SEW EURODRIVE

Operating Instructions



AC Motors

DR..71 – 315, DRN80 – 315

Edition 07/2015

21927189/EN



Contents

1 General information 6
1.1 About this documentation 6
1.2 Structure of the safety notes 6
1.3 Rights to claim under limited warranty 8
1.4 Exclusion of liability 8
1.5 Product names and trademarks 8
1.6 Copyright notice 8
1.7 Designation convention 8

2 Safety notes 9
2.1 Preliminary information 9
2.2 General information 9
2.3 Target group 10
2.4 Functional safety (FS) 11
2.5 Designated use 11
2.6 Other applicable documentation 12
2.7 Transport/storage 12
2.8 Installation 13
2.9 Electrical connection 13
2.10 Startup/operation 14

3 Motor structure 15
3.1 Basic structure of DR..71 – 132/DRN80 – 132S 15
3.2 Basic structure of DR..160 – 180, DRN132M – 180 16
3.3 Basic structure of DR..200 – 225, DRN200 – 225 17
3.4 Basic structure of DR..250 – 280, DRN250 – 280 18
3.5 Basic structure of DR..315, DRN315 19
3.6 Nameplate 20
3.7 Designs and options 24

4 Mechanical installation 27
4.1 Before you start 27
4.2 Extended storage of motors 28
4.3 Motor installation notes 30
4.4 Installation tolerances 31
4.5 Assembling the input elements 31
4.6 HR/HF manual brake release 32
4.7 Non-SEW encoder mounting 34
4.8 Mounting the XV.. encoder mounting adapter for DR..71 – 225, DRN80 – 225 34
4.9 Mounting the encoder to the EV../AV mounting adapter to DR..250 – 280, DRN250 – 280 motors 36
4.10 Terminal box 38
4.11 Retrofitting (option /F.A) or modifying (option /F.B) motor feet 40
4.12 Options 43

5 Electrical installation 47
5.1 Additional regulations 47

21927189/EN – 07/2015

5.2 Wiring diagrams and terminal assignment diagrams 47
5.3 Wiring notes 48
5.4 Special aspects for operation with a frequency inverter 48
5.5 Exterior grounding at the terminal box, LF grounding 51
5.6 Improving the grounding (EMC), HF grounding 52
5.7 Special aspects in switching operation 56
5.8 Special aspects of torque motors and low-speed motors 56
5.9 Special aspects of single-phase motors 57
5.10 Ambient conditions during operation 59
5.11 Notes regarding the connection of the motor 60
5.12 Connecting the motor via terminal block 61
5.13 Connecting the motor plug connector 71
5.14 Connecting the motor via terminal strip 76
5.15 Connecting the brake 78
5.16 Options 82

6 Startup 93
6.1 Before startup 94
6.2 Motors with reinforced bearing 94
6.3 Altering the blocking direction on motors with a backstop 95

7 Inspection/maintenance 98
7.1 Inspection and maintenance intervals 100
7.2 Bearing lubrication 101
7.3 Reinforced bearings 102
7.4 Corrosion protection 102
7.5 Motor and brake maintenance – preliminary work 103
7.6 Inspection/maintenance of DR..71 – 315, DRN80 – 315 motors 114
7.7 Inspection/maintenance of DR..71 – 315, DRN80 – 315 brakemotors 121
7.8 Inspection/maintenance work diagnostic unit /DUB 144
7.9 Inspection/maintenance work diagnostic unit /DUE 148

8 Technical data 159
8.1 Work done, working air gap, braking torques 159
8.2 Braking torque assignment 161
8.3 Operating currents 163
8.4 Resistors 166
8.5 Brake control system 170
8.6 Permitted rolling bearing types 174
8.7 Lubricant tables 176
8.8 Order information for lubricants and anti-corrosion agents 176
8.9 Encoders 177
8.10 Diagnostic unit /DUE 182
8.11 Characteristic values of functional safety 183
8.12 S1 duty cycle DRK.. single-phase motor 184

9 Malfunctions 185
9.1 Motor malfunctions 186

21927189/EN – 07/2015

SEW EURODRIVE

9.2 Brake malfunctions 188
9.3 Malfunctions when operated with a frequency inverter 190
9.4 Customer service 191
9.5 Disposal 191

10 Appendix 192
10.1 Wiring diagrams 192
10.2 Auxiliary terminals 1 and 2 208

11 Address list 209

Index 220

21927189/EN – 07/2015

1 General information

1.1 About this documentation

This documentation is an integral part of the product. The documentation is intended for all employees who perform assembly, installation, startup, and service work on the product.

Make sure this documentation is accessible and legible. Ensure that persons responsible for the machinery and its operation as well as persons who work on the device independently have read through the documentation carefully and understood it. If you are unclear about any of the information in this documentation or require further information, contact SEW-EURODRIVE.

1.2 Structure of the safety notes

1.2.1 Meaning of signal words

The following table shows the grading and meaning of the signal words for safety notes.

Signal word	Meaning	Consequences if disregarded
⚠ **DANGER**	Imminent hazard	Severe or fatal injuries.
⚠ **WARNING**	Possible dangerous situation	Severe or fatal injuries.
⚠ **CAUTION**	Possible dangerous situation	Minor injuries
NOTICE	Possible damage to property	Damage to the drive system or its environment.
INFORMATION	Useful information or tip: Simplifies handling of the drive system.	

1.2.2 Structure of section-related safety notes

Section-related safety notes do not apply to a specific action but to several actions pertaining to one subject. The hazard symbols used either indicate a general hazard or a specific hazard.

This is the formal structure of a safety note for a specific section:



SIGNAL WORD

Type and source of hazard.

Possible consequence(s) if disregarded.

- Measure(s) to prevent the hazard.

21927189/EN – 07/2015

Meaning of the hazard symbols

The hazard symbols in the safety notes have the following meaning:

Hazard symbol	Meaning
	General hazard
	Warning of dangerous electrical voltage
	Warning of hot surfaces
	Warning of risk of crushing
	Warning of suspended load
	Warning of automatic restart

1.2.3 Structure of embedded safety notes

Embedded safety notes are directly integrated into the instructions just before the description of the dangerous action.

This is the formal structure of an embedded safety note:

- ⚠ **SIGNAL WORD** Type and source of hazard.

  Possible consequence(s) if disregarded.

  – Measure(s) to prevent the hazard.

21927189/EN – 07/2015

1.3 Rights to claim under limited warranty

Read the information in this documentation. This is essential for fault-free operation and fulfillment of any rights to claim under limited warranty. Read the documentation before you start working with the unit!

1.4 Exclusion of liability

Read the information in this documentation, otherwise safe operation is impossible. You must comply with the information contained in this documentation to achieve the specified product characteristics and performance features. SEW-EURODRIVE assumes no liability for injury to persons or damage to equipment or property resulting from non-observance of these operating instructions. In such cases, SEW-EURODRIVE assumes no liability for defects.

1.5 Product names and trademarks

The brands and product names in this documentation are trademarks or registered trademarks of their respective titleholders.

1.6 Copyright notice

© 2015 SEW-EURODRIVE. All rights reserved.

Unauthorized reproduction, modification, distribution or any other use of the whole or any part of this documentation is strictly prohibited.

1.7 Designation convention

DR..	Stands for all motors of the DRS, DRE, DRP, DRL, DRK, DRM series
DRN..	Stand for all motors of the DRN series
..	Stands for 71, 80, 90, 100, 112, 132, 160, 180, 200, 225, 250, 280, 315 **or** S, E, P, L, K, M, N

The ".." after "DR" is an omission and stands for either the motor type "S, E, P, L, K, M, etc." and/or the omitted size.

- Examples: DR..80, DRS71

The ".." after "DRN" is an omission and stands for the omitted size.

- Examples: DRN80, DRN..

21927189/EN – 07/2015

2 Safety notes

The following basic safety notes must be read carefully to prevent injury to persons and damage to property. The user must ensure that the basic safety notes are read and observed. Make sure that persons responsible for the system and its operation, as well as persons who work independently on the unit, have read through the operating instructions carefully and understood them. If you are unclear about any of the information in this documentation, or if you require further information, please contact SEW-EURODRIVE.

2.1 Preliminary information

The following safety notes are primarily concerned with the use of the following components: DR../DRN.. AC motors. If you use gearmotors, also refer to the safety notes in the corresponding operating instructions for: Gear units

Also observe the additional safety notes provided in the individual chapters of this document.

2.2 General information

⚠ WARNING



During operation, the motors or gearmotors can have live, bare (in the event of open connectors/terminal boxes) and movable or rotating parts as well as hot surfaces, depending on their degree of protection.

Severe or fatal injuries.

- All work related to transportation, storage, installation, assembly, connection, startup, maintenance and repair may only be carried out by qualified personnel, in strict observance of the following points:
  - The applicable detailed documentation(s)
  - Warning and safety signs on the motor/gearmotor
  - All the project planning documents, startup instructions and wiring diagrams related to the drive
  - System-specific regulations and requirements
  - National/regional safety and accident prevention regulations.
- Never install damaged drives.
- Report any damage to the shipping company immediately.

Unauthorized removal of covers, improper use, or incorrect installation and operation may result in severe injury to persons, or damage to machinery.

Refer to the following chapters for more information.

21927189/EN – 07/2015

2.3 Target group

Any mechanical work may only be performed by adequately qualified personnel. Qualified personnel in the context of this documentation are persons familiar with the design, mechanical installation, troubleshooting and servicing of the product who possess the following qualifications:

- Training in mechanical engineering, e.g. as a mechanic or mechatronics technician (final examinations must have been passed).
- They are familiar with these operating instructions.

Any electronic work may only be performed by adequately qualified electricians. Qualified electricians in the context of this documentation are persons familiar with electrical installation, startup, troubleshooting and servicing of the product who possess the following qualifications:

- Training in electrical engineering, e.g. as an electrician, electronics or mechatronics technician (final examinations must have been passed).
- They are familiar with these operating instructions.

All work in the areas of transportation, storage, operation and waste disposal must be carried out by persons who are trained appropriately.

All qualified personnel must wear appropriate protective clothing.

21927189/EN – 07/2015

2.4 Functional safety (FS)

Drives from SEW-EURODRIVE can optionally be supplied with safety-related components.

MOVIMOT®, encoders or brakes, or other accessories, can be integrated in the AC motor as safety-related components either individually or in combination.

SEW-EURODRIVE indicates such an integration by the FS logo and a number on the nameplate (→ 🗎 20).



The number is a code that indicates which components in the drive are safety-related. See the following code table for all products:

Functional safety	Inverter (e.g. MOVIMOT®)	Brake	Manual brake release monitoring	Brake monitoring	Motor protection	Encoder
02		x				
04						x
11		x				x

If the drive bears the FS logo on the nameplate, you must adhere to the information in the following documents:

- "MOVIMOT® MM..D – Functional Safety" manual
- Addendum to the operating instructions "Safety-Rated Encoders – DR..71 – 315, DRN80 – 315 AC Motors – Functional Safety"
- Addendum to the operating instructions "Safety-Rated Brakes – DR..71 – 315, DRN80 – 315 AC Motors – Functional Safety"

You find the characteristic safety values of the following components in the technical data (→ 🗎 183) section so you can determine the security level for systems and machines yourself:

- Characteristic safety values for brakes: $B10_d$ values
- Characteristic safety values for encoders: $MTTF_d$ values

The characteristic safety values of SEW-EURODRIVE components are also available on the homepage at www.sew-eurodrive.de and in the SEW-EURODRIVE library for the BGIA Sistema software.

2.5 Designated use

DR../DRN.. AC motors are intended for industrial systems.

When installed in machines, startup (i.e. start of designated operation) is prohibited until it is determined that the machine complies with the local laws and directives. In the individual area of application, you must especially observe the Machinery Directive 2006/42/EC as well as the EMC Directive 2004/108/EC. The EMC test specifications EN 61000-4-2, EN 61000-4-3, EN 61000-4-4, EN 61000-4-6 and EN 61000-6-2 must be taken into account during startup.

Using these products in potentially explosive atmospheres is prohibited, unless specifically designated otherwise.

Air-cooled motors/gearmotors are dimensioned for ambient temperatures of -20 °C to +40 °C and installation altitudes ≤ 1000 m above sea level. Any differing specifications on the nameplate must be observed. The ambient conditions must comply with all the specifications on the nameplate.

21927189/EN – 07/2015

2.6 Other applicable documentation

2.6.1 DR..71 – 315, DRN80 – 315 AC motors

The following publications and documents have to be observed as well:

- Wiring diagrams provided with the motor
- "Gear Unit Series R..7, F..7, K..7, K..9, S..7, SPIROPLAN® W" operating instructions for gearmotors
- "AC Motors" catalog and/or
- "DRN.. AC Motors" catalog
- "DR.. Gearmotors" catalogs.
- Addendum to the operating instructions "Safety-Rated Brakes – DR..71 – 315, DRN80 – 315 AC Motors – Functional Safety" if necessary
- Addendum to the operating instructions "Safety-Rated Encoders – DR..71 – 315, DRN80 – 315 AC Motors – Functional Safety" if necessary
- "MOVIMOT® MM..D – Functional Safety" manual if necessary

2.7 Transport/storage

Inspect the shipment for damage as soon as you receive the delivery. Report any transport damage to the shipping company immediately. If necessary, suspend startup.

Tighten the eyebolts securely. They are designed to only carry the weight of the gear unit/motor/gearmotor; do not attach any additional loads.

The installed lifting eyebolts are in accordance with DIN 580. The loads and regulations specified in that document must always be observed. If two or four lifting eyes or eyebolts are attached to the gear unit/motor/gearmotor, all lifting eyes or eyebolts must be used during transport. In this case, the tension force vector of the slings must not exceed a 45° angle in accordance with DIN 580.

Use suitable, sufficiently rated handling equipment if necessary. Reattach these in the case of further transportation.

If the gear unit/motor/gearmotor is not installed immediately, it must be stored in a dry and dust-free storage location. You must not store the gear unit/motor/gearmotor outdoors or on the fan guard. The gear unit/motor/gearmotor can be stored for up to 9 months without requiring any special measures before startup.

21927189/EN – 07/2015

2.8 Installation

Make sure that the supports are even, the foot and flange mounting is correct and if there is direct coupling, align with precision. Resonances between the rotational frequency and the double line frequency caused by the structure are to be avoided. Release the brake (if installed), turn rotor manually, check for unusual grinding noise. Check the direction of rotation in decoupled state.

Only install or remove belt pulleys and couplings using suitable devices (heat up) and cover with a touch guard. Avoid improper belt tension.

Make the pipe connections that may eventually be required. Mounting positions with shaft ends pointing upwards should be equipped with a cover to prevent foreign objects from falling into the fan. Ensure that ventilation openings are not obstructed and that exhaust air, including air from adjacent units, cannot be drawn in again straight away.

Observe the notes in the "Mechanical installation" chapter.

2.9 Electrical connection

All work may only be carried out by qualified specialists. During work, the low-voltage machine must be at standstill, enabled and safeguarded against an accidental restart. This also applies to auxiliary circuits (e.g. anti-condensation heating or forced cooling fan).

Ensure that the unit is de-energized.

Exceeding the tolerances in EN 60034-1 (VDE 0530, part 1) – voltage + 5%, frequency + 2%, curve shape, symmetry – increases heating and influences electromagnetic compatibility. Also observe the standard EN 50110 (and, if applicable, other national regulations, such as DIN VDE 0105 for Germany).

Observe the wiring information and differing data on the nameplate as well as the wiring diagram in the terminal box.

The connection should be a permanent, secure electrical connection (no protruding wire ends); use the cable end pieces intended for this purpose. Establish a secure protective earth connection. When the motor is connected, the distances to non-insulated and live parts must not be shorter than the minimum values according to IEC 60664 and national regulations. With low voltage, the distances should be no shorter than the following values, in compliance with IEC 60664:

Nominal voltage V_N	Distance
≤ 500 V	3 mm
≤ 690 V	5.5 mm

The connection box must be free from foreign objects, dirt and moisture. Close unused cable entry openings and the box itself so they are dust and water proof. Secure key for test run without output elements. When operating low-voltage machines with brakes, check that the break is functioning correctly before startup.

Observe the notes in the "Electrical installation" chapter.

21927189/EN – 07/2015

2.10 Startup/operation

Whenever changes to normal operation occur in the gear unit/motor/gearmotor, such as increased temperatures, noise, vibrations, determine the cause. Consult the manufacturer if required. Never deactivate protection devices, even in test mode. Switch off the motor if you are not sure.

Regularly clean air ducts in dusty or dirty environments.

2.10.1 Surface temperature during operation



⚠ CAUTION

The surfaces of the drive can be very hot during operation.

Risk of burns.

- Make sure that hot surfaces cannot be touched unintentionally or during normal operation. Install covers or warning signs according to regulations.
- Let the unit cool down before you start working on it.

21927189/EN – 07/2015

3 Motor structure

INFORMATION

The following figures are block diagrams. Their purpose is to make it easier to assign components to the spare parts lists. Deviations are possible depending on the motor size and version.

3.1 Basic structure of DR..71 – 132/DRN80 – 132S

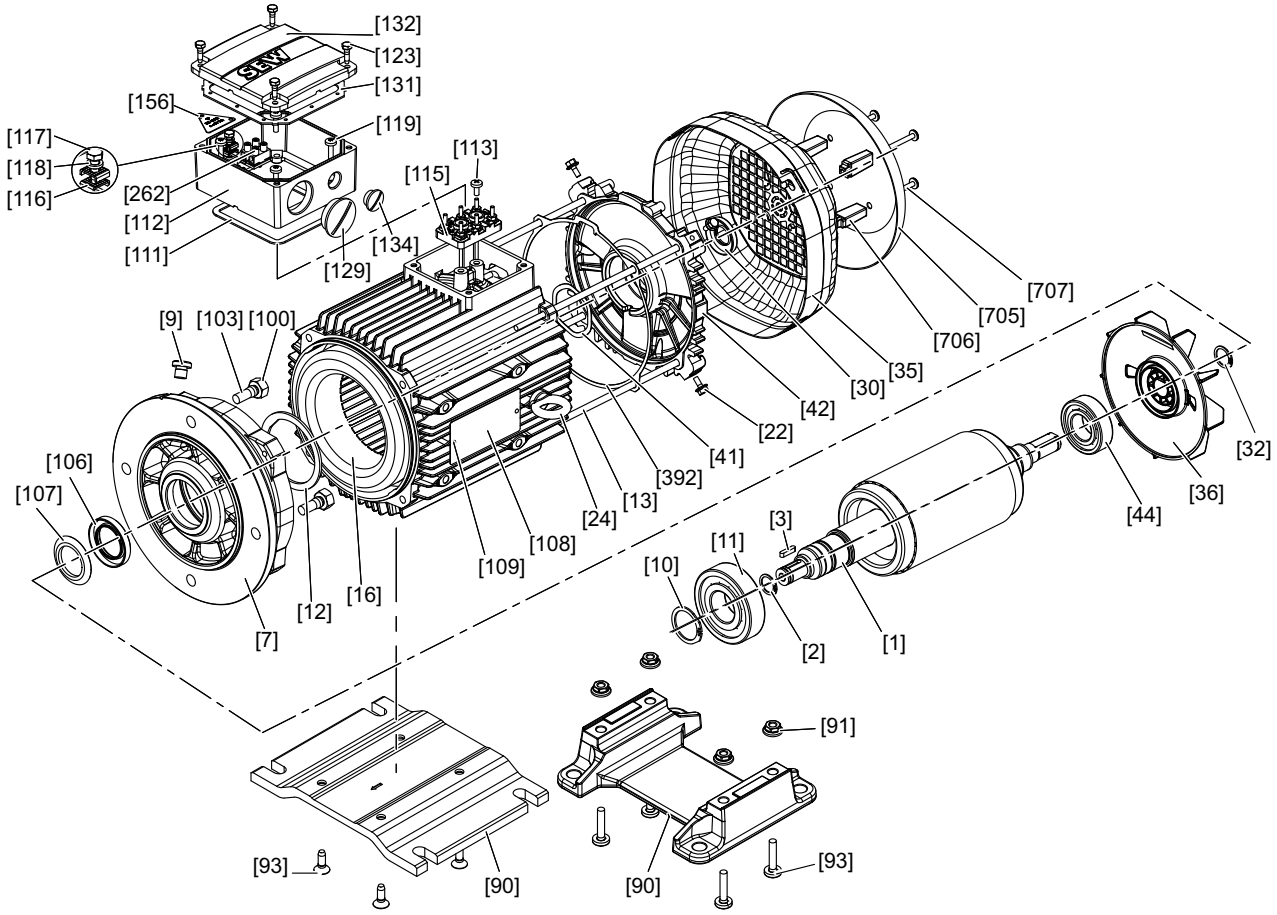

13369217931

[1]	Rotor	[30]	Oil seal	[106]	Oil seal	[123]	Hex head screw
[2]	Retaining ring	[32]	Retaining ring	[107]	Oil flinger	[129]	Screw plug with O-ring
[3]	Key	[35]	Fan guard	[108]	Nameplate	[131]	Gasket for cover
[7]	Flanged endshield	[36]	Fan	[109]	Grooved pin	[132]	Terminal box cover
[9]	Screw plug	[41]	Shim washer	[111]	Gasket for lower part	[134]	Screw plug with O-ring
[10]	Retaining ring	[42]	B-side endshield	[112]	Terminal box lower part	[156]	Information sign
[11]	Deep groove ball bearing	[44]	Deep groove ball bearing	[113]	Pan head screw	[262]	Connection terminal, complete
[12]	Retaining ring	[90]	Bed plate	[115]	Terminal board	[392]	Gasket
[13]	Cap screw	[91]	Hex nut	[116]	Terminal yoke	[705]	Canopy
[16]	Stator	[93]	Pan head screw	[117]	Hex head screw	[706]	Spacer
[22]	Hex head screw	[100]	Hex nut	[118]	Lock washer	[707]	Pan head screw
[24]	Eyebolt	[103]	Stud	[119]	Pan head screw		

3.2 Basic structure of DR..160 – 180, DRN132M – 180

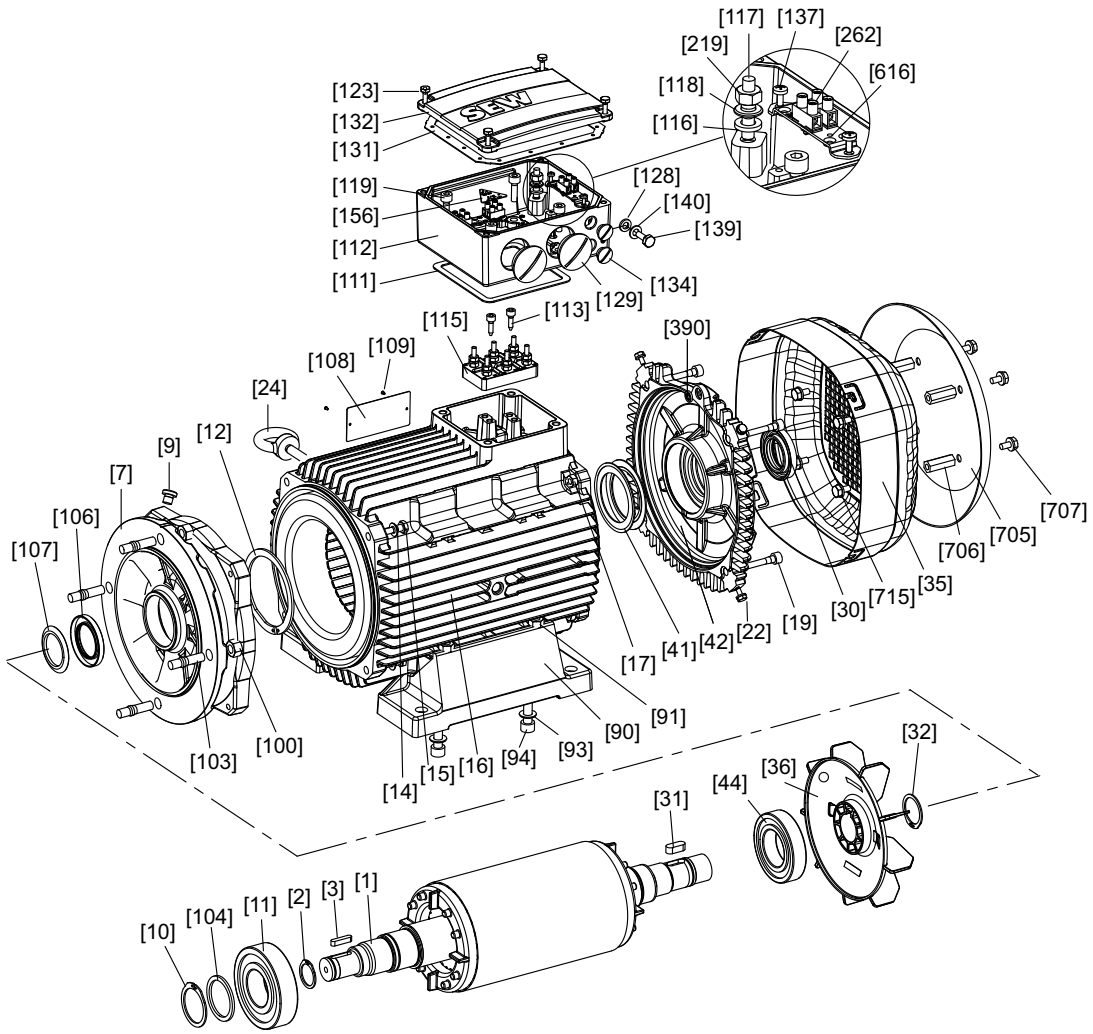

18014399036804619

[1]	Rotor	[31]	Key	[108]	Nameplate	[132]	Terminal box cover
[2]	Retaining ring	[32]	Retaining ring	[109]	Grooved pin	[134]	Screw plug with O-ring
[3]	Key	[35]	Fan guard	[111]	Gasket for lower part	[137]	Screw
[7]	Flange	[36]	Fan	[112]	Terminal box lower part	[139]	Hex head screw
[9]	Screw plug	[41]	Cup spring	[113]	Screw	[140]	Washer
[10]	Retaining ring	[42]	Rear endshield	[115]	Terminal board	[156]	Information label
[11]	Deep groove ball bearing	[44]	Deep groove ball bearing	[116]	Serrated lock washer	[219]	Hex nut
[12]	Retaining ring	[90]	Foot	[117]	Stud	[262]	Connection terminal
[14]	Washer	[91]	Hex nut	[118]	Washer	[390]	O-ring
[15]	Hex head screw	[93]	Washer	[119]	Cap screw	[616]	Retaining plate
[16]	Stator	[94]	Cap screw	[123]	Hex head screw	[705]	Canopy
[17]	Hex nut	[100]	Hex nut	[128]	Serrated lock washer	[706]	Spacer
[19]	Cap screw	[103]	Stud	[129]	Screw plug with O-ring	[707]	Hex head screw
[22]	Hex head screw	[104]	Supporting ring	[131]	Gasket for cover	[715]	Hex head screw
[24]	Eyebolt	[106]	Oil seal				
[30]	Sealing ring	[107]	Oil flinger				

21927189/EN – 07/2015

3.3 Basic structure of DR..200 – 225, DRN200 – 225

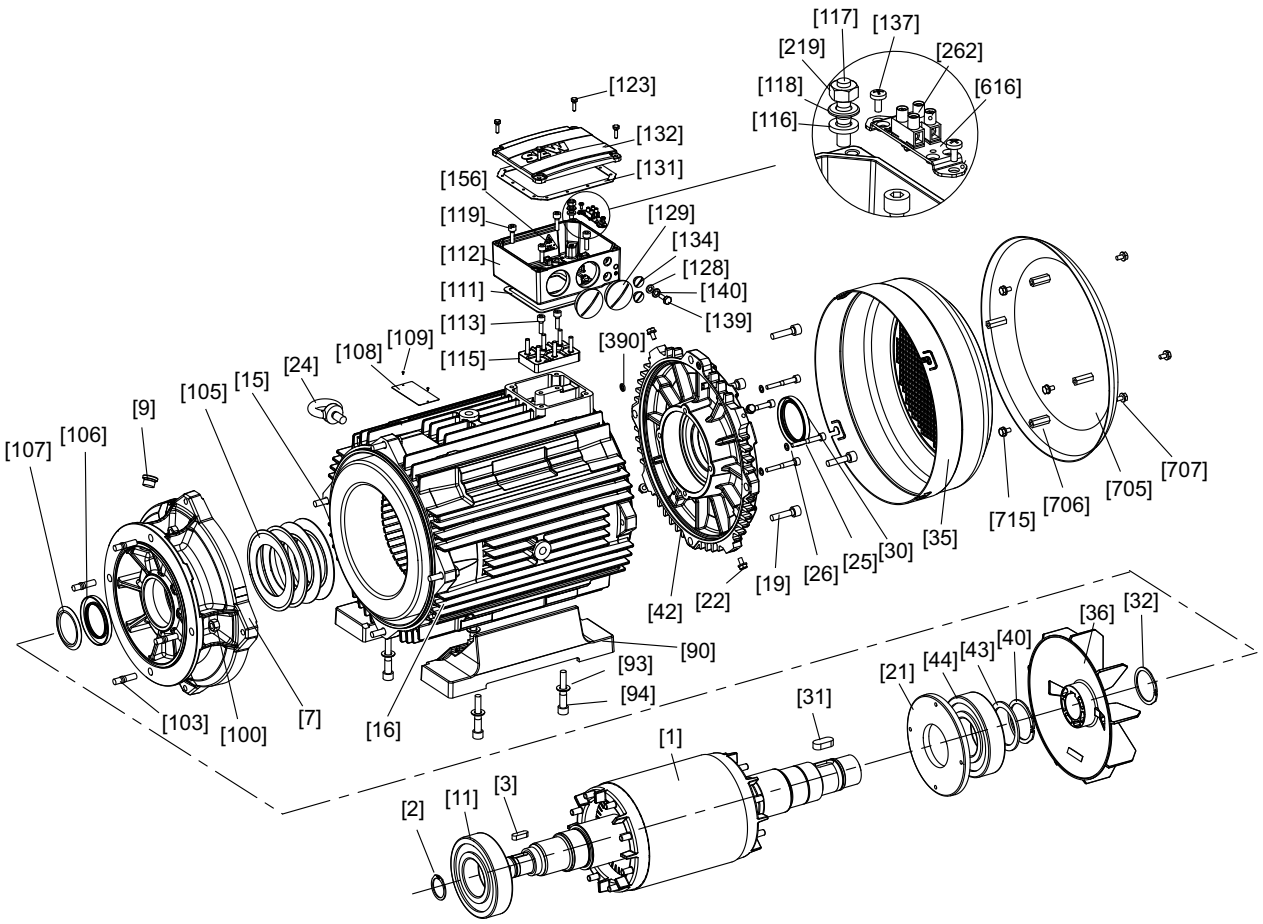

9007200332597387

[1]	Rotor	[31]	Key	[107]	Oil flinger	[132]	Terminal box cover
[2]	Retaining ring	[32]	Retaining ring	[108]	Nameplate	[134]	Screw plug
[3]	Key	[35]	Fan guard	[109]	Grooved pin	[137]	Screw
[7]	Flange	[36]	Fan	[111]	Gasket for lower part	[139]	Hex head screw
[9]	Screw plug	[40]	Retaining ring	[112]	Terminal box lower part	[140]	Washer
[11]	Deep groove ball bearing	[42]	Rear endshield	[113]	Cap screw	[156]	Information label
[15]	Hex head screw	[43]	Supporting ring	[115]	Terminal board	[219]	Hex nut
[16]	Stator	[44]	Deep groove ball bearing	[116]	Serrated lock washer	[262]	Connection terminal
[19]	Cap screw	[90]	Foot	[117]	Stud	[390]	O-ring
[21]	Oil seal flange	[93]	Washer	[118]	Washer	[616]	Retaining plate
[22]	Hex head screw	[94]	Cap screw	[119]	Cap screw	[705]	Canopy
[24]	Eyebolt	[100]	Hex nut	[123]	Hex head screw	[706]	Spacer bolt
[25]	Cap screw	[103]	Stud	[128]	Serrated lock washer	[707]	Hex head screw
[26]	Shield ring	[105]	Cup spring	[129]	Screw plug	[715]	Hex head screw
[30]	Oil seal	[106]	Oil seal	[131]	Gasket for cover		

3.4 Basic structure of DR..250 – 280, DRN250 – 280

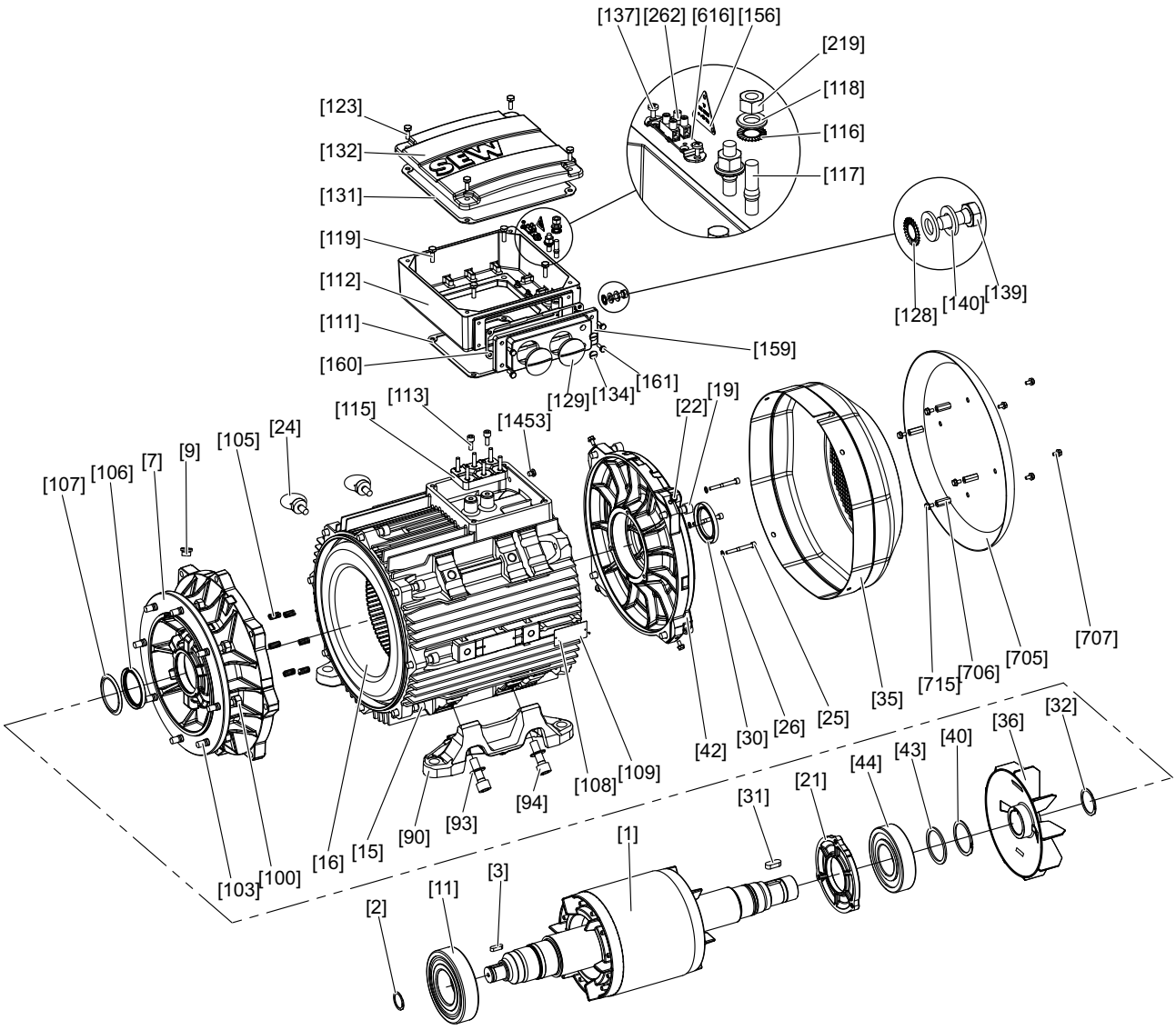

9007206690410123

[1]	Rotor	[32]	Retaining ring	[108]	Nameplate	[134]	Screw plug
[2]	Retaining ring	[35]	Fan guard	[109]	Grooved pin	[137]	Screw
[3]	Key	[36]	Fan	[111]	Gasket for lower part	[139]	Hex head screw
[7]	Flange	[40]	Retaining ring	[112]	Terminal box lower part	[140]	Washer
[9]	Screw plug	[42]	B-side endshield	[113]	Cap screw	[156]	Information sign
[11]	Deep groove ball bearing	[43]	Supporting ring	[115]	Terminal board	[159]	Connection piece
[15]	Cap screw	[44]	Deep groove ball bearing	[116]	Serrated lock washer	[160]	Connection piece gasket
[16]	Stator	[90]	Foot	[117]	Stud	[161]	Hex head screw
[19]	Cap screw	[93]	Washer	[118]	Washer	[219]	Hex nut
[21]	Oil seal flange	[94]	Cap screw	[119]	Hex head screw	[262]	Connection terminal
[22]	Hex head screw	[100]	Hex nut	[123]	Hex head screw	[705]	Canopy
[24]	Eyebolt	[103]	Stud	[128]	Serrated lock washer	[706]	Spacer bolt
[25]	Cap screw	[105]	Compression spring	[129]	Screw plug	[707]	Hex head screw
[26]	Shield ring	[106]	Oil seal	[131]	Gasket for cover	[715]	Hex head screw
[30]	Oil seal	[107]	Oil flinger	[132]	Terminal box cover	[1453]	Screw plug
[31]	Key						

21927189/EN – 07/2015

3.5 Basic structure of DR..315, DRN315

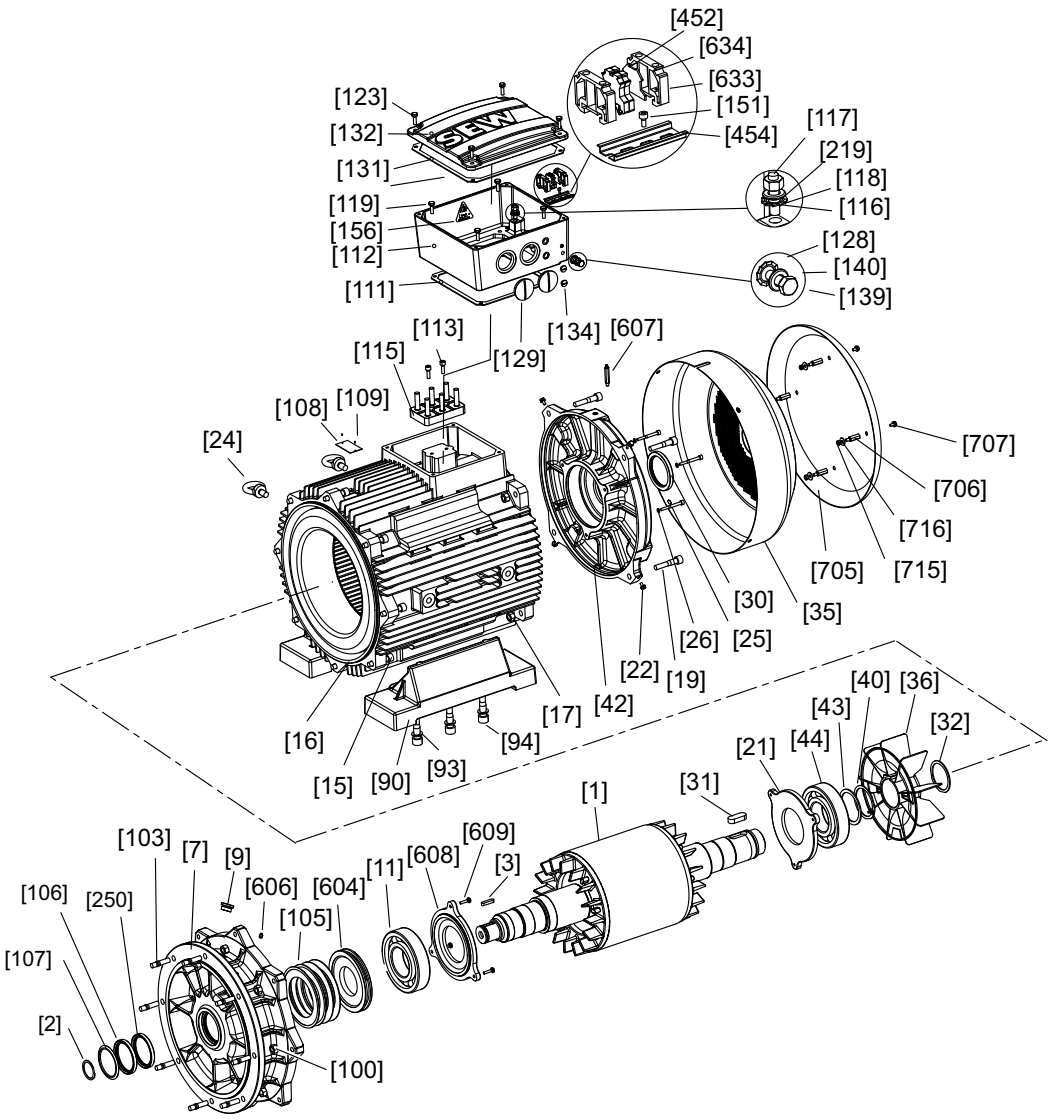

27021598116221579

[1]	Rotor	[32]	Retaining ring	[111]	Gasket for lower part	[156]	Information sign
[2]	Retaining ring	[35]	Fan guard	[112]	Terminal box lower part	[219]	Hex nut
[3]	Key	[36]	Fan	[113]	Cap screw	[250]	Oil seal
[7]	Flange	[40]	Retaining ring	[115]	Terminal board	[452]	Terminal strip
[9]	Screw plug	[42]	B-side endshield	[116]	Serrated lock washer	[454]	Mounting rail
[11]	Rolling bearing	[43]	Supporting ring	[117]	Stud	[604]	Lubrication ring
[15]	Cap screw	[44]	Rolling bearing	[118]	Washer	[606]	Grease nipple
[16]	Stator	[90]	Foot	[119]	Hex head screw	[607]	Grease nipple
[17]	Hex nut	[93]	Washer	[123]	Hex head screw	[608]	Oil seal flange
[19]	Cap screw	[94]	Cap screw	[128]	Serrated lock washer	[609]	Hex head screw
[21]	Oil seal flange	[100]	Hex nut	[129]	Screw plug	[633]	End bracket
[22]	Hex head screw	[103]	Stud	[131]	Gasket for cover	[634]	End plate
[24]	Eyebolt	[105]	Cup spring	[132]	Terminal box cover	[705]	Canopy
[25]	Cap screw	[106]	Oil seal	[134]	Screw plug	[706]	Spacer bolt
[26]	Shield ring	[107]	Oil flinger	[139]	Hex head screw	[707]	Hex head screw
[30]	Oil seal	[108]	Nameplate	[140]	Washer	[715]	Hex nut
[31]	Key	[109]	Grooved pin	[151]	Cap screw	[716]	Washer

3.6 Nameplate

The marks on the upper edge of the nameplate are only present when the motor has been certified accordingly or when it includes the relevant components.

3.6.1 DRE.. motor nameplate

The following figure shows an example of a nameplate:

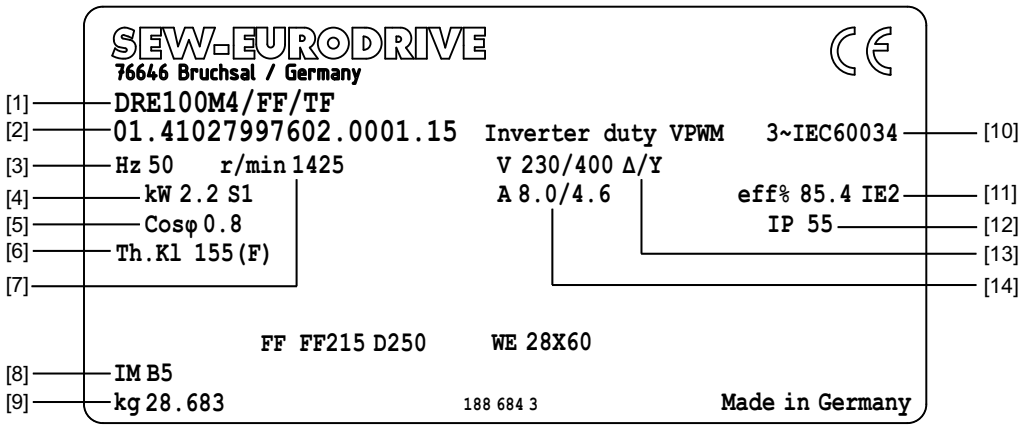

9007212456365451

[1] Type designation
[2] Serial number
[3] Nominal frequency
[4] Nominal power/duty type
[5] Power factor for AC motors
[6] Thermal class
[7] Nominal speed
[8] Mounting position
[9] Weight
[10] Number of phases and underlying rating and performance standards (IEC 60034-X and/or equivalent national standard)
[11] IE class and nominal efficiency for motors included in the scope of the IEC 60034-30-1 standard
[12] Degree of protection according to IEC 60034-5
[13] Nominal voltage
[14] Nominal current

21927189/EN – 07/2015

3.6.2 DRE.. global nameplate

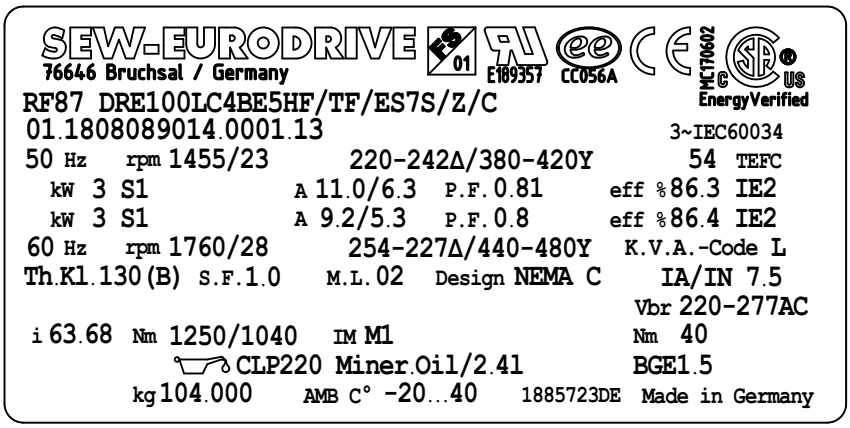

9007207468121227

3.6.3 Markings

The following table lists all marks that can occur on a nameplate or on the motor and an explanation of what they mean.

Mark	Meaning
CE	CE mark to state compliance with European guidelines, such as the Low Voltage Directive
Ex	ATEX mark to state compliance with the European Directive 94/9/EC
UR	UR logo to confirm that UL (Underwriters Laboratory) is informed about the registered components; register number by UL: E189357
ee CC056A	DoE mark to confirm compliance with US-American efficiency limit values for AC motors
c UL us LISTED	UL logo to confirm that a component is UL (Underwriters Laboratory) tested, also valid for CSA in conjunction with the register number
CSA	CSA mark to confirm the Canadian Standard Association (CSA) and the market conformity of AC motors
MC170602 C SA US EnergyVerified	CSAe mark to confirm compliance with the Canadian efficiency limit values for AC motors
CCC	CCC logo to confirm the adherence to the Chinese regulation for small appliances
VIK	VIK mark to confirm the compliance with the directive of the German Association of Energy and Power Industry (V.I.K.)

Mark	Meaning
	FS mark with code number to identify functional safety relevant components
	EAC mark (EurAsian Conformity) Confirms compliance with the technical regulations of the economic and customs union of Russia, Belarus, Kazakhstan, Armenia.
	UkrSEPRO mark (Ukrainian Certification of Products) Confirms compliance with the technical regulations of the country Ukraine.
	Motors with this mark may only be operated with frequency inverter (VSD = Variable Speed Drive) according to regulation 640/2009.

21927189/EN – 07/2015

3.6.4 Type designation

DR.., DRN.. AC brakemotor type designation

The following diagram shows a type designation example:

DRN132M4/BE11/HR/FI/TF	
DR	Series
N	Type designation
132	Size
M	Length
4	Number of poles
/**BE11**	Brake
/HR	Manual brake release
FI	Output option
TF	Thermal motor protection

Designation of the motors

Designation	
DRS..	Standard motor, Standard efficiency IE1
DRE..	Energy-efficient motor, High Efficiency IE2
DRP..	Energy-efficient motor, Premium Efficiency IE3
DRN..	Energy-efficient motor, Premium Efficiency IE3
DRL..	Asynchronous servomotor
DRK..	Single-phase operation with running capacitor
DRM..	Torque motor: AC motor for operation at speed n = 0
DR..J	Line start permanent magnet motor
71 – 315	Sizes: 71 / 80 / 90 / 100 / 112 / 132 / 160 / 180 / 200 / 225 / 315
K, S, M, L, MC, LC, ME, H, LS	Lengths
2, 4, 6, 8/2, 8/4, 4/2, 12	Number of poles

21927189/EN – 07/2015

3.7 Designs and options

3.7.1 Output variants

Designation	Option
/FI	IEC foot-mounted motor
/F.A, /F.B	Universal foot-mounted motor
/FG	7-series integral motor, as stand-alone motor
/FF	IEC flange-mounted motor with bore holes
/FT	IEC flange-mounted motor with threads
/FL	General flange-mounted motor (other than IEC)
/FM	7-series integral motor with IEC feet
/FE	IEC flange-mounted motor with bore and IEC feet
/FY	IEC flange-mounted motor with threads and IEC feet
/FK	General flange-mounted motor (deviating from IEC) with feet
/FC	C-face flange-mounted motor, dimensions in inch

3.7.2 Mechanical attachments

Designation	Option
/BE..	Spring-loaded brake with specification of size
/HR	Manual brake release of the brake, automatic re-engaging function
/HF	Manual brake release, lockable
/RS	Backstop
/MSW	MOVI-SWITCH®
/MM03 – MM40	MOVIMOT®
/MO	MOVIMOT® option(s)
/MI	Motor identification module for MOVIMOT®

3.7.3 Temperature sensor / temperature detection

Designation	Option
/TF	Temperature sensor (PTC thermistor or PTC resistor)
/TH	Thermostat (bimetallic switch)
/KY	1 KTY84 – 130 sensor
/PT	1 / 3 PT100 sensor(s)

21927189/EN – 07/2015

3.7.4 Encoder

Designation	Option
/ES7S /EG7S /EH7S /EV7S	Add-on speed sensor with Sin/Cos interface
/ES7R /EG7R /EH7R	Add-on speed sensor with TTL (RS-422) interface, V = 9 – 26 V
/EI7C /EI76 /EI72 /EI71	Built-in incremental encoder with HTL interface and 6 / 2 / 1 period(s)
/EI7C FS..	Safety-rated incremental encoder (marked with FS logo on the motor nameplate) For information, refer to the addendum to the operating instructions "Safety-Rated Encoders – DR..71 – 315, DRN80 315 AC Motors – Functional Safety"
/AS7W /AG7W	Add-on absolute encoder, RS-485 interface (multi-turn)
/AS7Y /AG7Y / AH7Y	Add-on absolute encoder, SSI interface (multi-turn)
/ES7A /EG7A	Mounting adapter for speed sensors
/EV2T /EV2R /EV2S /EV2C	Add-on incremental encoder with solid shaft
/XV.A	Mounting adapter for non-SEW speed sensors
/XV..	Mounted non-SEW speed sensor
/XH..	Mounting adapter for non-SEW hollow-shaft encoders

3.7.5 Connection alternatives

Designation	Option
/IS	Integrated plug connector
/ASE.	HAN 10ES plug connector on terminal box with single locking latch (cage clamp contacts on the motor side)
/ASB.	HAN 10ES plug connector on terminal box with double locking latch (cage clamp contacts on the motor side)
/ACE.	HAN 10E plug connector on terminal box with single locking latch (crimp contacts on the motor side)
/ACB.	HAN 10E plug connector on terminal box with double locking latch (crimp contacts on the motor side)
/AME. /ABE. /ADE. /AKE.	HAN Modular 10B plug connector on terminal box with single locking latch (crimp contacts on the motor side)
/AMB. /ABB. /ADB. /AKB.	HAN Modular 10B plug connector on terminal box with double locking latch (crimp contacts on the motor side)
/KCC	6 or 10-pole terminal strip with cage clamp contacts
/KC1	C1-profile-compliant connection of the electrified monorail system drive (VDI guideline 3643). Alternatively for more compact connection area.
/IV	Other industrial plug connectors according to customer specifications

21927189/EN – 07/2015

3.7.6 Ventilation

Designation	Option
/V	Forced cooling fan
/VH	Radial fan on fan guard
/Z	Additional inertia (flywheel fan)
/AL	Metal fan
/U	Non-ventilated (without fan)
/OL	Non-ventilated (closed B-side)
/C	Protection canopy for fan guard
/LF	Air filter
/LN	Low noise fan guard

3.7.7 Bearing

Designation	Option
/NS	Lubrication device
/ERF	Reinforced bearings on A-side with roller bearing
/NIB	Insulated bearing B-side

3.7.8 Condition monitoring

Designation	Option
/DUB	Diagnostic unit brake = brake monitoring
/DUE	Diagnostic Unit Eddy Current = Function and wear monitoring of the brake

3.7.9 Other additional features

Designation	Option
/DH	Condensation drain hole
/RI	Reinforced winding insulation
/RI2	Reinforced winding insulation with increased resistance against partial discharge
/2W	Second shaft end on the motor/brakemotor

21927189/EN – 07/2015

4 Mechanical installation

INFORMATION

Observe the safety notes in chapter 2 of these operating instructions for the mechanical installation.

If the nameplate of the drive bears the FS mark, also comply with the information on mechanical installation in the associated addenda to the operating instructions and/or the associated manual.

4.1 Before you start

NOTICE

The mounting position for installation must correspond to the specifications on the nameplate.

Only install the drive if the following conditions are met:

- The data on the nameplate of the drive corresponds with the voltage supply system or with the output voltage of the frequency inverter
- The drive is undamaged (no damage caused by transportation or storage)
- All transport protection has been removed
- You are certain that the following requirements have been met:
  - Ambient temperature between −20°C and +40°C

    Note that the temperature range of the gear unit may also be restricted (see gear unit operating instructions)

    Note that information on the nameplate may differ. It is essential that the operating conditions for the unit comply with the nameplate information.
  - No oil, acid, gas, vapors, radiation, etc.
  - Installation altitude max. 1000 m above sea level

    Observe the chapter Installation altitude (→ 🗎 59)
  - Note the limitations for encoders
  - Special design: Drive configured in accordance with the ambient conditions

The above mentioned information refers to standard orders. The conditions might be different when you order drives other than the standard. Observe any differing conditions in the order confirmation.

21927189/EN – 07/2015

4.2 Extended storage of motors

- Note that the service life of the lubricant in the ball bearings is reduced by 10% per year after the first year of storage.
- You should re-lubricate the lubrication devices on motors that have been in storage for longer than 5 years before startup. Observe the information on the motor lubricant plate.
- Check whether the motor has absorbed moisture as a result of being stored for a long time. Measure the insulation resistance for this purpose (measuring voltage 500 V).

The insulation resistance (see the following figure) varies greatly depending on the temperature. The motor must be dried if the insulation resistance is insufficient.

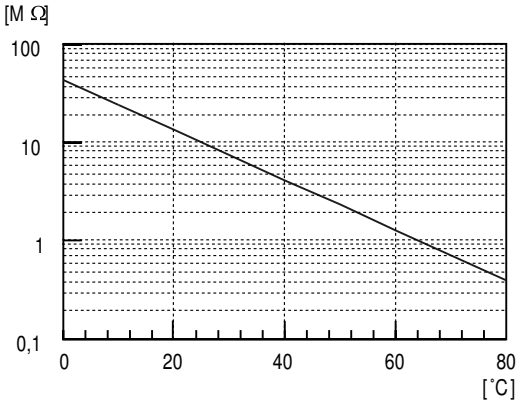

173323019

If the measured resistance, depending on the ambient temperature, is in a range above the limit characteristic curve, the insulation resistance is sufficient. If the value is below the limit characteristic curve, the motor must be dried.

4.2.1 Drying the motor

Heating the motor either with warm air or via an isolation transformer:

- With warm air

  DR.. motors with rotor designation "J" may be dried with warm air only.

⚠ WARNING



The motor shaft may be subject to torque when drying via isolation transformer.

Possible injury.

- DR.. motors with rotor designation "J" may be dried with warm air only.

Connection with wiring diagram R13:

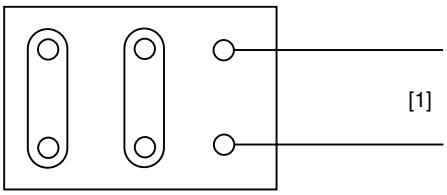

2336250251

[1] Transformer

21927189/EN – 07/2015

Connection with wiring diagram R72:

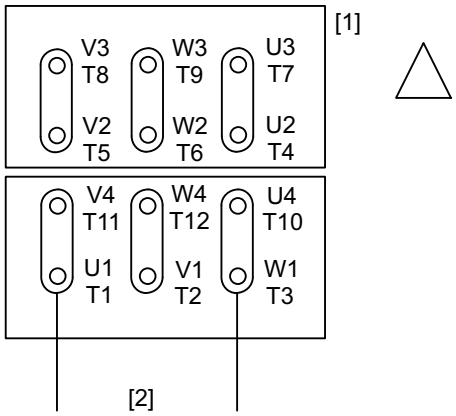

2343045259

[1] Motor terminal boards [2] Transformer

Connection with wiring diagram R76:

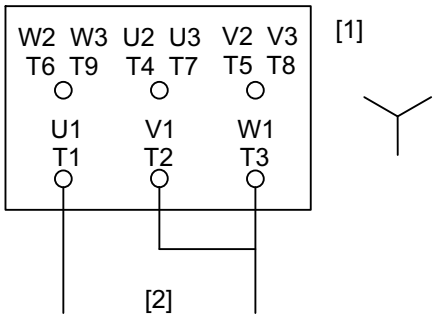

2343047179

[1] Motor terminal boards [2] Transformer

The drying process is finished when the minimum insulation resistance has been exceeded.

Check terminal box for the following:

- The inside is clean and dry
- The connections and fixing parts are free from corrosion
- The gasket and sealing surfaces are in good condition
- The cable glands are tight, otherwise clean or replace them
- Using an isolation transformer
  - Connect the windings in series (see following figures)
  - Auxiliary AC voltage supply max. 10% of the nominal voltage with max. 20% of the rated current

4.3 Motor installation notes



⚠ CAUTION

Sharp edges due to open keyway.

Minor injuries.

- Insert key in keyway.
- Pull protective sleeve over shaft.

NOTICE

Improper assembly may damage the drive and corresponding components.

Possible damage to property.

- Observe the following notes.

- Motor shaft ends must be thoroughly cleaned of anti-corrosion agents, contamination or similar (use a commercially available solvent). Do not allow the solvent to penetrate the bearings or sealing rings – this could damage the material.
- Only install the gearmotor in the specified mounting position on a level, vibration-free and torsionally rigid support structure.
- Align the motor and the driven machine carefully in order to prevent the output shaft from being exposed to unacceptable strain. Observe the permitted overhung and axial forces.
- Do not jolt or hammer the shaft end.
- Use an appropriate cover, e.g. motor option /C "Canopy", to prevent objects or fluids entering motors in vertical mounting positions (M4/V1).
- Check that there is sufficient clearance around the motor to provide for adequate cooling air supply, and that the motor does not suck in warm air from other devices.
- Balance components for subsequent mounting on the shaft with a half key (motor shafts are balanced with a half key).
- **Existing condensation drain holes are sealed with closing plugs. If contaminated, the condensation drain holes must be checked for proper functioning on a regular basis and cleaned if required.**
- If using brakemotors with manual brake release, screw in either the hand lever (with self-reengaging manual brake release) or the set screw (with lockable manual brake release).
- Protect shaft again against corrosion, if necessary.

INFORMATION



DR..: To mount motors with a foot made of aluminum, you have to use washers with at least twice the bolt diameter. Use bolts of strength class 8.8. Do not exceed the tightening torque according to VDI 2230-1.

DRN..: To mount motors with a foot made of aluminum, you have to use washers with an outer diameter that is at least twice the bolt diameter (e.g. DIN EN ISO 7090). Use bolts of strength class 8.8 up to max. 10.9. Tightening torque according to VDI 2230-1. The maximum bolt length for DRN80 – 90 = M8×20, for DRN100 – 132S = M10×25.

21927189/EN – 07/2015

4.3.1 Installation in damp locations or outdoors

- Use suitable cable glands for the incoming cable (use reducing adapters if necessary) according to the installation instructions.
- If possible, arrange the terminal box in such a way that the cable entries are pointing downwards.
- Seal the cable entry properly.
- Clean the sealing surfaces of the terminal box and the terminal box cover carefully before re-assembly; replace embrittled gaskets.
- If required, touch up the corrosion protection (especially at the eyebolts).
- Check the degree of protection.
- Protect the shaft against corrosion using a suitable anti-corrosion agent.

4.4 Installation tolerances

Shaft end	Flanges
Diameter tolerance according to EN 50347 • ISO j6 with Ø ≤ 28 mm • ISO k6 with Ø ≥ 38 mm up to ≤ 48 mm • ISO m6 at Ø ≥ 55 mm • Center bore in accordance with DIN 332, shape DR..	Centering shoulder tolerance in accordance with EN 50347 • ISO j6 with Ø ≤ 250 mm • ISO h6 with Ø ≥ 300 mm

4.5 Assembling the input elements

Drive components that are installed on the motor shaft end, e.g. pinions, must be warmed up prior to assembly in order to prevent damage, e.g. to the encoder of standalone motors.

21927189/EN – 07/2015

4.6 HR/HF manual brake release

4.6.1 HF manual brake release

You can use the optional lockable HF manual brake release to continuously mechanically release the BE.. brake with a set screw and a releasing lever.

On delivery, the set screw is inserted far enough to not fall out and to not affect the brake performance. The set screw is self-locking with a nylon coat in order to prevent it from unintended further penetration or from falling out.

Proceed as follows to activate the lockable HF manual brake release:

- Screw in the set screw until there is no more clearance at the releasing lever. Additionally, screw in the set screw by another 1/4 or 1/2 revolution in order to manually release the brake.

Proceed as follows to loosen the lockable HF manual brake release:

- Loosen the set screw at least until the floating clearance (see chapter Retrofitting HR/HF manual brake release (→ 🗎 33)) of the manual brake release has completely returned.

⚠ WARNING



Lacking functionality of the manual brake release due to improper brake installation, e.g. set screw inserted too far.

Severe or fatal injuries.

- Only qualified staff may perform work on the brake.
- Check the brake for proper function prior to startup.

21927189/EN – 07/2015

4.6.2 Retrofitting HR/HF manual brake release



⚠ WARNING

Risk of crushing if the drive starts up unintentionally.

Severe or fatal injuries.

- Isolate the motor, brake, and forced cooling fan, if installed, from the power supply before starting work, safeguarding them against unintentional re-start.
- Carefully observe the steps described below.

1. Remove the following:
   - Forced cooling fan and incremental encoder (if installed)

     See chapter "Motor and brake maintenance – preliminary work" (→ 🗎 103).
   - Fan guard or fan guard with encoder mounting [35], retaining ring [32] and fan [36]
2. Installing manual brake release:
   - **For BE05 – BE11:**
   – Remove the sealing ring [95]
   – Screw in and glue studs [56], insert sealing ring for manual brake release [95] and hammer in parallel pin [59].
   – Mount releasing lever [53], conical springs [57] and adjusting nuts [58].
   - **For B20 – BE122:**
   – Screw in studs [56].
   – Mount releasing lever [53], conical springs [57] and adjusting nuts [58].
3. Use setting nuts to set the floating clearance "s" between the conical coil springs (pressed flat) and the setting nuts (see the following figure).

   The floating clearance "s" is necessary so that the pressure plate can move up as the brake lining wears. Otherwise, reliable braking is not guaranteed.

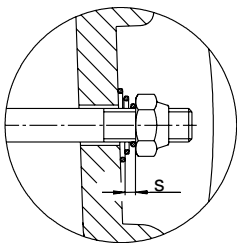

177241867

Brake	Floating clearance s mm
BE05, BE1, BE2,	1.5
BE5	1.7
BE11, BE20, BE30, BE32, BE 60, BE62, BE120, BE122	2

4. Reinstall the removed parts.

4.7 Non-SEW encoder mounting

If a drive was ordered with a non-SEW encoder, SEW-EURODRIVE will deliver the drive with a coupling included. For operation without a non-SEW encoder, the coupling must not be mounted.

4.8 Mounting the XV.. encoder mounting adapter for DR..71 – 225, DRN80 – 225

If you have ordered the XV.. encoder mounting adapter, the adapter and the coupling are enclosed with the motor and are to be assembled by the customer.

The following figure shows how to assemble the coupling and the adapter:

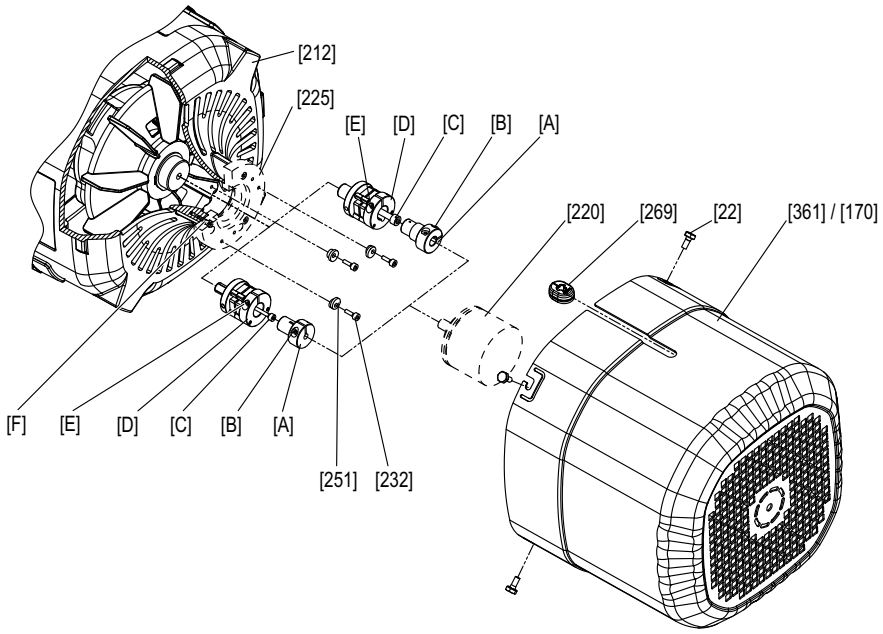

3633163787

[22]	Screw	[361]	Extended fan guard
[170]	Forced cooling fan guard	[269]	Grommet
[212]	Fan guard with encoder mount	[A]	Adapter
[220]	Encoder	[B]	Retaining screw
[225]	Intermediate flange (not with XV1A)	[C]	Central retaining screw
[232]	Screws (only with XV1A and XV2A)	[D]	Coupling (spread- or solid shaft coupling)
[251]	Conical spring washers (only with XV1A and XV2A)	[E]	Retaining screw
		[F]	Screw

1. If available, remove extended fan guard [361] or forced cooling fan guard [170].
2. **For XV2A and XV4A:** Remove intermediate flange [225].
3. Screw in the coupling [D] into the encoder bore of the motor shaft with the screw [C].

   DR..71 – 132, DRN80 – 132S: Tighten the screw [C] with a tightening torque of 3 Nm.

   DR..160 – 225, DRN132M – 225: Tighten the screw [C] with a tightening torque of 8 Nm.
4. Push the adapter [A] on the encoder [220] and tighten it with the retaining screw [B] with a tightening torque of 3 Nm.

21927189/EN – 07/2015

5. **For XV2A and XV4A:** Mount the intermediate flange [225] with the screw [F] with a tightening torque of 3 Nm.
6. Push the encoder and the adapter on the coupling [D] and tighten the retaining screw [E] with a tightening torque of 3 Nm.
7. **With XV1A and XV2A:** Arrange conical spring washers [251] with retaining screws [232] and place in annular groove of the encoder [220] and tighten with a tightening torque of 3 Nm.
8. **For XV3A and XV4A:** Installation by the customer via the bores in the encoder plate.

21927189/EN – 07/2015

4.9 Mounting the encoder to the EV../AV mounting adapter to DR..250 – 280, DRN250 – 280 motors

If you have ordered the EV../AV.. encoder mounting adapter, the coupling is enclosed with the motor and must be installed by the customer.

The following figure shows an example of how the coupling is installed:

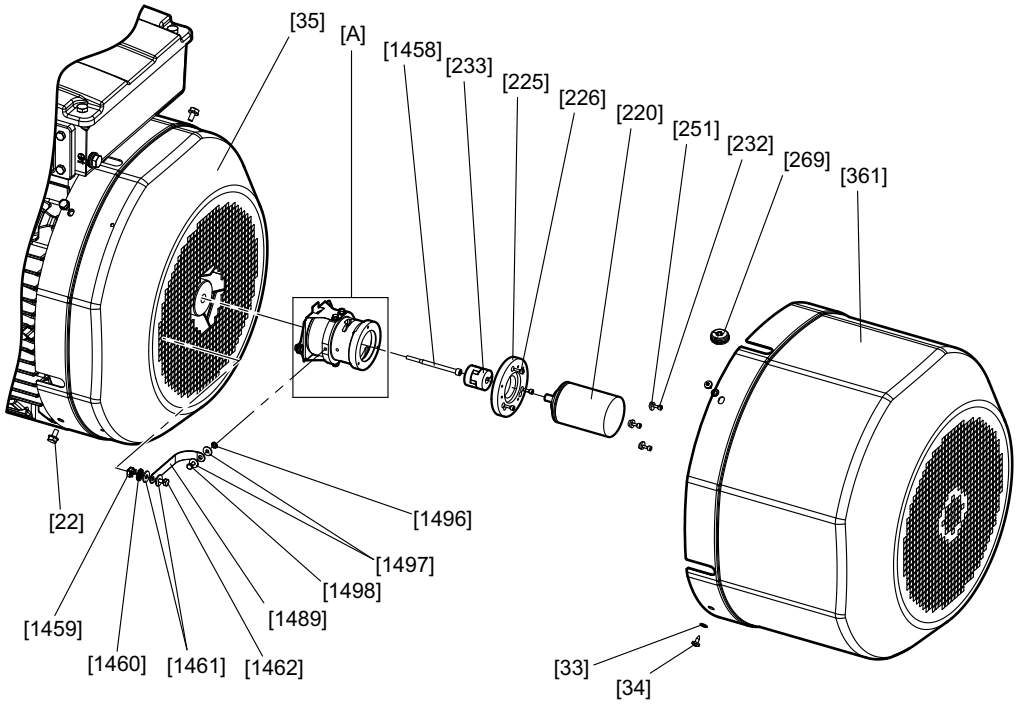

9007206970704907

[22]	Screw	[361]	Extended fan guard (normal/long)
[33]	Washer	[1458]	Screw
[34]	Screw	[1459]	Cage nut
[35]	Fan guard	[1460]	Serrated lock washer
[220]	Encoder	[1461]	Washer
[225]	Intermediate flange (optional)	[1462]	Screw
[226]	Screw	[1489]	Ground strap
[232]	Screws (enclosed with .V1A and .V2A)	[1496]	Serrated lock washer
[233]	Coupling	[1497]	Washer
[251]	Conical spring washers (enclosed with .V1A and .V2A)	[1498]	Screw
[269]	Grommet	[A]	Encoder mounting adapter

1. Remove extended fan guard [361], if installed. Loosen screws [34].
   - **With /V forced cooling fan option:** Remove forced cooling fan guard [170]. Loosen screws [22].
2. Push the coupling [233] with diameter 14 mm onto the pin of the encoder mounting adapter [A]. Tighten the screw of the coupling clamping hub [233] with 3 Nm through the slots in the encoder mounting adapter [A].
3. **With option EV2/3/4/5/7A, AV2/3/4/5/7A**: Mount the intermediate flange [225] to the encoder mounting adapter [A] with screws [226]. The tightening torque must be 3 Nm.
4. Mount the conical spring washers [251] to the encoder mounting adapter [A] with screws [232]. Do not tighten the screws [232] yet.

21927189/EN – 07/2015

5. Mount the encoder [220] to the encoder mounting adapter [A] or intermediate flange [225]. Insert the encoder shaft [220] into the coupling [233]. Insert the conical spring washers into the socket of the encoder [220] and tighten the screws [232] with 3 Nm. Tighten the screw of the coupling clamping hub [233] on the encoder end with 3 Nm.
6. Pull the cable of the encoder [220] through the cable grommet [269]. Insert the cable grommet [269] into the extended fan guard [361].
   - **With /V forced cooling fan option:** Insert the cable grommet into the forced cooling fan guard [170].
7. Mount the extended fan guard to the fan guard with screws [34] and washers [33].
   - **With /V forced cooling fan option:** Mount the forced cooling fan guard [170] with screws [22].

4.9.1 XH.. encoder mounting adapters

The XH1A, XH7A and XH8A encoder mounting adapters for hollow shaft encoders are premounted on delivery.

Proceed according to chapter "Motor and brake maintenance – preliminary work" (→ 🗎 103) to mount the encoder.

4.10 Terminal box

4.10.1 Turning the terminal box

The following figure shows the structure of the terminal box design with terminal board:

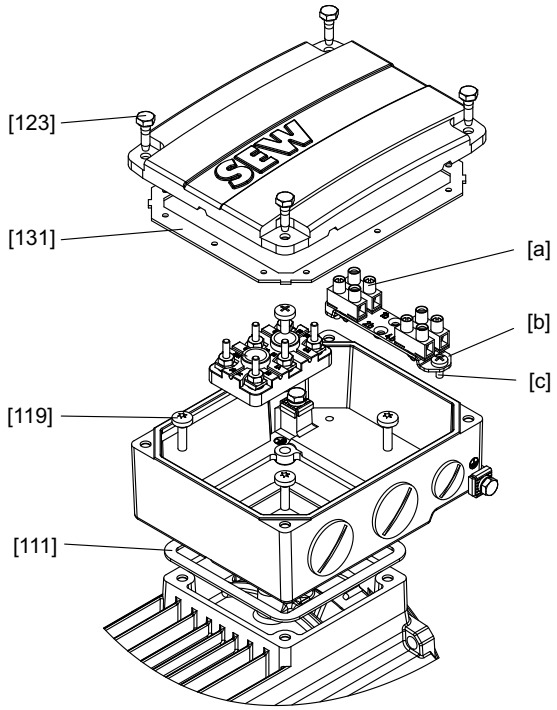

7362206987

[111] Seal
[119] Terminal box retaining screws (4 x)
[123] Terminal box cover retaining screws (4 x)
[131] Seal
[a] Terminal
[b] Auxiliary terminal retaining screws (2 x)
[c] Retaining plate

Proceed as follows to turn the terminal box:

1. Loosen the screws [123] from the terminal box cover and remove the cover.
2. Remove the terminals [a], if available.
3. Unscrew the retaining screws [119] of the terminal box.
4. Clean the sealing surfaces at the stator shoulder as well as at the lower part and the cover of the terminal box.
5. Check the gaskets [111 and 131] for damage and replace them if necessary.
6. Position the terminal box as desired. Refer to the appendix for the arrangement of the auxiliary terminals.
7. Tighten the screws of the lower part of the terminal box with the following tightening torques:
   - **DR..71 – 132, DRN80 – 132S:** 5 Nm
   - **DR..160 – 225, DRN132M – 225:** 25.5 Nm

   Do not forget the retaining plate [c] if available.
8. Tighten the screws of the terminal box cover with the following tightening torques:
   - **DR..71 – 132, DRN80 – 132S:** 4 Nm

21927189/EN – 07/2015

- **DR..160, DRN132M/L:** 10.3 Nm
- **DR..180 – 225, DRN160 – 225 (aluminum design):** 10.3 Nm
- **DR..180 – 225, DRN160 – 225 (gray cast iron design):** 25.5 Nm

Make sure the gasket is seated properly.

4.10.2 Terminal box with NPT thread

In terminal boxes with NPT thread, cable glands cannot always be screwed in all the way (up to the O-ring).

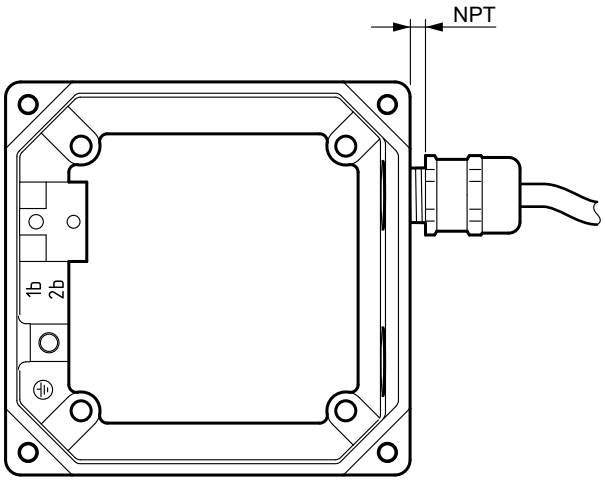

14949925387

SEW-EURODRIVE recommends to seal the screw fitting with Teflon tape or Loctite®.

4.11 Retrofitting (option /F.A) or modifying (option /F.B) motor feet

The following figure shows a DR..280 motor with option /F.A (retrofit feet).

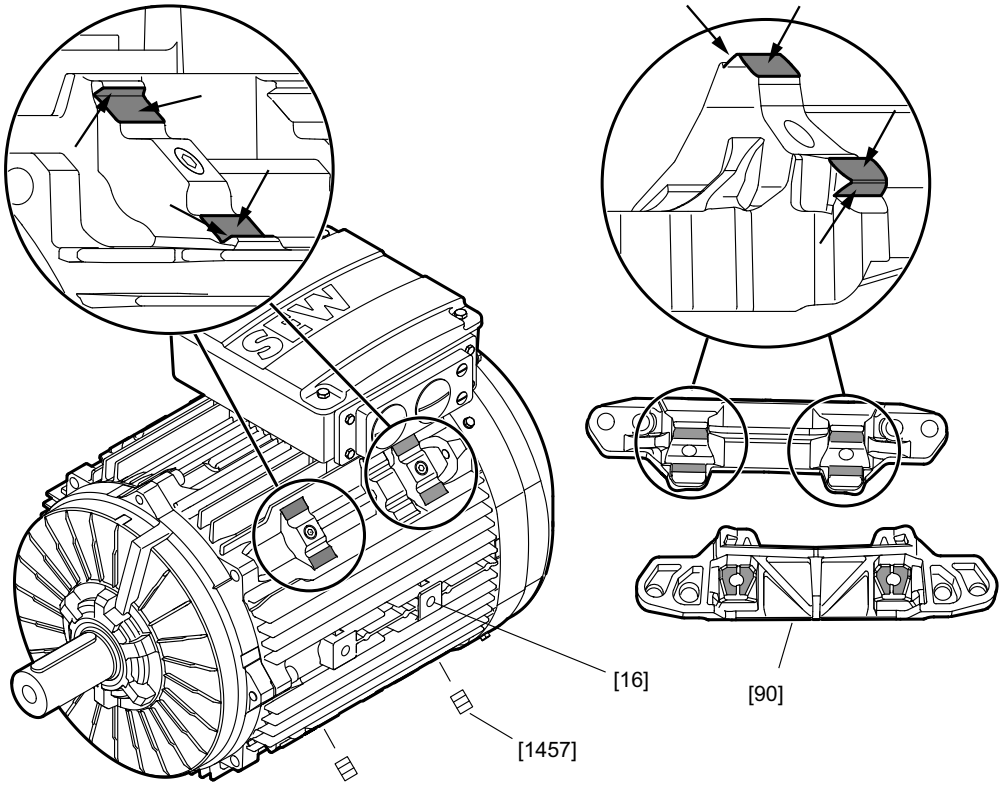

18014406536422539

[16] Stator
[90] Foot
[1457] Set screw
Remove paint from marked surfaces

The tapped holes of the foot mounting surfaces are closed with set screws [1457]. The contact surfaces at the feet [90] and stator [16] are painted.

1. Remove the set screws [1457]. Only remove the set screws from those threads into which you will screw the foot screws [94]. For DR..250/280, DRN250/280, 4 set screws, for DRN315, 6 set screws.
2. Remove the paint from the contact surfaces of the stator [16] (see marking in the "Example illustration of DR..280" above). For DR..250/280. DRN250/280, there are 8 surfaces, for DRN315, 12 there are 12. SEW-EURODRIVE recommends to use a chisel or flat scraper for this purpose. Remove the paint only from those surfaces to which the feet will be mounted. Refer to the illustration "Terminal box positions" below for selecting the contact surfaces. A thin layer of corrosion protection agent can be applied to the contact surfaces

21927189/EN – 07/2015

once the paint has been removed.
Possible terminal box positions are illustrated below:

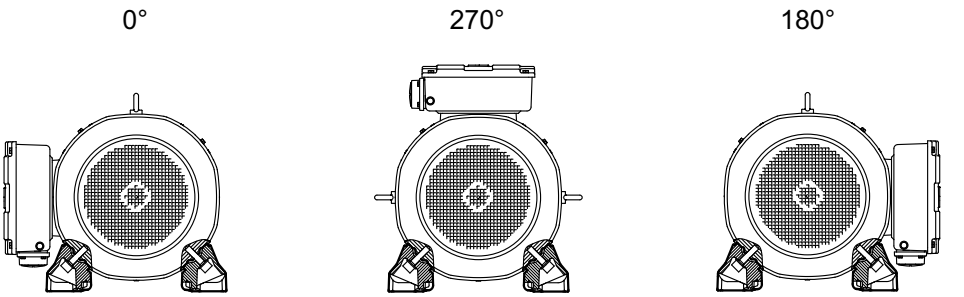

9007211165643403

3. Remove the paint from the contact surfaces of the feet [90] (see marking in the "Example illustration of DR..280" above). SEW-EURODRIVE recommends to use a chisel or flat scraper for this purpose. A thin corrosion protection agent can be applied to the contact surfaces once the paint has been removed.
4. Attach the feet [90] to the motor using the screws [94] and washers [93]. The tightening torque for the screws [94] must be 410 Nm. The screws are microencapsulated. This is why you have to screw in and tighten the screws quickly.
5. If necessary, you can apply paint or corrosion protection at the joint after attaching the feet [90].

4.11.1 Changing the position of the motor feet

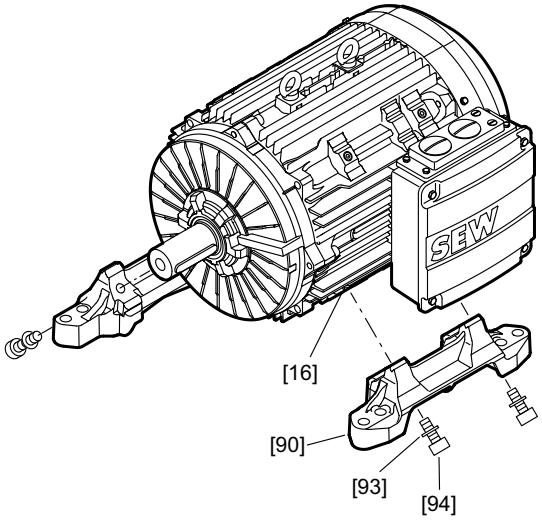

7741968395

[16] Stator
[90] Foot
[93] Washer
[94] Screw

When re-installing the feet in another position, observe the following:

- After removing the screws [94], check them for damage, e.g. to the thread.
- Remove the used microencapsulation.
- Clean the thread of the screws [94].
- Apply a high-strength thread locker to the screw threads [94] before inserting the screws again.
- The set screws removed from the new mounting position can be reused for the bores of the old mounting position. After inserting the set screw [1457] into the open tapped holes in the stator [16], paint or corrosion protection can be applied on the bare joining surfaces.

21927189/EN – 07/2015

4.12 Options

4.12.1 Air filter LF

The air filter, a kind of fleece mat, is mounted in front of the fan grille. It can be easily removed and mounted again for cleaning purposes.

The air filter avoids that dust and other particles drawn in by the air are distributed. It also prevents the ducts between the cooling fins from becoming clogged with dust.

In very dusty environments, the air filter protects the cooling fins from dirt or from becoming clogged.

The air filter must be cleaned or replaced depending on the amount of dust in the environment. No maintenance intervals can be specified due to the individuality of each drive and the environment where it is installed.

Technical data	Air filter
Certifications	All certifications
Ambient temperature	-40 °C to +100 °C
Suitable for the following motor sizes:	DR.71 – 132
Filter material	Viledon PSB290SG4 fleece

21927189/EN – 07/2015

4.12.2 Mounting adapter for measuring nipple

Depending on the respective order specifications, SEW-EURODRIVE delivers the drives as follows:

- with bore
- with bore and enclosed measuring nipples

The following figure shows a motor with bores and inserted measuring nipples [1]:

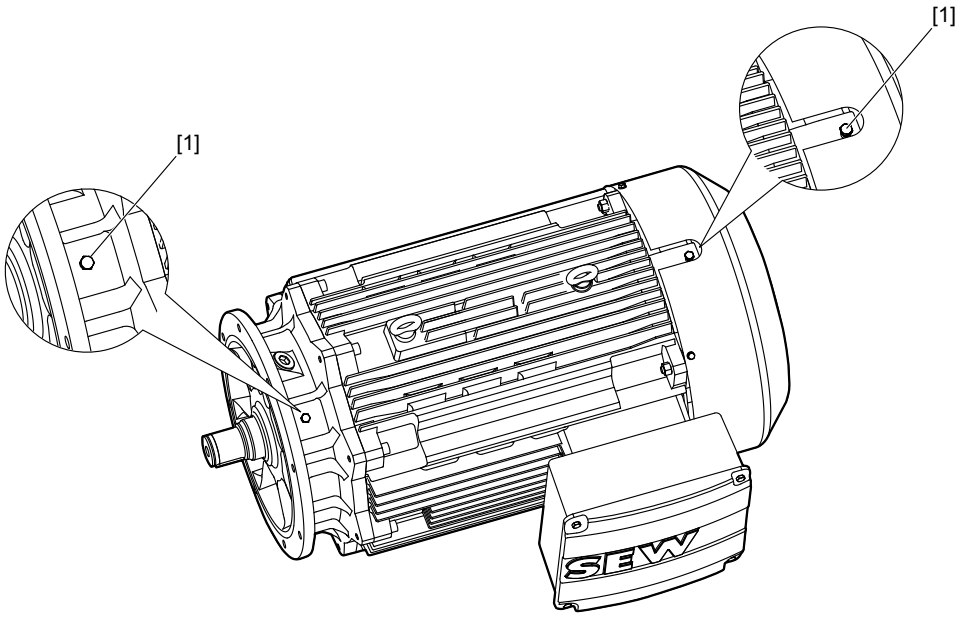

9007201960947467

[1] Bore with inserted measuring nipples

Proceed as follows to connect the customer measuring device:

- Remove the protective plugs from the bores.
- Insert the measuring nipple in the bores of the motor and screw in the measuring nipple with a tightening torque of 15 Nm.
- Plug the mounting adapter of the measuring unit into the measuring nipple.

21927189/EN – 07/2015

4.12.3 2nd shaft end with optional cover

SEW-EURODRIVE supplies the optional equipment "2nd shaft end" with inserted key (additional protection by means of a tape). As standard, no cover is supplied. It can be ordered optionally for sizes DR.71 – 280, DRN80 – 280.

INFORMATION

The motor must only be operated with a suitably secured key.

The following figure shows the dimensions of the covers:

Standard for DR..71 – 132, DRN80 – 132S, DR..250/280, DRN250/280

Optional for DR..160 – 225, DRN132M – 225

Standard for DR..160 – 225, DRN132M – 225M

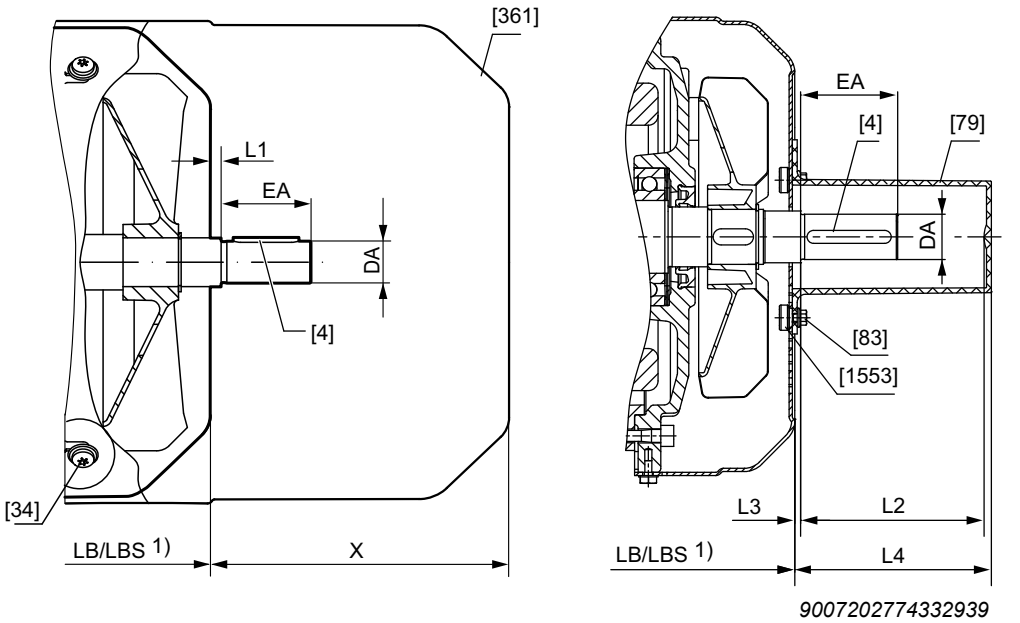

[4]	Keyway	[361]	Extended fan guard
[34]	Tapping screw	[1553]	Cage nut
[79]	Protective cap	LB/LBS	Length of the motor/brakemotor
[83]	Hex head screw	1)	Refer to the "AC Motors" catalog for dimensions

Dimensions

Motor size		DA	EA	L1	L2	L3	L4	X
DR..	DRN..							
DR..71	–	11	23	2	–	2	–	91.5
DR..71 /BE	–				–		–	88
DR..80	DRN..80	14	30	2	–	2	–	95.5
DR..80 /BE	DRN..80 /BE				–		–	94.5
DR..90	DRN..90	14	30	2	–	2	–	88.5
DR..90 /BE	DRN..90 /BE				–		–	81
DR..100	DRN..100	14	30	2	–	2	–	87.5
DR..100 /BE	DRN..100 /BE				–		–	81
DR..112 – 132	DRN..112 – 132S	19	40	3.5	–	3.5	–	125
DR..112 – 132 /BE	DRN..112 – 132S /BE				–		–	120.5
DR..160	DRN..132M/L	28	60	4	122	3.5	124	193
DR..160 /BE	DRN..132M/L /BE							187
DR..180	DRN..160 – 180	38	80	4	122	3.5	122	233
DR..180 /BE	DRN..160 – 180 /BE							236
DR..200 – 225	DRN..200 – 225	48	110	5	122	5	122	230
DR..200 – 225 /BE	DRN..200 – 225 /BE							246
DR..250/280	DRN..250/280	55	110	3	–	3	–	243.5
DR..250/280 /BE	DRN..250/280 /BE							

21927189/EN – 07/2015

5 Electrical installation

If the motor includes safety-relevant components, observe the following safety note:



⚠ WARNING

Disabling functional safety devices.

Severe or fatal injuries.

- Only qualified personnel is allowed to carry out work on functional safety components.
- Any work on functional safety components must be carried out strictly in accordance with the specifications in the operating instructions at hand and the respective addendum to the operating instructions. Else, the right to claim under warranty will become invalid.



⚠ WARNING

Risk of injury due to electric shock.

Severe or fatal injuries.

- Observe the following notes.

- It is essential to comply with the safety notes in chapter 2 during installation!
- Switch contacts in utilization category AC-3 to EN 60947-4-1 must be used for switching the motor and the brake.
- Use switch contacts in utilization category DC-3 according to EN 60947-4-1 for switching the brake with DC 24 V.
- When motors are powered by inverters, you must adhere to the wiring instructions issued by the inverter manufacturer.
- Observe the operating instructions of the inverter.

5.1 Additional regulations

The generally applicable installation regulations for low-voltage electric equipment (such as DIN IEC 60364, DIN EN 50110) must be complied with when setting up electrical machinery.

5.2 Wiring diagrams and terminal assignment diagrams

Connect the motor only as shown in the wiring diagram(s) included with the motor. Do not connect or start up the motor if the wiring diagram is missing. The applicable wiring diagrams are available from SEW-EURODRIVE free of charge.

21927189/EN – 07/2015

5.3 Wiring notes

Adhere to the safety notes during installation.

5.3.1 Protecting the brake control system against interference

Brake cables must always be routed separately from other unshielded power cables with phased currents to prevent interference with brake control. In particular, power cables with phased currents include:

- Output cables from frequency inverters and servo inverters, soft-start units and brake units
- Incoming cables for braking resistors and similar options

For line-operated motors and when using AC and DC circuit cut-off, the connection between the brake rectifier and the external switch contact must be in a different power cable that is separate from the motor power supply.

5.3.2 Protecting the motor protection devices against interference

Adhere to the following points to protect SEW motor protection devices (TF temperature sensors) against interference:

- You may route separately shielded supply cables together with switched-mode power cables in one cable.
- Do not route unshielded supply cables together with switched-mode power lines in one cable.

5.4 Special aspects for operation with a frequency inverter

When motors are powered from inverters, you must observe the wiring instructions issued by the inverter manufacturer. You must also observe the operating instructions for the frequency inverter.

5.4.1 Motors with frequency inverters from SEW-EURODRIVE

We have tested operation of the motor on SEW-EURODRIVE frequency inverters. The required electric strength values of the motors were confirmed and the startup routines adjusted to the motor data. You can operate the DR../DRN.. motor with any frequency inverter from SEW-EURODRIVE. To do this, start up the motor as described in the operating instructions for the frequency inverter.

21927189/EN – 07/2015

5.4.2 Motor with non-SEW inverter

Operating SEW-EURODRIVE motors on non-SEW frequency inverters is permitted if the pulse voltages at the motor terminals indicated in the following figure are not exceeded.

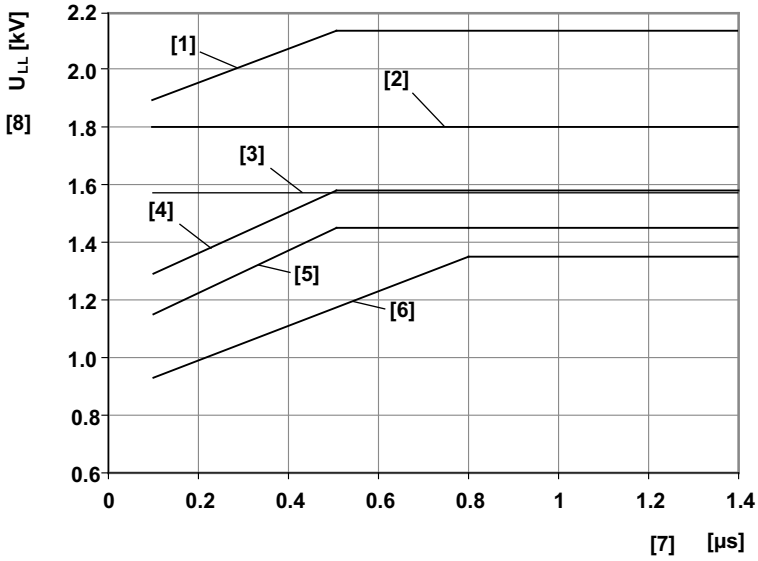

9007203235332235

[1] Permitted pulse voltage for DR.., DRN.. AC motors with reinforced insulation and increased resistance against partial discharge (/RI2)

[2] Permitted pulse voltage for DR.., DRN.. AC motors with reinforced insulation (/RI)

[3] Permitted pulse voltage according to NEMA MG1 part 31, $V_N \leq 500$ V

[4] Permitted pulse voltage according to IEC 60034-25, limit value curve A for nominal voltage $V_N \leq 500$ V, star connection

[5] Permitted pulse voltage according to IEC 60034-25, limit value curve A for nominal voltage $V_N \leq 500$ V, delta connection

[6] Permitted pulse voltage according to IEC 60034-17

[7] Voltage rise time

[8] Permitted pulse voltage

The insulation class depends on the voltage.

- ≤ 500 V = standard insulation
- ≤ 600 V = /RI
- > 600 V – 690 V = /RI2

21927189/EN – 07/2015

INFORMATION

Compliance with the following limit values must be checked and considered:

- The supply voltage level at the non-SEW inverter
- The threshold of the brake chopper voltage
- The operating mode of the motor (motoring/regenerative operation)

→ If the permitted pulse voltage is exceeded, you must install limiting measures, such as filters, chokes or special motor cables. Consult the manufacturer of the frequency inverter.

21927189/EN – 07/2015

5.5 Exterior grounding at the terminal box, LF grounding

In addition to the interior PE connection, a LF grounding cable can be attached to the outside of the terminal box. LF grounding is not installed as standard.

LF grounding can be ordered as completely pre-installed at the factory. For this an aluminum or gray cast iron terminal box designed for brake connections is required for DR..71 – 132, DRN80 – 132S motors. For DR..160 – 225 motors, DRN132M – 225, this option can be combined with all terminal box types.

The option can be combined with HF grounding (→ 🗎 52).

INFORMATION

All parts of the LF grounding kit are made from stainless steel.

DR..71 – 132, DRN80 – 132S

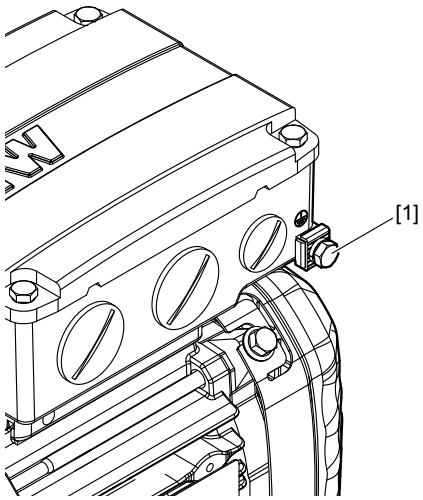

8024328587

[1] LF grounding at the terminal box

DR..160 – 225, DRN132M – 225

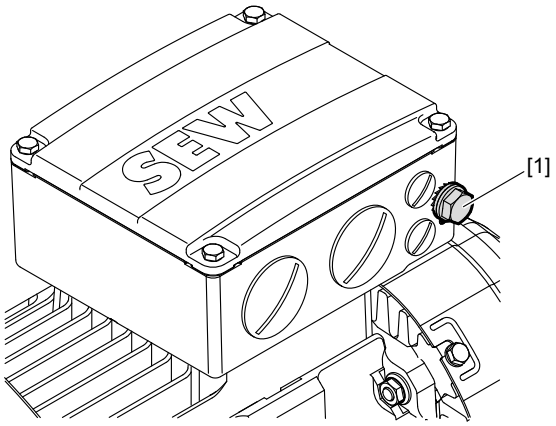

8026938379

[1] LF grounding at the terminal box

5.6 Improving the grounding (EMC), HF grounding

For improved, low-impedance grounding at high frequencies, we recommend using the following connections: SEW-EURODRIVE recommends to use corrosion-resistant connection elements.

HF grounding is not installed as standard.

The HF grounding option can be combined with LF grounding at the terminal box.

If you require LF grounding in addition to HF grounding, you can connect the conductor to the same point.

The HF grounding option can be ordered as follows:

- Completely pre-installed at the factory, or as
- "Grounding terminal" kit for customer installation; part numbers listed in the following table.

Motor size	Part number of "Grounding terminal" kit
DR..71S/M DR..80S/M, DRN80	1363 3953
DR..90M/L, DRN90	
DR..100M, DRN100LS	
DR..100L – 132, DRN100L – 132S	1363 3945
DR..160 – 225, DRN132M – 225 With aluminum terminal box	

INFORMATION

All parts of the kit are made from stainless steel.

INFORMATION

For further information regarding the grounding, refer to the SEW publication "Drive Engineering – Practical Implementation, EMC in Drive Engineering".

INFORMATION

If 2 or more ground straps are used, you have to attach them with a longer screw. The specified tightening torques refer to a strap thickness of t ≤ 3 mm.

21927189/EN – 07/2015

5.6.1 Sizes DR..71S/M, DR..80S/M and DRN80 with HF(+LF) grounding

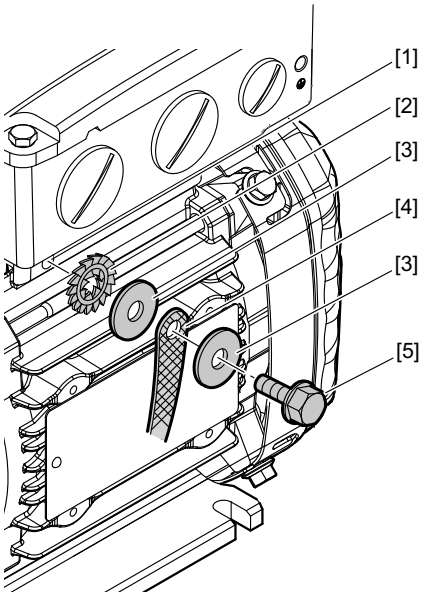

8026768011

[1] Use of the pre-cast bore at the stator housing
[2] Serrated lock washer
[3] Washer 7093
[4] Ground strap (not included in the delivery)
[5] Self-tapping screw DIN 7500 M6 × 16, tightening torque 10 Nm

5.6.2 Sizes DR..90M/L, DRN90 with HF(+LF) grounding

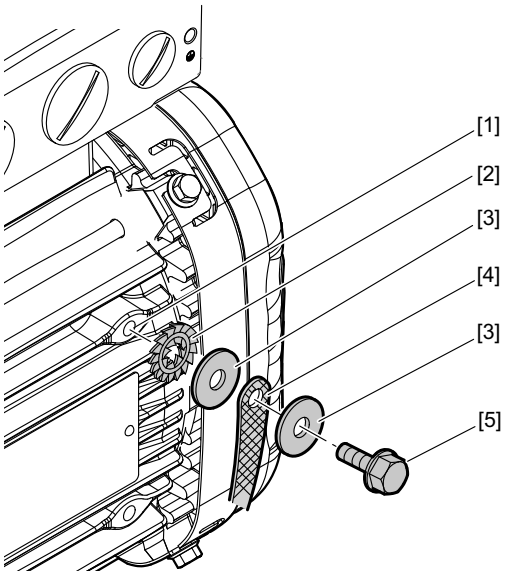

8026773131

[1] Use of the pre-cast bore at the stator housing
[2] Serrated lock washer
[3] Washer 7093
[4] Ground strap (not included in the delivery)
[5] Self-tapping screw DIN 7500 M6 × 16, tightening torque 10 Nm

5.6.3 Size DR..100M, DRN100LS with HF(+LF) grounding

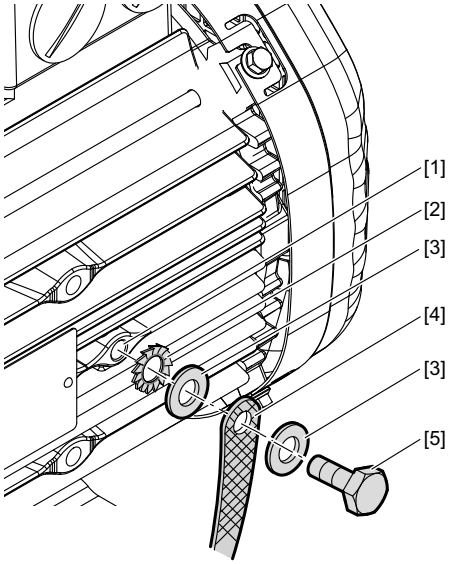

18014402064551947

[1] Use of the pre-cast bore at the stator housing
[2] Serrated lock washer
[3] Washer 7093
[4] Ground strap (not included in the delivery)
[5] Self-tapping screw DIN 7500 M6 × 16, tightening torque 10 Nm

5.6.4 Sizes DR..100L – 132, DRN100L – 132S with HF(+LF) grounding

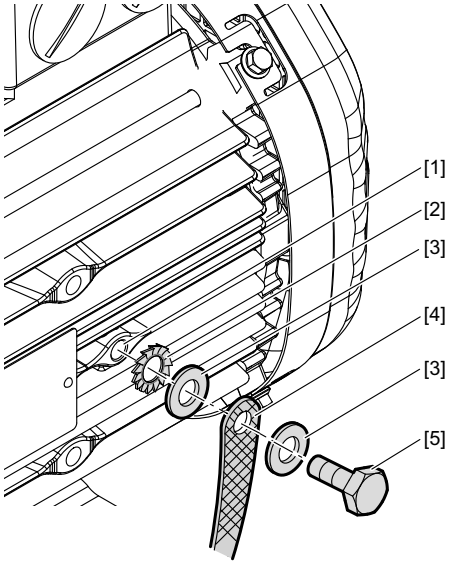

18014402064551947

[1] Use of tapped hole for lifting eyes
[2] Serrated lock washer DIN 6798
[3] Washer 7089 / 7090
[4] Ground strap (not included in the delivery)
[5] Hex head screw ISO 4017 M8 × 18, tightening torque 10 Nm

21927189/EN – 07/2015

5.6.5 Sizes DR..160 – 315, DRN132M – 315 with HF(+LF) grounding

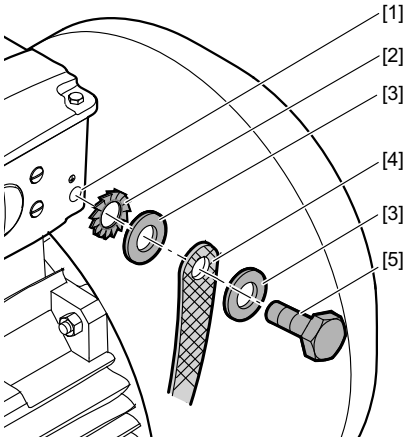

9007202821668107

[1] Use of the tapped holes at the terminal box
[2] Serrated lock washer DIN 6798
[3] Washer 7089 / 7090
[4] Ground strap (not included in the delivery)
[5]
- Hex head screw ISO 4017 M8 × 18 (with aluminum terminal boxes of size DR..160 – 225, DRN132M – 225), tightening torque 10 Nm
- Hex head screw ISO 4017 M10 × 25 (with gray cast iron terminal boxes of size DR..160 – 225, DRN132M – 225), tightening torque 10 Nm
- Hex head screw ISO 4017 M12 x 30 (terminal boxes of size DR../DRN250 – 315), tightening torque 15.5 Nm

21927189/EN – 07/2015

5.7 Special aspects in switching operation

When the motors are used in switching operation, possible interference of the switchgear must be excluded by ensuring suitable wiring. According to EN 60204 (electrical equipment of machines), motor windings must have interference suppression to protect the numerical or programmable logic controllers. As it is primarily switching operations that cause interference, SEW-EURODRIVE recommends installing protective circuit in the switching devices.

If the drive has been delivered with a suppressor circuit in the motor, you must observe the provided wiring diagram.

5.8 Special aspects of torque motors and low-speed motors

Due to the design of torque motors and low-speed motors, very high induction voltages may be generated when they are switched off. Consequently, SEW-EURODRIVE recommends using the varistor circuit shown below for protection. The size of the varistors depends, among other factors, on the starting frequency – note the project planning.

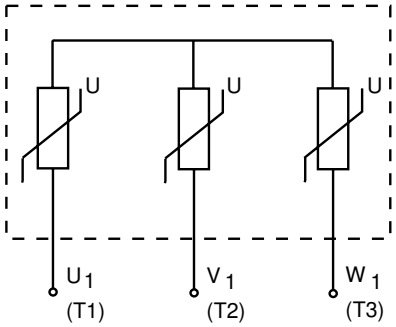

2454566155

21927189/EN – 07/2015

5.9 Special aspects of single-phase motors

Scope of delivery and motor design

DRK.. AC motors are delivered with installed running capacitor in the terminal box. Starting relay, centrifugal switch or start-up capacitor are not supplied.

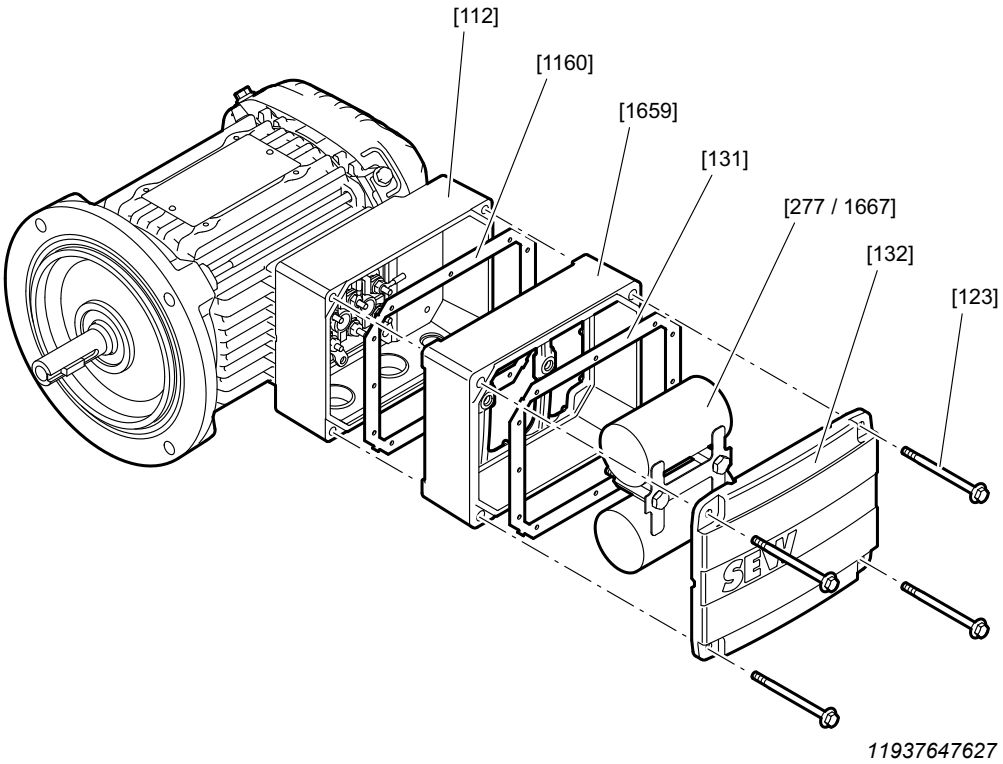

11937647627

[112]	Terminal box	[277]/[1667]	Capacitor
[1660]	Seal	[132]	Terminal box cover
[1659]	Adapter piece	[123]	Screw
[131]	Seal		

21927189/EN – 07/2015

5.9.1 Connecting the single-phase motor



⚠ WARNING

Electric shock due to charged capacitor.

Severe or fatal injuries

- After disconnection from the power supply, wait 5 seconds before opening the terminal box.

The DRK.. single-phase motor is delivered with one or two installed and connected running capacitors. The data specified in the chapter Technical Data (→ 🗎 184) apply.

INFORMATION



If a running capacitor installed by SEW-EURODRIVE must be replaced, only use capacitors with the same technical data.

INFORMATION



A full-load start using only the running capacitors is not possible.

Parts which are not supplied must be ordered from specialist retailers and must be connected according to the corresponding instructions and wiring diagrams (→ 🗎 207).

Proceed as follows during connection:

- Remove terminal box cover [132]
- Remove adapter piece [1659] with the running capacitors [277]/[1667]
- Connection according to supplied wiring diagrams.

21927189/EN – 07/2015

5.10 Ambient conditions during operation

5.10.1 Ambient temperature

The temperature range of -20 °C to +40 °C must be ensured unless specified otherwise on the nameplate. Motors approved for use in higher or lower ambient temperatures have specific designations on the nameplate.

5.10.2 Installation altitude

The rated data specified on the nameplate applies to an installation altitude of maximum 1000 m above sea level. Installation altitudes of more than 1000 m above sea level must be taken into account for project planning of motors and gearmotors.

5.10.3 Hazardous radiation

Motors must not be subjected to hazardous radiation (such as ionizing radiation). Consult SEW-EURODRIVE, if necessary.

5.10.4 Hazardous gases, vapors and dusts

The DR../DRN.. AC motors are equipped with gaskets that are suitable for the designated use.

If the motor is operated in environments with high environmental impact, such as increased ozone values, the DR../DRN.. motors can be optionally equipped with gaskets of a higher quality. If you have doubts regarding the stability of the gaskets in connection with the respective environmental impacts, consult SEW-EURODRIVE.

21927189/EN – 07/2015

5.11 Notes regarding the connection of the motor

INFORMATION

It is essential to comply with the valid wiring diagram. Do not connect or start up the motor if this wiring diagram is missing. The applicable wiring diagrams are available from SEW-EURODRIVE free of charge.

INFORMATION

The terminal box must be free from foreign objects, dirt and humidity. Unused cable entry openings and the terminal box itself must be closed so they are dust and water-proof.

Observe the following points when connecting the motor:

- Check cable cross section
- Arrange terminal links correctly
- Screw on the connections and the PE conductor correctly
- Make sure that the connection cables are not cramped to avoid damage to the cable insulation.
- Observe air gaps, see chapter "Electrical connection"
- In the terminal box: Check winding connections and tighten them if necessary
- Perform the connection in accordance with the enclosed wiring diagram
- Avoid protruding wire ends
- Connect the motor according to the prescribed direction of rotation

21927189/EN – 07/2015

5.12 Connecting the motor via terminal block

5.12.1 According to wiring diagram R13

Arrangement of terminal links with ⅄ connection

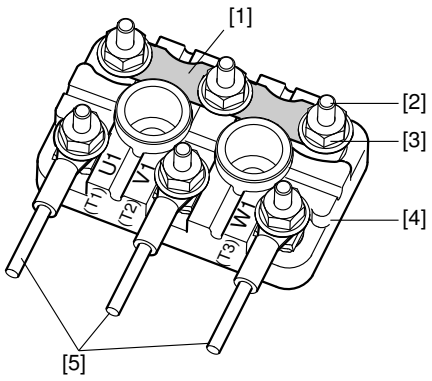

9007199493673739

Arrangement of terminal links with △ connection

Motor size DR..71 – 280, DRN80 – 280:
(Single-sided supply)

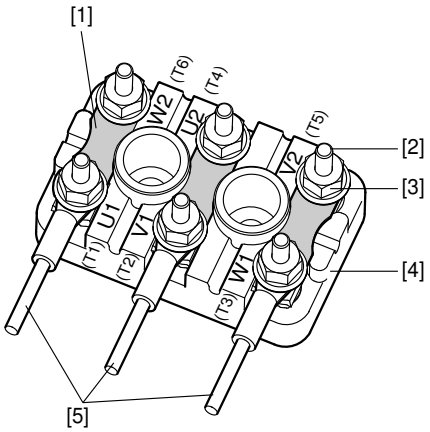

9007199493672075

Motor size DR../DRN250 – 315:
(Double-sided supply)

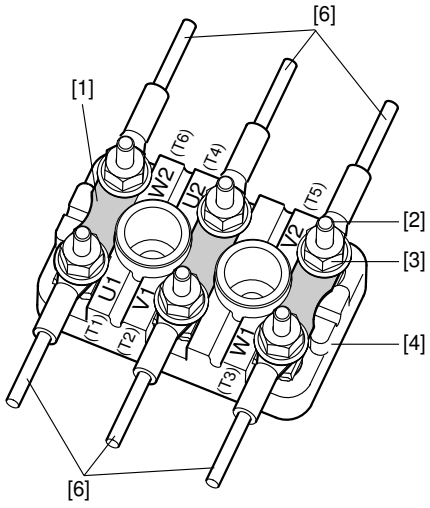

9007199734852747

[1] Terminal link
[2] Terminal stud
[3] Flange nut
[4] Terminal board
[5] Customer connection
[6] Customer connection with divided connection cable

INFORMATION

For DR../DRN250 – 315 motors, SEW-EURODRIVE recommends a double-sided supply for load currents higher than

- M12: 250 A
- M16: 315 A

5.12.2 According to wiring diagram R76

Arrangement of terminal links with ⅄ connection

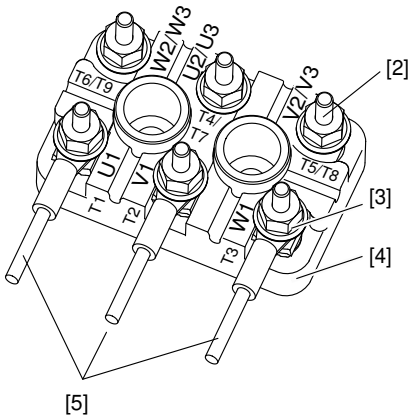

Arrangement of terminal links with ⅄⅄ connection

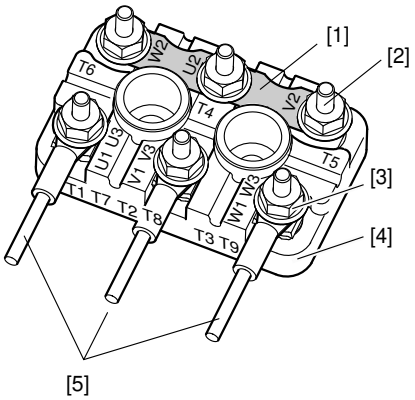

[1] Terminal link
[2] Terminal stud
[3] Flange nut
[4] Terminal board
[5] Customer connection

INFORMATION

Three winding lead ends must be rewired to change from high to low voltage:

The lines designated U3 (T7), V3 (T8) and W3 (T9) must be reconnected.

- U3 (T7) from U2 (T4) to U1 (T1)
- V3 (T8) from V2 (T5) to V1 (T2)
- W3 (T9) from W2 (T6) to W1 (T3)

→ Changing from low to high voltage is carried out in reverse order. In both cases, the customer connection is made to U1 (T1), V1 (T2) and W1 (T3). You can change the direction of rotation by interchanging 2 supply cables.

21927189/EN – 07/2015

5.12.3 According to wiring diagram R72

Arrangement of terminal links with △ connection

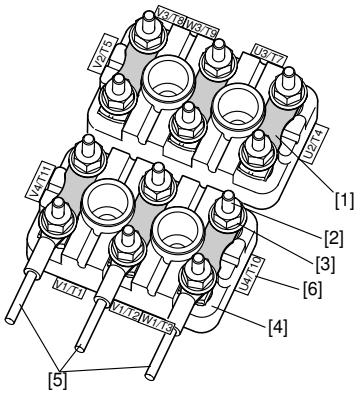

18014400828555147

21927189/EN – 07/2015

Arrangement of terminal links with △△ connection

Motor size DR..71 – 280, DRN80 – 280:
(Single-sided supply)

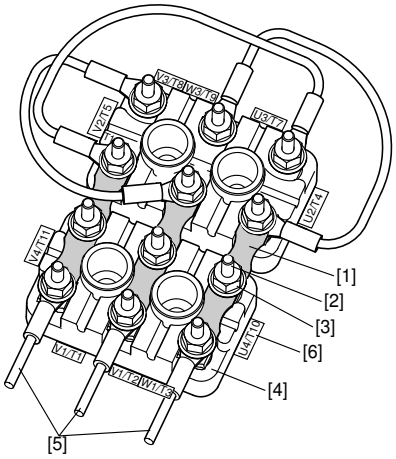

18014400845874315

Motor size DR../DRN250 – 315:
(Double-sided supply)

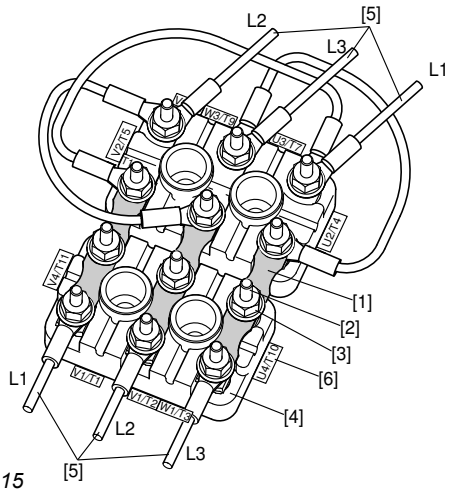

9007208157343883

[1] Terminal link
[2] Terminal stud
[3] Flange nut
[4] Terminal board
[5] Customer connection
[6] Wiring designation plate
L1 Conductor 1
L2 Conductor 2
L3 Conductor 3

INFORMATION

For DR../DRN250 – 315 motors, SEW-EURODRIVE recommends a double-sided supply for load currents higher than

- M10: 160 A

21927189/EN – 07/2015

5.12.4 Connection variants via terminal block

The motors are supplied and connected differently depending on the electrical design. Arrange the terminal links as shown in the wiring diagram and screw them on firmly. Observe the tightening torques specified in the following tables.

Motor size DR..71 – 100, DRN80 – 100							
Terminal studs	**Tightening torque hex nut**	**Connection**	**Design**	**Connection type**	**Scope of delivery**	**PE connection screw**	**PE design**
Ø		**Cross section**				**Ø**	
M4	**1.6 Nm**	**≤ 1.5 mm²**	**1a**	**Conductor end sleeve**	**Pre-assembled terminal links**	M5	4
		≤ 2.5 mm²	**1a**	**Solid wire**	**Pre-assembled terminal links**		
		≤ 6 mm²	**1b**	**Ring cable lug**	**Pre-assembled terminal links**		
		≤ 6 mm²	2	Ring cable lug	Connection accessories enclosed		
M5	2.0 Nm	≤ 2.5 mm²	1a	Solid wire Conductor end sleeve	Pre-assembled terminal links		
		≤ 16 mm²	1b	Ring cable lug	Pre-assembled terminal links		
		≤ 16 mm²	2	Ring cable lug	Connection accessories enclosed		
M6	3.0 Nm	≤ 35 mm²	3	Ring cable lug	Connection accessories enclosed		

Motor size DR..112 – 132, DRN112 – 132S							
Terminal studs	**Tightening torque hex nut**	**Customer connection**	**Design**	**Connection type**	**Scope of delivery**	**PE connection screw**	**PE design**
Ø		**Cross section**				**Ø**	
M5	**2.0 Nm**	**≤ 2.5 mm²**	**1a**	**Solid wire Conductor end sleeve**	**Pre-assembled terminal links**	M5	4
		≤ 16 mm²	**1b**	**Ring cable lug**	**Pre-assembled terminal links**		
		≤ 16 mm²	2	Ring cable lug	Connection accessories enclosed		
M6	3.0 Nm	≤ 35 mm²	3	Ring cable lug	Connection accessories enclosed		

Motor size DR..160, DRN132M/L							
Terminal stud	**Tightening torque hex nut**	**Customer connection**	**Design**	**Connection type**	**Scope of delivery**	**PE connection screw**	**PE design**
Ø		**Cross section**				**Ø**	
M6	**3.0 Nm**	**≤ 35 mm²**	**3**	**Ring cable lug**	**Connection accessories enclosed**	M8	5
M8	6.0 Nm	≤ 70 mm²	3	Ring cable lug	Connection accessories enclosed	M10	5

Motor size DR..180 – 225, DRN160 – 225							
Terminal studs	**Tightening torque hex nut**	**Customer connection**	**Design**	**Connection type**	**Scope of delivery**	**PE terminal stud**	**PE design**
Ø		**Cross section**				**Ø**	
M8	**6.0 Nm**	**≤ 70 mm²**	**3**	**Ring cable lug**	**Connection accessories enclosed**	M8	5
M10	10 Nm	≤ 95 mm²	3	Ring cable lug	Connection accessories enclosed	M10	5
M12	15.5 Nm	≤ 95 mm²	3	Ring cable lug	Connection accessories enclosed	M10	5

Motor size DR../DRN250 – 280							
Terminal studs	**Tightening torque hex nut**	**Customer connection**	**Design**	**Connection type**	**Scope of delivery**	**PE terminal stud**	**PE design**
Ø		**Cross section**				**Ø**	
M10	**10 Nm**	**≤ 95 mm²**	3	Ring cable lug	Connection accessories enclosed	M12	5
M12	**15.5 Nm**	**≤ 95 mm²**	3	Ring cable lug	Connection accessories enclosed	M12	5

Motor size DR../DRN315							
Terminal studs	**Tightening torque hex nut**	**Customer connection**	**Design**	**Connection type**	**Scope of delivery**	**PE terminal stud**	**PE design**
Ø		**Cross section**				**Ø**	
M12	**15.5 Nm**	**≤ 95 mm²**	**3**	**Ring cable lug**	**Premounted connection pieces**	M12	5
M16	**30 Nm**	**≤ 120 mm²**					

The designs in bold print apply to S1 operation for the standard voltages and standard frequencies according to the data in the catalog. Other variants may have different connections, for example, different terminal stud diameters and/or a different scope of delivery.

21927189/EN – 07/2015

Variant 1a

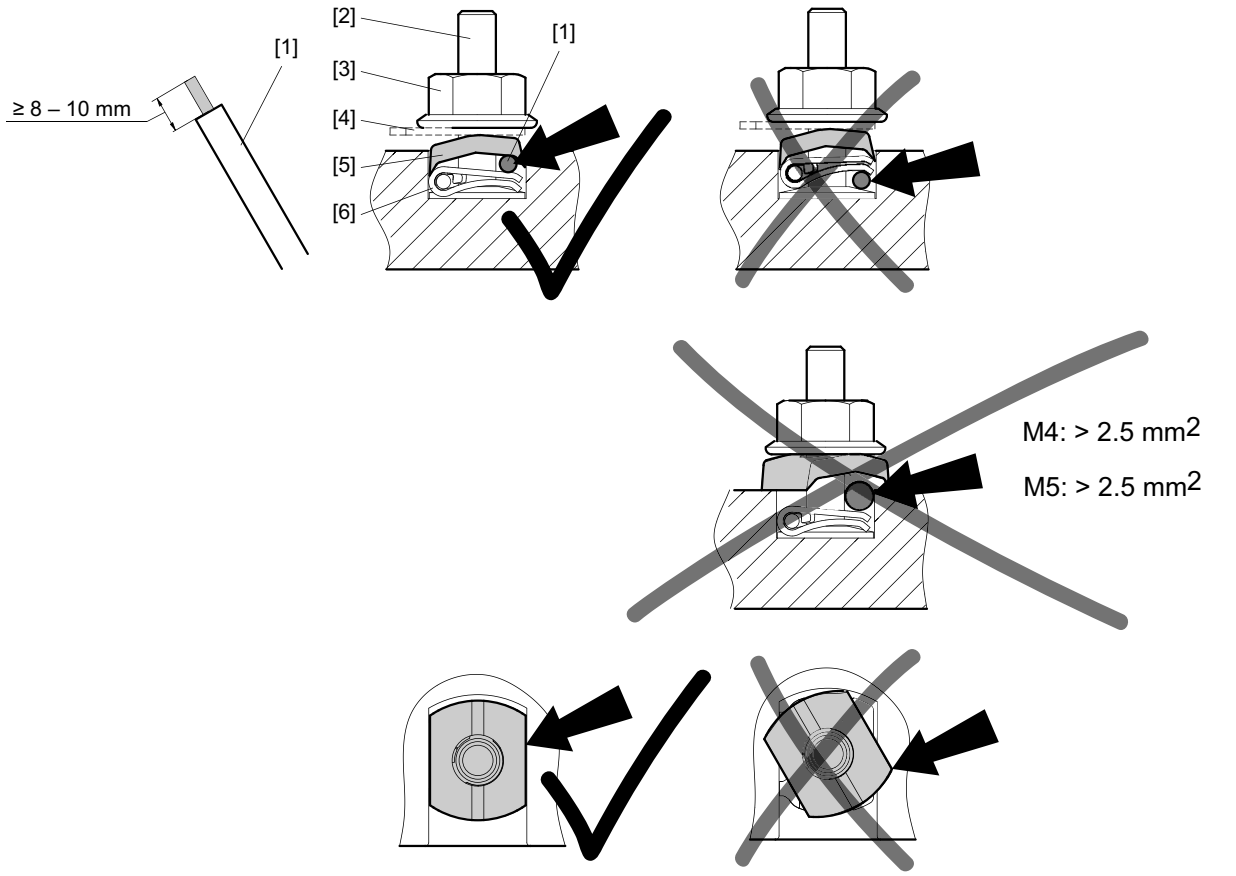

27021597853089931

[1] External connection
[2] Terminal stud
[3] Flange nut
[4] Terminal link
[5] Terminal washer
[6] Winding connection with Stocko terminal

Variant 1b:

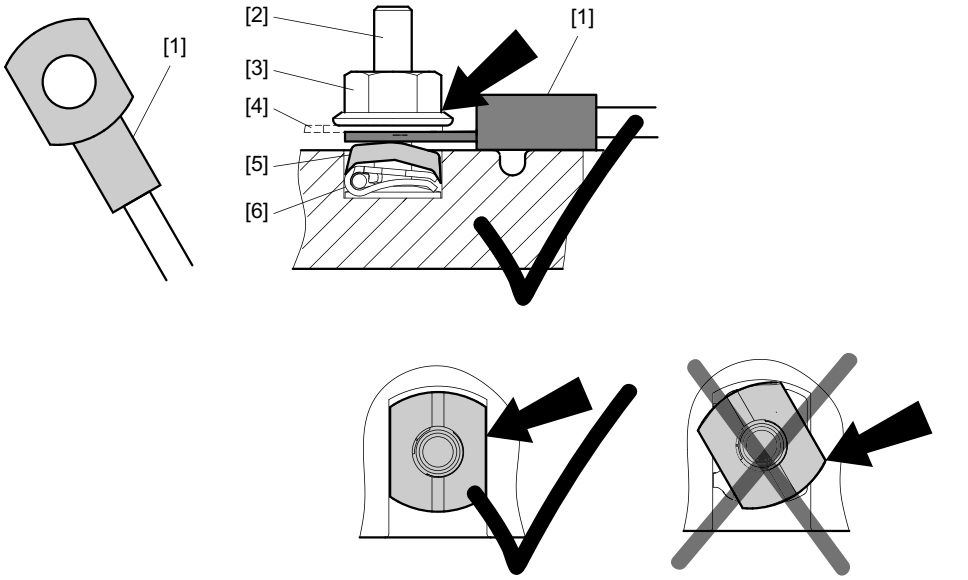

18014398598346763

[1] External connection with ring cable lug, according to DIN 46237 or DIN 46234, for example
[2] Terminal stud
[3] Flange nut
[4] Terminal link
[5] Terminal washer
[6] Winding connection with Stocko terminal

Variant 2

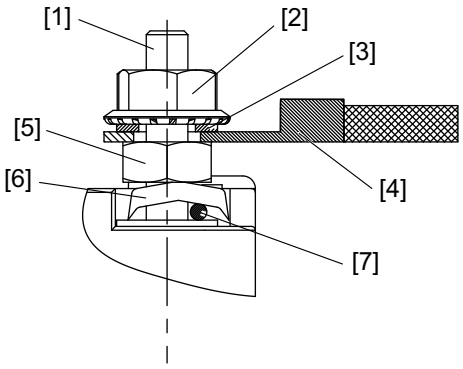

9007199440180363

[1] Terminal board
[2] Flange nut
[3] Terminal link
[4] External connection with ring cable lug, according to DIN 46237 or DIN 46234, for example
[5] Bottom nut
[6] Terminal washer
[7] Winding connection

21927189/EN – 07/2015

Variant 3

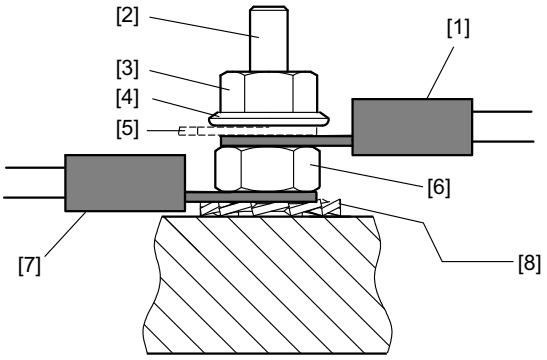

9007199454382091

[1] External connection with ring cable lug, according to DIN 46237 or DIN 46234, for example
[2] Terminal stud
[3] Upper nut
[4] Washer
[5] Terminal link
[6] Bottom nut
[7] Winding connection with ring cable lug
[8] Serrated lock washer

Variant 4

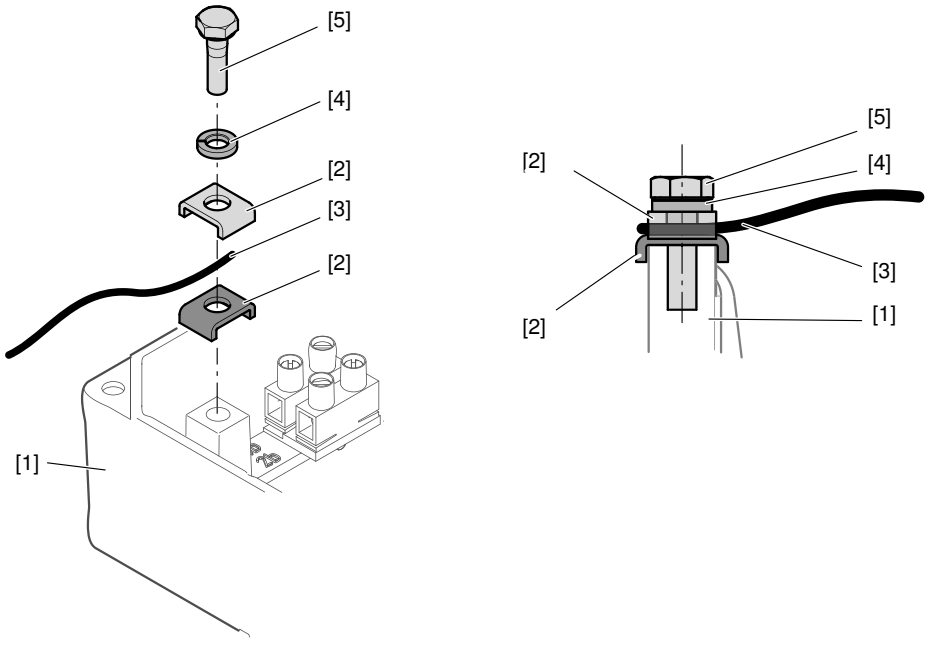

9007200394347659

[1] Terminal box
[2] Terminal clip
[3] PE conductor
[4] Lock washer
[5] Hex head screw

21927189/EN – 07/2015

Variant 5

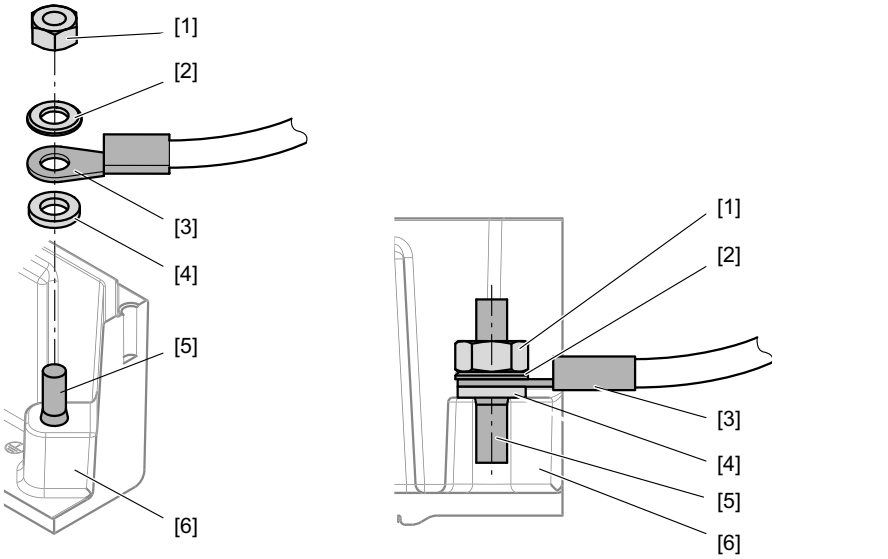

1139608587

[1] Hex nut
[2] Washer
[3] PE conductor on cable lug
[4] Serrated lock washer
[5] Stud
[6] Terminal box

21927189/EN – 07/2015

5.13 Connecting the motor plug connector

5.13.1 IS plug connector

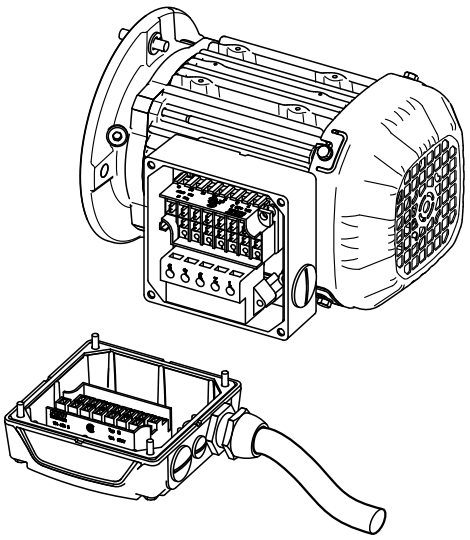

1009070219

The lower part of the IS plug connector is completely wired at the factory including the additional features such as brake rectifier. The IS plug connector top is included in the delivery and must be connected according to the specifications in the wiring diagram.

⚠ WARNING

No grounding due to incorrect installation.

Severe or fatal injuries.

- It is essential to comply with the safety notes in chapter 2 during installation.
- Tighten the retaining screws of the IS plug connector properly with 2 Nm as these screws also act as protective earth contacts.

The IS plug connector has CSA approval up to 600 V. Note for application according to CSA regulations: Tighten the M3 clamping screws to a torque of 0.5 Nm. See the following table for American Wire Gauge (AWG) cable cross sections.

Cable cross section

Make sure that the type of cable complies with the applicable regulations. The rated currents are specified on the nameplate. The cable cross sections that can be used are listed in the following table.

Without variable terminal link	With variable terminal link	Link cable	Double assignment (Motor and brake/SR)
0.25 – 4.0 mm^2	0.25 – 2.5 mm^2	Max. 1.5 mm^2	max. 1 x 2.5 and 1 x 1.5 mm^2

Wiring the upper section of the plug connector

- Loosen the housing cover screws:
  - Remove the housing cover
- Loosen the screws from the upper section of the plug connection:
  - Remove upper connector section from the cover
- Strip the insulation off the connection cable:
  - Strip off about 9 mm of insulation
- Pass the cable through the cable gland

Wiring up as shown in wiring diagram R83

- Connect the lines as shown in the wiring diagram:
  - Tighten the clamping screws carefully.
- Install the plug connector (see chapter Installing the connector (→ 🗎 74))

Wiring up as shown in wiring diagram R81

For ⅄/ △ startup:

- Connect with 6 lines:
  - Tighten the clamping screws carefully.
  - Motor contactors in the control cabinet
- Install the plug connector (see chapter Installing the connector (→ 🗎 74))

For ⅄ or △ operation:

- Connect as shown in the wiring diagram
- Install the variable terminal link as shown in the following figures according to the required motor operation (⅄ or △).
- Install the plug connector (see chapter Installing the connector (→ 🗎 74))

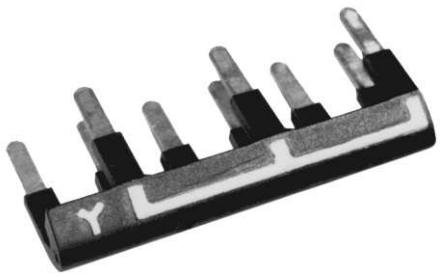

9007200053347851



9007200053349515

21927189/EN – 07/2015

Brake control system BSR – preparing the variable terminal link

For ⅄ operation:

On the ⅄ side of the variable terminal link as shown in the following figure: Remove only the bare metal pin of the marked prong horizontally – touch guard!

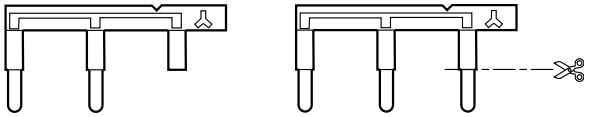

9007200053520139

For △ operation:

On the △ side of the variable terminal link as shown in the following figure: Completely remove two prongs horizontally.

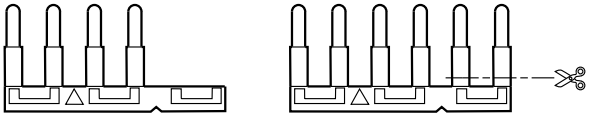

9007200053518475

Wiring according to the R81 wiring diagram for ⅄ or △ operation with double terminal assignment

- At terminal for double assignment:
  - Connect the link cable
- When operation is as required:
  - Insert the link cable in the variable terminal link
- Installing the variable terminal link
- At terminal for double assignment:
  - Connect the motor lead above the variable terminal link
- Connect the other lines as shown in the wiring diagram
- Install the plug connector (see chapter Installing the connector (→ 🗎 74))

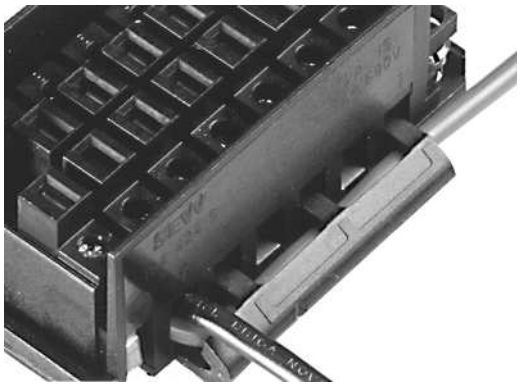

9007200053521803

Installing the plug connector

The housing cover of the IS plug connector can be screwed onto the lower housing part depending on the required position of the cable lead. The upper section of the plug connector shown in the following figure must first be installed in the housing cover so it will match the position of the lower section of the plug connector:

- Define the required mounting position
- Install the upper section of the plug connector into the housing cover in accordance with the mounting position
- Close the plug connector
- Tighten the cable gland

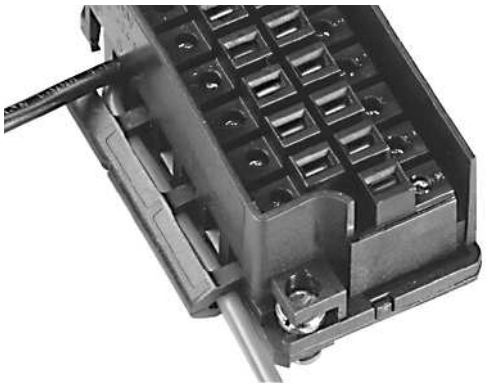

9007200053719819

Mounting position of the upper section of the plug connector in the housing cover

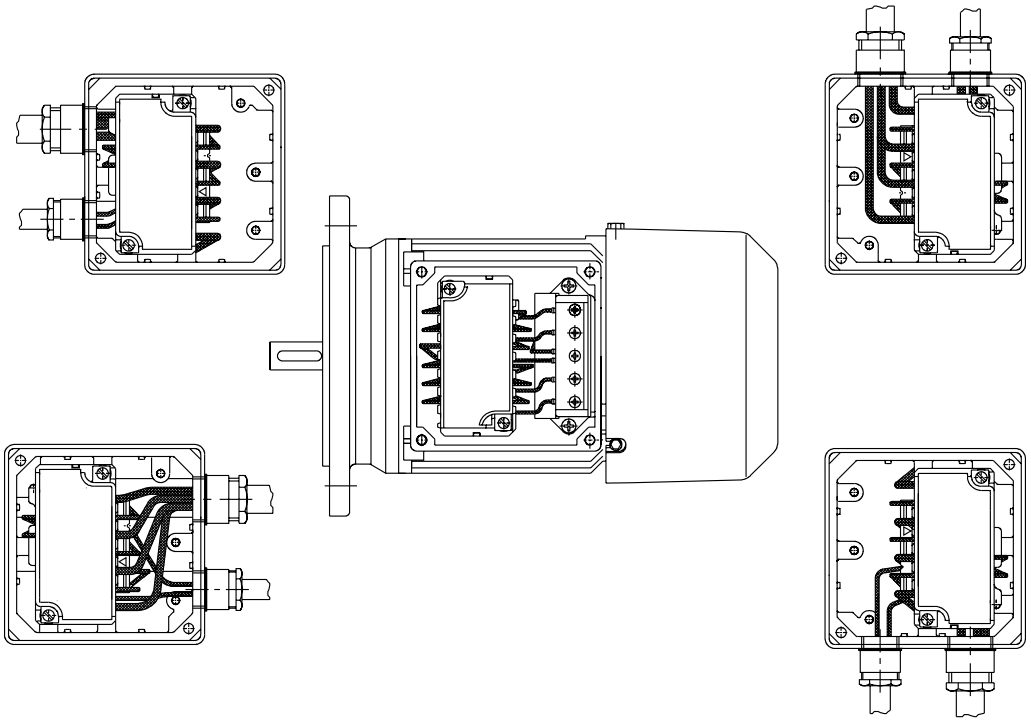

9007200053526155

5.13.2 AB.., AD.., AM.., AK.., AC.., AS.. plug connectors

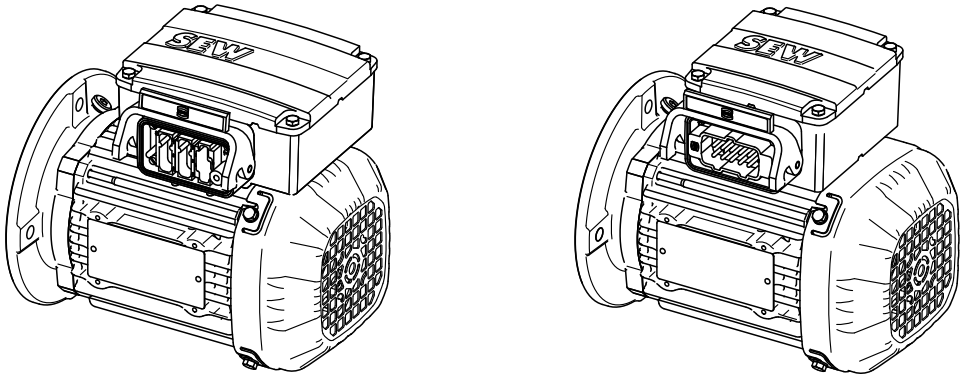

1009065611

The installed AB.., AD.., AM.., AK.., AC.. and AS plug connector systems are based on the plug connector systems made by Harting.

- AB.., AD.., AM.., AK.. Han Modular®
- AC.., AS.. Han 10E / 10ES

The connectors are located at the side of the terminal box. They are locked either using two clamps or one clamp on the terminal box.

UL approval has been granted for the plug connectors.

The mating connector (sleeve housing) with socket contacts is not included in the delivery.

The degree of protection is only applied when the mating connector is mounted and locked.

5.14 Connecting the motor via terminal strip

5.14.1 KCC terminal strip

- In accordance with the wiring diagram provided
- Check the max cable cross section:
  - 4 mm^2, rigid
  - 4 mm^2, flexible
  - 2.5 mm^2, flexible with conductor end sleeve
- In the terminal box: Check winding connections and tighten them if necessary
- Strip 10 – 12 mm of insulation

Arrangement of terminal links for ⅄ connection

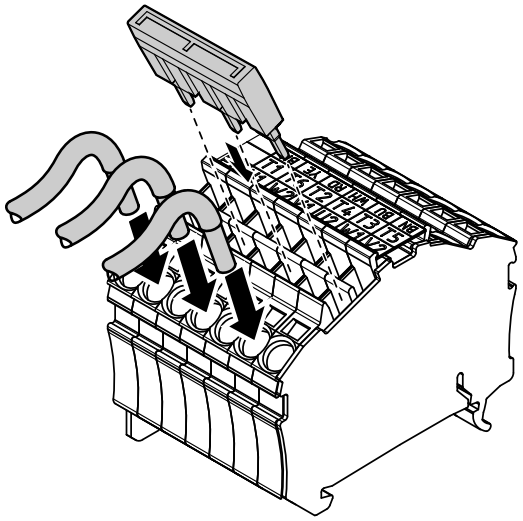

18014399506064139

Arrangement of terminal links for △ connection

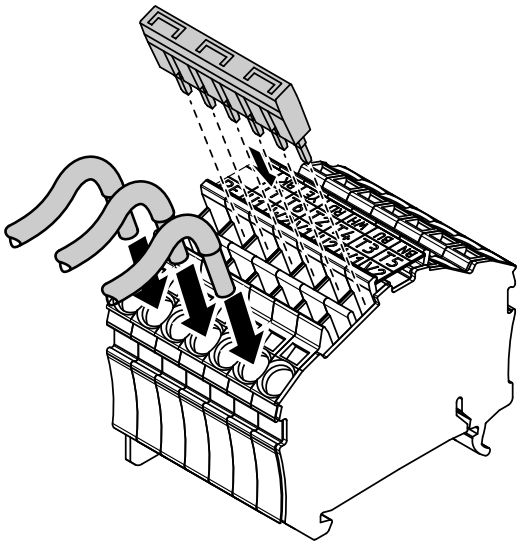

18014399506066059

21927189/EN – 07/2015

5.14.2 KC1 terminal strip

- Perform the connection in accordance with the enclosed wiring diagram
- Check the maximum cable cross section:
  - 2.5 mm² rigid
  - 2.5 mm² flexible
  - 1.5 mm² flexible with conductor end sleeve
- Strip 8 – 9 mm of insulation

Arrangement of terminal links with ⅄ connection

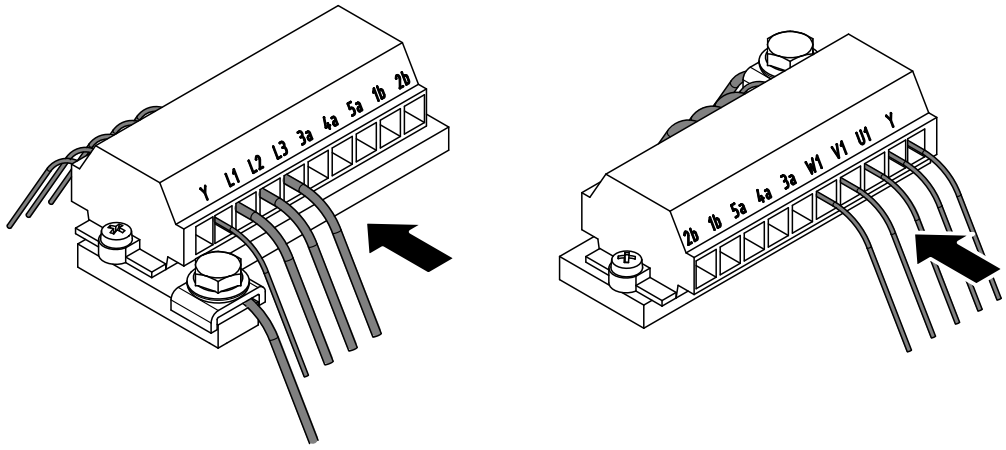

9007200257397387

Arrangement of terminal links with △ connection

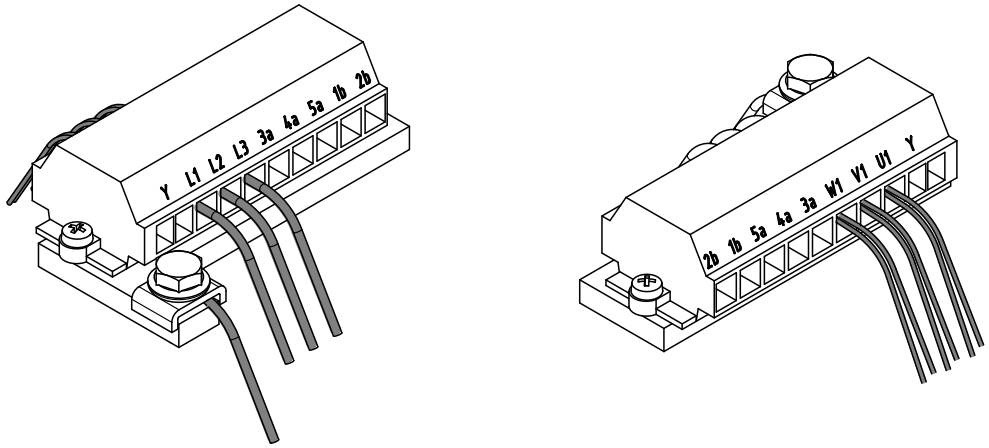

9007200257399307

21927189/EN – 07/2015

5.15 Connecting the brake

The brake is released electrically. The brake is applied mechanically when the voltage is switched off.



⚠ WARNING

Risk of crushing if the hoist falls.

Severe or fatal injuries.

- Comply with the applicable regulations issued by the relevant employer's liability insurance association regarding phase failure protection and the associated circuit/circuit modification.
- Connect the brake according to the provided wiring diagram.
- In view of the DC voltage to be switched and the high level of current load, it is essential to use either special brake contactors or AC contactors with contacts in utilization category AC-3 according to EN 60947-4-1.

5.15.1 Connecting the brake control

The DC disk brake is powered by a brake control system with protection circuit. It is located in the terminal box/IS lower part or must be installed in the control cabinet.

- Check the cable cross sections – braking currents (see chapter Technical data (→ 🗎 159))
- Connect the brake control according to the provided wiring diagram
- For motors in thermal class 180 (H), the brake rectifier and brake control systems are usually installed in the control cabinet. If you have ordered a brakemotor with insulating plate, it will be delivered with the terminal box isolated thermally from the brakemotor. In this case, the brake rectifier and brake control can be installed in the terminal box. The insulating plate increases the height of the terminal box by 9 mm.

21927189/EN – 07/2015

5.15.2 Connecting diagnostic unit /DUB

Connect the diagnostic unit as shown in the wiring diagrams provided with the motor. The maximum permitted connection voltage is AC 250 V with a maximum current of 6 A. With low voltage the maximum voltage is AC 24 V or DC 24 V with max. 0.1 A. A subsequent change to low voltage is not permitted.

SF function monitoring	Wear monitoring	Function and wear monitoring
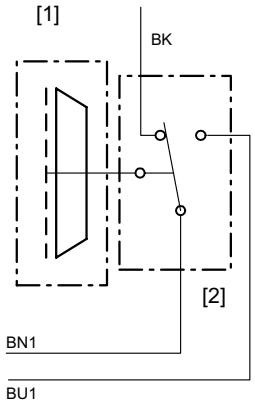	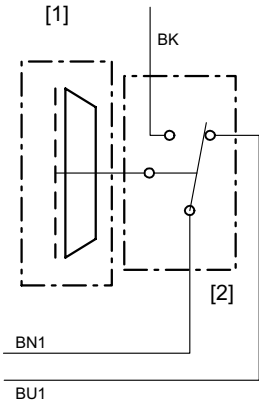	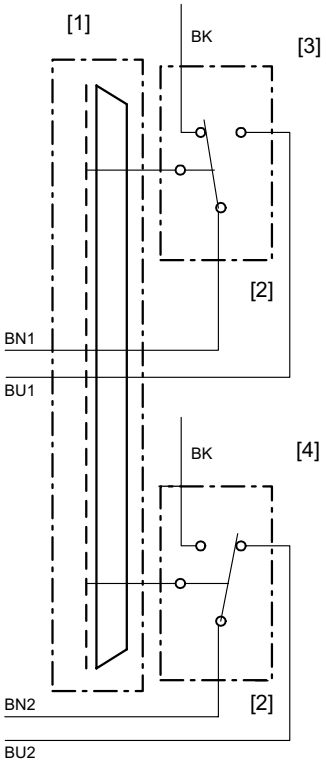
[1] Brake	[1] Brake	[1] Brake
[2] Microswitch MP321-1MS	[2] Microswitch MP321-1MS	[2] Microswitch MP321-1MS
		[3] Function monitoring
		[4] Wear monitoring

21927189/EN – 07/2015

5.15.3 Connecting the diagnostic unit /DUE option for function and wear monitoring

The /DUE diagnostic unit (Diagnostic Unit Eddy Current) is a contactless measuring system for function and wear monitoring of the brake and the continuous measurement of the current working air gap.

The measuring system consists of:

- Sensor, integrated in the magnet body of the brake
- Evaluation unit in the motor terminal box that is supplied via a DC 24 V voltage.

If the diagnostic unit /DUE was ordered, the function and wear monitoring is installed and calibrated at the factory. The customer must connect the diagnostic unit, see wiring diagram. The switching point of the wear monitoring is preset to the maximally permitted value. According to the "code table", a reduced value can be set.

For the state of the evaluation unit, refer to chapter "Status display of the evaluation unit".

For information on retrofitting the diagnostic unit /DUE, refer to chapter "Retrofitting the diagnostic unit /DUE for function and wear monitoring".

Designation of the components

The system comprises a sensor and single-channel evaluation unit. The function monitoring of the brake is realized via a digital signal (NO contact). A digital output (NC contact) signals if the wear limit was reached. Further, a current output allows for continuous monitoring of the brake wear.

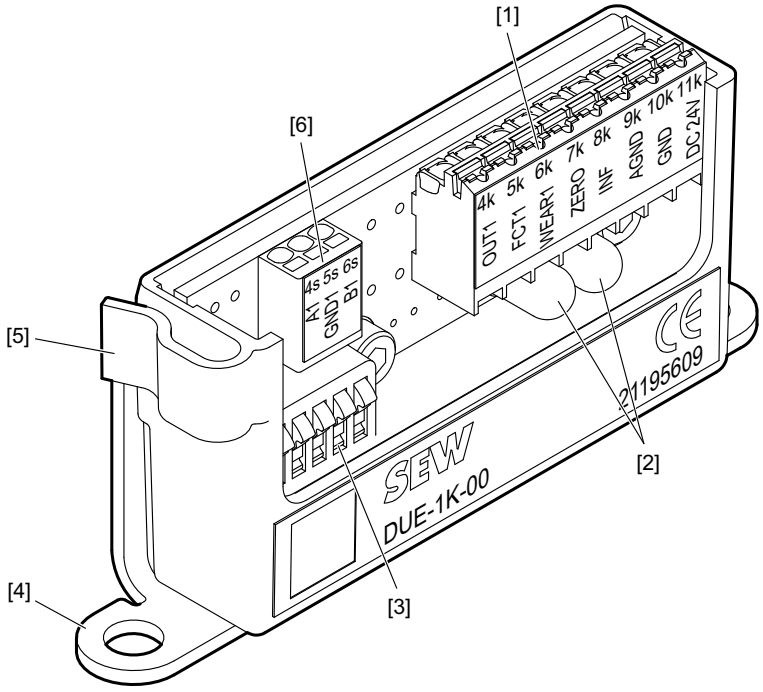

14950549515

[1] Terminals 4k – 11k
[2] LEDs for function and wear, brake
[3] DIP switches S1 – S5
[4] Fastening of terminal box (PE)
[5] Line clip
[6] Terminals 4s – 6s

The connection designation of the terminals are as follows:

Terminal	Designation	Description	Color coding
4s	A1	Sensor 1 connection 1	Brown (BN)
5s	GND1	Sensor 1 shield	Black (BK)
6s	B1	Sensor 1 connection 2	White (WH)

Terminal	Designation	Description
4k	OUT1	Analog output working air gap brake
5k	FCT1	Digital output function brake
6k	WEAR1	Digital output wear brake
7k	ZERO	Input calibration zero value
8k	INF	Input calibration infinite value
9k	AGND	Signal ground AGND
10k	GND	Ground potential GND
11k	DC 24 V	DC 24 V supply

The LEDs have the follow meaning:

LEDs	Designation	Description
Green [6]	FCT1	The brake is open. Electromagnet is active. Pressure plate is in contact with magnet body.
Red [6]	WEAR1	The current working air gap of the brake reached or exceeded the preset maximum working air gap.

21927189/EN – 07/2015

5.16 Options

Connect the optional equipment as shown in the wiring connection diagrams provided with the motor. **Do not connect any optional equipment if the wiring diagram is missing.** You can obtain the valid wiring diagrams free of charge from SEW-EURODRIVE.

5.16.1 Temperature sensor /TF



NOTICE

Destruction of the temperature sensor due to overheating if the voltage is too high.

The drive system might be damaged.

- Do not apply voltages > 30 V to the TF temperature sensor.

The PTC thermistors comply with DIN 44082.

Resistance measurement (measuring instrument with V ≤ 2.5 V or I < 1 mA):

- Standard measured values: 20 – 500 Ω, hot resistance > 4000 Ω

When using the temperature sensor for thermal monitoring, the evaluation function must be activated to maintain reliable isolation of the temperature sensor circuit. If the temperature reaches an excessive level, a thermal protection function must be triggered immediately.

If there is a 2nd terminal box for the TF temperature sensor, this is where you must connect the temperature sensor.

Observe the provided wiring diagram for the connection of the TF temperature sensor. If the wiring diagram is missing, you can obtain it from SEW-EURODRIVE free of charge.

INFORMATION

The temperature sensor TF may not be subjected to voltages > 30 V.

21927189/EN – 07/2015

Below figure shows the characteristic curve of the TF with reference to the nominal response temperature (referred to as T_{NF}).

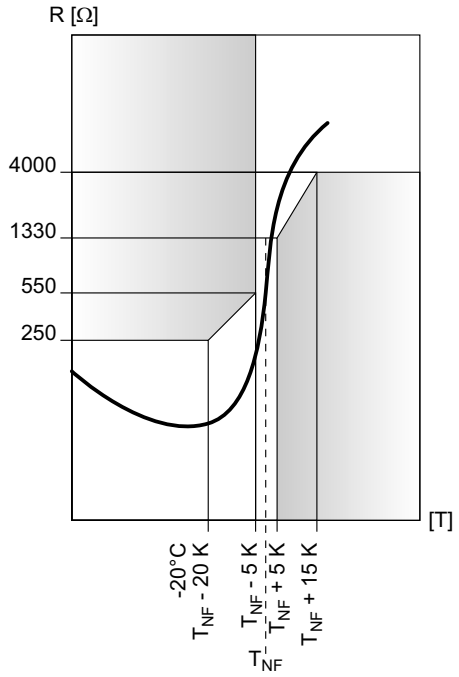

5470153483

5.16.2 TH winding thermostats

The thermostats are connected in series and open when the permitted winding temperature is exceeded. They can be connected in the drive monitoring loop.

	V_{AC}	V_{DC}	
Voltage V in V	250	60	24
Current (cos ϕ = 1.0) in A	2.5	1.0	1.6
Current (cos ϕ = 0.6) in A	1.6		
Contact resistance max. 1 Ω at DC 5 V / 1 mA			

5.16.3 /KY temperature sensor (KTY84 – 130)

NOTICE

Excessive self-heating of the temperature sensor can damage the insulation of the temperature sensor as well as the motor winding.

The drive system might be damaged.

- Avoid currents > 4 mA in the circuit of the KTY.
- Observe the correct connection of KTY to ensure correct evaluation of the temperature sensor. Ensure correct polarity.

The characteristic curve in the following figure shows the resistance curve subject to the motor temperature with a measuring current of 2 mA and correct pole connection.

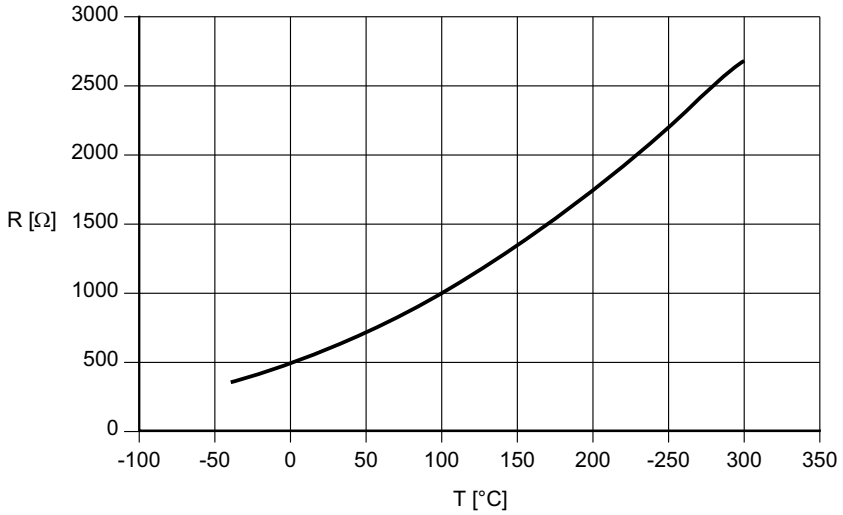

1140975115

Technical data	KTY84 – 130
Connection	Red (+) Blue (−)
Total resistance at 20 – 25 °C	540 Ω < R < 640 Ω
Test current	< 3 mA

21927189/EN – 07/2015

5.16.4 Temperature sensor /PT (PT100)

NOTICE

Excessive self-heating of the temperature sensor can damage the insulation of the temperature sensor as well as the motor winding.

The drive system might be damaged.

- Avoid currents > 4 mA in the circuit of the PT100.
- Observe the correct connection of PT100 to ensure correct evaluation of the temperature sensor. Ensure correct polarity.

The characteristic curve in the following figure shows the resistance curve subject to the motor temperature.

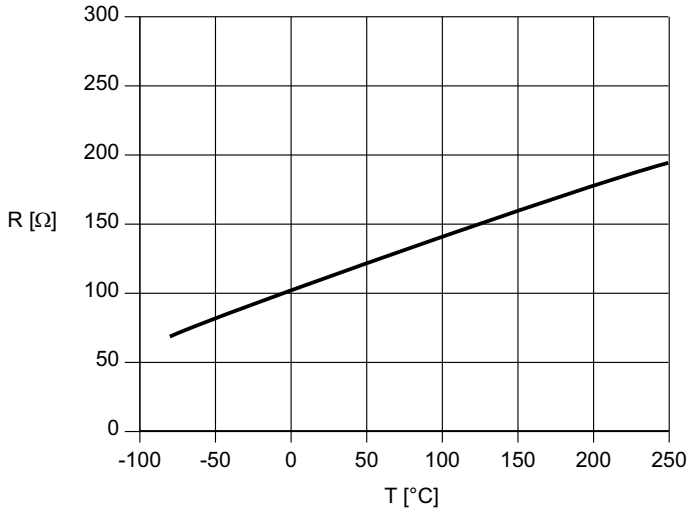

1145838347

Technical data	PT100
Connection	Red-white
Resistance at 20 – 25 °C per PT100	107 Ω < R < 110 Ω
Test current	< 3 mA

5.16.5 V forced cooling fan

- Connection in separate terminal box
- Max. connection cross section 3 × 1.5 mm² (3 × AWG 15)
- Cable gland M16 × 1.5

Motor size	Operating mode/connection	Frequency Hz	Voltage V
DR..71 – 132, DRN80 – 132S	1 ~ AC[1] (△)	50	100 – 127
DR..71 – 132, DRN80 – 132S	3 ~ AC ⅄	50	175 – 220
DR..71 – 132, DRN80 – 132S	3 ~ AC △	50	100 – 127
DR..71 – 180, DRN80 – 180	1 ~ AC[1] (△)	50	230 – 277
DR..71 – 315, DRN80 – 315	3 ~ AC ⅄	50	346 – 500
DR..71 – 315, DRN80 – 315	3 ~ AC △	50	200 – 290

1) Steinmetz circuit

Motor size	Operating mode/connection	Frequency Hz	Voltage V
DR..71 – 132, DRN80 – 132S	1 ~ AC[1] (△)	60	100 – 135
DR..71 – 132, DRN80 – 132S	3 ~ AC ⅄	60	175 – 230
DR..71 – 132, DRN80 – 132S	3 ~ AC △	60	100 – 135
DR..71 – 180, DRN80 – 180	1 ~ AC[1] (△)	60	230 – 277
DR..71 – 315, DRN80 – 315	3 ~ AC ⅄	60	380 – 575
DR..71 – 315, DRN80 – 315	3 ~ AC △	60	220 – 330

1) Steinmetz circuit

Motor size	Operating mode/connection	Voltage V
DR..71 – 132, DRN80 – 132S	DC 24 V	24

INFORMATION

For information on how to connect the V forced cooling fan, refer to the wiring diagram (→ 🗎 205).

21927189/EN – 07/2015

5.16.6 UWU52A switched-mode power supply

The forced cooling fan type V for DC 24 V includes the UWU52A switched-mode power supply, if you have ordered it. It can be ordered using the part number from SEW-EURODRIVE even after the order has been placed.

The following figure depicts the UWU52A switched-mode power supply:

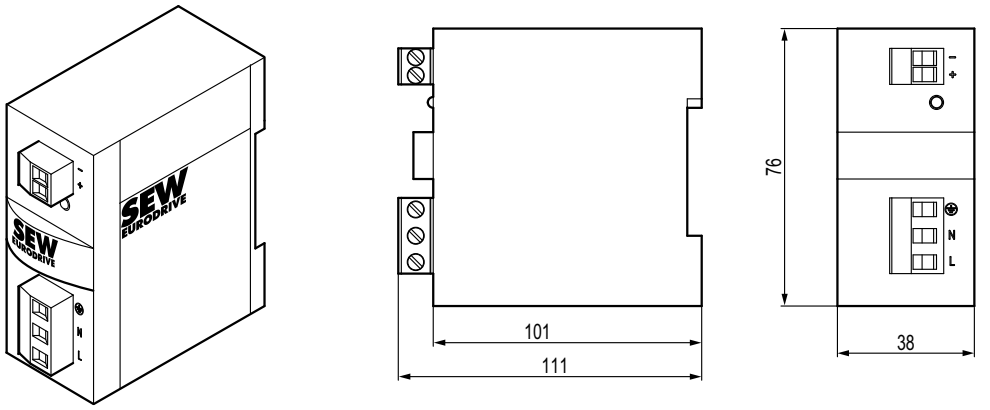

576533259

Input:	AC 110 – 240 V; 1.04 – 0.61 A; 50/60 Hz
	DC 110 – 300 V; 0.65 – 0.23 A
Output:	DC 24 V; 2.5 A (40 °C)
	DC 24 V; 2.0 A (55 °C)
Connection:	Screw terminals 1.5 – 2.5 mm^2, separable
Degree of protection:	IP20; attachment to EN 60715 TH35 mounting rail in the control cabinet
Part number:	0188 1817

5.16.7 Overview of mount-on encoders

Refer to the wiring connection diagrams on information on how to connect add-on encoders:

Encoder	Motor size	Encoder type	Mounting type	Supply in V_{DC}	Signal	Wiring diagram
ES7S	DR..71 – 132 DRN80 – 132S	Incremental	Shaft-centered	7 – 30	1 V_{ss} sin/cos	68180xx08
ES7R	DR..71 – 132 DRN80 – 132S	Incremental	Shaft-centered	7 – 30	TTL (RS422)	68179xx08
ES7C	DR..71 – 132 DRN80 – 132S	Incremental	Shaft-centered	4.5 – 30	HTL / TTL (RS422)	68179xx08
AS7W	DR..71 – 132 DRN80 – 132S	Absolute value	Shaft-centered	7 – 30	1 V_{ss} sin/cos	68181xx08
AS7Y	DR..71 – 132 DRN80 – 132S	Absolute value	Shaft-centered	7 – 30	1 V_{ss} sin/cos + SSI	68182xx07
EG7S	DR..160 – 280 DRN132M – 280	Incremental	Shaft-centered	7 – 30	1 V_{ss} sin/cos	68180xx08
EG7R	DR..160 – 280 DRN132M – 280	Incremental	Shaft-centered	7 – 30	TTL (RS422)	68179xx08
EG7C	DR..160 – 280 DRN132M – 280	Incremental	Shaft-centered	4.5 – 30	HTL / TTL (RS422)	68179 xx08
AG7W	DR..160 – 280 DRN132M – 280	Absolute value	Shaft-centered	7 – 30	1 V_{ss} sin/cos	68181xx08
AG7Y	DR..160 – 280 DRN132M – 280	Absolute value	Shaft-centered	7 – 30	1 V_{ss} sin/cos + SSI	68182xx07
EH7S	DR..315 DRN315	Incremental	Shaft-centered	10 – 30	1 V_{ss} sin/cos	08511xx08
EH7C	DR..315 DRN315	Incremental	Shaft-centered	10 – 30	HTL	08511xx08
EH7R	DR..315 DRN315	Incremental	Shaft-centered	10 – 30	TTL (RS422)	08511xx08
EH7T	DR..315 DRN315	Incremental	Shaft-centered	5	TTL (RS422)	08511xx08
AH7Y	DR..315 DRN315	Absolute value	Shaft-centered	9 – 30	TTL (RS422) +SSI	08259xx07
AV1H	DR..160 – 280 DRN132M – 280	Absolute value	Flange centered	7 – 12	Hiperface® / 1 V_{ss} sin/cos	–
AV1Y	DR..160 – 280 DRN132M – 280	Absolute value	Flange centered	10 – 30	1 V_{ss} sin/cos + SSI	–

21927189/EN – 07/2015

En-coder	Motor size	Encoder type	Mounting type	Supply in V_{DC}	Signal	Wiring diagram
EV2C	DR..160 – 280 DRN132M – 280	Incremental	Flange centered	9 – 26	HTL	–
EV2S	DR..160 – 280 DRN132M – 280	Incremental	Flange centered	9 – 26	1 V_{ss} sin/cos	–
EV2R	DR..160 – 280 DRN132M – 280	Incremental	Flange centered	9 – 26	TTL (RS422)	–
EV2T	DR..160 – 280 DRN132M – 280	Incremental	Flange centered	5	TTL (RS422)	–

INFORMATION

- Maximum oscillation load for encoders ≤ 10 g ≈ 100 m/s² (10 Hz to 2 kHz)
- Shock resistance = 100 g ≈ 1000 m/s² for DR..71 – 132, DRN80 – 132S motors
- Shock resistance = 200 g ≈ 2000 m/s² for DR..160 – 315, DRN132M – 315 motors

5.16.8 Overview of built-in encoders and visual feedback

INFORMATION

For information on how to connect the built-in encoder, refer to the wiring diagram.

- Observe chapter "Wiring diagrams" for connection via terminal strip.
- Observe the enclosed wiring diagram for connection via M12 connectors.

Encoder	Motor size	Supply in V_{DC}	Signals
EI71[1)]	DR..71 – 132 DRN80 – 132S	9 – 30	HTL 1 period/revolution
EI72[1)]			HTL 2 periods/revolution
EI76[1)]			HTL 6 periods/revolution
EI7C[1)]			HTL 24 periods/revolution

1) B in the type designation marks the unit generation of the encoder in the documentation. They are not indicated on the nameplate.

EI7. B – visual feedback

The EI7. encoders use 2 bi-colored LEDs (red + green each) for visual feedback on the operating state.

LED H1 (at cable output of the encoder) – status and errors

The green LED indicates the status or the configuration of the encoder. It flashes. The flashing frequency indicates the set number of periods.

LED H1 green	
Frequency	**Status/configuration**
LED off	Encoder without voltage or faulty
0.6 Hz	EI71 (1 period per revolution)
1.2 Hz	EI71 (2 periods per revolution)
3 Hz	EI76 (6 periods per revolution)
15 Hz	EI7C (24 periods per revolution)
LED lit continuously	Encoder defective

The red LED is lit when the encoder detects an error.

LED H1 red	
Blinking code	**Meaning**
10 s with 1 Hz and 2 s continuous	No valid number of periods can be set
Other	Output driver signals a fault (e.g. short circuit or overtemperature)

The H2 LED display gives visual feedback on the signal track status.

LED color	Track A	Track B	Track A	Track B
Orange (green and red)	0	0	1	1
Red	0	1	1	0
Green	1	0	0	1
Off	1	1	0	0

21927189/EN – 07/2015

5.16.9 Installation notes for encoders

When connecting the encoders to the inverters, observe the provided wiring diagrams and the information in these operating instructions as well as the operating instructions/wiring diagrams of the respective inverter and the operating instructions/wiring diagrams provided with the non-SEW encoder if applicable.

Proceed according to chapter "Motor and brake maintenance" to connect the encoders mechanically. Observe the following notes:

- Maximum line length (inverter to encoder):
  - 100 m with a capacitance per unit length conductor – shield ≤ 110 nF/km
  - 100 m with a capacitance per unit length conductor – conductor ≤ 85 nF/km
- Core cross section: 0.20 – 0.5 mm^2 recommendation ≥ 0.25 mm^2
- Use shielded cable with twisted pair conductors and apply shield over large area on both ends:
  - In the cable gland of the encoder connection cover or in the encoder connector
  - To the inverter on the electronics shield clamp and to the housing of the D-sub connector
- Install the encoder cables separately from the power cables, keeping a distance of at least 200 mm.
- Compare the operating voltage with the permitted operating voltage range on the encoder nameplate. Deviations in the operating voltage may overheat and damage the encoder.
- SEW-EURODRIVE recommends the use of stabilized voltage sources and separate supply systems for encoder or other sensor components and active components such as switches and light barriers.
- Supplies with voltage transients and interferences higher than the supply voltage U_B are not permitted.
- Observe the clamping area of 5 to 10 mm of the cable gland of the connection cover. If you use cables with a different cross section, you have to replace the provided cable gland with another suitable EMC-compliant cable gland.
- The cable glands for the cable entry must meet the following conditions:
  - Cramping area is suitable for the used cable(s)
  - The IP level of the encoder connection is at least as high as the IP degree of protection of the actual encoder
  - The operating temperature range matches the designated ambient temperature range.
- Check the flawless state and the proper seat of the connection cover gasket during assembly.
- Tighten the screws of the connection cover with a tightening torque of 2 Nm.

21927189/EN – 07/2015

5.16.10 Anti-condensation heating

To protect a shutdown motor from freezing up (rotor blockage) or condensation inside the motor, it can be equipped with an optional anti-condensation heating. The anti-condensation heating consists of strip heaters that are integrated in the winding head and supplied with voltage when the motor is switched off. The motor is heated by the current flowing through the strip heaters.

The strip heaters are controlled according to the following principle:

Motor switched off → anti-condensation heating activated

Motor switched on → anti-condensation heating deactivated

Observe the permitted voltage according to the nameplate and the enclosed terminal assignment diagram.

21927189/EN – 07/2015

6 Startup

INFORMATION

- Observe the safety notes in chapter 2 during installation.
- In case of problems, refer to the chapter "Malfunctions" (→ 🗎 185).

If the motor includes safety-relevant components, observe the following safety note:

⚠ WARNING



Disabling functional safety devices.

Severe or fatal injuries.

- Only qualified personnel is allowed to carry out work on functional safety components.
- Any work on functional safety components must be carried out strictly in accordance with the specifications in the operating instructions at hand and the respective addendum to the operating instructions. Else, the right to claim under warranty will become invalid.

⚠ WARNING



Risk of injury due to electric shock.

Severe or fatal injuries.

- Observe the following notes.
- Use switch contacts in utilization category AC-3 according to EN 60947-4-1 for switching the motor.
- When motors are powered by inverters, you must adhere to the wiring instructions issued by the inverter manufacturer.
- Observe the operating instructions of the inverter.

⚠ CAUTION



The surfaces of the drive can be very hot during operation.

Risk of burns.

- Let the motor cool down before you start your work.

NOTICE

The specified maximum limit torque (M_{pk}) and the maximum current (I_{max}) may not be exceeded, not even for acceleration.

Possible damage to property.

- Limit the maximum current at the inverter.

INFORMATION

Limit the maximum speed at the inverter. For information on the procedure, refer to the documentation of the inverter.

21927189/EN – 07/2015

INFORMATION

When using the DR..250/280, DRN250/280 AC motor **with the BE brake and an encoder**, note the following:

- The brake must be used as a holding brake only.
- The brake may only be applied when the speed is ≤ 20 1/min. For higher speeds, please contact SEW-EURODRIVE.
- Emergency stops from a higher motor speed are allowed.

6.1 Before startup

Prior to startup make sure that

- The drive is undamaged and not blocked.
- Any transport locks have been removed.
- The measures stipulated in chapter "Extended storage of motors" (→ 🗎 28) are performed after extended storage periods.
- All connections have to be made correctly.
- The direction of rotation of the motor/gearmotor is correct
  - Motor rotating clockwise: U, V, W (T1, T2, T3) to L1, L2, L3
- All protective covers are installed correctly.
- All motor protection equipment is active and set for the rated motor current.
- There are no other sources of danger.
- The lockable manual brake release is permitted.
- Loose elements like keys are appropriately secured.

6.2 Motors with reinforced bearing

NOTICE

Bearings might be damaged due to missing overhung load.

The drive system might be damaged.

- Do not operate cylindrical roller bearings without overhung load.

21927189/EN – 07/2015

6.3 Altering the blocking direction on motors with a backstop

6.3.1 Basic structure of DR..71 – 80, DRN80 with backstop

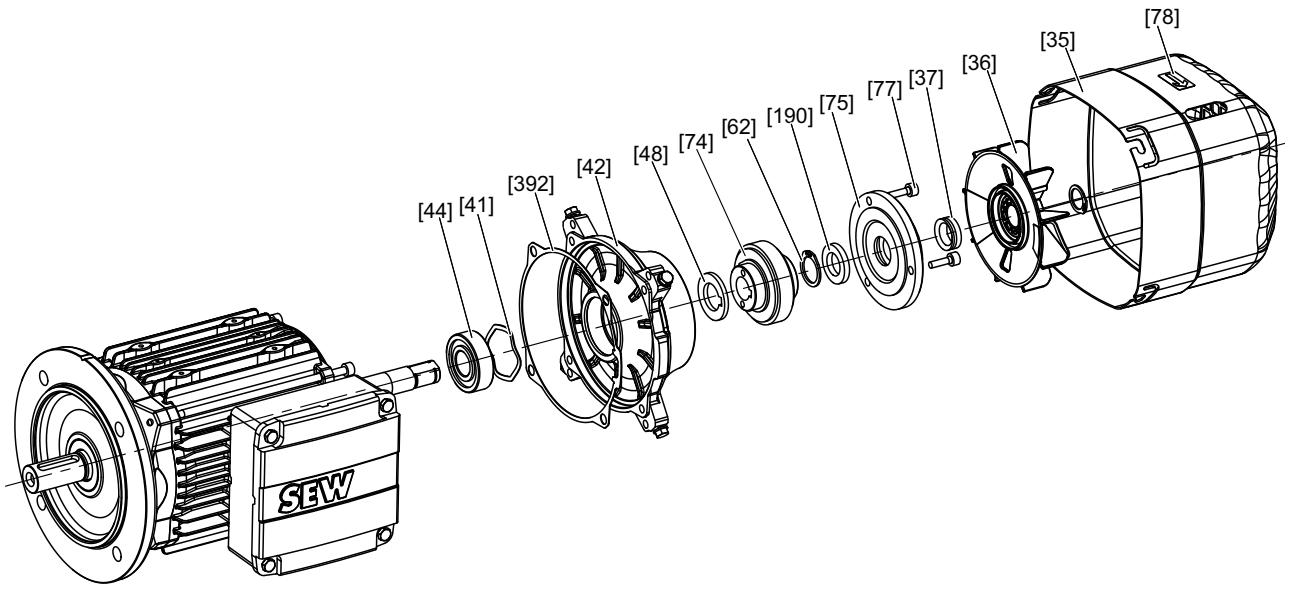

9007200397599243

[35] Fan guard
[36] Fan
[37] Sealing ring
[41] Cup spring
[42] Backstop endshield
[44] Deep grooved ball bearing
[48] Spacing ring
[62] Retaining ring
[74] Sprag ring, complete
[75] Sealing flange
[77] Screw
[78] Label
[190] Felt ring
[392] Gasket

6.3.2 Basic structure of DR..90 – 315, DRN90 – 315 with backstop

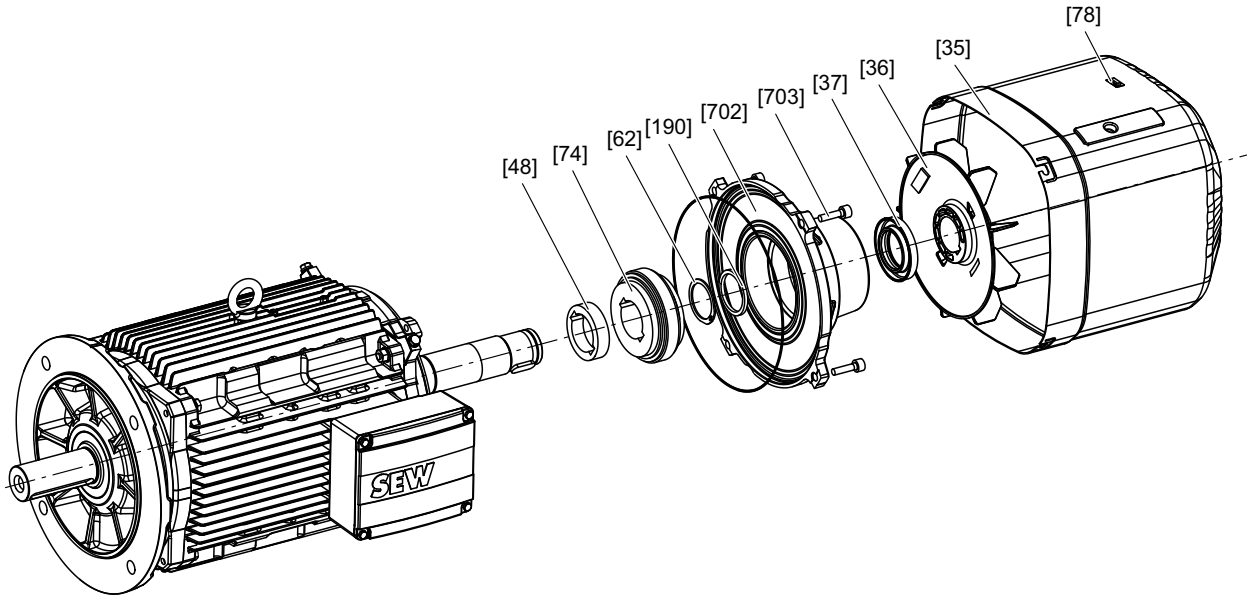

9007200397597323

[35] Fan guard
[36] Fan
[37] Sealing ring
[48] Spacing ring
[62] Retaining ring
[74] Sprag ring, complete
[78] Label
[190] Felt ring
[702] Backstop housing, complete
[703] Cap screw

21927189/EN – 07/2015

6.3.3 Changing the blocking direction

A backstop is used to block/preclude a direction of rotation of the motor. The direction of rotation is indicated by an arrow on the fan guard of the motor or on the gearmotor housing.

Observe the direction of rotation of the end shaft and the number of stages when you mount the motor to the gear unit. Do not start up the motor in blocking direction (ensure correct connection of power supply with motor). For inspection purposes, you can operate the backstop one time with half the motor voltage in the blocking direction:



⚠ WARNING

Risk of crushing if the drive starts up unintentionally.

Severe or fatal injuries.

- Before starting work, isolate the motor and, if installed, the forced cooling fan from the power supply.
- Safeguard against accidental startup.
- Carefully observe the following steps!

Proceed as follows to change the blocking direction:

1. Remove forced cooling fan and rotary encoder, if installed.

   See chapter "Motor and brake maintenance – preliminary work" (→ 🗎 103)
2. Remove flange cover or fan guard [35]
3. **For the DR..71 – 80, DRN80:** Remove the sealing flange [75].

   For the DR../DRN90 – 315: Completely remove the backstop housing [702].
4. Loosen the retaining ring [62].
5. Remove the sprag ring [74] via screws in the forcing threads or using a puller.
6. Spacing ring [48], if provided, remains installed.
7. Turn around the sprag ring [74], check the old grease and replace according to the specifications below and reinstall the sprag ring.
8. Install retaining ring [62].
9. **For the DR..71 – 80, DRN80:** Apply Hylomar to cover sealing flange [75] and install it. Replace felt ring [190] and sealing ring [37], if required.

   For the DR../DRN90 – 315: Replace seal [901], felt ring [190] and sealing ring [37], if required, and install the backstop housing [702].
10. Reinstall the removed parts.
11. Replace the label indicating the direction of rotation.

21927189/EN – 07/2015

Lubricating the backstop

The backstop is greased at the factory with the corrosion protection low-viscosity grease Mobil LBZ. If you want to use another grease, make sure it complies with NLGI class 00/000 with a base oil viscosity of 42 mm^2/s at 40 °C on a lithium saponified and mineral oil base. The application temperature range is from -50 °C to +90 °C. See the following table for the amount of grease required:

DR.. motor type	71	80	90/100	112/132	160	180	200/225	250/280	315
Motor type DRN..	**–**	**80**	**90/100**	**112/132S**	**132M/L**	**160/180**	**200/225**	**250/280**	**315**
Amount of grease in g	9	11	15	20	30	45	80	80	120

The tolerance regarding the grease level is ± 30%.

21927189/EN – 07/2015

7 Inspection/maintenance



⚠ WARNING

Risk of crushing if the hoist falls or in the event of uncontrolled unit behavior.

Severe or fatal injuries.

- Secure or lower hoist drives (danger of falling)
- Safeguard and/or protect the driven machine against touching
- Isolate the motor, brake, and forced cooling fan, if installed, from the power supply before starting work, safeguarding them against unintentional re-start.
- Only use genuine spare parts in accordance with the valid spare parts list.
- Always install a new brake control system at the same time as replacing the brake coil.

If the motor includes safety-relevant components, observe the following safety note:



⚠ WARNING

Disabling functional safety devices.

Severe or fatal injuries.

- Only qualified personnel is allowed to carry out work on functional safety components.
- Any work on functional safety components must be carried out by strictly observing the specifications in the operating instructions at hand and the respective addendum to the operating instructions. Else, the right to claim under warranty will become invalid.



⚠ CAUTION

The surfaces of the drive can be very hot during operation.

Risk of burns.

- Let the motor cool down before you start your work.

NOTICE

Damage to the oil seals if the temperatures is too low during installation.

Possible damage to the oil seals.

- For assembly, the ambient temperature and the oil seals themselves may not be colder than 0 °C.



INFORMATION

Apply grease with a grease depot (Klüber Petamo GHY133N) to the lip of the oil seal before assembly.



INFORMATION

Friction disks in the brakemotor may only be replaced by SEW-EURODRIVE service staff.

21927189/EN – 07/2015

Only SEW-EURODRIVE repair workshops, or SEW plants that provide the necessary expertise may repair or modify the motor/brakemotor.

Before re-startup of the motor, make sure that all regulations are complied with and document this with a label on the motor or a written test report.

Always perform safety and functional checks following all maintenance and repair work (thermal protection).

21927189/EN – 07/2015

7.1 Inspection and maintenance intervals

The following table lists the inspection and maintenance intervals:

Unit / unit part	Time interval	What to do?
BE brake	• **If used as a working brake:** At least every 3000 operating hours[1)] • **If used as a holding brake:** Every 2 to 4 years, depending on operating conditions[1)]	Brake inspection • Measure the brake disk thickness • Brake disk, lining • Measure and adjust working air gap • Pressure plate • Driver/gearing • Pressure rings • Sucking off any abrasion • Inspect the switch contacts and replace them, if necessary (e.g. in case of burn-out)
Motor	• **Every 10000 operating hours**[2) 3)]	Inspect the motor: • Check rolling bearing and change if necessary. • Replace the oil seal • Clean cooling air ducts
Drive	• Different [3)]	• Touch up or renew the surface/corrosion protection • Check and clean the air filter. • if applicable, clean condensation drain hole at the bottom of the fan guard • Clean clogged bores

1) The amount of wear depends on many factors and may be high. The machine designer must calculate the required inspection/maintenance intervals individually in accordance with the project planning documents (e.g. "Project Planning for Drives").

2) For the DR../DRN250 – 315 with relubrication device, note the shortened relubrication periods in the chapter "Bearing lubrication DR../DRN250 – 315".

3) The interval depends on outer influences and can be very short, e.g. in the event of high dust concentration in the environment.

If you open the motor during inspection/maintenance, you have to clean it before you close it.

7.1.1 Connection cables

Check the connection cable for damage at regular intervals and replace if necessary.

21927189/EN – 07/2015

7.2 Bearing lubrication

7.2.1 Bearing lubrication DR..71 – 280, DRN80 – 280

In standard design, the bearings are lubricated for life.

7.2.2 Bearing lubrication DR..250 – 315, DRN250 – 315 with relubrication device /NS

Motors of sizes 250, 280, and 315 can be equipped with a relubrication device. The following figure shows the positions of the lubrication devices.

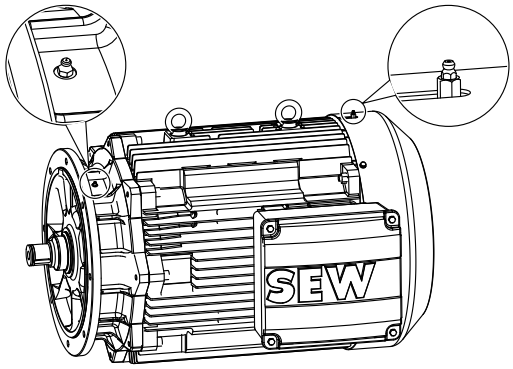

375353099

[1] Lubrication device in type A in accordance with DIN 71412

Under normal operating conditions and at an ambient temperature between -20 °C to +40 °C, SEW-EURODRIVE uses ESSO Polyrex EM (K2P-20 DIN 51825), a polyurea-based mineral high-performance, high-temperature grease for initial lubrication.

For motors in the low temperature range up to -40 °C SEW-EURODRIVE uses SKF GXN or LGHP2, which are also a polyurea-based mineral greases.

Relubrication

You can purchase the lubricants in 400 g cartridges from SEW-EURODRIVE. Refer to chapter Order information for lubricants and anti-corrosion agents (→ 🗎 176) for order information.

INFORMATION

Only mix lubricants of the same thickness type, the same base oil and the same consistency (NLGI class)!

Grease the motor bearings in accordance with the information on the lubricant plate. The used grease collects inside the motor and should be removed every 6 to 8 relubrication cycles during an inspection. Each time you relubricate, ensure that the bearing is two-thirds full.

After relubricating the motors, you should startup slowly, if possible, so that the grease is distributed evenly.

21927189/EN – 07/2015

Re-lubrication period

The table below lists the bearing relubrication intervals for the following conditions:

- Ambient temperature -20 °C to +40 °C
- Rated speed that corresponds to that of a 4-pole AC motor
- normal load

At greater speeds, higher loads or higher ambient temperatures, the re-lubrication intervals are shorter. Use 1.5 times the quantity for the initial filling.

	Horizontal mounting position		Vertical mounting position	
Motor type	**Duration**	**Quantity**	**Duration**	**Quantity**
DR../DRN250 – 315 /NS	5000 h	50 g	3000 h	70 g
DR../DRN250 – 315 /ERF /NS	3000 h	50 g	2000 h	70 g

7.3 Reinforced bearings

In the /ERF (reinforced bearings) option, cylindrical rolling bearings are installed on the A-side.

NOTICE

Bearings might be damaged due to missing overhung load.

The drive system might be damaged.

- Do not operate cylindrical roller bearings without overhung load.

The reinforced bearings are only offered with the /NS (relubrication) option so as to facilitate optimal lubrication of the bearing. Observe the notes on bearing lubrication in chapter Bearing lubrication DR..250 – 315, DRN250 – 315 with relubrication device / NS (→ 🗎 101).

7.4 Corrosion protection

If a drive is equipped with the /KS corrosion protection option and IP56 or IP66, you have to replace the Hylomar at the studs.

21927189/EN – 07/2015

7.5 Motor and brake maintenance – preliminary work

⚠ WARNING

Risk of crushing if the drive starts up unintentionally.

Severe or fatal injuries.

- Before starting work, isolate the motor, brake, and if installed, the forced cooling fan from the power supply.
- Safeguard against accidental startup.

7.5.1 Removing the rotary encoder from DR..71 – 132, DRN80 – 132S

The following figure illustrates the disassembly procedure using the ES7. rotary encoder as an example:

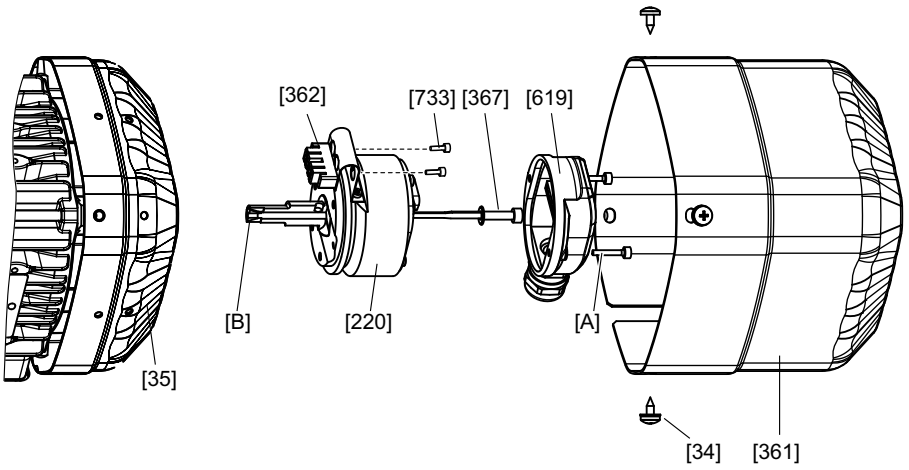

3475618443

[34]	Tapping screw	[367]	Retaining screw
[35]	Fan guard	[619]	Encoder cover
[220]	Encoder	[733]	Screws
[361]	Extended fan guard	[A]	Screws
[362]	Torque bracket	[B]	Cone

Removing ES7. and AS7. encoders

1. Remove the cover [361].
2. Unscrew and remove the connection cover [619]. Do not disconnect the encoder connection cable.
3. Loosen screws [733].
4. Unscrew the central retaining screw [367] by about 2 to 3 turns and unfasten the spread shaft cone by tapping lightly on the screw head.

   Do not lose the cone [B].
5. Carefully remove the expansion anchor of the torque bracket [362] from the cover grid and the encoder form the rotor.

Re-assembly

Proceed as follows to re-assemble the encoder:

1. Tighten the central retaining screw [367] with a tightening torque of 2.9 Nm.
2. Tighten the screw [733] in the expansion anchor with a tightening torque of max. 2.0 Nm.
3. Assemble the encoder cover [619] and tighten the screws [A] with a tightening torque of 2 Nm.
4. Install the extended fan guard [361] with the screws [34].

7.5.2 Removing the rotary encoder from DR..160 – 280, DRN132M – 280

The following figure illustrates the disassembly procedure using the EG7. rotary encoder as an example:

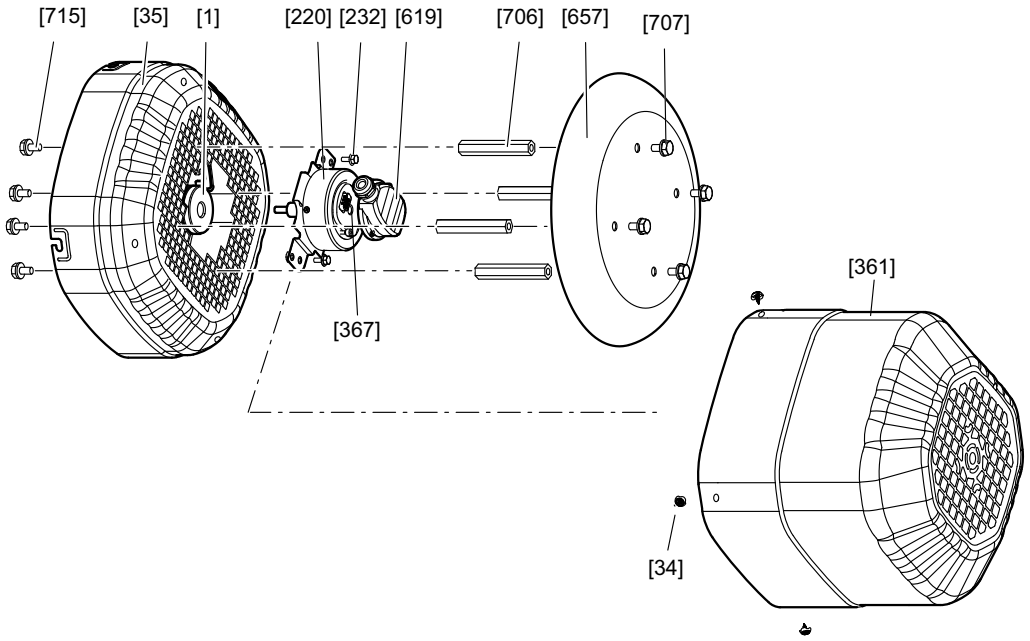

9007201646566283

[1]	Rotor	[367]	Retaining screw
[34]	Tapping screw	[619]	Connection cover
[35]	Fan guard	[657]	Canopy
[220]	Encoder	[706]	Spacer bolt
[232]	Screws	[707][715]	Screws
[361]	Extended fan guard	[A]	Screws

Removing EG7. and AG7. encoders

1. Loosen the screws [22] and remove the forced cooling fan guard [170].
2. Remove the cable grommet [269] with encoder cable from the forced cooling fan guard [170].
3. Loosen the screws [232] and [936] and remove the torque bracket [935].
4. Loosen the retaining screw [220] on the encoder and remove the encoder from the rotor [1].

21927189/EN – 07/2015

Re-assembly

1. Place the encoder onto the rotor [1] and attach it with the central retaining screw of the encoder [A]. The tightening torque must be 8 Nm.
2. Place the torque bracket [935] on the spacing bushings [934] and tighten the screws [936] with 11 Nm.
3. Attach the torque bracket of the encoder [A] to the torque bracket [935] using the screws [232]. The tightening torque must be 6 Nm.
4. Pull the cable of the encoder [220] through the cable grommet [269]. Insert the cable grommet [269] into the forced cooling fan guard [170].
5. Mount the forced cooling fan guard [170] and tighten the screws [22] with 28 Nm.

7.5.3 Removing the rotary encoder from a DR..160 – 225, DRN132M – 315 motor with /V forced cooling fan option

The following figure illustrates the disassembly procedure using the EG7. rotary encoder as an example:

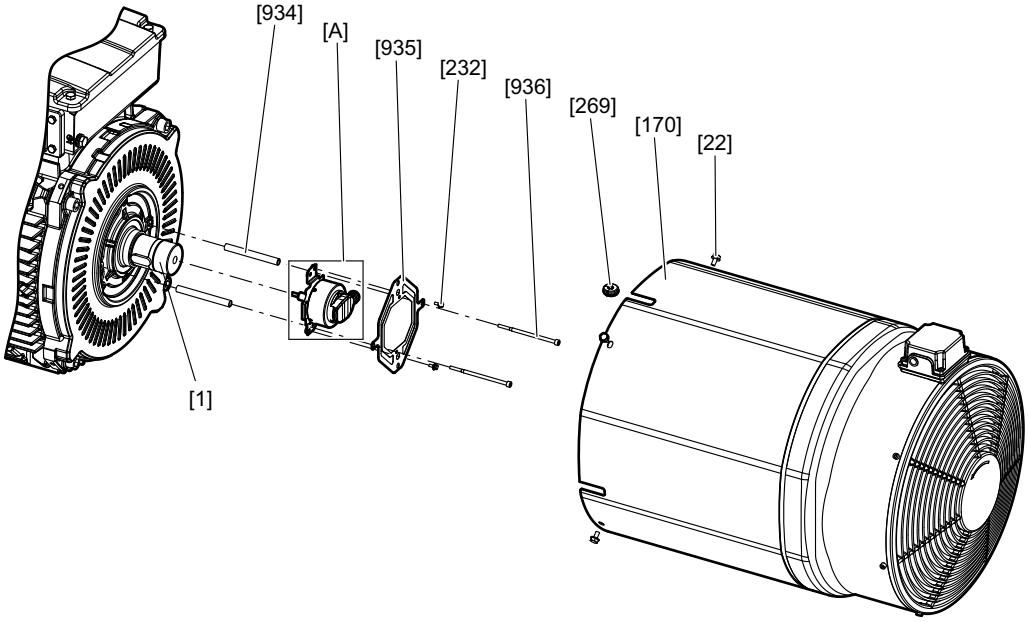

7715961995

[22]	Screw	[935]	Torque arm
[170]	Forced cooling fan guard	[936]	Screw
[232]	Screws	[934]	Spacer bushing
[269]	Grommet	[A]	Encoder

Removing EG7. and AG7. encoders

1. Loosen the screws [22] and remove the forced cooling fan guard [170].
2. Remove the cable grommet [269] with encoder cable from the forced cooling fan guard [170].
3. Loosen the screws [232] and [936] and remove the torque bracket [935].
4. Loosen the retaining screw [220] on the encoder and remove the encoder from the rotor [1].

Re-assembly

1. Place the encoder onto the rotor [1] and attach it with the central retaining screw of the encoder [A]. The tightening torque must be 8 Nm.
2. Place the torque bracket [935] on the spacing bushings [934] and tighten the screws [936] with 11 Nm.
3. Attach the torque bracket of the encoder [A] to the torque bracket [935] using the screws [232]. The tightening torque must be 6 Nm.
4. Pull the cable of the encoder [220] through the cable grommet [269]. Insert the cable grommet [269] into the forced cooling fan guard [170].
5. Mount the forced cooling fan guard [170] and tighten the screws [22] with 28 Nm.

7.5.4 Removing the rotary encoder from DR..315, DRN315

The following figure illustrates the disassembly procedure using the EH7. and AH7. rotary encoders as an example:

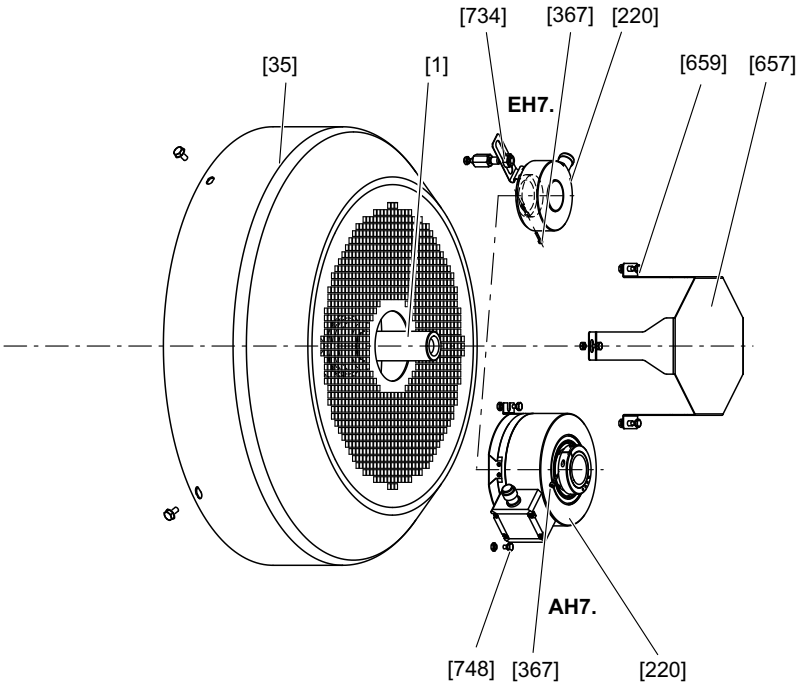

9007199662370443

[35]	Fan guard	[659]	Screw
[220]	Encoder	[734]	Nut
[367]	Retaining screw	[748]	Screw
[657]	Cover plate		

Removing EH7. encoders

1. Remove the cover plate [657] by loosening the screws [659].
2. Separate the encoder [220] from the fan guard by loosening the nut [734].
3. Loosen the retaining screw [367] on the encoder and remove the encoder [220] from the rotor [1].

21927189/EN – 07/2015

Removing AH7. encoders

1. Remove the protection cover [657] by loosening the screws [659].
2. Separate the encoder [220] from the fan guard by loosening the screws [748].
3. Loosen the retaining screw [367] on the encoder and remove the encoder [220] from the shaft.

Re-assembly

1. Mount fan guard [35].
2. Push the encoder [220] on the shaft and fasten it with the retaining screw [367] applying a tightening torque according to the following table:

Encoder	Tightening torque
EH7.	0.7 Nm
AH7.	3.0 Nm

3. Install the screw [748] and the nut [734].
4. Install the cover plate [657].

21927189/EN – 07/2015

7.5.5 Mounting/removing the rotary encoder with XV.. mounting adapter for DR..71 – 225, DRN80 – 225

The following figure illustrates the disassembly procedure using a non-SEW encoder as an example:

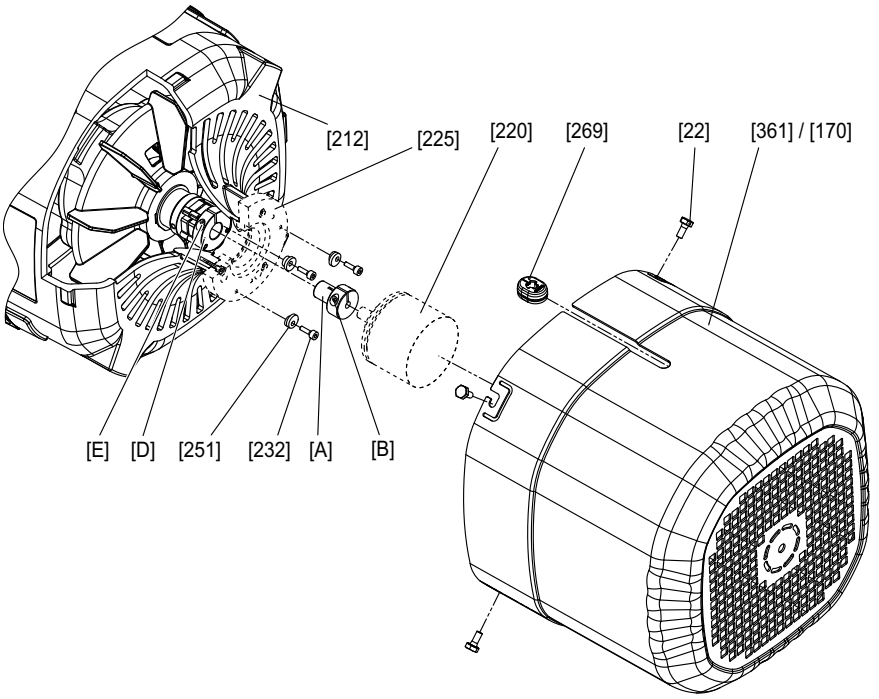

9007202887906699

[22]	Screw	[361]	Extended fan guard (normal/long)
[170]	Forced cooling fan guard	[269]	Grommet
[212]	Fan guard with encoder mount	[A]	Adapter
[220]	Encoder	[B]	Clamping screw
[225]	Intermediate flange (not with XV1A)	[D]	Coupling (spread- or solid shaft coupling)
[232]	Screws (enclosed with XV1A and XV2A)	[E]	Clamping screw
[251]	Conical spring washers (enclosed with XV1A and XV2A)		

Removing EV.., AV.., and XV. encoders

1. Remove the extended fan guard [361] or forced cooling fan guard [170] by loosening the screws [22].
2. Loosen the retaining screws [232] and turn the conical spring washers [251] outwards.
3. Loosen the clamping screw [E] of the coupling.
4. Remove the adapter [A] and the encoder [220].

Re-assembly

1. Proceed according to chapter "Connecting XV.. encoder mounting adapter to DR..71 – 225, DRN80 – 225 motors (→ 🗎 34)" to mount the encoder.

21927189/EN – 07/2015

7.5.6 Mounting/removing the rotary encoder with EV../AV.. mounting adapter for DR..250 – 280, DRN250 – 280

The following figure illustrates the disassembly procedure using a non-SEW encoder as an example:

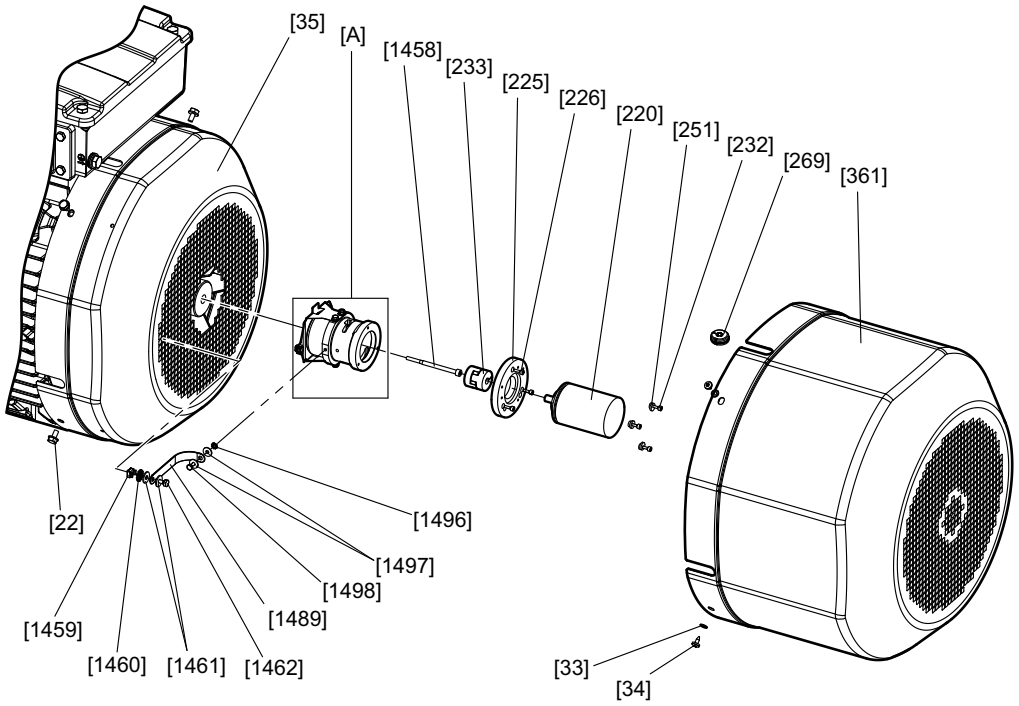

9007206970704907

[22]	Screw	[361]	Extended fan guard (normal/long)
[33]	Washer	[1458]	Screw
[34]	Screw	[1459]	Cage nut
[35]	Fan guard	[1460]	Serrated lock washer
[220]	Encoder	[1461]	Washer
[225]	Intermediate flange (optional)	[1462]	Screw
[226]	Screw	[1489]	Ground strap
[232]	Screws (enclosed with .V1A and .V2A)	[1496]	Serrated lock washer
[233]	Coupling	[1497]	Washer
[251]	Conical spring washers (enclosed with .V1A and .V2A)	[1498]	Screw
[269]	Grommet	[A]	Encoder mounting adapter

Removing the encoder mounting adapter

1. Loosen the screws [34] and washers [33] at the extended fan guard. Remove the extended fan guard [361].
2. Remove the encoder. For more details, see chapter "Removing the encoder." (→ 🗎 110)
3. Loosen the ground strap of the encoder mounting adapter [A] with serrated lock washer [1496], washers [1497], and screw [1498].
4. Loosen the screws [22] and remove the fan guard [35].

5. Loosen the encoder mounting adapter [A] with screw [1458] in the encoder bore of the rotor and remove it.

   If the encoder mounting adapter cannot easily be removed: Screw in an M6 set screw with 20 – 35 mm length into the rotor bore (bore for screw [1458]) and tighten it finger-tight. Screw in a set screw M8 with > 10 mm length or a screw M8 with min. 80 mm length into the same bore and push out the encoder mounting adapter [A] from the rotor [1]. Then remove the set screw M6 from the rotor again.

Removing EV.., AV.. encoders

1. Loosen the screws [34] and remove the extended fan guard [361].
2. Remove the cable grommet [269] with encoder cable from the extended fan guard [361].
3. Loosen the screws [232] and turn the conical spring washers of the encoder [220] outwards. Loosen the screw of the coupling clamping hub [233] on the encoder end through the slots in the encoder mounting adapter [A].
4. Remove the encoder [220] from the encoder mounting adapter [A] or intermediate flange [225].

Re-assembly

1. Proceed according to chapter "Connecting EV../AV.. encoder mounting adapter to DR..250 – 280, DRN250 – 280 motors (→ 🖹 36)" to mount the encoder.

INFORMATION

When re-installing the fan guard [35], make sure that the torque is supported:

The damping elements [1486] on both sides of the encoder mounting adapter [A] must engage with the ventilation grid (see figure below). The torque plate [935] must protrude from the grid to the left and to the right of the damping element.

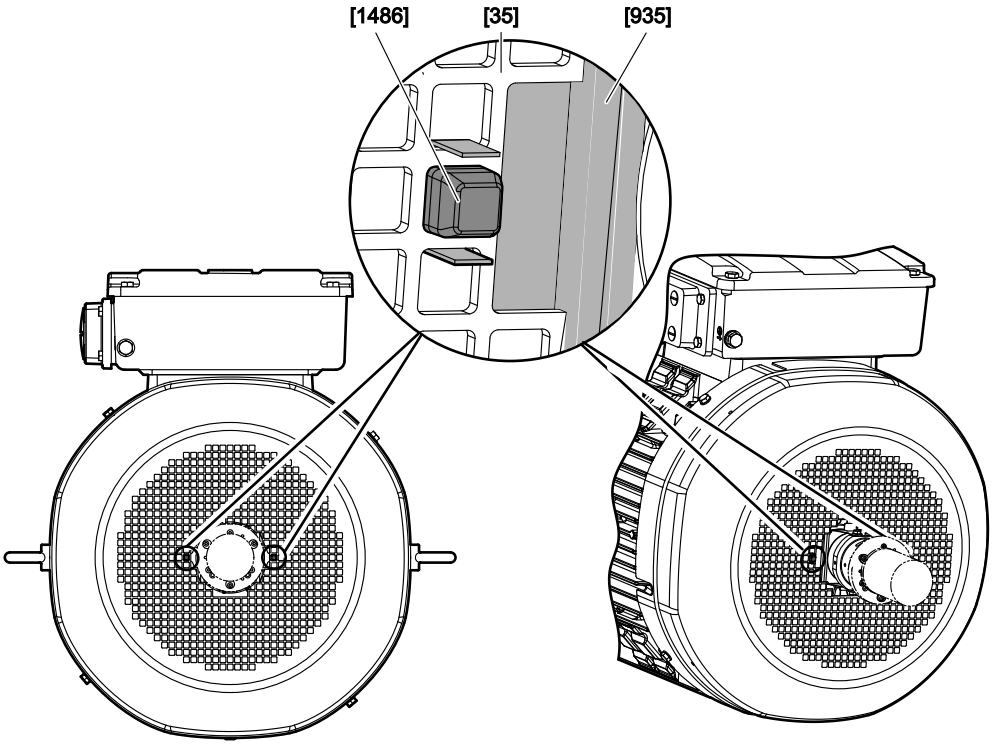

9007207498780299

21927189/EN – 07/2015

7.5.7 Mounting/removing the rotary encoder with EV../AV../XV.. mounting adapter for DR..250 – 280, DRN250 – 280 with /V forced cooling fan option

The following figure illustrates the disassembly procedure using a non-SEW encoder as an example:

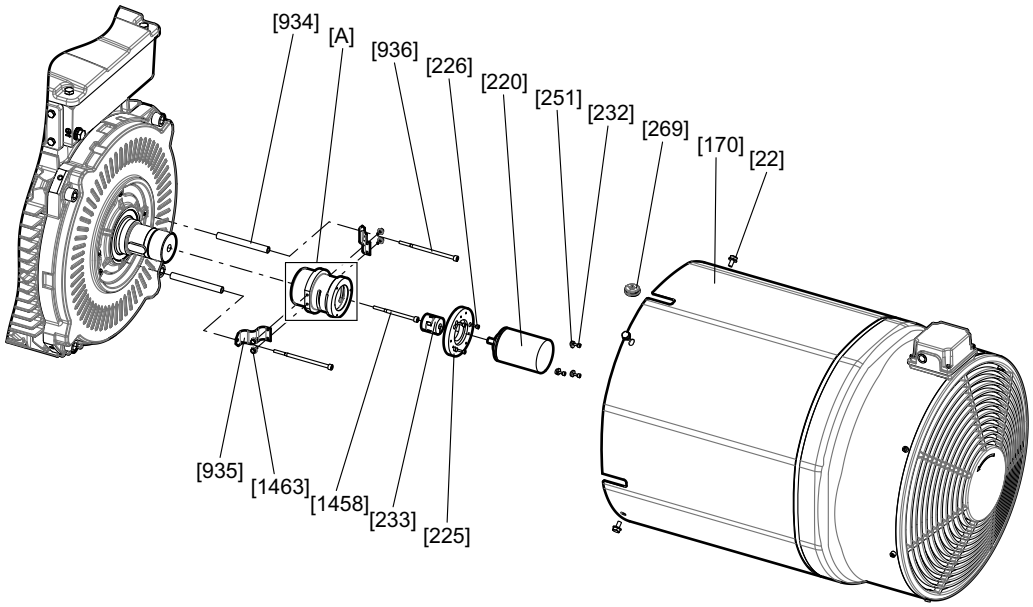

7715965835

[22]	Screw	[269]	Grommet
[170]	Forced cooling fan guard	[934]	Spacer bushing
[220]	Encoder	[935]	Torque bracket
[225]	Intermediate flange (optional)	[936]	Screw
[226]	Screw	[1458]	Screw
[232]	Screws (enclosed with .V1A and .V2A)	[1463]	Screw
[233]	Coupling	[A]	Encoder mounting adapter
[251]	Conical spring washers (enclosed with .V1A and .V2A)		

Removing the encoder mounting adapter

1. Loosen the screws [22] and remove the forced cooling fan guard [170].
2. Remove the cable grommet [269] from the fan guard [170].
3. Loosen the screws [232] and turn the conical spring washers [251] to the side. Loosen the screw of the coupling clamping hub [233] on the encoder end and remove the encoder [220]. The intermediate flange [225] and screws [226] can remain at the encoder mounting adapter [A].
4. Loosen the screws [1458] and [936] and remove the encoder mounting adapter [A]. The torque brackets [935] and screws [1463] can remain at the encoder mounting adapter [A].
   - If the encoder mounting adapter [A] cannot easily be removed: Screw in a set screw M6 with 20 – 35 mm length into the rotor bore (bore for screw [1458]) and tighten it finger-tight. Screw in a set screw M8 with > 10 mm length or a screw M8 with min. 80 mm length into the same bore and push out the encoder mounting adapter [A] from the rotor [1]. Then remove the set screw M6 from the rotor again.

Removing EV.., AV.., and XV. encoders

1. Loosen the screws [22] and remove the forced cooling fan guard [170].
2. Remove the cable grommet [269] with encoder cable from the forced cooling fan guard [170].
3. Turn the conical spring washers of the encoder [220] outwards and loosen the screws [232]. Loosen the screw of the coupling clamping hub [233] on the encoder end.
4. Remove the encoder [220] from the encoder mounting adapter [A] or intermediate flange [225].

Re-assembly

1. Proceed as described in chapter "Installing the EV.A / AV.A encoder mounting adapter on DR..250 – 280, DRN250 – 280 motors" (→ 🗎 36) to mount the encoder.

7.5.8 Installing/removing hollow shaft encoders from/to XH.. mounting adapter of DR..71 – 225, DRN80 – 225

The following figure illustrates the disassembly procedure using a non-SEW encoder as an example:

Encoder mounting via XH1A mounting adapter

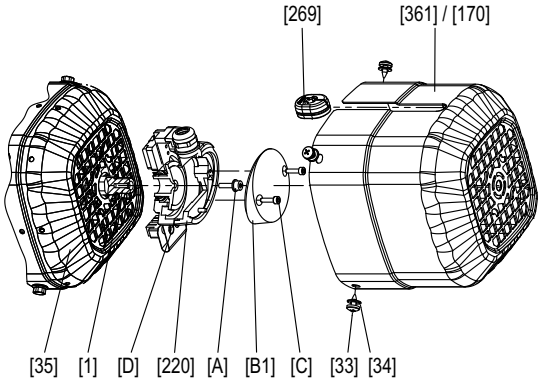

Encoder mounting via XH7A and XH8A mounting adapter

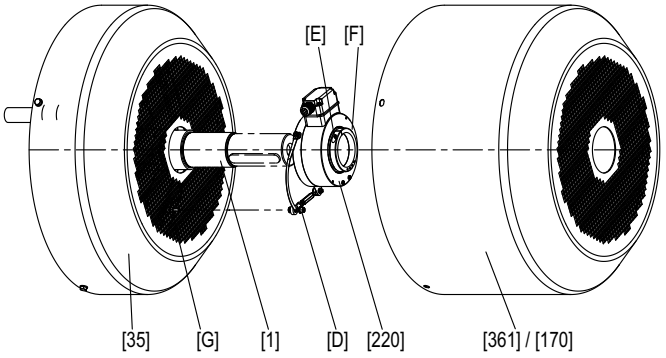

3633161867

[1]	Rotor
[33]	Tapping screw
[34]	Washer
[35]	Fan guard
[170]	Forced cooling fan guard
[220]	Encoder
[269]	Grommet
[361]	Extended fan guard
[A]	Retaining screw
[B]	Encoder cover
[C]	Screw for torque bracket
[D]	Nut of the torque bracket
[E]	Screw
[F]	Clamping ring
[G]	Nut of the torque bracket

Removing hollow shaft encoders from XH1A mounting adapter

1. Remove cover [361] or forced cooling fan guard [170].
2. Loosen encoder cover [B] via screws [C].
3. Remove screw [A].
4. Loosen screw and nut of the torque bracket [D] and remove torque arm.
5. Remove encoder [220] from rotor [1].

21927189/EN – 07/2015

Removing hollow shaft encoders from XH7A and XH8A mounting adapter

1. Remove cover [361] or forced cooling fan guard [170].
2. Loosen screw [E] on clamping ring [F].
3. Remove nut of torque bracket [G].
4. Remove encoder [220] from rotor [1].

Reinstalling hollow shaft encoders to XH1A mounting adapter

1. Push encoder [220] on rotor [1].
2. Mount torque bracket via screws [D].
3. Fasten the encoder [220] via screw [A] with a tightening torque of 2.9 Nm.
4. Fasten encoder cover [B] via screws [C] with a tightening torque of 3 Nm.
5. Install cover [361] or forced cooling fan guard [170].

Reinstalling hollow shaft encoders to XH7A and XH8A mounting adapter

1. Push encoder [220] on rotor [1].
2. Mount torque bracket via nut [D] with a tightening torque of 10.3 Nm.
3. Fasten clamping ring [F] via screw [E] with a tightening torque of 5 Nm.
4. Install cover [361] or forced cooling fan guard [170].

21927189/EN – 07/2015

7.6 Inspection/maintenance of DR..71 – 315, DRN80 – 315 motors

7.6.1 Basic structure of DR..71 – 132/DRN80 – 132S

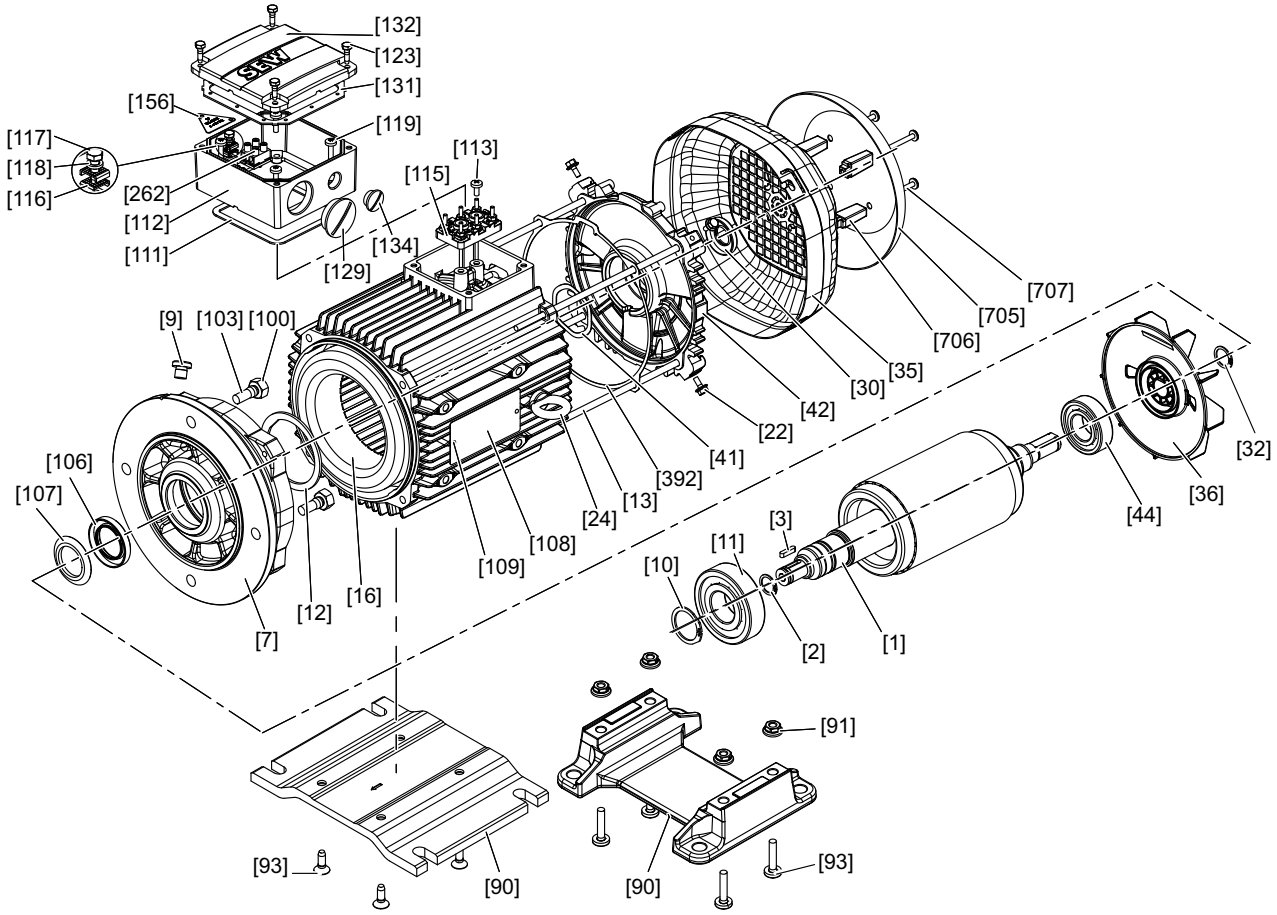

13369217931

[1]	Rotor	[30]	Oil seal	[106]	Oil seal	[123]	Hex head screw
[2]	Retaining ring	[32]	Retaining ring	[107]	Oil flinger	[129]	Screw plug with O-ring
[3]	Key	[35]	Fan guard	[108]	Nameplate	[131]	Gasket for cover
[7]	Flanged endshield	[36]	Fan	[109]	Grooved pin	[132]	Terminal box cover
[9]	Screw plug	[41]	Shim washer	[111]	Gasket for lower part	[134]	Screw plug with O-ring
[10]	Retaining ring	[42]	B-side endshield	[112]	Terminal box lower part	[156]	Information sign
[11]	Deep groove ball bearing	[44]	Deep groove ball bearing	[113]	Pan head screw	[262]	Connection terminal, complete
[12]	Retaining ring	[90]	Bed plate	[115]	Terminal board	[392]	Gasket
[13]	Cap screw	[91]	Hex nut	[116]	Terminal yoke	[705]	Canopy
[16]	Stator	[93]	Pan head screw	[117]	Hex head screw	[706]	Spacer
[22]	Hex head screw	[100]	Hex nut	[118]	Lock washer	[707]	Pan head screw
[24]	Eyebolt	[103]	Stud	[119]	Pan head screw		

21927189/EN – 07/2015

7.6.2 Basic structure of DR..160 – 180, DRN132M – 180

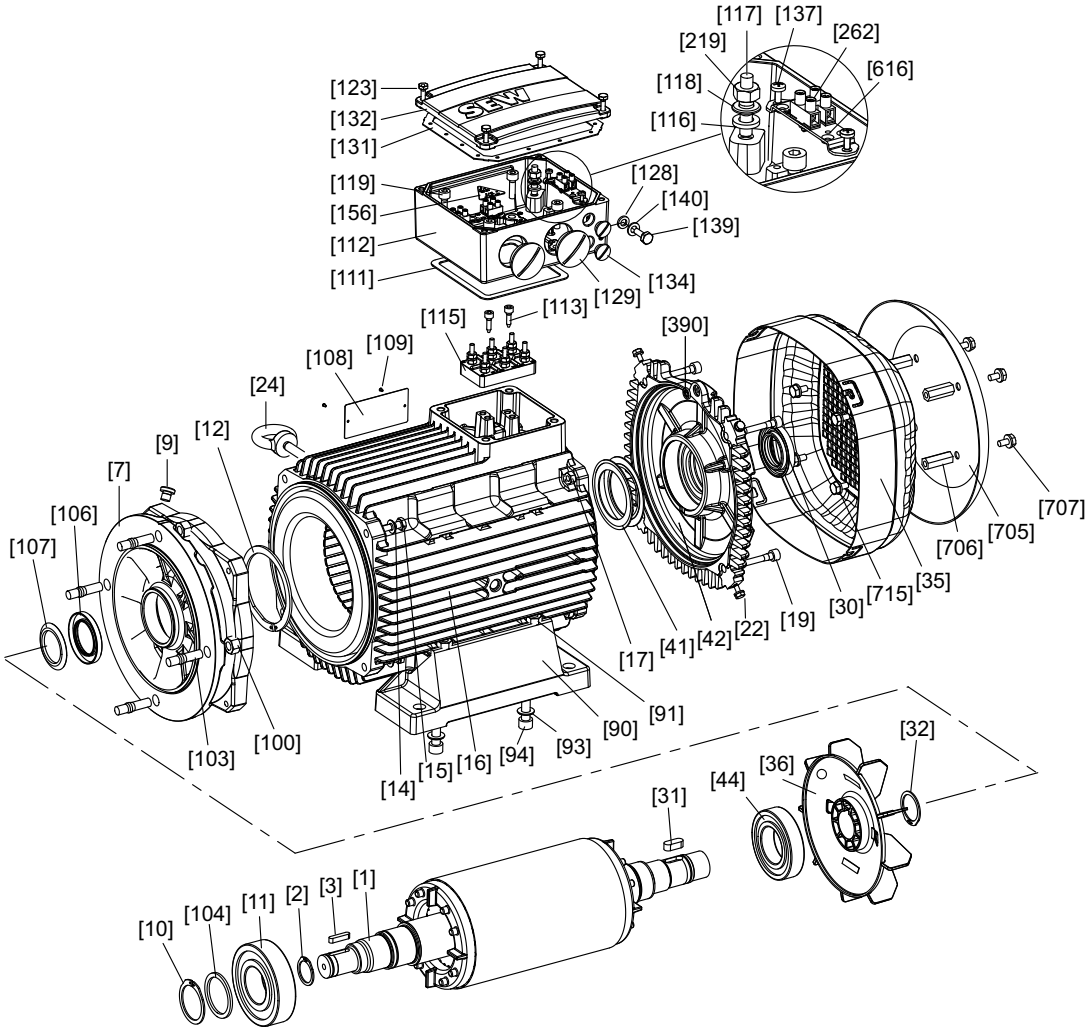

18014399036804619

[1]	Rotor	[31]	Key	[108]	Nameplate	[132]	Terminal box cover
[2]	Retaining ring	[32]	Retaining ring	[109]	Grooved pin	[134]	Screw plug with O-ring
[3]	Key	[35]	Fan guard	[111]	Gasket for lower part	[137]	Screw
[7]	Flange	[36]	Fan	[112]	Terminal box lower part	[139]	Hex head screw
[9]	Screw plug	[41]	Cup spring	[113]	Screw	[140]	Washer
[10]	Retaining ring	[42]	Rear endshield	[115]	Terminal board	[156]	Information label
[11]	Deep groove ball bearing	[44]	Deep groove ball bearing	[116]	Serrated lock washer	[219]	Hex nut
[12]	Retaining ring	[90]	Foot	[117]	Stud	[262]	Connection terminal
[14]	Washer	[91]	Hex nut	[118]	Washer	[390]	O-ring
[15]	Hex head screw	[93]	Washer	[119]	Cap screw	[616]	Retaining plate
[16]	Stator	[94]	Cap screw	[123]	Hex head screw	[705]	Canopy
[17]	Hex nut	[100]	Hex nut	[128]	Serrated lock washer	[706]	Spacer
[19]	Cap screw	[103]	Stud	[129]	Screw plug with O-ring	[707]	Hex head screw
[22]	Hex head screw	[104]	Supporting ring	[131]	Gasket for cover	[715]	Hex head screw
[24]	Eyebolt	[106]	Oil seal				
[30]	Sealing ring	[107]	Oil flinger				

7.6.3 Basic structure of DR..200 – 225, DRN200 – 225

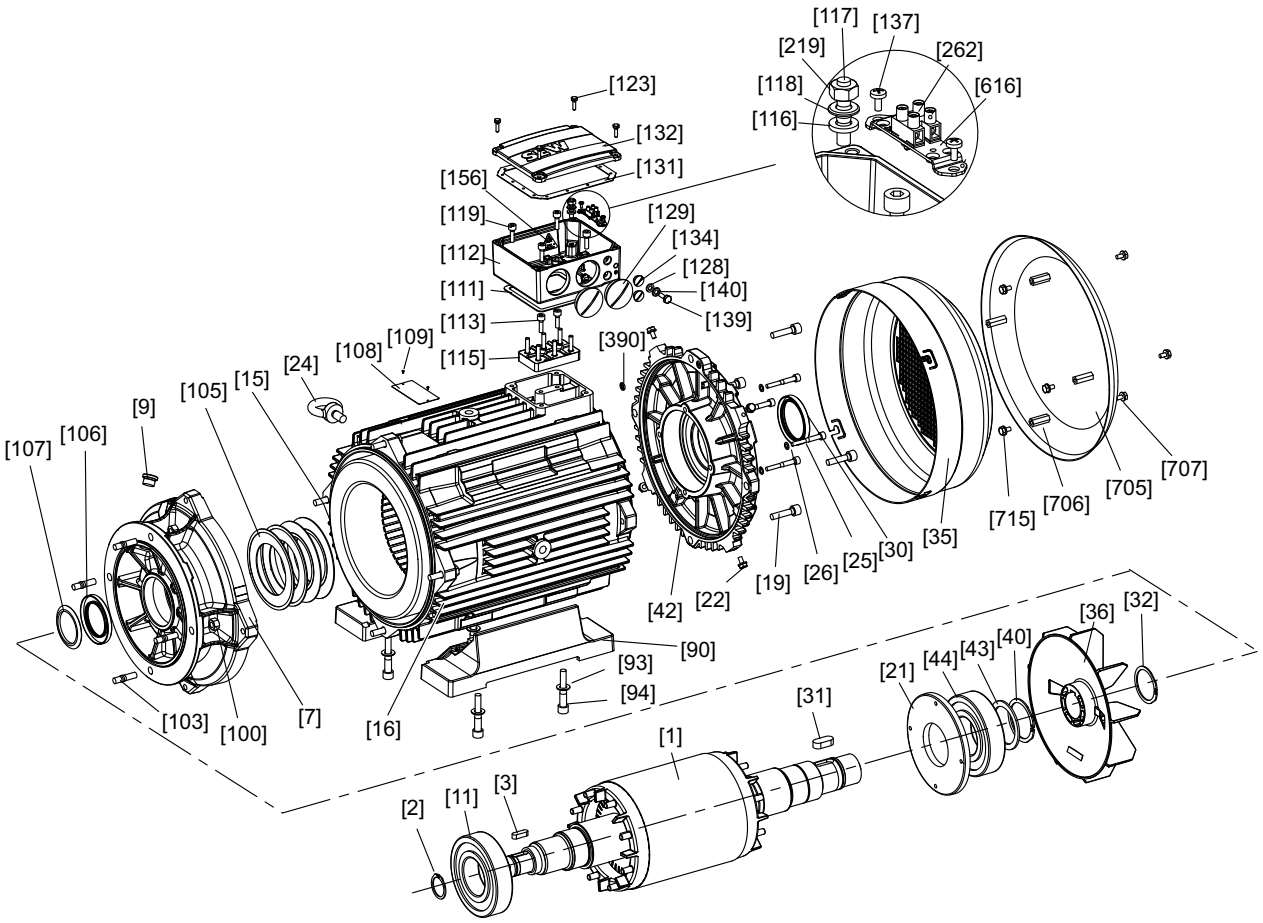

9007200332597387

[1]	Rotor	[31]	Key	[107]	Oil flinger	[132]	Terminal box cover
[2]	Retaining ring	[32]	Retaining ring	[108]	Nameplate	[134]	Screw plug
[3]	Key	[35]	Fan guard	[109]	Grooved pin	[137]	Screw
[7]	Flange	[36]	Fan	[111]	Gasket for lower part	[139]	Hex head screw
[9]	Screw plug	[40]	Retaining ring	[112]	Terminal box lower part	[140]	Washer
[11]	Deep groove ball bearing	[42]	Rear endshield	[113]	Cap screw	[156]	Information label
[15]	Hex head screw	[43]	Supporting ring	[115]	Terminal board	[219]	Hex nut
[16]	Stator	[44]	Deep groove ball bearing	[116]	Serrated lock washer	[262]	Connection terminal
[19]	Cap screw	[90]	Foot	[117]	Stud	[390]	O-ring
[21]	Oil seal flange	[93]	Washer	[118]	Washer	[616]	Retaining plate
[22]	Hex head screw	[94]	Cap screw	[119]	Cap screw	[705]	Canopy
[24]	Eyebolt	[100]	Hex nut	[123]	Hex head screw	[706]	Spacer bolt
[25]	Cap screw	[103]	Stud	[128]	Serrated lock washer	[707]	Hex head screw
[26]	Shield ring	[105]	Cup spring	[129]	Screw plug	[715]	Hex head screw
[30]	Oil seal	[106]	Oil seal	[131]	Gasket for cover		

7.6.4 Basic structure of DR..250 – 280, DRN250 – 280

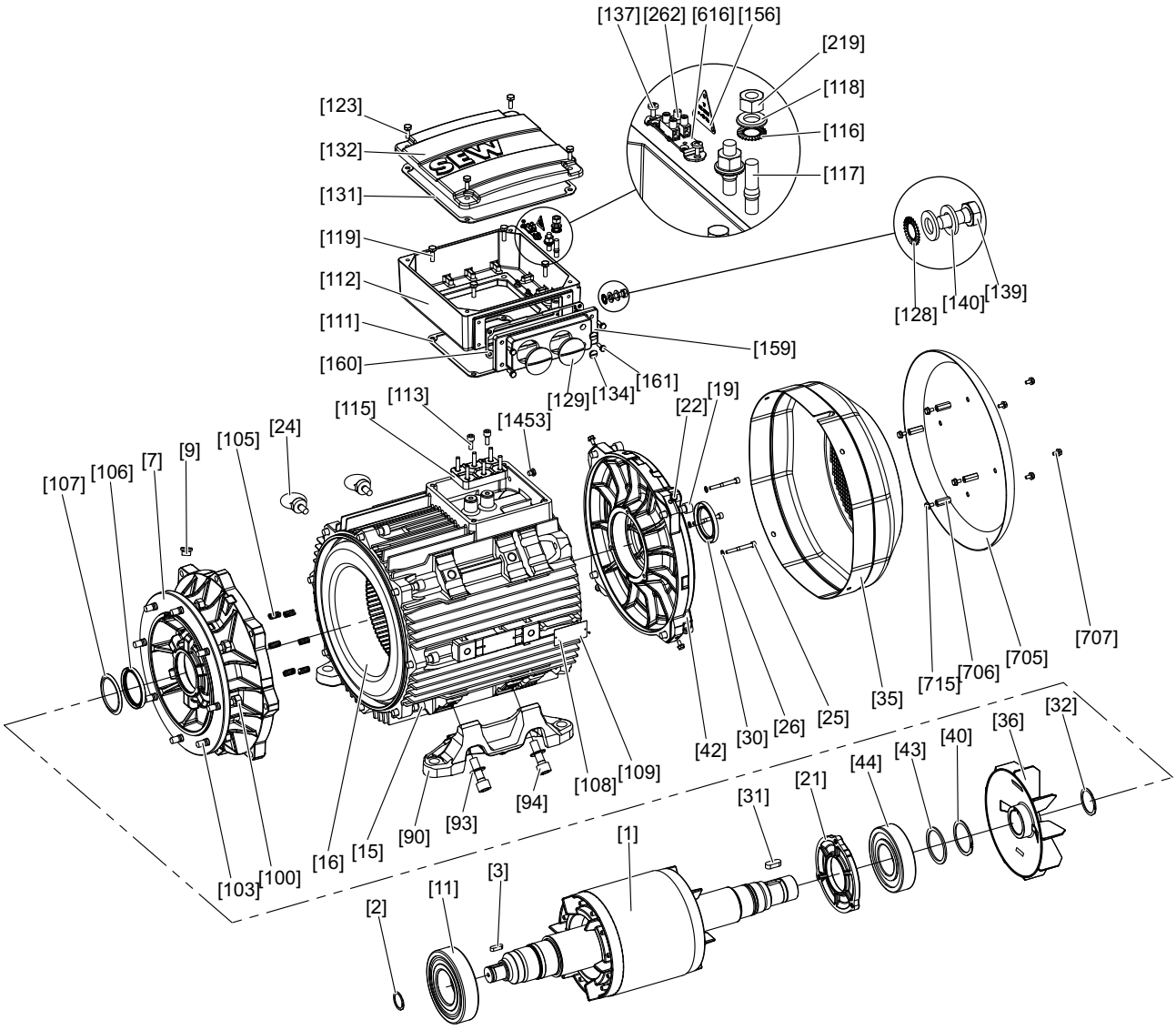

9007206690410123

[1]	Rotor	[32]	Retaining ring	[108]	Nameplate	[134]	Screw plug
[2]	Retaining ring	[35]	Fan guard	[109]	Grooved pin	[137]	Screw
[3]	Key	[36]	Fan	[111]	Gasket for lower part	[139]	Hex head screw
[7]	Flange	[40]	Retaining ring	[112]	Terminal box lower part	[140]	Washer
[9]	Screw plug	[42]	B-side endshield	[113]	Cap screw	[156]	Information sign
[11]	Deep groove ball bearing	[43]	Supporting ring	[115]	Terminal board	[159]	Connection piece
[15]	Cap screw	[44]	Deep groove ball bearing	[116]	Serrated lock washer	[160]	Connection piece gasket
[16]	Stator	[90]	Foot	[117]	Stud	[161]	Hex head screw
[19]	Cap screw	[93]	Washer	[118]	Washer	[219]	Hex nut
[21]	Oil seal flange	[94]	Cap screw	[119]	Hex head screw	[262]	Connection terminal
[22]	Hex head screw	[100]	Hex nut	[123]	Hex head screw	[705]	Canopy
[24]	Eyebolt	[103]	Stud	[128]	Serrated lock washer	[706]	Spacer bolt
[25]	Cap screw	[105]	Compression spring	[129]	Screw plug	[707]	Hex head screw
[26]	Shield ring	[106]	Oil seal	[131]	Gasket for cover	[715]	Hex head screw
[30]	Oil seal	[107]	Oil flinger	[132]	Terminal box cover	[1453]	Screw plug
[31]	Key						

7.6.5 Basic structure of DR..315, DRN315

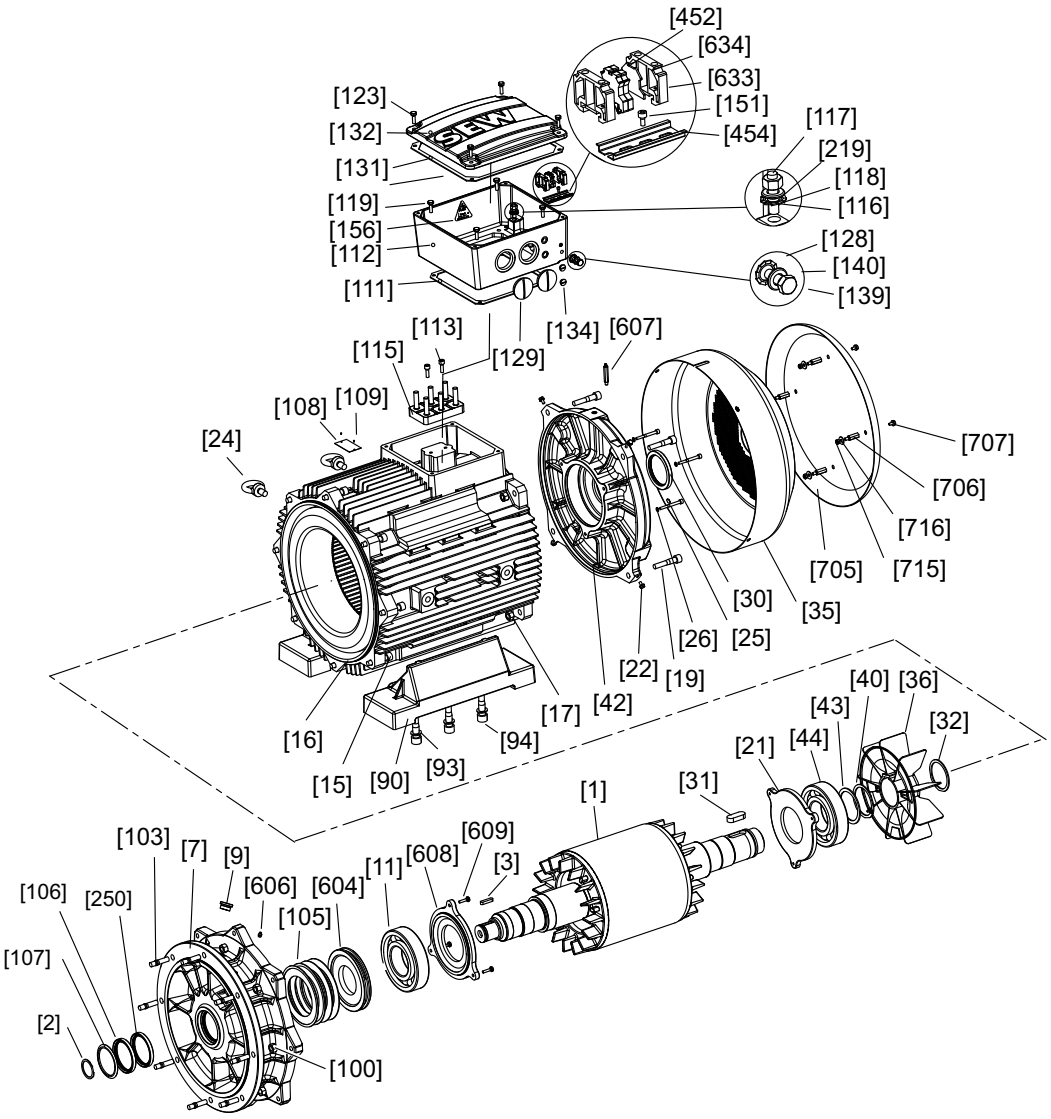

27021598116221579

[1]	Rotor	[32]	Retaining ring	[111]	Gasket for lower part	[156]	Information sign
[2]	Retaining ring	[35]	Fan guard	[112]	Terminal box lower part	[219]	Hex nut
[3]	Key	[36]	Fan	[113]	Cap screw	[250]	Oil seal
[7]	Flange	[40]	Retaining ring	[115]	Terminal board	[452]	Terminal strip
[9]	Screw plug	[42]	B-side endshield	[116]	Serrated lock washer	[454]	Mounting rail
[11]	Rolling bearing	[43]	Supporting ring	[117]	Stud	[604]	Lubrication ring
[15]	Cap screw	[44]	Rolling bearing	[118]	Washer	[606]	Grease nipple
[16]	Stator	[90]	Foot	[119]	Hex head screw	[607]	Grease nipple
[17]	Hex nut	[93]	Washer	[123]	Hex head screw	[608]	Oil seal flange
[19]	Cap screw	[94]	Cap screw	[128]	Serrated lock washer	[609]	Hex head screw
[21]	Oil seal flange	[100]	Hex nut	[129]	Screw plug	[633]	End bracket
[22]	Hex head screw	[103]	Stud	[131]	Gasket for cover	[634]	End plate
[24]	Eyebolt	[105]	Cup spring	[132]	Terminal box cover	[705]	Canopy
[25]	Cap screw	[106]	Oil seal	[134]	Screw plug	[706]	Spacer bolt
[26]	Shield ring	[107]	Oil flinger	[139]	Hex head screw	[707]	Hex head screw
[30]	Oil seal	[108]	Nameplate	[140]	Washer	[715]	Hex nut
[31]	Key	[109]	Grooved pin	[151]	Cap screw	[716]	Washer

21927189/EN – 07/2015

7.6.6 Inspection steps for DR..71 – 315, DRN80 – 315 motors



⚠ WARNING

Risk of crushing if the drive starts up unintentionally.

Severe or fatal injuries.

- Isolate the motor and forced cooling fan, if installed, from the power supply before starting work, safeguarding them against unintentional re-start.
- Carefully observe the steps described below.

1. Remove forced cooling fan and rotary encoder, if installed.

   See chapter "Motor and brake maintenance – preliminary work" (→ 🗎 103).
2. With gearmotors: Remove the motor from the gear unit.

   Remove pinion and oil flinger [107].
3. Remove fan guard [35] and fan [36].
4. Remove stator:
   - **Size DR..71 – 132, DRN80 – 132S:** Remove cap screws [13] from flanged endshield [7] and B-side endshield [42]. Remove stator [16] from flanged endshield [7].
   - **Size DR..160 – 180, DRN132M – 180:** Loosen cap screws [19] and remove B-side endshield [42]. Loosen hex head screw [15] and remove stator from flanged endshield.
   - **Size DR..200 – 225, DRN200 – 225**
   – Loosen hex head screw [15] and remove the flanged endshield [7] from the stator.
   – Loosen cap screws [19] and remove the complete rotor [1] together with the B-side endshield [42].
   – Loosen cap screws [25] and remove the complete rotor [1] from the B-side endshield [42].
   - **Size DR..250 – 280, DRN250 – 280 without** /ERF or /NS option
   – Loosen cap screws [15] and remove the flange [7].
   – Loosen cap screws [19] and remove the B-side endshield [42] together with the rotor [1].
   – Loosen cap screws [25] and remove the B-side endshield [42] from the rotor [1].
   - **Size DR..250 – 280, DRN250 – 280** with /ERF or /NS option or **DR../DRN315**
   – Unfasten cap screws [19] and [25], and remove B-side endshield [42].
   – Loosen cap screws [15] and remove the flange [7] together with the rotor [1].
   – Loosen hex head screws [609] and remove the flange [7] from the rotor [1].
   – Before disassembly, preferably protect the oil seal seat from damage using adhesive tape or a protective sleeve.
5. Visual inspection: Are there traces of gear oil or moisture inside the stator?
   - If not, proceed with step 8.
   - If there is moisture, proceed with step 6.
   - If there is gear oil, have the motor repaired by a specialist workshop

21927189/EN – 07/2015

6. If there is moisture inside the stator:
   - With gearmotors: Remove the motor from the gear unit.
   - With motors without a gear unit: Remove A-flange.
   - Remove the rotor [1].
7. Clean the winding, dry it and check it electrically (see chapter "Drying the motor" (→ 🗎 28)).
8. Replace the rolling bearing [11], [44] with permitted rolling bearing types.

   See chapter "Permitted rolling bearing types" (→ 🗎 174).
9. **DR..250 – 280, DRN250 – 280 with** /ERF or /NS option or **DR../DRN315**
   - Fill the rolling bearing with grease until it is two thirds full. See chapter "Bearing lubrication" (→ 🗎 101).
   - Note: Place the oil seal flange [608] and [21] onto the rotor shaft before installing the bearings.
   - Starting on the A-side, mount the motor vertically.
   - Place the springs [105] and lubrication ring [604] into the bearing bore of the flange [7].
   - Hang the rotor [1] onto the B-side thread, and guide into the flange [7].
   - Fasten the oil seal flange [608] to the flange [7] using the hex head bolts [609].
10. Reseal the shaft:
    - A-side: Replace the oil seal [106].
    - B-side: Replace the oil seal [30].

      Coat the sealing lip with grease (Klüber Petamo GHY 133).
11. Reseal the stator seat:
    - Seal the sealing surface with duroplastic sealing compound (operating temperature -40 to +180 °C), such as "SEW L Spezial".
    - For sizes **DR..71 – 132, DRN80 – 132S**: Replace sealing [392].
    - For sizes **DR..71 – 132, DRN80 – 132S**: Change O-ring [1480] if it is deformed or damaged. As an alternative, use e.g. "SEW L Spezial" instead of the O-ring.
12. Install the motor and optional equipment.

21927189/EN – 07/2015

7.7 Inspection/maintenance of DR..71 – 315, DRN80 – 315 brakemotors

7.7.1 Basic structure of DR..71 – 80, DRN80 brakemotors

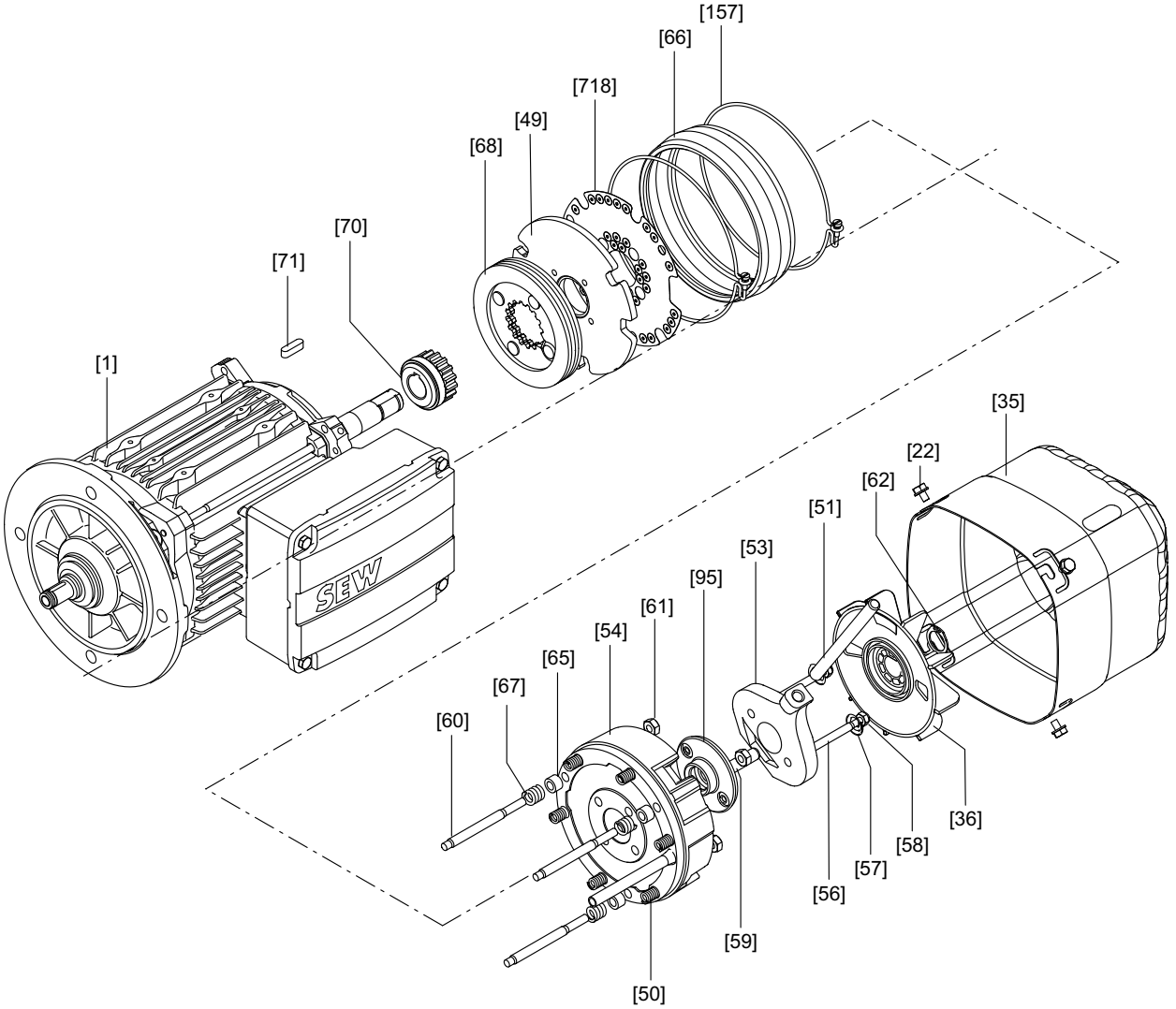

9007199428941963

[1]	Motor with brake endshield	[54]	Magnet body, complete	[67]	Counter spring
[22]	Hex head screw	[56]	Stud	[68]	Brake disk
[35]	Fan guard	[57]	Conical spring	[62]	Retaining ring
[36]	Fan	[58]	Adjusting nut	[70]	Driver
[49]	Pressure plate	[59]	Parallel pin	[71]	Key
[50]	Brake spring	[60]	Stud 3x	[95]	Sealing ring
[11]	Complete magnet body	[61]	Hex nut	[718]	Damping plate
[51]	Hand lever	[65]	Pressure ring		
[53]	Releasing lever	[66]	Sealing strip		

21927189/EN – 07/2015

7.7.2 Basic structure of DR..90 – 132, DRN90 – 132S brakemotors

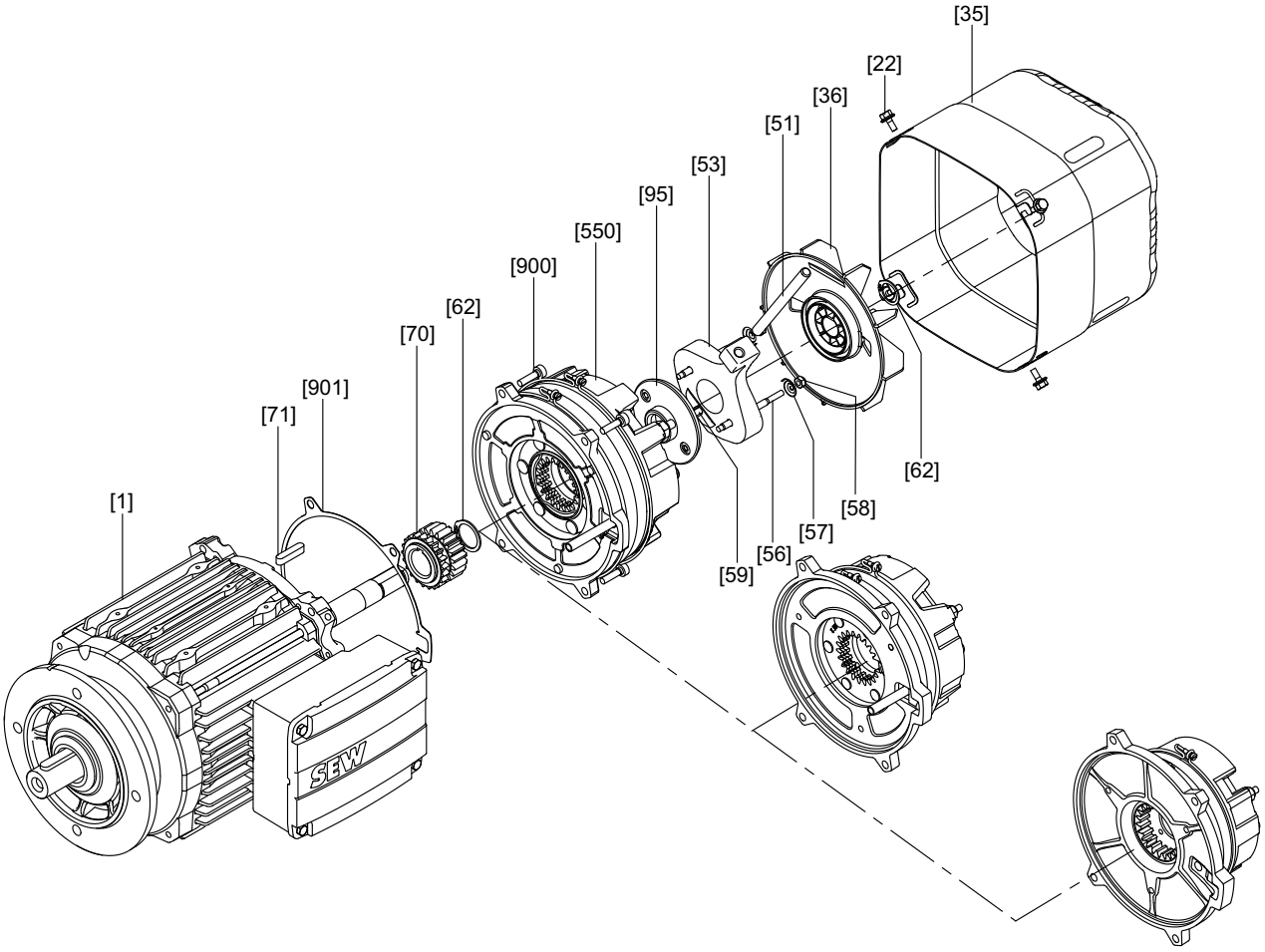

9007199434722955

[1]	Motor with brake endshield	[53]	Releasing lever	[70]	Driver
[22]	Hex head screw	[56]	Stud	[71]	Key
[32]	Retaining ring	[57]	Conical spring	[95]	Sealing ring
[35]	Fan guard	[58]	Adjusting nut	[550]	Pre-assembled brake
[36]	Fan	[59]	Parallel pin	[900]	Screw
[51]	Hand lever	[62]	Retaining ring	[901]	Gasket

21927189/EN – 07/2015

7.7.3 Basic structure of DR..160 – 280, DRN132M – 280 brakemotors

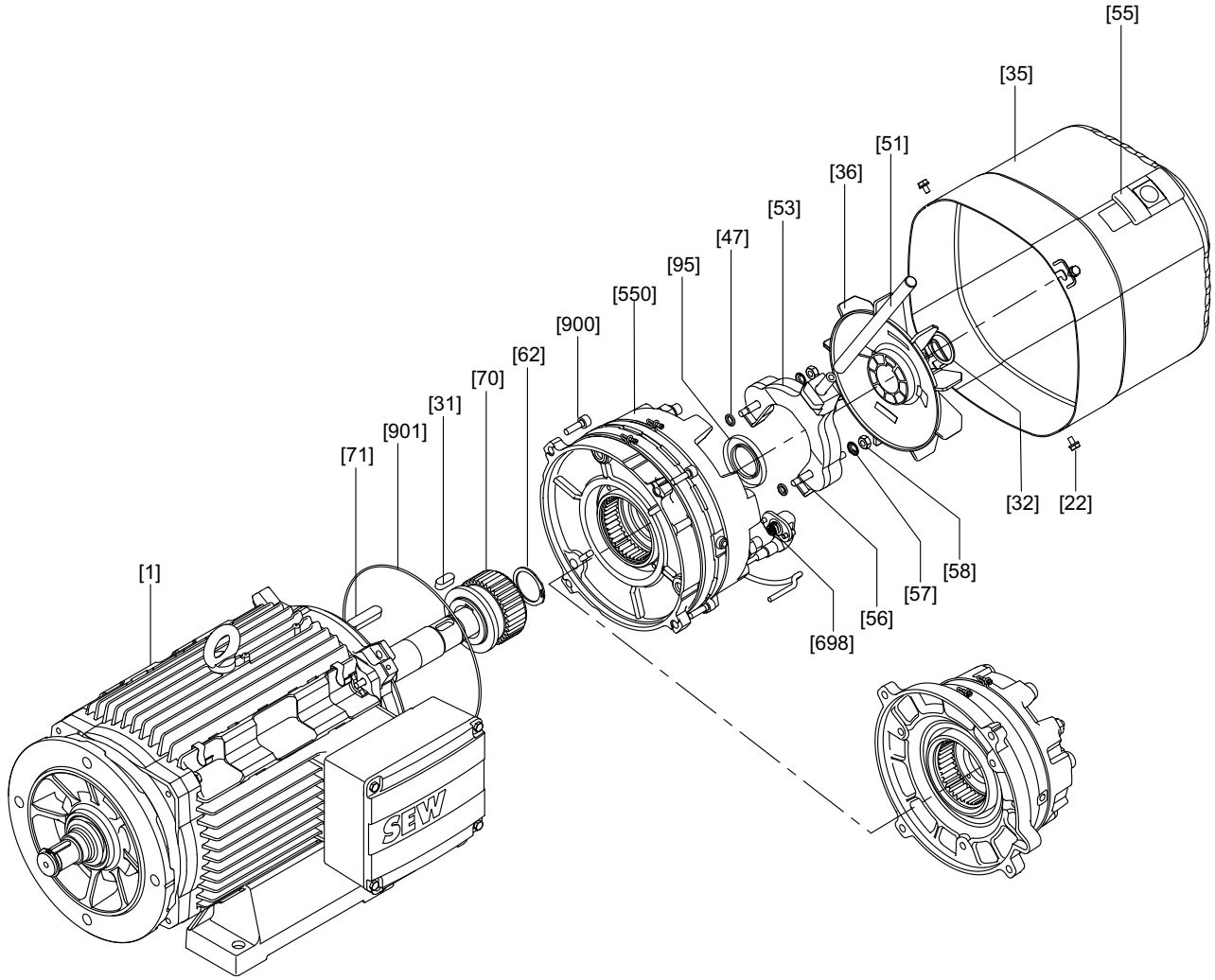

9007199781964683

[1]	Motor with brake endshield	[51]	Hand lever	[70]	Driver
[22]	Hex head screw	[53]	Releasing lever	[71]	Key
[31]	Key	[55]	Closing piece	[95]	Sealing ring
[32]	Retaining ring	[56]	Stud	[550]	Pre-assembled brake
[35]	Fan guard	[57]	Conical spring	[698]	Connector complete (only for BE20 – BE122)
[36]	Fan	[58]	Adjusting nut	[900]	Screw
[47]	O-ring	[62]	Retaining ring	[901]	O-ring

7.7.4 DR.315 brakemotor – basic structure

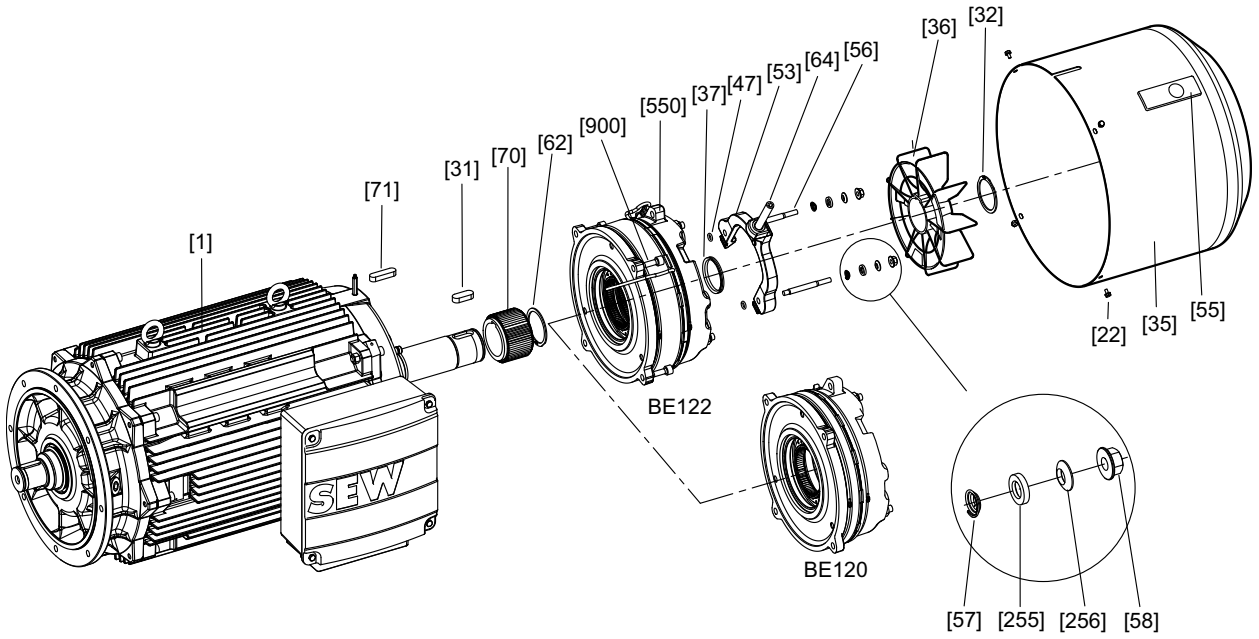

[1]	Motor with brake endshield	[53]	Releasing lever	[71]	Key
[22]	Hex head screw	[55]	Closing piece	[255]	Conical seat
[31]	Key	[56]	Stud	[256]	Spherical washer
[32]	Retaining ring	[57]	Conical spring	[550]	Pre-assembled brake
[35]	Fan guard	[58]	Adjusting nut	[900]	Screw
[36]	Fan	[62]	Retaining ring	[901]	Gasket
[37]	V-ring	[64]	Set screw		
[47]	O-ring	[70]	Driver		

21927189/EN – 07/2015

7.7.5 Inspection steps for DR..71 – 315, DRN80 – 315 brakemotors



⚠ WARNING

Risk of crushing if the drive starts up unintentionally.

Severe or fatal injuries.

- Isolate the motor, brake, and forced cooling fan, if installed, from the power supply before starting work, safeguarding them against unintentional re-start.
- Carefully observe the steps described below.

1. Remove forced cooling fan and rotary encoder, if installed.

   See chapter "Motor and brake maintenance – preliminary work" (→ 🗎 103).
2. With gearmotors: Remove the motor from the gear unit.

   Remove pinion and oil flinger [107].
3. Remove fan guard [35] and fan [36].
4. Remove stator:
   - **Size DR..71 – 132, DRN80 – 132S:** Remove cap screws [13] from flanged endshield [7] and B-side endshield [42]. Remove stator [16] from flanged endshield [7].
   - **Size DR..160 – 180, DRN132M – 180:** Loosen cap screws [19] and remove B-side endshield [42]. Loosen hex head screw [15] and remove stator from flanged endshield.
   - **Size DR..200 – 225, DRN200 – 225**
   – Loosen hex head screw [15] and remove the flanged endshield [7] from the stator.
   – Loosen cap screws [19] and remove the complete rotor [1] together with the B-side endshield [42].
   – Loosen cap screws [25] and remove the complete rotor [1] from the B-side endshield [42].
   - **Size DR..250 – 280, DRN250 – 280 without** /ERF or /NS option
   – Loosen cap screws [15] and remove the flange [7].
   – Loosen cap screws [19] and remove the B-side endshield [42] together with the rotor [1].
   – Loosen cap screws [25] and remove the B-side endshield [42] from the rotor [1].
   - **Size DR..250 – 280, DRN250 – 280** with /ERF or /NS option or **DR../DRN315**
   – Unfasten cap screws [19] and [25], and remove B-side endshield [42].
   – Loosen cap screws [15] and remove the flange [7] together with the rotor [1].
   – Loosen hex head screws [609] and remove the flange [7] from the rotor [1].
   – Before disassembly, preferably protect the oil seal seat from damage using adhesive tape or a protective sleeve.
5. Remove the brake cable:
   - **BE05 – 11:** Remove the terminal box cover and unfasten the brake cable from the rectifier.
   - **BE20 – 122:** Loosen safety screws of the brake plug connector [698] and remove plug connector.

21927189/EN – 07/2015

6. Push the brake off the stator and carefully lift it off.
7. Pull the stator back by about 3 to 4 cm.
8. Visual inspection: Are there traces of gear oil or moisture inside the stator?
   - If not, proceed with step 11.
   - If there is moisture, proceed with step 9.
   - If there is gear oil, have the motor repaired by a specialist workshop
9. If there is moisture inside the stator:
   - With gearmotors: Remove the motor from the gear unit
   - With motors without a gear unit: Remove A-flange
   - Remove the rotor [1]
10. Clean the winding, dry it and check it electrically (see chapter "Drying the motor" (→ 🗎 28)).
11. Replace the rolling bearing [11], [44] with permitted rolling bearing types.

    See chapter "Permitted rolling bearing types" (→ 🗎 174).
12. **DR..250 – 280, DRN250 – 280 with** /ERF or /NS option or **DR../DRN315**
    - Fill the rolling bearing with grease until it is two thirds full. See chapter "Bearing lubrication" (→ 🗎 101).
    - Note: Place the oil seal flange [608] and [21] onto the rotor shaft before installing the bearings.
    - Starting on the A-side, mount the motor vertically.
    - Place the springs [105] and lubrication ring [604] into the bearing bore of the flange [7].
    - Hang the rotor [1] onto the B-side thread, and guide into the flange [7].
    - Fasten the oil seal flange [608] to the flange [7] using the hex head bolts [609].
    - Screw in the stator [16] and flange [7] with screws [15].

      Note: Protect the winding overhang from damage.
    - Before mounting the B-side endshield, screw in the M8 set screw approximately 200 mm into the oil seal flange [21].
    - Before mounting the B-side endshield [42], feed the set screw in through a bore for the screw [25]. Screw B-side endshield to stator [16] using cap screws [19] and hex nuts [17]. Lift the oil seal flange [21] with the set screw, and fasten using 2 screws [25]. Remove the set screw and screw in the remaining screws [25].
    - Renew oil seals
    – A-side: Replace oil seals [106], for gearmotors replace the oil flinger [107] and oil seal [250].

      With gearmotors, fill about two-thirds of the space between the two oil seals with suitable grease. See chapter Order information for lubricants and anti-corrosion agents (→ 🗎 176).
    – B-side: Insert the oil seal [30], and coat the sealing lip with the same grease.
13. Reseal the shaft:
    - A-side: Replace the oil seal [106]
    - B-side: Replace the oil seal [30]

21927189/EN – 07/2015

Apply suitable grease to the sealing lip. See chapter Order information for lubricants and anti-corrosion agents (→ 🗎 176).

14. Reseal the stator seat:
    - Seal the sealing surface with duroplastic sealing compound

      (operating temperature –40 °C to +180 °C), e.g. "SEW L Spezial".
    - For **sizes DR..71 – 132, DRN80 – 132S**: Replace sealing [392].
15. **Motor size DR..160 – 280, DRN132M – 280:** Replace the O-ring [901] between the B-side endshield [42] and the pre-assembled brake [550]. Install the pre-assembled brake [550]
16. Apply suitable grease to the sealing ring [95]. See chapter Order information for lubricants and anti-corrosion agents (→ 🗎 176).
17. Install the motor, the brake and optional equipment.

21927189/EN – 07/2015

7.7.6 Basic structure of BE05 – BE2 brakes (DR..71 – 80, DRN80)

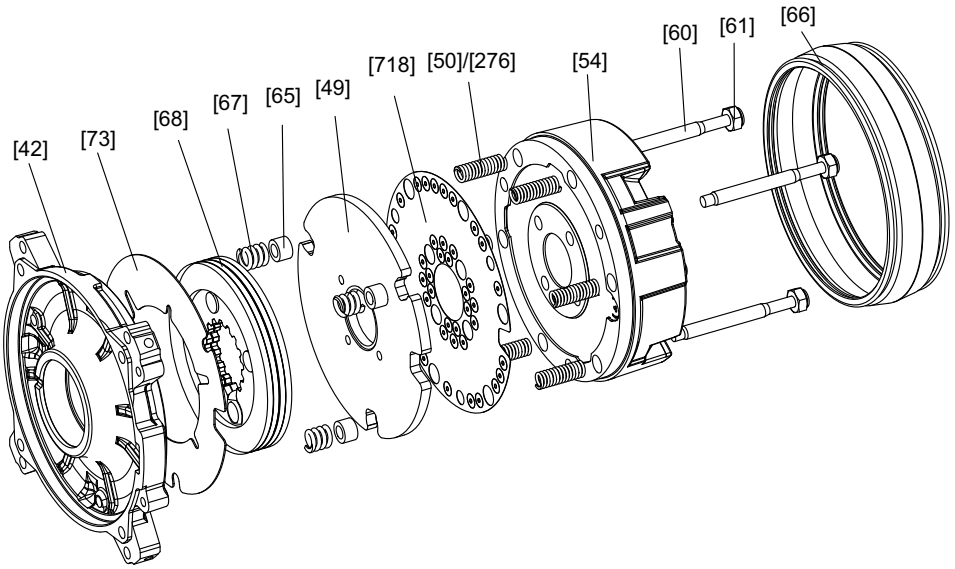

18014399037859723

[42]	Brake endshield	[61]	Hex nut	[73]	Washer
[49]	Pressure plate	[65]	Pressure ring	[276]	Brake spring (blue)
[50]	Brake spring (normal)	[66]	Sealing strip	[718]	Damping plate
[54]	Magnet body, complete	[67]	Counter spring		
[60]	Stud 3x	[68]	Brake disk		

7.7.7 Basic structure of BE1 – BE11 brakes (DR..90 – 160, DRN90 – 132S)

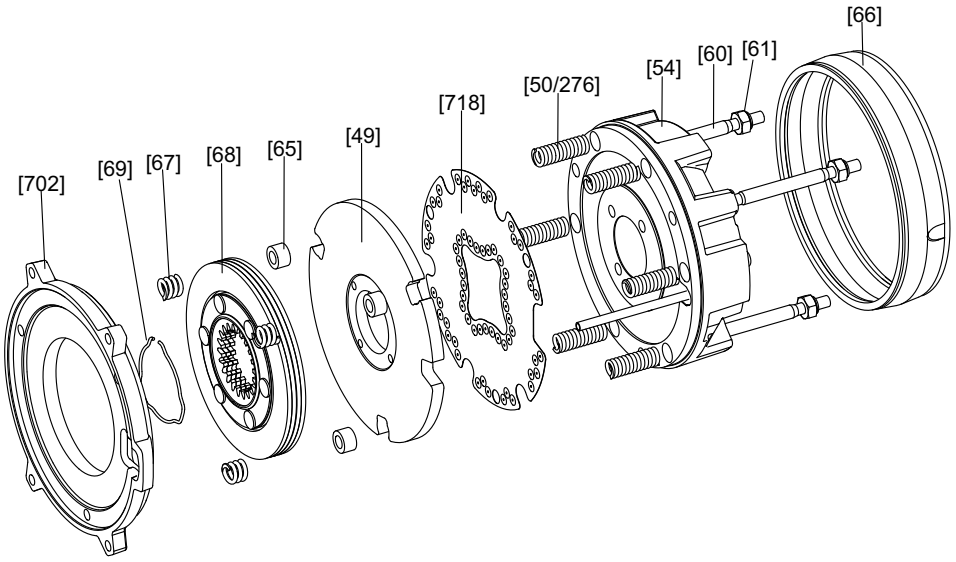

18014398683684619

[49]	Pressure plate	[61]	Hex nut	[68]	Brake disk
[50]	Brake spring (normal)	[65]	Pressure ring	[276]	Brake spring (blue)
[54]	Magnet body, complete	[66]	Sealing strip	[702]	Friction disk
[60]	Stud 3x	[67]	Counter spring	[718]	Damping plate

21927189/EN – 07/2015

7.7.8 Basic structure of BE20 brakes (DR..160 – 180, DRN132M – 180)

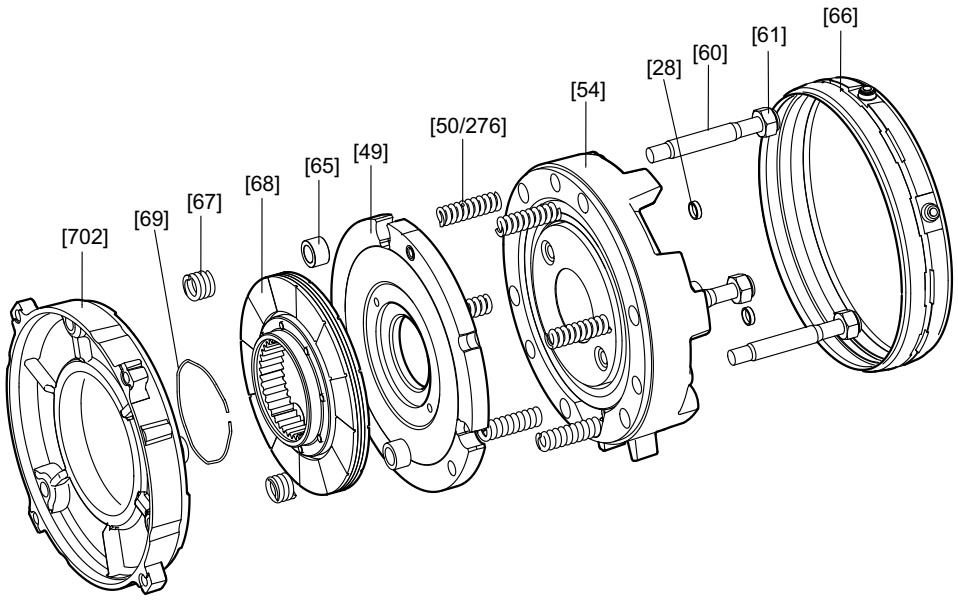

9007200415803275

[28]	Closing cap	[61]	Hex nut	[69]	Circular spring
[49]	Pressure plate, complete	[65]	Pressure ring	[276]	Brake spring (blue)
[50]	Brake spring (normal)	[66]	Sealing strip	[702]	Friction disk
[54]	Magnet body, complete	[67]	Counter spring		
[60]	Stud 3x	[68]	Brake disk		

7.7.9 Basic structure of BE30 – BE32 brakes (DR..180 – 225, DRN180 – 225)

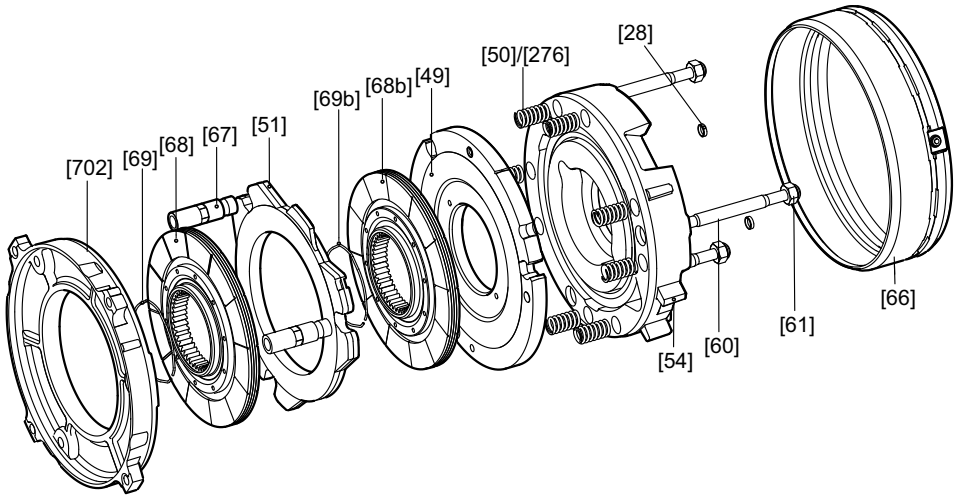

18014399663204747

[28]	Closing cap	[60]	Stud 3x	[69]	Circular spring
[49]	Pressure plate	[61]	Hex nut	[276]	Brake spring (blue)
[50]	Brake spring (normal)	[66]	Sealing strip	[718]	Friction disk
[51]	Brake plate	[67]	Setting sleeve		
[54]	Magnet body	[68]	Brake disk		

7.7.10 Basic structure of BE60 – BE122 brakes (DR..250 – 315, DRN250 – 315)

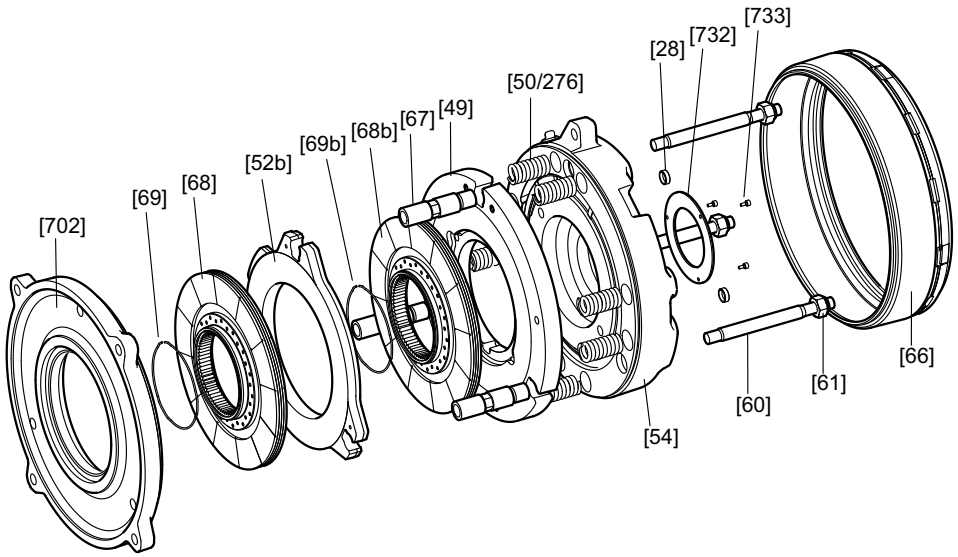

18014398863076107

[28]	Closing cap	[61]	Hex nut	[69b]	Circular spring (BE122 only)
[49]	Pressure plate	[66]	Sealing strip	[276]	Brake spring
[50]	Brake spring	[67]	Counter spring	[702]	Friction disk
[52b]	Brake plate (BE122 only)	[68]	Brake disk	[732]	Cover plate
[54]	Magnet body, complete	[68b]	Brake disk (BE12 only)	[733]	Screw
[60]	Stud 3x	[69]	Circular spring		

21927189/EN – 07/2015

7.7.11 Setting the working air gap of BE05 – BE122 brakes



⚠ WARNING

Risk of crushing if the drive starts up unintentionally.

Severe or fatal injuries.

- Isolate the motor, brake, and forced cooling fan, if installed, from the power supply before starting work, safeguarding them against unintentional re-start.
- Carefully observe the steps described below.

1. Remove the following:
   - Forced cooling fan and rotary encoder, if installed.

     See chapter "Motor and brake maintenance – preliminary work" (→ 🗎 103).
   - Fan guard with encoder mounting or fan guard [35]
2. Push the sealing strip [66] aside,
   - Release the clamping strap, if necessary
   - Sucking off any abrasion
3. Measure the brake disk [68]:
   - Minimum brake disk thickness see chapter "Technical data" (→ 🗎 159).
   - If necessary, replace brake disk according to chapter Replacing the brake disk of BE05 – BE122 brakes (→ 🗎 133).
4. **BE30 – 122:** Unfasten the setting sleeve [67] by turning it towards the B-side endshield.
5. Measure the working air gap A (see the following figure)

   (use a feeler gauge and measure at three points offset by 120°):
   - **For BE05 – 11:** between pressure plate [49] and damping plate [718]
   - **For BE20 – 122:** between pressure plate [49] and magnet body [54]

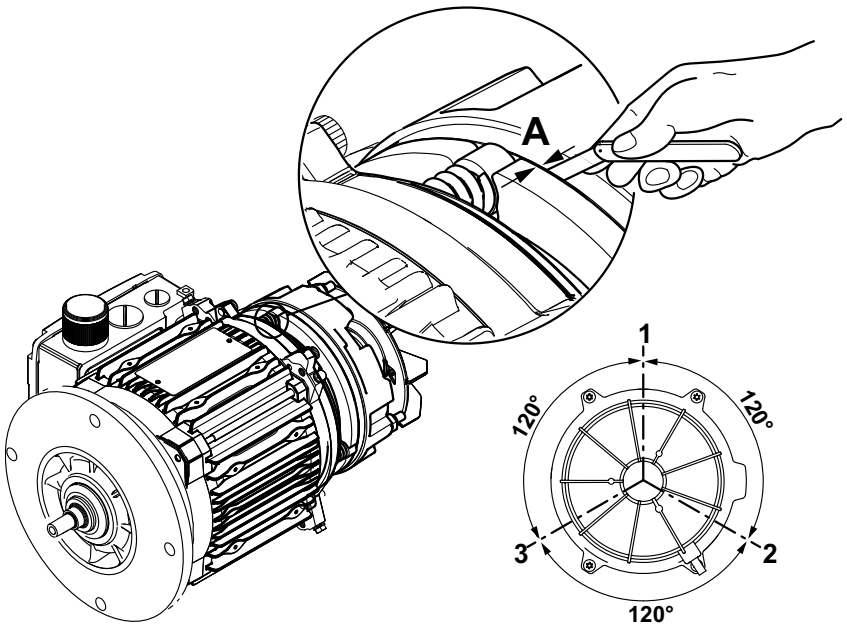

18014398689460619

- **BE050 – 20:** Tighten the hex nuts [61] until the working air gap is set correctly, see chapter "Technical data".
- **BE30 – 62:** Tighten the hex nuts [61] until the working air gap is 0.25 mm.
- **BE120 – 122:** Tighten the hex nuts [61] until the working air gap is 0.30 mm.
- **If you are mounting the BE32 in a vertical position, set the 3 springs of the brake plate to the following dimension:**

Mounting position	X in mm
Brake at the top	7.3
Brake at the bottom	7.3

- **If you are mounting the BE62 – 122 brakes in a vertical position, set the 3 springs on the brake plate to the following position:**

Mounting position	X in mm
Brake at the top	10.0
Brake at the bottom	10.0

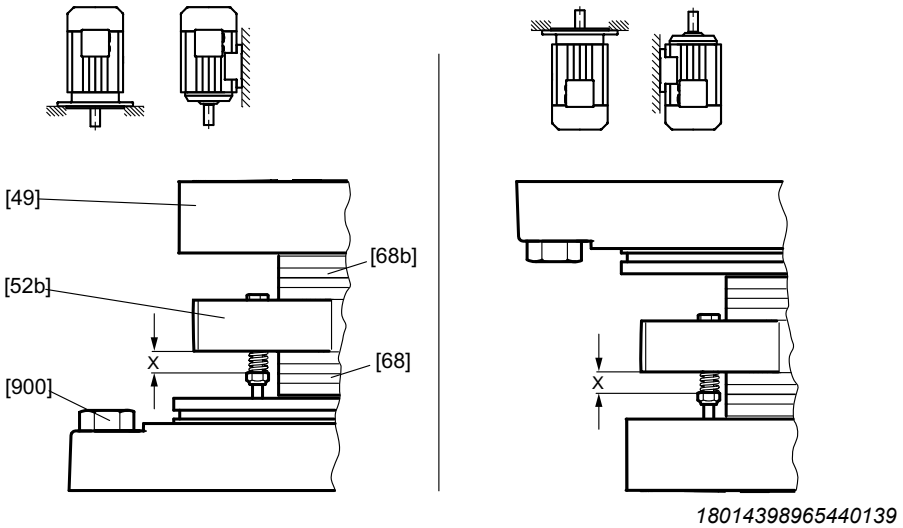

18014398965440139

[49] Pressure plate
[52b] Brake plate (BE32, BE62, BE122)
[68] Brake disk
[68b] Brake disk (BE32, BE62, BE122)
[900] Hex nut

7. **BE30 – 122:** Screw the setting sleeves [67] to the magnet body until the working air gap is correctly set, see chapter "Technical data (→ 🗎 159)".
8. Install the sealing strip back in place and re-install the dismantled parts.

21927189/EN – 07/2015

7.7.12 Replacing the brake disk of BE05 – BE122 brakes

In addition to the brake elements listed in column "BE brake", see chapter "Inspection and maintenance intervals" (→ 🗎 100), check the hex nuts [61] for wear when you replace the brake disk. You must always replace the hex nuts [61] when you replace the brake disk.



⚠ WARNING

Risk of crushing if the drive starts up unintentionally.

Severe or fatal injuries.

- Isolate the motor, brake, and forced cooling fan, if installed, from the power supply before starting work, safeguarding them against unintentional re-start.
- Carefully observe the steps described below.



INFORMATION

- The brake of DR..71 – 80, DRN80 motor sizes cannot be removed from the motor because the BE brake is directly installed on the brake endshield of the motor.
- The brake of DR..90 – 315, DRN90 – 315 motor sizes can be removed from the motor for replacing the brake disk because the BE brake is pre-installed on the brake endshield of the motor with a friction disk.

1. Remove the following:
   - Forced cooling fan and rotary encoder, if installed.

     See chapter "Motor and brake maintenance – preliminary work" (→ 🗎 103).
   - Fan guard with encoder mount or fan guard [35], retaining ring [32/62] and fan [36]
2. Remove the brake cable
   - **BE05 – 11:** Remove the terminal box cover and unfasten the brake cable from the rectifier.
   - **BE20 – 122:** Loosen safety screws of the brake plug connector [698] and remove plug connector.
3. Remove the rubber sealing strip [66]
4. Remove manual brake release if necessary.
   - Setting nuts [58], conical springs [57], studs [56], releasing lever [53], spiral dowel pin, if necessary [59], conical seat [255], spherical washer [256]
5. Loosen hex nuts [61], carefully pull off the magnet body [54] (brake cable!) and take out the brake springs [50].
6. **BE05 – 11:** Remove the damping plate [718], pressure plate [49] and brake disk [68]

   BE20, BE30, BE60, BE120: Remove pressure plate [49] and brake disk [68]

   BE32, BE62, BE122: Remove pressure plate [49], brake disks [68] and [68b]
7. Clean the brake components.
8. Install new brake disk(s).

21927189/EN – 07/2015

9. Brake parts are installed as described in chapter Inspection steps for DR..71 – 315, DRN80 – 315 brakemotors (→ 🗎 125).
   - Except for the fan and the fan guard, because the working air gap has to be set first, see chapter "Setting the working air gap of BE05 – BE122 brakes (→ 🗎 131)".
10. In case of manual brake release: Use the setting nuts to adjust the floating clearance "s" between the conical coil springs (pressed flat) and the setting nuts (see following figure).

⚠ WARNING



No braking due to incorrectly set floating clearance "s".

Severe or fatal injuries.

- Set the floating clearance "s" correctly according to the following figure and table so that the pressure plate can move up as the brake lining wears.

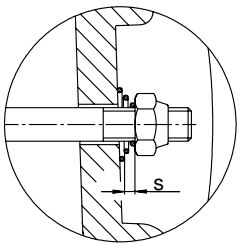

177241867

Brake	Floating clearance s in mm
BE05, BE1, BE2,	1.5
BE5	1.7
BE11, BE20, BE30, BE32, BE60, BE62, BE120, BE122	2

11. Put the sealing strip in place and re-install the dismantled parts.

INFORMATION



- The lockable manual brake release (type HF) is already released when resistance is encountered as the set screw is turned.
- The self-reengaging manual brake release (type HR) can be operated with normal hand pressure.
- In brakemotors with self-reengaging manual brake release, the manual brake release lever must be removed after startup/maintenance! A bracket is provided for storing the lever on the outside of the motor.

INFORMATION



After replacing the brake disk, the maximum braking torque will be reached after several cycles.

21927189/EN – 07/2015

7.7.13 Changing the braking torque of BE05 – BE122 brakes

The braking torque can be altered in stages.

- By changing the type and number of brake springs
- By changing the complete magnet body (only possible for BE05 and BE1)
- By changing the brake (from motor size DR..90, DRN90).
- By changing to a double-disk brake (BE30 only)

For the possible braking torque steps, please refer to chapter "Technical data" (→ 🗎 159).

21927189/EN – 07/2015

7.7.14 Changing the brake spring of BE05 – BE122 brakes



⚠ WARNING

Risk of crushing if the drive starts up unintentionally.

Severe or fatal injuries.

- Isolate the motor, brake, and forced cooling fan, if installed, from the power supply before starting work, safeguarding them against unintentional re-start.
- Carefully observe the steps described below.

1. Remove the following:
   - Forced cooling fan and rotary encoder, if installed.

     See chapter "Motor and brake maintenance – preliminary work" (→ 🗎 103).
   - Fan guard with encoder mount or fan guard [35], retaining ring [32/62] and fan [36]
2. Remove the brake cable
   - **BE05 – 11:** Remove the terminal box cover and unfasten the brake cable from the rectifier.
   - **BE20 – 122:** Loosen safety screws of the brake plug connector [698] and remove plug connector.
3. Remove the sealing strip [66] and the manual brake release:
   - Setting nuts [58], conical springs [57], studs [56], releasing lever [53], spiral dowel pin [59], conical seat [255], spherical washer [256]
4. Loosen hex nuts [61] and pull off the magnet body [54]
   - By approx. 50 mm (watch the brake cable)
5. Replace or add brake springs [50/276/265]
   - Arrange brake springs symmetrically
6. Brake parts are installed as described in chapter Inspection steps for DR..71 – 315, DRN80 – 315 brakemotors (→ 🗎 125).
   - Except for the fan and the fan guard, because the working air gap has to be set first, see chapter "Setting the working air gap of BE05 – BE122 brakes (→ 🗎 131)".
7. In case of manual brake release: Use the setting nuts to adjust the floating clearance "s" between the conical coil springs (pressed flat) and the setting nuts (see following figure).



⚠ WARNING

No braking due to incorrectly set floating clearance "s".

Severe or fatal injuries.

- Set the floating clearance "s" correctly according to the following figure and table so that the pressure plate can move up as the brake lining wears.

21927189/EN – 07/2015

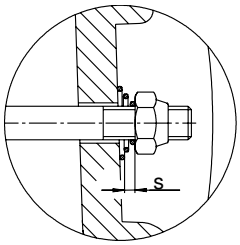

177241867

Brake	Floating clearance s in mm
BE05, BE1, BE2,	1.5
BE5	1.7
BE11, BE20, BE30, BE32, BE60, BE62, BE120, BE122	2

8. Put the sealing strip in place and re-install the dismantled parts.

INFORMATION

Replace setting nuts [58] and hex nuts [61] if the removal procedure is repeated.

7.7.15 Changing the magnet body of BE05 – BE122 brakes



⚠ WARNING

Risk of crushing if the drive starts up unintentionally.

Severe or fatal injuries.

- Isolate the motor, brake, and forced cooling fan, if installed, from the power supply before starting work, safeguarding them against unintentional re-start.
- Carefully observe the steps described below.

1. Remove the following:
   - Forced cooling fan and rotary encoder, if installed.

     See chapter "Motor and brake maintenance – preliminary work" (→ 🗎 103).
   - Fan guard with encoder mount or fan guard [35], retaining ring [32/62] and fan [36]
2. Remove the sealing strip [66] and the manual brake release:
   - Setting nuts [58], conical coil springs [57], studs [56], releasing lever [53], spiral dowel pin [59]
3. Remove the brake cable
   - **BE05 – 11:** Remove the terminal box cover and unfasten the brake cable from the rectifier.
   - **BE20 – 122:** Loosen safety screws of the brake plug connector [698] and remove plug connector.
4. Loosen hex nuts [61], remove complete magnet body [54], remove brake springs [50/276].
5. Install new magnet body with brake springs. For the possible braking torque steps, please refer to chapter "Technical data" (→ 🗎 159).
6. Brake parts are installed as described in chapter Inspection steps for DR..71 – 315, DRN80 – 315 brakemotors (→ 🗎 125).
   - Except for the fan and the fan guard, because the working air gap has to be set first, see chapter "Setting the working air gap of BE05 – BE122 brakes (→ 🗎 131)".
7. In case of manual brake release: Use the setting nuts to adjust the floating clearance "s" between the conical coil springs (pressed flat) and the setting nuts (see following figure).



⚠ WARNING

No braking due to incorrectly set floating clearance "s".

Severe or fatal injuries.

- Set the floating clearance "s" correctly according to the following figure and table so that the pressure plate can move up as the brake lining wears.

21927189/EN – 07/2015

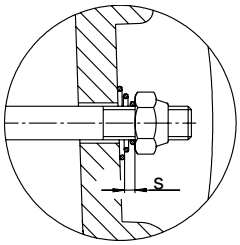

177241867

Brake	Floating clearance s in mm
BE05, BE1, BE2	1.5
BE5	1.7
BE11, BE20, BE30, BE32, BE60, BE62, BE120, BE122	2

8. Put the sealing strip in place and re-install the dismantled parts.
9. Replace brake control in the event of an interturn short circuit or a short circuit to frame.

INFORMATION

Replace setting nuts [58] and hex nuts [61] if the removal procedure is repeated.

7.7.16 Changing the brake of DR..71 – 80, DRN80 motors



⚠ WARNING

Risk of crushing if the drive starts up unintentionally.

Severe or fatal injuries.

- Isolate the motor, brake, and forced cooling fan, if installed, from the power supply before starting work, safeguarding them against unintentional re-start.
- Carefully observe the following steps!

1. Remove the following:
   - Forced cooling fan and rotary encoder, if installed.

     See chapter "Motor and brake maintenance – preliminary work" (→ 🗎 103)
   - Flange cover or fan guard [35], circlip [32/62] and fan [36]
2. Remove the terminal box cover and loosen the brake cable from the rectifier. If necessary, attach trailing wire to brake cables.
3. Loosen machine screws [13] and remove brake endshield with brake from stator.
4. Insert the brake cable of the new brake into the terminal box.
5. Install the new brake, observing the alignment of the cams of the brake endshield.
6. Reseal the shaft:
   - Replace the sealing ring [95]
   - Apply grease to the sealing lip (see chapter "Order information for lubricants and anti-corrosion agents" (→ 🗎 176)).
7. In case of manual brake release: Use the adjusting nuts to adjust the floating clearance "s" between the conical springs (pressed flat) and the adjusting nuts (see following figure).



⚠ WARNING

No braking due to incorrectly set floating clearance "s."

Severe or fatal injuries.

- Set the floating clearance "s" correctly according to the following figure and table so that the pressure plate can move up as the brake lining wears.

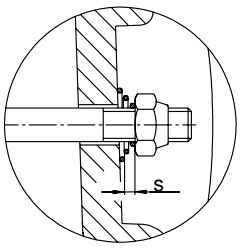

177241867

Brakes	Floating clearance s in mm
BE05, BE1, BE2	1.5

21927189/EN – 07/2015

7.7.17 Changing the brakes for DR..90 – 225, DRN90 – 225



⚠ WARNING

Risk of crushing if the drive starts up unintentionally.

Severe or fatal injuries.

- Isolate the motor, brake, and forced cooling fan, if installed, from the power supply before starting work, safeguarding them against unintentional re-start.
- Carefully observe the steps described below.

1. Remove the following:
   - Forced cooling fan and rotary encoder, if installed.

     See chapter "Motor and brake maintenance – preliminary work" (→ 🗎 103).
   - Fan guard with encoder mount or fan guard [35], retaining ring [32/62] and fan [36]
2. Remove the brake cable
   - **BE05 – 11:** Remove the terminal box cover and unfasten the brake cable from the rectifier.
   - **BE20 – 32:** Loosen safety screws of the brake plug connector [698] and remove plug connector.
3. Unfasten screws [900] and remove brake from brake endshield.
4. **DR..90 – 132, DRN90 – 132S:** Pay attention to the alignment of the gasket [901].
5. Connect the brake cables of the new brake.
6. Install the new brake, observing the alignment of the cams of the friction disk.
7. Reseal the shaft:
   - Replace the sealing ring [95]
   - Apply grease to the sealing lip (see chapter "Order information for lubricants and anti-corrosion agents" (→ 🗎 176)).
8. In case of manual brake release: Use the setting nuts to adjust the floating clearance "s" between the conical coil springs (pressed flat) and the setting nuts (see following figure).

⚠ WARNING



No braking due to incorrectly set floating clearance "s".

Severe or fatal injuries.

- Set the floating clearance "s" correctly according to the following figure and table so that the pressure plate can move up as the brake lining wears.

21927189/EN – 07/2015

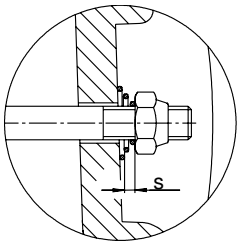

177241867

Brake	Floating clearance s in mm
BE05, BE1, BE2	1.5
BE5	1.7
BE11, BE20, BE30, BE32	2

21927189/EN – 07/2015

7.7.18 Changing the brakes for DR..250 – 315, DRN250 – 315



⚠ WARNING

Risk of crushing if the drive starts up unintentionally.

Severe or fatal injuries.

- Isolate the motor, brake, and forced cooling fan, if installed, from the power supply before starting work, safeguarding them against unintentional re-start.
- Carefully observe the following steps!

1. Remove the following:
   - Forced cooling fan and rotary encoder, if installed.

     See chapter "Motor and brake maintenance – preliminary work" (→ 🗎 103)
   - Flange cover or fan guard [35], circlip [32/62] and fan [36]
2. **BE60 – 62:** Remove the brake cable
   - Remove the terminal box cover and unfasten the brake cable from the rectifier.
   - Connect the brake cables of the new brake
3. **BE120 – 122**: Unfasten brake connector.
4. Unfasten screws [900] and remove brake from brake endshield.
5. Install the new brake, observing the alignment of the cams of the friction disk.
6. Reseal the shaft:
   - Replace the sealing ring [95]
   - Apply grease to the sealing lip (see chapter "Order information for lubricants and anti-corrosion agents" (→ 🗎 176)).
7. In case of manual brake release: Use the adjusting nuts to adjust the floating clearance "s" between the conical springs (pressed flat) and the adjusting nuts (see following figure).



⚠ WARNING

No braking due to incorrectly set floating clearance "s."

Severe or fatal injuries.

- Set the floating clearance "s" correctly according to the following figure and table so that the pressure plate can move up as the brake lining wears.

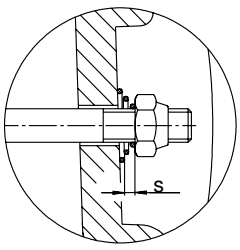

177241867

Brakes	Floating clearance s in mm
BE60, BE62, BE120, BE122	2

7.8 Inspection/maintenance work diagnostic unit /DUB

7.8.1 Basic structure of diagnostic unit /DUB on DR..90 – 100 with BE2

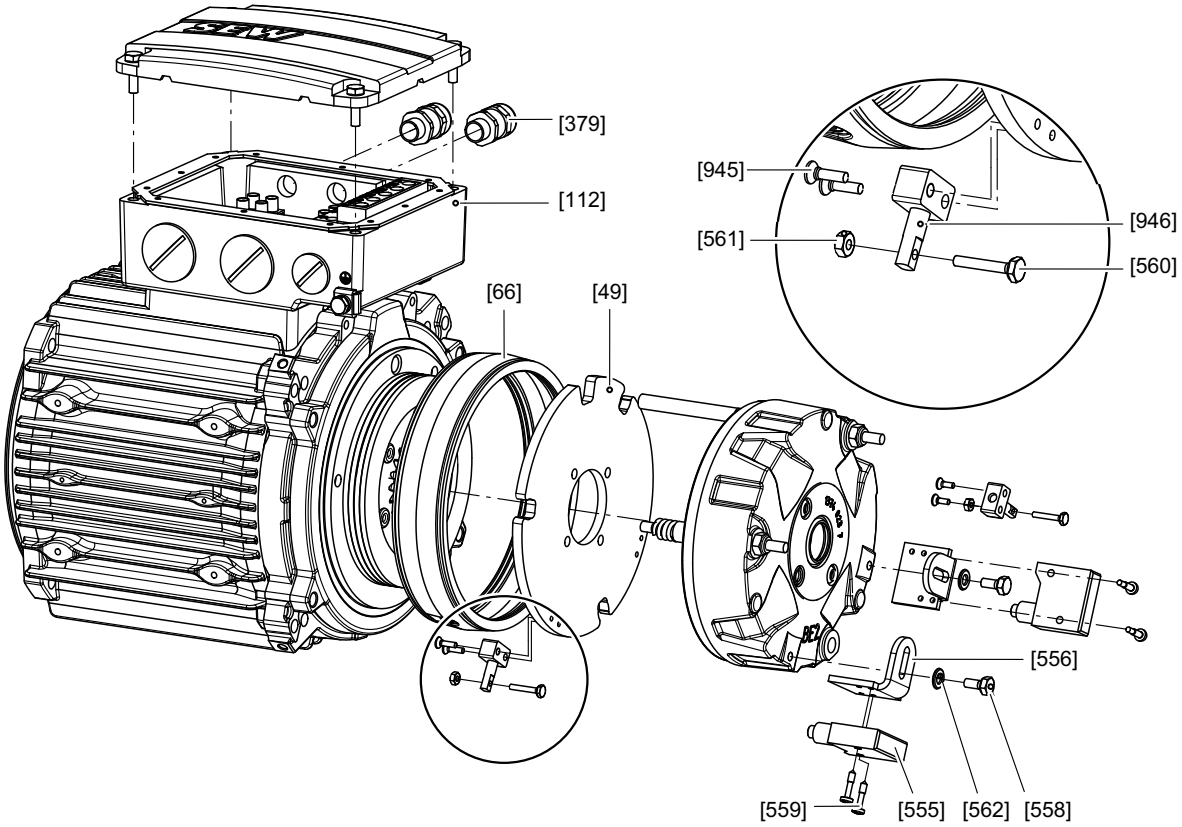

9007200340056843

[49]	Pressure plate for DUB	[556]	Angle bracket	[561]	Stud
[66]	Sealing strip for DUB	[557]	Stud	[562]	Washer
[112]	Terminal box lower part	[558]	Hex head screw	[945]	Countersunk screw
[379]	Screw fitting	[559]	Pan head screw	[946]	Mounting plate complete
[555]	Microswitch	[560]	Hex head screw		

21927189/EN – 07/2015

7.8.2 Basic structure of diagnostic unit /DUB on DR..90 – 315 with BE5 – 122

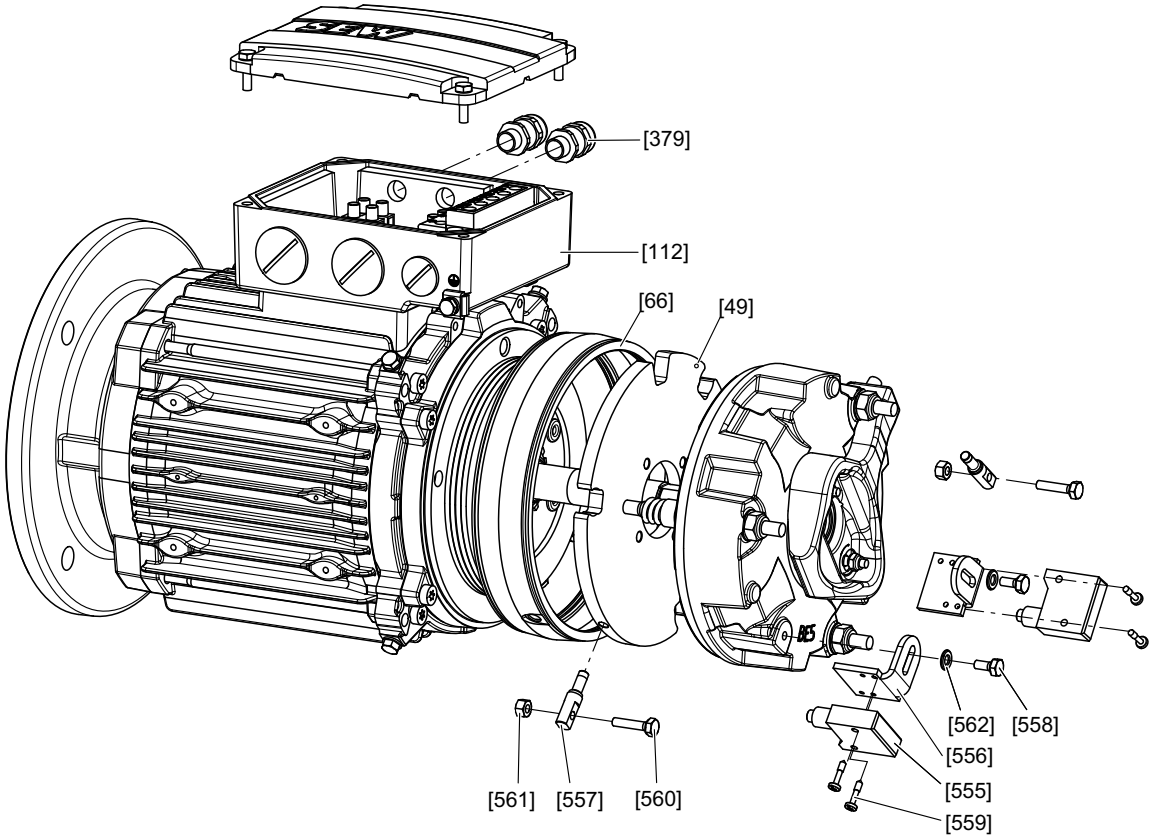

1085317771

[49]	Pressure plate for /DUB	[556]	Mounting bracket	[561]	Stud
[66]	Sealing strip for /DUB	[557]	Pin	[562]	Washer
[112]	Terminal box lower part	[558]	Hex head screw		
[379]	Screw fitting	[559]	Pan head screw		
[555]	Microswitch	[560]	Hex head screw		

7.8.3 Inspection/maintenance work diagnostic unit /DUB for function monitoring



⚠ WARNING

Risk of crushing if the drive starts up unintentionally.

Severe or fatal injuries.

- Isolate the motor and forced cooling fan, if installed, from the power supply before starting work, safeguarding them against unintentional re-start.
- Carefully observe the steps described below.

1. Check working air gap according to chapter "Setting the working air gap of BE05 – BE122 brakes (→ 🗎 131)" and adjust it if necessary.
2. Screw the hex head screw [560] against the actuator of the microswitch [555] until it trips (brown, blue contacts closed).

   While screwing, install hex nut [561] to eliminate the longitudinal play from the thread.
3. Turn hex head screw [560] back until microswitch [555] switches back (contacts brown-blue open).
4. To ensure operational reliability, turn hex head screw [560] further back by one-sixth of a revolution (0.1 mm).
5. Tighten hex nut [561], while doing so, hold hex head screw [560] to keep it in the correct position.
6. Switch the brake on and off several times. Check whether the microswitch opens and closes reliably in any motor shaft position. Therefore, turn the motor shaft manually several times.

21927189/EN – 07/2015

7.8.4 Inspection/maintenance work diagnostic unit /DUB for wear monitoring



⚠ WARNING

Risk of crushing if the drive starts up unintentionally.

Severe or fatal injuries.

- Isolate the motor and forced cooling fan, if installed, from the power supply before starting work, safeguarding them against unintentional re-start.
- Carefully observe the steps described below.

1. Check and, if necessary, adjust the working air gap according to chapter "Setting the working air gap for BE.. brake".
2. Screw the hex head screw [560] against the actuator of the microswitch [555] until it trips (brown-blue contacts closed).

   While screwing, install hex nut [561] to eliminate the longitudinal play from the thread.
3. **For BE2 – 5:** Loosen hex head screw [560] by a 3/4 revolution towards the microswitch [555] (with BE2 by about 0.375 mm / with BE5 by about 0.6 mm).

   For BE11 – 122: Loosen hex head screw [560] towards the microswitch [555] by a whole revolution (about 0.8 mm).
4. Tighten hex nut [561], while doing so, hold hex head screw [560] to keep it in the correct position.
5. If the brake lining reaches the wear limit, the microswitch automatically switches back (contacts brown-blue open) and activates a relay or a signal.

7.8.5 Inspection/maintenance of the diagnostic unit /DUB for function and wear monitoring

If two diagnostic units /DUB are connected to one brake, both monitoring statuses can be realized. In this case, set the diagnostic unit /DUB for wear monitoring before you set the diagnostic unit /DUB for function monitoring.

21927189/EN – 07/2015

7.9 Inspection/maintenance work diagnostic unit /DUE

7.9.1 Disassembling the diagnostic unit /DUE

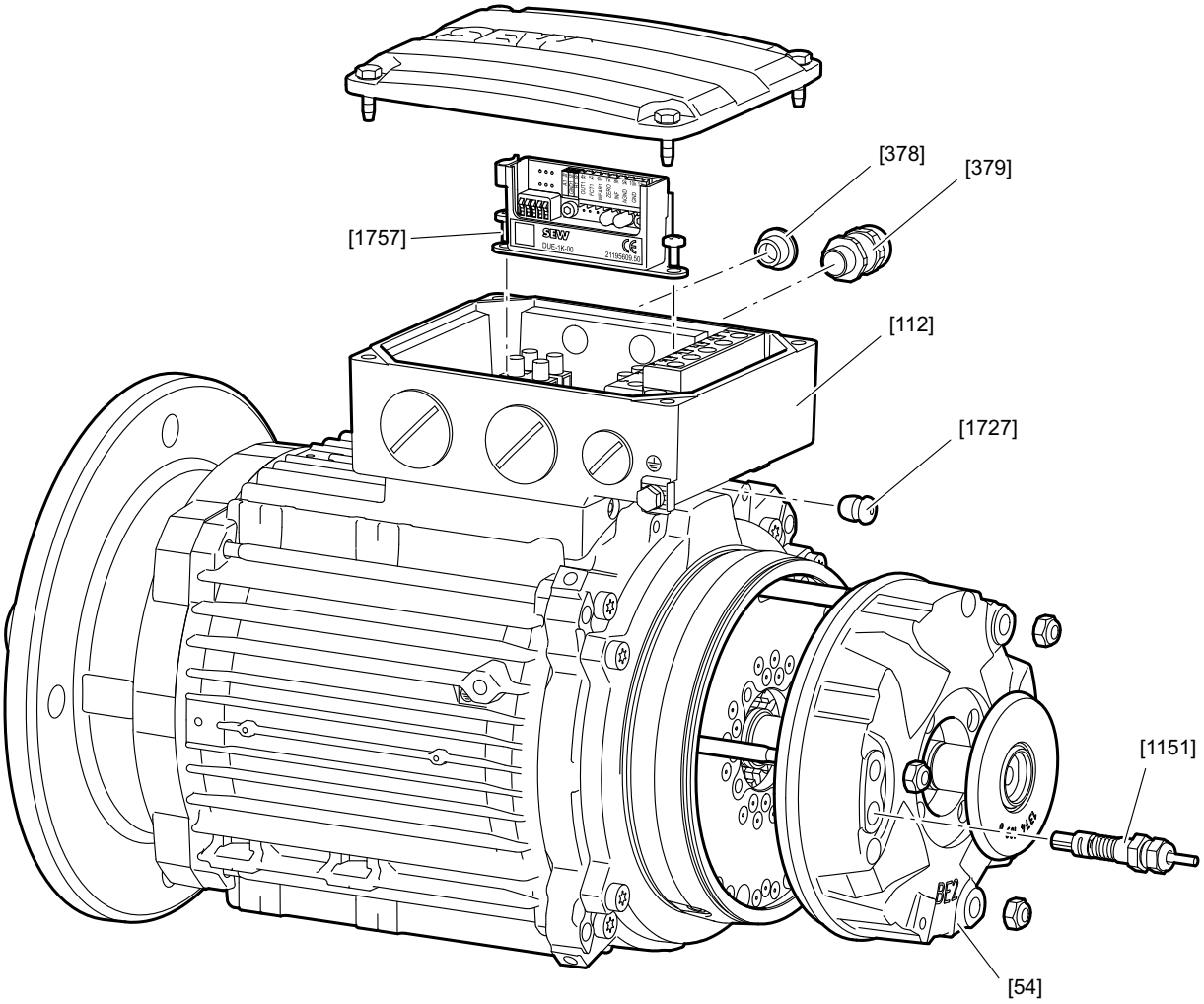

14278188043

[54] Magnet body
[112] Terminal box lower part
[378] Screw plug
[379] Cable gland
[1151] Sensor
[1727] Grommet
[1757] Evaluation unit

1. Remove forced cooling fan and rotary encoder, if installed. See chapter "Motor and brake maintenance – preliminary work (→ 🗎 103)".
2. First, remove the actuator elements [1191] from designs with manual brake release.
3. Remove the fan guard [35] or the forced cooling fan [170] by loosening the retaining screws [22].
4. If applicable: Remove the retaining ring [32] and the fan wheel [36] using a suitable tool.
5. Loosen the screw [1154] for the cable fixture clamp [1153].
6. Loosen the union nut of the sensor screw fitting. The sensor cable is free.
7. Loosen the sensor [1151] on the mounting flange. Remove the sensor.

21927189/EN – 07/2015

7.9.2 Retrofitting diagnostic unit /DUE for function and wear monitoring



⚠ DANGER

Risk of crushing if the drive starts up unintentionally.

Severe or fatal injuries.

- Disconnect the motor from the power supply and safeguard it against accidental startup before starting work!

For the component designation of the evaluation unit, refer to chapter "Component designation" (→ 🗎 80).

21927189/EN – 07/2015

Setting and installing the evaluation unit

The evaluation unit has a 5-pin DIP switch that is labeled with the numbers 1 to 5. Use it to set the measuring range and the maximum permitted wear limit (maximum working air gap).

To activate the DIP switch □1, push the switch upwards. To deactivate the DIP switch □0, push the switch downwards.

The following table shows the DIP switch settings of the evaluation unit for the maximum working air gap.

1. Set the wear limit using the DIP switches.

INFORMATION

Set the DIP switch only in a de-energized state.

S1	S2	S3	S4	S5	Wear limit	BE1 – 2	BE5	BE 1 – 2 (FS)	BE5 (FS)
Sensor Ø 6 mm									
0	**0**	**0**	**0**	**0**	1.2 mm				
0	**0**	**0**	**0**	**1**	1.1 mm				
0	**0**	**0**	**1**	**0**	1.0 mm				
0	**0**	**0**	**1**	**1**	0.9 mm		X		
0	**0**	**1**	**0**	**0**	0.8 mm				
0	**0**	**1**	**0**	**1**	0.7 mm				X
0	**0**	**1**	**1**	**0**	0.6 mm	X		X	
0	**0**	**1**	**1**	**1**	0.5 mm				

S1	S2	S3	S4	S5	Wear limit	BE11 – 122	BE11 – 30 (FS)	BE32 (FS)
Sensor Ø 8 mm								
1	**0**	**0**	**0**	**0**	1.2 mm	X		
1	**0**	**0**	**0**	**1**	1.1 mm			
1	**0**	**0**	**1**	**0**	1.0 mm			
1	**0**	**0**	**1**	**1**	0.9 mm			
1	**0**	**1**	**0**	**0**	0.8 mm			X
1	**0**	**1**	**0**	**1**	0.7 mm		X	
1	**0**	**1**	**1**	**0**	0.6 mm			
1	**0**	**1**	**1**	**1**	0.5 mm			

X = Factory setting

Setting possible in addition

2. Screw the evaluation unit into the terminal box after consultation with SEW-EURODRIVE.
3. Connect the sensor. See chapter "Connecting the sensor (→ 🗎 153)".
4. Calibrate the infinite value. See chapter "Calibration of infinite value" (→ 🗎 155).
5. Install the sensor in the brake. See chapter "Installing the sensor (→ 🗎 156)".

21927189/EN – 07/2015

6. Route the cable. See chapter "Cable routing" (→ 🗎 157).
7. Calibrate the zero value. See chapter "Calibration of zero value" (→ 🗎 157).
8. To check the function, measure the voltage via terminal 5k to 10k. Switch the brake and check if 24 V are applied.
9. To check if the working air gap is within the permitted range, measure the current between terminals 4k and 10k. Compare the value to the range in the diagram in chapter "Output signals for function and wear monitoring (→ 🗎 154)".

21927189/EN – 07/2015

Connecting electronics

The function and wear monitoring is connected according to the following wiring diagram. The maximum permitted cable cross section at the terminals "k" is 1.5 mm² with conductor end sleeve without plastic collar, 0.75 mm² with conductor end sleeve. The required cable cross section at the terminal "k" is 0.5 mm² with conductor end sleeve without plastic collar.

INFORMATION

Use shielded cables to wire the evaluation unit. Connect the shield at least at one end to the GND.

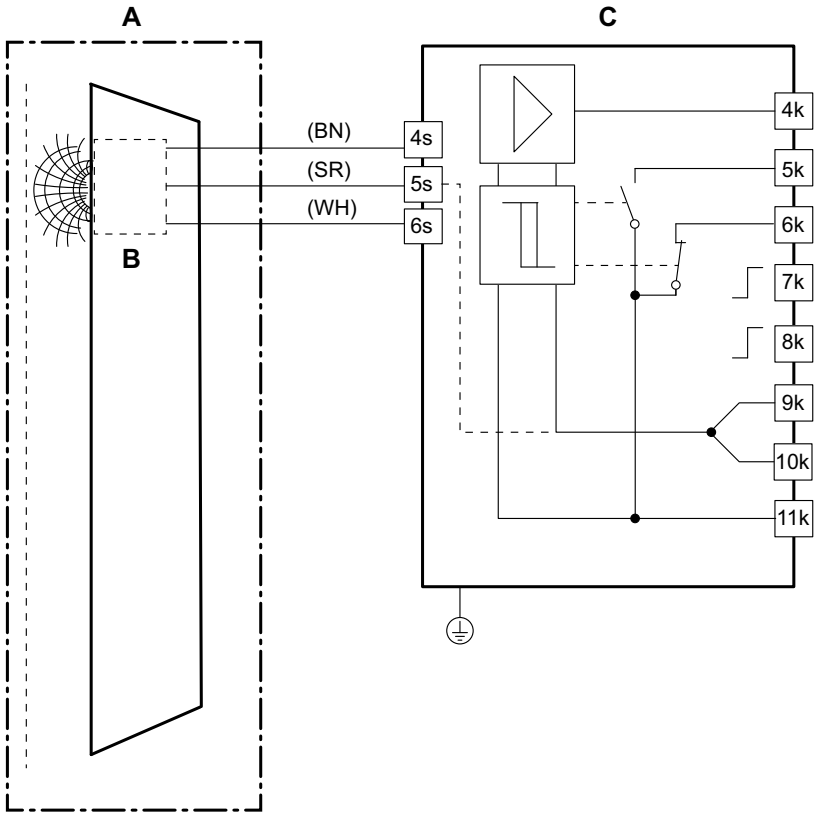

9007212783931659

[A] Brake
[B] Eddy current sensor
[C] Evaluation unit

[4s] Connection sensor A1 (brown cable)
[5s] Connection sensor GND 1 (shield)
[6s] Connection sensor B1 (white cable)

[4k] Analog output wear 1 (air gap)
[5k] Digital output function 1 (NO contact)
[6k] Digital output wear 1 (NC contact)
[7k] Input calibration zero value
[8k] Input calibration infinite value
[9k] Signal ground AGND
[10k] Ground potential GND
[11k] 24 V DC supply

The evaluation unit is supplied with DC 24 V via the terminals GND [10k] and DC24V [11k].

Brake monitoring provides digital signals for:

- Function FCT1 [5k] and wear WEAR1 [6k] of the brake.

21927189/EN – 07/2015

The working air gap can be monitored continuously via the analog signal (4 – 20 mA) regarding the signal ground [9k]:

- Terminal OUIT1 [4k]

Use terminals ZERO [7k] and INF [8k] for calibration.

INFORMATION

If values deviate from the factory setting, the wear point setting must be adjusted. See chapter "Setting and installing the evaluation unit" (→ 🗎 150).

Connecting the sensor

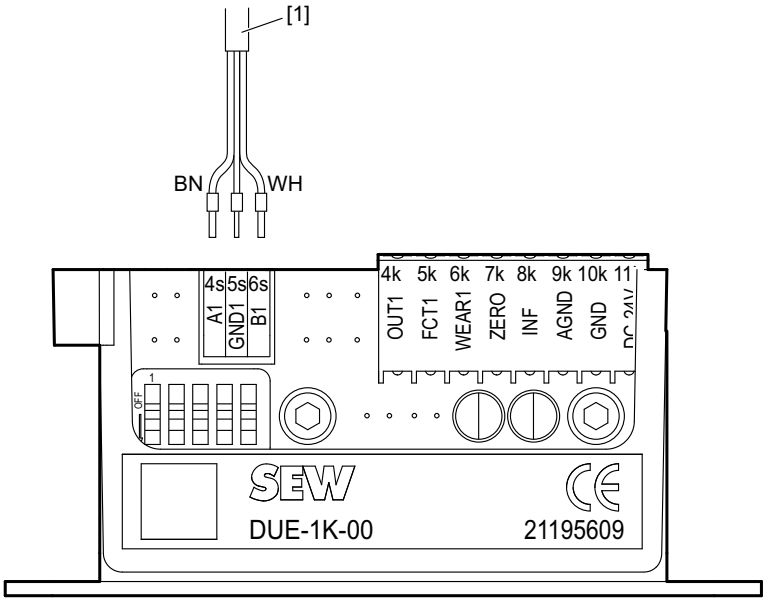

14975059851

[1] Brake sensor

The connection cross section of the sensor is 0.14 mm². The litz wires of the sensor cables must be equipped with conductor end sleeves. The cable shield must be isolated against other potentials using a heat shrink tubing. The litz wires can be pushed into the terminals without using tools. Put the sensor cables in the provided line clip, see figure in chapter "Calibration of infinite value" (→ 🗎 155). To remove the sensor cables, use an insulated screwdriver to disengage the clips.

Output signals for function and wear monitoring

The diagnostic unit /DUE provides an analog signal (4 – 20 mA, DIN IEC 60381-1) for the current working air gap of the brake.

D6

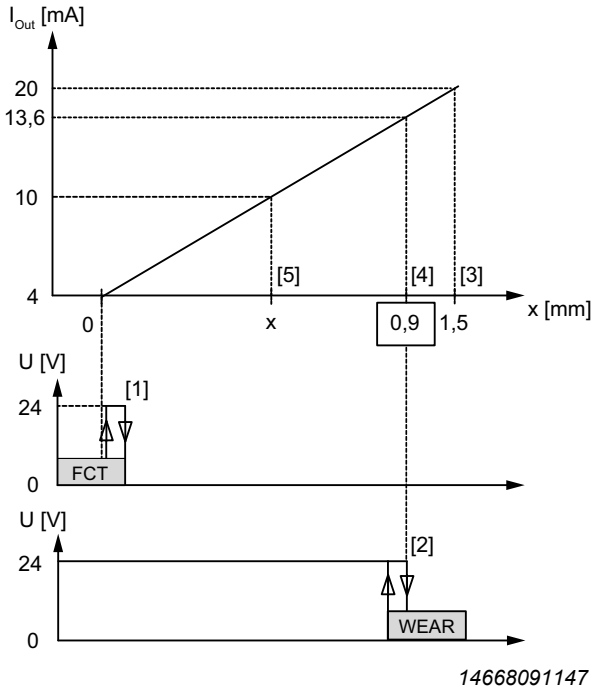

14668091147

D8

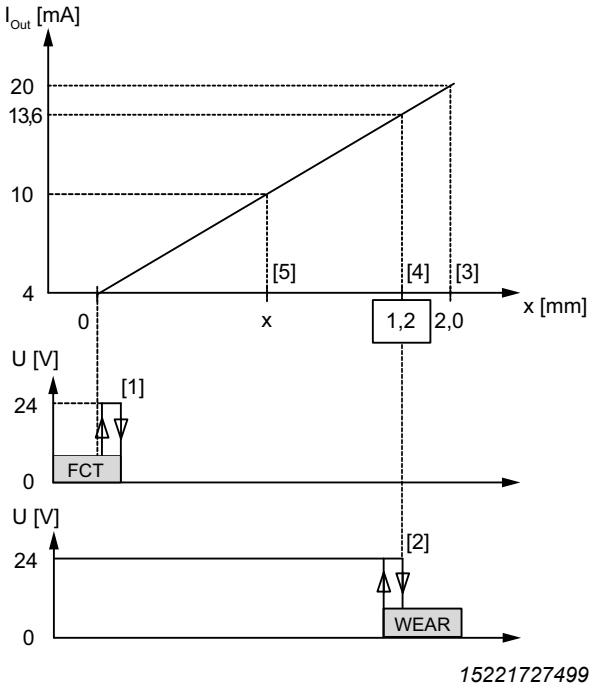

15221727499

[1] FCT: Digital output function (DC 24 V, DIN EN 61131-2)
[2] WEAR: Digital output wear (DC 24 V, DIN EN 61131-2)
[3] Measuring range of the sensor
[4] Max. working air gap of the brake (exemplary)
[5] Currently measured working air gap (exemplary)

Calibration of infinite value

Before you can install the sensor in the brake, the electronics must be calibrated to the actual cable length. During calibration of the infinite value, electronics is adjusted to the sensor cable length. Electronics is reset and previous settings are overwritten.

The sensor must be removed from the brake for the following steps.

Procedure to calibrate the infinite value for the sensor:

1. Make sure that no metallic objects are within a 10 cm radius from the sensor head. The mounting springs may be in contact with the back of the sensor head during calibration.
2. Apply supply voltage to INF (8k) and AGND (9k) for 5 seconds. GND can be used as reference potential instead of AGND. The evaluation unit is supplied via the calibration input during calibration.

Calibration of the infinite value was successful if the red LED flashes every second.

The corresponding wiring diagram for the calibration process.

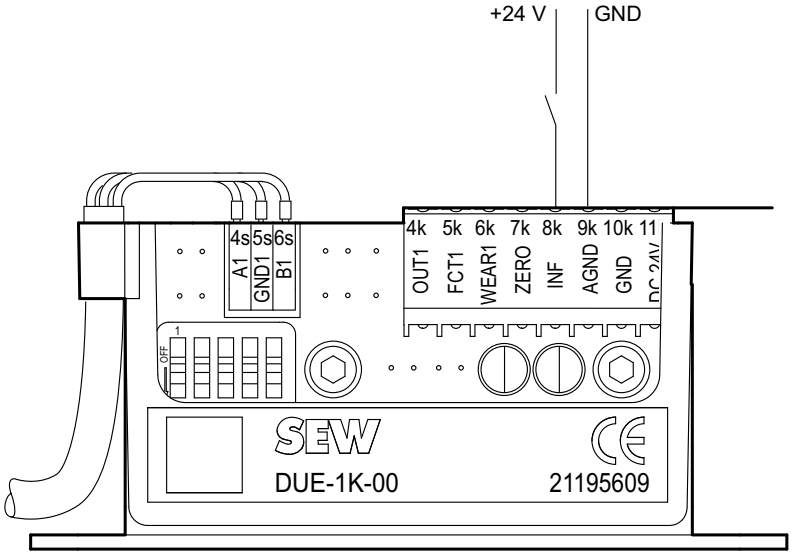

14975067787

During calibration, the digital outputs WEAR1, FCT1 send a 0 signal which may lead to error messages (wear limit reached).

The analog output OUT1 signals 0 mA during the calibration procedure. After successful calibration, the output has 20 mA.

Installing the sensor

After calibration, the eddy current sensor can be installed in the magnet body of the brake. When installing the sensor, make sure that the sensor head can be inserted in the stepped bore without pressure being applied.

First install the lower part of the cable gland. Then mount the upper part of the cable gland.

INFORMATION

To ensure that the sensor is correctly inserted in the stepped bore, twist the sensor carefully with the cable before screwing in the cable gland. Protect the sensor cable against damage.

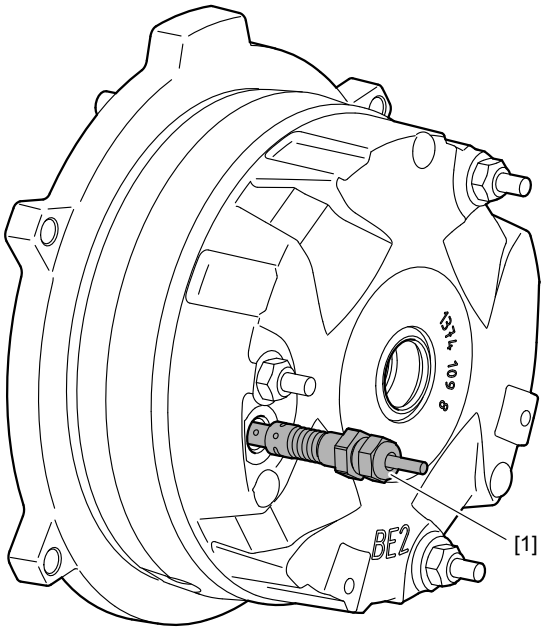

15126940043

[1] Brake sensor

21927189/EN – 07/2015

Cable routing

Prevent the cable from colliding with the fan cable. If necessary, attach the cable to the brake using a clip or similar.

Calibration zero value

During calibration of the zero value, the current working air gap with released (open) brake is written in the evaluation unit. The electronics is reset and previous settings are overwritten. You can save the zero value at any time without changing the infinite value.

Procedure during calibration of the zero value:

1. Open the brake.
2. Apply the supply voltage to ZERO (7k) and AGND (9k) for approx. 3 seconds. Electronics is in calibration mode. You can use GND as reference potential instead of AGND. The evaluation unit is supplied via the calibration input during calibration.

The evaluation unit saves the smallest working air gap of the brake. Each write process is indicated by a brief flashing of the red LED.

The activated calibration mode is indicated by the following LED state:

LED	State
Green [6]	Off
Red [6]	Flashing (2 Hz)

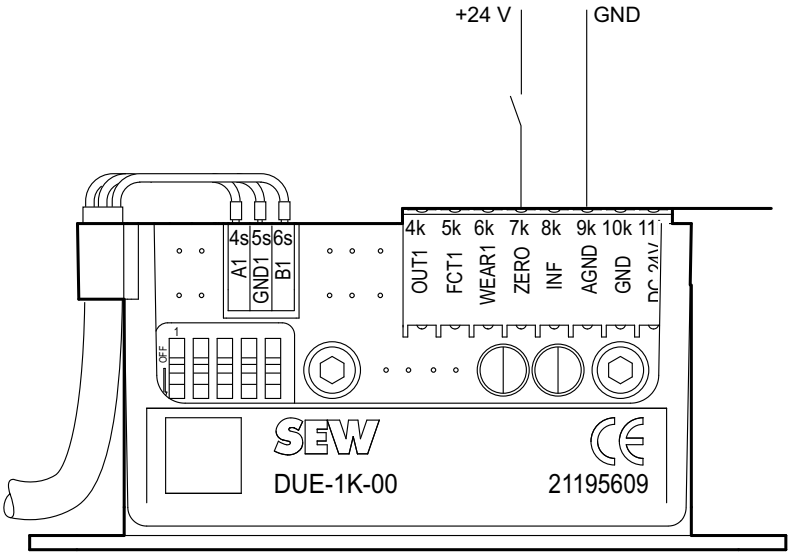

14977696651

During calibration, the digital outputs WEAR1, FCT1 send a 0 signal which may lead to error messages (wear limit reached).

The analog output OUT1 signals 0 mA during the calibration procedure. After successful calibration, the value is saved. The output has 4 mA with released brake. If a smaller value is available within 3 seconds, the last value is deleted and the new value is saved. The 4 mA at the output remain unchanged.

Status messages of the evaluation unit

Brake	Sensor	Calibration		LEDs and outputs							State
		ZERO	INF	Green	Red	Green	Red	FCT	WEAR	OUT	
Open	Installed	–	–	To	Off	To	Off	HI	HI	3.6 – 5.6 mA	Brake open, no wear
Closed	Installed	–	–	Off	Off	Off	Off	LO	HI	6 – 20 mA	Brake closed, no wear
Closed	Installed	–	–	Off	To	Off	To	LO	LO	6 – 20 mA	Brake closed, set wear limit of brake reached
–	–	–	–	Off	To	Off	To	LO	LO	>20 mA	Measuring range exceeded or sensor not connected correctly
–	Not installed	–	HI	Off	Blinking 1 Hz	Off	Blinking 1 Hz	LO	LO	0 mA	Calibration of infinite value active
–	Not installed	–	HI	Off	Flashing 1 Hz	Off	Flashing 1 Hz	LO	LO	20 mA	Infinite calibration successful
–	–	–	–	Blinking 1 Hz	Blinking 1 Hz	Blinking 1 Hz	Blinking 1 Hz	Clock 1 Hz	Clock 1 Hz	0 mA	Not completely calibrated: • ZERO calibration missing • Delivery state (both calibrations missing)
Open	Installed	HI	–	Off	Blinking 2 Hz	Off	Blinking 2 Hz	LO	LO	0 mA	Calibration of zero value active
Open	Installed	HI	–	Off	Blinking 2 Hz	Off	Blinking 2 Hz	LO	LO	4 mA	First zero value successful
Open	Installed	HI	–	Off	Flickering	Off	Flickering	LO	LO	4 mA	Smaller zero value detected and saved

21927189/EN – 07/2015

8 Technical data

8.1 Work done, working air gap, braking torques

If you use encoders and brakes with functional safety technology, the values for the maximum working air gaps and the work done until maintenance are reduced. For the new values, refer to the addendum to the operating instructions "Safety-Rated Encoders/Safety-rated Brakes – DR..71 – 315, DRN80 315 AC Motors – Functional Safety".

Brake Type	Braking work done until maintenance	Working air gap		Brake disk	Part number damping plate/pole sheet	Braking torque settings					
		min.[1]	Max.	Min.		Braking torque	Type and number of Brake springs			Purchase order number of Brake springs	
	10^6 J	mm		mm		Nm	Normal	blue	white	Normal	Blue/white
BE05	120	0.25	0.6	9.0	13740563	5.0	3	–	–	0135017X	13741373
						3.5	–	6	–		
						2.5	–	4	–		
						1.8	–	3	–		
BE1	120	0.25	0.6	9.0	13740563	10	6	–	–	0135017X	13741373
						7.0	4	2	–		
						5.0	3	–	–		
BE2	180	0.25	0.6	9.0	13740199	20	6	–	–	13740245	13740520
						14	2	4	–		
						10	2	2	–		
						7.0	–	4	–		
						5.0	–	3	–		
BE5	390	0.25	0.9	9.0	13740695	55	6	–	–	13740709	13740717
						40	2	4	–		
						28	2	2	–		
						20	–	–	6		13747738
						14	–	–	4		
BE11	640	0.3	1.2	10.0	13741713	110	6	–	–	13741837	13741845
						80	2	4	–		
						55	2	2	–		
						40	–	4	–		
					13741713 + 13746995	28	–	3	–		
						20	–	–	4	13741837	13747789
BE20	1000	0.3	1.2	10.0	–	200	6	–	–	13743228	13742485
					–	150	4	2	–		
					–	110	3	3	–		
					–	80	3	–	–		
					13746758	55	–	4	–		
						40	–	3	–		
BE30	1500	0.3	1.2	10.0	–	300	8	–	–	01874551	13744356
					–	200	4	4	–		
					–	150	4	–	–		
					–	100	–	8	–		
					–	75	–	6	–		
BE32	1500	0.4	1.2	10.0	–	600	8	–	–	01874551	13744356
					–	500	6	2	–		
					–	400	4	4	–		
					–	300	4	–	–		
					–	200	–	8	–		
					–	150	–	6	–		
					13746731	100	–	4	–		

Brake Type	Braking work done until maintenance	Working air gap		Brake disk	Part number damping plate/pole sheet	Braking torque settings					
		min.[1]	Max.	Min.		Braking torque	Type and number of Brake springs			Purchase order number of Brake springs	
	10^6 J	mm		mm		Nm	Normal	blue	white	Normal	Blue/white
BE60	2500	0.3	1.2	10.0	–	600	8	–	–	01868381	13745204
					–	500	6	2	–		
					–	400	4	4	–		
					–	300	4	–	–		
					–	200	–	8	–		
BE62	2500	0.4	1.2	10.0	–	1200	8	–	–	01868381	13745204
					–	1000	6	2	–		
					–	800	4	4	–		
					–	600	4	–	–		
					–	400	–	8	–		
BE120	390	0.6	1.2	12.0	–	1000	8	–	–	13608770	13608312
					–	800	6	2	–		
					–	600	4	4	–		
					–	400	4	–	–		
BE122	300	0.8	1.2	12.0	–	2000	8	–	–	13608770	13608312
					–	1600	6	2	–		
					–	1200	4	4	–		
					–	800	4	–	–		

1) When checking the working air gap, note: Parallelism tolerances on the brake disk may give rise to deviations of ± 0.15 mm after a test run.

The following table shows the brake spring layout:

BE05 – 11:

6 springs	3 + 3 springs	4 + 2 springs	2 + 2 springs	4 springs	3 springs
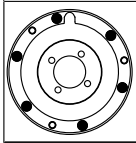	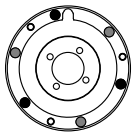	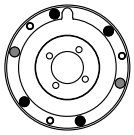	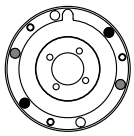	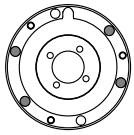	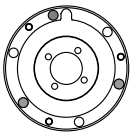

BE20:

6 springs	4 + 2 springs	3 + 3 springs	4 springs	3 springs
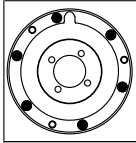	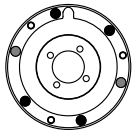	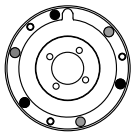	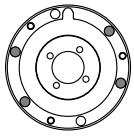	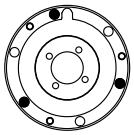

BE30 – 122:

8 springs	6 + 2 springs	4 + 4 springs	6 springs	4 springs
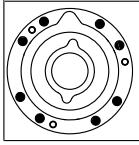	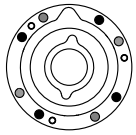	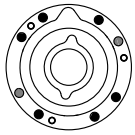	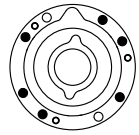	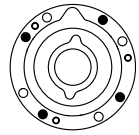

INFORMATION

Due to the selected pivoted mounting position/pivoting angle, the values for braking work are reduced by 50% compared to the values specified here.

21927189/EN – 07/2015

8.2 Braking torque assignment

8.2.1 Motor sizes DR..71 – 100, DRN80 – 100

Motor type	Brake type	Braking torque gradation in Nm										
DR..71	BE05	1.8	2.5	3.5	5.0							
	BE1				5.0	7.0	10					
DR..80 DRN80	BE05	1.8	2.5	3.5	5.0							
	BE1				5.0	7.0	10					
	BE2					7.0	10	14	20			
DR..90 DRN90	BE05	1.8	2.5	3.5	5.0							
	BE1				5.0	7.0	10					
	BE2				5.0	7.0	10	14	20			
	BE5							14	20	28	40	55
DR..100 DRN100	BE1				5.0	7.0	10					
	BE2				5.0	7.0	10	14	20			
	BE5							14	20	28	40	55

8.2.2 Motor sizes DR..112 – 225, DRN112 – 225

Motor type	Brake type	Braking torque gradation in Nm															
DR..112 DRN112 DR..132 DRN132S	BE5	14	20	28	40	55											
	BE11		20	28	40	55	80	110									
DR..160 DRN132M/L	BE11		20	28	40	55	80	110									
	BE20				40	55	80	110	150	200							
DR..180 DRN160 – 180	BE20				40	55	80	110	150	200							
	BE30						75	100	150	200	300						
	BE32							100	150	200	300	400	500	600			
DR..200/225 DRN200 – 225	BE30						75	100	150	200	300						
	BE32							100	150	200	300	400	500	600			
	BE60									200	300	400	500	600			
	BE62											400		600	800	1000	1200

21927189/EN – 07/2015

8.2.3 Motor size DR..250/280, DRN250/280

Motor type	Brake type	Braking torque gradation in Nm									
DR..250/280 DRN250 – 280	BE60	200	300	400	500	600					
	BE62			400		600	800	1000	1200		
	BE120			400		600	800	1000			
	BE122						800		1200	1600	2000

8.2.4 Motor sizes DR..315, DRN315

Motor type	Brake type	Braking torque gradation in Nm						
DR..315 DRN315	BE120	400	600	800	1000			
	BE122			800		1200	1600	2000

21927189/EN – 07/2015

8.3 Operating currents

8.3.1 Brake BE05, BE1, BE2

The current values I_H (holding current) listed in the tables are r.m.s. values. Use only appropriate instruments for measuring r.m.s. values. The inrush current (acceleration current) I_B only flows for a short time (ca. 160 ms) when the brake is released. There is no increased inrush current if a BG or BMS brake rectifier is used or if there is a direct DC voltage supply (only possible with brakes up to size BE2).

	BE05, BE1	BE2
Maximum braking torque in Nm	5/10	20
Braking power in W	32	43
Inrush current ratio I_B/I_H	4	4

Nominal voltage V_N		BE05, BE1		BE2	
V_{AC}	V_{DC}	I_H A_{AC}	I_G A_{DC}	I_H A_{AC}	I_G A_{DC}
24 (23-26)	10	2.25	2.90	2.95	3.80
60 (57-63)	24	0.90	1.17	1.18	1.53
120 (111-123)	48	0.45	0.59	0.59	0.77
147 (139-154)	60	0.36	0.47	0.48	0.61
184 (174-193)	80	0.29	0.37	0.38	0.49
208 (194-217)	90	0.26	0.33	0.34	0.43
230 (218-243)	96	0.23	0.30	0.30	0.39
254 (244-273)	110	0.20	0.27	0.27	0.35
290 (274-306)	125	0.18	0.24	0.24	0.31
330 (307-343)	140	0.16	0.21	0.21	0.28
360 (344-379)	160	0.14	0.19	0.19	0.25
400 (380-431)	180	0.13	0.17	0.17	0.22
460 (432-484)	200	0.11	0.15	0.15	0.19
500 (485-542)	220	0.10	0.13	0.14	0.18
575 (543-600)	250	0.09	0.12	0.12	0.16

I_B Acceleration current – brief inrush current
I_H Holding current r.m.s. value in the supply cable to the SEW brake rectifier
I_G Direct current with direct DC voltage supply
V_N Nominal voltage (nominal voltage range)

21927189/EN – 07/2015

8.3.2 Brakes BE5, BE11, BE20, BE30, BE32, BE60, BE62

The current values I_H (holding current) listed in the tables are r.m.s. values. Use only appropriate instruments for measuring r.m.s. values. The inrush current (acceleration current) I_B only flows for a short time (ca. 160 ms) when the brake is released. A separate voltage supply is not possible.

	BE5	BE11	BE20	BE30, BE32	BE60, BE62
Maximum braking torque in Nm	55	110	200	300/600	600/1200
Braking power in W	49	77	100	130	195
Inrush current ratio I_B/I_H	5.7	6.6	7	10	9.2

Nominal voltage V_N	**BE5**	**BE11**	**BE20**	**BE30, BE32**	**BE60, BE62**
V_{DC}	**I_H A_{AC}**	**I_H A_{AC}**	**I_H A_{AC}**	**I_H A_{AC}**	**I_H A_{AC}**
60 (57-63)	1.28	2.05	2.55	–	–
120 (111-123)	0.64	1.04	1.28	1.66	–
147 (139-154)	0.51	0.83	1.02	1.33	–
184 (174-193)	0.41	0.66	0.81	1.05	–
208 (194-217)	0.37	0.59	0.72	0.94	1.50
230 (218-243)	0.33	0.52	0.65	0.84	1.35
254 (244-273)	0.29	0.47	0.58	0.75	1.20
290 (274-306)	0.26	0.42	0.51	0.67	1.12
330 (307-343)	0.23	0.37	0.46	0.59	0.97
360 (344-379)	0.21	0.33	0.41	0.53	0.86
400 (380-431)	0.18	0.30	0.37	0.47	0.77
460 (432-484)	0.16	0.27	0.33	0.42	0.68
500 (485-542)	0.15	0.24	0.29	0.38	0.60
575 (543-600)	0.13	0.22	0.26	0.34	0.54

I_B Acceleration current – brief inrush current
I_H Holding current r.m.s. value in the supply cable to the SEW brake rectifier
I_G Direct current with direct DC voltage supply
V_N Nominal voltage (nominal voltage range)

21927189/EN – 07/2015

8.3.3 Brake BE120, BE122

The current values I_H (holding current) listed in the tables are r.m.s. values. Use only appropriate instruments for measuring r.m.s. values. The inrush current (acceleration current) I_B only flows for a short time (ca. 400 ms) when the brake is released. A separate voltage supply is not possible.

	BE120	BE122
Maximum braking torque in Nm	1000	2000
Braking power in W	250	250
Inrush current ratio I_B/I_H	4.9	4.9

Nominal voltage V_N	BE120	BE122
V_{AC}	I_H A_{AC}	I_H A_{AC}
230 (218-243)	1.80	1.80
254 (244-273)	1.60	1.60
290 (274-306)	1.43	1.43
360 (344-379)	1.14	1.14
400 (380-431)	1.02	1.02
460 (432-484)	0.91	0.91
500 (485-542)	0.81	0.81
575 (543-600)	0.72	0.72

I_B Acceleration current – brief inrush current
I_H Holding current r.m.s. value in the supply cable to the SEW brake rectifier
I_G Direct current with direct DC voltage supply
V_N Nominal voltage (nominal voltage range)

21927189/EN – 07/2015

8.4 Resistors

8.4.1 Brake BE05, BE1, BE2, BE5

	BE05, BE1	BE2
Maximum braking torque in Nm	5/10	20
Braking power in W	3 2	43
Inrush current ratio I_B/I_H	4	4

Nominal voltage V_N		BE05, BE1		BE2	
V_{AC}	V_{DC}	R_B	R_T	R_B	R_T
24 (23-26)	10	0.77	2.35	0.57	1.74
60 (57-63)	24	4.85	14.8	3.60	11.0
120 (111-123)	48	19.4	59.0	14.4	44.0
147 (139-159)	60	30.5	94.0	23.0	69.0
184 (174-193)	80	48.5	148	36.0	110
208 (194-217)	90	61.0	187	45.5	139
230 (218-243)	96	77.0	235	58.0	174
254 (244-273)	110	97.0	296	72.0	220
290 (274-306)	125	122	372	91	275
330 (307-343)	140	154	469	115	350
360 (344-379)	160	194	590	144	440
400 (380-431)	180	244	743	182	550
460 (432-484)	200	308	935	230	690
500 (485-542)	220	387	1178	290	870
575 (543-600)	250	488	1483	365	1100

21927189/EN – 07/2015

8.4.2 Brakes BE11, BE20, BE30, BE32, BE60, BE62

	BE5	BE11	BE20	BE30, BE32	BE60, BE62
Maximum braking torque in Nm	55	110	200	300/600	600/1200
Braking power in W	49	77	100	130	195
Inrush current ratio I_B/I_H	5.7	6.6	7.5	8.5	9.2

Nominal voltage V_N	BE5		BE11		BE20		BE30, BE32		BE60, BE62	
V_{AC}	R_B	R_T	R_B	R_T	R_B	R_T	R_B	R_T	R_B	R_T
60 (57-63)	2.20	10.5	1.22	7.0	0.9	5.7	–	–	–	–
120 (111-123)	8.70	42.0	4.90	28.0	3.4	22.8	2.3	17.2	–	–
147 (139-159)	13.8	66	7.7	44.0	5.4	36.1	3.7	27.3	–	–
184 (174-193)	22.0	105	12.3	70	8.5	57.2	5.8	43.2	–	–
208 (194-217)	27.5	132	15.5	88	10.7	72.0	7.3	54.4	4.0	32.6
230 (218-243)	34.5	166	19.5	111	13.5	90.6	9.2	68.5	5.0	41.0
254 (244-273)	43.5	210	24.5	139	17.0	114.1	11.6	86.2	6.3	51.6
290 (274-306)	55.0	265	31.0	175	21.4	143.6	14.6	108.6	7.9	65.0
330 (307-343)	69.0	330	39.0	220	26.9	180.8	18.4	136.7	10.0	81.8
360 (344-379)	87.0	420	49	280	33.2	223	23.1	172.1	12.6	103
400 (380-431)	110	530	62	350	42.7	287	29.1	216.6	15.8	130
460 (432-484)	138	660	78	440	53.2	357	35.1	261.8	19.9	163
500 (485-542)	174	830	98	550	67.7	454	45.2	336.4	25.1	205
575 (543-600)	220	1050	123	700	83.5	559	56.3	419.2	31.6	259

8.4.3 Resistance measurement BE05, BE1, BE2, BE5, BE30, BE32, BE60, BE62

Cut-off in the AC circuit

The following illustration shows how to measure resistance with cut-off in the AC circuit.

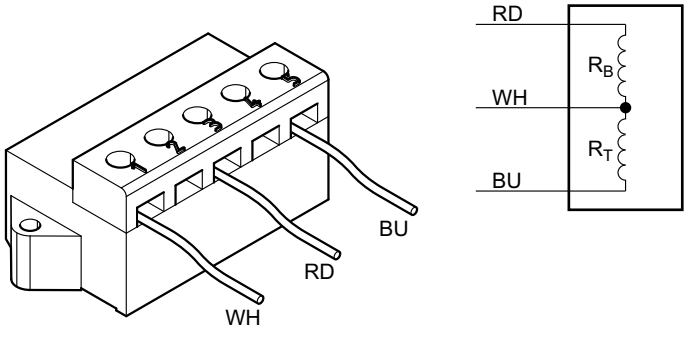

9007199497350795

Cut-off in the DC and AC circuits

The following illustration shows how to measure resistance with cut-off in the DC and AC circuits.

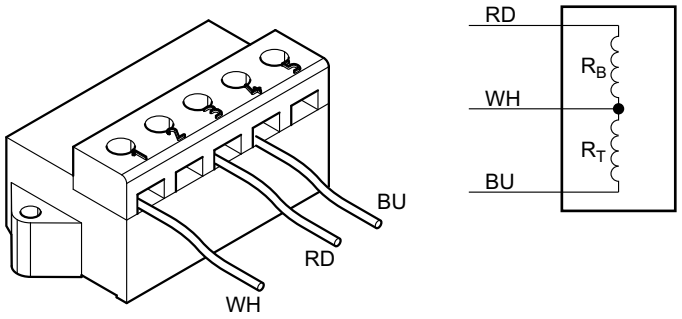

18014398752093451

BS	Accelerator coil	RD	Red
TS	Coil section	WH	white
R_B	Accelerator coil resistance at 20 °C in Ω	BU	blue
R_T	Coil section resistance at 20 °C in Ω		
V_N	Nominal voltage (nominal voltage range)		

INFORMATION

When measuring the resistance of the coil section R_T or the accelerator coil R_B, remove the white conductor from the brake rectifier; if it remains connected, the internal resistance of the brake rectifier will cause erroneous results.

21927189/EN – 07/2015

8.4.4 Brake BE120, BE122

	BE120, BE122
Maximum braking torque in Nm	1000/2000
Braking power in W	250
Inrush current ratio I_B/I_H	4.9

Nominal voltage V_N	BE120, BE122	
V_{AC}	R_B	R_T
230 (218-243)	8.0	29.9
254 (244-273)	10.1	37.6
290 (274-306)	12.7	47.4
360 (344-379)	20.1	75.1
400 (380-431)	25.3	94.6
460 (432-484)	31.8	119.0
500 (485-542)	40.1	149.9
575 (543-600)	50.5	188.7

8.4.5 Resistance measurement BE120, BE122

The following illustration shows how to measure resistance with BMP 3.1.

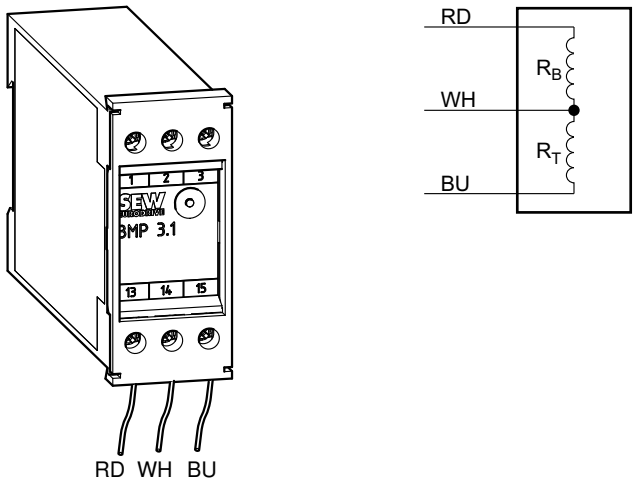

BS	Accelerator coil	RD	Red
TS	Coil section	WH	white
R_B	Accelerator coil resistance at 20 °C in Ω	BU	blue
R_T	Coil section resistance at 20 °C in Ω		
V_N	Nominal voltage (nominal voltage range)		

INFORMATION

When measuring the resistance of the coil section R_T or the accelerator coil R_B, remove the white conductor from the brake rectifier; if it remains connected, the internal resistance of the brake rectifier will cause erroneous results.

21927189/EN – 07/2015

8.5 Brake control system

8.5.1 Permitted combinations

The table below shows the standard and optional combinations of brakes and brake rectifiers.

		BE05	BE1	BE2	BE5	BE11	BE20	BE30, BE32	BE60, BE62	BE120, BE122
BG	BG 1.4	X[3]	X[3]	X[3]	–	–	–	–	–	–
	BG 1.5	X[1]	X[1]	X[1]	•	–	–	–	–	–
	BG 3	X[2]	X[2]	X[2]	–	–	–	–	–	–
BGE	BGE 1.4	o	o	o	X[3]	X[3]	X[3]	X[3]	X[3]	–
	BGE 1.5	•	•	•	X[1]	X[1]	X[1]	X[1]	X	–
	BGE 3	•	•	•	X[2]	X[2]	X[2]	X[2]	X	–
BS	BS 24	X	X	X	•	–	–	–	–	–
BMS	BMS 1.4	o	o	o	–	–	–	–	–	–
	BMS 1.5	•	•	•	–	–	–	–	–	–
	BMS 3	•	•	•	–	–	–	–	–	–
BME	BME 1.4	o	o	o	o	o	o	o	o	–
	BME 1.5	•	•	•	•	•	•	•	X	–
	BME 3	•	•	•	•	•	•	•	X	–
BMH	BMH 1.4	o	o	o	o	o	o	o	–	–
	BMH 1.5	•	•	•	•	•	•	•	–	–
	BMH 3	•	•	•	•	•	•	•	–	–
BMK	BMK 1.4	o	o	o	o	o	o	o	o	–
	BMK 1.5	•	•	•	•	•	•	•	–	–
	BMK 3	•	•	•	•	•	•	•	–	–
BMKB	BMKB 1.5	•	•	•	•	•	•	•	–	–
BMP	BMP 1.4	o	o	o	o	o	o	o	o	–
	BMP 1.5	•	•	•	•	•	•	•	–	–
	BMP 3	•	•	•	•	•	•	•	–	–
	BMP 3.1	–	–	–	–	–	–	–	–	X
BMV	BMV 5	•	•	•	•	•	•	–	–	–
BSG	BSG	•	•	•	X	X	X	–	–	–

21927189/EN – 07/2015

		BE05	BE1	BE2	BE5	BE11	BE20	BE30, BE32	BE60, BE62	BE120, BE122
BSR	BGE 1.4 + SR 15	o	o	o	o	o	o	o	o	–
	BGE 3 + SR 11	•	•	•	•	•	–	–	–	–
	BGE 3 + SR 15	•	•	•	•	•	•	•	–	–
	BGE 1.5 + SR 11	•	•	•	•	•	–	–	–	–
	BGE 1.5 + SR 15	•	•	•	•	•	•	•	–	–
BUR	BGE 3 + UR 11	•	•	•	•	–	–	–	–	–
	BGE 1.5 + UR 15	•	•	•	•	•	•	•	–	–

X Standard version
X^1 Standard design with nominal brake voltage of 150 - 500 V_{AC}
X^2 Standard design with nominal brake voltage of 24/42 - 150 V_{AC}
X^3 Standard design with nominal brake voltage of 575 V_{AC}
• Can be selected
o Can be selected with 575 V_{AC} nominal brake voltage
– Not permitted

21927189/EN – 07/2015

8.5.2 Wiring space of the motor

The following table lists the technical data of brake control systems for installation in the motor wiring space and the assignments with regard to motor size and connection technology. The different housings have different colors (= color code) to make them easier to distinguish.

Type	Function	Voltage	Holding current I_{Hmax} in A	Type	Part number	Color code
BG	One-way rectifier	AC 150 – 500 V	1.5	BG 1.5	8253846	Black
		AC 24 – 500 V	3.0	BG 3	8253862	Brown
BGE	One-way rectifier with electronic switching	AC 150 – 500 V	1.5	BGE 1.5	8253854	Red
		AC 42 – 150 V	3.0	BGE 3	8253870	Blue
BSR	Half-wave rectifier + current relay for switch-off in the DC circuit	AC 150 – 500 V	1.0	BGE 1.5 + SR 11	8253854 8267618	
			1.0	BGE 1.5 + SR 15	8253854 8267626	
		AC 42 – 150 V	1.0	BGE 3 + SR11	8253870 8267618	
			1.0	BGE 3 + SR15	8253870 8267626	
BUR	Half-wave rectifier + voltage relay for switch-off in the DC circuit	AC 150 – 500 V	1.0	BGE 1.5 + UR 15	8253854 8267596	
		AC 42 – 150 V	1.0	BGE 3 + UR 11	8253870 8267588	
BS	Varistor protection circuit	DC 24 V	5.0	BS24	8267634	Water blue
BSG	Electronic switching	DC 24 V	5.0	BSG	8254591	White
BMP	Half-wave rectifier with electronic switching, integrated voltage relay for switch-off in the DC circuit	AC 230 – 575 V	2.8	BMP 3.1[1)]	8295077	

1) Only sizes 280M, 315

21927189/EN – 07/2015

8.5.3 Control cabinet

The following table lists the technical data of brake control systems for installation in the control cabinet and the assignments with regard to motor size and connection technology. The different housings have different colors (= color code) to make them easier to distinguish.

Type	Function	Voltage	Holding current I_{Hmax} in A	Type	Part number	Color code
BMS	One-way rectifier as BG	AC 230 – 575 V	1.0	BMS 1.4	8298300	Black
		AC 150 – 500 V	1.5	BMS 1.5	8258023	Black
		AC 42 – 150 V	3.0	BMS 3	8258031	Brown
BME	One-way rectifier with electronic switching as BGE	AC 230 – 575 V	1.0	BME 1.4	8298319	Red
		AC 150 – 500 V	1.5	BME 1.5	8257221	Red
		AC 42 – 150 V	3.0	BME 3	825723X	Blue
BMH	One-way rectifier with electronic switching and heating function	AC 230 – 575 V	1.0	BMH 1.4	8298343	Green
		AC 150 – 500 V	1.5	BMH 1.5	825818X	Green
		AC 42 – 150 V	3	BMH 3	8258198	Yellow
BMP	One-way rectifier with electronic switching, integrated voltage relay for switch-off in the DC circuit	AC 230 – 575 V	1.0	BMP 1.4	8298327	White
		AC 150 – 500 V	1.5	BMP 1.5	8256853	White
		AC 42 – 150 V	3.0	BMP 3	8265666	Light blue
		AC 230 – 575 V	2.8	BMP 3.1[1)]	8295077	
BMK	One-way rectifier with electronic switch mode, DC 24 V control input and separation in the DC circuit	AC 230 – 575 V	1.0	BMK 1.4	8298335	Water blue
		AC 150 – 500 V	1.5	BMK 1.5	8264635	Water blue
		AC 42 – 150 V	3.0	BMK 3	8265674	Bright red
BMV	Brake control unit with electronic switching, DC 24 V control input and fast switch-off	DC 24 V	5.0	BMV 5	13000063	White

1) Only sizes 280M, 315

21927189/EN – 07/2015

8.6 Permitted rolling bearing types

8.6.1 Rolling bearing types for motor sizes DR..71 – 315

Motor type	A-side bearing		B-side bearing	
	IEC motor	Gearmotor	AC motor	Brakemotor
DR..71	6204-2Z-J-C3	6303-2Z-J-C3	6203-2Z-J-C3	6203-2RS-J-C3
DR..80,	6205-2Z-J-C3	6304-2Z-J-C3	6304-2Z-J-C3	6304-2RS-J-C3
DR..90 – 100	6306-2Z-J-C3		6205-2Z-J-C3	6205-2RS-J-C3
DR..112 – 132	6308-2Z-J-C3		6207-2Z-J-C3	6207-2RS-J-C3
DR..160	6309-2Z-J-C3		6209-2Z-J-C3	6209-2RS-J-C3
DR..180, DRN180	6312-2Z-J-C3		6213-2Z-J-C3	6213-2RS-J-C3
DR..200 – 225	6314-2Z-J-C3		6314-2Z-J-C3	6314-2RS-J-C3
DR..250 – 280	6317-2Z-J-C4		6315-2Z-J-C3	6315-2RS-J-C3

8.6.2 Rolling bearing types for motor sizes DRN80 – 315

Motor type	A-side bearing		B-side bearing	
	IEC motor	Gearmotor	AC motor	Brakemotor
DRN80	6205-2Z-J-C3 E2.6205-2Z-C3-K24	6304-2Z-J-C3	6304-2Z-J-C3 E2.6304-2Z-C3-K24	6304-2RS-J-C3
DRN90	6305-2Z-J-C3		6205-2Z-J-C3	6205-2RS-J-C3
DRN100	6306-2Z-J-C3		6205-2Z-J-C3	6205-2RS-J-C3
DRN112	6308-2Z-J-C3		6207-2Z-J-C3	6207-2RS-J-C3
DRN132S	6308-2Z-J-C3 E2.6308-2Z-C3-K24	6308-2Z-J-C3	6207-2Z-J-C3 E2.6207-2Z-C3-K24	6207-2RS-J-C3
DRN132M/L	6308-2Z-J-C3	6309-2Z-J-C3	6209-2Z-J-C3	6209-2RS-J-C3
DRN160	6310-2Z-J-C3	6312-2Z-J-C3	6212-2Z-J-C3	6212-2RS-J-C3
DRN180	6311-2Z-J-C3	6312-2Z-J-C3	6212-2Z-J-C3	6212-2RS-J-C3
DRN200	6312-2Z-J-C3	6314-2Z-J-C3	6314-2Z-J-C3	6314-2RS-J-C3
DRN225	6314-2Z-J-C3		6314-2Z-J-C3	6314-2RS-J-C3
DRN250 – 280	6317-2Z-J-C4		6315-2Z-J-C3	

21927189/EN – 07/2015

8.6.3 Rolling bearing types for motor sizes DR..315, DRN315

Motor type	A-side bearing		B-side bearing	
	IEC motor	Gearmotor	IEC motor	Gearmotor
DR..315K, DRN315S	6319-J-C3	6319-J-C3	6319-J-C3	6319-J-C3
DR..315S, DRN315M				
DR..315M, DRN315L	6319-J-C3	6322-J-C3	6319-J-C3	6322-J-C3
DR..315L, DRN315H				

8.6.4 Motors with /ERF reinforced bearings for motor sizes DR..250 – 315, DRN250 – 315

Motor type	A-side bearing	B-side bearing	
		IEC motor	Gearmotor
DR..250 – 280, DRN250 – 280	NU317E-C3	6315-J-C3	
DR..315K, DRN315S	NU319E	6319-J-C3	6319-J-C3
DR..315S, DRN315M			
DR..315M, DRN315L			6322-J-C3
DR..315L, DRN315H			

8.6.5 /NIB current-insulated rolling bearings for motor sizes DR..200 – 315, DRN200 – 315

Motor type	B-side bearing	
	AC motor	Gearmotor
DR..200 – 225, DRN200 – 225	6314-J-C3-EI	6314-J-C3-EI
DR..250 – 280, DRN250 – 280	6315-Z-J-C3-EI	6315-Z-J-C3-EI
DR..315K, DRN315S	6319-J-C3-EI	6319-J-C3-EI
DR..315S, DRN315M		
DR..315M, DRN315L		6322-J-C3-EI
DR..315L, DRN315H		

21927189/EN – 07/2015

8.7 Lubricant tables

8.7.1 Lubricant table for rolling bearings

INFORMATION

Using the wrong bearing greases could cause bearing damage.

Motors with sealed bearings

The bearings are 2Z or 2RS closed bearings and cannot be re-lubricated. They are used for the sizes DR..71 – 280, DRN80 – 280.

	Ambient temperature	Manufacturer	Type	DIN designation
Motor rolling bearings	-20 °C – +80 °C	Esso	Polyrex EM[1)]	K2P-20
	+20 °C – +100 °C	Klüber	Barrierta L55/2[2)]	KX2U
	-40 °C – +60 °C	Kyodo Yushi	Multemp SRL[2)]	K2N-40

1) Mineral lubricant (= mineral-based rolling bearing grease)

2) Synthetic lubricant (= synthetic-based roller bearing grease)

Motors with open bearings

Motors of the size DR..250/280, 315, DRN250/280, 315 have open bearings and can be equipped with a relubrication device.

	Ambient temperature	Manufacturer	Type	DIN designation
Motor rolling bearings	-20 °C – +80 °C	Esso	Polyrex EM[1)]	K2P-20
	-40 °C – +60 °C	SKF	GXN[1)]	K2N-40

1) Mineral lubricant (= mineral-based rolling bearing grease)

8.8 Order information for lubricants and anti-corrosion agents

Lubricants and anti-corrosion agents can be ordered directly from SEW-EURODRIVE using the following order numbers.

Use	Manufacturer	Type	Quantity	Purchase order number
Lubricant for rolling bearings	Esso	Polyrex EM	400 g	03259420
	SKF	GXN	400 g	09101276
Lubricant for sealing rings				
Material: NBR/FKM	Klüber	Petamo GHY 133N	10 g	04963458
Material: EPDM	Klüber	Klübersynth BLR 46-122	10 g	03252663
Corrosion protection and lubricant	SEW-EURODRIVE	NOCO® fluid	5.5 g	09107819

21927189/EN – 07/2015

8.9 Encoders

8.9.1 ES7. and EG7.

Encoder type		ES7S	EG7S	ES7R	EG7R	ES7C	EG7C
For motors		DR..71 – 132 DRN80 – 132S	DR..160 – 280 DRN132M – 280	DR..71 – 132 DRN80 – 132S	DR..160 – 280 DRN132M – 280	DR..71 – 132 DRN80 – 132S	DR..160 – 280 DRN132M – 280
Supply voltage	U_B	DC 7 V – 30 V		DC 7 – 30 V		DC 4.75 – 30 V	
Max. current consumption	I_{in}	140 mA_{RMS}		160 mA_{RMS}		250 mA_{RMS}	
Max. pulse frequency	f_{max}	150 kHz		120 kHz		120 kHz	
Periods per revolution	A, B	1024		1024		1024	
	C	1		1		1	
Output amplitude per track	U_{high}	1 V_{SS}		≥ DC 2.5 V		≥ DC 2.5 V	
	U_{low}			≤ DC 0.5 V		≤ DC 1.1 V	
Signal output		Sin/Cos		TTL		HTL	
Output current per track	I_{out}	10 mA_{RMS}		25 mA_{RMS}		60 mA_{RMS}	
Pulse duty factor		Sin/Cos		1: 1 ± 10%		1: 1 ± 10%	
Phase angle A : B		90° ± 3°		90° ± 20°		90° ± 20°	
Vibration resistance		≤ 100 m/s²		≤ 100 m/s²	≤ 200 m/s²	≤ 100 m/s²	
Shock resistance		≤ 1000 m/s²	≤ 2000 m/s²	≤ 1000 m/s²	≤ 2000 m/s²	≤ 1000 m/s²	≤ 2000 m/s²
Maximum speed	n_{max}	6000 rpm		6000 rpm		6000 rpm	
Degree of protection		IP66		IP66		IP66	
Connection		Terminal box on incremental encoder					

8.9.2 EH7.

Encoder type		EH7R	EH7T	EH7C	EH7S
For motors		DR..315 DRN315			
Supply voltage	U_B	DC 10 V – 30 V	DC 5 V	DC 10 V - 30 V	
Max. current consumption	I_{in}	140 mA		225 mA	140 mA
Max. pulse frequency f_{max}	kHz	300			180
Periods per revolution	A, B	1024			
	C	1			
Output amplitude	U_{high}	≥ 2.5 V		V_B -3 V	1 V_{ss}
	U_{low}	≤ 0.5 V		≤ 2.5 V	
Signal output		TTL (RS-422)		HTL	Sin/Cos
Output current per track	I_{out}	20 mA		30 mA	10 mA
Pulse duty factor		1: 1 ± 20%			90° ± 10°
Phase angle A : B		90° ± 20°			-
Vibration resistance at 10 Hz – 2 kHz		≤ 100 m/s² (EN 60088-2-6)			
Shock resistance		≤ 2000 m/s² (EN 60088-2-27)			
Maximum speed n_{max}	rpm	6000, 2500 at 60°C			
Degree of protection		IP65 (EN 60529)			
Connection		12-pin plug connector			

21927189/EN – 07/2015

8.9.3 AS7Y and AG7Y

Encoder type		AS7Y	AG7Y
For motors		DR..71 – 132 DRN80 – 132S	DR..160 – 280 DRN132M – 280
Supply voltage	U_B	DC 7 – 30 V	
Max. current consumption	I_{in}	150 mA_{RMS}	
Max. pulse frequency	f_{max}	200 kHz	
Periods per revolution	A, B	2048	
	C	-	
Output amplitude per track	U_{high}	1 V_{SS}	
	U_{low}		
Signal output		Sin/Cos	
Output current per track	I_{out}	10 mA_{RMS}	
Pulse duty factor		Sin/Cos	
Phase angle A : B		90° ± 3°	
Scanning code		Gray Code	
Single-turn resolution		4096 increments/revolution	
Multi-turn resolution		4096 revolutions	
Data transmission		synchronous-serial	
Serial data output		Driver to EIA RS-422	
Serial pulse input		Recommended receiver to EIA RS-422	
Clock frequency		Permitted range: 100 – 2000 kHz (max. 100 m cable length with 300 kHz)	
Clock-pulse space period		12 – 30 µs	
Vibration resistance		≤ 100 m/s²	
Shock resistance		≤ 1000 m/s²	≤ 2000 m/s²
Maximum speed	n_{max}	6000 rpm	
Degree of protection		IP66	
Connection		Terminal strip in pluggable connection cover	

21927189/EN – 07/2015

8.9.4 AS7W and AG7W

Encoder type		AS7W	AG7W
For motors		DR..71 – 132 DRN80 – 132S	DR..160 – 280 DRN132M – 280
Supply voltage	U_B	DC 7 – 30 V	
Max. current consumption	I_{in}	140 mA_{RMS}	
Max. pulse frequency	f_{max}	200 kHz	
Periods per revolution	A, B	2048	
	C	–	
Output amplitude per track	U_{high}	1 V_{SS}	
	U_{low}		
Signal output		Sin/Cos	
Output current per track	I_{out}	10 mA_{RMS}	
Pulse duty factor		Sin/Cos	
Phase angle A : B		90° ± 3°	
Scanning code		Binary code	
Single-turn resolution		8192 increments/revolution	
Multi-turn resolution		65536 revolutions	
Data transmission		RS485	
Serial data output		Driver to EIA RS-485	
Serial pulse input		Recommended driver to EIA RS-422	
Clock frequency		9600 Bd	
Clock-pulse space period		–	–
Vibration resistance		≤ 100 m/s²	≤ 200 m/s²
Shock resistance		≤ 1000 m/s²	≤ 2000 m/s²
Maximum speed	n_{max}	6000 rpm	
Degree of protection		IP66	
Connection		Terminal strip in pluggable connection cover	

21927189/EN – 07/2015

8.9.5 AH7Y

Encoder type		AH7Y
For motors		DR..315 DRN315
Supply voltage	U_B	DC 9 V – 30 V
Max. current consumption	I_{in}	160 mA
Periods per revolution	A, B	2048
	C	–
Output amplitude	U_{high}	≥ 2.5 V_{SS}
	U_{low}	≤ 0.5 V_{SS}
Max. pulse frequency		120 kHz
Signal output		TTL (RS-422)
Output current per track	I_{out}	20 mA
Pulse duty factor		1: 1 ± 20%
Phase angle A : B		90° ± 20°
Absolute encoder scanning code		Gray Code
Single-turn resolution		4096 increments/revolution
Multi-turn resolution		4096 revolutions
Data transmission of absolute value		Synchronous, serial (SSI)
Serial data output		Driver to EIA RS-485
Serial pulse input		Optocoupler, recommended driver to EIA RS-485
Clock frequency		Permitted range: 100 – 800 kHz (max. 100 m cable length with 300 kHz)
Clock-pulse space period		12 ms – 30 ms
Vibration resistance at 10 Hz – 2 kHz		≤ 100 m/s^2 (EN 60088-2-6)
Shock resistance		≤ 2000 m/s^2 (EN 60088-2-27)
Maximum speed n_{max}	n_{max}	3500 rpm
Degree of protection		IP56 (EN 60529)
Connection		Terminal strip on encoder

21927189/EN – 07/2015

8.9.6 EI7. B

Encoder type		EI7C	EI76	EI72	EI71
For motors		DR..71 – 132 DRN80 – 132S			
Supply voltage	V_B	DC 9 – 30 V			
Max. current consumption (with no load)	I_{max}	120 mA_{RMS}			
Max. pulse frequency at n_{max}	f_{max}	1.44 kHz			
Periods per revolution	A, B	24	6	2	1
(signal tracks)	C	–			
Output amplitude per track	V_{high}	≥ V_B -3.5 V			
	V_{low}	≤ 3 V			
Signal output		HTL			
Maximum output current per track	I_{out_max}	60 mA_{RMS}			
Pulse duty factor (DIN IEC 60469-1) $t = t_{log_1}/(t_{period})$ n = constant		30 – 70% (typically: 50%)			
Phase offset A: B $\varphi_{phase, A:B}$ n = constant		70°– 110° (typically: 90°)			
Vibration resistance		10 g (98.1 m/s^2); 5 – 2000 Hz (EN 60068-2-6:2008)			
Shock resistance		100 g (981 m/s^2); 6 ms (EN 60068-2-27:2009)			
Permitted magnetic interference field on the outer contour of the motor	B_{extmax} H_{extmax}	25mT 20kA/m			
Maximum speed	n_{max}	3600 min^{-1}			
Degree of protection		IP66			
Connection		Terminal strip in the terminal box or M12 (4- or 8-pin)			

8.9.7 EV2.

Encoder type		EV2T	EV2S	EV2R	EV2C
For motors		DR..71 – DR..225 DRN80 – 225			
Supply voltage	U_B	DC 5 V	DC 9 V – 26 V		
Max. current consumption	I_{in}	160 mA_{RMS}	120 mA_{RMS}	160 mA_{RMS}	250 mA_{RMS}
Max. pulse frequency	f_{max}	120 kHz			
Periods per revolution	A, B	1024			
	C	1			
Output amplitude per track	U_{high}	≥ 2.5 V	1 V_{SS}	≥ 2.5 V	≥ V_B - 3.5 V
	U_{low}	≤ 0.5 V		≤ 0.5 V	≤ 3 V
Signal output		TTL	Sin/Cos	TTL	HTL
Output current per track	I_{out}	25 mA_{RMS}	10 mA_{RMS}	25 mA_{RMS}	60 mA_{RMS}
Pulse duty factor		1: 1 ± 20%	Sin/Cos	1: 1 ± 20%	
Phase angle A : B		90° ± 20°	90°	90° ± 20°	
Data memory		–			
Vibration resistance		≤ 100 m/s^2			
Shock resistance		≤ 1000 m/s^2	≤ 3000 m/s^2	≤ 1000 m/s^2	
Maximum speed	n_{max}	6000 rpm			
Weight	m	0.36 kg			
Degree of protection		IP66			
Connection		Terminal box on incremental encoder			

8.10 Diagnostic unit /DUE

Sensors		Ø 6 mm	Ø 8 mm
		DUE-d6-00	DUE-d8-00
Measuring range (MB)	mm	1.5	2.0
Protection class		IP66	IP66
Operating temperature (sensor and cable)		-50 to +150 °C	-50 to +150 °C

Evaluation unit			DUE-1 K-00
Part number			21195609
Signal outputs (1 channel)			Out1: 4 – 20 mA FCT1: DC 24 V (150 mA) WEAR1: DC 24 V (150 mA)
Current consumption	Max.	mA	190
	Min.	mA	40
Supply voltage			DC 24 V (± 15%)
Electromagnetic compatibility			DIN EN 61800-3
Operating temperature (evaluation unit)			-40 to +105 °C
Humidity			≤ 90% rF
Protection class			IP20 (in the closed terminal box up to IP66)

21927189/EN – 07/2015

8.11 Characteristic values of functional safety

8.11.1 Characteristic safety values of the brakes BE05 – BE122

Definition of the characteristic safety value $B10_d$:

The value $B10_d$ specifies the number of cycles at which 10% of components have failed dangerously (definition according to standard EN ISO 13849-1). Failed dangerously means in this context that the brake is not applied when required. This means the brake does not deliver the necessary braking torque.

Size	$B10_d$ Switching cycles
BE05	16,000,000
BE1	12,000,000
BE2	8,000,000
BE5	6,000,000
BE11	3,000,000
BE20	2,000,000
BE30	1,500,000
BE32	1,500,000
BE60	1,000,000
BE62	1,000,000
BE120	250,000
BE122	250,000

In addition to the brakes listed above, SEW also offers safety-rated brakes up to size 32. For detailed information, refer to the addendum to the operating instructions "Safety-Rated Brakes – Functional Safety for AC Motors."

8.11.2 Safety characteristics of safety-rated encoders

Definition of the characteristic safety value $MTTF_d$:

The value $MTTF_d$ (Mean Time To Failure) specifies the mean time to dangerous failure / component fault.

Motor size	Designation	$MTTF_d$[1)]	Service life
		In years	
DR..71 – 132 **DRN80 – 132S**	ES7S	61	20
	AS7W	41	20
	AS7Y	41	20
	EI7C FS	202	20
DR..160 – 315 **DRN132M – 315**	EG7S	61	20
	AG7W	41	20
	AG7Y	41	20

1) Referring to an ambient temperature of 40°C

21927189/EN – 07/2015

8.12 S1 duty cycle DRK.. single-phase motor

The following section describes the data for DRK.. single-phase motor in S1 continuous duty

The specified starting torques result from the connection of a running capacitor or a running capacitor with start-up capacitor connected in parallel respectively.

S1 duty at 1500 / 1800 rpm (230 V)									
							M_A / M_N with C_B	C_A for M_A/M_N	
Motor type		P_N	n_N	I_N	cos φ	C_B		100%	150%
	Hz	**kW**	**rpm**	**A**		**µF**		**µF**	**µF**
DRK71S4	50	0.18	1450	1.53	0.81	20	0.5	14	25
	60		1755	1.38	0.87	18	0.45	14	25
DRK71M4	50	0.25	1455	2.05	0.80	25	0.45	16	35
	60		1760	1.80	0.89	25	0.5	14	30
DRK80S4	50	0.37	1420	2.40	0.98	18	0.5	12	25
	60		1730	2.45	0.94	15	0.45	12	20
DRK80M4	50	0.55	1430	3.45	0.97	25	0.5	12	30
	60		1740	3.45	0.94	20	0.5	12	25
DRK90M4	50	0.75	1430	4.75	0.93	15+15	0.5	20	40
	60		1740	4.80	0.90	25	0.5	18	35
DRK90L4	50	1.1	1415	6.6	0.97	20+25	0.5	30	70
	60		1725	6.8	0.93	15+20	0.55	30	50

C_B Running capacitor

C_A Start-up capacitor

21927189/EN – 07/2015

9 Malfunctions



⚠ WARNING

Risk of crushing if the drive starts up unintentionally.

Severe or fatal injuries.

- De-energize the motor before you start working on the unit.
- Secure the motor against unintended power-up.



⚠ CAUTION

The surfaces of the drive can be very hot during operation.

Risk of burns.

- Let the motor cool down before you start your work.

NOTICE

Improper troubleshooting measures may damage the drive.

Possible damage to property.

- Use only genuine spare parts in accordance with the valid spare parts list.
- Strictly observe the safety notes in the individual chapters.

21927189/EN – 07/2015

9.1 Motor malfunctions

Fault	Possible cause	Measure
Motor does not start up	Supply cable interrupted	Check the connections and (intermediate) terminal points, correct if necessary
	Brake does not release	See chapter "Brake malfunctions"
	Supply cable fuse has blown	Replace fuse
	Motor protection (switch) has triggered	Check that the motor protection (switch) is set correctly; current specification is on the nameplate
	Motor protection does not trip	Check motor protection control
	Malfunction in control or in the control process	Observe the switching sequence; correct if necessary
Motor only starts with difficulty or does not start at all	Motor power designed for delta connection but connected in star	Correct the connection from star to delta; follow the wiring diagram
	Motor power designed for star-star connection but only connected in star	Correct the connection from star to star-star; follow the wiring diagram
	Voltage or frequency differs considerably from the setpoint, at least when switching on the motor	Provide better power supply system; reduce the power supply load; Check cross section of supply cable, replace with cable of larger cross section if necessary
Motor does not start in star connection, only in delta connection	Star connection does not provide sufficient torque	If the delta inrush current is not too high (observe the regulations of the power supplier), start up directly in delta; Check the project planning and use a larger motor or special design if necessary. Contact SEW-EURODRIVE.
	Contact fault on star/delta switch	Check the switch, replace if necessary; Check the connections
Incorrect direction of rotation	Motor connected incorrectly	Swap two phases of the motor supply cable
Motor hums and has high current consumption	Brake does not release	See chapter "Brake malfunctions"
	Winding defective	Send motor to specialist workshop for repair
	Rotor rubbing	
Fuses blow or motor protection trips immediately	Short circuit in the motor supply cable	Eliminate short circuit
	Supply cables connected incorrectly	Correct the wiring, observe the wiring diagram
	Short circuit in the motor	Send motor to specialist workshop for repair
	Ground fault on motor	
Severe speed loss under load	Motor overload	Measure power, check project planning and use larger motor or reduce load if necessary
	Voltage drops	Check cross section of supply cable, replace with cable of larger cross section if necessary

21927189/EN – 07/2015

Fault	Possible cause	Measure
Motor heats up excessively (measure temperature)	Overload	Measure power, check project planning and use larger motor or reduce load if necessary
	Insufficient cooling	Provide for cooling air supply or clear cooling air passages, retrofit forced cooling fan if necessary. Check the air filter, clean or replace if necessary
	Ambient temperature too high	Observe the permitted temperature range, reduce the load if necessary
	Motor in delta connection instead of star connection as intended	Correct the wiring, observe the wiring diagram
	Loose contact in supply cable (one phase missing)	Tighten loose contact, check connections, observe wiring diagram
	Fuse blown	Look for and rectify cause (see above); replace fuse
	Line voltage deviates from the rated motor voltage by more than 5% (range A) / 10% (range B).	Adjust motor to line voltage
	Nominal duty cycle (S1 to S10, DIN 57530) exceeded, e.g. caused by excessive starting frequency	Adjust the nominal duty cycle of the motor to the required operating conditions; consult a professional to determine the proper drive, if necessary
Excessively loud	Ball bearing compressed, dirty or damaged	Re-align motor and the driven machine, inspect rolling bearing and replace if necessary. See chapter "Permitted rolling bearing types" (→ 🗎 174).
	Vibration of rotating parts	Look for the case, possibly an imbalance; correct the cause, observe method for balancing
	Foreign objects in cooling air ducts	Clean cooling air ducts
	For DR.. motors with rotor designation "J": Load too high	Reduce load

21927189/EN – 07/2015

9.2 Brake malfunctions

Fault	Possible cause	Measure
Brake does not release	Incorrect voltage on brake control unit	Apply the correct voltage; brake voltage specified on the nameplate
	Brake control unit failed	Install a new brake control, check resistors and insulation of the brake coils (see "Resistors" chapter for resistance values) Check switchgear, replace if necessary
	Max. permitted working air gap exceeded because brake lining worn down	Measure and set working air gap. See the following chapters: • Setting the working air gap of BE05 – BE122 brakes (→ 🗎 131) • Setting the working air gap of BE120 – BE122 brakes If the brake disk is too thin, replace the brake disk. See the following chapters: • Replacing the brake disk of BE05 – BE122 brakes (→ 🗎 133) • Replacing the brake disk of BE120 – BE122 brakes
	Voltage drop along supply cable > 10%	Provide correct connection voltage: brake voltage specifications on the nameplate. Check the cross section of the brake supply cable; increase cross section if necessary
	Inadequate cooling, brake overheats	Provide for cooling air supply or clear cooling air passages, check air filter, clean or replace if necessary. Replace type BG brake rectifier with type BGE
	Brake coil has interturn short circuit or a short circuit to frame	Check resistors and insulation of the brake coils (see "Resistors" chapter for resistance values); Replace complete brake and brake control (specialist workshop), Check switchgear, replace if necessary
	Rectifier defective	Replace rectifier and brake coil; it may be more economical to replace the complete brake

21927189/EN – 07/2015

Fault	Possible cause	Measure
Brake does not brake	Working air gap not correct	Measure and set working air gap. See the following chapters: • Setting the working air gap of BE05 – BE122 brakes (→ 🗎 131) • Setting the working air gap of BE120 – BE122 brakes If the brake disk is too thin, replace the brake disk. See the following chapters: • Replacing the brake disk of BE05 – BE122 brakes (→ 🗎 133) • Replacing the brake disk of BE120 – BE122 brakes
	Brake lining worn	Replace entire brake disk. See the following chapters: • Replacing the brake disk of BE05 – BE122 brakes (→ 🗎 133) • Replacing the brake disk of BE120 – BE122 brakes
	Incorrect braking torque	Check the project planning and change the braking torque if necessary; see chapter "Work done, working air gap, braking torques" (→ 🗎 159) • by changing the type and number of brake springs. See the following chapters: – Changing the braking torque of BE05 – BE122 brakes (→ 🗎 135) – Changing the braking torque of BE120 – BE122 brakes • by selecting a different brake See chapter "Braking torque assignment" (→ 🗎 161)

21927189/EN – 07/2015

Fault	Possible cause	Measure
Brake does not brake	Working air gap so large that setting nuts for the manual brake release come into contact	Set the working air gap. See the following chapters: • Setting the working air gap of BE05 – BE122 brakes (→ 🗎 131) • Setting the working air gap of BE120 – BE122 brakes
	Manual brake release device not set correctly	Set the adjusting nuts for the manual brake release correctly See the following chapters: • Changing the braking torque of BE05 – BE122 brakes (→ 🗎 135) • Changing the braking torque of BE120 – BE122 brakes
	Brake locked by manual brake release HF	Loosen the set screw, remove if necessary
Brake is applied with time lag	Brake is switched only on AC voltage side	Switch both the DC and AC circuits (e.g. by retrofitting a SR current relay to BSR or a UR voltage relay to BUR); observe wiring diagram
Noises in vicinity of brake	Gearing wear on the brake disk or the driver caused by jolting startup	Check the project planning, replace the brake disk if necessary See the following chapters: • Replacing the brake disk of BE05 – BE122 brakes (→ 🗎 133) • Replacing the brake disk of BE120 – BE122 brakes Have a specialist workshop replace the driver
	Alternating torques due to incorrectly set frequency inverter	Check correct setting of frequency inverter according to its operating instructions, correct if necessary.

9.3 Malfunctions when operated with a frequency inverter

The symptoms described in the "Motor malfunctions" chapter may also occur when the motor is operated with a frequency inverter. Please refer to the frequency inverter operating instructions for the meaning of the problems that occur and to find information about rectifying the problems.

21927189/EN – 07/2015

9.4 Customer service

Have the following information available if you require customer service assistance:

- Nameplate data (complete)
- Nature and extent of the problem
- Time the failure occurred and any accompanying circumstances
- Assumed cause
- Ambient conditions e.g.:
  - Ambient temperature
  - Humidity
  - Installation altitude
  - Dirt
  - etc.

9.5 Disposal

Dispose of the motors in accordance with the material structure and the regulations in force:

- Iron
- Aluminum
- Copper
- Plastics
- Electronic parts
- Oil and grease (not mixed with solvents)

21927189/EN – 07/2015

10 Appendix

10.1 Wiring diagrams

INFORMATION

The motor should be connected as shown in the connection wiring diagram or the terminal assignment diagram, which are supplied with the motor. The following chapter only shows a selection of the common types of connections. You can obtain the relevant wiring diagrams free of charge from SEW-EURODRIVE.

10.1.1 Delta and star connection in wiring diagram R13

For all motors with one speed, direct on-line or ⅄/△ start-up.

Delta connection

The following figure shows △ connection for low voltage.

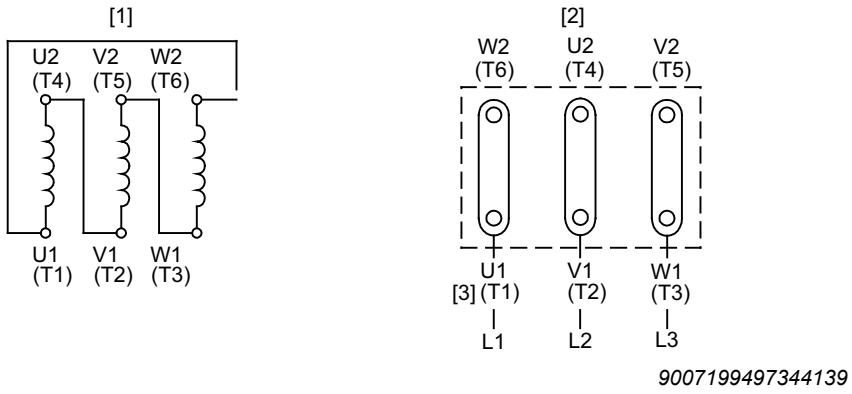

9007199497344139

[1] Motor winding
[2] Motor terminal board
[3] Incoming cables

Star connection

The following figure shows ⅄ connection for high voltage.

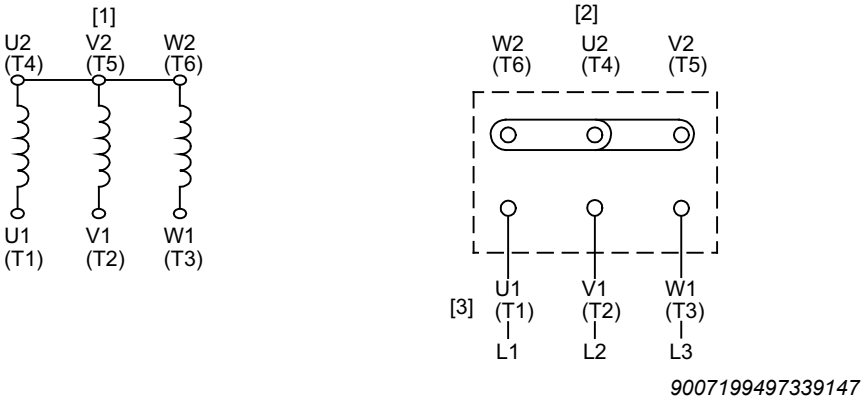

9007199497339147

[1] Motor winding
[2] Motor terminal board
[3] Incoming cables

Direction of rotation reversal: Swap connection of 2 incoming cables, L1 – L2

21927189/EN – 07/2015

10.1.2 Delta connection with wiring diagram R72 (68192 xx 09)

For all motors with one speed and direct power-on.

Delta connection, Double-delta connection

The following figure shows △ connection for high voltages and △ △ connection for low voltages.

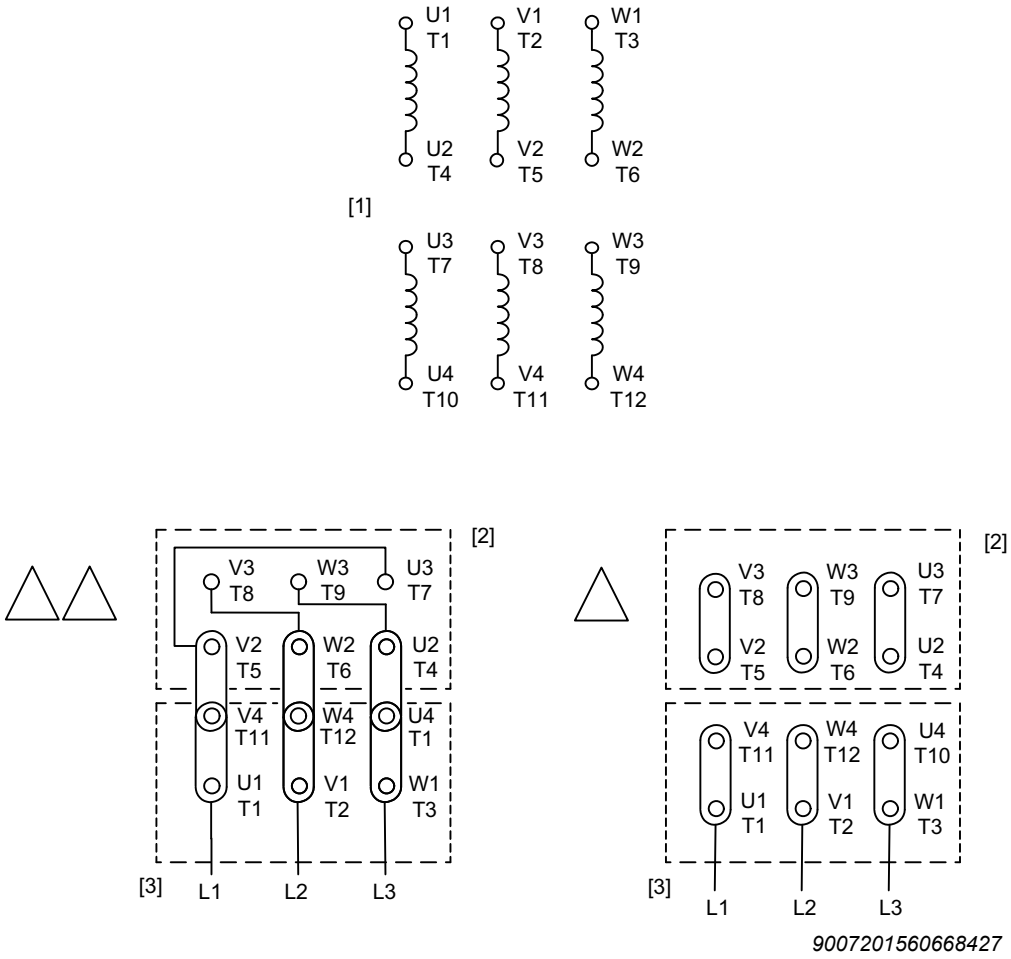

[1] Motor winding
[2] Motor terminal board
[3] Incoming cables

Direction of rotation reversal: Swap connection of 2 incoming cables, L1 – L2

10.1.3 Star connection with wiring diagram R76 (68043 xx 06)

For all motors with one speed and direct power-on.

Star connection, double-star connection

The following figure shows ⅄ connection for high voltages and ⅄ ⅄ connection for low voltages.

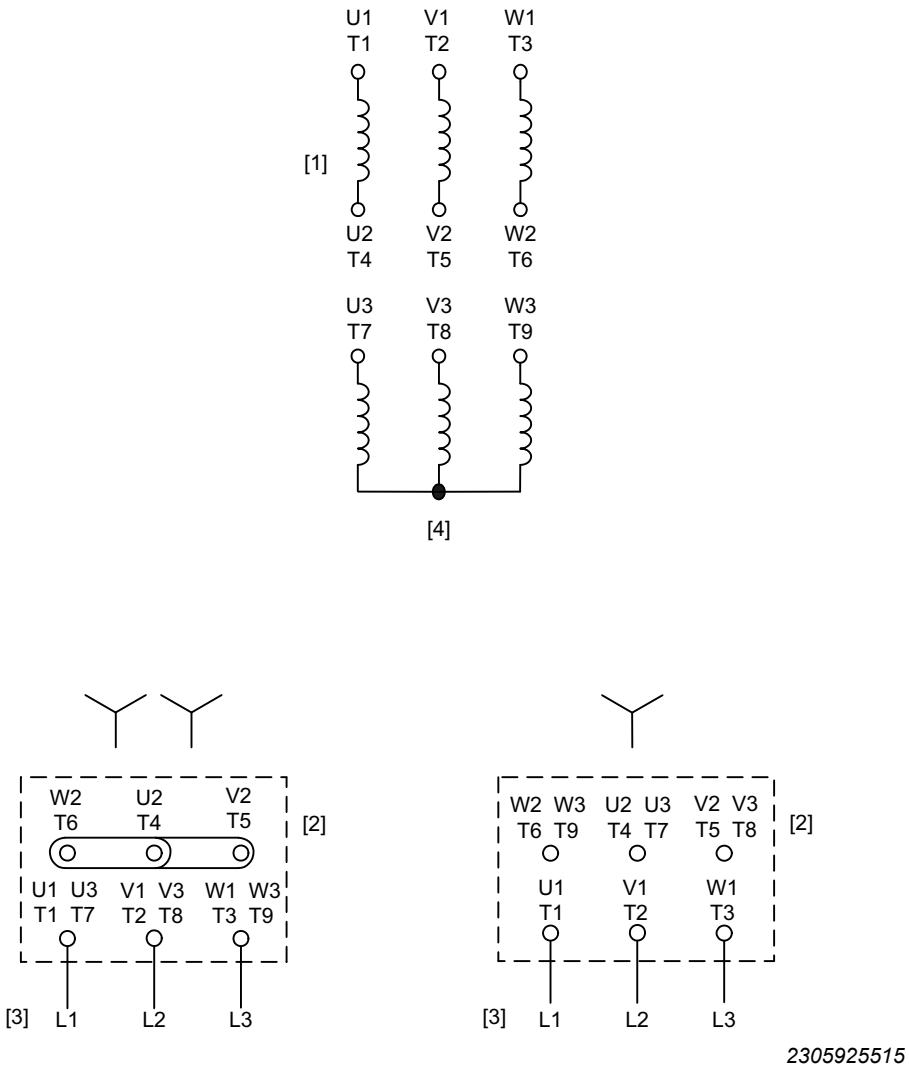

[1] Motor winding
[2] Motor terminal board
[3] Incoming cables
[4] Star point connected in motor

Direction of rotation reversal: Swap connection of 2 incoming cables, L1 - L2

10.1.4 Motor protection with TF or TH for DR..71 – 280, DRN80 – 280

TF/TH

The following figures show the connection of motor protection with TF PTC thermistor sensors or TH bimetallic thermostats.

Either a two-pin connection terminal or a five-pin terminal strip is available for connecting to the trip switch.

Example: TF/TH to a two-pin terminal strip

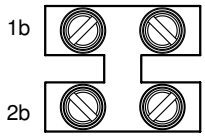

9007199728684427

1b	2b
TF/TH	TF/TH

Example: 2xTF/TH to a five-pin terminal strip

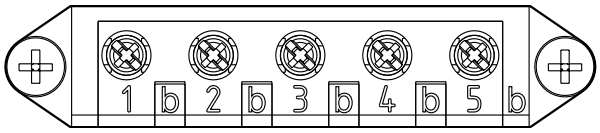

18014398983427083

1b	2b	3b	4b	5b
1.TF/TH	1.TF/TH	2nd TF/TH	2nd TF/TH	–

2xTF/TH with anti-condensation heating

The following illustration shows the connection of the motor protection with 2 TF PTC thermistor sensors or TH bimetallic thermostats and Hx anti-condensation heating.

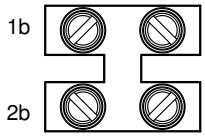

9007199728684427

1b	2b
Hx	Hx

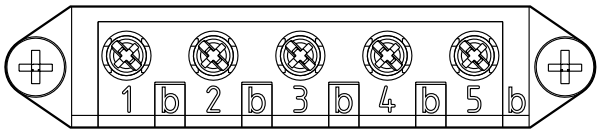

18014398983427083

1b	2b	3b	4b	5b
1.TF/TH	1.TF/TH	2nd TF/TH	2nd TF/TH	–

10.1.5 Motor protection using TF or TH with DR..315, DRN315

TF/TH

The following figures show the connection of motor protection with TF PTC thermistor sensors or TH bimetallic thermostats.

Depending on the version, an "x-pin" terminal strip is available for connection to the trip switch.

Example: TF/TH to terminal strip

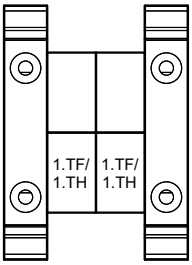

473405707

Example: 2xTF/TH to terminal strip

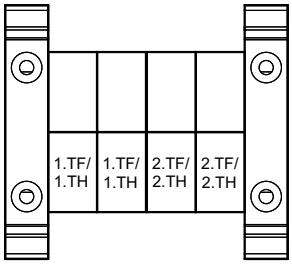

473410187

21927189/EN – 07/2015

10.1.6 EI7.B built-in encoder

Connection via terminal strip

The encoder is equipped with a 10-pin terminal strip for connection:

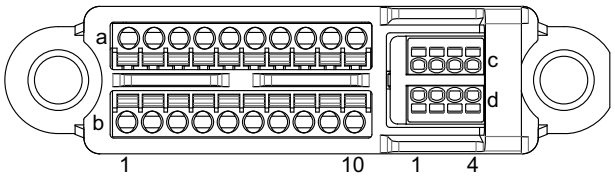

9007207579353739

INFORMATION

The ranges 1a – 10a, 1c – 4c und 1d – 4d have been pre-configured by SEW-EURODRIVE. The must not be changed.

Range 1b – 10b is intended for customer adjustments.

Basic connection:

Connections 1a – 10a, 1c – 4c and 1d – 4d lead to the encoder or to the motor.

Connections 1b – 10b lead to the cable gland.

	1	2	3	4	5	6	7	8	9	10	1	2	3	4	
a	TF1[1]	TF1[1]	TF2[1] Opt.	TF2[1] Opt.	+UB[1] (GY)	GND[1] (PK)	A[1] (BN)	$\overline{A}$[1] (WH)	$\overline{B}$[1] (YE)	B[1] (GN)	see below				c
b	TF1	TF1	TF2 Opt.	TF2 Opt.	+UB	GND	A	$\overline{A}$	B	$\overline{B}$	see below				d

1) Pre-configured by SEW-EURODRIVE. Do not alter the setting!

Pin assignment EI7**C** B				
1	2	3	4	
GND[1] (BU)	n. c.[1]	n. c.[1]	n. c.[1]	c
EI7C[1] (RD)	n. c.[1]	n. c.[1]	n. c.[1]	d

Pin assignment EI7**6** B				
1	2	3	4	
GND[1] (BU)	n. c.[1]	n. c.[1]	n. c.[1]	c
n. c.[1]	EI76[1] (RD)	n. c.[1]	n. c.[1]	d

1) Pre-configured by SEW-EURODRIVE. Do not alter the setting!

Pin assignment EI7**2** B				
1	2	3	4	
GND[1] (BU)	n. c.[1]	n. c.[1]	n. c.[1]	c
n. c.[1]	n. c.[1]	EI72[1] (RD)	n. c.[1]	d

Pin assignment EI7**1** B				
1	2	3	4	
GND[1] (BU)	n. c.[1]	n. c.[1]	n. c.[1]	c
n. c.[1]	n. c.[1]	n. c.[1]	EI71[1] (RD)	d

1) Pre-configured by SEW-EURODRIVE. Do not alter the setting!

21927189/EN – 07/2015

Connection via M12 plug connector

A 8-pin or a 4-pin M12 plug connector is available for the connection.

4-pin M12 plug connector AVSE		8-pin M12 plug connector AVRE	
• A coded • Male 	Pin 1: $+U_B$ Pin 2: B Pin 3: GND Pin 4: A	• A coded • Male 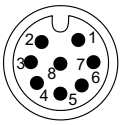	Pin 1: $+U_B$ Pin 2: GND Pin 3: A Pin 4: $\overline{A}$ Pin 5: B Pin 6: $\overline{B}$ Pin 7: TF1 Pin 8: TF1

21927189/EN – 07/2015

10.1.7 Brake control BGE; BG; BSG; BUR

BE brake

BGE, BG, BSG, BUR brake control;

Apply voltage to release the brake (see nameplate).

Contact rating of the brake control: AC3 in accordance with EN 60947-4-1.

The voltage can be distributed as follows:

- Through a separate supply cable
- From the motor terminal board

This does not apply to pole-changing and frequency-controlled motors.

BG / BGE

The following illustration shows the wiring for BG and BGE brake rectifiers for the AC-side shut-off as well as the DC and AC-side shutoff.

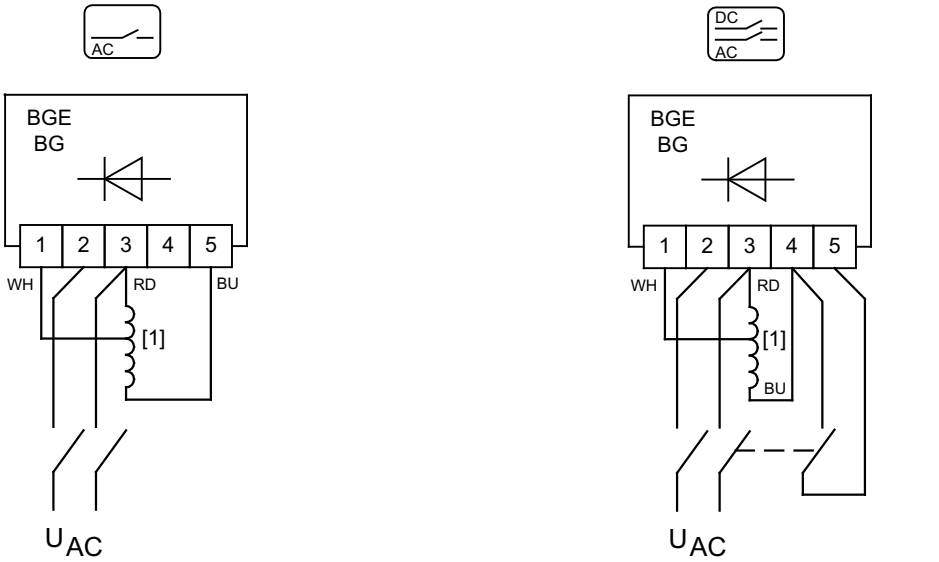

242604811

[1] Brake coil

BSG

The following illustration shows the DC 24 V connection of the BSG control unit

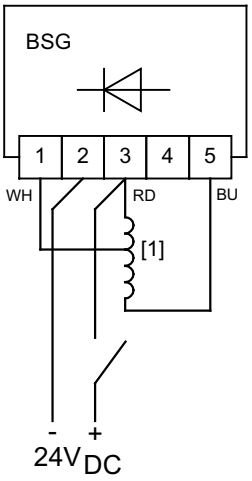

242606475

[1] Brake coil

BUR



⚠ WARNING

Malfunction caused by incorrect connection for frequency operation.

Possible damage to the drive system.

- Do not connect the brake to the terminal board of the motor.

The following figure shows the wiring for BUR brake control:

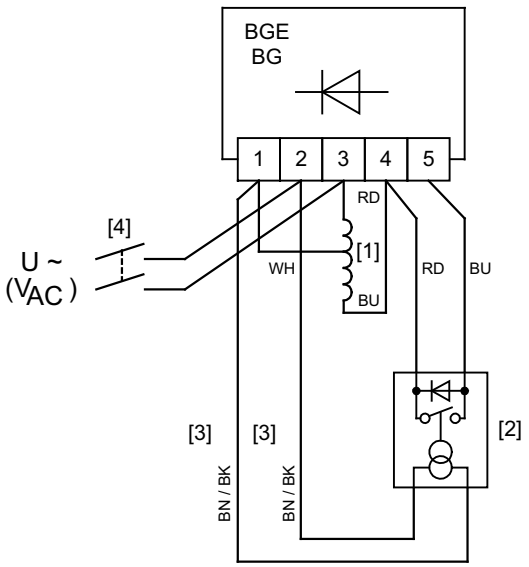

242608139

[1] Brake coil
[2] UR11/UR15 voltage relay

BN = UR 11 (42 – 150 V)
BK = UR 15 (150 – 500 V)

21927189/EN – 07/2015

10.1.8 BSR brake control

BE brake

BSR brake control

Brake voltage = Phase-to-neutral voltage

The white connecting leads are the ends of a converter loop and, depending on the motor connection, must be connected to the motor terminal block instead of the △ or ⅄ bridge prior startup.

Factory set to star in wiring diagram R13

The following illustration shows the factory wiring for the BSR brake control

Example

Motor: AC 230 V / AC 400 V

Brake: AC 230 V

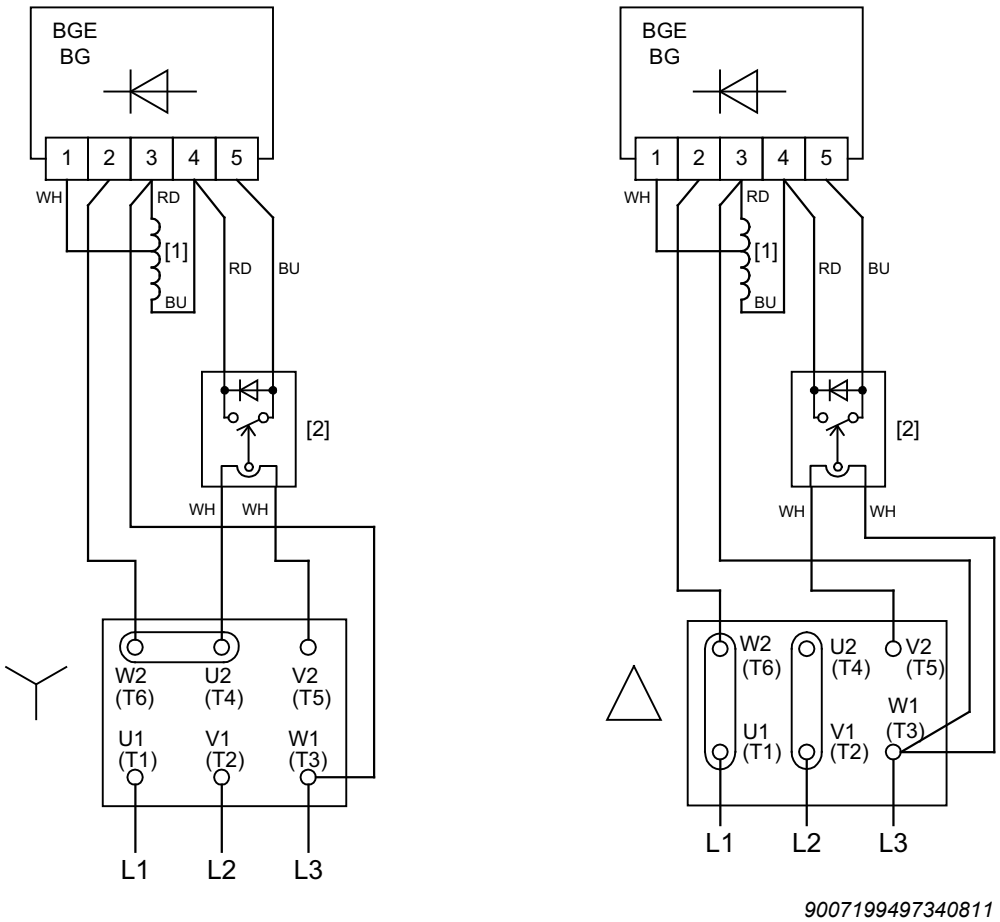

9007199497340811

[1] Brake coil
[2] SR11/15 current relay

Factory set to start in wiring diagram R76

The following illustration shows the factory wiring for the BSR brake control

Example

Motor: AC 230 V / AC 460 V

Brake: AC 230 V

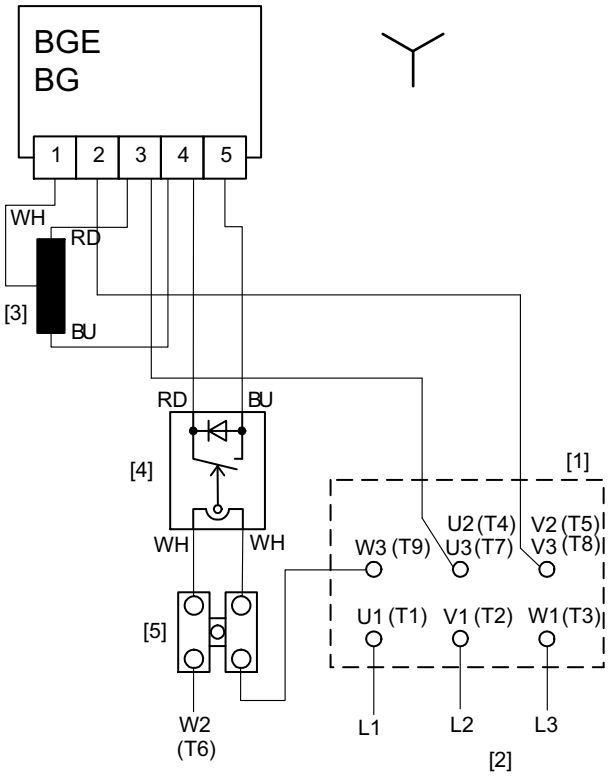

2319077003

[1] Motor terminal board
[2] Incoming cables
[3] Brake coil
[4] SR11/15 current relay
[5] Auxiliary terminal

Alternative connection: Factory set to double-star with wiring diagram R76

The following illustration shows the factory wiring for the BSR brake control

Example

Motor: AC 230 V / AC 460 V

Brake: AC 230 V

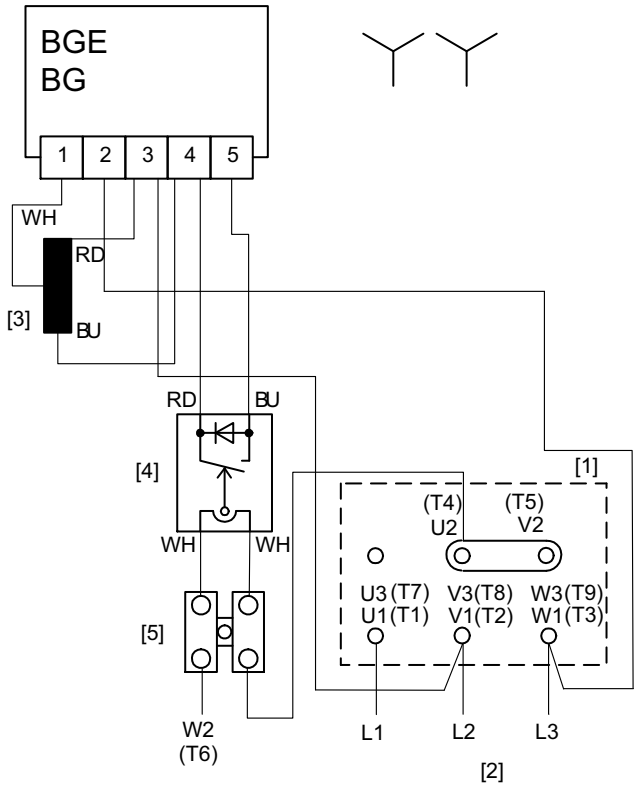

2337824139

[1] Motor terminal board
[2] Incoming cables
[3] Brake coil
[4] SR11/15 current relay
[5] Auxiliary terminal

10.1.9 BMP3.1 brake control in the terminal box

Brake BE120, BE122

BMP3.1 brake control

Apply voltage to release the brake (see nameplate).

Contact rating of the brake control: AC3 in accordance with EN 60947-4-1.

Separate supply cables are required for the voltage supply.

BMP3.1

The following illustration shows the wiring for the BMP3.1 brake rectifier for the AC-side shut-off as well as the DC and AC-side shutoff.

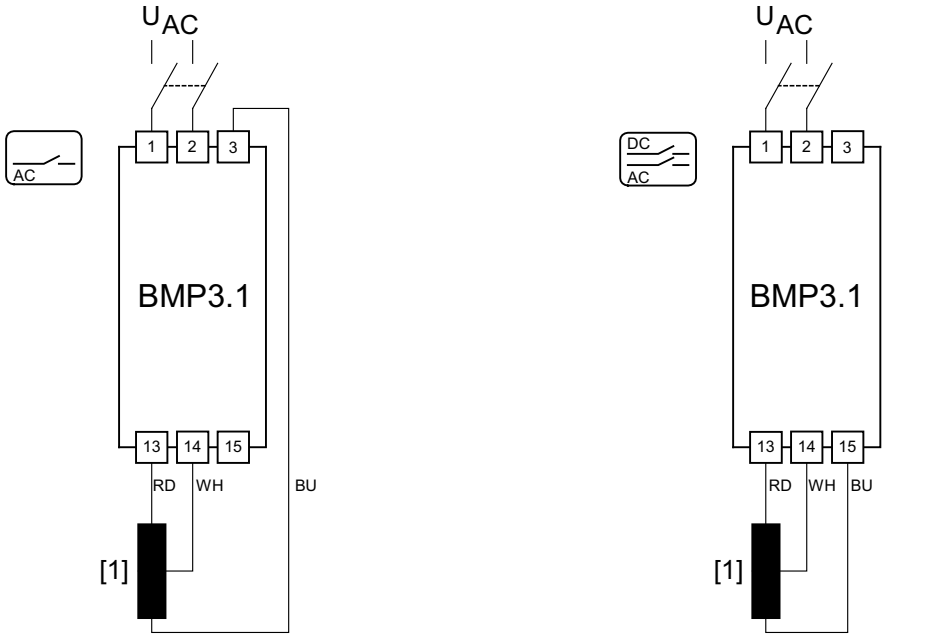

365750411

[1] Brake coil

10.1.10 V forced cooling fan

Delta-Steinmetz

The following figure shows the wiring of the V forced cooling fan for delta-Steinmetz connection for 1-phase operation

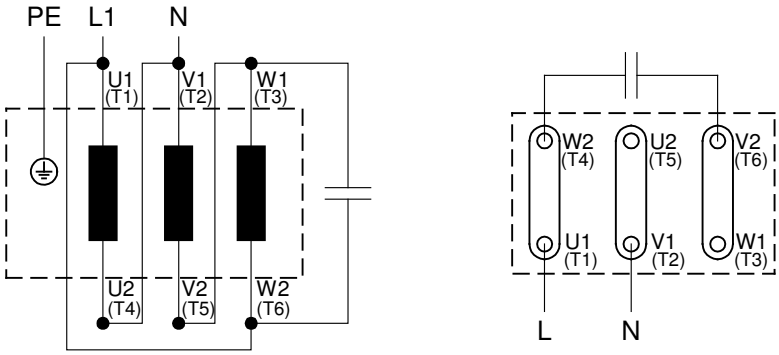

9007199778089483

Star connection

The following figure shows the wiring of the V forced cooling fan for star connection.

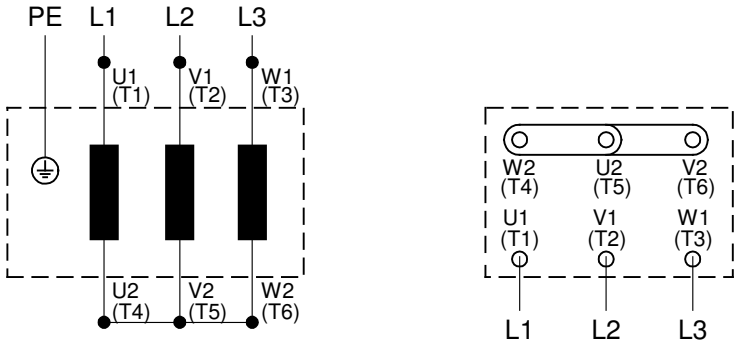

9007199778091147

Delta connection

The following figure shows the wiring of the V forced cooling fan for delta connection.

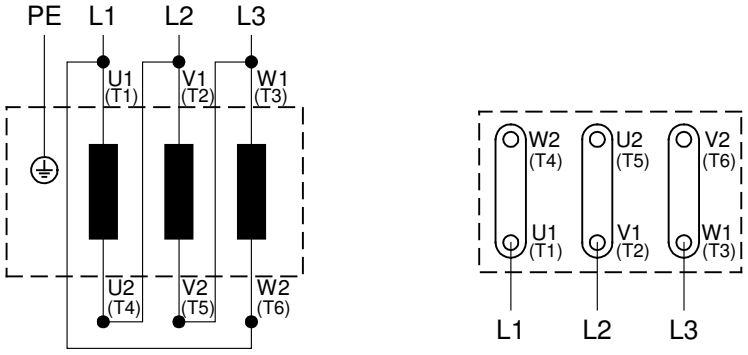

18014399032833803

DC 24 V connection

The following figure shows the wiring of the /V forced cooling fan for DC 24 V.

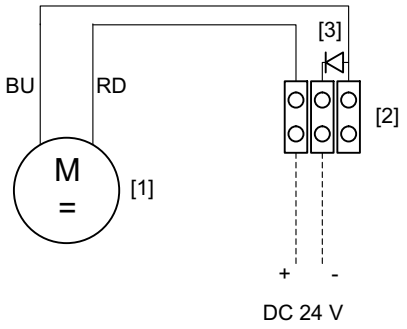

9007201648125067

[1] Forced cooling fan
[2] Terminal strip
[3] Polarity reversal protection diode

A Factory
B Customer wiring

INFORMATION

Observe the polarity.

21927189/EN – 07/2015

10.1.11 DRK... single-phase motor

ER10 wiring diagram

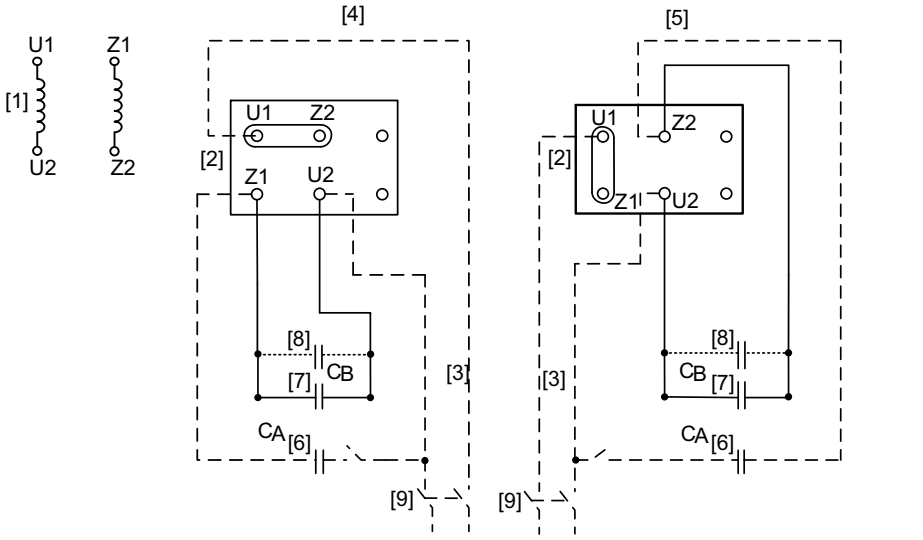

11919510027

[1]	Motor winding	[6]	Starting capacitor, switchable
[2]	Motor terminal	[7]	Running capacitor
[3]	Incoming cables	[8]	Further running capacitors (if available)
[4]	Counterclockwise rotation		
[5]	CW rotation, connected at factory	[9]	All-pole power switch

ER11 wiring diagram

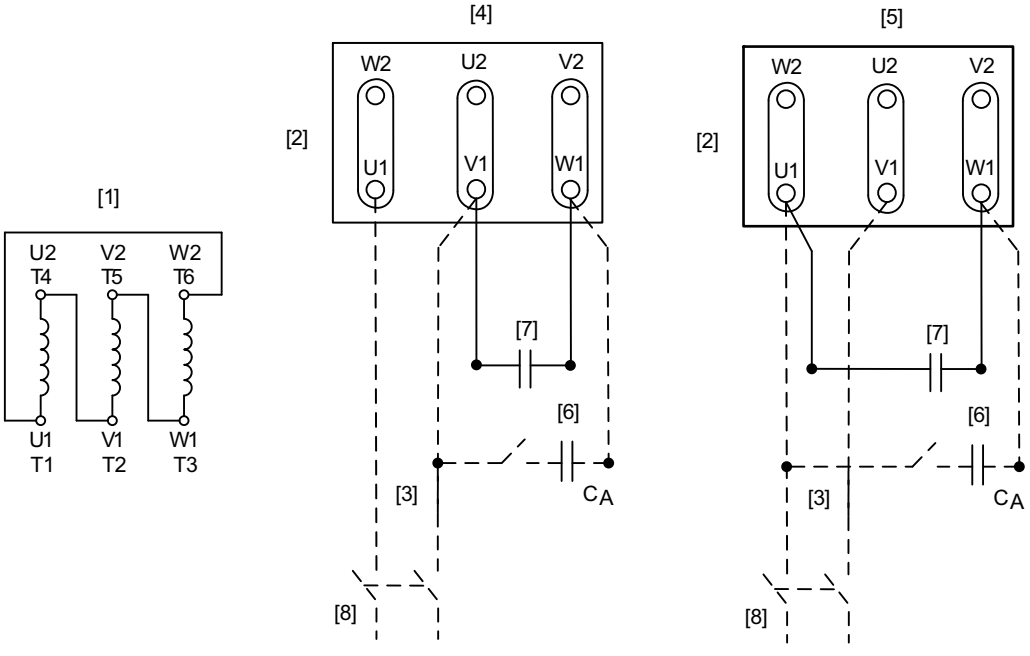

11919511947

[1]	Motor winding	[5]	CW rotation, connected at factory
[2]	Motor terminal board	[6]	Starting capacitor, switchable
[3]	Incoming cables	[7]	Running capacitor
[4]	Counterclockwise rotation	[8]	All-pole power switch

10.2 Auxiliary terminals 1 and 2

The following figure shows the arrangement of the auxiliary terminals for the different terminal box positions.

Terminal box position 2 and X, here X[1)]

Terminal box position 1 and 3, here 3

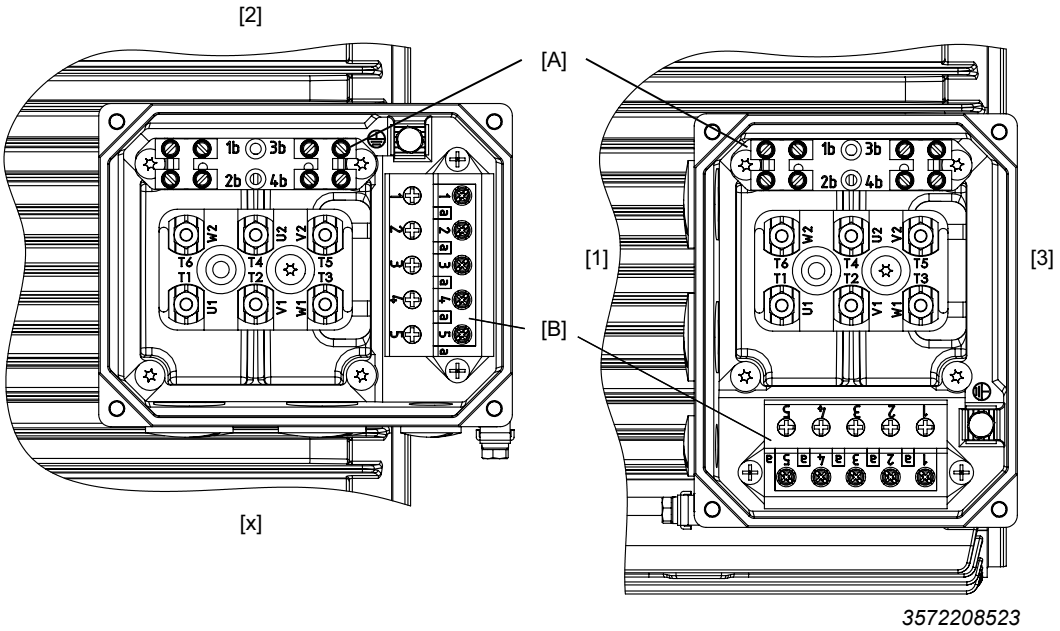

1) If auxiliary terminal 2 is not provided, you can install auxiliary terminal 1 in the same position.

[1]	Terminal box position 1	[X]	Terminal box position X
[2]	Terminal box system 2	[A]	Auxiliary terminal 1
[3]	Terminal box system 3	[B]	Auxiliary terminal 2

Regardless of the terminal box position, auxiliary terminal 1 must always be mounted parallel to the terminal board.

The terminal structure can vary depending on the terminal box design.

21927189/EN – 07/2015

11 Address list

Algeria			
Sales	Algiers	REDUCOM Sarl 16, rue des Frères Zaghnoune Bellevue 16200 El Harrach Alger	Tel. +213 21 8214-91 Fax +213 21 8222-84 http://www.reducom-dz.com info@reducom-dz.com
Argentina			
Assembly Sales	Buenos Aires	SEW EURODRIVE ARGENTINA S.A. Ruta Panamericana Km 37.5, Lote 35 (B1619IEA) Centro Industrial Garín Prov. de Buenos Aires	Tel. +54 3327 4572-84 Fax +54 3327 4572-21 http://www.sew-eurodrive.com.ar sewar@sew-eurodrive.com.ar
Australia			
Assembly Sales Service	Melbourne	SEW-EURODRIVE PTY. LTD. 27 Beverage Drive Tullamarine, Victoria 3043	Tel. +61 3 9933-1000 Fax +61 3 9933-1003 http://www.sew-eurodrive.com.au enquires@sew-eurodrive.com.au
	Sydney	SEW-EURODRIVE PTY. LTD. 9, Sleigh Place, Wetherill Park New South Wales, 2164	Tel. +61 2 9725-9900 Fax +61 2 9725-9905 enquires@sew-eurodrive.com.au
Austria			
Assembly Sales Service	Vienna	SEW-EURODRIVE Ges.m.b.H. Richard-Strauss-Strasse 24 A-1230 Wien	Tel. +43 1 617 55 00-0 Fax +43 1 617 55 00-30 http://www.sew-eurodrive.at sew@sew-eurodrive.at
Bangladesh			
Sales	Bangladesh	SEW-EURODRIVE INDIA PRIVATE LIMITED 345 DIT Road East Rampura Dhaka-1219, Bangladesh	Tel. +88 01729 097309 salesdhaka@seweurodrivebangladesh.com
Belarus			
Sales	Minsk	Foreign Enterprise Industrial Components RybalkoStr. 26 BY-220033 Minsk	Tel. +375 17 298 47 56 / 298 47 58 Fax +375 17 298 47 54 http://www.sew.by sales@sew.by
Belgium			
Assembly Sales Service	Brussels	SEW-EURODRIVE n.v./s.a. Researchpark Haasrode 1060 Evenementenlaan 7 BE-3001 Leuven	Tel. +32 16 386-311 Fax +32 16 386-336 http://www.sew-eurodrive.be info@sew-eurodrive.be
Service Competence Center	Industrial Gears	SEW-EURODRIVE n.v./s.a. Rue de Parc Industriel, 31 BE-6900 Marche-en-Famenne	Tel. +32 84 219-878 Fax +32 84 219-879 http://www.sew-eurodrive.be service-wallonie@sew-eurodrive.be
Brazil			
Production Sales Service	São Paulo	SEW-EURODRIVE Brasil Ltda. Estrada Municipal José Rubim, 205 – Rodovia Santos Dumont Km 49 Indaiatuba – 13347-510 – SP	Tel. +55 19 3835-8000 sew@sew.com.br
Assembly Sales Service	Rio Claro	SEW-EURODRIVE Brasil Ltda. Rodovia Washington Luiz, Km 172 Condomínio Industrial Conpark Caixa Postal: 327 13501-600 – Rio Claro / SP	Tel. +55 19 3522-3100 Fax +55 19 3524-6653 montadora.rc@sew.com.br
	Joinville	SEW-EURODRIVE Brasil Ltda. Rua Dona Francisca, 12.346 – Pirabeiraba 89239-270 – Joinville / SC	Tel. +55 47 3027-6886 Fax +55 47 3027-6888 filial.sc@sew.com.br
Bulgaria			
Sales	Sofia	BEVER-DRIVE GmbH Bogdanovetz Str.1 BG-1606 Sofia	Tel. +359 2 9151160 Fax +359 2 9151166 bever@bever.bg

21927189/EN – 07/2015

Cameroon			
is supported by Germany.			
Canada			
Assembly Sales Service	Toronto	SEW-EURODRIVE CO. OF CANADA LTD. 210 Walker Drive Bramalea, ON L6T 3W1	Tel. +1 905 791-1553 Fax +1 905 791-2999 http://www.sew-eurodrive.ca l.watson@sew-eurodrive.ca
	Vancouver	SEW-EURODRIVE CO. OF CANADA LTD. Tilbury Industrial Park 7188 Honeyman Street Delta, BC V4G 1G1	Tel. +1 604 946-5535 Fax +1 604 946-2513 b.wake@sew-eurodrive.ca
	Montreal	SEW-EURODRIVE CO. OF CANADA LTD. 2555 Rue Leger Lasalle, PQ H8N 2V9	Tel. +1 514 367-1124 Fax +1 514 367-3677 a.peluso@sew-eurodrive.ca
Chile			
Assembly Sales Service	Santiago de Chile	SEW-EURODRIVE CHILE LTDA Las Encinas 1295 Parque Industrial Valle Grande LAMPA RCH-Santiago de Chile P.O. Box Casilla 23 Correo Quilicura - Santiago - Chile	Tel. +56 2 2757 7000 Fax +56 2 2757 7001 http://www.sew-eurodrive.cl ventas@sew-eurodrive.cl
China			
Production Assembly Sales Service	Tianjin	SEW-EURODRIVE (Tianjin) Co., Ltd. No. 78, 13th Avenue, TEDA Tianjin 300457	Tel. +86 22 25322612 Fax +86 22 25323273 http://www.sew-eurodrive.cn info@sew-eurodrive.cn
Assembly Sales Service	Suzhou	SEW-EURODRIVE (Suzhou) Co., Ltd. 333, Suhong Middle Road Suzhou Industrial Park Jiangsu Province, 215021	Tel. +86 512 62581781 Fax +86 512 62581783 suzhou@sew-eurodrive.cn
	Guangzhou	SEW-EURODRIVE (Guangzhou) Co., Ltd. No. 9, JunDa Road East Section of GETDD Guangzhou 510530	Tel. +86 20 82267890 Fax +86 20 82267922 guangzhou@sew-eurodrive.cn
	Shenyang	SEW-EURODRIVE (Shenyang) Co., Ltd. 10A-2, 6th Road Shenyang Economic Technological Development Area Shenyang, 110141	Tel. +86 24 25382538 Fax +86 24 25382580 shenyang@sew-eurodrive.cn
	Taiyuan	SEW-EURODRIVE (Taiyuan) Co,. Ltd. No.3, HuaZhang Street, TaiYuan Economic & Technical Development Zone ShanXi, 030032	Tel. +86-351-7117520 Fax +86-351-7117522 taiyuan@sew-eurodrive.cn
	Wuhan	SEW-EURODRIVE (Wuhan) Co., Ltd. 10A-2, 6th Road No. 59, the 4th Quanli Road, WEDA 430056 Wuhan	Tel. +86 27 84478388 Fax +86 27 84478389 wuhan@sew-eurodrive.cn
	Xi'An	SEW-EURODRIVE (Xi'An) Co., Ltd. No. 12 Jinye 2nd Road Xi'An High-Technology Industrial Development Zone Xi'An 710065	Tel. +86 29 68686262 Fax +86 29 68686311 xian@sew-eurodrive.cn
Sales Service	Hong Kong	SEW-EURODRIVE LTD. Unit No. 801-806, 8th Floor Hong Leong Industrial Complex No. 4, Wang Kwong Road Kowloon, Hong Kong	Tel. +852 36902200 Fax +852 36902211 contact@sew-eurodrive.hk
Colombia			
Assembly Sales Service	Bogota	SEW-EURODRIVE COLOMBIA LTDA. Calle 22 No. 132-60 Bodega 6, Manzana B Santafé de Bogotá	Tel. +57 1 54750-50 Fax +57 1 54750-44 http://www.sew-eurodrive.com.co sew@sew-eurodrive.com.co

21927189/EN – 07/2015

Croatia			
Sales Service	Zagreb	KOMPEKS d. o. o. Zeleni dol 10 HR 10 000 Zagreb	Tel. +385 1 4613-158 Fax +385 1 4613-158 kompeks@inet.hr
Czech Republic			
Assembly Sales Service	Hostivice	SEW-EURODRIVE CZ s.r.o. Floriánova 2459 253 01 Hostivice	Tel. +420 255 709 601 Fax +420 235 350 613 http://www.sew-eurodrive.cz sew@sew-eurodrive.cz
	Drive Service Hotline / 24 Hour Service	+420 800 739 739 (800 SEW SEW)	Service Tel. +420 255 709 632 Fax +420 235 358 218 servis@sew-eurodrive.cz
Denmark			
Assembly Sales Service	Copenhagen	SEW-EURODRIVEA/S Geminivej 28-30 DK-2670 Greve	Tel. +45 43 95 8500 Fax +45 43 9585-09 http://www.sew-eurodrive.dk sew@sew-eurodrive.dk
Egypt			
Sales Service	Cairo	Copam Egypt for Engineering & Agencies 33 El Hegaz ST Heliopolis, Cairo	Tel. +20 222566299 Fax +20 2 22594-757 http://www.copam-egypt.com copam@copam-egypt.com
Estonia			
Sales	Tallin	ALAS-KUUL AS Reti tee 4 EE-75301 Peetri küla, Rae vald, Harjumaa	Tel. +372 6593230 Fax +372 6593231 http://www.alas-kuul.ee veiko.soots@alas-kuul.ee
Finland			
Assembly Sales Service	Hollola	SEW-EURODRIVE OY Vesimäentie 4 FIN-15860 Hollola 2	Tel. +358 201 589-300 Fax +358 3 780-6211 http://www.sew-eurodrive.fi sew@sew.fi
Service	Hollola	SEW-EURODRIVE OY Keskikankaantie 21 FIN-15860 Hollola	Tel. +358 201 589-300 Fax +358 3 780-6211 http://www.sew-eurodrive.fi sew@sew.fi
Production Assembly	Karkkila	SEW Industrial Gears Oy Santasalonkatu 6, PL 8 FI-03620 Karkkila, 03601 Karkkila	Tel. +358 201 589-300 Fax +358 201 589-310 http://www.sew-eurodrive.fi sew@sew.fi
France			
Production Sales Service	Hagenau	SEW-USOCOME 48-54 route de Soufflenheim B. P. 20185 F-67506 Haguenau Cedex	Tel. +33 3 88 73 67 00 Fax +33 3 88 73 66 00 http://www.usocome.com sew@usocome.com
Production	Forbach	SEW-USOCOME Zone industrielle Technopôle Forbach Sud B. P. 30269 F-57604 Forbach Cedex	Tel. +33 3 87 29 38 00
	Brumath	SEW-USOCOME 1 rue de Bruxelles F-67670 Mommenheim	Tel. +33 3 88 37 48 48
Assembly Sales Service	Bordeaux	SEW-USOCOME Parc d'activités de Magellan 62 avenue de Magellan – B. P. 182 F-33607 Pessac Cedex	Tel. +33 5 57 26 39 00 Fax +33 5 57 26 39 09
	Lyon	SEW-USOCOME Parc d'affaires Roosevelt Rue Jacques Tati F-69120 Vaulx en Velin	Tel. +33 4 72 15 37 00 Fax +33 4 72 15 37 15

France			
	Nantes	SEW-USOCOME Parc d'activités de la forêt 4 rue des Fontenelles F-44140 Le Bignon	Tel. +33 2 40 78 42 00 Fax +33 2 40 78 42 20
	Paris	SEW-USOCOME Zone industrielle 2 rue Denis Papin F-77390 Verneuil l'Étang	Tel. +33 1 64 42 40 80 Fax +33 1 64 42 40 88
Gabon			
is supported by Germany.			
Germany			
Headquarters Production Sales	Bruchsal	SEW-EURODRIVE GmbH & Co KG Ernst-Blickle-Straße 42 D-76646 Bruchsal P.O. Box Postfach 3023 – D-76642 Bruchsal	Tel. +49 7251 75-0 Fax +49 7251 75-1970 http://www.sew-eurodrive.de sew@sew-eurodrive.de
Production / Industrial Gears	Bruchsal	SEW-EURODRIVE GmbH & Co KG Christian-Pähr-Str. 10 D-76646 Bruchsal	Tel. +49 7251 75-0 Fax +49 7251 75-2970
Production	Graben	SEW-EURODRIVE GmbH & Co KG Ernst-Blickle-Straße 1 D-76676 Graben-Neudorf P.O. Box Postfach 1220 – D-76671 Graben-Neudorf	Tel. +49 7251 75-0 Fax +49 7251-2970
	Östringen	SEW-EURODRIVE GmbH & Co KG, Werk Östringen Franz-Gurk-Straße 2 D-76684 Östringen	Tel. +49 7253 9254-0 Fax +49 7253 9254-90 oestringen@sew-eurodrive.de
Service Competence Center	Mechanics / Mechatronics	SEW-EURODRIVE GmbH & Co KG Ernst-Blickle-Straße 1 D-76676 Graben-Neudorf	Tel. +49 7251 75-1710 Fax +49 7251 75-1711 scc-mechanik@sew-eurodrive.de
	Electronics	SEW-EURODRIVE GmbH & Co KG Ernst-Blickle-Straße 42 D-76646 Bruchsal	Tel. +49 7251 75-1780 Fax +49 7251 75-1769 scc-elektronik@sew-eurodrive.de
Drive Technology Center	North	SEW-EURODRIVE GmbH & Co KG Alte Ricklinger Straße 40-42 D-30823 Garbsen (Hannover)	Tel. +49 5137 8798-30 Fax +49 5137 8798-55 dtc-nord@sew-eurodrive.de
	East	SEW-EURODRIVE GmbH & Co KG Dänkritzer Weg 1 D-08393 Meerane (Zwickau)	Tel. +49 3764 7606-0 Fax +49 3764 7606-30 dtc-ost@sew-eurodrive.de
	South	SEW-EURODRIVE GmbH & Co KG Domagkstraße 5 D-85551 Kirchheim (München)	Tel. +49 89 909552-10 Fax +49 89 909552-50 dtc-sued@sew-eurodrive.de
	West	SEW-EURODRIVE GmbH & Co KG Siemensstraße 1 D-40764 Langenfeld (Düsseldorf)	Tel. +49 2173 8507-30 Fax +49 2173 8507-55 dtc-west@sew-eurodrive.de
Drive Center	Berlin	SEW-EURODRIVE GmbH & Co KG Alexander-Meißner-Straße 44 D-12526 Berlin	Tel. +49 306331131-30 Fax +49 306331131-36 dc-berlin@sew-eurodrive.de
	Ludwigshafen	SEW-EURODRIVE GmbH & Co KG c/o BASF SE Gebäude W130 Raum 101 D-67056 Ludwigshafen	Tel. +49 7251 75 3759 Fax +49 7251 75 503759 dc-ludwigshafen@sew-eurodrive.de
	Saarland	SEW-EURODRIVE GmbH & Co KG Gottlieb-Daimler-Straße 4 D-66773 Schwalbach Saar – Hülzweiler	Tel. +49 6831 48946 10 Fax +49 6831 48946 13 dc-saarland@sew-eurodrive.de
	Ulm	SEW-EURODRIVE GmbH & Co KG Dieselstraße 18 D-89160 Dornstadt	Tel. +49 7348 9885-0 Fax +49 7348 9885-90 dc-ulm@sew-eurodrive.de
	Würzburg	SEW-EURODRIVE GmbH & Co KG Nürnbergerstraße 118 D-97076 Würzburg-Lengfeld	Tel. +49 931 27886-60 Fax +49 931 27886-66 dc-wuerzburg@sew-eurodrive.de
Drive Service Hotline / 24 Hour Service			+49 800 SEWHELP +49 800 7394357

21927189/EN – 07/2015

Great Britain			
Assembly Sales Service	Normanton	SEW-EURODRIVE Ltd. DeVilliers Way Trident Park Normanton West Yorkshire WF6 1GX	Tel. +44 1924 893-855 Fax +44 1924 893-702 http://www.sew-eurodrive.co.uk info@sew-eurodrive.co.uk
	Drive Service Hotline / 24 Hour Service		Tel. 01924 896911
Greece			
Sales	Athens	Christ. Boznos & Son S.A. 12, K. Mavromichali Street P.O. Box 80136 GR-18545 Piraeus	Tel. +30 2 1042 251-34 Fax +30 2 1042 251-59 http://www.boznos.gr info@boznos.gr
Hungary			
Sales Service	Budapest	SEW-EURODRIVE Kft. Csillaghegyí út 13. H-1037 Budapest	Tel. +36 1 437 06-58 Fax +36 1 437 06-50 http://www.sew-eurodrive.hu office@sew-eurodrive.hu
Iceland			
Sales	Reykjavik	Varma & Vélaverk ehf. Knarrarvogi 4 IS-104 Reykjavík	Tel. +354 585 1070 Fax +354 585)1071 http://www.varmaverk.is vov@vov.is
India			
Registered Office Assembly Sales Service	Vadodara	SEW-EURODRIVE India Private Limited Plot No. 4, GIDC POR Ramangamdi • Vadodara - 391 243 Gujarat	Tel. +91 265 3045200 Fax +91 265 3045300 http://www.seweurodriveindia.com salesvadodara@seweurodriveindia.com
Assembly Sales Service	Chennai	SEW-EURODRIVE India Private Limited Plot No. K3/1, Sipcot Industrial Park Phase II Mambakkam Village Sriperumbudur - 602105 Kancheepuram Dist, Tamil Nadu	Tel. +91 44 37188888 Fax +91 44 37188811 saleschennai@seweurodriveindia.com
	Pune	SEW-EURODRIVE India Private Limited Plant: Plot No. D236/1, Chakan Industrial Area Phase- II, Warale, Tal- Khed, Pune-410501, Maharashtra	Tel. +91 21 35301400 salespune@seweurodriveindia.com
Indonesia			
Sales	Jakarta	PT. Cahaya Sukses Abadi Komplek Rukan Puri Mutiara Blok A no 99, Sunter Jakarta 14350	Tel. +62 21 65310599 Fax +62 21 65310600 csajkt@cbn.net.id
	Jakarta	PT. Agrindo Putra Lestari JL.Pantai Indah Selatan, Komplek Sentra Industri Terpadu, Pantai indah Kapuk Tahap III, Blok E No. 27 Jakarta 14470	Tel. +62 21 2921-8899 Fax +62 21 2921-8988 aplindo@indosat.net.id http://www.aplindo.com
	Medan	PT. Serumpun Indah Lestari Jl.Pulau Solor no. 8, Kawasan Industri Medan II Medan 20252	Tel. +62 61 687 1221 Fax +62 61 6871429 / +62 61 6871458 / +62 61 30008041 sil@serumpunindah.com serumpunindah@yahoo.com http://www.serumpunindah.com
	Surabaya	PT. TRIAGRI JAYA ABADI Jl. Sukosemolo No. 63, Galaxi Bumi Permai G6 No. 11 Surabaya 60111	Tel. +62 31 5990128 Fax +62 31 5962666 sales@triagri.co.id http://www.triagri.co.id
	Surabaya	CV. Multi Mas Jl. Raden Saleh 43A Kav. 18 Surabaya 60174	Tel. +62 31 5458589 Fax +62 31 5317220 sianhwa@sby.centrin.net.id http://www.cvmultimas.com

21927189/EN – 07/2015

Ireland			
Sales Service	Dublin	Alperton Engineering Ltd. 48 Moyle Road Dublin Industrial Estate Glasnevin, Dublin 11	Tel. +353 1 830-6277 Fax +353 1 830-6458 http://www.alperton.ie info@alperton.ie
Israel			
Sales	Tel Aviv	Liraz Handasa Ltd. Ahofer Str 34B / 228 58858 Holon	Tel. +972 3 5599511 Fax +972 3 5599512 http://www.liraz-handasa.co.il office@liraz-handasa.co.il
Italy			
Assembly Sales Service	Solaro	SEW-EURODRIVE di R. Blickle & Co.s.a.s. Via Bernini,14 I-20020 Solaro (Milano)	Tel. +39 02 96 9801 Fax +39 02 96 79 97 81 http://www.sew-eurodrive.it sewit@sew-eurodrive.it
Ivory Coast			
Sales	Abidjan	SEW-EURODRIVE SARL Ivory Coast Rue des Pècheurs, Zone 3 26 BP 916 Abidjan 26	Tel. +225 21 21 81 05 Fax +225 21 25 30 47 info@sew-eurodrive.ci http://www.sew-eurodrive.ci
Japan			
Assembly Sales Service	Iwata	SEW-EURODRIVE JAPAN CO., LTD 250-1, Shimoman-no, Iwata Shizuoka 438-0818	Tel. +81 538 373811 Fax +81 538 373814 http://www.sew-eurodrive.co.jp sewjapan@sew-eurodrive.co.jp hamamatsu@sew-eurodrive.co.jp
Kazakhstan			
Sales	Almaty	SEW-EURODRIVE LLP 291-291A, Tole bi street 050031, Almaty	Tel. +7 (727) 350 5156 Fax +7 (727) 350 5156 http://www.sew-eurodrive.kz sew@sew-eurodrive.kz
	Tashkent	SEW-EURODRIVE LLP Representative office in Uzbekistan 96A, Sharaf Rashidov street, Tashkent, 100084	Tel. +998 71 2359411 Fax +998 71 2359412 http://www.sew-eurodrive.uz sew@sew-eurodrive.uz
	Ulaanbaatar	SEW-EURODRIVE LLP Representative office in Mongolia Suite 407, Tushig Centre Seoul street 23, Sukhbaatar district, Ulaanbaatar 14250	Tel. +976-77109997 Fax +976-77109997 http://www.sew-eurodrive.mn sew@sew-eurodrive.mn
Kenya			
is supported by Tanzania.			
Latvia			
Sales	Riga	SIA Alas-Kuul Katlakalna 11C LV-1073 Riga	Tel. +371 6 7139253 Fax +371 6 7139386 http://www.alas-kuul.lv info@alas-kuul.com
Lebanon			
Sales Lebanon	Beirut	Gabriel Acar & Fils sarl B. P. 80484 Bourj Hammoud, Beirut	Tel. +961 1 510 532 Fax +961 1 494 971 ssacar@inco.com.lb
Sales / Jordan / Kuwait / Saudi Arabia / Syria	Beirut	Middle East Drives S.A.L. (offshore) Sin El Fil. B. P. 55-378 Beirut	Tel. +961 1 494 786 Fax +961 1 494 971 http://www.medrives.com info@medrives.com

21927189/EN – 07/2015

Lithuania			
Sales	Alytus	UAB Irseva Statybininku 106C LT-63431 Alytus	Tel. +370 315 79204 Fax +370 315 56175 http://www.irseva.lt irmantas@irseva.lt
Luxembourg			
Assembly Sales Service	Brussels	SEW-EURODRIVE n.v./s.a. Researchpark Haasrode 1060 Evenementenlaan 7 BE-3001 Leuven	Tel. +32 16 386-311 Fax +32 16 386-336 http://www.sew-eurodrive.lu info@sew-eurodrive.be
Macedonia			
Sales	Skopje	Boznos DOOEL Dime Anicin 2A/7A 1000 Skopje	Tel. +389 23256553 Fax +389 23256554 http://www.boznos.mk
Madagascar			
Sales	Antananarivo	Ocean Trade BP21bis. Andraharo Antananarivo 101 Madagascar	Tel. +261 20 2330303 Fax +261 20 2330330 oceantrabp@moov.mg
Malaysia			
Assembly Sales Service	Johor	SEW-EURODRIVE SDN BHD No. 95, Jalan Seroja 39, Taman Johor Jaya 81000 Johor Bahru, Johor West Malaysia	Tel. +60 7 3549409 Fax +60 7 3541404 sales@sew-eurodrive.com.my
Mexiko			
Assembly Sales Service	Quéretaro	SEW-EURODRIVE MEXICO SA DE CV SEM-981118-M93 Tequisquiapan No. 102 Parque Industrial Quéretaro C.P. 76220 Quéretaro, México	Tel. +52 442 1030-300 Fax +52 442 1030-301 http://www.sew-eurodrive.com.mx scmexico@seweurodrive.com.mx
Mongolia			
Technical Office	Ulaanbaatar	SEW-EURODRIVE LLP Representative office in Mongolia Suite 407, Tushig Centre Seoul street 23, Sukhbaatar district, Ulaanbaatar 14250	Tel. +976-77109997 Fax +976-77109997 http://www.sew-eurodrive.mn sew@sew-eurodrive.mn
Morocco			
Sales Service	Mohammedia	SEW-EURODRIVE SARL 2 bis, Rue Al Jahid 28810 Mohammedia	Tel. +212 523 32 27 80/81 Fax +212 523 32 27 89 http://www.sew-eurodrive.ma sew@sew-eurodrive.ma
Namibia			
Sales	Swakopmund	DB Mining & Industrial Services Einstein Street Strauss Industrial Park Unit1 Swakopmund	Tel. +264 64 462 738 Fax +264 64 462 734 anton@dbminingnam.com
Netherlands			
Assembly Sales Service	Rotterdam	SEW-EURODRIVE B.V. Industrieweg 175 NL-3044 AS Rotterdam Postbus 10085 NL-3004 AB Rotterdam	Tel. +31 10 4463-700 Fax +31 10 4155-552 Service: 0800-SEWHELP http://www.sew-eurodrive.nl info@sew-eurodrive.nl
New Zealand			
Assembly Sales Service	Auckland	SEW-EURODRIVE NEW ZEALAND LTD. P.O. Box 58-428 82 Greenmount drive East Tamaki Auckland	Tel. +64 9 2745627 Fax +64 9 2740165 http://www.sew-eurodrive.co.nz sales@sew-eurodrive.co.nz

21927189/EN – 07/2015

New Zealand			
	Christchurch	SEW-EURODRIVE NEW ZEALAND LTD. 30 Lodestar Avenue, Wigram Christchurch	Tel. +64 3 384-6251 Fax +64 3 384-6455 sales@sew-eurodrive.co.nz
Nigeria			
Sales	Lagos	EISNL Engineering Solutions and Drives Ltd Plot 9, Block A, Ikeja Industrial Estate (Ogba Scheme) Adeniyi Jones St. End Off ACME Road, Ogba, Ikeja, Lagos	Tel. +234 1 217 4332 http://www.eisnl.com team.sew@eisnl.com
Norway			
Assembly Sales Service	Moss	SEW-EURODRIVE A/S Solgaard skog 71 N-1599 Moss	Tel. +47 69 24 10 20 Fax +47 69 24 10 40 http://www.sew-eurodrive.no sew@sew-eurodrive.no
Pakistan			
Sales	Karachi	Industrial Power Drives Al-Fatah Chamber A/3, 1st Floor Central Commercial Area, Sultan Ahmed Shah Road, Block 7/8, Karachi	Tel. +92 21 452 9369 Fax +92-21-454 7365 seweurodrive@cyber.net.pk
Paraguay			
Sales	Fernando de la Mora	SEW-EURODRIVE PARAGUAY S.R.L De la Victoria 112, Esquina nueva Asunción Departamento Central Fernando de la Mora, Barrio Bernardino	Tel. +595 991 519695 Fax +595 21 3285539 sewpy@sew-eurodrive.com.py
Peru			
Assembly Sales Service	Lima	SEW EURODRIVE DEL PERU S.A.C. Los Calderos, 120-124 Urbanizacion Industrial Vulcano, ATE, Lima	Tel. +51 1 3495280 Fax +51 1 3493002 http://www.sew-eurodrive.com.pe sewperu@sew-eurodrive.com.pe
Philippines			
Sales	Makati	P.T. Cerna Corporation 4137 Ponte St., Brgy. Sta. Cruz Makati City 1205	Tel. +63 2 519 6214 Fax +63 2 890 2802 mech_drive_sys@ptcerna.com http://www.ptcerna.com
Poland			
Assembly Sales Service	Łódź	SEW-EURODRIVE Polska Sp.z.o.o. ul. Techniczna 5 PL-92-518 Łódź	Tel. +48 42 293 00 00 Fax +48 42 293 00 49 http://www.sew-eurodrive.pl sew@sew-eurodrive.pl
	Service	Tel. +48 42 293 0030 Fax +48 42 293 0043	24 Hour Service Tel. +48 602 739 739 (+48 602 SEW SEW) serwis@sew-eurodrive.pl
Portugal			
Assembly Sales Service	Coimbra	SEW-EURODRIVE, LDA. Av. da Fonte Nova, n.º 86 P-3050-379 Mealhada	Tel. +351 231 20 9670 Fax +351 231 20 3685 http://www.sew-eurodrive.pt infosew@sew-eurodrive.pt
Romania			
Sales Service	Bucharest	Sialco Trading SRL str. Brazilia nr. 36 011783 Bucuresti	Tel. +40 21 230-1328 Fax +40 21 230-7170 sialco@sialco.ro
Russia			
Assembly Sales Service	St. Petersburg	ZAO SEW-EURODRIVE P.O. Box 36 RUS-195220 St. Petersburg	Tel. +7 812 3332522 / +7 812 5357142 Fax +7 812 3332523 http://www.sew-eurodrive.ru sew@sew-eurodrive.ru

21927189/EN – 07/2015

Sambia

is supported by South Africa.

Senegal

Sales	Dakar	SENEMECA Mécanique Générale Km 8, Route de Rufisque B.P. 3251, Dakar	Tel. +221 338 494 770 Fax +221 338 494 771 http://www.senemeca.com senemeca@senemeca.sn

Serbia

Sales	Belgrade	DIPAR d.o.o. Ustanicka 128a PC Košum, IV floor SRB-11000 Beograd	Tel. +381 11 347 3244 / +381 11 288 0393 Fax +381 11 347 1337 office@dipar.rs

Singapore

Assembly Sales Service	Singapore	SEW-EURODRIVE PTE. LTD. No 9, Tuas Drive 2 Jurong Industrial Estate Singapore 638644	Tel. +65 68621701 Fax +65 68612827 http://www.sew-eurodrive.com.sg sewsingapore@sew-eurodrive.com

Slovakia

Sales	Bratislava	SEW-Eurodrive SK s.r.o. Rybničná 40 SK-831 06 Bratislava	Tel.+421 2 33595 202, 217, 201 Fax +421 2 33595 200 http://www.sew-eurodrive.sk sew@sew-eurodrive.sk
	Košice	SEW-Eurodrive SK s.r.o. Slovenská ulica 26 SK-040 01 Košice	Tel. +421 55 671 2245 Fax +421 55 671 2254 Mobile +421 907 671 976 sew@sew-eurodrive.sk

Slovenia

Sales Service	Celje	Pakman - Pogonska Tehnika d.o.o. UI. XIV. divizije 14 SLO - 3000 Celje	Tel. +386 3 490 83-20 Fax +386 3 490 83-21 pakman@siol.net

South Africa

Assembly Sales Service	Johannesburg	SEW-EURODRIVE (PROPRIETARY) LIMITED Eurodrive House Cnr. Adcock Ingram and Aerodrome Roads Aeroton Ext. 2 Johannesburg 2013 P.O.Box 90004 Bertsham 2013	Tel. +27 11 248-7000 Fax +27 11 248-7289 http://www.sew.co.za info@sew.co.za
	Cape Town	SEW-EURODRIVE (PROPRIETARY) LIMITED Rainbow Park Cnr. Racecourse & Omuramba Road Montague Gardens Cape Town P.O.Box 36556 Chempet 7442	Tel. +27 21 552-9820 Fax +27 21 552-9830 Telex 576 062 bgriffiths@sew.co.za
	Durban	SEW-EURODRIVE (PROPRIETARY) LIMITED 48 Prospecton Road Isipingo Durban P.O. Box 10433, Ashwood 3605	Tel. +27 31 902 3815 Fax +27 31 902 3826 cdejager@sew.co.za
	Nelspruit	SEW-EURODRIVE (PROPRIETARY) LIMITED 7 Christie Crescent Vintonia P.O.Box 1942 Nelspruit 1200	Tel. +27 13 752-8007 Fax +27 13 752-8008 robermeyer@sew.co.za

South Korea

Assembly Sales Service	Ansan	SEW-EURODRIVE KOREA CO., LTD. 7, Dangjaengi-ro, Danwon-gu, Ansan-si, Gyeonggi-do, Zip 425-839	Tel. +82 31 492-8051 Fax +82 31 492-8056 http://www.sew-eurodrive.kr master.korea@sew-eurodrive.com

21927189/EN – 07/2015

South Korea			
	Busan	SEW-EURODRIVE KOREA CO., LTD. 28, Noksansandan 262-ro 50beon-gil, Gangseo-gu, Busan, Zip 618-820	Tel. +82 51 832-0204 Fax +82 51 832-0230
Spain			
Assembly Sales Service	Bilbao	SEW-EURODRIVE ESPAÑA, S.L. Parque Tecnológico, Edificio, 302 E-48170 Zamudio (Vizcaya)	Tel. +34 94 43184-70 Fax +34 94 43184-71 http://www.sew-eurodrive.es sew.spain@sew-eurodrive.es
Sri Lanka			
Sales	Colombo	SM International (Pte) Ltd 254, Galle Raod Colombo 4, Sri Lanka	Tel. +94 1 2584887 Fax +94 1 2582981
Swaziland			
Sales	Manzini	C G Trading Co. (Pty) Ltd PO Box 2960 Manzini M200	Tel. +268 2 518 6343 Fax +268 2 518 5033 engineering@cgtrading.co.sz
Sweden			
Assembly Sales Service	Jönköping	SEW-EURODRIVE AB Gnejsvägen 6-8 S-55 303 Jönköping Box 3100 S-55 003 Jönköping	Tel. +46 36 34 42 00 Fax +46 36 34 42 80 http://www.sew-eurodrive.se jonkoping@sew.se
Switzerland			
Assembly Sales Service	Basel	Alfred Imhof A.G. Jurastrasse 10 CH-4142 Münchenstein bei Basel	Tel. +41 61 417 1717 Fax +41 61 417 1700 http://www.imhof-sew.ch info@imhof-sew.ch
Taiwan			
Sales	Taipei	Ting Shou Trading Co., Ltd. 6F-3, No. 267, Sec. 2 Tung Huw S. Road Taipei	Tel. +886 2 27383535 Fax +886 2 27368268 Telex 27 245 sewtwn@ms63.hinet.net http://www.tingshou.com.tw
	Nan Tou	Ting Shou Trading Co., Ltd. No. 55 Kung Yeh N. Road Industrial District Nan Tou 540	Tel. +886 49 255353 Fax +886 49 257878 sewtwn@ms63.hinet.net http://www.tingshou.com.tw
Tanzania			
Sales	Daressalam	SEW-EURODRIVE PTY LIMITED TANZANIA Plot 52, Regent Estate PO Box 106274 Dar Es Salaam	Tel. +255 0 22 277 5780 Fax +255 0 22 277 5788 http://www.sew-eurodrive.co.tz central.mailbox@sew.co.tz
Thailand			
Assembly Sales Service	Chonburi	SEW-EURODRIVE (Thailand) Ltd. 700/456, Moo.7, Donhuaroh Muang Chonburi 20000	Tel. +66 38 454281 Fax +66 38 454288 sewthailand@sew-eurodrive.com
Tunisia			
Sales	Tunis	T. M.S. Technic Marketing Service Zone Industrielle Mghira 2 Lot No. 39 2082 Fouchana	Tel. +216 79 40 88 77 Fax +216 79 40 88 66 http://www.tms.com.tn tms@tms.com.tn
Turkey			
Assembly Sales Service	Kocaeli-Gebze	SEW-EURODRİVE Hareket Sistemleri San. Ve TIC. Ltd. Sti Gebze Organize Sanayi Böl. 400 Sok No. 401 41480 Gebze Kocaeli	Tel. +90 262 9991000 04 Fax +90 262 9991009 http://www.sew-eurodrive.com.tr sew@sew-eurodrive.com.tr

21927189/EN – 07/2015

Ukraine			
Assembly Sales Service	Dnipropetrovsk	ООО «СЕВ-Евродрайв» ул.Рабочая, 23-В, офис 409 49008 Днепропетровск	Tel. +380 56 370 3211 Fax +380 56 372 2078 http://www.sew-eurodrive.ua sew@sew-eurodrive.ua
United Arab Emirates			
Sales Service	Sharjah	Copam Middle East (FZC) Sharjah Airport International Free Zone P.O. Box 120709 Sharjah	Tel. +971 6 5578-488 Fax +971 6 5578-499 copam_me@eim.ae
Uruguay			
Assembly Sales	Montevideo	SEW-EURODRIVE Uruguay, S. A. Jose Serrato 3569 Esqina Corumbe CP 12000 Montevideo	Tel. +598 2 21181-89 Fax +598 2 21181-90 sewuy@sew-eurodrive.com.uy
USA			
Production Assembly Sales Service	Southeast Region	SEW-EURODRIVE INC. 1295 Old Spartanburg Highway P.O. Box 518 Lyman, S.C. 29365	Tel. +1 864 439-7537 Fax Sales +1 864 439-7830 Fax Production +1 864 439-9948 Fax Assembly +1 864 439-0566 Fax Confidential/HR +1 864 949-5557 http://www.seweurodrive.com cslyman@seweurodrive.com
Assembly Sales Service	Northeast Region	SEW-EURODRIVE INC. Pureland Ind. Complex 2107 High Hill Road, P.O. Box 481 Bridgeport, New Jersey 08014	Tel. +1 856 467-2277 Fax +1 856 845-3179 csbridgeport@seweurodrive.com
	Midwest Region	SEW-EURODRIVE INC. 2001 West Main Street Troy, Ohio 45373	Tel. +1 937 335-0036 Fax +1 937 332-0038 cstroy@seweurodrive.com
	Southwest Region	SEW-EURODRIVE INC. 3950 Platinum Way Dallas, Texas 75237	Tel. +1 214 330-4824 Fax +1 214 330-4724 csdallas@seweurodrive.com
	Western Region	SEW-EURODRIVE INC. 30599 San Antonio St. Hayward, CA 94544	Tel. +1 510 487-3560 Fax +1 510 487-6433 cshayward@seweurodrive.com
	Additional addresses for service in USA provided on request!		
Uzbekistan			
Technical Office	Tashkent	SEW-EURODRIVE LLP Representative office in Uzbekistan 96A, Sharaf Rashidov street, Tashkent, 100084	Tel. +998 71 2359411 Fax +998 71 2359412 http://www.sew-eurodrive.uz sew@sew-eurodrive.uz
Venezuela			
Assembly Sales Service	Valencia	SEW-EURODRIVE Venezuela S.A. Av. Norte Sur No. 3, Galpon 84-319 Zona Industrial Municipal Norte Valencia, Estado Carabobo	Tel. +58 241 832-9804 Fax +58 241 838-6275 http://www.sew-eurodrive.com.ve ventas@sew-eurodrive.com.ve sewfinanzas@cantv.net
Vietnam			
Sales	Ho Chi Minh City	Nam Trung Co., Ltd Huế - South Vietnam / Construction Materials 250 Binh Duong Avenue, Thu Dau Mot Town, Binh Duong Province HCM office: 91 Tran Minh Quyen Street District 10, Ho Chi Minh City	Tel. +84 8 8301026 Fax +84 8 8392223 khanh-nguyen@namtrung.com.vn http://www.namtrung.com.vn
	Hanoi	MICO LTD Quảng Trị - North Vietnam / All sectors except Construction Materials 8th Floor, Ocean Park Building, 01 Dao Duy Anh St, Ha Noi, Viet Nam	Tel. +84 4 39386666 Fax +84 4 3938 6888 nam_ph@micogroup.com.vn http://www.micogroup.com.vn

21927189/EN – 07/2015

Index

Icons

/DUB (Diagnostic Unit Brake) 146

A

AB.., AD.., AM.., AK.., AC.., AS plug connectors 75
Add-on encoders 88
AG7. 88
AH7. 88
Ambient conditions 59
  Hazardous radiation 59
Ambient temperature 59
Anti-condensation heating 92
AS7. 88
Assembly
  Tolerances 31
Auxiliary terminals, arrangement 208

B

Backstop 95
BE – 11 128
BE05 – 2 128
BE20 129
BE30 – 32 129
BE60 – 122 130
Bearing lubrication 101
Bearings
  Reinforced 94, 102
Brake
  BE05 – 2 128
  BE1 – 11 128
  BE20 129
  BE30 – 32 129
  BE60 – 122 130
  Braking torques 159
  Braking work 159
  Working air gap 159
Brake connection 78
Brake control 48, 78, 170
  BG 199
  BGE 199
  BMP3.1 204
  BSG 199
  BSR 201
  BUR 199
  Control cabinet 173
  Motor wiring space 172
Brake malfunctions 188
Brake rectifier combinations 170
Brake replacement
  DR..250 – 315, DRN250 – 315 143
  DR..71 – 80, DRN80 140
  DR..90 – 225, DRN90 – 225 141
Brakemotor inspection
  DR.71 – 315, DRN80 – 315 125
Brakemotor structure
  DR..160 – 280, DRN132M – 280 123
  DR..71 – 80, DRN80 121
  DR..90 – 132, DRN90 – 132S 122
  DR.315 124
Braking torques 159, 161
Braking work 159
Built-in encoder 197
Built-in encoders 89

C

Cable gland
  NPT 39
Changing the blocking direction 95
Changing the brake disk
  BE05 – 122 133
Changing the brake spring
  BE05 – 122 136
Changing the braking torque
  BE05 – 122 135
Changing the magnet body
  BE05 – 122 138
Condensation drain holes 30
Connecting diagnostic unit 79
Connecting diagnostic unit /DUE 152
Connecting the motor 60
  AB.., AD.., AM.., AK.., AC.., AS plug connectors 75
  IS plug connector 71
  KC1 terminal strip 77
  KCC terminal strip 76
  Terminal box 61, 62, 63
  via plug connector 71
  via terminal board 61

21927189/EN – 07/15

SEW EURODRIVE

via terminal strip 76
Connection
Cable 100
Encoder 91
Variants 25
Copyright notice 8
Corrosion protection 102
Customer service 191

D

Delta connection
R13 192
R72 193
Design
Brakemotor 121, 122, 123
DR..160 – 280, DRN132M – 280 with BE 123
DR..250 – 280, DRN250 – 280 ..... 18, 117
DR..315, DRN315 ..... 19, 118
DR..71 – 132 ..... 15, 114
DR..71 – 80, DRN80 with BE 121
DR..90 – 132, DRN90 – 132S with BE 122
Motor 15, 18, 19, 114, 117, 118
Designated use 11
Diagnostic unit /DUB 79
Diagnostic unit /DUE 150
Disassembly
Diagnostic unit /DUE 148
Drive components, installation 31
DRK 57
DRK.. single-phase motor
S1 duty type 184
DRK... single-phase motor
Wiring diagram 207
Drying the motor 28
Dusts 59

E

EG7. 88
EH7. 88
EI7 197
EI7. 89
Electrical connection 13
Electrical installation 47
Embedded safety notes 7
EMC 52
Encoder 25, 88
AG7. 88
AH7. 88
AS7 88
EG7. 88
EH7. 88
EI7. 89
ES7 88
Non-SEW encoder mounting 34
Technical data 177
Encoder connection 91
Encoder mounting adapter 34, 36
Equipment, optional 82
ES7 88
Exclusion of liability 8
Extended fan guard 45
Extended storage 28

F

Forced cooling fan
Wiring diagram 205
Forced cooling fan V 86
Frequency inverter operation 48
Functional safety 183

G

Gases 59
General safety notes 9
Grounding 52
at the terminal box 51
NF 51

H

Hazard symbols
Meaning 7
Hollow shaft rotary encoder 37

I

Improving the grounding 52
Inspection 98
/DUB for wear monitoring 147
DUB for function and wear monitoring 147
Inspection intervals 100
Inspection/
DUB for function monitoring 146
Installation 13, 30
Electrical 47

In damp locations or outdoors 31
Mechanical 27
Installation altitude 59
Installation notes
Encoder 91
Installation regulations 47
Installation tolerances 31
Installation, conditions 27
Insulation resistance 28
Insulation, reinforced 49
Intervals for inspection and maintenance 100
IS plug connector 71
Isolation transformer 28

K

KC1 terminal strip 77
KCC terminal strip 76
KTY84-130 84

L

LF 43
LF air filter 43
Low-speed motors 56
Low-voltage equipment 47
Lubricant table 176
Lubrication 101

M

Maintenance 98
Maintenance intervals 100
Malfunctions 185
Malfunctions when operating with a frequency inverter 190
Measuring nipple mounting adapter 44
Mechanical installation 27
Motor
Connect via terminal board 61
Connecting the terminal strip 76
Connecting via plug connector 71
Connection 60
Drying 28
Extended storage 28
Installation 30
Motor design 15
DR..250 – 280, DRN250 – 280 ..... 18, 117
DR..315, DRN315 ..... 19, 118
DR..71 – 132 ..... 15, 114
Motor designation 23
Motor feet
Retrofitting / modifying motor feet 40
Motor inspection
DR..71 – 315, DRN80 – 315 119
Motor malfunctions 186
Motor protection 195, 196
TF 195, 196
TH 195, 196
Motor protection device 48
Motor structure
DR..160 – 180, DRN132M – 180 ..... 16, 115
DR..200 – 225, DRN200 – 225 ..... 17, 116
Mounting 30
Measuring nipple 44
XH.. encoder mounting adapter 37
XV.. encoder mounting adapter 34
Mounting adapter 34, 36
Measuring nipple 44
XH.. 112
XV 108, 109, 111
Mounting XH 37
Mounting XV 34

N

Nameplate 20
Non-SEW encoder mounting 34
Notes
Designation in the documentation 6
Meaning of the hazard symbols 7

O

Operating currents 163
Operation with frequency inverter 48
Options 24
Electrical 82
Mechanical 43
Other applicable documentation 12

P

Plug connector 71
AB.., AD.., AM.., AK.., AC.., AS 75
IS 71
Preliminary work for motor and brake maintenance 103

21927189/EN – 07/15

SEW EURODRIVE

Product names 8
PT100 85
PT100 temperature detection 85
Pulse voltages 49

R

Reinforced bearings 94, 102
Relubrication 101
Relubrication device 101
Relubrication intervals 102
Removing rotary encoder 103, 104
EG7. and AG7. 104
ES7. and AS7. 103
Removing the absolute encoder 108, 109, 111
Removing the encoder 103, 104, 105, 106, 108, 109, 111, 112
EG7. and AG7. ..... 104, 105
EH7. and AH7. 106
ES7. and AS7. 103
EV.., AV.., and XV.. ..... 108, 109, 111
Removing the hollow shaft encoder 112
Removing the incremental encoder 108, 109, 111
EV.., AV.., and XV.. ..... 108, 109, 111
Removing the rotary encoder 105, 106
EG7. and AG7. 105
EH7. and AH7. 106
Removing the special encoder 108, 109, 111
Resistance measurement of the brake 167, 169
Resistances 166
Retrofitting HR/HF manual brake release 33
Retrofitting the HR/HF manual brake release 32
Rights to claim under limited warranty 8
Rolling bearing types 174
RS 95

S

Safety characteristics 183
Safety notes 9
Designated use 11
Designation in the documentation 6
Electrical connection 13
General information 9
Installation 13
Meaning of the hazard symbols 7
Operation 14
Structure of embedded 7
Structure of the section-related 6
Transport 12
Safety, functional 183
Second shaft end 45
Section-related safety notes 6
Setting the working air gap
BE05 – 122 131
Signal words in the safety notes 6
Single-phase motor 57
Special design 27
Special features
Low-speed motors 56
Switching operation 56
Torque motors 56
Star connection
R13 192
R76 194
Startup 93
Status message evaluation unit 158
Storage, extended 28
Structure
/DUB 145
Brakemotor 124
DR..160 – 180, DRN132M – 180 ..... 16, 115
DR..200 – 225, DRN200 – 225 ..... 17, 116
DR.315 with BE 124
DUB 144
Motor 16, 17, 115, 116
Switching operation 56

T

Technical data 159
ASI absolute encoder 179
Incremental rotary encoders with plug-in shaft 177
Incremental rotary encoders with solid shaft 181
Incremental rotary encoders with spread shaft 177
SSI absolute encoder 178
Temperature sensor KTY84-130 84
Terminal arrangement 208
Terminal board 61
Terminal box
Turning 38
Terminal box positions 208
Terminal strip 76

21927189/EN – 07/15

KC1 77
KCC 76
TF 82, 195, 196
TF temperature sensor 82
TH 83, 195, 196
TH winding thermostats 83
Torque motors 56
Trademarks 8
Transport 12
Type designation 23
Output types;Output types 24
Temperature detection 24
Type designation DR
Encoder 25
Mechanical mount-on components 24
Type designation DR..
Bearings 26
Condition monitoring 26
Connection variants 25
Other additional features 26
Temperature sensor and temperature detection . 24
Ventilation 26
Types
Overview 24

U

UWU51A switched-mode power supply 87

V

V forced cooling fan 86
Vapors 59
Visual feedback 89

W

Waste disposal 191
Wear 100
Wiring diagram
BG 199
BGE 199
BMP3.1 204
BSG 200
R13 delta connection 192, 193
R13 star connection 192
R76 star connection 194
Wiring diagrams 192
BSR 201
TF 195, 196
TH 195, 196
Working air gap 159

21927189/EN – 07/15

SEW EURODRIVE

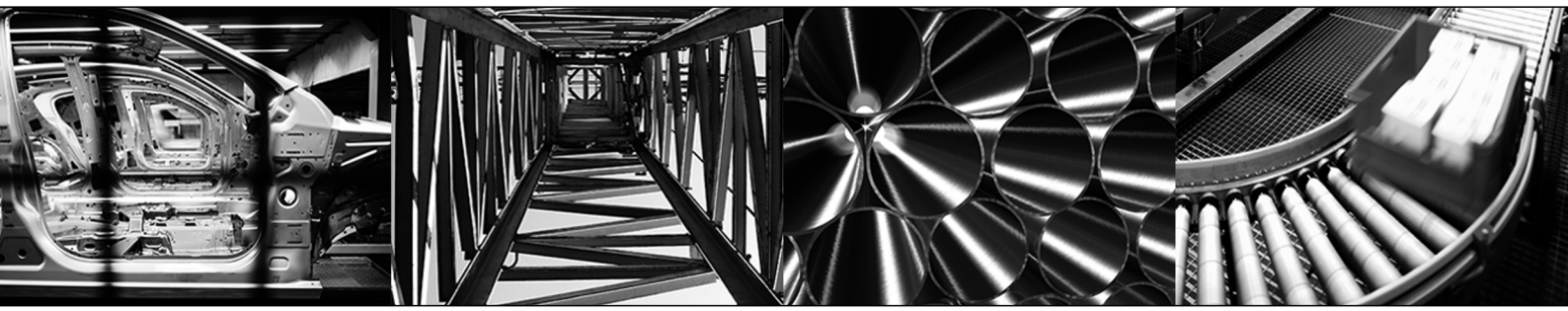

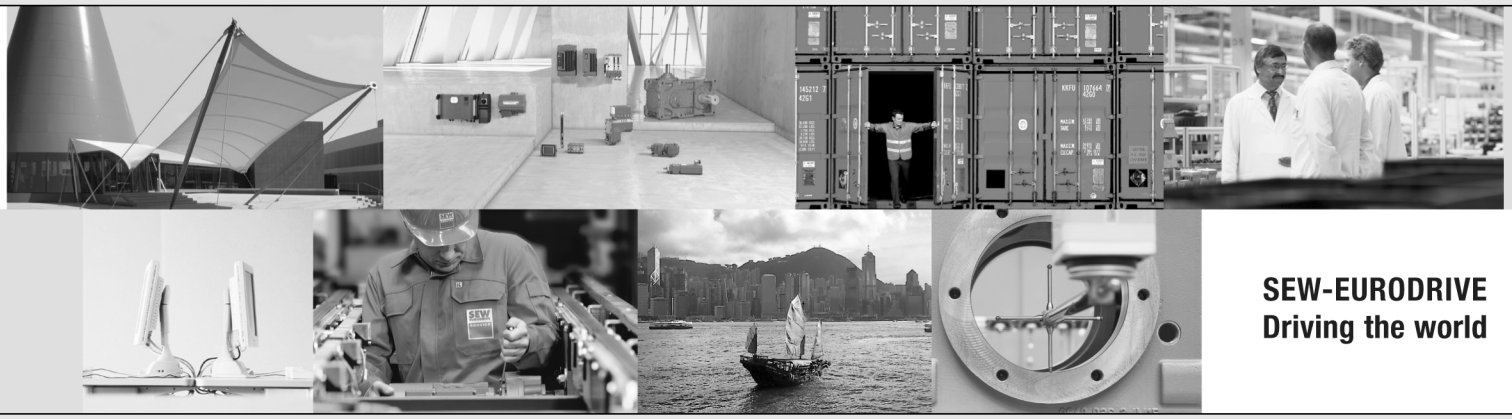

SEW-EURODRIVE
Driving the world

SEW-EURODRIVE GmbH & Co KG
P.O. Box 3023
76642 BRUCHSAL
GERMANY
Phone +49 7251 75-0
Fax +49 7251 75-1970
sew@sew-eurodrive.com
➞ **www.sew-eurodrive.com**