SEW EURODRIVE

Catalog

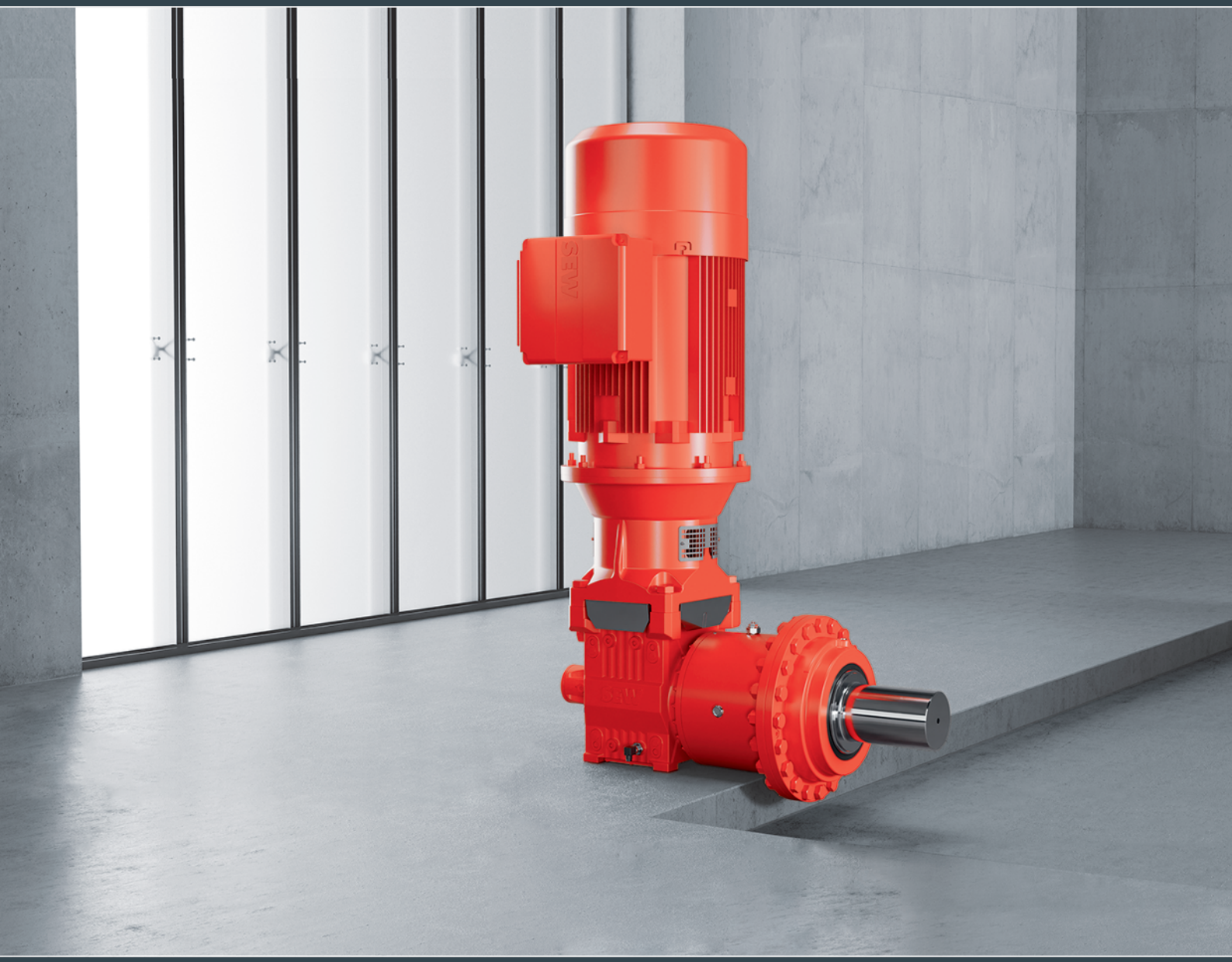

Industrial gear units

P-X1.e series bevel planetary gear units

Torque classes from 24 to 500 kNm

Edition 12/2025

33091900/EN



Table of contents

1 Introduction 6
1.1 The SEW-EURODRIVE group of companies 6
1.2 Documentation 10
1.3 Product names and trademarks 10
1.4 Copyright notice 10
1.5 Decimal separator in numerical values 10
1.6 Recycling, reprocessing, reuse 10

2 Product description 11
2.1 Overview of gear unit and mount-on components 11
2.2 Product characteristics 12
2.3 Overview of advantages 12
2.4 Added values of planetary gear units by SEW-EURODRIVE 12
2.5 General information 14
2.6 Sizes, torques 16
2.7 Basic designs of the bevel planetary gear units 16
2.8 Nameplate 18
2.9 Type designation 19
2.10 Abbreviations for output shaft designs 20
2.11 Direction of rotation dependencies 20
2.12 Input and output shafts 21
2.13 Sealing system 24
2.14 Coating and surface protection systems 26
2.15 Storage and transport conditions 28
2.16 Types of lubrication 30

3 Options and additional features 31
3.1 Torque arm /T 31
3.2 Oil expansion tank /ET 32
3.3 Motor adapter /MA 33
3.4 Shaft end pump /SEP 37
3.5 Pressure switch /PS 37
3.6 Fan /FAN 38
3.7 Oil heater 39
3.8 Water cooling cartridge /CCT 42
3.9 Oil drain 43
3.10 Breather /BPG 44

4 Condition monitoring 47
4.1 Temperature switch /NTB 47
4.2 Temperature sensor /Pt100 48
4.3 Temperature switch /TSK 49

5 Mounting positions 51
5.1 Mounting position 51
5.2 Fixed and variable pivoted mounting positions 52

6 Important order information 60

33091900/EN – 12/2025

6.1 Mounting positions of primary gear units ... 60
6.2 Position of motor terminal box and cable entry ... 61
6.3 Torque arm ... 62
6.4 Order example ... 63

7 Project planning for gear units ... 64
7.1 Project planning procedure ... 64

8 Lubricants ... 77
8.1 General information on selecting the oil ... 77
8.2 Permitted lubricants ... 78
8.3 Lubricant fill quantities ... 86
8.4 Sealing greases/bearing greases ... 87

9 Design and operating notes ... 88
9.1 Screws included in the delivery ... 88
9.2 Output shaft as hollow shaft with shrink disk ... 89

10 Important information on selection tables and dimension sheets ... 90
10.1 Selection tables ... 90
10.2 Dimension sheets ... 91

11 Selection tables ... 92
11.1 Size P.002e X1KP060e ... 92
11.2 Size P.012e X1KP060e ... 94
11.3 Size P.022e X1KP080e ... 96
11.4 Size P.032e X1KP080e ... 98
11.5 Size P.042e X1KP080e ... 100
11.6 Size P.042e X1KP100e ... 102
11.7 Size P.052e X1KP080e ... 104
11.8 Size P.052e X1KP100e ... 105
11.9 Size P.062e X1KP100e ... 107
11.10 Size P.062e X1KP120e ... 108
11.11 Size P.072e X1KP100e ... 110
11.12 Size P.072e X1KP120e ... 111
11.13 Size P.082e X1KP140e ... 113
11.14 Size P.092 X1KP140e ... 115
11.15 Size P.102 X1KP060e ... 116

12 Dimension sheets ... 117
12.1 Size P.002e X1KP060e ... 117
12.2 Size P.012e X1KP060e ... 118
12.3 Size P.022e X1KP080e ... 119
12.4 Size P.032e X1KP080e ... 120
12.5 Size P.042e X1KP080e ... 121
12.6 Size P.042e X1KP100e ... 122
12.7 Size P.052e X1KP080e ... 123
12.8 Size P.052e X1KP100e ... 124
12.9 Size P.062e X1KP100e ... 125
12.10 Size P.062e X1KP120e ... 126

33091900/EN – 12/2025

12.11 Size P.072e X1KP100e 127
12.12 Size P.072e X1KP120e 128
12.13 Size P.082e X1KP140e 129
12.14 Size P.092 X1KP140e 130
12.15 Size P.102 X1KP160e 131

13 Options dimension sheets 132
13.1 Housing bores 132
13.2 Output shaft 134
13.3 Locking screws of the shrink disk 137
13.4 Protective cover for shrink disk 138
13.5 IEC motor adapter 139
13.6 NEMA motor adapter [inch] 141
13.7 Oil heater /OH 143
13.8 Water cooling cartridge /CCT 147
13.9 Oil drain valve /ODV 149
13.10 Oil expansion tank /ET, breather /BPG, and oil level glass /OLG 151

14 Appendix 153
14.1 Abbreviation key 153

Index 154

15 Contacting SEW-EURODRIVE 156

33091900/EN – 12/2025

1 Introduction

1.1 The SEW-EURODRIVE group of companies

1.1.1 What do we stand for?

For a reliable partnership!

Humanity and partnership, solutions and services, responsibility and quality, tradition and innovation: SEW-EURODRIVE, the owner-managed family business, has stood for all this and much more for more than 90 years.

As a market leader in drive and automation technology, we don't just power countless applications in virtually every industry. With over 22000 employees, we are also playing a key role in shaping the future of drive technology. For you. Ensuring you, your systems and machines are always at the cutting edge. Not just now, but in the future as well. We want you to succeed together with us.

1.1.2 Where can you find us?

We are always nearby!

Our 17 production plants and 92 Drive Technology Centers in 57 countries mean we are at your service on every continent and in every corner of the world, always working with you as an equal partner and ensuring everything runs smoothly.

What makes us truly stand out from other manufacturers? With our broad customer support and service network worldwide, you never have to wait long for spare parts, repairs or professional advice.



57
countries

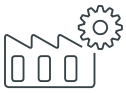

17
production plants



92
Drive Technology Centers



> 22000
employees



Global service



Countless industries

33091900/EN – 12/2025

1.1.3 What do we offer?

State-of-the-art drive technology and automation solutions from a single source!

Looking to modernize your processes or to construct a new system? We offer you one of the most extensive ranges of drive technology products, solutions, and services on the market. A single contact person for everything: that sounds good, doesn't it?

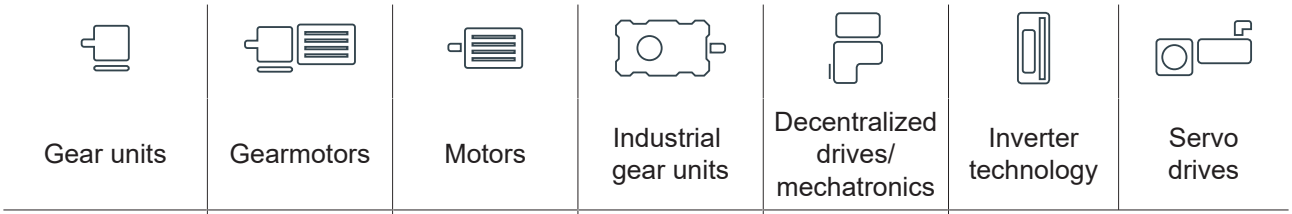

From the very outset, our customers have been able to rely on our high quality, committed advice and support, and fast delivery times. We offer a portfolio of modular solutions that are comprehensive and unique and meet every possible need.

- Perfect combination options and solutions for every application
- Energy efficiency up to IE5
- Quick and easy selection process and project planning
- Comprehensive portfolio – from drives and motors for continuous operation to high-precision servo drives
- Special designs in stainless steel, with explosion protection, or for electrified monorail systems
- Ideal solutions for every application
- Complete automation solutions for your machine or factory and many other areas

Independent of the project scope and the complexity of your requirements: We rise to the challenge, working with you to develop the perfect solution for you – including an all-round service package throughout your entire system life cycle on request.

Predictive maintenance is just one of the service trend topics no. 1. Early diagnosis and end-to-end condition monitoring have been an essential part of our offering for many years. That's because one thing in particular matters to us – the satisfaction and trust of our customers. from planning and the operation phase all the way to modernization. Where necessary, we also take care of drives from other manufacturers.

33091900/EN – 12/2025

1.1.4 What are the goals we want to reach with you?

We want to take you to the top!

Nothing excites us more than the future of production. We are already using Industry 4.0 principles to transform our manufacturing operations. As far as we are concerned, Industry 4.0 ceased to be a distant vision long ago – it is already a successful reality thanks to our smart factory. As a result, we have become one of the world's pioneers in this field.

Yet we do not just focus on increasing our performance to ever greater levels. We also pass on to you the expertise, experience and technical solutions we have gathered in implementing Industry 4.0 in our production halls. Why not find out more?

No matter how large or small your project may be, no matter how high or complex your requirements may be: We rise to the challenge, working with you to develop the perfect solution for you – including an all-round service package throughout your entire system life cycle on request.
Predictive maintenance is one of the currently trending service topics. Early diagnosis and end-to-end condition monitoring have been an essential part of our offering for many years. The only thing that counts is your satisfaction and driving forward your processes – from planning and the operation phase all the way to modernization. Where necessary, we also take care of drives from other manufacturers.

1.1.5 Why should you choose SEW-EURODRIVE?

Because these ten reasons speak for themselves:



1. **You will be more flexible**

   However much the requirements for your processes and production systems increase, we're there for you every step of the way. With rapid conversions, short delivery times, enhanced capacity and faster format changeovers, we're at your side – from evaluating your needs and implementing an appropriate solution all the way to Life Cycle Services.



2. **You will be more satisfied**

   Our name stands for the best quality. But we do not rest on our laurels. Quite the contrary, in fact. To ensure we meet all standards – both ours and yours – we undergo annual testing, including certification processes. That's because only one thing matters to us – the satisfaction and trust of our customers.



3. **You will know more**

   We're happy to share with you the industry and application expertise we have gained over decades and extending far beyond drive technology areas. We work with you to plan and put into practice your tailored solutions in a process where you constantly evolve in tandem with us.



4. **You will be more sustainable**

   We take responsibility for our employees, customers and business partners but also the environment in which we live and work. As a family business, we think in generations and always look beyond today and tomorrow. With us, you too can drive the future.

33091900/EN – 12/2025



5. **You will be more successful**

   Like you, we cannot afford to stand still. We provide continuous training for our employees and customers. We constantly expand our horizons and enhance our products, solutions and services, and thus your processes. You can only continue to be successful in the future with optimized workflows.



6. **You will be more energy efficient**

   We go out of our way to find new approaches and make our drives more efficient while always staying well ahead of international regulations. And, if you wish, we work with you to plan your systems and machines so that you can make the best possible use of energy recovery.



7. **You will be more innovative**

   What's the point of innovations if they remain out of your reach? We listen to you, which makes us fully aware of your future challenges, and we respond accordingly. With our approximately 800 researchers, we drive forward innovative technologies and help bring your processes up to date.

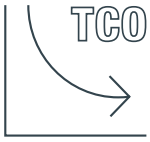

8. **You will save more money**

   With us, you can lower your overall operating costs. After all, it isn't just a matter of procurement expenses. Your TCO is significantly determined by the subsequent utilization and service life of your drive technology. We provide you with comprehensive advice on how to reduce your costs through sustainable operations.



9. **You will be close to us**

   Wherever in the world your system is running, our comprehensive service network and experts mean we're always ready to provide advice and practical assistance when you need it. All-in-one, on-site service that knows no bounds and significantly reduces or even eliminates downtimes.



10. **You will be faster**

    Throughout the world, our service staff ensure spare parts get to you fast, and faulty drives – including third-party products – are collected and repaired quickly. Software tools make engineering and startup easier for you. Services covering your entire system life cycle help make you faster and more efficient.

33091900/EN – 12/2025

1.2 Documentation

1.2.1 Contents of this publication

This catalog provides a detailed description of the following product group offered by **SEW-EURODRIVE**:

- P2..e X1KP..e and P... X1KP...e series industrial gear units

1.2.2 Additional documentation

In addition to the present "P-X1.e series industrial gear units" catalog, **SEW-EURODRIVE** offers the following catalogs:

- "P2..e series planetary gear units" catalog
- "P... series planetary gear units" catalog
- "DRN63 – 315 AC motors" catalog
- External oil supply and oil cooling systems catalog

1.3 Product names and trademarks

All product names included in this documentation are trademarks or registered trademarks of the respective titleholders.

1.4 Copyright notice

© 2025 SEW-EURODRIVE. All rights reserved. Copyright law prohibits the unauthorized reproduction, modification, distribution and use of this document – in whole or in part.

1.5 Decimal separator in numerical values

In this document, a period is used to indicate the decimal separator.

Example: 30.5 kg

1.6 Recycling, reprocessing, reuse

When manufacturing products, SEW-EURODRIVE makes sure to keep the use of new natural resources to a minimum in the interests of the circular economy. Key aspects here are the recycling of materials as well as the inspection and/or processing of returned components and their reuse in new products. These processes are only used at SEW-EURODRIVE if the resulting materials and components correspond to the quality of new products.

33091900/EN – 12/2025

2 Product description

2.1 Overview of gear unit and mount-on components

The gear unit is a combination of:

- Output stage: P2..e or P... series planetary gear unit
- Primary gear unit: X1KP..e bevel-helical gear unit
- Optional system components: Oil heater, water cooling cartridges, fan in motor adapter, motor, coupling, shaft end pump or oil cooling system with pressure lubrication.
- Optional mount-on parts: Motor adapter, torque arm, foot mounting

The gear units have a **shared oil chamber**.

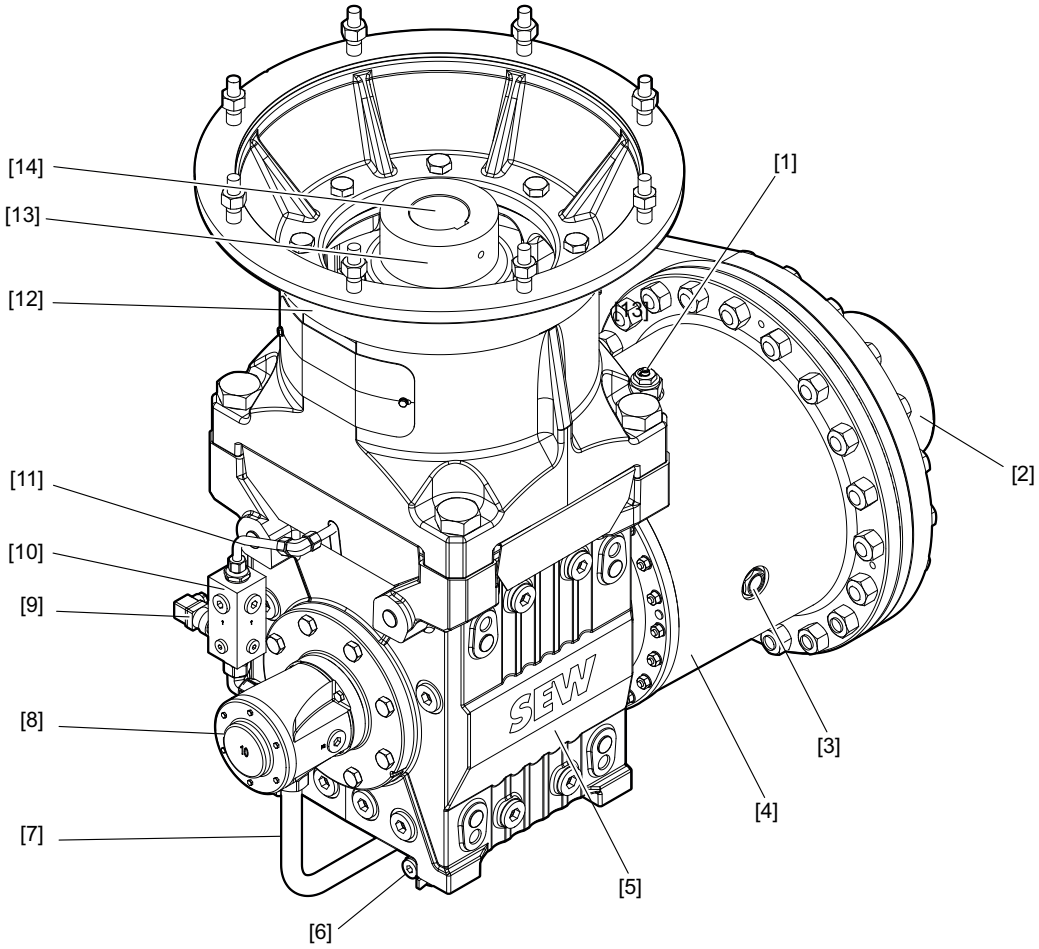

27021648229464331

[1] Breather
[2] Output shaft
[3] Oil sight glass
[4] Planetary gear unit
[5] Bevel-helical gear unit
[6] Oil drain valve
[7] Suction pipe
[8] Shaft end pump
[9] Pressure switch
[10] Gauge mounting block
[11] Pressure pipe
[12] Motor adapter
[13] Coupling
[14] Input shaft

2.2 Product characteristics

The 3-stage bevel planetary gear unit is the connection of a 2-stage planetary gear unit and a single-stage X..e series helical-bevel pre-stage gear unit.

The combination enables high torques with small gear ratios and high output speeds. This makes it ideal for demanding applications such as:

- Liquid mixers
- Wash presses
- Chain conveyors
- Rolling mills
- Screw conveyors

2.3 Overview of advantages

- Numerous, perfectly coordinated overall gear ratios
- Shared oil chamber for balanced thermal behavior
- Standardized units, which means excellent price/performance ratio and short delivery times
- Reliable lubrication thanks to an optional shaft end pump with pressure lubrication
- Outstanding thermal performance and optimum lubrication thanks to optional water cooling system with pressure lubrication

2.4 Added values of planetary gear units by SEW-EURODRIVE

2.4.1 GearOil by SEW-EURODRIVE



GearOil by SEW-EURODRIVE increases the performance of the gear unit with high-quality base oils and the latest additive technologies. The oil reduces friction in rolling and sliding contact, resulting in increased efficiency and wear resistance.

2.4.2 Delivery times



The coordinated process chain from order receipt to shipping ensures short delivery times even for customer-specific adjustments.

This way, even replacement parts that are required during servicing can be delivered quickly.

33091900/EN – 12/2025

2.4.3 Global availability



With 4 production plants and 13 assembly plants across the globe, standardized industrial gear units can be made available worldwide in the shortest possible time. Additional service centers can also provide short-term service of any kind.

2.4.4 Detailed calculation



Thanks to the networked calculation landscape, each drive is simulated and calculated with the individually required drive data. Collaboration with research institutes enable us to already use the latest calculation models for series products. The individually tailored product can be created in this way.

2.4.5 Extended warranty

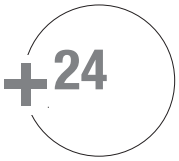

If the gear unit starts up after the statutory warranty has expired or if you want to pass on your customer's warranty claim to the supplier, for example, SEW-EURODRIVE offers a new warranty package "**+24**" for an additional 24 months warranty on the industrial gear unit.

The following packages are available for the gear units.

Packages	Scope	Advantages
+24	24 months of warranty on the gear unit.	The correct installation of the gear unit is checked by an SEW service technician.
+24 advanced	Gear unit filled with premium lubricant GearOil by SEW-EURODRIVE, giving you an additional 24 months warranty for your industrial gear unit free of charge.	The correct installation of the gear unit is checked by an SEW service technician.

The prerequisite for claiming extended warranty is an acceptance test of the customer-installed gear unit performed by a service technician from SEW-EURODRIVE. In the interest of both parties, the inspection ensures correct installation, alignment, and proper preparation of the drive system for operation. For this reason, inspection by SEW-EURODRIVE must be performed after installation and before startup.

33091900/EN – 12/2025

2.5 General information

2.5.1 Important information

Observe the following information.

- Figures in the catalog are examples. Final dimensions are available from SEW-EURODRIVE on request.
- Lubricant fill quantities are non-binding guide values. The oil level marking on the oil level glass or oil dipstick is decisive.
- As standard, the gear units are delivered ready for operation but without oil filling.
- The oil viscosity and oil type must correspond to the specifications on the nameplate.
- The specified weights are guide values. The exact gear unit weight is given in the order-specific dimension sheet. The nameplate shows the weight of the basic gear unit including all mounted gear unit options.
- Rotating parts must be protected by the buyer against unintentional contact. Observe the valid safety regulations of the respective country of use.

2.5.2 Power and torque

The power and torque values listed in the catalogs apply to standard design and standard lubrication of the gear units under normal ambient conditions.

Please note that the motor power shown in the selection tables for gear units is subject to selection. However, the output torque and the desired output speed are essential for the application and need to be checked.

2.5.3 Speeds

The quoted output speeds of the gear units are recommended values. You can calculate the rated output speed based on the rated motor speed and the gear unit ratio. Please note that the actual output speed depends on the motor load and the supply system conditions.

2.5.4 Sound power level

The sound power levels of the gear units, gearmotors, and motors correspond to ISO 8579-1 for gear units and gearmotors and comply with the limit values of EN 60034 for motors.

2.5.5 Painting

Gear units and motors are painted in "blue gray"/RAL 7031 as per DIN 1843 as standard. Special paint coatings are available on request.

2.5.6 Weight information

Note that all weight specifications listed in this catalog do not include lubricant, as the lubricant filling depends on the mounting position.

33091900/EN – 12/2025

2.5.7 Air admission and accessibility

The gear units must be mounted on the driven machine in such a way that both axially and radially there is enough space left for unimpeded air admission and for the purposes of maintenance of the brake. Please also refer to the notes in the motor dimension sheets.

2.5.8 International markets

Market access is contingent to local approvals in many countries. Additional laws, regulations, and market conventions must be adhered to. Experience has shown that an identification of the product is required together with certification. This is realized at SEW-EURODRIVE with one or several logos on the main nameplate, with additional labels on the product, or by providing the relevant certificates.

Some countries, such as the states of the European Union, impose certain requirements regarding explosion-protected gear units. The following markings are attached to the gear unit if these requirements are met.

CE	CE marking to state compliance with European directives, (see EU declaration of conformity or EU declaration of incorporation).
Ex	ATEX mark to state compliance with the European Directive 2014/34/EU.

Refer to the operating instructions of the respective motor for information on the motor markings.

33091900/EN – 12/2025

2.6 Sizes, torques

The nominal gear unit torques in the following table show the fatigue-free gear unit torques of the P2..e X1KP..e series bevel planetary gear units.

Size	Nominal torque Nm
P.**002** X1KP..e	24830
P.**012** X1KP..e	36810
P.**022** X1KP..e	51190
P.**032** X1KP..e	69620
P.**042** X1KP..e	100170
P.**052** X1KP..e	124060
P.**062** X1KP..e	185660
P.**072** X1KP..e	245660
P.**082** X1KP..e	359400
P.**092** X1KP..e	423000
P.**102** X1KP..e	500000

2.7 Basic designs of the bevel planetary gear units

The gear units are available in 3 mounting designs: Foot-mounted design, flange-mounted design, and design with torque arm.

- Torque arm

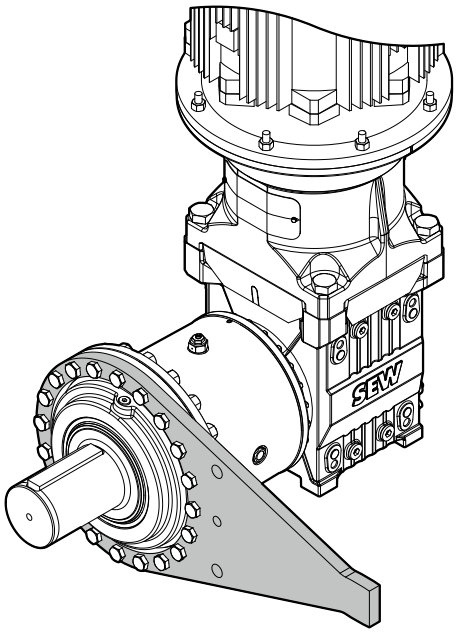

54376227211

33091900/EN – 12/2025

- Flange-mounted design

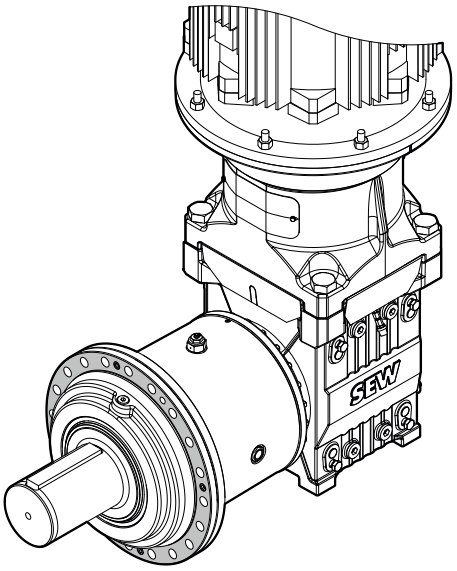

9007253630970635

- Foot-mounted design

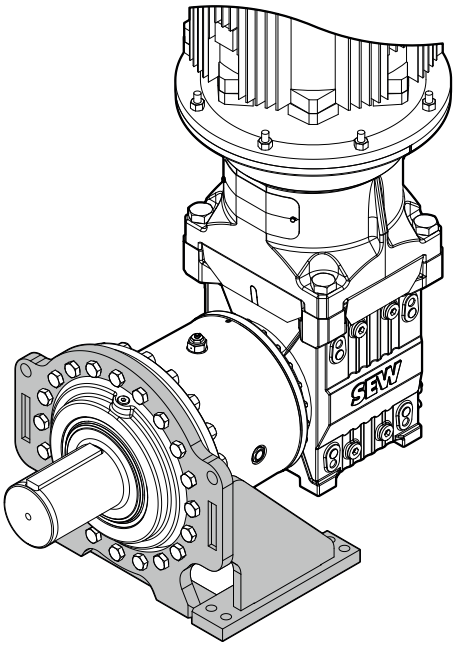

54376232075

The various mounting designs can be combined with the available output shaft types. For an overview of the available output shaft types, refer to chapter "Output shaft designs" (→ 🗎 21). The mounting design "torque arm" can be combined with the output shaft type "hollow shaft with shrink disk" as standard. Contact SEW-EURODRIVE for information on deviating combinations.

33091900/EN – 12/2025

2.8 Nameplate

The following figure shows the structure of the nameplate:

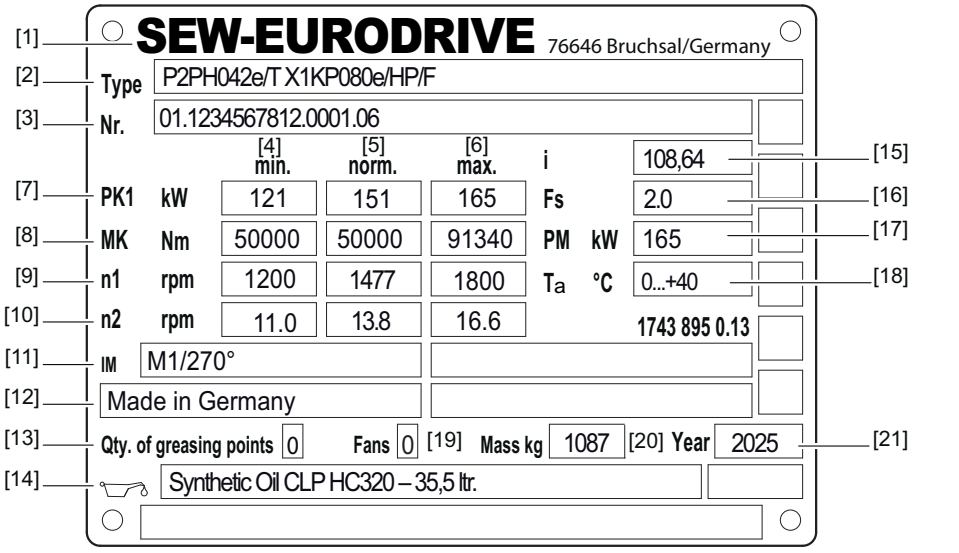

27021649673240331

Line	Information
[1]	• Manufacturer, address
[2]	• Type designation
[3]	• Serial number
[4]	• Minimum operating point
[5]	• Normal operating point
[6]	• Maximum operating point
[7]	• Operating power at the input shaft (HSS)
[8]	• Gear unit output torque
[9]	• Input speed (HSS)
[10]	• Output speed (LSS)
[11]	• Mounting position and mounting surface
[12]	• Country of manufacture
[13]	• Number of greasing points
[14]	• Oil grade and viscosity class/oil quantity
[15]	• Exact gear unit ratio
[16]	• Service factor
[17]	• Nominal motor power
[18]	• Deviation from the standard temperature range (−20 °C to +40 °C)
[19]	• Number of mounted fans
[20]	• Gear unit weight
[21]	• Year of manufacture

33091900/EN – 12/2025

2.9 Type designation

The following example shows the structure of the type designation:

P2PH042e/T X1KP080e/HP/F	
P	Industrial gear unit series
2	Number of gear unit stages • 2 = 2-stage
P	Gear unit design • P = Coaxial design
H	Output shaft type • S = Solid shaft with key • R = Smooth solid shaft • L = Splined solid shaft • H = Hollow shaft with shrink disk • V = Splined hollow shaft
042	Planetary gear unit size • 002 – 0102
e	Generation P2.e
T	Gear unit mounting • /B = Foot • /T = Torque arm • /F = Flange
X	Industrial gear unit series
1	Number of gear unit stages • 1 = Single-stage
K	Gear unit design • K = Bevel-helical gear unit
P	Output shaft type • P = Intermediate shaft for planetary gear units
080	Gear unit size • 60 – 100
e	Generation X.e
HP	Housing design • HP = Housing for planetary gear units
F	Gear unit mounting • /F = Flange

33091900/EN – 12/2025

2.10 Abbreviations for output shaft designs

..PHF042e/T	
P	• Gear unit design
H	Output shaft type: • - = Solid shaft with key(s) (1 or 2) • R = Smooth solid shaft • L = Splining on the outside • H = Shrink disk
F	Gear unit mounting: • - = Foot-mounted design • F = Flange-mounted design
042	• Size
/T	• Torque arm

2.11 Direction of rotation dependencies

The following figure shows the direction of rotation dependencies between input and output shaft. The gear unit and the position of the backstop are schematically depicted.

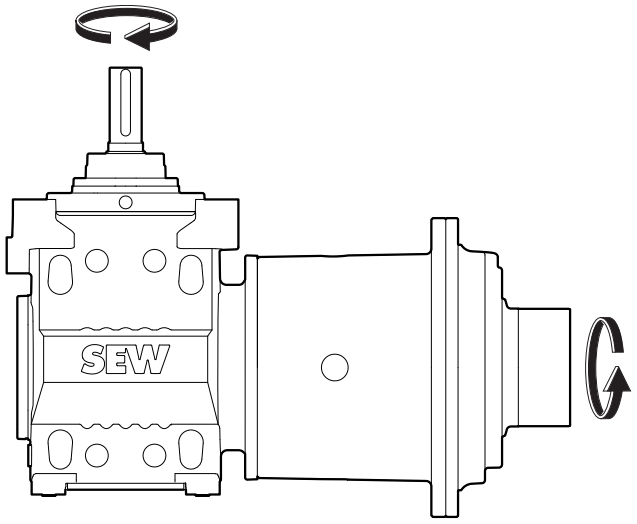

18014449281707531

33091900/EN – 12/2025

2.12 Input and output shafts

There are 2 types of shafts:

- High-speed shaft (**HSS**), usually an input shaft
- Low-speed shaft (**LSS**), usually an output shaft

2.12.1 Input shaft

The input shaft (HSS) is provided with a closed keyway according to DIN 6885/T1 and a center bore according to DIN 332. The delivery includes a matching key in accordance with DIN 6885/T1 – form A.

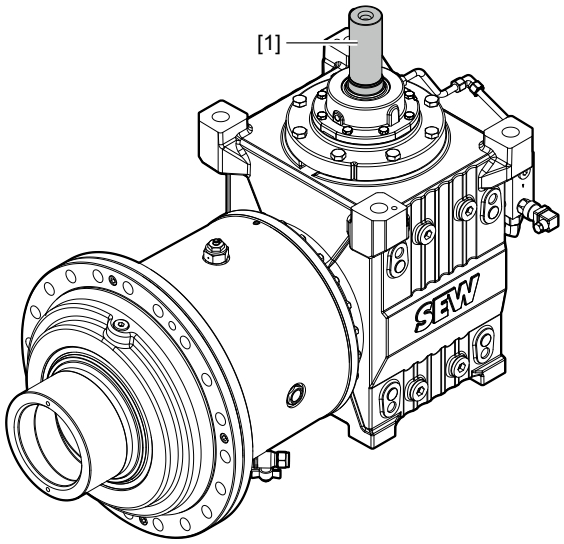

9007250463752843

2.12.2 Output shaft designs

The output shaft [LSS] of the planetary gear unit is available in the following designs:

Output shaft as solid shaft with key P2.e../..S or P../.._

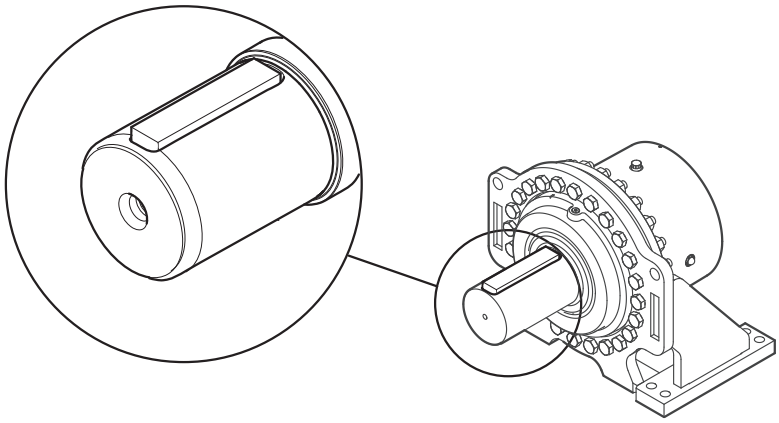

9007218403195787

Output shaft as solid shaft with 2 keys P2.e../..S or P../.._

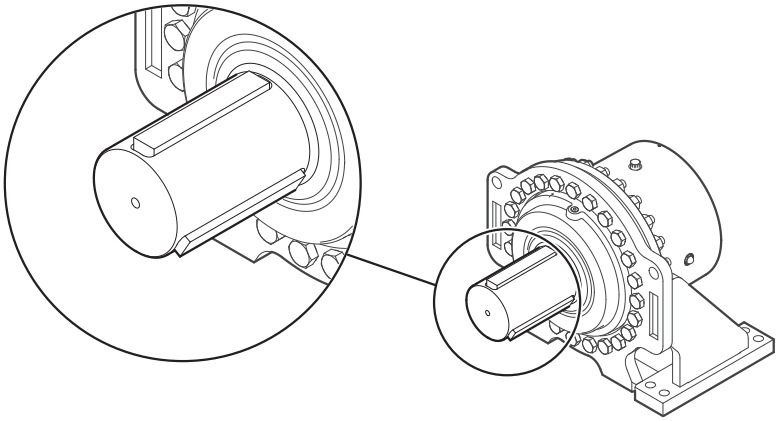

9007218403198219

Output shaft as a smooth solid shaft /..R

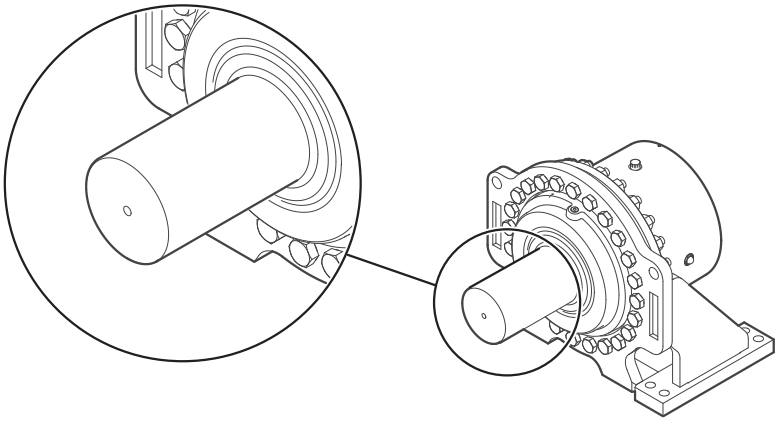

9007218403188491

Output shaft as a splined solid shaft /..L

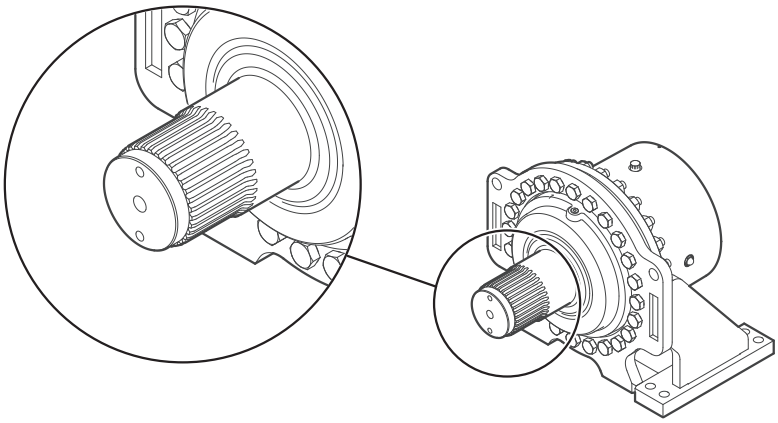

9007218403200651

33091900/EN – 12/2025

Output shaft as a hollow shaft with shrink disk /..H

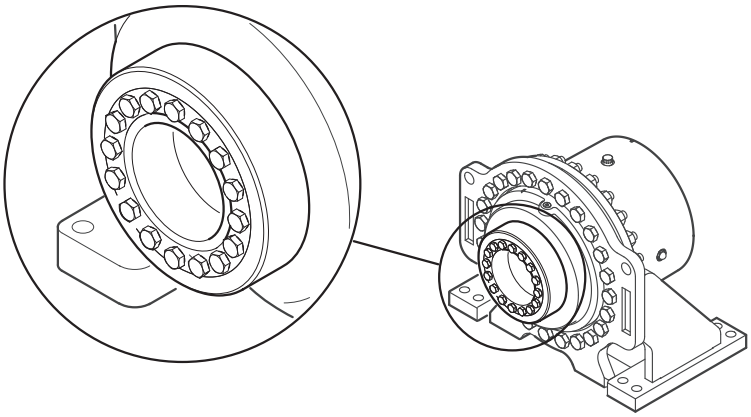

9007218403190923

Output shaft as a splined hollow shaft /..V

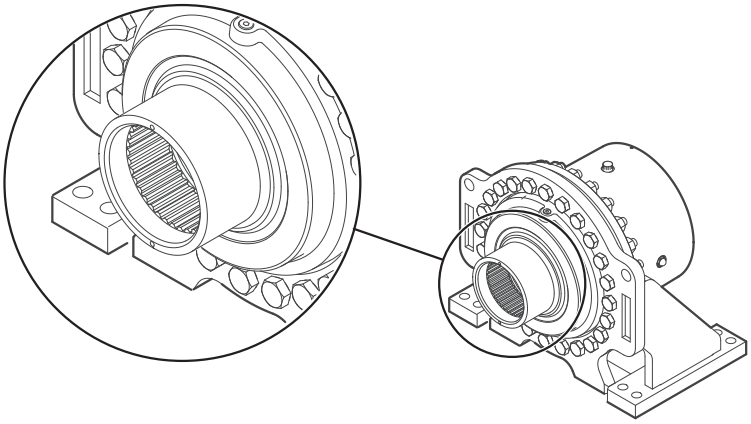

9007218403193355

33091900/EN – 12/2025

2.13 Sealing system

2.13.1 Input shaft

Standard	Dust-protected	Dust-protected regreasable	Radial labyrinth seal (Taconite) regreasable
Single oil seal with dust protection lip	Single oil seal with dust protection cover	Double lip seal with dust protection cover	Single oil seal with radial labyrinth seal
• Normal environment	• **Medium** dust load with abrasive particles	• **High** dust load with abrasive particles	• **Very high** dust load with abrasive particles
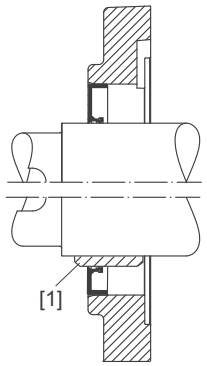	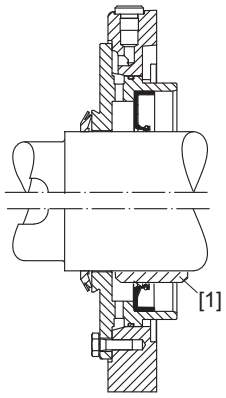	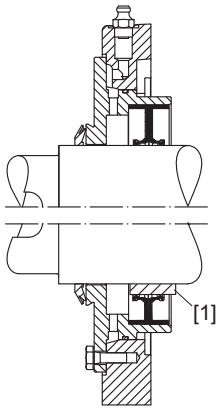	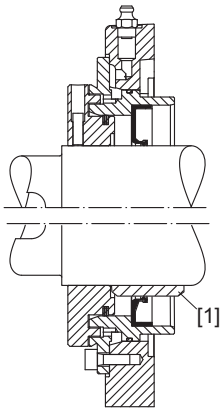

[1] Optional with oil seal sleeve

2.13.2 Output shaft

The following table shows the output sealing systems for horizontal and vertical mounting positions.

Designation	Property	Environment	Figure
Standard for mounting positions M1/M3/M5/M6	Single oil seal, inside sealing with dust protection lip on a hardened sleeve [1]	Normal environment	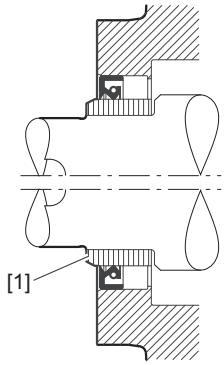
Standard for mounting position M4 (optional for mounting positions M1/M3/M5/M6)	2 oil seals, inside sealing on a hardened sleeve [1]	**Medium** dust load with abrasive particles	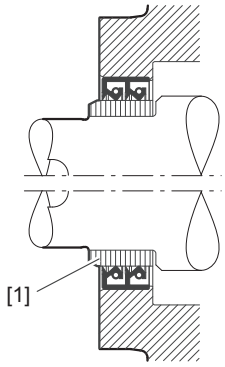

33091900/EN – 12/2025

Designation	Property	Environment	Figure
Standard for mounting position M2 (optional for mounting positions M1/M3/M5/M6)	1 oil seal, sealing on the inside, and 1 oil seal, sealing on the outside, on a hardened sleeve [1]	**High** dust load with abrasive particles and splash water load	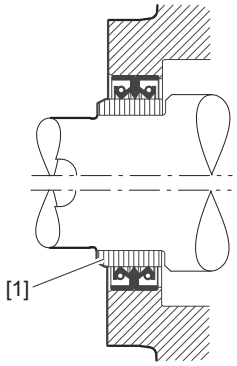
Radial labyrinth seal Regreasable for mounting positions M1/M2/M3/M4/M5/M6	Single oil seal with radial labyrinth seal on a hardened sleeve [1]	**Very high** dust load with abrasive particles	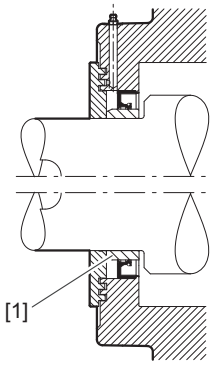

33091900/EN – 12/2025

2.14 Coating and surface protection systems

The gear units are available with surface protection OS 1, OS 2, OS 3, and OS 4.

The following descriptions provide an overview of the coating and surface protection systems.

OS 1 low environmental pollution	
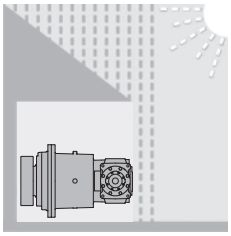	Suitable for environments prone to condensation and atmospheres with low humidity or contamination, such as outdoor applications under roof or with protection, unheated buildings where condensation can build up. Based on corrosivity category: C2 (low)
Sample applications	• Systems in saw mills • Agitators and mixers
Condensation test ISO 6270	120 h
Salt spray test ISO 7253	–

OS 2 medium environmental pollution	
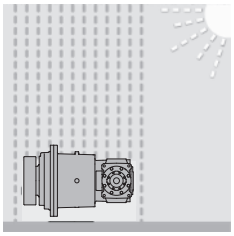	Suitable for environments with high humidity or moderate atmospheric contamination, such as applications outdoors subject to direct weathering. Based on corrosivity category: C3 (moderate)
Sample applications	• Applications in gravel plants • Cable cars
Condensation test ISO 6270	120 h
Salt spray test ISO 7253	240 h

OS 3 high environmental pollution	
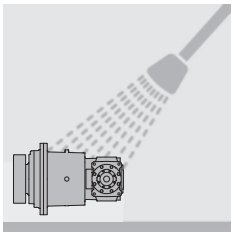	Suitable for environments with high humidity and occasionally severe atmospheric and chemical contamination. Occasionally acidic or caustic wet cleaning. Also for applications in coastal areas with moderate salt exposure. Based on corrosivity category: C4 (high)
Sample applications	• Port cranes • Sewage treatment plants • Mining applications
Condensation test ISO 6270	240 h
Salt spray test ISO 7253	480 h

33091900/EN – 12/2025

OS 4 high environmental pollution	
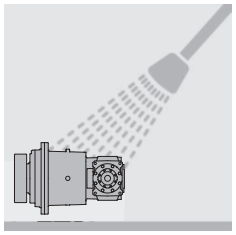	Suitable for environments with permanent humidity or severe atmospheric or chemical contamination. Regular acidic and caustic wet cleaning also with chemical cleaning agents. Based on corrosivity category: C5 (very high)
Sample applications	• Drives in malting plants • Wet areas in the beverage industry • Conveyor belts in the food industry
Condensation test ISO 6270	360 h
Salt spray test ISO 7253	600 h

INFORMATION

- Standard top coat color RAL 7031, can deviate depending on the order.
- Colors according to RAL – Yes
- Water and hand perspiration repelling rust preventive for external preservation applied to uncoated parts, shaft ends/flanges.
- Sheet metal parts (such as protection covers) are painted in RAL 1003 as standard.
- Higher quality surface protection systems are available on request.

33091900/EN – 12/2025

2.15 Storage and transport conditions

The gear units can be shipped with the following protection and packaging types depending on the storage and transport conditions.

2.15.1 Internal preservation

Standard preservation

After the test run, the test oil fill is drained out of the gear unit. The remaining oil film protects the gear unit against corrosion for a limited period of time. If specified in the order, the gear unit can be delivered with oil. Refer to the order documents for more information.

Long-term preservation

After the test run, the test oil fill is drained out of the gear unit and the interior space is filled with a vapor phase inhibitor. The breather is replaced by a screw plug and included in the gear unit delivery.

Preservation with VCI anti-corrosion agent is not permitted for gear units that are operated with food grade lubricants. Contact SEW-EURODRIVE in such cases.

2.15.2 Exterior preservation

The following measures are taken for exterior preservation:

- Anti-corrosion agent is applied to bare, non-painted functional surfaces of shafts, flanges, mounting and foot surfaces of the housing. The anti-corrosion agent must be removed only with a suitable solvent that does not damage the oil seal.
- Small spare parts and loose pieces, such as bolts, nuts, etc., are packed in corrosion protection plastic bags (VCI corrosion protection bags).
- Threaded holes and blind holes are covered with plastic plugs.
- If the gear unit is stored longer than 6 months, you must regularly check the protective coating of unpainted areas as well as the paint coating. Renew areas with damaged protective coating/paint.

2.15.3 Packaging

Standard packaging

The gear unit is delivered on a pallet without cover.

Use: transport by truck or rail

Long-term packaging

The gear unit is delivered in a wooden box that is also appropriate for sea transport.

Use: transport by ship and/or extended storage

2.15.4 Storage conditions

Improper storage may result in damage to the gear unit. Observe the following information to prevent damage to the gear unit:

- While in storage until startup, the gear unit must be stored in a shock-free manner to prevent damage to the rolling bearing races.

33091900/EN – 12/2025

- Only fill gear units with oil up to the uppermost rolling element. This ensures a remaining air volume for the oil to expand in case of higher temperatures. Add VCI Anticorit to the oil and tightly seal the gear unit (replace the breather with a screw plug).
- The permissible storage temperature is -30 °C to +50 °C.
- When storing in tropical areas, ensure adequate protection against insect damage. Contact SEW-EURODRIVE in case of deviating requirements.

The gear unit is delivered without any oil filling as standard; different protection systems are required depending on the storage period and storage conditions as shown in the following table:

Preservation + packaging	Storage location	Storage duration
Standard preservation + Standard packaging	• Under roof and enclosed at constant temperature and humidity (5 °C < ϑ < 60 °C, < 50% relative humidity) • No sudden temperature variations and controlled ventilation with filter (free of dirt and dust) • No aggressive vapors or shocks	Maximum 6 months with intact surface protection
Long-term preservation + Standard packaging	• Under roof and enclosed at constant temperature and humidity (5 °C < ϑ < 60 °C, < 50% relative humidity) • No sudden temperature variations and controlled ventilation of the storage room with filter (free of dirt and dust) • No aggressive vapors or shocks	Maximum 3 years with regular inspection and checking for intactness
Long-term preservation + Long-term packaging	• Covered, protection against rain, vibration-free	Maximum 3 years with regular inspection and checking for intactness

33091900/EN – 12/2025

2.16 Types of lubrication

A distinction is made between 3 lubrication types, taking into account the mounting positions of the planetary gear units.

2.16.1 Splash lubrication

The gear unit is half filled with oil. Gearing and bearing parts that are not immersed in the oil bath are lubricated by splashing oil.

2.16.2 Bath lubrication

The gear unit is (almost completely) filled with oil. All tooth engagement or bearing points are immersed in the oil bath completely or partly.

2.16.3 Pressure lubrication

The X1KP..e bevel-helical gear unit is lubricated with pressure lubrication. A shaft end pump or motor pump in conjunction with a mounted oil-water cooler /OWP1 provides lubrication. The lubrication line continuously supplies the gearing and bearing points above the oil level with oil.

33091900/EN – 12/2025

3 Options and additional features

The following additional options are available. Contact SEW-EURODRIVE if necessary.

- Double-sided torque arm
- Hollow shaft with shrink disk optionally with forcing thread

3.1 Torque arm /T

An optional torque arm is available to support the reaction torque of solid and hollow shaft gear units in the shaft-mounted design.

Depending on the load direction and design of the customer load bearing point, the reaction torque acts either as a tensile force or as a compressive force.

3.1.1 Single-sided torque arm

Depending on the customer's request, the torque arm [1] is either included in the delivery or mounted on the gear unit. The retaining screws are included in the scope of delivery.

The figure shows an example structure of a planetary gearmotor with a torque arm [1] on one side.

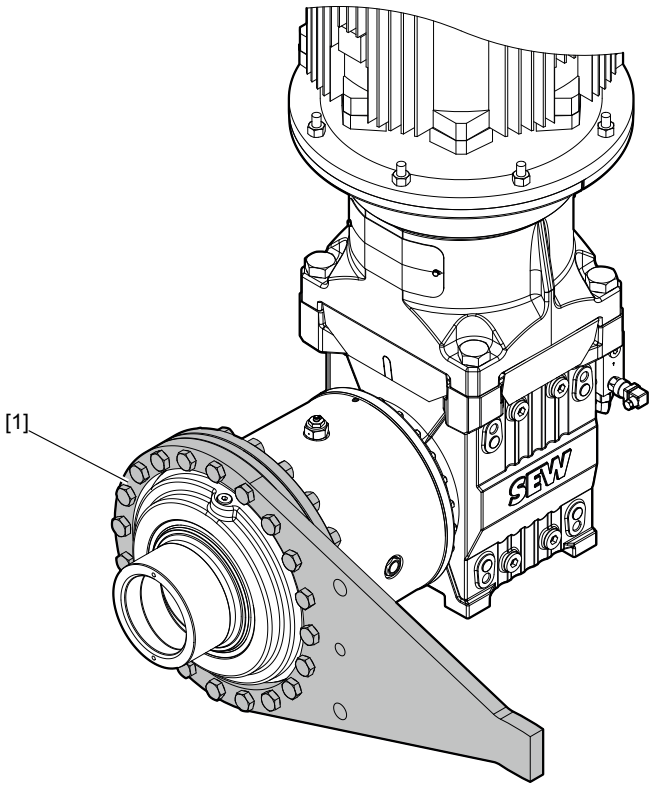

50747855371

3.2 Oil expansion tank /ET

The oil expansion tank compensates for changes in the oil volume in the system caused by temperature variations. When the temperature of the gear unit increases, the oil expansion tank absorbs excess oil and returns it when the temperature decreases. This ensures that the gear unit is always supplied with the optimum amount of oil in every operating state.

Based on the oil level specified by SEW-EURODRIVE, the oil expansion tank is designed to compensate the oil volume changes within the permitted operating temperature range. A temperature decrease below the permitted temperature range causes the oil expansion tank to be completely emptied and air being sucked into the gear unit. This can lead to insufficient lubrication and thus to failure of the gear unit. An increase above the permitted temperature range causes an overfilling of the oil expansion tank and oil might leak from the gear unit. During operation, any oil level above the level specified by SEW-EURODRIVE is permitted as long as there is oil in the expansion tank and the oil expansion tank does not overflow. During operation, the oil level must not be below the min. marking on the oil dipstick.

3.2.1 Mounting position M4

Standard lubrication type with oil expansion tank for bath lubrication:

- Oil expansion tank for volume compensation
- Oil level is checked by an oil dipstick [1] or oil level glass [3] (option)
- Oil filling via the oil expansion tank

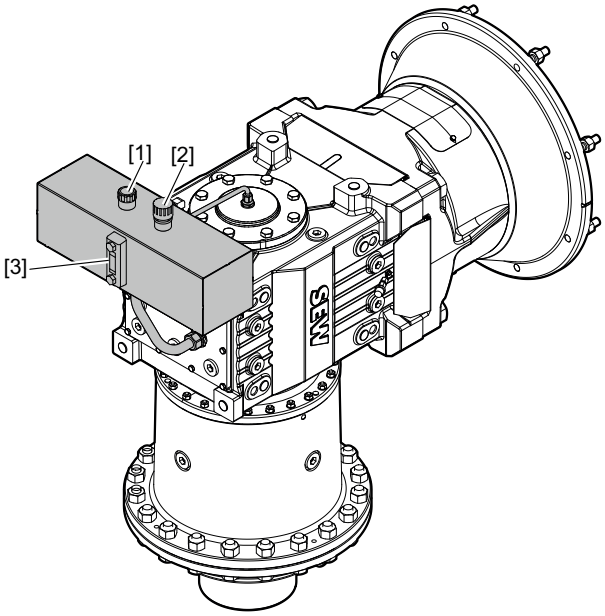

51174147851

[1] Oil dipstick
[2] Breather
[3] Oil level glass (option)

33091900/EN – 12/2025

3.3 Motor adapter /MA

Motor adapters [1] are available for the mounting of

- **IEC (B5) motors** of sizes 160 to 355
- **NEMA ("C" face) motors** of sizes 254 to 449

INFORMATION

- The gear unit must be installed in such a way that no liquids can enter the motor adapter (HSS end) and accumulate there. Otherwise there is a risk that the respective oil seal can be damaged and subsequent damage could create a potential ignition source.
- An elastic claw coupling is included in the scope of delivery.

The following figure shows an example of the motor adapter [1] connected to the gear unit:

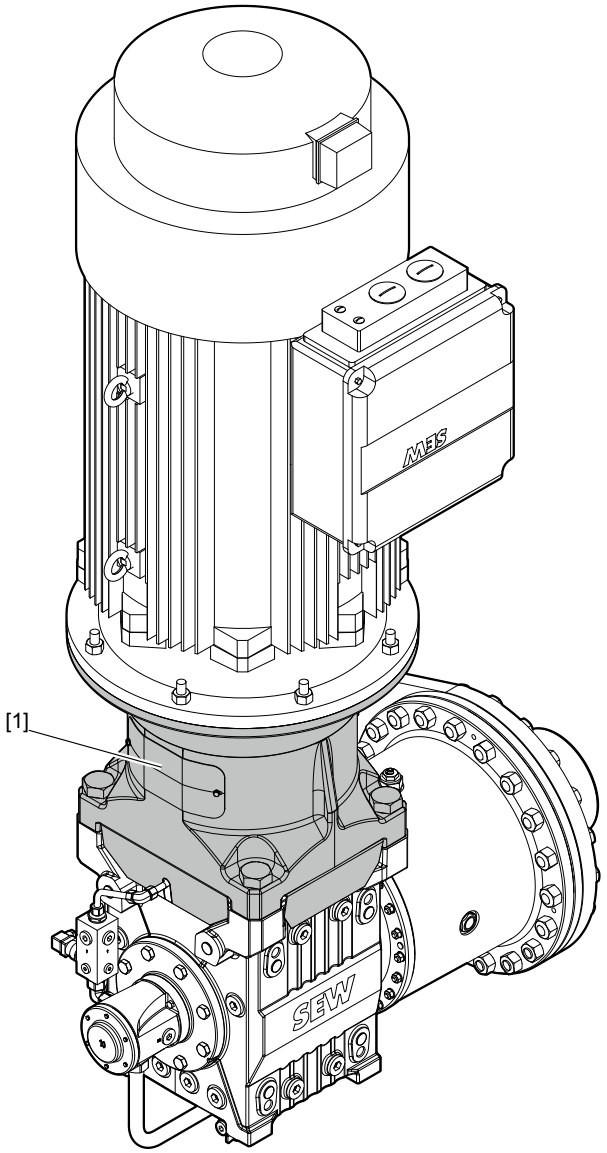

50461765259

3.3.1 Motor adapter assignment

The following motor adapters are available:

Mounting position M1/270°

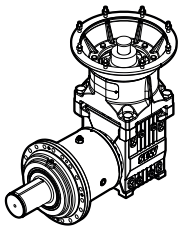

54588959755

Gear unit		Motor			
X1KP..e	**P2..e**	**IEC2500+280**	**IEC315S-L**	**IEC315**	**IEC355**
X1KP060e	**P.002e**	x	x	–	–
	P.012e	x	x	–	–
X1KP080e	**P.022e**	x	x	x	–
	P.032e	x	x	x	–
	P.042e	x	x	x	–
	P.052e	x	x	x	–
X1KP100e	**P.042e**	x	x	x	x
	P.052e	x	x	x	x
	P.062e	x	x	x	x
	P.072e	x	x	x	x
X1KP120e	**P.062e**	x	x	x	x
	P.072e	x	x	x	x
X1KP140e	**P.082e**	x	x	x	x
	P.092e	x	x	x	x
X1KP160e	**P.092e**	x	x	x	x

33091900/EN – 12/2025

Mounting position M1/0°

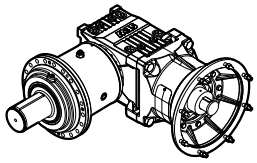

54588962699

Gear unit		Motor			
X1KP..e	**P2..e**	**IEC2500+280**	**IEC315S-L**	**IEC315**	**IEC355**
X1KP060e	**P.002e**	x	–	–	–
	P.012e	x	–	–	–
X1KP080e	**P.022e**	x	x	–	–
	P.032e	x	x	–	–
	P.042e	x	x	–	–
	P.052e	x	x	–	–
X1KP100e	**P.042e**	x	–	–	–
	P.052e	x	x	–	–
	P.062e	x	x	x	x
	P.072e	x	x	x	x
X1KP120e	**P.062e**	x	x	x	x
	P.072e	x	x	x	x
X1KP140e	**P.082e**	x	x	x	x
	P.092e	x	x	x	x
X1KP160e	**P.092e**	x	x	x	x

33091900/EN – 12/2025

Mounting position M4/0°

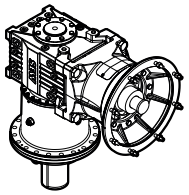

54591617163

Gear unit		Motor				
X1KP..e	**P2..e**	**IEC225**	**IEC2500+280**	**IEC315S-L**	**IEC315**	**IEC355**
X1K-P060e	**P.002e**	x	–	–	–	–
	P.012e	x	–	–	–	–
X1K-P080e	**P.022e**	x	x	–	–	–
	P.032e	x	x	–	–	–
	P.042e	x	x	x	–	–
	P.052e	x	x	x	–	–
X1K-P100e	**P.042e**	x	x	–	–	–
	P.052e	x	x	x	–	–
	P.062e	x	x	x	x	–
	P.072e	x	x	x	x	–
X1K-P120e	**P.062e**	x	x	x	–	–
	P.072e	x	x	x	–	–
X1K-P140e	**P.082e**	x	x	x	x	–
	P.092e	x	x	x	x	x
X1K-P160e	**P.092e**	x	x	x	x	x

33091900/EN – 12/2025

3.4 Shaft end pump /SEP

The direction-independent shaft end pump [1] supplies all bearing points and gearing above the oil sump with oil via a tube system.

It is mounted externally on the gear unit and is driven via an intermediate shaft of the gear unit, which ensures a high reliability of the pump function.

INFORMATION

A minimum speed of the pump of ≥ 400 min^{-1} is required for proper operation of the shaft end pump. If you use variable input speeds (e.g. for inverter-controlled drives) or if you intend to change the input speed of a gear unit equipped with a shaft end pump, contact SEW-EURODRIVE.

The figure shows the shaft end pump mounted to the gear unit.

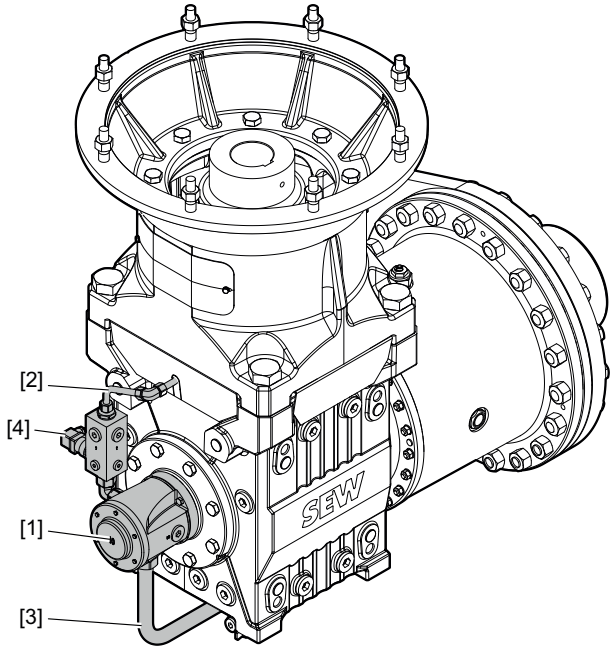

50465246219

[1] Shaft end pump
[2] Pressure pipe
[3] Suction pipe
[4] Pressure switch

3.5 Pressure switch /PS

The pressure switch shows the correct oil pressure in the pressure pipe and in this way confirms that the pressure lubrication is ready for operation. Therefore, the pressure switch must be monitored by the user.

Pressure might build up with a delay during the startup phase of the gear unit with a shaft end pump. This slow pressure build-up can trigger an error signal by the pressure switch, which can be bridged. The bridging time of the pressure switch should be limited to 5 to a maximum of 10 seconds.

Longer shutdown delays may result in damage to the gear unit and are not permitted.

33091900/EN – 12/2025

3.6 Fan /FAN

To increase the thermal rating, a direction-independent radial fan [1] can be installed. Observe the specifications in the order documents.

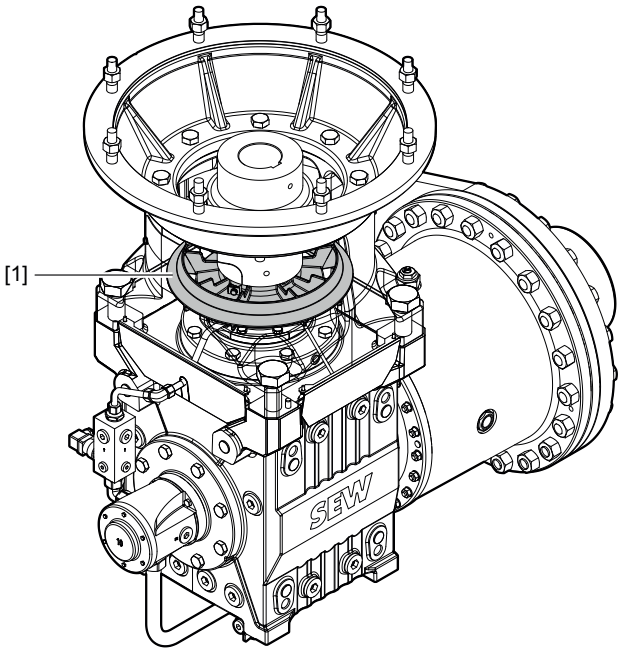

51882461067

33091900/EN – 12/2025

3.7 Oil heater

An oil heater is necessary to ensure lubrication of the gear unit during cold starts at low ambient temperatures.

Observe the oil viscosity outside of the gear unit, e.g. in the oil pipes.

The heater is integrated into the gear unit housing at the factory and is controlled by a thermostat. The limit temperature set on the thermostat, below which the oil must be heated, is set at the factory depending on the used lubricant.

3.7.1 Structure

The oil heater consists of 2 main parts:

1. Heating element [1] in the oil sump with terminal box
2. Thermostat [2] with integrated temperature sensor

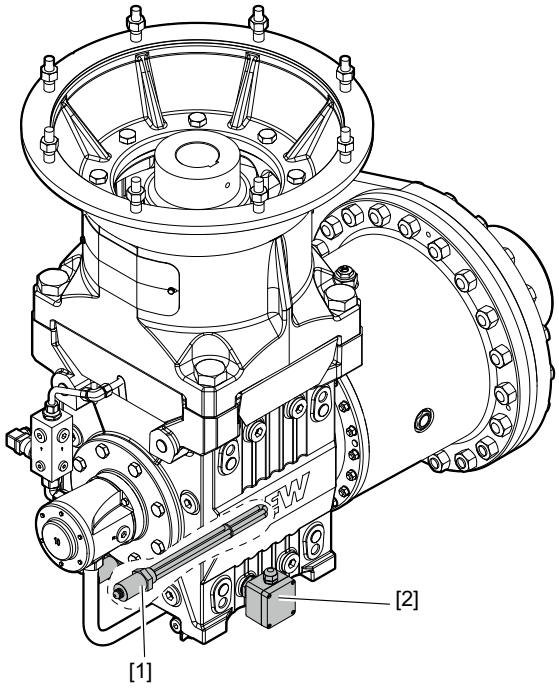

50461767691

Notes on the use of heating elements:

Complete immersion required:

To avoid damage, the heating elements must be completely immersed in the oil sump.

Thermostat position:

The position of the thermostat varies depending on the gear unit design and mounting position.

Possible applications and restrictions:

The number and possible use of heating elements depend on the following factors, among others:

In certain mounting positions and with limited mounting space, there may be restrictions concerning the combination with other accessory options. Contact SEW-EURODRIVE in such cases.

- Size
- Mounting position

33091900/EN – 12/2025

- End gear position
- Lubrication type

Operation and heating time:

To keep the gear unit startup temperature, the thermostat can be continuously supplied with current. The heating process can take several hours.

Dimensions of the heating elements:

Refer to chapter "Oil heater /OH" (→ 🗎 143) for the dimensions of the heating elements.

3.7.2 Thermostat control and heating behavior of the oil heater

Observe the following information.

Factory setting of the trip point:

The trip point of the oil heater thermostat is factory-set to a temperature of about 5 K above the respective initial temperature for gear unit startup, see chapter "Limit temperature for gear unit startup" (→ 🗎 41).

The thermostat turns off the oil heater at this temperature. Only then may the gear unit be started up. If the temperature falls below this value by about 5 K, the heater is automatically switched on again.

Safe oil temperature control:

To avoid overheating and thus possible damage to the oil, the maximum surface load of the heating tubes is limited. This extends the heating time of the cold gear unit oil to up to several hours – depending on the gear unit size, mounting position, oil volume, and ambient temperature.

Installation and startup:

Thermostat and heating elements are already installed in the gear unit and ready for operation. Before startup, they must be properly wired and connected to the current supply.

Special operating conditions:

Contact SEW-EURODRIVE if a differing oil viscosity class is used or if ambient temperatures fall below the specified limit temperature.

33091900/EN – 12/2025

3.7.3 Connection power

The table shows the power of the installable heating elements.

Size	Mounting position X1KP	Number of heating elements	P_{inst} power of an installed heating element in watts
P2P.002e X1KP060e **P2P.012e X1KP060e**	M1	1 – 3	270
	M3	1 – 3	
	M4	1 – 2	
	M5	1 – 6	
P2P.022e X1KP080e **P2P.032e X1KP080e** **P2P.042e X1KP080e** **P2P.052e X1KP080e**	M1	1 – 3	320
	M3	1 – 3	
	M4	1 – 3	
	M5	1 – 6	
P2P.042e X1KP100e **P2P.052e X1KP100e** **P2P.062e X1KP100e** **P2P.072e X1KP100e**	M1	1 – 3	440
	M3	1 – 3	
	M4	1 – 3	
	M5	1 – 6	
P2P.062e X1KP100e **P2P.072e X1KP120e**	M1	1 – 5	550
	M3	1 – 5	
	M4	1 – 5	
	M5	1 – 8	
P2P.082e X1KP140e **P.092 X1KP140e**	M1	1 – 5	1050
	M3	1 – 5	
	M4	1 – 5	
	M5	1 – 8	
P.102 X1KP160e	M1	1 – 5	1050
	M3	1 – 5	
	M4	1 – 5	
	M5	1 – 8	

3.7.4 Limit temperature for gear unit startup

The minimum permitted ambient temperature/oil temperature for gear unit startup depends on the viscosity of the oil used and the lubrication type of the gear unit.

Before startup, the oil may have to be heated to the specified "starting temperature" by an oil heater. Observe the lubricant table in chapter "Permitted lubricants".

33091900/EN – 12/2025

3.8 Water cooling cartridge /CCT

The water cooling cartridge can be installed both above and below the oil level. The water connection must be established by the user, while adhering to the technical specifications.

3.8.1 Structure

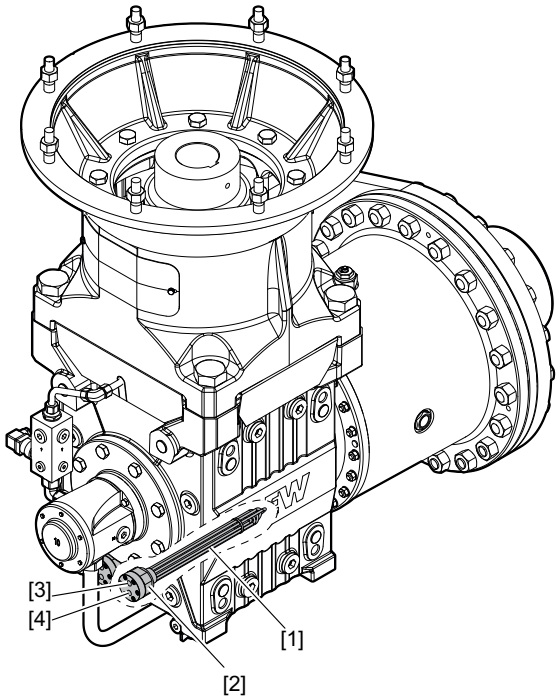

50465243787

[1] Cooling pipes
[2] Tube plate with connection piece
[3] Return
[4] Supply

The water cooling cartridge consists of 3 main parts:

- Cooling pipes (CuNi alloy), stainless steel optional
- Tube plate (brass)
- Connection piece (brass; gray cast iron; steel)

The water cooling cartridges can be retrofitted to a certain extent. Contact SEW-EURODRIVE.

3.8.2 Notes on connection and operation

The required cooling water flow rate is calculated by SEW-EURODRIVE as part of the project planning. Get in contact for additional information.

The required cooling water flow rate depends on the following characteristics:

- Gear unit size
- Mounting position
- Lubrication type

33091900/EN – 12/2025

The specified cooling water flow rate refers to one cooling cartridge. The cooling circuit must be connected in parallel for gear units with several water cooling cartridges. A series connection of multiple cooling cartridges is not permitted.

Size	Connection	Max. water pressure	Max. cooling water flow rate (per water cooling cartridge) l/min
X1KP60e – 120e	G 1/4″	10	11
X1KP140e – 160e	G 1/2″	10	28

Contact SEW-EURODRIVE in the following cases:

- If special cooling media are used, as the cooling capacity of the water cooling cartridge can change.
- If aggressive cooling media are used, such as brackish water or salt water.

3.9 Oil drain

In addition to the standard oil drain plug, SEW-EURODRIVE also offers an oil drain valve option.

The following figure shows an example of the positions of the oil drain valves [1].

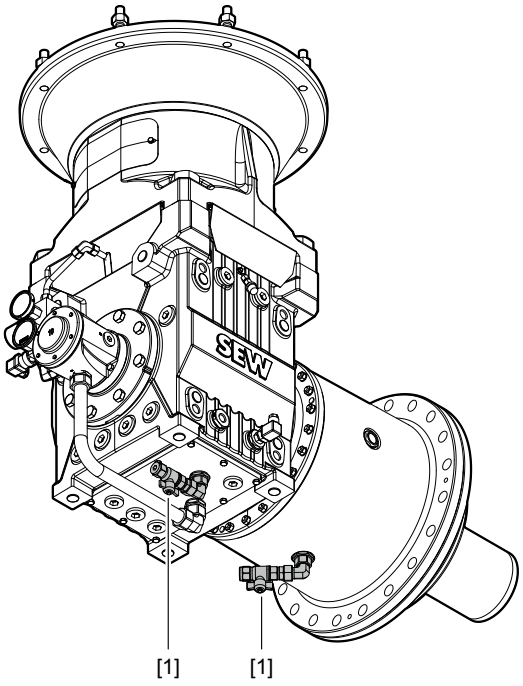

51877416203

33091900/EN – 12/2025

3.10 Breather /BPG

The breather prevents non-permitted pressure increases generated by heating or cooling during operation.

Observe the following information.

3.10.1 Breather (standard)

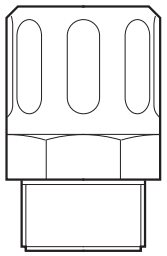

9007218373427339

Structure

Features	
Housing material	Steel
Filter inserts	Wire mesh
Design	3/4" or 1"

3.10.2 Steel breather for harsh operating conditions

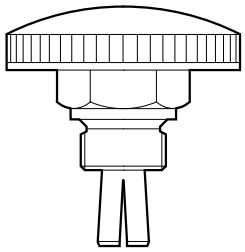

9007218373325963

Structure

Features	
Housing material	Steel
Filter inserts	Steel and aluminum wire mesh
Design	Cylindrical pipe thread according to DIN EN ISO 228-1, dimensioned for operating conditions with special protection against drip and splash water

33091900/EN – 12/2025

3.10.3 Stainless steel breather for harsh operating conditions

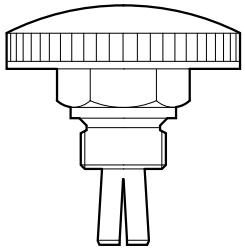

9007218373325963

Structure

Features	
Housing material	Stainless steel
Filter inserts	Steel and aluminum wire mesh
Design	Cylindrical pipe thread according to DIN EN ISO 228-1, dimensioned for operating conditions with special protection against drip and splash water

3.10.4 Breather with filter insert /PI

The breather has a corrosion-proof housing with air intake opening at the top. The cover with protection lip keeps splashing water off.

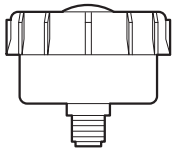

18014417357440779

Structure

Characteristics	
Housing material	Polyamide
Filter inserts	Wire mesh, galvanized
Filter size	10 µm
Thread	3/4" or 1"

3.10.5 Plastic breather

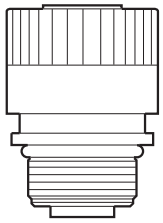

9007218102697099

Structure

Features	
Housing material	Plastic
Filter inserts	Polyester filter, not exchangeable
Filter size	2 µm
Threads	3/4" or 1"

3.10.6 Desiccant breather filter /DC

The filter contains a desiccant that absorbs water vapor from the inflowing air.

The filter can also retain oil mist from the outflowing air, which reduces the environmental impact and increases the efficiency of the system

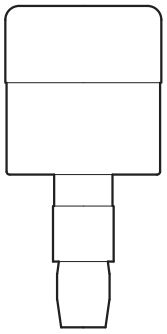

9007222800055435

Structure

Features	
Housing material	Polycarbonate
Filter inserts	• Polyester filter: Removes air particles > 3 µm • Silica gel: Absorbs water and humidity. Saturation is indicated by the color changing from blue to pink. • Foam pad: Absorbs oil mist
Thread	3/8" or 1"

33091900/EN – 12/2025

4 Condition monitoring

4.1 Temperature switch /NTB

A temperature switch with preset switching temperatures of 70, 80, 90, or 100 °C is available for monitoring the gear unit's oil temperature.

It is also used as a limit value switch for various functions, for example to trigger a pre-alarm or a main alarm for switching off the main motor. The temperature switch is located in the oil sump of the gear unit. The exact position depends on the gear unit design and the shaft position.

4.1.1 Dimensions

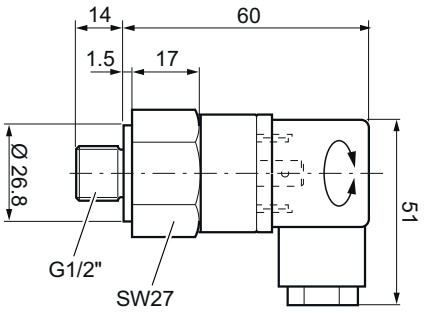

56786714763

4.1.2 Electrical connection

To ensure a long service life and proper function, it is recommended to use a relay in the circuit instead of a direct connection through the temperature switch.

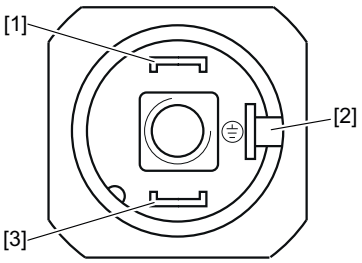

56786712331

[1] [3] NC contact
[2] Grounding terminal 6.3 x 0.8

4.1.3 Technical data

- Trip temperature: 70 °C, 80 °C, 90 °C, 100 °C ± 5 °C
- Contact capacity: 10 A – AC 240 V
- Connector: DIN EN 175301-803 PG9 (IP65)
- The tightening torque for the retaining screw in the back of the connector for electrical connection is 0.25 Nm.

33091900/EN – 12/2025

4.2 Temperature sensor /Pt100

The Pt100 temperature sensor can be used to measure the temperature of the gear unit oil.

It is located in the oil sump of the gear unit. The exact position depends on the gear unit design and shaft position.

4.2.1 Dimensions

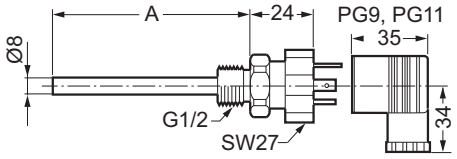

27021598123377419

A in mm
50

4.2.2 Electrical connection

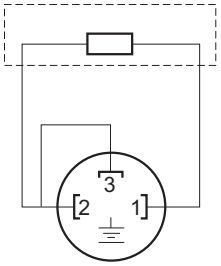

9007199613899531

[1] [2] Resistor element connection

4.2.3 Technical data

- Design with thermowell and changeable measuring insert
- Sensor tolerance K ± (0.3 + 0.005 × T), (corresponds to DIN IEC 751 class B)

  T = Oil temperature in °C
- Connector: DIN EN 175301-803 PG9 (IP65)
- The tightening torque for the retaining screw in the back of the connector for electrical connection is 0.25 Nm.

33091900/EN – 12/2025

4.3 Temperature switch /TSK

The TSK temperature switch is used with oil supply systems for circulation cooling. It is provided with 2 fixed switching points of 60 °C and 90 °C for controlling and monitoring the system.

The temperature switch is integrated into the circuit of the oil supply system as follows:

- The cooling system is activated when the oil temperature reaches 60 °C
- Warning signal or shutdown of the gear unit when the oil temperature exceeds 90 °C (usually a sign of malfunction in the oil supply system)

The temperature switch is located in the oil sump of the gear unit. The exact position depends on the gear unit variant and shaft position.

4.3.1 Dimensions

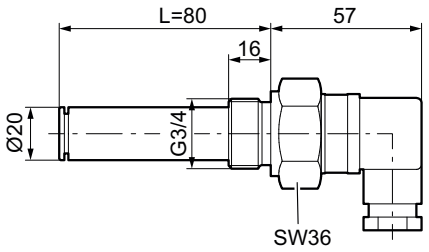

56786717195

4.3.2 Electrical connection

To ensure a long service life and proper function, it is recommended to use a relay in the circuit instead of a direct connection through the temperature switch.

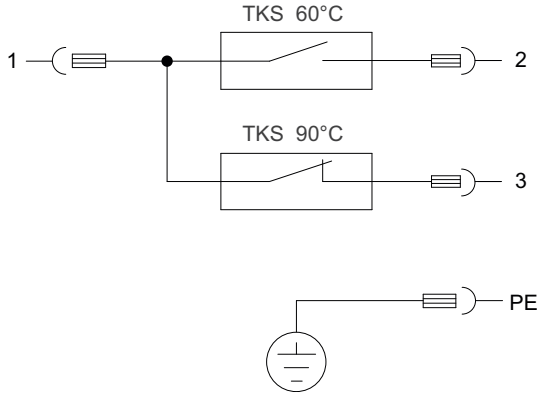

56435381771

[1] [2] Switch 60 °C NO contact
[1] [3] Switch 90 °C NC contact
PE Grounding terminal

33091900/EN – 12/2025

4.3.3 Technical data

- Switching temperatures: 60 °C and 90 °C
- Contact capacity: 2 A – AC 240 V
- Connector: DIN EN 175301-803 PG11 (IP65)
- The tightening torque for the retaining screw in the back of the connector for electrical connection is 0.25 Nm.

33091900/EN – 12/2025

5 Mounting positions

5.1 Mounting position

The mounting position defines the spatial orientation of the gear unit housing and is designated **M1..M6**.

Definition

The mounting position of the combined gear unit corresponds to the planetary stage. The mounting position of the primary gear unit is specified as an angle. Different mounting positions result from the angle of view of the primary gear unit. For further information, refer to the following chapter "Mounting positions of primary gear units" (→ 🗎 60).

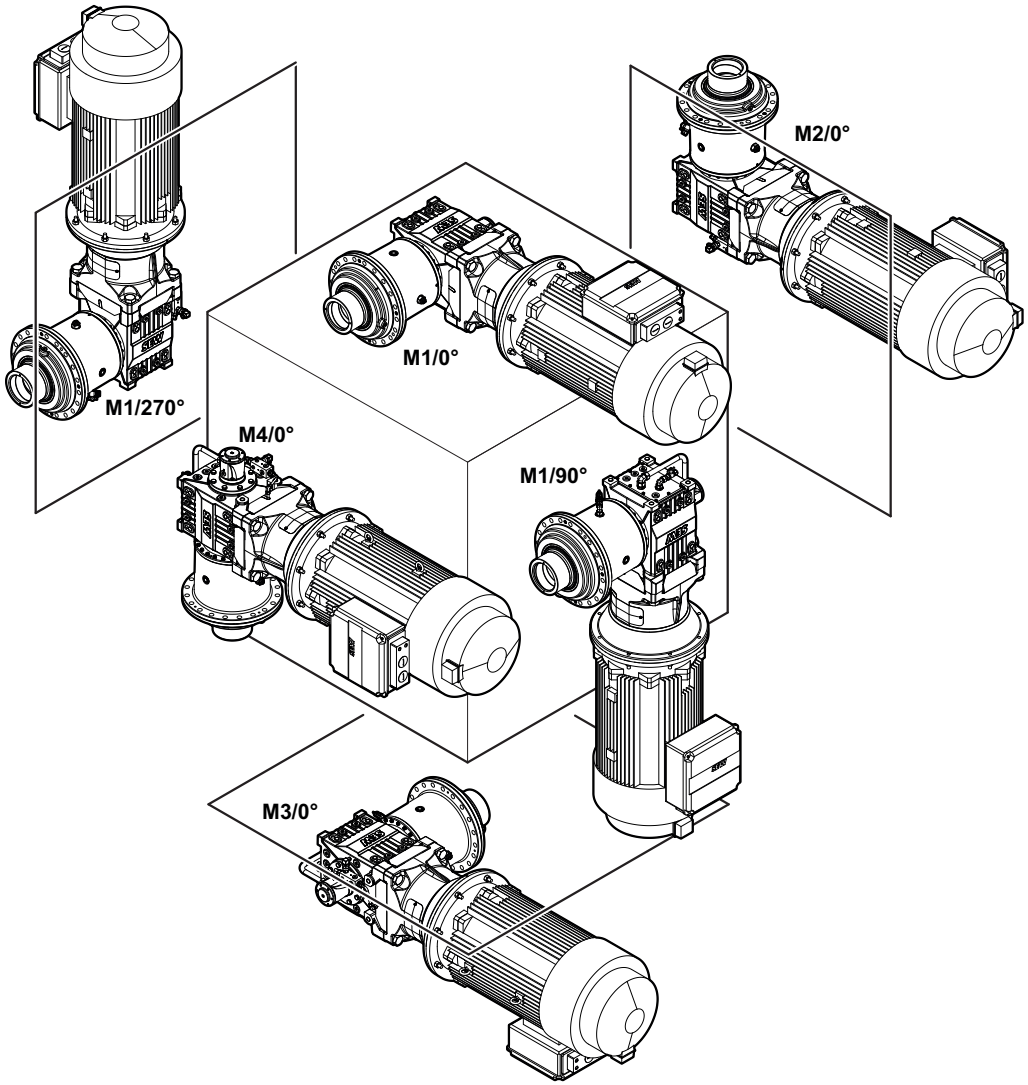

50747862667

33091900/EN – 12/2025

5.2 Fixed and variable pivoted mounting positions

Mounting positions deviating from the standard are differentiated between **fixed** and **variable** pivoted mounting positions.

INFORMATION

- Fixed and variable pivoted mounting positions are only possible after consultation with SEW-EURODRIVE. Observe the order documents, e.g. the dimension sheet.
- Fixed and variable pivoted mounting positions may involve restrictions for accessories and technical data and possibly longer delivery times. Contact SEW-EURODRIVE.

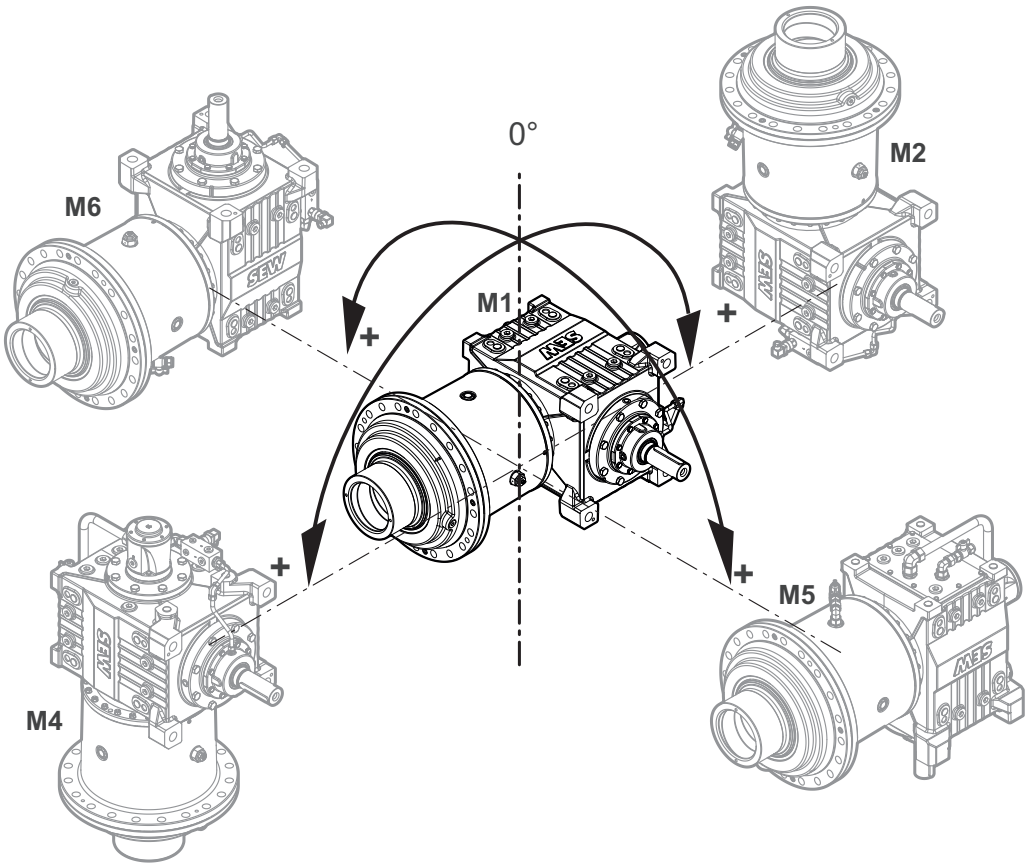

50747865099

33091900/EN – 12/2025

5.2.1 Fixed pivoted mounting position

Definition:

Gear units with fixed pivoted mounting position have a fixed mounting position that differs from the standard.

This means the gear unit does not change its mounting position during operation.

Example:

The type designation is set up as follows:

M1 = Initial mounting position

M5 = Pivoting direction

9° = Fixed pivoting angle

Pivoted from mounting position M1 to M5 by 9°

This results in the following fixed pivoted mounting position:

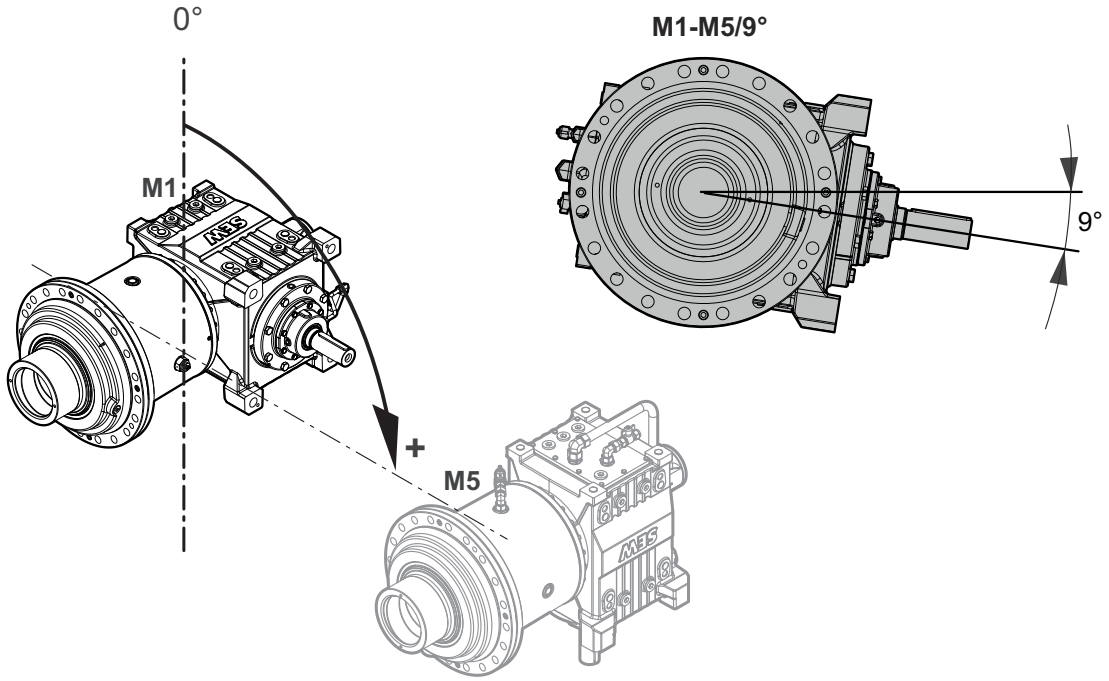

50747857803

The oil level is checked in the selected fixed pivoted mounting position.

The fixed pivoted mounting position is shown on the nameplate.

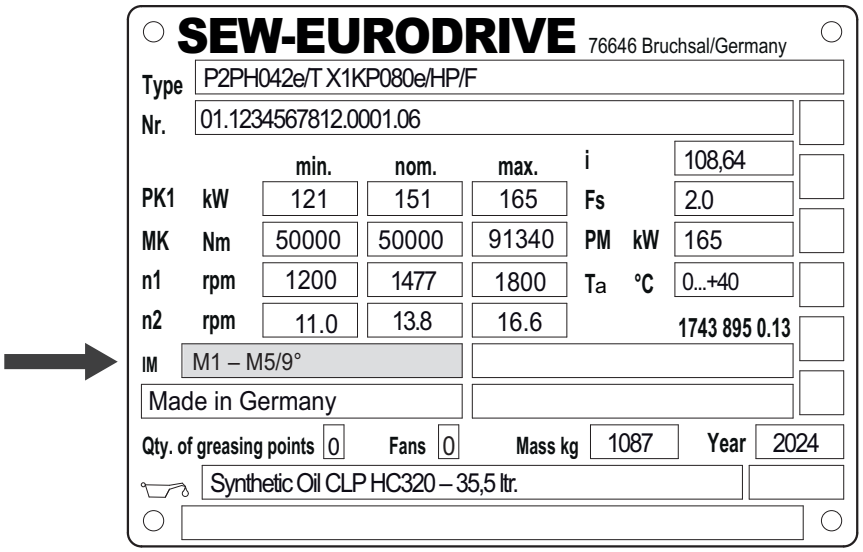

9007251334742027

33091900/EN – 12/2025

5.2.2 Variable pivoted mounting position

Definition:

Gear units with variable pivoted mounting position can change the mounting position during operation **variably** within the specified max./min. range.

Example:

The gear unit is operated in variable pivoted mounting position M1 to M2 by 9° and M1 to M4 by 12°.

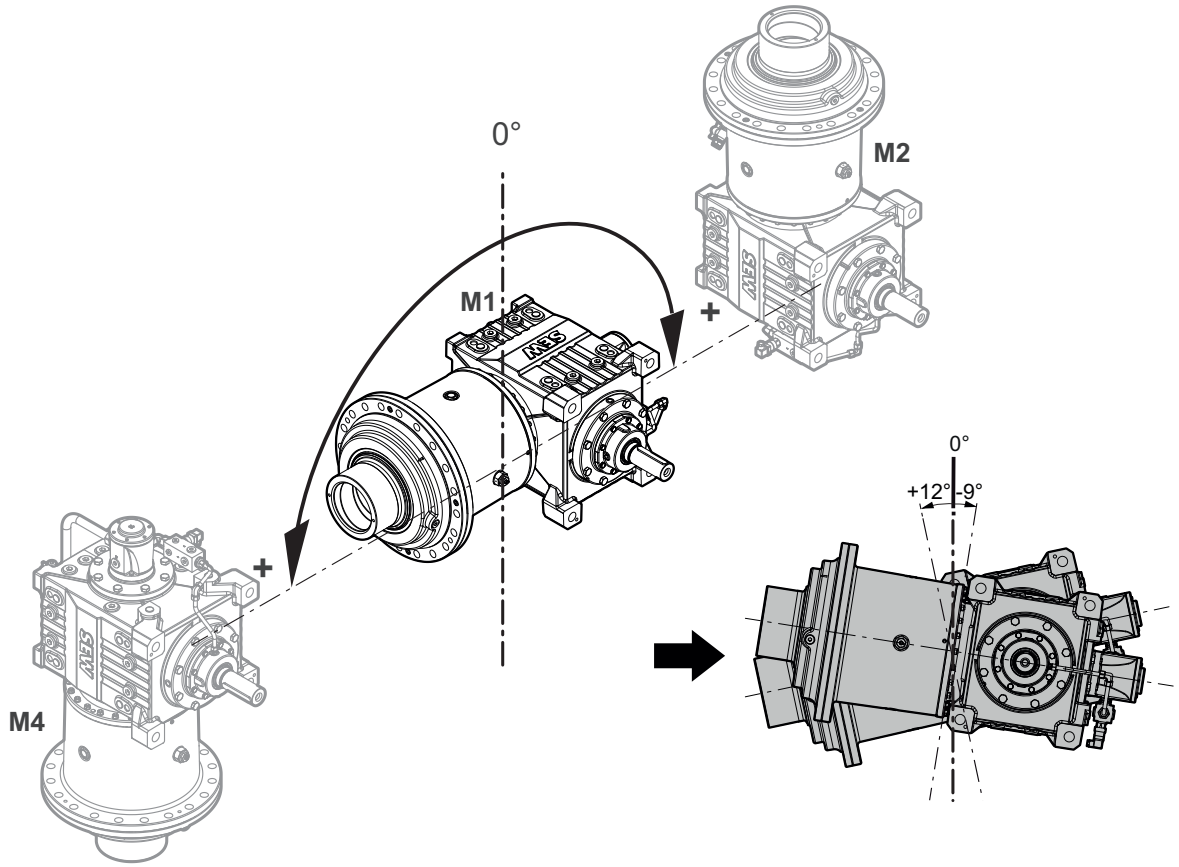

50751763595

Step 1:

The largest pivoting angle determines the positive pivoting direction (12° > 9°). In this example, this is 12° towards M4.

Pivoted from M1 to M4 by +12°

33091900/EN – 12/2025

Pivoted from M1 to M2 by -9°

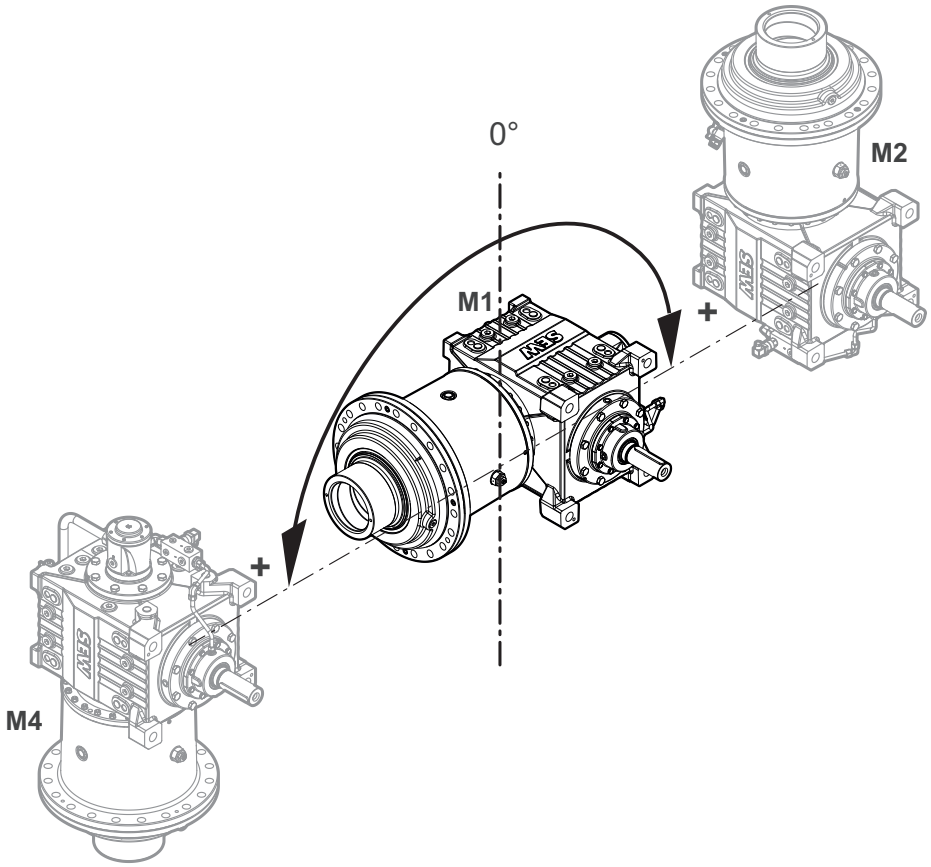

50751758731

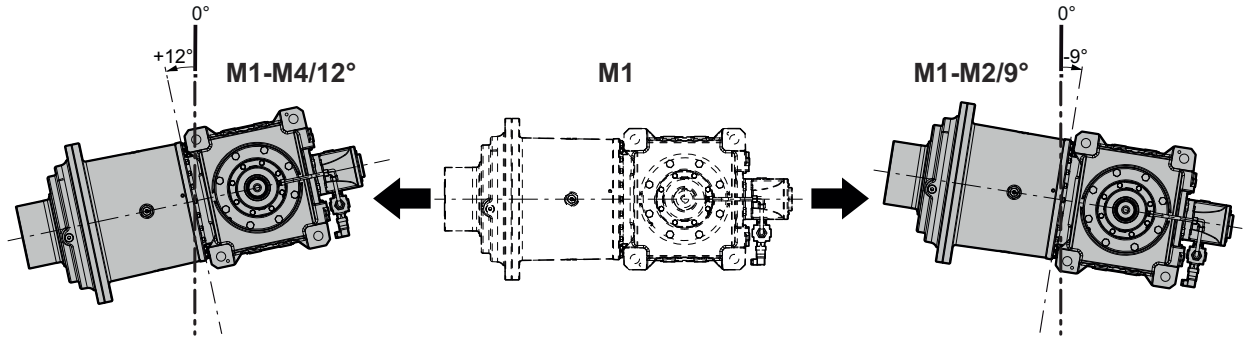

50751761163

This example results in the following type designation:

M1 – M4/-9° – 12°

M1 = Initial mounting position

M4 = Pivoting direction

12° = 12° from M1 to M4

-9° = 9° from M1 to M2 (= -9° from M1 to M4)

The variable pivoted mounting position is shown on the nameplate.

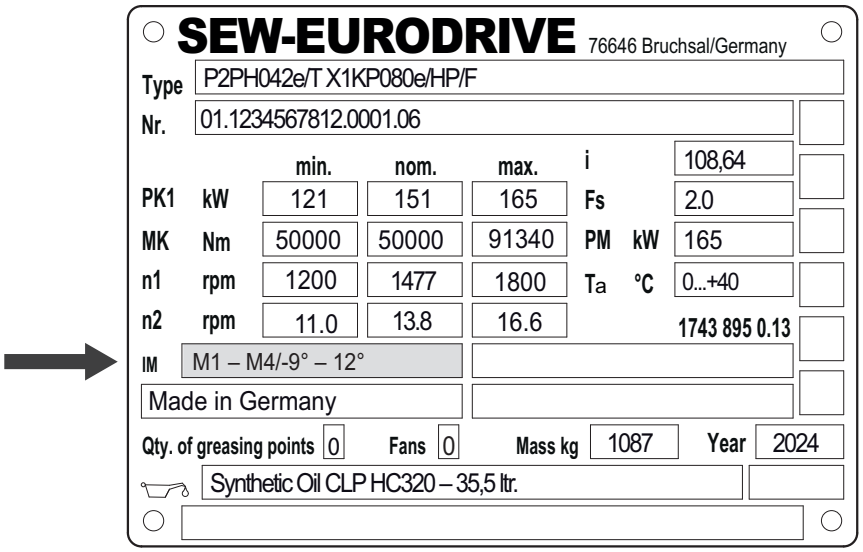

9007251334739083

Step 2:

With variable pivoted mounting positions, the customer must specify the pivoting angle in which the oil level is checked.

An additional nameplate is used to clearly indicate the oil check angle. This nameplate indicates the mounting position for checking the oil level.

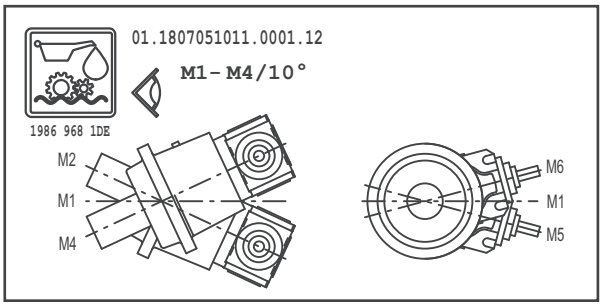

9007213873586187

5.2.3 Combination of fixed and variable pivoted mounting positions

Fixed and variable pivoted mounting positions can be combined.

Example:

The following example shows a combination of a fixed and variable pivoted mounting position.

The type designation is set up as follows:

M1 – M4/9° (Fixed pivoted mounting position)

M1 = Initial mounting position

M4 = Pivoting direction

9° = Fixed pivoting angle

M1 – M6/-9° – 12° (Variable pivoted mounting position)

M1 = Initial mounting position

M6 = Pivoting direction

12° = 12° from M1 to M6

-9° = 9° from M1 to M5 (= -9° from M1 to M6)

The fixed and variable pivoted mounting position are shown on the nameplate.

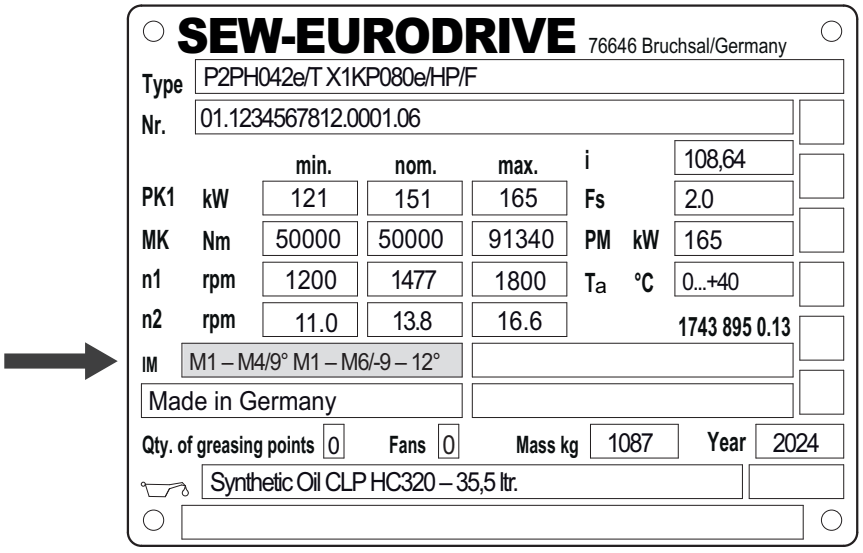

9007251335849099

When combining fixed and variable pivoted mounting positions, the customer must specify the variable pivoting in which the oil level is checked. The fixed angle for the oil level check is already defined.

The gear unit has an additional nameplate for correct oil level checks. This nameplate indicates the mounting position for checking the oil level.

33091900/EN – 12/2025

In this example, the user checks the oil level at M1 – M4/9° M1 – M6/10°.

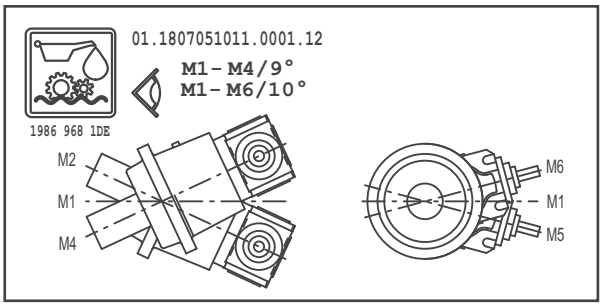

9007213873588619

33091900/EN – 12/2025

6 Important order information

6.1 Mounting positions of primary gear units

The following information is defined.

P... M1	
X1KP 0° (M1)	X1KP 270° (M4)
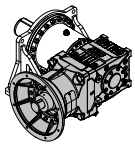	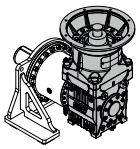
X1KP 90° (*)	X1KP 180° (M3)
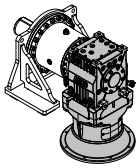	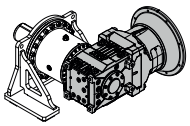

P... M2	
X1KP 0° (*)	X1KP 270° (*)
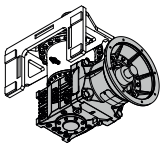	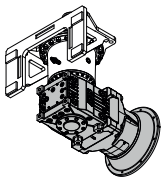
X1KP 90° (*)	X1KP 180° (*)
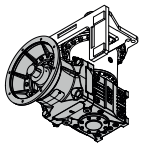	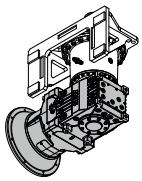

P... M3	
X1KP 0° (M3)	X1KP 270° (*)
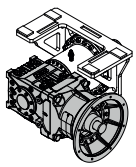	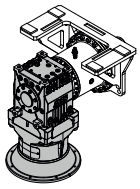
X1KP 90° (M4)	X1KP 180° (M1)
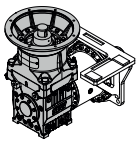	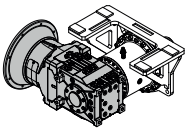

P... M4	
X1KP 0° (M5)	X1KP 270° (M5)
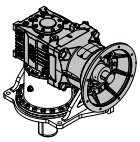	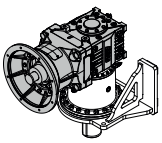
X1KP 90° (M5)	X1KP 180° (M5)
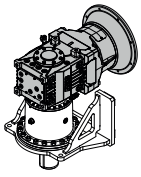	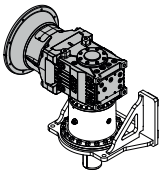

P... M5	
X1KP 0° (*)	X1KP 270° (M1)
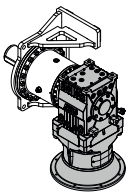	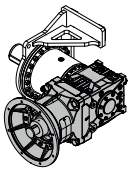
X1KP 90° (M3)	X1KP 180° (M4)
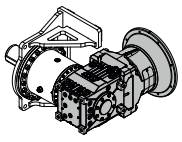	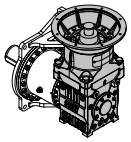

P... M6	
X1KP 0° (M4)	X1KP 270° (M3)
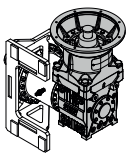	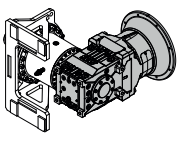
X1KP 90° (M1)	X1KP 180° (*)
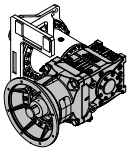	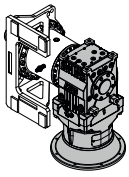

33091900/EN – 12/2025

M1/M2/M3/M4/M5/M6 = Mounting positions of the gear unit position
0°/90°/180°/270° = Mounting position of the X1KP..e bevel-helical gear unit
(*) In case of this mounting position, contact SEW-EURODRIVE.

6.2 Position of motor terminal box and cable entry

The position of the motor terminal box has so far been indicated with 0°, 90°, 180° or 270° as viewed onto the fan guard (see figure below). A change in the product standard EN 60034 specifies that the following designations will have to be used for terminal box positions for foot-mounted motors in the future:

- As viewed onto the output shaft = A-end
- Designation as R (right), B (bottom), L (left) and T (top)

This new designation applies to foot-mounted motors without a gear unit in mounting position B3 (= M1). For gearmotors, the previous designation is retained. The following figure shows both designations. If the mounting position of the motor changes, R, B, L and T are rotated accordingly.

The position of the cable entry can be selected as well. Available positions are "X" (= standard position), "1", "2" or "3" (see the following figure).

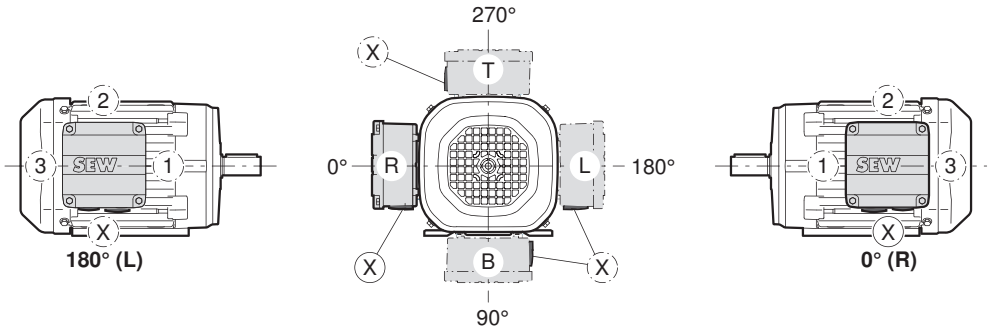

9007205555740427

Unless other information is given regarding the terminal box, the 0° type (R) with "X" cable entry will be supplied.

INFORMATION

When the terminal box is in the 90° (B) position, check to see if the planetary gearmotor has to be supported.

6.3 Torque arm

The torque arm can be enclosed in the delivery or can be mounted according to customer requirements.

The retaining screws are included in the scope of delivery.

The position of the torque arm is determined as looking onto the output shaft (mounting position **0°, 90°, 180°, 270°**).

INFORMATION

Different mounting positions are possible depending on the angle division (number of retaining screws).

The following figure shows an example of the mounting position of the torque arm.

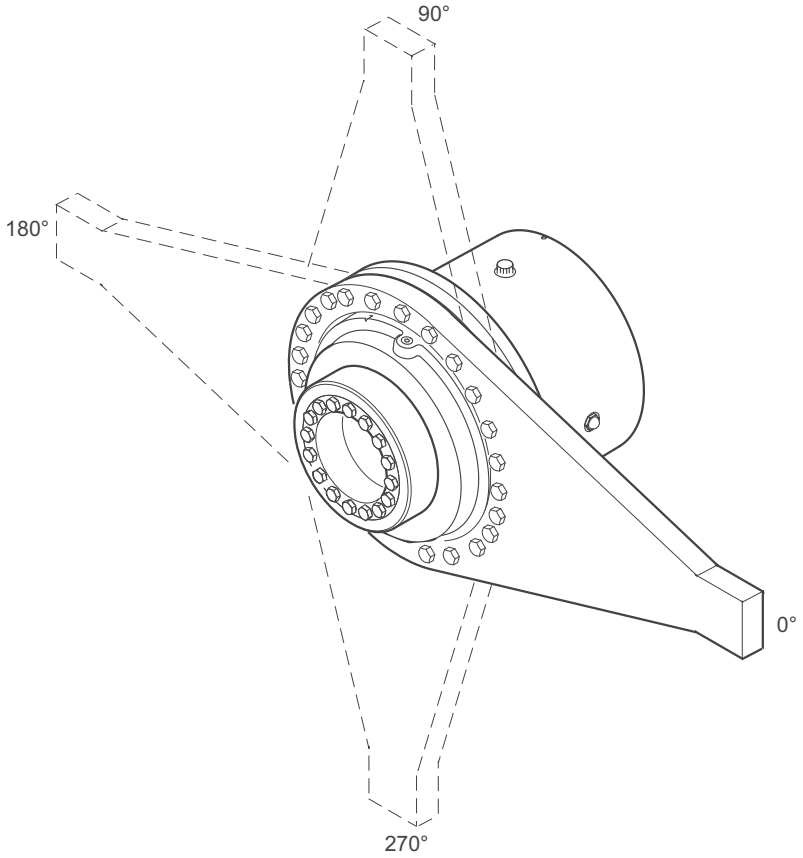

27021604065225867

33091900/EN – 12/2025

6.4 Order example

Type	Mounting position planetary gear unit	Mounting position		Additional feature
		Primary gear unit	Torque arm	
P2P.042 X1KP080e/HP/F	M1	270° (M4)	0°	LSS labyrinth seal

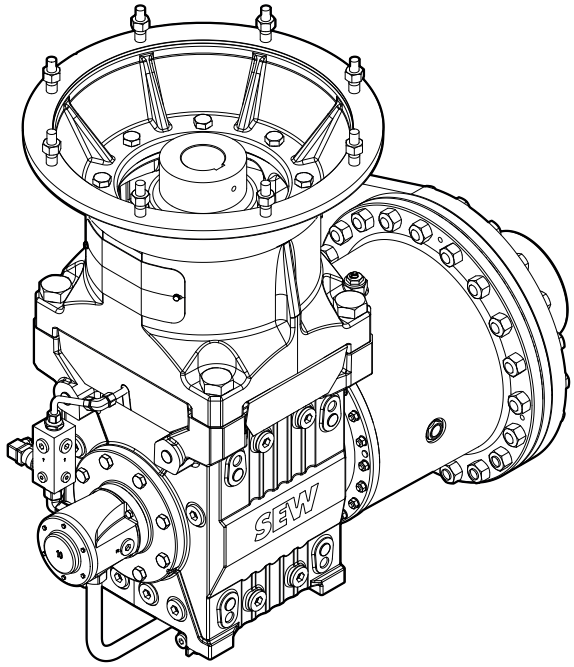

33091900/EN – 12/2025

7 Project planning for gear units

7.1 Project planning procedure

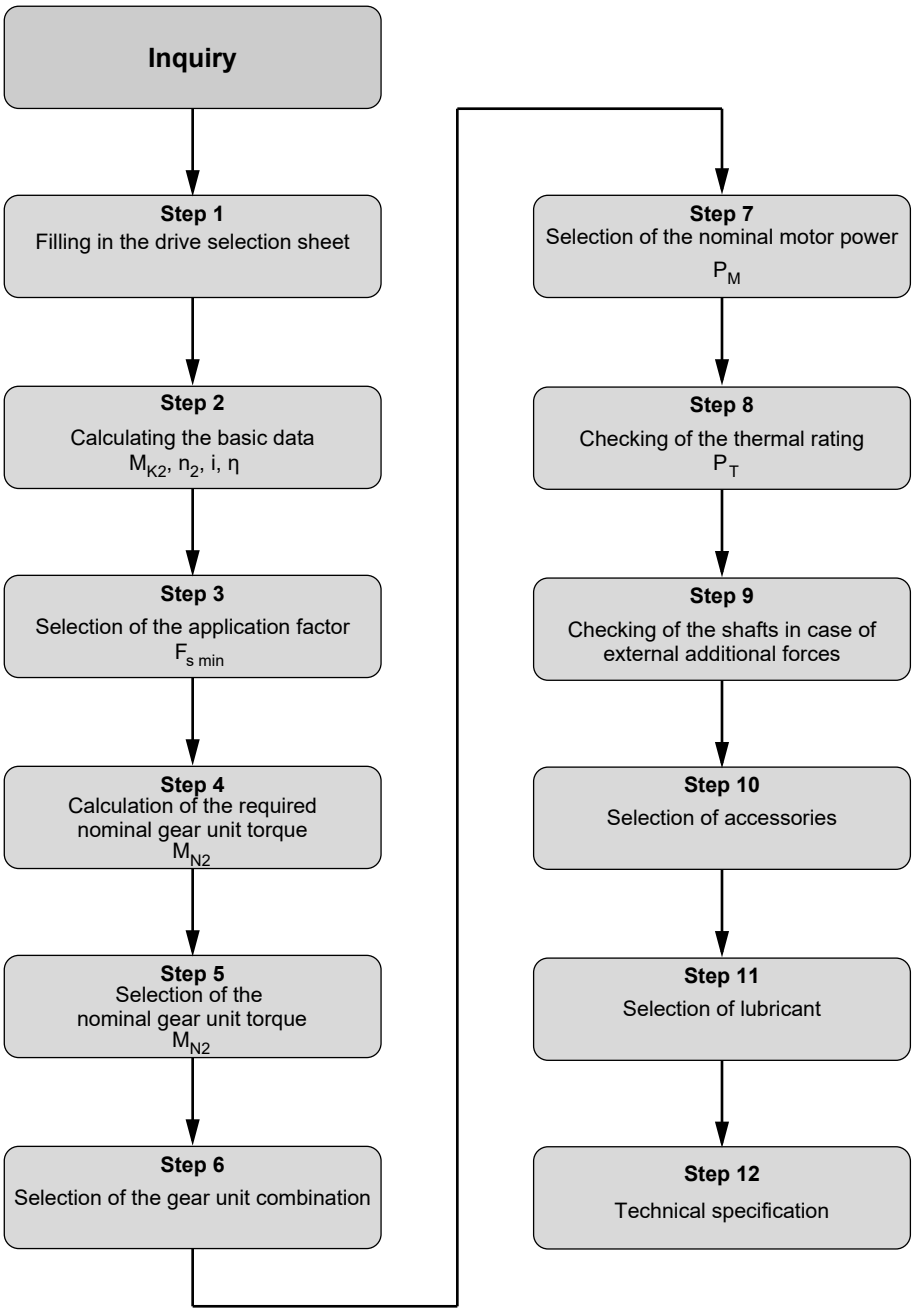

40000949899

33091900/EN – 12/2025

7.1.1 Step 1: Drive selection data:

1. Machine on LSS (normally a driven machine)

Key: [...] = Values to be filled in
[X] = Mark your selection with ☒

1.1 Area of application/industry [...]

1.2 Application [...]

1.3 Ambient temperature [°C] [...]

normal | min. | max.

1.4 Installation altitude [m] [...]

1.5 Gear unit installation [X]

- ☐ Small space ($v_a \geq 0.5$ m/s)
- ☐ Large spaces and halls ($v_a > 1.4$ m/s)
- ☐ Outdoors with sun protection ($v_a > 3$ m/s)

1.6 Ambient conditions [X]

- ☐ Normal
- ☐ Dusty
- ☐ Damp
- ☐ Corrosive
- ☐ Dry

2. Load characteristics

2.1 Required speed n_2 [1/min] [...]

normal | min. | max.

2.2 Operating power on HSS P_{K1} [kW] [...]

normal | min. | max.

2.3 Operating torque on LSS M_{K2} [Nm] [...]

normal | min. | max.

2.4 Frequency of load peaks ($M_{K2\ max.}$ or $P_{K1\ max.}$)

per hour

2.5 Number of startups per hour [...]

Startups

2.6 Service life [X]

- ☐ Infinite fatigue strength (Gearing acc. to DIN 3990)
- ☐ Defined service life [h]

2.7 Direction of rotation under load (LSS) [X]

- ☐ CW rotation
- ☐ CCW rotation
- ☐ Both directions of rotation
- ☐ Reversible

2.8 Operating time/day [X]

- ☐ < 3 hours
- ☐ 3 – 10 hours
- ☐ > 10 hours

2.9 Backstop required [X]

- ☐ No
- ☐ Yes

2.10 Exact load cycle attached [X]

- ☐ No
- ☐ Yes

3. Machine on HSS (normally a drive machine)

3.1 Type: [X]

☐ AC motor ☐ AC motor/inverter ☐ DC motor
☐ Hydraulic motor ☐ Servomotor

3.2 Motor power P_M [kW] [...]

normal | min. | max.

3.3 Motor speed n_M [1/min] [...]

normal | min. | max.

3.4 Motor torque M [Nm] [$_M$]

normal | min. | max.

3.5 Input speed n_1 [1/min] [...]

normal | min. | max.

3.6 If electric motor: [X] [...]

- ☐ IEC
- ☐ NEMA

Motor size (IEC or NEMA code):

3.7 Motor mounting position [X] [...]

- ☐ B3
- ☐ B5
- ☐ V1
- ☐ Other:

33091900/EN – 12/2025

4.0 Gear unit requirements

4.1 Mounting position [X]

- ☐ M1
- ☐ M2
- ☐ M3
- ☐ M4

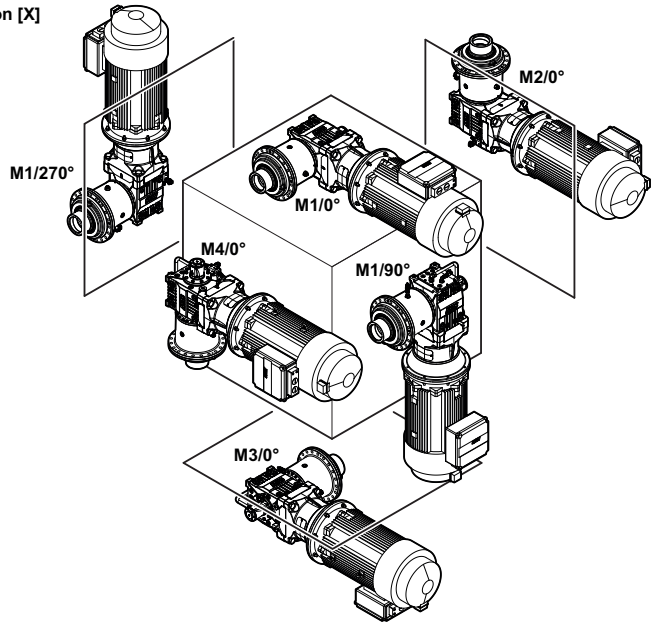

4.2 Mounting position of primary gear unit [X]

P2.e M1	
X1KP 0° (M1)	X1KP 270° (M4)
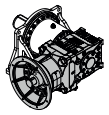	
X1KP 90° (*)	X1KP 180° (M3)
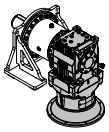	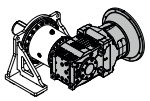

P2.e M2	
X1KP 0° (*)	X1KP 270° (*)
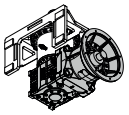	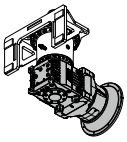
X1KP 90° (*)	X1KP 180° (*)
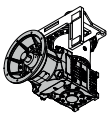	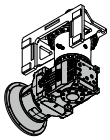

P2.e M3	
X1KP 0° (M3)	X1KP 270° (*)
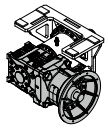	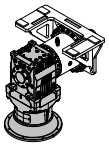
X1KP 90° (M4)	X1KP 180° (M1)
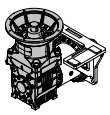	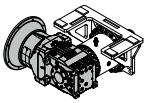

P2.e M5	
X1KP 0° (*)	X1KP 270° (M1)
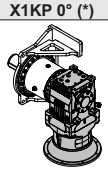	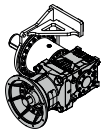
X1KP 90° (M3)	X1KP 180° (M4)
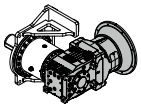	

P2.e M4	
X1KP 0° (M5)	X1KP 270° (M5)
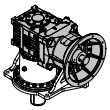	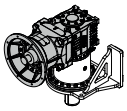
X1KP 90° (M5)	X1KP 180° (M5)
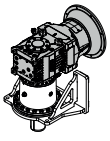	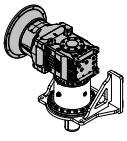

P2.e M6	
X1KP 0° (M4)	X1KP 270° (M3)
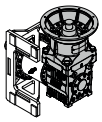	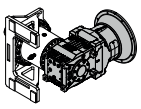
X1KP 90° (M1)	X1KP 180° (*)
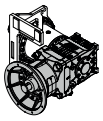	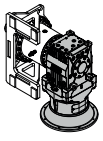

33091900/EN – 12/2025

4.3 Application-specific operating factor $F_{S\ min.}$ [X] [...]

☐ In relation to motor power P_M / motor torque M_M

☐ Operating power at LSS P_{K2} / operating torque at LSS M_{K2}

4.4 Assembly of gear unit housing [X]

☐ Foot
☐ Flange
☐ Torque arm

4.5 LSS connection to customer machine shaft [X] [...]

☐ Elastic coupling (claw or bolt coupling)
☐ Flexible coupling
☐ Rigid flange coupling
☐ Barrel coupling
☐ Sprocket
☐ Pinion
☐ Hollow shaft – torque arm
☐ Hollow shaft – foot mounting
☐ Hollow shaft – flange mounting
☐ Other

4.6 LSS gear unit design [X] [...]

LSS design (if with solid shaft)

☐ Solid shaft with key
☐ Solid shaft with 2 keys
☐ Solid shaft without keyway
☐ Smooth shaft
☐ Solid shaft with splined hollow shaft DIN 5480
☐ Other

LSS design (if with hollow shaft)

☐ Hollow shaft for shrink disk connection, including shrink disk
☐ Splined hollow shaft DIN 5480
☐ Other

4.7 HSS connection to motor [X]

☐ Customer installation (base frame)
☐ Motor adapter with elastic coupling
☐ Motor bracket with V-belt drive
☐ Motor scoop
☐ Other, see sketch

4.8 Machine shaft bearings

☐ 2 bearings, gear unit transmits only the torque
☐ 1 bearing opposite the gear unit, gear unit acts as a point of support
☐ 1 bearing right at the gear unit, gear unit acts as a point of support

4.9 Forces acting on the input shaft HSS [X] [...]

	Shaft 0
Axial force F_A [kN]	
Radial force F_R [kN]	
Distance from shaft shoulder X [mm]	
Application angle of the radial force α [°]	

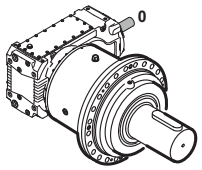

or variable ☐

4.10 Forces at the LSS [X] [...]

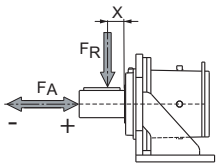

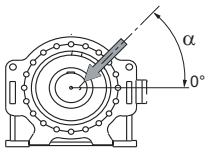

	normal	min.	max.
Axial force F_{A2} [N]			
Radial force F_{R2} [N]			
Distance from shaft shoulder X [mm]			

Application angle of radial force α [°]

or variable ☐

4.11 Electric power supply [X] [...]

	AC 3-phase	AC 1-phase	DC		
Line voltage V_{line}	☐	☐	☐	V	HZ
Auxiliary voltage V_{aux}	☐	☐	☐	V	HZ

Degree of protection: IP

Explosion protection required: ☐ Yes ☐ No

4.12 Permitted cooling (if required) [X]

	Permitted	Not permitted
Fan	☐	☐
Cooling cartridge	☐	☐
External oil-air cooler	☐	☐
External oil-water cooler	☐	☐

Cooling water available: ☐ Yes ☐ No

Cooling water temperature: °C

3309100/EN – 12/2025

7.1.2 Step 2: Calculation of basic data – M_{K2}, n_2, i, η

Constant torque	$M_{K2} = \frac{P_{K1} \times 9550 \times \eta}{n_2}$ Note: If P_{K1} is unknown → $P_{K1} = P_M$ M_{K2} = Operating torque on LSS in Nm P_{K1} = Required operating power at HSS in kW n_2 = Output speed (LSS) in min^{-1}
Gear ratio	$i = \frac{n_1}{n_2}$ n_1 = Input speed (HSS) in min^{-1} n_2 = Output speed (LSS) in min^{-1}
Efficiency – η	η = f (i; gear unit type) The efficiency of the gear units is mainly determined by the gearing and bearing friction as well as by churning losses. For the calculation, an approximate value of 96% is used.

7.1.3 Step 3: Selection of the application factor

- Application-specific service factor $F_{S\ min}$

Application-specific service factor – $F_{S\ min}$ and peak load

The application-specific service factor takes into account all continuously occurring dynamic torques that are applied to the gear unit from outside beyond nominal operation based on the application factor according to DIN 3990.

These torques depend on the following factors and apply to gear units with even power demand:

- The characteristics of the driving and driven machine
- The size and distribution of the mass moments of inertia
- The spring stiffness in the drive and output train (shafts and couplings, etc.)
- Preventive measures such as safety clutches
- The operating conditions

Furthermore, an additional check for peak loads is required only if this condition does not apply. This is necessary, for example, for intermittent duty, operation with extreme, repeated shock loads, etc.

In general, the gear units can be loaded with up to twice the nominal gear unit torque for a limited number of load changes.

In this specific case, we recommend contacting SEW-EURODRIVE.

The application-specific service factor $F_{S\ min}$ takes account of the typical load behavior with regard to the driven machine. When determining the application-specific service factor $F_{S\ min}$, at least a value of 1.40 must be taken into account.

Recommended values in relation to

- Area of application
- Type of driven machine

are listed in the table below.

33091900/EN – 12/2025

INFORMATION

These tables apply only to gear units driven by electric motors. For other types of driving motors, the following correction values apply:

- Combustion engines with 4 or more cylinders:
  - $F_{S\,min}$ (selection table) + 0.25
- Combustion engines with 1 to 3 cylinders:
  - $F_{S\,min}$ (selection table) + 0.5

In the event of deviations from the typical load behavior, consult SEW-EURODRIVE.

Area of application	Type of application (driven machine)	Application-specific service factor $F_{S\,min}$
Wastewater treatment	Impeller aerators	2.00
	Thickeners	1.50
	Vacuum filters	1.50
	Accumulators	1.50
	Screw pumps	1.50
	Brush aerators	2.00
Mining	Crushers	2.00
	Shakers and screens	2.00
	Slewing gears	1.80
	Bucket-wheel excavators	1)
Energy	Frequency inverters	2.00
	Water wheels (rotating slowly)	1.70
	Water turbines	1)
Conveyor systems	Bucket elevators	1.50
	Vertical conveyors – other	1.80
	Belt conveyor ≤ 100 kW	1.40
	Belt conveyor > 100 kW	1.50
	Apron feeders	1.50
	Feeding screw	1.50
	Shakers, screens	2.00
	Escalators	1.50
	Passenger elevators	1)
Rubber and plastics industry	Extruders (plastic)	1.60
	Extruders (rubber)	1.80
	Rubber rollers (2 consecutive)	2.00
	Rubber rollers (3 consecutive)	1.75
	Heated rollers	1.75
	Calenders	1.65
	Mills	2.00
	Mixing rollers	1)
	Slab rollers	2.00
	Refining rollers	2.00
	Tire machine	1)
Wood industry	Wood industry	1)
Crane systems	Cranes and hoists	2)
Food industry	Crushers and mills	1.75
	Beet cutters	1.50
	Drying drums	1.50

33091900/EN – 12/2025

Area of application	Type of application (driven machine)	Application-specific service factor $F_{S\ min}$
Metal production and processing	Winders	1.75
	Cutting rollers	2.00
	Table conveyors, single drive	1)
	Table conveyors, group drive	1)
	Table conveyors, running in and out	1)
	Wire drawing machines	1.75
	Rollers	1)
Mills and drums	Cooling and drying drums	1.60
	Rotary kilns	2.00
	Ball mills	2.00
	Coal mills	1.75
Paper and pulp industry	Debarking drums and barkers	-
	Rollers (pick-up, wire drive, and wire suction)	2.00
	Drying cylinders (rolling bearing)	2.00
	Calenders (rolling bearing)	2.00
	Filters (pressure and vacuum)	2.00
	Beaters and chippers	2.00
	Jordan mills	1.75
	Presses (bark, felt, glue, suction)	1.75
	Reels	1.75
	Pulpers	1)
	Washer filters	1.50
	Yankee cylinders (dryers)	1)
Pumps	Centrifugal pumps	1.45
	Reciprocating pumps (single-cylinder)	1.80
	Reciprocating pumps (multi-cylinder)	1.50
	Screw pumps	1.50
	Rotary pumps (gear wheel, wing pumps)	1)
Agitators and mixers	Agitators for liquids	1.50
	Agitators for liquids (variable density)	1.65
	Agitators for solids (non-uniform material)	1.70
	Agitators for solids (uniform material)	1.40
	Concrete mixers	1.50
Cableways	Material ropeways	1.50
	Aerial tramways	1)
	Surface lifts	1)
	Continuous aerial tramways	1)
	Funicular railways	1)
Fans	Heat exchangers	1.50
	Dry cooling tower	2.00
	Wet cooling tower	2.00
	Blowers (axial and radial)	1.50
Compressors	Reciprocating compressors	1.90
	Radial compressors	1.50
	Screw-type compressors	1.75

1) Contact SEW-EURODRIVE

2) Contact SEW-EURODRIVE; dimensioning according to FEM1001

33091900/EN – 12/2025

7.1.4 Step 4: Calculating the required nominal gear unit torque – M_{N2}

Constant load direction – constant torque:

$$M_{N2} \geq M_{K2} \times F_{S\min}$$

M_{N2} = Nominal gear unit torque in Nm
M_{K2} = Operating torque at LSS in Nm
$F_{S\ min}$ = Application-specific service factor

Reversing load direction – constant torque:

$$M_{N2} \geq M_{K2} \times F_{S\min} \times f_{rev}$$

M_{N2} = Nominal gear unit torque in Nm
M_{K2} = Operating torque at LSS in Nm
$F_{S\ min}$ = Application-specific service factor
f_{rev} = Reversing factor

Depending on the ratio of the load between the two directions of rotation, the reversing factor must be assumed according to the following table. The values apply as an example to the load ratio. If the load ratio differs, contact SEW-EURODRIVE.

Load ratio of the directions of rotation	Factor f_{rev}
100%	1.43
50%	1.25
10%	1.0

7.1.5 Step 5: Selecting the planetary gear unit size – M_{N2}

Size	M_{N2}
P..002e	24830
P..012e	36810
P..022e	51190
P..032e	69620
P..042e	100170
P..052e	124060
P..062e	185660
P..072e	245660
P..082e	359400
P..092	423000
P..102	500000

33091900/EN – 12/2025

7.1.6 Step 6: Selection of the gear unit combination

The selection of the gear unit combination is based on the nominal gear unit torque M_{N2} according to the speed/power overview tables in chapter "Selection tables".

If the input speed n_1 **<** 1000 min^{-1}, the value for 1000 min^{-1} can be used for M_{N2}.

For input speeds n_1 **>** 1800 min^{-1}, contact SEW-EURODRIVE.

The following figure shows the structure of the selection tables.

P.002e X1KP060e					
n_1 min^{-1}	i_{nom}	i_{ex}	M_{n2} Nm	n_2 min^{-1}	P_{N1} kW
1000	22.4	21.19	24830	47.2	127
	25	24.28	24830	41.2	111
	28	27.17	24830	36.8	99
	31.5	31.18	24830	32.1	87
	35.5	37.12	24830	26.9	73
	40	41.30	24830	24.2	65
	45	46.80	24830	21.4	58
	50	47.74	24830	20.9	57
	56	54.37	24830	18.4	50
	63	60.20	24830	16.6	45
	71	69.93	24830	14.3	39
	80	76.25	24830	13.1	36
	90	88.58	24830	11.3	31
	100	108.22	24830	9.2	25
	112	108.22	24830	9.2	25
	125	119.27	24830	8.4	23
	140	138.55	24830	7.2	20

9007254110606347

n_1 = Input speed
i_{nom} = Nominal gear unit ratio
i_{ex} = Exact gear unit ratio
M_{N2} = Nominal gear unit torque
n_2 = Output speed
P_{N1} = Nominal gear unit power (in relation to HSS)

7.1.7 Step 7: Selection of the nominal motor power P_M; output torque – M_a.

$$P_M \geq P_{K1} = \frac{P_{K2}}{\eta}\, kW$$

P_M = Nominal motor power in kW
P_{K1} = Operating power at HSS in kW
P_{K2} = Operating power at LSS in kW
η = Efficiency

$$M_a = \frac{P_{K1} \times 9550 \times \eta}{n_2}$$

M_a = Output torque in relation to nominal motor power in Nm
n_2 = Output speed on LSS min^{-1}

33091900/EN – 12/2025

7.1.8 Step 8: Checking of the thermal rating – P_T

The thermal rating P_T of a gear unit is the power that a gear unit can transmit continuously without exceeding a specific oil temperature.

The thermal rating P_T depends on the following factors:

- Ambient temperature
- Air circulation and sunlight exposure at the installation site
- Installation altitude
- Heat conduction to the base at the installation site
- Gear unit type, size and gear ratio
- External cooling type of the gear unit
- Lubrication type of the gear unit
- Lubricant type
- Cyclic duration factor

For the following ambient conditions, the thermal rating can be read directly from the selection tables:

- Ambient temperature 20 °C
- Installation in a large hall (air velocity ≥ 1.4 m/s)
- Self-cooling or cooling with fan in motor adapter
- Base as steel support structure
- Installation altitude < 1000 m above sea level

INFORMATION

- For other ambient temperatures and lubrication types, you can calculate the thermal rating P_T using the temperature factor f_T and the lubrication factor f_L. The resulting calculation results are approximate values. Contact SEW-EURODRIVE to determine the exact values.
- Sufficient protection from direct sunlight is absolutely necessary when installed outdoors. If the gear unit cannot be protected against direct sunlight, the thermal calculation must take the actual sunlight in kW/m^2 into account.

$$P_T = P_{TH} \times f_1 \times f_T$$

P_T = Thermal rating of the gear unit in kW

P_{TH} = Nominal thermal rating of the gear unit in kW. The values in chapter "Selection tables" depend on type of cooling, mounting position and lubrication type.

f_1 = Altitude factor

f_T = Temperature factor

33091900/EN – 12/2025

Altitude factor f_1

The following table lists the altitude factor f_1.

Altitude factor	Altitude H in m above sea level				
	up to 999	1000 - 2000	2000 - 3000	3000 - 4000	4000 - 5000
f_1	1.00	0.95	0.91	0.87	0.83

Temperature factors f_T

The following table shows the temperature factor f_T depending on the lubrication type, ambient temperature, and cooling option.

Temperature factor f_T					
	Without additional cooling or with fan				
Lubrication type	Ambient temperature in °C				
	10	20	30	40	50
Splash lubrication	1.15	1	0.85	0.7	0.55

$$P_T < \frac{1}{3} \times P_{N1}$$

→ Contact SEW-EURODRIVE

P_T = Thermal rating of the gear unit in kW

P_{N1} = Nominal gear unit power

The gear unit's thermal rating must be at least as large as the operating power on the input shaft HSS.

$$P_T \geq P_{K1}$$

P_T = Thermal rating of the gear unit in kW

P_{K1} = Operating power at HSS in kW

33091900/EN – 12/2025

7.1.9 Step 9: Checking of the shafts in case of external additional forces

Checking the shaft strength

The shaft strength is checked for permissibility according to the following table.

$$S_{St} = \frac{M_{b,all.1}}{F_R \times (x + x_s)} \geq 1$$

S_{St} = Static safety value
$M_{b,all.1}$ = Permitted bending moment in Nm (see table)
F_R = Radial load in kN
x = Force application point in mm
x_s = Correction factor (see table)

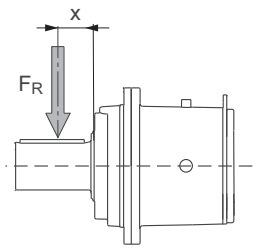

	P..002	P..012	P..022	P..032	P.042	P.052	P.062	P.072	P.082	P.092	P.102
$M_{b,all.1}$	17810	23240	31600	45760	51140	69480	96650	129420	161970	195080	254390
Value x_s	139.1	118.6	119.8	156	140.3	158.4	158.8	188	187	205.5	220.2

Checking the dynamic shaft strength according to the required service life

Use the following table to check the permitted dynamic shaft strength.

$$S_{Dy} = \frac{M_{b,ref} \times f_L}{F_R \times (x + x_D)} \geq 1 \qquad f_L = \left(\frac{100000}{n_2 \times L_h} \right)^{0.3}$$

S_{Dy} = Dynamic safety value
$M_{b,ref}$ = Permitted bending moment in Nm (see table)
f_L = Service life factor
F_R = Radial load in kN
x = Force application point in mm
x_D = Dynamic correction factor (see table)
n_2 = Output speed in min^{-1}
L_h = Required service life in h

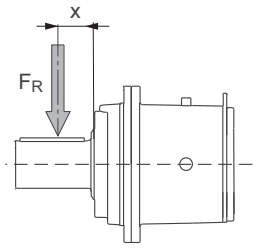

	P..002e	P..012e	P..022e	P..032e	P.042	P.052	P.062	P.072	P.082	P.092	P.102
$M_{b,ref}$	24000	27900	65100	82800	109700	152000	172400	163700	305200	455800	476100
Value x_D	159.2	125.8	227.4	301	319.5	374	334.6	278.6	403.2	563.5	472.4

33091900/EN – 12/2025

7.1.10 Step 10: Selection of the optional equipment/accessories

P..
- Oil drain valve
- Breather valve
- Torque arm
- Flange-mounted design

X2K..e
- Motor adapter
- Fan
- Pt100 temperature sensor

7.1.11 Step 11: Selection of lubricant

Lubricants can be chosen according to the lubricant table.

Output speeds $n_2 < 1.0\ min^{-1}$:

We recommend using CLP HC 320 synthetic lubricants in conjunction with fluorocarbon rubber oil seals to ensure the lubricating properties at low output speeds.

7.1.12 Step 12: Technical specification

PHF042/T X2KP110e/HP/F	
PHF..	Flange-mounted design, hollow shaft with shrink disk
042	Size
/T	Torque arm
X2KP	X series bevel-helical gear unit
110	Size
e	Generation e
/HP	Housing for planetary gear unit
/F	Flange-mounted design

33091900/EN – 12/2025

8 Lubricants

8.1 General information on selecting the oil

If no special arrangement is specified, SEW-EURODRIVE supplies the drives without oil filling.

INFORMATION

Before starting up the gear unit, the correct oil type and oil quantity must be filled in. Refer to the nameplate of the gear unit for the corresponding information.

The following tables provide an overview of mineral and synthetic oils.

8.1.1 Mineral oil

Standards

Lubricating oils are divided into ISO VG viscosity classes according to ISO 3448 and DIN 51519.

ISO class	ISO 6743-6 Designation	DIN 51517-3 Designation	AGMA 9005-D94 Designation
150	ISO-L-CKC 150	DIN 51517-CLP 150	AGMA 4 EP
220	ISO-L-CKC 220	DIN 51517-CLP 220	AGMA 5 EP
320	ISO-L-CKC 320	DIN 51517-CLP 320	AGMA 6 EP
460	ISO-L-CKC 460	DIN 51517-CLP 460	AGMA 7 EP
680	ISO-L-CKC 680	DIN 51517-CLP 680	AGMA 8 EP

8.1.2 Synthetic oil

Standards

Lubricating oils are divided into ISO VG viscosity classes according to ISO 3448 and DIN 51519.

ISO class	ISO 6743-6 Designation	DIN 51519 Designation	AGMA 9005-D94 Designation
150	ISO-L-CKT 150	CLP HC 150	AGMA 4 EP
220	ISO-L-CKT 220	CLP HC 220	AGMA 5 EP
320	ISO-L-CKT 320	CLP HC 320	AGMA 6 EP
460	ISO-L-CKT 460	CLP HC 460	AGMA 7 EP
680	ISO-L-CKT 680	CLP HC 680	AGMA 8 EP

In addition to the required oil viscosity, the oil must meet the following criteria:

- CLP oils according to DIN 51517-3
- Micro-pitting test according to FVA, FV no. 54/ I-IV, GFT class high, damage force level > 10

If synthetic oil is used, SEW-EURODRIVE recommends oil based on polyalphaolefin oils (CLP HC).

33091900/EN – 12/2025

8.2 Permitted lubricants

This chapter describes the permitted lubricants and the permitted temperatures for industrial gear units from SEW-EURODRIVE.

Observe the following information.

- The oil type and viscosity are selected by SEW-EURODRIVE specifically to the order. The information in the order confirmation and on the nameplate are decisive.
- Contact **SEW-EURODRIVE** in advance when using biological lubricants, food grade lubricants, or polyglycol oils.
- Check the compatibility of the used grease and oil.
- The tables contain only the lubricants approved by **SEW-EURODRIVE**.
- Note that oils of the same viscosity class may have different properties depending on the manufacturer. In particular, the minimum permitted oil bath temperatures are manufacturer-specific and listed in the lubricant tables.
- The minimum permitted oil bath temperatures depend on the used method of lubrication. These temperatures are specified in the lubricant tables. The values correspond to the maximum viscosity of the individual lubricants.
- The values specified in the tables correspond to the state at the time of printing. The data of the lubricants is subject to dynamic change by the lubricant manufacturers. For the latest information on lubricants, refer to https://www.sew-eurodrive.de/lubricants/

33091900/EN – 12/2025

8.2.1 Structure of the tables and abbreviations

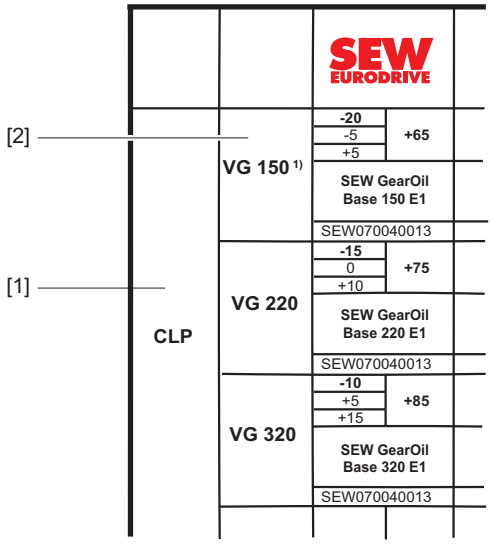

27021615684069515

[1] Lubricant type
[2] Viscosity class

Abbreviations

Icons	Designation
CLP	= mineral oil
CLP HC	= synthetic polyalphaolefin (PAO)
E	= ester-based oil
	= mineral lubricant
	= synthetic lubricant
	= lubricant for the food industry (**NSF H1**-compliant)
	= biodegradable oil (lubricant for agriculture, forestry, and water management)
1)	= lubricants may only be used if service factor $F_s \geq 1.3$

8.2.2 Explanation of the various lubricants

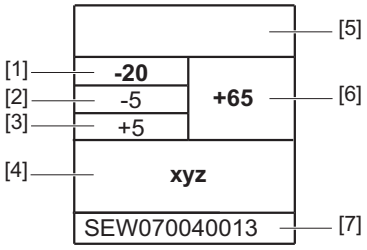

18014416413363467

[1] Lowest cold start temperature in °C for splash lubrication
[2] Lowest cold start temperature in °C for drives with pumps up to a max. oil viscosity of 5000 cSt[1)]
[3] Lowest cold start temperature in °C for drives with pumps up to a max. oil viscosity of 2000 cSt[1)]
[4] Trade name
[5] Manufacturer
[6] Highest oil bath temperature in °C[1)]
[7] Approvals

1) Service life is significantly reduced when exceeded. Observe chapter "Lubricant change intervals".

33091900/EN – 12/2025

8.2.3 Lubricant compatibility with oil seals

Approval	Explanation
SEW07004_ _13:	A lubricant especially recommended with regard to compatibility with the approved oil seals. The lubricant exceeds the state-of-the-art requirements regarding elastomer compatibility.

Permitted application temperature range of the oil seals

In the low temperature range, oil seals can withstand shaft deflections (e.g. through overhung load) only to a limited extent. Take special care to avoid or limit pulsating and changing radial displacements of the shaft. Contact SEW-EURODRIVE if necessary.

Oil seal material class	Permitted oil sump temperature
NBR	-40°C to +80°C
FKM	-25°C to +115°C
FKM-PSS	-25°C to +115°C

Limitations of use of oil seals with the specific lubricant are described in the following table:

Material class			Manufacturer		Material	
S	1	NBR	1	Freudenberg		72 NBR 902
			2	Trelleborg		4NV11
	2	FKM	1	Freudenberg	1	75 FKM 585
					2	75 FKM 170055
			2	Trelleborg	1	VCBVR

Examples:

S11: Only the elastomer 72NBR902 from Freudenberg meets the approval requirements in conjunction with the specific lubricant.

S2: Only the elastomer FKM meets the approval requirements in conjunction with the specific lubricant.

33091900/EN – 12/2025

8.2.4 GearOil by SEW-EURODRIVE – lubricant for gear units



With decades of experience in gear unit development and construction, as well as numerous customer applications, SEW-EURODRIVE has extensive tribological knowledge. On this basis and in accordance with long-term test runs, SEW-EURODRIVE has developed a special formulation for its own premium gear oil: GearOil by SEW-EURODRIVE – the optimum protection for SEW-EURODRIVE gear units.

By using high-quality base materials and additives as well as the appropriate logistics, SEW-EURODRIVE ensures the highest level of quality.

GearOil by SEW-EURODRIVE increases the performance of the gear unit, regardless of whether it is a standard, servo, or industrial gear unit. The premium gear oil reduces the friction between gear wheels by creating a very good lubrication film. This increases the service life of lubricant and wear parts, such as sealing rings and bearings. The high scuffing load capacity of the GearOil Base mineral lubricant (scuffing load capacity 14) improves protection from fretting on the gearing. At the same time, GearOil increases the efficiency of the gear unit and protects against corrosion and harmful foaming of the oil. The "self-cleaning" properties of the lubricants prevent deposits as they bind water and dirt particles.

Optionally, you can select GearOil by SEW-EURODRIVE as the initial filling for the gear units and gearmotors. The premium gear oil can be ordered in can or barrel containers for service and maintenance purposes. GearOil by SEW-EURODRIVE can be stored for up to 6 years in unopened containers.

33091900/EN – 12/2025

8.2.5 Lubricant tables

This lubricant table is valid when the document is published. Refer to www.sew-eurodrive.de/lubricants for the latest version of the table.

[1]	[2]	SEW EURODRIVE			Castrol			FUCHS			Mobil			KLÜBER LUBRICATION			SINOPEC			TotalEnergies		
CLP	VG 150	-20 -5 +5	+65	SEW GearOil Base 150 E1 / US1 / CN1 / BR1	-20 -5 +5	+65	Optigear BM 150	-20 -5 +5	+65	Renolin CLP 150 Plus	-20 -5 +5	+65	Mobilgear 600 XP 150	-20 -5 +5	+65	Klüberoil GEM 1-150 N	-20 -5 +5	+65	AP-SGO 150			
		SEW070040013					Alpha SP 150			Renolin HighGear 150							SEW070030013					
	VG 220	-15 0 +10	+75	SEW GearOil Base 220 E1 / US1 / CN1 / BR1	-15 0 +10	+75	Optigear BM 220	-15 0 +10	+75	Renolin CLP 220 Plus	-15 0 +10	+75	Mobilgear 600 XP 220	-15 0 +10	+75	Klüberoil GEM 1-220 N	-15 0 +10	+75	AP-SGO 220	-15 0 +10	+75	Carter EP 220
		SEW070040013					Alpha SP 220			Renolin HighGear 220							SEW070030013					
	VG 320	-10 +5 +15	+85	SEW GearOil Base 320 E1 / US1 / CN1 / BR1	-10 +5 +15	+80	Optigear BM 320	-10 +5 +15	+80	Renolin CLP 320 Plus	-10 +5 +15	+80	Mobilgear 600 XP 320	-10 +5 +15	+80	Klüberoil GEM 1-320 N	-10 +5 +15	+80	AP-SGO 320	-10 +5 +15	+80	Carter EP 320
		SEW070040013					Alpha SP 320			Renolin HighGear 320							SEW070030013					
	VG 460	-5 +10 +20	+90	SEW GearOil Base 460 E1 / US1 / CN1 / BR1	-5 +10 +20	+90	Optigear BM 460	-5 +10 +20	+90	Renolin CLP 460 Plus	-5 +10 +20	+90	Mobilgear 600 XP 460	-5 +10 +20	+90	Klüberoil GEM 1-460 N	-5 +10 +20	+90	AP-SGO 460	-5 +10 +20	+90	Carter EP 460
		SEW070040013					Alpha SP 460			Renolin HighGear 460							SEW070030013					
	VG 680	0 +15 +25	+90	SEW GearOil Base 680 E1 / US1 / CN1 / BR1	0 +15 +25	+90	Optigear BM 680	0 +15 +25	+90	Renolin CLP 680 Plus	0 +15 +25	+90	Mobilgear 600 XP 680	0 +15 +25	+90	Klüberoil GEM 1-680 N	0 +15 +25	+90	AP-SGO 460	0 +15 +25	+90	Carter EP 680
		SEW070040013					Alpha SP 680			Renolin CLP 680 Plus							SEW070030013					
	VG 1000	+5 +20 +30	+90	Optigear BM 1000																		

45036020758903691

This lubricant table is valid when the document is published. Refer to www.sew-eurodrive.de/lubricants for the latest version of the table.

[1]	[2]	SEW EURODRIVE	Castrol	FUCHS	Mobil	KLÜBER LUBRICATION	TotalEnergies
CLP HC	VG 32 [1]				SHC 624		
					-40 -30 -25 +30		
	VG 68 [1]			Renolin Unisyn CLP 68	SHC 626	Klübersynth GEM 4-68 N	
				-35 -20 -10 +50	-40 -25 -15 +50	-35 -20 -10 +50	
	VG 150 [1]	GearOil Synth 150 E1	Alphasyn EP 150	Optigear Synthetic X 150	Renolin Unisyn CLP 150	SHC 629	Klübersynth GEM 4-150 N	Carter SH 150
		-35 -15 -5 +75	-25 -10 0 +70	-30 -10 0 +70	-30 -10 +0 +70	-30 -10 0 +75	-25 -10 0 70	-35 -15 -5 +75
		SEW 070040313				SHC Gear 150		
						-35 -15 -5 +75		
	VG 220	GearOil Synth 220 E1	Alphasyn EP 220	Optigear Synthetic X 220	Renolin Unisyn CLP 220	SHC 630	Klübersynth GEM 4-220 N	Carter SH 220
		-30 -10 0 +85	-25 -5 +5 +80	-25 -5 +5 +80	-25 -5 +5 +80	-25 -5 0 +85	-25 -5 +5 +80	-25 -5 +5 +80
		SEW 070040313				SHC Gear 220		
		-25 -5 -5 +100	-20 0 +10 +90	-20 0 +10 +90	-20 0 +10 +90	-30 -10 +5 +85	-25 -5 +5 +80	-20 0 +10 +90
	VG 320	GearOil Synth 320 E1	Alphasyn EP 320	Optigear Synthetic X 320	Renolin Unisyn CLP 320	SHC 632	Klübersynth GEM 4-320 N	Carter SH 320
		-20 0 +5 +110	-15 +5 +15 +100	-15 +5 +15 +100	-15 +5 +15 +100	-20 0 +10 +95	-20 0 +10 +95	-20 0 +10 +90
		SEW 070040313				SHC Gear 320		
						-25 -5 +5 +110		
	VG 460	GearOil Synth 460 E1	Alphasyn EP 460	Optigear Synthetic X 460	Renolin Unisyn CLP 460	SHC 634	Klübersynth GEM 4-460 N	Carter SH 460
		-15 +5 +20 +110	-15 +5 +15 +100	-15 +5 +15 +100	-15 +5 +15 +100	-15 +5 +15 +105	-15 +5 +20 +105	-15 +5 +15 +100
		SEW 070040313				SHC Gear 460		
						-20 0 +15 +110		
	VG 680	GearOil Synth 680 E1		Optigear Synthetic X 680	Renolin Unisyn CLP 680	SHC 636	Klübersynth GEM 4-680 N	Carter SH 680
		-15 +5 +20 +110		-10 +10 +25 +110	-10 +10 +25 +110	-10 +10 +25 +110	-10 +10 +25 +110	-10 +10 +25 +110
		SEW 070040313				SHC Gear 680		
						-15 +10 +25 +110		
	VG 1000					SHC 639	Klübersynth EG4-1000	
						-10 +15 +30 +110	0 +20 +30 +110	
						SHC Gear 1000		
						-10 +15 +30 +110		

36028821510415371

This lubricant table is valid when the document is published. Refer to www.sew-eurodrive.de/lubricants for the latest version of the table.

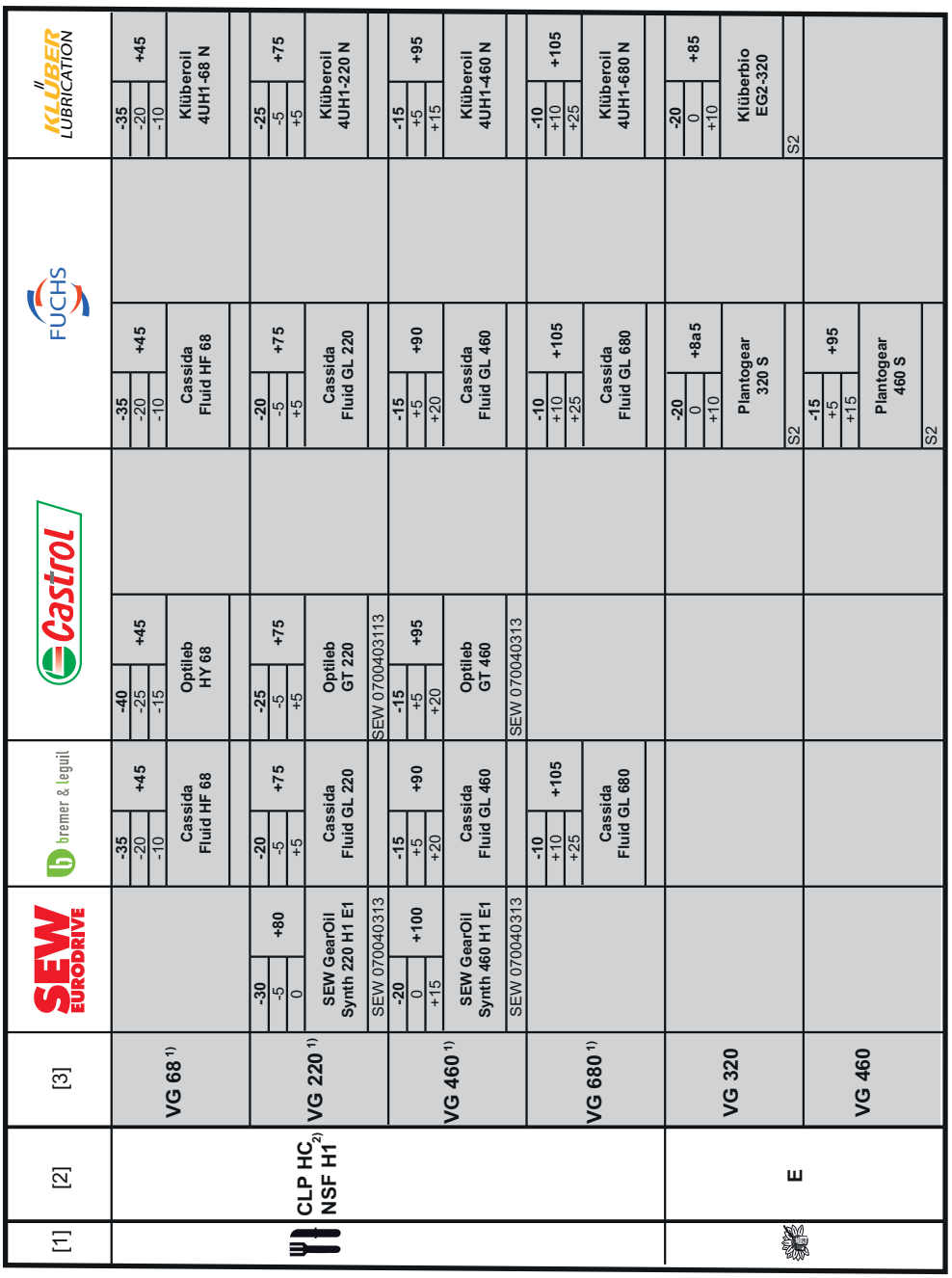

[1]	[2]	[3]	SEW EURODRIVE	bremer & leguil	Castrol	FUCHS	KLÜBER LUBRICATION
	CLP HC, NSF H1 [2]	VG 68 [1]		-35 / -20 / -10 Cassida Fluid HF 68 +45	-40 / -25 / -15 Optileb HY 68 +45	-35 / -20 / -10 Cassida Fluid HF 68 +45	-35 / -20 / -10 Klüberoil 4UH1-68 N +45
		VG 220 [1]	-30 / -5 / 0 SEW GearOil Synth 220 H1 E1 +80	-20 / -5 / +5 Cassida Fluid GL 220 +75	-25 / -5 / +5 Optileb GT 220 +75	-20 / -5 / +5 Cassida Fluid GL 220 +75	-25 / -5 / +5 Klüberoil 4UH1-220 N +75
			SEW 070040313		SEW 070040313		
		VG 460 [1]	-20 / 0 / +15 SEW GearOil Synth 460 H1 E1 +100	-15 / +5 / +20 Cassida Fluid GL 460 +90	-15 / +5 / +20 Optileb GT 460 +95	-15 / +5 / +20 Cassida Fluid GL 460 +90	-15 / +5 / +15 Klüberoil 4UH1-460 N +95
			SEW 070040313		SEW 070040313		
		VG 680 [1]	-10 / +10 / +25 Cassida Fluid GL 680 +105			-10 / +10 / +25 Cassida Fluid GL 680 +105	-10 / +10 / +25 Klüberoil 4UH1-680 N +105
	E	VG 320				-20 / 0 / +10 Plantogear 320 S +8a5 S2	-20 / 0 / +10 Klüberbio EG2-320 +85 S2
		VG 460				-15 / +5 / +15 Plantogear 460 S +95 S2	

36028821504165131

1) Lubricants may only be used
if the service factor F_s and peak load factor $F_F \geq 1.6$.
The peak output torque $MK2_{per}$ is limited as follows: $F_F \geq 1.6 \rightarrow M_{K2per} \leq 1.25 \times MN2$ (nominal torque) $\rightarrow M_{K2per} \leq 2 \times M_{N2}/F_F = 2/1.6 \times M_{N2}$.
In case of deviations, contact SEW-EURODRIVE.

2) NSF-H1 registered oils for the food processing industry cannot be combined with the gear unit option "Extended storage" (a VCI anti-corrosion agent is added).

NOTICE:
Also observe the thermal application limits of the oil seal materials, see chapter "Lubricant compatibility with oil seals" (→ 🗎 81).

8.3 Lubricant fill quantities

The following table shows the lubricant fill quantities for the gear units depending on their mounting position.

Size	Oil quantities for mounting position P / mounting angle X1KP		
	M1/0° (M1/180°) M3/180° (M3/0°) M5/270° (M5/90°) M6/90° (M6/270°)	M1/270° M3/90° M5/180° M6/0°	M2 M4
P2002e X1KP60e	20	21	41
P2012e X1KP60e	22	23	45
P2022e X1KP80e	31	29	62
P2032e X1KP80e	33	31	67
P2042e X1KP80e	38	35	77
P2052e X1KP80e	40	38	81
P2042e X1KP100e	61	58	124
P2052e X1KP100e	64	60	129
P2062e X1KP100e	73	70	150
P2072e X1KP100e	82	76	165
P2062e X1KP120e	99	90	201
P2072e X1KP120e	107	96	217
P2082e X1KP140e	216	197	436
P092 X1KP140e	231	211	465
P102 X1KP160e	281	262	569

33091900/EN – 12/2025

8.4 Sealing greases/bearing greases

8.4.1 Bearing greases

The table shows the greases recommended by SEW-EURODRIVE with the "lower operating temperature".

The permitted operating temperature of the lubricant used must be taken into account for the lower and upper operating temperature. For further information, refer to chapter "Lubricant table" (→ 🗎 83).

Area of operation	Manufacturer	Greases	Lower temperature limit
Standard	SEW-EURODRIVE	**SEW Grease HL 2 E1**[1)]	-40 °C
	Fuchs	Renolit CX TOM 15 OEM	-40 °C
	BP	Energrease LS EP-2	-30 °C
	Castrol	Longtime PD 2	-35 °C
		Spheerol EPL 2	-20 °C
	Klüber	Centoplex EP 2	-25 °C
		Petamo GHY 133 N	-40 °C
	Mobil	Mobilux EP 2	-20 °C
	Shell	Gadus S2 V220 2	-20 °C
	Total	Multis EP 2	-20 °C
	SEW-EURODRIVE	**SEW Grease HL 2 H1 E1**[1)]	-40 °C
	Bremer & Leguil	Cassida Grease GTS2	-40 °C
	Fuchs	**Plantogel 2**[1)]	-40 °C

1) Use the greases used at the factory if possible.

8.4.2 Premium bearing grease HL 2 E1 Grease by SEW-EURODRIVE

HL 2 E1 Grease by SEW-EURODRIVE consists of optimally matched product components. The calcium sulfonate complex saponified lubricating grease is based on a semi-synthetic base oil. In combination with an optimized additive package, the HL 2 E1 Grease by SEW-EURODRIVE has extraordinary mechanical characteristics. The powerful lubricant provides high thermal and mechanical stability for all friction points (bearings and seals) which are subjected to high levels of stress in the gear unit and the seals in the motor. This minimizes sealing ring wear and reduces the risk of premature roller bearing failure.

The corresponding premium bearing grease HL 2 E1 Grease by SEW-EURODRIVE is available for use in the food processing industry.

Key advantages:

- Good corrosion and wear protection
- Wide service temperature range
- Optimum water resistance
- Resistant to aging
- High thermal and mechanical stability

33091900/EN – 12/2025

9 Design and operating notes

9.1 Screws included in the delivery

For gear unit designs with torque arm and foot-mounted design, connection screws are included **in the scope of delivery**:

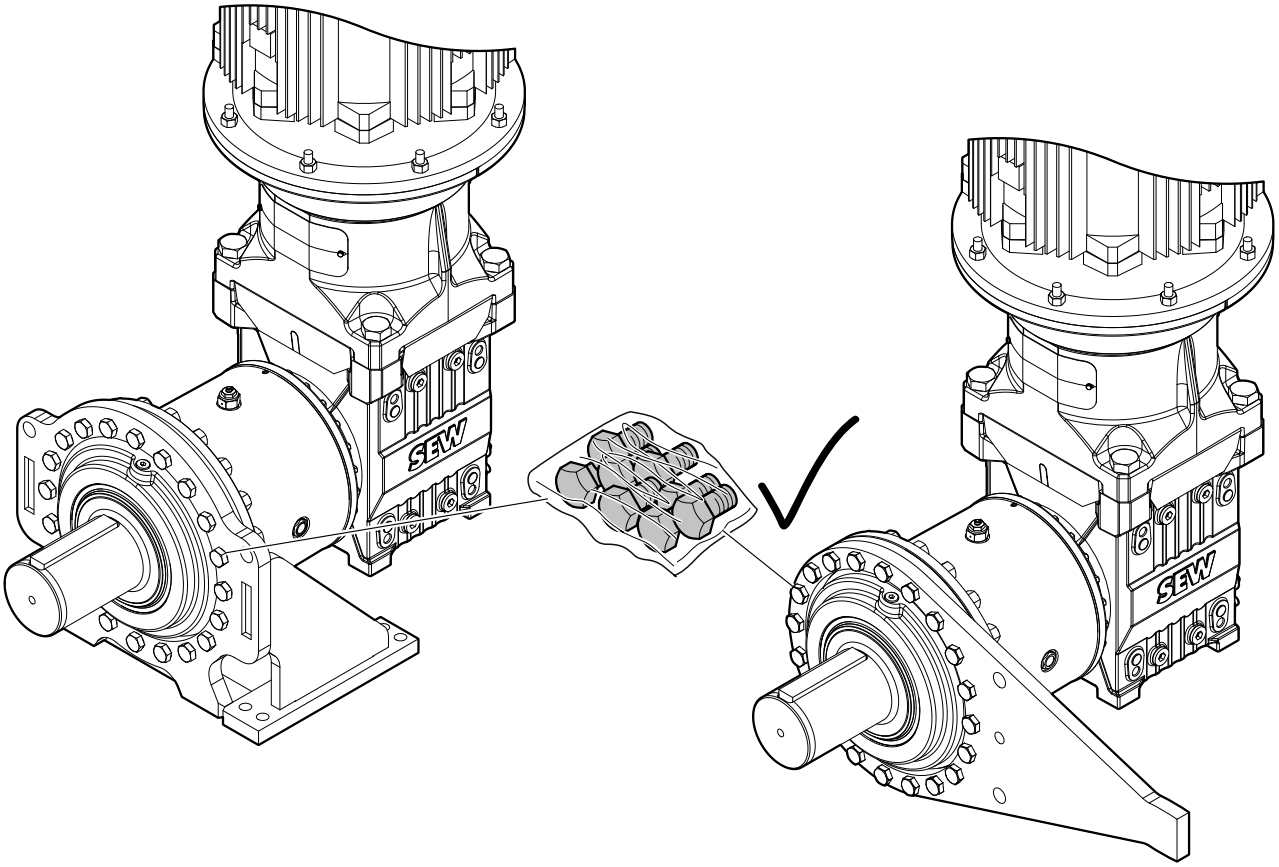

54375683979

The following tools and aids are required for installation/assembly:

- Wrench set
- Torque wrench
- Mounting device
- Equalizing rings (shims, spacing rings)
- Fasteners for input/output elements
- Lubricant, e.g. NOCO-Paste H1 E1 from SEW-EURODRIVE
- Aids for assembly/disassembly onto the machine shaft
- Fastening parts for the gear unit base

33091900/EN – 12/2025

The listed tools and aids are not included in the scope of delivery.

- Connection screws for flange-mounted gear units

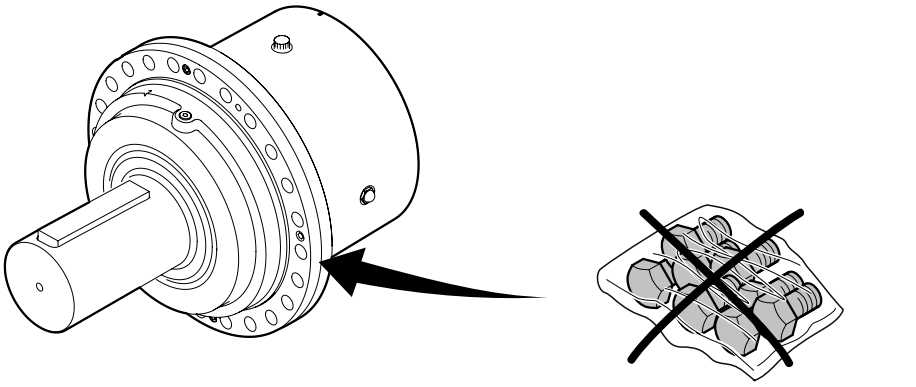

37275354379

9.2 Output shaft as hollow shaft with shrink disk

To guarantee a complete torque transmission from the gear unit to the machine shaft, observe the following steps during construction and assembly: Push the gear unit onto the machine shaft until the contact surfaces touch.

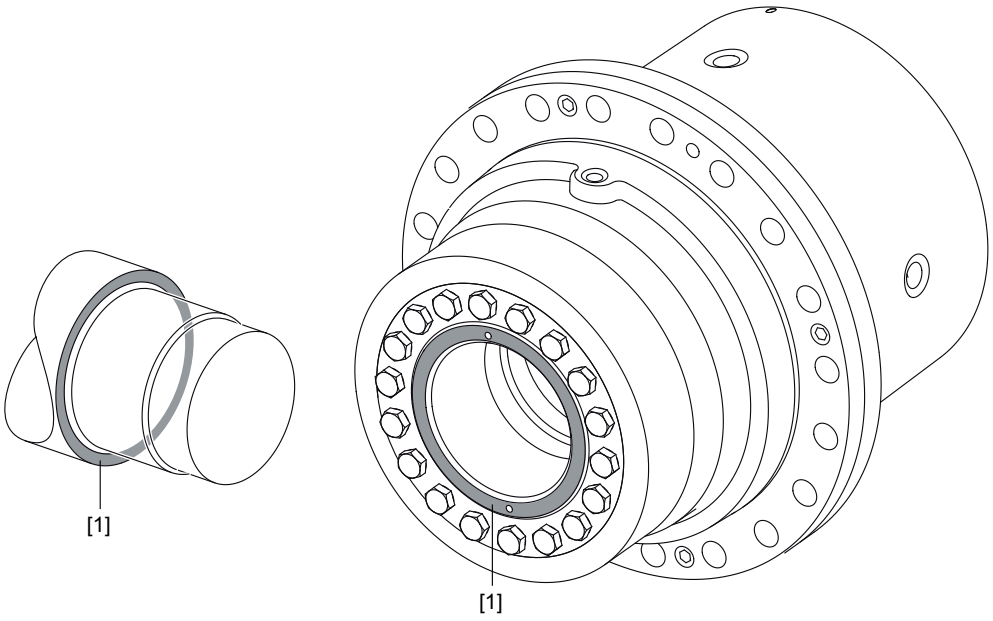

11980869643

10 Important information on selection tables and dimension sheets

INFORMATION

Unless specified otherwise, all dimensions are given in **mm**.

10.1 Selection tables

The following figure shows the structure of the selection tables.

P.002e X1KP060e

n_1 min^{-1}	i_{nom}	i_{ex}	M_{n2} Nm	n_2 min^{-1}	P_{N1} kW
1000	22.4	21.19	24830	47.2	127
	25	24.28	24830	41.2	111
	28	27.17	24830	36.8	99
	31.5	31.18	24830	32.1	87
	35.5	37.12	24830	26.9	73
	40	41.30	24830	24.2	65
	45	46.80	24830	21.4	58
	50	47.74	24830	20.9	57
	56	54.37	24830	18.4	50
	63	60.20	24830	16.6	45
	71	69.93	24830	14.3	39
	80	76.25	24830	13.1	36
	90	88.58	24830	11.3	31
	100	108.22	24830	9.2	25
	112	108.22	24830	9.2	25
	125	119.27	24830	8.4	23
	140	138.55	24830	7.2	20

9007254110606347

n_1 = Input speed

i_{nom} = Nominal gear unit ratio

i_{ex} = Exact gear unit ratio

M_{N2} = Nominal gear unit torque

n_2 = Output speed

P_{N1} = Nominal gear unit power (in relation to HSS)

33091900/EN – 12/2025

10.2 Dimension sheets

10.2.1 Scope of delivery



= Standard parts supplied by SEW-EURODRIVE.



= Standard parts not supplied by SEW-EURODRIVE.

10.2.2 Tolerances

Keys

Keys: according to DIN 6885 (domed type B)

Spline

Splined shaft according to DIN 5480

10.2.3 Dimensions of motors and planetary gear units

Motor options

The motor dimensions can change when installing motor options. Refer to the dimension drawings of the motor options.

Special designs

The dimensions of the terminal box on special designs such as KS, CSA, VIK, low voltage or voltage changeover may deviate from the standard dimensions.

EN 50347

European standard EN 50347 became effective in August 2001. This standard adopts the dimension designations for three-phase AC motors for sizes 56 to 315M and flange sizes 65 to 740 from the IEC 72-1 standard.

The new dimension designations given in EN 50347 / IEC 72-1 are used for the dimensions in question in the dimension tables of the dimensions sheets.

33091900/EN – 12/2025

11 Selection tables

11.1 Size P.002e X1KP060e

P.002e X1KP060e					
n_1 min^{-1}	i_{nom}	i_{ex}	M_{n2} Nm	n_2 min^{-1}	P_{N1} kW
1000	22.4	21.19	24830	47.2	127
	25	24.28	24830	41.2	111
	28	27.17	24830	36.8	99
	31.5	31.18	24830	32.1	87
	35.5	37.12	24830	26.9	73
	40	41.30	24830	24.2	65
	45	46.80	24830	21.4	58
	50	47.74	24830	20.9	57
	56	54.37	24830	18.4	50
	63	60.20	24830	16.6	45
	71	69.93	24830	14.3	39
	80	76.25	24830	13.1	36
	90	88.58	24830	11.3	31
	100	108.22	24830	9.2	25
	112	108.22	24830	9.2	25
	125	119.27	24830	8.4	23
	140	138.55	24830	7.2	20
1200	22.4	21.19	24830	56.6	152
	25	24.28	24830	49.4	133
	28	27.17	24830	44.2	119
	31.5	31.18	24830	38.5	104
	35.5	37.12	24830	32.3	87
	40	41.30	24830	29.1	79
	45	46.80	24830	25.6	69
	50	47.74	24830	25.1	68
	56	54.37	24830	22.1	60
	63	60.20	24830	19.9	54
	71	69.93	24830	17.2	47
	80	76.25	24830	15.7	43
	90	88.58	24830	13.5	37
	100	108.22	24830	11.1	30
	112	108.22	24830	11.1	30
	125	119.27	24830	10.1	28
	140	138.55	24830	8.7	24

33091900/EN – 12/2025

P.002e X1KP060e					
n_1 min^{-1}	i_{nom}	i_{ex}	M_{n2} Nm	n_2 min^{-1}	P_{N1} kW
1500	22.4	21.19	24830	70.8	190
	25	24.28	24830	61.8	166
	28	27.17	24830	55.2	148
	31.5	31.18	24830	48.1	129
	35.5	37.12	24830	40.4	109
	40	41.30	24830	36.3	98
	45	46.80	24830	32.1	87
	50	47.74	24830	31.4	85
	56	54.37	24830	27.6	74
	63	60.20	24830	24.9	67
	71	69.93	24830	21.5	58
	80	76.25	24830	19.7	53
	90	88.58	24830	16.9	46
	100	108.22	24830	13.9	38
	112	108.22	24830	13.9	38
	125	119.27	24830	12.6	34
	140	138.55	24830	10.8	29
1800	22.4	21.19	24830	84.9	228
	25	24.28	24830	74.1	199
	28	27.17	24830	66.2	178
	31.5	31.18	24830	57.7	155
	35.5	37.12	24830	48.5	131
	40	41.30	24830	43.6	117
	45	46.80	24830	38.5	104
	50	47.74	24830	37.7	102
	56	54.37	24830	33.1	89
	63	60.20	24830	29.9	81
	71	69.93	24830	25.7	69
	80	76.25	24830	23.6	64
	90	88.58	24830	20.3	55
	100	108.22	24830	16.6	45
	112	108.22	24830	16.6	45
	125	119.27	24830	15.1	41
	140	138.55	24830	13.0	35

33091900/EN – 12/2025

11.2 Size P.012e X1KP060e

P.012e X1KP060e					
n_1 min^{-1}	i_{nom}	i_{ex}	M_{n2} Nm	n_2 min^{-1}	P_{N1} kW
1000	22.4	21.89	36810	45.7	182
	25	25.04	36810	39.9	159
	28	27.98	36810	35.7	142
	31.5	32.02	36810	31.2	124
	35.5	37.92	36810	26.4	105
	40	42.03	36810	23.8	95
	45	47.36	36810	21.1	84
	50	48.77	36810	20.5	82
	56	54.58	36810	18.3	73
	63	60.92	36810	16.4	66
	71	70.20	36810	14.2	57
	80	77.16	36810	13.0	52
	90	88.93	36810	11.2	45
	100	108.64	36810	9.2	37
	112	108.64	36810	9.2	37
	125	120.69	36810	8.3	33
	140	139.10	36810	7.2	29
1200	22.4	21.89	36810	54.8	218
	25	25.04	36810	47.9	191
	28	27.98	36810	42.9	171
	31.5	32.02	36810	37.5	150
	35.5	37.92	36810	31.6	126
	40	42.03	36810	28.6	114
	45	47.36	36810	25.3	101
	50	48.77	36810	24.6	98
	56	54.58	36810	22.0	88
	63	60.92	36810	19.7	79
	71	70.20	36810	17.1	68
	80	77.16	36810	15.6	62
	90	88.93	36810	13.5	54
	100	108.64	36810	11.0	44
	112	108.64	36810	11.0	44
	125	120.69	36810	9.9	40
	140	139.10	36810	8.6	35

33091900/EN – 12/2025

P.012e X1KP060e					
n_1 min^{-1}	i_{nom}	i_{ex}	M_{n2} Nm	n_2 min^{-1}	P_{N1} kW
1500	22.4	21.89	36810	68.5	273
	25	25.04	36810	59.9	239
	28	27.98	36810	53.6	214
	31.5	32.02	36810	46.8	186
	35.5	37.92	36810	39.6	158
	40	42.03	36810	35.7	142
	45	47.36	36810	31.7	126
	50	48.77	36810	30.8	123
	56	54.58	36810	27.5	110
	63	60.92	36810	24.6	98
	71	70.20	36810	21.4	86
	80	77.16	36810	19.4	78
	90	88.93	36810	16.9	68
	100	108.64	36810	13.8	55
	112	108.64	36810	13.8	55
	125	120.69	36810	12.4	50
	140	139.10	36810	10.8	43
1800	22.4	21.89	36810	82.2	327
	25	25.04	36810	71.9	286
	28	27.98	36810	64.3	256
	31.5	32.02	36810	56.2	224
	35.5	37.92	36810	47.5	189
	40	42.03	36810	42.8	171
	45	47.36	36810	38.0	152
	50	48.77	36810	36.9	147
	56	54.58	36810	33.0	132
	63	60.92	36810	29.5	118
	71	70.20	36810	25.6	102
	80	77.16	36810	23.3	93
	90	88.93	36810	20.2	81
	100	108.64	36810	16.6	66
	112	108.64	36810	16.6	66
	125	120.69	36810	14.9	60
	140	139.10	36810	12.9	52

33091900/EN – 12/2025

11.3 Size P.022e X1KP080e

P.022e X1KP080e					
n_1 min^{-1}	i_{nom}	i_{ex}	M_{n2} Nm	n_2 min^{-1}	P_{N1} kW
1000	22.4	22.38	51190	44.7	248
	25	25.62	51190	39.0	216
	28	28.62	51190	34.9	193
	31.5	32.75	51190	30.5	169
	35.5	35.99	51190	27.8	154
	40	38.79	51190	25.8	143
	45	42.99	51190	23.3	129
	50	48.44	51190	20.6	114
	56	55.83	51190	17.9	99
	63	60.91	51190	16.4	91
	71	70.20	51190	14.2	79
	80	83.65	51190	12.0	67
	90	94.27	51190	10.6	59
	100	108.64	51190	9.2	51
	112	108.64	51190	9.2	51
	125	120.69	51190	8.3	46
	140	139.10	51190	7.2	40
1200	22.4	22.38	51190	53.6	297
	25	25.62	51190	46.8	259
	28	28.62	51190	41.9	232
	31.5	32.75	51190	36.6	203
	35.5	35.99	51190	33.3	185
	40	38.79	51190	30.9	171
	45	42.99	51190	27.9	155
	50	48.44	51190	24.8	138
	56	55.83	51190	21.5	119
	63	60.91	51190	19.7	109
	71	70.20	51190	17.1	95
	80	83.65	51190	14.3	80
	90	94.27	51190	12.7	71
	100	108.64	51190	11.0	61
	112	108.64	51190	11.0	61
	125	120.69	51190	9.9	55
	140	139.10	51190	8.6	48

33091900/EN – 12/2025

P.022e X1KP080e					
n_1 min^{-1}	i_{nom}	i_{ex}	M_{n2} Nm	n_2 min^{-1}	P_{N1} kW
1500	22.4	22.38	51190	67.0	371
	25	25.62	51190	58.5	324
	28	28.62	51190	52.4	290
	31.5	32.75	51190	45.8	254
	35.5	35.99	51190	41.7	231
	40	38.79	51190	38.7	214
	45	42.99	51190	34.9	193
	50	48.44	51190	31.0	172
	56	55.83	51190	26.9	149
	63	60.91	51190	24.6	136
	71	70.20	51190	21.4	119
	80	83.65	51190	17.9	99
	90	94.27	51190	15.9	88
	100	108.64	51190	13.8	77
	112	108.64	51190	13.8	77
	125	120.69	51190	12.4	69
	140	139.10	51190	10.8	60
1800	22.4	22.38	51190	80.4	445
	25	25.62	51190	70.3	389
	28	28.62	51190	62.9	348
	31.5	32.75	51190	55.0	304
	35.5	35.99	51190	50.0	277
	40	38.79	51190	46.4	257
	45	42.99	51190	41.9	232
	50	48.44	51190	37.2	206
	56	55.83	51190	32.2	178
	63	60.91	51190	29.6	164
	71	70.20	51190	25.6	142
	80	83.65	51190	21.5	119
	90	94.27	51190	19.1	106
	100	108.64	51190	16.6	92
	112	108.64	51190	16.6	92
	125	120.69	51190	14.9	83
	140	139.10	51190	12.9	72

33091900/EN – 12/2025

11.4 Size P.032e X1KP080e

P.032e X1KP080e					
n_1 min^{-1}	i_{nom}	i_{ex}	M_{n2} Nm	n_2 min^{-1}	P_{N1} kW
1000	22.4	22.38	59300	44.7	287
	25	25.62	67900	39.0	286
	28	28.62	69620	34.9	263
	31.5	32.75	69620	30.5	230
	35.5	35.99	69620	27.8	209
	40	38.79	69620	25.8	194
	45	42.99	69620	23.3	176
	50	48.44	69620	20.6	155
	56	55.83	69620	17.9	135
	63	60.91	69620	16.4	124
	71	70.20	69620	14.2	107
	80	83.65	69620	12.0	91
	90	94.27	69620	10.6	80
	100	108.64	69620	9.2	70
	112	108.64	69620	9.2	70
	125	120.69	69620	8.3	63
	140	139.10	69620	7.2	55
1200	22.4	22.38	59300	53.6	344
	25	25.62	67900	46.8	344
	28	28.62	69620	41.9	315
	31.5	32.75	69620	36.6	276
	35.5	35.99	69620	33.3	251
	40	38.79	69620	30.9	233
	45	42.99	69620	27.9	210
	50	48.44	69620	24.8	187
	56	55.83	69620	21.5	162
	63	60.91	69620	19.7	149
	71	70.20	69620	17.1	129
	80	83.65	69620	14.3	108
	90	94.27	69620	12.7	96
	100	108.64	69620	11.0	83
	112	108.64	69620	11.0	83
	125	120.69	69620	9.9	75
	140	139.10	69620	8.6	65

33091900/EN – 12/2025

P.032e X1KP080e					
n_1 min^{-1}	i_{nom}	i_{ex}	M_{n2} Nm	n_2 min^{-1}	P_{N1} kW
1500	22.4	22.38	59300	67.0	429
	25	25.62	67900	58.5	429
	28	28.62	69620	52.4	394
	31.5	32.75	69620	45.8	345
	35.5	35.99	69620	41.7	314
	40	38.79	69620	38.7	291
	45	42.99	69620	34.9	263
	50	48.44	69620	31.0	233
	56	55.83	69620	26.9	203
	63	60.91	69620	24.6	185
	71	70.20	69620	21.4	161
	80	83.65	69620	17.9	135
	90	94.27	69620	15.9	120
	100	108.64	69620	13.8	104
	112	108.64	69620	13.8	104
	125	120.69	69620	12.4	94
	140	139.10	69620	10.8	82
1800	22.4	22.38	59300	80.4	515
	25	25.62	67900	70.3	516
	28	28.62	69620	62.9	473
	31.5	32.75	69620	55.0	414
	35.5	35.99	69620	50.0	376
	40	38.79	69620	46.4	349
	45	42.99	69620	41.9	315
	50	48.44	69620	37.2	280
	56	55.83	69620	32.2	243
	63	60.91	69620	29.6	223
	71	70.20	69620	25.6	193
	80	83.65	69620	21.5	162
	90	94.27	69620	19.1	144
	100	108.64	69620	16.6	125
	112	108.64	69620	16.6	125
	125	120.69	69620	14.9	112
	140	139.10	69620	12.9	97

33091900/EN – 12/2025

11.5 Size P.042e X1KP080e

P.042e X1KP080e					
n_1 min^{-1}	i_{nom}	i_{Gsx}	M_{n2} Nm	n_2 min^{-1}	P_{N1} kW
1000	31.5	32.75	86600	30.5	286
	35.5	38.79	100170	25.8	280
	40	38.79	100170	25.8	280
	45	42.99	100170	23.3	252
	50	48.44	100170	20.6	223
	56	55.83	100170	17.9	194
	63	60.91	100170	16.4	178
	71	70.2	100170	14.2	154
	80	83.65	88100	12	115
	90	94.27	99300	10.6	114
	100	108.64	100170	9.2	100
	112	108.64	100170	9.2	100
1200	31.5	32.75	86600	36.6	343
	35.5	38.79	100170	30.9	335
	40	38.79	100170	30.9	335
	45	42.99	100170	27.9	302
	50	48.44	100170	24.8	269
	56	55.83	100170	21.5	233
	63	60.91	100170	19.7	214
	71	70.2	100170	17.1	185
	80	83.65	88100	14.3	137
	90	94.27	99300	12.7	137
	100	108.64	100170	11	119
	112	108.64	100170	11	119

33091900/EN – 12/2025

P.042e X1KP080e					
n_1 min^{-1}	i_{nom}	i_{Gsx}	M_{n2} Nm	n_2 min^{-1}	P_{N1} kW
1500	31.5	32.75	86600	45.8	429
	35.5	38.79	100170	38.7	419
	40	38.79	100170	38.7	419
	45	42.99	100170	34.9	378
	50	48.44	100170	31	336
	56	55.83	100170	26.9	291
	63	60.91	100170	24.6	267
	71	70.2	100170	21.4	232
	80	83.65	88100	17.9	171
	90	94.27	99300	15.9	171
	100	108.64	100170	13.8	150
	112	108.64	100170	13.8	150
1800	31.5	32.75	86600	55	515
	35.5	38.79	100170	46.4	502
	40	38.79	100170	46.4	502
	45	42.99	100170	41.9	454
	50	48.44	100170	37.2	403
	56	55.83	100170	32.2	349
	63	60.91	100170	29.6	321
	71	70.2	100170	25.6	277
	80	83.65	88100	21.5	205
	90	94.27	99300	19.1	205
	100	108.64	100170	16.6	180
	112	108.64	100170	16.6	180

33091900/EN – 12/2025

11.6 Size P.042e X1KP100e

P.042e X1KP100e					
n_1 min^{-1}	i_{nom}	i_{ex}	M_{n2} Nm	n_2 min^{-1}	P_{N1} kW
1000	22.4	21.89	92300	68.5	683
	25	25.04	100170	39.9	432
	28	27.98	100170	35.7	387
	31.5	32.02	100170	31.2	338
	35.5	37.92	100170	26.4	286
	40	42.03	100170	23.8	258
	45	47.36	100170	21.1	229
	50	49.7	100170	20.1	218
	56	54.58	100170	18.3	198
	63	62.08	100170	16.1	175
	71	71.54	100170	14	152
	80	77.16	100170	13	141
	90	88.93	100170	11.2	122
	100	108.64	100170	9.2	100
	112	108.64	100170	9.2	100
	125	120.69	100170	8.3	90
	140	139.1	100170	7.2	78
1200	22.4	21.89	92300	54.8	547
	25	25.04	100170	47.9	519
	28	27.98	100170	42.9	464
	31.5	32.02	100170	37.5	406
	35.5	37.92	100170	31.6	342
	40	42.03	100170	28.6	310
	45	47.36	100170	25.3	274
	50	49.7	100170	24.1	261
	56	54.58	100170	22	238
	63	62.08	100170	19.3	209
	71	71.54	100170	16.8	182
	80	77.16	100170	15.6	169
	90	88.93	100170	13.5	146
	100	108.64	100170	11	119
	112	108.64	100170	11	119
	125	120.69	100170	9.9	108
	140	139.1	100170	8.6	94

33091900/EN – 12/2025

P.042e X1KP100e					
n_1 min^{-1}	i_{nom}	i_{ex}	M_{n2} Nm	n_2 min^{-1}	P_{N1} kW
1500	22.4	21.89	92300	68.5	683
	25	25.04	100170	59.9	648
	28	27.98	100170	53.6	580
	31.5	32.02	100170	46.8	507
	35.5	37.92	100170	39.6	429
	40	42.03	100170	35.7	387
	45	47.36	100170	31.7	343
	50	49.7	100170	30.2	327
	56	54.58	100170	27.5	298
	63	62.08	100170	24.2	262
	71	71.54	100170	21	228
	80	77.16	100170	19.4	210
	90	88.93	100170	16.9	183
	100	108.64	100170	13.8	150
	112	108.64	100170	13.8	150
	125	120.69	100170	12.4	135
	140	139.1	100170	10.8	117
1800	22.4	21.89	92300	82.2	820
	25	25.04	100170	71.9	778
	28	27.98	100170	64.3	696
	31.5	32.02	100170	56.2	608
	35.5	37.92	100170	47.5	514
	40	42.03	100170	42.8	463
	45	47.36	100170	38	411
	50	49.7	100170	36.2	392
	56	54.58	100170	33	357
	63	62.08	100170	29	314
	71	71.54	100170	25.2	273
	80	77.16	100170	23.3	252
	90	88.93	100170	20.2	219
	100	108.64	100170	16.6	180
	112	108.64	100170	16.6	180
	125	120.69	100170	14.9	162
	140	139.1	100170	12.9	140

33091900/EN – 12/2025

11.7 Size P.052e X1KP080e

P052e X1KP080e					
n_1 min^{-1}	i_{nom}	i_{ex}	M_{n2} Nm	n_2 min^{-1}	P_{N1} kW
1000	45	42.99	113700	23.3	287
	50	48.44	124060	20.6	276
	56	55.83	124060	17.9	240
	63	60.91	124060	16.4	220
	71	70.2	124060	14.2	191
	100	108.64	114500	9.2	114
	112	108.64	114500	9.2	114
1200	45	42.99	113700	27.9	343
	50	48.44	124060	24.8	333
	56	55.83	124060	21.5	288
	63	60.91	124060	19.7	264
	71	70.2	124060	17.1	230
	100	108.64	114500	11	136
	112	108.64	114500	11	136
1500	45	42.99	113700	34.9	429
	50	48.44	124060	31	416
	56	55.83	124060	26.9	361
	63	60.91	124060	24.6	330
	71	70.2	124060	21.4	287
	100	108.64	114500	13.8	171
	112	108.64	114500	13.8	171
1800	45	42.99	113700	41.9	515
	50	48.44	124060	37.2	499
	56	55.83	124060	32.2	432
	63	60.91	124060	29.6	397
	71	70.2	124060	25.6	343
	100	108.64	114500	16.6	206
	112	108.64	114500	16.6	206

33091900/EN – 12/2025

11.8 Size P.052e X1KP100e

P.052e X1KP100e					
n_1 min^{-1}	i_{nom}	i_{ex}	M_{n2} Nm	n_2 min^{-1}	P_{N1} kW
1000	22.4	21.89	92300	45.7	456
	25	25.04	105600	39.9	455
	28	27.98	118000	35.7	455
	31.5	32.02	124060	31.2	418
	35.5	37.92	124060	26.4	354
	40	42.03	124060	23.8	319
	45	47.36	124060	21.1	283
	50	49.7	124060	20.1	270
	56	54.58	124060	18.3	246
	63	62.08	124060	16.1	216
	71	71.54	124060	14	188
	80	77.16	124060	13	175
	90	88.93	124060	11.2	151
	100	108.64	124060	9.2	124
	112	108.64	124060	9.2	124
	125	120.69	124060	8.3	112
	140	139.1	124060	7.2	97
1200	22.4	21.89	92300	54.8	547
	25	25.04	105600	47.9	547
	28	27.98	118000	42.9	547
	31.5	32.02	124060	37.5	503
	35.5	37.92	124060	31.6	424
	40	42.03	124060	28.6	384
	45	47.36	124060	25.3	339
	50	49.7	124060	24.1	323
	56	54.58	124060	22	295
	63	62.08	124060	19.3	259
	71	71.54	124060	16.8	226
	80	77.16	124060	15.6	209
	90	88.93	124060	13.5	181
	100	108.64	124060	11	148
	112	108.64	124060	11	148
	125	120.69	124060	9.9	133
	140	139.1	124060	8.6	116

33091900/EN – 12/2025

P.052e X1KP100e					
n_1 min^{-1}	i_{nom}	i_{ex}	M_{n2} Nm	n_2 min^{-1}	P_{N1} kW
1500	22.4	21.89	92300	68.5	683
	25	25.04	105600	59.9	683
	28	27.98	118000	53.6	683
	31.5	32.02	124060	46.8	627
	35.5	37.92	124060	39.6	531
	40	42.03	124060	35.7	479
	45	47.36	124060	31.7	425
	50	49.7	124060	30.2	405
	56	54.58	124060	27.5	369
	63	62.08	124060	24.2	325
	71	71.54	124060	21	282
	80	77.16	124060	19.4	260
	90	88.93	124060	16.9	227
	100	108.64	124060	13.8	185
	112	108.64	124060	13.8	185
	125	120.69	124060	12.4	167
	140	139.1	124060	10.8	145
1800	22.4	21.89	92300	82.2	820
	25	25.04	105600	71.9	820
	28	27.98	118000	64.3	820
	31.5	32.02	124060	56.2	753
	35.5	37.92	124060	47.5	637
	40	42.03	124060	42.8	574
	45	47.36	124060	38	509
	50	49.7	124060	36.2	485
	56	54.58	124060	33	442
	63	62.08	124060	29	389
	71	71.54	124060	25.2	338
	80	77.16	124060	23.3	313
	90	88.93	124060	20.2	271
	100	108.64	124060	16.6	223
	112	108.64	124060	16.6	223
	125	120.69	124060	14.9	200
	140	139.1	124060	12.9	173

33091900/EN – 12/2025

11.9 Size P.062e X1KP100e

P.062e X1KP100e					
n_1 min^{-1}	i_{nom}	i_{ex}	M_{n2} Nm	n_2 min^{-1}	P_{N1} kW
1000	28	27.98	185660	35.7	716
	31.5	32.02	185660	31.2	626
	35.5	37.92	185660	26.4	530
	40	42.03	185660	23.8	478
	45	47.36	185660	21.1	423
	50	49.70	185660	20.1	403
	56	55.08	185660	18.2	365
	63	62.08	185660	16.1	323
	71	71.54	185660	14.0	281
	80	77.16	185660	13.0	261
	90	88.93	185660	11.2	225
1000	28	27.98	185660	42.9	860
	31.5	32.02	185660	37.5	752
	35.5	37.92	185660	31.6	634
	40	42.03	185660	28.6	574
	45	47.36	185660	25.3	508
	50	49.70	185660	24.1	484
	56	55.08	185660	21.8	437
	63	62.08	185660	19.3	387
	71	71.54	185660	16.8	337
	80	77.16	185660	15.6	313
	90	88.93	185660	13.5	271
1500	28	27.98	185660	53.6	1075
	31.5	32.02	185660	46.8	939
	35.5	37.92	185660	39.6	794
	40	42.03	185660	35.7	716
	45	47.36	185660	31.7	636
	50	49.70	185660	30.2	606
	56	55.08	185660	27.2	546
	63	62.08	185660	24.2	486
	71	71.54	185660	21.0	421
	80	77.16	185660	19.4	389
	90	88.93	185660	16.9	339
1800	28	27.98	185660	64.3	1289
	31.5	32.02	185660	56.2	1127
	35.5	37.92	185660	47.5	953
	40	42.03	185660	42.8	858
	45	47.36	185660	38.0	762
	50	49.70	185660	36.2	726
	56	55.08	185660	32.7	656
	63	62.08	185660	29.0	582
	71	71.54	185660	25.2	506
	80	77.16	185660	23.3	468
	90	88.93	185660	20.2	405

33091900/EN – 12/2025

11.10 Size P.062e X1KP120e

P.062e X1KP120e					
n_1 min^{-1}	i_{nom}	i_{ex}	M_{n2} Nm	n_2 min^{-1}	P_{N1} kW
1000	22.4	21.89	185660	45.7	916
	25	25.04	185660	39.9	800
	28	27.98	185660	35.7	716
	31.5	32.02	185660	31.2	626
	35.5	37.92	185660	26.4	530
	40	42.03	185660	23.8	478
	45	47.36	185660	21.1	423
	50	48.77	185660	20.5	411
	56	54.58	185660	18.3	367
	63	60.92	185660	16.4	329
	71	70.20	185660	14.2	285
	80	77.16	185660	13.0	261
	90	88.93	185660	11.2	225
	100	108.64	185660	9.2	185
	112	108.64	185660	9.2	185
	125	120.69	185660	8.3	167
	140	139.10	185660	7.2	145
1200	22.4	21.89	185660	54.8	1099
	25	25.04	185660	47.9	961
	28	27.98	185660	42.9	860
	31.5	32.02	185660	37.5	752
	35.5	37.92	185660	31.6	634
	40	42.03	185660	28.6	574
	45	47.36	185660	25.3	508
	50	48.77	185660	24.6	494
	56	54.58	185660	22.0	441
	63	60.92	185660	19.7	395
	71	70.20	185660	17.1	343
	80	77.16	185660	15.6	313
	90	88.93	185660	13.5	271
	100	108.64	185660	11.0	221
	112	108.64	185660	11.0	221
	125	120.69	185660	9.9	199
	140	139.10	185660	8.6	173

33091900/EN – 12/2025

P.062e X1KP120e					
n_1 min^{-1}	i_{nom}	i_{ex}	M_{n2} Nm	n_2 min^{-1}	P_{N1} kW
1500	22.4	21.89	185660	68.5	1373
	25	25.04	185660	59.9	1201
	28	27.98	185660	53.6	1075
	31.5	32.02	185660	46.8	939
	35.5	37.92	185660	39.6	794
	40	42.03	185660	35.7	716
	45	47.36	185660	31.7	636
	50	48.77	185660	30.8	618
	56	54.58	185660	27.5	552
	63	60.92	185660	24.6	494
	71	70.20	185660	21.4	429
	80	77.16	185660	19.4	389
	90	88.93	185660	16.9	339
	100	108.64	185660	13.8	277
	112	108.64	185660	13.8	277
	125	120.69	185660	12.4	249
	140	139.10	185660	10.8	217
1800	22.4	21.89 (*)	185660	82.2	1648
	25	25.04 (*)	185660	71.9	1442
	28	27.98	185660	64.3	1289
	31.5	32.02	185660	56.2	1127
	35.5	37.92	185660	47.5	953
	40	42.03	185660	42.8	858
	45	47.36	185660	38.0	762
	50	48.77	185660	36.9	740
	56	54.58	185660	33.0	662
	63	60.92	185660	29.5	592
	71	70.20	185660	25.6	514
	80	77.16	185660	23.3	468
	90	88.93	185660	20.2	405
	100	108.64	185660	16.6	333
	112	108.64	185660	16.6	333
	125	120.69	185660	14.9	299
	140	139.10	185660	12.9	259

(*) Contact SEW-EURODRIVE.

33091900/EN – 12/2025

11.11 Size P.072e X1KP100e

P.072e X1KP100e					
n_1 min^{-1}	i_{nom}	i_{ex}	M_{n2} Nm	n_2 min^{-1}	P_{N1} kW
1000	35.5	37.45	245660	26.7	709
	40	41.34	245660	24.2	642
	45	46.34	245660	21.6	573
	50	49.09	245660	20.4	542
	56	54.18	245660	18.5	491
	63	60.73	245660	16.5	438
	71	69.47	245660	14.4	382
	80	75.49	201700	13.2	288
	90	86.35	230700	11.6	289
1200	35.5	37.45	245660	32.0	849
	40	41.34	245660	29.0	770
	45	46.34	245660	25.9	687
	50	49.09	245660	24.4	648
	56	54.18	245660	22.1	587
	63	60.73	245660	19.8	526
	71	69.47	245660	17.3	459
	80	75.49	201700	15.9	347
	90	86.35	230700	13.9	347
1500	35.5	37.45	245660	40.1	1064
	40	41.34	245660	36.3	963
	45	46.34	245660	32.4	860
	50	49.09	245660	30.6	812
	56	54.18	245660	27.7	735
	63	60.73	245660	24.7	656
	71	69.47	245660	21.6	573
	80	75.49	201700	19.9	434
	90	86.35	230700	17.4	434
1800	35.5	37.45	245660	48.1	1276
	40	41.34	245660	43.5	1154
	45	46.34	245660	38.8	1030
	50	49.09	245660	36.7	974
	56	54.18	245660	33.2	881
	63	60.73	245660	29.6	786
	71	69.47	245660	25.9	687
	80	75.49	201700	23.8	519
	90	86.35	230700	20.8	519

33091900/EN – 12/2025

11.12 Size P.072e X1KP120e

P.072e X1KP120e					
n_1 min^{-1}	i_{nom}	i_{ex}	M_{n2} Nm	n_2 min^{-1}	P_{N1} kW
1000	22.4	21.91	245660	45.6	1210
	25	25.02	245660	40.0	1061
	28	28.18	245660	35.5	942
	31.5	31.80	245660	31.4	833
	35.5	37.45	245660	26.7	709
	40	41.34	245660	24.2	642
	45	46.34	245660	21.6	573
	50	48.17	245660	20.8	552
	56	53.00	245660	18.9	502
	63	59.60	245660	16.8	446
	71	68.17	245660	14.7	390
	80	82.29	245660	12.2	324
	90	86.35	245660	11.6	308
	100	105.49	245660	9.5	252
	112	105.49	245660	9.5	252
	125	118.09	245660	8.5	226
	140	135.06	245660	7.4	197
1200	22.4	21.91	245660	54.8	1454
	25	25.02	245660	48.0	1274
	28	28.18	245660	42.6	1130
	31.5	31.80	245660	37.7	1000
	35.5	37.45	245660	32.0	849
	40	41.34	245660	29.0	770
	45	46.34	245660	25.9	687
	50	48.17	245660	24.9	661
	56	53.00	245660	22.6	600
	63	59.60	245660	20.1	534
	71	68.17	245660	17.6	467
	80	82.29	245660	14.6	388
	90	86.35	245660	13.9	369
	100	105.49	245660	11.4	303
	112	105.49	245660	11.4	303
	125	118.09	245660	10.2	271
	140	135.06	245660	8.9	237

33091900/EN – 12/2025

P.072e X1KP120e					
n_1 min^{-1}	i_{nom}	i_{ex}	M_{n2} Nm	n_2 min^{-1}	P_{N1} kW
1500	22.4	21.91 (*)	245660	68.5	1817
	25	25.02	245660	60.0	1592
	28	28.18	245660	53.2	1411
	31.5	31.80	245660	47.2	1252
	35.5	37.45	245660	40.1	1064
	40	41.34	245660	36.3	963
	45	46.34	245660	32.4	860
	50	48.17	245660	31.1	825
	56	53.00	245660	28.3	751
	63	59.60	245660	25.2	669
	71	68.17	245660	22.0	584
	80	82.29	245660	18.2	483
	90	86.35	245660	17.4	462
	100	105.49	245660	14.2	377
	112	105.49	245660	14.2	377
	125	118.09	245660	12.7	337
	140	135.06	245660	11.1	295
1800	22.4	21.91 (*)	245660	82.2	2181
	25	25.02 (*)	245660	71.9	1907
	28	28.18	245660	63.9	1695
	31.5	31.80	245660	56.6	1502
	35.5	37.45	245660	48.1	1276
	40	41.34	245660	43.5	1154
	45	46.34	245660	38.8	1030
	50	48.17	245660	37.4	992
	56	53.00	245660	34.0	902
	63	59.60	245660	30.2	801
	71	68.17	245660	26.4	701
	80	82.29	245660	21.9	581
	90	86.35	245660	20.8	552
	100	105.49	245660	17.1	454
	112	105.49	245660	17.1	454
	125	118.09	245660	15.2	404
	140	135.06	245660	13.3	353

(*) Contact SEW-EURODRIVE.

33091900/EN – 12/2025

11.13 Size P.082e X1KP140e

P.082e X1KP140e					
n_1 min^{-1}	i_{nom}	i_{ex}	M_{n2} Nm	n_2 min^{-1}	P_{N1} kW
1000	22.4	22.46	359400	44.5	1727
	25	25.60	359400	39.1	1518
	28	28.88	359400	34.6	1343
	31.5	32.91	359400	30.4	1180
	35.5	37.91	359400	26.4	1025
	40	41.69	359400	24.0	932
	45	46.50	359400	21.5	835
	50	52.83	359400	18.9	734
	56	53.60	359400	18.7	726
	63	59.78	359400	16.7	648
	71	67.92	359400	14.7	571
	80	85.08	359400	11.8	458
	90	91.49	359400	10.9	423
	100	103.94	359400	9.6	373
	112	117.14	359400	8.5	330
	125	133.07	359400	7.5	292
	140	133.07	359400	7.5	292
1200	22.4	22.46	359400	53.4	2072
	25	25.60	359400	46.9	1820
	28	28.88	359400	41.6	1615
	31.5	32.91	359400	36.5	1417
	35.5	37.91	359400	31.7	1230
	40	41.69	359400	28.8	1118
	45	46.50	359400	25.8	1002
	50	52.83	359400	22.7	881
	56	53.60	359400	22.4	870
	63	59.78	359400	20.1	780
	71	67.92	359400	17.7	687
	80	85.08	359400	14.1	548
	90	91.49	359400	13.1	509
	100	103.94	359400	11.5	447
	112	117.14	359400	10.2	396
	125	133.07	359400	9.0	350
	140	133.07	359400	9.0	350

33091900/EN – 12/2025

P.082e X1KP140e					
n_1 min^{-1}	i_{nom}	i_{ex}	M_{n2} Nm	n_2 min^{-1}	P_{N1} kW
1500	22.4	22.46 (*)	359400	66.8	2592
	25	25.60 (*)	359400	58.6	2274
	28	28.88	359400	51.9	2014
	31.5	32.91	359400	45.6	1770
	35.5	37.91	359400	39.6	1537
	40	41.69	359400	36.0	1397
	45	46.50	359400	32.3	1254
	50	52.83	359400	28.4	1102
	56	53.60	359400	28.0	1087
	63	59.78	359400	25.1	974
	71	67.92	359400	22.1	858
	80	85.08	359400	17.6	683
	90	91.49	359400	16.4	637
	100	103.94	359400	14.4	559
	112	117.14	359400	12.8	497
	125	133.07	359400	11.3	439
	140	133.07	359400	11.3	439
1800	22.4	22.46 (*)	359400	80.1	3108
	25	25.60 (*)	359400	70.3	2728
	28	28.88 (*)	359400	62.3	2418
	31.5	32.91	359400	54.7	2123
	35.5	37.91	359400	47.5	1844
	40	41.69	359400	43.2	1677
	45	46.50	359400	38.7	1502
	50	52.83	359400	34.1	1324
	56	53.60	359400	33.6	1304
	63	59.78	359400	30.1	1168
	71	67.92	359400	26.5	1029
	80	85.08	359400	21.2	823
	90	91.49	359400	19.7	765
	100	103.94	359400	17.3	672
	112	117.14	359400	15.4	598
	125	133.07	359400	13.5	524
	140	133.07	359400	13.5	524

(*) Contact SEW-EURODRIVE.

33091900/EN – 12/2025

11.14 Size P.092 X1KP140e

P.092e X1KP140e					
n_1 min^{-1}	i_{nom}	i_{ex}	M_{n2} Nm	n_2 min^{-1}	P_{N1} kW
1000	28	28.30 (*)	423000	35.3	1613
	35.5	36.39 (*)	423000	27.5	1256
	45	45.58	423000	21.9	1001
	56	55.22	423000	18.1	827
	71	70.99	423000	14.1	644
	90	88.93	423000	11.2	512
	112	108.64	423000	9.2	421
	140	139.10	423000	7.2	329
1200	28	28.30 (*)	423000	42.4	1937
	35.5	36.39 (*)	423000	33.0	1507
	45	45.58 (*)	423000	26.3	1202
	56	55.22	423000	21.7	991
	71	70.99	423000	16.9	772
	90	88.93	423000	13.5	617
	112	108.64	423000	11.0	503
	140	139.10	423000	8.6	393
1500	28	28.30 (*)	423000	53.0	2421
	35.5	36.39 (*)	423000	41.2	1882
	45	45.58 (*)	423000	32.9	1503
	56	55.22	423000	27.2	1243
	71	70.99	423000	21.1	964
	90	88.93	423000	16.9	772
	112	108.64	423000	13.8	631
	140	139.10	423000	10.8	494
1800	28	28.30 (*)	423000	63.6	2905
	35.5	36.39 (*)	423000	49.5	2261
	45	45.58 (*)	423000	39.5	1804
	56	55.22 (*)	423000	32.6	1489
	71	70.99	423000	25.4	1160
	90	88.93	423000	20.2	923
	112	108.64	423000	16.6	759
	140	139.10	423000	12.9	590

(*) Contact SEW-EURODRIVE.

33091900/EN – 12/2025

11.15 Size P.102 X1KP060e

P.102e X1KP140e					
n_1 min^{-1}	i_{nom}	i_{ex}	M_{n2} Nm	n_2 min^{-1}	P_{N1} kW
1000	28	27.94 (*)	500000	35.8	1933
	35.5	35.92 (*)	500000	27.8	1501
	45	45.54	500000	22.0	1188
	56	54.50	500000	18.3	988
	71	70.07	500000	14.3	772
	90	88.83	500000	11.3	610
	112	107.87	500000	9.3	503
	140	137.29	500000	7.3	395
1200	28	27.94 (*)	500000	42.9	2316
	35.5	35.92 (*)	500000	33.4	1803
	45	45.54 (*)	500000	26.4	1426
	56	54.50	500000	22.0	1188
	71	70.07	500000	17.1	924
	90	88.83	500000	13.5	729
	112	107.87	500000	11.1	600
	140	137.29	500000	8.7	470
1500	28	27.94 (*)	500000	53.7	2899
	35.5	35.92 (*)	500000	41.8	2257
	45	45.54 (*)	500000	32.9	1776
	56	54.50 (*)	500000	27.5	1485
	71	70.07	500000	21.4	1156
	90	88.83	500000	16.9	913
	112	107.87	500000	13.9	751
	140	137.29	500000	10.9	589
1800	28	27.94 (*)	500000	64.4	3477
	35.5	35.92 (*)	500000	50.1	2705
	45	45.54 (*)	500000	39.5	2133
	56	54.50 (*)	500000	33.0	1782
	71	70.07 (*)	500000	25.7	1388
	90	88.83	500000	20.3	1096
	112	107.87	500000	16.7	902
	140	137.29	500000	13.1	708

(*) Contact SEW-EURODRIVE.

33091900/EN – 12/2025

12 Dimension sheets

12.1 Size P.002e X1KP060e

45 001 01 25

P2PS002e X1KP060e..

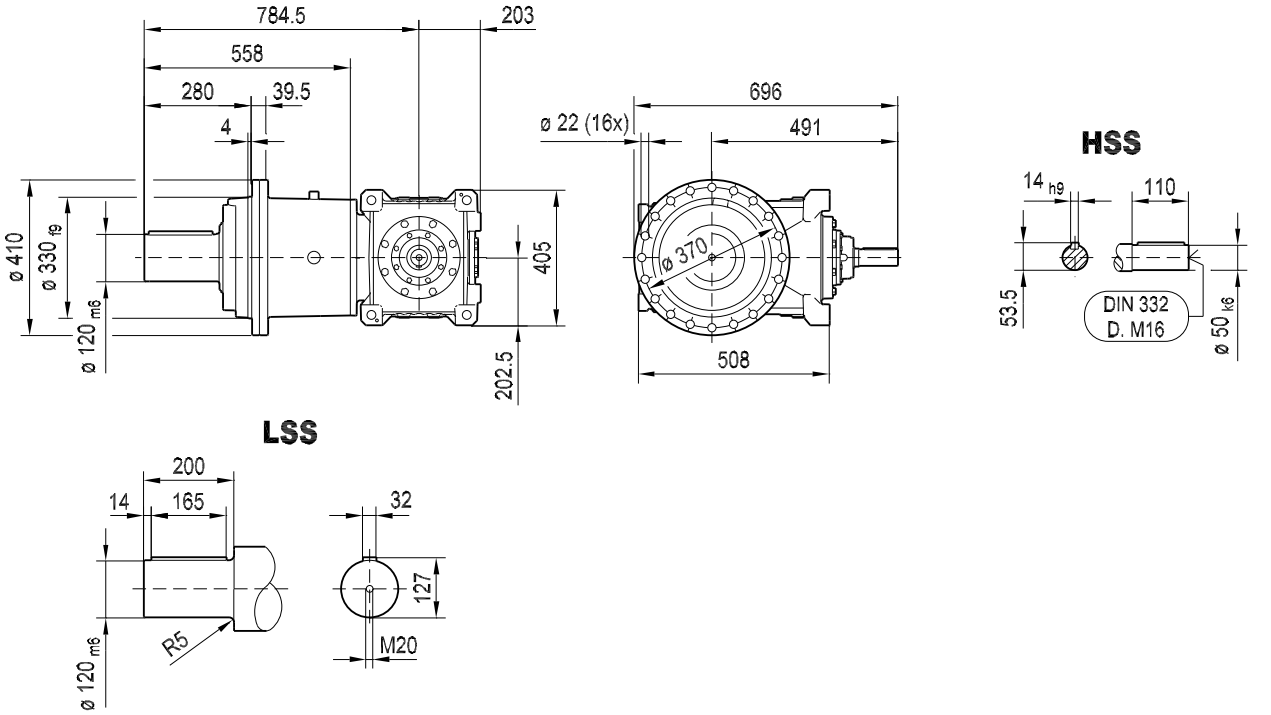

P2PH002e X1KP060e..

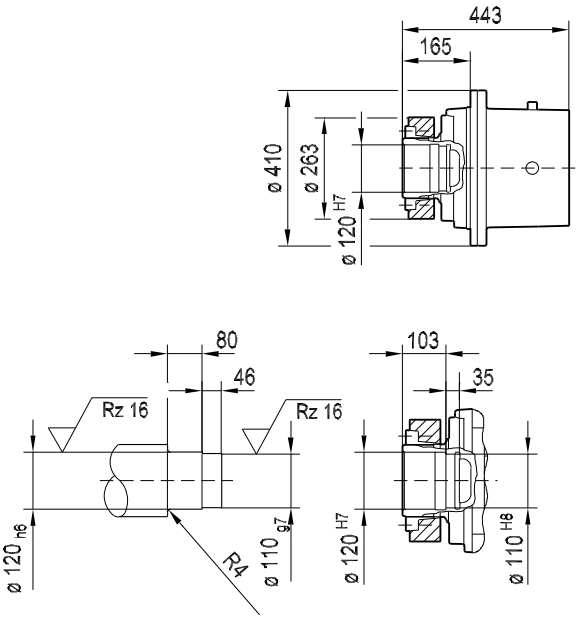

P..002e/T..

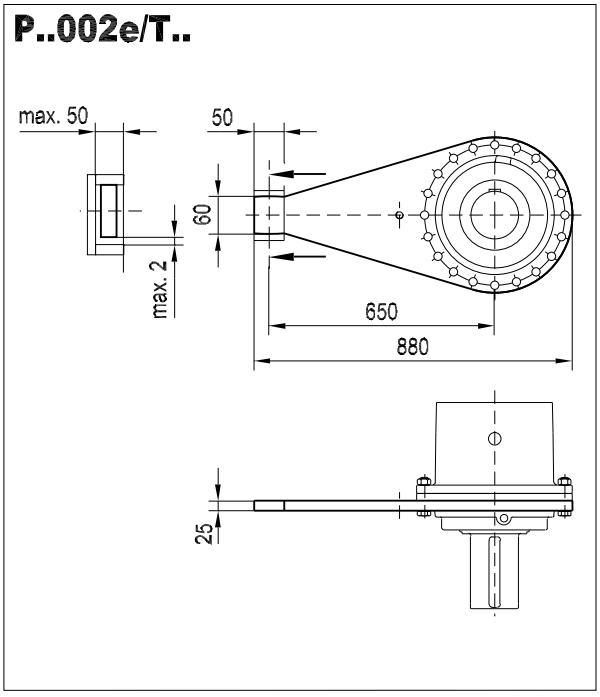

P.002e	kg
P2PS002e X1KP060e	366
P2PH002e X1KP060e	379
/T..	25

33091900/EN – 12/2025

12.2 Size P.012e X1KP060e

45 002 01 25

P2PS012e X1KP060e..

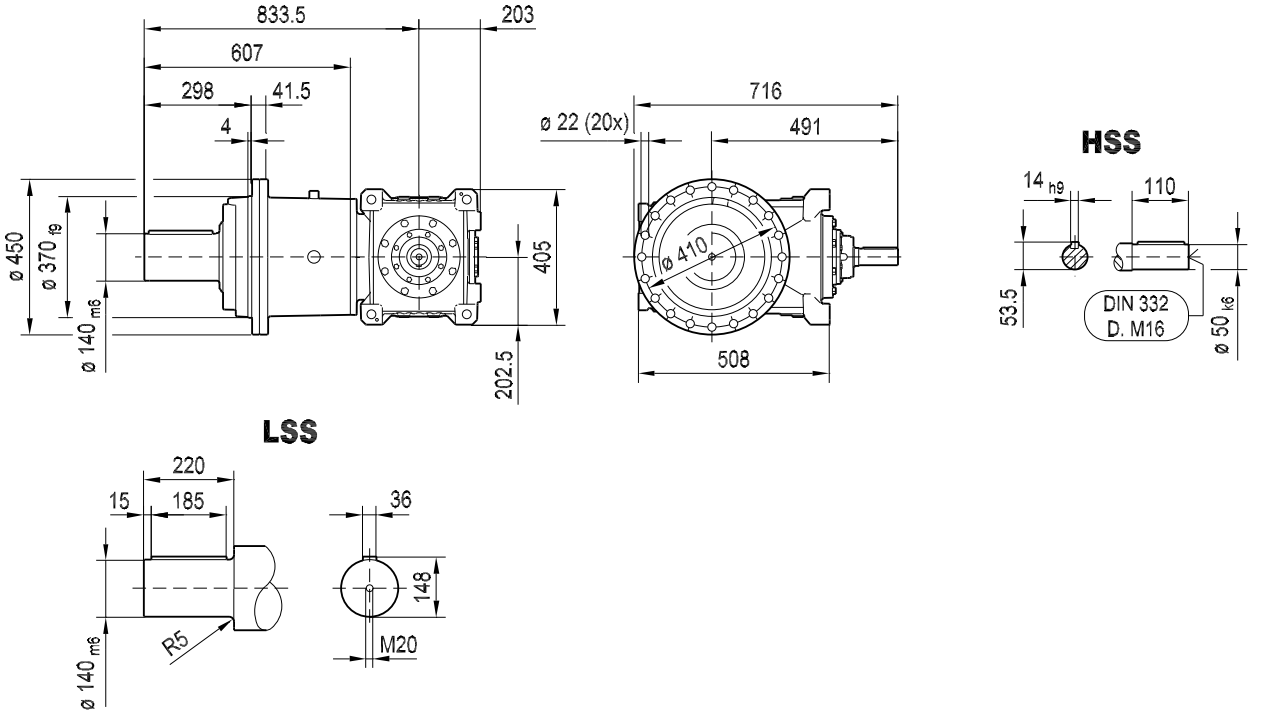

P2PH012e X1KP060e..

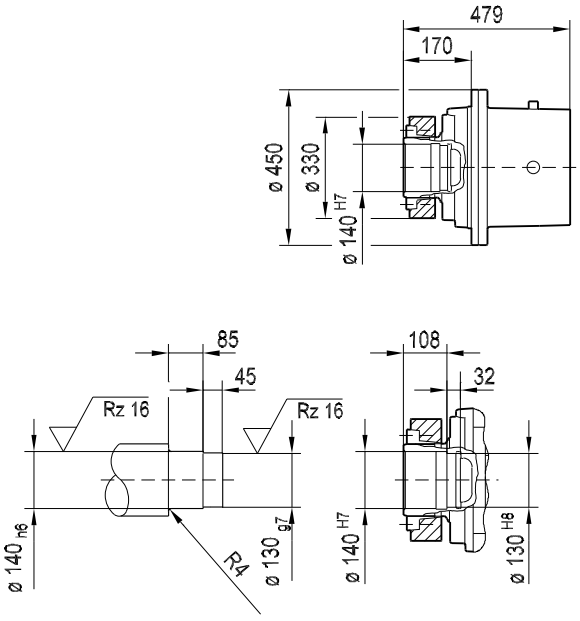

P..012e/T..

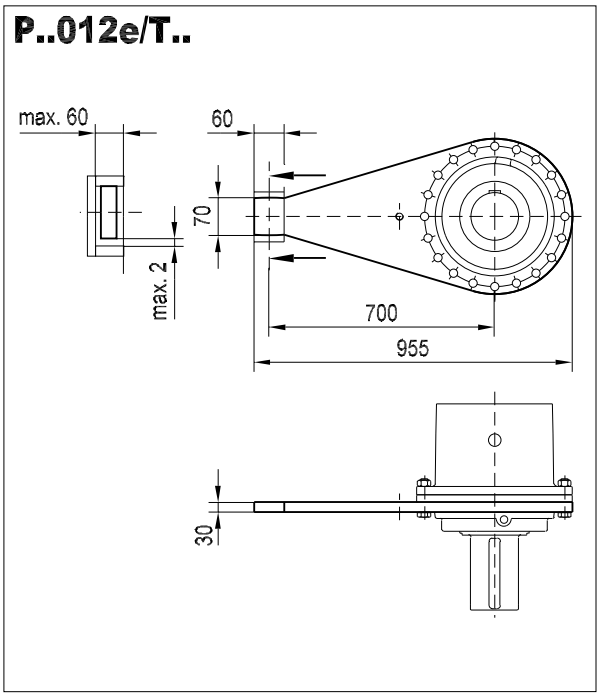

P.012e	kg
P2PS012e X1KP060e	431
P2PH012e X1KP060e	445
/T..	35

33091900/EN – 12/2025

12.3 Size P.022e X1KP080e

45 003 01 25

P2PS022e X1KP080e..

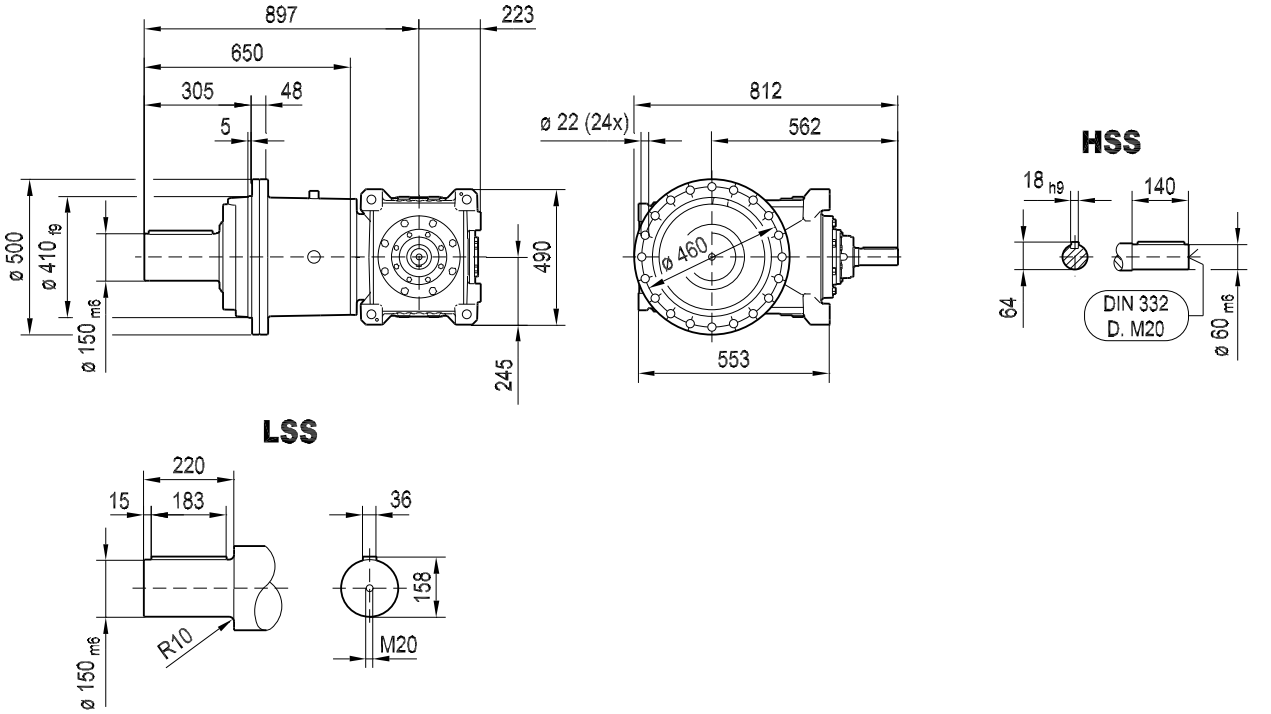

P2PH022e X1KP080e..

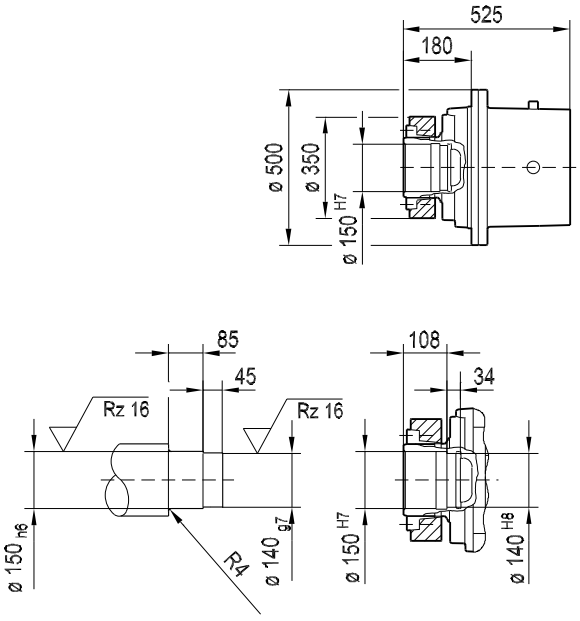

P..022e/T..

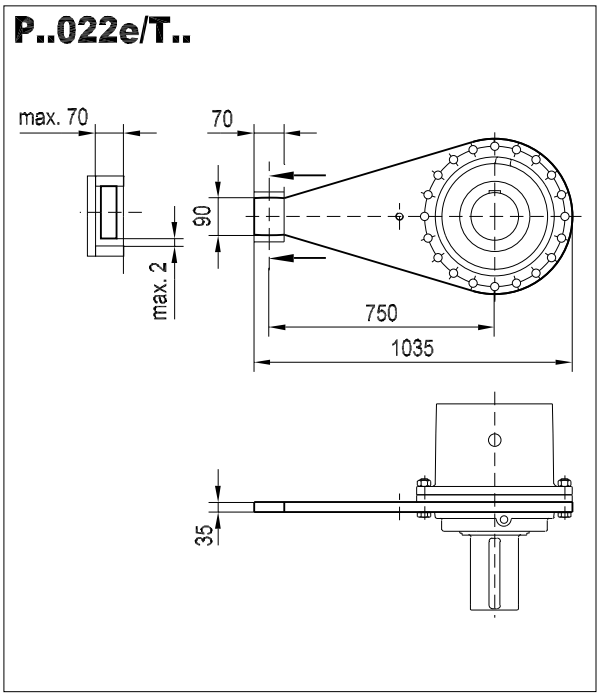

P.022e	kg
P2PS022e X1KP080e	625
P2PH022e X1KP080e	636
/T..	48

33091900/EN – 12/2025

12.4 Size P.032e X1KP080e

45 004 01 25

P2PS032e X1KP080e..

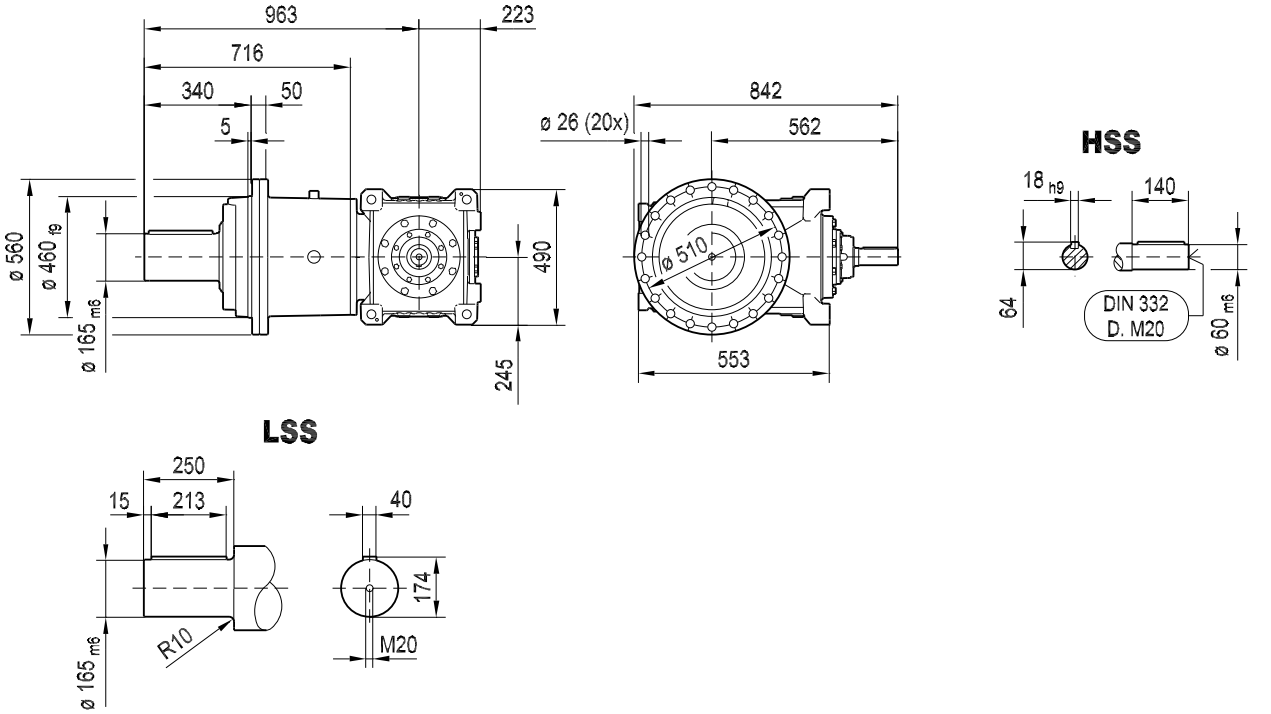

LSS

P2PH032e X1KP080e..

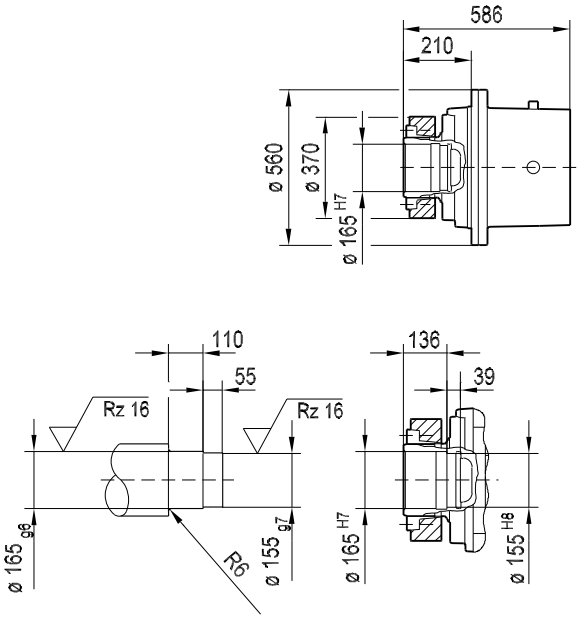

P..032e/T..

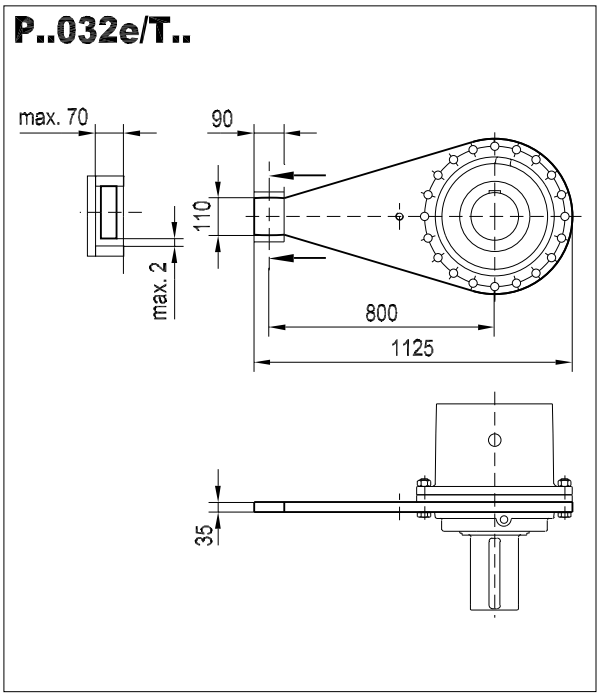

P.032e	kg
P2PS032e X1KP080e	704
P2PH032e X1KP080e	728
/T..	58

33091900/EN – 12/2025

12.5 Size P.042e X1KP080e

45 005 01 25

P2PS042e X1KP080e..

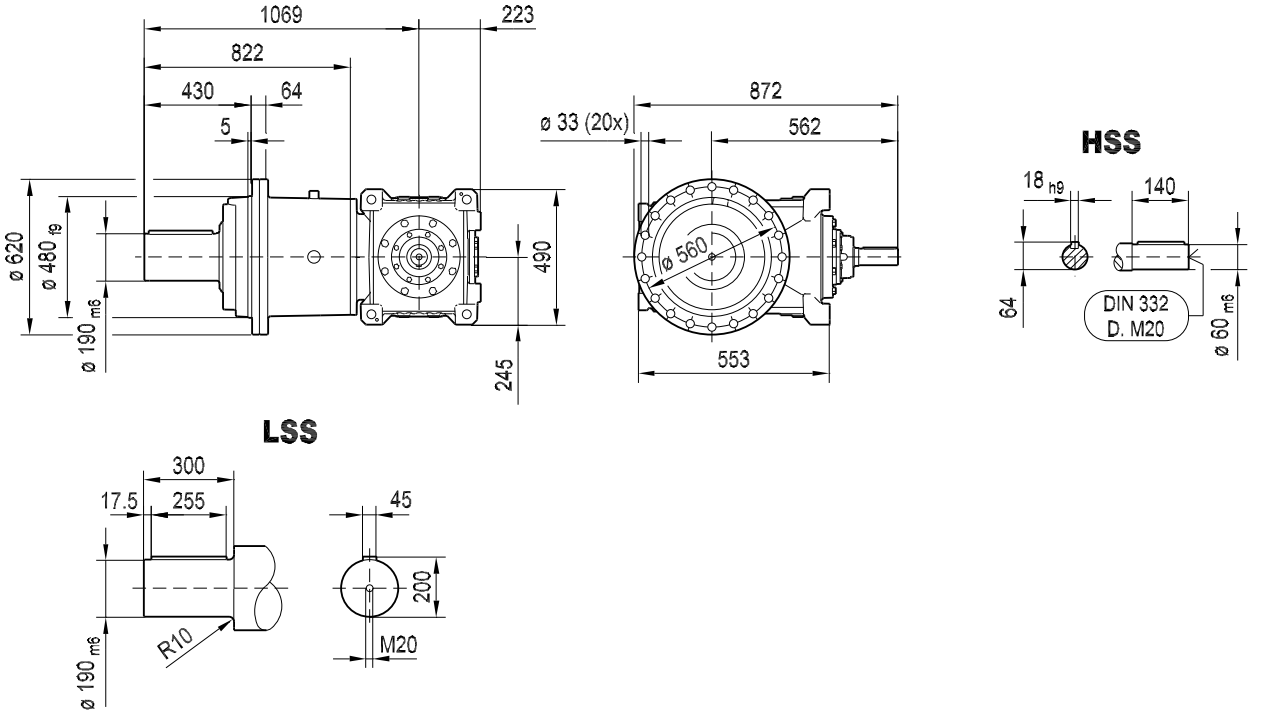

LSS

P2PH042e X1KP080e..

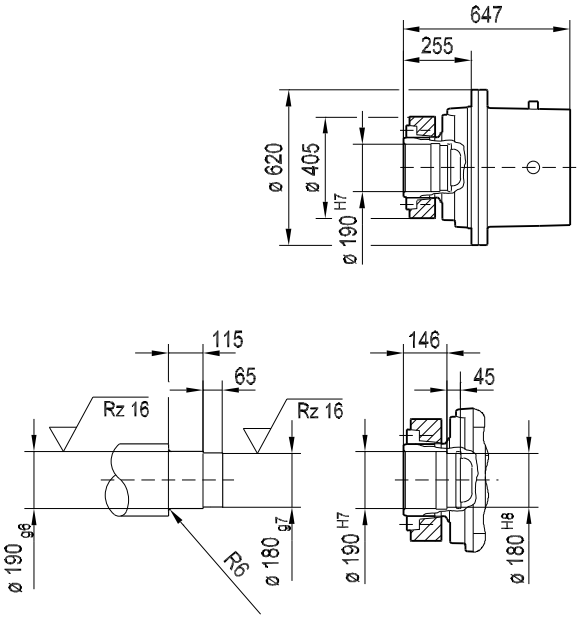

P..042e/T..

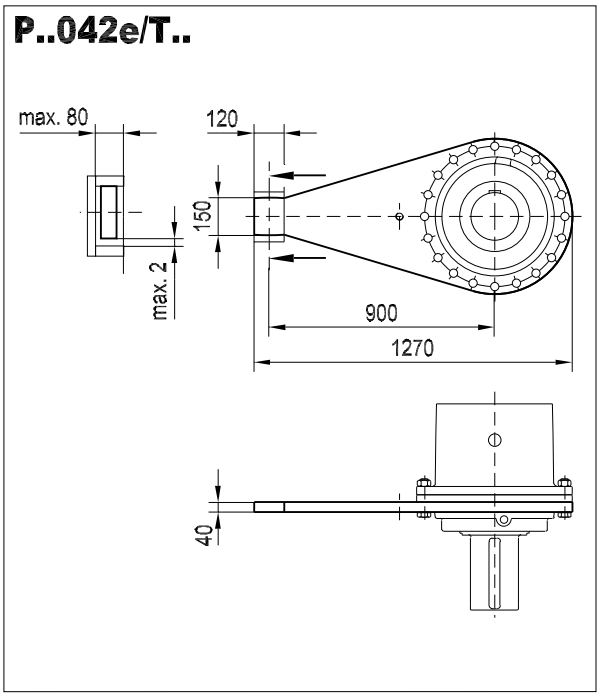

P.042e	kg
P2PS042e X1KP080e	864
P2PH042e X1KP080e	871
/T..	93

33091900/EN – 12/2025

12.6 Size P.042e X1KP100e

45 007 01 25

P2PS042e X1KP100e..

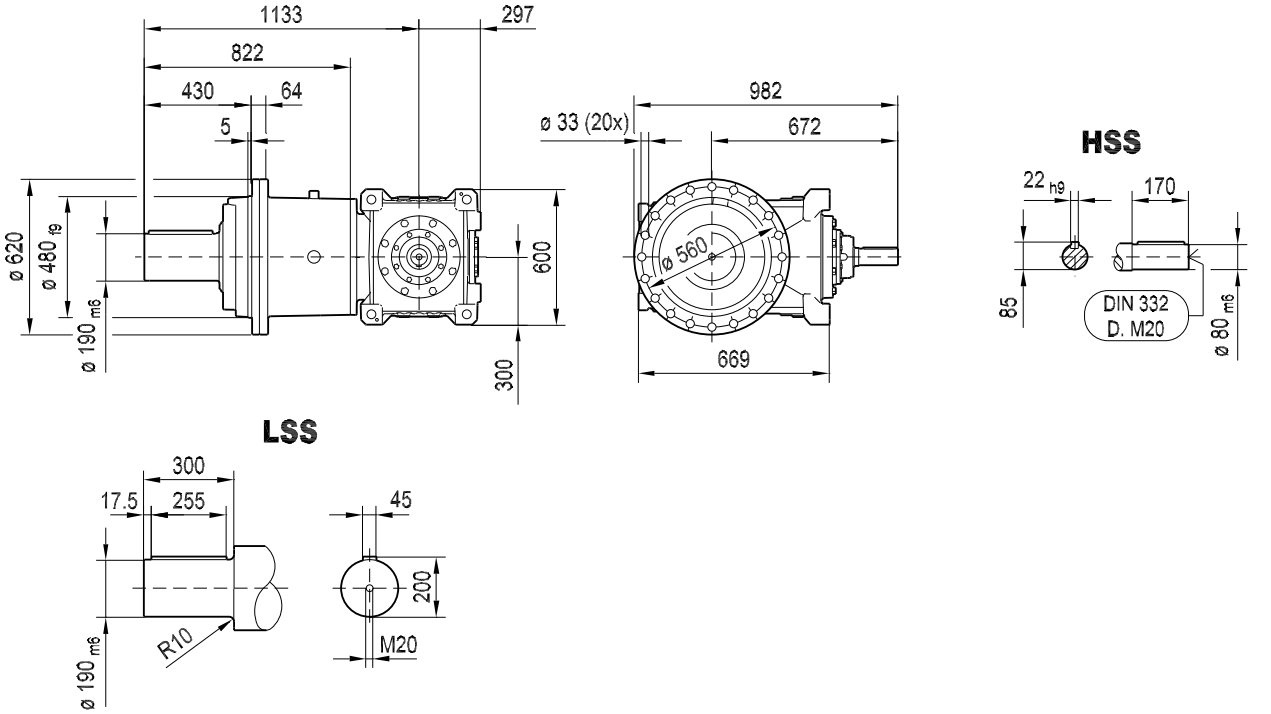

LSS

P2PH042e X1KP100e..

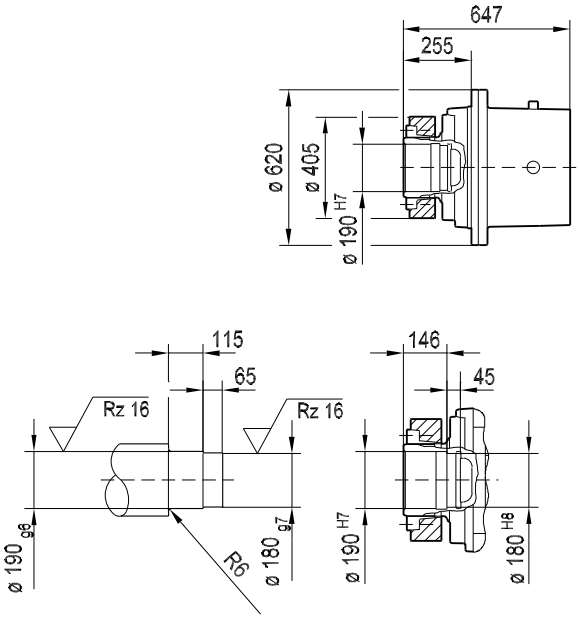

P..042e/T..

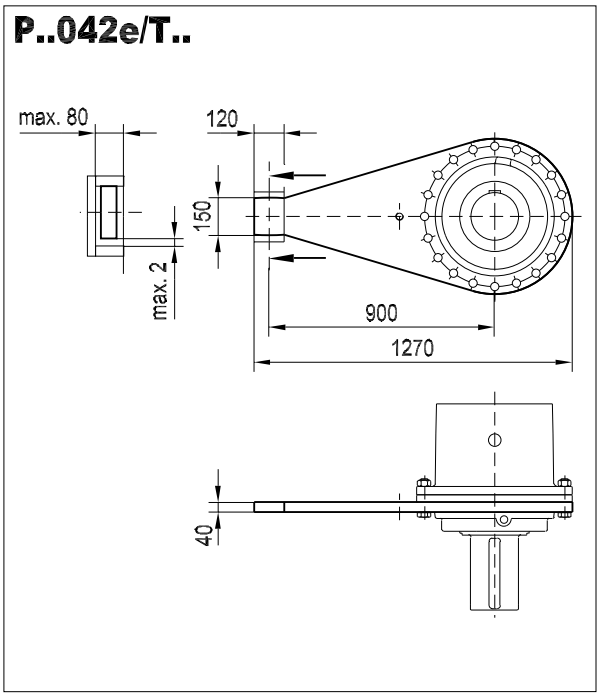

P.042e	kg
P2PS042e X1KP100e	1137
P2PH042e X1KP100e	1143
/T..	102

33091900/EN – 12/2025

12.7 Size P.052e X1KP080e

45 006 01 25

P2PS052e X1KP080e..

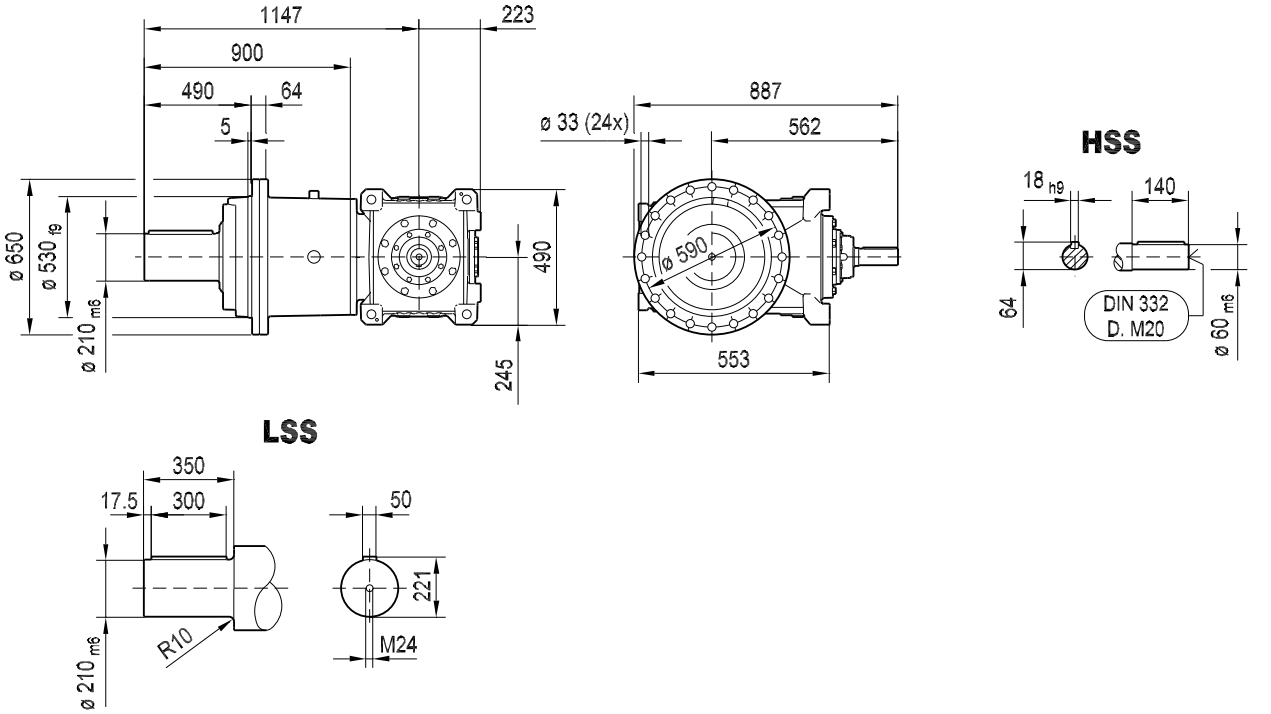

P2PH052e X1KP080e..

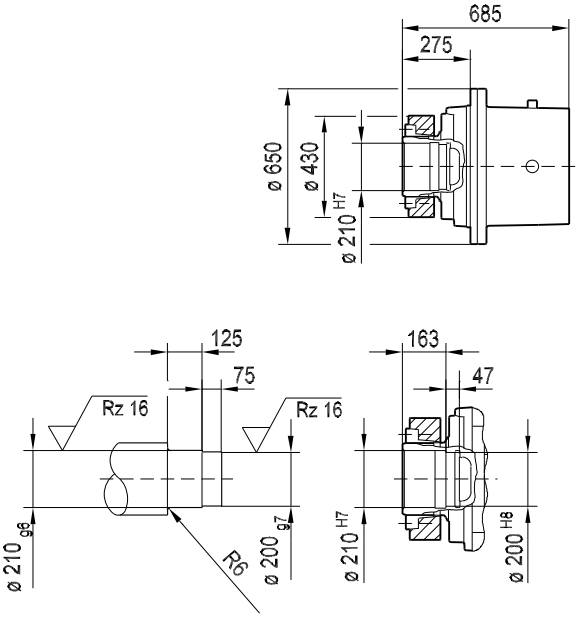

P..052e/T..

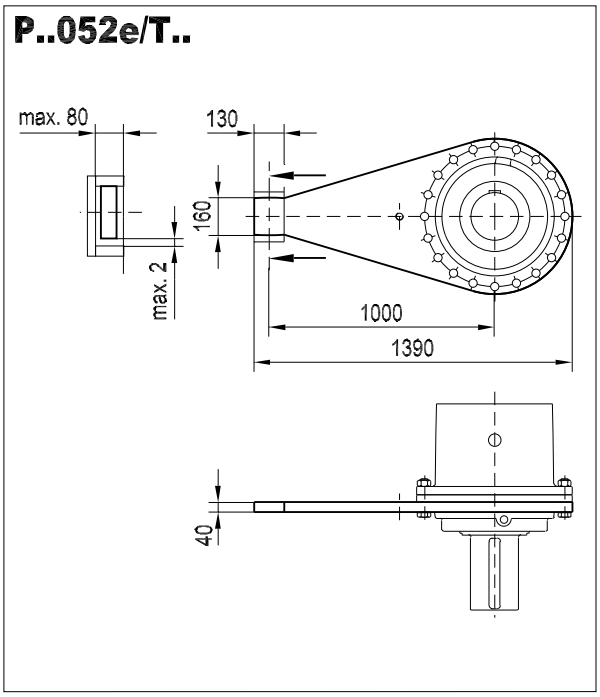

P.052e	kg
P2PS052e X1KP080e	984
P2PH052e X1KP080e	979
/T..	102

33091900/EN – 12/2025

12.8 Size P.052e X1KP100e

45 008 01 25

P2PS052e X1KP100e..

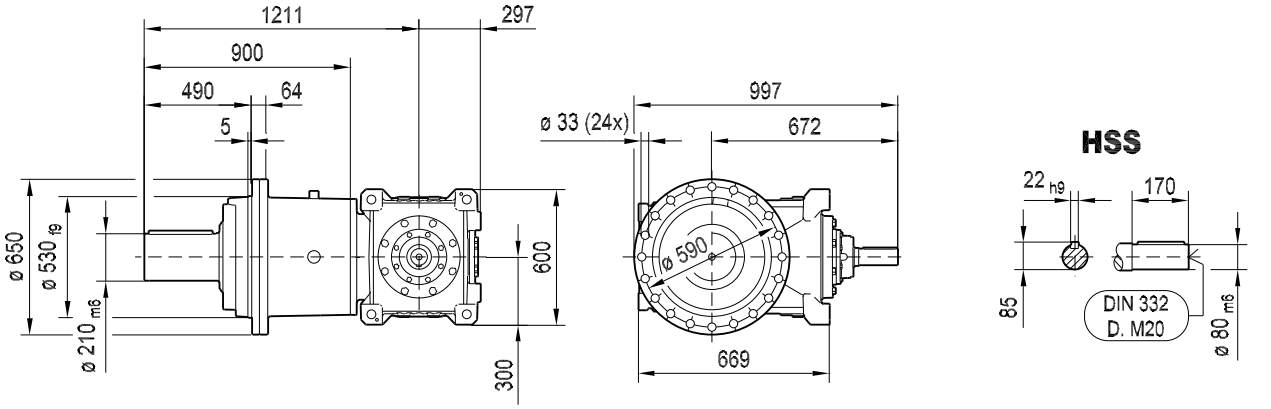

HSS

LSS

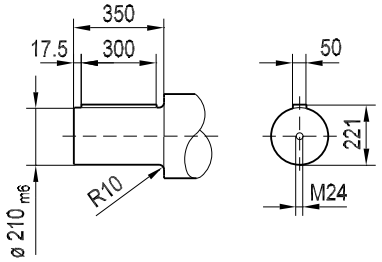

P2PH052e X1KP100e..

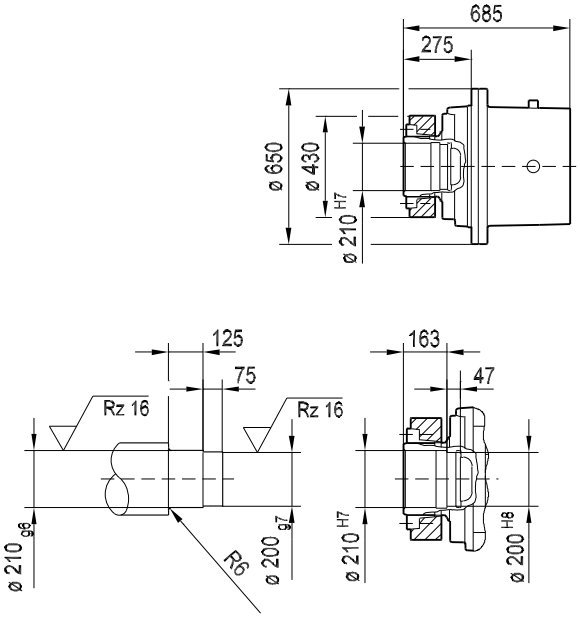

P..052e/T..

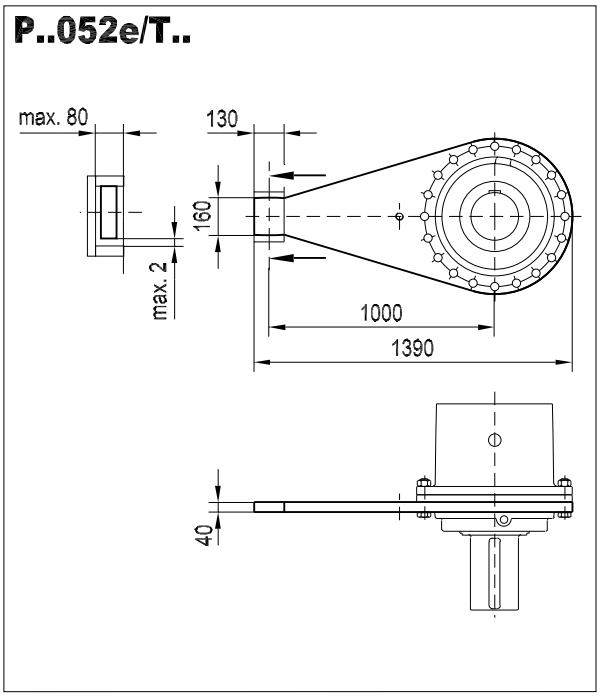

P.052e	kg
P2PS052e X1KP100e	1258
P2PH052e X1KP100e	1252
/T..	102

33091900/EN – 12/2025

12.9 Size P.062e X1KP100e

45 055 01 25

P2PS062e X1KP100e..

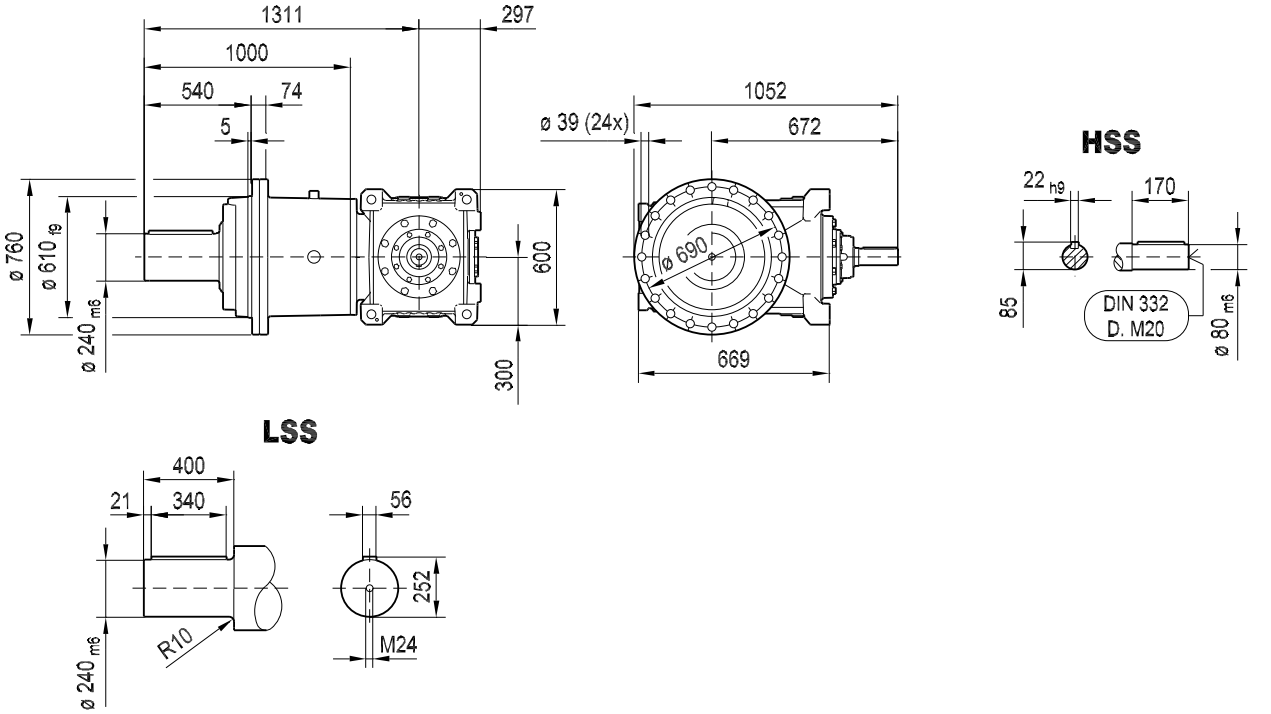

P2PH062e X1KP100e..

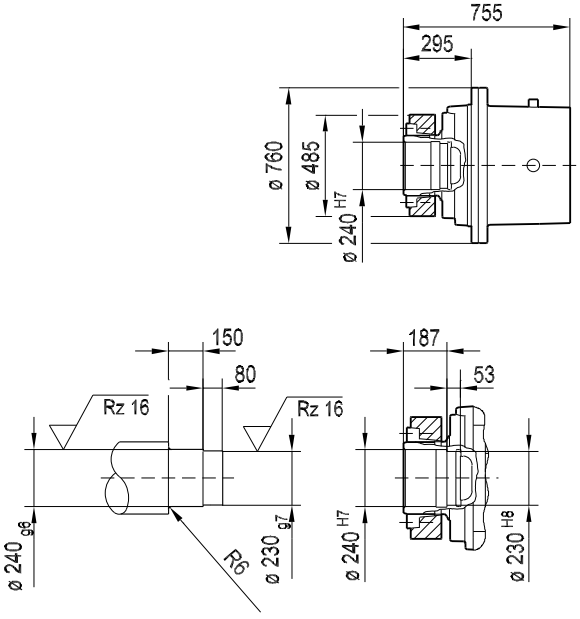

P..062e/T..

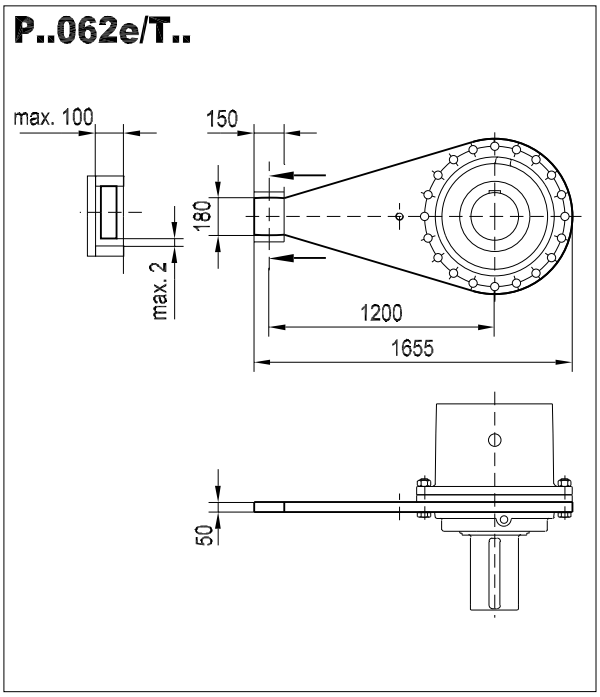

P.062e	kg
P2PS062e X1KP100e	1608
P2PH062e X1KP100e	1620
/T..	183

12.10 Size P.062e X1KP120e

45 057 01 25

P2PS062e X1KP120e..

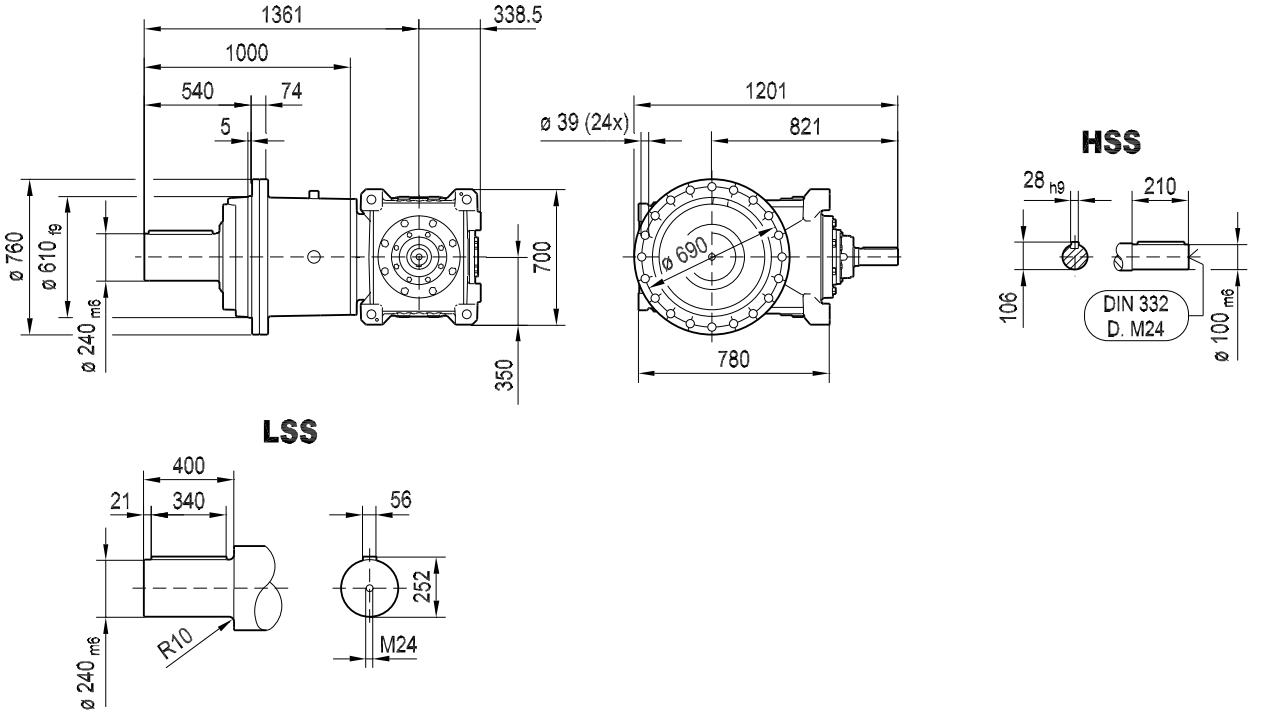

LSS

P2PH062e X1KP120e..

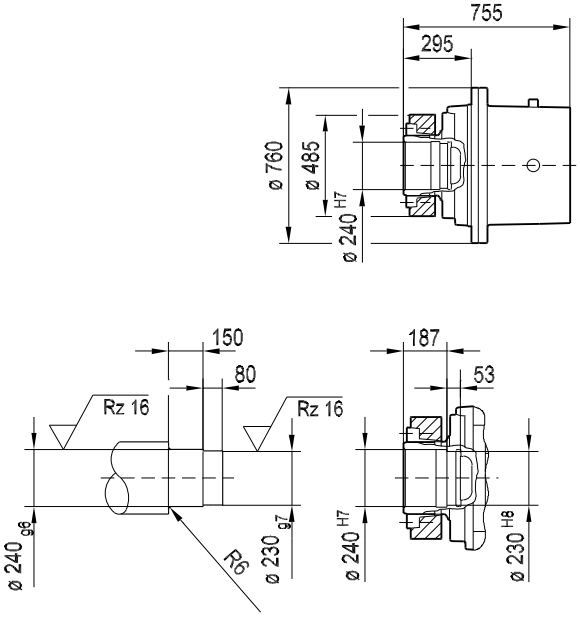

P..062e/T..

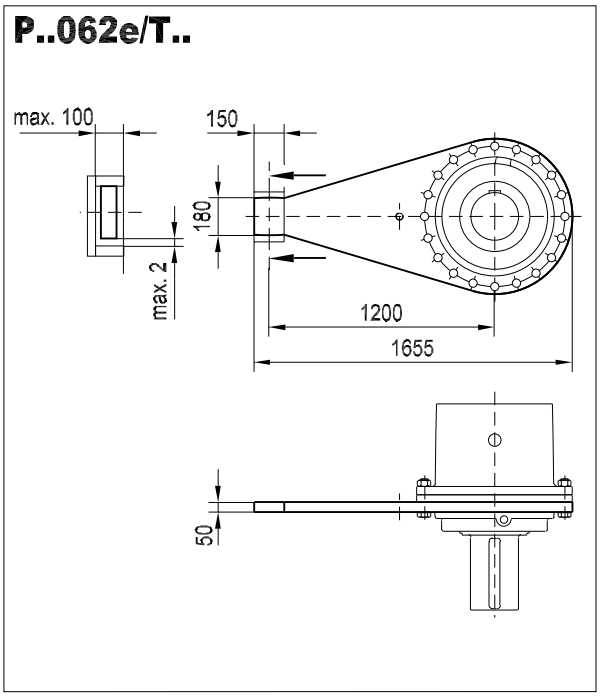

P.062e	kg
P2PS062e X1KP120e	1952
P2PH062e X1KP120e	1964
/T..	183

33091900/EN – 12/2025

12.11 Size P.072e X1KP100e

45 056 01 25

P2PS072e X1KP100e..

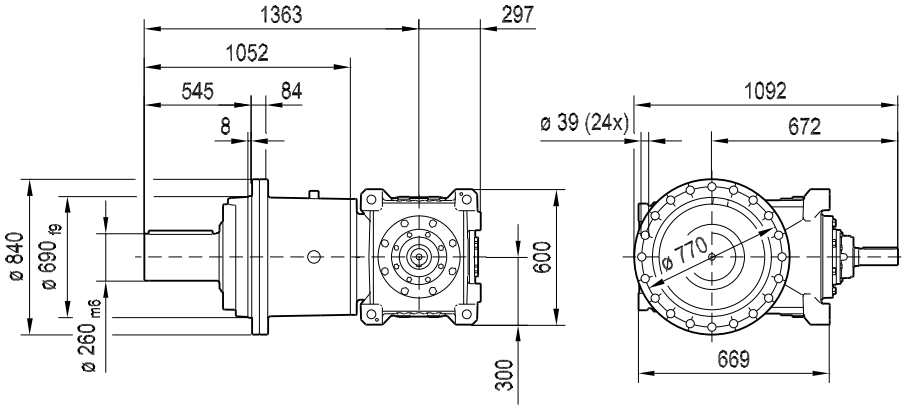

HSS

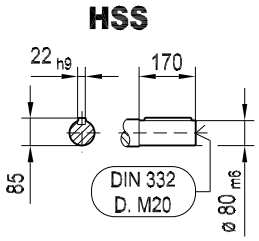

LSS

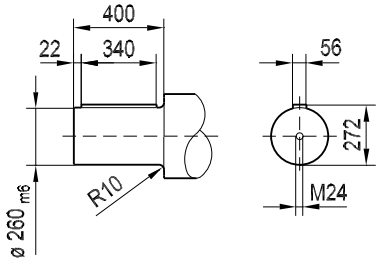

P2PH072e X1KP100e..

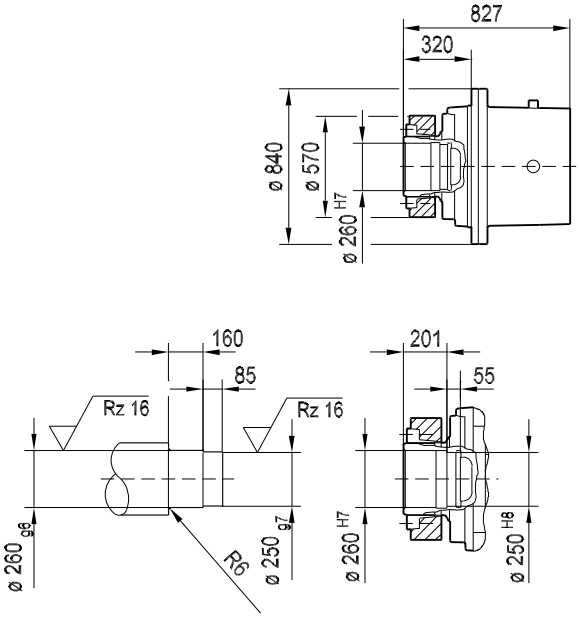

P..072e/T..

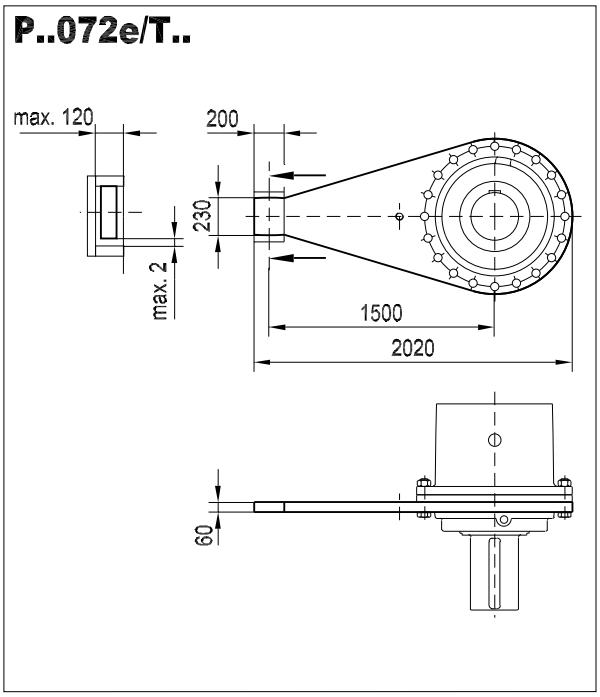

P.072e	kg
P2PS072e X1KP100e	1921
P2PH072e X1KP100e	1981
/T..	317

12.12 Size P.072e X1KP120e

45 058 01 25

P2PS072e X1KP120e..

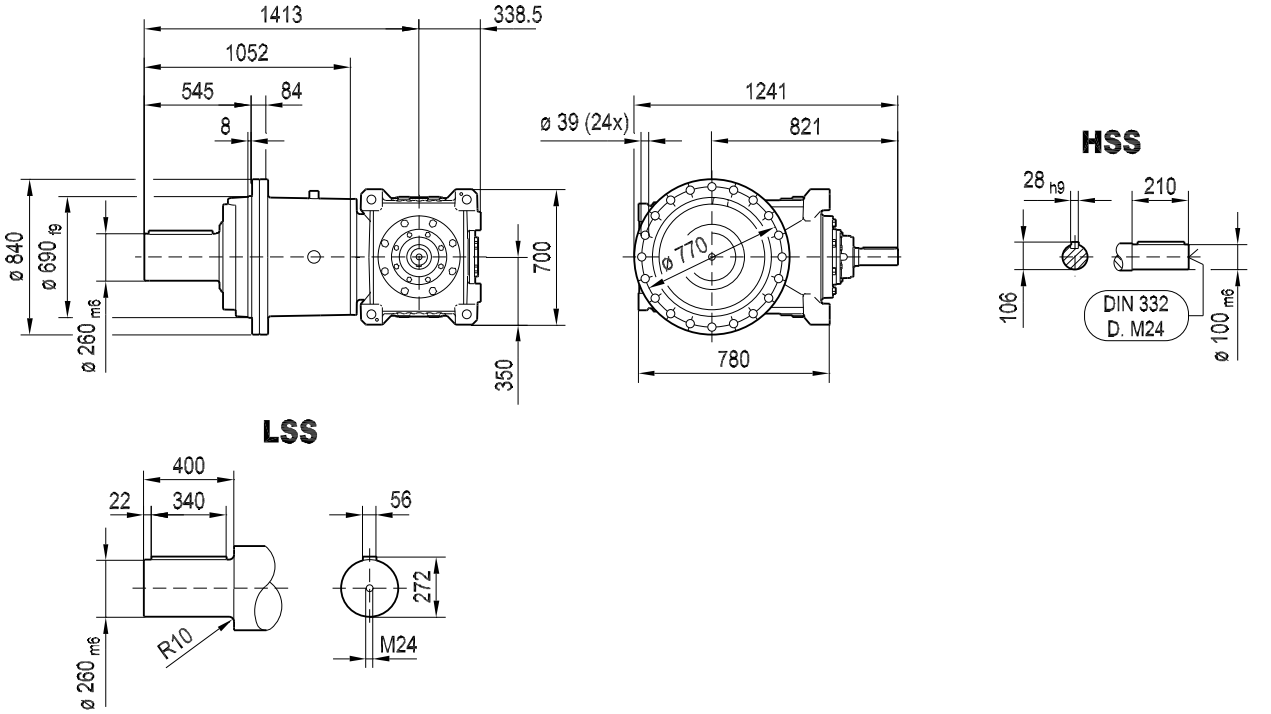

LSS

P2PH072e X1KP120e..

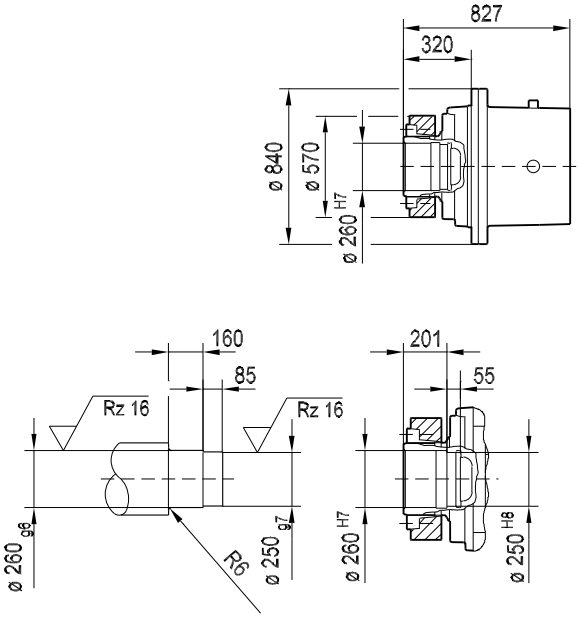

P..072e/T..

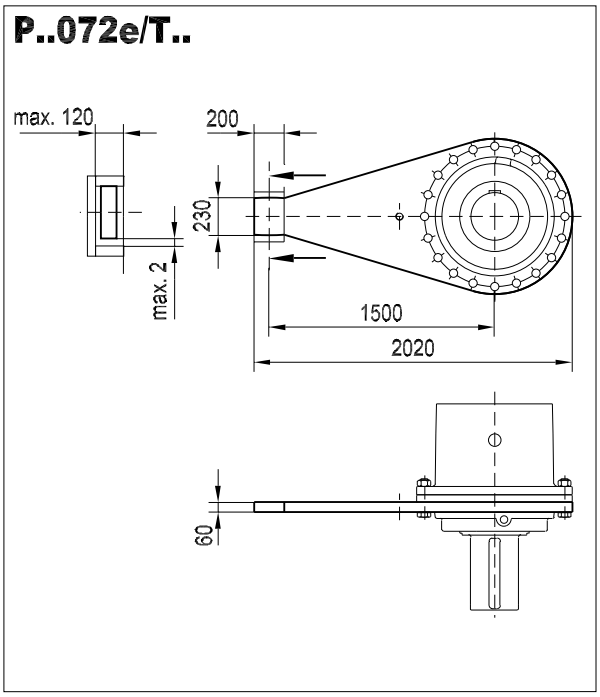

P.072e	kg
P2PS072e X1KP120e	2265
P2PH072e X1KP120e	2326
/T..	317

33091900/EN – 12/2025

12.13 Size P.082e X1KP140e

45 059 01 25

P2PS082e X1KP140e..

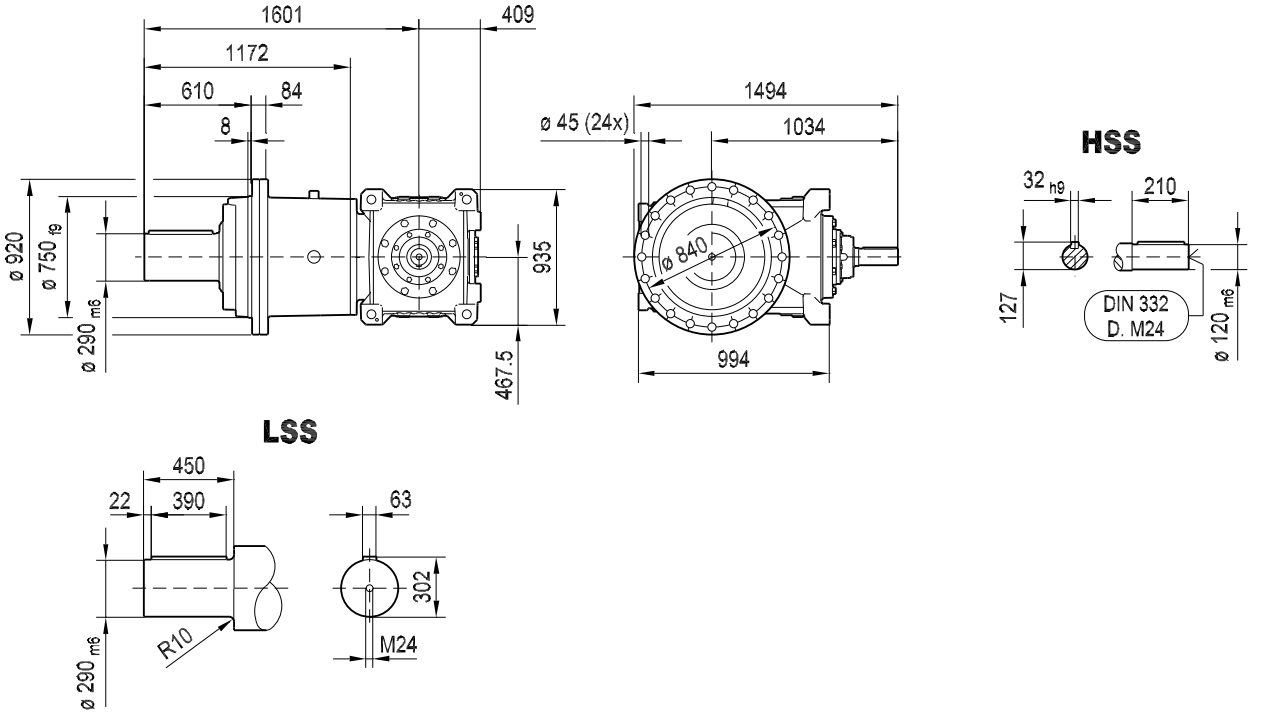

P2PH082e X1KP140e..

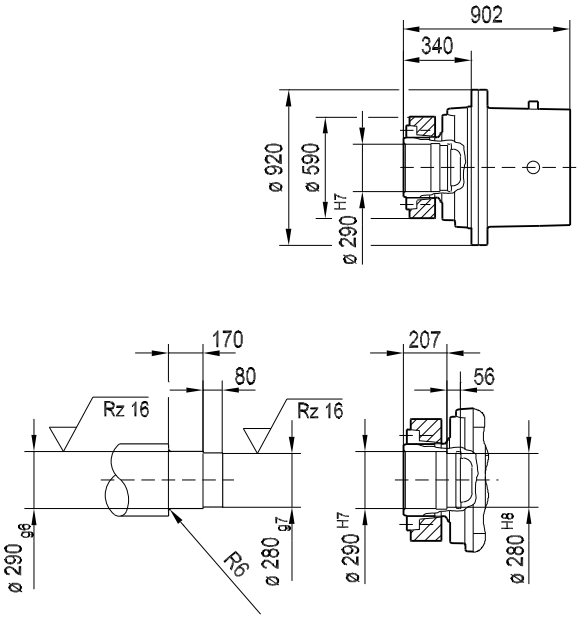

P..082e/T..

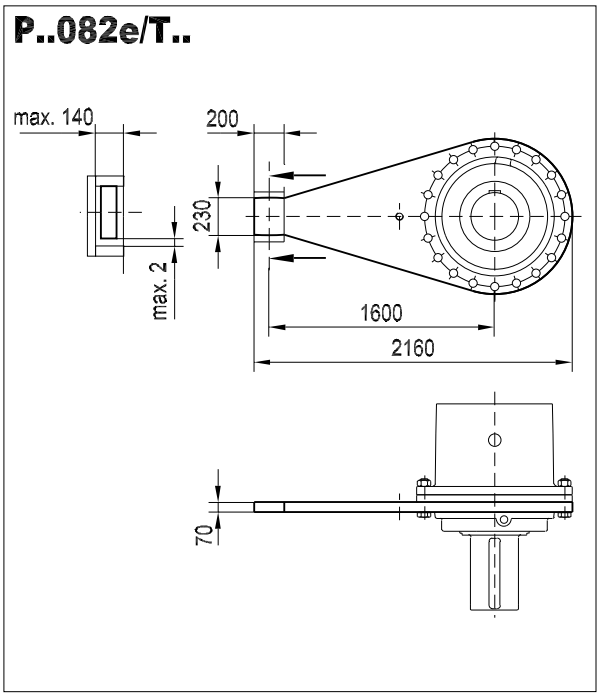

P.082e	kg
P2PS082e X1KP140e	3482
P2PH082e X1KP140e	3453
/T..	420

33091900/EN – 12/2025

12.14 Size P.092 X1KP140e

45 060 01 25

PF092 X1KP140e..

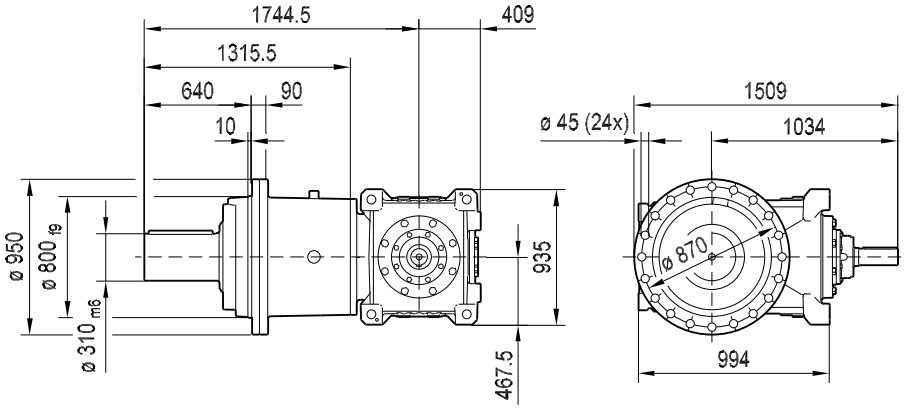

HSS

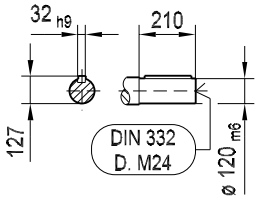

LSS

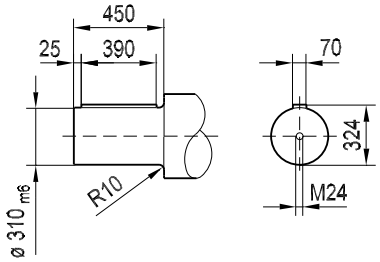

PHF092 X1KP140e..

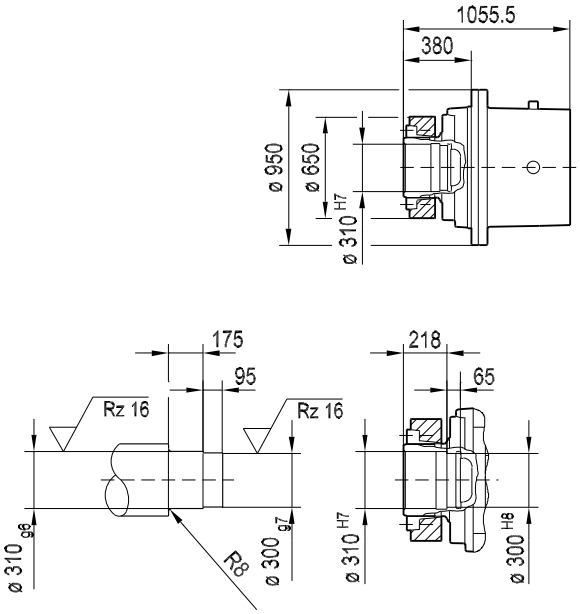

P..092/T..

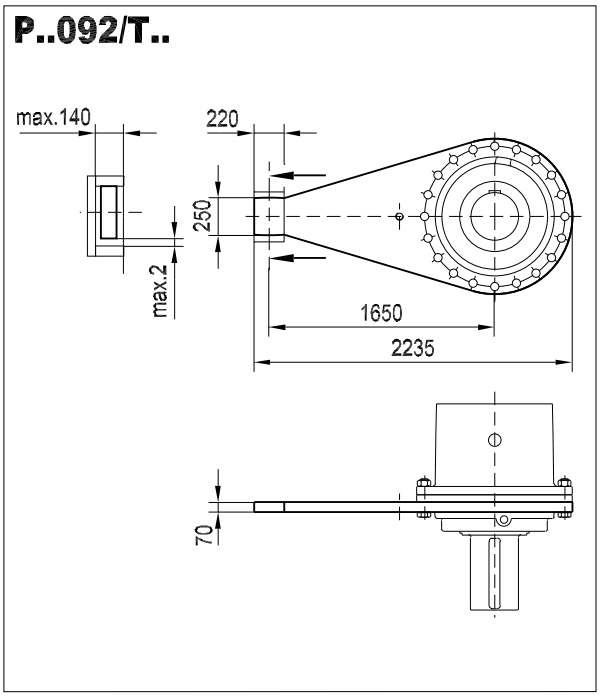

P.092	kg
PF092 X1KP140e	3905
PHF092 X1KP140e	3960
/T..	440

33091900/EN – 12/2025

12.15 Size P.102 X1KP160e

45 061 01 25

PF102 X1KP160e..

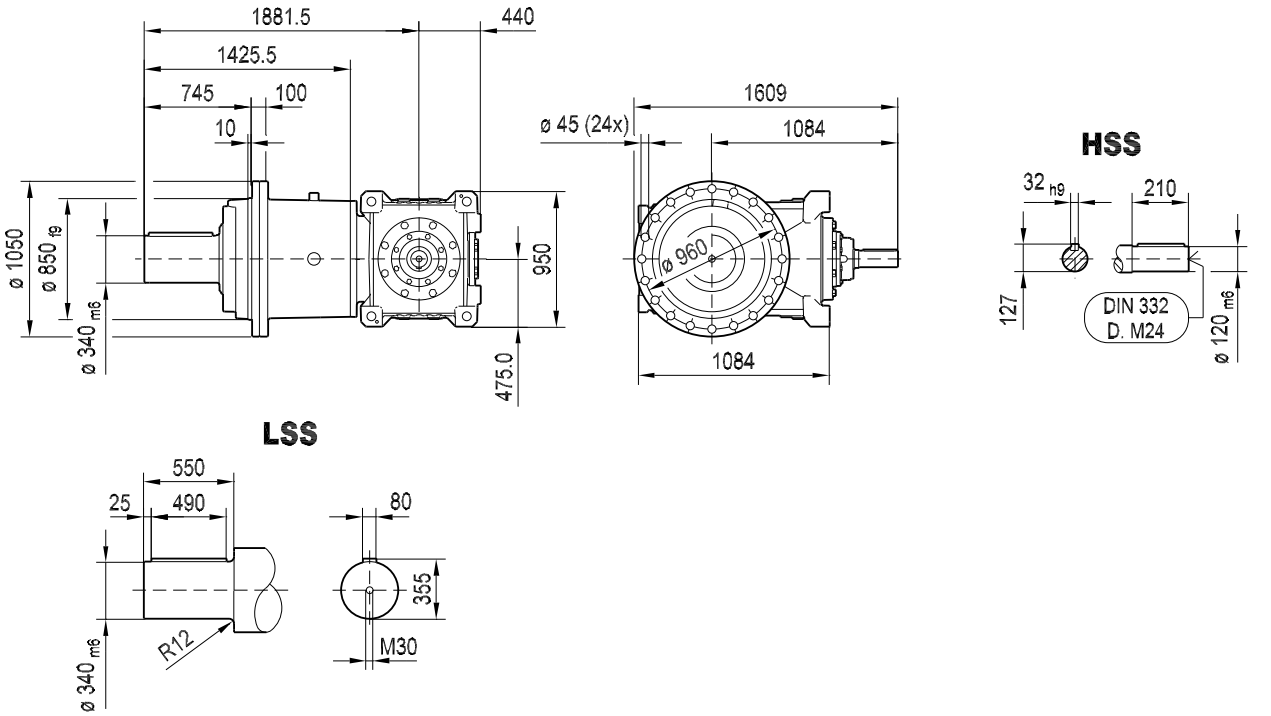

LSS

PHF102 X1KP160e..

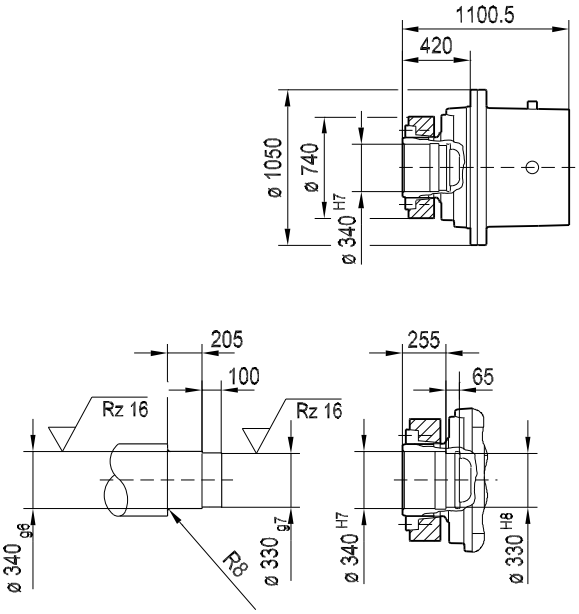

P..102/T..

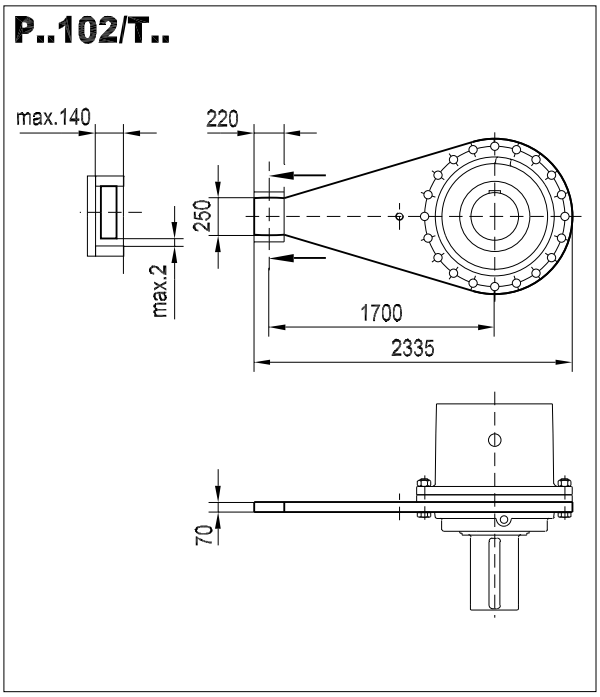

P.102	kg
PF102 X1KP140e	4851
PHF102 X1KP140e	4916
/T..	510

33091900/EN – 12/2025

13 Options dimension sheets

13.1 Housing bores

HP

45 016 01 25

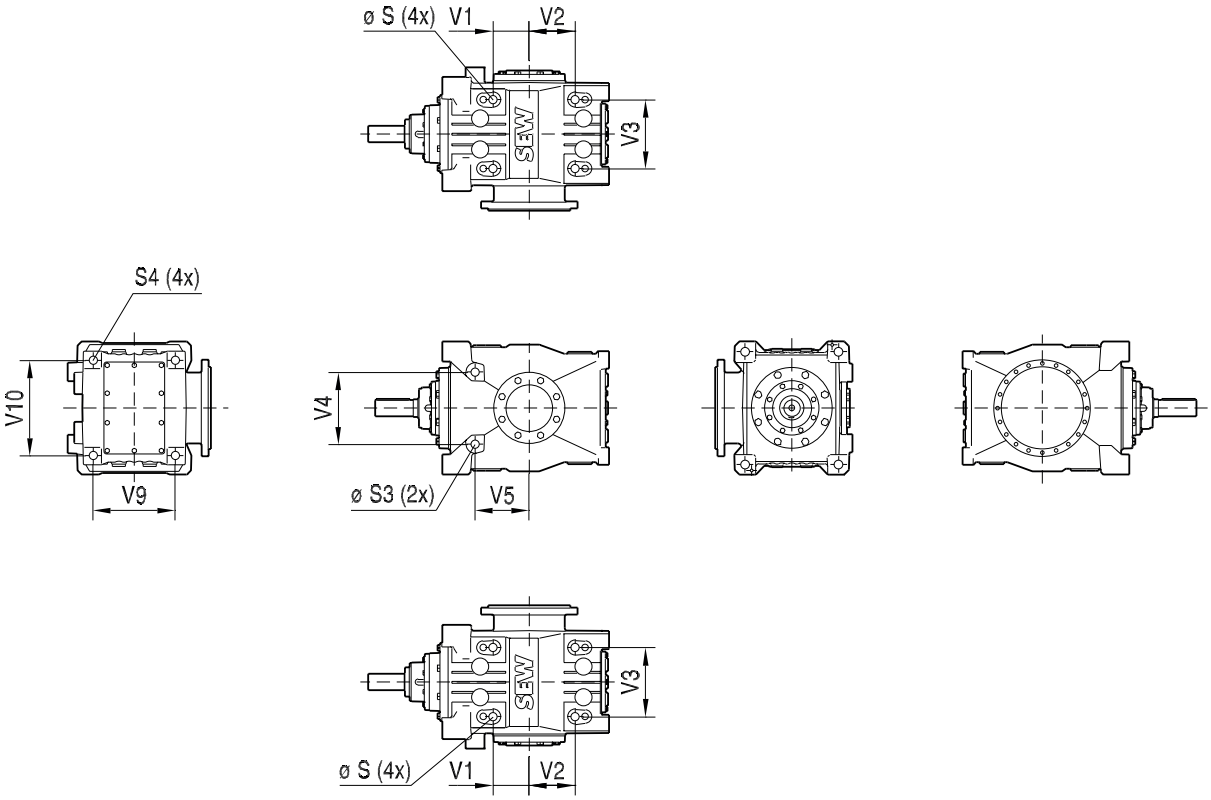

33091900/EN – 12/2025

	V1	V2	V3	ØS (4x)	V4	V5	ØS3 (2x)	V9	V10	ØS4 (4x)
P002e – 012e X1KP060e	110	140	210	M20 (4x)	220	165	M20 (2x)	250	290	M20 (4x)
P022e – 052e X1KP080e	160	140	245	M20 (4x)	260	210	M20 (2x)	288	322	M20 (4x)
P042e – 052e X1KP100e	205	195	340	M24 (4x)	300	230	M30 (2x)	390	430	M24 (4x)
P062e – 072e X1KP100e	205	195	340	M30 (4x)	300	230	M30 (2x)	390	430	M30 (4x)
P062e – 072e X1KP120e	227.5	227.5	420	M30 (4x)	420	305	M30 (2x)	470	480	M30 (4x)
P082e – 092 X1KP140e	295	295	520	M36 (4x)	600	430	M36 (2x)	585	690	M36 (4x)
P102X1KP160e	335	335	560	M42 (2x)	600	460	M42 (2x)	615	705	M42 (2x)

33091900/EN – 12/2025

13.2 Output shaft

13.2.1 P.. solid shaft with 2 keys

45 002 01 14

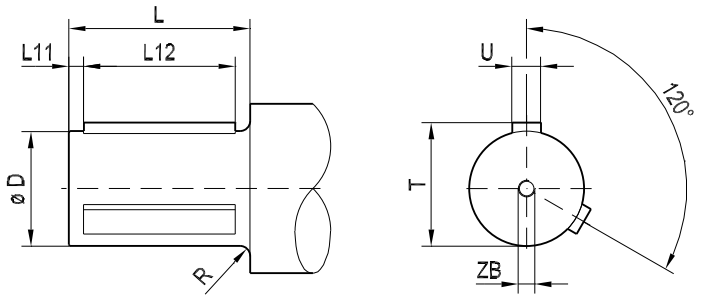

	Ø D	L11	L12	L	T	V	M	R
P.002	120_{m6}	14	165	200	127	32	M20	5
P.012	140_{m6}	15	185	220	148	36	M20	5
P.022	150_{m6}	15	183	220	158	36	M20	10
P.032	165_{m6}	15	213	250	174	40	M20	10
P.042	190_{m6}	17.5	255	300	200	45	M20	10
P.052	210_{m6}	17.5	300	350	221	50	M24	10
P.062	240_{m6}	21	340	400	252	56	M24	10
P.072	260_{m6}	22	340	400	272	56	M24	10
P.082	290_{m6}	22	390	450	302	63	M24	10
P.092	310_{m6}	25	390	450	324	70	M24	10
P.102	340_{m6}	25	490	550	355	80	M30	12

13.2.2 PR.. smooth solid shaft

45 003 01 14

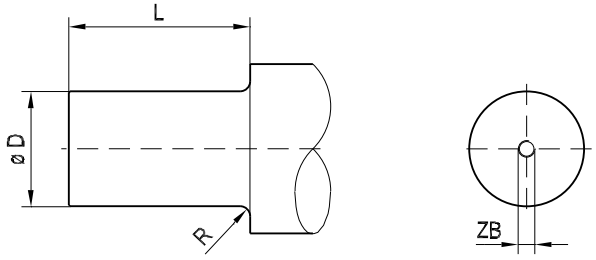

	Ø D	L	M	R
PR.002	120_{v6}	200	M20	5
PR.012	140_{v6}	220	M20	5
PR.022	150_{v6}	220	M20	10
PR.032	165_{v6}	250	M20	10
PR.042	190_{v6}	300	M20	10
PR.052	210_{v6}	350	M24	10
PR.062	240_{v6}	400	M24	10
PR.072	260_{v6}	400	M24	10
PR.082	290_{v6}	450	M24	10
PR.092	310_{v6}	450	M24	10
PR.102	340_{v6}	550	M30	12

33091900/EN – 12/2025

13.2.3 PL.. splined solid shaft

45 002 02 16

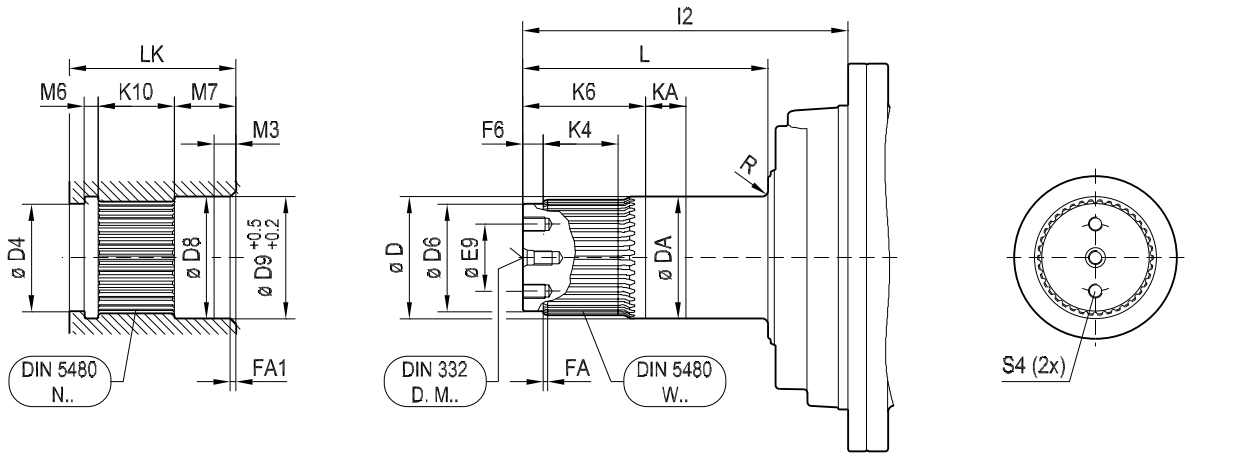

DIN 5480 – Solid shaft															
Type	**ø D**	**ø DA**	**ø D6**	**KA**	**F6**	**L**	**I2**	**K6**	**K4**	**R**	**ø E9**	**DIN 332 D.M..**	**S4 (2 ×)**	**FA**	**DIN 5480-W..**
PL.002	120_{h9}	120_{m6}	95_{m6}	20	20	200	280	135	80	5	–	M20	–	8	110x5x30x20x8f
PL.012	140_{h9}	140_{m6}	115_{m6}	25	25	220	298	145	85	5	–	M20	–	8	130x5x30x24x8f
PL.022	150_{h9}	150_{m6}	125_{m6}	25	25	220	305	155	95	10	–	M20	–	8	140x5x30x26x8f
PL.032	165_{h9}	165_{m6}	145_{m6}	25	25	250	340	157	100	10	90	M20	M20	8	160x5x30x30x8f
PL.042	190_{h9}	190_{m6}	165_{m6}	30	30	300	430	175	110	10	125	M20	M20	8	180x5x30x34x8f
PL.052	210_{h9}	210_{m6}	185_{m6}	35	35	350	490	180	110	10	140	M24	M24	8	200x5x30x38x8f
PL.062	240_{h9}	240_{m6}	205_{m6}	35	35	400	540	210	130	10	160	M24	M24	8	220x5x30x42x8f
PL.072	260_{h9}	260_{m6}	235_{m6}	40	40	400	545	215	135	10	160	M24	M24	8	250x5x30x48x8f
PL.082	290_{h9}	290_{m6}	265_{m6}	40	40	450	610	235	155	10	190	M24	M24	8	280x5x30x54x8f
PL.092	310_{h9}	310_{m6}	280_{m6}	45	45	450	640	245	160	10	220	M24	M24	8	300x5x30x58x8f
PL.102	340_{h9}	340_{m6}	300_{m6}	50	50	550	745	265	167	12	235	M30	M30	8	320x5x30x62x8f

Recommendations for customer shaft										
Type	**ø D4**	**ø D8**	**ø D9**	**M6**	**M7**	**M3**	**K10**	**FA1**	**LK**	**DIN 5480-N..**
PL.002	95^{F7}	120^{F7}	120	10	102	45	70	12×45°	200	110×5×30×20×9H
PL.012	115^{F7}	140^{F7}	140	10	112	50	75	12×45°	220	130×5×30×24×9H
PL.022	125^{F7}	150^{F7}	150	10	102	40	85	12×45°	220	140×5×30×26×9H
PL.032	145^{F7}	165^{F7}	165	10	127	68	90	12×45°	250	160×5×30×30×9H
PL.042	165^{F7}	190^{F7}	190	12	162	95	100	12×45°	300	180×5×30×34×9H
PL.052	185^{F7}	210^{F7}	210	12	207	135	100	12×45°	350	200×5×30×38×9H
PL.062	205^{F7}	240^{F7}	240	12	237	155	120	12×45°	400	220×5×30×42x9H
PL.072	235^{F7}	260^{F7}	260	12	227	145	125	12×45°	400	250×5×30×48x9H
PL.082	265^{F7}	290^{F7}	290	12	257	175	145	12×45°	450	280×5×30×54x9H
PL.092	280^{F7}	310^{F7}	310	12	247	160	150	12×45°	450	300×5×30×58x9H
PL.102	300^{F7}	340^{F7}	340	12	335	235	155	12×45°	550	320×5×30×62x9H

INFORMATION

For applications with overhung loads, consult SEW-EURODRIVE.

33091900/EN – 12/2025

13.2.4 PV.. splined hollow shaft

45 001 01 16

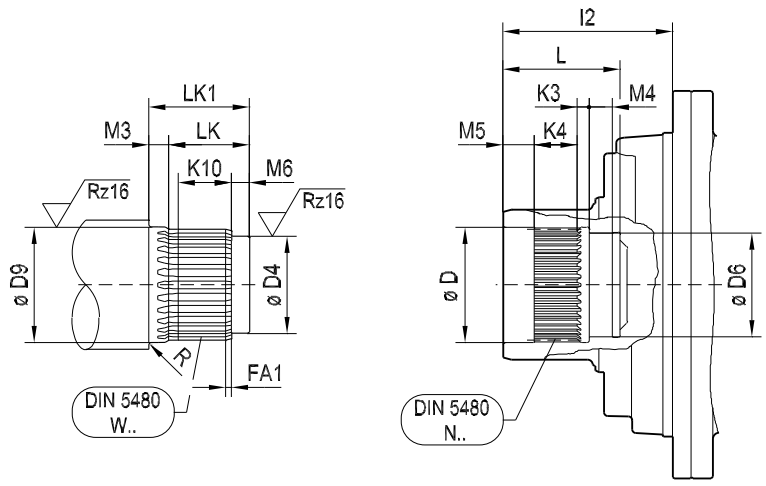

DIN 5480 – Hollow shaft									
Type	**ø D**	**ø D6**	**M5**	**M4**	**L**	**I2**	**K4**	**K3**	**DIN 5480-N..**
PV.002	132^{H7}	110^{H7}	35	20	138	165	50	18	130x5x30x24x9H
PV.012	152^{H7}	130^{H7}	35	20	140	170	54	19	150x5x30x28x9H
PV.022	162^{H7}	140^{H7}	35	20	152.5	180	65	19.5	160x5x30x30x9H
PV.032	182^{H7}	155^{H7}	45	25	175	210	70	20	180x5x30x34x9H
PV.042	202^{H7}	180^{H7}	45	30	191	255	80	21	200x5x30x38x9H
PV.052	222^{H7}	200^{H7}	55	35	210	275	82	23	220x5x30x42x9H
PV.062	252^{H7}	230^{H7}	60	35	240	295	95	32	250x5x30x48x9H
PV.072	282^{H7}	250^{H7}	60	37	256	320	98	43	280x5x30x54x9H
PV.082	302^{H7}	280^{H7}	60	38	263	340	125	22	300x5x30x58x9H
PV.092	322^{H7}	300^{H7}	70	40	283	380	130	23	320x5x30x62x9H
PV.102	362^{H7}	330^{H7}	90	45	320	420	125	40	360x8x30x44x9H

Recommendations for customer shaft										
Type	**ø D9**	**ø D4**	**M3**	**M6**	**LK1**	**LK**	**K10**	**R**	**FA1**	**DIN 5480-W..**
PV.002	132_{g6}	110_{g6}	24	30	125	101	62	3	8x30°	130x5x30x24x8f
PV.012	152_{g6}	130_{g6}	24	31	130	106	66	3	8x30°	150x5x30x28x8f
PV.022	162_{g6}	140_{g6}	24	31.5	141.5	117.5	77	3	8x30°	160x5x30x30x8f
PV.032	182_{g6}	155_{g6}	34	37	162	128	82	5	8x30°	180x5x30x34x8f
PV.042	202_{g6}	180_{g6}	34	43	178	144	92	5	8x30°	200x5x30x38x8f
PV.052	222_{g6}	200_{g6}	44	50	197	153	94	5	8x30°	220x5x30x42x8f
PV.062	252_{g6}	230_{g6}	49	59	224	175	107	5	8x30°	250x5x30x48x8f
PV.072	282_{g6}	250_{g6}	49	72	240	191	110	6	8x30°	280x5x30x54x8f
PV.082	302_{g6}	280_{g6}	49	52	247	198	137	6	8x30°	300x5x30x58x8f
PV.092	322_{g6}	300_{g6}	59.5	55	265	205.5	142	8	8x30°	320x5x30x62x8f
PV.102	362_{g6}	330_{g6}	77	75	302	225	139	8	10x30°	360x8x30x44x8f

INFORMATION

For applications with overhung loads, consult SEW-EURODRIVE.

33091900/EN – 12/2025

13.3 Locking screws of the shrink disk

45 001 00 20

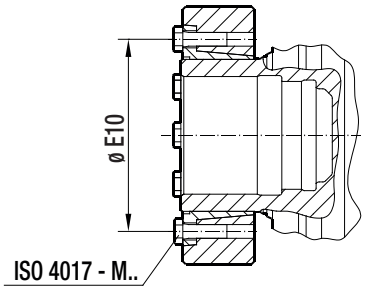

Gear unit type	Size	Ø E10	ISO
PH../PHF..	002	196	ISO 4017 – M16x45
PH../PHF..	012	224	ISO 4017 – M16x70
PH../PHF..	022	240	ISO 4017 – M16x70
PH../PHF..	032	270	ISO 4017 – M20x60
PH../PHF..	042	296	ISO 4017 – M20x60
PH../PHF..	052	318	ISO 4017 – M20x60
PH../PHF..	062	360	ISO 4017 – M24x80
PH../PHF..	072	402	ISO 4017 – M24x80
PH../PHF..	082	424	ISO 4017 – M24x80
PH../PHF..	092	458	ISO 4017 – M27x80
PH../PHF..	102	518	ISO 4017 – M27x80

33091900/EN – 12/2025

13.4 Protective cover for shrink disk

45 133 02 08

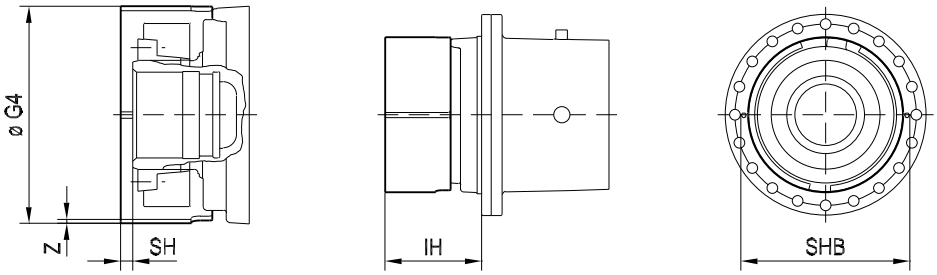

	B	ø D	L	Z	SH
P.002	350	307	176	2	11
P.012	396	353	182.5	2	12.5
P.022	452	409	193	2	13
P.032	472	429	224.5	2	14.5
P.042	522	479	269	2	14
P.052	566	523	293	2	18
P.062	636	593	312	2	17
P.072	712	669	335.5	2	15.5
P.082	776	733	360	2	20
P.092	734	684	399.5	2	19.5
P.102	824	774	435.5	2	14.5

33091900/EN – 12/2025

13.5 IEC motor adapter

MA

45 009 01 25

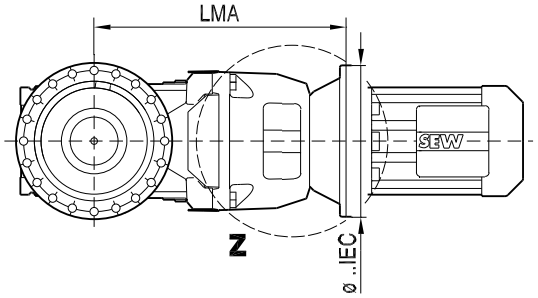

≤ IEC200

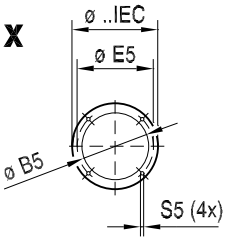

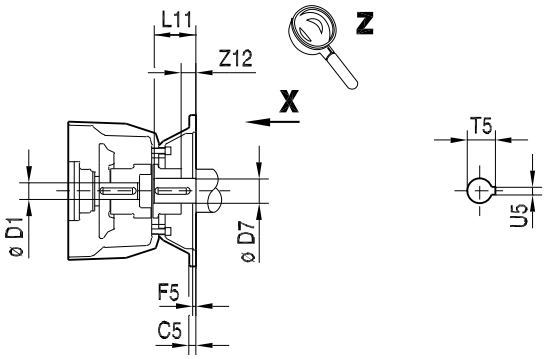

≥ IEC 225

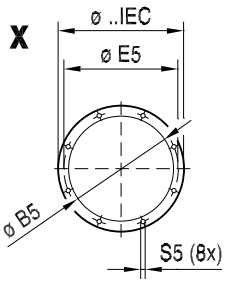

33091900/EN – 12/2025

	IEC	Ø IEC	Ø B5	C5	Ø D7	Ø E5	F5	L11	S5	T5	U5	Ø D1	LMA	Z12	kg
P002e – 012e X1KP060e	160	350	250^{H7}	16	42^{H7}	300	6	110	M16 (4x)	45.3	12^{JS9}	50	622	51.5	64
	180	350	250^{H7}	16	48^{H7}	300	6	110	M16 (4x)	51.8	14^{JS9}	50	622	51	64
	200	400	300^{H7}	20	55^{H7}	350	7	110	M16 (4x)	59.3	16^{JS9}	50	634	42.5	70
	225	450	350^{H7}	20	60^{H7}	400	7	140	M16 (8x)	64.4	18^{JS9}	50	664	43	86
	250	550	450^{H7}	25	65^{H7}	500	7	140	M16 (8x)	69.4	18^{JS9}	50	694	57	100
	280	550	450^{H7}	25	75^{H7}	500	7	140	M16 (8x)	79.9	20^{JS9}	50	694	64	100
	315S–L	660	550^{H7}	25	80^{H7}	600	7	170	M20 (8x)	85.4	22^{JS9}	50	694	38	130
P022e – 052e X1KP080e	200	400	300^{H7}	20	55^{H7}	350	6	110	M16 (4x)	59.3	16^{JS9}	60	692	42	100
	225	450	350^{H7}	20	60^{H7}	400	6	140	M16 (8x)	64.4	18^{JS9}	60	722	44	117
	250	550	450^{H7}	25	65^{H7}	500	7	140	M16 (8x)	69.4	18^{JS9}	60	732	46	122
	280	550	450^{H7}	25	75^{H7}	500	7	140	M16 (8x)	79.9	20^{JS9}	60	732	50	122
	315S–L	660	550^{H7}	25	80^{H7}	600	7	170	M20 (8x)	85.4	22^{JS9}	60	771	69	153
	315	800	680^{H7}	25	85^{H7}	740	7	170	M20 (8x)	90.4	22^{JS9}	60	807	80	193
P042e – 072e X1KP100e	250	550	450^{H7}	25	65^{H7}	500	7	140	M16 (8x)	69.4	18^{JS9}	80	840	50	160
	280	550	450^{H7}	25	75^{H7}	500	7	140	M16 (8x)	79.9	20^{JS9}	80	840	50	160
	315S–L	660	550^{H7}	25	80^{H7}	600	7	170	M20 (8x)	85.4	22^{JS9}	80	879	62	192
	315	800	680^{H7}	25	85^{H7}	740	7	170	M20 (8x)	90.4	22^{JS9}	80	915	73	230
	355	800	680^{H7}	25	100^{H7}	740	7	210	M20 (8x)	106.4	28^{JS9}	80	955	110	257
P062e – 072e X1KP120e	315S–L	660	680^{H7}	25	80^{H7}	600	7	170	M20 (8x)	85.4	22^{JS9}	100	994	32.5	240
	315	800	680^{H7}	25	85^{H7}	740	7	170	M20 (8x)	90.4	22^{JS9}	100	1030	39	280
	355	800	680^{H7}	25	100^{H7}	740	7	210	M20 (8x)	106.4	28^{JS9}	100	1070	74	305
P082e – 092 X1KP140e	315S–L	660	680^{H7}	25	80^{H7}	600	7	170	M20 (8x)	85.4	22^{JS9}	100	1222	13	360
	315	800	680^{H7}	25	85^{H7}	740	7	170	M20 (8x)	90.4	22^{JS9}	100	1258	49	378
	355	800	680^{H7}	25	100^{H7}	740	7	210	M20 (8x)	106.4	28JS9	100	1298	89	400
P102 X1KP160e	315S–L	660	680^{H7}	25	80^{H7}	600	7	170	M20 (8x)	85.4	22^{JS9}	100	1272	13	360
	315	800	680^{H7}	25	85^{H7}	740	7	170	M20 (8x)	90.4	22^{JS9}	100	1308	49	380
	355	800	680^{H7}	25	100^{H7}	740	7	210	M20 (8x)	106.4	28^{JS9}	100	1348	89	390

33091900/EN – 12/2025

13.6 NEMA motor adapter [inch]

NEMA-MA

45 010 01 25

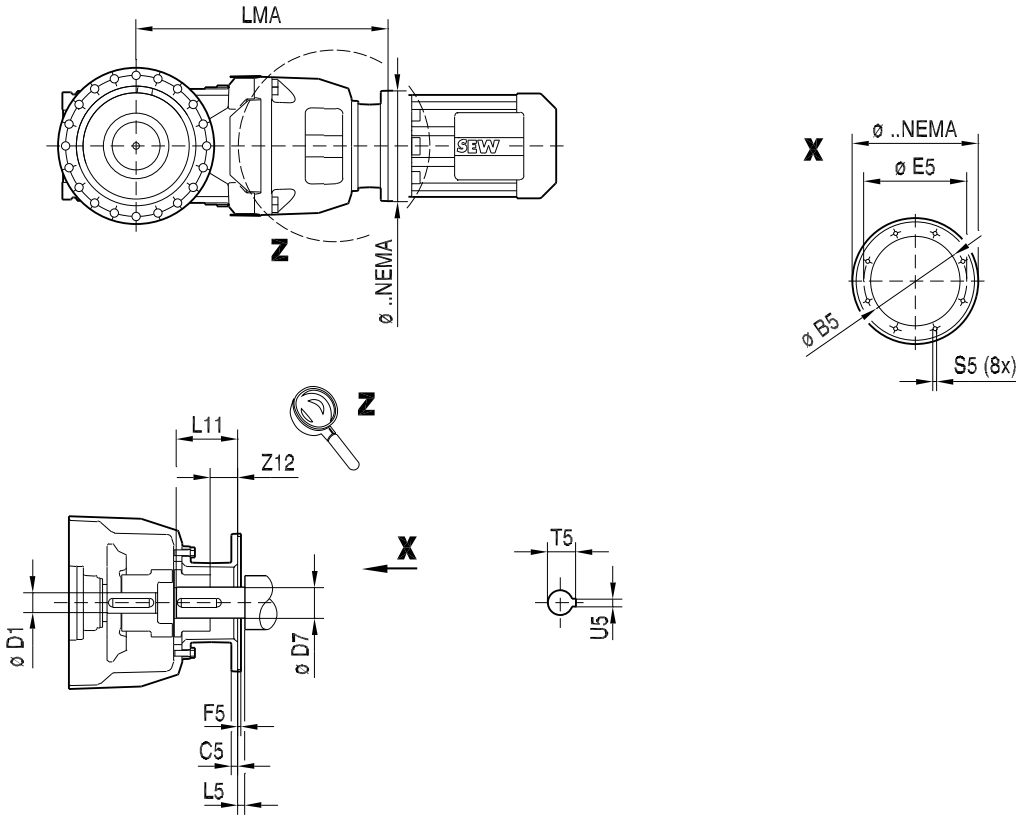

33091900/EN – 12/2025

inch																
	NEMA	Ø NEMA	Ø B5	C5	Ø D7	Ø E5	F5	L5	L11	S5	T5	U5	Ø D1	LMA	Z12	kg
P002e – 012e X1KP060e	254–256	9	8 1/2^{H7}	0.55	1 5/8$^{+0.0010}$	7 1/4	0.2	1/4	3 3/4	0.59 (4x)	1.794	3/8$^{+0.00197}$	1.97	23.23	0.78	52
	284–286	11 1/4	10 1/2^{H7}	0.59	1 7/8$^{+0.0010}$	9	0.2	1/4	4 3/8	0.59 (4x)	2.106	1/2$^{+0.00197}$	1.97	24.96	2.49	52
	324–326	13	12 1/2^{H7}	0.71	2 1/8$^{+0.0015}$	11	0.2	1/4	5	0.69 (4x)	2.362	1/2$^{+0.00197}$	1.97	25.94	2.78	52
	364–365	13	12 1/2^{H7}	0.71	2 3/8$^{+0.0015}$	11	0.2	1/4	5 5/8	0.69 (8x)	2.661	5/8$^{+0.00197}$	1.97	26.81	2.93	59
	404–405	13	12 1/2^{H7}	0.79	2 7/8$^{+0.0015}$	11	0.2	1/4	7	0.69 (8x)	3.213	3/4$^{+0.00197}$	1.97	29.09	4.01	88
	444–445	16.6	16^{H7}	0.79	3 3/8$^{+0.0015}$	14	0.2	1/4	8 1/4	0.69 (8x)	3.772	7/8$^{+0.00197}$	1.97	30.28	4.30	109
P022e – 052e X1KP080e	324–326	13	12 1/2^{H7}	0.71	2 1/8$^{+0.0015}$	11	0.2	1/4	5	0.69 (4x)	2.362	1/2$^{+0.00197}$	2.36	27.95	1.42	99
	364–365	13	12 1/2^{H7}	0.71	2 3/8$^{+0.0015}$	11	0.2	1/4	5 5/8	0.69 (8x)	2.661	5/8$^{+0.00197}$	2.36	27.95	1.59	108
	404–405	13	12 1/2^{H7}	0.79	2 7/8$^{+0.0015}$	11	0.2	1/4	7	0.69 (8x)	3.213	3/4$^{+0.00197}$	2.36	30.31	3.66	116
	444–445	16.6	16^{H7}	0.79	3 3/8$^{+0.0015}$	14	0.2	1/4	8 1/4	0.69 (8x)	3.772	7/8$^{+0.00197}$	2.36	33.35	5.09	144
	447–449	16.6	16^{H7}	0.79	3 3/8$^{+0.0015}$	14	0.2	1/4	8 1/4	0.69 (8x)	3.772	7/8$^{+0.00197}$	2.36	33.35	4.73	157
P042e – 072e X1KP100e	404–405	13	12 1/2^{H7}	0.67	2 7/8$^{+0.0015}$	11	0.2	1/4	7	0.69 (8x)	3.213	3/4$^{+0.00197}$	3.15	34.57	3.46	154
	444–445	16.6	16^{H7}	0.79	3 3/8$^{+0.0015}$	14	0.2	1/4	8 1/4	0.69 (8x)	3.772	7/8$^{+0.00197}$	3.15	37.60	4.83	183
	447–449	16.6	16^{H7}	0.79	3 3/8$^{+0.0015}$	14	0.2	1/4	8 1/4	0.69 (8x)	3.772	7/8$^{+0.00197}$	3.15	37.60	4.43	194
P062e – 072e X1KP120e	444–445	16.6	16^{H7}	0.79	3 3/8$^{+0.0015}$	14	0.2	1/4	8 1/4	0.69 (8x)	3.772	7/8$^{+0.00197}$	3.15	26.81	4.274	230
	447–449	16.6	16^{H7}	0.79	3 3/8$^{+0.0015}$	14	0.2	1/4	8 1/4	0.69 (8x)	3.772	7/8$^{+0.00197}$	3.15	29.09	3.683	243
P082e – 092 X1KP140e	444–445	16.6	16^{H7}	0.79	3 3/8$^{+0.0015}$	14	0.2	1/4	8 1/4	0.69 (8x)	3.772	7/8$^{+0.00197}$	3.15	30.28	3.486	378
	447–449	16.6	16^{H7}	0.79	3 3/8$^{+0.0015}$	14	0.2	1/4	8 1/4	0.69 (8x)	3.772	7/8$^{+0.00197}$	3.15	27.95	3.486	378
P102 X1KP160e	444–445	16.6	16^{H7}	0.79	3 3/8$^{+0.0015}$	14	0.2	1/4	8 1/4	0.69 (8x)	3.772	7/8$^{+0.00197}$	3.15	53.071	3.486	380
	447–449	16.6	16^{H7}	0.79	3 3/8$^{+0.0015}$	14	0.2	1/4	8 1/4	0.69 (8x)	3.772	7/8$^{+0.00197}$	3.15	53.071	3.486	380

33091900/EN – 12/2025

13.7 Oil heater /OH

13.7.1 M1-0°/M1-180°

45 011 02 25

OH
M1-0°

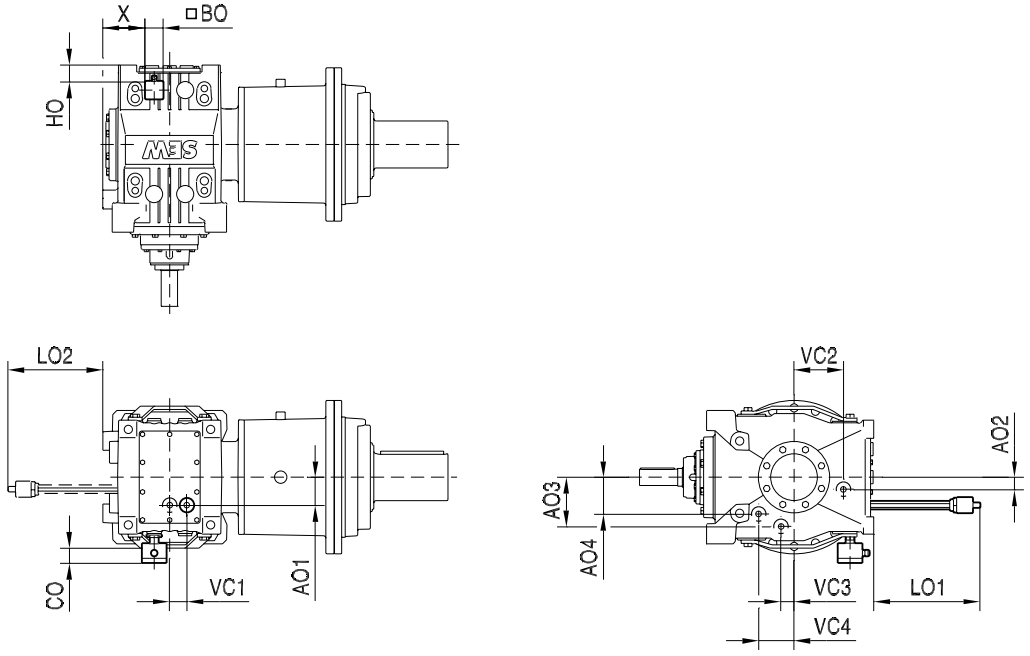

OH
M1-180°

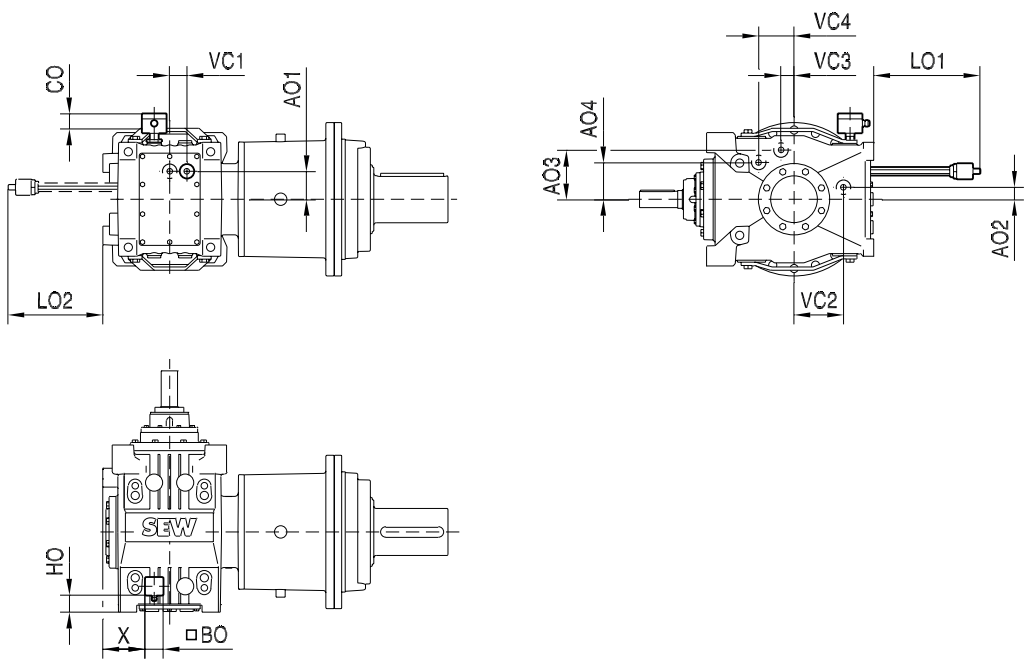

33091900/EN – 12/2025

	H0	X	□BO	CO	VC1	AO1	LO1	VC2	AO2	LO2	VC3	AO3	VC4	AO4
P002e – 012e X1KP060e	38	116	80	54.5	52.5	85	349	150	50	314	100	112	-	-
P022e – 052e X1KP080e	33	129	80	32	65	115	390	165	37	355	67	154	-	-
P042e – 052e X1KP100e	64	183	80	40	85	125	480	205	67	439	80	199	-	-
P062e – 072e X1KP100e	64	223	80	40	85	115	480	205	67	439	80	199	-	-
P062e – 072e X1KP120e	65	191.5	80	20	85	168	564	230	114	522	130	242	190	199
P082e – 092 X1KP140e	85	232	80	12.5	100	207.5	692	295	255	634.5	80	325	180	282.5
P102 X1KP160e	85	263	80	20	100	207.5	692	330	255	628.5	100	335	200	287

33091900/EN – 12/2025

13.7.2 M1-270°/M4-0°

45 012 02 25

OH
M1-270°

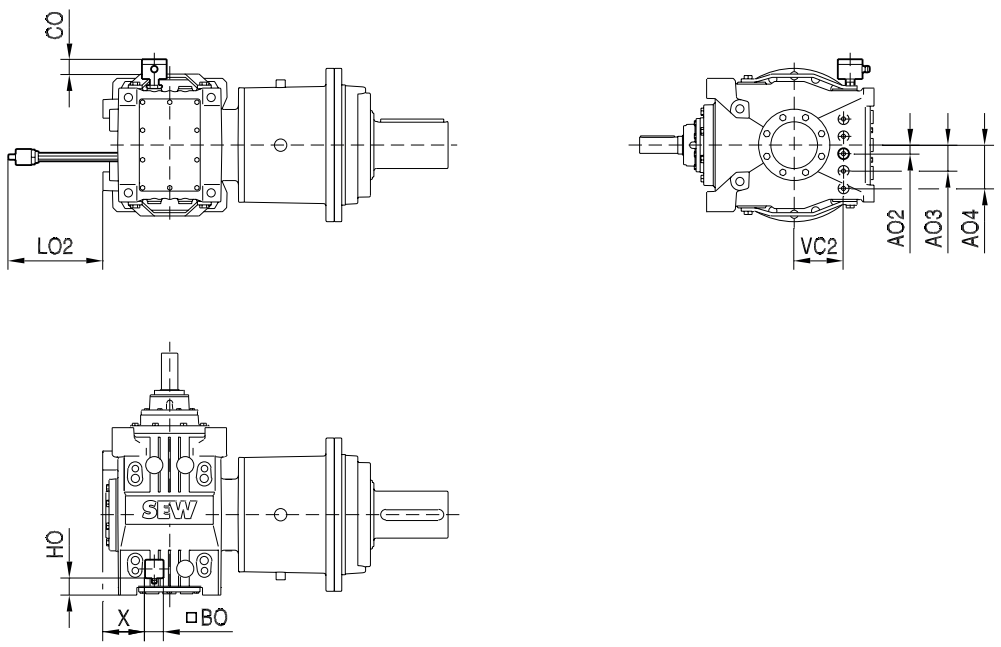

OH
M4-0°

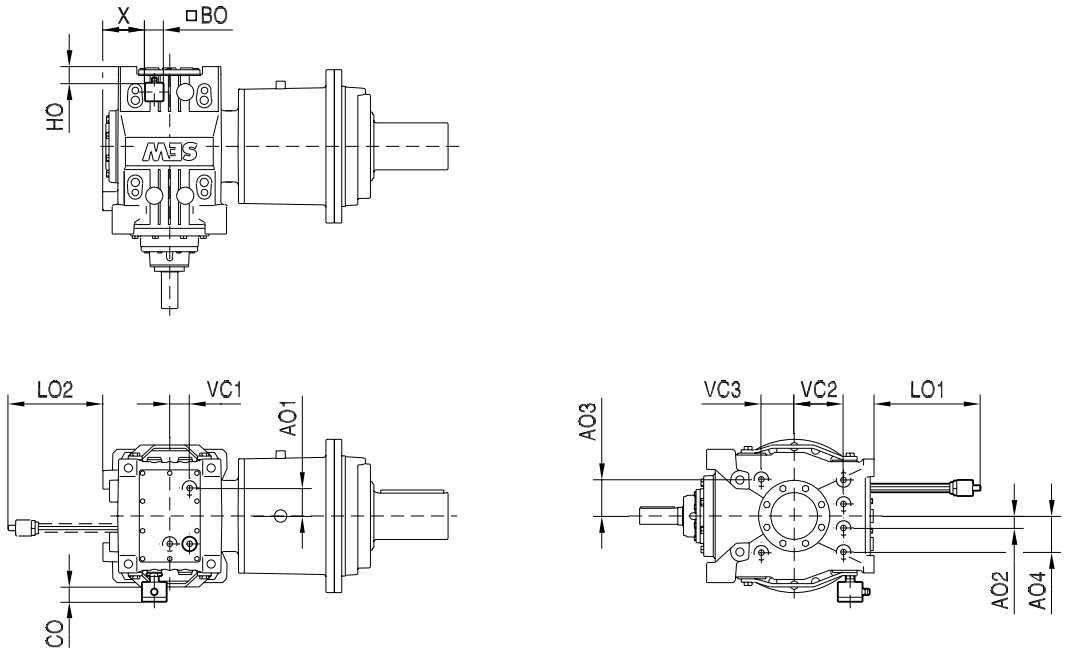

M1-270

	H0	X	□BO	CO	VC2	AO2	LO2	A03	AO4
P002e – 012e X1KP060e	38	116	80	54,5	150	50	314	X	X
P022e – 052e X1KP080e	33	129	80	32	165	37	355	109	X
P042e – 072e X1KP100e	64	183	80	40	205	67	429	155	X
P062e – 072e X1KP120e	65	191.5	80	20	230	47	522	114	181
P082e – 092 X1KP140e	85	232	80	12.5	295	65	634.5	160	255
P102 X1KP160e	85	263	80	20	330	65	628.5	160	255

M4-0°

	H0	X	□BO	CO	VC1	AO1	LO1
P002e – 012e X1KP060e	38	116	80	54,5	52,5	85	349
P022e – 052e X1KP080e	33	129	80	32	65	115	390
P042e – 072e X1KP100e	64	183	80	40	85	125	480
P062e – 072eX1KP120e	65	191.5	80	20	85	168	564
P082e – 092 X1KP140e	85	232	80	12.5	100	207.5	692
P102 X1KP160e	85	263	80	20	100	207.5	692

	VC2	AO2	LO2	VC3	AO3	AO4
P002e – 012e X1KP060e	150	50	314	100	112	X
P022e – 052e X1KP080e	165	37	355	67	154	X
P042e – 072e X1KP100e	205	67	429	80	199	X
P062e – 072e X1KP120e	230	47	522	130	242	114
P082e – 092 X1KP140e	295	65	634.5	80	325	160
P102 X1KP160e	330	65	628.5	100	335.5	160

33091900/EN – 12/2025

13.8 Water cooling cartridge /CCT

45 013 02 25

CCT
M1-0°

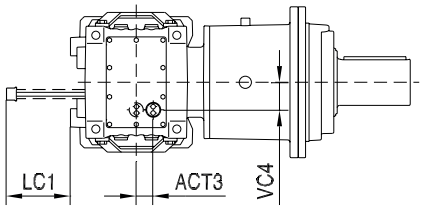

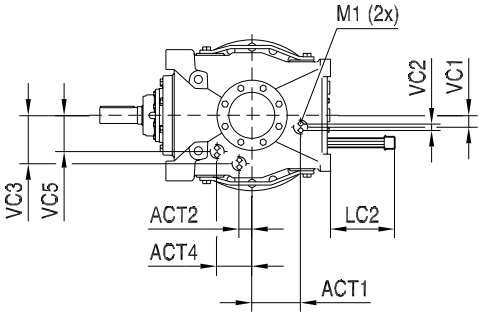

CCT
M1-180°

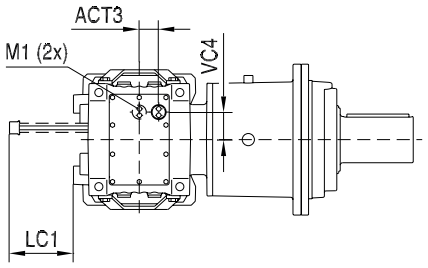

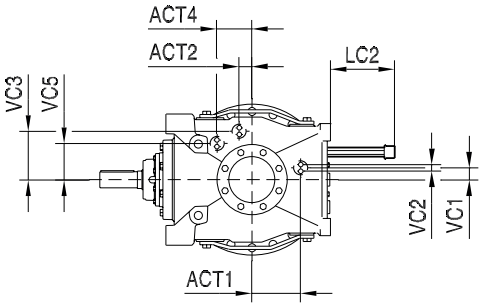

CCT
M1-270°

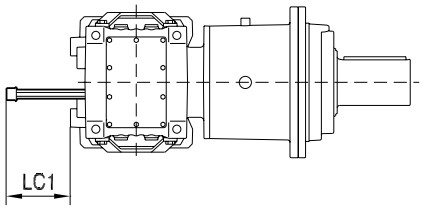

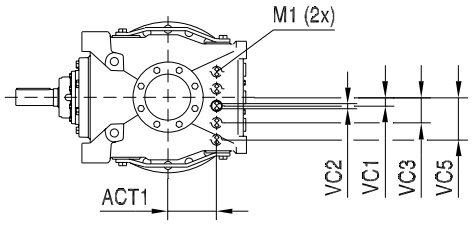

CCT
M4-0°

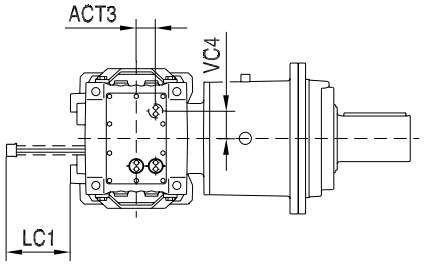

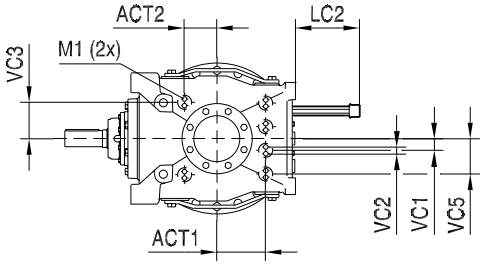

33091900/EN – 12/2025

13.8.1 M1-0°

	ACT1	VC1	LC1	ACT2	VC3	ACT3	VC4	LC2	VC2	M1	ACT4	VC5
P002e – 012e X1KP060e	150	50	275.5	100	112	52.5	85	306	22	G1	X	X
P022e – 052e X1KP080e	165	37	312	67	154	65	115	347	22	G1	X	X
P042e – 072e X1KP100e	205	67	386	80	199	85	125	437	22	G1	X	X
P062e – 072e X1KP120e	230	114	479	130	242	85	168	521	22	G1	190	199
P082e – 092 X1KP140e	295	255	571	80	325	100	207.5	629	34	G1 1/2	180	282.5
P102 X1KP160e	330	255	570	100	335.5	100	207.5	629	34	G1 1/2	200	287

13.8.2 M1-180°

	ACT1	VC1	LC1	ACT2	VC3	ACT3	VC4	LC2	VC2	M1	ACT4	VC5
P002e – 012e X1KP060e	150	50	275.5	100	112	52,5	85	306	22	G1	X	X
P022e – 052eX1KP080e	165	37	312	67	154	65	115	347	22	G1	X	X
P042e – 072e X1KP100e	205	67	386	80	199	85	125	437	22	G1 1/2	X	X
P062e – 072e X1KP120e	230	114	479	130	242	85	168	521	22	G1 1/2	190	199
P082e – 092 X1KP140e	295	255	571	80	325	100	207.5	629	34	G1 1/2	180	282.5
P102 X1KP160e	330	255	570	100	335.5	100	207.5	629	34	G1 1/2	200	287

13.8.3 M1-270°

	ACT1	VC1	LC1	VC3	VC2	M1	VC5
P002e – 012e X1KP060e	150	50	275.5	-	22	G1	X
P022e – 052eX1KP080e	165	37	312	109	22	G1	X
P042e – 072e X1KP100e	205	67	386	155	22	G1	X
P062e – 072e X1KP120e	230	47	479	114	22	G1	181
P082e – 092 X1KP140e	295	65	571	160	34	G1 1/2	255
P102 X1KP160e	330	65	570	160	34	G1 1/2	255

13.8.4 M4-0°

	ACT1	VC1	LC1	ACT2	VC3	ACT3	VC4	LC2	VC2	M1	VC5
P002e – 012e X1KP060e	150	50	275.5	100	112	52.5	85	306	22	G1	X
P022e – 052eX1KP080e	165	37	312	67	154	65	115	347	22	G1	X
P042e – 072e X1KP100e	205	67	386	80	199	85	125	437	22	G1	X
P062 e– 072e X1KP120e	230	47	479	130	242	85	168	521	22	G1	114
P082e – 092 X1KP140e	295	65	571	80	325	100	207.5	629	34	G1 1/2	160
P102 X1KP160e	330	65	570	100	335.5	100	207.5	629	34	G1 1/2	160

33091900/EN – 12/2025

13.9 Oil drain valve /ODV

45 014 01 25

ODV
M1-0°

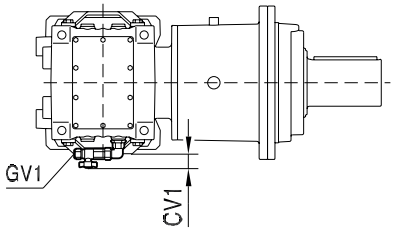

ODV
M1-180°

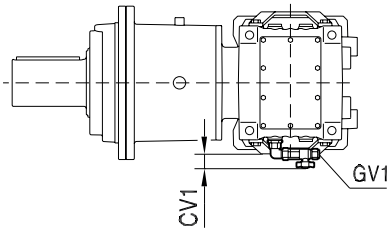

ODV
M1-270°

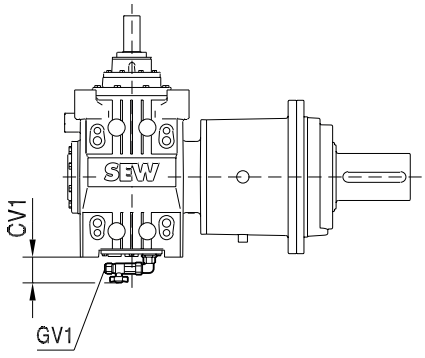

33091900/EN – 12/2025

13.9.1 M1-0°/M1-180°

	CV1	GV1
P002e – 012e X1KP060e	80.7	G1/2
P022e – 052eX1KP080e	58.2	G1/2
P042e – 072e X1KP100e	77.2	G1/2
P062e – 072e X1KP120e	67.2	G1/2
P082e – 092 X1KP140e	59.7	G1/2
P102 X1KP160e	67.2	G1/2

13.9.2 M1-270°

	CV1	GV1
P002e – 012e X1KP060e	83.2	G1/2
P022e – 052eX1KP080e	83.2	G1/2
P042e – 072e X1KP100e	83.2	G1/2
P062e – 072e X1KP120e	77.2	G1/2
P082e – 092 X1KP140e	77.2	G1/2
P102 X1KP160e	77.2	G1/2

33091900/EN – 12/2025

13.10 Oil expansion tank /ET, breather /BPG, and oil level glass /OLG

45 015 01 25

ET
M4

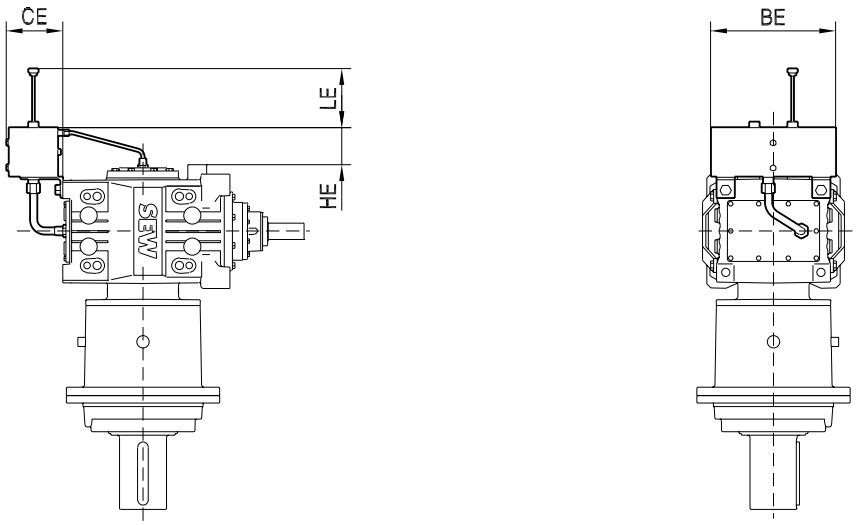

BPG
M4

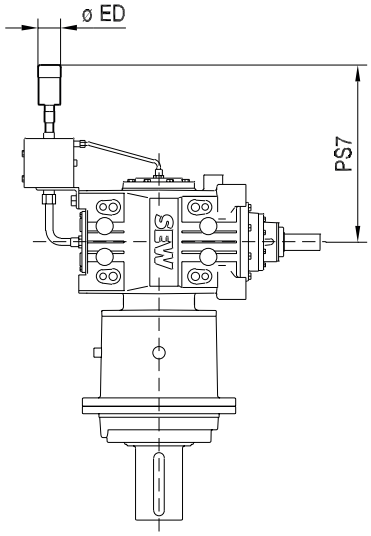

OLG
M4

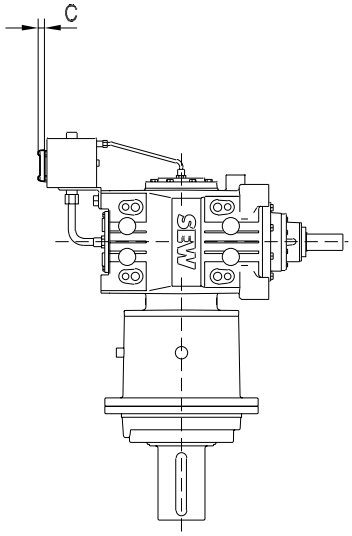

33091900/EN – 12/2025

	BE	CE	HE	LE	PS7	Ø ED	C
P002e – 012e X1KP060e	380	172.5	112	195	643	104	34.5
P022e – 052eX1KP080e	530	180	121	203	672	104	34.5
P042e – 072e X1KP100e	600	237	173	260	801	104	34.5
P062e – 072e X1KP120e	690	244.5	186.5	260	856	104	34.5
P082e – 092 X1KP140e	850	279.5	243.5	350	983.5	104	34.5
P102 X1KP160e	850	279.5	227.5	350	998.5	104	34.5

33091900/EN – 12/2025

14 Appendix

14.1 Abbreviation key

d_0	Mean diameter of the installed transmission element	mm
F_{A1}	Axial load on HSS	N
F_{A2}	Axial load on LSS	N
F_F	Peak load factor	–
F_R	Radial load	N
$F_{R\ per}$	Permitted radial load	N
$F_{R\ max}$	Maximum radial load	N
F_{Start}	Startup factor	–
$F_{S\ min}$	Application-specific service factor	–
F_S	Service factor = MN2 / MK2 = PN1 / PK1	–
f_1	Altitude factor	
f_{rev}	Reversing factor	
f_T	Temperature factor	
f_z	Transmission element factor	–
η	Efficiency	–
H	Installation altitude above sea level	m
HSS	High-speed gear shaft (normally input shaft)	–
i	Gear ratio	–
i_{ex}	Exact gear unit ratio	–
IP..	Degree of protection of electrical instruments	–
L_H	Required service life	h
$L_{h\ min.}$	Required minimum bearing life of the gear unit	h
LSS	Low-speed gear shaft (usually output shaft)	–
M_a	Output torque in relation to motor power	Nm
M_{K1}	Input torque (= operating torque on HSS)	Nm
$M_{K1\ max}$	Peak input torque (= peak operating torque on HSS)	Nm
M_{K2}	Output torque (= operating torque on LSS)	Nm
$M_{K2\ max}$	Peak output torque (= peak operating torque on LSS)	Nm
$M_{K2\ per}$	Permitted peak output torque	Nm
M_M	Nominal torque of the motor	Nm
M_{N2}	Nominal gear unit torque	Nm
n_1	Input speed	min^{-1}
n_2	Output speed	min^{-1}
n_M	Motor speed	min^{-1}
P_{K1}	Operating power at HSS	kW
$P_{K1\ max}$	Peak operating power at HSS	kW
$P_{K1\ per}$	Permitted peak operating power at HSS	kW
P_{K2}	Operating power at LSS	kW
P_M	Nominal motor power	kW
P_{N1}	Nominal gear unit power (in relation to HSS)	kW
P_T	Thermal rating of the gear unit	kW
P_{TH}	Nominal thermal rating of the gear unit	kW
S_{St}	Static safety value	–
S_{Dy}	Dynamic safety value	–
t	Time under load within a cycle	s
T_{amb}	Ambient temperature	°C

33091900/EN – 12/2025

Index

A

Additional documentation 10
Advantages at a glance 12

B

Bearing greases 87
Breather
  Desiccant breather filter /DC 46

C

Cable entry 61
Churning losses 68
Coating system
  OS 1 26
  OS 2 26
  OS 3 26
  OS 4 27
Configuration 65
Connection screws, scope of delivery 88
Copyright notice 10

D

Decimal separator 10
Desiccant breather filter 46
Design features 12
Design types 16
Dimension sheets 117
Dimension sheets, note 91
Direction of rotation dependencies 20
Documentation, additional 10

E

Efficiency 68
ET 32
Exterior preservation 28

F

Fan 38
Fixed pivoted mounting position
  Definition 53

G

General information 14

H

Hollow shaft with shrink disk 21, 89

I

IEC 33
Input shaft 21
Internal preservation 28

K

Keys 91

L

Limit temperature for gear unit startup 41
Lubricant
  Compatibility with oil seal 81
Lubricating greases 87

M

M1...M6 51
Motor adapter
  IEC dimension sheet 139
  Structure 33
Motor dimensions 91
Motor options 91
Motor terminal box 61
Motor, dimensions 91
Mounting position 51
Mounting positions of the primary gear units 60

N

NEMA 33
Noise 14
NTB temperature switch
  Technical data 47

O

Oil bath lubrication 30
Oil drain 43
Oil drain valve
  Dimension sheet 149
Oil expansion tank 30
  Position 32
  Structure 32
Oil heater
  Connected load 41

33091900/EN – 12/25

Dimension sheet ... 143
Function ... 40
Limit temperature for gear unit startup ... 41
Structure ... 39
Oil seal
Lubricant compatibility ... 81
Oil selection
Information ... 77
Mineral oil ... 77
Synthetic oil ... 77
Operating torque ... 68
Order examples ... 63
Order information ... 60
Output shaft ... 21
Output shaft variants ... 21

P

Packaging ... 28
Painting ... 14
Pivoted mounting position
Definition ... 52
Pressure switch
Structure ... 37
Product description, general information ... 14
Product names ... 10
Protective cover for shrink disk ... 138
Pt100 ... 48
Pt100 temperature sensor ... 48

R

Riser pipe ... 32

S

Scope of delivery ... 88
Sealing grease ... 87
Selection tables, structure ... 90
SEP ... 37
Service factor, application-specific ... 68
SEW-EURODRIVE
Group of companies ... 6
Shaft end pump
Structure ... 37
Shrink disk
Locking screws ... 137
Solid shaft with key ... 21
Splash lubrication ... 30
Storage conditions ... 28

T

Technical data ... 16
Temperature sensor Pt100
Dimensions ... 48
Electrical connection ... 48
Technical data ... 48
Temperature switch NTB
Dimensions ... 47
Electrical connection ... 47
Temperature switch TSK ... 49
Dimensions ... 49
Electrical connection ... 49
Technical data ... 50
Tolerances ... 91
Torque arm ... 31, 62
Trademarks ... 10
Transport conditions ... 28
TSK ... 49

V

Variable pivoted mounting position
Definition ... 55
Volume ... 14

W

Water cooling cartridge
Dimension sheet ... 147
Sizes ... 42
Structure ... 42
Water cooling cover
Dimension sheet ... 147

33091900/EN – 12/25

15 Contacting SEW-EURODRIVE

You can find the worldwide contact data and locations on the **SEW-EURODRIVE website** via the following link or the QR code shown below.

https://www.sew-eurodrive.de/contacts-worldwide



33091900/EN – 12/2025

IoT App
DriveRadar®

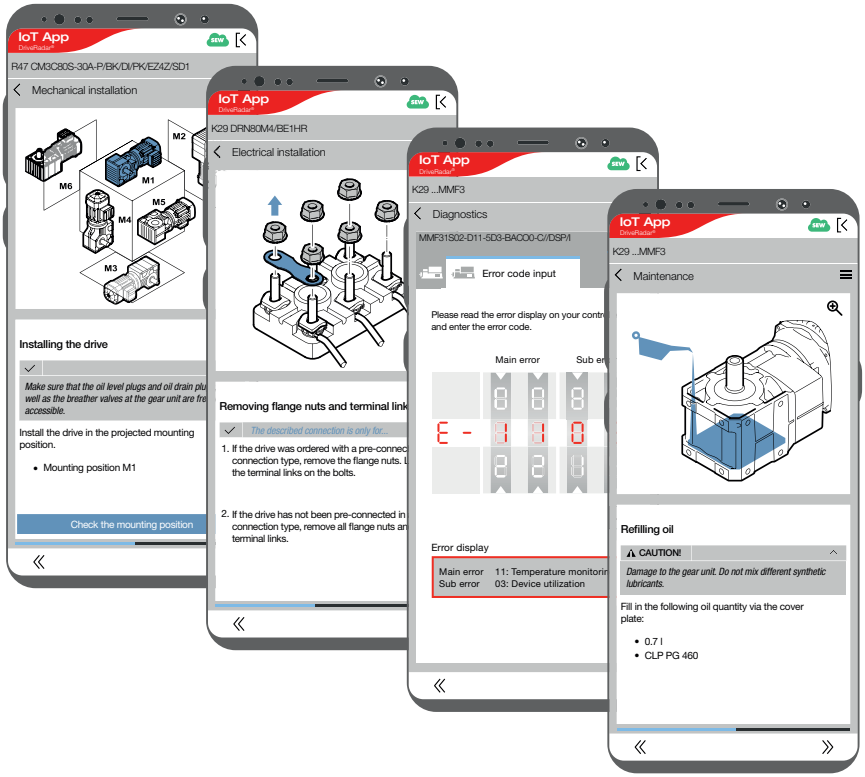

https://iotapp.io

Google Play App Store

THE GREEN SIDE OF DRIVE

Documentation and technical information on your smartphone – paperless and always available





SEW-EURODRIVE
Driving the world

SEW-EURODRIVE GmbH & Co KG
Ernst-Blickle-Str. 42
76646 BRUCHSAL
GERMANY
Tel. +49 7251 75-0
Fax +49 7251 75-1970
sew@sew-eurodrive.com
→ www.sew-eurodrive.com