SEW EURODRIVE

Catalog



Industrial gear units

P2.e series planetary gearmotors

Torque classes from 24 – 359 kNm

Edition 08/2025

31991203/EN



Table of contents

1 Introduction 5
1.1 The SEW-EURODRIVE group of companies 5
1.2 Documentation 9
1.3 Product names and trademarks 9
1.4 Copyright notice 9
1.5 Decimal separator in numerical values 9
1.6 Recycling, reprocessing, reuse 10

2 Product description and overview of types 11
2.1 Design features 12
2.2 Overview of advantages 12
2.3 Application areas 12
2.4 Added values of planetary gear units by SEW-EURODRIVE 13
2.5 Extended warranty 14
2.6 General information 15
2.7 Sizes, torque ratings 17
2.8 Basic designs of planetary gearmotors 18
2.9 Type designation 22
2.10 Nameplate 23
2.11 Coating and surface protection systems 26
2.12 Storage and transport conditions 28
2.13 DR.. series driving motor 30
2.14 Sealing system 31
2.15 Lubrication types 33

3 Options 37
3.1 Torque arm 38
3.2 Motor adapters /AMP 39
3.3 Base frame 40
3.4 Breather /BPG 41
3.5 Pt100 temperature sensor 44

4 Mounting positions 45
4.1 Mounting position 45
4.2 Pivoted mounting position: Fixed and variable mounting positions 46
4.3 Mounting position sheets 47

5 Important order information 49
5.1 For all gearmotors 49
5.2 Position of motor terminal box and cable entry 49
5.3 Torque arm 50
5.4 Output direction of rotation with backstop 51
5.5 Sample orders 51

6 Project planning for gear units 53
6.1 Project planning procedure 53
6.2 Dimensioning example 66

31991203/EN – 08/2025

7 Lubricants 71
7.1 General information on selecting the oil 71
7.2 Permitted lubricants 72
7.3 Lubricant fill quantities 80
7.4 Sealing greases/bearing greases 82

8 Design and operating notes 83
8.1 Screws included in the delivery 83

9 Important information on selection tables and dimension drawings 85
9.1 Selection tables 85
9.2 Dimension sheets 86

10 Selection tables 88
10.1 P2..e DM DRN.. and P3..e DM DRN.. planetary gearmotors 88
10.2 P2..e DMF DRN.. and P3..e DMF DRN.. planetary gearmotors 107
10.3 P2..e DM DRU.. and P3..e DM DRU.. planetary gearmotors 126
10.4 P2..e DMF DRU.. and P3..e DMF DRU.. planetary gearmotors 145
10.5 Service life-dependent gear unit torque 164
10.6 Thermal rating of horizontal mounting positions (M1/M3/M5/M6) 182
10.7 Thermal rating of vertical mounting positions (M2/M4) 200

11 Dimension sheets 218
11.1 P2.e DM DRN.. planetary gearmotors 218
11.2 P2.e DMF DRN.. planetary gearmotors 254
11.3 P2.e DM DRU.. planetary gearmotors 282
11.4 P2.e DMF DRU.. planetary gearmotors 318
11.5 Input shaft assembly /ADP 346
11.6 Input shaft assembly /ADPF 347
11.7 Motor adapter /AMP for mounting IEC motors 348
11.8 Motor adapter /AMP for mounting NEMA motors 350
11.9 Motor adapter /AMPF for mounting IEC motors 352
11.10 Motor adapter /AMPF for mounting NEMA motors 354
11.11 Oil expansion tank for mounting position M2 356
11.12 Oil expansion tank for mounting position M4 357
11.13 Output shafts 363
11.14 Locking screws of the shrink disk 367
11.15 Protection cover for shrink disk 368

12 Mass moments of inertia 369

13 Abbreviation key 378

Index 379

14 Contacting SEW-EURODRIVE 381

31991203/EN – 08/2025

1 Introduction

1.1 The SEW-EURODRIVE group of companies

1.1.1 What do we stand for?

For a reliable partnership!

Humanity and partnership, solutions and services, responsibility and quality, tradition and innovation: SEW-EURODRIVE, the owner-managed family business, has stood for all this and much more for more than 90 years.

As a market leader in drive and automation technology, we don't just power countless applications in virtually every industry. With over 22000 employees, we are also playing a key role in shaping the future of drive technology. For you. Ensuring you, your systems and machines are always at the cutting edge. Not just now, but in the future as well. We want you to succeed together with us.

1.1.2 Where can you find us?

We are always nearby!

Our 17 production plants and 92 Drive Technology Centers in 57 countries mean we are at your service on every continent and in every corner of the world, always working with you as an equal partner and ensuring everything runs smoothly.

What makes us truly stand out from other manufacturers? With our broad customer support and service network worldwide, you never have to wait long for spare parts, repairs or professional advice.



57
countries

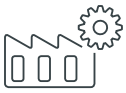

17
production plants



92
Drive Technology Centers



> 22000
employees



Global service



Countless industries

31991203/EN – 08/2025

1.1.3 What do we offer?

State-of-the-art drive technology and automation solutions from a single source!

Looking to modernize your processes or to construct a new system? We offer you one of the most extensive ranges of drive technology products, solutions, and services on the market. A single contact person for everything: that sounds good, doesn't it?

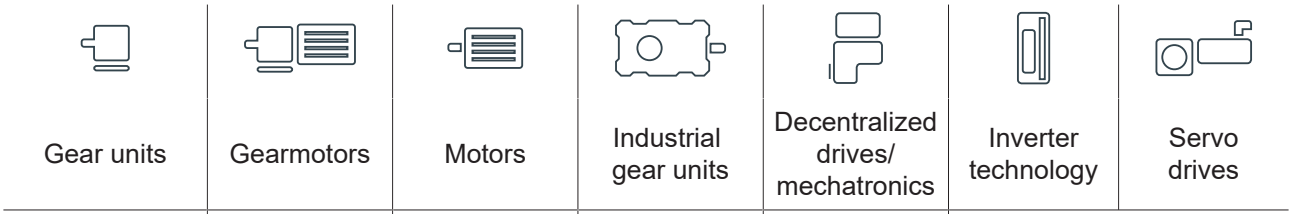

From the very outset, our customers have been able to rely on our high quality, committed advice and support, and fast delivery times. We offer a portfolio of modular solutions that are comprehensive and unique and meet every possible need.

- Perfect combination options and solutions for every application
- Energy efficiency up to IE5
- Quick and easy selection process and project planning
- Comprehensive portfolio – from drives and motors for continuous operation to high-precision servo drives
- Special designs in stainless steel, with explosion protection, or for electrified monorail systems
- Ideal solutions for every application
- Complete automation solutions for your machine or factory and many other areas

Independent of the project scope and the complexity of your requirements: We rise to the challenge, working with you to develop the perfect solution for you – including an all-round service package throughout your entire system life cycle on request.

Predictive maintenance is just one of the service trend topics no. 1. Early diagnosis and end-to-end condition monitoring have been an essential part of our offering for many years. That's because one thing in particular matters to us – the satisfaction and trust of our customers. from planning and the operation phase all the way to modernization. Where necessary, we also take care of drives from other manufacturers.

31991203/EN – 08/2025

1.1.4 What are the goals we want to reach with you?

We want to take you to the top!

Nothing excites us more than the future of production. We are already using Industry 4.0 principles to transform our manufacturing operations. As far as we are concerned, Industry 4.0 ceased to be a distant vision long ago – it is already a successful reality thanks to our smart factory. As a result, we have become one of the world's pioneers in this field.

Yet we do not just focus on increasing our performance to ever greater levels. We also pass on to you the expertise, experience and technical solutions we have gathered in implementing Industry 4.0 in our production halls. Why not find out more?

No matter how large or small your project may be, no matter how high or complex your requirements may be: We rise to the challenge, working with you to develop the perfect solution for you – including an all-round service package throughout your entire system life cycle on request.
Predictive maintenance is one of the currently trending service topics. Early diagnosis and end-to-end condition monitoring have been an essential part of our offering for many years. The only thing that counts is your satisfaction and driving forward your processes – from planning and the operation phase all the way to modernization. Where necessary, we also take care of drives from other manufacturers.

1.1.5 Why should you choose SEW-EURODRIVE?

Because these ten reasons speak for themselves:



1. **You will be more flexible**

   However much the requirements for your processes and production systems increase, we're there for you every step of the way. With rapid conversions, short delivery times, enhanced capacity and faster format changeovers, we're at your side – from evaluating your needs and implementing an appropriate solution all the way to Life Cycle Services.



2. **You will be more satisfied**

   Our name stands for the best quality. But we do not rest on our laurels. Quite the contrary, in fact. To ensure we meet all standards – both ours and yours – we undergo annual testing, including certification processes. That's because only one thing matters to us – the satisfaction and trust of our customers.



3. **You know more**

   We're happy to share with you the industry and application expertise we have gained over decades and extending far beyond drive technology areas. We work with you to plan and put into practice your tailored solutions in a process where you constantly evolve in tandem with us.



4. **You will be more sustainable**

   We take responsibility for our employees, customers and business partners but also the environment in which we live and work. As a family business, we think in generations and always look beyond today and tomorrow. With us, you too can drive the future.

31991203/EN – 08/2025



5. **You will be more successful**

   Like you, we cannot afford to stand still. We provide continuous training for our employees and customers. We constantly expand our horizons and enhance our products, solutions and services, and thus your processes. You can only continue to be successful in the future with optimized workflows.



6. **You will be more energy efficient**

   We go out of our way to find new approaches and make our drives more efficient while always staying well ahead of international regulations. And, if you wish, we work with you to plan your systems and machines so that you can make the best possible use of energy recovery.



7. **You will be more innovative**

   What's the point of innovations if they remain out of your reach? We listen to you, which makes us fully aware of your future challenges, and we respond accordingly. With our approximately 800 researchers, we drive forward innovative technologies and help bring your processes up to date.

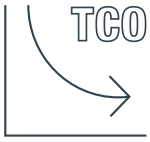

8. **You will save more money**

   With us, you can lower your overall operating costs. After all, it isn't just a matter of procurement expenses. Your TCO is significantly determined by the subsequent utilization and service life of your drive technology. We provide you with comprehensive advice on how to reduce your costs through sustainable operations.



9. **You will be close to us**

   Wherever in the world your system is running, our comprehensive service network and experts mean we're always ready to provide advice and practical assistance when you need it. All-in-one, on-site service that knows no bounds and significantly reduces or even eliminates downtimes.



10. **You will be faster**

    Throughout the world, our service staff ensure spare parts get to you fast, and faulty drives – including third-party products – are collected and repaired quickly. Software tools make engineering and startup easier for you. Services covering your entire system life cycle help make you faster and more efficient.

31991203/EN – 08/2025

1.2 Documentation

1.2.1 Contents of this publication

This catalog provides a detailed description of the following product group offered by SEW-EURODRIVE:

- Industrial gear units: Planetary gearmotor series P2.e with DRN.. motors and DRU.. motors (50 Hz)

1.2.2 Additional documentation

In addition to the present catalog "Planetary gearmotor series P2..e", you can obtain the following documents on our website under "Online Support" > "Data and Documents":

- "DRN63 – 315, DR2S63 – 80 AC motors" catalog
- "DRU.. gearmotors (IE4)" catalog
- "DRN.. gearmotors (IE3)" catalog
- "Planetary gearmotors P.002 – P.102 series" catalog
- "XP130 – XP250 series" catalog
- "P-X.e series" catalog
- "PPK series" brochure
- "Drive systems for conveyor systems" brochure
- "Complete drive systems with industrial gear units" brochure

1.3 Product names and trademarks

All product names included in this documentation are trademarks or registered trademarks of the respective titleholders.

1.4 Copyright notice

© 2025 SEW-EURODRIVE. All rights reserved. Copyright law prohibits the unauthorized reproduction, modification, distribution and use of this document – in whole or in part.

1.5 Decimal separator in numerical values

In this document, a period is used to indicate the decimal separator.

Example: 30.5 kg

31991203/EN – 08/2025

1.6 Recycling, reprocessing, reuse

When manufacturing products, SEW-EURODRIVE makes sure to keep the use of new natural resources to a minimum in the interests of the circular economy. Key aspects here are the recycling of materials as well as the inspection and/or processing of returned components and their reuse in new products. These processes are only used at SEW-EURODRIVE if the resulting materials and components correspond to the quality of new products.

31991203/EN – 08/2025

2 Product description and overview of types

The Generation P2.e gear units are designed as 2- or 3-stage planetary gear units. As standard, the gear units can be combined with:

- DR.. motors by SEW-EURODRIVE via direct motor mounting
- Input cover
- Adapters for mounting IEC and NEMA motors

Due to the load distribution to several planet wheels, planetary gear units of Generation P2.e achieve a significantly higher power density and consequently in smaller dimensions compared to helical and bevel-helical gear units.

The following figure shows a sample combination of a planetary gear unit and a DR.. motor.

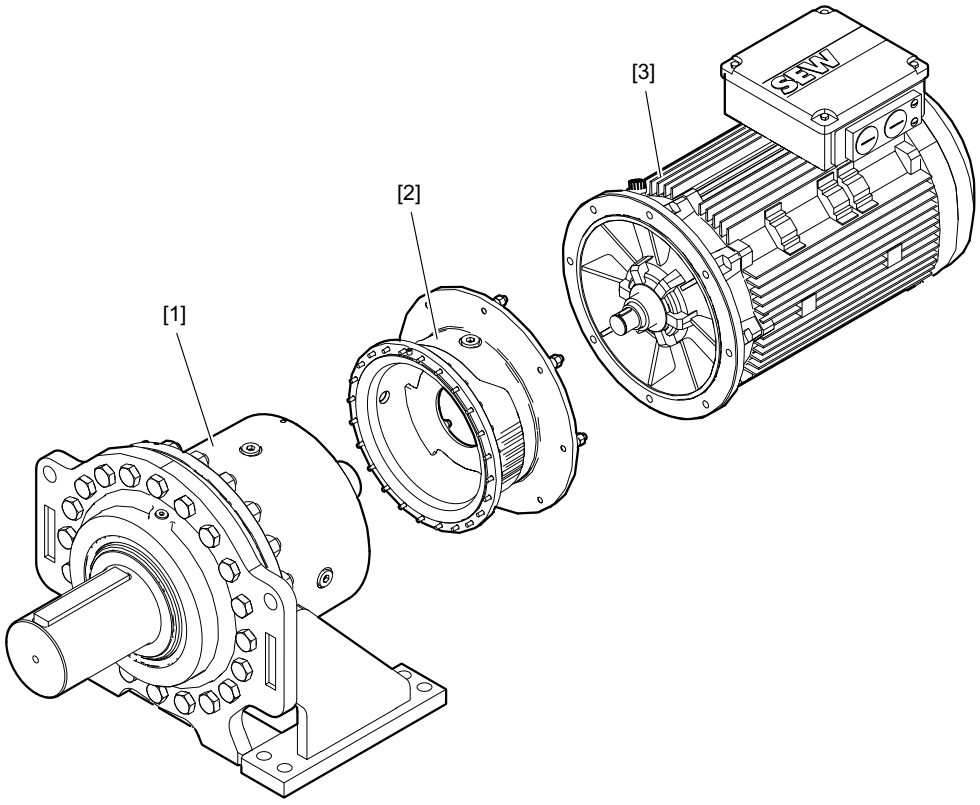

38160453003

[1] Planetary gear units
[2] DM adapter
[3] DR.. motor

31991203/EN – 08/2025

2.1 Design features

Planetary gear units ...

- Can transmit a high torque
- Are very compact
- Offer a high degree of torsional rigidity

Motors ...

- Offer a wide range of performance classes
- Ensure an optimum solution for every customer requirement with the great range of options and accessories

2.2 Overview of advantages

- Perfectly matched units (gear unit and motor)
- High energy savings thanks to DR.. motors up to energy efficiency class IE4 and thermally optimized planetary gear units
- Large range of options thanks to the modular design by SEW-EURODRIVE
- Short, compact design due to direct motor mounting
- Standardized units ensure an excellent delivery capability.

2.3 Application areas

The gear units of Generation P2.e are particularly compact as coaxial planetary gear units and can therefore be used flexibly in machines.

Gear units of the P2.e series can show their advantages in the following industries and applications:

Industry	Usage
Cement	Ring pan mixers, clinker crushers
Logistics/materials handling technology	Screw conveyor
Recycling	Shredder
Food industry	Horizontal mixers, screw presses
Paper industry	Screw presses

31991203/EN – 08/2025

2.4 Added values of planetary gear units by SEW-EURODRIVE

2.4.1 Thermal "best in class" limit power

To that end, SEW-EURODRIVE provides an integrated fan in the motor interface that enables optimal cooling due to its targeted air flow, and therefore allows for a higher continuous power of the system.

2.4.2 Installation space

The planetary gear units of Generation P2.e are characterized by a particularly compact design. The direct mounting of DR.. motors from the modular system by SEW-EURODRIVE also saves valuable installation space.

2.4.3 GearOil by SEW-EURODRIVE



GearOil by SEW-EURODRIVE increases the performance of the gear unit with high-quality base oils and the latest additive technologies. The oil reduces friction in rolling and sliding contact, resulting in increased efficiency and wear resistance.

2.4.4 Delivery times

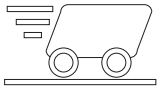

The coordinated process chain from order receipt to shipping ensures short delivery times even for customer-specific adjustments.

Replacement parts required during servicing can also be supplied quickly in this way.

2.4.5 Global availability



With 2 production plants and 13 assembly plants across the globe, standardized industrial gear units can be made available worldwide in the shortest possible time. Additional service centers can also provide short-term service of any kind.

2.4.6 Detailed calculation



Thanks to the networked calculation landscape, each drive is simulated and calculated with the individually required drive data. Collaboration with research institutes enable us to already use the latest calculation models for series products. The individually tailored product can be created in this way.

31991203/EN – 08/2025

2.5 Extended warranty

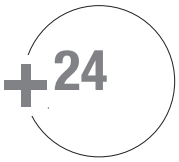

If the gear unit starts up after the statutory warranty has expired or if you want to pass on your customer's warranty claim to the supplier, for example, SEW-EURODRIVE offers a new warranty package "**+24**" for an additional 24 months warranty on the industrial gear unit.

The following packages are available for the gear units.

Packages	Scope	Advantages
+24	24 months of warranty on the gear unit.	The correct installation of the gear unit is checked by an SEW service technician.
+24 advanced	Gear unit filled with premium lubricant GearOil by SEW-EURODRIVE, giving you an additional 24 months warranty for your industrial gear unit free of charge.	The correct installation of the gear unit is checked by an SEW service technician.

The prerequisite for claiming extended warranty is an acceptance test of the customer-installed gear unit performed by a service technician from SEW-EURODRIVE. In the interest of both parties, the inspection ensures correct installation, alignment, and proper preparation of the drive system for operation. For this reason, inspection by SEW-EURODRIVE must be performed after installation and before startup.

31991203/EN – 08/2025

2.6 General information

2.6.1 Important information

Note the following points!

INFORMATION

- The illustrations in the catalog are examples. Final dimensions are available from SEW-EURODRIVE on request.
- The specified lubricant fill quantities are guide values only. Use the marks on the oil dipstick or oil level glass to determine the oil level.
- On delivery, the planetary gear units are ready for operation, but not filled with oil. However, it is possible to have the gear units delivered filled with oil.
- Oil viscosity and grade must comply with those specified on the nameplate.
- The specified weights are guide values. The exact gear unit weight is given in the order-specific dimension sheet. The nameplate shows the weight of the basic gear unit including all mounted gear unit options.
- The buyer must provide protection against unintentional contact with moving parts. The applicable safety regulations of the country in which the unit will be used are to be followed.

2.6.2 Power and torque

The power and torque values listed in the catalogs apply to standard design and standard lubrication of the gearmotors under normal ambient conditions.

Please note that the motor power shown in the selection tables for gearmotors is subject to selection. However, the output torque and the desired output speed are essential for the application and need to be checked.

2.6.3 Speeds

The quoted output speeds of the gearmotors are recommended values. You can calculate the rated output speed based on the rated motor speed and the gear unit ratio. Please note that the actual output speed depends on the motor load and the supply system conditions.

2.6.4 Sound power level

The sound power levels of the gear units, gearmotors, and motors correspond to ISO 8579-1 for gear units and gearmotors and comply with the limit values of EN 60034 for motors.

2.6.5 Paint

The gearmotors and (brake)motors are painted in the color "blue gray"/RAL7031 according to DIN 1843 as standard. Special paintings are available on request.

31991203/EN – 08/2025

2.6.6 Weight information

INFORMATION

Please note that all weights shown in the catalog exclude the oil fill because the lubricant fill quantity depends on the mounting position.

2.6.7 Air admission and accessibility

The gearmotors/brakemotors must be mounted on the driven machine in such a way that both axially and radially there is enough space left for unimpeded air admission and for the purposes of maintenance of the brake. Also refer to the notes in the motor dimension sheets.

2.6.8 Brakemotors

The motors and gearmotors are supplied with an integrated mechanical brake on request. The SEW-EURODRIVE brake is an electromagnetic disk brake with a DC coil that releases electrically and brakes using spring force. Due to its operating principle, the brake is applied if the power fails. It meets the basic safety requirements. The brake can also be released mechanically if equipped with manual brake release. Either a hand lever that springs back automatically or a set screw that can be locked are included in the delivery. The brake is controlled by a brake control that is installed in either the motor wiring space or the control cabinet.

A characteristic feature of the brakes is their extremely short design. The brake endshield is a part of both the motor and the brake. The integrated construction of the SEW-EURODRIVE brakemotor permits particularly compact and sturdy solutions.

2.6.9 International markets

Market access is contingent to local approvals in many countries. Additional laws, regulations, and market conventions must be adhered to. Experience has shown that an identification of the product is required together with certification. This is realized at SEW-EURODRIVE with one or several logos on the main nameplate, with additional labels on the product, or by providing the relevant certificates.

Some countries, such as the states of the European Union, impose certain requirements regarding explosion-protected gear units. The following markings are attached to the gear unit if these requirements are met.

CE	CE marking to state compliance with European Directives, (see EU declaration of conformity or EU declaration of incorporation).
Ex	ATEX mark to state compliance with the European Directive 2014/34/EU.

Refer to the operating instructions of the respective motor for information on the motor markings.

31991203/EN – 08/2025

2.7 Sizes, torque ratings

The nominal gear unit torques in the following table show the fatigue-free gear unit torques of generation P2.e. planetary gear units.

Size	Nominal torque Nm
P..002e	24830
P..012e	36810
P..022e	51190
P..032e	69620
P..042e	100170
P..052e	124060
P..062e	185660
P..072e	245660
P..082e	359400

31991203/EN – 08/2025

2.8 Basic designs of planetary gearmotors

2.8.1 P..2e DR.. planetary gearmotors

Planetary gearmotors are available in 3 mounting types. Foot-mounted design, flange-mounted design, and design with torque arm:

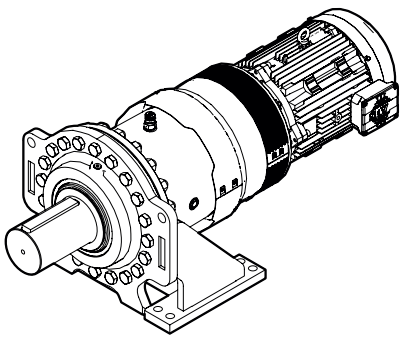	**P..2e/B DR..** Planetary gearmotor in foot-mounted design
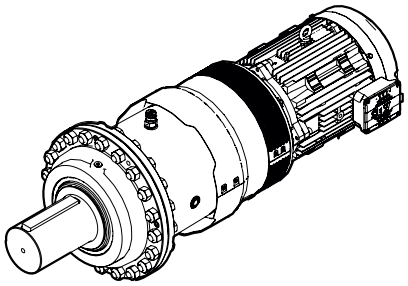	**P..2e/F DR..** Planetary gearmotor in flange-mounted design
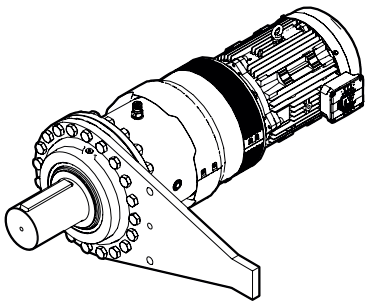	**P..2e/T DR..** Planetary gearmotor in flange-mounted design with torque arm

INFORMATION

The various mounting types can be combined with the available output shaft types.

For the available output shaft designs, refer to chapter "Output shaft designs" (→ 🗎 20). The mounting design "torque arm" can be combined with the output shaft type "hollow shaft with shrink disk" as standard. Contact SEW-EURODRIVE for information on deviating combinations.

31991203/EN – 08/2025

2.8.2 Components on the input end

The following figure shows the components on the input end.

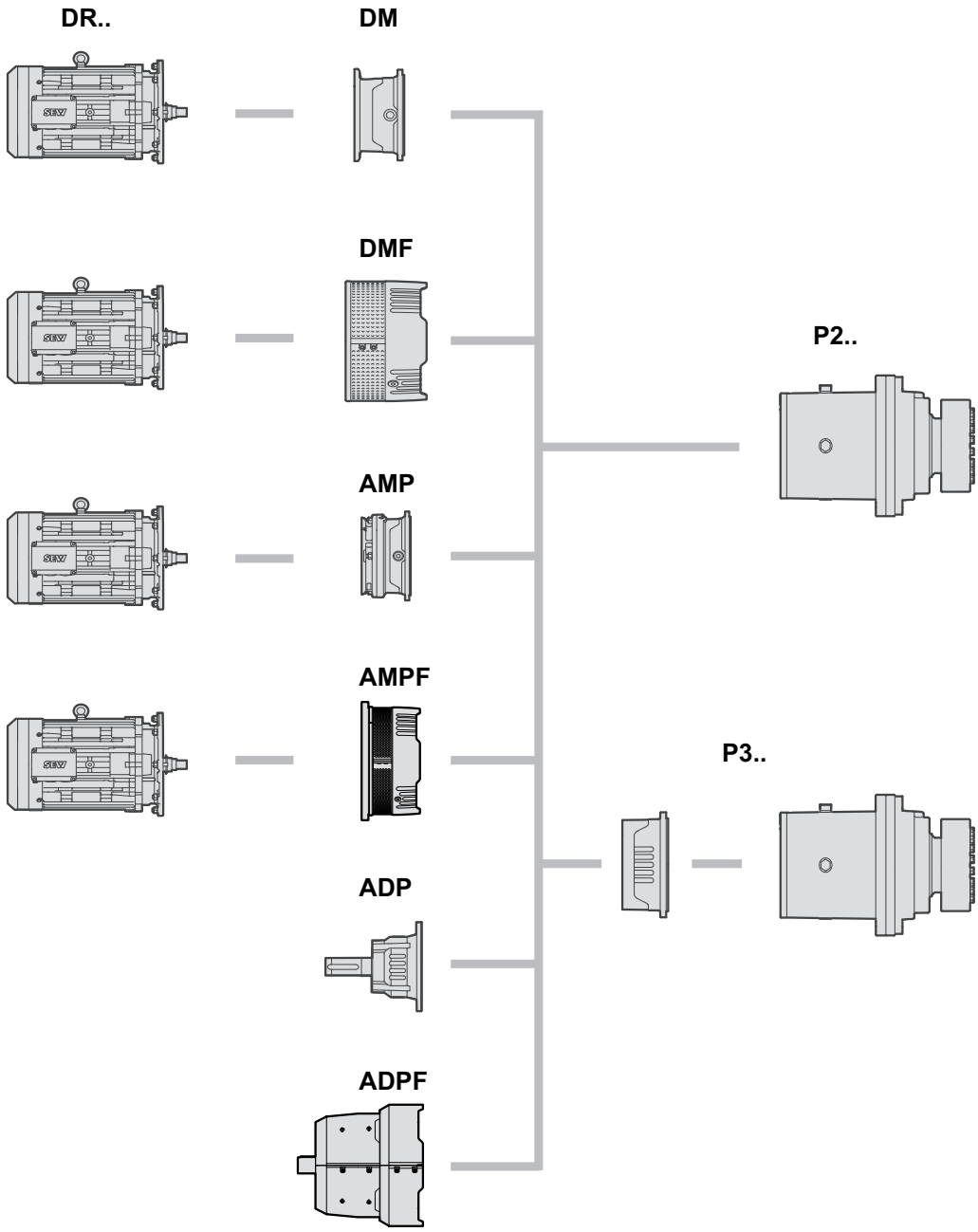

9007249110923403

DR..	Motor
DM	Direct motor mounting
DMF	Direct motor mounting with fan
AMP	Motor adapter
AMPF	Motor adapter with fan
ADP	Input shaft assembly
ADPF	Input shaft assembly with fan
P2..	2-stage planetary gear unit
P3..	3-stage planetary gear unit

31991203/EN – 08/2025

2.8.3 Output shaft designs

The output shaft [LSS] of the planetary gear unit is available in the following designs:

Output shaft as a solid shaft with key /..S

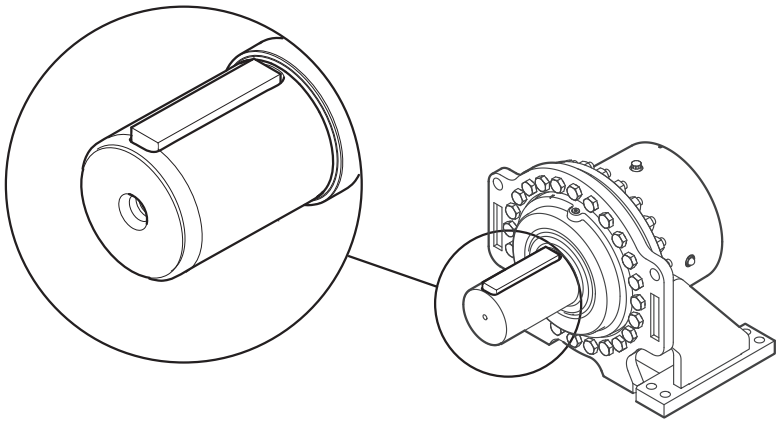

9007218403195787

Output shaft as a solid shaft with 2 keys /..S

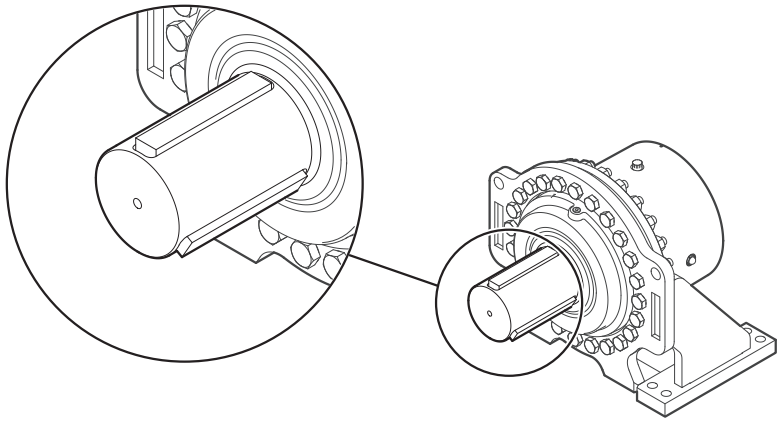

9007218403198219

Output shaft as a smooth solid shaft /..R

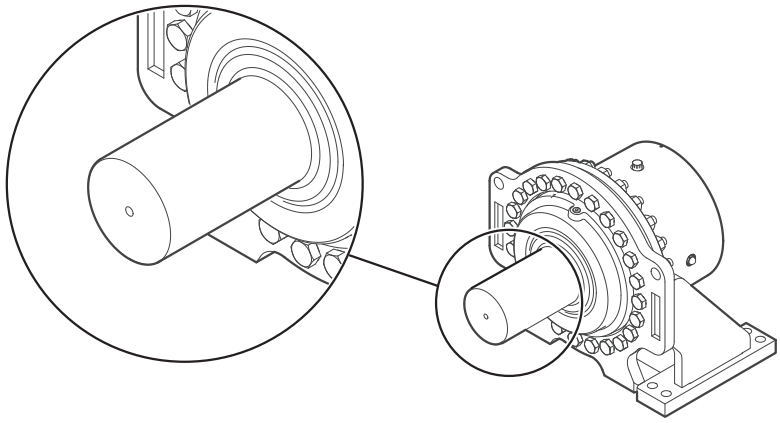

9007218403188491

31991203/EN – 08/2025

Output shaft as a splined solid shaft /..L

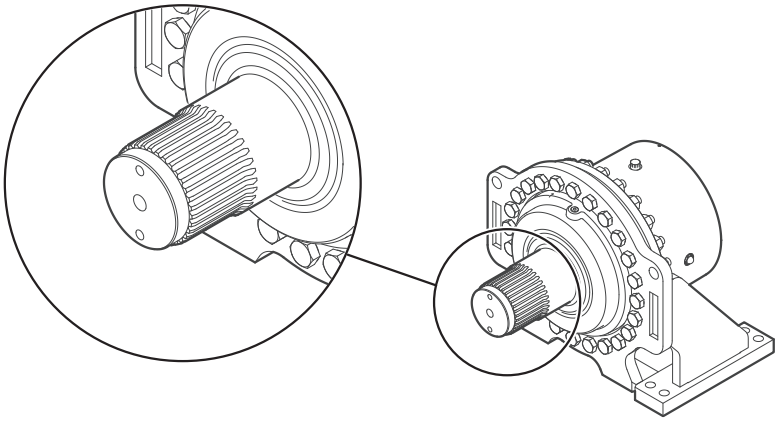

9007218403200651

Output shaft as a hollow shaft with shrink disk /..H

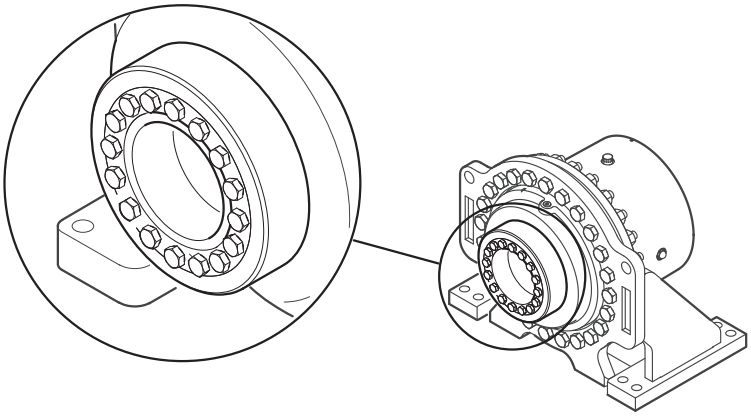

9007218403190923

Output shaft as a splined hollow shaft /..V

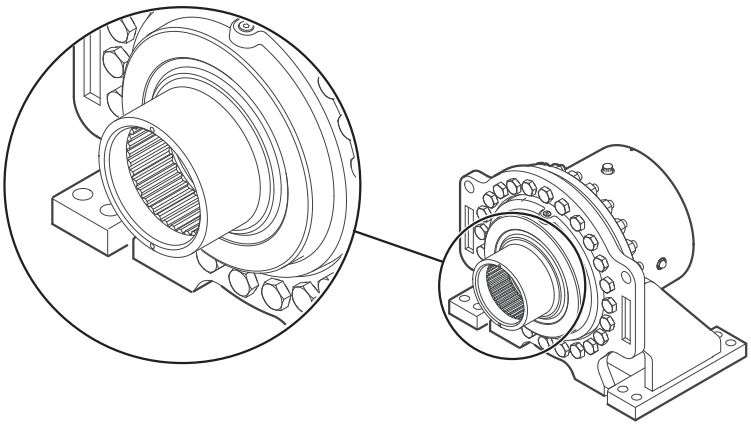

9007218403193355

31991203/EN – 08/2025

2.9 Type designation

The type designation is set up as follows.

Example: P3PV042e/F DMF		
Planetary gear units	**P**	Industrial gear unit series
	3	Number of gear unit stages • 2 = 2-stage • 3 = 3-stage
	P	Gear unit design • P = Coaxial design
	V	Output shaft type • S = Solid shaft with key • R = Smooth solid shaft • L = Splined solid shaft • H = Hollow shaft with shrink disk • V = Splined hollow shaft
	042	Planetary gear unit size
	e	Generation P2.e
	/F	Gear unit mounting • /B = Foot • /T = Torque arm • /F = Flange
	DMF	Motor interface • ADP = Input cover • ADPF = Input cover with fan • AMP = Motor adapter • AMPF = Motor adapter with fan • DM = Direct motor mounting • DMF = Direct motor mounting with fan

31991203/EN – 08/2025

2.10 Nameplate

2.10.1 Planetary gear units

The following example shows the structure of the nameplate.

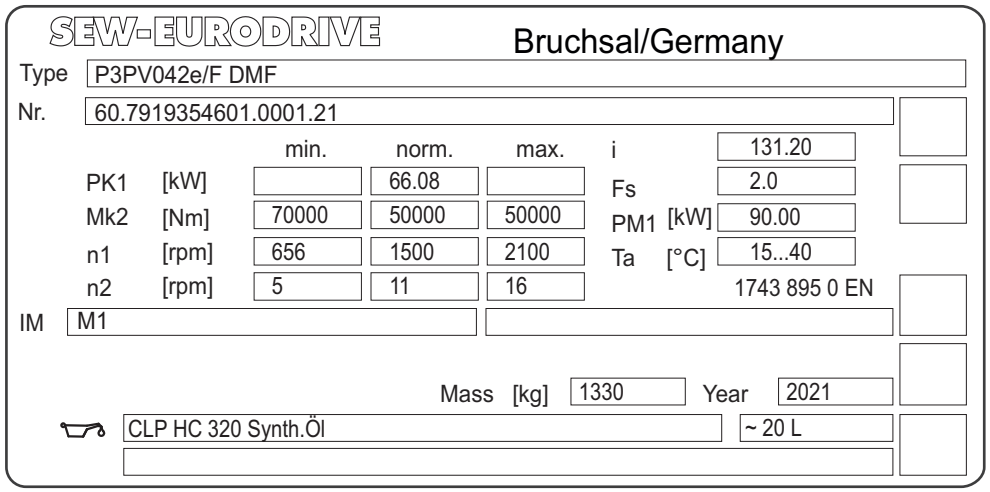

34506807051

Type		Type designation
No.		Production number
PK1	kW	Operating power on the input shaft (HSS)
MK2	Nm	Gear unit output torque
n1	rpm	Input speed (HSS)
n2	rpm	Output speed (LSS)
norm.		Normal operating point
min.		Operating point at minimum speed
max		Operating point at maximum speed
i		Exact gear unit ratio
F_S		Service factor
PM1	kW	Nominal motor power
T_A	°C	Deviation from the standard temperature range (−20 °C to – 40 °C)
IM		Mounting position and mounting surface
Mass	kg	Gear unit weight
		Oil grade and viscosity class/oil quantity
Year		Year of manufacture

31991203/EN – 08/2025

2.10.2 DRN.. motor nameplate

The following figure shows an example of a nameplate:

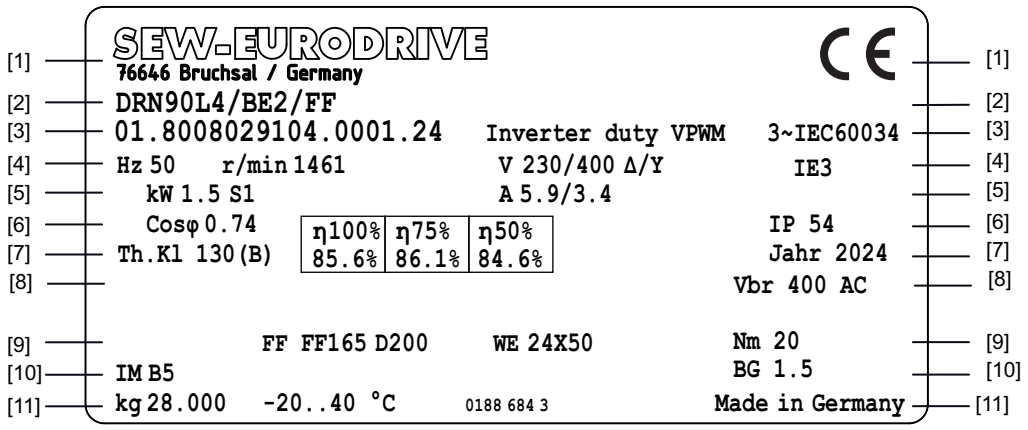

18014420197253003

Line	Information
[1]	• Manufacturer, address • CE label
[2]	• Type designation
[3]	• Serial number • Suitability for inverter operation • Number of phases and underlying rating and performance standards (EN/IEC 60034-X and/or equivalent national standard)
[4]	• Rated frequency • Rated speed • Nominal voltage • Energy efficiency class according to IEC 60034-30-1
[5]	• Rated power and operating mode • Rated current
[6]	• Power factor • Degree of protection according to IEC 60034-5
[7]	• Thermal class • Rated efficiency for motors included in the validity of the IEC 60034-30-1 standard • Year of manufacture
[8]	• Brake voltage
[9]	• Flange • Shaft end • Braking torque
[10]	• Mounting position • Brake rectifier

31991203/EN – 08/2025

Line	Information
[11]	• Mass • Permitted ambient temperature range • Part number nameplate • Country of manufacture

31991203/EN – 08/2025

2.11 Coating and surface protection systems

The gear units are available with surface protection OS 1, OS 2, OS 3, and OS 4.

The following descriptions provide an overview of the coating and surface protection systems.

OS 1 low environmental pollution	
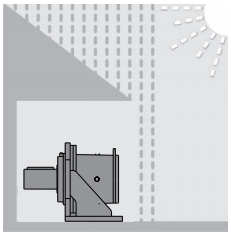	Suitable for environments prone to condensation and atmospheres with low humidity or contamination, such as outdoor applications under roof or with protection, unheated buildings where condensation can build up. According to corrosivity category: C2 (low)
Sample applications	• Systems in saw mills • Agitators and mixers
Condensation test ISO 6270	120 h
Salt spray test ISO 7253	–

OS 2 medium environmental pollution	
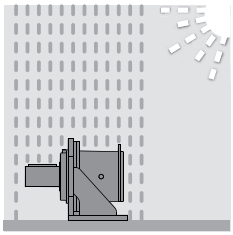	Suitable for environments with high humidity or moderate atmospheric contamination, such as applications outdoors subject to direct weathering. According to corrosivity category: C3 (moderate)
Sample applications	• Applications in gravel plants • Cableways
Condensation test ISO 6270	120 h
Salt spray test ISO 7253	240 h

OS 3 high environmental pollution	
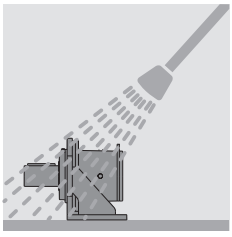	Suitable for environments with high humidity and occasionally severe atmospheric and chemical contamination. Occasionally acidic or caustic wet cleaning. Also for applications in coastal areas with moderate salt load. According to corrosivity category: C4 (high)
Sample applications	• Port cranes • Sewage treatment plants • Mining applications
Condensation test ISO 6270	240 h
Salt spray test ISO 7253	480 h

31991203/EN – 08/2025

OS 4 high environmental pollution	
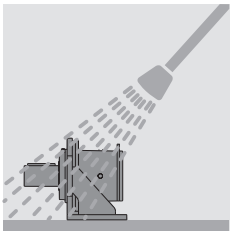	Suitable for environments with permanent humidity or severe atmospheric or chemical contamination. Regular acidic and caustic wet cleaning also with chemical cleaning agents. According to corrosivity category: C5 (very high)
Sample applications	• Drives in malting plants • Wet areas in the beverage industry • Conveyor belts in the food industry
Condensation test ISO 6270	360 h
Salt spray test ISO 7253	600 h

INFORMATION

- Standard top coat color RAL 7031, can deviate depending on the order.
- Colors according to RAL – Yes
- Water and hand perspiration repelling rust preventive for external preservation applied to uncoated parts, shaft ends/flanges.
- Sheet metal parts (such as protection covers) are painted in RAL 1003 as standard.
- Higher quality surface protection systems are available on request.

31991203/EN – 08/2025

2.12 Storage and transport conditions

The gear units can be shipped with the following protection and packaging types depending on the storage and transport conditions.

2.12.1 Internal conservation

Standard corrosion protection

After the test run, the test oil fill is drained out of the gear unit. The remaining oil film protects the gear unit against corrosion for a limited period of time. If specified in the order, the gear unit can be delivered with oil. Refer to the order documents for more information.

Long-term corrosion protection

After the test run, the test oil fill is drained out of the gear unit and the interior space is filled with a vapor phase inhibitor. The breather is replaced by a screw plug and included in the gear unit delivery.

Corrosion protection with VCI anti-corrosion agent is not permitted for gear units that are operated with food grade lubricants. Contact SEW-EURODRIVE in such cases.

2.12.2 Exterior corrosion protection

In general, the following measures are used for external preservation:

- Anti-corrosion agent is applied to bare, non-painted functional surfaces of shafts, flanges, mounting and foot surfaces of the housing. The anti-corrosion agent must be removed with a suitable solvent that does not damage the oil seal.
- Small spare parts and loose pieces, such as bolts, nuts, etc., are packed in corrosion protection plastic bags (VCI corrosion protection bags).
- Tapped holes and blind holes are sealed with plastic plugs.
- If the gear unit is stored longer than 6 months, regularly check the protective coating of unpainted areas as well as the paint coating. Areas with protective coating and/or paint that has been damaged may have to be repainted.

2.12.3 Packaging

Standard packaging

The gear unit is delivered on a pallet without cover.

Use: transport by truck or rail

Long-term packaging

The gear unit is delivered in a wooden box that is also appropriate for sea transport.

Use: transport by ship and/or extended storage

2.12.4 Storage conditions

Improper storage may result in damage to the gear unit. Observe the following information to prevent damage to the gear unit:

- While in storage until startup, the gear unit must be stored in a shock-free manner to prevent damage to the rolling bearing races.

31991203/EN – 08/2025

- Only fill gear units with oil up to the uppermost rolling element. This ensures a remaining air volume for the oil to expand in case of higher temperatures. Add Anticorit VCI and tightly seal the gear unit (replace the breather with a screw plug)
- The permitted storage temperature is -30 °C to +50 °C.
- When storing in tropical areas, ensure adequate protection against insect damage. In case of deviating requirements, contact SEW-EURODRIVE.

The gear unit is delivered without any oil filling as standard; different protection systems are required depending on the storage period and storage conditions as shown in the following table.

Preservation + packaging	Storage location	Storage period
Standard preservation + standard packaging	Under roof and enclosed at constant temperature and humidity (5 °C < ϑ < 60 °C, < 50% relative humidity). No sudden temperature fluctuations and controlled ventilation with filter (free of dirt and dust). No aggressive vapors or shocks.	Maximum 6 months with intact surface protection
Long-term preservation + standard packaging	Under roof and enclosed at constant temperature and humidity (5 °C < ϑ < 60 °C, < 50% relative humidity). No sudden temperature fluctuations and controlled ventilation of the storage room with filter (free of dirt and dust). No aggressive vapors or shocks.	Maximum 3 years with regular inspection and checking for intactness
Long-term preservation + standard packaging	Under roof, protection against rain, vibration-free.	Maximum 3 years with regular inspection and checking for intactness

31991203/EN – 08/2025

2.13 DR.. series driving motor

The motors of the DR.. series comply with all international standards and meet the new requirements of the IEC motor standard already today.

The tried-and-tested DR.. modular motor system for line operation and frequency inverter operation in class IE3 is now being extended with a further sustainable and energy-saving design in class IE4. This rounds off the SEW-EURODRIVE portfolio and makes it ready for the upcoming IE4 energy efficiency regulations for asynchronous motors.

With the new asynchronous motor in energy efficiency class IE4, SEW-EURODRIVE is making a significant contribution to boosting efficiency, limiting energy consumption, and reducing CO_2 generation.

Refer to the www.sew-eurodrive.com website for further information on the DR.. motor series. If you are unclear about any of the information in this documentation or if you require further information, contact SEW-EURODRIVE directly.

This catalog includes energy-efficient motors of the types DRN.. and DRU.. for combination with planetary gear units of the P2e generation.

Motors of the IE3 motor standard: Premium efficiency

For combinations of the DRN.. motor with planetary gear units, refer to the "Selection tables for DRN.. motors" (→ 🗎 88).

For dimensions of the DRN.. motor series, refer to the "Dimension sheets for DRN.. motors" (→ 🗎 218).

Motors of the IE4 motor standard: Ultra premium efficiency

For combinations of DRU.. motors with planetary gear units, refer to the "Selection tables for DRU.. motors" (→ 🗎 126).

For dimensions of the DRU.. motor series, refer to the "Dimension sheets for DRU.. motors" (→ 🗎 282).

31991203/EN – 08/2025

2.14 Sealing system

2.14.1 Input shaft on the input shaft assembly /ADP

The following table shows the input sealing systems for horizontal and vertical mounting positions.

Designation	Property	Environment	Figure
Standard	Single oil seal with dust protection lip	Normal environment	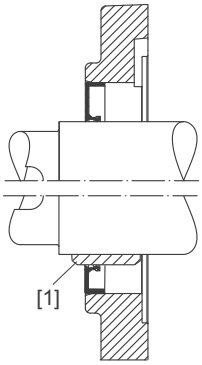
Radial labyrinth seal (Taconite), regreasable	Single oil seal with radial labyrinth seal	**Very high** dust load with abrasive particles	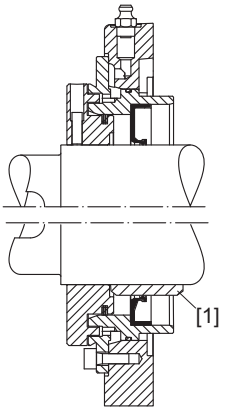

[1] Optional with oil seal sleeve

31991203/EN – 08/2025

2.14.2 Output shaft

The following table shows the output sealing systems for horizontal and vertical mounting positions.

Designation	Property	Environment	Figure
Standard for mounting positions M1/M3/M5/M6	Single oil seal, inside sealing with dust protection lip on a hardened sleeve [1]	Normal environment	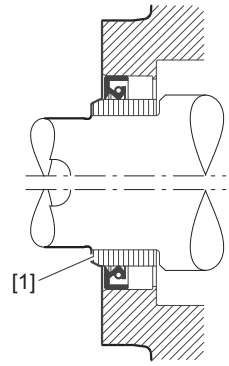
Standard for mounting position M4 (optional for mounting positions M1/M3/M5/M6)	2 oil seals, inside sealing on a hardened sleeve [1]	**Medium** dust load with abrasive particles	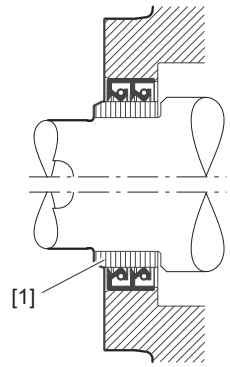
Standard for mounting position M2 (optional for mounting positions M1/M3/M5/M6)	1 oil seal, sealing on the inside, and 1 oil seal, sealing on the outside, on a hardened sleeve [1]	**High** dust load with abrasive particles and splash water load	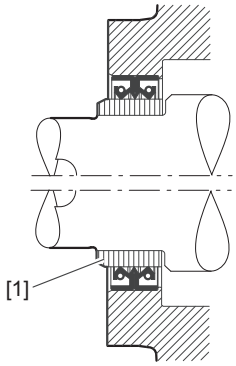
Radial labyrinth seal Regreasable for mounting positions M1/M2/M3/M4/M5/M6	Single oil seal with radial labyrinth seal on a hardened sleeve [1]	**Very high** dust load with abrasive particles	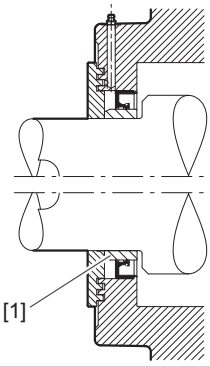

31991203/EN – 08/2025

2.15 Lubrication types

There are two lubrication types that are described on the following pages.

- **Splash lubrication** for gear units in horizontal mounting positions (M1/M3/M5/M6)
- **Oil bath lubrication** for gear units in vertical mounting positions (M2/M4)

2.15.1 Splash lubrication for horizontal mounting positions: M1/M3/M5/M6

The gear unit is half filled with oil. Gearing and bearing parts that are not immersed in the oil bath are lubricated by splashing oil. The oil level is checked at the oil sight glass [3] on the housing gear rim. The oil drain plug [4] can be replaced with an oil drain valve as an option. The oil is filled via the highest point on the gear unit where a splash guard adapter [2] and a breather [1] are mounted.

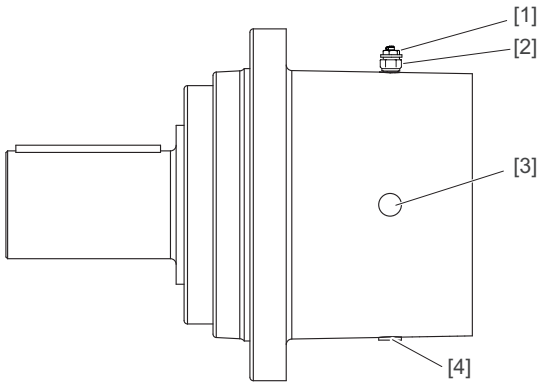

9007236446548875

2.15.2 Oil drain valve option for horizontal mounting positions (M1/M3/M5/M6)

In addition to the standard oil drain plug, SEW-EURODRIVE offers the oil drain valve option. Observe the variants that are described below.

INFORMATION

For some foot-mounted gear units, the installation of an oil drain valve is not possible or only possible with restrictions due to limited space. Contact SEW-EURODRIVE.

Position of the oil drain valve

The following figure shows the installation options of the oil drain valve.

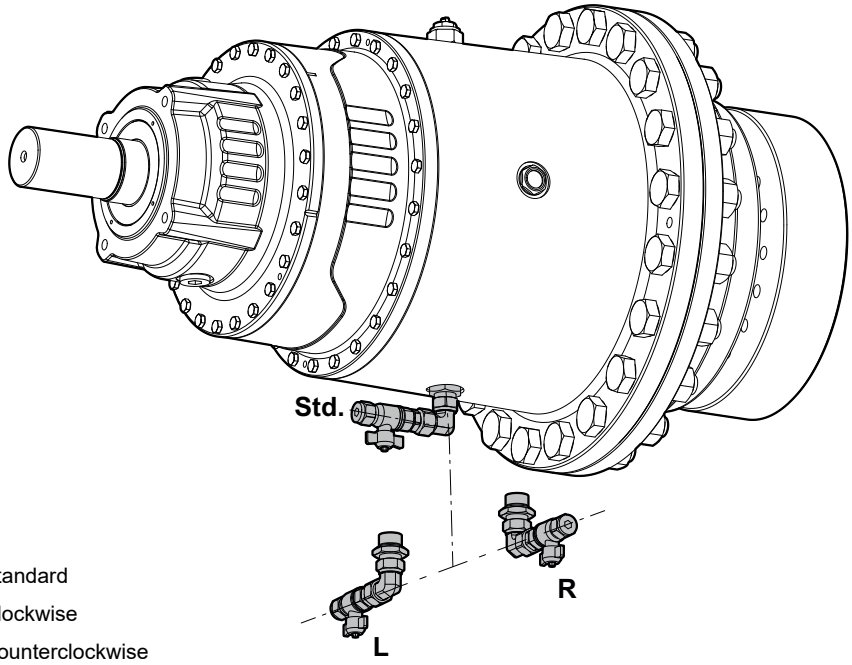

Std. = Standard
R = Clockwise
L = Counterclockwise

42241180427

Position of the lever

The following figure shows the possible positions of the lever.

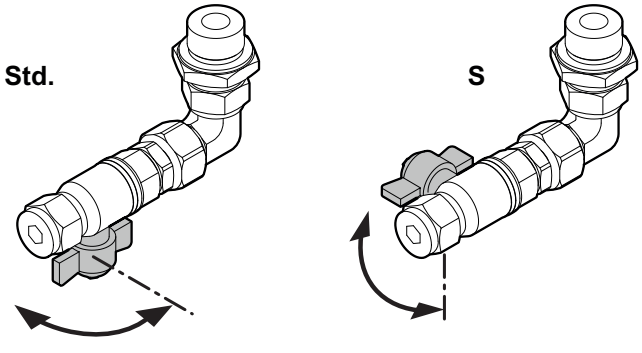

Std. = Standard
S = On the side

42241184395

31991203/EN – 08/2025

2.15.3 Bath lubrication for vertical mounting positions: M2/M4

The gear unit is (almost completely) filled with oil. All tooth engagement or bearing points are immersed in the oil bath completely or partly.

Mounting position M2

Standard lubrication type with oil expansion tank:

- Oil expansion tank [2] for volume compensation
- The oil level is checked by means of a combined oil dipstick with breather [1]
- Oil is filled in via the oil expansion tank

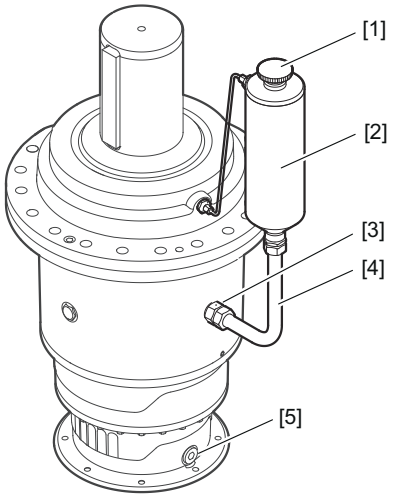

9007234457870347

[1] Oil dipstick with breather
[2] Oil expansion tank
[3] Splash guard adapter
[4] Riser pipe
[5] Oil drain plug

31991203/EN – 08/2025

Mounting position M4

Standard lubrication type with oil expansion tank:

- Oil expansion tank [2] for volume compensation
- The oil level is checked by means of a combined oil dipstick with breather [1]
- Oil filling via the oil expansion tank

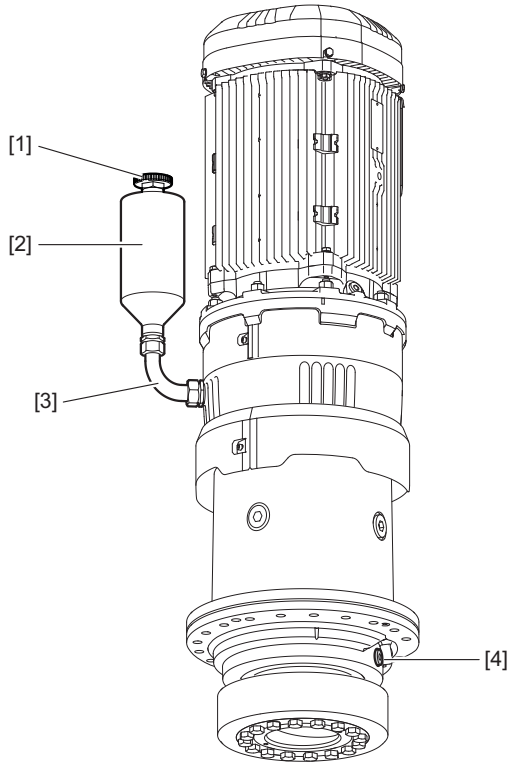

18014433734255499

[1] Oil dipstick with breather
[2] Oil expansion tank
[3] Riser pipe
[4] Oil drain plug

INFORMATION

For mounting position M4 in combination with direct motor mounting (DM), no oil expansion tank is required. Refer to chapter "Mounting position sheets" (→ 🗎 47).

31991203/EN – 08/2025

3 Options

The following additional options are available. Contact SEW-EURODRIVE if required.

- Double-sided torque arm
- Hollow shaft with shrink disk optional with forcing thread
- Cooling systems
- Extended output shaft
- Optional motor types
- Motor options
  - Brake
  - Backstop
  - Speed sensors

31991203/EN – 08/2025

3.1 Torque arm

3.1.1 Single-sided torque arm

The reaction torque to the output torque is absorbed by the torque arm fixture via lever arm A. The illustration shows an example of absorption in a welded construction with design dimensions. Two supporting plates with the suggested dimensions are welded onto the customer's structure. Once the gear unit has been mounted, a connecting cover plate is welded onto the two supporting plates. The force from the gear unit torque divided by the length of the lever arm A acts on the support. The reaction force acts on the gear unit and customer bearings.

NOTICE

Mounting elements may be damaged by excessively high impacts.

Possible damage to property.

- Limit the maximum clearance for the torque arm bearing according to F7 and F8 in the following table.

INFORMATION

The torque arm bearing must be sufficiently dimensioned by the user.

The following figure shows a sample torque arm with dimensions.

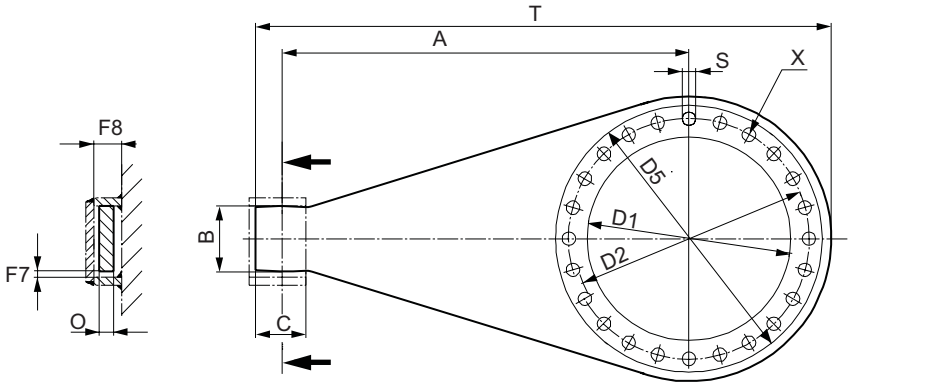

19817440779

Dimensions

Size	Dimensions in mm										Quantity	Mass
	A	B	C	D1	D2	O	F7	F8	S	T	X	kg
P..002e	650	60	50	334	370	25	2	50	22	880	16	25
P..012e	700	70	60	374	410	30	2	60	22	955	20	35
P..022e	750	90	70	414	460	35	2	70	22	1035	24	48
P..032e	800	110	90	464	510	35	2	70	26	1125	20	58
P..042e	900	150	120	484	560	40	2	80	33	1270	20	93
P..052e	1000	160	130	534	590	40	2	80	33	1390	24	102
P..062e	1200	180	150	614	690	50	2	100	39	1655	24	183
P..072e	1500	230	200	694	770	60	2	120	39	2020	24	317
P..082e	1600	230	200	754	840	70	2	140	45	2160	24	420

31991203/EN – 08/2025

3.2 Motor adapters /AMP

The motor adapters are available for mounting the following motors.

- **IEC (B5) motors** of sizes 132 to 355
- **NEMA ("C" face) motors** of sizes 213 to 449

The dimension sheets are provided in chapter "Motor adapter /AMP".

The gear unit must be installed in such a way that no liquids can enter the motor adapter (HSS end) and accumulate there.

3.2.1 Maximum motor weight depends on motor adapter size

The following maximum loads on the motor adapter must not be exceeded.

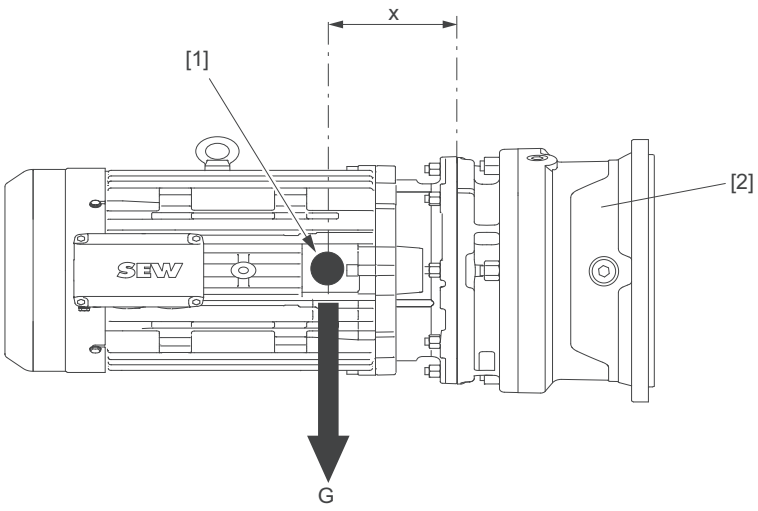

9007234494804107

[1] Motor center of gravity
[2] Motor adapter

X = Center of gravity distance
G_M = gearmotor weight

INFORMATION

The table only applies to stationary applications. For mobile applications (e.g. travel drives), contact SEW-EURODRIVE.

Motor adapter		G_M	X
IEC	NEMA	kg	mm
132	213 – 215	110	230
160/180	254 – 286	220	310
200	324	280	340
225	326	400	420
250/280	364 – 405	820	480
315S-L	444 – 449	1450	680
315		2000	740
355		2500	740

If the center of gravity distance **X** is increased, the maximum permitted mass G_M must be reduced linearly. G_M cannot be increased if the center of gravity distance is reduced.

31991203/EN – 08/2025

3.3 Base frame

The following table shows the mass of the base frame for individual sizes.

Size	Mass kg
P.002e	52
P.012e	64
P.022e	94
P.032e	110
P.042e	165
P.052e	176
P.062e	304
P.072e	433
P.082e	575

31991203/EN – 08/2025

3.4 Breather /BPG

The breather prevents non-permitted pressure increases generated by heating or cooling during operation.

Observe the following information.

3.4.1 Standard

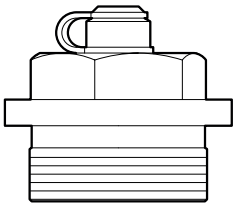

41578951051

Structure

Characteristics	
Housing material	Brass, optionally available in stainless steel (NIRO)
Design	With elastic seal and transport protection
Thread	1″

3.4.2 Optional breathers

The optional breathers are only available for 3-stage planetary gear units.

Plastic breather

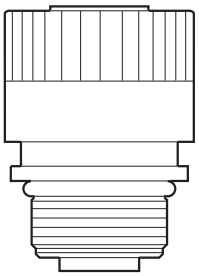

18847956107

Structure

Features	
Housing material	Polyamide
Filter inserts	Polyester filter, not interchangeable
Filter size	2 µm
Thread	1″

31991203/EN – 08/2025

Breather with filter insert /PI

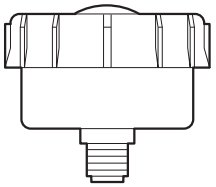

9007218102699787

The breather has the following characteristics:

- Corrosion-resistant
- Robust filter housing
- High dirt-absorbing capacity

Structure

The breather has a corrosion-proof housing with air intake opening at the top. The cover with protection lip keeps splashing water off.

Features	
Housing material	Polyamide
Filter inserts	Wire mesh, galvanized
Filter size	10 µm
Thread	1″

Steel breather for harsh operating conditions

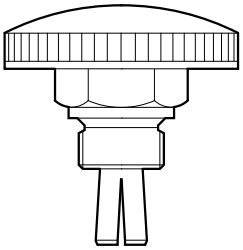

9007218373325963

Structure

Features	
Housing material	Steel
Filter inserts	Steel and aluminum wire mesh
Design	Cylindrical pipe thread according to DIN EN ISO 228-1, dimensioned for operating conditions with special protection against drip and splash water

31991203/EN – 08/2025

Stainless steel breather for harsh operating conditions

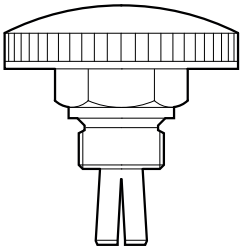

9007218373325963

Structure

Features	
Housing material	Stainless steel
Filter inserts	Steel and aluminum wire mesh
Design	Cylindrical pipe thread according to DIN EN ISO 228-1, dimensioned for operating conditions with special protection against drip and splash water

Desiccant breather filter /DC

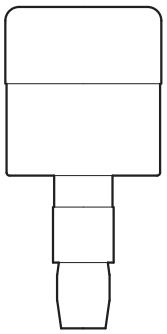

9007222800055435

The breather has the following characteristics:

- Absorbs water moisture and humidity
- Reduces oil mist

Structure

Features	
Housing material	Polycarbonate
Filter inserts	• Polyester filter: Removes air particles > 3 µm • Silica gel: Absorbs water and humidity. Saturation is indicated by the color changing from blue to pink. • Foam pad: Absorbs oil mist.
Thread	1″

31991203/EN – 08/2025

3.5 Pt100 temperature sensor

The Pt100 temperature sensor can be used to measure the temperature of the oil in the gear unit.

The temperature sensor is located in the oil sump of the gear unit. The exact position depends on the gear unit variant.

3.5.1 Dimensions

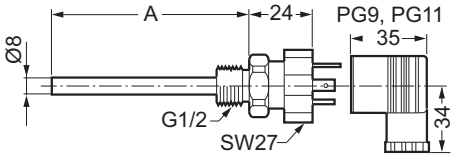

27021598123377419

Dimension "A" is determined specifically in each order.

3.5.2 Electrical connection

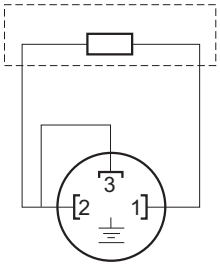

9007199613899531

[1] [2] Resistor element connection

3.5.3 Technical data

- Design with thermowell and changeable measuring insert
- Sensor tolerance K ± (0.3 + 0.005 × T), (corresponds to DIN IEC 751 class B)

  T = Oil temperature in °C
- Plug connector: DIN EN 175301-803 PG9 (IP65)
- The tightening torque for the retaining screw in the back of the plug connector for electrical connection is 0.25 Nm.

31991203/EN – 08/2025

4 Mounting positions

4.1 Mounting position

The mounting position defines the spatial position of the gear unit housing and is designated with M1 – M6.

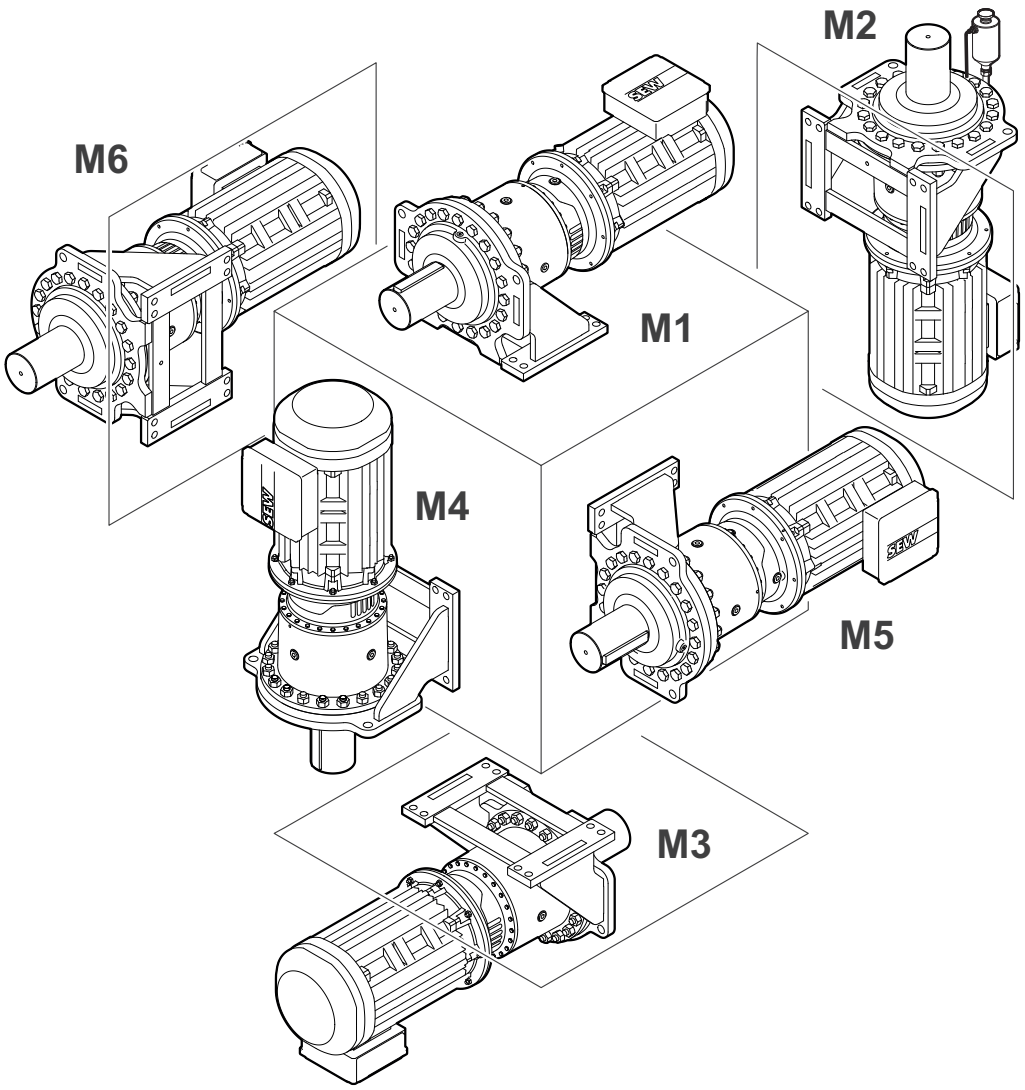

18014433711968651

31991203/EN – 08/2025

4.2 Pivoted mounting position: Fixed and variable mounting positions

Mounting positions deviating from the standard are differentiated between **fixed** and **variable** pivoted mounting positions.

Gear units with fixed pivoted mounting position have a mounting position that differs from the standard but is fixed. The gear unit does not change its mounting position during operation.

Gear units with a variable pivoted mounting position can change the mounting position **variably** during operation within the specified max./min. pivoting angle.

The designation of pivoted mounting positions and variable mounting positions is structured as follows:

M1 - M2/20°/V
[1] [2] [3] [4]

[1]	Initial mounting position	[3]	Pivoting angle
[2]	Target mounting position	[4]	F = Fixed end position; V = Variable end position

The following figure shows examples:

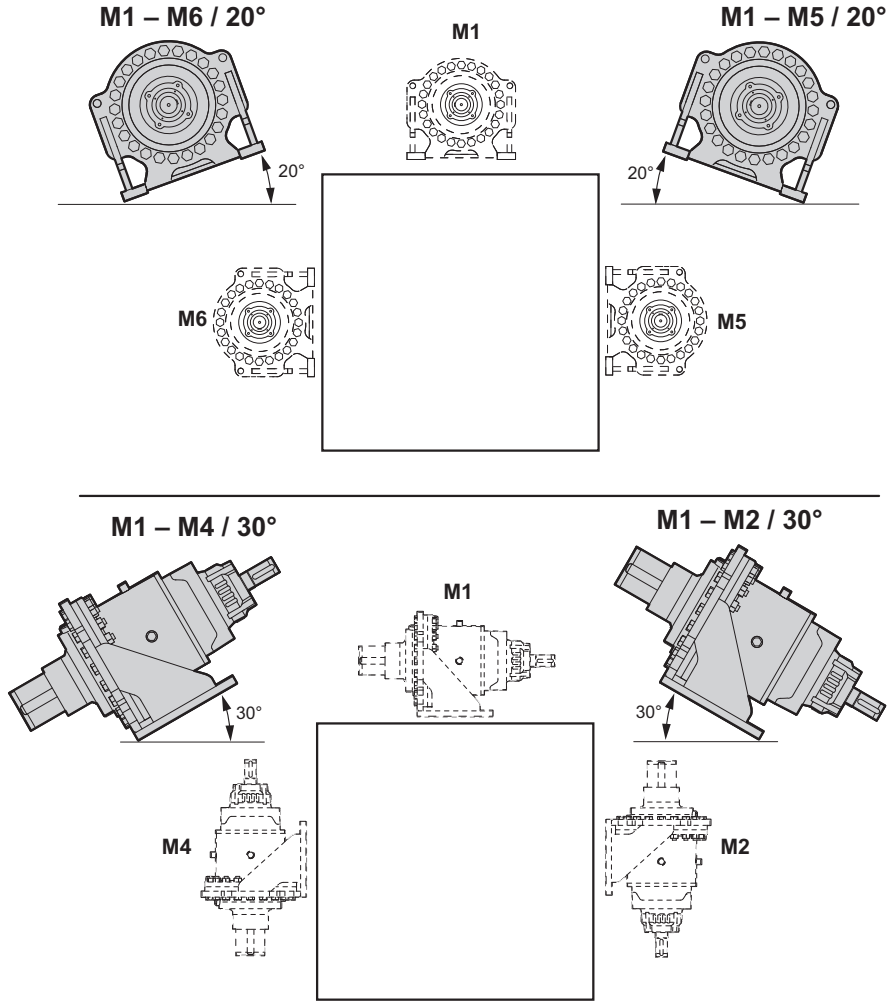

All end positions have to be specified if the mounting position of the gear unit deviates from standard mounting positions in several directions. Combinations of fixed and variable end positions are possible.

31991203/EN – 08/2025

Example of a gear unit based on mounting position M1 that is tilted by ±20° around the output shaft during operation and is mounted in a fixed angle of 30° around the longitudinal axis:

M1 – M2/20°/V – M4/20°/V – M5/30°/F

INFORMATION

Pivoted mounting positions may involve restrictions for accessories and technical data and possibly longer delivery times. Contact SEW-EURODRIVE.

4.3 Mounting position sheets

The following table shows the symbols used in the mounting position sheets and what they mean:

Symbol	Meaning
	Oil drain plug
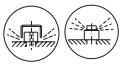	Breather
	Oil dipstick
	Oil sight glass

31991203/EN – 08/2025

45 001 02 21

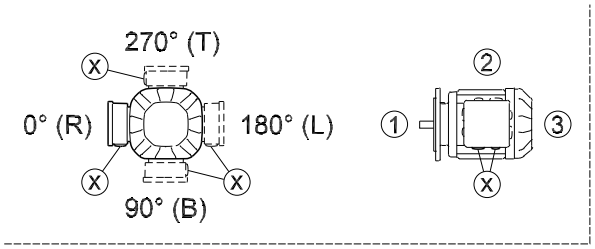

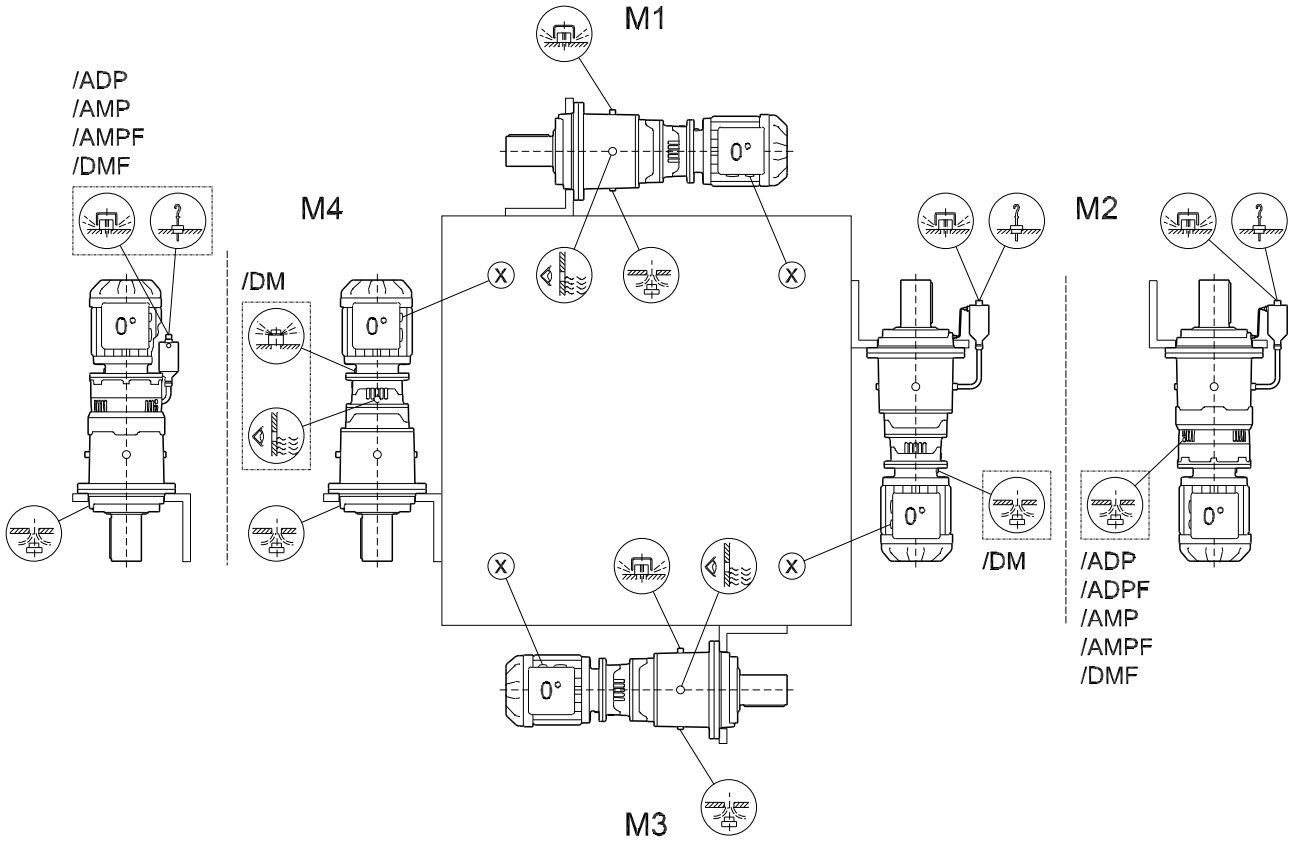

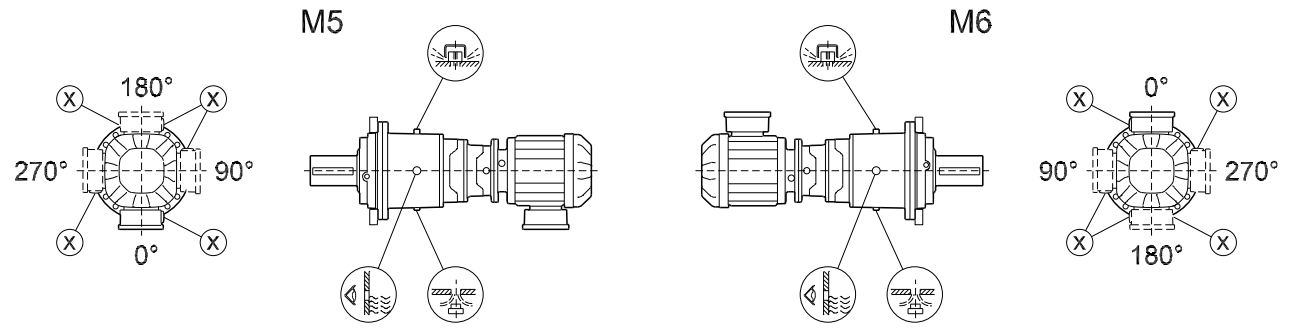

31991203/EN – 08/2025

5 Important order information

5.1 For all gearmotors

The following order information is required for planetary gearmotors in addition to the mounting position for an accurate configuration of the drive.

5.2 Position of motor terminal box and cable entry

The position of the motor terminal box has so far been indicated with 0°, 90°, 180° or 270° as viewed onto the fan guard (see figure below). A change in the product standard EN 60034 specifies that the following designations will have to be used for terminal box positions for foot-mounted motors in the future:

- As viewed onto the output shaft = A-end
- Designation as R (right), B (bottom), L (left) and T (top)

This new designation applies to foot-mounted motors without a gear unit in mounting position B3 (= M1). For gearmotors, the previous designation is retained. The following figure shows both designations. If the mounting position of the motor changes, R, B, L and T are rotated accordingly.

The position of the cable entry can be selected as well. Available positions are "X" (= standard position), "1", "2" or "3" (see the following figure).

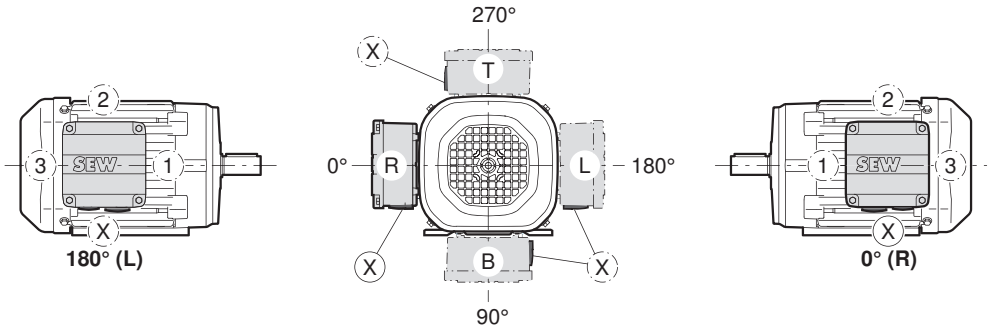

9007205555740427

Unless other information is given regarding the terminal box, the 0° type (R) with "X" cable entry will be supplied.

INFORMATION

When the terminal box is in the 90° (B) position, check to see if the planetary gearmotor has to be supported.

5.3 Torque arm

The torque arm can be enclosed in the delivery or can be mounted according to customer requirements.

The retaining screws are included in the scope of delivery.

The position of the torque arm is determined as looking onto the output shaft (mounting position **0°, 90°, 180°, 270°**).

INFORMATION

Different mounting positions are possible depending on the angle division (number of retaining screws).

The following figure shows an example of the mounting position of the torque arm.

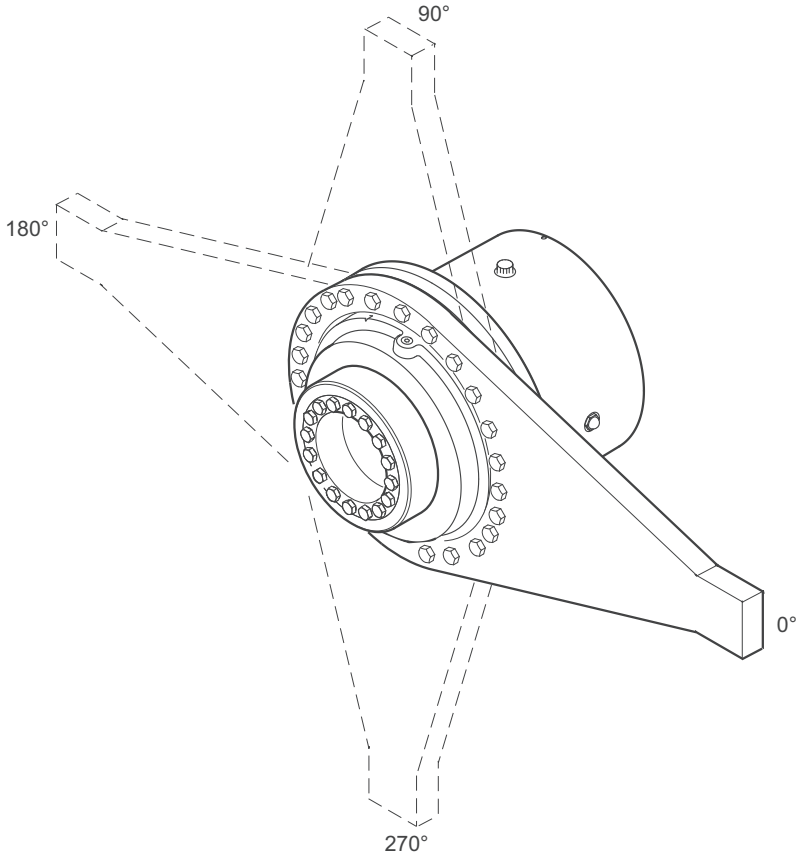

27021604065225867

31991203/EN – 08/2025

5.4 Output direction of rotation with backstop

With planetary gear units, you must specify the required direction of rotation of the output shaft. The direction of rotation is specified as viewed onto the output shaft.

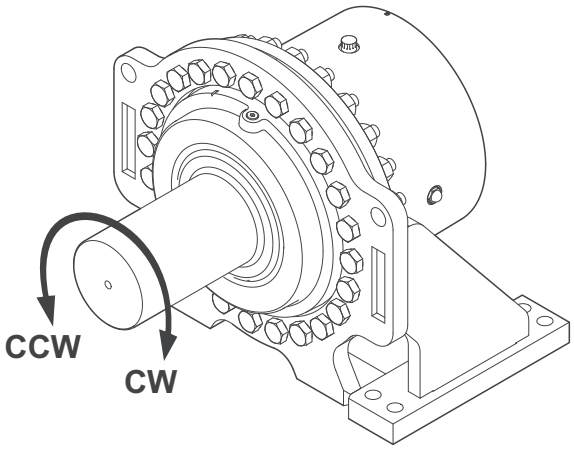

As viewed at the output shaft: Clockwise rotation **(CW)** = Rotating clockwise
Counterclockwise rotation **(CCW)** = Rotating counterclockwise

5.5 Sample orders

The following sample orders show a combination of a planetary gear unit and a motor.

Type	Mounting position of planetary gear unit	Mounting position			Additional feature
		Terminal box	Cable bushing	Torque arm	
P3PH042e/T DMF DRN250M4	M1	0°	X	0°	LSS labyrinth seal

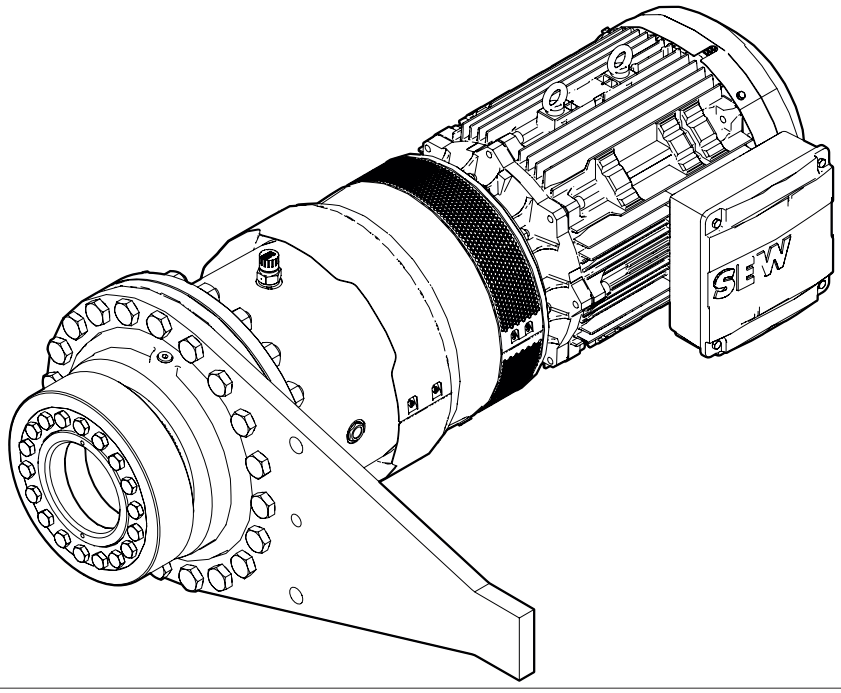

31991203/EN – 08/2025

Type	Mounting position of planetary gear unit	Mounting position			Additional feature
		Terminal box	Cable bushing	Torque arm	
P2PS042e/B DM DRN280S4	M4	270°	X	–	

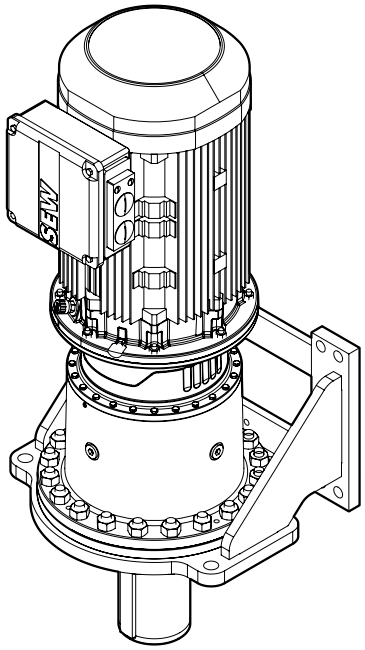

Type	Mounting position of planetary gear unit	Mounting position			Additional feature
		Terminal box	Cable bushing	Torque arm	
P3PS042e/F AMP DRN180M4	M2	180°	3	–	

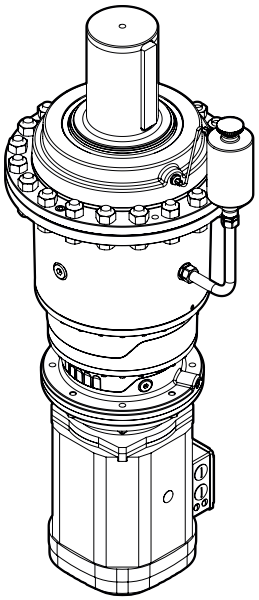

31991203/EN – 08/2025

6 Project planning for gear units

6.1 Project planning procedure

INFORMATION

For gear units in explosion-protected design, only a gear unit project planning with infinite fatigue strength is possible.

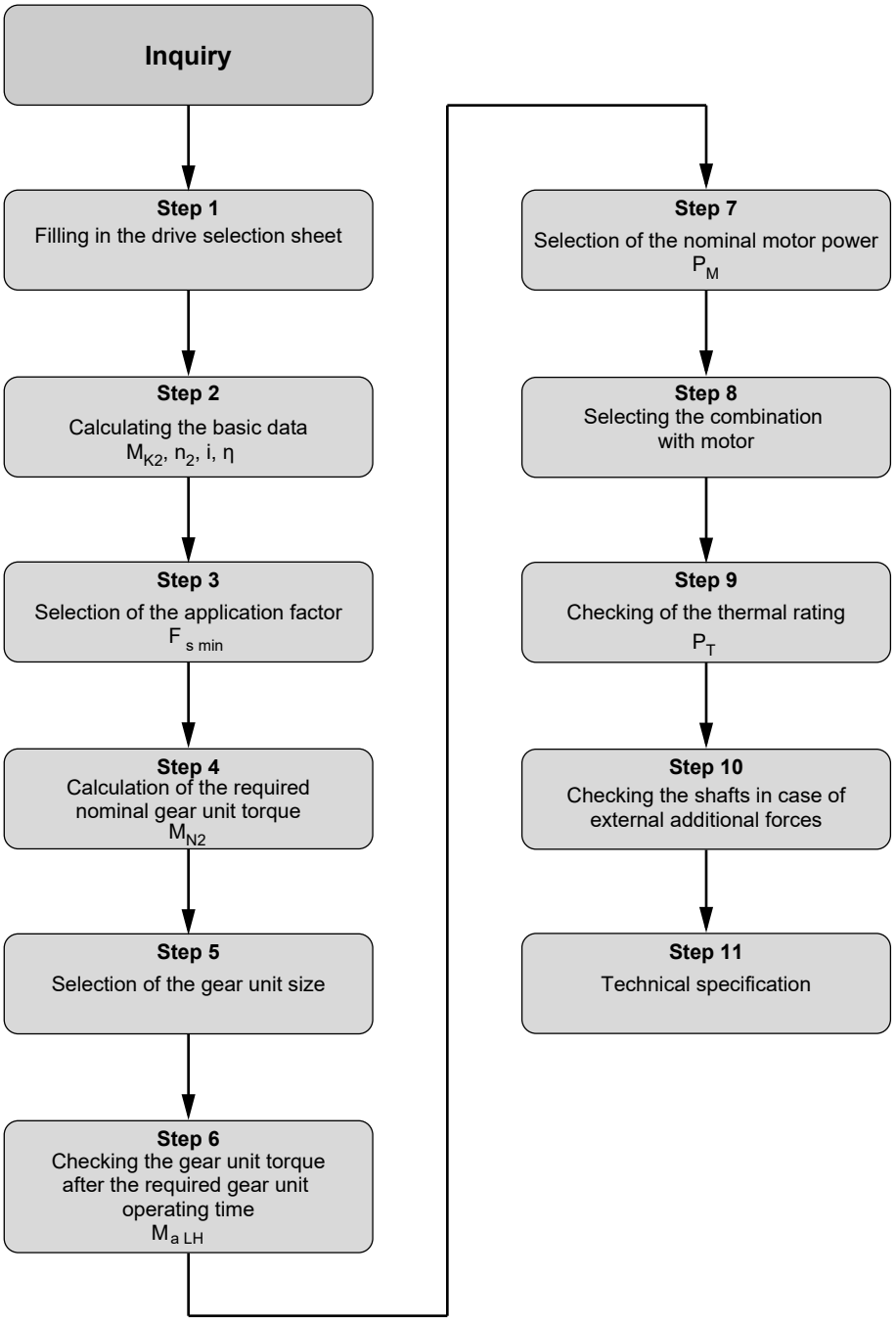

38708006795

31991203/EN – 08/2025

6.1.1 Step 1: Drive selection data

1.0 Machine on LSS (normally the driven machine)

Key: [...] = fill in values
[X] = make your selections by ☒

1.1 Field of application/industry [...]

1.2 Application [...]

1.3 Ambient temperature [°C] [...]

normal | min. | max.

1.4 Installation altitude [m] [...]

1.5 Installation [X]

☐ Small rooms ($v_a \geq 0.5$ m/s)
☐ Large rooms and halls ($v_a \geq 1.4$ m/s)
☐ Outdoors with protection from the sun ($v_a \geq 3$ m/s)

1.6 Ambient conditions [X]

☐ Normal ☐ Moist
☐ Dusty ☐ Dry
☐ Corrosive

2.0 Load characteristics

2.1 Required speed n_2 [min^{-1}] [...]

normal | min. | max.

2.2 Operating power on HSS P_{K1} [kW] [...]

normal | min. | max.

2.3 Operating torque on LSS M_{K2} [Nm] [...]

normal | min. | max.

2.4 Frequency of peak load ($M_{K2\ max.}$ or $P_{K1\ max.}$) [...]

per hour

2.5 Number of starts per hour [...]

starts

2.6 Service life [X]

☐ Defined service life [h]

2.7 Rotation direction under load (LSS) [X]

☐ Clockwise (CW)
☐ Counter-clockwise (CCW)
☐ Both directions
☐ Reversible

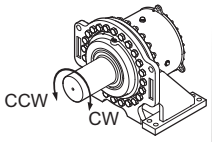

2.8 Operating period/day [X]

☐ ≤ 3 hours
☐ 3 – 10 hours
☐ > 10 hours

2.9 Backstop required in gear unit [X]

☐ No
☐ Yes

2.10 Exact load cycle attached [X]

☐ No
☐ Yes

3.0 Machine on HSS (normally the drive machine)

3.1 Type: [X]

☐ AC motor ☐ AC motor/inverter ☐ DC motor
☐ Hydraulic motor ☐ Servomotor

3.2 Motor power P_M [kW] [...]

normal | min. | max.

3.3 Motor speed n_M [min^{-1}] [...]

normal | min. | max.

3.4 Motor torque M_M [Nm] [...]

normal | min. | max.

3.5 Input speed n_1 [min^{-1}] [...]

normal | min. | max.

3.6 If electric motor: [X] [...]

☐ IEC
☐ NEMA
Motor size (IEC- or NEMA code):

3.7 Mounting of motor [X] [...]

☐ B3
☐ B5
☐ V1
☐ other:

37395582731

31991203/EN – 08/2025

4.0 Gear unit requirements

4.1 Mounting position [X]

- ☐ M1
- ☐ M2
- ☐ M3
- ☐ M4
- ☐ M5
- ☐ M6

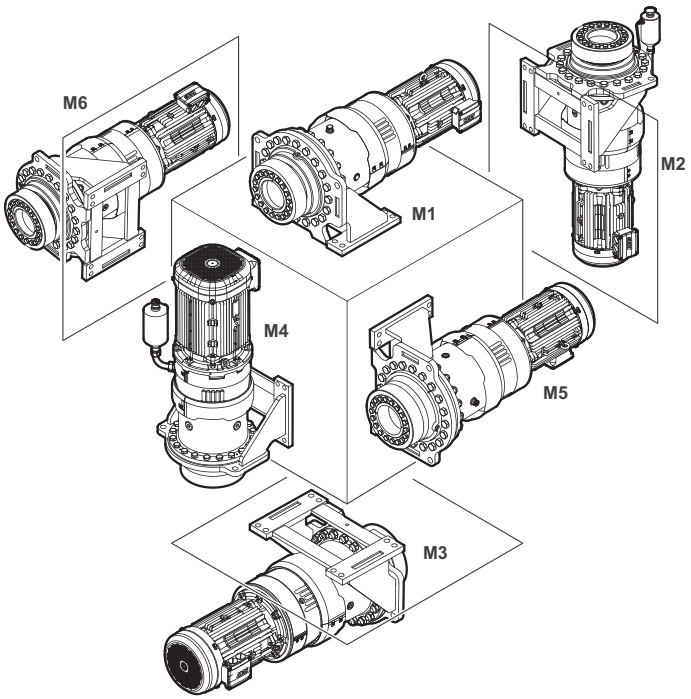

4.2 Position of terminal box and cable entries [X]

- ☐ 0° (R)
- ☐ 90° (B)
- ☐ 180° (L)
- ☐ 270° (T)

- ☐ X
- ☐ 1
- ☐ 2
- ☐ 3

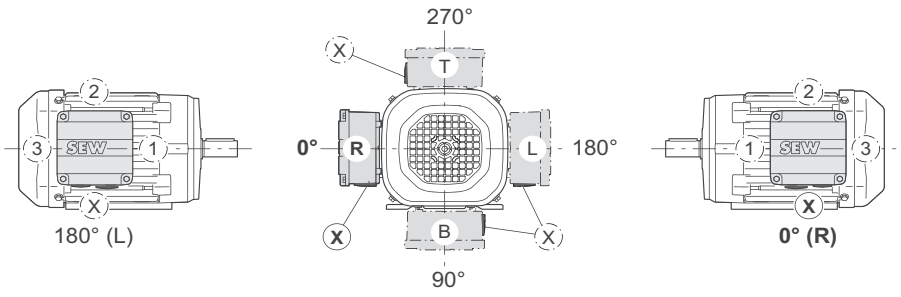

37395606155

4.6 Application-specific operating factor $F_{S\ min.}$ [X] [...]

☐ In relation to motor power P_M / motor torque M_M

☐ Operating power at LSS P_{K2} / operating torque at LSS M_{K2}

4.7 Required bearing service life $L_{h\ min}$ [...]

hours

4.8 Mounting of gear unit housing [X]

☐ Foot
☐ Flange
☐ Torque arm

4.9 LSS connection to customer machine shaft [X] [...]

☐ Elastic clutch (claw or bolt coupling)
☐ Flexible coupling
☐ Rigid flange coupling
☐ Barrel coupling
☐ Sprocket
☐ Pinion

☐ Hollow shaft – torque arm
☐ Hollow shaft – foot-mounting
☐ Hollow shaft – flange-mounting
☐ Other

4.10 LSS gear unit design [X] [...]

LSS design (if with solid shaft)

☐ Solid shaft with keyway
☐ Solid shaft with 2 keyways
☐ Smotth solid shaft
☐ Solid shaft with splined hollow shaft DIN 5480
☐ Other

LSS design (if with hollow shaft)

☐ Hollow shaft for shrink disk connection, including shrink disk
☐ Splined hollow shaft DIN 5480
☐ Other

4.11 HSS connection to motor [X]

☐ Customer installation (base frame)
☐ Motor adapter with elastic coupling
☐ Swing base/base frame
☐ Motor bracket with V-belt drive
☐ Other, see sketch

4.12 Machine shaft bearings

☐ 2 bearings, gear unit transmits only the torque
☐ 1 bearing opposite the gear unit, gear unit acts as a point of support
☐ 1 bearing right at the gear unit, gear unit acts as a point of support

4.13 Forces at the LSS [X] [...]

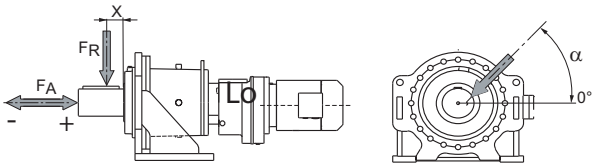

	normal	min.	max.
Axial force F_{A2} [N]			
Radial force F_{R2} [N]			
Distance from shaft shoulder X [mm]			

Application angle of radial force α [°]

or rotating ☐

4.15 Electric power supply [X] [...]

	AC 3-phase	AC 1-phase	DC		
Line voltage U_{line}	☐	☐	☐	V	HZ
Auxiliary voltage U_{aux}	☐	☐	☐	V	HZ

Degree of protection: IP

Explosion protection required: ☐ Yes ☐ No

37402739723

31991203/EN – 08/2025

6.1.2 Step 2: Calculation of basic data – M_{K2}, n_2, i, η

Constant torque	$M_{K2} = \frac{P_{K1} \times 9550 \times \eta}{n_2}$ Comment: If P_{K1} is unknown → $P_{K1} = P_M$ M_{K2} = Operating torque on LSS in Nm P_{K1} = Required operating power at HSS in kW n_2 = Output speed (LSS) in min^{-1}
Gear ratio	$i = \frac{n_1}{n_2}$ n_1 = Input speed (HSS) in min^{-1} n_2 = Output speed (LSS) in min^{-1}
Efficiency – η	η = f (i; gear unit type) The efficiency of the gear unit is mainly determined by the gearing and bearing friction as well by churning losses. η = 98% (gear ratio i = 16–40) η = 97% (gear ratio i = 50–330)

6.1.3 Step 3: Selecting the application factor

- Application-specific service factor $F_{S\,min}$

Application-specific service factor – $F_{S\,min}$ and peak load

The application-specific service factor takes into account all continuously occurring dynamic torques that are applied to the gear unit from outside beyond rated operation based on the application factor according to DIN 3990.

These torques depend on the following factors and apply to gear units with even power demand:

- The characteristics of the driving and driven machine
- The size and distribution of the mass moments of inertia
- The spring stiffness in the input and output train (shafts and couplings, etc.)
- Protective measures such as safety clutches
- The operating conditions

Furthermore, an additional check for peak loads is required only if this condition does not apply. This is necessary, for example, for intermittent operation, operation with extreme, repeated shock loads, etc.

In general, the gear units can be loaded with up to twice the rated gear unit torque for a limited number of load changes.

In this specific case, we recommend contacting SEW-EURODRIVE.

The application-specific service factor $F_{S\,min}$ takes account of the typical load behavior with regard to the driven machine. When determining the application-specific service factor $F_{S\,min}$, at least a value of 1.40 must be taken into account.

Recommended values in relation to

- Area of application
- Type of driven machine

are listed in the table below.

31991203/EN – 08/2025

INFORMATION

These tables apply only to gear units driven by electric motors. For other types of driving motors, the following correction values apply:

- Combustion engines with 4 or more cylinders:
  - $F_{S\,min}$ (selection table) + 0.25
- Combustion engines with 1 to 3 cylinders:
  - $F_{S\,min}$ (selection table) + 0.5

In the event of deviations from the typical load behavior, consult SEW-EURODRIVE.

Area of application	Type of application (driven machine)	Application-specific service factor $F_{S\,min}$
Wastewater treatment	Impeller aerator	2.00
	Thickener	1.50
	Vacuum filter	1.50
	Accumulator	1.50
	Screw pump	1.50
	Brush aerators	2.00
Mining	Crushers	2.00
	Shakers and screens	2.00
	Slewing gear	1.80
	Bucket-wheel excavators	1)
Energy	Frequency inverters	2.00
	Water wheels (rotating slowly)	1.70
	Water turbines	1)
Conveyor systems	Bucket elevators	1.50
	Vertical conveyors – other	1.80
	Belt conveyor ≤ 100 kW	1.40
	Belt conveyor > 100 kW	1.50
	Apron feeders	1.50
	Feeding screw	1.50
	Shakers, screens	2.00
	Escalator	1.50
	Passenger elevators	1)
Rubber and plastics industry	Extruders (plastic)	1.60
	Extruders (rubber)	1.80
	Rubber rollers (2 consecutive)	2.00
	Rubber rollers (3 consecutive)	1.75
	Heated rollers	1.75
	Calenders	1.65
	Mills	2.00
	Mixing rollers	1)
	Slab rollers	2.00
	Refining rollers	2.00
	Tire machines	1)
Wood industry	Wood industry	1)

1) Contact SEW-EURODRIVE.

31991203/EN – 08/2025

Area of application	Type of application (driven machine)	Application-specific service factor $F_{S\ min}$
Crane systems	Cranes and hoists	2)
Food industry	Crushers and mills	1.75
	Beet cutters	1.50
	Drying drums	1.50
Metal production and processing	Winders	1.75
	Cutting rollers	2.00
	Table conveyors, single drive	1)
	Table conveyor, group drive	1)
	Table conveyor, reciprocating	1)
	Wire drawing machines	1.75
	Rollers	1)
Mills and drums	Cooling and drying drums	1.60
	Rotary kilns	2.00
	Ball mills	2.00
	Coal mills	1.75
Paper and pulp industry	Debarking drums and barkers	-
	Rolls (pick-up, wire drive, wire suction)	2.00
	Drying cylinders (rolling bearings)	2.00
	Calenders (rolling bearings)	2.00
	Filters (pressure and vacuum)	2.00
	Chipping machines and choppers	2.00
	Jordan mills	1.75
	Presses (bark, felt, glue and suction presses)	1.75
	Rolling device	1.75
	Pulpers	1)
	Wash filters	1.50
	Yankee cylinders (dryers)	1)
Pumps	Centrifugal pumps	1.45
	Piston pumps (1 cylinder)	1.80
	Piston pumps (several cylinders)	1.50
	Screw pumps	1.50
	Rotary pumps (gear wheel, wing pumps)	1)
Agitators and mixers	Agitators for liquids	1.50
	Agitators for liquids (variable density)	1.65
	Agitators for solid media (non-uniform material)	1.70
	Agitators for solid media (uniform material)	1.40
	Concrete mixers	1.50
Cable cars	Material webs	1.50
	Aerial tramways	1)
	T-bar lifts	1)
	Aerial ropeways	1)
	Funiculars	1)
Fans	Heat exchanger	1.50
	Dry cooling tower	2.00
	Wet cooling tower	2.00
	Fans (axial and radial)	1.50
Compressors	Piston compressor	1.90
	Radial compressor	1.50
	Screw compressor	1.75

1) Contact SEW-EURODRIVE.

2) Contact SEW-EURODRIVE; dimensioning according to FEM1001.

31991203/EN – 08/2025

6.1.4 Step 4: Calculating the required nominal gear unit torque – M_{N2}

Constant load direction – constant torque:

$$M_{N2} \geq M_{K2} \times F_{S\min}$$

M_{N2} = Nominal gear unit torque in Nm
M_{K2} = Operating torque at LSS in Nm
$F_{S\,min}$ = Application-specific service factor

Reversing load direction – constant torque:

$$M_{N2} \geq M_{K2} \times F_{S\min} \times f_{rev}$$

M_{N2} = Nominal gear unit torque in Nm
M_{K2} = Operating torque at LSS in Nm
$F_{S\,min}$ = Application-specific service factor
f_{rev} = Reversing factor

Depending on the ratio of the load between the two directions of rotation, the reversing factor must be assumed according to the following table. The values apply as an example to the load ratio. If the load ratio differs, contact SEW-EURODRIVE.

Load ratio of the directions of rotation	Factor f_{rev}
100%	1.43
50%	1.25
10%	1.0

6.1.5 Step 5: Selecting the planetary gear unit size – M_{N2}

Size	M_{N2}
P..002e	24830
P..012e	36810
P..022e	51190
P..032e	69620
P..042e	100170
P..052e	124060
P..062e	185660
P..072e	245660
P..082e	359400

6.1.6 Step 6: Checking the gear unit torque after the required gear unit operating time

$$M_{aLh} \geq M_{K2}$$

$M_{a\,Lh}$ = Service life-dependent gear unit torque in Nm
M_{K2} = Operating torque at LSS in Nm
i_{ex} = Exact gear ratio

Select the gear unit torque [1] according to the gear unit size, based on the input speed [2], gear ratio I_{ex} [3] and the required gear unit operating time [4].

[2] [3]

P.002e... n1=1500 min^{-1}		$M_{a\,Lh}$ / Nm						24830 Nm
i_N	i_{ex}	≤5000 h	≤10000 h	≤15000 h	≤30000 h	≤60000 h	≤80000 h	≤100000 h [4]
16	15.23	15900	13100	11700	9700	7940	7310	6870
18	17.45	16400	13600	12100	10000	8210	7550	7090
20	19.53	16900	14000	12500	10300	8470	7780	7300
22.4	22.41	17500	14500	13000	10700	8830	8110	7600
25	26.68	18500	15300	13700	11300	9360	8610	8070

[1]

31991203/EN – 08/2025

6.1.7 Step 7: Selecting the nominal motor power P_M

$$P_M \geq P_{K1} = \frac{P_{K2}}{\eta}$$

P_M = Nominal motor power in kW
P_{K1} = Operating power at HSS in kW
P_{K2} = Operating power at LSS in kW
η = Efficiency

Efficiency:

η = 98% (gear ratio i = 16–40)

η = 97% (gear ratio i = 50–330)

6.1.8 Step 8: Selecting the combination with motor

The following figure shows the structure of the selection tables.

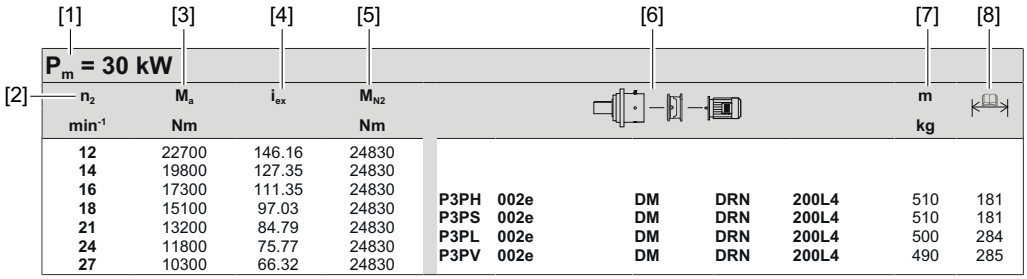

[1] Nominal motor power
[2] Output speed
[3] Output torque in relation to nominal motor power
[4] Gear unit ratio
[5] Nominal gear unit torque
[6] Gear unit type
[7] Mass
[8] Page number dimension sheet

After selecting the combination with the motor, check the output torque:

$M_a > M_{K2}$

31991203/EN – 08/2025

6.1.9 Step 9: Checking the thermal rating P_T

The thermal rating P_T of a gear unit is the power that a gear unit can transmit continuously without exceeding a specific oil temperature.

The thermal rating P_T depends on the following factors:

- Ambient temperature
- Air circulation and sunlight exposure at the installation site
- Installation altitude
- Gear unit type, size and gear ratio
- Type of gear unit lubrication
- Lubricant type
- Cyclic duration factor

For the following ambient conditions, the thermal rating can be directly read from the "selection tables" (→ 🗎 182):

- Ambient temperature 20 °C
- Installation in a large hall (air velocity ≥ 1.4 m/s)
- Self-cooling or fan cooling.
- Installation altitude < 1000 m above sea level tbd

INFORMATION

- For other ambient temperatures and types of lubricants, you can calculate the thermal rating P_T using the temperature factor f_T and the lubrication factor f_L. The resulting calculation results are approximate values. Contact SEW-EURODRIVE to determine the exact values.
- Sufficient protection from direct sunlight is absolutely necessary when installed outdoors. If the gear unit is not sufficiently protected against sunlight, a thermal calculation including the available solar radiation in kW/m² must be performed.

$$P_T = P_{TH} \times f_1 \times f_T$$

P_T = Thermal rating of the gear unit in kW

P_{TH} = Nominal thermal rating of the gear unit in kW. The values in the "selection tables" (→ 🗎 182) depend on the cooling type, mounting position and lubrication type.

f_1 = Altitude factor

f_T = Temperature factor

Altitude factor f_1

The following table lists the altitude factor f_1.

Altitude factor	Altitude H in m above sea level				
	up to 999	1000 – 2000	2000 – 3000	3000 – 4000	4000 – 5000
f_1	1.00	0.95	0.91	0.87	0.83

31991203/EN – 08/2025

Temperature factor f_T

The following table shows the temperature factor f_T depending on the lubrication type, ambient temperature, and cooling option.

Temperature factor f_T					
Lubrication type	Without additional cooling or with fan				
	Ambient temperature °C				
	10	20	30	40	50
Splash lubrication	1.15	1	0.85	0.7	0.55
Bath lubrication	1.18	1	0.85	0.65	0.48

at

$$P_T < \frac{1}{3} \times P_{N1}$$

→ Contact SEW-EURODRIVE

P_T = Thermal rating of the gear unit in kW

P_{N1} = Nominal gear unit power

The gear unit's thermal rating must be at least as large as the operating power on the input shaft HSS.

$$P_T \geq P_{K1}$$

P_T = Thermal rating of the gear unit in kW

P_{K1} = Operating power at HSS in kW

INFORMATION

If the thermal rating is not sufficient, contact SEW-EURODRIVE.

31991203/EN – 08/2025

6.1.10 Step 10: Checking the shafts in case of external additional forces

Checking the shaft strength

The shaft strength is checked for permissibility according to the following table.

$$S_{St} = \frac{M_{b,all.1}}{F_R \times (x + x_s)} \geq 1$$

S_{St} = Static safety value
$M_{b,all.1}$ = Permitted bending moment in Nm (see table)
F_R = Radial load in kN
x = Force application point in mm
x_s = Correction factor (see table)

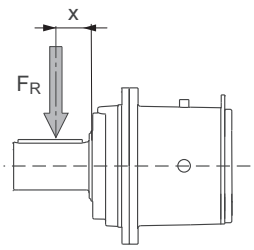

	P..002e	P..012e	P..022e	P..032e	P..042e	P..052e	P..062e	P..072e	P..082e
$M_{b,all.1}$	17810	23240	31600	45760	51140	69480	96650	129420	161970
Value x_s	139.1	118.6	119.8	156	140.3	158.4	158.8	188	187

Checking the dynamic shaft strength according to the required service life

Use the following table to check the permitted dynamic shaft strength.

$$S_{Dy} = \frac{M_{b,ref} \times f_L}{F_R \times (x + x_D)} \geq 1 \qquad f_L = \left(\frac{100000}{n_2 \times L_h} \right)^{0.3}$$

S_{Dy} = Dynamic safety value
$M_{b,ref}$ = Permitted bending moment in Nm (see table)
f_L = Service life factor
F_R = Radial load in kN
x = Force application point in mm
x_D = Dynamic correction factor (see table)
n_2 = Output speed in min^{-1}
L_h = Required service life in h

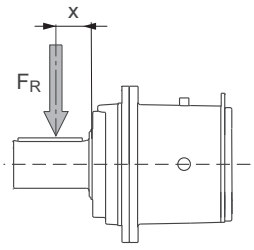

	P..002e	P..012e	P..022e	P..032e	P.042e	P..052e	P..062e	P..072e	P..082e
$M_{b,ref}$	24000	27900	65100	82800	109700	152000	172400	163700	305200
Value x_D	159.2	125.8	227.4	301	319.5	374	334.6	278.6	403.2

INFORMATION

If foot mounting is required and external forces are present, contact SEW-EURODRIVE.

31991203/EN – 08/2025

6.1.11 Step 11: Technical specification

Example: P3PV042e/F DMF		
Planetary gear units	**P**	Industrial gear unit series
	3	Number of gear unit stages • 2 = 2-stage • 3 = 3-stage
	P	Gear unit design • P = Coaxial design
	V	Output shaft type • S = Solid shaft with key • R = Smooth solid shaft • L = Splined solid shaft • H = Hollow shaft with shrink disk • V = Splined hollow shaft
	042	Planetary gear unit size
	e	Generation P2.e
	/F	Gear unit mounting • /B = Foot • /T = Torque arm • /F = Flange
	DMF	Motor interface • ADP = Input cover • ADPF = Input cover with fan • AMP = Motor adapter • AMPF = Motor adapter with fan • DM = Direct motor mounting • DMF = Direct motor mounting with fan

31991203/EN – 08/2025

6.2 Dimensioning example

6.2.1 Step 1: Drive selection data

- Application: Feeding screws
- Drive design: Planetary gearmotor
- Solid shaft with key and flange mounting
- Required operating time: 50 000 hours
- Required output speed n_2 = 25.0 min^{-1}
- Required operating power at LSS P_{K2} = 22 kW
- 4-pole motor/50 Hz/frequency inverter operation
- Input speed n_1 = 1500 min^{-1}
- Direction of rotation under load: Clockwise rotation
- Ambient temperature = 0 °C to 40 °C
- Installation altitude H = 10 m
- Horizontal mounting position
- Radial load FR = 25 kN, force application point x = 150 mm (from shaft end)

6.2.2 Step 2: Calculation of basic data M_{K2}, i, η

Operating torque on LSS

$$M_{K2} = \frac{P_{K2} \times 9550}{n_2}$$

M_{K2} = Operating torque at LSS in Nm
P_{K2} = Operating power at LSS in kW
n_2 = Output speed (LSS) in min^{-1}

$$M_{K2} = \frac{22\,kW \times 9550}{25\,min^{-1}} = 8404\,Nm$$

Required gear ratio

$$i = \frac{n_1}{n_2} = \frac{1500\,min^{-1}}{25\,min^{-1}} = 60$$

n_1 = Input speed (HSS) in min^{-1}
n_2 = Output speed (LSS) in min^{-1}

Efficiency:

η = 0.97 (→ 🗎 57)

31991203/EN – 08/2025

6.2.3 Step 3: Selecting the application factor $F_{S\,min}$

Application-specific operating factor $F_{S\,min}$

Application: Feeding screw

$F_{S\,min}$ = 1.5 (→ 57)

6.2.4 Step 4: Calculation of the required nominal gear unit torque M_{N2}

Constant direction of the load – constant torque:

$$M_{N2} \geq M_{K2} \times F_{Smin} = 8404\,Nm \times 1.5 = 12606\,Nm$$

M_{N2} = Nominal torque in Nm
M_{K2} = Operating torque at LSS in Nm
$F_{S\,min}$ = Application-specific service factor

6.2.5 Step 5: Selecting the planetary gear unit size – M_{N2}

Size	M_{N2}
P..002e	24830
P..012e	36810
P..022e	51190
P..032e	69620
P..042e	100170
P..052e	124060
P..062e	185660
P..072e	245660
P..082e	359400

6.2.6 Step 6: Checking the gear unit torque after the required gear unit operating time

$$M_{aLh} \geq M_{K2} \Rightarrow 11600\,Nm > 8404\,Nm \Rightarrow o.k.$$

$M_{a\,Lh}$ = Service life-dependent gear unit torque in Nm
M_{K2} = Operating torque at LSS in Nm
i_{ex} = Exact gear ratio

P.002e... n1=1500 min^{-1}		$M_{a\,Lh}$ / Nm						24830 Nm
i_N	i_{ex}	≤5000 h	≤10000 h	≤15000 h	≤30000 h	≤60000 h	≤80000 h	≤100000 h
16	15.23	15900	13100	11700	9700	7940	7310	6870
18	17.45	16400	13600	12100	10000	8210	7550	7090
20	19.53	16900	14000	12500	10300	8470	7780	7300
22.4	22.41	17500	14500	13000	10700	8830	8110	7600
25	26.68	18500	15300	13700	11300	9360	8610	8070
31.5	29.68	19000	15800	14100	11700	9640	8880	8320
35.5	33.64	19600	16200	14500	12000	9930	9170	8600
40	39.08	20300	16900	15100	12500	10300	9530	8960
50	51.73	22000	18300	16400	13500	11200	10300	9720
56	59.26	22900	19000	17000	14100	11600	10700	10100
63	66.32	23600	19600	17600	14600	12000	11100	10400

31991203/EN – 08/2025

6.2.7 Step 7: Selecting the motor power P_M

$$P_M \geq P_{K1} = \frac{P_{K2}}{\eta} = \frac{22\,kW}{0.97} = 22.68\,kW$$

P_M = Nominal motor power in kW
P_{K1} = Operating power on the input shaft (HSS) in kW
P_{K2} = Operating power at LSS in kW

Motor selection → P_M = kW 30

6.2.8 Step 8: Selecting the combination with motor

P_m = 30 kW

n_2 min^{-1}	M_a Nm	i_{ex}	M_{N2} Nm					m kg	
12	23900	127.35	24830						
13	20900	111.35	24830	P3PH	002e	DM	DRN	200L4	280	185
15	18200	97.03	24830	P3PS	002e	DM	DRN	200L4	275	185
17	15900	84.79	24830	P3PL	002e	DM	DRN	200L4	275	287
20	14200	75.77	24830	P3PV	002e	DM	DRN	200L4	280	288
22	12400	66.32	24830							
25	11100	59.26	24830							
29	9710	51.73	24830							

Selected combination: P3PS002e DM DRN200L4 (P.PS. → Solid shaft with key)

Checking the output torque M_a = 11100 Nm > M_{K2} = 8404 Nm → o.k.

Exact gear ratio: i_{ex} = 59.24 (required = 60 → OK)

6.2.9 Step 9: Checking the thermal rating P_T

Thermal rating of horizontal mounting positions (M1/M3/M5/M6)

Ambient temperature = 40 °C

Altitude factor f_1 = 1 (→ 🗎 62)

Temperature factor f_T = 0.7 (→ 🗎 63)

P..002e, n1=1500 min^{-1}		Mn2 = 24830				
--i_N	--i_{ex}	P_{TH} 20 °C / kW				
		ADP	ADPF	AMP	DM	AMPF/DMF
50	51.73	21	58	22	35	92
56	59.26	21	57	22	35	90
63	66.32	21	56	22	35	89

$$P_T = P_{TH} \times f_1 \times f_T = 35\,kW \times 1 \times 0.7 = 24.5\,kW$$

P_T = Thermal rating of the gear unit in kW
P_{TH} = Nominal thermal rating of the gear unit in kW. The values in the "selection tables" (→ 🗎 182) depend on the cooling type, mounting position and lubrication type.

$$P_T \geq P_{K1} \rightarrow o.k.$$

31991203/EN – 08/2025

6.2.10 Step 10: Checking the shafts in case of external additional forces

Checking the shaft strength

$$S_{St} = \frac{M_{b,all.1}}{F_R \times (x + x_s)} \geq 1$$

S_{St} = Static safety value
$M_{b,all.1}$ = Permitted bending moment in Nm (see table)
F_R = Radial load in kN
x = Force application point in mm
x_s = Correction factor (see table)

	P..002e	P..012e	P..022e	P..032e	P..042e	P..052e	P..062e	P..072e	P..082e
$M_{b,all.1}$	**17810**	23240	31600	45760	51140	69480	96650	129420	161970
Value x_s	**139.1**	118.6	119.8	156	140.3	158.4	158.8	188	187

$$S_{St} = \frac{17810\,Nm}{25\,kN \times (150\,mm + 139.1mm)} = 2.46$$

$$S_{St} \geq 1 \rightarrow o.k.$$

Checking the dynamic shaft strength according to the required service life

$$S_{Dy} = \frac{M_{b,ref} \times f_L}{F_R \times (x + x_D)} \geq 1 \qquad f_L = \left(\frac{100000}{n_2 \times L_h} \right)^{0.3}$$

S_{Dy} = Dynamic safety value
$M_{b,ref}$ = Permitted bending moment in Nm (see table)
f_L = Service life factor
F_R = Radial load in kN
x = Force application point in mm
x_D = Dynamic correction factor (see table)
n_2 = Output speed in min^{-1}
L_h = Required service life in h

	P..002e	P..012e	P..022e	P..032e	P.042e	P..052e	P..062e	P..072e	P..082e
$M_{b,ref}$	**24000**	27900	65100	82800	109700	152000	172400	163700	305200
Value x_D	**159.2**	125.8	227.4	301	319.5	374	334.6	278.6	403.2

$$S_{Dy} = \frac{24000\,Nm \times 0.469}{25\,kN \times (150\,mm + 159.2\,mm)} = 1.46$$

$$f_L = \left(\frac{100000}{25\,min^{-1} \times 50000\,h} \right)^{0.3} = 0.469$$

$$S_{Dy} \geq 1 \rightarrow o.k.$$

31991203/EN – 08/2025

6.2.11 Step 11: Specifying the gear unit

P3PS002e/F DM		
Planetary gear unit	**P**	Industrial gear unit series
	3	Number of gear unit stages
	P	Gear unit design • P = Coaxial design
	S	Output shaft type • S = Solid shaft with key • R = Smooth solid shaft • L = Splined solid shaft • H = Hollow shaft with shrink disk • V = Splined hollow shaft
	002	Planetary gear unit size
	e	Generation P2.e
	/F	Gear unit mounting • /B = Foot • /T = Torque arm • /F = Flange
	DM	Motor interface • DM = Direct motor mounting

Gearmotor

Designation: P3PS002e/F DM DRN200L4

31991203/EN – 08/2025

7 Lubricants

7.1 General information on selecting the oil

If no special arrangement is specified, SEW-EURODRIVE supplies the drives without oil filling.

INFORMATION

Before starting up the gear unit, the correct oil type and oil quantity must be filled in. Refer to the nameplate of the gear unit for the corresponding information.

The following tables provide an overview of mineral and synthetic oils.

7.1.1 Mineral oil

Standards

Lubricating oils are divided into ISO VG viscosity classes according to ISO 3448 and DIN 51519.

ISO class	ISO 6743-6 Designation	DIN 51517-3 Designation	AGMA 9005-D94 Designation
150	ISO-L-CKC 150	DIN 51517-CLP 150	AGMA 4 EP
220	ISO-L-CKC 220	DIN 51517-CLP 220	AGMA 5 EP
320	ISO-L-CKC 320	DIN 51517-CLP 320	AGMA 6 EP
460	ISO-L-CKC 460	DIN 51517-CLP 460	AGMA 7 EP
680	ISO-L-CKC 680	DIN 51517-CLP 680	AGMA 8 EP

7.1.2 Synthetic oil

Standards

Lubricating oils are divided into ISO VG viscosity classes according to ISO 3448 and DIN 51519.

ISO class	ISO 6743-6 Designation	DIN 51519 Designation	AGMA 9005-D94 Designation
150	ISO-L-CKT 150	CLP HC 150	AGMA 4 EP
220	ISO-L-CKT 220	CLP HC 220	AGMA 5 EP
320	ISO-L-CKT 320	CLP HC 320	AGMA 6 EP
460	ISO-L-CKT 460	CLP HC 460	AGMA 7 EP
680	ISO-L-CKT 680	CLP HC 680	AGMA 8 EP

In addition to the required oil viscosity, the oil must meet the following criteria:

- CLP oils according to DIN 51517-3
- Micro-pitting test according to FVA, FV no. 54/ I-IV, GFT class high, damage force level > 10

If synthetic oil is used, SEW-EURODRIVE recommends oil based on polyalphaolefin oils (CLP HC).

31991203/EN – 08/2025

7.2 Permitted lubricants

This chapter describes the permitted lubricants and the permitted temperatures for industrial gear units from SEW-EURODRIVE.

INFORMATION

- The standard for viscosity and oil grade is the type of oil that is specified by SEW-EURODRIVE in the order (see order confirmation and nameplate).
- Contact SEW-EURODRIVE if you use bio and food grade lubricants or polyglycol oils.
- Check the compatibility of the used grease and oil.
- The tables contain the lubricants approved by SEW-EURODRIVE.
- Oils of the same viscosity class from different manufacturers do not have the same characteristics. In particular, the minimum permitted oil bath temperatures are manufacturer-specific. These temperatures are specified in the lubricant tables.
- The minimum permitted oil bath temperatures depend on the lubrication type used. These temperatures are specified in the lubricant tables. The values correspond to the maximum viscosity of the individual lubricants.
- The values specified in the lubricant tables apply as of the time of printing of this document. The data of the lubricants is subject to dynamic change on the part of the lubricant manufacturers. For the latest information about the lubricants, visit: www.sew-eurodrive.de/lubricants

31991203/EN – 08/2025

7.2.1 Structure of the tables and abbreviations

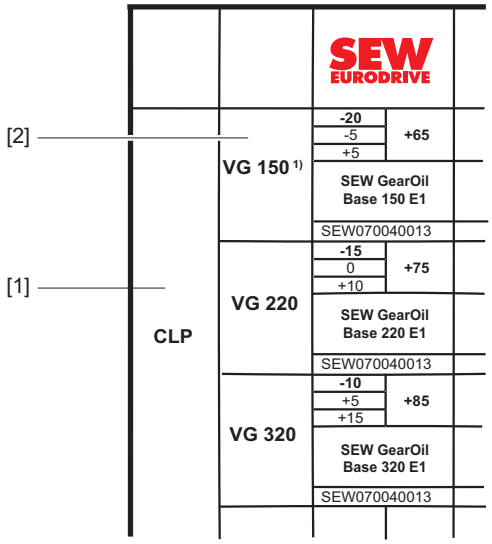

27021615684069515

[1] Lubricant type
[2] Viscosity class

Abbreviations

Icons	Designation
CLP	= mineral oil
CLP HC	= synthetic polyalphaolefin (PAO)
E	= ester-based oil
	= mineral lubricant
	= synthetic lubricant
	= lubricant for the food industry (**NSF H1**-compliant)
	= biodegradable oil (lubricant for agriculture, forestry, and water management)
1)	= lubricants may only be used if service factor $F_s \geq 1.3$

31991203/EN – 08/2025

7.2.2 Explanation of the various lubricants

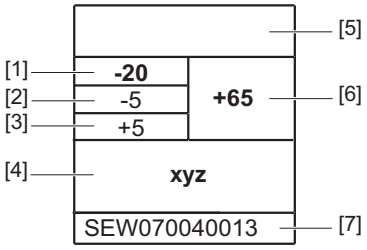

18014416413363467

[1] Lowest cold start temperature in °C for splash lubrication
[2] Lowest cold start temperature in °C for drives with pumps up to a max. oil viscosity of 5000 cSt[1)]
[3] Lowest cold start temperature in °C for drives with pumps up to a max. oil viscosity of 2000 cSt[1)]
[4] Trade name
[5] Manufacturer
[6] Highest oil bath temperature in °C[1)]
[7] Approvals

1) Service life is significantly reduced when exceeded. Observe chapter "Lubricant change intervals".

31991203/EN – 08/2025

7.2.3 Lubricant compatibility with oil seals

Approval	Explanation
SEW07004_ _13:	A lubricant especially recommended with regard to compatibility with the approved oil seals. The lubricant exceeds the state-of-the-art requirements regarding elastomer compatibility.

Permitted application temperature range of the oil seals

In the low temperature range, oil seals can withstand shaft deflections (e.g. through overhung load) only to a limited extent. Take special care to avoid or limit pulsating and changing radial displacements of the shaft. Contact SEW-EURODRIVE if necessary.

Oil seal material class	Permitted oil sump temperature
NBR	-40°C to +80°C
FKM	-25°C to +115°C
FKM-PSS	-25°C to +115°C

Limitations of use of oil seals with the specific lubricant are described in the following table:

Material class			Manufacturer		Material	
S	1	NBR	1	Freudenberg		72 NBR 902
			2	Trelleborg		4NV11
	2	FKM	1	Freudenberg	1	75 FKM 585
					2	75 FKM 170055
			2	Trelleborg	1	VCBVR

Examples:

S11: Only the elastomer 72NBR902 from Freudenberg meets the approval requirements in conjunction with the specific lubricant.

S2: Only the elastomer FKM meets the approval requirements in conjunction with the specific lubricant.

31991203/EN – 08/2025

7.2.4 GearOil by SEW-EURODRIVE – lubricant for gear units



With decades of experience in gear unit development and construction, as well as numerous customer applications, SEW-EURODRIVE has extensive tribological knowledge. On this basis and in accordance with long-term test runs, SEW-EURODRIVE has developed a special formulation for its own premium gear oil: GearOil by SEW-EURODRIVE – the optimum protection for SEW-EURODRIVE gear units.

By using high-quality base materials and additives as well as the appropriate logistics, SEW-EURODRIVE ensures the highest level of quality.

GearOil by SEW-EURODRIVE increases the performance of the gear unit, regardless of whether it is a standard, servo, or industrial gear unit. The premium gear oil reduces the friction between gear wheels by creating a very good lubrication film. This increases the service life of lubricant and wear parts, such as sealing rings and bearings. The high scuffing load capacity of the GearOil Base mineral lubricant (scuffing load capacity 14) improves protection from fretting on the gearing. At the same time, GearOil increases the efficiency of the gear unit and protects against corrosion and harmful foaming of the oil. The "self-cleaning" properties of the lubricants prevent deposits as they bind water and dirt particles.

Optionally, you can select GearOil by SEW-EURODRIVE as the initial filling for the gear units and gearmotors. The premium gear oil can be ordered in can or barrel containers for service and maintenance purposes. GearOil by SEW-EURODRIVE can be stored for up to 6 years in unopened containers.

31991203/EN – 08/2025

7.2.5 Lubricant tables

This lubricant table is valid when the document is published. Refer to www.sew-eurodrive.de/lubricants for the latest version of the table.

[1]	[2]	SEW EURODRIVE	Castrol	FUCHS	Mobil®	KLÜBER LUBRICATION	SINOPEC	TOTAL
CLP	VG 150	-20 -5 +5 +65	-20 -5 +5 +65	-20 -5 +5 +65	-20 -5 +5 +65	-20 -5 +5 +65	-20 -5 +5 +65	
		SEW GearOil Base 150 E1 / US1 / CN1 / BR1	Optigear BM 150	Renolin CLP 150 Plus	Mobilgear 600 XP 150	Klüberoil GEM 1-150 N	AP-SGO 150	
		SEW07004001 3		SEW07003001 3				
	VG 220	-15 0 +10 +75	-15 0 +10 +75	-15 0 +10 +75	-15 0 +10 +75	-15 0 +10 +75	-15 0 +10 +75	-15 0 +10 +75
		SEW GearOil Base 220 E1 / US1 / CN1 / BR1	Optigear BM 220	Alpha SP 220	Renolin CLP 220 Plus	Renolin HighGear 220	Mobilgear 600 XP 220	Klüberoil GEM 1-220 N	AP-SGO 220	Carter EP 220
		SEW07004001 3		SEW07003001 3						
	VG 320	-10 +5 +15 +85	-10 +5 +15 +85	-10 +5 +15 +80	-10 +5 +15 +80	-10 +5 +15 +80	-10 +5 +15 +80	-10 +5 +15 +80
		SEW GearOil Base 320 E1 / US1 / CN1 / BR1	Optigear BM 320	Alpha SP 320	Renolin CLP 320 Plus	Renolin HighGear 320	Mobilgear 600 XP 320	Klüberoil GEM 1-320 N	AP-SGO 320	Carter EP 320
		SEW07004001 3		SEW07003001 3						
	VG 460	-5 +10 +20 +90	-5 +10 +20 +90	-5 +10 +20 +90	-5 +10 +20 +90	-5 +10 +20 +90	-5 +10 +20 +90	-5 +10 +20 +90
		SEW GearOil Base 460 E1 / US1 / CN1 / BR1	Optigear BM 460	Alpha SP 460	Renolin CLP 460 Plus	Renolin HighGear 460	Mobilgear 600 XP 460	Klüberoil GEM 1-460 N	AP-SGO 460	Carter EP 460
		SEW07004001 3		SEW07003001 3						
	VG 680	0 +15 +25 +90	0 +15 +25 +90	0 +15 +25 +90	0 +15 +25 +90	0 +15 +25 +90	-5 +10 +20 +90	0 +15 +25 +90
		SEW GearOil Base 680 E1 / US1 / CN1 / BR1	Optigear BM 680	Alpha SP 680	Renolin CLP 680 Plus	Renolin HighGear 680	Mobilgear 600 XP 680	Klüberoil GEM 1-680 N	AP-SGO 460	Carter EP 680
		SEW07004001 3		SEW07003001 3						
	VG 1000	+5 +20 +30 +90								
		Optigear BM 1000								

This lubricant table is valid when the document is published. Refer to www.sew-eurodrive.de/lubricants for the latest version of the table.

[1]	[2]	SEW EURODRIVE	Castrol	FUCHS	Mobil®	KLÜBER LUBRICATION	TOTAL
CLP HC	VG 32 [1]				-40 / -30 / -25 SHC 624 +30		
	VG 68 [1]			-35 / -20 / -10 Renolin Unisyn CLP 68 +50	-40 / -25 / -15 SHC 626 +50	-35 / -20 / -10 Klübersynth GEM 4-68 N +50	
	VG 150 [1]	-35 / -15 / -5 GearOil Synth 150 E1 +75 SEW 070040313	-25 / -10 / 0 Alphasyn EP 150 +70	-30 / -10 / +0 Renolin Unisyn CLP 150 +70	-30 / -10 / 0 SHC 629 +75	-25 / -10 / 0 Klübersynth GEM 4-150 N 70	-35 / -15 / -5 Carter SH 150 +75
	VG 220	-30 / -10 / 0 GearOil Synth 220 E1 +85 SEW 070040313	-25 / -5 / +5 Alphasyn EP 220 +80	-25 / -5 / +5 Renolin Unisyn CLP 220 +80	-25 / -5 / 0 SHC 630 +85	-25 / -5 / +5 Klübersynth GEM 4-220 N +80	-25 / -5 / +5 Carter SH 220 +80
	VG 320	-25 / -5 / +5 GearOil Synth 320 E1 +100 SEW 070040313	-20 / 0 / +10 Alphasyn EP 320 +90	-20 / 0 / +10 Renolin Unisyn CLP 320 +90	-20 / 0 / +10 SHC 632 +95	-20 / 0 / +10 Klübersynth GEM 4-320 N +95	-20 / 0 / +10 Carter SH 320 +90
	VG 460	-20 / 0 / +15 GearOil Synth 460 E1 +110 SEW 070040313	-15 / +5 / +15 Alphasyn EP 460 +100	-15 / +5 / +15 Renolin Unisyn CLP 460 +100	-15 / +5 / +15 SHC 634 +105	-15 / +5 / +20 Klübersynth GEM 4-460 N +105	-15 / +5 / +15 Carter SH 460 +100
	VG 680	-15 / +5 / +20 GearOil Synth 680 E1 +110 SEW 070040313	-10 / +10 / +25 Optigear Synthetic X 680 +110	-10 / +10 / +25 Renolin Unisyn CLP 680 +110	-10 / +10 / +25 SHC 636 +110	-10 / +10 / +25 Klübersynth GEM 4-680 N +110	-10 / +10 / +25 Carter SH 680 +110
	VG 1000				-10 / +15 / +30 SHC 639 +110	0 / +20 / +30 Klübersynth EG4-1000 +110	

This lubricant table is valid when the document is published. Refer to www.sew-eurodrive.de/lubricants for the latest version of the table.

[1]								
[2]								
[3]								
	SEW EURODRIVE	bremer & leguil	Castrol	FUCHS	KLÜBER LUBRICATION			
CLP HC NSF H1 [2]	VG 220 [1]	SEW GearOil Synth 220 H1 E1	-30 -5 0 +80	-20 -5 +5 +75	-25 -5 +5 +75	-20 -5 +5 +75	-25 -5 +5 +75	
		SEW 07004031 3			SEW 07004031 3			
	VG 460 [1]	SEW GearOil Synth 460 H1 E1	-20 0 +15 +100	-15 +5 +20 +90	-15 +5 +20 +95	-15 +5 +20 +90	-15 +5 +15 +95	
		SEW 07004031 3			SEW 07004031 3			
	VG 680 [1]			-10 +10 +25 +105		-10 +10 +25 +105	-10 +10 +25 +105	
E	VG 320					S2 -20 0 +10 +8a5	S2 -20 0 +10 +85	
	VG 460					S2 -15 +5 +15 +95		
		Cassida Fluid HF 68		-35 -20 -10 +45		-35 -20 -10 +45	Klüberoil 4UH1-68 N	-35 -20 -10 +45
	VG 68 [1]	Cassida Fluid HF 68	-35 -20 -10 +45		Optileb HY 68			
		Cassida Fluid GL 220	-20 -5 +5 +75		Optileb GT 220		Klüberoil 4UH1-220 N	-25 -5 +5 +75
					SEW 07004031 3			
		Cassida Fluid GL 460	-15 +5 +20 +90		Optileb GT 460		Klüberoil 4UH1-460 N	-15 +5 +15 +95
		Cassida Fluid GL 680	-10 +10 +25 +105				Klüberoil 4UH1-680 N	-10 +10 +25 +105
		Plantogear 320 S	S2 -20 0 +10 +8a5				Klüberbio EG2-320	S2 -20 0 +10 +85
		Plantogear 460 S	S2 -15 +5 +15 +95					

1) Lubricants may only be used
if the service factor F_s and peak load factor $F_F \geq 1.6$.
The peak output torque $MK2_{per}$ is limited as follows: $F_F \geq 1.6 \rightarrow M_{K2per} \leq 1.25 \times MN2$ (nominal torque) $\rightarrow M_{K2per} \leq 2 \times M_{N2}/F_F = 2/1.6 \times M_{N2}$.
In case of deviations, contact SEW-EURODRIVE.

2) NSF-H1 registered oils for the food processing industry cannot be combined with the gear unit option "Extended storage" (a VCI anti-corrosion agent is added).

NOTICE:
Also observe the thermal application limits of the oil seal materials, see chapter "Lubricant compatibility with oil seals" (→ 🗎 75).

7.3 Lubricant fill quantities

The oil level of planetary gear units is checked using the oil sight glass or oil dipstick.

The following table shows the lubricant fill quantities for planetary gear units depending on the gear unit's mounting position.

Size	Number of stages	Mounting position	Gear unit design					
			DM	DMF	AMP	AMPF	ADP	ADPF
			Fill quantity in liters					
P..002e	Two-stage	M1, M3, M5, M6	7	5	5	5	5	5
		M2	14	9	9	9	10	10
		M4	9	9	10	9	10	10
	Three-stage	M1, M3, M5, M6	9	6	7	6	7	7
		M2	17	12	13	12	13	13
		M4	13	12	13	12	13	13
P..012e	Two-stage	M1, M3, M5, M6	10	7	7	7	8	8
		M2	20	13	14	13	15	15
		M4	13	13	14	13	15	15
	Three-stage	M1, M3, M5, M6	10	8	8	8	8	8
		M2	21	16	16	16	17	17
		M4	16	16	16	16	17	17
P..022e	Two-stage	M1, M3, M5, M6	15	10	11	10	10	10
		M2	29	19	22	19	20	20
		M4	20	20	22	20	21	21
	Three-stage	M1, M3, M5, M6	14	11	12	11	12	12
		M2	28	22	23	22	23	23
		M4	23	23	24	23	24	24
P..032e	Two-stage	M1, M3, M5, M6	20	12	13	12	13	13
		M2	40	23	25	23	27	27
		M4	24	23	26	23	27	27
	Three-stage	M1, M3, M5, M6	18	15	15	15	16	16
		M2	37	30	31	30	32	32
		M4	28	30	31	30	32	32
P..042e	Two-stage	M1, M3, M5, M6	26	16	18	16	16	16
		M2	52	32	36	32	33	33
		M4	32	32	37	32	34	34
	Three-stage	M1, M3, M5, M6	25	20	21	20	20	20
		M2	50	40	42	40	40	40
		M4	40	40	43	40	41	41

31991203/EN – 08/2025

Size	Number of stages	Mounting position	Gear unit design					
			DM	DMF	AMP	AMPF	ADP	ADPF
			Fill quantity in liters					
P..052e	Two-stage	M1, M3, M5, M6	28	18	21	18	23	23
		M2	57	37	41	37	46	46
		M4	37	38	42	38	48	48
	Three-stage	M1, M3, M5, M6	30	23	25	23	25	25
		M2	61	47	50	47	51	51
		M4	48	48	51	48	52	52
P..062e	Two-stage	M1, M3, M5, M6	–	31	32	31	33	33
		M2	–	64	64	64	66	66
		M4	–	64	65	64	67	67
	Three-stage	M1, M3, M5, M6	43	37	39	37	37	37
		M2	89	75	79	75	76	76
		M4	75	79	79	79	77	77
P..072e	Two-stage	M1, M3, M5, M6	–	–	35	–	42	42
		M2	–	–	73	–	87	87
		M4	–	–	73	–	87	87
	Three-stage	M1, M3, M5, M6	50	43	45	43	48	48
		M2	103	89	94	89	99	99
		M4	89	90	94	90	99	99
P..082e	Two-stage	M1, M3, M5, M6	–	–	47	–	54	54
		M2	–	–	75	–	90	90
		M4	–	–	99	–	113	113
	Three-stage	M1, M3, M5, M6	–	63	63	63	64	64
		M2	–	109	109	109	111	111
		M4	–	132	133	132	135	135

31991203/EN – 08/2025

7.4 Sealing greases/bearing greases

7.4.1 Bearing greases

The table shows the greases recommended by SEW-EURODRIVE with the "lower operating temperature".

The permitted operating temperature of the lubricant used must be taken into account for the lower and upper operating temperature. For further information, refer to chapter "Lubricant table" (→ 🗎 77).

Area of operation	Manufacturer	Greases	Lower temperature limit
Standard	SEW-EURODRIVE	**SEW Grease HL 2 E1**[1)]	-40 °C
	Fuchs	Renolit CX TOM 15 OEM	-40 °C
	BP	Energrease LS EP-2	-30 °C
	Castrol	Longtime PD 2	-35 °C
		Spheerol EPL 2	-20 °C
	Klüber	Centoplex EP 2	-25 °C
		Petamo GHY 133 N	-40 °C
	Mobil	Mobilux EP 2	-20 °C
	Shell	Gadus S2 V220 2	-20 °C
	Total	Multis EP 2	-20 °C
	SEW-EURODRIVE	**SEW Grease HL 2 H1 E1**[1)]	-40 °C
	Bremer & Leguil	Cassida Grease GTS2	-40 °C
	Fuchs	**Plantogel 2**[1)]	-40 °C

1) Use the greases used at the factory if possible.

7.4.2 Premium bearing grease HL 2 E1 Grease by SEW-EURODRIVE

HL 2 E1 Grease by SEW-EURODRIVE consists of optimally matched product components. The calcium sulfonate complex saponified lubricating grease is based on a semi-synthetic base oil. In combination with an optimized additive package, the HL 2 E1 Grease by SEW-EURODRIVE has extraordinary mechanical characteristics. The powerful lubricant provides high thermal and mechanical stability for all friction points (bearings and seals) which are subjected to high levels of stress in the gear unit and the seals in the motor. This minimizes sealing ring wear and reduces the risk of premature roller bearing failure.

The corresponding premium bearing grease HL 2 E1 Grease by SEW-EURODRIVE is available for use in the food processing industry.

Key advantages:

- Good corrosion and wear protection
- Wide service temperature range
- Optimum water resistance
- Resistant to aging
- High thermal and mechanical stability

31991203/EN – 08/2025

8 Design and operating notes

8.1 Screws included in the delivery

For the following gear unit designs, the screws are included in the **scope of delivery**:

- Gear unit in foot-mounted design

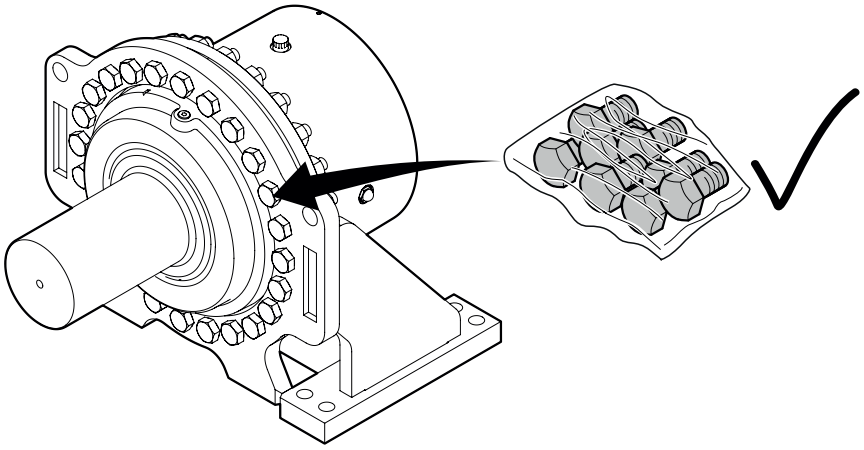

37275356811

- Gear unit with torque arm

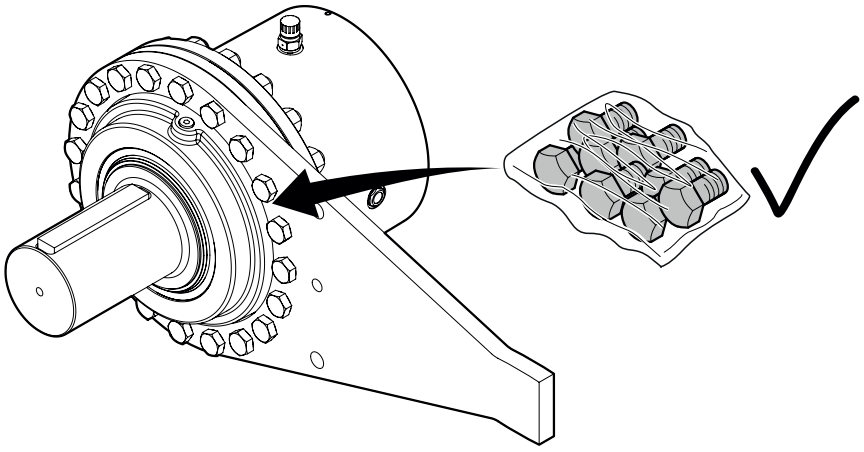

37275351947

The following tools and resources are required for installation/assembly:

- Wrench set
- Torque wrench
- Retractor
- Equalizing rings (shims, spacing rings)
- Fasteners for input/output elements
- Lubricant, e.g. NOCO® fluid H1 E1 from SEW-EURODRIVE
- Aids for assembly/disassembly onto the machine shaft
- Fastening parts for the gear unit base

31991203/EN – 08/2025

The listed tools and aids are not included in the scope of delivery.

- Connection screws for flange-mounted gear units

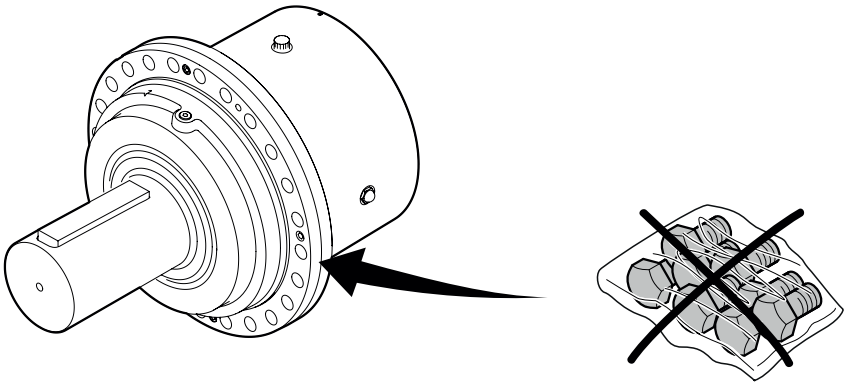

37275354379

31991203/EN – 08/2025

9 Important information on selection tables and dimension drawings

The following pages contain important information for chapters 10 and 11.

INFORMATION

Unless specified otherwise, all dimensions are given in **mm**.

9.1 Selection tables

INFORMATION

The selection tables show possible gear unit combinations. Different gear ratio ranges and options are possible. Primary gear units from the X..e or KF../RF.. series are used for this purpose. Contact SEW-EURODRIVE.

The following figure shows the structure of the selection tables.

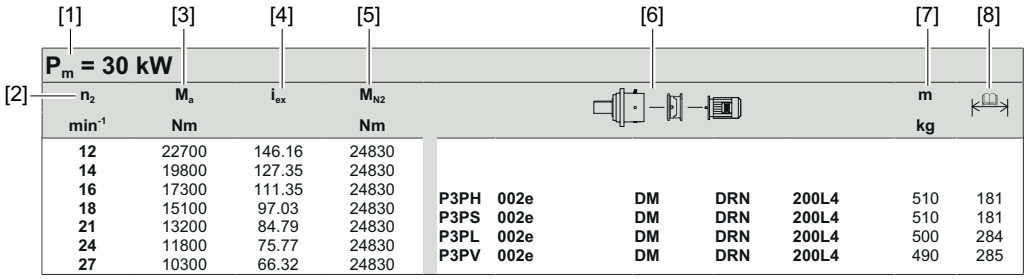

[1] Nominal motor power
[2] Output speed
[3] Output torque in relation to motor power
[4] Gear unit ratio
[5] Nominal gear unit torque
[6] Gear unit type
[7] Weight (Specified value refers to flange-mounted gear motors.)
[8] Page number dimension sheet

Thermal rating tables

The tables in chapter 10.6 describe the thermal ratings of the gear unit designs shown for mounting positions M1, M3, M5 and M6. The tables in chapter 10.7 describe the thermal ratings of the gear unit designs shown for mounting positions M2 and M4. The specified thermal rating represents the largest value for the specified gear ratio range. Contact SEW-EURODRIVE for other gear unit designs.

31991203/EN – 08/2025

9.2 Dimension sheets

9.2.1 Scope of delivery



= Standard parts supplied by SEW-EURODRIVE.



= Standard parts not supplied by SEW-EURODRIVE.

9.2.2 Tolerances

Keys

Keys: according to DIN 6885-1 (domed type B)

Spline

Splined shaft according to DIN 5480

9.2.3 Oil expansion tank/oil riser pipe

An oil expansion tank is mounted to the gear unit in mounting positions M2 and M4. The dimensions specified in chapters 11.7 and 11.8 are guide values. If there is little space available for the mounting positions, contact SEW-EURODRIVE.

31991203/EN – 08/2025

9.2.4 Dimensions of motors and planetary gear units

Motor options

The motor dimensions can change when installing motor options. Refer to the dimension drawings of the motor options.

Special designs

The dimensions of the terminal box of special designs such as KS, CSA, VIK, extra-low voltage or voltage changeover may deviate from the standard dimensions.

EN 50347

European standard EN 50347 became effective in August 2001. This standard adopts the dimension designations for three-phase AC motors for sizes 56 to 315M and flange sizes 65 to 740 from the IEC 72-1 standard.

The new dimension designations given in EN 50347 / IEC 72-1 are used for the dimensions in question in the dimension tables of the dimensions sheets.

Dimension designations

The dimensions of the planetary gearmotor are described below. They are specified in chapters 11.1 – 11.4.

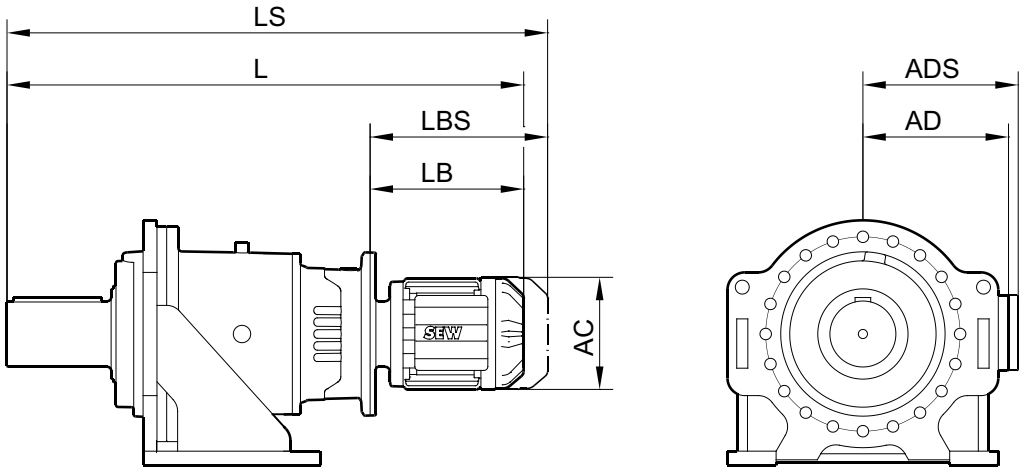

L = Total length of the planetary gearmotor
LS = Total length of planetary gearmotor including brake
LB = Length of the motor
LBS = Length of the brakemotor
AC = Diameter of the motor
AD = Center of motor shaft to top edge of the terminal box
ADS = Center of brakemotor shaft to top edge of the terminal box

31991203/EN – 08/2025

10 Selection tables

10.1 P2..e DM DRN.. and P3..e DM DRN.. planetary gearmotors

P_m = 5.5 kW

n_2	M_a	i_{ex}	M_{N2}						m	
min^{-1}	Nm		Nm						kg	
4.4	11500	332.32	36810	**P3PH**	**012e**	**DM**	**DRN**	**132S4**	370	224
5.1	10000	288.36	36810	**P3PS**	**012e**	**DM**	**DRN**	**132S4**	360	
				P3PL	**012e**	**DM**	**DRN**	**132S4**	355	
				P3PV	**012e**	**DM**	**DRN**	**132S4**	335	
4.4	11500	331.02	24830							
5.1	9930	284.95	24830	**P3PH**	**002e**	**DM**	**DRN**	**132S4**	295	
5.8	8770	251.44	24830	**P3PS**	**002e**	**DM**	**DRN**	**132S4**	290	220
6.7	7650	219.39	24830	**P3PL**	**002e**	**DM**	**DRN**	**132S4**	285	
7.5	6750	193.59	24830	**P3PV**	**002e**	**DM**	**DRN**	**132S4**	275	

P_m = 7.5 kW

n_2	M_a	i_{ex}	M_{N2}						m	
min^{-1}	Nm		Nm						kg	
4.4	15600	331.02	51190	**P3PH**	**022e**	**DM**	**DRN**	**132M4**	495	228
5.1	13500	287.23	51190	**P3PS**	**022e**	**DM**	**DRN**	**132M4**	480	
				P3PL	**022e**	**DM**	**DRN**	**132M4**	480	
				P3PV	**022e**	**DM**	**DRN**	**132M4**	455	
4.4	15700	332.32	36810							
5.1	13600	288.36	36810	**P3PH**	**012e**	**DM**	**DRN**	**132M4**	385	
5.9	11800	250.21	36810	**P3PS**	**012e**	**DM**	**DRN**	**132M4**	375	225
6.6	10500	222.01	36810	**P3PL**	**012e**	**DM**	**DRN**	**132M4**	370	
7.5	9320	197.00	36810	**P3PV**	**012e**	**DM**	**DRN**	**132M4**	350	
4.4	15600	331.02	24830							
5.2	13400	284.95	24830	**P3PH**	**002e**	**DM**	**DRN**	**132M4**	310	
5.8	11900	251.44	24830	**P3PS**	**002e**	**DM**	**DRN**	**132M4**	305	221
6.7	10300	219.39	24830	**P3PL**	**002e**	**DM**	**DRN**	**132M4**	300	
7.6	9160	193.59	24830	**P3PV**	**002e**	**DM**	**DRN**	**132M4**	290	
8.9	7790	164.72	24830							
10	6910	146.16	24830							

P_m = 9.2 kW

n_2	M_a	i_{ex}	M_{N2}						m	
min^{-1}	Nm		Nm						kg	
4.4	19100	331.02	51190	**P3PH**	**022e**	**DM**	**DRN**	**132L4**	500	228
5.1	16600	287.23	51190	**P3PS**	**022e**	**DM**	**DRN**	**132L4**	490	
6.0	14300	247.25	51190	**P3PL**	**022e**	**DM**	**DRN**	**132L4**	485	
				P3PV	**022e**	**DM**	**DRN**	**132L4**	465	
4.4	19200	332.32	36810							
5.1	16700	288.36	36810	**P3PH**	**012e**	**DM**	**DRN**	**132L4**	395	
5.9	14500	250.21	36810	**P3PS**	**012e**	**DM**	**DRN**	**132L4**	385	225
6.6	12800	222.01	36810	**P3PL**	**012e**	**DM**	**DRN**	**132L4**	380	
7.5	11400	197.00	36810	**P3PV**	**012e**	**DM**	**DRN**	**132L4**	360	
8.7	9800	169.15	36810							
4.4	19100	331.02	24830							
5.2	16500	284.95	24830							
5.8	14500	251.44	24830	**P3PH**	**002e**	**DM**	**DRN**	**132L4**	320	
6.7	12700	219.39	24830	**P3PS**	**002e**	**DM**	**DRN**	**132L4**	315	221
7.6	11200	193.59	24830	**P3PL**	**002e**	**DM**	**DRN**	**132L4**	310	
8.9	9550	164.72	24830	**P3PV**	**002e**	**DM**	**DRN**	**132L4**	295	
10	8470	146.16	24830							
12	7380	127.35	24830							
13	6450	111.35	24830							

31991203/EN – 08/2025

P_m = 11.0 kW

n_2	M_a	i_{ex}	M_{N2}	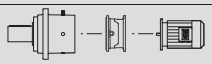					m	
min^{-1}	Nm		Nm						kg	
4.4	22900	332.32	69620	**P3PH**	**032e**	**DM**	**DRN**	**160M4**	640	232
5.1	19900	288.36	69620	**P3PS**	**032e**	**DM**	**DRN**	**160M4**	620	
				P3PL	**032e**	**DM**	**DRN**	**160M4**	610	
				P3PV	**032e**	**DM**	**DRN**	**160M4**	580	
4.5	22900	331.02	51190							
5.1	19800	287.23	51190	**P3PH**	**022e**	**DM**	**DRN**	**160M4**	530	229
6.0	17100	247.25	51190	**P3PS**	**022e**	**DM**	**DRN**	**160M4**	520	
6.7	15100	219.39	51190	**P3PL**	**022e**	**DM**	**DRN**	**160M4**	520	
7.6	13300	193.59	51190	**P3PV**	**022e**	**DM**	**DRN**	**160M4**	495	
4.4	22900	332.32	36810							
5.1	19900	288.36	36810							
5.9	17300	250.21	36810	**P3PH**	**012e**	**DM**	**DRN**	**160M4**	425	225
6.6	15300	222.01	36810	**P3PS**	**012e**	**DM**	**DRN**	**160M4**	415	
7.5	13600	197.00	36810	**P3PL**	**012e**	**DM**	**DRN**	**160M4**	410	
8.7	11700	169.15	36810	**P3PV**	**012e**	**DM**	**DRN**	**160M4**	390	
9.8	10300	150.09	36810							
4.5	22900	331.02	24830							
5.2	19700	284.95	24830							
5.9	17300	251.44	24830							
6.7	15100	219.39	24830	**P3PH**	**002e**	**DM**	**DRN**	**160M4**	350	221
7.6	13300	193.59	24830	**P3PS**	**002e**	**DM**	**DRN**	**160M4**	345	
8.9	11300	164.72	24830	**P3PL**	**002e**	**DM**	**DRN**	**160M4**	340	
10	10100	146.16	24830	**P3PV**	**002e**	**DM**	**DRN**	**160M4**	330	
12	8810	127.35	24830							
13	7700	111.35	24830							
15	6710	97.03	24830							
38	2730	39.08	24830	**P2PH**	**002e**	**DM**	**DRN**	**160M4**	320	218
				P2PS	**002e**	**DM**	**DRN**	**160M4**	315	
				P2PL	**002e**	**DM**	**DRN**	**160M4**	310	
				P2PV	**002e**	**DM**	**DRN**	**160M4**	300	

P_m = 15.0 kW

n_2	M_a	i_{ex}	M_{N2}	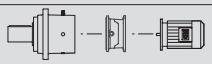					m	
min^{-1}	Nm		Nm						kg	
4.4	31300	332.32	69620	**P3PH**	**032e**	**DM**	**DRN**	**160L4**	660	232
5.1	27100	288.36	69620	**P3PS**	**032e**	**DM**	**DRN**	**160L4**	630	
5.9	23500	250.21	69620	**P3PL**	**032e**	**DM**	**DRN**	**160L4**	630	
6.6	20900	222.01	69620	**P3PV**	**032e**	**DM**	**DRN**	**160L4**	600	
7.5	18500	197.00	69620							
4.5	31200	331.02	51190							
5.1	27000	287.23	51190							
6.0	23300	247.25	51190	**P3PH**	**022e**	**DM**	**DRN**	**160L4**	550	229
6.7	20600	219.39	51190	**P3PS**	**022e**	**DM**	**DRN**	**160L4**	540	
7.6	18200	193.59	51190	**P3PL**	**022e**	**DM**	**DRN**	**160L4**	530	
8.4	16400	174.68	51190	**P3PV**	**022e**	**DM**	**DRN**	**160L4**	510	
9.4	14800	156.99	51190							
10	13500	143.53	51190							
4.4	31300	332.32	36810							
5.1	27100	288.36	36810							
5.9	23500	250.21	36810							
6.6	20900	222.01	36810	**P3PH**	**012e**	**DM**	**DRN**	**160L4**	440	225
7.5	18500	197.00	36810	**P3PS**	**012e**	**DM**	**DRN**	**160L4**	430	
8.7	15900	169.15	36810	**P3PL**	**012e**	**DM**	**DRN**	**160L4**	425	
9.8	14100	150.09	36810	**P3PV**	**012e**	**DM**	**DRN**	**160L4**	410	
11	12300	131.16	36810							
13	10700	114.35	36810							
15	9420	99.93	36810							
38	3730	39.23	36810	**P2PH**	**012e**	**DM**	**DRN**	**160L4**	415	223
				P2PS	**012e**	**DM**	**DRN**	**160L4**	400	
				P2PL	**012e**	**DM**	**DRN**	**160L4**	400	
				P2PV	**012e**	**DM**	**DRN**	**160L4**	380	

31991203/EN – 08/2025

P_m = 15.0 kW

n_2	M_a	i_{ex}	M_{N2}	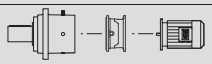					m	
min^{-1}	Nm		Nm						kg	
4.5	31200	331.02	24830							
5.2	26800	284.95	24830							
5.9	23700	251.44	24830							
6.7	20600	219.39	24830							
7.6	18200	193.59	24830							
8.9	15500	164.72	24830	**P3PH**	**002e**	**DM**	**DRN**	**160L4**	370	
10	13700	146.16	24830	**P3PS**	**002e**	**DM**	**DRN**	**160L4**	360	221
12	12000	127.35	24830	**P3PL**	**002e**	**DM**	**DRN**	**160L4**	360	
13	10400	111.35	24830	**P3PV**	**002e**	**DM**	**DRN**	**160L4**	345	
15	9140	97.03	24830							
17	7990	84.79	24830							
19	7140	75.77	24830							
22	6250	66.32	24830							
38	3720	39.08	24830	**P2PH**	**002e**	**DM**	**DRN**	**160L4**	340	
44	3200	33.64	24830	**P2PS**	**002e**	**DM**	**DRN**	**160L4**	330	219
50	2820	29.68	24830	**P2PL**	**002e**	**DM**	**DRN**	**160L4**	330	
55	2540	26.68	24830	**P2PV**	**002e**	**DM**	**DRN**	**160L4**	315	

P_m = 18.5 kW

n_2	M_a	i_{ex}	M_{N2}	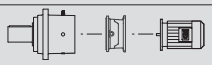					m	
min^{-1}	Nm		Nm						kg	
4.5	38500	332.32	124060	**P3PH**	**052e**	**DM**	**DRN**	**180M4**	1030	
5.1	33400	288.36	124060	**P3PS**	**052e**	**DM**	**DRN**	**180M4**	1030	240
				P3PL	**052e**	**DM**	**DRN**	**180M4**	1030	
				P3PV	**052e**	**DM**	**DRN**	**180M4**	940	
4.5	38500	332.32	100170	**P3PH**	**042e**	**DM**	**DRN**	**180M4**	880	
5.1	33400	288.36	100170	**P3PS**	**042e**	**DM**	**DRN**	**180M4**	870	237
5.9	29000	250.21	100170	**P3PL**	**042e**	**DM**	**DRN**	**180M4**	860	
6.7	25700	222.01	100170	**P3PV**	**042e**	**DM**	**DRN**	**180M4**	810	
4.5	38500	332.32	69620							
5.1	33400	288.36	69620							
5.9	29000	250.21	69620	**P3PH**	**032e**	**DM**	**DRN**	**180M4**	680	
6.7	25700	222.01	69620	**P3PS**	**032e**	**DM**	**DRN**	**180M4**	660	233
7.5	22800	197.00	69620	**P3PL**	**032e**	**DM**	**DRN**	**180M4**	650	
8.3	20600	177.75	69620	**P3PV**	**032e**	**DM**	**DRN**	**180M4**	620	
9.2	18600	160.39	69620							
9.8	17400	150.09	69620							
4.5	38300	331.02	51190							
5.2	33300	287.23	51190							
6.0	28600	247.25	51190							
6.7	25400	219.39	51190	**P3PH**	**022e**	**DM**	**DRN**	**180M4**	570	
7.6	22400	193.59	51190	**P3PS**	**022e**	**DM**	**DRN**	**180M4**	560	229
8.5	20200	174.68	51190	**P3PL**	**022e**	**DM**	**DRN**	**180M4**	560	
9.4	18200	156.99	51190	**P3PV**	**022e**	**DM**	**DRN**	**180M4**	540	
10	16600	143.53	51190							
12	14700	127.35	51190							
13	12900	111.35	51190							
4.5	38500	332.32	36810							
5.1	33400	288.36	36810							
5.9	29000	250.21	36810							
6.7	25700	222.01	36810							
7.5	22800	197.00	36810	**P3PH**	**012e**	**DM**	**DRN**	**180M4**	465	
8.7	19600	169.15	36810	**P3PS**	**012e**	**DM**	**DRN**	**180M4**	455	225
9.8	17400	150.09	36810	**P3PL**	**012e**	**DM**	**DRN**	**180M4**	450	
11	15200	131.16	36810	**P3PV**	**012e**	**DM**	**DRN**	**180M4**	430	
13	13200	114.35	36810							
15	11500	99.93	36810							
17	10100	87.32	36810							
38	4590	39.23	36810	**P2PH**	**012e**	**DM**	**DRN**	**180M4**	435	
43	3980	34.04	36810	**P2PS**	**012e**	**DM**	**DRN**	**180M4**	425	223
				P2PL	**012e**	**DM**	**DRN**	**180M4**	420	
				P2PV	**012e**	**DM**	**DRN**	**180M4**	400	

31991203/EN – 08/2025

P_m = 18.5 kW

n_2	M_a	i_{ex}	M_{N2}						m	
min^{-1}	Nm		Nm						kg	
5.9	29100	251.44	24830							
6.7	25400	219.39	24830							
7.6	22400	193.59	24830							
9.0	19100	164.72	24830							
10	16900	146.16	24830	**P3PH**	**002e**	**DM**	**DRN**	**180M4**	390	
12	14700	127.35	24830	**P3PS**	**002e**	**DM**	**DRN**	**180M4**	385	221
13	12900	111.35	24830	**P3PL**	**002e**	**DM**	**DRN**	**180M4**	380	
15	11200	97.03	24830	**P3PV**	**002e**	**DM**	**DRN**	**180M4**	370	
17	9830	84.79	24830							
20	8780	75.77	24830							
22	7690	66.32	24830							
25	6870	59.26	24830							
38	4570	39.08	24830	**P2PH**	**002e**	**DM**	**DRN**	**180M4**	360	
44	3940	33.64	24830	**P2PS**	**002e**	**DM**	**DRN**	**180M4**	355	219
50	3470	29.68	24830	**P2PL**	**002e**	**DM**	**DRN**	**180M4**	350	
55	3120	26.68	24830	**P2PV**	**002e**	**DM**	**DRN**	**180M4**	340	
66	2620	22.41	24830							

P_m = 22 kW

n_2	M_a	i_{ex}	M_{N2}						m	
min^{-1}	Nm		Nm						kg	
4.4	45800	332.32	124060	**P3PH**	**052e**	**DM**	**DRN**	**180L4**	1040	
5.1	39700	288.36	124060	**P3PS**	**052e**	**DM**	**DRN**	**180L4**	1050	240
5.9	34500	250.21	124060	**P3PL**	**052e**	**DM**	**DRN**	**180L4**	1040	
				P3PV	**052e**	**DM**	**DRN**	**180L4**	960	
4.4	45800	332.32	100170	**P3PH**	**042e**	**DM**	**DRN**	**180L4**	890	
5.1	39700	288.36	100170	**P3PS**	**042e**	**DM**	**DRN**	**180L4**	890	237
5.9	34500	250.21	100170	**P3PL**	**042e**	**DM**	**DRN**	**180L4**	880	
6.7	30600	222.01	100170	**P3PV**	**042e**	**DM**	**DRN**	**180L4**	820	
7.5	27100	197.00	100170							
4.4	45800	332.32	69620							
5.1	39700	288.36	69620							
5.9	34500	250.21	69620							
6.7	30600	222.01	69620	**P3PH**	**032e**	**DM**	**DRN**	**180L4**	700	
7.5	27100	197.00	69620	**P3PS**	**032e**	**DM**	**DRN**	**180L4**	670	233
8.3	24500	177.75	69620	**P3PL**	**032e**	**DM**	**DRN**	**180L4**	670	
9.2	22100	160.39	69620	**P3PV**	**032e**	**DM**	**DRN**	**180L4**	640	
9.8	20700	150.09	69620							
11	18100	131.16	69620							
4.5	45600	331.02	51190							
5.1	39600	287.23	51190							
6.0	34100	247.25	51190							
6.7	30200	219.39	51190							
7.6	26700	193.59	51190	**P3PH**	**022e**	**DM**	**DRN**	**180L4**	590	
8.5	24100	174.68	51190	**P3PS**	**022e**	**DM**	**DRN**	**180L4**	580	228
9.4	21600	156.99	51190	**P3PL**	**022e**	**DM**	**DRN**	**180L4**	570	
10	19800	143.53	51190	**P3PV**	**022e**	**DM**	**DRN**	**180L4**	550	
12	17500	127.35	51190							
13	15300	111.35	51190							
15	13300	97.03	51190							
38	5460	39.23	51190	**P2PH**	**022e**	**DM**	**DRN**	**180L4**	570	
				P2PS	**022e**	**DM**	**DRN**	**180L4**	560	226
				P2PL	**022e**	**DM**	**DRN**	**180L4**	550	
				P2PV	**022e**	**DM**	**DRN**	**180L4**	530	

31991203/EN – 08/2025

P_m = 22 kW

n_2	M_a	i_{ex}	M_{N2}						m	
min^{-1}	Nm		Nm						kg	
4.4	45800	332.32	36810							
5.1	39700	288.36	36810							
5.9	34500	250.21	36810							
6.7	30600	222.01	36810							
7.5	27100	197.00	36810							
8.7	23300	169.15	36810	**P3PH**	**012e**	**DM**	**DRN**	**180L4**	480	
9.8	20700	150.09	36810	**P3PS**	**012e**	**DM**	**DRN**	**180L4**	470	224
11	18100	131.16	36810	**P3PL**	**012e**	**DM**	**DRN**	**180L4**	465	
13	15700	114.35	36810	**P3PV**	**012e**	**DM**	**DRN**	**180L4**	445	
15	13700	99.93	36810							
17	12000	87.32	36810							
19	10700	78.16	36810							
22	9420	68.30	36810							
38	5460	39.23	36810	**P2PH**	**012e**	**DM**	**DRN**	**180L4**	450	
43	4740	34.04	36810	**P2PS**	**012e**	**DM**	**DRN**	**180L4**	440	222
49	4210	30.21	36810	**P2PL**	**012e**	**DM**	**DRN**	**180L4**	435	
54	3790	27.26	36810	**P2PV**	**012e**	**DM**	**DRN**	**180L4**	420	
6.7	30200	219.39	24830							
7.6	26700	193.59	24830							
9.0	22700	164.72	24830							
10	20100	146.16	24830							
12	17500	127.35	24830	**P3PH**	**002e**	**DM**	**DRN**	**180L4**	405	
13	15300	111.35	24830	**P3PS**	**002e**	**DM**	**DRN**	**180L4**	400	220
15	13300	97.03	24830	**P3PL**	**002e**	**DM**	**DRN**	**180L4**	395	
17	11700	84.79	24830	**P3PV**	**002e**	**DM**	**DRN**	**180L4**	385	
19	10400	75.77	24830							
22	9150	66.32	24830							
25	8170	59.26	24830							
29	7130	51.73	24830							
38	5440	39.08	24830							
44	4680	33.64	24830	**P2PH**	**002e**	**DM**	**DRN**	**180L4**	375	
50	4130	29.68	24830	**P2PS**	**002e**	**DM**	**DRN**	**180L4**	370	218
55	3710	26.68	24830	**P2PL**	**002e**	**DM**	**DRN**	**180L4**	365	
66	3120	22.41	24830	**P2PV**	**002e**	**DM**	**DRN**	**180L4**	355	
76	2720	19.53	24830							

P_m = 30 kW

n_2	M_a	i_{ex}	M_{N2}						m	
min^{-1}	Nm		Nm						kg	
4.6	60600	322.69	245660							
5.2	52900	282.12	245660							
6.0	45900	244.80	245660							
6.8	40700	217.21	245660							
7.6	36300	193.79	245660							
8.4	32900	175.57	245660							
9.3	29700	158.42	245660	**P3PH**	**072e**	**DM**	**DRN**	**200L4**	295	
10	27700	147.64	245660	**P3PS**	**072e**	**DM**	**DRN**	**200L4**	295	248
11	24500	130.72	245660	**P3PL**	**072e**	**DM**	**DRN**	**200L4**	295	
13	21300	113.57	245660	**P3PV**	**072e**	**DM**	**DRN**	**200L4**	295	
15	18700	99.59	245660							
17	16300	87.03	245660							
19	14500	77.63	245660							
22	12700	68.07	245660							
24	11400	61.07	245660							
28	10000	53.48	245660							
4.5	62400	332.32	185660	**P3PH**	**062e**	**DM**	**DRN**	**200L4**	295	
5.1	54100	288.36	185660	**P3PS**	**062e**	**DM**	**DRN**	**200L4**	295	244
5.9	46900	250.21	185660	**P3PL**	**062e**	**DM**	**DRN**	**200L4**	295	
				P3PV	**062e**	**DM**	**DRN**	**200L4**	295	
4.5	62400	332.32	124060							
5.1	54100	288.36	124060	**P3PH**	**052e**	**DM**	**DRN**	**200L4**	1150	
5.9	46900	250.21	124060	**P3PS**	**052e**	**DM**	**DRN**	**200L4**	1160	240
6.7	41600	222.01	124060	**P3PL**	**052e**	**DM**	**DRN**	**200L4**	1150	
7.5	36900	197.00	124060	**P3PV**	**052e**	**DM**	**DRN**	**200L4**	1070	
8.3	33300	177.75	124060							

31991203/EN – 08/2025

P_m = 30 kW

n_2	M_a	i_{ex}	M_{N2}						m	
min^{-1}	Nm		Nm						kg	
38	7440	39.23	124060	**P2PH**	**052e**	**DM**	**DRN**	**200L4**	1070	238
				P2PS	**052e**	**DM**	**DRN**	**200L4**	1080	
				P2PL	**052e**	**DM**	**DRN**	**200L4**	1070	
				P2PV	**052e**	**DM**	**DRN**	**200L4**	990	
4.5	62400	332.32	100170							236
5.1	54100	288.36	100170							
5.9	46900	250.21	100170	**P3PH**	**042e**	**DM**	**DRN**	**200L4**	1000	
6.7	41600	222.01	100170	**P3PS**	**042e**	**DM**	**DRN**	**200L4**	990	
7.5	36900	197.00	100170	**P3PL**	**042e**	**DM**	**DRN**	**200L4**	990	
8.3	33300	177.75	100170	**P3PV**	**042e**	**DM**	**DRN**	**200L4**	930	
9.2	30100	160.39	100170							
9.9	28100	150.09	100170							
38	7440	39.23	100170	**P2PH**	**042e**	**DM**	**DRN**	**200L4**	950	234
				P2PS	**042e**	**DM**	**DRN**	**200L4**	950	
				P2PL	**042e**	**DM**	**DRN**	**200L4**	940	
				P2PV	**042e**	**DM**	**DRN**	**200L4**	880	
4.5	62400	332.32	69620							232
5.1	54100	288.36	69620							
5.9	46900	250.21	69620							
6.7	41600	222.01	69620	**P3PH**	**032e**	**DM**	**DRN**	**200L4**	800	
7.5	36900	197.00	69620	**P3PS**	**032e**	**DM**	**DRN**	**200L4**	780	
8.3	33300	177.75	69620	**P3PL**	**032e**	**DM**	**DRN**	**200L4**	780	
9.2	30100	160.39	69620	**P3PV**	**032e**	**DM**	**DRN**	**200L4**	750	
9.9	28100	150.09	69620							
11	24600	131.16	69620							
13	21400	114.35	69620							
15	18700	99.93	69620							
38	7440	39.23	69620	**P2PH**	**032e**	**DM**	**DRN**	**200L4**	800	230
				P2PS	**032e**	**DM**	**DRN**	**200L4**	770	
				P2PL	**032e**	**DM**	**DRN**	**200L4**	770	
				P2PV	**032e**	**DM**	**DRN**	**200L4**	740	
4.5	62100	331.02	51190							228
5.2	53900	287.23	51190							
6.0	46400	247.25	51190							
6.8	41200	219.39	51190							
7.6	36300	193.59	51190	**P3PH**	**022e**	**DM**	**DRN**	**200L4**	700	
8.5	32800	174.68	51190	**P3PS**	**022e**	**DM**	**DRN**	**200L4**	680	
9.4	29400	156.99	51190	**P3PL**	**022e**	**DM**	**DRN**	**200L4**	680	
10	26900	143.53	51190	**P3PV**	**022e**	**DM**	**DRN**	**200L4**	660	
12	23900	127.35	51190							
13	20900	111.35	51190							
15	18200	97.03	51190							
17	15900	84.79	51190							
20	14200	75.68	51190							
38	7440	39.23	51190	**P2PH**	**022e**	**DM**	**DRN**	**200L4**	670	226
43	6450	34.04	51190	**P2PS**	**022e**	**DM**	**DRN**	**200L4**	660	
49	5730	30.21	51190	**P2PL**	**022e**	**DM**	**DRN**	**200L4**	660	
54	5170	27.26	51190	**P2PV**	**022e**	**DM**	**DRN**	**200L4**	640	
6.7	41600	222.01	36810							224
7.5	36900	197.00	36810							
8.8	31700	169.15	36810							
9.9	28100	150.09	36810							
11	24600	131.16	36810	**P3PH**	**012e**	**DM**	**DRN**	**200L4**	590	
13	21400	114.35	36810	**P3PS**	**012e**	**DM**	**DRN**	**200L4**	580	
15	18700	99.93	36810	**P3PL**	**012e**	**DM**	**DRN**	**200L4**	570	
17	16400	87.32	36810	**P3PV**	**012e**	**DM**	**DRN**	**200L4**	550	
19	14600	78.16	36810							
22	12800	68.30	36810							
24	11400	61.13	36810							
28	10000	53.42	36810							
38	7440	39.23	36810							222
43	6450	34.04	36810	**P2PH**	**012e**	**DM**	**DRN**	**200L4**	560	
49	5730	30.21	36810	**P2PS**	**012e**	**DM**	**DRN**	**200L4**	550	
54	5170	27.26	36810	**P2PL**	**012e**	**DM**	**DRN**	**200L4**	540	
64	4360	23.01	36810	**P2PV**	**012e**	**DM**	**DRN**	**200L4**	530	
74	3810	20.11	36810							

31991203/EN – 08/2025

P_m = 30 kW

n_2	M_a	i_{ex}	M_{N2}						m	
min^{-1}	Nm		Nm						kg	
9.0	30900	164.72	24830							
10	27400	146.16	24830							
12	23900	127.35	24830							
13	20900	111.35	24830	**P3PH**	**002e**	**DM**	**DRN**	**200L4**	510	
15	18200	97.03	24830	**P3PS**	**002e**	**DM**	**DRN**	**200L4**	510	220
17	15900	84.79	24830	**P3PL**	**002e**	**DM**	**DRN**	**200L4**	500	
20	14200	75.77	24830	**P3PV**	**002e**	**DM**	**DRN**	**200L4**	490	
22	12400	66.32	24830							
25	11100	59.26	24830							
29	9710	51.73	24830							
38	7410	39.08	24830							
44	6380	33.64	24830							
50	5630	29.68	24830	**P2PH**	**002e**	**DM**	**DRN**	**200L4**	485	
55	5060	26.68	24830	**P2PS**	**002e**	**DM**	**DRN**	**200L4**	480	218
66	4250	22.41	24830	**P2PL**	**002e**	**DM**	**DRN**	**200L4**	475	
76	3700	19.53	24830	**P2PV**	**002e**	**DM**	**DRN**	**200L4**	460	
85	3310	17.45	24830							
97	2880	15.23	24830							

P_m = 37 kW

n_2	M_a	i_{ex}	M_{N2}						m	
min^{-1}	Nm		Nm						kg	
4.6	74600	322.69	245660	**P3PH**	**072e**	**DM**	**DRN**	**225S4**	325	
5.2	65200	282.12	245660	**P3PS**	**072e**	**DM**	**DRN**	**225S4**	325	248
				P3PL	**072e**	**DM**	**DRN**	**225S4**	325	
				P3PV	**072e**	**DM**	**DRN**	**225S4**	325	
4.5	76800	332.32	185660	**P3PH**	**062e**	**DM**	**DRN**	**225S4**	325	
5.1	66700	288.36	185660	**P3PS**	**062e**	**DM**	**DRN**	**225S4**	325	244
5.9	57800	250.21	185660	**P3PL**	**062e**	**DM**	**DRN**	**225S4**	325	
6.7	51300	222.01	185660	**P3PV**	**062e**	**DM**	**DRN**	**225S4**	325	
4.5	76800	332.32	124060							
5.1	66700	288.36	124060							
5.9	57800	250.21	124060	**P3PH**	**052e**	**DM**	**DRN**	**225S4**	1180	
6.7	51300	222.01	124060	**P3PS**	**052e**	**DM**	**DRN**	**225S4**	1190	240
7.5	45500	197.00	124060	**P3PL**	**052e**	**DM**	**DRN**	**225S4**	1180	
8.3	41100	177.75	124060	**P3PV**	**052e**	**DM**	**DRN**	**225S4**	1100	
9.2	37100	160.39	124060							
9.9	34700	150.09	124060							
38	9160	39.23	124060	**P2PH**	**052e**	**DM**	**DRN**	**225S4**	1100	
				P2PS	**052e**	**DM**	**DRN**	**225S4**	1110	238
				P2PL	**052e**	**DM**	**DRN**	**225S4**	1100	
				P2PV	**052e**	**DM**	**DRN**	**225S4**	1020	
4.5	76800	332.32	100170							
5.1	66700	288.36	100170							
5.9	57800	250.21	100170							
6.7	51300	222.01	100170	**P3PH**	**042e**	**DM**	**DRN**	**225S4**	1030	
7.5	45500	197.00	100170	**P3PS**	**042e**	**DM**	**DRN**	**225S4**	1020	236
8.3	41100	177.75	100170	**P3PL**	**042e**	**DM**	**DRN**	**225S4**	1020	
9.2	37100	160.39	100170	**P3PV**	**042e**	**DM**	**DRN**	**225S4**	960	
9.9	34700	150.09	100170							
11	30300	131.16	100170							
13	26400	114.35	100170							
38	9160	39.23	100170	**P2PH**	**042e**	**DM**	**DRN**	**225S4**	980	
				P2PS	**042e**	**DM**	**DRN**	**225S4**	980	234
				P2PL	**042e**	**DM**	**DRN**	**225S4**	970	
				P2PV	**042e**	**DM**	**DRN**	**225S4**	920	

31991203/EN – 08/2025

P_m = 37 kW

n_2	M_a	i_{ex}	M_{N2}							m	
min^{-1}	Nm		Nm							kg	
4.5	76800	332.32	69620								
5.1	66700	288.36	69620								
5.9	57800	250.21	69620								
6.7	51300	222.01	69620								
7.5	45500	197.00	69620	**P3PH**	**032e**	**DM**	**DRN**	**225S4**	830		
8.3	41100	177.75	69620	**P3PS**	**032e**	**DM**	**DRN**	**225S4**	810		
9.2	37100	160.39	69620	**P3PL**	**032e**	**DM**	**DRN**	**225S4**	810	232	
9.9	34700	150.09	69620	**P3PV**	**032e**	**DM**	**DRN**	**225S4**	780		
11	30300	131.16	69620								
13	26400	114.35	69620								
15	23100	99.93	69620								
17	20200	87.32	69620								
19	18000	78.16	69620								
38	9160	39.23	69620	**P2PH**	**032e**	**DM**	**DRN**	**225S4**	830		
44	7950	34.04	69620	**P2PS**	**032e**	**DM**	**DRN**	**225S4**	800	230	
49	7050	30.21	69620	**P2PL**	**032e**	**DM**	**DRN**	**225S4**	800		
				P2PV	**032e**	**DM**	**DRN**	**225S4**	770		
6.0	57100	247.25	51190								
6.8	50700	219.39	51190								
7.7	44700	193.59	51190								
8.5	40400	174.68	51190								
9.4	36300	156.99	51190								
10	33200	143.53	51190	**P3PH**	**022e**	**DM**	**DRN**	**225S4**	730		
12	29400	127.35	51190	**P3PS**	**022e**	**DM**	**DRN**	**225S4**	720	228	
13	25700	111.35	51190	**P3PL**	**022e**	**DM**	**DRN**	**225S4**	710		
15	22400	97.03	51190	**P3PV**	**022e**	**DM**	**DRN**	**225S4**	690		
17	19600	84.79	51190								
20	17500	75.68	51190								
22	15200	66.13	51190								
25	13600	59.19	51190								
38	9160	39.23	51190								
44	7950	34.04	51190	**P2PH**	**022e**	**DM**	**DRN**	**225S4**	710		
49	7050	30.21	51190	**P2PS**	**022e**	**DM**	**DRN**	**225S4**	690	226	
54	6360	27.26	51190	**P2PL**	**022e**	**DM**	**DRN**	**225S4**	690		
64	5370	23.01	51190	**P2PV**	**022e**	**DM**	**DRN**	**225S4**	670		
7.5	45500	197.00	36810								
8.8	39100	169.15	36810								
9.9	34700	150.09	36810								
11	30300	131.16	36810								
13	26400	114.35	36810	**P3PH**	**012e**	**DM**	**DRN**	**225S4**	620		
15	23100	99.93	36810	**P3PS**	**012e**	**DM**	**DRN**	**225S4**	610	224	
17	20200	87.32	36810	**P3PL**	**012e**	**DM**	**DRN**	**225S4**	600		
19	18000	78.16	36810	**P3PV**	**012e**	**DM**	**DRN**	**225S4**	590		
22	15700	68.30	36810								
24	14100	61.13	36810								
28	12300	53.42	36810								
38	9160	39.23	36810								
44	7950	34.04	36810								
49	7050	30.21	36810	**P2PH**	**012e**	**DM**	**DRN**	**225S4**	590		
54	6360	27.26	36810	**P2PS**	**012e**	**DM**	**DRN**	**225S4**	580	222	
64	5370	23.01	36810	**P2PL**	**012e**	**DM**	**DRN**	**225S4**	580		
74	4690	20.11	36810	**P2PV**	**012e**	**DM**	**DRN**	**225S4**	560		
82	4200	18.00*	36810								
12	29400	127.35	24830								
13	25700	111.35	24830								
15	22400	97.03	24830	**P3PH**	**002e**	**DM**	**DRN**	**225S4**	550		
17	19600	84.79	24830	**P3PS**	**002e**	**DM**	**DRN**	**225S4**	540	220	
20	17500	75.77	24830	**P3PL**	**002e**	**DM**	**DRN**	**225S4**	540		
22	15300	66.32	24830	**P3PV**	**002e**	**DM**	**DRN**	**225S4**	520		
25	13700	59.26	24830								
29	11900	51.73	24830								

31991203/EN – 08/2025

P_m = 37 kW

n_2	M_a	i_{ex}	M_{N2}						m	
min^{-1}	Nm		Nm						kg	
38	9130	39.08	24830							
44	7860	33.64	24830							
50	6930	29.68	24830	**P2PH**	**002e**	**DM**	**DRN**	**225S4**	520	218
56	6230	26.68	24830	**P2PS**	**002e**	**DM**	**DRN**	**225S4**	510	
66	5230	22.41	24830	**P2PL**	**002e**	**DM**	**DRN**	**225S4**	510	
76	4560	19.53	24830	**P2PV**	**002e**	**DM**	**DRN**	**225S4**	490	
85	4070	17.45	24830							
97	3550	15.23	24830							

P_m = 45 kW

n_2	M_a	i_{ex}	M_{N2}						m	
min^{-1}	Nm		Nm						kg	
4.6	90700	322.69	245660	**P3PH**	**072e**	**DM**	**DRN**	**225M4**	325	248
5.2	79300	282.12	245660	**P3PS**	**072e**	**DM**	**DRN**	**225M4**	325	
6.0	68800	244.80	245660	**P3PL**	**072e**	**DM**	**DRN**	**225M4**	325	
				P3PV	**072e**	**DM**	**DRN**	**225M4**	325	
4.5	93400	332.32	185660							
5.1	81100	288.36	185660	**P3PH**	**062e**	**DM**	**DRN**	**225M4**	325	244
5.9	70300	250.21	185660	**P3PS**	**062e**	**DM**	**DRN**	**225M4**	325	
6.7	62400	222.01	185660	**P3PL**	**062e**	**DM**	**DRN**	**225M4**	325	
7.5	55400	197.00	185660	**P3PV**	**062e**	**DM**	**DRN**	**225M4**	325	
8.3	50000	177.75	185660							
4.5	93400	332.32	124060							
5.1	81100	288.36	124060							
5.9	70300	250.21	124060							
6.7	62400	222.01	124060	**P3PH**	**052e**	**DM**	**DRN**	**225M4**	1180	240
7.5	55400	197.00	124060	**P3PS**	**052e**	**DM**	**DRN**	**225M4**	1190	
8.3	50000	177.75	124060	**P3PL**	**052e**	**DM**	**DRN**	**225M4**	1180	
9.2	45100	160.39	124060	**P3PV**	**052e**	**DM**	**DRN**	**225M4**	1100	
9.9	42200	150.09	124060							
11	36900	131.16	124060							
13	32100	114.35	124060							
38	11100	39.23	124060	**P2PH**	**052e**	**DM**	**DRN**	**225M4**	1100	238
44	9670	34.04	124060	**P2PS**	**052e**	**DM**	**DRN**	**225M4**	1110	
49	8580	30.21	124060	**P2PL**	**052e**	**DM**	**DRN**	**225M4**	1100	
				P2PV	**052e**	**DM**	**DRN**	**225M4**	1020	
4.5	93400	332.32	100170							
5.1	81100	288.36	100170							
5.9	70300	250.21	100170							
6.7	62400	222.01	100170							
7.5	55400	197.00	100170	**P3PH**	**042e**	**DM**	**DRN**	**225M4**	1030	236
8.3	50000	177.75	100170	**P3PS**	**042e**	**DM**	**DRN**	**225M4**	1020	
9.2	45100	160.39	100170	**P3PL**	**042e**	**DM**	**DRN**	**225M4**	1020	
9.9	42200	150.09	100170	**P3PV**	**042e**	**DM**	**DRN**	**225M4**	960	
11	36900	131.16	100170							
13	32100	114.35	100170							
15	28100	99.93	100170							
38	11100	39.23	100170	**P2PH**	**042e**	**DM**	**DRN**	**225M4**	980	234
44	9670	34.04	100170	**P2PS**	**042e**	**DM**	**DRN**	**225M4**	980	
				P2PL	**042e**	**DM**	**DRN**	**225M4**	970	
				P2PV	**042e**	**DM**	**DRN**	**225M4**	920	
5.1	81100	288.36	69620							
5.9	70300	250.21	69620							
6.7	62400	222.01	69620							
7.5	55400	197.00	69620							
8.3	50000	177.75	69620	**P3PH**	**032e**	**DM**	**DRN**	**225M4**	830	232
9.2	45100	160.39	69620	**P3PS**	**032e**	**DM**	**DRN**	**225M4**	810	
9.9	42200	150.09	69620	**P3PL**	**032e**	**DM**	**DRN**	**225M4**	810	
11	36900	131.16	69620	**P3PV**	**032e**	**DM**	**DRN**	**225M4**	780	
13	32100	114.35	69620							
15	28100	99.93	69620							
17	24500	87.32	69620							
19	21900	78.16	69620							
22	19200	68.30	69620							

31991203/EN – 08/2025

P_m = 45 kW

n_2	M_a	i_{ex}	M_{N2}						m	
min^{-1}	Nm		Nm						kg	
38	11100	39.23	69620	**P2PH**	**032e**	**DM**	**DRN**	**225M4**	830	230
44	9670	34.04	69620	**P2PS**	**032e**	**DM**	**DRN**	**225M4**	800	
49	8580	30.21	69620	**P2PL**	**032e**	**DM**	**DRN**	**225M4**	800	
54	7740	27.26	69620	**P2PV**	**032e**	**DM**	**DRN**	**225M4**	770	
6.8	61700	219.39	51190							228
7.7	54400	193.59	51190							
8.5	49100	174.68	51190							
9.4	44100	156.99	51190							
10	40300	143.53	51190							
12	35800	127.35	51190	**P3PH**	**022e**	**DM**	**DRN**	**225M4**	730	
13	31300	111.35	51190	**P3PS**	**022e**	**DM**	**DRN**	**225M4**	720	
15	27200	97.03	51190	**P3PL**	**022e**	**DM**	**DRN**	**225M4**	710	
17	23800	84.79	51190	**P3PV**	**022e**	**DM**	**DRN**	**225M4**	690	
20	21200	75.68	51190							
22	18600	66.13	51190							
25	16600	59.19	51190							
29	14500	51.73	51190							
38	11100	39.23	51190							226
44	9670	34.04	51190	**P2PH**	**022e**	**DM**	**DRN**	**225M4**	710	
49	8580	30.21	51190	**P2PS**	**022e**	**DM**	**DRN**	**225M4**	690	
54	7740	27.26	51190	**P2PL**	**022e**	**DM**	**DRN**	**225M4**	690	
64	6540	23.01	51190	**P2PV**	**022e**	**DM**	**DRN**	**225M4**	670	
74	5710	20.11	51190							
9.9	42200	150.09	36810							224
11	36900	131.16	36810							
13	32100	114.35	36810							
15	28100	99.93	36810	**P3PH**	**012e**	**DM**	**DRN**	**225M4**	620	
17	24500	87.32	36810	**P3PS**	**012e**	**DM**	**DRN**	**225M4**	610	
19	21900	78.16	36810	**P3PL**	**012e**	**DM**	**DRN**	**225M4**	600	
22	19200	68.30	36810	**P3PV**	**012e**	**DM**	**DRN**	**225M4**	590	
24	17100	61.13	36810							
28	15000	53.42	36810							
38	11100	39.23	36810							222
44	9670	34.04	36810							
49	8580	30.21	36810	**P2PH**	**012e**	**DM**	**DRN**	**225M4**	590	
54	7740	27.26	36810	**P2PS**	**012e**	**DM**	**DRN**	**225M4**	580	
64	6540	23.01	36810	**P2PL**	**012e**	**DM**	**DRN**	**225M4**	580	
74	5710	20.11	36810	**P2PV**	**012e**	**DM**	**DRN**	**225M4**	560	
82	5110	18.00*	36810							
94	4470	15.73	36810							
15	27200	97.03	24830							220
17	23800	84.79	24830	**P3PH**	**002e**	**DM**	**DRN**	**225M4**	550	
20	21300	75.77	24830	**P3PS**	**002e**	**DM**	**DRN**	**225M4**	540	
22	18600	66.32	24830	**P3PL**	**002e**	**DM**	**DRN**	**225M4**	540	
25	16600	59.26	24830	**P3PV**	**002e**	**DM**	**DRN**	**225M4**	520	
29	14500	51.73	24830							
38	11100	39.08	24830							218
44	9560	33.64	24830							
50	8430	29.68	24830	**P2PH**	**002e**	**DM**	**DRN**	**225M4**	520	
56	7580	26.68	24830	**P2PS**	**002e**	**DM**	**DRN**	**225M4**	510	
66	6360	22.41	24830	**P2PL**	**002e**	**DM**	**DRN**	**225M4**	510	
76	5540	19.53	24830	**P2PV**	**002e**	**DM**	**DRN**	**225M4**	490	
85	4950	17.45	24830							
97	4320	15.23	24830							

P_m = 55 kW

n_2	M_a	i_{ex}	M_{N2}						m	
min^{-1}	Nm		Nm						kg	
4.6	110900	322.69	245660							248
5.2	97000	282.12	245660	**P3PH**	**072e**	**DM**	**DRN**	**250M4**	475	
6.0	84100	244.80	245660	**P3PS**	**072e**	**DM**	**DRN**	**250M4**	475	
6.8	74600	217.21	245660	**P3PL**	**072e**	**DM**	**DRN**	**250M4**	475	
7.7	66600	193.79	245660	**P3PV**	**072e**	**DM**	**DRN**	**250M4**	475	

31991203/EN – 08/2025

P_m = 55 kW

n_2	M_a	i_{ex}	M_{N2}						m	
min^{-1}	Nm		Nm						kg	
4.5	114200	332.32	185660							
5.1	99100	288.36	185660							
5.9	86000	250.21	185660	**P3PH**	**062e**	**DM**	**DRN**	**250M4**	475	
6.7	76300	222.01	185660	**P3PS**	**062e**	**DM**	**DRN**	**250M4**	475	244
7.5	67700	197.00	185660	**P3PL**	**062e**	**DM**	**DRN**	**250M4**	475	
8.3	61100	177.75	185660	**P3PV**	**062e**	**DM**	**DRN**	**250M4**	475	
9.2	55100	160.39	185660							
9.9	51600	150.09	185660							
4.5	114200	332.32	124060							
5.1	99100	288.36	124060							
5.9	86000	250.21	124060							
6.7	76300	222.01	124060							
7.5	67700	197.00	124060	**P3PH**	**052e**	**DM**	**DRN**	**250M4**	1330	
8.3	61100	177.75	124060	**P3PS**	**052e**	**DM**	**DRN**	**250M4**	1340	240
9.2	55100	160.39	124060	**P3PL**	**052e**	**DM**	**DRN**	**250M4**	1330	
9.9	51600	150.09	124060	**P3PV**	**052e**	**DM**	**DRN**	**250M4**	1250	
11	45100	131.16	124060							
13	39300	114.35	124060							
15	34300	99.93	124060							
38	13600	39.23	124060	**P2PH**	**052e**	**DM**	**DRN**	**250M4**	1260	
44	11800	34.04	124060	**P2PS**	**052e**	**DM**	**DRN**	**250M4**	1260	238
49	10400	30.21	124060	**P2PL**	**052e**	**DM**	**DRN**	**250M4**	1250	
54	9460	27.26	124060	**P2PV**	**052e**	**DM**	**DRN**	**250M4**	1170	
4.5	114200	332.32	100170							
5.1	99100	288.36	100170							
5.9	86000	250.21	100170							
6.7	76300	222.01	100170							
7.5	67700	197.00	100170							
8.3	61100	177.75	100170	**P3PH**	**042e**	**DM**	**DRN**	**250M4**	1180	
9.2	55100	160.39	100170	**P3PS**	**042e**	**DM**	**DRN**	**250M4**	1170	236
9.9	51600	150.09	100170	**P3PL**	**042e**	**DM**	**DRN**	**250M4**	1170	
11	45100	131.16	100170	**P3PV**	**042e**	**DM**	**DRN**	**250M4**	1110	
13	39300	114.35	100170							
15	34300	99.93	100170							
17	30000	87.32	100170							
19	26800	78.16	100170							
38	13600	39.23	100170	**P2PH**	**042e**	**DM**	**DRN**	**250M4**	1140	
44	11800	34.04	100170	**P2PS**	**042e**	**DM**	**DRN**	**250M4**	1130	234
49	10400	30.21	100170	**P2PL**	**042e**	**DM**	**DRN**	**250M4**	1120	
				P2PV	**042e**	**DM**	**DRN**	**250M4**	1070	
5.9	86000	250.21	69620							
6.7	76300	222.01	69620							
7.5	67700	197.00	69620							
8.3	61100	177.75	69620							
9.2	55100	160.39	69620							
9.9	51600	150.09	69620	**P3PH**	**032e**	**DM**	**DRN**	**250M4**	980	
11	45100	131.16	69620	**P3PS**	**032e**	**DM**	**DRN**	**250M4**	960	232
13	39300	114.35	69620	**P3PL**	**032e**	**DM**	**DRN**	**250M4**	960	
15	34300	99.93	69620	**P3PV**	**032e**	**DM**	**DRN**	**250M4**	930	
17	30000	87.32	69620							
19	26800	78.16	69620							
22	23400	68.30	69620							
24	21000	61.13	69620							
28	18300	53.42	69620							
38	13600	39.23	69620							
44	11800	34.04	69620	**P2PH**	**032e**	**DM**	**DRN**	**250M4**	980	
49	10400	30.21	69620	**P2PS**	**032e**	**DM**	**DRN**	**250M4**	960	230
54	9460	27.26	69620	**P2PL**	**032e**	**DM**	**DRN**	**250M4**	950	
64	7990	23.01	69620	**P2PV**	**032e**	**DM**	**DRN**	**250M4**	920	
74	6980	20.11	69620							

31991203/EN – 08/2025

P_m = 55 kW

n_2	M_a	i_{ex}	M_{N2}						m	
min^{-1}	Nm		Nm						kg	
8.5	60000	174.68	51190							
9.4	53900	156.99	51190							
10	49300	143.53	51190							
12	43700	127.35	51190							
13	38200	111.35	51190	**P3PH**	**022e**	**DM**	**DRN**	**250M4**	880	
15	33300	97.03	51190	**P3PS**	**022e**	**DM**	**DRN**	**250M4**	870	228
17	29100	84.79	51190	**P3PL**	**022e**	**DM**	**DRN**	**250M4**	860	
20	26000	75.68	51190	**P3PV**	**022e**	**DM**	**DRN**	**250M4**	840	
22	22700	66.13	51190							
25	20300	59.19	51190							
29	17700	51.73	51190							
38	13600	39.23	51190							
44	11800	34.04	51190							
49	10400	30.21	51190	**P2PH**	**022e**	**DM**	**DRN**	**250M4**	860	
54	9460	27.26	51190	**P2PS**	**022e**	**DM**	**DRN**	**250M4**	840	226
64	7990	23.01	51190	**P2PL**	**022e**	**DM**	**DRN**	**250M4**	840	
74	6980	20.11	51190	**P2PV**	**022e**	**DM**	**DRN**	**250M4**	820	
82	6250	18.00	51190							
94	5460	15.73	51190							
38	13600	39.23	36810							
44	11800	34.04	36810							
49	10400	30.21	36810	**P2PH**	**012e**	**DM**	**DRN**	**250M4**	740	
54	9460	27.26	36810	**P2PS**	**012e**	**DM**	**DRN**	**250M4**	730	222
64	7990	23.01	36810	**P2PL**	**012e**	**DM**	**DRN**	**250M4**	730	
74	6980	20.11	36810	**P2PV**	**012e**	**DM**	**DRN**	**250M4**	710	
82	6250	18.00*	36810							
94	5460	15.73	36810							
38	13500	39.08	24830							
44	11600	33.64	24830							
50	10300	29.68	24830	**P2PH**	**002e**	**DM**	**DRN**	**250M4**	670	
56	9260	26.68	24830	**P2PS**	**002e**	**DM**	**DRN**	**250M4**	660	218
66	7780	22.41	24830	**P2PL**	**002e**	**DM**	**DRN**	**250M4**	660	
76	6780	19.53	24830	**P2PV**	**002e**	**DM**	**DRN**	**250M4**	640	
85	6060	17.45	24830							
97	5290	15.23	24830							

P_m = 75 kW

n_2	M_a	i_{ex}	M_{N2}						m	
min^{-1}	Nm		Nm						kg	
4.6	151300	322.69	245660							
5.2	132200	282.12	245660							
6.0	114700	244.80	245660	**P3PH**	**072e**	**DM**	**DRN**	**280S4**	520	
6.8	101800	217.21	245660	**P3PS**	**072e**	**DM**	**DRN**	**280S4**	520	248
7.7	90800	193.79	245660	**P3PL**	**072e**	**DM**	**DRN**	**280S4**	520	
8.4	82300	175.57	245660	**P3PV**	**072e**	**DM**	**DRN**	**280S4**	520	
9.4	74200	158.42	245660							
10	69200	147.64	245660							
4.5	155800	332.32	185660							
5.1	135200	288.36	185660							
5.9	117300	250.21	185660							
6.7	104100	222.01	185660							
7.5	92300	197.00	185660	**P3PH**	**062e**	**DM**	**DRN**	**280S4**	520	
8.3	83300	177.75	185660	**P3PS**	**062e**	**DM**	**DRN**	**280S4**	520	244
9.2	75200	160.39	185660	**P3PL**	**062e**	**DM**	**DRN**	**280S4**	520	
9.9	70300	150.09	185660	**P3PV**	**062e**	**DM**	**DRN**	**280S4**	520	
11	61500	131.16	185660							
13	53600	114.35	185660							
15	46800	99.93	185660							

31991203/EN – 08/2025

P_m = 75 kW

n_2	M_a	i_{ex}	M_{N2}						m	
min^{-1}	Nm		Nm						kg	
4.5	155800	332.32	124060							
5.1	135200	288.36	124060							
5.9	117300	250.21	124060							
6.7	104100	222.01	124060							
7.5	92300	197.00	124060							
8.3	83300	177.75	124060	**P3PH**	**052e**	**DM**	**DRN**	**280S4**	1380	240
9.2	75200	160.39	124060	**P3PS**	**052e**	**DM**	**DRN**	**280S4**	1390	
9.9	70300	150.09	124060	**P3PL**	**052e**	**DM**	**DRN**	**280S4**	1380	
11	61500	131.16	124060	**P3PV**	**052e**	**DM**	**DRN**	**280S4**	1300	
13	53600	114.35	124060							
15	46800	99.93	124060							
17	40900	87.32	124060							
19	36600	78.16	124060							
22	32000	68.30	124060							
38	18500	39.23	124060	**P2PH**	**052e**	**DM**	**DRN**	**280S4**	1300	238
44	16100	34.04	124060	**P2PS**	**052e**	**DM**	**DRN**	**280S4**	1310	
49	14300	30.21	124060	**P2PL**	**052e**	**DM**	**DRN**	**280S4**	1300	
54	12900	27.26	124060	**P2PV**	**052e**	**DM**	**DRN**	**280S4**	1220	
5.9	117300	250.21	100170							
6.7	104100	222.01	100170							
7.5	92300	197.00	100170							
8.3	83300	177.75	100170							
9.2	75200	160.39	100170							
9.9	70300	150.09	100170	**P3PH**	**042e**	**DM**	**DRN**	**280S4**	1230	236
11	61500	131.16	100170	**P3PS**	**042e**	**DM**	**DRN**	**280S4**	1220	
13	53600	114.35	100170	**P3PL**	**042e**	**DM**	**DRN**	**280S4**	1220	
15	46800	99.93	100170	**P3PV**	**042e**	**DM**	**DRN**	**280S4**	1160	
17	40900	87.32	100170							
19	36600	78.16	100170							
22	32000	68.30	100170							
24	28600	61.13	100170							
28	25000	53.42	100170							
38	18500	39.23	100170							
44	16100	34.04	100170	**P2PH**	**042e**	**DM**	**DRN**	**280S4**	1190	234
49	14300	30.21	100170	**P2PS**	**042e**	**DM**	**DRN**	**280S4**	1180	
54	12900	27.26	100170	**P2PL**	**042e**	**DM**	**DRN**	**280S4**	1170	
64	10900	23.01	100170	**P2PV**	**042e**	**DM**	**DRN**	**280S4**	1120	
38	18500	39.23	69620							
44	16100	34.04	69620							
49	14300	30.21	69620	**P2PH**	**032e**	**DM**	**DRN**	**280S4**	1030	230
54	12900	27.26	69620	**P2PS**	**032e**	**DM**	**DRN**	**280S4**	1000	
64	10900	23.01	69620	**P2PL**	**032e**	**DM**	**DRN**	**280S4**	1000	
74	9520	20.11	69620	**P2PV**	**032e**	**DM**	**DRN**	**280S4**	970	
82	8520	18.00	69620							
94	7450	15.73	69620							
38	18500	39.23	51190							
44	16100	34.04	51190							
49	14300	30.21	51190	**P2PH**	**022e**	**DM**	**DRN**	**280S4**	900	226
54	12900	27.26	51190	**P2PS**	**022e**	**DM**	**DRN**	**280S4**	890	
64	10900	23.01	51190	**P2PL**	**022e**	**DM**	**DRN**	**280S4**	890	
74	9520	20.11	51190	**P2PV**	**022e**	**DM**	**DRN**	**280S4**	870	
82	8520	18.00	51190							
94	7450	15.73	51190							
38	18500	39.23	36810							
44	16100	34.04	36810							
49	14300	30.21	36810	**P2PH**	**012e**	**DM**	**DRN**	**280S4**	790	222
54	12900	27.26	36810	**P2PS**	**012e**	**DM**	**DRN**	**280S4**	780	
64	10900	23.01	36810	**P2PL**	**012e**	**DM**	**DRN**	**280S4**	770	
74	9520	20.11	36810	**P2PV**	**012e**	**DM**	**DRN**	**280S4**	760	
82	8520	18.00*	36810							
94	7450	15.73	36810							

31991203/EN – 08/2025

P_m = 90 kW

n_2	M_a	i_{ex}	M_{N2}						m	
min^{-1}	Nm		Nm						kg	
4.6	181600	322.69	245660							
5.2	158800	282.12	245660							
6.0	137800	244.80	245660							
6.8	122300	217.21	245660	**P3PH**	**072e**	**DM**	**DRN**	**280M4**	640	
7.6	109100	193.79	245660	**P3PS**	**072e**	**DM**	**DRN**	**280M4**	640	248
8.4	98800	175.57	245660	**P3PL**	**072e**	**DM**	**DRN**	**280M4**	640	
9.3	89200	158.42	245660	**P3PV**	**072e**	**DM**	**DRN**	**280M4**	640	
10	83100	147.64	245660							
11	73600	130.72	245660							
13	63900	113.57	245660							
4.5	187100	332.32	185660							
5.1	162300	288.36	185660							
5.9	140800	250.21	185660							
6.7	125000	222.01	185660							
7.5	110900	197.00	185660	**P3PH**	**062e**	**DM**	**DRN**	**280M4**	640	
8.3	100000	177.75	185660	**P3PS**	**062e**	**DM**	**DRN**	**280M4**	640	244
9.2	90300	160.39	185660	**P3PL**	**062e**	**DM**	**DRN**	**280M4**	640	
9.9	84500	150.09	185660	**P3PV**	**062e**	**DM**	**DRN**	**280M4**	640	
11	73800	131.16	185660							
13	64300	114.35	185660							
15	56200	99.93	185660							
17	49100	87.32	185660							
5.9	140800	250.21	124060							
6.7	125000	222.01	124060							
7.5	110900	197.00	124060							
8.3	100000	177.75	124060							
9.2	90300	160.39	124060							
9.9	84500	150.09	124060	**P3PH**	**052e**	**DM**	**DRN**	**280M4**	1500	
11	73800	131.16	124060	**P3PS**	**052e**	**DM**	**DRN**	**280M4**	1500	240
13	64300	114.35	124060	**P3PL**	**052e**	**DM**	**DRN**	**280M4**	1490	
15	56200	99.93	124060	**P3PV**	**052e**	**DM**	**DRN**	**280M4**	1410	
17	49100	87.32	124060							
19	44000	78.16	124060							
22	38400	68.30	124060							
24	34400	61.13	124060							
38	22300	39.23	124060							
44	19300	34.04	124060	**P2PH**	**052e**	**DM**	**DRN**	**280M4**	1420	
49	17100	30.21	124060	**P2PS**	**052e**	**DM**	**DRN**	**280M4**	1430	238
54	15500	27.26	124060	**P2PL**	**052e**	**DM**	**DRN**	**280M4**	1420	
64	13000	23.01	124060	**P2PV**	**052e**	**DM**	**DRN**	**280M4**	1340	
6.7	125000	222.01	100170							
7.5	110900	197.00	100170							
8.3	100000	177.75	100170							
9.2	90300	160.39	100170							
9.9	84500	150.09	100170							
11	73800	131.16	100170	**P3PH**	**042e**	**DM**	**DRN**	**280M4**	1340	
13	64300	114.35	100170	**P3PS**	**042e**	**DM**	**DRN**	**280M4**	1340	236
15	56200	99.93	100170	**P3PL**	**042e**	**DM**	**DRN**	**280M4**	1330	
17	49100	87.32	100170	**P3PV**	**042e**	**DM**	**DRN**	**280M4**	1280	
19	44000	78.16	100170							
22	38400	68.30	100170							
24	34400	61.13	100170							
28	30000	53.42	100170							
38	22300	39.23	100170							
44	19300	34.04	100170							
49	17100	30.21	100170	**P2PH**	**042e**	**DM**	**DRN**	**280M4**	1300	
54	15500	27.26	100170	**P2PS**	**042e**	**DM**	**DRN**	**280M4**	1290	234
64	13000	23.01	100170	**P2PL**	**042e**	**DM**	**DRN**	**280M4**	1290	
74	11400	20.11	100170	**P2PV**	**042e**	**DM**	**DRN**	**280M4**	1230	
82	10200	18.00	100170							

31991203/EN – 08/2025

P_m = 90 kW

n_2	M_a	i_{ex}	M_{N2}						m	
min^{-1}	Nm		Nm						kg	
38	22300	39.23	69620							
44	19300	34.04	69620							
49	17100	30.21	69620	**P2PH**	**032e**	**DM**	**DRN**	**280M4**	1140	230
54	15500	27.26	69620	**P2PS**	**032e**	**DM**	**DRN**	**280M4**	1120	
64	13000	23.01	69620	**P2PL**	**032e**	**DM**	**DRN**	**280M4**	1120	
74	11400	20.11	69620	**P2PV**	**032e**	**DM**	**DRN**	**280M4**	1090	
82	10200	18.00	69620							
94	8940	15.73	69620							
38	22300	39.23	51190							
44	19300	34.04	51190							
49	17100	30.21	51190	**P2PH**	**022e**	**DM**	**DRN**	**280M4**	1020	226
54	15500	27.26	51190	**P2PS**	**022e**	**DM**	**DRN**	**280M4**	1010	
64	13000	23.01	51190	**P2PL**	**022e**	**DM**	**DRN**	**280M4**	1000	
74	11400	20.11	51190	**P2PV**	**022e**	**DM**	**DRN**	**280M4**	980	
82	10200	18.00	51190							
94	8940	15.73	51190							
38	22300	39.23	36810							
44	19300	34.04	36810							
49	17100	30.21	36810	**P2PH**	**012e**	**DM**	**DRN**	**280M4**	900	222
54	15500	27.26	36810	**P2PS**	**012e**	**DM**	**DRN**	**280M4**	890	
64	13000	23.01	36810	**P2PL**	**012e**	**DM**	**DRN**	**280M4**	890	
74	11400	20.11	36810	**P2PV**	**012e**	**DM**	**DRN**	**280M4**	870	
82	10200	18.00*	36810							
94	8940	15.73	36810							

P_m = 110 kW

n_2	M_a	i_{ex}	M_{N2}						m	
min^{-1}	Nm		Nm						kg	
4.6	221000	322.69	245660							
5.3	193200	282.12	245660							
6.1	167600	244.80	245660							
6.8	148700	217.21	245660							
7.7	132700	193.79	245660	**P3PH**	**072e**	**DM**	**DRN**	**315S4**	880	248
8.5	120200	175.57	245660	**P3PS**	**072e**	**DM**	**DRN**	**315S4**	880	
9.4	108500	158.42	245660	**P3PL**	**072e**	**DM**	**DRN**	**315S4**	880	
10	101100	147.64	245660	**P3PV**	**072e**	**DM**	**DRN**	**315S4**	880	
11	89500	130.72	245660							
13	77700	113.57	245660							
15	68200	99.59	245660							
4.5	227600	332.32	185660							
5.2	197500	288.36	185660							
6.0	171300	250.21	185660							
6.7	152000	222.01	185660							
7.5	134900	197.00	185660							
8.4	121700	177.75	185660	**P3PH**	**062e**	**DM**	**DRN**	**315S4**	880	244
9.3	109800	160.39	185660	**P3PS**	**062e**	**DM**	**DRN**	**315S4**	880	
9.9	102800	150.09	185660	**P3PL**	**062e**	**DM**	**DRN**	**315S4**	880	
11	89800	131.16	185660	**P3PV**	**062e**	**DM**	**DRN**	**315S4**	880	
13	78300	114.35	185660							
15	68400	99.93	185660							
17	59800	87.32	185660							
19	53500	78.16	185660							
22	46700	68.30	185660							
6.7	152000	222.01	124060							
7.5	134900	197.00	124060							
8.4	121700	177.75	124060							
9.3	109800	160.39	124060							
9.9	102800	150.09	124060	**P3PH**	**052e**	**DM**	**DRN**	**315S4**	1740	240
11	89800	131.16	124060	**P3PS**	**052e**	**DM**	**DRN**	**315S4**	1750	
13	78300	114.35	124060	**P3PL**	**052e**	**DM**	**DRN**	**315S4**	1740	
15	68400	99.93	124060	**P3PV**	**052e**	**DM**	**DRN**	**315S4**	1660	
17	59800	87.32	124060							
19	53500	78.16	124060							
22	46700	68.30	124060							
24	41800	61.13	124060							
28	36500	53.42	124060							

31991203/EN – 08/2025

P_m = 110 kW

n_2	M_a	i_{ex}	M_{N2}						m	
min^{-1}	Nm		Nm						kg	
38	27100	39.23	124060							
44	23500	34.04	124060							
49	20800	30.21	124060	**P2PH**	**052e**	**DM**	**DRN**	**315S4**	1660	238
55	18800	27.26	124060	**P2PS**	**052e**	**DM**	**DRN**	**315S4**	1670	
65	15900	23.01	124060	**P2PL**	**052e**	**DM**	**DRN**	**315S4**	1660	
74	13900	20.11	124060	**P2PV**	**052e**	**DM**	**DRN**	**315S4**	1580	
83	12400	18.00	124060							
38	27100	39.23	100170							
44	23500	34.04	100170							
49	20800	30.21	100170	**P2PH**	**042e**	**DM**	**DRN**	**315S4**	1540	234
55	18800	27.26	100170	**P2PS**	**042e**	**DM**	**DRN**	**315S4**	1540	
65	15900	23.01	100170	**P2PL**	**042e**	**DM**	**DRN**	**315S4**	1530	
74	13900	20.11	100170	**P2PV**	**042e**	**DM**	**DRN**	**315S4**	1480	
83	12400	18.00	100170							
95	10800	15.73	100170							
38	27100	39.23	69620							
44	23500	34.04	69620							
49	20800	30.21	69620	**P2PH**	**032e**	**DM**	**DRN**	**315S4**	1390	230
55	18800	27.26	69620	**P2PS**	**032e**	**DM**	**DRN**	**315S4**	1360	
65	15900	23.01	69620	**P2PL**	**032e**	**DM**	**DRN**	**315S4**	1360	
74	13900	20.11	69620	**P2PV**	**032e**	**DM**	**DRN**	**315S4**	1330	
83	12400	18.00	69620							
95	10800	15.73	69620							

P_m = 132 kW

n_2	M_a	i_{ex}	M_{N2}						m	
min^{-1}	Nm		Nm						kg	
4.6	265200	322.69	245660							
5.3	231800	282.12	245660							
6.1	201200	244.80	245660							
6.8	178500	217.21	245660							
7.7	159200	193.79	245660							
8.5	144300	175.57	245660	**P3PH**	**072e**	**DM**	**DRN**	**315M4**	900	248
9.4	130200	158.42	245660	**P3PS**	**072e**	**DM**	**DRN**	**315M4**	900	
10	121300	147.64	245660	**P3PL**	**072e**	**DM**	**DRN**	**315M4**	900	
11	107400	130.72	245660	**P3PV**	**072e**	**DM**	**DRN**	**315M4**	900	
13	93300	113.57	245660							
15	81800	99.59	245660							
17	71500	87.03	245660							
19	63800	77.63	245660							
6.0	205600	250.21	185660							
6.7	182400	222.01	185660							
7.5	161900	197.00	185660							
8.4	146100	177.75	185660							
9.3	131800	160.39	185660							
9.9	123300	150.09	185660	**P3PH**	**062e**	**DM**	**DRN**	**315M4**	900	244
11	107800	131.16	185660	**P3PS**	**062e**	**DM**	**DRN**	**315M4**	900	
13	93900	114.35	185660	**P3PL**	**062e**	**DM**	**DRN**	**315M4**	900	
15	82100	99.93	185660	**P3PV**	**062e**	**DM**	**DRN**	**315M4**	900	
17	71700	87.32	185660							
19	64200	78.16	185660							
22	56100	68.30	185660							
24	50200	61.13	185660							
8.4	146100	177.75	124060							
9.3	131800	160.39	124060							
9.9	123300	150.09	124060							
11	107800	131.16	124060	**P3PH**	**052e**	**DM**	**DRN**	**315M4**	1760	240
13	93900	114.35	124060	**P3PS**	**052e**	**DM**	**DRN**	**315M4**	1770	
15	82100	99.93	124060	**P3PL**	**052e**	**DM**	**DRN**	**315M4**	1760	
17	71700	87.32	124060	**P3PV**	**052e**	**DM**	**DRN**	**315M4**	1680	
19	64200	78.16	124060							
22	56100	68.30	124060							
24	50200	61.13	124060							
28	43900	53.42	124060							

31991203/EN – 08/2025

P_m = 132 kW

n_2	M_a	i_{ex}	M_{N2}						m	
min^{-1}	Nm		Nm						kg	
38	32500	39.23	124060							
44	28200	34.04	124060							
49	25000	30.21	124060	**P2PH**	**052e**	**DM**	**DRN**	**315M4**	1680	
55	22600	27.26	124060	**P2PS**	**052e**	**DM**	**DRN**	**315M4**	1690	238
65	19100	23.01	124060	**P2PL**	**052e**	**DM**	**DRN**	**315M4**	1680	
74	16600	20.11	124060	**P2PV**	**052e**	**DM**	**DRN**	**315M4**	1600	
83	14900	18.00	124060							
95	13000	15.73	124060							
38	32500	39.23	100170							
44	28200	34.04	100170							
49	25000	30.21	100170	**P2PH**	**042e**	**DM**	**DRN**	**315M4**	1560	
55	22600	27.26	100170	**P2PS**	**042e**	**DM**	**DRN**	**315M4**	1560	234
65	19100	23.01	100170	**P2PL**	**042e**	**DM**	**DRN**	**315M4**	1550	
74	16600	20.11	100170	**P2PV**	**042e**	**DM**	**DRN**	**315M4**	1500	
83	14900	18.00	100170							
95	13000	15.73	100170							
38	32500	39.23	69620							
44	28200	34.04	69620							
49	25000	30.21	69620	**P2PH**	**032e**	**DM**	**DRN**	**315M4**	1410	
55	22600	27.26	69620	**P2PS**	**032e**	**DM**	**DRN**	**315M4**	1380	230
65	19100	23.01	69620	**P2PL**	**032e**	**DM**	**DRN**	**315M4**	1380	
74	16600	20.11	69620	**P2PV**	**032e**	**DM**	**DRN**	**315M4**	1350	
83	14900	18.00	69620							
95	13000	15.73	69620							

P_m = 160 kW

n_2	M_a	i_{ex}	M_{N2}						m	
min^{-1}	Nm		Nm						kg	
5.3	281400	282.12	245660							
6.1	244200	244.80	245660							
6.8	216700	217.21	245660							
7.7	193300	193.79	245660							
8.5	175100	175.57	245660							
9.4	158000	158.42	245660	**P3PH**	**072e**	**DM**	**DRN**	**315L4**	1040	
10	147200	147.64	245660	**P3PS**	**072e**	**DM**	**DRN**	**315L4**	1040	248
11	130400	130.72	245660	**P3PL**	**072e**	**DM**	**DRN**	**315L4**	1040	
13	113300	113.57	245660	**P3PV**	**072e**	**DM**	**DRN**	**315L4**	1040	
15	99300	99.59	245660							
17	86800	87.03	245660							
19	77400	77.63	245660							
22	67900	68.07	245660							
6.7	221400	222.01	185660							
7.5	196500	197.00	185660							
8.4	177300	177.75	185660							
9.3	160000	160.39	185660							
9.9	149700	150.09	185660							
11	130800	131.16	185660	**P3PH**	**062e**	**DM**	**DRN**	**315L4**	1040	
13	114000	114.35	185660	**P3PS**	**062e**	**DM**	**DRN**	**315L4**	1040	244
15	99600	99.93	185660	**P3PL**	**062e**	**DM**	**DRN**	**315L4**	1040	
17	87100	87.32	185660	**P3PV**	**062e**	**DM**	**DRN**	**315L4**	1040	
19	77900	78.16	185660							
22	68100	68.30	185660							
24	60900	61.13	185660							
28	53200	53.42	185660							
9.9	149700	150.09	124060							
11	130800	131.16	124060							
13	114000	114.35	124060	**P3PH**	**052e**	**DM**	**DRN**	**315L4**	1890	
15	99600	99.93	124060	**P3PS**	**052e**	**DM**	**DRN**	**315L4**	1900	240
17	87100	87.32	124060	**P3PL**	**052e**	**DM**	**DRN**	**315L4**	1890	
19	77900	78.16	124060	**P3PV**	**052e**	**DM**	**DRN**	**315L4**	1810	
22	68100	68.30	124060							
24	60900	61.13	124060							
28	53200	53.42	124060							

31991203/EN – 08/2025

P_m = 160 kW

n_2	M_a	i_{ex}	M_{N2}						m	
min^{-1}	Nm		Nm						kg	
38	39500	39.23	124060							
44	34300	34.04	124060							
49	30400	30.21	124060	**P2PH**	**052e**	**DM**	**DRN**	**315L4**	1820	
55	27400	27.26	124060	**P2PS**	**052e**	**DM**	**DRN**	**315L4**	1820	238
65	23100	23.01	124060	**P2PL**	**052e**	**DM**	**DRN**	**315L4**	1810	
74	20200	20.11	124060	**P2PV**	**052e**	**DM**	**DRN**	**315L4**	1730	
83	18100	18.00	124060							
94	15800	15.73	124060							
38	39500	39.23	100170							
44	34300	34.04	100170							
49	30400	30.21	100170	**P2PH**	**042e**	**DM**	**DRN**	**315L4**	1700	
55	27400	27.26	100170	**P2PS**	**042e**	**DM**	**DRN**	**315L4**	1690	234
65	23100	23.01	100170	**P2PL**	**042e**	**DM**	**DRN**	**315L4**	1680	
74	20200	20.11	100170	**P2PV**	**042e**	**DM**	**DRN**	**315L4**	1630	
83	18100	18.00	100170							
94	15800	15.73	100170							
38	39500	39.23	69620							
44	34300	34.04	69620							
49	30400	30.21	69620	**P2PH**	**032e**	**DM**	**DRN**	**315L4**	1540	
55	27400	27.26	69620	**P2PS**	**032e**	**DM**	**DRN**	**315L4**	1520	230
65	23100	23.01	69620	**P2PL**	**032e**	**DM**	**DRN**	**315L4**	1510	
74	20200	20.11	69620	**P2PV**	**032e**	**DM**	**DRN**	**315L4**	1480	
83	18100	18.00	69620							
94	15800	15.73	69620							

P_m = 200 kW

n_2	M_a	i_{ex}	M_{N2}						m	
min^{-1}	Nm		Nm						kg	
6.1	304600	244.80	245660							
6.8	270300	217.21	245660							
7.7	241100	193.79	245660							
8.5	218500	175.57	245660							
9.4	197100	158.42	245660							
10	183700	147.64	245660	**P3PH**	**072e**	**DM**	**DRN**	**315H4**	1150	
11	162600	130.72	245660	**P3PS**	**072e**	**DM**	**DRN**	**315H4**	1150	248
13	141300	113.57	245660	**P3PL**	**072e**	**DM**	**DRN**	**315H4**	1150	
15	123900	99.59	245660	**P3PV**	**072e**	**DM**	**DRN**	**315H4**	1150	
17	108300	87.03	245660							
19	96600	77.63	245660							
22	84700	68.07	245660							
24	76000	61.07	245660							
28	66500	53.48	245660							
8.4	221200	177.75	185660							
9.3	199600	160.39	185660							
9.9	186700	150.09	185660							
11	163200	131.16	185660							
13	142300	114.35	185660	**P3PH**	**062e**	**DM**	**DRN**	**315H4**	1150	
15	124300	99.93	185660	**P3PS**	**062e**	**DM**	**DRN**	**315H4**	1150	244
17	108600	87.32	185660	**P3PL**	**062e**	**DM**	**DRN**	**315H4**	1150	
19	97200	78.16	185660	**P3PV**	**062e**	**DM**	**DRN**	**315H4**	1150	
22	85000	68.30	185660							
24	76000	61.13	185660							
28	66400	53.42	185660							
13	142300	114.35	124060							
15	124300	99.93	124060							
17	108600	87.32	124060	**P3PH**	**052e**	**DM**	**DRN**	**315H4**	2010	
19	97200	78.16	124060	**P3PS**	**052e**	**DM**	**DRN**	**315H4**	2020	240
22	85000	68.30	124060	**P3PL**	**052e**	**DM**	**DRN**	**315H4**	2010	
24	76000	61.13	124060	**P3PV**	**052e**	**DM**	**DRN**	**315H4**	1930	
28	66400	53.42	124060							

31991203/EN – 08/2025

P_m = 200 kW

n_2	M_a	i_{ex}	M_{N2}						m	
min^{-1}	Nm		Nm						kg	
38	49300	39.23	124060							
44	42700	34.04	124060							
49	37900	30.21	124060	**P2PH**	**052e**	**DM**	**DRN**	**315H4**	1930	
55	34200	27.26	124060	**P2PS**	**052e**	**DM**	**DRN**	**315H4**	1940	238
65	28900	23.01	124060	**P2PL**	**052e**	**DM**	**DRN**	**315H4**	1930	
74	25200	20.11	124060	**P2PV**	**052e**	**DM**	**DRN**	**315H4**	1850	
83	22600	18.00	124060							
95	19700	15.73	124060							
38	49300	39.23	100170							
44	42700	34.04	100170							
49	37900	30.21	100170	**P2PH**	**042e**	**DM**	**DRN**	**315H4**	1810	
55	34200	27.26	100170	**P2PS**	**042e**	**DM**	**DRN**	**315H4**	1810	234
65	28900	23.01	100170	**P2PL**	**042e**	**DM**	**DRN**	**315H4**	1800	
74	25200	20.11	100170	**P2PV**	**042e**	**DM**	**DRN**	**315H4**	1750	
83	22600	18.00	100170							
95	19700	15.73	100170							
38	49300	39.23	69620							
44	42700	34.04	69620							
49	37900	30.21	69620	**P2PH**	**032e**	**DM**	**DRN**	**315H4**	1660	
55	34200	27.26	69620	**P2PS**	**032e**	**DM**	**DRN**	**315H4**	1630	230
65	28900	23.01	69620	**P2PL**	**032e**	**DM**	**DRN**	**315H4**	1630	
74	25200	20.11	69620	**P2PV**	**032e**	**DM**	**DRN**	**315H4**	1600	
83	22600	18.00	69620							
95	19700	15.73	69620							

31991203/EN – 08/2025

10.2 P2..e DMF DRN.. and P3..e DMF DRN.. planetary gearmotors

P_m = 5.5 kW

n_2	M_a	i_{ex}	M_{N2}						m	
min^{-1}	Nm		Nm						kg	
4.4	11500	332.32	36810	**P3PH**	**012e**	**DMF**	**DRN**	**132S4**	390	260
5.1	10000	288.36	36810	**P3PS**	**012e**	**DMF**	**DRN**	**132S4**	380	
				P3PL	**012e**	**DMF**	**DRN**	**132S4**	375	
				P3PV	**012e**	**DMF**	**DRN**	**132S4**	360	
4.4	11500	331.02	24830	**P3PH**	**002e**	**DMF**	**DRN**	**132S4**	320	256
5.1	9930	284.95	24830	**P3PS**	**002e**	**DMF**	**DRN**	**132S4**	310	
5.8	8770	251.44	24830	**P3PL**	**002e**	**DMF**	**DRN**	**132S4**	310	
6.7	7650	219.39	24830	**P3PV**	**002e**	**DMF**	**DRN**	**132S4**	295	
7.5	6750	193.59	24830							

P_m = 7.5 kW

n_2	M_a	i_{ex}	M_{N2}						m	
min^{-1}	Nm		Nm						kg	
4.4	15600	331.02	51190	**P3PH**	**022e**	**DMF**	**DRN**	**132M4**	510	264
5.1	13500	287.23	51190	**P3PS**	**022e**	**DMF**	**DRN**	**132M4**	500	
				P3PL	**022e**	**DMF**	**DRN**	**132M4**	500	
				P3PV	**022e**	**DMF**	**DRN**	**132M4**	480	
4.4	15700	332.32	36810	**P3PH**	**012e**	**DMF**	**DRN**	**132M4**	405	260
5.1	13600	288.36	36810	**P3PS**	**012e**	**DMF**	**DRN**	**132M4**	395	
5.9	11800	250.21	36810	**P3PL**	**012e**	**DMF**	**DRN**	**132M4**	390	
6.6	10500	222.01	36810	**P3PV**	**012e**	**DMF**	**DRN**	**132M4**	375	
7.5	9320	197.00	36810							
4.4	15600	331.02	24830	**P3PH**	**002e**	**DMF**	**DRN**	**132M4**	335	256
5.2	13400	284.95	24830	**P3PS**	**002e**	**DMF**	**DRN**	**132M4**	325	
5.8	11900	251.44	24830	**P3PL**	**002e**	**DMF**	**DRN**	**132M4**	325	
6.7	10300	219.39	24830	**P3PV**	**002e**	**DMF**	**DRN**	**132M4**	310	
7.6	9160	193.59	24830							
8.9	7790	164.72	24830							
10	6910	146.16	24830							

P_m = 9.2 kW

n_2	M_a	i_{ex}	M_{N2}						m	
min^{-1}	Nm		Nm						kg	
4.4	19100	331.02	51190	**P3PH**	**022e**	**DMF**	**DRN**	**132L4**	520	264
5.1	16600	287.23	51190	**P3PS**	**022e**	**DMF**	**DRN**	**132L4**	510	
6.0	14300	247.25	51190	**P3PL**	**022e**	**DMF**	**DRN**	**132L4**	510	
				P3PV	**022e**	**DMF**	**DRN**	**132L4**	485	
4.4	19200	332.32	36810	**P3PH**	**012e**	**DMF**	**DRN**	**132L4**	415	260
5.1	16700	288.36	36810	**P3PS**	**012e**	**DMF**	**DRN**	**132L4**	405	
5.9	14500	250.21	36810	**P3PL**	**012e**	**DMF**	**DRN**	**132L4**	400	
6.6	12800	222.01	36810	**P3PV**	**012e**	**DMF**	**DRN**	**132L4**	380	
7.5	11400	197.00	36810							
8.7	9800	169.15	36810							
4.4	19100	331.02	24830	**P3PH**	**002e**	**DMF**	**DRN**	**132L4**	340	256
5.2	16500	284.95	24830	**P3PS**	**002e**	**DMF**	**DRN**	**132L4**	335	
5.8	14500	251.44	24830	**P3PL**	**002e**	**DMF**	**DRN**	**132L4**	330	
6.7	12700	219.39	24830	**P3PV**	**002e**	**DMF**	**DRN**	**132L4**	320	
7.6	11200	193.59	24830							
8.9	9550	164.72	24830							
10	8470	146.16	24830							
12	7380	127.35	24830							
13	6450	111.35	24830							

31991203/EN – 08/2025

P_m = 11.0 kW

n_2	M_a	i_{ex}	M_{N2}						m	
min^{-1}	Nm		Nm						kg	
4.4	22900	332.32	69620	**P3PH**	**032e**	**DMF**	**DRN**	**160M4**	670	268
5.1	19900	288.36	69620	**P3PS**	**032e**	**DMF**	**DRN**	**160M4**	650	
				P3PL	**032e**	**DMF**	**DRN**	**160M4**	640	
				P3PV	**032e**	**DMF**	**DRN**	**160M4**	620	
4.5	22900	331.02	51190							
5.1	19800	287.23	51190	**P3PH**	**022e**	**DMF**	**DRN**	**160M4**	550	264
6.0	17100	247.25	51190	**P3PS**	**022e**	**DMF**	**DRN**	**160M4**	540	
6.7	15100	219.39	51190	**P3PL**	**022e**	**DMF**	**DRN**	**160M4**	540	
7.6	13300	193.59	51190	**P3PV**	**022e**	**DMF**	**DRN**	**160M4**	520	
4.4	22900	332.32	36810							
5.1	19900	288.36	36810							
5.9	17300	250.21	36810	**P3PH**	**012e**	**DMF**	**DRN**	**160M4**	450	
6.6	15300	222.01	36810	**P3PS**	**012e**	**DMF**	**DRN**	**160M4**	435	260
7.5	13600	197.00	36810	**P3PL**	**012e**	**DMF**	**DRN**	**160M4**	435	
8.7	11700	169.15	36810	**P3PV**	**012e**	**DMF**	**DRN**	**160M4**	415	
9.8	10300	150.09	36810							
4.5	22900	331.02	24830							
5.2	19700	284.95	24830							
5.9	17300	251.44	24830							
6.7	15100	219.39	24830	**P3PH**	**002e**	**DMF**	**DRN**	**160M4**	375	
7.6	13300	193.59	24830	**P3PS**	**002e**	**DMF**	**DRN**	**160M4**	370	256
8.9	11300	164.72	24830	**P3PL**	**002e**	**DMF**	**DRN**	**160M4**	365	
10	10100	146.16	24830	**P3PV**	**002e**	**DMF**	**DRN**	**160M4**	350	
12	8810	127.35	24830							
13	7700	111.35	24830							
15	6710	97.03	24830							
38	2730	39.08	24830	**P2PH**	**002e**	**DMF**	**DRN**	**160M4**	345	254
				P2PS	**002e**	**DMF**	**DRN**	**160M4**	340	
				P2PL	**002e**	**DMF**	**DRN**	**160M4**	335	
				P2PV	**002e**	**DMF**	**DRN**	**160M4**	320	

P_m = 15.0 kW

n_2	M_a	i_{ex}	M_{N2}						m	
min^{-1}	Nm		Nm						kg	
4.4	31300	332.32	69620	**P3PH**	**032e**	**DMF**	**DRN**	**160L4**	690	268
5.1	27100	288.36	69620	**P3PS**	**032e**	**DMF**	**DRN**	**160L4**	660	
5.9	23500	250.21	69620	**P3PL**	**032e**	**DMF**	**DRN**	**160L4**	660	
6.6	20900	222.01	69620	**P3PV**	**032e**	**DMF**	**DRN**	**160L4**	630	
7.5	18500	197.00	69620							
4.5	31200	331.02	51190							
5.1	27000	287.23	51190							
6.0	23300	247.25	51190	**P3PH**	**022e**	**DMF**	**DRN**	**160L4**	570	
6.7	20600	219.39	51190	**P3PS**	**022e**	**DMF**	**DRN**	**160L4**	560	264
7.6	18200	193.59	51190	**P3PL**	**022e**	**DMF**	**DRN**	**160L4**	560	
8.4	16400	174.68	51190	**P3PV**	**022e**	**DMF**	**DRN**	**160L4**	530	
9.4	14800	156.99	51190							
10	13500	143.53	51190							
4.4	31300	332.32	36810							
5.1	27100	288.36	36810							
5.9	23500	250.21	36810							
6.6	20900	222.01	36810	**P3PH**	**012e**	**DMF**	**DRN**	**160L4**	465	
7.5	18500	197.00	36810	**P3PS**	**012e**	**DMF**	**DRN**	**160L4**	450	260
8.7	15900	169.15	36810	**P3PL**	**012e**	**DMF**	**DRN**	**160L4**	450	
9.8	14100	150.09	36810	**P3PV**	**012e**	**DMF**	**DRN**	**160L4**	430	
11	12300	131.16	36810							
13	10700	114.35	36810							
15	9420	99.93	36810							
38	3730	39.23	36810	**P2PH**	**012e**	**DMF**	**DRN**	**160L4**	445	258
				P2PS	**012e**	**DMF**	**DRN**	**160L4**	435	
				P2PL	**012e**	**DMF**	**DRN**	**160L4**	430	
				P2PV	**012e**	**DMF**	**DRN**	**160L4**	410	

31991203/EN – 08/2025

P_m = 15.0 kW

n_2	M_a	i_{ex}	M_{N2}						m	
min^{-1}	Nm		Nm						kg	
4.5	31200	331.02	24830							
5.2	26800	284.95	24830							
5.9	23700	251.44	24830							
6.7	20600	219.39	24830							
7.6	18200	193.59	24830							
8.9	15500	164.72	24830	**P3PH**	**002e**	**DMF**	**DRN**	**160L4**	390	
10	13700	146.16	24830	**P3PS**	**002e**	**DMF**	**DRN**	**160L4**	385	256
12	12000	127.35	24830	**P3PL**	**002e**	**DMF**	**DRN**	**160L4**	380	
13	10400	111.35	24830	**P3PV**	**002e**	**DMF**	**DRN**	**160L4**	365	
15	9140	97.03	24830							
17	7990	84.79	24830							
19	7140	75.77	24830							
22	6250	66.32	24830							
38	3720	39.08	24830	**P2PH**	**002e**	**DMF**	**DRN**	**160L4**	360	
44	3200	33.64	24830	**P2PS**	**002e**	**DMF**	**DRN**	**160L4**	355	254
50	2820	29.68	24830	**P2PL**	**002e**	**DMF**	**DRN**	**160L4**	350	
55	2540	26.68	24830	**P2PV**	**002e**	**DMF**	**DRN**	**160L4**	335	

P_m = 18.5 kW

n_2	M_a	i_{ex}	M_{N2}						m	
min^{-1}	Nm		Nm						kg	
4.5	38500	332.32	124060	**P3PH**	**052e**	**DMF**	**DRN**	**180M4**	1100	
5.1	33400	288.36	124060	**P3PS**	**052e**	**DMF**	**DRN**	**180M4**	1100	276
				P3PL	**052e**	**DMF**	**DRN**	**180M4**	1090	
				P3PV	**052e**	**DMF**	**DRN**	**180M4**	1010	
4.5	38500	332.32	100170	**P3PH**	**042e**	**DMF**	**DRN**	**180M4**	940	
5.1	33400	288.36	100170	**P3PS**	**042e**	**DMF**	**DRN**	**180M4**	930	272
5.9	29000	250.21	100170	**P3PL**	**042e**	**DMF**	**DRN**	**180M4**	920	
6.7	25700	222.01	100170	**P3PV**	**042e**	**DMF**	**DRN**	**180M4**	870	
4.5	38500	332.32	69620							
5.1	33400	288.36	69620							
5.9	29000	250.21	69620	**P3PH**	**032e**	**DMF**	**DRN**	**180M4**	710	
6.7	25700	222.01	69620	**P3PS**	**032e**	**DMF**	**DRN**	**180M4**	690	268
7.5	22800	197.00	69620	**P3PL**	**032e**	**DMF**	**DRN**	**180M4**	680	
8.3	20600	177.75	69620	**P3PV**	**032e**	**DMF**	**DRN**	**180M4**	650	
9.2	18600	160.39	69620							
9.8	17400	150.09	69620							
4.5	38300	331.02	51190							
5.2	33300	287.23	51190							
6.0	28600	247.25	51190							
6.7	25400	219.39	51190	**P3PH**	**022e**	**DMF**	**DRN**	**180M4**	590	
7.6	22400	193.59	51190	**P3PS**	**022e**	**DMF**	**DRN**	**180M4**	580	264
8.5	20200	174.68	51190	**P3PL**	**022e**	**DMF**	**DRN**	**180M4**	580	
9.4	18200	156.99	51190	**P3PV**	**022e**	**DMF**	**DRN**	**180M4**	560	
10	16600	143.53	51190							
12	14700	127.35	51190							
13	12900	111.35	51190							
4.5	38500	332.32	36810							
5.1	33400	288.36	36810							
5.9	29000	250.21	36810							
6.7	25700	222.01	36810							
7.5	22800	197.00	36810	**P3PH**	**012e**	**DMF**	**DRN**	**180M4**	485	
8.7	19600	169.15	36810	**P3PS**	**012e**	**DMF**	**DRN**	**180M4**	475	260
9.8	17400	150.09	36810	**P3PL**	**012e**	**DMF**	**DRN**	**180M4**	470	
11	15200	131.16	36810	**P3PV**	**012e**	**DMF**	**DRN**	**180M4**	455	
13	13200	114.35	36810							
15	11500	99.93	36810							
17	10100	87.32	36810							
38	4590	39.23	36810	**P2PH**	**012e**	**DMF**	**DRN**	**180M4**	465	
43	3980	34.04	36810	**P2PS**	**012e**	**DMF**	**DRN**	**180M4**	455	258
				P2PL	**012e**	**DMF**	**DRN**	**180M4**	450	
				P2PV	**012e**	**DMF**	**DRN**	**180M4**	435	

31991203/EN – 08/2025

P_m = 18.5 kW

n_2	M_a	i_{ex}	M_{N2}						m	
min^{-1}	Nm		Nm						kg	
5.9	29100	251.44	24830							
6.7	25400	219.39	24830							
7.6	22400	193.59	24830							
9.0	19100	164.72	24830							
10	16900	146.16	24830	**P3PH**	**002e**	**DMF**	**DRN**	**180M4**	415	
12	14700	127.35	24830	**P3PS**	**002e**	**DMF**	**DRN**	**180M4**	405	256
13	12900	111.35	24830	**P3PL**	**002e**	**DMF**	**DRN**	**180M4**	405	
15	11200	97.03	24830	**P3PV**	**002e**	**DMF**	**DRN**	**180M4**	390	
17	9830	84.79	24830							
20	8780	75.77	24830							
22	7690	66.32	24830							
25	6870	59.26	24830							
38	4570	39.08	24830	**P2PH**	**002e**	**DMF**	**DRN**	**180M4**	385	
44	3940	33.64	24830	**P2PS**	**002e**	**DMF**	**DRN**	**180M4**	375	254
50	3470	29.68	24830	**P2PL**	**002e**	**DMF**	**DRN**	**180M4**	375	
55	3120	26.68	24830	**P2PV**	**002e**	**DMF**	**DRN**	**180M4**	360	
66	2620	22.41	24830							

P_m = 22 kW

n_2	M_a	i_{ex}	M_{N2}						m	
min^{-1}	Nm		Nm						kg	
4.4	45800	332.32	124060	**P3PH**	**052e**	**DMF**	**DRN**	**180L4**	1110	
5.1	39700	288.36	124060	**P3PS**	**052e**	**DMF**	**DRN**	**180L4**	1120	276
5.9	34500	250.21	124060	**P3PL**	**052e**	**DMF**	**DRN**	**180L4**	1110	
				P3PV	**052e**	**DMF**	**DRN**	**180L4**	1030	
4.4	45800	332.32	100170							
5.1	39700	288.36	100170	**P3PH**	**042e**	**DMF**	**DRN**	**180L4**	950	
5.9	34500	250.21	100170	**P3PS**	**042e**	**DMF**	**DRN**	**180L4**	940	272
6.7	30600	222.01	100170	**P3PL**	**042e**	**DMF**	**DRN**	**180L4**	940	
7.5	27100	197.00	100170	**P3PV**	**042e**	**DMF**	**DRN**	**180L4**	880	
4.4	45800	332.32	69620							
5.1	39700	288.36	69620							
5.9	34500	250.21	69620							
6.7	30600	222.01	69620	**P3PH**	**032e**	**DMF**	**DRN**	**180L4**	730	
7.5	27100	197.00	69620	**P3PS**	**032e**	**DMF**	**DRN**	**180L4**	700	268
8.3	24500	177.75	69620	**P3PL**	**032e**	**DMF**	**DRN**	**180L4**	700	
9.2	22100	160.39	69620	**P3PV**	**032e**	**DMF**	**DRN**	**180L4**	670	
9.8	20700	150.09	69620							
11	18100	131.16	69620							
4.5	45600	331.02	51190							
5.1	39600	287.23	51190							
6.0	34100	247.25	51190							
6.7	30200	219.39	51190							
7.6	26700	193.59	51190	**P3PH**	**022e**	**DMF**	**DRN**	**180L4**	610	
8.5	24100	174.68	51190	**P3PS**	**022e**	**DMF**	**DRN**	**180L4**	600	264
9.4	21600	156.99	51190	**P3PL**	**022e**	**DMF**	**DRN**	**180L4**	590	
10	19800	143.53	51190	**P3PV**	**022e**	**DMF**	**DRN**	**180L4**	570	
12	17500	127.35	51190							
13	15300	111.35	51190							
15	13300	97.03	51190							
38	5460	39.23	51190	**P2PH**	**022e**	**DMF**	**DRN**	**180L4**	620	
				P2PS	**022e**	**DMF**	**DRN**	**180L4**	610	262
				P2PL	**022e**	**DMF**	**DRN**	**180L4**	610	
				P2PV	**022e**	**DMF**	**DRN**	**180L4**	590	

31991203/EN – 08/2025

P_m = 22 kW

n_2	M_a	i_{ex}	M_{N2}						m	
min^{-1}	Nm		Nm						kg	
4.4	45800	332.32	36810							
5.1	39700	288.36	36810							
5.9	34500	250.21	36810							
6.7	30600	222.01	36810							
7.5	27100	197.00	36810	**P3PH**	**012e**	**DMF**	**DRN**	**180L4**	500	
8.7	23300	169.15	36810	**P3PS**	**012e**	**DMF**	**DRN**	**180L4**	490	260
9.8	20700	150.09	36810	**P3PL**	**012e**	**DMF**	**DRN**	**180L4**	485	
11	18100	131.16	36810	**P3PV**	**012e**	**DMF**	**DRN**	**180L4**	470	
13	15700	114.35	36810							
15	13700	99.93	36810							
17	12000	87.32	36810							
19	10700	78.16	36810							
22	9420	68.30	36810							
38	5460	39.23	36810	**P2PH**	**012e**	**DMF**	**DRN**	**180L4**	485	
43	4740	34.04	36810	**P2PS**	**012e**	**DMF**	**DRN**	**180L4**	470	258
49	4210	30.21	36810	**P2PL**	**012e**	**DMF**	**DRN**	**180L4**	470	
54	3790	27.26	36810	**P2PV**	**012e**	**DMF**	**DRN**	**180L4**	450	
6.7	30200	219.39	24830							
7.6	26700	193.59	24830							
9.0	22700	164.72	24830							
10	20100	146.16	24830							
12	17500	127.35	24830	**P3PH**	**002e**	**DMF**	**DRN**	**180L4**	430	
13	15300	111.35	24830	**P3PS**	**002e**	**DMF**	**DRN**	**180L4**	420	256
15	13300	97.03	24830	**P3PL**	**002e**	**DMF**	**DRN**	**180L4**	420	
17	11700	84.79	24830	**P3PV**	**002e**	**DMF**	**DRN**	**180L4**	405	
19	10400	75.77	24830							
22	9150	66.32	24830							
25	8170	59.26	24830							
29	7130	51.73	24830							
38	5440	39.08	24830							
44	4680	33.64	24830	**P2PH**	**002e**	**DMF**	**DRN**	**180L4**	400	
50	4130	29.68	24830	**P2PS**	**002e**	**DMF**	**DRN**	**180L4**	390	254
55	3710	26.68	24830	**P2PL**	**002e**	**DMF**	**DRN**	**180L4**	390	
66	3120	22.41	24830	**P2PV**	**002e**	**DMF**	**DRN**	**180L4**	375	
76	2720	19.53	24830							

P_m = 30 kW

n_2	M_a	i_{ex}	M_{N2}						m	
min^{-1}	Nm		Nm						kg	
4.6	60600	322.69	245660							
5.2	52900	282.12	245660							
6.0	45900	244.80	245660							
6.8	40700	217.21	245660							
7.6	36300	193.79	245660							
8.4	32900	175.57	245660							
9.3	29700	158.42	245660	**P3PH**	**072e**	**DMF**	**DRN**	**200L4**	295	
10	27700	147.64	245660	**P3PS**	**072e**	**DMF**	**DRN**	**200L4**	295	280
11	24500	130.72	245660	**P3PL**	**072e**	**DMF**	**DRN**	**200L4**	295	
13	21300	113.57	245660	**P3PV**	**072e**	**DMF**	**DRN**	**200L4**	295	
15	18700	99.59	245660							
17	16300	87.03	245660							
19	14500	77.63	245660							
22	12700	68.07	245660							
24	11400	61.07	245660							
28	10000	53.48	245660							
4.5	62400	332.32	185660	**P3PH**	**062e**	**DMF**	**DRN**	**200L4**	295	
5.1	54100	288.36	185660	**P3PS**	**062e**	**DMF**	**DRN**	**200L4**	295	278
5.9	46900	250.21	185660	**P3PL**	**062e**	**DMF**	**DRN**	**200L4**	295	
				P3PV	**062e**	**DMF**	**DRN**	**200L4**	295	
4.5	62400	332.32	124060							
5.1	54100	288.36	124060	**P3PH**	**052e**	**DMF**	**DRN**	**200L4**	1220	
5.9	46900	250.21	124060	**P3PS**	**052e**	**DMF**	**DRN**	**200L4**	1230	276
6.7	41600	222.01	124060	**P3PL**	**052e**	**DMF**	**DRN**	**200L4**	1220	
7.5	36900	197.00	124060	**P3PV**	**052e**	**DMF**	**DRN**	**200L4**	1140	
8.3	33300	177.75	124060							

31991203/EN – 08/2025

P_m = 30 kW											
n_2	M_a	i_{ex}	M_{N2}							m	
min^{-1}	Nm		Nm							kg	
38	7440	39.23	124060	**P2PH**	**052e**	**DMF**	**DRN**	**200L4**	1170		274
				P2PS	**052e**	**DMF**	**DRN**	**200L4**	1170		
				P2PL	**052e**	**DMF**	**DRN**	**200L4**	1160		
				P2PV	**052e**	**DMF**	**DRN**	**200L4**	1080		
4.5	62400	332.32	100170								272
5.1	54100	288.36	100170								
5.9	46900	250.21	100170	**P3PH**	**042e**	**DMF**	**DRN**	**200L4**	1060		
6.7	41600	222.01	100170	**P3PS**	**042e**	**DMF**	**DRN**	**200L4**	1050		
7.5	36900	197.00	100170	**P3PL**	**042e**	**DMF**	**DRN**	**200L4**	1040		
8.3	33300	177.75	100170	**P3PV**	**042e**	**DMF**	**DRN**	**200L4**	990		
9.2	30100	160.39	100170								
9.9	28100	150.09	100170								
38	7440	39.23	100170	**P2PH**	**042e**	**DMF**	**DRN**	**200L4**	1030		270
				P2PS	**042e**	**DMF**	**DRN**	**200L4**	1030		
				P2PL	**042e**	**DMF**	**DRN**	**200L4**	1020		
				P2PV	**042e**	**DMF**	**DRN**	**200L4**	960		
4.5	62400	332.32	69620								268
5.1	54100	288.36	69620								
5.9	46900	250.21	69620								
6.7	41600	222.01	69620	**P3PH**	**032e**	**DMF**	**DRN**	**200L4**	830		
7.5	36900	197.00	69620	**P3PS**	**032e**	**DMF**	**DRN**	**200L4**	810		
8.3	33300	177.75	69620	**P3PL**	**032e**	**DMF**	**DRN**	**200L4**	810		
9.2	30100	160.39	69620	**P3PV**	**032e**	**DMF**	**DRN**	**200L4**	780		
9.9	28100	150.09	69620								
11	24600	131.16	69620								
13	21400	114.35	69620								
15	18700	99.93	69620								
38	7440	39.23	69620	**P2PH**	**032e**	**DMF**	**DRN**	**200L4**	870		266
				P2PS	**032e**	**DMF**	**DRN**	**200L4**	840		
				P2PL	**032e**	**DMF**	**DRN**	**200L4**	840		
				P2PV	**032e**	**DMF**	**DRN**	**200L4**	810		
4.5	62100	331.02	51190								264
5.2	53900	287.23	51190								
6.0	46400	247.25	51190								
6.8	41200	219.39	51190								
7.6	36300	193.59	51190	**P3PH**	**022e**	**DMF**	**DRN**	**200L4**	720		
8.5	32800	174.68	51190	**P3PS**	**022e**	**DMF**	**DRN**	**200L4**	710		
9.4	29400	156.99	51190	**P3PL**	**022e**	**DMF**	**DRN**	**200L4**	700		
10	26900	143.53	51190	**P3PV**	**022e**	**DMF**	**DRN**	**200L4**	680		
12	23900	127.35	51190								
13	20900	111.35	51190								
15	18200	97.03	51190								
17	15900	84.79	51190								
20	14200	75.68	51190								
38	7440	39.23	51190	**P2PH**	**022e**	**DMF**	**DRN**	**200L4**	730		262
43	6450	34.04	51190	**P2PS**	**022e**	**DMF**	**DRN**	**200L4**	720		
49	5730	30.21	51190	**P2PL**	**022e**	**DMF**	**DRN**	**200L4**	720		
54	5170	27.26	51190	**P2PV**	**022e**	**DMF**	**DRN**	**200L4**	690		
6.7	41600	222.01	36810								260
7.5	36900	197.00	36810								
8.8	31700	169.15	36810								
9.9	28100	150.09	36810								
11	24600	131.16	36810	**P3PH**	**012e**	**DMF**	**DRN**	**200L4**	610		
13	21400	114.35	36810	**P3PS**	**012e**	**DMF**	**DRN**	**200L4**	600		
15	18700	99.93	36810	**P3PL**	**012e**	**DMF**	**DRN**	**200L4**	590		
17	16400	87.32	36810	**P3PV**	**012e**	**DMF**	**DRN**	**200L4**	580		
19	14600	78.16	36810								
22	12800	68.30	36810								
24	11400	61.13	36810								
28	10000	53.42	36810								
38	7440	39.23	36810								258
43	6450	34.04	36810	**P2PH**	**012e**	**DMF**	**DRN**	**200L4**	590		
49	5730	30.21	36810	**P2PS**	**012e**	**DMF**	**DRN**	**200L4**	580		
54	5170	27.26	36810	**P2PL**	**012e**	**DMF**	**DRN**	**200L4**	570		
64	4360	23.01	36810	**P2PV**	**012e**	**DMF**	**DRN**	**200L4**	560		
74	3810	20.11	36810								

31991203/EN – 08/2025

P_m = 30 kW

n_2	M_a	i_{ex}	M_{N2}						m	
min^{-1}	Nm		Nm						kg	
9.0	30900	164.72	24830							
10	27400	146.16	24830							
12	23900	127.35	24830							
13	20900	111.35	24830	**P3PH**	**002e**	**DMF**	**DRN**	**200L4**	540	
15	18200	97.03	24830	**P3PS**	**002e**	**DMF**	**DRN**	**200L4**	530	256
17	15900	84.79	24830	**P3PL**	**002e**	**DMF**	**DRN**	**200L4**	530	
20	14200	75.77	24830	**P3PV**	**002e**	**DMF**	**DRN**	**200L4**	510	
22	12400	66.32	24830							
25	11100	59.26	24830							
29	9710	51.73	24830							
38	7410	39.08	24830							
44	6380	33.64	24830							
50	5630	29.68	24830	**P2PH**	**002e**	**DMF**	**DRN**	**200L4**	510	
55	5060	26.68	24830	**P2PS**	**002e**	**DMF**	**DRN**	**200L4**	500	254
66	4250	22.41	24830	**P2PL**	**002e**	**DMF**	**DRN**	**200L4**	495	
76	3700	19.53	24830	**P2PV**	**002e**	**DMF**	**DRN**	**200L4**	485	
85	3310	17.45	24830							
97	2880	15.23	24830							

P_m = 37 kW

n_2	M_a	i_{ex}	M_{N2}						m	
min^{-1}	Nm		Nm						kg	
4.6	74600	322.69	245660	**P3PH**	**072e**	**DMF**	**DRN**	**225S4**	325	
5.2	65200	282.12	245660	**P3PS**	**072e**	**DMF**	**DRN**	**225S4**	325	280
				P3PL	**072e**	**DMF**	**DRN**	**225S4**	325	
				P3PV	**072e**	**DMF**	**DRN**	**225S4**	325	
4.5	76800	332.32	185660	**P3PH**	**062e**	**DMF**	**DRN**	**225S4**	325	
5.1	66700	288.36	185660	**P3PS**	**062e**	**DMF**	**DRN**	**225S4**	325	278
5.9	57800	250.21	185660	**P3PL**	**062e**	**DMF**	**DRN**	**225S4**	325	
6.7	51300	222.01	185660	**P3PV**	**062e**	**DMF**	**DRN**	**225S4**	325	
4.5	76800	332.32	124060							
5.1	66700	288.36	124060							
5.9	57800	250.21	124060	**P3PH**	**052e**	**DMF**	**DRN**	**225S4**	1250	
6.7	51300	222.01	124060	**P3PS**	**052e**	**DMF**	**DRN**	**225S4**	1260	276
7.5	45500	197.00	124060	**P3PL**	**052e**	**DMF**	**DRN**	**225S4**	1250	
8.3	41100	177.75	124060	**P3PV**	**052e**	**DMF**	**DRN**	**225S4**	1170	
9.2	37100	160.39	124060							
9.9	34700	150.09	124060							
38	9160	39.23	124060	**P2PH**	**052e**	**DMF**	**DRN**	**225S4**	1200	
				P2PS	**052e**	**DMF**	**DRN**	**225S4**	1200	274
				P2PL	**052e**	**DMF**	**DRN**	**225S4**	1200	
				P2PV	**052e**	**DMF**	**DRN**	**225S4**	1110	
4.5	76800	332.32	100170							
5.1	66700	288.36	100170							
5.9	57800	250.21	100170							
6.7	51300	222.01	100170	**P3PH**	**042e**	**DMF**	**DRN**	**225S4**	1090	
7.5	45500	197.00	100170	**P3PS**	**042e**	**DMF**	**DRN**	**225S4**	1080	272
8.3	41100	177.75	100170	**P3PL**	**042e**	**DMF**	**DRN**	**225S4**	1080	
9.2	37100	160.39	100170	**P3PV**	**042e**	**DMF**	**DRN**	**225S4**	1020	
9.9	34700	150.09	100170							
11	30300	131.16	100170							
13	26400	114.35	100170							
38	9160	39.23	100170	**P2PH**	**042e**	**DMF**	**DRN**	**225S4**	1060	
				P2PS	**042e**	**DMF**	**DRN**	**225S4**	1060	270
				P2PL	**042e**	**DMF**	**DRN**	**225S4**	1050	
				P2PV	**042e**	**DMF**	**DRN**	**225S4**	990	

31991203/EN – 08/2025

P_m = 37 kW

n_2	M_a	i_{ex}	M_{N2}						m	
min^{-1}	Nm		Nm						kg	
4.5	76800	332.32	69620							
5.1	66700	288.36	69620							
5.9	57800	250.21	69620							
6.7	51300	222.01	69620							
7.5	45500	197.00	69620	**P3PH**	**032e**	**DMF**	**DRN**	**225S4**	870	
8.3	41100	177.75	69620	**P3PS**	**032e**	**DMF**	**DRN**	**225S4**	840	268
9.2	37100	160.39	69620	**P3PL**	**032e**	**DMF**	**DRN**	**225S4**	840	
9.9	34700	150.09	69620	**P3PV**	**032e**	**DMF**	**DRN**	**225S4**	810	
11	30300	131.16	69620							
13	26400	114.35	69620							
15	23100	99.93	69620							
17	20200	87.32	69620							
19	18000	78.16	69620							
38	9160	39.23	69620	**P2PH**	**032e**	**DMF**	**DRN**	**225S4**	900	
44	7950	34.04	69620	**P2PS**	**032e**	**DMF**	**DRN**	**225S4**	870	266
49	7050	30.21	69620	**P2PL**	**032e**	**DMF**	**DRN**	**225S4**	870	
				P2PV	**032e**	**DMF**	**DRN**	**225S4**	840	
6.0	57100	247.25	51190							
6.8	50700	219.39	51190							
7.7	44700	193.59	51190							
8.5	40400	174.68	51190							
9.4	36300	156.99	51190							
10	33200	143.53	51190	**P3PH**	**022e**	**DMF**	**DRN**	**225S4**	750	
12	29400	127.35	51190	**P3PS**	**022e**	**DMF**	**DRN**	**225S4**	740	264
13	25700	111.35	51190	**P3PL**	**022e**	**DMF**	**DRN**	**225S4**	730	
15	22400	97.03	51190	**P3PV**	**022e**	**DMF**	**DRN**	**225S4**	710	
17	19600	84.79	51190							
20	17500	75.68	51190							
22	15200	66.13	51190							
25	13600	59.19	51190							
38	9160	39.23	51190							
44	7950	34.04	51190	**P2PH**	**022e**	**DMF**	**DRN**	**225S4**	760	
49	7050	30.21	51190	**P2PS**	**022e**	**DMF**	**DRN**	**225S4**	750	262
54	6360	27.26	51190	**P2PL**	**022e**	**DMF**	**DRN**	**225S4**	750	
64	5370	23.01	51190	**P2PV**	**022e**	**DMF**	**DRN**	**225S4**	730	
7.5	45500	197.00	36810							
8.8	39100	169.15	36810							
9.9	34700	150.09	36810							
11	30300	131.16	36810							
13	26400	114.35	36810	**P3PH**	**012e**	**DMF**	**DRN**	**225S4**	640	
15	23100	99.93	36810	**P3PS**	**012e**	**DMF**	**DRN**	**225S4**	630	260
17	20200	87.32	36810	**P3PL**	**012e**	**DMF**	**DRN**	**225S4**	630	
19	18000	78.16	36810	**P3PV**	**012e**	**DMF**	**DRN**	**225S4**	610	
22	15700	68.30	36810							
24	14100	61.13	36810							
28	12300	53.42	36810							
38	9160	39.23	36810							
44	7950	34.04	36810							
49	7050	30.21	36810	**P2PH**	**012e**	**DMF**	**DRN**	**225S4**	620	
54	6360	27.26	36810	**P2PS**	**012e**	**DMF**	**DRN**	**225S4**	610	258
64	5370	23.01	36810	**P2PL**	**012e**	**DMF**	**DRN**	**225S4**	610	
74	4690	20.11	36810	**P2PV**	**012e**	**DMF**	**DRN**	**225S4**	590	
82	4200	18.00*	36810							
12	29400	127.35	24830							
13	25700	111.35	24830							
15	22400	97.03	24830	**P3PH**	**002e**	**DMF**	**DRN**	**225S4**	570	
17	19600	84.79	24830	**P3PS**	**002e**	**DMF**	**DRN**	**225S4**	560	256
20	17500	75.77	24830	**P3PL**	**002e**	**DMF**	**DRN**	**225S4**	560	
22	15300	66.32	24830	**P3PV**	**002e**	**DMF**	**DRN**	**225S4**	540	
25	13700	59.26	24830							
29	11900	51.73	24830							

31991203/EN – 08/2025

P_m = 37 kW

n_2	M_a	i_{ex}	M_{N2}						m	
min^{-1}	Nm		Nm						kg	
38	9130	39.08	24830							
44	7860	33.64	24830							
50	6930	29.68	24830	**P2PH**	**002e**	**DMF**	**DRN**	**225S4**	540	254
56	6230	26.68	24830	**P2PS**	**002e**	**DMF**	**DRN**	**225S4**	530	
66	5230	22.41	24830	**P2PL**	**002e**	**DMF**	**DRN**	**225S4**	530	
76	4560	19.53	24830	**P2PV**	**002e**	**DMF**	**DRN**	**225S4**	510	
85	4070	17.45	24830							
97	3550	15.23	24830							

P_m = 45 kW

n_2	M_a	i_{ex}	M_{N2}						m	
min^{-1}	Nm		Nm						kg	
4.6	90700	322.69	245660	**P3PH**	**072e**	**DMF**	**DRN**	**225M4**	325	280
5.2	79300	282.12	245660	**P3PS**	**072e**	**DMF**	**DRN**	**225M4**	325	
6.0	68800	244.80	245660	**P3PL**	**072e**	**DMF**	**DRN**	**225M4**	325	
				P3PV	**072e**	**DMF**	**DRN**	**225M4**	325	
4.5	93400	332.32	185660							
5.1	81100	288.36	185660	**P3PH**	**062e**	**DMF**	**DRN**	**225M4**	325	278
5.9	70300	250.21	185660	**P3PS**	**062e**	**DMF**	**DRN**	**225M4**	325	
6.7	62400	222.01	185660	**P3PL**	**062e**	**DMF**	**DRN**	**225M4**	325	
7.5	55400	197.00	185660	**P3PV**	**062e**	**DMF**	**DRN**	**225M4**	325	
8.3	50000	177.75	185660							
4.5	93400	332.32	124060							
5.1	81100	288.36	124060							
5.9	70300	250.21	124060							
6.7	62400	222.01	124060	**P3PH**	**052e**	**DMF**	**DRN**	**225M4**	1250	276
7.5	55400	197.00	124060	**P3PS**	**052e**	**DMF**	**DRN**	**225M4**	1260	
8.3	50000	177.75	124060	**P3PL**	**052e**	**DMF**	**DRN**	**225M4**	1250	
9.2	45100	160.39	124060	**P3PV**	**052e**	**DMF**	**DRN**	**225M4**	1170	
9.9	42200	150.09	124060							
11	36900	131.16	124060							
13	32100	114.35	124060							
38	11100	39.23	124060	**P2PH**	**052e**	**DMF**	**DRN**	**225M4**	1200	274
44	9670	34.04	124060	**P2PS**	**052e**	**DMF**	**DRN**	**225M4**	1200	
49	8580	30.21	124060	**P2PL**	**052e**	**DMF**	**DRN**	**225M4**	1200	
				P2PV	**052e**	**DMF**	**DRN**	**225M4**	1110	
4.5	93400	332.32	100170							
5.1	81100	288.36	100170							
5.9	70300	250.21	100170							
6.7	62400	222.01	100170							
7.5	55400	197.00	100170	**P3PH**	**042e**	**DMF**	**DRN**	**225M4**	1090	272
8.3	50000	177.75	100170	**P3PS**	**042e**	**DMF**	**DRN**	**225M4**	1080	
9.2	45100	160.39	100170	**P3PL**	**042e**	**DMF**	**DRN**	**225M4**	1080	
9.9	42200	150.09	100170	**P3PV**	**042e**	**DMF**	**DRN**	**225M4**	1020	
11	36900	131.16	100170							
13	32100	114.35	100170							
15	28100	99.93	100170							
38	11100	39.23	100170	**P2PH**	**042e**	**DMF**	**DRN**	**225M4**	1060	270
44	9670	34.04	100170	**P2PS**	**042e**	**DMF**	**DRN**	**225M4**	1060	
				P2PL	**042e**	**DMF**	**DRN**	**225M4**	1050	
				P2PV	**042e**	**DMF**	**DRN**	**225M4**	990	
5.1	81100	288.36	69620							
5.9	70300	250.21	69620							
6.7	62400	222.01	69620							
7.5	55400	197.00	69620							
8.3	50000	177.75	69620							
9.2	45100	160.39	69620	**P3PH**	**032e**	**DMF**	**DRN**	**225M4**	870	268
9.9	42200	150.09	69620	**P3PS**	**032e**	**DMF**	**DRN**	**225M4**	840	
11	36900	131.16	69620	**P3PL**	**032e**	**DMF**	**DRN**	**225M4**	840	
13	32100	114.35	69620	**P3PV**	**032e**	**DMF**	**DRN**	**225M4**	810	
15	28100	99.93	69620							
17	24500	87.32	69620							
19	21900	78.16	69620							
22	19200	68.30	69620							

31991203/EN – 08/2025

P_m = 45 kW

n_2	M_a	i_{ex}	M_{N2}						m	
min^{-1}	Nm		Nm						kg	
38	11100	39.23	69620	**P2PH**	**032e**	**DMF**	**DRN**	**225M4**	900	266
44	9670	34.04	69620	**P2PS**	**032e**	**DMF**	**DRN**	**225M4**	870	
49	8580	30.21	69620	**P2PL**	**032e**	**DMF**	**DRN**	**225M4**	870	
54	7740	27.26	69620	**P2PV**	**032e**	**DMF**	**DRN**	**225M4**	840	
6.8	61700	219.39	51190							264
7.7	54400	193.59	51190							
8.5	49100	174.68	51190							
9.4	44100	156.99	51190							
10	40300	143.53	51190							
12	35800	127.35	51190	**P3PH**	**022e**	**DMF**	**DRN**	**225M4**	750	
13	31300	111.35	51190	**P3PS**	**022e**	**DMF**	**DRN**	**225M4**	740	
15	27200	97.03	51190	**P3PL**	**022e**	**DMF**	**DRN**	**225M4**	730	
17	23800	84.79	51190	**P3PV**	**022e**	**DMF**	**DRN**	**225M4**	710	
20	21200	75.68	51190							
22	18600	66.13	51190							
25	16600	59.19	51190							
29	14500	51.73	51190							
38	11100	39.23	51190							262
44	9670	34.04	51190	**P2PH**	**022e**	**DMF**	**DRN**	**225M4**	760	
49	8580	30.21	51190	**P2PS**	**022e**	**DMF**	**DRN**	**225M4**	750	
54	7740	27.26	51190	**P2PL**	**022e**	**DMF**	**DRN**	**225M4**	750	
64	6540	23.01	51190	**P2PV**	**022e**	**DMF**	**DRN**	**225M4**	730	
74	5710	20.11	51190							
9.9	42200	150.09	36810							260
11	36900	131.16	36810							
13	32100	114.35	36810							
15	28100	99.93	36810	**P3PH**	**012e**	**DMF**	**DRN**	**225M4**	640	
17	24500	87.32	36810	**P3PS**	**012e**	**DMF**	**DRN**	**225M4**	630	
19	21900	78.16	36810	**P3PL**	**012e**	**DMF**	**DRN**	**225M4**	630	
22	19200	68.30	36810	**P3PV**	**012e**	**DMF**	**DRN**	**225M4**	610	
24	17100	61.13	36810							
28	15000	53.42	36810							
38	11100	39.23	36810							258
44	9670	34.04	36810							
49	8580	30.21	36810	**P2PH**	**012e**	**DMF**	**DRN**	**225M4**	620	
54	7740	27.26	36810	**P2PS**	**012e**	**DMF**	**DRN**	**225M4**	610	
64	6540	23.01	36810	**P2PL**	**012e**	**DMF**	**DRN**	**225M4**	610	
74	5710	20.11	36810	**P2PV**	**012e**	**DMF**	**DRN**	**225M4**	590	
82	5110	18.00*	36810							
94	4470	15.73	36810							
15	27200	97.03	24830							256
17	23800	84.79	24830	**P3PH**	**002e**	**DMF**	**DRN**	**225M4**	570	
20	21300	75.77	24830	**P3PS**	**002e**	**DMF**	**DRN**	**225M4**	560	
22	18600	66.32	24830	**P3PL**	**002e**	**DMF**	**DRN**	**225M4**	560	
25	16600	59.26	24830	**P3PV**	**002e**	**DMF**	**DRN**	**225M4**	540	
29	14500	51.73	24830							
38	11100	39.08	24830							254
44	9560	33.64	24830							
50	8430	29.68	24830	**P2PH**	**002e**	**DMF**	**DRN**	**225M4**	540	
56	7580	26.68	24830	**P2PS**	**002e**	**DMF**	**DRN**	**225M4**	530	
66	6360	22.41	24830	**P2PL**	**002e**	**DMF**	**DRN**	**225M4**	530	
76	5540	19.53	24830	**P2PV**	**002e**	**DMF**	**DRN**	**225M4**	510	
85	4950	17.45	24830							
97	4320	15.23	24830							

P_m = 55 kW

n_2	M_a	i_{ex}	M_{N2}						m	
min^{-1}	Nm		Nm						kg	
4.6	110900	322.69	245660							280
5.2	97000	282.12	245660	**P3PH**	**072e**	**DMF**	**DRN**	**250M4**	475	
6.0	84100	244.80	245660	**P3PS**	**072e**	**DMF**	**DRN**	**250M4**	475	
6.8	74600	217.21	245660	**P3PL**	**072e**	**DMF**	**DRN**	**250M4**	475	
7.7	66600	193.79	245660	**P3PV**	**072e**	**DMF**	**DRN**	**250M4**	475	

31991203/EN – 08/2025

P_m = 55 kW

n_2	M_a	i_{ex}	M_{N2}						m	
min^{-1}	Nm		Nm						kg	
4.5	114200	332.32	185660							
5.1	99100	288.36	185660							
5.9	86000	250.21	185660	**P3PH**	**062e**	**DMF**	**DRN**	**250M4**	475	
6.7	76300	222.01	185660	**P3PS**	**062e**	**DMF**	**DRN**	**250M4**	475	278
7.5	67700	197.00	185660	**P3PL**	**062e**	**DMF**	**DRN**	**250M4**	475	
8.3	61100	177.75	185660	**P3PV**	**062e**	**DMF**	**DRN**	**250M4**	475	
9.2	55100	160.39	185660							
9.9	51600	150.09	185660							
4.5	114200	332.32	124060							
5.1	99100	288.36	124060							
5.9	86000	250.21	124060							
6.7	76300	222.01	124060							
7.5	67700	197.00	124060	**P3PH**	**052e**	**DMF**	**DRN**	**250M4**	1400	
8.3	61100	177.75	124060	**P3PS**	**052e**	**DMF**	**DRN**	**250M4**	1410	276
9.2	55100	160.39	124060	**P3PL**	**052e**	**DMF**	**DRN**	**250M4**	1400	
9.9	51600	150.09	124060	**P3PV**	**052e**	**DMF**	**DRN**	**250M4**	1320	
11	45100	131.16	124060							
13	39300	114.35	124060							
15	34300	99.93	124060							
38	13600	39.23	124060	**P2PH**	**052e**	**DMF**	**DRN**	**250M4**	1350	
44	11800	34.04	124060	**P2PS**	**052e**	**DMF**	**DRN**	**250M4**	1360	274
49	10400	30.21	124060	**P2PL**	**052e**	**DMF**	**DRN**	**250M4**	1350	
54	9460	27.26	124060	**P2PV**	**052e**	**DMF**	**DRN**	**250M4**	1270	
4.5	114200	332.32	100170							
5.1	99100	288.36	100170							
5.9	86000	250.21	100170							
6.7	76300	222.01	100170							
7.5	67700	197.00	100170							
8.3	61100	177.75	100170	**P3PH**	**042e**	**DMF**	**DRN**	**250M4**	1240	
9.2	55100	160.39	100170	**P3PS**	**042e**	**DMF**	**DRN**	**250M4**	1230	272
9.9	51600	150.09	100170	**P3PL**	**042e**	**DMF**	**DRN**	**250M4**	1230	
11	45100	131.16	100170	**P3PV**	**042e**	**DMF**	**DRN**	**250M4**	1170	
13	39300	114.35	100170							
15	34300	99.93	100170							
17	30000	87.32	100170							
19	26800	78.16	100170							
38	13600	39.23	100170	**P2PH**	**042e**	**DMF**	**DRN**	**250M4**	1210	
44	11800	34.04	100170	**P2PS**	**042e**	**DMF**	**DRN**	**250M4**	1210	270
49	10400	30.21	100170	**P2PL**	**042e**	**DMF**	**DRN**	**250M4**	1200	
				P2PV	**042e**	**DMF**	**DRN**	**250M4**	1150	
5.9	86000	250.21	69620							
6.7	76300	222.01	69620							
7.5	67700	197.00	69620							
8.3	61100	177.75	69620							
9.2	55100	160.39	69620							
9.9	51600	150.09	69620	**P3PH**	**032e**	**DMF**	**DRN**	**250M4**	1020	
11	45100	131.16	69620	**P3PS**	**032e**	**DMF**	**DRN**	**250M4**	990	268
13	39300	114.35	69620	**P3PL**	**032e**	**DMF**	**DRN**	**250M4**	990	
15	34300	99.93	69620	**P3PV**	**032e**	**DMF**	**DRN**	**250M4**	960	
17	30000	87.32	69620							
19	26800	78.16	69620							
22	23400	68.30	69620							
24	21000	61.13	69620							
28	18300	53.42	69620							
38	13600	39.23	69620							
44	11800	34.04	69620	**P2PH**	**032e**	**DMF**	**DRN**	**250M4**	1050	
49	10400	30.21	69620	**P2PS**	**032e**	**DMF**	**DRN**	**250M4**	1020	266
54	9460	27.26	69620	**P2PL**	**032e**	**DMF**	**DRN**	**250M4**	1020	
64	7990	23.01	69620	**P2PV**	**032e**	**DMF**	**DRN**	**250M4**	990	
74	6980	20.11	69620							

31991203/EN – 08/2025

P_m = 55 kW

n_2	M_a	i_{ex}	M_{N2}						m	
min^{-1}	Nm		Nm						kg	
8.5	60000	174.68	51190							
9.4	53900	156.99	51190							
10	49300	143.53	51190							
12	43700	127.35	51190							
13	38200	111.35	51190	**P3PH**	**022e**	**DMF**	**DRN**	**250M4**	900	
15	33300	97.03	51190	**P3PS**	**022e**	**DMF**	**DRN**	**250M4**	890	264
17	29100	84.79	51190	**P3PL**	**022e**	**DMF**	**DRN**	**250M4**	880	
20	26000	75.68	51190	**P3PV**	**022e**	**DMF**	**DRN**	**250M4**	860	
22	22700	66.13	51190							
25	20300	59.19	51190							
29	17700	51.73	51190							
38	13600	39.23	51190							
44	11800	34.04	51190							
49	10400	30.21	51190	**P2PH**	**022e**	**DMF**	**DRN**	**250M4**	910	
54	9460	27.26	51190	**P2PS**	**022e**	**DMF**	**DRN**	**250M4**	900	262
64	7990	23.01	51190	**P2PL**	**022e**	**DMF**	**DRN**	**250M4**	900	
74	6980	20.11	51190	**P2PV**	**022e**	**DMF**	**DRN**	**250M4**	880	
82	6250	18.00	51190							
94	5460	15.73	51190							
38	13600	39.23	36810							
44	11800	34.04	36810							
49	10400	30.21	36810	**P2PH**	**012e**	**DMF**	**DRN**	**250M4**	770	
54	9460	27.26	36810	**P2PS**	**012e**	**DMF**	**DRN**	**250M4**	760	258
64	7990	23.01	36810	**P2PL**	**012e**	**DMF**	**DRN**	**250M4**	760	
74	6980	20.11	36810	**P2PV**	**012e**	**DMF**	**DRN**	**250M4**	740	
82	6250	18.00*	36810							
94	5460	15.73	36810							
38	13500	39.08	24830							
44	11600	33.64	24830							
50	10300	29.68	24830	**P2PH**	**002e**	**DMF**	**DRN**	**250M4**	690	
56	9260	26.68	24830	**P2PS**	**002e**	**DMF**	**DRN**	**250M4**	680	254
66	7780	22.41	24830	**P2PL**	**002e**	**DMF**	**DRN**	**250M4**	680	
76	6780	19.53	24830	**P2PV**	**002e**	**DMF**	**DRN**	**250M4**	660	
85	6060	17.45	24830							
97	5290	15.23	24830							

P_m = 75 kW

n_2	M_a	i_{ex}	M_{N2}						m	
min^{-1}	Nm		Nm						kg	
4.6	151300	322.69	245660							
5.2	132200	282.12	245660							
6.0	114700	244.80	245660	**P3PH**	**072e**	**DMF**	**DRN**	**280S4**	520	
6.8	101800	217.21	245660	**P3PS**	**072e**	**DMF**	**DRN**	**280S4**	520	280
7.7	90800	193.79	245660	**P3PL**	**072e**	**DMF**	**DRN**	**280S4**	520	
8.4	82300	175.57	245660	**P3PV**	**072e**	**DMF**	**DRN**	**280S4**	520	
9.4	74200	158.42	245660							
10	69200	147.64	245660							
4.5	155800	332.32	185660							
5.1	135200	288.36	185660							
5.9	117300	250.21	185660							
6.7	104100	222.01	185660							
7.5	92300	197.00	185660	**P3PH**	**062e**	**DMF**	**DRN**	**280S4**	520	
8.3	83300	177.75	185660	**P3PS**	**062e**	**DMF**	**DRN**	**280S4**	520	278
9.2	75200	160.39	185660	**P3PL**	**062e**	**DMF**	**DRN**	**280S4**	520	
9.9	70300	150.09	185660	**P3PV**	**062e**	**DMF**	**DRN**	**280S4**	520	
11	61500	131.16	185660							
13	53600	114.35	185660							
15	46800	99.93	185660							

31991203/EN – 08/2025

P_m = 75 kW											
n_2	M_a	i_{ex}	M_{N2}							m	
min^{-1}	Nm		Nm							kg	
4.5	155800	332.32	124060								
5.1	135200	288.36	124060								
5.9	117300	250.21	124060								
6.7	104100	222.01	124060								
7.5	92300	197.00	124060								
8.3	83300	177.75	124060	**P3PH**	**052e**	**DMF**	**DRN**	**280S4**		1450	
9.2	75200	160.39	124060	**P3PS**	**052e**	**DMF**	**DRN**	**280S4**		1460	276
9.9	70300	150.09	124060	**P3PL**	**052e**	**DMF**	**DRN**	**280S4**		1450	
11	61500	131.16	124060	**P3PV**	**052e**	**DMF**	**DRN**	**280S4**		1370	
13	53600	114.35	124060								
15	46800	99.93	124060								
17	40900	87.32	124060								
19	36600	78.16	124060								
22	32000	68.30	124060								
38	18500	39.23	124060	**P2PH**	**052e**	**DMF**	**DRN**	**280S4**		1400	
44	16100	34.04	124060	**P2PS**	**052e**	**DMF**	**DRN**	**280S4**		1400	274
49	14300	30.21	124060	**P2PL**	**052e**	**DMF**	**DRN**	**280S4**		1400	
54	12900	27.26	124060	**P2PV**	**052e**	**DMF**	**DRN**	**280S4**		1320	
5.9	117300	250.21	100170								
6.7	104100	222.01	100170								
7.5	92300	197.00	100170								
8.3	83300	177.75	100170								
9.2	75200	160.39	100170								
9.9	70300	150.09	100170	**P3PH**	**042e**	**DMF**	**DRN**	**280S4**		1290	
11	61500	131.16	100170	**P3PS**	**042e**	**DMF**	**DRN**	**280S4**		1280	272
13	53600	114.35	100170	**P3PL**	**042e**	**DMF**	**DRN**	**280S4**		1280	
15	46800	99.93	100170	**P3PV**	**042e**	**DMF**	**DRN**	**280S4**		1220	
17	40900	87.32	100170								
19	36600	78.16	100170								
22	32000	68.30	100170								
24	28600	61.13	100170								
28	25000	53.42	100170								
38	18500	39.23	100170								
44	16100	34.04	100170	**P2PH**	**042e**	**DMF**	**DRN**	**280S4**		1260	
49	14300	30.21	100170	**P2PS**	**042e**	**DMF**	**DRN**	**280S4**		1260	270
54	12900	27.26	100170	**P2PL**	**042e**	**DMF**	**DRN**	**280S4**		1250	
64	10900	23.01	100170	**P2PV**	**042e**	**DMF**	**DRN**	**280S4**		1190	
38	18500	39.23	69620								
44	16100	34.04	69620								
49	14300	30.21	69620	**P2PH**	**032e**	**DMF**	**DRN**	**280S4**		1100	
54	12900	27.26	69620	**P2PS**	**032e**	**DMF**	**DRN**	**280S4**		1070	266
64	10900	23.01	69620	**P2PL**	**032e**	**DMF**	**DRN**	**280S4**		1070	
74	9520	20.11	69620	**P2PV**	**032e**	**DMF**	**DRN**	**280S4**		1040	
82	8520	18.00	69620								
94	7450	15.73	69620								
38	18500	39.23	51190								
44	16100	34.04	51190								
49	14300	30.21	51190	**P2PH**	**022e**	**DMF**	**DRN**	**280S4**		960	
54	12900	27.26	51190	**P2PS**	**022e**	**DMF**	**DRN**	**280S4**		950	262
64	10900	23.01	51190	**P2PL**	**022e**	**DMF**	**DRN**	**280S4**		950	
74	9520	20.11	51190	**P2PV**	**022e**	**DMF**	**DRN**	**280S4**		930	
82	8520	18.00	51190								
94	7450	15.73	51190								
38	18500	39.23	36810								
44	16100	34.04	36810								
49	14300	30.21	36810	**P2PH**	**012e**	**DMF**	**DRN**	**280S4**		820	
54	12900	27.26	36810	**P2PS**	**012e**	**DMF**	**DRN**	**280S4**		810	258
64	10900	23.01	36810	**P2PL**	**012e**	**DMF**	**DRN**	**280S4**		810	
74	9520	20.11	36810	**P2PV**	**012e**	**DMF**	**DRN**	**280S4**		790	
82	8520	18.00*	36810								
94	7450	15.73	36810								

31991203/EN – 08/2025

P_m = 90 kW

n_2	M_a	i_{ex}	M_{N2}						m	
min^{-1}	Nm		Nm						kg	
4.6	181600	322.69	245660							
5.2	158800	282.12	245660							
6.0	137800	244.80	245660							
6.8	122300	217.21	245660	**P3PH**	**072e**	**DMF**	**DRN**	**280M4**	640	280
7.6	109100	193.79	245660	**P3PS**	**072e**	**DMF**	**DRN**	**280M4**	640	
8.4	98800	175.57	245660	**P3PL**	**072e**	**DMF**	**DRN**	**280M4**	640	
9.3	89200	158.42	245660	**P3PV**	**072e**	**DMF**	**DRN**	**280M4**	640	
10	83100	147.64	245660							
11	73600	130.72	245660							
13	63900	113.57	245660							
4.5	187100	332.32	185660							
5.1	162300	288.36	185660							
5.9	140800	250.21	185660							
6.7	125000	222.01	185660							
7.5	110900	197.00	185660	**P3PH**	**062e**	**DMF**	**DRN**	**280M4**	640	278
8.3	100000	177.75	185660	**P3PS**	**062e**	**DMF**	**DRN**	**280M4**	640	
9.2	90300	160.39	185660	**P3PL**	**062e**	**DMF**	**DRN**	**280M4**	640	
9.9	84500	150.09	185660	**P3PV**	**062e**	**DMF**	**DRN**	**280M4**	640	
11	73800	131.16	185660							
13	64300	114.35	185660							
15	56200	99.93	185660							
17	49100	87.32	185660							
5.9	140800	250.21	124060							
6.7	125000	222.01	124060							
7.5	110900	197.00	124060							
8.3	100000	177.75	124060							
9.2	90300	160.39	124060							
9.9	84500	150.09	124060	**P3PH**	**052e**	**DMF**	**DRN**	**280M4**	1570	276
11	73800	131.16	124060	**P3PS**	**052e**	**DMF**	**DRN**	**280M4**	1570	
13	64300	114.35	124060	**P3PL**	**052e**	**DMF**	**DRN**	**280M4**	1560	
15	56200	99.93	124060	**P3PV**	**052e**	**DMF**	**DRN**	**280M4**	1480	
17	49100	87.32	124060							
19	44000	78.16	124060							
22	38400	68.30	124060							
24	34400	61.13	124060							
38	22300	39.23	124060							
44	19300	34.04	124060	**P2PH**	**052e**	**DMF**	**DRN**	**280M4**	1510	274
49	17100	30.21	124060	**P2PS**	**052e**	**DMF**	**DRN**	**280M4**	1520	
54	15500	27.26	124060	**P2PL**	**052e**	**DMF**	**DRN**	**280M4**	1510	
64	13000	23.01	124060	**P2PV**	**052e**	**DMF**	**DRN**	**280M4**	1430	
6.7	125000	222.01	100170							
7.5	110900	197.00	100170							
8.3	100000	177.75	100170							
9.2	90300	160.39	100170							
9.9	84500	150.09	100170							
11	73800	131.16	100170	**P3PH**	**042e**	**DMF**	**DRN**	**280M4**	1400	272
13	64300	114.35	100170	**P3PS**	**042e**	**DMF**	**DRN**	**280M4**	1400	
15	56200	99.93	100170	**P3PL**	**042e**	**DMF**	**DRN**	**280M4**	1390	
17	49100	87.32	100170	**P3PV**	**042e**	**DMF**	**DRN**	**280M4**	1340	
19	44000	78.16	100170							
22	38400	68.30	100170							
24	34400	61.13	100170							
28	30000	53.42	100170							
38	22300	39.23	100170							
44	19300	34.04	100170							
49	17100	30.21	100170	**P2PH**	**042e**	**DMF**	**DRN**	**280M4**	1380	270
54	15500	27.26	100170	**P2PS**	**042e**	**DMF**	**DRN**	**280M4**	1370	
64	13000	23.01	100170	**P2PL**	**042e**	**DMF**	**DRN**	**280M4**	1370	
74	11400	20.11	100170	**P2PV**	**042e**	**DMF**	**DRN**	**280M4**	1310	
82	10200	18.00	100170							

31991203/EN – 08/2025

P_m = 90 kW

n_2	M_a	i_{ex}	M_{N2}						m	
min^{-1}	Nm		Nm						kg	
38	22300	39.23	69620							
44	19300	34.04	69620							
49	17100	30.21	69620	**P2PH**	**032e**	**DMF**	**DRN**	**280M4**	1210	
54	15500	27.26	69620	**P2PS**	**032e**	**DMF**	**DRN**	**280M4**	1190	266
64	13000	23.01	69620	**P2PL**	**032e**	**DMF**	**DRN**	**280M4**	1190	
74	11400	20.11	69620	**P2PV**	**032e**	**DMF**	**DRN**	**280M4**	1160	
82	10200	18.00	69620							
94	8940	15.73	69620							
38	22300	39.23	51190							
44	19300	34.04	51190							
49	17100	30.21	51190	**P2PH**	**022e**	**DMF**	**DRN**	**280M4**	1080	
54	15500	27.26	51190	**P2PS**	**022e**	**DMF**	**DRN**	**280M4**	1070	262
64	13000	23.01	51190	**P2PL**	**022e**	**DMF**	**DRN**	**280M4**	1060	
74	11400	20.11	51190	**P2PV**	**022e**	**DMF**	**DRN**	**280M4**	1040	
82	10200	18.00	51190							
94	8940	15.73	51190							
38	22300	39.23	36810							
44	19300	34.04	36810							
49	17100	30.21	36810	**P2PH**	**012e**	**DMF**	**DRN**	**280M4**	930	
54	15500	27.26	36810	**P2PS**	**012e**	**DMF**	**DRN**	**280M4**	920	258
64	13000	23.01	36810	**P2PL**	**012e**	**DMF**	**DRN**	**280M4**	920	
74	11400	20.11	36810	**P2PV**	**012e**	**DMF**	**DRN**	**280M4**	900	
82	10200	18.00*	36810							
94	8940	15.73	36810							

P_m = 110 kW

n_2	M_a	i_{ex}	M_{N2}						m	
min^{-1}	Nm		Nm						kg	
4.6	221000	322.69	245660							
5.3	193200	282.12	245660							
6.1	167600	244.80	245660							
6.8	148700	217.21	245660							
7.7	132700	193.79	245660	**P3PH**	**072e**	**DMF**	**DRN**	**315S4**	880	
8.5	120200	175.57	245660	**P3PS**	**072e**	**DMF**	**DRN**	**315S4**	880	280
9.4	108500	158.42	245660	**P3PL**	**072e**	**DMF**	**DRN**	**315S4**	880	
10	101100	147.64	245660	**P3PV**	**072e**	**DMF**	**DRN**	**315S4**	880	
11	89500	130.72	245660							
13	77700	113.57	245660							
15	68200	99.59	245660							
4.5	227600	332.32	185660							
5.2	197500	288.36	185660							
6.0	171300	250.21	185660							
6.7	152000	222.01	185660							
7.5	134900	197.00	185660							
8.4	121700	177.75	185660	**P3PH**	**062e**	**DMF**	**DRN**	**315S4**	880	
9.3	109800	160.39	185660	**P3PS**	**062e**	**DMF**	**DRN**	**315S4**	880	278
9.9	102800	150.09	185660	**P3PL**	**062e**	**DMF**	**DRN**	**315S4**	880	
11	89800	131.16	185660	**P3PV**	**062e**	**DMF**	**DRN**	**315S4**	880	
13	78300	114.35	185660							
15	68400	99.93	185660							
17	59800	87.32	185660							
19	53500	78.16	185660							
22	46700	68.30	185660							
6.7	152000	222.01	124060							
7.5	134900	197.00	124060							
8.4	121700	177.75	124060							
9.3	109800	160.39	124060							
9.9	102800	150.09	124060							
11	89800	131.16	124060	**P3PH**	**052e**	**DMF**	**DRN**	**315S4**	1810	
13	78300	114.35	124060	**P3PS**	**052e**	**DMF**	**DRN**	**315S4**	1820	276
15	68400	99.93	124060	**P3PL**	**052e**	**DMF**	**DRN**	**315S4**	1810	
17	59800	87.32	124060	**P3PV**	**052e**	**DMF**	**DRN**	**315S4**	1730	
19	53500	78.16	124060							
22	46700	68.30	124060							
24	41800	61.13	124060							
28	36500	53.42	124060							

31991203/EN – 08/2025

P_m = 110 kW

n_2	M_a	i_{ex}	M_{N2}						m	
min^{-1}	Nm		Nm						kg	
38	27100	39.23	124060							
44	23500	34.04	124060							
49	20800	30.21	124060	**P2PH**	**052e**	**DMF**	**DRN**	**315S4**	1760	274
55	18800	27.26	124060	**P2PS**	**052e**	**DMF**	**DRN**	**315S4**	1760	
65	15900	23.01	124060	**P2PL**	**052e**	**DMF**	**DRN**	**315S4**	1750	
74	13900	20.11	124060	**P2PV**	**052e**	**DMF**	**DRN**	**315S4**	1670	
83	12400	18.00	124060							
38	27100	39.23	100170							
44	23500	34.04	100170							
49	20800	30.21	100170	**P2PH**	**042e**	**DMF**	**DRN**	**315S4**	1620	270
55	18800	27.26	100170	**P2PS**	**042e**	**DMF**	**DRN**	**315S4**	1620	
65	15900	23.01	100170	**P2PL**	**042e**	**DMF**	**DRN**	**315S4**	1610	
74	13900	20.11	100170	**P2PV**	**042e**	**DMF**	**DRN**	**315S4**	1550	
83	12400	18.00	100170							
95	10800	15.73	100170							
38	27100	39.23	69620							
44	23500	34.04	69620							
49	20800	30.21	69620	**P2PH**	**032e**	**DMF**	**DRN**	**315S4**	1460	266
55	18800	27.26	69620	**P2PS**	**032e**	**DMF**	**DRN**	**315S4**	1430	
65	15900	23.01	69620	**P2PL**	**032e**	**DMF**	**DRN**	**315S4**	1430	
74	13900	20.11	69620	**P2PV**	**032e**	**DMF**	**DRN**	**315S4**	1400	
83	12400	18.00	69620							
95	10800	15.73	69620							

P_m = 132 kW

n_2	M_a	i_{ex}	M_{N2}						m	
min^{-1}	Nm		Nm						kg	
4.6	265200	322.69	245660							
5.3	231800	282.12	245660							
6.1	201200	244.80	245660							
6.8	178500	217.21	245660							
7.7	159200	193.79	245660							
8.5	144300	175.57	245660	**P3PH**	**072e**	**DMF**	**DRN**	**315M4**	900	280
9.4	130200	158.42	245660	**P3PS**	**072e**	**DMF**	**DRN**	**315M4**	900	
10	121300	147.64	245660	**P3PL**	**072e**	**DMF**	**DRN**	**315M4**	900	
11	107400	130.72	245660	**P3PV**	**072e**	**DMF**	**DRN**	**315M4**	900	
13	93300	113.57	245660							
15	81800	99.59	245660							
17	71500	87.03	245660							
19	63800	77.63	245660							
6.0	205600	250.21	185660							
6.7	182400	222.01	185660							
7.5	161900	197.00	185660							
8.4	146100	177.75	185660							
9.3	131800	160.39	185660							
9.9	123300	150.09	185660	**P3PH**	**062e**	**DMF**	**DRN**	**315M4**	900	278
11	107800	131.16	185660	**P3PS**	**062e**	**DMF**	**DRN**	**315M4**	900	
13	93900	114.35	185660	**P3PL**	**062e**	**DMF**	**DRN**	**315M4**	900	
15	82100	99.93	185660	**P3PV**	**062e**	**DMF**	**DRN**	**315M4**	900	
17	71700	87.32	185660							
19	64200	78.16	185660							
22	56100	68.30	185660							
24	50200	61.13	185660							
8.4	146100	177.75	124060							
9.3	131800	160.39	124060							
9.9	123300	150.09	124060							
11	107800	131.16	124060	**P3PH**	**052e**	**DMF**	**DRN**	**315M4**	1830	276
13	93900	114.35	124060	**P3PS**	**052e**	**DMF**	**DRN**	**315M4**	1840	
15	82100	99.93	124060	**P3PL**	**052e**	**DMF**	**DRN**	**315M4**	1830	
17	71700	87.32	124060	**P3PV**	**052e**	**DMF**	**DRN**	**315M4**	1750	
19	64200	78.16	124060							
22	56100	68.30	124060							
24	50200	61.13	124060							
28	43900	53.42	124060							

31991203/EN – 08/2025

P_m = 132 kW

n_2	M_a	i_{ex}	M_{N2}						m	
min^{-1}	Nm		Nm						kg	
38	32500	39.23	124060							
44	28200	34.04	124060							
49	25000	30.21	124060	**P2PH**	**052e**	**DMF**	**DRN**	**315M4**	1780	274
55	22600	27.26	124060	**P2PS**	**052e**	**DMF**	**DRN**	**315M4**	1780	
65	19100	23.01	124060	**P2PL**	**052e**	**DMF**	**DRN**	**315M4**	1780	
74	16600	20.11	124060	**P2PV**	**052e**	**DMF**	**DRN**	**315M4**	1690	
83	14900	18.00	124060							
95	13000	15.73	124060							
38	32500	39.23	100170							
44	28200	34.04	100170							
49	25000	30.21	100170	**P2PH**	**042e**	**DMF**	**DRN**	**315M4**	1640	270
55	22600	27.26	100170	**P2PS**	**042e**	**DMF**	**DRN**	**315M4**	1640	
65	19100	23.01	100170	**P2PL**	**042e**	**DMF**	**DRN**	**315M4**	1630	
74	16600	20.11	100170	**P2PV**	**042e**	**DMF**	**DRN**	**315M4**	1570	
83	14900	18.00	100170							
95	13000	15.73	100170							
38	32500	39.23	69620							
44	28200	34.04	69620							
49	25000	30.21	69620	**P2PH**	**032e**	**DMF**	**DRN**	**315M4**	1480	266
55	22600	27.26	69620	**P2PS**	**032e**	**DMF**	**DRN**	**315M4**	1450	
65	19100	23.01	69620	**P2PL**	**032e**	**DMF**	**DRN**	**315M4**	1450	
74	16600	20.11	69620	**P2PV**	**032e**	**DMF**	**DRN**	**315M4**	1420	
83	14900	18.00	69620							
95	13000	15.73	69620							

P_m = 160 kW

n_2	M_a	i_{ex}	M_{N2}						m	
min^{-1}	Nm		Nm						kg	
5.3	281400	282.12	245660							
6.1	244200	244.80	245660							
6.8	216700	217.21	245660							
7.7	193300	193.79	245660							
8.5	175100	175.57	245660							
9.4	158000	158.42	245660	**P3PH**	**072e**	**DMF**	**DRN**	**315L4**	1040	280
10	147200	147.64	245660	**P3PS**	**072e**	**DMF**	**DRN**	**315L4**	1040	
11	130400	130.72	245660	**P3PL**	**072e**	**DMF**	**DRN**	**315L4**	1040	
13	113300	113.57	245660	**P3PV**	**072e**	**DMF**	**DRN**	**315L4**	1040	
15	99300	99.59	245660							
17	86800	87.03	245660							
19	77400	77.63	245660							
22	67900	68.07	245660							
6.7	221400	222.01	185660							
7.5	196500	197.00	185660							
8.4	177300	177.75	185660							
9.3	160000	160.39	185660							
9.9	149700	150.09	185660							
11	130800	131.16	185660	**P3PH**	**062e**	**DMF**	**DRN**	**315L4**	1040	278
13	114000	114.35	185660	**P3PS**	**062e**	**DMF**	**DRN**	**315L4**	1040	
15	99600	99.93	185660	**P3PL**	**062e**	**DMF**	**DRN**	**315L4**	1040	
17	87100	87.32	185660	**P3PV**	**062e**	**DMF**	**DRN**	**315L4**	1040	
19	77900	78.16	185660							
22	68100	68.30	185660							
24	60900	61.13	185660							
28	53200	53.42	185660							
9.9	149700	150.09	124060							
11	130800	131.16	124060							
13	114000	114.35	124060	**P3PH**	**052e**	**DMF**	**DRN**	**315L4**	1960	276
15	99600	99.93	124060	**P3PS**	**052e**	**DMF**	**DRN**	**315L4**	1970	
17	87100	87.32	124060	**P3PL**	**052e**	**DMF**	**DRN**	**315L4**	1960	
19	77900	78.16	124060	**P3PV**	**052e**	**DMF**	**DRN**	**315L4**	1880	
22	68100	68.30	124060							
24	60900	61.13	124060							
28	53200	53.42	124060							

31991203/EN – 08/2025

P_m = 160 kW

n_2	M_a	i_{ex}	M_{N2}						m	
min^{-1}	Nm		Nm						kg	
38	39500	39.23	124060							
44	34300	34.04	124060							
49	30400	30.21	124060	**P2PH**	**052e**	**DMF**	**DRN**	**315L4**	1910	
55	27400	27.26	124060	**P2PS**	**052e**	**DMF**	**DRN**	**315L4**	1920	274
65	23100	23.01	124060	**P2PL**	**052e**	**DMF**	**DRN**	**315L4**	1910	
74	20200	20.11	124060	**P2PV**	**052e**	**DMF**	**DRN**	**315L4**	1830	
83	18100	18.00	124060							
94	15800	15.73	124060							
38	39500	39.23	100170							
44	34300	34.04	100170							
49	30400	30.21	100170	**P2PH**	**042e**	**DMF**	**DRN**	**315L4**	1770	
55	27400	27.26	100170	**P2PS**	**042e**	**DMF**	**DRN**	**315L4**	1770	270
65	23100	23.01	100170	**P2PL**	**042e**	**DMF**	**DRN**	**315L4**	1760	
74	20200	20.11	100170	**P2PV**	**042e**	**DMF**	**DRN**	**315L4**	1710	
83	18100	18.00	100170							
94	15800	15.73	100170							
38	39500	39.23	69620							
44	34300	34.04	69620							
49	30400	30.21	69620	**P2PH**	**032e**	**DMF**	**DRN**	**315L4**	1610	
55	27400	27.26	69620	**P2PS**	**032e**	**DMF**	**DRN**	**315L4**	1580	266
65	23100	23.01	69620	**P2PL**	**032e**	**DMF**	**DRN**	**315L4**	1580	
74	20200	20.11	69620	**P2PV**	**032e**	**DMF**	**DRN**	**315L4**	1550	
83	18100	18.00	69620							
94	15800	15.73	69620							

P_m = 200 kW

n_2	M_a	i_{ex}	M_{N2}						m	
min^{-1}	Nm		Nm						kg	
6.1	304600	244.80	245660							
6.8	270300	217.21	245660							
7.7	241100	193.79	245660							
8.5	218500	175.57	245660							
9.4	197100	158.42	245660							
10	183700	147.64	245660	**P3PH**	**072e**	**DMF**	**DRN**	**315H4**	1150	
11	162600	130.72	245660	**P3PS**	**072e**	**DMF**	**DRN**	**315H4**	1150	280
13	141300	113.57	245660	**P3PL**	**072e**	**DMF**	**DRN**	**315H4**	1150	
15	123900	99.59	245660	**P3PV**	**072e**	**DMF**	**DRN**	**315H4**	1150	
17	108300	87.03	245660							
19	96600	77.63	245660							
22	84700	68.07	245660							
24	76000	61.07	245660							
28	66500	53.48	245660							
8.4	221200	177.75	185660							
9.3	199600	160.39	185660							
9.9	186700	150.09	185660							
11	163200	131.16	185660							
13	142300	114.35	185660	**P3PH**	**062e**	**DMF**	**DRN**	**315H4**	1150	
15	124300	99.93	185660	**P3PS**	**062e**	**DMF**	**DRN**	**315H4**	1150	278
17	108600	87.32	185660	**P3PL**	**062e**	**DMF**	**DRN**	**315H4**	1150	
19	97200	78.16	185660	**P3PV**	**062e**	**DMF**	**DRN**	**315H4**	1150	
22	85000	68.30	185660							
24	76000	61.13	185660							
28	66400	53.42	185660							
13	142300	114.35	124060							
15	124300	99.93	124060							
17	108600	87.32	124060	**P3PH**	**052e**	**DMF**	**DRN**	**315H4**	2080	
19	97200	78.16	124060	**P3PS**	**052e**	**DMF**	**DRN**	**315H4**	2090	276
22	85000	68.30	124060	**P3PL**	**052e**	**DMF**	**DRN**	**315H4**	2080	
24	76000	61.13	124060	**P3PV**	**052e**	**DMF**	**DRN**	**315H4**	2000	
28	66400	53.42	124060							

31991203/EN – 08/2025

P_m = 200 kW											
n_2	M_a	i_{ex}	M_{N2}							m	
min^{-1}	Nm		Nm							kg	
38	49300	39.23	124060								
44	42700	34.04	124060								
49	37900	30.21	124060	**P2PH**	**052e**	**DMF**	**DRN**	**315H4**		2030	
55	34200	27.26	124060	**P2PS**	**052e**	**DMF**	**DRN**	**315H4**		2030	274
65	28900	23.01	124060	**P2PL**	**052e**	**DMF**	**DRN**	**315H4**		2020	
74	25200	20.11	124060	**P2PV**	**052e**	**DMF**	**DRN**	**315H4**		1940	
83	22600	18.00	124060								
95	19700	15.73	124060								
38	49300	39.23	100170								
44	42700	34.04	100170								
49	37900	30.21	100170	**P2PH**	**042e**	**DMF**	**DRN**	**315H4**		1890	
55	34200	27.26	100170	**P2PS**	**042e**	**DMF**	**DRN**	**315H4**		1890	270
65	28900	23.01	100170	**P2PL**	**042e**	**DMF**	**DRN**	**315H4**		1880	
74	25200	20.11	100170	**P2PV**	**042e**	**DMF**	**DRN**	**315H4**		1820	
83	22600	18.00	100170								
95	19700	15.73	100170								
38	49300	39.23	69620								
44	42700	34.04	69620								
49	37900	30.21	69620	**P2PH**	**032e**	**DMF**	**DRN**	**315H4**		1730	
55	34200	27.26	69620	**P2PS**	**032e**	**DMF**	**DRN**	**315H4**		1700	266
65	28900	23.01	69620	**P2PL**	**032e**	**DMF**	**DRN**	**315H4**		1700	
74	25200	20.11	69620	**P2PV**	**032e**	**DMF**	**DRN**	**315H4**		1670	
83	22600	18.00	69620								
95	19700	15.73	69620								

31991203/EN – 08/2025

10.3 P2..e DM DRU.. and P3..e DM DRU.. planetary gearmotors

P_m = 4.0 kW

n_2	M_a	i_{ex}	M_{N2}						m	
min^{-1}	Nm		Nm						kg	
4.5	8330	331.02	24830	**P3PH**	**002e**	**DM**	**DRU**	**132S4**	295	284
5.2	7170	284.95	24830	**P3PS**	**002e**	**DM**	**DRU**	**132S4**	290	
5.8	6330	251.44	24830	**P3PL**	**002e**	**DM**	**DRU**	**132S4**	285	
				P3PV	**002e**	**DM**	**DRU**	**132S4**	275	

P_m = 5.5 kW

n_2	M_a	i_{ex}	M_{N2}						m	
min^{-1}	Nm		Nm						kg	
4.4	11400	332.32	36810	**P3PH**	**012e**	**DM**	**DRU**	**132M4**	385	288
5.1	9940	288.36	36810	**P3PS**	**012e**	**DM**	**DRU**	**132M4**	375	
				P3PL	**012e**	**DM**	**DRU**	**132M4**	370	
				P3PV	**012e**	**DM**	**DRU**	**132M4**	350	
4.5	11400	331.02	24830	**P3PH**	**002e**	**DM**	**DRU**	**132M4**	310	284
5.2	9830	284.95	24830	**P3PS**	**002e**	**DM**	**DRU**	**132M4**	305	
5.9	8670	251.44	24830	**P3PL**	**002e**	**DM**	**DRU**	**132M4**	300	
6.7	7560	219.39	24830	**P3PV**	**002e**	**DM**	**DRU**	**132M4**	290	
7.6	6670	193.59	24830							

P_m = 7.5 kW

n_2	M_a	i_{ex}	M_{N2}						m	
min^{-1}	Nm		Nm						kg	
4.5	15500	331.02	51190	**P3PH**	**022e**	**DM**	**DRU**	**160M4**	530	292
5.2	13400	287.23	51190	**P3PS**	**022e**	**DM**	**DRU**	**160M4**	520	
				P3PL	**022e**	**DM**	**DRU**	**160M4**	520	
				P3PV	**022e**	**DM**	**DRU**	**160M4**	495	
4.5	15600	332.32	36810	**P3PH**	**012e**	**DM**	**DRU**	**160M4**	425	288
5.1	13500	288.36	36810	**P3PS**	**012e**	**DM**	**DRU**	**160M4**	415	
5.9	11700	250.21	36810	**P3PL**	**012e**	**DM**	**DRU**	**160M4**	410	
6.7	10400	222.01	36810	**P3PV**	**012e**	**DM**	**DRU**	**160M4**	390	
7.5	9240	197.00	36810							
4.5	15500	331.02	24830	**P3PH**	**002e**	**DM**	**DRU**	**160M4**	350	284
5.2	13300	284.95	24830	**P3PS**	**002e**	**DM**	**DRU**	**160M4**	345	
5.9	11800	251.44	24830	**P3PL**	**002e**	**DM**	**DRU**	**160M4**	340	
6.8	10300	219.39	24830	**P3PV**	**002e**	**DM**	**DRU**	**160M4**	330	
7.6	9090	193.59	24830							
9.0	7730	164.72	24830							
10	6860	146.16	24830							

P_m = 9.2 kW

n_2	M_a	i_{ex}	M_{N2}	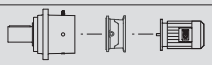					m	
min^{-1}	Nm		Nm						kg	
4.5	19100	332.32	69620	**P3PH**	**032e**	**DM**	**DRU**	**160L4**	660	296
				P3PS	**032e**	**DM**	**DRU**	**160L4**	630	
				P3PL	**032e**	**DM**	**DRU**	**160L4**	630	
				P3PV	**032e**	**DM**	**DRU**	**160L4**	600	
4.5	19000	331.02	51190	**P3PH**	**022e**	**DM**	**DRU**	**160L4**	550	292
5.2	16500	287.23	51190	**P3PS**	**022e**	**DM**	**DRU**	**160L4**	540	
6.0	14200	247.25	51190	**P3PL**	**022e**	**DM**	**DRU**	**160L4**	530	
				P3PV	**022e**	**DM**	**DRU**	**160L4**	510	
4.5	19100	332.32	36810	**P3PH**	**012e**	**DM**	**DRU**	**160L4**	440	288
5.1	16500	288.36	36810	**P3PS**	**012e**	**DM**	**DRU**	**160L4**	430	
5.9	14400	250.21	36810	**P3PL**	**012e**	**DM**	**DRU**	**160L4**	425	
6.7	12700	222.01	36810	**P3PV**	**012e**	**DM**	**DRU**	**160L4**	410	
7.5	11300	197.00	36810							
8.8	9730	169.15	36810							

31991203/EN – 08/2025

P_m = 9.2 kW

n_2	M_a	i_{ex}	M_{N2}						m	
min^{-1}	Nm		Nm						kg	
4.5	19000	331.02	24830							
5.2	16400	284.95	24830							
5.9	14400	251.44	24830							
6.8	12600	219.39	24830	**P3PH**	**002e**	**DM**	**DRU**	**160L4**	370	284
7.7	11100	193.59	24830	**P3PS**	**002e**	**DM**	**DRU**	**160L4**	360	
9.0	9480	164.72	24830	**P3PL**	**002e**	**DM**	**DRU**	**160L4**	360	
10	8410	146.16	24830	**P3PV**	**002e**	**DM**	**DRU**	**160L4**	345	
12	7330	127.35	24830							
13	6400	111.35	24830							

P_m = 11.0 kW

n_2	M_a	i_{ex}	M_{N2}						m	
min^{-1}	Nm		Nm						kg	
4.5	22900	332.32	69620	**P3PH**	**032e**	**DM**	**DRU**	**160L4**	660	296
5.1	19800	288.36	69620	**P3PS**	**032e**	**DM**	**DRU**	**160L4**	630	
				P3PL	**032e**	**DM**	**DRU**	**160L4**	630	
				P3PV	**032e**	**DM**	**DRU**	**160L4**	600	
4.5	22800	331.02	51190							
5.2	19700	287.23	51190	**P3PH**	**022e**	**DM**	**DRU**	**160L4**	550	292
6.0	17000	247.25	51190	**P3PS**	**022e**	**DM**	**DRU**	**160L4**	540	
6.7	15100	219.39	51190	**P3PL**	**022e**	**DM**	**DRU**	**160L4**	530	
7.6	13300	193.59	51190	**P3PV**	**022e**	**DM**	**DRU**	**160L4**	510	
4.5	22900	332.32	36810							
5.1	19800	288.36	36810							
5.9	17200	250.21	36810	**P3PH**	**012e**	**DM**	**DRU**	**160L4**	440	288
6.7	15200	222.01	36810	**P3PS**	**012e**	**DM**	**DRU**	**160L4**	430	
7.5	13500	197.00	36810	**P3PL**	**012e**	**DM**	**DRU**	**160L4**	425	
8.7	11600	169.15	36810	**P3PV**	**012e**	**DM**	**DRU**	**160L4**	410	
9.8	10300	150.09	36810							
4.5	22800	331.02	24830							
5.2	19600	284.95	24830							
5.9	17300	251.44	24830							
6.7	15100	219.39	24830	**P3PH**	**002e**	**DM**	**DRU**	**160L4**	370	284
7.6	13300	193.59	24830	**P3PS**	**002e**	**DM**	**DRU**	**160L4**	360	
9.0	11300	164.72	24830	**P3PL**	**002e**	**DM**	**DRU**	**160L4**	360	
10	10000	146.16	24830	**P3PV**	**002e**	**DM**	**DRU**	**160L4**	345	
12	8770	127.35	24830							
13	7670	111.35	24830							
15	6680	97.03	24830							
38	2720	39.08	24830	**P2PH**	**002e**	**DM**	**DRU**	**160L4**	340	282
				P2PS	**002e**	**DM**	**DRU**	**160L4**	330	
				P2PL	**002e**	**DM**	**DRU**	**160L4**	330	
				P2PV	**002e**	**DM**	**DRU**	**160L4**	315	

P_m = 15.0 kW

n_2	M_a	i_{ex}	M_{N2}						m	
min^{-1}	Nm		Nm						kg	
4.5	31100	332.32	124060	**P3PH**	**052e**	**DM**	**DRU**	**180L4**	1040	304
				P3PS	**052e**	**DM**	**DRU**	**180L4**	1050	
				P3PL	**052e**	**DM**	**DRU**	**180L4**	1040	
				P3PV	**052e**	**DM**	**DRU**	**180L4**	960	
4.5	31100	332.32	100170	**P3PH**	**042e**	**DM**	**DRU**	**180L4**	890	300
5.1	27000	288.36	100170	**P3PS**	**042e**	**DM**	**DRU**	**180L4**	890	
				P3PL	**042e**	**DM**	**DRU**	**180L4**	880	
				P3PV	**042e**	**DM**	**DRU**	**180L4**	820	
4.5	31100	332.32	69620							
5.1	27000	288.36	69620	**P3PH**	**032e**	**DM**	**DRU**	**180L4**	700	296
5.9	23400	250.21	69620	**P3PS**	**032e**	**DM**	**DRU**	**180L4**	670	
6.7	20800	222.01	69620	**P3PL**	**032e**	**DM**	**DRU**	**180L4**	670	
7.5	18400	197.00	69620	**P3PV**	**032e**	**DM**	**DRU**	**180L4**	640	

31991203/EN – 08/2025

P_m = 15.0 kW

n_2	M_a	i_{ex}	M_{N2}						m	
min^{-1}	Nm		Nm						kg	
4.5	31000	331.02	51190							
5.2	26900	287.23	51190							
6.0	23100	247.25	51190	**P3PH**	**022e**	**DM**	**DRU**	**180L4**	590	
6.8	20500	219.39	51190	**P3PS**	**022e**	**DM**	**DRU**	**180L4**	580	292
7.7	18100	193.59	51190	**P3PL**	**022e**	**DM**	**DRU**	**180L4**	570	
8.5	16300	174.68	51190	**P3PV**	**022e**	**DM**	**DRU**	**180L4**	550	
9.4	14700	156.99	51190							
10	13400	143.53	51190							
4.5	31100	332.32	36810							
5.1	27000	288.36	36810							
5.9	23400	250.21	36810							
6.7	20800	222.01	36810	**P3PH**	**012e**	**DM**	**DRU**	**180L4**	480	
7.5	18400	197.00	36810	**P3PS**	**012e**	**DM**	**DRU**	**180L4**	470	288
8.8	15800	169.15	36810	**P3PL**	**012e**	**DM**	**DRU**	**180L4**	465	
9.9	14000	150.09	36810	**P3PV**	**012e**	**DM**	**DRU**	**180L4**	445	
11	12200	131.16	36810							
13	10700	114.35	36810							
15	9360	99.93	36810							
38	3710	39.23	36810	**P2PH**	**012e**	**DM**	**DRU**	**180L4**	450	
				P2PS	**012e**	**DM**	**DRU**	**180L4**	440	286
				P2PL	**012e**	**DM**	**DRU**	**180L4**	435	
				P2PV	**012e**	**DM**	**DRU**	**180L4**	420	
4.5	31000	331.02	24830							
5.2	26700	284.95	24830							
5.9	23500	251.44	24830							
6.8	20500	219.39	24830							
7.7	18100	193.59	24830							
9.0	15400	164.72	24830	**P3PH**	**002e**	**DM**	**DRU**	**180L4**	405	
10	13600	146.16	24830	**P3PS**	**002e**	**DM**	**DRU**	**180L4**	400	284
12	11900	127.35	24830	**P3PL**	**002e**	**DM**	**DRU**	**180L4**	395	
13	10400	111.35	24830	**P3PV**	**002e**	**DM**	**DRU**	**180L4**	385	
15	9090	97.03	24830							
17	7940	84.79	24830							
20	7100	75.77	24830							
22	6210	66.32	24830							
38	3690	39.08	24830	**P2PH**	**002e**	**DM**	**DRU**	**180L4**	375	
44	3180	33.64	24830	**P2PS**	**002e**	**DM**	**DRU**	**180L4**	370	282
50	2810	29.68	24830	**P2PL**	**002e**	**DM**	**DRU**	**180L4**	365	
56	2520	26.68	24830	**P2PV**	**002e**	**DM**	**DRU**	**180L4**	355	

P_m = 18.5 kW

n_2	M_a	i_{ex}	M_{N2}						m	
min^{-1}	Nm		Nm						kg	
4.5	38300	332.32	124060	**P3PH**	**052e**	**DM**	**DRU**	**200L4**	1150	
5.2	33200	288.36	124060	**P3PS**	**052e**	**DM**	**DRU**	**200L4**	1160	304
				P3PL	**052e**	**DM**	**DRU**	**200L4**	1150	
				P3PV	**052e**	**DM**	**DRU**	**200L4**	1070	
4.5	38300	332.32	100170	**P3PH**	**042e**	**DM**	**DRU**	**200L4**	1000	
5.2	33200	288.36	100170	**P3PS**	**042e**	**DM**	**DRU**	**200L4**	990	300
5.9	28800	250.21	100170	**P3PL**	**042e**	**DM**	**DRU**	**200L4**	990	
6.7	25600	222.01	100170	**P3PV**	**042e**	**DM**	**DRU**	**200L4**	930	
4.5	38300	332.32	69620							
5.2	33200	288.36	69620							
5.9	28800	250.21	69620	**P3PH**	**032e**	**DM**	**DRU**	**200L4**	800	
6.7	25600	222.01	69620	**P3PS**	**032e**	**DM**	**DRU**	**200L4**	780	296
7.5	22700	197.00	69620	**P3PL**	**032e**	**DM**	**DRU**	**200L4**	780	
8.3	20500	177.75	69620	**P3PV**	**032e**	**DM**	**DRU**	**200L4**	750	
9.3	18500	160.39	69620							

31991203/EN – 08/2025

P_m = 18.5 kW

n_2	M_a	i_{ex}	M_{N2}						m	
min^{-1}	Nm		Nm						kg	
4.5	38200	331.02	51190							
5.2	33100	287.23	51190							
6.0	28500	247.25	51190							
6.8	25300	219.39	51190	**P3PH**	**022e**	**DM**	**DRU**	**200L4**	700	
7.7	22300	193.59	51190	**P3PS**	**022e**	**DM**	**DRU**	**200L4**	680	292
8.5	20100	174.68	51190	**P3PL**	**022e**	**DM**	**DRU**	**200L4**	680	
9.5	18100	156.99	51190	**P3PV**	**022e**	**DM**	**DRU**	**200L4**	660	
10	16500	143.53	51190							
12	14700	127.35	51190							
13	12800	111.35	51190							
4.5	38300	332.32	36810							
5.2	33200	288.36	36810							
5.9	28800	250.21	36810							
6.7	25600	222.01	36810							
7.5	22700	197.00	36810	**P3PH**	**012e**	**DM**	**DRU**	**200L4**	590	
8.8	19500	169.15	36810	**P3PS**	**012e**	**DM**	**DRU**	**200L4**	580	288
9.9	17300	150.09	36810	**P3PL**	**012e**	**DM**	**DRU**	**200L4**	570	
11	15100	131.16	36810	**P3PV**	**012e**	**DM**	**DRU**	**200L4**	550	
13	13100	114.35	36810							
15	11500	99.93	36810							
17	10000	87.32	36810							
38	4570	39.23	36810	**P2PH**	**012e**	**DM**	**DRU**	**200L4**	560	
44	3960	34.04	36810	**P2PS**	**012e**	**DM**	**DRU**	**200L4**	550	286
				P2PL	**012e**	**DM**	**DRU**	**200L4**	540	
				P2PV	**012e**	**DM**	**DRU**	**200L4**	530	
5.9	29000	251.44	24830							
6.8	25300	219.39	24830							
7.7	22300	193.59	24830							
9.0	19000	164.72	24830							
10	16800	146.16	24830							
12	14700	127.35	24830	**P3PH**	**002e**	**DM**	**DRU**	**200L4**	510	
13	12800	111.35	24830	**P3PS**	**002e**	**DM**	**DRU**	**200L4**	510	284
15	11200	97.03	24830	**P3PL**	**002e**	**DM**	**DRU**	**200L4**	500	
18	9780	84.79	24830	**P3PV**	**002e**	**DM**	**DRU**	**200L4**	490	
20	8740	75.77	24830							
22	7650	66.32	24830							
25	6840	59.26	24830							
29	5970	51.73	24830							
38	4550	39.08	24830							
44	3920	33.64	24830							
50	3460	29.68	24830	**P2PH**	**002e**	**DM**	**DRU**	**200L4**	485	
56	3110	26.68	24830	**P2PS**	**002e**	**DM**	**DRU**	**200L4**	480	282
66	2610	22.41	24830	**P2PL**	**002e**	**DM**	**DRU**	**200L4**	475	
76	2270	19.53	24830	**P2PV**	**002e**	**DM**	**DRU**	**200L4**	460	
85	2030	17.45	24830							
98	1770	15.23	24830							

P_m = 22 kW

n_2	M_a	i_{ex}	M_{N2}						m	
min^{-1}	Nm		Nm						kg	
4.6	44300	322.69	245660							
5.3	38700	282.12	245660							
6.1	33600	244.80	245660							
6.8	29800	217.21	245660							
7.7	26600	193.79	245660							
8.4	24100	175.57	245660							
9.4	21700	158.42	245660	**P3PH**	**072e**	**DM**	**DRU**	**200L4**	295	
10	20200	147.64	245660	**P3PS**	**072e**	**DM**	**DRU**	**200L4**	295	312
11	17900	130.72	245660	**P3PL**	**072e**	**DM**	**DRU**	**200L4**	295	
13	15600	113.57	245660	**P3PV**	**072e**	**DM**	**DRU**	**200L4**	295	
15	13600	99.59	245660							
17	11900	87.03	245660							
19	10600	77.63	245660							
22	9350	68.07	245660							
24	8380	61.07	245660							
28	7340	53.48	245660							

31991203/EN – 08/2025

P_m = 22 kW

n_2	M_a	i_{ex}	M_{N2}						m	
min^{-1}	Nm		Nm						kg	
4.5	45600	332.32	185660							
5.2	39600	288.36	185660							
5.9	34300	250.21	185660							
6.7	30400	222.01	185660							
7.5	27000	197.00	185660							
8.3	24400	177.75	185660							
9.2	22000	160.39	185660	**P3PH**	**062e**	**DM**	**DRU**	**200L4**	295	308
9.9	20600	150.09	185660	**P3PS**	**062e**	**DM**	**DRU**	**200L4**	295	
11	18000	131.16	185660	**P3PL**	**062e**	**DM**	**DRU**	**200L4**	295	
13	15700	114.35	185660	**P3PV**	**062e**	**DM**	**DRU**	**200L4**	295	
15	13700	99.93	185660							
17	11900	87.32	185660							
19	10700	78.16	185660							
22	9380	68.30	185660							
24	8390	61.13	185660							
28	7330	53.42	185660							
4.5	45600	332.32	124060	**P3PH**	**052e**	**DM**	**DRU**	**200L4**	1150	304
5.2	39600	288.36	124060	**P3PS**	**052e**	**DM**	**DRU**	**200L4**	1160	
5.9	34300	250.21	124060	**P3PL**	**052e**	**DM**	**DRU**	**200L4**	1150	
				P3PV	**052e**	**DM**	**DRU**	**200L4**	1070	
4.5	45600	332.32	100170							
5.2	39600	288.36	100170	**P3PH**	**042e**	**DM**	**DRU**	**200L4**	1000	300
5.9	34300	250.21	100170	**P3PS**	**042e**	**DM**	**DRU**	**200L4**	990	
6.7	30400	222.01	100170	**P3PL**	**042e**	**DM**	**DRU**	**200L4**	990	
7.5	27000	197.00	100170	**P3PV**	**042e**	**DM**	**DRU**	**200L4**	930	
4.5	45600	332.32	69620							
5.2	39600	288.36	69620							
5.9	34300	250.21	69620							
6.7	30400	222.01	69620	**P3PH**	**032e**	**DM**	**DRU**	**200L4**	800	296
7.5	27000	197.00	69620	**P3PS**	**032e**	**DM**	**DRU**	**200L4**	780	
8.3	24400	177.75	69620	**P3PL**	**032e**	**DM**	**DRU**	**200L4**	780	
9.2	22000	160.39	69620	**P3PV**	**032e**	**DM**	**DRU**	**200L4**	750	
9.9	20600	150.09	69620							
11	18000	131.16	69620							
4.5	45400	331.02	51190							
5.2	39400	287.23	51190							
6.0	33900	247.25	51190							
6.8	30100	219.39	51190							
7.7	26500	193.59	51190	**P3PH**	**022e**	**DM**	**DRU**	**200L4**	700	292
8.5	23900	174.68	51190	**P3PS**	**022e**	**DM**	**DRU**	**200L4**	680	
9.4	21500	156.99	51190	**P3PL**	**022e**	**DM**	**DRU**	**200L4**	680	
10	19700	143.53	51190	**P3PV**	**022e**	**DM**	**DRU**	**200L4**	660	
12	17400	127.35	51190							
13	15200	111.35	51190							
15	13300	97.03	51190							
38	5440	39.23	51190	**P2PH**	**022e**	**DM**	**DRU**	**200L4**	670	290
				P2PS	**022e**	**DM**	**DRU**	**200L4**	660	
				P2PL	**022e**	**DM**	**DRU**	**200L4**	660	
				P2PV	**022e**	**DM**	**DRU**	**200L4**	640	
4.5	45600	332.32	36810							
5.2	39600	288.36	36810							
5.9	34300	250.21	36810							
6.7	30400	222.01	36810							
7.5	27000	197.00	36810							
8.8	23200	169.15	36810	**P3PH**	**012e**	**DM**	**DRU**	**200L4**	590	288
9.9	20600	150.09	36810	**P3PS**	**012e**	**DM**	**DRU**	**200L4**	580	
11	18000	131.16	36810	**P3PL**	**012e**	**DM**	**DRU**	**200L4**	570	
13	15700	114.35	36810	**P3PV**	**012e**	**DM**	**DRU**	**200L4**	550	
15	13700	99.93	36810							
17	11900	87.32	36810							
19	10700	78.16	36810							
22	9380	68.30	36810							
38	5440	39.23	36810	**P2PH**	**012e**	**DM**	**DRU**	**200L4**	560	286
44	4720	34.04	36810	**P2PS**	**012e**	**DM**	**DRU**	**200L4**	550	
49	4190	30.21	36810	**P2PL**	**012e**	**DM**	**DRU**	**200L4**	540	
54	3780	27.26	36810	**P2PV**	**012e**	**DM**	**DRU**	**200L4**	530	

31991203/EN – 08/2025

P_m = 22 kW

n_2	M_a	i_{ex}	M_{N2}						m	
min^{-1}	Nm		Nm						kg	
6.8	30100	219.39	24830							
7.7	26500	193.59	24830							
9.0	22600	164.72	24830							
10	20000	146.16	24830							
12	17400	127.35	24830	**P3PH**	**002e**	**DM**	**DRU**	**200L4**	510	
13	15200	111.35	24830	**P3PS**	**002e**	**DM**	**DRU**	**200L4**	510	284
15	13300	97.03	24830	**P3PL**	**002e**	**DM**	**DRU**	**200L4**	500	
18	11600	84.79	24830	**P3PV**	**002e**	**DM**	**DRU**	**200L4**	490	
20	10400	75.77	24830							
22	9100	66.32	24830							
25	8140	59.26	24830							
29	7100	51.73	24830							
38	5420	39.08	24830							
44	4660	33.64	24830	**P2PH**	**002e**	**DM**	**DRU**	**200L4**	485	
50	4110	29.68	24830	**P2PS**	**002e**	**DM**	**DRU**	**200L4**	480	282
56	3700	26.68	24830	**P2PL**	**002e**	**DM**	**DRU**	**200L4**	475	
66	3100	22.41	24830	**P2PV**	**002e**	**DM**	**DRU**	**200L4**	460	
76	2700	19.53	24830							

P_m = 30 kW

n_2	M_a	i_{ex}	M_{N2}						m	
min^{-1}	Nm		Nm						kg	
4.6	60300	322.69	245660							
5.3	52700	282.12	245660							
6.1	45700	244.80	245660							
6.8	40600	217.21	245660							
7.7	36200	193.79	245660							
8.5	32800	175.57	245660							
9.4	29600	158.42	245660	**P3PH**	**072e**	**DM**	**DRU**	**225S4**	325	
10	27500	147.64	245660	**P3PS**	**072e**	**DM**	**DRU**	**225S4**	325	312
11	24400	130.72	245660	**P3PL**	**072e**	**DM**	**DRU**	**225S4**	325	
13	21200	113.57	245660	**P3PV**	**072e**	**DM**	**DRU**	**225S4**	325	
15	18600	99.59	245660							
17	16200	87.03	245660							
19	14500	77.63	245660							
22	12700	68.07	245660							
24	11400	61.07	245660							
28	9990	53.48	245660							
4.5	62100	332.32	185660	**P3PH**	**062e**	**DM**	**DRU**	**225S4**	325	
5.2	53900	288.36	185660	**P3PS**	**062e**	**DM**	**DRU**	**225S4**	325	308
5.9	46700	250.21	185660	**P3PL**	**062e**	**DM**	**DRU**	**225S4**	325	
				P3PV	**062e**	**DM**	**DRU**	**225S4**	325	
4.5	62100	332.32	124060							
5.2	53900	288.36	124060	**P3PH**	**052e**	**DM**	**DRU**	**225S4**	1180	
5.9	46700	250.21	124060	**P3PS**	**052e**	**DM**	**DRU**	**225S4**	1190	304
6.7	41500	222.01	124060	**P3PL**	**052e**	**DM**	**DRU**	**225S4**	1180	
7.5	36800	197.00	124060	**P3PV**	**052e**	**DM**	**DRU**	**225S4**	1100	
8.4	33200	177.75	124060							
38	7400	39.23	124060	**P2PH**	**052e**	**DM**	**DRU**	**225S4**	1100	
				P2PS	**052e**	**DM**	**DRU**	**225S4**	1110	302
				P2PL	**052e**	**DM**	**DRU**	**225S4**	1100	
				P2PV	**052e**	**DM**	**DRU**	**225S4**	1020	
4.5	62100	332.32	100170							
5.2	53900	288.36	100170							
5.9	46700	250.21	100170	**P3PH**	**042e**	**DM**	**DRU**	**225S4**	1030	
6.7	41500	222.01	100170	**P3PS**	**042e**	**DM**	**DRU**	**225S4**	1020	300
7.5	36800	197.00	100170	**P3PL**	**042e**	**DM**	**DRU**	**225S4**	1020	
8.4	33200	177.75	100170	**P3PV**	**042e**	**DM**	**DRU**	**225S4**	960	
9.3	29900	160.39	100170							
9.9	28000	150.09	100170							
38	7400	39.23	100170	**P2PH**	**042e**	**DM**	**DRU**	**225S4**	980	
				P2PS	**042e**	**DM**	**DRU**	**225S4**	980	298
				P2PL	**042e**	**DM**	**DRU**	**225S4**	970	
				P2PV	**042e**	**DM**	**DRU**	**225S4**	920	

31991203/EN – 08/2025

P_m = 30 kW

n_2	M_a	i_{ex}	M_{N2}						m	
min^{-1}	Nm		Nm						kg	
4.5	62100	332.32	69620							
5.2	53900	288.36	69620							
5.9	46700	250.21	69620							
6.7	41500	222.01	69620							
7.5	36800	197.00	69620	**P3PH**	**032e**	**DM**	**DRU**	**225S4**	830	
8.4	33200	177.75	69620	**P3PS**	**032e**	**DM**	**DRU**	**225S4**	810	296
9.3	29900	160.39	69620	**P3PL**	**032e**	**DM**	**DRU**	**225S4**	810	
9.9	28000	150.09	69620	**P3PV**	**032e**	**DM**	**DRU**	**225S4**	780	
11	24500	131.16	69620							
13	21300	114.35	69620							
15	18600	99.93	69620							
38	7400	39.23	69620	**P2PH**	**032e**	**DM**	**DRU**	**225S4**	830	
				P2PS	**032e**	**DM**	**DRU**	**225S4**	800	294
				P2PL	**032e**	**DM**	**DRU**	**225S4**	800	
				P2PV	**032e**	**DM**	**DRU**	**225S4**	770	
4.5	61800	331.02	51190							
5.2	53600	287.23	51190							
6.0	46200	247.25	51190							
6.8	41000	219.39	51190							
7.7	36100	193.59	51190							
8.5	32600	174.68	51190	**P3PH**	**022e**	**DM**	**DRU**	**225S4**	730	
9.5	29300	156.99	51190	**P3PS**	**022e**	**DM**	**DRU**	**225S4**	720	292
10	26800	143.53	51190	**P3PL**	**022e**	**DM**	**DRU**	**225S4**	710	
12	23800	127.35	51190	**P3PV**	**022e**	**DM**	**DRU**	**225S4**	690	
13	20800	111.35	51190							
15	18100	97.03	51190							
18	15800	84.79	51190							
20	14100	75.68	51190							
38	7400	39.23	51190	**P2PH**	**022e**	**DM**	**DRU**	**225S4**	710	
44	6420	34.04	51190	**P2PS**	**022e**	**DM**	**DRU**	**225S4**	690	290
49	5700	30.21	51190	**P2PL**	**022e**	**DM**	**DRU**	**225S4**	690	
55	5140	27.26	51190	**P2PV**	**022e**	**DM**	**DRU**	**225S4**	670	
6.7	41500	222.01	36810							
7.5	36800	197.00	36810							
8.8	31600	169.15	36810							
9.9	28000	150.09	36810							
11	24500	131.16	36810	**P3PH**	**012e**	**DM**	**DRU**	**225S4**	620	
13	21300	114.35	36810	**P3PS**	**012e**	**DM**	**DRU**	**225S4**	610	288
15	18600	99.93	36810	**P3PL**	**012e**	**DM**	**DRU**	**225S4**	600	
17	16300	87.32	36810	**P3PV**	**012e**	**DM**	**DRU**	**225S4**	590	
19	14600	78.16	36810							
22	12700	68.30	36810							
24	11400	61.13	36810							
28	9980	53.42	36810							
38	7400	39.23	36810							
44	6420	34.04	36810	**P2PH**	**012e**	**DM**	**DRU**	**225S4**	590	
49	5700	30.21	36810	**P2PS**	**012e**	**DM**	**DRU**	**225S4**	580	286
55	5140	27.26	36810	**P2PL**	**012e**	**DM**	**DRU**	**225S4**	580	
65	4340	23.01	36810	**P2PV**	**012e**	**DM**	**DRU**	**225S4**	560	
74	3790	20.11	36810							
9.0	30700	164.72	24830							
10	27300	146.16	24830							
12	23800	127.35	24830							
13	20800	111.35	24830	**P3PH**	**002e**	**DM**	**DRU**	**225S4**	550	
15	18100	97.03	24830	**P3PS**	**002e**	**DM**	**DRU**	**225S4**	540	284
18	15800	84.79	24830	**P3PL**	**002e**	**DM**	**DRU**	**225S4**	540	
20	14100	75.77	24830	**P3PV**	**002e**	**DM**	**DRU**	**225S4**	520	
22	12300	66.32	24830							
25	11000	59.26	24830							
29	9660	51.73	24830							

31991203/EN – 08/2025

P_m = 30 kW

n_2	M_a	i_{ex}	M_{N2}						m	
min^{-1}	Nm		Nm						kg	
38	7370	39.08	24830							
44	6350	33.64	24830							
50	5600	29.68	24830	**P2PH**	**002e**	**DM**	**DRU**	**225S4**	520	282
56	5030	26.68	24830	**P2PS**	**002e**	**DM**	**DRU**	**225S4**	510	
66	4230	22.41	24830	**P2PL**	**002e**	**DM**	**DRU**	**225S4**	510	
76	3680	19.53	24830	**P2PV**	**002e**	**DM**	**DRU**	**225S4**	490	
85	3290	17.45	24830							
98	2870	15.23	24830							

P_m = 37 kW

n_2	M_a	i_{ex}	M_{N2}						m	
min^{-1}	Nm		Nm						kg	
4.6	74400	322.69	245660	**P3PH**	**072e**	**DM**	**DRU**	**225ME4**	380	312
5.3	65000	282.12	245660	**P3PS**	**072e**	**DM**	**DRU**	**225ME4**	380	
				P3PL	**072e**	**DM**	**DRU**	**225ME4**	380	
				P3PV	**072e**	**DM**	**DRU**	**225ME4**	380	
4.5	76600	332.32	185660	**P3PH**	**062e**	**DM**	**DRU**	**225ME4**	380	308
5.2	66500	288.36	185660	**P3PS**	**062e**	**DM**	**DRU**	**225ME4**	380	
5.9	57700	250.21	185660	**P3PL**	**062e**	**DM**	**DRU**	**225ME4**	380	
6.7	51200	222.01	185660	**P3PV**	**062e**	**DM**	**DRU**	**225ME4**	380	
4.5	76600	332.32	124060							
5.2	66500	288.36	124060							
5.9	57700	250.21	124060	**P3PH**	**052e**	**DM**	**DRU**	**225ME4**	1240	304
6.7	51200	222.01	124060	**P3PS**	**052e**	**DM**	**DRU**	**225ME4**	1240	
7.5	45400	197.00	124060	**P3PL**	**052e**	**DM**	**DRU**	**225ME4**	1240	
8.4	41000	177.75	124060	**P3PV**	**052e**	**DM**	**DRU**	**225ME4**	1150	
9.3	37000	160.39	124060							
9.9	34600	150.09	124060							
38	9140	39.23	124060	**P2PH**	**052e**	**DM**	**DRU**	**225ME4**	1160	302
				P2PS	**052e**	**DM**	**DRU**	**225ME4**	1170	
				P2PL	**052e**	**DM**	**DRU**	**225ME4**	1160	
				P2PV	**052e**	**DM**	**DRU**	**225ME4**	1080	
4.5	76600	332.32	100170							
5.2	66500	288.36	100170							
5.9	57700	250.21	100170							
6.7	51200	222.01	100170	**P3PH**	**042e**	**DM**	**DRU**	**225ME4**	1090	300
7.5	45400	197.00	100170	**P3PS**	**042e**	**DM**	**DRU**	**225ME4**	1080	
8.4	41000	177.75	100170	**P3PL**	**042e**	**DM**	**DRU**	**225ME4**	1070	
9.3	37000	160.39	100170	**P3PV**	**042e**	**DM**	**DRU**	**225ME4**	1020	
9.9	34600	150.09	100170							
11	30200	131.16	100170							
13	26300	114.35	100170							
38	9140	39.23	100170	**P2PH**	**042e**	**DM**	**DRU**	**225ME4**	1040	298
				P2PS	**042e**	**DM**	**DRU**	**225ME4**	1030	
				P2PL	**042e**	**DM**	**DRU**	**225ME4**	1030	
				P2PV	**042e**	**DM**	**DRU**	**225ME4**	970	
4.5	76600	332.32	69620							
5.2	66500	288.36	69620							
5.9	57700	250.21	69620							
6.7	51200	222.01	69620							
7.5	45400	197.00	69620							
8.4	41000	177.75	69620	**P3PH**	**032e**	**DM**	**DRU**	**225ME4**	890	296
9.3	37000	160.39	69620	**P3PS**	**032e**	**DM**	**DRU**	**225ME4**	870	
9.9	34600	150.09	69620	**P3PL**	**032e**	**DM**	**DRU**	**225ME4**	860	
11	30200	131.16	69620	**P3PV**	**032e**	**DM**	**DRU**	**225ME4**	830	
13	26300	114.35	69620							
15	23000	99.93	69620							
17	20100	87.32	69620							
19	18000	78.16	69620							
38	9140	39.23	69620	**P2PH**	**032e**	**DM**	**DRU**	**225ME4**	880	294
44	7930	34.04	69620	**P2PS**	**032e**	**DM**	**DRU**	**225ME4**	860	
49	7030	30.21	69620	**P2PL**	**032e**	**DM**	**DRU**	**225ME4**	860	
				P2PV	**032e**	**DM**	**DRU**	**225ME4**	830	

31991203/EN – 08/2025

P_m = 37 kW

n_2	M_a	i_{ex}	M_{N2}						m	
min^{-1}	Nm		Nm						kg	
6.0	57000	247.25	51190							
6.8	50600	219.39	51190							
7.7	44600	193.59	51190							
8.5	40200	174.68	51190							
9.5	36200	156.99	51190							
10	33100	143.53	51190	**P3PH**	**022e**	**DM**	**DRU**	**225ME4**	780	
12	29300	127.35	51190	**P3PS**	**022e**	**DM**	**DRU**	**225ME4**	770	292
13	25600	111.35	51190	**P3PL**	**022e**	**DM**	**DRU**	**225ME4**	770	
15	22300	97.03	51190	**P3PV**	**022e**	**DM**	**DRU**	**225ME4**	750	
18	19500	84.79	51190							
20	17400	75.68	51190							
22	15200	66.13	51190							
25	13600	59.19	51190							
38	9140	39.23	51190							
44	7930	34.04	51190	**P2PH**	**022e**	**DM**	**DRU**	**225ME4**	760	
49	7030	30.21	51190	**P2PS**	**022e**	**DM**	**DRU**	**225ME4**	750	290
55	6350	27.26	51190	**P2PL**	**022e**	**DM**	**DRU**	**225ME4**	750	
65	5360	23.01	51190	**P2PV**	**022e**	**DM**	**DRU**	**225ME4**	720	
7.5	45400	197.00	36810							
8.8	39000	169.15	36810							
9.9	34600	150.09	36810							
11	30200	131.16	36810							
13	26300	114.35	36810	**P3PH**	**012e**	**DM**	**DRU**	**225ME4**	680	
15	23000	99.93	36810	**P3PS**	**012e**	**DM**	**DRU**	**225ME4**	660	288
17	20100	87.32	36810	**P3PL**	**012e**	**DM**	**DRU**	**225ME4**	660	
19	18000	78.16	36810	**P3PV**	**012e**	**DM**	**DRU**	**225ME4**	640	
22	15700	68.30	36810							
24	14100	61.13	36810							
28	12300	53.42	36810							
38	9140	39.23	36810							
44	7930	34.04	36810							
49	7030	30.21	36810	**P2PH**	**012e**	**DM**	**DRU**	**225ME4**	650	
55	6350	27.26	36810	**P2PS**	**012e**	**DM**	**DRU**	**225ME4**	640	286
65	5360	23.01	36810	**P2PL**	**012e**	**DM**	**DRU**	**225ME4**	630	
74	4680	20.11	36810	**P2PV**	**012e**	**DM**	**DRU**	**225ME4**	610	
83	4190	18.00*	36810							
12	29300	127.35	24830							
13	25600	111.35	24830							
15	22300	97.03	24830	**P3PH**	**002e**	**DM**	**DRU**	**225ME4**	600	
18	19500	84.79	24830	**P3PS**	**002e**	**DM**	**DRU**	**225ME4**	600	284
20	17400	75.77	24830	**P3PL**	**002e**	**DM**	**DRU**	**225ME4**	590	
22	15300	66.32	24830	**P3PV**	**002e**	**DM**	**DRU**	**225ME4**	580	
25	13600	59.26	24830							
29	11900	51.73	24830							
38	9100	39.08	24830							
44	7830	33.64	24830							
50	6910	29.68	24830	**P2PH**	**002e**	**DM**	**DRU**	**225ME4**	570	
56	6210	26.68	24830	**P2PS**	**002e**	**DM**	**DRU**	**225ME4**	570	282
66	5220	22.41	24830	**P2PL**	**002e**	**DM**	**DRU**	**225ME4**	560	
76	4550	19.53	24830	**P2PV**	**002e**	**DM**	**DRU**	**225ME4**	550	
85	4060	17.45	24830							
98	3540	15.23	24830							

P_m = 45 kW

n_2	M_a	i_{ex}	M_{N2}						m	
min^{-1}	Nm		Nm						kg	
4.6	90600	322.69	245660	**P3PH**	**072e**	**DM**	**DRU**	**250M4**	475	
5.3	79200	282.12	245660	**P3PS**	**072e**	**DM**	**DRU**	**250M4**	475	312
6.1	68700	244.80	245660	**P3PL**	**072e**	**DM**	**DRU**	**250M4**	475	
				P3PV	**072e**	**DM**	**DRU**	**250M4**	475	

31991203/EN – 08/2025

P_m = 45 kW

n_2	M_a	i_{ex}	M_{N2}						m	
min^{-1}	Nm		Nm						kg	
4.5	93300	332.32	185660							
5.2	80900	288.36	185660	**P3PH**	**062e**	**DM**	**DRU**	**250M4**	475	
5.9	70200	250.21	185660	**P3PS**	**062e**	**DM**	**DRU**	**250M4**	475	308
6.7	62300	222.01	185660	**P3PL**	**062e**	**DM**	**DRU**	**250M4**	475	
7.5	55300	197.00	185660	**P3PV**	**062e**	**DM**	**DRU**	**250M4**	475	
8.3	49900	177.75	185660							
4.5	93300	332.32	124060							
5.2	80900	288.36	124060							
5.9	70200	250.21	124060							
6.7	62300	222.01	124060	**P3PH**	**052e**	**DM**	**DRU**	**250M4**	1330	
7.5	55300	197.00	124060	**P3PS**	**052e**	**DM**	**DRU**	**250M4**	1340	304
8.3	49900	177.75	124060	**P3PL**	**052e**	**DM**	**DRU**	**250M4**	1330	
9.3	45000	160.39	124060	**P3PV**	**052e**	**DM**	**DRU**	**250M4**	1250	
9.9	42100	150.09	124060							
11	36800	131.16	124060							
13	32100	114.35	124060							
38	11100	39.23	124060	**P2PH**	**052e**	**DM**	**DRU**	**250M4**	1260	
44	9650	34.04	124060	**P2PS**	**052e**	**DM**	**DRU**	**250M4**	1260	302
49	8560	30.21	124060	**P2PL**	**052e**	**DM**	**DRU**	**250M4**	1250	
				P2PV	**052e**	**DM**	**DRU**	**250M4**	1170	
4.5	93300	332.32	100170							
5.2	80900	288.36	100170							
5.9	70200	250.21	100170							
6.7	62300	222.01	100170							
7.5	55300	197.00	100170	**P3PH**	**042e**	**DM**	**DRU**	**250M4**	1180	
8.3	49900	177.75	100170	**P3PS**	**042e**	**DM**	**DRU**	**250M4**	1170	300
9.3	45000	160.39	100170	**P3PL**	**042e**	**DM**	**DRU**	**250M4**	1170	
9.9	42100	150.09	100170	**P3PV**	**042e**	**DM**	**DRU**	**250M4**	1110	
11	36800	131.16	100170							
13	32100	114.35	100170							
15	28000	99.93	100170							
38	11100	39.23	100170	**P2PH**	**042e**	**DM**	**DRU**	**250M4**	1140	
44	9650	34.04	100170	**P2PS**	**042e**	**DM**	**DRU**	**250M4**	1130	298
				P2PL	**042e**	**DM**	**DRU**	**250M4**	1120	
				P2PV	**042e**	**DM**	**DRU**	**250M4**	1070	
5.2	80900	288.36	69620							
5.9	70200	250.21	69620							
6.7	62300	222.01	69620							
7.5	55300	197.00	69620							
8.3	49900	177.75	69620							
9.3	45000	160.39	69620	**P3PH**	**032e**	**DM**	**DRU**	**250M4**	980	
9.9	42100	150.09	69620	**P3PS**	**032e**	**DM**	**DRU**	**250M4**	960	296
11	36800	131.16	69620	**P3PL**	**032e**	**DM**	**DRU**	**250M4**	960	
13	32100	114.35	69620	**P3PV**	**032e**	**DM**	**DRU**	**250M4**	930	
15	28000	99.93	69620							
17	24500	87.32	69620							
19	21900	78.16	69620							
22	19100	68.30	69620							
38	11100	39.23	69620	**P2PH**	**032e**	**DM**	**DRU**	**250M4**	980	
44	9650	34.04	69620	**P2PS**	**032e**	**DM**	**DRU**	**250M4**	960	294
49	8560	30.21	69620	**P2PL**	**032e**	**DM**	**DRU**	**250M4**	950	
54	7720	27.26	69620	**P2PV**	**032e**	**DM**	**DRU**	**250M4**	920	
6.8	61600	219.39	51190							
7.7	54300	193.59	51190							
8.5	49000	174.68	51190							
9.5	44000	156.99	51190							
10	40200	143.53	51190							
12	35700	127.35	51190	**P3PH**	**022e**	**DM**	**DRU**	**250M4**	880	
13	31200	111.35	51190	**P3PS**	**022e**	**DM**	**DRU**	**250M4**	870	292
15	27200	97.03	51190	**P3PL**	**022e**	**DM**	**DRU**	**250M4**	860	
18	23800	84.79	51190	**P3PV**	**022e**	**DM**	**DRU**	**250M4**	840	
20	21200	75.68	51190							
22	18500	66.13	51190							
25	16600	59.19	51190							
29	14500	51.73	51190							

31991203/EN – 08/2025

P_m = 45 kW

n_2	M_a	i_{ex}	M_{N2}						m	
min^{-1}	Nm		Nm						kg	
38	11100	39.23	51190							
44	9650	34.04	51190	**P2PH**	**022e**	**DM**	**DRU**	**250M4**	860	
49	8560	30.21	51190	**P2PS**	**022e**	**DM**	**DRU**	**250M4**	840	290
54	7720	27.26	51190	**P2PL**	**022e**	**DM**	**DRU**	**250M4**	840	
65	6520	23.01	51190	**P2PV**	**022e**	**DM**	**DRU**	**250M4**	820	
74	5700	20.11	51190							
38	11100	39.23	36810							
44	9650	34.04	36810							
49	8560	30.21	36810	**P2PH**	**012e**	**DM**	**DRU**	**250M4**	740	
54	7720	27.26	36810	**P2PS**	**012e**	**DM**	**DRU**	**250M4**	730	286
65	6520	23.01	36810	**P2PL**	**012e**	**DM**	**DRU**	**250M4**	730	
74	5700	20.11	36810	**P2PV**	**012e**	**DM**	**DRU**	**250M4**	710	
82	5100	18.00*	36810							
94	4460	15.73	36810							
38	11000	39.08	24830							
44	9540	33.64	24830							
50	8410	29.68	24830	**P2PH**	**002e**	**DM**	**DRU**	**250M4**	670	
56	7560	26.68	24830	**P2PS**	**002e**	**DM**	**DRU**	**250M4**	660	282
66	6350	22.41	24830	**P2PL**	**002e**	**DM**	**DRU**	**250M4**	660	
76	5530	19.53	24830	**P2PV**	**002e**	**DM**	**DRU**	**250M4**	640	
85	4940	17.45	24830							
98	4310	15.23	24830							

P_m = 55 kW

n_2	M_a	i_{ex}	M_{N2}						m	
min^{-1}	Nm		Nm						kg	
4.6	110500	322.69	245660							
5.3	96600	282.12	245660	**P3PH**	**072e**	**DM**	**DRU**	**250ME4**	520	
6.1	83800	244.80	245660	**P3PS**	**072e**	**DM**	**DRU**	**250ME4**	520	312
6.8	74400	217.21	245660	**P3PL**	**072e**	**DM**	**DRU**	**250ME4**	520	
7.7	66400	193.79	245660	**P3PV**	**072e**	**DM**	**DRU**	**250ME4**	520	
4.5	113800	332.32	185660							
5.2	98800	288.36	185660							
5.9	85700	250.21	185660	**P3PH**	**062e**	**DM**	**DRU**	**250ME4**	520	
6.7	76000	222.01	185660	**P3PS**	**062e**	**DM**	**DRU**	**250ME4**	520	308
7.5	67500	197.00	185660	**P3PL**	**062e**	**DM**	**DRU**	**250ME4**	520	
8.4	60900	177.75	185660	**P3PV**	**062e**	**DM**	**DRU**	**250ME4**	520	
9.3	54900	160.39	185660							
9.9	51400	150.09	185660							
4.5	113800	332.32	124060							
5.2	98800	288.36	124060							
5.9	85700	250.21	124060							
6.7	76000	222.01	124060							
7.5	67500	197.00	124060	**P3PH**	**052e**	**DM**	**DRU**	**250ME4**	1380	
8.4	60900	177.75	124060	**P3PS**	**052e**	**DM**	**DRU**	**250ME4**	1390	304
9.3	54900	160.39	124060	**P3PL**	**052e**	**DM**	**DRU**	**250ME4**	1380	
9.9	51400	150.09	124060	**P3PV**	**052e**	**DM**	**DRU**	**250ME4**	1300	
11	44900	131.16	124060							
13	39100	114.35	124060							
15	34200	99.93	124060							
38	13500	39.23	124060	**P2PH**	**052e**	**DM**	**DRU**	**250ME4**	1300	
44	11700	34.04	124060	**P2PS**	**052e**	**DM**	**DRU**	**250ME4**	1310	302
49	10400	30.21	124060	**P2PL**	**052e**	**DM**	**DRU**	**250ME4**	1300	
55	9430	27.26	124060	**P2PV**	**052e**	**DM**	**DRU**	**250ME4**	1220	

31991203/EN – 08/2025

P_m = 55 kW

n_2	M_a	i_{ex}	M_{N2}						m	
min^{-1}	Nm		Nm						kg	
4.5	113800	332.32	100170							
5.2	98800	288.36	100170							
5.9	85700	250.21	100170							
6.7	76000	222.01	100170							
7.5	67500	197.00	100170							
8.4	60900	177.75	100170	**P3PH**	**042e**	**DM**	**DRU**	**250ME4**	1230	
9.3	54900	160.39	100170	**P3PS**	**042e**	**DM**	**DRU**	**250ME4**	1220	300
9.9	51400	150.09	100170	**P3PL**	**042e**	**DM**	**DRU**	**250ME4**	1210	
11	44900	131.16	100170	**P3PV**	**042e**	**DM**	**DRU**	**250ME4**	1160	
13	39100	114.35	100170							
15	34200	99.93	100170							
17	29900	87.32	100170							
19	26700	78.16	100170							
38	13500	39.23	100170	**P2PH**	**042e**	**DM**	**DRU**	**250ME4**	1180	
44	11700	34.04	100170	**P2PS**	**042e**	**DM**	**DRU**	**250ME4**	1180	298
49	10400	30.21	100170	**P2PL**	**042e**	**DM**	**DRU**	**250ME4**	1170	
				P2PV	**042e**	**DM**	**DRU**	**250ME4**	1110	
5.9	85700	250.21	69620							
6.7	76000	222.01	69620							
7.5	67500	197.00	69620							
8.4	60900	177.75	69620							
9.3	54900	160.39	69620							
9.9	51400	150.09	69620	**P3PH**	**032e**	**DM**	**DRU**	**250ME4**	1030	
11	44900	131.16	69620	**P3PS**	**032e**	**DM**	**DRU**	**250ME4**	1010	296
13	39100	114.35	69620	**P3PL**	**032e**	**DM**	**DRU**	**250ME4**	1000	
15	34200	99.93	69620	**P3PV**	**032e**	**DM**	**DRU**	**250ME4**	980	
17	29900	87.32	69620							
19	26700	78.16	69620							
22	23400	68.30	69620							
24	20900	61.13	69620							
28	18300	53.42	69620							
38	13500	39.23	69620							
44	11700	34.04	69620	**P2PH**	**032e**	**DM**	**DRU**	**250ME4**	1030	
49	10400	30.21	69620	**P2PS**	**032e**	**DM**	**DRU**	**250ME4**	1000	294
55	9430	27.26	69620	**P2PL**	**032e**	**DM**	**DRU**	**250ME4**	1000	
65	7960	23.01	69620	**P2PV**	**032e**	**DM**	**DRU**	**250ME4**	970	
74	6960	20.11	69620							
8.5	59800	174.68	51190							
9.5	53800	156.99	51190							
10	49100	143.53	51190							
12	43600	127.35	51190							
13	38100	111.35	51190	**P3PH**	**022e**	**DM**	**DRU**	**250ME4**	920	
15	33200	97.03	51190	**P3PS**	**022e**	**DM**	**DRU**	**250ME4**	910	292
18	29000	84.79	51190	**P3PL**	**022e**	**DM**	**DRU**	**250ME4**	910	
20	25900	75.68	51190	**P3PV**	**022e**	**DM**	**DRU**	**250ME4**	890	
22	22600	66.13	51190							
25	20200	59.19	51190							
29	17700	51.73	51190							
38	13500	39.23	51190							
44	11700	34.04	51190							
49	10400	30.21	51190	**P2PH**	**022e**	**DM**	**DRU**	**250ME4**	900	
55	9430	27.26	51190	**P2PS**	**022e**	**DM**	**DRU**	**250ME4**	890	290
65	7960	23.01	51190	**P2PL**	**022e**	**DM**	**DRU**	**250ME4**	890	
74	6960	20.11	51190	**P2PV**	**022e**	**DM**	**DRU**	**250ME4**	870	
83	6230	18.00	51190							
95	5440	15.73	51190							
38	13500	39.23	36810							
44	11700	34.04	36810							
49	10400	30.21	36810	**P2PH**	**012e**	**DM**	**DRU**	**250ME4**	790	
55	9430	27.26	36810	**P2PS**	**012e**	**DM**	**DRU**	**250ME4**	780	286
65	7960	23.01	36810	**P2PL**	**012e**	**DM**	**DRU**	**250ME4**	770	
74	6960	20.11	36810	**P2PV**	**012e**	**DM**	**DRU**	**250ME4**	750	
83	6230	18.00*	36810							
95	5440	15.73	36810							

31991203/EN – 08/2025

P_m = 55 kW

n_2	M_a	i_{ex}	M_{N2}						m	
min^{-1}	Nm		Nm						kg	
38	13500	39.08	24830							
44	11600	33.64	24830							
50	10200	29.68	24830	**P2PH**	**002e**	**DM**	**DRU**	**250ME4**	710	
56	9230	26.68	24830	**P2PS**	**002e**	**DM**	**DRU**	**250ME4**	710	282
66	7750	22.41	24830	**P2PL**	**002e**	**DM**	**DRU**	**250ME4**	700	
76	6750	19.53	24830	**P2PV**	**002e**	**DM**	**DRU**	**250ME4**	690	
85	6040	17.45	24830							
98	5270	15.23	24830							

P_m = 75 kW

n_2	M_a	i_{ex}	M_{N2}						m	
min^{-1}	Nm		Nm						kg	
4.6	150900	322.69	245660							
5.3	131900	282.12	245660							
6.1	114400	244.80	245660	**P3PH**	**072e**	**DM**	**DRU**	**280M4**	640	
6.8	101500	217.21	245660	**P3PS**	**072e**	**DM**	**DRU**	**280M4**	640	312
7.7	90600	193.79	245660	**P3PL**	**072e**	**DM**	**DRU**	**280M4**	640	
8.5	82100	175.57	245660	**P3PV**	**072e**	**DM**	**DRU**	**280M4**	640	
9.4	74000	158.42	245660							
10	69000	147.64	245660							
4.5	155400	332.32	185660							
5.2	134800	288.36	185660							
5.9	117000	250.21	185660							
6.7	103800	222.01	185660							
7.5	92100	197.00	185660	**P3PH**	**062e**	**DM**	**DRU**	**280M4**	640	
8.4	83100	177.75	185660	**P3PS**	**062e**	**DM**	**DRU**	**280M4**	640	308
9.3	75000	160.39	185660	**P3PL**	**062e**	**DM**	**DRU**	**280M4**	640	
9.9	70100	150.09	185660	**P3PV**	**062e**	**DM**	**DRU**	**280M4**	640	
11	61300	131.16	185660							
13	53400	114.35	185660							
15	46700	99.93	185660							
4.5	155400	332.32	124060							
5.2	134800	288.36	124060							
5.9	117000	250.21	124060							
6.7	103800	222.01	124060							
7.5	92100	197.00	124060							
8.4	83100	177.75	124060	**P3PH**	**052e**	**DM**	**DRU**	**280M4**	1500	
9.3	75000	160.39	124060	**P3PS**	**052e**	**DM**	**DRU**	**280M4**	1500	304
9.9	70100	150.09	124060	**P3PL**	**052e**	**DM**	**DRU**	**280M4**	1490	
11	61300	131.16	124060	**P3PV**	**052e**	**DM**	**DRU**	**280M4**	1410	
13	53400	114.35	124060							
15	46700	99.93	124060							
17	40800	87.32	124060							
19	36500	78.16	124060							
22	31900	68.30	124060							
38	18500	39.23	124060	**P2PH**	**052e**	**DM**	**DRU**	**280M4**	1420	
44	16000	34.04	124060	**P2PS**	**052e**	**DM**	**DRU**	**280M4**	1430	302
49	14200	30.21	124060	**P2PL**	**052e**	**DM**	**DRU**	**280M4**	1420	
55	12800	27.26	124060	**P2PV**	**052e**	**DM**	**DRU**	**280M4**	1340	
5.9	117000	250.21	100170							
6.7	103800	222.01	100170							
7.5	92100	197.00	100170							
8.4	83100	177.75	100170							
9.3	75000	160.39	100170							
9.9	70100	150.09	100170	**P3PH**	**042e**	**DM**	**DRU**	**280M4**	1340	
11	61300	131.16	100170	**P3PS**	**042e**	**DM**	**DRU**	**280M4**	1340	300
13	53400	114.35	100170	**P3PL**	**042e**	**DM**	**DRU**	**280M4**	1330	
15	46700	99.93	100170	**P3PV**	**042e**	**DM**	**DRU**	**280M4**	1280	
17	40800	87.32	100170							
19	36500	78.16	100170							
22	31900	68.30	100170							
24	28500	61.13	100170							
28	24900	53.42	100170							

31991203/EN – 08/2025

P_m = 75 kW

n_2	M_a	i_{ex}	M_{N2}						m	
min^{-1}	Nm		Nm						kg	
38	18500	39.23	100170							
44	16000	34.04	100170	**P2PH**	**042e**	**DM**	**DRU**	**280M4**	1300	
49	14200	30.21	100170	**P2PS**	**042e**	**DM**	**DRU**	**280M4**	1290	298
55	12800	27.26	100170	**P2PL**	**042e**	**DM**	**DRU**	**280M4**	1290	
65	10800	23.01	100170	**P2PV**	**042e**	**DM**	**DRU**	**280M4**	1230	
38	18500	39.23	69620							
44	16000	34.04	69620							
49	14200	30.21	69620	**P2PH**	**032e**	**DM**	**DRU**	**280M4**	1140	
55	12800	27.26	69620	**P2PS**	**032e**	**DM**	**DRU**	**280M4**	1120	294
65	10800	23.01	69620	**P2PL**	**032e**	**DM**	**DRU**	**280M4**	1120	
74	9490	20.11	69620	**P2PV**	**032e**	**DM**	**DRU**	**280M4**	1090	
83	8500	18.00	69620							
94	7430	15.73	69620							
38	18500	39.23	51190							
44	16000	34.04	51190							
49	14200	30.21	51190	**P2PH**	**022e**	**DM**	**DRU**	**280M4**	1020	
55	12800	27.26	51190	**P2PS**	**022e**	**DM**	**DRU**	**280M4**	1010	290
65	10800	23.01	51190	**P2PL**	**022e**	**DM**	**DRU**	**280M4**	1000	
74	9490	20.11	51190	**P2PV**	**022e**	**DM**	**DRU**	**280M4**	980	
83	8500	18.00	51190							
94	7430	15.73	51190							
38	18500	39.23	36810							
44	16000	34.04	36810							
49	14200	30.21	36810	**P2PH**	**012e**	**DM**	**DRU**	**280M4**	900	
55	12800	27.26	36810	**P2PS**	**012e**	**DM**	**DRU**	**280M4**	890	286
65	10800	23.01	36810	**P2PL**	**012e**	**DM**	**DRU**	**280M4**	890	
74	9490	20.11	36810	**P2PV**	**012e**	**DM**	**DRU**	**280M4**	870	
83	8500	18.00*	36810							
94	7430	15.73	36810							

P_m = 90 kW

n_2	M_a	i_{ex}	M_{N2}						m	
min^{-1}	Nm		Nm						kg	
4.6	180800	322.69	245660							
5.3	158100	282.12	245660							
6.1	137100	244.80	245660							
6.8	121700	217.21	245660	**P3PH**	**072e**	**DM**	**DRU**	**315S4**	880	
7.7	108600	193.79	245660	**P3PS**	**072e**	**DM**	**DRU**	**315S4**	880	312
8.5	98300	175.57	245660	**P3PL**	**072e**	**DM**	**DRU**	**315S4**	880	
9.4	88700	158.42	245660	**P3PV**	**072e**	**DM**	**DRU**	**315S4**	880	
10	82700	147.64	245660							
11	73200	130.72	245660							
13	63600	113.57	245660							
4.5	186200	332.32	185660							
5.2	161600	288.36	185660							
6.0	140200	250.21	185660							
6.7	124400	222.01	185660							
7.5	110400	197.00	185660	**P3PH**	**062e**	**DM**	**DRU**	**315S4**	880	
8.4	99600	177.75	185660	**P3PS**	**062e**	**DM**	**DRU**	**315S4**	880	306
9.3	89800	160.39	185660	**P3PL**	**062e**	**DM**	**DRU**	**315S4**	880	
9.9	84100	150.09	185660	**P3PV**	**062e**	**DM**	**DRU**	**315S4**	880	
11	73500	131.16	185660							
13	64000	114.35	185660							
15	56000	99.93	185660							
17	48900	87.32	185660							

31991203/EN – 08/2025

P_m = 90 kW

n_2	M_a	i_{ex}	M_{N2}						m	
min^{-1}	Nm		Nm						kg	
6.0	140200	250.21	124060							
6.7	124400	222.01	124060							
7.5	110400	197.00	124060							
8.4	99600	177.75	124060							
9.3	89800	160.39	124060	**P3PH**	**052e**	**DM**	**DRU**	**315S4**	1740	304
9.9	84100	150.09	124060	**P3PS**	**052e**	**DM**	**DRU**	**315S4**	1750	
11	73500	131.16	124060	**P3PL**	**052e**	**DM**	**DRU**	**315S4**	1740	
13	64000	114.35	124060	**P3PV**	**052e**	**DM**	**DRU**	**315S4**	1660	
15	56000	99.93	124060							
17	48900	87.32	124060							
19	43800	78.16	124060							
22	38200	68.30	124060							
24	34200	61.13	124060							
38	22200	39.23	124060							
44	19200	34.04	124060	**P2PH**	**052e**	**DM**	**DRU**	**315S4**	1660	302
49	17000	30.21	124060	**P2PS**	**052e**	**DM**	**DRU**	**315S4**	1670	
55	15400	27.26	124060	**P2PL**	**052e**	**DM**	**DRU**	**315S4**	1660	
65	13000	23.01	124060	**P2PV**	**052e**	**DM**	**DRU**	**315S4**	1580	
38	22200	39.23	100170							
44	19200	34.04	100170							
49	17000	30.21	100170	**P2PH**	**042e**	**DM**	**DRU**	**315S4**	1540	298
55	15400	27.26	100170	**P2PS**	**042e**	**DM**	**DRU**	**315S4**	1540	
65	13000	23.01	100170	**P2PL**	**042e**	**DM**	**DRU**	**315S4**	1530	
74	11300	20.11	100170	**P2PV**	**042e**	**DM**	**DRU**	**315S4**	1480	
83	10100	18.00	100170							
38	22200	39.23	69620							
44	19200	34.04	69620							
49	17000	30.21	69620	**P2PH**	**032e**	**DM**	**DRU**	**315S4**	1390	294
55	15400	27.26	69620	**P2PS**	**032e**	**DM**	**DRU**	**315S4**	1360	
65	13000	23.01	69620	**P2PL**	**032e**	**DM**	**DRU**	**315S4**	1360	
74	11300	20.11	69620	**P2PV**	**032e**	**DM**	**DRU**	**315S4**	1330	
83	10100	18.00	69620							
95	8900	15.73	69620							

P_m = 110 kW

n_2	M_a	i_{ex}	M_{N2}						m	
min^{-1}	Nm		Nm						kg	
4.6	221000	322.69	245660							
5.3	193200	282.12	245660							
6.1	167600	244.80	245660							
6.8	148700	217.21	245660							
7.7	132700	193.79	245660	**P3PH**	**072e**	**DM**	**DRU**	**315S4**	880	312
8.5	120200	175.57	245660	**P3PS**	**072e**	**DM**	**DRU**	**315S4**	880	
9.4	108500	158.42	245660	**P3PL**	**072e**	**DM**	**DRU**	**315S4**	880	
10	101100	147.64	245660	**P3PV**	**072e**	**DM**	**DRU**	**315S4**	880	
11	89500	130.72	245660							
13	77700	113.57	245660							
15	68200	99.59	245660							
4.5	227600	332.32	185660							
5.2	197500	288.36	185660							
6.0	171300	250.21	185660							
6.7	152000	222.01	185660							
7.5	134900	197.00	185660							
8.4	121700	177.75	185660	**P3PH**	**062e**	**DM**	**DRU**	**315S4**	880	308
9.3	109800	160.39	185660	**P3PS**	**062e**	**DM**	**DRU**	**315S4**	880	
9.9	102800	150.09	185660	**P3PL**	**062e**	**DM**	**DRU**	**315S4**	880	
11	89800	131.16	185660	**P3PV**	**062e**	**DM**	**DRU**	**315S4**	880	
13	78300	114.35	185660							
15	68400	99.93	185660							
17	59800	87.32	185660							
19	53500	78.16	185660							
22	46700	68.30	185660							

31991203/EN – 08/2025

P_m = 110 kW

n_2	M_a	i_{ex}	M_{N2}						m	
min^{-1}	Nm		Nm						kg	
6.7	152000	222.01	124060							
7.5	134900	197.00	124060							
8.4	121700	177.75	124060							
9.3	109800	160.39	124060							
9.9	102800	150.09	124060							
11	89800	131.16	124060	**P3PH**	**052e**	**DM**	**DRU**	**315S4**	1740	
13	78300	114.35	124060	**P3PS**	**052e**	**DM**	**DRU**	**315S4**	1750	304
15	68400	99.93	124060	**P3PL**	**052e**	**DM**	**DRU**	**315S4**	1740	
17	59800	87.32	124060	**P3PV**	**052e**	**DM**	**DRU**	**315S4**	1660	
19	53500	78.16	124060							
22	46700	68.30	124060							
24	41800	61.13	124060							
28	36500	53.42	124060							
38	27100	39.23	124060							
44	23500	34.04	124060							
49	20800	30.21	124060	**P2PH**	**052e**	**DM**	**DRU**	**315S4**	1660	
55	18800	27.26	124060	**P2PS**	**052e**	**DM**	**DRU**	**315S4**	1670	302
65	15900	23.01	124060	**P2PL**	**052e**	**DM**	**DRU**	**315S4**	1660	
74	13900	20.11	124060	**P2PV**	**052e**	**DM**	**DRU**	**315S4**	1580	
83	12400	18.00	124060							
38	27100	39.23	100170							
44	23500	34.04	100170							
49	20800	30.21	100170	**P2PH**	**042e**	**DM**	**DRU**	**315S4**	1540	
55	18800	27.26	100170	**P2PS**	**042e**	**DM**	**DRU**	**315S4**	1540	298
65	15900	23.01	100170	**P2PL**	**042e**	**DM**	**DRU**	**315S4**	1530	
74	13900	20.11	100170	**P2PV**	**042e**	**DM**	**DRU**	**315S4**	1480	
83	12400	18.00	100170							
95	10800	15.73	100170							
38	27100	39.23	69620							
44	23500	34.04	69620							
49	20800	30.21	69620	**P2PH**	**032e**	**DM**	**DRU**	**315S4**	1390	
55	18800	27.26	69620	**P2PS**	**032e**	**DM**	**DRU**	**315S4**	1360	294
65	15900	23.01	69620	**P2PL**	**032e**	**DM**	**DRU**	**315S4**	1360	
74	13900	20.11	69620	**P2PV**	**032e**	**DM**	**DRU**	**315S4**	1330	
83	12400	18.00	69620							
95	10800	15.73	69620							

P_m = 132 kW

n_2	M_a	i_{ex}	M_{N2}						m	
min^{-1}	Nm		Nm						kg	
4.6	265200	322.69	245660							
5.3	231800	282.12	245660							
6.1	201200	244.80	245660							
6.8	178500	217.21	245660							
7.7	159200	193.79	245660							
8.5	144300	175.57	245660	**P3PH**	**072e**	**DM**	**DRU**	**315M4**	900	
9.4	130200	158.42	245660	**P3PS**	**072e**	**DM**	**DRU**	**315M4**	900	312
10	121300	147.64	245660	**P3PL**	**072e**	**DM**	**DRU**	**315M4**	900	
11	107400	130.72	245660	**P3PV**	**072e**	**DM**	**DRU**	**315M4**	900	
13	93300	113.57	245660							
15	81800	99.59	245660							
17	71500	87.03	245660							
19	63800	77.63	245660							
6.0	205600	250.21	185660							
6.7	182400	222.01	185660							
7.5	161900	197.00	185660							
8.4	146100	177.75	185660							
9.3	131800	160.39	185660							
9.9	123300	150.09	185660	**P3PH**	**062e**	**DM**	**DRU**	**315M4**	900	
11	107800	131.16	185660	**P3PS**	**062e**	**DM**	**DRU**	**315M4**	900	308
13	93900	114.35	185660	**P3PL**	**062e**	**DM**	**DRU**	**315M4**	900	
15	82100	99.93	185660	**P3PV**	**062e**	**DM**	**DRU**	**315M4**	900	
17	71700	87.32	185660							
19	64200	78.16	185660							
22	56100	68.30	185660							
24	50200	61.13	185660							

31991203/EN – 08/2025

P_m = 132 kW

n_2	M_a	i_{ex}	M_{N2}							m	
min^{-1}	Nm		Nm							kg	
8.4	146100	177.75	124060								
9.3	131800	160.39	124060								
9.9	123300	150.09	124060								
11	107800	131.16	124060								
13	93900	114.35	124060	**P3PH**	**052e**	**DM**	**DRU**	**315M4**	1760		
15	82100	99.93	124060	**P3PS**	**052e**	**DM**	**DRU**	**315M4**	1770		304
17	71700	87.32	124060	**P3PL**	**052e**	**DM**	**DRU**	**315M4**	1760		
19	64200	78.16	124060	**P3PV**	**052e**	**DM**	**DRU**	**315M4**	1680		
22	56100	68.30	124060								
24	50200	61.13	124060								
28	43900	53.42	124060								
38	32500	39.23	124060								
44	28200	34.04	124060								
49	25000	30.21	124060	**P2PH**	**052e**	**DM**	**DRU**	**315M4**	1680		
55	22600	27.26	124060	**P2PS**	**052e**	**DM**	**DRU**	**315M4**	1690		302
65	19100	23.01	124060	**P2PL**	**052e**	**DM**	**DRU**	**315M4**	1680		
74	16600	20.11	124060	**P2PV**	**052e**	**DM**	**DRU**	**315M4**	1600		
83	14900	18.00	124060								
95	13000	15.73	124060								
38	32500	39.23	100170								
44	28200	34.04	100170								
49	25000	30.21	100170	**P2PH**	**042e**	**DM**	**DRU**	**315M4**	1560		
55	22600	27.26	100170	**P2PS**	**042e**	**DM**	**DRU**	**315M4**	1560		298
65	19100	23.01	100170	**P2PL**	**042e**	**DM**	**DRU**	**315M4**	1550		
74	16600	20.11	100170	**P2PV**	**042e**	**DM**	**DRU**	**315M4**	1500		
83	14900	18.00	100170								
95	13000	15.73	100170								
38	32500	39.23	69620								
44	28200	34.04	69620								
49	25000	30.21	69620	**P2PH**	**032e**	**DM**	**DRU**	**315M4**	1410		
55	22600	27.26	69620	**P2PS**	**032e**	**DM**	**DRU**	**315M4**	1380		294
65	19100	23.01	69620	**P2PL**	**032e**	**DM**	**DRU**	**315M4**	1380		
74	16600	20.11	69620	**P2PV**	**032e**	**DM**	**DRU**	**315M4**	1350		
83	14900	18.00	69620								
95	13000	15.73	69620								

P_m = 160 kW

n_2	M_a	i_{ex}	M_{N2}							m	
min^{-1}	Nm		Nm							kg	
5.3	281000	282.12	245660								
6.1	243800	244.80	245660								
6.8	216400	217.21	245660								
7.7	193000	193.79	245660								
8.5	174900	175.57	245660								
9.4	157800	158.42	245660	**P3PH**	**072e**	**DM**	**DRU**	**315H4**	1150		
10	147000	147.64	245660	**P3PS**	**072e**	**DM**	**DRU**	**315H4**	1150		312
11	130200	130.72	245660	**P3PL**	**072e**	**DM**	**DRU**	**315H4**	1150		
13	113100	113.57	245660	**P3PV**	**072e**	**DM**	**DRU**	**315H4**	1150		
15	99200	99.59	245660								
17	86700	87.03	245660								
19	77300	77.63	245660								
22	67800	68.07	245660								
6.7	221100	222.01	185660								
7.5	196200	197.00	185660								
8.4	177000	177.75	185660								
9.3	159700	160.39	185660								
9.9	149500	150.09	185660								
11	130600	131.16	185660	**P3PH**	**062e**	**DM**	**DRU**	**315H4**	1150		
13	113900	114.35	185660	**P3PS**	**062e**	**DM**	**DRU**	**315H4**	1150		308
15	99500	99.93	185660	**P3PL**	**062e**	**DM**	**DRU**	**315H4**	1150		
17	87000	87.32	185660	**P3PV**	**062e**	**DM**	**DRU**	**315H4**	1150		
19	77800	78.16	185660								
22	68000	68.30	185660								
24	60900	61.13	185660								
28	53200	53.42	185660								

31991203/EN – 08/2025

P_m = 160 kW

n_2	M_a	i_{ex}	M_{N2}						m	
min^{-1}	Nm		Nm						kg	
9.9	149500	150.09	124060							
11	130600	131.16	124060							
13	113900	114.35	124060							
15	99500	99.93	124060	**P3PH**	**052e**	**DM**	**DRU**	**315H4**	2010	304
17	87000	87.32	124060	**P3PS**	**052e**	**DM**	**DRU**	**315H4**	2020	
19	77800	78.16	124060	**P3PL**	**052e**	**DM**	**DRU**	**315H4**	2010	
22	68000	68.30	124060	**P3PV**	**052e**	**DM**	**DRU**	**315H4**	1930	
24	60900	61.13	124060							
28	53200	53.42	124060							
38	39400	39.23	124060							
44	34200	34.04	124060							
49	30300	30.21	124060	**P2PH**	**052e**	**DM**	**DRU**	**315H4**	1930	302
55	27400	27.26	124060	**P2PS**	**052e**	**DM**	**DRU**	**315H4**	1940	
65	23100	23.01	124060	**P2PL**	**052e**	**DM**	**DRU**	**315H4**	1930	
74	20200	20.11	124060	**P2PV**	**052e**	**DM**	**DRU**	**315H4**	1850	
83	18100	18.00	124060							
95	15800	15.73	124060							
38	39400	39.23	100170							
44	34200	34.04	100170							
49	30300	30.21	100170	**P2PH**	**042e**	**DM**	**DRU**	**315H4**	1810	298
55	27400	27.26	100170	**P2PS**	**042e**	**DM**	**DRU**	**315H4**	1810	
65	23100	23.01	100170	**P2PL**	**042e**	**DM**	**DRU**	**315H4**	1800	
74	20200	20.11	100170	**P2PV**	**042e**	**DM**	**DRU**	**315H4**	1750	
83	18100	18.00	100170							
95	15800	15.73	100170							
38	39400	39.23	69620							
44	34200	34.04	69620							
49	30300	30.21	69620	**P2PH**	**032e**	**DM**	**DRU**	**315H4**	1660	294
55	27400	27.26	69620	**P2PS**	**032e**	**DM**	**DRU**	**315H4**	1630	
65	23100	23.01	69620	**P2PL**	**032e**	**DM**	**DRU**	**315H4**	1630	
74	20200	20.11	69620	**P2PV**	**032e**	**DM**	**DRU**	**315H4**	1600	
83	18100	18.00	69620							
95	15800	15.73	69620							

P_m = 200 kW

n_2	M_a	i_{ex}	M_{N2}						m	
min^{-1}	Nm		Nm						kg	
6.1	304400	244.80	245660							
6.9	270100	217.21	245660							
7.7	241000	193.79	245660							
8.5	218300	175.57	245660							
9.4	197000	158.42	245660							
10	183600	147.64	245660	**P3PH**	**072e**	**DM**	**DRU**	**315H4**	1150	312
11	162500	130.72	245660	**P3PS**	**072e**	**DM**	**DRU**	**315H4**	1150	
13	141200	113.57	245660	**P3PL**	**072e**	**DM**	**DRU**	**315H4**	1150	
15	123800	99.59	245660	**P3PV**	**072e**	**DM**	**DRU**	**315H4**	1150	
17	108200	87.03	245660							
19	96500	77.63	245660							
22	84600	68.07	245660							
24	75900	61.07	245660							
28	66500	53.48	245660							
8.4	221000	177.75	185660							
9.3	199400	160.39	185660							
9.9	186600	150.09	185660							
11	163100	131.16	185660							
13	142200	114.35	185660	**P3PH**	**062e**	**DM**	**DRU**	**315H4**	1150	308
15	124200	99.93	185660	**P3PS**	**062e**	**DM**	**DRU**	**315H4**	1150	
17	108600	87.32	185660	**P3PL**	**062e**	**DM**	**DRU**	**315H4**	1150	
19	97200	78.16	185660	**P3PV**	**062e**	**DM**	**DRU**	**315H4**	1150	
22	84900	68.30	185660							
24	76000	61.13	185660							
28	66400	53.42	185660							

31991203/EN – 08/2025

P_m = 200 kW

n_2	M_a	i_{ex}	M_{N2}						m	
min^{-1}	Nm		Nm						kg	
13	142200	114.35	124060							
15	124200	99.93	124060							
17	108600	87.32	124060	**P3PH**	**052e**	**DM**	**DRU**	**315H4**	2010	304
19	97200	78.16	124060	**P3PS**	**052e**	**DM**	**DRU**	**315H4**	2020	
22	84900	68.30	124060	**P3PL**	**052e**	**DM**	**DRU**	**315H4**	2010	
24	76000	61.13	124060	**P3PV**	**052e**	**DM**	**DRU**	**315H4**	1930	
28	66400	53.42	124060							
38	49200	39.23	124060							
44	42700	34.04	124060							
49	37900	30.21	124060	**P2PH**	**052e**	**DM**	**DRU**	**315H4**	1930	302
55	34200	27.26	124060	**P2PS**	**052e**	**DM**	**DRU**	**315H4**	1940	
65	28900	23.01	124060	**P2PL**	**052e**	**DM**	**DRU**	**315H4**	1930	
74	25200	20.11	124060	**P2PV**	**052e**	**DM**	**DRU**	**315H4**	1850	
83	22600	18.00	124060							
95	19700	15.73	124060							
38	49200	39.23	100170							
44	42700	34.04	100170							
49	37900	30.21	100170	**P2PH**	**042e**	**DM**	**DRU**	**315H4**	1810	298
55	34200	27.26	100170	**P2PS**	**042e**	**DM**	**DRU**	**315H4**	1810	
65	28900	23.01	100170	**P2PL**	**042e**	**DM**	**DRU**	**315H4**	1800	
74	25200	20.11	100170	**P2PV**	**042e**	**DM**	**DRU**	**315H4**	1750	
83	22600	18.00	100170							
95	19700	15.73	100170							
38	49200	39.23	69620							
44	42700	34.04	69620							
49	37900	30.21	69620	**P2PH**	**032e**	**DM**	**DRU**	**315H4**	1660	294
55	34200	27.26	69620	**P2PS**	**032e**	**DM**	**DRU**	**315H4**	1630	
65	28900	23.01	69620	**P2PL**	**032e**	**DM**	**DRU**	**315H4**	1630	
74	25200	20.11	69620	**P2PV**	**032e**	**DM**	**DRU**	**315H4**	1600	
83	22600	18.00	69620							
95	19700	15.73	69620							

31991203/EN – 08/2025

10.4 P2..e DMF DRU.. and P3..e DMF DRU.. planetary gearmotors

P_m = 4.0 kW

n_2	M_a	i_{ex}	M_{N2}						m	
min^{-1}	Nm		Nm						kg	
4.5	8330	331.02	24830	**P3PH**	**002e**	**DMF**	**DRU**	**132S4**	320	320
5.2	7170	284.95	24830	**P3PS**	**002e**	**DMF**	**DRU**	**132S4**	310	
5.8	6330	251.44	24830	**P3PL**	**002e**	**DMF**	**DRU**	**132S4**	310	
				P3PV	**002e**	**DMF**	**DRU**	**132S4**	295	

P_m = 5.5 kW

n_2	M_a	i_{ex}	M_{N2}						m	
min^{-1}	Nm		Nm						kg	
4.4	11400	332.32	36810	**P3PH**	**012e**	**DMF**	**DRU**	**132M4**	405	324
5.1	9940	288.36	36810	**P3PS**	**012e**	**DMF**	**DRU**	**132M4**	395	
				P3PL	**012e**	**DMF**	**DRU**	**132M4**	390	
				P3PV	**012e**	**DMF**	**DRU**	**132M4**	375	
4.5	11400	331.02	24830	**P3PH**	**002e**	**DMF**	**DRU**	**132M4**	335	320
5.2	9830	284.95	24830	**P3PS**	**002e**	**DMF**	**DRU**	**132M4**	325	
5.9	8670	251.44	24830	**P3PL**	**002e**	**DMF**	**DRU**	**132M4**	325	
6.7	7560	219.39	24830	**P3PV**	**002e**	**DMF**	**DRU**	**132M4**	310	
7.6	6670	193.59	24830							

P_m = 7.5 kW

n_2	M_a	i_{ex}	M_{N2}						m	
min^{-1}	Nm		Nm						kg	
4.5	15500	331.02	51190	**P3PH**	**022e**	**DMF**	**DRU**	**160M4**	550	328
5.2	13400	287.23	51190	**P3PS**	**022e**	**DMF**	**DRU**	**160M4**	540	
				P3PL	**022e**	**DMF**	**DRU**	**160M4**	540	
				P3PV	**022e**	**DMF**	**DRU**	**160M4**	520	
4.5	15600	332.32	36810	**P3PH**	**012e**	**DMF**	**DRU**	**160M4**	450	324
5.1	13500	288.36	36810	**P3PS**	**012e**	**DMF**	**DRU**	**160M4**	435	
5.9	11700	250.21	36810	**P3PL**	**012e**	**DMF**	**DRU**	**160M4**	435	
6.7	10400	222.01	36810	**P3PV**	**012e**	**DMF**	**DRU**	**160M4**	415	
7.5	9240	197.00	36810							
4.5	15500	331.02	24830	**P3PH**	**002e**	**DMF**	**DRU**	**160M4**	375	320
5.2	13300	284.95	24830	**P3PS**	**002e**	**DMF**	**DRU**	**160M4**	370	
5.9	11800	251.44	24830	**P3PL**	**002e**	**DMF**	**DRU**	**160M4**	365	
6.8	10300	219.39	24830	**P3PV**	**002e**	**DMF**	**DRU**	**160M4**	350	
7.6	9090	193.59	24830							
9.0	7730	164.72	24830							
10	6860	146.16	24830							

P_m = 9.2 kW

n_2	M_a	i_{ex}	M_{N2}						m	
min^{-1}	Nm		Nm						kg	
4.5	19100	332.32	69620	**P3PH**	**032e**	**DMF**	**DRU**	**160L4**	690	332
				P3PS	**032e**	**DMF**	**DRU**	**160L4**	660	
				P3PL	**032e**	**DMF**	**DRU**	**160L4**	660	
				P3PV	**032e**	**DMF**	**DRU**	**160L4**	630	
4.5	19000	331.02	51190	**P3PH**	**022e**	**DMF**	**DRU**	**160L4**	570	328
5.2	16500	287.23	51190	**P3PS**	**022e**	**DMF**	**DRU**	**160L4**	560	
6.0	14200	247.25	51190	**P3PL**	**022e**	**DMF**	**DRU**	**160L4**	560	
				P3PV	**022e**	**DMF**	**DRU**	**160L4**	530	
4.5	19100	332.32	36810	**P3PH**	**012e**	**DMF**	**DRU**	**160L4**	465	324
5.1	16500	288.36	36810	**P3PS**	**012e**	**DMF**	**DRU**	**160L4**	450	
5.9	14400	250.21	36810	**P3PL**	**012e**	**DMF**	**DRU**	**160L4**	450	
6.7	12700	222.01	36810	**P3PV**	**012e**	**DMF**	**DRU**	**160L4**	430	
7.5	11300	197.00	36810							
8.8	9730	169.15	36810							

31991203/EN – 08/2025

P_m = 9.2 kW

n_2	M_a	i_{ex}	M_{N2}						m	
min^{-1}	Nm		Nm						kg	
4.5	19000	331.02	24830							
5.2	16400	284.95	24830							
5.9	14400	251.44	24830							
6.8	12600	219.39	24830	**P3PH**	**002e**	**DMF**	**DRU**	**160L4**	390	
7.7	11100	193.59	24830	**P3PS**	**002e**	**DMF**	**DRU**	**160L4**	385	320
9.0	9480	164.72	24830	**P3PL**	**002e**	**DMF**	**DRU**	**160L4**	380	
10	8410	146.16	24830	**P3PV**	**002e**	**DMF**	**DRU**	**160L4**	365	
12	7330	127.35	24830							
13	6400	111.35	24830							

P_m = 11.0 kW

n_2	M_a	i_{ex}	M_{N2}						m	
min^{-1}	Nm		Nm						kg	
4.5	22900	332.32	69620	**P3PH**	**032e**	**DMF**	**DRU**	**160L4**	690	
5.1	19800	288.36	69620	**P3PS**	**032e**	**DMF**	**DRU**	**160L4**	660	332
				P3PL	**032e**	**DMF**	**DRU**	**160L4**	660	
				P3PV	**032e**	**DMF**	**DRU**	**160L4**	630	
4.5	22800	331.02	51190							
5.2	19700	287.23	51190	**P3PH**	**022e**	**DMF**	**DRU**	**160L4**	570	
6.0	17000	247.25	51190	**P3PS**	**022e**	**DMF**	**DRU**	**160L4**	560	328
6.7	15100	219.39	51190	**P3PL**	**022e**	**DMF**	**DRU**	**160L4**	560	
7.6	13300	193.59	51190	**P3PV**	**022e**	**DMF**	**DRU**	**160L4**	530	
4.5	22900	332.32	36810							
5.1	19800	288.36	36810							
5.9	17200	250.21	36810	**P3PH**	**012e**	**DMF**	**DRU**	**160L4**	465	
6.7	15200	222.01	36810	**P3PS**	**012e**	**DMF**	**DRU**	**160L4**	450	324
7.5	13500	197.00	36810	**P3PL**	**012e**	**DMF**	**DRU**	**160L4**	450	
8.7	11600	169.15	36810	**P3PV**	**012e**	**DMF**	**DRU**	**160L4**	430	
9.8	10300	150.09	36810							
4.5	22800	331.02	24830							
5.2	19600	284.95	24830							
5.9	17300	251.44	24830							
6.7	15100	219.39	24830	**P3PH**	**002e**	**DMF**	**DRU**	**160L4**	390	
7.6	13300	193.59	24830	**P3PS**	**002e**	**DMF**	**DRU**	**160L4**	385	320
9.0	11300	164.72	24830	**P3PL**	**002e**	**DMF**	**DRU**	**160L4**	380	
10	10000	146.16	24830	**P3PV**	**002e**	**DMF**	**DRU**	**160L4**	365	
12	8770	127.35	24830							
13	7670	111.35	24830							
15	6680	97.03	24830							
38	2720	39.08	24830	**P2PH**	**002e**	**DMF**	**DRU**	**160L4**	360	
				P2PS	**002e**	**DMF**	**DRU**	**160L4**	355	318
				P2PL	**002e**	**DMF**	**DRU**	**160L4**	350	
				P2PV	**002e**	**DMF**	**DRU**	**160L4**	335	

P_m = 15.0 kW

n_2	M_a	i_{ex}	M_{N2}						m	
min^{-1}	Nm		Nm						kg	
4.5	31100	332.32	124060	**P3PH**	**052e**	**DMF**	**DRU**	**180L4**	1110	
				P3PS	**052e**	**DMF**	**DRU**	**180L4**	1120	340
				P3PL	**052e**	**DMF**	**DRU**	**180L4**	1110	
				P3PV	**052e**	**DMF**	**DRU**	**180L4**	1030	
4.5	31100	332.32	100170	**P3PH**	**042e**	**DMF**	**DRU**	**180L4**	950	
5.1	27000	288.36	100170	**P3PS**	**042e**	**DMF**	**DRU**	**180L4**	940	336
				P3PL	**042e**	**DMF**	**DRU**	**180L4**	940	
				P3PV	**042e**	**DMF**	**DRU**	**180L4**	880	
4.5	31100	332.32	69620							
5.1	27000	288.36	69620	**P3PH**	**032e**	**DMF**	**DRU**	**180L4**	730	
5.9	23400	250.21	69620	**P3PS**	**032e**	**DMF**	**DRU**	**180L4**	700	332
6.7	20800	222.01	69620	**P3PL**	**032e**	**DMF**	**DRU**	**180L4**	700	
7.5	18400	197.00	69620	**P3PV**	**032e**	**DMF**	**DRU**	**180L4**	670	

31991203/EN – 08/2025

P_m = 15.0 kW

n_2	M_a	i_{ex}	M_{N2}						m	
min^{-1}	Nm		Nm						kg	
4.5	31000	331.02	51190							
5.2	26900	287.23	51190							
6.0	23100	247.25	51190	**P3PH**	**022e**	**DMF**	**DRU**	**180L4**	610	
6.8	20500	219.39	51190	**P3PS**	**022e**	**DMF**	**DRU**	**180L4**	600	328
7.7	18100	193.59	51190	**P3PL**	**022e**	**DMF**	**DRU**	**180L4**	590	
8.5	16300	174.68	51190	**P3PV**	**022e**	**DMF**	**DRU**	**180L4**	570	
9.4	14700	156.99	51190							
10	13400	143.53	51190							
4.5	31100	332.32	36810							
5.1	27000	288.36	36810							
5.9	23400	250.21	36810							
6.7	20800	222.01	36810	**P3PH**	**012e**	**DMF**	**DRU**	**180L4**	500	
7.5	18400	197.00	36810	**P3PS**	**012e**	**DMF**	**DRU**	**180L4**	490	324
8.8	15800	169.15	36810	**P3PL**	**012e**	**DMF**	**DRU**	**180L4**	485	
9.9	14000	150.09	36810	**P3PV**	**012e**	**DMF**	**DRU**	**180L4**	470	
11	12200	131.16	36810							
13	10700	114.35	36810							
15	9360	99.93	36810							
38	3710	39.23	36810	**P2PH**	**012e**	**DMF**	**DRU**	**180L4**	485	
				P2PS	**012e**	**DMF**	**DRU**	**180L4**	470	322
				P2PL	**012e**	**DMF**	**DRU**	**180L4**	470	
				P2PV	**012e**	**DMF**	**DRU**	**180L4**	450	
4.5	31000	331.02	24830							
5.2	26700	284.95	24830							
5.9	23500	251.44	24830							
6.8	20500	219.39	24830							
7.7	18100	193.59	24830							
9.0	15400	164.72	24830	**P3PH**	**002e**	**DMF**	**DRU**	**180L4**	430	
10	13600	146.16	24830	**P3PS**	**002e**	**DMF**	**DRU**	**180L4**	420	320
12	11900	127.35	24830	**P3PL**	**002e**	**DMF**	**DRU**	**180L4**	420	
13	10400	111.35	24830	**P3PV**	**002e**	**DMF**	**DRU**	**180L4**	405	
15	9090	97.03	24830							
17	7940	84.79	24830							
20	7100	75.77	24830							
22	6210	66.32	24830							
38	3690	39.08	24830	**P2PH**	**002e**	**DMF**	**DRU**	**180L4**	400	
44	3180	33.64	24830	**P2PS**	**002e**	**DMF**	**DRU**	**180L4**	390	318
50	2810	29.68	24830	**P2PL**	**002e**	**DMF**	**DRU**	**180L4**	390	
56	2520	26.68	24830	**P2PV**	**002e**	**DMF**	**DRU**	**180L4**	375	

P_m = 18.5 kW

n_2	M_a	i_{ex}	M_{N2}						m	
min^{-1}	Nm		Nm						kg	
4.5	38300	332.32	124060	**P3PH**	**052e**	**DMF**	**DRU**	**200L4**	1220	
5.2	33200	288.36	124060	**P3PS**	**052e**	**DMF**	**DRU**	**200L4**	1230	340
				P3PL	**052e**	**DMF**	**DRU**	**200L4**	1220	
				P3PV	**052e**	**DMF**	**DRU**	**200L4**	1140	
4.5	38300	332.32	100170	**P3PH**	**042e**	**DMF**	**DRU**	**200L4**	1060	
5.2	33200	288.36	100170	**P3PS**	**042e**	**DMF**	**DRU**	**200L4**	1050	336
5.9	28800	250.21	100170	**P3PL**	**042e**	**DMF**	**DRU**	**200L4**	1040	
6.7	25600	222.01	100170	**P3PV**	**042e**	**DMF**	**DRU**	**200L4**	990	
4.5	38300	332.32	69620							
5.2	33200	288.36	69620							
5.9	28800	250.21	69620	**P3PH**	**032e**	**DMF**	**DRU**	**200L4**	830	
6.7	25600	222.01	69620	**P3PS**	**032e**	**DMF**	**DRU**	**200L4**	810	332
7.5	22700	197.00	69620	**P3PL**	**032e**	**DMF**	**DRU**	**200L4**	810	
8.3	20500	177.75	69620	**P3PV**	**032e**	**DMF**	**DRU**	**200L4**	780	
9.3	18500	160.39	69620							

31991203/EN – 08/2025

P_m = 18.5 kW

n_2	M_a	i_{ex}	M_{N2}						m	
min^{-1}	Nm		Nm						kg	
4.5	38200	331.02	51190							
5.2	33100	287.23	51190							
6.0	28500	247.25	51190							
6.8	25300	219.39	51190	**P3PH**	**022e**	**DMF**	**DRU**	**200L4**	720	
7.7	22300	193.59	51190	**P3PS**	**022e**	**DMF**	**DRU**	**200L4**	710	328
8.5	20100	174.68	51190	**P3PL**	**022e**	**DMF**	**DRU**	**200L4**	700	
9.5	18100	156.99	51190	**P3PV**	**022e**	**DMF**	**DRU**	**200L4**	680	
10	16500	143.53	51190							
12	14700	127.35	51190							
13	12800	111.35	51190							
4.5	38300	332.32	36810							
5.2	33200	288.36	36810							
5.9	28800	250.21	36810							
6.7	25600	222.01	36810							
7.5	22700	197.00	36810	**P3PH**	**012e**	**DMF**	**DRU**	**200L4**	610	
8.8	19500	169.15	36810	**P3PS**	**012e**	**DMF**	**DRU**	**200L4**	600	324
9.9	17300	150.09	36810	**P3PL**	**012e**	**DMF**	**DRU**	**200L4**	590	
11	15100	131.16	36810	**P3PV**	**012e**	**DMF**	**DRU**	**200L4**	580	
13	13100	114.35	36810							
15	11500	99.93	36810							
17	10000	87.32	36810							
38	4570	39.23	36810	**P2PH**	**012e**	**DMF**	**DRU**	**200L4**	590	
44	3960	34.04	36810	**P2PS**	**012e**	**DMF**	**DRU**	**200L4**	580	322
				P2PL	**012e**	**DMF**	**DRU**	**200L4**	570	
				P2PV	**012e**	**DMF**	**DRU**	**200L4**	560	
5.9	29000	251.44	24830							
6.8	25300	219.39	24830							
7.7	22300	193.59	24830							
9.0	19000	164.72	24830							
10	16800	146.16	24830							
12	14700	127.35	24830	**P3PH**	**002e**	**DMF**	**DRU**	**200L4**	540	
13	12800	111.35	24830	**P3PS**	**002e**	**DMF**	**DRU**	**200L4**	530	320
15	11200	97.03	24830	**P3PL**	**002e**	**DMF**	**DRU**	**200L4**	530	
18	9780	84.79	24830	**P3PV**	**002e**	**DMF**	**DRU**	**200L4**	510	
20	8740	75.77	24830							
22	7650	66.32	24830							
25	6840	59.26	24830							
29	5970	51.73	24830							
38	4550	39.08	24830							
44	3920	33.64	24830							
50	3460	29.68	24830	**P2PH**	**002e**	**DMF**	**DRU**	**200L4**	510	
56	3110	26.68	24830	**P2PS**	**002e**	**DMF**	**DRU**	**200L4**	500	318
66	2610	22.41	24830	**P2PL**	**002e**	**DMF**	**DRU**	**200L4**	495	
76	2270	19.53	24830	**P2PV**	**002e**	**DMF**	**DRU**	**200L4**	485	
85	2030	17.45	24830							
98	1770	15.23	24830							

P_m = 22 kW

n_2	M_a	i_{ex}	M_{N2}						m	
min^{-1}	Nm		Nm						kg	
4.6	44300	322.69	245660							
5.3	38700	282.12	245660							
6.1	33600	244.80	245660							
6.8	29800	217.21	245660							
7.7	26600	193.79	245660							
8.4	24100	175.57	245660							
9.4	21700	158.42	245660	**P3PH**	**072e**	**DMF**	**DRU**	**200L4**	295	
10	20200	147.64	245660	**P3PS**	**072e**	**DMF**	**DRU**	**200L4**	295	344
11	17900	130.72	245660	**P3PL**	**072e**	**DMF**	**DRU**	**200L4**	295	
13	15600	113.57	245660	**P3PV**	**072e**	**DMF**	**DRU**	**200L4**	295	
15	13600	99.59	245660							
17	11900	87.03	245660							
19	10600	77.63	245660							
22	9350	68.07	245660							
24	8380	61.07	245660							
28	7340	53.48	245660							

31991203/EN – 08/2025

P_m = 22 kW

n_2	M_a	i_{ex}	M_{N2}						m	
min^{-1}	Nm		Nm						kg	
4.5	45600	332.32	185660							
5.2	39600	288.36	185660							
5.9	34300	250.21	185660							
6.7	30400	222.01	185660							
7.5	27000	197.00	185660							
8.3	24400	177.75	185660							
9.2	22000	160.39	185660	**P3PH**	**062e**	**DMF**	**DRU**	**200L4**	295	342
9.9	20600	150.09	185660	**P3PS**	**062e**	**DMF**	**DRU**	**200L4**	295	
11	18000	131.16	185660	**P3PL**	**062e**	**DMF**	**DRU**	**200L4**	295	
13	15700	114.35	185660	**P3PV**	**062e**	**DMF**	**DRU**	**200L4**	295	
15	13700	99.93	185660							
17	11900	87.32	185660							
19	10700	78.16	185660							
22	9380	68.30	185660							
24	8390	61.13	185660							
28	7330	53.42	185660							
4.5	45600	332.32	124060	**P3PH**	**052e**	**DMF**	**DRU**	**200L4**	1220	340
5.2	39600	288.36	124060	**P3PS**	**052e**	**DMF**	**DRU**	**200L4**	1230	
5.9	34300	250.21	124060	**P3PL**	**052e**	**DMF**	**DRU**	**200L4**	1220	
				P3PV	**052e**	**DMF**	**DRU**	**200L4**	1140	
4.5	45600	332.32	100170							
5.2	39600	288.36	100170	**P3PH**	**042e**	**DMF**	**DRU**	**200L4**	1060	336
5.9	34300	250.21	100170	**P3PS**	**042e**	**DMF**	**DRU**	**200L4**	1050	
6.7	30400	222.01	100170	**P3PL**	**042e**	**DMF**	**DRU**	**200L4**	1040	
7.5	27000	197.00	100170	**P3PV**	**042e**	**DMF**	**DRU**	**200L4**	990	
4.5	45600	332.32	69620							
5.2	39600	288.36	69620							
5.9	34300	250.21	69620							
6.7	30400	222.01	69620	**P3PH**	**032e**	**DMF**	**DRU**	**200L4**	830	332
7.5	27000	197.00	69620	**P3PS**	**032e**	**DMF**	**DRU**	**200L4**	810	
8.3	24400	177.75	69620	**P3PL**	**032e**	**DMF**	**DRU**	**200L4**	810	
9.2	22000	160.39	69620	**P3PV**	**032e**	**DMF**	**DRU**	**200L4**	780	
9.9	20600	150.09	69620							
11	18000	131.16	69620							
4.5	45400	331.02	51190							
5.2	39400	287.23	51190							
6.0	33900	247.25	51190							
6.8	30100	219.39	51190							
7.7	26500	193.59	51190	**P3PH**	**022e**	**DMF**	**DRU**	**200L4**	720	328
8.5	23900	174.68	51190	**P3PS**	**022e**	**DMF**	**DRU**	**200L4**	710	
9.4	21500	156.99	51190	**P3PL**	**022e**	**DMF**	**DRU**	**200L4**	700	
10	19700	143.53	51190	**P3PV**	**022e**	**DMF**	**DRU**	**200L4**	680	
12	17400	127.35	51190							
13	15200	111.35	51190							
15	13300	97.03	51190							
38	5440	39.23	51190	**P2PH**	**022e**	**DMF**	**DRU**	**200L4**	730	326
				P2PS	**022e**	**DMF**	**DRU**	**200L4**	720	
				P2PL	**022e**	**DMF**	**DRU**	**200L4**	720	
				P2PV	**022e**	**DMF**	**DRU**	**200L4**	690	
4.5	45600	332.32	36810							
5.2	39600	288.36	36810							
5.9	34300	250.21	36810							
6.7	30400	222.01	36810							
7.5	27000	197.00	36810							
8.8	23200	169.15	36810	**P3PH**	**012e**	**DMF**	**DRU**	**200L4**	610	324
9.9	20600	150.09	36810	**P3PS**	**012e**	**DMF**	**DRU**	**200L4**	600	
11	18000	131.16	36810	**P3PL**	**012e**	**DMF**	**DRU**	**200L4**	590	
13	15700	114.35	36810	**P3PV**	**012e**	**DMF**	**DRU**	**200L4**	580	
15	13700	99.93	36810							
17	11900	87.32	36810							
19	10700	78.16	36810							
22	9380	68.30	36810							
38	5440	39.23	36810	**P2PH**	**012e**	**DMF**	**DRU**	**200L4**	590	322
44	4720	34.04	36810	**P2PS**	**012e**	**DMF**	**DRU**	**200L4**	580	
49	4190	30.21	36810	**P2PL**	**012e**	**DMF**	**DRU**	**200L4**	570	
54	3780	27.26	36810	**P2PV**	**012e**	**DMF**	**DRU**	**200L4**	560	

31991203/EN – 08/2025

P_m = 22 kW

n_2	M_a	i_{ex}	M_{N2}						m	
min^{-1}	Nm		Nm						kg	
6.8	30100	219.39	24830							
7.7	26500	193.59	24830							
9.0	22600	164.72	24830							
10	20000	146.16	24830							
12	17400	127.35	24830	**P3PH**	**002e**	**DMF**	**DRU**	**200L4**	540	
13	15200	111.35	24830	**P3PS**	**002e**	**DMF**	**DRU**	**200L4**	530	320
15	13300	97.03	24830	**P3PL**	**002e**	**DMF**	**DRU**	**200L4**	530	
18	11600	84.79	24830	**P3PV**	**002e**	**DMF**	**DRU**	**200L4**	510	
20	10400	75.77	24830							
22	9100	66.32	24830							
25	8140	59.26	24830							
29	7100	51.73	24830							
38	5420	39.08	24830							
44	4660	33.64	24830	**P2PH**	**002e**	**DMF**	**DRU**	**200L4**	510	
50	4110	29.68	24830	**P2PS**	**002e**	**DMF**	**DRU**	**200L4**	500	318
56	3700	26.68	24830	**P2PL**	**002e**	**DMF**	**DRU**	**200L4**	495	
66	3100	22.41	24830	**P2PV**	**002e**	**DMF**	**DRU**	**200L4**	485	
76	2700	19.53	24830							

P_m = 30 kW

n_2	M_a	i_{ex}	M_{N2}						m	
min^{-1}	Nm		Nm						kg	
4.6	60300	322.69	245660							
5.3	52700	282.12	245660							
6.1	45700	244.80	245660							
6.8	40600	217.21	245660							
7.7	36200	193.79	245660							
8.5	32800	175.57	245660							
9.4	29600	158.42	245660	**P3PH**	**072e**	**DMF**	**DRU**	**225S4**	325	
10	27500	147.64	245660	**P3PS**	**072e**	**DMF**	**DRU**	**225S4**	325	344
11	24400	130.72	245660	**P3PL**	**072e**	**DMF**	**DRU**	**225S4**	325	
13	21200	113.57	245660	**P3PV**	**072e**	**DMF**	**DRU**	**225S4**	325	
15	18600	99.59	245660							
17	16200	87.03	245660							
19	14500	77.63	245660							
22	12700	68.07	245660							
24	11400	61.07	245660							
28	9990	53.48	245660							
4.5	62100	332.32	185660	**P3PH**	**062e**	**DMF**	**DRU**	**225S4**	325	
5.2	53900	288.36	185660	**P3PS**	**062e**	**DMF**	**DRU**	**225S4**	325	342
5.9	46700	250.21	185660	**P3PL**	**062e**	**DMF**	**DRU**	**225S4**	325	
				P3PV	**062e**	**DMF**	**DRU**	**225S4**	325	
4.5	62100	332.32	124060							
5.2	53900	288.36	124060	**P3PH**	**052e**	**DMF**	**DRU**	**225S4**	1250	
5.9	46700	250.21	124060	**P3PS**	**052e**	**DMF**	**DRU**	**225S4**	1260	340
6.7	41500	222.01	124060	**P3PL**	**052e**	**DMF**	**DRU**	**225S4**	1250	
7.5	36800	197.00	124060	**P3PV**	**052e**	**DMF**	**DRU**	**225S4**	1170	
8.4	33200	177.75	124060							
38	7400	39.23	124060	**P2PH**	**052e**	**DMF**	**DRU**	**225S4**	1200	
				P2PS	**052e**	**DMF**	**DRU**	**225S4**	1200	338
				P2PL	**052e**	**DMF**	**DRU**	**225S4**	1200	
				P2PV	**052e**	**DMF**	**DRU**	**225S4**	1110	
4.5	62100	332.32	100170							
5.2	53900	288.36	100170							
5.9	46700	250.21	100170	**P3PH**	**042e**	**DMF**	**DRU**	**225S4**	1090	
6.7	41500	222.01	100170	**P3PS**	**042e**	**DMF**	**DRU**	**225S4**	1080	336
7.5	36800	197.00	100170	**P3PL**	**042e**	**DMF**	**DRU**	**225S4**	1080	
8.4	33200	177.75	100170	**P3PV**	**042e**	**DMF**	**DRU**	**225S4**	1020	
9.3	29900	160.39	100170							
9.9	28000	150.09	100170							
38	7400	39.23	100170	**P2PH**	**042e**	**DMF**	**DRU**	**225S4**	1060	
				P2PS	**042e**	**DMF**	**DRU**	**225S4**	1060	334
				P2PL	**042e**	**DMF**	**DRU**	**225S4**	1050	
				P2PV	**042e**	**DMF**	**DRU**	**225S4**	990	

31991203/EN – 08/2025

P_m = 30 kW

n_2	M_a	i_{ex}	M_{N2}						m	
min^{-1}	Nm		Nm						kg	
4.5	62100	332.32	69620							
5.2	53900	288.36	69620							
5.9	46700	250.21	69620							
6.7	41500	222.01	69620							
7.5	36800	197.00	69620	**P3PH**	**032e**	**DMF**	**DRU**	**225S4**	870	
8.4	33200	177.75	69620	**P3PS**	**032e**	**DMF**	**DRU**	**225S4**	840	332
9.3	29900	160.39	69620	**P3PL**	**032e**	**DMF**	**DRU**	**225S4**	840	
9.9	28000	150.09	69620	**P3PV**	**032e**	**DMF**	**DRU**	**225S4**	810	
11	24500	131.16	69620							
13	21300	114.35	69620							
15	18600	99.93	69620							
38	7400	39.23	69620	**P2PH**	**032e**	**DMF**	**DRU**	**225S4**	900	
				P2PS	**032e**	**DMF**	**DRU**	**225S4**	870	330
				P2PL	**032e**	**DMF**	**DRU**	**225S4**	870	
				P2PV	**032e**	**DMF**	**DRU**	**225S4**	840	
4.5	61800	331.02	51190							
5.2	53600	287.23	51190							
6.0	46200	247.25	51190							
6.8	41000	219.39	51190							
7.7	36100	193.59	51190							
8.5	32600	174.68	51190	**P3PH**	**022e**	**DMF**	**DRU**	**225S4**	750	
9.5	29300	156.99	51190	**P3PS**	**022e**	**DMF**	**DRU**	**225S4**	740	328
10	26800	143.53	51190	**P3PL**	**022e**	**DMF**	**DRU**	**225S4**	730	
12	23800	127.35	51190	**P3PV**	**022e**	**DMF**	**DRU**	**225S4**	710	
13	20800	111.35	51190							
15	18100	97.03	51190							
18	15800	84.79	51190							
20	14100	75.68	51190							
38	7400	39.23	51190	**P2PH**	**022e**	**DMF**	**DRU**	**225S4**	760	
44	6420	34.04	51190	**P2PS**	**022e**	**DMF**	**DRU**	**225S4**	750	326
49	5700	30.21	51190	**P2PL**	**022e**	**DMF**	**DRU**	**225S4**	750	
55	5140	27.26	51190	**P2PV**	**022e**	**DMF**	**DRU**	**225S4**	730	
6.7	41500	222.01	36810							
7.5	36800	197.00	36810							
8.8	31600	169.15	36810							
9.9	28000	150.09	36810							
11	24500	131.16	36810	**P3PH**	**012e**	**DMF**	**DRU**	**225S4**	640	
13	21300	114.35	36810	**P3PS**	**012e**	**DMF**	**DRU**	**225S4**	630	324
15	18600	99.93	36810	**P3PL**	**012e**	**DMF**	**DRU**	**225S4**	630	
17	16300	87.32	36810	**P3PV**	**012e**	**DMF**	**DRU**	**225S4**	610	
19	14600	78.16	36810							
22	12700	68.30	36810							
24	11400	61.13	36810							
28	9980	53.42	36810							
38	7400	39.23	36810							
44	6420	34.04	36810	**P2PH**	**012e**	**DMF**	**DRU**	**225S4**	620	
49	5700	30.21	36810	**P2PS**	**012e**	**DMF**	**DRU**	**225S4**	610	322
55	5140	27.26	36810	**P2PL**	**012e**	**DMF**	**DRU**	**225S4**	610	
65	4340	23.01	36810	**P2PV**	**012e**	**DMF**	**DRU**	**225S4**	590	
74	3790	20.11	36810							
9.0	30700	164.72	24830							
10	27300	146.16	24830							
12	23800	127.35	24830							
13	20800	111.35	24830	**P3PH**	**002e**	**DMF**	**DRU**	**225S4**	570	
15	18100	97.03	24830	**P3PS**	**002e**	**DMF**	**DRU**	**225S4**	560	320
18	15800	84.79	24830	**P3PL**	**002e**	**DMF**	**DRU**	**225S4**	560	
20	14100	75.77	24830	**P3PV**	**002e**	**DMF**	**DRU**	**225S4**	540	
22	12300	66.32	24830							
25	11000	59.26	24830							
29	9660	51.73	24830							

31991203/EN – 08/2025

P_m = 30 kW

n_2	M_a	i_{ex}	M_{N2}						m	
min^{-1}	Nm		Nm						kg	
38	7370	39.08	24830							
44	6350	33.64	24830							
50	5600	29.68	24830	**P2PH**	**002e**	**DMF**	**DRU**	**225S4**	540	318
56	5030	26.68	24830	**P2PS**	**002e**	**DMF**	**DRU**	**225S4**	530	
66	4230	22.41	24830	**P2PL**	**002e**	**DMF**	**DRU**	**225S4**	530	
76	3680	19.53	24830	**P2PV**	**002e**	**DMF**	**DRU**	**225S4**	510	
85	3290	17.45	24830							
98	2870	15.23	24830							

P_m = 37 kW

n_2	M_a	i_{ex}	M_{N2}						m	
min^{-1}	Nm		Nm						kg	
4.6	74400	322.69	245660	**P3PH**	**072e**	**DMF**	**DRU**	**225ME4**	380	344
5.3	65000	282.12	245660	**P3PS**	**072e**	**DMF**	**DRU**	**225ME4**	380	
				P3PL	**072e**	**DMF**	**DRU**	**225ME4**	380	
				P3PV	**072e**	**DMF**	**DRU**	**225ME4**	380	
4.5	76600	332.32	185660	**P3PH**	**062e**	**DMF**	**DRU**	**225ME4**	380	342
5.2	66500	288.36	185660	**P3PS**	**062e**	**DMF**	**DRU**	**225ME4**	380	
5.9	57700	250.21	185660	**P3PL**	**062e**	**DMF**	**DRU**	**225ME4**	380	
6.7	51200	222.01	185660	**P3PV**	**062e**	**DMF**	**DRU**	**225ME4**	380	
4.5	76600	332.32	124060							340
5.2	66500	288.36	124060							
5.9	57700	250.21	124060	**P3PH**	**052e**	**DMF**	**DRU**	**225ME4**	1310	
6.7	51200	222.01	124060	**P3PS**	**052e**	**DMF**	**DRU**	**225ME4**	1310	
7.5	45400	197.00	124060	**P3PL**	**052e**	**DMF**	**DRU**	**225ME4**	1300	
8.4	41000	177.75	124060	**P3PV**	**052e**	**DMF**	**DRU**	**225ME4**	1220	
9.3	37000	160.39	124060							
9.9	34600	150.09	124060							
38	9140	39.23	124060	**P2PH**	**052e**	**DMF**	**DRU**	**225ME4**	1250	338
				P2PS	**052e**	**DMF**	**DRU**	**225ME4**	1260	
				P2PL	**052e**	**DMF**	**DRU**	**225ME4**	1250	
				P2PV	**052e**	**DMF**	**DRU**	**225ME4**	1170	
4.5	76600	332.32	100170							336
5.2	66500	288.36	100170							
5.9	57700	250.21	100170							
6.7	51200	222.01	100170	**P3PH**	**042e**	**DMF**	**DRU**	**225ME4**	1150	
7.5	45400	197.00	100170	**P3PS**	**042e**	**DMF**	**DRU**	**225ME4**	1140	
8.4	41000	177.75	100170	**P3PL**	**042e**	**DMF**	**DRU**	**225ME4**	1130	
9.3	37000	160.39	100170	**P3PV**	**042e**	**DMF**	**DRU**	**225ME4**	1080	
9.9	34600	150.09	100170							
11	30200	131.16	100170							
13	26300	114.35	100170							
38	9140	39.23	100170	**P2PH**	**042e**	**DMF**	**DRU**	**225ME4**	1120	334
				P2PS	**042e**	**DMF**	**DRU**	**225ME4**	1110	
				P2PL	**042e**	**DMF**	**DRU**	**225ME4**	1110	
				P2PV	**042e**	**DMF**	**DRU**	**225ME4**	1050	
4.5	76600	332.32	69620							332
5.2	66500	288.36	69620							
5.9	57700	250.21	69620							
6.7	51200	222.01	69620							
7.5	45400	197.00	69620							
8.4	41000	177.75	69620	**P3PH**	**032e**	**DMF**	**DRU**	**225ME4**	920	
9.3	37000	160.39	69620	**P3PS**	**032e**	**DMF**	**DRU**	**225ME4**	900	
9.9	34600	150.09	69620	**P3PL**	**032e**	**DMF**	**DRU**	**225ME4**	890	
11	30200	131.16	69620	**P3PV**	**032e**	**DMF**	**DRU**	**225ME4**	860	
13	26300	114.35	69620							
15	23000	99.93	69620							
17	20100	87.32	69620							
19	18000	78.16	69620							
38	9140	39.23	69620	**P2PH**	**032e**	**DMF**	**DRU**	**225ME4**	950	330
44	7930	34.04	69620	**P2PS**	**032e**	**DMF**	**DRU**	**225ME4**	930	
49	7030	30.21	69620	**P2PL**	**032e**	**DMF**	**DRU**	**225ME4**	930	
				P2PV	**032e**	**DMF**	**DRU**	**225ME4**	900	

31991203/EN – 08/2025

P_m = 37 kW

n_2	M_a	i_{ex}	M_{N2}						m	
min^{-1}	Nm		Nm						kg	
6.0	57000	247.25	51190							
6.8	50600	219.39	51190							
7.7	44600	193.59	51190							
8.5	40200	174.68	51190							
9.5	36200	156.99	51190							
10	33100	143.53	51190	**P3PH**	**022e**	**DMF**	**DRU**	**225ME4**	800	
12	29300	127.35	51190	**P3PS**	**022e**	**DMF**	**DRU**	**225ME4**	790	328
13	25600	111.35	51190	**P3PL**	**022e**	**DMF**	**DRU**	**225ME4**	790	
15	22300	97.03	51190	**P3PV**	**022e**	**DMF**	**DRU**	**225ME4**	770	
18	19500	84.79	51190							
20	17400	75.68	51190							
22	15200	66.13	51190							
25	13600	59.19	51190							
38	9140	39.23	51190							
44	7930	34.04	51190	**P2PH**	**022e**	**DMF**	**DRU**	**225ME4**	820	
49	7030	30.21	51190	**P2PS**	**022e**	**DMF**	**DRU**	**225ME4**	810	326
55	6350	27.26	51190	**P2PL**	**022e**	**DMF**	**DRU**	**225ME4**	800	
65	5360	23.01	51190	**P2PV**	**022e**	**DMF**	**DRU**	**225ME4**	780	
7.5	45400	197.00	36810							
8.8	39000	169.15	36810							
9.9	34600	150.09	36810							
11	30200	131.16	36810							
13	26300	114.35	36810	**P3PH**	**012e**	**DMF**	**DRU**	**225ME4**	700	
15	23000	99.93	36810	**P3PS**	**012e**	**DMF**	**DRU**	**225ME4**	690	324
17	20100	87.32	36810	**P3PL**	**012e**	**DMF**	**DRU**	**225ME4**	680	
19	18000	78.16	36810	**P3PV**	**012e**	**DMF**	**DRU**	**225ME4**	660	
22	15700	68.30	36810							
24	14100	61.13	36810							
28	12300	53.42	36810							
38	9140	39.23	36810							
44	7930	34.04	36810							
49	7030	30.21	36810	**P2PH**	**012e**	**DMF**	**DRU**	**225ME4**	680	
55	6350	27.26	36810	**P2PS**	**012e**	**DMF**	**DRU**	**225ME4**	670	322
65	5360	23.01	36810	**P2PL**	**012e**	**DMF**	**DRU**	**225ME4**	660	
74	4680	20.11	36810	**P2PV**	**012e**	**DMF**	**DRU**	**225ME4**	640	
83	4190	18.00*	36810							
12	29300	127.35	24830							
13	25600	111.35	24830							
15	22300	97.03	24830	**P3PH**	**002e**	**DMF**	**DRU**	**225ME4**	620	
18	19500	84.79	24830	**P3PS**	**002e**	**DMF**	**DRU**	**225ME4**	620	320
20	17400	75.77	24830	**P3PL**	**002e**	**DMF**	**DRU**	**225ME4**	610	
22	15300	66.32	24830	**P3PV**	**002e**	**DMF**	**DRU**	**225ME4**	600	
25	13600	59.26	24830							
29	11900	51.73	24830							
38	9100	39.08	24830							
44	7830	33.64	24830							
50	6910	29.68	24830	**P2PH**	**002e**	**DMF**	**DRU**	**225ME4**	590	
56	6210	26.68	24830	**P2PS**	**002e**	**DMF**	**DRU**	**225ME4**	590	318
66	5220	22.41	24830	**P2PL**	**002e**	**DMF**	**DRU**	**225ME4**	580	
76	4550	19.53	24830	**P2PV**	**002e**	**DMF**	**DRU**	**225ME4**	570	
85	4060	17.45	24830							
98	3540	15.23	24830							

P_m = 45 kW

n_2	M_a	i_{ex}	M_{N2}						m	
min^{-1}	Nm		Nm						kg	
4.6	90600	322.69	245660	**P3PH**	**072e**	**DMF**	**DRU**	**250M4**	475	
5.3	79200	282.12	245660	**P3PS**	**072e**	**DMF**	**DRU**	**250M4**	475	344
6.1	68700	244.80	245660	**P3PL**	**072e**	**DMF**	**DRU**	**250M4**	475	
				P3PV	**072e**	**DMF**	**DRU**	**250M4**	475	

31991203/EN – 08/2025

P_m = 45 kW											
n_2	M_a	i_{ex}	M_{N2}							m	
min^{-1}	Nm		Nm							kg	
4.5	93300	332.32	185660								
5.2	80900	288.36	185660	**P3PH**	**062e**	**DMF**	**DRU**	**250M4**		475	
5.9	70200	250.21	185660	**P3PS**	**062e**	**DMF**	**DRU**	**250M4**		475	342
6.7	62300	222.01	185660	**P3PL**	**062e**	**DMF**	**DRU**	**250M4**		475	
7.5	55300	197.00	185660	**P3PV**	**062e**	**DMF**	**DRU**	**250M4**		475	
8.3	49900	177.75	185660								
4.5	93300	332.32	124060								
5.2	80900	288.36	124060								
5.9	70200	250.21	124060								
6.7	62300	222.01	124060	**P3PH**	**052e**	**DMF**	**DRU**	**250M4**		1400	
7.5	55300	197.00	124060	**P3PS**	**052e**	**DMF**	**DRU**	**250M4**		1410	340
8.3	49900	177.75	124060	**P3PL**	**052e**	**DMF**	**DRU**	**250M4**		1400	
9.3	45000	160.39	124060	**P3PV**	**052e**	**DMF**	**DRU**	**250M4**		1320	
9.9	42100	150.09	124060								
11	36800	131.16	124060								
13	32100	114.35	124060								
38	11100	39.23	124060	**P2PH**	**052e**	**DMF**	**DRU**	**250M4**		1350	
44	9650	34.04	124060	**P2PS**	**052e**	**DMF**	**DRU**	**250M4**		1360	338
49	8560	30.21	124060	**P2PL**	**052e**	**DMF**	**DRU**	**250M4**		1350	
				P2PV	**052e**	**DMF**	**DRU**	**250M4**		1270	
4.5	93300	332.32	100170								
5.2	80900	288.36	100170								
5.9	70200	250.21	100170								
6.7	62300	222.01	100170								
7.5	55300	197.00	100170	**P3PH**	**042e**	**DMF**	**DRU**	**250M4**		1240	
8.3	49900	177.75	100170	**P3PS**	**042e**	**DMF**	**DRU**	**250M4**		1230	336
9.3	45000	160.39	100170	**P3PL**	**042e**	**DMF**	**DRU**	**250M4**		1230	
9.9	42100	150.09	100170	**P3PV**	**042e**	**DMF**	**DRU**	**250M4**		1170	
11	36800	131.16	100170								
13	32100	114.35	100170								
15	28000	99.93	100170								
38	11100	39.23	100170	**P2PH**	**042e**	**DMF**	**DRU**	**250M4**		1210	
44	9650	34.04	100170	**P2PS**	**042e**	**DMF**	**DRU**	**250M4**		1210	334
				P2PL	**042e**	**DMF**	**DRU**	**250M4**		1200	
				P2PV	**042e**	**DMF**	**DRU**	**250M4**		1150	
5.2	80900	288.36	69620								
5.9	70200	250.21	69620								
6.7	62300	222.01	69620								
7.5	55300	197.00	69620								
8.3	49900	177.75	69620								
9.3	45000	160.39	69620	**P3PH**	**032e**	**DMF**	**DRU**	**250M4**		1020	
9.9	42100	150.09	69620	**P3PS**	**032e**	**DMF**	**DRU**	**250M4**		990	332
11	36800	131.16	69620	**P3PL**	**032e**	**DMF**	**DRU**	**250M4**		990	
13	32100	114.35	69620	**P3PV**	**032e**	**DMF**	**DRU**	**250M4**		960	
15	28000	99.93	69620								
17	24500	87.32	69620								
19	21900	78.16	69620								
22	19100	68.30	69620								
38	11100	39.23	69620	**P2PH**	**032e**	**DMF**	**DRU**	**250M4**		1050	
44	9650	34.04	69620	**P2PS**	**032e**	**DMF**	**DRU**	**250M4**		1020	330
49	8560	30.21	69620	**P2PL**	**032e**	**DMF**	**DRU**	**250M4**		1020	
54	7720	27.26	69620	**P2PV**	**032e**	**DMF**	**DRU**	**250M4**		990	
6.8	61600	219.39	51190								
7.7	54300	193.59	51190								
8.5	49000	174.68	51190								
9.5	44000	156.99	51190								
10	40200	143.53	51190								
12	35700	127.35	51190	**P3PH**	**022e**	**DMF**	**DRU**	**250M4**		900	
13	31200	111.35	51190	**P3PS**	**022e**	**DMF**	**DRU**	**250M4**		890	328
15	27200	97.03	51190	**P3PL**	**022e**	**DMF**	**DRU**	**250M4**		880	
18	23800	84.79	51190	**P3PV**	**022e**	**DMF**	**DRU**	**250M4**		860	
20	21200	75.68	51190								
22	18500	66.13	51190								
25	16600	59.19	51190								
29	14500	51.73	51190								

31991203/EN – 08/2025

P_m = 45 kW

n_2	M_a	i_{ex}	M_{N2}						m	
min^{-1}	Nm		Nm						kg	
38	11100	39.23	51190							
44	9650	34.04	51190	**P2PH**	**022e**	**DMF**	**DRU**	**250M4**	910	
49	8560	30.21	51190	**P2PS**	**022e**	**DMF**	**DRU**	**250M4**	900	326
54	7720	27.26	51190	**P2PL**	**022e**	**DMF**	**DRU**	**250M4**	900	
65	6520	23.01	51190	**P2PV**	**022e**	**DMF**	**DRU**	**250M4**	880	
74	5700	20.11	51190							
38	11100	39.23	36810							
44	9650	34.04	36810							
49	8560	30.21	36810	**P2PH**	**012e**	**DMF**	**DRU**	**250M4**	770	
54	7720	27.26	36810	**P2PS**	**012e**	**DMF**	**DRU**	**250M4**	760	322
65	6520	23.01	36810	**P2PL**	**012e**	**DMF**	**DRU**	**250M4**	760	
74	5700	20.11	36810	**P2PV**	**012e**	**DMF**	**DRU**	**250M4**	740	
82	5100	18.00*	36810							
94	4460	15.73	36810							
38	11000	39.08	24830							
44	9540	33.64	24830							
50	8410	29.68	24830	**P2PH**	**002e**	**DMF**	**DRU**	**250M4**	690	
56	7560	26.68	24830	**P2PS**	**002e**	**DMF**	**DRU**	**250M4**	680	318
66	6350	22.41	24830	**P2PL**	**002e**	**DMF**	**DRU**	**250M4**	680	
76	5530	19.53	24830	**P2PV**	**002e**	**DMF**	**DRU**	**250M4**	660	
85	4940	17.45	24830							
98	4310	15.23	24830							

P_m = 55 kW

n_2	M_a	i_{ex}	M_{N2}						m	
min^{-1}	Nm		Nm						kg	
4.6	110500	322.69	245660							
5.3	96600	282.12	245660	**P3PH**	**072e**	**DMF**	**DRU**	**250ME4**	520	
6.1	83800	244.80	245660	**P3PS**	**072e**	**DMF**	**DRU**	**250ME4**	520	344
6.8	74400	217.21	245660	**P3PL**	**072e**	**DMF**	**DRU**	**250ME4**	520	
7.7	66400	193.79	245660	**P3PV**	**072e**	**DMF**	**DRU**	**250ME4**	520	
4.5	113800	332.32	185660							
5.2	98800	288.36	185660							
5.9	85700	250.21	185660	**P3PH**	**062e**	**DMF**	**DRU**	**250ME4**	520	
6.7	76000	222.01	185660	**P3PS**	**062e**	**DMF**	**DRU**	**250ME4**	520	342
7.5	67500	197.00	185660	**P3PL**	**062e**	**DMF**	**DRU**	**250ME4**	520	
8.4	60900	177.75	185660	**P3PV**	**062e**	**DMF**	**DRU**	**250ME4**	520	
9.3	54900	160.39	185660							
9.9	51400	150.09	185660							
4.5	113800	332.32	124060							
5.2	98800	288.36	124060							
5.9	85700	250.21	124060							
6.7	76000	222.01	124060							
7.5	67500	197.00	124060	**P3PH**	**052e**	**DMF**	**DRU**	**250ME4**	1450	
8.4	60900	177.75	124060	**P3PS**	**052e**	**DMF**	**DRU**	**250ME4**	1460	340
9.3	54900	160.39	124060	**P3PL**	**052e**	**DMF**	**DRU**	**250ME4**	1450	
9.9	51400	150.09	124060	**P3PV**	**052e**	**DMF**	**DRU**	**250ME4**	1370	
11	44900	131.16	124060							
13	39100	114.35	124060							
15	34200	99.93	124060							
38	13500	39.23	124060	**P2PH**	**052e**	**DMF**	**DRU**	**250ME4**	1400	
44	11700	34.04	124060	**P2PS**	**052e**	**DMF**	**DRU**	**250ME4**	1400	338
49	10400	30.21	124060	**P2PL**	**052e**	**DMF**	**DRU**	**250ME4**	1390	
55	9430	27.26	124060	**P2PV**	**052e**	**DMF**	**DRU**	**250ME4**	1310	

31991203/EN – 08/2025

P_m = 55 kW

n_2	M_a	i_{ex}	M_{N2}						m	
min^{-1}	Nm		Nm						kg	
4.5	113800	332.32	100170							
5.2	98800	288.36	100170							
5.9	85700	250.21	100170							
6.7	76000	222.01	100170							
7.5	67500	197.00	100170							
8.4	60900	177.75	100170	**P3PH**	**042e**	**DMF**	**DRU**	**250ME4**	1290	
9.3	54900	160.39	100170	**P3PS**	**042e**	**DMF**	**DRU**	**250ME4**	1280	336
9.9	51400	150.09	100170	**P3PL**	**042e**	**DMF**	**DRU**	**250ME4**	1270	
11	44900	131.16	100170	**P3PV**	**042e**	**DMF**	**DRU**	**250ME4**	1220	
13	39100	114.35	100170							
15	34200	99.93	100170							
17	29900	87.32	100170							
19	26700	78.16	100170							
38	13500	39.23	100170	**P2PH**	**042e**	**DMF**	**DRU**	**250ME4**	1260	
44	11700	34.04	100170	**P2PS**	**042e**	**DMF**	**DRU**	**250ME4**	1250	334
49	10400	30.21	100170	**P2PL**	**042e**	**DMF**	**DRU**	**250ME4**	1250	
				P2PV	**042e**	**DMF**	**DRU**	**250ME4**	1190	
5.9	85700	250.21	69620							
6.7	76000	222.01	69620							
7.5	67500	197.00	69620							
8.4	60900	177.75	69620							
9.3	54900	160.39	69620							
9.9	51400	150.09	69620	**P3PH**	**032e**	**DMF**	**DRU**	**250ME4**	1060	
11	44900	131.16	69620	**P3PS**	**032e**	**DMF**	**DRU**	**250ME4**	1040	332
13	39100	114.35	69620	**P3PL**	**032e**	**DMF**	**DRU**	**250ME4**	1030	
15	34200	99.93	69620	**P3PV**	**032e**	**DMF**	**DRU**	**250ME4**	1010	
17	29900	87.32	69620							
19	26700	78.16	69620							
22	23400	68.30	69620							
24	20900	61.13	69620							
28	18300	53.42	69620							
38	13500	39.23	69620							
44	11700	34.04	69620	**P2PH**	**032e**	**DMF**	**DRU**	**250ME4**	1100	
49	10400	30.21	69620	**P2PS**	**032e**	**DMF**	**DRU**	**250ME4**	1070	330
55	9430	27.26	69620	**P2PL**	**032e**	**DMF**	**DRU**	**250ME4**	1070	
65	7960	23.01	69620	**P2PV**	**032e**	**DMF**	**DRU**	**250ME4**	1040	
74	6960	20.11	69620							
8.5	59800	174.68	51190							
9.5	53800	156.99	51190							
10	49100	143.53	51190							
12	43600	127.35	51190							
13	38100	111.35	51190	**P3PH**	**022e**	**DMF**	**DRU**	**250ME4**	950	
15	33200	97.03	51190	**P3PS**	**022e**	**DMF**	**DRU**	**250ME4**	930	328
18	29000	84.79	51190	**P3PL**	**022e**	**DMF**	**DRU**	**250ME4**	930	
20	25900	75.68	51190	**P3PV**	**022e**	**DMF**	**DRU**	**250ME4**	910	
22	22600	66.13	51190							
25	20200	59.19	51190							
29	17700	51.73	51190							
38	13500	39.23	51190							
44	11700	34.04	51190							
49	10400	30.21	51190	**P2PH**	**022e**	**DMF**	**DRU**	**250ME4**	960	
55	9430	27.26	51190	**P2PS**	**022e**	**DMF**	**DRU**	**250ME4**	950	326
65	7960	23.01	51190	**P2PL**	**022e**	**DMF**	**DRU**	**250ME4**	950	
74	6960	20.11	51190	**P2PV**	**022e**	**DMF**	**DRU**	**250ME4**	920	
83	6230	18.00	51190							
95	5440	15.73	51190							
38	13500	39.23	36810							
44	11700	34.04	36810							
49	10400	30.21	36810	**P2PH**	**012e**	**DMF**	**DRU**	**250ME4**	820	
55	9430	27.26	36810	**P2PS**	**012e**	**DMF**	**DRU**	**250ME4**	810	322
65	7960	23.01	36810	**P2PL**	**012e**	**DMF**	**DRU**	**250ME4**	800	
74	6960	20.11	36810	**P2PV**	**012e**	**DMF**	**DRU**	**250ME4**	780	
83	6230	18.00*	36810							
95	5440	15.73	36810							

31991203/EN – 08/2025

P_m = 55 kW

n_2	M_a	i_{ex}	M_{N2}						m	
min^{-1}	Nm		Nm						kg	
38	13500	39.08	24830							
44	11600	33.64	24830							
50	10200	29.68	24830	**P2PH**	**002e**	**DMF**	**DRU**	**250ME4**	730	
56	9230	26.68	24830	**P2PS**	**002e**	**DMF**	**DRU**	**250ME4**	730	318
66	7750	22.41	24830	**P2PL**	**002e**	**DMF**	**DRU**	**250ME4**	720	
76	6750	19.53	24830	**P2PV**	**002e**	**DMF**	**DRU**	**250ME4**	710	
85	6040	17.45	24830							
98	5270	15.23	24830							

P_m = 75 kW

n_2	M_a	i_{ex}	M_{N2}						m	
min^{-1}	Nm		Nm						kg	
4.6	150900	322.69	245660							
5.3	131900	282.12	245660							
6.1	114400	244.80	245660	**P3PH**	**072e**	**DMF**	**DRU**	**280M4**	640	
6.8	101500	217.21	245660	**P3PS**	**072e**	**DMF**	**DRU**	**280M4**	640	344
7.7	90600	193.79	245660	**P3PL**	**072e**	**DMF**	**DRU**	**280M4**	640	
8.5	82100	175.57	245660	**P3PV**	**072e**	**DMF**	**DRU**	**280M4**	640	
9.4	74000	158.42	245660							
10	69000	147.64	245660							
4.5	155400	332.32	185660							
5.2	134800	288.36	185660							
5.9	117000	250.21	185660							
6.7	103800	222.01	185660							
7.5	92100	197.00	185660	**P3PH**	**062e**	**DMF**	**DRU**	**280M4**	640	
8.4	83100	177.75	185660	**P3PS**	**062e**	**DMF**	**DRU**	**280M4**	640	342
9.3	75000	160.39	185660	**P3PL**	**062e**	**DMF**	**DRU**	**280M4**	640	
9.9	70100	150.09	185660	**P3PV**	**062e**	**DMF**	**DRU**	**280M4**	640	
11	61300	131.16	185660							
13	53400	114.35	185660							
15	46700	99.93	185660							
4.5	155400	332.32	124060							
5.2	134800	288.36	124060							
5.9	117000	250.21	124060							
6.7	103800	222.01	124060							
7.5	92100	197.00	124060							
8.4	83100	177.75	124060	**P3PH**	**052e**	**DMF**	**DRU**	**280M4**	1570	
9.3	75000	160.39	124060	**P3PS**	**052e**	**DMF**	**DRU**	**280M4**	1570	340
9.9	70100	150.09	124060	**P3PL**	**052e**	**DMF**	**DRU**	**280M4**	1560	
11	61300	131.16	124060	**P3PV**	**052e**	**DMF**	**DRU**	**280M4**	1480	
13	53400	114.35	124060							
15	46700	99.93	124060							
17	40800	87.32	124060							
19	36500	78.16	124060							
22	31900	68.30	124060							
38	18500	39.23	124060	**P2PH**	**052e**	**DMF**	**DRU**	**280M4**	1510	
44	16000	34.04	124060	**P2PS**	**052e**	**DMF**	**DRU**	**280M4**	1520	338
49	14200	30.21	124060	**P2PL**	**052e**	**DMF**	**DRU**	**280M4**	1510	
55	12800	27.26	124060	**P2PV**	**052e**	**DMF**	**DRU**	**280M4**	1430	
5.9	117000	250.21	100170							
6.7	103800	222.01	100170							
7.5	92100	197.00	100170							
8.4	83100	177.75	100170							
9.3	75000	160.39	100170							
9.9	70100	150.09	100170	**P3PH**	**042e**	**DMF**	**DRU**	**280M4**	1400	
11	61300	131.16	100170	**P3PS**	**042e**	**DMF**	**DRU**	**280M4**	1400	336
13	53400	114.35	100170	**P3PL**	**042e**	**DMF**	**DRU**	**280M4**	1390	
15	46700	99.93	100170	**P3PV**	**042e**	**DMF**	**DRU**	**280M4**	1340	
17	40800	87.32	100170							
19	36500	78.16	100170							
22	31900	68.30	100170							
24	28500	61.13	100170							
28	24900	53.42	100170							

31991203/EN – 08/2025

P_m = 75 kW

n_2	M_a	i_{ex}	M_{N2}						m	
min^{-1}	Nm		Nm						kg	
38	18500	39.23	100170							
44	16000	34.04	100170	**P2PH**	**042e**	**DMF**	**DRU**	**280M4**	1380	
49	14200	30.21	100170	**P2PS**	**042e**	**DMF**	**DRU**	**280M4**	1370	334
55	12800	27.26	100170	**P2PL**	**042e**	**DMF**	**DRU**	**280M4**	1370	
65	10800	23.01	100170	**P2PV**	**042e**	**DMF**	**DRU**	**280M4**	1310	
38	18500	39.23	69620							
44	16000	34.04	69620							
49	14200	30.21	69620	**P2PH**	**032e**	**DMF**	**DRU**	**280M4**	1210	
55	12800	27.26	69620	**P2PS**	**032e**	**DMF**	**DRU**	**280M4**	1190	330
65	10800	23.01	69620	**P2PL**	**032e**	**DMF**	**DRU**	**280M4**	1190	
74	9490	20.11	69620	**P2PV**	**032e**	**DMF**	**DRU**	**280M4**	1160	
83	8500	18.00	69620							
94	7430	15.73	69620							
38	18500	39.23	51190							
44	16000	34.04	51190							
49	14200	30.21	51190	**P2PH**	**022e**	**DMF**	**DRU**	**280M4**	1080	
55	12800	27.26	51190	**P2PS**	**022e**	**DMF**	**DRU**	**280M4**	1070	328
65	10800	23.01	51190	**P2PL**	**022e**	**DMF**	**DRU**	**280M4**	1060	
74	9490	20.11	51190	**P2PV**	**022e**	**DMF**	**DRU**	**280M4**	1040	
83	8500	18.00	51190							
94	7430	15.73	51190							
38	18500	39.23	36810							
44	16000	34.04	36810							
49	14200	30.21	36810	**P2PH**	**012e**	**DMF**	**DRU**	**280M4**	930	
55	12800	27.26	36810	**P2PS**	**012e**	**DMF**	**DRU**	**280M4**	920	322
65	10800	23.01	36810	**P2PL**	**012e**	**DMF**	**DRU**	**280M4**	920	
74	9490	20.11	36810	**P2PV**	**012e**	**DMF**	**DRU**	**280M4**	900	
83	8500	18.00*	36810							
94	7430	15.73	36810							

P_m = 90 kW

n_2	M_a	i_{ex}	M_{N2}						m	
min^{-1}	Nm		Nm						kg	
4.6	180800	322.69	245660							
5.3	158100	282.12	245660							
6.1	137100	244.80	245660							
6.8	121700	217.21	245660	**P3PH**	**072e**	**DMF**	**DRU**	**315S4**	880	
7.7	108600	193.79	245660	**P3PS**	**072e**	**DMF**	**DRU**	**315S4**	880	344
8.5	98300	175.57	245660	**P3PL**	**072e**	**DMF**	**DRU**	**315S4**	880	
9.4	88700	158.42	245660	**P3PV**	**072e**	**DMF**	**DRU**	**315S4**	880	
10	82700	147.64	245660							
11	73200	130.72	245660							
13	63600	113.57	245660							
4.5	186200	332.32	185660							
5.2	161600	288.36	185660							
6.0	140200	250.21	185660							
6.7	124400	222.01	185660							
7.5	110400	197.00	185660	**P3PH**	**062e**	**DMF**	**DRU**	**315S4**	880	
8.4	99600	177.75	185660	**P3PS**	**062e**	**DMF**	**DRU**	**315S4**	880	342
9.3	89800	160.39	185660	**P3PL**	**062e**	**DMF**	**DRU**	**315S4**	880	
9.9	84100	150.09	185660	**P3PV**	**062e**	**DMF**	**DRU**	**315S4**	880	
11	73500	131.16	185660							
13	64000	114.35	185660							
15	56000	99.93	185660							
17	48900	87.32	185660							

31991203/EN – 08/2025

P_m = 90 kW

n_2	M_a	i_{ex}	M_{N2}							m	
min^{-1}	Nm		Nm							kg	
6.0	140200	250.21	124060								
6.7	124400	222.01	124060								
7.5	110400	197.00	124060								
8.4	99600	177.75	124060								
9.3	89800	160.39	124060								
9.9	84100	150.09	124060	**P3PH**	**052e**	**DMF**	**DRU**	**315S4**	1810		
11	73500	131.16	124060	**P3PS**	**052e**	**DMF**	**DRU**	**315S4**	1820	340	
13	64000	114.35	124060	**P3PL**	**052e**	**DMF**	**DRU**	**315S4**	1810		
15	56000	99.93	124060	**P3PV**	**052e**	**DMF**	**DRU**	**315S4**	1730		
17	48900	87.32	124060								
19	43800	78.16	124060								
22	38200	68.30	124060								
24	34200	61.13	124060								
38	22200	39.23	124060								
44	19200	34.04	124060	**P2PH**	**052e**	**DMF**	**DRU**	**315S4**	1760		
49	17000	30.21	124060	**P2PS**	**052e**	**DMF**	**DRU**	**315S4**	1760	338	
55	15400	27.26	124060	**P2PL**	**052e**	**DMF**	**DRU**	**315S4**	1750		
65	13000	23.01	124060	**P2PV**	**052e**	**DMF**	**DRU**	**315S4**	1670		
4.5	186200	332.32	100170								
5.2	161600	288.36	100170								
6.0	140200	250.21	100170								
6.7	124400	222.01	100170								
7.5	110400	197.00	100170								
8.4	99600	177.75	100170								
9.3	89800	160.39	100170	**P3PH**	**042e**	**DMF**	**DRU**	**315S4**	780		
9.9	84100	150.09	100170	**P3PS**	**042e**	**DMF**	**DRU**	**315S4**	770	336	
11	73500	131.16	100170	**P3PL**	**042e**	**DMF**	**DRU**	**315S4**	760		
13	64000	114.35	100170	**P3PV**	**042e**	**DMF**	**DRU**	**315S4**	710		
15	56000	99.93	100170								
17	48900	87.32	100170								
19	43800	78.16	100170								
22	38200	68.30	100170								
24	34200	61.13	100170								
28	29900	53.42	100170								
38	22200	39.23	100170								
44	19200	34.04	100170								
49	17000	30.21	100170	**P2PH**	**042e**	**DMF**	**DRU**	**315S4**	1620		
55	15400	27.26	100170	**P2PS**	**042e**	**DMF**	**DRU**	**315S4**	1620	334	
65	13000	23.01	100170	**P2PL**	**042e**	**DMF**	**DRU**	**315S4**	1610		
74	11300	20.11	100170	**P2PV**	**042e**	**DMF**	**DRU**	**315S4**	1550		
83	10100	18.00	100170								
38	22200	39.23	69620								
44	19200	34.04	69620								
49	17000	30.21	69620	**P2PH**	**032e**	**DMF**	**DRU**	**315S4**	1460		
55	15400	27.26	69620	**P2PS**	**032e**	**DMF**	**DRU**	**315S4**	1430	330	
65	13000	23.01	69620	**P2PL**	**032e**	**DMF**	**DRU**	**315S4**	1430		
74	11300	20.11	69620	**P2PV**	**032e**	**DMF**	**DRU**	**315S4**	1400		
83	10100	18.00	69620								
95	8900	15.73	69620								

P_m = 110 kW

n_2	M_a	i_{ex}	M_{N2}							m	
min^{-1}	Nm		Nm							kg	
4.6	221000	322.69	245660								
5.3	193200	282.12	245660								
6.1	167600	244.80	245660								
6.8	148700	217.21	245660								
7.7	132700	193.79	245660	**P3PH**	**072e**	**DMF**	**DRU**	**315S4**	880		
8.5	120200	175.57	245660	**P3PS**	**072e**	**DMF**	**DRU**	**315S4**	880	344	
9.4	108500	158.42	245660	**P3PL**	**072e**	**DMF**	**DRU**	**315S4**	880		
10	101100	147.64	245660	**P3PV**	**072e**	**DMF**	**DRU**	**315S4**	880		
11	89500	130.72	245660								
13	77700	113.57	245660								
15	68200	99.59	245660								

31991203/EN – 08/2025

P_m = 110 kW

n_2	M_a	i_{ex}	M_{N2}						m	
min^{-1}	Nm		Nm						kg	
4.5	227600	332.32	185660							
5.2	197500	288.36	185660							
6.0	171300	250.21	185660							
6.7	152000	222.01	185660							
7.5	134900	197.00	185660							
8.4	121700	177.75	185660	**P3PH**	**062e**	**DMF**	**DRU**	**315S4**	880	342
9.3	109800	160.39	185660	**P3PS**	**062e**	**DMF**	**DRU**	**315S4**	880	
9.9	102800	150.09	185660	**P3PL**	**062e**	**DMF**	**DRU**	**315S4**	880	
11	89800	131.16	185660	**P3PV**	**062e**	**DMF**	**DRU**	**315S4**	880	
13	78300	114.35	185660							
15	68400	99.93	185660							
17	59800	87.32	185660							
19	53500	78.16	185660							
22	46700	68.30	185660							
6.7	152000	222.01	124060							
7.5	134900	197.00	124060							
8.4	121700	177.75	124060							
9.3	109800	160.39	124060							
9.9	102800	150.09	124060							
11	89800	131.16	124060	**P3PH**	**052e**	**DMF**	**DRU**	**315S4**	1810	340
13	78300	114.35	124060	**P3PS**	**052e**	**DMF**	**DRU**	**315S4**	1820	
15	68400	99.93	124060	**P3PL**	**052e**	**DMF**	**DRU**	**315S4**	1810	
17	59800	87.32	124060	**P3PV**	**052e**	**DMF**	**DRU**	**315S4**	1730	
19	53500	78.16	124060							
22	46700	68.30	124060							
24	41800	61.13	124060							
28	36500	53.42	124060							
38	27100	39.23	124060							
44	23500	34.04	124060							
49	20800	30.21	124060	**P2PH**	**052e**	**DMF**	**DRU**	**315S4**	1760	338
55	18800	27.26	124060	**P2PS**	**052e**	**DMF**	**DRU**	**315S4**	1760	
65	15900	23.01	124060	**P2PL**	**052e**	**DMF**	**DRU**	**315S4**	1750	
74	13900	20.11	124060	**P2PV**	**052e**	**DMF**	**DRU**	**315S4**	1670	
83	12400	18.00	124060							
38	27100	39.23	100170							
44	23500	34.04	100170							
49	20800	30.21	100170	**P2PH**	**042e**	**DMF**	**DRU**	**315S4**	1620	334
55	18800	27.26	100170	**P2PS**	**042e**	**DMF**	**DRU**	**315S4**	1620	
65	15900	23.01	100170	**P2PL**	**042e**	**DMF**	**DRU**	**315S4**	1610	
74	13900	20.11	100170	**P2PV**	**042e**	**DMF**	**DRU**	**315S4**	1550	
83	12400	18.00	100170							
95	10800	15.73	100170							
38	27100	39.23	69620							
44	23500	34.04	69620							
49	20800	30.21	69620	**P2PH**	**032e**	**DMF**	**DRU**	**315S4**	1460	330
55	18800	27.26	69620	**P2PS**	**032e**	**DMF**	**DRU**	**315S4**	1430	
65	15900	23.01	69620	**P2PL**	**032e**	**DMF**	**DRU**	**315S4**	1430	
74	13900	20.11	69620	**P2PV**	**032e**	**DMF**	**DRU**	**315S4**	1400	
83	12400	18.00	69620							
95	10800	15.73	69620							

31991203/EN – 08/2025

P_m = 132 kW

n_2	M_a	i_{ex}	M_{N2}							m	
min^{-1}	Nm		Nm							kg	
4.6	265200	322.69	245660								
5.3	231800	282.12	245660								
6.1	201200	244.80	245660								
6.8	178500	217.21	245660								
7.7	159200	193.79	245660								
8.5	144300	175.57	245660	**P3PH**	**072e**	**DMF**	**DRU**	**315M4**	900		
9.4	130200	158.42	245660	**P3PS**	**072e**	**DMF**	**DRU**	**315M4**	900	344	
10	121300	147.64	245660	**P3PL**	**072e**	**DMF**	**DRU**	**315M4**	900		
11	107400	130.72	245660	**P3PV**	**072e**	**DMF**	**DRU**	**315M4**	900		
13	93300	113.57	245660								
15	81800	99.59	245660								
17	71500	87.03	245660								
19	63800	77.63	245660								
6.0	205600	250.21	185660								
6.7	182400	222.01	185660								
7.5	161900	197.00	185660								
8.4	146100	177.75	185660								
9.3	131800	160.39	185660								
9.9	123300	150.09	185660	**P3PH**	**062e**	**DMF**	**DRU**	**315M4**	900		
11	107800	131.16	185660	**P3PS**	**062e**	**DMF**	**DRU**	**315M4**	900	342	
13	93900	114.35	185660	**P3PL**	**062e**	**DMF**	**DRU**	**315M4**	900		
15	82100	99.93	185660	**P3PV**	**062e**	**DMF**	**DRU**	**315M4**	900		
17	71700	87.32	185660								
19	64200	78.16	185660								
22	56100	68.30	185660								
24	50200	61.13	185660								
8.4	146100	177.75	124060								
9.3	131800	160.39	124060								
9.9	123300	150.09	124060								
11	107800	131.16	124060								
13	93900	114.35	124060	**P3PH**	**052e**	**DMF**	**DRU**	**315M4**	1830		
15	82100	99.93	124060	**P3PS**	**052e**	**DMF**	**DRU**	**315M4**	1840	340	
17	71700	87.32	124060	**P3PL**	**052e**	**DMF**	**DRU**	**315M4**	1830		
19	64200	78.16	124060	**P3PV**	**052e**	**DMF**	**DRU**	**315M4**	1750		
22	56100	68.30	124060								
24	50200	61.13	124060								
28	43900	53.42	124060								
38	32500	39.23	124060								
44	28200	34.04	124060								
49	25000	30.21	124060	**P2PH**	**052e**	**DMF**	**DRU**	**315M4**	1780		
55	22600	27.26	124060	**P2PS**	**052e**	**DMF**	**DRU**	**315M4**	1780	338	
65	19100	23.01	124060	**P2PL**	**052e**	**DMF**	**DRU**	**315M4**	1780		
74	16600	20.11	124060	**P2PV**	**052e**	**DMF**	**DRU**	**315M4**	1690		
83	14900	18.00	124060								
95	13000	15.73	124060								
38	32500	39.23	100170								
44	28200	34.04	100170								
49	25000	30.21	100170	**P2PH**	**042e**	**DMF**	**DRU**	**315M4**	1640		
55	22600	27.26	100170	**P2PS**	**042e**	**DMF**	**DRU**	**315M4**	1640	334	
65	19100	23.01	100170	**P2PL**	**042e**	**DMF**	**DRU**	**315M4**	1630		
74	16600	20.11	100170	**P2PV**	**042e**	**DMF**	**DRU**	**315M4**	1570		
83	14900	18.00	100170								
95	13000	15.73	100170								
38	32500	39.23	69620								
44	28200	34.04	69620								
49	25000	30.21	69620	**P2PH**	**032e**	**DMF**	**DRU**	**315M4**	1480		
55	22600	27.26	69620	**P2PS**	**032e**	**DMF**	**DRU**	**315M4**	1450	330	
65	19100	23.01	69620	**P2PL**	**032e**	**DMF**	**DRU**	**315M4**	1450		
74	16600	20.11	69620	**P2PV**	**032e**	**DMF**	**DRU**	**315M4**	1420		
83	14900	18.00	69620								
95	13000	15.73	69620								

31991203/EN – 08/2025

P_m = 160 kW

n_2	M_a	i_{ex}	M_{N2}						m	
min^{-1}	Nm		Nm						kg	
5.3	281000	282.12	245660							
6.1	243800	244.80	245660							
6.8	216400	217.21	245660							
7.7	193000	193.79	245660							
8.5	174900	175.57	245660							
9.4	157800	158.42	245660	**P3PH**	**072e**	**DMF**	**DRU**	**315H4**	1150	
10	147000	147.64	245660	**P3PS**	**072e**	**DMF**	**DRU**	**315H4**	1150	344
11	130200	130.72	245660	**P3PL**	**072e**	**DMF**	**DRU**	**315H4**	1150	
13	113100	113.57	245660	**P3PV**	**072e**	**DMF**	**DRU**	**315H4**	1150	
15	99200	99.59	245660							
17	86700	87.03	245660							
19	77300	77.63	245660							
22	67800	68.07	245660							
6.7	221100	222.01	185660							
7.5	196200	197.00	185660							
8.4	177000	177.75	185660							
9.3	159700	160.39	185660							
9.9	149500	150.09	185660							
11	130600	131.16	185660	**P3PH**	**062e**	**DMF**	**DRU**	**315H4**	1150	
13	113900	114.35	185660	**P3PS**	**062e**	**DMF**	**DRU**	**315H4**	1150	342
15	99500	99.93	185660	**P3PL**	**062e**	**DMF**	**DRU**	**315H4**	1150	
17	87000	87.32	185660	**P3PV**	**062e**	**DMF**	**DRU**	**315H4**	1150	
19	77800	78.16	185660							
22	68000	68.30	185660							
24	60900	61.13	185660							
28	53200	53.42	185660							
9.9	149500	150.09	124060							
11	130600	131.16	124060							
13	113900	114.35	124060							
15	99500	99.93	124060	**P3PH**	**052e**	**DMF**	**DRU**	**315H4**	2080	
17	87000	87.32	124060	**P3PS**	**052e**	**DMF**	**DRU**	**315H4**	2090	340
19	77800	78.16	124060	**P3PL**	**052e**	**DMF**	**DRU**	**315H4**	2080	
22	68000	68.30	124060	**P3PV**	**052e**	**DMF**	**DRU**	**315H4**	2000	
24	60900	61.13	124060							
28	53200	53.42	124060							
38	39400	39.23	124060							
44	34200	34.04	124060							
49	30300	30.21	124060	**P2PH**	**052e**	**DMF**	**DRU**	**315H4**	2030	
55	27400	27.26	124060	**P2PS**	**052e**	**DMF**	**DRU**	**315H4**	2030	338
65	23100	23.01	124060	**P2PL**	**052e**	**DMF**	**DRU**	**315H4**	2020	
74	20200	20.11	124060	**P2PV**	**052e**	**DMF**	**DRU**	**315H4**	1940	
83	18100	18.00	124060							
95	15800	15.73	124060							
38	39400	39.23	100170							
44	34200	34.04	100170							
49	30300	30.21	100170	**P2PH**	**042e**	**DMF**	**DRU**	**315H4**	1890	
55	27400	27.26	100170	**P2PS**	**042e**	**DMF**	**DRU**	**315H4**	1890	334
65	23100	23.01	100170	**P2PL**	**042e**	**DMF**	**DRU**	**315H4**	1880	
74	20200	20.11	100170	**P2PV**	**042e**	**DMF**	**DRU**	**315H4**	1820	
83	18100	18.00	100170							
95	15800	15.73	100170							
38	39400	39.23	69620							
44	34200	34.04	69620							
49	30300	30.21	69620	**P2PH**	**032e**	**DMF**	**DRU**	**315H4**	1730	
55	27400	27.26	69620	**P2PS**	**032e**	**DMF**	**DRU**	**315H4**	1700	330
65	23100	23.01	69620	**P2PL**	**032e**	**DMF**	**DRU**	**315H4**	1700	
74	20200	20.11	69620	**P2PV**	**032e**	**DMF**	**DRU**	**315H4**	1670	
83	18100	18.00	69620							
95	15800	15.73	69620							

31991203/EN – 08/2025

P_m = 200 kW											
n_2	M_a	i_{ex}	M_{N2}							m	
min^{-1}	Nm		Nm							kg	
6.1	304400	244.80	245660								
6.9	270100	217.21	245660								
7.7	241000	193.79	245660								
8.5	218300	175.57	245660								
9.4	197000	158.42	245660								
10	183600	147.64	245660	**P3PH**	**072e**	**DMF**	**DRU**	**315H4**	1150		
11	162500	130.72	245660	**P3PS**	**072e**	**DMF**	**DRU**	**315H4**	1150		344
13	141200	113.57	245660	**P3PL**	**072e**	**DMF**	**DRU**	**315H4**	1150		
15	123800	99.59	245660	**P3PV**	**072e**	**DMF**	**DRU**	**315H4**	1150		
17	108200	87.03	245660								
19	96500	77.63	245660								
22	84600	68.07	245660								
24	75900	61.07	245660								
28	66500	53.48	245660								
8.4	221000	177.75	185660								
9.3	199400	160.39	185660								
9.9	186600	150.09	185660								
11	163100	131.16	185660								
13	142200	114.35	185660	**P3PH**	**062e**	**DMF**	**DRU**	**315H4**	1150		
15	124200	99.93	185660	**P3PS**	**062e**	**DMF**	**DRU**	**315H4**	1150		342
17	108600	87.32	185660	**P3PL**	**062e**	**DMF**	**DRU**	**315H4**	1150		
19	97200	78.16	185660	**P3PV**	**062e**	**DMF**	**DRU**	**315H4**	1150		
22	84900	68.30	185660								
24	76000	61.13	185660								
28	66400	53.42	185660								
13	142200	114.35	124060								
15	124200	99.93	124060								
17	108600	87.32	124060	**P3PH**	**052e**	**DMF**	**DRU**	**315H4**	2080		
19	97200	78.16	124060	**P3PS**	**052e**	**DMF**	**DRU**	**315H4**	2090		340
22	84900	68.30	124060	**P3PL**	**052e**	**DMF**	**DRU**	**315H4**	2080		
24	76000	61.13	124060	**P3PV**	**052e**	**DMF**	**DRU**	**315H4**	2000		
28	66400	53.42	124060								
38	49200	39.23	124060								
44	42700	34.04	124060								
49	37900	30.21	124060	**P2PH**	**052e**	**DMF**	**DRU**	**315H4**	2030		
55	34200	27.26	124060	**P2PS**	**052e**	**DMF**	**DRU**	**315H4**	2030		338
65	28900	23.01	124060	**P2PL**	**052e**	**DMF**	**DRU**	**315H4**	2020		
74	25200	20.11	124060	**P2PV**	**052e**	**DMF**	**DRU**	**315H4**	1940		
83	22600	18.00	124060								
95	19700	15.73	124060								
38	49200	39.23	100170								
44	42700	34.04	100170								
49	37900	30.21	100170	**P2PH**	**042e**	**DMF**	**DRU**	**315H4**	1890		
55	34200	27.26	100170	**P2PS**	**042e**	**DMF**	**DRU**	**315H4**	1890		334
65	28900	23.01	100170	**P2PL**	**042e**	**DMF**	**DRU**	**315H4**	1880		
74	25200	20.11	100170	**P2PV**	**042e**	**DMF**	**DRU**	**315H4**	1820		
83	22600	18.00	100170								
95	19700	15.73	100170								
38	49200	39.23	69620								
44	42700	34.04	69620								
49	37900	30.21	69620	**P2PH**	**032e**	**DMF**	**DRU**	**315H4**	1730		
55	34200	27.26	69620	**P2PS**	**032e**	**DMF**	**DRU**	**315H4**	1700		330
65	28900	23.01	69620	**P2PL**	**032e**	**DMF**	**DRU**	**315H4**	1700		
74	25200	20.11	69620	**P2PV**	**032e**	**DMF**	**DRU**	**315H4**	1670		
83	22600	18.00	69620								
95	19700	15.73	69620								

31991203/EN – 08/2025

10.5 Service life-dependent gear unit torque

10.5.1 Size P..002e

P..002e n1 = 750 min^{-1}		$M_{a\,Lh}$ / Nm						24830 Nm
i_N	i_{ex}	≤5000 h	≤10000 h	≤15000 h	≤30000 h	≤60000 h	≤80000 h	≤100000 h
16	15.23	19100	15900	14200	11700	9700	8940	8380
18	17.45	19800	16400	14700	12100	10000	9250	8680
20	19.53	20300	16900	15100	12500	10300	9530	8960
22.4	22.41	21100	17500	15700	13000	10700	9910	9310
25	26.68	22200	18400	16500	13700	11300	10400	9810
31.5	29.68	22900	19000	17000	14100	11600	10700	10100
35.5	33.64	23700	19700	17700	14600	12100	11200	10500
40	39.08	24600	20500	18400	15200	12600	11600	10900
50	51.73	24900	22100	19800	16400	13600	12600	11800
56	59.26	24900	22900	20600	17000	14100	13000	12300
63	66.32	24900	23600	21200	17600	14600	13500	12700
80	75.77	25300	24400	21900	18200	15100	13900	13100
90	84.79	25600	24800	22500	18700	15500	14300	13500
100	97.03	26000	24800	23200	19300	16000	14800	13900
112	111.35	26500	24700	24100	20100	16600	15400	14500
125	127.35	26900	24700	24700	20900	17300	16000	15100
140	146.16	27400	25100	24700	21700	18000	16700	15700
160	164.72	27800	25400	24700	22300	18500	17100	16100
200	193.59	27000	25900	24700	23100	19200	17800	16700
224	219.39	26000	26000	25000	23800	19800	18400	17300
250	251.44	27000	26800	25400	24700	20600	19100	18000
280	284.95	26000	26000	25800	24600	21400	19800	18700
315	331.02	24800	24800	24800	24600	22500	20800	19600

P..002e n1 = 1000 min^{-1}								24830 Nm
16	15.23	17600	14600	13100	10800	8890	8160	7650
18	17.45	18400	15200	13600	11200	9300	8550	8010
20	19.53	19000	15700	14100	11600	9610	8850	8290
22.4	22.41	19600	16200	14500	12000	9930	9170	8590
25	26.68	20500	17000	15200	12600	10400	9600	9020
31.5	29.68	21100	17500	15700	13000	10700	9890	9300
35.5	33.64	21800	18100	16200	13400	11100	10200	9650
40	39.08	22800	18900	17000	14100	11600	10700	10000
50	51.73	24600	20500	18400	15200	12600	11600	10900
56	59.26	24900	21200	19100	15800	13100	12100	11300
63	66.32	24900	21900	19600	16300	13500	12400	11700
80	75.77	24900	22600	20300	16900	14000	12900	12100
90	84.79	24800	23300	21000	17400	14400	13300	12500
100	97.03	25200	24200	21700	18000	14900	13800	13000
112	111.35	25600	24800	22400	18600	15400	14300	13400
125	127.35	26000	24800	23100	19200	15900	14700	13900
140	146.16	26400	24700	24000	20000	16600	15300	14400
160	164.72	26800	24700	24700	20700	17200	15900	14900
200	193.59	27000	25000	24700	21700	18000	16700	15700
224	219.39	25900	25400	24700	22300	18500	17100	16100
250	251.44	27000	25900	24700	22900	19100	17700	16600
280	284.95	26000	26000	24900	23700	19700	18200	17200
315	331.02	24800	24800	24800	24700	20500	19000	17900

31991203/EN – 08/2025

P..002e n1 = 1500 min^{-1}				$M_{a\,Lh}$ / Nm				24830 Nm
i_N	i_{ex}	≤5000 h	≤10000 h	≤15000 h	≤30000 h	≤60000 h	≤80000 h	≤100000 h
16	15.23	15900	13100	11700	9700	7940	7310	6870
18	17.45	16400	13600	12100	10000	8210	7550	7090
20	19.53	16900	14000	12500	10300	8470	7780	7300
22.4	22.41	17500	14500	13000	10700	8830	8110	7600
25	26.68	18500	15300	13700	11300	9360	8610	8070
31.5	29.68	19000	15800	14100	11700	9640	8880	8320
35.5	33.64	19600	16200	14500	12000	9930	9170	8600
40	39.08	20300	16900	15100	12500	10300	9530	8960
50	51.73	22000	18300	16400	13500	11200	10300	9720
56	59.26	22900	19000	17000	14100	11600	10700	10100
63	66.32	23600	19600	17600	14600	12000	11100	10400
80	75.77	24400	20300	18200	15100	12500	11500	10800
90	84.79	24900	21000	18800	15600	12900	11900	11200
100	97.03	24900	21700	19500	16200	13400	12400	11600
112	111.35	24900	22500	20200	16800	13900	12800	12100
125	127.35	24800	23300	21000	17400	14400	13300	12500
140	146.16	25200	24200	21700	18100	14900	13800	13000
160	164.72	25500	24800	22300	18600	15400	14200	13400
200	193.59	26000	24800	23200	19300	16000	14800	13900
224	219.39	25900	24700	24000	20000	16600	15300	14400
250	251.44	26900	24700	24700	20800	17300	16000	15000
280	284.95	25900	25000	24700	21600	17900	16600	15600
315	331.02	24800	24800	24700	22300	18500	17100	16100

P..002e n1 = 1800 min^{-1}								24830 Nm
16	15.23	15100	12500	11200	9240	7550	6960	6550
18	17.45	15700	13000	11600	9600	7850	7230	6790
20	19.53	16100	13300	11900	9850	8070	7430	6980
22.4	22.41	16700	13800	12300	10200	8360	7690	7220
25	26.68	17500	14500	12900	10700	8810	8090	7580
31.5	29.68	18100	15000	13400	11000	9130	8390	7860
35.5	33.64	18800	15600	13900	11500	9510	8760	8210
40	39.08	19400	16100	14400	11900	9850	9090	8520
50	51.73	20900	17300	15500	12800	10600	9800	9210
56	59.26	21700	18000	16100	13400	11000	10200	9580
63	66.32	22400	18600	16700	13800	11400	10500	9910
80	75.77	23300	19400	17300	14400	11900	10900	10300
90	84.79	24000	20000	17900	14800	12300	11300	10600
100	97.03	24900	20700	18600	15400	12700	11700	11000
112	111.35	24900	21500	19300	16000	13200	12200	11500
125	127.35	24900	22200	20000	16600	13700	12700	11900
140	146.16	24800	23100	20700	17200	14200	13100	12400
160	164.72	25000	23800	21400	17800	14700	13600	12800
200	193.59	25500	24700	22200	18500	15300	14100	13300
224	219.39	25900	24800	22900	19000	15800	14600	13700
250	251.44	26300	24800	23700	19700	16300	15100	14200
280	284.95	25900	24700	24600	20500	17000	15700	14800
315	331.02	24800	24800	24700	21400	17800	16500	15500

31991203/EN – 08/2025

10.5.2 Size P..012e

P..012e n1 = 750 min^{-1}				$M_{a\,Lh}$ / Nm				36810 Nm
i_N	i_{ex}	≤5000 h	≤10000 h	≤15000 h	≤30000 h	≤60000 h	≤80000 h	≤100000 h
16	15.73	36900	30600	27400	22500	18400	16900	15800
18	18.00	37400	31600	28300	23300	19100	17600	16400
20	20.11	37400	32600	29100	24000	19700	18100	17000
22.4	23.01	37300	33800	30300	25000	20500	18800	17700
28	27.26	37200	35500	31800	26300	21600	19900	18600
31.5	30.21	37200	36600	32800	27100	22300	20500	19200
35.5	34.04	37100	37100	34000	28100	23100	21300	20000
40	39.23	37100	37100	35200	29200	24000	22100	20800
56	53.42	37000	37000	37000	31800	26200	24200	22700
63	61.13	36900	36900	36900	32900	27200	25100	23600
71	68.30	37100	36900	36900	34000	28100	26000	24400
80	78.16	37700	36900	36900	35100	29100	26800	25200
90	87.32	38200	36800	36800	36000	29800	27600	25900
100	99.93	38800	36800	36800	36800	30900	28600	26800
112	114.35	39500	36800	36800	36800	32100	29700	27900
125	131.16	40100	36700	36700	36700	33500	31000	29200
140	150.09	40400	37300	36700	36700	34700	32100	30200
160	169.15	39400	37900	36700	36700	35600	33000	31000
200	197.00	40400	38600	36700	36600	36600	34200	32200
224	222.01	39400	39200	37200	36600	36600	35300	33200
250	250.21	39400	39400	37800	36600	36600	36500	34400
280	288.36	39400	39400	38400	36600	36600	36600	35900
315	332.32	37700	37700	37700	36600	36600	36600	36600

P..012e n1 = 1000 min^{-1}								36810 Nm
16	15.73	34100	28200	25200	20600	16800	15500	14500
18	18.00	35600	29400	26300	21600	17700	16200	15200
20	20.11	36600	30300	27100	22300	18200	16700	15700
22.4	23.01	37400	31300	28000	23000	18900	17400	16200
28	27.26	37400	32700	29300	24100	19800	18200	17100
31.5	30.21	37300	33600	30100	24800	20400	18800	17600
35.5	34.04	37200	34800	31200	25700	21100	19500	18200
40	39.23	37200	36300	32500	26900	22100	20300	19100
56	53.42	37100	37100	35500	29300	24200	22300	20900
63	61.13	37000	37000	36800	30500	25200	23200	21800
71	68.30	37000	37000	37000	31400	25900	23900	22400
80	78.16	36900	36900	36900	32600	26900	24800	23300
90	87.32	36900	36900	36900	33600	27800	25600	24100
100	99.93	37500	36900	36900	34800	28800	26600	24900
112	114.35	38100	36800	36800	35900	29700	27400	25800
125	131.16	38700	36800	36800	36800	30800	28400	26700
140	150.09	39400	36800	36800	36800	32000	29500	27800
160	169.15	39400	36700	36700	36700	33200	30700	28800
200	197.00	40400	37300	36700	36700	34600	32000	30100
224	222.01	39400	37800	36700	36700	35500	32800	30900
250	250.21	39400	38400	36700	36700	36500	33800	31800
280	288.36	39400	39100	37100	36600	36600	35000	33000
315	332.32	37700	37700	37700	36600	36600	36500	34300

31991203/EN – 08/2025

P..012e n1 = 1500 min^{-1}				$M_{a\,Lh}$ / Nm				36810 Nm
i_N	i_{ex}	≤5000 h	≤10000 h	≤15000 h	≤30000 h	≤60000 h	≤80000 h	≤100000 h
16	15.73	30600	25200	22500	18400	15000	13800	13000
18	18.00	31600	26100	23300	19100	15500	14200	13400
20	20.11	32500	26900	24000	19700	16000	14700	13800
22.4	23.01	33800	28000	25000	20500	16700	15300	14400
28	27.26	35700	29500	26400	21700	17700	16300	15200
31.5	30.21	36600	30300	27100	22300	18200	16700	15700
35.5	34.04	37400	31200	27900	23000	18800	17300	16200
40	39.23	37200	32300	28900	23800	19500	18000	16900
56	53.42	37200	35300	31600	26100	21400	19700	18500
63	61.13	37200	36700	32900	27200	22400	20600	19300
71	68.30	37100	37100	34000	28100	23100	21300	20000
80	78.16	37100	37100	35200	29100	24000	22100	20700
90	87.32	37000	37000	36300	30100	24800	22900	21400
100	99.93	37000	37000	37000	31200	25800	23800	22300
112	114.35	36900	36900	36900	32300	26700	24600	23100
125	131.16	36900	36900	36900	33600	27800	25600	24100
140	150.09	37500	36900	36900	34800	28800	26600	25000
160	169.15	38000	36800	36800	35800	29600	27300	25700
200	197.00	38700	36800	36800	36800	30800	28400	26700
224	222.01	39300	36800	36800	36800	31800	29400	27700
250	250.21	39400	36700	36700	36700	33000	30500	28700
280	288.36	39400	37200	36700	36700	34400	31900	30000
315	332.32	37700	37700	36700	36700	35500	32800	30900

P..012e n1 = 1800 min^{-1}								36810 Nm
16	15.73	29200	24100	21400	17500	14300	13200	12400
18	18.00	30300	25000	22200	18200	14800	13600	12800
20	20.11	31100	25600	22900	18700	15200	14000	13200
22.4	23.01	32100	26500	23700	19400	15800	14500	13600
28	27.26	33700	27900	24900	20400	16600	15300	14300
31.5	30.21	34800	28800	25700	21100	17200	15800	14800
35.5	34.04	36100	29900	26700	21900	18000	16500	15400
40	39.23	37100	30900	27600	22700	18600	17100	16000
56	53.42	37300	33500	30000	24700	20300	18700	17500
63	61.13	37200	34800	31200	25700	21100	19400	18200
71	68.30	37200	36000	32200	26600	21900	20100	18900
80	78.16	37100	37100	33500	27700	22800	21000	19700
90	87.32	37100	37100	34500	28600	23500	21700	20300
100	99.93	37000	37000	35800	29700	24500	22500	21100
112	114.35	37000	37000	37000	30800	25400	23400	22000
125	131.16	37000	37000	37000	32000	26400	24300	22800
140	150.09	36900	36900	36900	33100	27400	25300	23700
160	169.15	37200	36900	36900	34300	28400	26200	24600
200	197.00	37900	36800	36800	35500	29400	27200	25500
224	222.01	38500	36800	36800	36600	30300	28000	26300
250	250.21	39000	36800	36800	36800	31300	28900	27200
280	288.36	39400	36700	36700	36700	32600	30100	28400
315	332.32	37700	37000	36700	36700	34100	31600	29700

31991203/EN – 08/2025

10.5.3 Size P..022e

P..022e n1 = 750 min^{-1}		$M_{a\,Lh}$ / Nm						51190 Nm
i_N	i_{ex}	≤5000 h	≤10000 h	≤15000 h	≤30000 h	≤60000 h	≤80000 h	≤100000 h
16	15.73	52500	45000	40300	33300	27500	25300	23700
18	18.00	52400	46500	41600	34400	28400	26200	24500
20	20.11	52300	47800	42800	35500	29200	27000	25300
22.4	23.01	52200	49600	44500	36800	30400	28100	26300
28	27.26	52100	52100	46700	38700	32000	29500	27700
31.5	30.21	52000	52000	48200	39900	33000	30400	28600
35.5	34.04	52000	52000	49900	41400	34200	31600	29700
40	39.23	51000	51000	51000	42900	35500	32800	30800
50	51.73	51700	51700	51700	46300	38300	35400	33300
56	59.19	51700	51700	51700	48000	39700	36700	34500
63	66.13	51700	51600	51600	49500	41000	37900	35600
80	75.68	52500	51600	51600	51200	42400	39200	36900
90	84.79	53100	51500	51500	51500	43500	40300	37900
100	97.03	53900	51500	51500	51500	45000	41700	39200
112	111.35	54800	51500	51500	51500	46800	43300	40800
125	127.35	55300	51400	51400	51400	48800	45100	42500
140	143.53	53900	51900	51400	51400	50500	46700	44000
160	156.99	57000	52500	51400	51400	51400	47600	44800
180	174.68	57700	53100	51300	51300	51300	48800	45900
200	193.59	55400	53700	51300	51300	51300	50000	47000
224	219.39	55400	54500	51900	51300	51300	51300	48600
250	247.25	53900	53900	52700	51200	51200	51200	50300
280	287.23	53900	53900	53600	51200	51200	51200	51200
315	331.02	51300	51300	51300	51200	51200	51200	51200

P..022e n1 = 1000 min^{-1}								51190 Nm
16	15.73	50000	41500	37100	30600	25200	23200	21800
18	18.00	52200	43300	38800	32000	26400	24300	22800
20	20.11	52500	44500	39900	33000	27200	25000	23500
22.4	23.01	52400	46000	41200	34100	28100	25900	24300
28	27.26	52300	48000	43000	35600	29400	27100	25400
31.5	30.21	52200	49400	44300	36700	30300	27900	26200
35.5	34.04	52100	51100	45800	38000	31300	28900	27200
40	39.23	50900	50900	47800	39600	32700	30200	28400
50	51.73	51900	51900	51600	42800	35400	32700	30700
56	59.19	51800	51800	51800	44400	36800	34000	31900
63	66.13	51800	51800	51800	45800	37900	35000	32900
80	75.68	51700	51700	51700	47400	39300	36300	34200
90	84.79	51700	51700	51700	48900	40500	37500	35200
100	97.03	52200	51600	51600	50700	42000	38900	36600
112	111.35	53000	51600	51600	51600	43400	40100	37700
125	127.35	53800	51500	51500	51500	44900	41500	39000
140	143.53	53800	51500	51500	51500	46400	42900	40400
160	156.99	55100	51400	51400	51400	47600	44000	41500
180	174.68	55800	51400	51400	51400	49200	45500	42900
200	193.59	55300	52000	51400	51400	50600	46900	44100
224	219.39	55400	52700	51300	51300	51300	48100	45300
250	247.25	53900	53500	51300	51300	51300	49400	46500
280	287.23	53900	53900	51800	51300	51300	51300	48400
315	331.02	51300	51300	51300	51200	51200	51200	50400

31991203/EN – 08/2025

P..022e n1 = 1500 min^{-1}				$M_{a\,Lh}$ / Nm				51190 Nm
i_N	i_{ex}	≤5000 h	≤10000 h	≤15000 h	≤30000 h	≤60000 h	≤80000 h	≤100000 h
16	15.73	45000	37200	33300	27500	22500	20700	19400
18	18.00	46400	38400	34400	28400	23300	21500	20100
20	20.11	47800	39600	35400	29200	24000	22100	20800
22.4	23.01	49700	41200	36800	30400	25000	23000	21600
28	27.26	52400	43400	38900	32100	26500	24400	22900
31.5	30.21	52500	44500	39900	33000	27200	25000	23500
35.5	34.04	52400	45800	41100	34000	28000	25800	24200
40	39.23	50600	47500	42600	35200	29000	26800	25100
50	51.73	52100	51300	46000	38100	31500	29000	27300
56	59.19	52000	52000	47900	39700	32800	30300	28400
63	66.13	52000	52000	49500	41000	33900	31300	29400
80	75.68	51900	51900	51200	42500	35200	32500	30500
90	84.79	51800	51800	51800	43800	36300	33500	31500
100	97.03	51800	51800	51800	45500	37700	34800	32700
112	111.35	51700	51700	51700	47200	39100	36100	34000
125	127.35	51700	51700	51700	48900	40500	37500	35300
140	143.53	52200	51600	51600	50500	41900	38700	36400
160	156.99	52700	51600	51600	51600	42800	39500	37200
180	174.68	53300	51500	51500	51500	43900	40600	38200
200	193.59	53900	51500	51500	51500	45000	41600	39200
224	219.39	54700	51500	51500	51500	46600	43100	40600
250	247.25	53900	51400	51400	51400	48300	44700	42100
280	287.23	53900	51900	51400	51400	50500	46800	44000
315	331.02	51300	51300	51300	51300	51300	48200	45300

P..022e n1 = 1800 min^{-1}								51190 Nm
16	15.73	43000	35600	31800	26200	21500	19700	18400
18	18.00	44500	36800	32900	27100	22300	20500	19100
20	20.11	45600	37800	33800	27900	22900	21100	19700
22.4	23.01	47200	39100	35000	28800	23700	21800	20500
28	27.26	49500	41000	36700	30300	24900	22900	21500
31.5	30.21	51000	42300	37900	31300	25700	23700	22200
35.5	34.04	52500	43900	39300	32500	26800	24600	23100
40	39.23	50500	45400	40600	33600	27700	25500	23900
50	51.73	52200	48700	43700	36100	29800	27500	25800
56	59.19	52100	50600	45400	37600	31000	28600	26900
63	66.13	52100	52100	46900	38800	32100	29600	27800
80	75.68	52000	52000	48800	40400	33400	30800	29000
90	84.79	51900	51900	50400	41800	34600	31900	30000
100	97.03	51900	51900	51900	43300	35800	33100	31100
112	111.35	51800	51800	51800	45000	37200	34400	32300
125	127.35	51700	51700	51700	46600	38600	35700	33500
140	143.53	51700	51700	51700	48100	39800	36800	34600
160	156.99	51600	51600	51600	49300	40900	37800	35500
180	174.68	52200	51600	51600	50700	42000	38900	36600
200	193.59	52800	51600	51600	51600	43000	39800	37400
224	219.39	53600	51500	51500	51500	44400	41000	38600
250	247.25	53800	51500	51500	51500	45800	42400	39800
280	287.23	53900	51400	51400	51400	47900	44300	41700
315	331.02	51200	51200	51200	51200	50000	46300	43600

31991203/EN – 08/2025

10.5.4 Size P..032e

P..032e n1 = 750 min^{-1}				$M_{a\,Lh}$ / Nm				69620 Nm
i_N	i_{ex}	≤5000 h	≤10000 h	≤15000 h	≤30000 h	≤60000 h	≤80000 h	≤100000 h
16	15.73	72600	60700	54400	45000	37200	34300	32200
18	18.00	72500	69600	62600	52100	43300	40100	37800
20	20.11	72400	71500	64400	53700	44600	41300	38900
22.4	23.01	72300	72300	66700	55700	46300	42800	40300
28	27.26	72100	72100	70000	58400	48600	45000	42300
31.5	30.21	72000	72000	72000	60100	50000	46400	43600
35.5	34.04	71900	71900	71900	62200	51800	48000	45200
40	39.23	70100	70100	70100	64400	53700	49700	46900
56	53.42	71600	71600	71600	62700	52000	48100	45200
63	61.13	71500	71500	71500	71500	60400	56000	52800
71	68.30	71800	71400	71400	71400	62200	57700	54400
80	78.16	72900	71400	71400	71400	64200	59500	56200
90	87.32	73800	71300	71300	71300	65800	61100	57600
100	99.93	74900	71200	71200	71200	68000	63100	59500
112	114.35	76000	71200	71200	71200	70600	65500	61800
125	131.16	77200	71100	71100	71100	71100	68300	64400
140	150.09	75500	72200	71000	71000	71000	70600	66600
160	160.39	78300	72700	71000	71000	71000	71000	67500
180	177.75	78400	73600	71000	71000	71000	71000	69000
200	197.00	75600	74500	71000	70900	70900	70900	70700
224	222.01	73400	73400	71900	70900	70900	70900	70900
250	250.21	73400	73400	72900	70900	70900	70900	70900
280	288.36	73500	73500	73500	70800	70800	70800	70800
315	332.32	70600	70600	70600	70600	70600	70600	70600

P..032e n1 = 1000 min^{-1}								69620 Nm
16	15.73	67700	56200	50300	41600	34300	31600	29600
18	18.00	72800	65000	58500	48600	40400	37400	35200
20	20.11	72700	66800	60100	50000	41500	38500	36300
22.4	23.01	72500	68900	62000	51600	42900	39700	37400
28	27.26	72400	71900	64600	53900	44800	41400	39100
31.5	30.21	72300	72300	66400	55400	46100	42600	40200
35.5	34.04	72200	72200	68700	57300	47700	44100	41500
40	39.23	69900	69900	69900	59700	49700	46000	43300
56	53.42	71800	71800	69900	58000	48000	44400	41700
63	61.13	71700	71700	71700	67200	56100	52000	48900
71	68.30	71600	71600	71600	69100	57700	53500	50400
80	78.16	71500	71500	71500	71500	59700	55400	52200
90	87.32	71500	71500	71500	71500	61500	57000	53800
100	99.93	72500	71400	71400	71400	63600	59000	55700
112	114.35	73600	71300	71300	71300	65500	60800	57400
125	131.16	74700	71200	71200	71200	67800	62900	59300
140	150.09	75500	71200	71200	71200	70300	65200	61500
160	160.39	76500	71100	71100	71100	71100	66500	62700
180	177.75	77400	71300	71100	71100	71100	68600	64700
200	197.00	75500	72100	71100	71100	71100	70400	66400
224	222.01	73400	73100	71000	71000	71000	71000	68100
250	250.21	73400	73400	71000	71000	71000	71000	69900
280	288.36	73400	73400	71700	70900	70900	70900	70900
315	332.32	70600	70600	70600	70600	70600	70600	70600

31991203/EN – 08/2025

P..032e n1 = 1500 min^{-1}				$M_{a\,Lh}$ / Nm				69620 Nm
i_N	i_{ex}	≤5000 h	≤10000 h	≤15000 h	≤30000 h	≤60000 h	≤80000 h	≤100000 h
16	15.73	60700	50300	45000	37200	30500	28100	26400
18	18.00	69500	58000	52100	43300	36000	33200	31300
20	20.11	71500	59600	53600	44500	37000	34200	32200
22.4	23.01	73000	61900	55700	46300	38500	35600	33500
28	27.26	72800	65200	58600	48800	40500	37500	35300
31.5	30.21	72700	66800	60100	50000	41500	38500	36300
35.5	34.04	72100	68600	61700	51400	42700	39600	37300
40	39.23	69600	69600	64000	53300	44300	41000	38600
56	53.42	72100	69900	62700	51900	43000	39700	37300
63	61.13	72000	72000	72000	60300	50200	46500	43800
71	68.30	71900	71900	71900	62200	51800	48000	45200
80	78.16	71800	71800	71800	64400	53700	49700	46800
90	87.32	71700	71700	71700	66300	55300	51200	48300
160	160.39	73100	71300	71300	71300	64600	59900	56500
100	99.93	71600	71600	71600	68700	57300	53100	50000
112	114.35	71500	71500	71500	71100	59300	55000	51800
125	131.16	71500	71500	71500	71500	61500	57100	53800
140	150.09	72500	71400	71400	71400	63600	59000	55700
180	177.75	73900	71300	71300	71300	66100	61300	57800
200	197.00	74800	71200	71200	71200	67800	62900	59300
224	222.01	73300	71200	71200	71200	70000	65000	61300
250	250.21	73300	71100	71100	71100	71100	67300	63500
280	288.36	73400	71900	71100	71100	71100	70100	66100
315	332.32	70500	70500	70500	70500	70500	70500	68000

P..032e n1 = 1800 min^{-1}								69620 Nm
16	15.73	64500	53800	48300	40100	33200	30800	29000
18	18.00	66700	55700	50000	41500	34400	31800	30000
20	20.11	68400	57100	51200	42500	35300	32700	30800
22.4	23.01	70600	58900	52900	44000	36600	33800	31800
28	27.26	73000	61700	55500	46100	38300	35400	33300
31.5	30.21	71900	63600	57200	47600	39500	36600	34400
35.5	34.04	71700	65900	59300	49300	41000	37900	35700
40	39.23	69400	68000	61200	50900	42300	39200	36900
56	53.42	72300	66600	59700	49500	40900	37700	35400
63	61.13	72200	72200	68600	57300	47600	44100	41500
71	68.30	72100	72100	70800	59100	49200	45600	42900
80	78.16	71900	71900	71900	61400	51100	47400	44600
90	87.32	71900	71900	71900	63200	52700	48800	46000
100	99.93	71800	71800	71800	65500	54600	50600	47600
112	114.35	71700	71700	71700	67900	56700	52500	49400
125	131.16	71600	71600	71600	70300	58600	54400	51200
140	150.09	71500	71500	71500	71500	60700	56300	53100
160	160.39	71600	71400	71400	71400	61800	57400	54100
180	177.75	72400	71400	71400	71400	63400	58800	55500
200	197.00	73300	71300	71300	71300	64900	60200	56800
224	222.01	73300	71300	71300	71300	66700	61900	58400
250	250.21	73300	71200	71200	71200	68800	63800	60200
280	288.36	73300	71100	71100	71100	71100	66500	62700
315	332.32	70500	70500	70500	70500	70500	69400	65500

31991203/EN – 08/2025

10.5.5 Size P..042e

P..042e n1 = 750 min^{-1}		$M_{a\,Lh}$ / Nm						100170 Nm
i_N	i_{ex}	≤5000 h	≤10000 h	≤15000 h	≤30000 h	≤60000 h	≤80000 h	≤100000 h
16	15.73	97000	81000	72800	60600	50400	46800	44100
18	18.00	97900	83600	75200	62600	52100	48300	45500
20	20.11	97800	86000	77300	64400	53600	49700	46800
22.4	23.01	97500	89100	80200	66800	55600	51500	48600
28	27.26	97300	93400	84100	70100	58300	54000	50900
31.5	30.21	95400	95400	86600	72200	60100	55700	52500
35.5	34.04	94200	94200	89500	74700	62200	57700	54300
40	39.23	88300	88300	88300	77400	64500	59700	56300
56	53.42	96500	96500	96500	84000	70000	64900	61100
63	61.13	96300	96300	96300	86900	72500	67200	63300
71	68.30	96800	96200	96200	89600	74800	69300	65300
80	78.16	98400	96100	96100	92400	77100	71500	67400
90	87.32	99700	96000	96000	94700	79100	73300	69200
100	99.93	101400	95900	95900	95900	81800	75800	71500
112	114.35	103100	95800	95800	95800	84900	78700	74200
125	131.16	104900	95700	95700	95700	88400	82100	77400
140	150.09	96500	96500	95600	95600	91500	84900	80100
160	160.39	101200	98200	95600	95600	92700	86000	81200
180	177.75	101200	99500	95500	95500	94700	87900	83000
200	197.00	96500	96500	95500	95500	95500	90000	85000
224	222.01	95000	95000	95000	95000	95000	92800	87600
250	250.21	95000	95000	95000	95000	95000	95000	90600
280	288.36	95100	95100	95100	95100	95100	95100	94500
315	332.32	89000	89000	89000	89000	89000	89000	89000

P..042e n1 = 1000 min^{-1}								100170 Nm
16	15.73	89800	74900	67300	56000	46700	43200	40600
18	18.00	93600	78100	70200	58400	48600	45100	42400
20	20.11	96100	80300	72200	60000	50000	46400	43600
22.4	23.01	98000	82800	74400	62000	51500	47800	45100
28	27.26	97700	86300	77700	64700	53800	49900	47000
31.5	30.21	95000	88700	79800	66500	55300	51300	48400
35.5	34.04	93800	91700	82500	68800	57300	53000	50000
40	39.23	88100	88100	85900	71700	59600	55300	52100
56	53.42	96800	96800	93300	77900	64800	60100	56700
63	61.13	96700	96700	96700	80800	67300	62400	58800
71	68.30	96500	96500	96500	83100	69300	64200	60500
80	78.16	96400	96400	96400	86000	71700	66400	62600
90	87.32	96300	96300	96300	88600	73900	68500	64500
100	99.93	97900	96200	96200	91600	76400	70900	66800
112	114.35	99500	96000	96000	94300	78800	73000	68900
125	131.16	101200	95900	95900	95900	81500	75500	71200
140	150.09	96400	95800	95800	95800	84500	78400	73900
160	160.39	101100	95800	95800	95800	86100	79900	75400
180	177.75	101100	95900	95700	95700	88900	82500	77800
200	197.00	96500	96500	95600	95600	91200	84600	79800
224	222.01	95000	95000	95000	95000	93400	86700	81800
250	250.21	95000	95000	95000	95000	95000	89000	84000
280	288.36	95000	95000	95000	95000	95000	92200	87000
315	332.32	89000	89000	89000	89000	89000	89000	89000

31991203/EN – 08/2025

P..042e n1 = 1500 min^{-1}		$M_{a\,Lh}$ / Nm						100170 Nm
i_N	i_{ex}	≤5000 h	≤10000 h	≤15000 h	≤30000 h	≤60000 h	≤80000 h	≤100000 h
16	15.73	81000	67500	60600	50500	41900	38800	36600
18	18.00	83500	69700	62500	52000	43300	40000	37700
20	20.11	85900	71600	64300	53500	44600	41200	38800
22.4	23.01	89200	74400	66800	55600	46300	42800	40300
28	27.26	93800	78300	70400	58600	48800	45200	42500
31.5	30.21	93500	80300	72200	60100	50000	46400	43600
35.5	34.04	93200	82500	74200	61700	51400	47600	44900
40	39.23	87600	85400	76800	64000	53200	49300	46500
56	53.42	97300	92900	83600	69700	58000	53700	50600
63	61.13	97100	96500	86900	72400	60300	55900	52600
71	68.30	97000	97000	89600	74800	62200	57700	54400
80	78.16	96800	96800	92700	77300	64400	59700	56300
90	87.32	96700	96700	95500	79700	66400	61500	58000
100	99.93	96600	96600	96600	82600	68900	63800	60100
112	114.35	96400	96400	96400	85400	71200	66000	62200
125	131.16	96300	96300	96300	88600	73900	68500	64600
140	150.09	96200	96200	96200	91600	76400	70900	66800
160	160.39	98700	96100	96100	92900	77600	71900	67800
180	177.75	100000	96000	96000	95100	79400	73600	69500
200	197.00	96300	95900	95900	95900	81500	75500	71300
224	222.01	94900	94900	94900	94900	84200	78100	73600
250	250.21	94900	94900	94900	94900	87200	80900	76300
280	288.36	94900	94900	94900	94900	90700	84200	79400
315	332.32	88900	88900	88900	88900	88900	86600	81800

P..042e n1 = 1800 min^{-1}								100170 Nm
16*)	15.73*)	77500	64600	58000	48300	40100	37100	35000
18*)	18.00*)	80200	66800	60000	49900	41500	38400	36200
20*)	20.11*)	82200	68500	61500	51200	42500	39400	37100
22.4	23.01	84900	70800	63500	52900	44000	40700	38300
28	27.26	88800	74100	66600	55400	46200	42700	40200
31.5	30.21	91600	76400	68700	57200	47600	44100	41500
35.5	34.04	91600	79200	71200	59200	49300	45700	43000
40	39.23	87300	81700	73500	61200	50900	47200	44500
56	53.42	97600	88300	79500	66200	55100	51000	48100
63	61.13	97400	91700	82500	68800	57200	53000	50000
71	68.30	97200	94600	85100	71000	59100	54700	51600
80	78.16	97100	97100	88400	73800	61400	56900	53600
90	87.32	96900	96900	91000	75900	63200	58600	55200
100	99.93	96800	96800	94300	78700	65500	60700	57300
112	114.35	96600	96600	96600	81600	68000	63000	59400
125	131.16	96500	96500	96500	84400	70400	65200	61500
140	150.09	96100	96100	96100	87400	72900	67600	63700
160	160.39	96500	96300	96300	89100	74300	68900	64900
180	177.75	97700	96200	96200	91300	76200	70700	66600
200	197.00	96300	96100	96100	93400	78000	72300	68200
224	222.01	94800	94800	94800	94800	80200	74400	70100
250	250.21	94900	94900	94900	94900	82700	76700	72300
280	288.36	94900	94900	94900	94900	86100	79900	75300
315	332.32	88900	88900	88900	88900	88900	83500	78700

*) Contact SEW-EURODRIVE.

31991203/EN – 08/2025

10.5.6 Size P..052e

P..052e n1 = 750 min^{-1}				$M_{a\,Lh}$ / Nm				124060 Nm
i_N	i_{ex}	≤5000 h	≤10000 h	≤15000 h	≤30000 h	≤60000 h	≤80000 h	≤100000 h
16	15.73	122400	102000	91600	76200	63300	58600	55200
18	18.00	129600	113400	101900	84900	70600	65300	61400
20	20.11	129400	116700	104800	87300	72600	67300	63300
22.4	23.01	129100	121000	108700	90500	75400	69800	65700
28	27.26	124400	124400	114100	95000	79100	73300	69100
31.5	30.21	120400	120400	117500	97900	81500	75500	71100
35.5	34.04	117400	117400	117400	101200	84400	78100	73600
40	39.23	111900	111900	111900	105000	87400	81000	76300
56	53.42	127700	127700	126300	105300	87600	81200	76500
63	61.13	127500	127500	127500	118000	98300	91100	85900
71	68.30	128100	127400	127400	121700	101300	93900	88600
80	78.16	130100	127200	127200	125600	104600	96900	91400
90	87.32	131800	127100	127100	127100	107200	99400	93700
100	99.93	134000	127000	127000	127000	110900	102800	96900
112	114.35	136200	126800	126800	126800	115200	106700	100600
125	131.16	138500	126700	126700	126700	120100	111300	104900
140	150.09	121800	121800	121800	121800	121800	115200	108600
160	160.39	126100	126100	126100	126100	126000	116700	110100
180	177.75	126200	126200	126200	126200	126200	119400	112500
200	197.00	121800	121800	121800	121800	121800	121800	115300
224	222.01	118500	118500	118500	118500	118500	118500	118500
250	250.21	118500	118500	118500	118500	118500	118500	118500
280	288.36	118500	118500	118500	118500	118500	118500	118500
315	332.32	112700	112700	112700	112700	112700	112700	112700

P..052e n1 = 1000 min^{-1}								124060 Nm
16	15.73	113500	94500	84900	70500	58600	54200	51000
18	18.00	127200	105900	95100	79200	65800	60800	57300
20	20.11	130000	108800	97800	81400	67700	62600	58900
22.4	23.01	129700	112300	100900	84000	69900	64600	60800
28	27.26	122000	117200	105300	87700	73000	67600	63500
31.5	30.21	119400	119400	108300	90200	75000	69500	65400
35.5	34.04	116900	116900	112000	93200	77600	71900	67700
40	39.23	111600	111600	111600	97100	80900	74900	70600
56	53.42	128100	128100	117000	97400	81100	75100	70700
63	61.13	127900	127900	127900	109600	91200	84600	79700
71	68.30	127800	127800	127800	112700	93900	87000	82000
80	78.16	127600	127600	127600	116700	97200	90100	84900
90	87.32	127500	127400	127400	120300	100100	92800	87500
100	99.93	129500	127300	127300	124400	103600	96000	90500
112	114.35	131600	127100	127100	127100	106800	99000	93300
125	131.16	133700	127000	127000	127000	110500	102400	96500
140	150.09	121700	121700	121700	121700	114600	106200	100200
160	160.39	126000	126000	126000	126000	116900	108400	102100
180	177.75	126100	126100	126100	126100	120700	111900	105400
200	197.00	121800	121800	121800	121800	121800	114800	108200
224	222.01	118400	118400	118400	118400	118400	117700	110900
250	250.21	118500	118500	118500	118500	118500	118500	113900
280	288.36	118500	118500	118500	118500	118500	118500	118100
315	332.32	112700	112700	112700	112700	112700	112700	112700

31991203/EN – 08/2025

P..052e n1 = 1500 min^{-1}				$M_{a\,Lh}$ / Nm				124060 Nm
i_N	i_{ex}	≤5000 h	≤10000 h	≤15000 h	≤30000 h	≤60000 h	≤80000 h	≤100000 h
16	15.73	109900	91500	82200	68400	56600	52300	49200
18	18.00	113400	94400	84800	70600	58400	54100	50800
20	20.11	116600	97100	87200	72600	60200	55700	52300
22.4	23.01	121100	100800	90600	75400	62500	57900	54500
28	27.26	117200	106200	95400	79500	66000	61000	57400
31.5	30.21	115100	108900	97800	81500	67700	62600	58900
35.5	34.04	114800	111900	100500	83800	69700	64400	60600
40	39.23	110900	110900	104100	86700	72200	66800	62800
56	53.42	128800	117000	105100	87500	72800	67400	63500
63	61.13	128600	128600	117900	98200	81800	75700	71400
71	68.30	128400	128400	121700	101300	84400	78200	73700
80	78.16	128200	128200	125900	104800	87300	80900	76300
90	87.32	128000	128000	128000	108100	90000	83500	78600
100	99.93	127800	127800	127800	112000	93300	86500	81500
112	114.35	127600	127600	127600	115900	96500	89500	84400
125	131.16	127500	127400	127400	120300	100200	92900	87500
140	150.09	121400	121400	121400	121400	103600	96100	90600
160	160.39	125800	125800	125800	125800	105200	97500	91900
200	197.00	121600	121600	121600	121600	110500	102400	96600
180	177.75	125800	125800	125800	125800	107700	99800	94100
224	222.01	118300	118300	118300	118300	114200	105800	99800
250	250.21	118300	118300	118300	118300	118300	109700	103400
280	288.36	118400	118400	118400	118400	118400	114200	107700
315	332.32	112600	112600	112600	112600	112600	112600	110900

P..052e n1 = 1800 min^{-1}								124060 Nm
16	15.73	105100	87500	78600	65300	54100	49900	47000
18	18.00	108700	90500	81400	67600	56000	51700	48600
20	20.11	111500	92800	83400	69400	57500	53100	49900
22.4	23.01	115100	95900	86200	71700	59400	55000	51600
28	27.26	114400	100400	90200	75100	62300	57600	54200
31.5	30.21	112600	103600	93100	77500	64300	59500	56000
35.5	34.04	112500	107300	96500	80300	66700	61700	58100
40	39.23	110500	110500	99600	83000	69000	63800	60000
56	53.42	129200	111600	100300	83400	69300	64200	60500
63	61.13	128900	124600	111900	93200	77600	71900	67700
71	68.30	128700	128600	115500	96200	80100	74200	69900
80	78.16	128500	128500	120100	100000	83300	77100	72700
90	87.32	128300	128300	123700	102900	85800	79500	74900
100	99.93	128100	128100	128100	106700	88800	82400	77600
112	114.35	127900	127900	127900	110700	92200	85400	80500
125	131.16	127700	127700	127700	114600	95400	88400	83400
140	150.09	121300	121300	121300	118700	98900	91600	86400
160	160.39	125600	125600	125600	121000	100700	93300	88000
180	177.75	125700	125700	125700	124100	103300	95800	90300
200	197.00	121500	121500	121500	121500	105700	98000	92400
224	222.01	118200	118200	118200	118200	108800	100800	95000
250	250.21	118300	118300	118300	118300	112200	104000	98000
280	288.36	118300	118300	118300	118300	116900	108300	102100
315	332.32	112600	112600	112600	112600	112600	112600	106700

31991203/EN – 08/2025

10.5.7 Size P..062e

P..062e n1 = 750 min^{-1}				$M_{a\,Lh}$ / Nm				124060 Nm
i_N	i_{ex}	≤5000 h	≤10000 h	≤15000 h	≤30000 h	≤60000 h	≤80000 h	≤100000 h
16	15.73	174000	145000	130300	108500	90200	83600	78800
18	18.00	185660	164700	148200	123600	102800	95200	89700
20	20.11	185660	175400	157900	131800	109700	101600	95700
22.4	23.01	185660	181800	163700	136600	113800	105400	99300
28	27.26	185660	185660	171600	143300	119400	110600	104300
31.5	30.21	185660	185660	176700	147600	123100	114000	107400
35.5	34.04	185660	185660	182700	152600	127300	118000	111200
40	39.23	185660	185660	185660	158100	132000	122400	115300
56	53.42	185660	185660	185660	185660	168100	156000	147200
63	61.13	185660	185660	185660	185660	169600	157300	148500
71	68.30	185660	185660	185660	185660	173200	160800	151700
80	78.16	185660	185660	185660	185660	174500	162000	152900
90	87.32	185660	185660	185660	185660	175000	162400	153200
100	99.93	185660	185660	185660	185660	181300	168300	158800
112	114.35	185660	185660	185660	185660	185660	173400	163700
125	131.16	185660	185660	185660	185660	185660	178500	168400
140	150.09	185660	185660	185660	185660	185660	185660	180100
160	160.39	185660	185660	185660	185660	185660	185660	185660
180	177.75	185660	185660	185660	185660	185660	185660	185660
200	197.00	185660	185660	185660	177400	148200	137400	129600
224	222.01	185660	185660	185660	184000	153700	142600	134500
250	250.21	185660	185660	185660	185660	161500	149900	141400
280	288.36	185660	185660	185660	185660	163800	152000	143400
315	332.32	185660	185660	185660	185660	167000	154900	146200

P..062e n1 = 1000 min^{-1}								124060 Nm
16	15.73	161200	134400	120800	100500	83600	77400	72900
18	18.00	183100	152800	137500	114600	95200	88200	83100
20	20.11	185660	163900	147500	123000	102300	94700	89200
22.4	23.01	185660	169000	152100	126900	105600	97700	92100
28	27.26	185660	176200	158600	132300	110200	102100	96100
31.5	30.21	185660	181100	163000	136100	113300	105000	98900
35.5	34.04	185660	185660	168500	140700	117200	108600	102300
40	39.23	185660	185660	175400	146500	122100	113100	106600
56	53.42	185660	185660	185660	159000	132700	123100	115900
63	61.13	185660	185660	185660	165000	137700	127700	120400
71	68.30	185660	185660	185660	175400	141600	131300	123900
80	78.16	185660	185660	185660	180700	146500	135900	128200
90	87.32	185660	185660	185660	185660	151000	140000	132100
100	99.93	185660	185660	185660	185660	156100	144900	136600
112	114.35	185660	185660	185660	185660	160800	149200	140800
125	131.16	185660	185660	185660	185660	166300	154300	145600
140	150.09	185660	185660	185660	185660	172400	160000	151000
160	160.39	185660	185660	185660	185660	175800	163200	154000
180	177.75	185660	185660	185660	185660	181400	168300	158900
200	197.00	185660	185660	185660	185660	185660	172800	163100
224	222.01	185660	185660	185660	185660	185660	177500	167600
250	250.21	185660	185660	185660	185660	185660	182700	172400
280	288.36	185660	185660	185660	185660	185660	185660	178800
315	332.32	185660	185660	185660	185660	185660	185660	185660

31991203/EN – 08/2025

P..062e n1 = 1500 min^{-1}				$M_{a\,Lh}$ / Nm				124060 Nm
i_N	i_{ex}	≤5000 h	≤10000 h	≤15000 h	≤30000 h	≤60000 h	≤80000 h	≤100000 h
22.4	23.01	181900	152000	136700	113800	94600	87700	82700
28	27.26	181900	160000	144000	120000	99800	92400	87100
31.5	30.21	185660	163900	147500	123000	102300	94700	89200
35.5	34.04	185660	168400	151600	126500	105200	97400	91700
40	39.23	185660	174300	156900	130900	109000	101000	95100
90	87.32	185660	185660	185660	162800	135900	126000	118800
100	99.93	185660	185660	185660	174300	140700	130500	123100
112	114.35	185660	185660	185660	180800	145600	135000	127400
125	131.16	185660	185660	185660	185660	151000	140100	132100
140	150.09	185660	185660	185660	185660	156100	144900	136700
160	160.39	185660	185660	185660	185660	158400	147000	138700
180	177.75	185660	185660	185660	185660	162200	150500	142000
200	197.00	185660	185660	185660	185660	166300	154300	145700
224	222.01	185660	185660	185660	185660	171800	159400	150400
250	250.21	185660	185660	185660	185660	177900	165100	155800
280	288.36	185660	185660	185660	185660	185200	171900	162200
315	332.32	185660	185660	185660	185660	185660	177400	167500

P..062e n1 = 1800 min^{-1}								124060 Nm
28	27.26	181200	151400	136200	113400	94200	87300	82300
31.5	30.21	185660	156100	140400	117000	97200	90100	84900
35.5	34.04	185660	161700	145500	121300	100900	93400	88000
40	39.23	185660	166900	150200	125300	104200	96400	90900
100	99.93	185660	185660	90200	160700	134100	124400	117200
112	114.35	185660	185660	185660	166600	139100	129000	121600
125	131.16	185660	185660	185660	172300	143900	133500	125900
140	150.09	185660	185660	185660	178500	149100	138300	130400
160	160.39	185660	185660	185660	181700	151800	140800	132800
180	177.75	185660	185660	185660	185660	155700	144500	136300
200	197.00	185660	185660	185660	185660	159200	147800	139400
224	222.01	185660	185660	185660	185660	163700	151900	143400
250	250.21	185660	185660	185660	185660	168800	156700	147800
280	288.36	185660	185660	185660	185660	175700	163100	153900
315	332.32	185660	185660	185660	185660	183500	170400	160800

31991203/EN – 08/2025

10.5.8 Size P..072e

P..072e n1 = 750 min^{-1}				$M_{a\,Lh}$ / Nm				124060 Nm
i_N	i_{ex}	≤5000 h	≤10000 h	≤15000 h	≤30000 h	≤60000 h	≤80000 h	≤100000 h
16	15.75	215600	179900	161800	134800	112100	103700	97800
18	17.98	233500	195200	175700	146600	122000	113000	106500
20	20.04	240000	200600	180600	150700	125500	116200	109600
22.4	22.86	245660	207700	187000	156200	130100	120500	113600
28	26.92	245660	217400	195800	163600	136400	126200	119000
31.5	29.71	245660	223600	201300	168200	140300	130000	122400
35.5	33.31	245660	230800	207800	173700	144900	134400	126500
40	38.10	245660	238700	214900	179600	149900	139000	131000
56	53.48	245660	245660	245660	230300	192500	178600	168600
63	61.07	245660	245660	245660	232100	194000	180100	170000
71	68.07	245660	245660	245660	236800	197900	183700	173400
80	77.63	245660	245660	245660	238800	199600	185300	174800
90	87.03	245660	245660	245660	239000	199800	185400	175000
100	99.59	245660	245660	245660	245660	207700	192800	182000
112	113.57	245660	245660	245660	245660	212900	197600	186600
125	130.72	245660	245660	245660	245660	221500	205600	194100
140	147.64	245660	245660	245660	245660	233800	217100	204800
160	158.42	245660	245660	245660	245660	241600	224200	211700
180	175.57	245660	245660	245660	245660	245660	242400	228800
200	193.79	245660	245660	245660	202900	169600	157300	148400
224	217.21	245660	245660	245660	210400	175800	163200	153900
250	244.80	245660	245660	245660	220900	184600	171400	161700
280	282.12	245660	245660	245660	224300	187500	174000	164200
315	322.69	245660	245660	245660	228400	190900	177200	167200

P..072e n1 = 1000 min^{-1}								124060 Nm
16	15.75	200000	166900	150100	124800	103700	96100	90600
18	17.98	218500	182600	164400	137100	113900	105500	99300
20	20.04	224100	187300	168600	140600	116900	108400	102000
22.4	22.86	230900	193000	173700	144900	120600	111700	105200
28	26.92	240500	201000	180900	151000	125700	116400	109800
31.5	29.71	245660	206300	185800	155100	129200	119600	112800
35.5	33.31	245660	221100	191700	160100	133500	123500	116400
40	38.10	245660	242000	199100	166300	138700	128500	121000
56	53.48	245660	245660	217900	182100	152000	141000	132900
63	61.07	245660	245660	225800	188800	157600	146200	137900
71	68.07	245660	245660	232000	193900	162000	150200	141700
80	77.63	245660	245660	239800	200400	167500	155300	146500
90	87.03	245660	245660	245660	206600	172700	160300	151100
100	99.59	245660	245660	245660	213500	178400	165600	156200
112	113.57	245660	245660	245660	219900	183700	170500	160900
125	130.72	245660	245660	245660	227500	190200	176400	166600
140	147.64	245660	245660	245660	235100	196500	182400	172100
160	158.42	245660	245660	245660	239900	200500	186200	175700
180	175.57	245660	245660	245660	245660	206900	192100	181200
200	193.79	245660	245660	245660	245660	212200	197000	185900
224	217.21	245660	245660	245660	245660	217700	202000	190700
250	244.80	245660	245660	245660	245660	223900	207800	196200
280	282.12	245660	245660	245660	245660	232200	215600	203400
315	322.69	245660	245660	245660	245660	240800	223500	211000

31991203/EN – 08/2025

P..072e n1 = 1500 min^{-1}				$M_{a\,Lh}$ / Nm				124060 Nm
i_N	i_{ex}	≤5000 h	≤10000 h	≤15000 h	≤30000 h	≤60000 h	≤80000 h	≤100000 h
28	26.92	218400	182500	164300	137000	113900	105500	99300
31.5	29.71	223500	186800	168200	140300	116600	108100	101700
35.5	33.31	223900	191700	172500	144000	119700	111000	104500
40	38.10	236900	198000	178300	148800	123800	114700	108200
90	87.03	245660	245660	222700	186200	155400	144100	136000
100	99.59	245660	245660	230500	192700	161000	149300	140800
112	113.57	245660	245660	238200	199100	166400	154300	145500
125	130.72	245660	245660	245660	206700	172700	160300	151200
140	147.64	245660	245660	245660	213000	178000	165200	155800
160	158.42	245660	245660	245660	216300	180700	167800	158300
180	175.57	245660	245660	245660	221400	185000	171700	162100
200	193.79	245660	245660	245660	226800	189600	175900	166100
224	217.21	245660	245660	245660	233800	195400	181400	171200
250	244.80	245660	245660	245660	242100	202300	187800	177200
280	282.12	245660	245660	245660	245660	210800	195700	184700
315	322.69	245660	245660	245660	245660	217200	201600	190300

P..072e n1 = 1800 min^{-1}								124060 Nm
31.5	29.71	212800	177800	160100	133400	110900	102600	96600
35.5	33.31	220200	184000	165700	138200	114900	106400	100100
40	38.10	226800	189600	170700	142400	118400	109800	103300
100	99.59	245660	244200	219900	183800	153400	142300	134200
112	113.57	245660	245660	227700	190300	158900	147400	139000
125	130.72	245660	245660	235700	197000	164700	152700	144000
140	147.64	245660	245660	243300	203300	169900	157600	148700
160	158.42	245660	245660	245660	207300	173200	160800	151600
180	175.57	245660	245660	245660	212600	177600	164900	155500
200	193.79	245660	245660	245660	217200	181500	168500	159000
224	217.21	245660	245660	245660	223000	186400	173000	163300
250	244.80	245660	245660	245660	229800	192100	178300	168300
280	282.12	245660	245660	245660	239200	199900	185600	175100
315	322.69	245660	245660	245660	245660	208200	193300	182400

31991203/EN – 08/2025

10.5.9 Size P..082e

P..082e n1 = 750 min^{-1}				$M_{a\,Lh}$ / Nm				124060 Nm
i_N	i_{ex}	≤5000 h	≤10000 h	≤15000 h	≤30000 h	≤60000 h	≤80000 h	≤100000 h
16	15.96	319500	266100	239200	199300	165700	153200	144000
18	18.19	330500	275800	248000	206500	171300	158400	148800
20	20.23	339500	283400	254800	212300	176200	163100	153200
22.4	22.99	351300	293300	263800	219800	182500	169000	159000
28	26.94	359400	306600	275800	229900	191100	176900	166600
31.5	29.62	359400	315000	283400	236300	196600	181900	171300
35.5	33.04	359400	325000	292300	243900	203000	187800	176800
40	37.53	359400	335500	301900	251900	209700	194100	182800
56	54.20	359400	359400	359400	323000	269500	250000	235700
63	61.76	359400	359400	359400	323100	269600	250100	235800
71	68.70	359400	359400	359400	326600	272500	252800	238400
80	78.08	359400	359400	359400	334700	279300	259100	244400
90	87.83	359400	359400	359400	337000	281300	260900	246100
100	100.51	359400	359400	359400	346800	289500	268500	253300
112	114.24	359400	359400	359400	357300	298300	276700	261000
125	131.93	359400	359400	359400	359400	309600	287200	270900
140	147.19	359400	359400	359400	359400	320600	297400	280600
160	158.52	359400	359400	359400	359400	331400	307400	290100
180	175.69	359400	359400	359400	359400	354000	328500	309900
200	193.19	359400	359400	332300	277200	231100	214200	201900
224	215.47	359400	359400	354700	296100	247000	228900	215800
250	242.84	359400	359400	359400	312300	260500	241600	227700
280	279.86	359400	359400	359400	317400	264800	245700	231500
315	317.93	359400	359400	359400	322500	269000	249500	235300

P..082e n1 = 1000 min^{-1}								124060 Nm
i_N	i_{ex}	≤5000 h	≤10000 h	≤15000 h	≤30000 h	≤60000 h	≤80000 h	≤100000 h
18	18.19	309200	258000	231900	192800	159900	147600	138700
20	20.23	316700	264200	237600	197700	164000	151400	142300
22.4	22.99	326300	272200	244800	203800	169100	156200	146800
28	26.94	339400	283300	254800	212200	176100	163100	153200
31.5	29.62	348100	290600	261300	217700	180800	167300	157400
35.5	33.04	358700	299500	269300	224500	186500	172600	162600
40	37.53	359400	310500	279300	232800	193600	179200	168800
56	54.20	359400	342700	308300	257200	214300	198500	186800
63	61.76	359400	355000	319500	266500	222100	205900	193800
71	68.70	359400	359400	328100	273700	228200	211500	199300
80	78.08	359400	359400	338900	282900	235800	218600	206100
90	87.83	359400	359400	349800	292100	243600	225700	212800
100	100.51	359400	359400	359400	301700	251700	233300	219900
112	114.24	359400	359400	359400	310400	259000	240200	226400
125	131.93	359400	359400	359400	321700	268400	249000	234700
140	147.19	359400	359400	359400	331500	276600	256500	242000
160	158.52	359400	359400	359400	338700	282700	262100	247300
180	175.69	359400	359400	359400	349400	291700	270500	255200
200	193.19	359400	359400	359400	358100	299000	277300	261600
224	215.47	359400	359400	359400	359400	306300	254200	268100
250	242.84	359400	359400	359400	359400	315200	292400	275800
280	279.86	359400	359400	359400	359400	327000	303300	286200
315	317.93	359400	359400	359400	359400	338400	314000	296200

31991203/EN – 08/2025

P..082e n1 = 1500 min^{-1}				$M_{a\,Lh}$ / Nm				124060 Nm
i_N	i_{ex}	≤5000 h	≤10000 h	≤15000 h	≤30000 h	≤60000 h	≤80000 h	≤100000 h
28	26.94	308000	257000	230900	192000	159200	146900	138200
31.5	29.62	315100	262800	236300	196600	163100	150500	141500
35.5	33.04	323000	269400	242300	201700	167300	154500	145200
40	37.53	333100	277900	250000	208200	172700	159800	150100
100	100.51	359400	359400	326100	272000	226700	210200	198000
112	114.24	359400	359400	336700	281000	234300	217100	204700
125	131.93	359400	359400	350000	292200	243700	225800	212900
140	147.19	359400	359400	359400	300100	250400	232000	218800
160	158.52	359400	359400	359400	305000	254500	235900	222400
180	175.69	359400	359400	359400	312300	260500	241600	227700
200	193.19	359400	359400	359400	319700	266700	247400	233200
224	215.47	359400	359400	359400	329200	274700	254800	240300
250	242.84	359400	359400	359400	340800	284500	263800	248900
280	279.86	359400	359400	359400	355400	296700	275200	259600
315	317.93	359400	359400	359400	359400	305200	283200	267000

P..082e n1 = 1800 min^{-1}								124060 Nm
35.5	33.04	310000	258600	232500	193300	160300	148000	139100
40	37.53	318900	266100	239200	199100	165200	152500	143300
125	131.93	359400	359400	333400	278200	231900	215000	202700
160	158.52	359400	359400	350100	292300	243800	225900	213000
180	175.69	359400	359400	359000	299700	250100	231800	218500
200	193.19	359400	359400	359400	306100	255400	236800	223200
224	215.47	359400	359400	359400	313900	261900	242900	229000
250	242.84	359400	359400	359400	323600	270000	250400	236100
280	279.86	359400	359400	359400	336700	281000	260600	245900
315	317.93	359400	359400	359400	350000	292200	271000	255600

31991203/EN – 08/2025

10.6 Thermal rating of horizontal mounting positions (M1/M3/M5/M6)

P..002e, n1=750 min^{-1}						Mn2 = 24830
i_N	i_{ex}	P_{TH} 20 °C / kW				
		ADP 	ADPF 	AMP 	DM 	AMPF/DMF 
16	15.23	53	110	51	66	160
18	17.45	52	105	51	65	155
20	19.53	52	100	50	64	145
22.4	22.41	50	95	49	61	135
25	26.68	46	86	45	57	125
28	29.68	44	81	43	53	115
31.5	33.64	41	74	40	49	105
40	39.08	37	66	36	45	92
50	51.73	32	45	31	39	69
56	59.26	31	44	30	38	67
63	66.32	30	43	30	37	65
71	75.77	30	41	29	36	61
80	84.79	29	40	28	35	60
100	97.03	27	38	27	34	56
112	111.35	26	36	26	32	53
125	127.35	24	32	23	29	47
140	146.16	23	31	22	28	44
160	164.72	21	29	21	26	41
200	193.59	20	28	20	25	39
224	219.39	19	26	19	23	37
250	251.44	18	25	18	23	35
280	284.95	18	24	17	22	34
315	331.02	16	23	16	20	32

P..002e, n1=1000 min^{-1}						Mn2 = 24830
16	15.23	47	125	46	65	185
18	17.45	48	120	47	65	175
20	19.53	49	120	49	66	170
22.4	22.41	49	115	49	65	160
25	26.68	47	105	47	61	150
28	29.68	45	98	45	58	140
31.5	33.64	43	90	42	55	125
40	39.08	39	81	39	50	115
50	51.73	30	51	30	40	79
56	59.26	30	50	29	39	77
63	66.32	29	48	29	38	75
71	75.77	30	48	30	39	72
80	84.79	29	47	29	38	70
100	97.03	28	45	28	36	67
112	111.35	27	43	27	35	64
125	127.35	25	40	25	33	57
140	146.16	24	38	24	31	55
160	164.72	23	35	23	30	51
200	193.59	22	34	22	28	49
224	219.39	21	32	21	27	46
250	251.44	19	29	19	24	40
280	284.95	18	27	18	23	38
315	331.02	16	25	16	22	36

31991203/EN – 08/2025

P..002e, n1=1500 min^{-1}						Mn2 = 24830
i_N	i_{ex}	P_{TH} 20 °C / kW				
		ADP 	ADPF 	AMP 	DM 	AMPF/DMF 
16	15.23	17	145	19	47	220
18	17.45	24	145	27	54	215
20	19.53	32	145	34	61	210
22.4	22.41	38	140	40	64	205
25	26.68	40	135	42	64	190
28	29.68	40	125	42	63	180
31.5	33.64	39	120	41	60	165
40	39.08	37	110	39	56	150
50	51.73	21	58	22	35	92
56	59.26	21	57	22	35	90
63	66.32	21	56	22	35	89
71	75.77	25	59	27	39	90
80	84.79	25	58	26	39	88
100	97.03	26	57	27	39	85
112	111.35	25	55	26	37	81
125	127.35	25	52	26	37	75
140	146.16	24	50	25	35	72
160	164.72	23	47	24	34	68
200	193.59	22	45	23	32	65
224	219.39	21	43	21	30	62
250	251.44	19	39	20	29	56
280	284.95	18	37	19	27	53
315	331.02	17	35	18	26	49

P..002e, n1=1800 min^{-1}						Mn2 = 24830
16	15.73	*)	160	*)	*)	225
18	18	*)	180	*)	23	235
20	20.11	*)	190	9	42	240
22.4	23.01	16	190	25	56	240
25	27.26	28	185	37	66	230
28	30.21	32	180	41	69	225
31.5	34.04	34	170	43	69	210
40	39.23	36	160	44	67	195
50	53.42	19	69	19	36	115
56	61.13	19	69	19	36	110
63	68.3	20	68	20	37	110
71	78.16	20	67	20	37	105
80	87.32	27	73	27	44	110
100	99.93	28	72	28	45	110
112	114.35	28	70	28	44	105
125	131.16	28	67	29	44	97
140	150.09	26	64	26	41	95
160	169.15	25	61	25	39	91
200	197	26	59	26	39	86
224	222.01	25	57	25	37	82
250	250.21	24	54	24	36	77
280	288.36	22	50	22	34	71
315	332.32	21	47	21	32	67

31991203/EN – 08/2025

P..012e, n1=750 min^{-1}						Mn2 = 36810
i_N	i_{ex}	P_{TH} 20 °C / kW				
		ADP 	ADPF 	AMP 	DM 	AMPF/DMF 
16	15.73	63	135	57	73	175
18	18	64	130	58	73	165
20	20.11	64	130	59	73	160
22.4	23.01	62	120	58	71	150
25	27.26	59	110	54	67	140
28	30.21	56	105	52	63	130
31.5	34.04	52	97	49	59	120
40	39.23	48	87	44	54	105
50	53.42	38	52	37	46	81
56	61.13	37	50	36	44	78
63	68.3	36	49	35	43	76
71	78.16	35	47	34	42	73
80	87.32	34	46	33	41	69
100	99.93	33	44	31	39	65
112	114.35	31	42	30	37	62
125	131.16	28	37	27	33	54
140	150.09	28	38	27	34	56
160	169.15	27	36	26	32	53
200	197	24	32	23	29	46
224	222.01	23	31	22	28	44
250	250.21	22	29	21	26	42
280	288.36	21	28	20	25	40
315	332.32	20	27	19	24	38

P..012e, n1=1000 min^{-1}						Mn2 = 36810
16	15.73	48	150	44	66	195
18	18	54	150	51	70	190
20	20.11	58	150	55	73	185
22.4	23.01	59	140	56	73	180
25	27.26	58	135	55	71	165
28	30.21	56	125	54	68	155
31.5	34.04	53	115	51	65	145
40	39.23	50	105	48	60	130
50	53.42	37	59	35	46	92
56	61.13	36	57	35	45	89
63	68.3	36	56	34	45	88
71	78.16	34	54	33	43	84
80	87.32	35	54	34	44	82
100	99.93	34	52	33	42	77
112	114.35	33	50	32	41	74
125	131.16	30	46	29	38	66
140	150.09	30	46	29	37	67
160	169.15	29	43	27	35	64
200	197	27	40	26	33	57
224	222.01	25	38	24	32	55
250	250.21	24	35	23	30	50
280	288.36	22	32	21	27	45
315	332.32	20	30	19	25	42

31991203/EN – 08/2025

P..012e, n1=1500 min^{-1}						Mn2 = 36810
i_N	i_{ex}	P_{TH} 20 °C / kW				
		ADP 	ADPF 	AMP 	DM 	AMPF/DMF 
16	15.73	*)	165	*)	28	220
18	18	14	175	18	46	225
20	20.11	27	180	31	58	225
22.4	23.01	37	175	41	67	220
25	27.26	43	170	47	71	210
28	30.21	45	160	49	71	200
31.5	34.04	45	150	48	69	185
40	39.23	44	140	47	66	170
50	53.42	27	67	27	42	105
56	61.13	27	66	27	42	105
63	68.3	27	65	26	42	105
71	78.16	27	63	26	41	100
80	87.32	32	67	31	45	100
100	99.93	32	65	31	45	97
112	114.35	31	63	30	44	94
125	131.16	30	59	30	42	87
140	150.09	29	58	28	40	86
160	169.15	28	55	27	39	82
200	197	27	53	27	38	76
224	222.01	26	50	25	36	73
250	250.21	25	47	24	34	68
280	288.36	23	44	23	32	62
315	332.32	22	41	21	30	58

P..012e, n1=1800 min^{-1}						Mn2 = 36810
16	15.73	*)	160	*)	*)	225
18	18	*)	180	*)	23	235
20	20.11	*)	190	9	42	240
22.4	23.01	16	190	25	56	240
25	27.26	28	185	37	66	230
28	30.21	32	180	41	69	225
31.5	34.04	34	170	43	69	210
40	39.23	36	160	44	67	195
50	53.42	19	69	19	36	115
56	61.13	19	69	19	36	110
63	68.3	20	68	20	37	110
71	78.16	20	67	20	37	105
80	87.32	27	73	27	44	110
100	99.93	28	72	28	45	110
112	114.35	28	70	28	44	105
125	131.16	28	67	29	44	97
140	150.09	26	64	26	41	95
160	169.15	25	61	25	39	91
200	197	26	59	26	39	86
224	222.01	25	57	25	37	82
250	250.21	24	54	24	36	77
280	288.36	22	50	22	34	71
315	332.32	21	47	21	32	67

31991203/EN – 08/2025

P..022e, n1=750 min^{-1}						Mn2 = 51190
i_N	i_{ex}	P_{TH} 20 °C / kW				
		ADP 	ADPF 	AMP 	DM 	AMPF/DMF 
16	15.73	79	170	81	91	205
18	18	82	170	84	94	200
20	20.11	80	160	82	91	190
22	23.01	79	155	81	89	180
25	27.26	75	140	77	84	165
28	30.21	71	135	73	80	155
32	34.04	67	125	69	75	145
40	39.23	61	110	62	68	125
50	51.73	49	66	48	56	100
56	59.19	48	64	47	55	97
63	66.13	46	62	46	53	94
71	75.68	45	60	44	52	91
80	84.79	44	59	43	51	86
100	97.03	42	57	42	49	83
112	111.35	40	53	40	46	77
125	127.35	38	51	38	44	75
140	143.53	37	49	36	42	71
160	156.99	35	46	34	40	65
180	174.68	33	43	32	38	60
200	193.59	31	41	31	36	58
224	219.39	29	39	29	34	54
250	247.25	28	37	28	33	52
280	287.23	27	36	27	31	49
315	331.02	25	33	25	29	46

P..022e, n1=1000 min^{-1}						Mn2 = 51190
16	15.73	59	190	63	79	225
18	18	70	190	74	89	225
20	20.11	71	185	75	89	215
22	23.01	74	180	78	91	210
25	27.26	74	170	77	89	195
28	30.21	72	160	75	86	185
32	34.04	69	150	72	82	170
40	39.23	64	135	66	75	155
50	51.73	47	74	46	56	115
56	59.19	46	73	46	56	110
63	66.13	45	71	45	54	110
71	75.68	44	69	44	53	105
80	84.79	45	69	45	53	100
100	97.03	43	66	43	52	97
112	111.35	42	64	42	50	92
125	127.35	40	60	39	47	88
140	143.53	38	58	38	45	84
160	156.99	38	56	37	45	79
180	174.68	36	53	36	43	74
200	193.59	34	51	34	41	71
224	219.39	32	47	32	38	65
250	247.25	31	45	31	37	62
280	287.23	28	41	28	33	56
315	331.02	26	38	26	31	52

31991203/EN – 08/2025

P..022e, n1=1500 min^{-1}						Mn2 = 51190
i_N	i_{ex}	P_{TH} 20 °C / kW				
		ADP 	ADPF 	AMP 	DM 	AMPF/DMF 
16	15.73	*)	200	*)	22	245
18	18	18	220	26	54	260
20	20.11	28	220	36	63	255
22	23.01	44	220	52	78	255
25	27.26	55	210	63	86	245
28	30.21	59	205	65	87	235
32	34.04	60	195	66	86	220
40	39.23	58	175	64	82	200
50	51.73	35	84	36	48	130
56	59.19	35	83	36	49	130
63	66.13	34	81	35	48	125
71	75.68	34	80	35	48	120
80	84.79	40	84	41	53	125
100	97.03	39	81	40	52	120
112	111.35	40	80	41	53	115
125	127..35	36	75	37	48	110
140	143.53	35	72	36	47	105
160	156.99	38	73	39	49	105
180	174.68	37	70	38	48	98
200	193.59	35	67	36	46	94
224	219.39	34	63	35	44	88
250	247.25	32	61	33	42	84
280	287.23	30	56	31	39	76
315	331.02	28	52	29	37	71

P..022e, n1=1800 min^{-1}						Mn2 = 51190
16	15.73	*)	190	*)	*)	240
18	18	*)	225	*)	20	270
20	20.11	*)	230	*)	36	270
22	23.01	16	235	27	60	275
25	27.26	36	235	45	77	270
28	30.21	42	225	52	82	260
32	34.04	47	215	56	84	250
40	39.23	49	200	57	82	230
50	51.73	23	85	25	41	135
56	59.19	24	86	27	42	135
63	66.13	25	84	27	41	130
71	75.68	25	83	27	41	130
80	84.79	33	91	35	51	135
100	97.03	33	88	35	50	130
112	111.35	36	88	38	52	130
125	127.35	32	81	34	47	120
140	143.53	31	78	32	45	115
160	156.99	35	82	37	50	115
180	174.68	35	79	37	49	110
200	193.59	34	76	36	47	105
224	219.39	33	72	35	46	100
250	247.25	32	69	33	44	96
280	287.23	30	64	32	42	88
315	331.02	28	60	30	39	82

31991203/EN – 08/2025

P..032e, n1=750 min^{-1}						Mn2 = 69620
i_N	i_{ex}	P_{TH} 20 °C / kW				
		ADP 	ADPF 	AMP 	DM 	AMPF/DMF 
16	15.73	89	210	90	115	220
18	18	91	200	92	115	215
20	20.11	90	195	91	115	205
22	23.01	92	185	92	115	200
25	27.26	88	175	89	110	185
28	30.21	85	165	85	105	175
32	34.04	80	150	81	98	160
40	39.23	73	135	74	89	145
50	53.42	55	74	53	60	99
56	61.13	52	70	50	57	94
63	68.3	50	67	48	55	90
71	78.16	48	64	46	52	85
80	87.32	47	62	45	51	81
100	99.93	44	58	43	48	75
112	114.35	42	55	41	45	71
125	131.16	38	49	37	41	62
140	150.09	37	48	36	40	62
160	160.39	35	46	34	38	59
180	177.75	33	43	32	36	54
200	197	31	41	30	34	51
224	222.01	30	38	29	32	48
250	250.21	28	36	27	30	45
280	288.36	27	34	26	29	43
315	332.32	25	32	24	27	40

P..032e, n1=1000 min^{-1}						Mn2 = 69620
16	15.73	55	230	60	95	245
18	18	67	225	71	105	240
20	20.11	72	220	76	105	235
22	23.01	80	215	84	110	230
25	27.26	83	205	87	110	215
28	30.21	83	195	86	110	205
32	34.04	80	185	83	105	195
40	39.23	75	165	78	98	175
50	53.42	53	84	52	61	115
56	61.13	51	80	50	58	110
63	68.3	50	77	48	56	105
71	78.16	48	74	46	54	99
80	87.32	49	74	48	55	97
100	99.93	47	70	46	53	91
112	114.35	45	66	44	51	86
125	131.16	42	61	41	47	78
140	150.09	40	58	39	45	76
160	160.39	39	57	38	44	73
180	177.75	37	53	37	42	68
200	197	35	51	35	40	64
224	222.01	33	48	33	37	61
250	250.21	31	44	31	35	56
280	288.36	28	40	28	32	50
315	332.32	26	37	26	29	46

31991203/EN – 08/2025

P..032e, n1=1500 min^{-1}						Mn2 = 69620
i_N	i_{ex}	P_{TH} 20 °C / kW				
		ADP 	ADPF 	AMP 	DM 	AMPF/DMF 
16	15.73	*)	225	*)	5	245
18	18	*)	245	*)	40	265
20	20.11	*)	245	10	58	265
22	23.01	27	255	39	85	275
25	27.26	48	255	60	100	270
28	30.21	56	245	67	105	265
32	34.04	60	235	71	105	250
40	39.23	62	220	72	105	235
50	53.42	32	95	35	49	135
56	61.13	33	92	35	48	130
63	68.3	33	89	35	47	125
71	78.16	33	85	35	47	120
80	87.32	43	91	45	56	120
100	99.93	45	89	47	57	115
112	114.35	43	85	45	55	110
125	131.16	44	81	45	54	105
140	150.09	39	76	41	49	99
160	160.39	40	75	42	50	97
180	177.75	39	72	41	48	92
200	197	37	68	39	46	87
224	222.01	35	64	37	44	82
250	250.21	34	60	35	41	77
280	288.36	31	55	33	39	70
315	332.32	29	51	30	36	65

P..032e, n1=1800 min^{-1}						Mn2 = 69620
16	15.73	*)	195	*)	*)	225
18	18	*)	235	*)	*)	260
20	20.11	*)	250	*)	11	275
22	23.01	*)	270	*)	54	295
25	27.26	15	275	33	86	295
28	30.21	29	270	46	96	290
32	34.04	38	260	55	100	280
40	39.23	45	245	61	105	265
50	53.42	9	95	15	33	140
56	61.13	11	93	17	34	135
63	68.3	12	90	18	34	130
71	78.16	14	88	19	35	125
80	87.32	34	99	39	52	135
100	99.93	39	98	43	56	130
112	114.35	38	94	42	54	125
125	131.16	41	91	45	56	120
140	150.09	35	84	39	49	110
160	160.39	38	84	41	51	110
180	177.75	37	81	41	50	105
200	197	36	77	39	48	100
224	222.01	34	73	37	46	94
250	250.21	33	69	36	44	88
280	288.36	31	64	34	41	81
315	332.32	29	59	32	38	75

31991203/EN – 08/2025

P..042e, n1=750 min^{-1}						Mn2 = 100170
i_N	i_{ex}	P_{TH} 20 °C / kW				
		ADP 	ADPF 	AMP 	DM 	AMPF/DMF 
16	15.73	105	255	98	130	240
18	18	110	250	105	130	235
20	20.11	110	245	105	135	230
22	23.01	115	235	110	135	220
25	27.26	110	220	105	130	210
28	30.21	105	205	100	120	195
32	34.04	100	190	97	115	185
40	39.23	90	170	87	105	160
50	53.42	68	95	69	74	120
56	61.13	65	91	66	70	115
63	68.3	63	87	63	68	110
71	78.16	60	83	60	65	105
80	87.32	59	80	59	63	98
100	99.93	56	75	56	60	91
112	114.35	53	71	53	57	86
125	131.16	48	64	48	52	76
140	150.09	46	62	46	50	75
160	160.39	45	60	45	48	71
180	177.75	42	56	42	45	66
200	197	39	52	40	43	62
224	222.01	37	50	38	40	59
250	250.21	35	47	36	38	56
280	288.36	33	44	34	36	52
315	332.32	31	40	31	33	48

P..042e, n1=1000 min^{-1}						Mn2 = 100170
16	15.73	*)	260	*)	*)	245
18	18	*)	295	*)	16	280
20	20.11	*)	310	*)	53	295
22	23.01	33	325	40	91	315
25	27.26	63	320	69	115	310
28	30.21	73	310	79	120	300
32	34.04	80	300	85	125	295
40	39.23	80	270	84	120	265
50	53.42	36	125	38	54	155
56	61.13	37	120	39	54	150
63	68.3	38	120	40	54	145
71	78.16	38	115	40	54	140
80	87.32	52	120	54	67	145
100	99.93	56	120	58	69	140
112	114.35	54	115	55	66	135
125	131.16	55	110	57	67	125
140	150.09	49	100	50	59	120
160	160.39	51	100	52	61	120
180	177.75	50	96	51	60	110
200	197	47	90	48	57	105
224	222.01	45	86	46	54	100
250	250.21	43	81	44	52	94
280	288.36	40	74	41	48	85
315	332.32	36	67	37	44	77

31991203/EN – 08/2025

P..042e, n1=1500 min^{-1}						Mn2 = 100170
i_N	i_{ex}	P_{TH} 20 °C / kW				
		ADP 	ADPF 	AMP 	DM 	AMPF/DMF 
16	15.73	*)	260	*)	*)	245
18	18	*)	295	*)	16	280
20	20.11	*)	310	*)	53	295
22	23.01	33	325	40	91	315
25	27.26	63	320	69	115	310
28	30.21	73	310	79	120	300
32	34.04	80	300	85	125	295
40	39.23	80	270	84	120	265
50	53.42	36	125	38	54	155
56	61.13	37	120	39	54	150
63	68.3	38	120	40	54	145
71	78.16	38	115	40	54	140
80	87.32	52	120	54	67	145
100	99.93	56	120	58	69	140
112	114.35	54	115	55	66	135
125	131.16	55	110	57	67	125
140	150.09	49	100	50	59	120
160	160.39	51	100	52	61	120
180	177.75	50	96	51	60	110
200	197	47	90	48	57	105
224	222.01	45	86	46	54	100
250	250.21	43	81	44	52	94
280	288.36	40	74	41	48	85
315	332.32	36	67	37	44	77

P..042e, n1=1800 min^{-1}						Mn2 = 100170
16	15.73	*)	215	*)	*)	200
18	18	*)	275	*)	*)	260
20	20.11	*)	310	*)	*)	300
22	23.01	*)	340	*)	48	330
25	27.26	22	350	34	92	345
28	30.21	40	345	53	105	335
32	34.04	54	335	66	115	330
40	39.23	62	305	72	115	305
50	53.42	3	125	7	29	160
56	61.13	7	125	10	32	155
63	68.3	9	120	13	34	150
71	78.16	12	115	16	36	145
80	87.32	39	130	42	60	160
100	99.93	48	130	50	67	155
112	114.35	47	125	49	64	150
125	131.16	53	125	55	68	145
140	150.09	43	110	45	58	130
160	160.39	48	115	50	62	135
180	177.75	48	110	50	62	125
200	197	45	105	47	59	120
224	222.01	44	98	45	56	115
250	250.21	42	93	44	54	110
280	288.36	40	86	42	51	99
315	332.32	37	78	38	47	90

31991203/EN – 08/2025

P..052e, n1=750 min^{-1}						Mn2 = 124060
i_N	i_{ex}	P_{TH} 20 °C / kW				
		ADP 	ADPF 	AMP 	DM 	AMPF/DMF 
16	15.73	105	300	100	130	240
18	18	115	295	110	140	240
20	20.11	120	290	115	145	235
22	23.01	125	280	120	145	230
25	27.26	120	260	120	140	220
28	30.21	120	245	115	135	210
32	34.04	110	230	110	130	195
40	39.23	100	205	100	120	175
50	53.42	76	115	76	87	130
56	61.13	73	110	73	84	120
63	68.3	70	105	70	80	115
71	78.16	67	100	67	77	110
80	87.32	65	95	65	74	105
100	99.93	62	90	63	71	99
112	114.35	59	85	59	67	94
125	131.16	54	76	54	62	84
140	150.09	52	75	52	59	82
160	160.39	50	71	51	57	79
180	177.75	47	67	48	54	73
200	197	45	63	45	51	69
224	222.01	42	59	42	48	65
250	250.21	40	56	40	46	62
280	288.36	38	53	38	43	58
315	332.32	35	49	36	40	54

P..052e, n1=1000 min^{-1}						Mn2 = 124060
16	15.73	34	320	41	83	255
18	18	61	325	68	110	265
20	20.11	79	325	86	120	270
22	23.01	98	320	105	135	270
25	27.26	105	305	110	145	265
28	30.21	110	295	115	140	255
32	34.04	105	275	110	135	240
40	39.23	100	250	105	130	220
50	53.42	69	130	71	86	150
56	61.13	67	125	69	83	140
63	68.3	65	120	67	80	135
71	78.16	63	115	65	77	130
80	87.32	65	115	67	79	125
100	99.93	65	110	66	77	120
112	114.35	62	105	63	74	115
125	131.16	59	96	60	70	105
140	150.09	55	92	56	66	100
160	160.39	54	89	56	65	98
180	177.75	52	84	53	62	93
200	197	49	80	51	59	88
224	222.01	47	75	48	55	83
250	250.21	44	70	45	52	77
280	288.36	40	62	41	48	69
315	332.32	37	57	38	44	63

31991203/EN – 08/2025

P..052e, n1=1500 min^{-1}						Mn2 = 124060
i_N	i_{ex}	P_{TH} 20 °C / kW				
		ADP 	ADPF 	AMP 	DM 	AMPF/DMF 
16	15.73	*)	275	*)	*)	215
18	18	*)	325	*)	*)	270
20	20.11	*)	350	*)	26	300
22	23.01	*)	375	26	79	330
25	27.26	31	375	67	115	335
28	30.21	48	365	82	125	330
32	34.04	59	350	91	130	320
40	39.23	66	325	95	135	300
50	53.42	22	150	29	56	170
56	61.13	24	145	31	57	165
63	68.3	26	140	33	57	160
71	78.16	28	135	35	57	155
80	87.32	47	145	53	73	160
100	99.93	55	145	60	78	160
112	114.35	53	135	58	76	150
125	131.16	58	130	62	78	145
140	150.09	49	120	53	68	135
160	160.39	53	120	57	71	135
180	177.75	52	115	56	70	125
200	197	50	110	54	67	120
224	222.01	47	105	51	63	115
250	250.21	46	97	49	61	105
280	288.36	43	89	46	57	98
315	332.32	40	82	43	53	90

P..052e, n1=1800 min^{-1}						Mn2 = 124060
16	15.73	*)	200	*)	*)	140
18	18	*)	285	*)	*)	240
20	20.11	*)	335	*)	*)	295
22	23.01	*)	385	*)	19	345
25	27.26	*)	400	22	81	370
28	30.21	*)	400	48	105	370
32	34.04	13	385	66	120	360
40	39.23	30	360	79	125	340
50	53.42	*)	150	*)	19	175
56	61.13	*)	145	*)	23	170
63	68.3	*)	145	*)	26	165
71	78.16	*)	140	*)	30	160
80	87.32	24	155	34	61	175
100	99.93	40	160	49	73	175
112	114.35	40	150	48	71	170
125	131.16	51	150	59	79	165
140	150.09	38	135	45	65	150
160	160.39	46	135	53	71	150
180	177.75	47	130	54	72	145
200	197	46	125	52	69	140
224	222.01	43	120	49	65	130
250	250.21	43	115	49	64	125
280	288.36	42	105	47	61	115
315	332.32	39	96	43	56	105

31991203/EN – 08/2025

P..062e, n1=750 min^{-1}						Mn2 = 185660
i_N	i_{ex}	P_{TH} 20 °C / kW				
		ADP 	ADPF 	AMP 	DM 	AMPF/DMF 
16	15.73	105	---	105	---	415
18	18	130	---	130	---	450
20	20.11	145	---	150	---	480
22.4	23.01	175	---	180	---	500
28	27.26	195	---	195	---	510
31.5	30.21	195	---	200	---	500
35.5	34.04	195	---	200	---	485
40	39.23	185	---	190	---	455
56	53.42	105	215	100	125	190
63	61.13	105	210	100	125	190
71	68.3	105	210	105	125	190
80	78.16	105	210	105	125	185
90	87.32	110	200	110	130	185
100	99.93	110	190	110	130	175
112	114.35	110	180	110	125	170
125	131.16	105	160	100	120	150
140	150.09	105	155	100	115	150
160	160.39	100	150	100	110	145
180	177.75	96	140	95	105	135
200	197	91	135	90	100	125
224	222.01	86	125	85	95	120
250	250.21	83	120	81	91	115
280	288.36	78	110	77	85	105
315	332.32	72	105	71	79	100

P..062e, n1=1000 min^{-1}						Mn2 = 185660
16	15.73	*)	---	*)	---	370
18	18	32	---	42	---	445
20	20.11	72	---	82	---	500
22.4	23.01	110	---	120	---	550
28	27.26	135	---	145	---	580
31.5	30.21	150	---	160	---	580
35.5	34.04	160	---	170	---	580
40	39.23	160	---	170	---	550
56	53.42	85	230	84	100	200
63	61.13	84	230	83	100	205
71	68.3	83	230	82	100	205
80	78.16	80	230	79	100	205
90	87.32	96	240	95	120	215
100	99.93	105	235	100	125	220
112	114.35	100	220	100	125	210
125	131.16	105	205	105	125	195
140	150.09	98	195	97	120	185
160	160.39	100	190	100	125	180
180	177.75	100	180	100	120	170
200	197	97	170	97	115	160
224	222.01	95	160	95	110	155
250	250.21	90	150	90	105	145
280	288.36	82	130	82	93	130
315	332.32	76	120	76	86	120

31991203/EN – 08/2025

P..062e, n1=1500 min^{-1}						Mn2 = 185660
i_N	i_{ex}	P_{TH} 20 °C / kW				
		ADP 	ADPF 	AMP 	DM 	AMPF/DMF 
16	15.73	*)	---	*)	---	190
18	18	*)	---	*)	---	320
20	20.11	*)	---	*)	---	450
22.4	23.01	*)	---	*)	---	590
28	27.26	17	---	46	---	680
31.5	30.21	51	---	78	---	710
35.5	34.04	75	---	100	---	730
40	39.23	92	---	115	---	720
56	53.42	*)	225	6	37	195
63	61.13	9	230	13	43	200
71	68.3	14	235	17	46	205
80	78.16	19	240	22	50	210
90	87.32	58	285	61	85	255
100	99.93	73	300	75	97	275
112	114.35	71	295	74	99	275
125	131.16	84	280	88	120	265
140	150.09	66	260	69	97	245
160	160.39	80	260	84	115	250
180	177.75	84	250	88	115	240
200	197	82	240	86	115	225
224	222.01	81	225	84	110	215
250	250.21	83	215	87	115	205
280	288.36	81	190	85	110	185
315	332.32	77	180	81	105	175

P..062e, n1=1800 min^{-1}						Mn2 = 185660
16	15.73	*)	---	*)	---	13
18	18	*)	---	*)	---	230
20	20.11	*)	---	*)	---	360
22.4	23.01	*)	---	*)	---	560
28	27.26	*)	---	*)	---	720
31.5	30.21	*)	---	9	---	770
35.5	34.04	8	---	49	---	800
40	39.23	42	---	80	---	800
56	53.42	*)	205	*)	*)	180
63	61.13	*)	210	*)	*)	180
71	68.3	*)	220	*)	*)	185
80	78.16	*)	225	*)	*)	190
90	87.32	20	295	27	59	265
100	99.93	49	325	56	83	300
112	114.35	50	325	56	83	300
125	131.16	72	325	77	105	310
140	150.09	49	295	54	77	280
160	160.39	64	300	68	99	285
180	177.75	67	290	74	105	275
200	197	66	275	73	105	265
224	222.01	65	260	72	105	250
250	250.21	71	250	78	110	240
280	288.36	72	225	79	110	220
315	332.32	69	210	76	105	205

31991203/EN – 08/2025

P..072e, n1=750 min^{-1}						Mn2 = 245660
i_N	i_{ex}	P_{TH} 20 °C / kW				
		ADP 	ADPF 	AMP 	DM 	AMPF/DMF 
16	15.75	93	---	98	---	---
18	17.98	145	---	150	---	---
20	20.04	165	---	170	---	---
22.4	22.86	195	---	205	---	---
28	26.92	220	---	230	---	---
31.5	29.71	230	---	235	---	---
35.5	33.31	230	---	240	---	---
40	38.1	220	---	230	---	---
56	53.48	120	290	115	140	170
63	61.07	120	290	120	140	175
71	68.07	120	290	120	140	175
80	77.63	120	280	120	140	175
90	87.03	130	270	130	150	180
100	99.59	130	255	130	150	180
112	113.57	130	240	130	150	180
125	130.72	125	215	125	140	165
140	147.64	125	210	120	140	160
160	158.42	120	200	120	140	155
180	175.57	115	190	115	130	150
200	193.79	110	180	115	125	140
224	217.21	105	170	105	115	135
250	244.8	100	160	100	110	125
280	282.12	96	150	97	105	120
315	322.69	90	140	91	99	115

P..072e, n1=1000 min^{-1}						Mn2 = 245660
16	15.75	*)	---	*)	---	---
18	17.98	*)	---	17	---	---
20	20.04	49	---	72	---	---
22.4	22.86	110	---	130	---	---
28	26.92	150	---	165	---	---
31.5	29.71	160	---	185	---	---
35.5	33.31	170	---	200	---	---
40	38.1	180	---	205	---	---
56	53.48	92	320	96	115	190
63	61.07	93	325	96	115	195
71	68.07	92	320	95	115	195
80	77.63	90	320	93	110	195
90	87.03	105	325	110	135	220
100	99.59	115	315	120	145	225
112	113.57	115	300	120	145	225
125	130.72	120	275	125	145	220
140	147.64	110	265	115	140	205
160	158.42	115	260	120	145	205
180	175.57	115	240	120	140	195
200	193.79	110	230	120	140	185
224	217.21	110	220	115	135	175
250	244.8	105	200	110	125	165
280	282.12	98	180	105	115	150
315	322.69	92	165	96	105	140

31991203/EN – 08/2025

P..072e, n1=1500 min^{-1}						Mn2 = 245660
i_N	i_{ex}	P_{TH} 20 °C / kW				
		ADP 	ADPF 	AMP 	DM 	AMPF/DMF 
16	15.75	*)	---	*)	---	---
18	17.98	*)	---	*)	---	---
20	20.04	*)	---	*)	---	---
22.4	22.86	*)	---	*)	---	---
28	26.92	*)	---	21	---	---
31.5	29.71	9	---	72	---	---
35.5	33.31	48	---	110	---	---
40	38.1	80	---	135	---	---
56	53.48	*)	320	*)	17	200
63	61.07	*)	335	*)	29	200
71	68.07	*)	335	*)	34	205
80	77.63	*)	340	11	40	210
90	87.03	47	395	67	93	275
100	99.59	71	415	88	110	300
112	113.57	71	400	87	110	300
125	130.72	87	385	105	135	315
140	147.64	67	360	81	105	290
160	158.42	78	360	98	130	295
180	175.57	83	340	105	135	285
200	193.79	82	325	105	130	270
224	217.21	81	310	100	130	260
250	244.8	83	290	105	130	245
280	282.12	83	260	105	130	225
315	322.69	80	240	100	125	210

P..072e, n1=1800 min^{-1}						Mn2 = 245660
16	15.75	*)	---	*)	---	---
18	17.98	*)	---	*)	---	---
20	20.04	*)	---	*)	---	---
22.4	22.86	*)	---	*)	---	---
28	26.92	*)	---	*)	---	---
31.5	29.71	*)	---	*)	---	---
35.5	33.31	*)	---	31	---	---
40	38.1	*)	---	81	---	---
56	53.48	*)	290	*)	*)	185
63	61.07	*)	305	*)	*)	195
71	68.07	*)	315	*)	*)	195
80	77.63	*)	320	*)	*)	195
90	87.03	*)	415	19	54	290
100	99.59	27	455	60	90	335
112	113.57	31	450	62	91	340
125	130.72	67	440	94	120	365
140	147.64	34	405	61	86	330
160	158.42	57	410	82	110	345
180	175.57	65	395	88	120	335
200	193.79	63	380	87	120	325
224	217.21	60	360	86	120	305
250	244.8	63	340	93	125	295
280	282.12	66	310	97	130	275
315	322.69	63	285	93	125	255

P..082e, n1=750 min^{-1}						Mn2 = 359400
i_N	i_{ex}	P_{TH} 20 °C / kW				
		ADP 	ADPF 	AMP 	DM 	AMPF/DMF 
16	15.96	10	---	40	---	---
18	18.19	90	---	120	---	---
20	20.23	135	---	165	---	---
22.4	22.99	180	---	205	---	---
28	26.94	210	---	240	---	---
31.5	29.62	225	---	260	---	---
35.5	33.04	235	---	265	---	---
40	37.53	235	---	265	---	---
56	54.2	140	370	140	---	190
63	61.76	135	370	135	---	190
71	68.7	130	365	130	---	190
80	78.08	130	365	130	---	195
90	87.83	150	360	150	---	210
100	100.51	155	340	155	---	215
112	114.24	155	325	155	---	215
125	131.93	145	285	150	---	205
140	147.19	145	285	150	---	205
160	158.52	145	270	150	---	200
180	175.69	140	250	145	---	190
200	193.19	135	240	140	---	180
224	215.47	135	230	135	---	175
250	242.84	130	215	130	---	165
280	279.86	125	205	125	---	155
315	317.93	115	190	120	---	150

P..082e, n1=1000 min^{-1}						Mn2 = 359400
16	15.96	*)	---	*)	---	---
18	18.19	*)	---	*)	---	---
20	20.23	*)	---	*)	---	---
22.4	22.99	29	---	94	---	---
28	26.94	110	---	170	---	---
31.5	29.62	140	---	195	---	---
35.5	33.04	160	---	210	---	---
40	37.53	165	---	220	---	---
56	54.2	89	405	95	---	185
63	61.76	92	410	97	---	185
71	68.7	92	410	97	---	180
80	78.08	93	410	98	---	185
90	87.83	120	435	125	---	230
100	100.51	130	425	135	---	245
112	114.24	130	410	135	---	245
125	131.93	140	370	145	---	245
140	147.19	125	365	135	---	235
160	158.52	135	350	145	---	245
180	175.69	135	330	145	---	235
200	193.19	135	315	140	---	225
224	215.47	130	300	135	---	215
250	242.84	130	275	135	---	205
280	279.86	120	245	125	---	185
315	317.93	115	225	120	---	175

31991203/EN – 08/2025

P..082e, n1=1500 min^{-1}						Mn2 = 359400
i_N	i_{ex}	P_{TH} 20 °C / kW				
		ADP 	ADPF 	AMP 	DM 	AMPF/DMF 
16	15.96	*)	---	*)	---	---
18	18.19	*)	---	*)	---	---
20	20.23	*)	---	*)	---	---
22.4	22.99	*)	---	*)	---	---
28	26.94	*)	---	*)	---	---
31.5	29.62	*)	---	*)	---	---
35.5	33.04	*)	---	72	---	---
40	37.53	*)	---	130	---	---
56	54.2	*)	395	*)	---	200
63	61.76	*)	410	*)	---	205
71	68.7	*)	415	*)	---	210
80	78.08	*)	425	*)	---	210
90	87.83	29	530	46	---	305
100	100.51	73	560	88	---	355
112	114.24	75	550	89	---	355
125	131.93	105	530	120	---	385
140	147.19	74	500	86	---	345
160	158.52	95	495	105	---	375
180	175.69	100	475	115	---	370
200	193.19	96	450	110	---	355
224	215.47	94	430	110	---	340
250	242.84	100	405	115	---	320
280	279.86	105	365	120	---	300
315	317.93	99	340	115	---	280

P..082e, n1=1800 min^{-1}						Mn2 = 359400
16	15.96	*)	---	*)	---	---
18	18.19	*)	---	*)	---	---
20	20.23	*)	---	*)	---	---
22.4	22.99	*)	---	*)	---	---
28	26.94	*)	---	*)	---	---
31.5	29.62	*)	---	*)	---	---
35.5	33.04	*)	---	*)	---	---
40	37.53	*)	---	35	---	---
56	54.2	*)	360	*)	---	165
63	61.76	*)	360	*)	---	180
71	68.7	*)	375	*)	---	190
80	78.08	*)	390	*)	---	195
90	87.83	*)	550	*)	---	330
100	100.51	6	620	31	---	405
112	114.24	14	620	38	---	410
125	131.93	78	620	99	---	460
140	147.19	22	570	44	---	400
160	158.52	64	580	83	---	450
180	175.69	78	550	95	---	445
200	193.19	76	530	93	---	425
224	215.47	73	510	90	---	410
250	242.84	80	475	96	---	395
280	279.86	82	435	105	---	365
315	317.93	80	405	100	---	345

*) Contact SEW-EURODRIVE.

31991203/EN – 08/2025

10.7 Thermal rating of vertical mounting positions (M2/M4)

P..002e, n1=750 min^{-1}						Mn2 = 24830
		P_{TH} 20 °C / kW				
i_N	i_{ex}	ADP 	ADPF 	AMP 	DM 	AMPF/DMF 
16	15.23	45	125	45	69	205
18	17.45	48	125	48	71	195
20	19.53	52	125	52	74	190
22.4	22.41	54	120	54	74	180
25	26.68	53	110	53	71	165
28	29.68	51	105	52	69	155
31.5	33.64	50	100	50	67	145
40	39.08	48	93	48	63	135
50	51.73	30	45	30	41	76
56	59.26	29	45	29	40	74
63	66.32	29	44	29	40	71
71	75.77	32	47	32	43	71
80	84.79	32	46	32	42	69
100	97.03	32	45	32	42	66
112	111.35	31	43	32	40	63
125	127.35	31	41	31	38	60
140	146.16	30	40	30	37	58
160	164.72	29	38	29	35	55
200	193.59	27	35	27	33	51
224	219.39	25	33	25	31	48
250	251.44	24	32	24	30	46
280	284.95	23	30	23	28	44
315	331.02	21	28	22	26	41

P..002e, n1=1000 min^{-1}						Mn2 = 24830
16	15.23	16	130	19	51	225
18	17.45	24	130	27	58	220
20	19.53	35	135	37	66	215
22.4	22.41	42	135	44	71	205
25	26.68	45	130	48	72	190
28	29.68	45	125	48	70	180
31.5	33.64	45	115	47	68	165
40	39.08	43	105	45	64	150
50	51.73	21	45	22	36	82
56	59.26	21	44	22	36	80
63	66.32	21	44	22	35	78
71	75.77	27	49	28	40	79
80	84.79	26	48	28	40	76
100	97.03	28	49	29	41	74
112	111.35	27	48	29	40	71
125	127.35	29	47	30	41	69
140	146.16	28	45	29	39	65
160	164.72	28	43	29	38	63
200	193.59	26	40	27	35	58
224	219.39	25	38	26	33	55
250	251.44	24	37	25	32	53
280	284.95	23	35	24	30	50
315	331.02	21	32	22	28	46

31991203/EN – 08/2025

P..002e, n1=1500 min^{-1}						Mn2 = 24830
i_N	i_{ex}	P_{TH} 20 °C / kW				
		ADP 	ADPF 	AMP 	DM 	AMPF/DMF 
16	15.23	*)	99	*)	*)	215
18	17.45	*)	120	*)	9	230
20	19.53	*)	135	*)	29	245
22.4	22.41	2	150	9	49	245
25	26.68	14	150	23	61	235
28	29.68	19	150	29	64	225
31.5	33.64	24	145	34	66	215
40	39.08	27	135	35	65	195
50	51.73	*)	35	*)	17	81
56	59.26	*)	35	*)	17	80
63	66.32	*)	36	1	18	79
71	75.77	10	49	14	33	91
80	84.79	10	49	15	33	90
100	97.03	15	51	19	36	88
112	111.35	15	50	19	36	84
125	127.35	19	53	23	39	81
140	146.16	19	52	23	38	78
160	164.72	20	51	24	39	75
200	193.59	18	46	22	36	70
224	219.39	17	44	21	34	66
250	251.44	19	44	22	35	64
280	284.95	18	41	22	33	61
315	331.02	17	38	20	31	56

P..002e, n1=1800 min^{-1}						Mn2 = 24830
16	15.23	*)	60	*)	*)	195
18	17.45	*)	94	*)	*)	220
20	19.53	*)	125	*)	3	245
22.4	22.41	*)	145	*)	26	260
25	26.68	*)	155	5	49	255
28	29.68	*)	155	12	56	250
31.5	33.64	7	155	20	61	235
40	39.08	12	145	25	63	215
50	51.73	*)	22	*)	3	75
56	59.26	*)	23	*)	4	74
63	66.32	*)	25	*)	5	74
71	75.77	*)	46	5	25	94
80	84.79	*)	46	5	26	93
100	97.03	5	51	11	32	96
112	111.35	5	50	11	31	91
125	127.35	11	54	18	37	89
140	146.16	11	52	18	36	84
160	164.72	13	53	19	37	81
200	193.59	11	48	17	34	75
224	219.39	11	46	16	33	71
250	251.44	14	46	19	35	70
280	284.95	13	44	19	34	66
315	331.02	13	41	18	31	61

31991203/EN – 08/2025

P..012e, n1=750 min^{-1}						Mn2 = 36810
		P_{TH} 20 °C / kW				
i_N	i_{ex}	ADP 	ADPF 	AMP 	DM 	AMPF/DMF 
16	15.73	39	145	35	63	205
18	18	49	150	46	71	205
20	20.11	56	150	53	77	205
22.4	23.01	61	150	58	80	195
25	27.26	62	140	59	79	180
28	30.21	62	135	60	78	175
31.5	34.04	61	130	59	77	165
40	39.23	59	120	57	73	155
50	53.42	37	54	35	47	89
56	61.13	37	53	35	47	88
63	68.3	37	53	35	47	86
71	78.16	36	51	34	46	83
80	87.32	39	54	38	49	83
100	99.93	40	54	38	48	80
112	114.35	39	52	37	47	76
125	131.16	38	50	37	46	73
140	150.09	36	47	35	43	69
160	169.15	35	45	33	41	65
200	197	34	43	33	40	62
224	222.01	32	41	31	37	59
250	250.21	31	39	30	36	57
280	288.36	29	37	28	34	53
315	332.32	27	35	27	32	50

P..012e, n1=1000 min^{-1}						Mn2 = 36810
16	15.73	*)	135	*)	25	205
18	18	11	145	14	46	215
20	20.11	25	155	29	61	225
22.4	23.01	38	160	42	71	220
25	27.26	47	155	50	76	210
28	30.21	50	155	53	77	200
31.5	34.04	50	145	53	76	190
40	39.23	50	135	53	73	175
50	53.42	28	54	27	42	94
56	61.13	29	54	27	42	92
63	68.3	29	53	27	42	91
71	78.16	29	52	27	41	88
80	87.32	34	58	33	47	92
100	99.93	36	58	34	48	89
112	114.35	35	57	34	47	85
125	131.16	36	57	35	47	82
140	150.09	33	53	32	44	77
160	169.15	32	50	31	42	73
200	197	33	49	32	42	71
224	222.01	32	47	31	40	67
250	250.21	31	45	31	39	64
280	288.36	30	43	29	37	61
315	332.32	28	40	27	34	57

31991203/EN – 08/2025

P..012e, n1=1500 min^{-1}						Mn2 = 36810
i_N	i_{ex}	P_{TH} 20 °C / kW				
		ADP 	ADPF 	AMP 	DM 	AMPF/DMF 
16	15.73	*)	52	*)	*)	150
18	18	*)	105	*)	*)	195
20	20.11	*)	135	*)	3	225
22.4	23.01	*)	160	*)	28	240
25	27.26	*)	170	14	53	250
28	30.21	7	175	23	62	245
31.5	34.04	13	170	31	67	235
40	39.23	19	160	38	70	220
50	53.42	3	46	2	22	94
56	61.13	4	47	4	23	93
63	68.3	6	48	5	24	93
71	78.16	7	47	6	25	91
80	87.32	19	61	19	39	105
100	99.93	24	63	23	43	105
112	114.35	24	62	23	42	100
125	131.16	28	64	28	46	97
140	150.09	22	57	22	40	89
160	169.15	22	55	22	38	84
200	197	26	59	26	42	84
224	222.01	25	56	25	41	80
250	250.21	26	54	26	41	77
280	288.36	26	52	26	40	73
315	332.32	25	48	25	38	68

P..012e, n1=1800 min^{-1}						Mn2 = 36810
16	15.73	*)	*)	*)	*)	85
18	18	*)	48	*)	*)	160
20	20.11	*)	105	*)	*)	210
22.4	23.01	*)	145	*)	*)	240
25	27.26	*)	170	*)	29	260
28	30.21	*)	175	3	44	260
31.5	34.04	*)	175	13	56	255
40	39.23	*)	170	22	63	245
50	53.42	*)	33	*)	6	86
56	61.13	*)	36	*)	8	86
63	68.3	*)	38	*)	10	87
71	78.16	*)	39	*)	11	86
80	87.32	8	60	9	32	105
100	99.93	14	65	15	38	110
112	114.35	14	64	15	38	105
125	131.16	21	66	22	43	105
140	150.09	14	59	15	36	97
160	169.15	14	57	15	35	92
200	197	20	61	21	40	90
224	222.01	20	59	20	39	86
250	250.21	21	58	22	40	83
280	288.36	22	56	22	40	79
315	332.32	21	53	21	38	74

31991203/EN – 08/2025

P..022e, n1=750 min^{-1}						Mn2 = 51190
		P_{TH} 20 °C / kW				
i_N	i_{ex}	ADP 	ADPF 	AMP 	DM 	AMPF/DMF 
16	15.73	42	175	48	70	225
18	18	62	185	67	87	235
20	20.11	65	180	70	90	225
22	23.01	74	180	78	96	225
25	27.26	76	175	81	97	210
28	30.21	77	170	82	96	205
32	34.04	77	165	81	95	195
40	39.23	74	155	78	91	180
50	51.73	45	66	45	56	110
56	59.19	45	65	45	56	105
63	66.13	45	64	45	55	105
71	75.68	44	63	44	55	105
80	84.79	48	66	48	58	105
100	97.03	47	65	47	57	99
112	111.35	48	65	48	57	96
125	127.35	44	60	44	53	89
140	143.53	42	58	42	51	84
160	156.99	45	59	46	54	85
180	174.68	45	57	45	52	82
200	193.59	43	55	43	50	78
224	219.39	41	53	41	47	75
250	247.25	39	50	40	45	71
280	287.23	37	47	37	43	67
315	331.02	35	44	35	40	62

P..022e, n1=1000 min^{-1}						Mn2 = 51190
16	15.73	*)	155	*)	17	210
18	18	13	180	20	50	235
20	20.11	22	185	30	62	235
22	23.01	43	195	52	80	240
25	27.26	57	195	65	90	240
28	30.21	62	190	69	92	230
32	34.04	64	180	71	92	220
40	39.23	64	170	70	89	205
50	51.73	32	65	34	48	115
56	59.19	34	65	35	49	110
63	66.13	33	64	35	48	110
71	75.68	33	62	35	48	105
80	84.79	40	69	41	54	110
100	97.03	40	67	41	53	110
112	111.35	42	69	44	55	105
125	127.35	37	63	39	50	98
140	143.53	36	61	38	48	93
160	156.99	42	67	43	54	95
180	174.68	42	65	43	54	92
200	193.59	41	62	42	52	88
224	219.39	41	60	42	51	85
250	247.25	39	57	40	48	81
280	287.23	38	54	39	46	76
315	331.02	36	50	36	43	71

31991203/EN – 08/2025

P..022e, n1=1500 min^{-1}						Mn2 = 51190
i_N	i_{ex}	P_{TH} 20 °C / kW				
		ADP 	ADPF 	AMP 	DM 	AMPF/DMF 
16	15.73	*)	34	*)	*)	105
18	18	*)	120	*)	*)	190
20	20.11	*)	145	*)	*)	210
22	23.01	*)	185	*)	16	245
25	27.26	*)	210	7	51	265
28	30.21	8	215	20	67	265
32	34.04	18	210	32	76	260
40	39.23	28	205	43	82	250
50	51.73	*)	48	*)	19	105
56	59.19	*)	51	4	22	110
63	66.13	*)	51	5	22	105
71	75.68	2	52	7	23	105
80	84.79	18	68	22	41	120
100	97.03	18	68	23	41	115
112	111.35	25	73	30	47	120
125	127.35	18	63	23	39	110
140	143.53	18	61	22	38	105
160	156.99	30	73	34	50	110
180	174.68	32	73	36	51	110
200	193.59	31	71	35	49	105
224	219.39	32	71	36	50	100
250	247.25	31	68	35	49	96
280	287.23	32	65	35	48	91
315	331.02	30	61	34	46	85

P..022e, n1=1800 min^{-1}						Mn2 = 51190
16	15.73	*)	*)	*)	*)	*)
18	18	*)	45	*)	*)	125
20	20.11	*)	93	*)	*)	165
22	23.01	*)	160	*)	*)	230
25	27.26	*)	205	*)	18	265
28	30.21	*)	215	*)	39	275
32	34.04	*)	220	4	57	275
40	39.23	2	215	18	71	265
50	51.73	*)	30	*)	*)	93
56	59.19	*)	34	*)	*)	96
63	66.13	*)	35	*)	*)	95
71	75.68	*)	37	*)	4	96
80	84.79	*)	64	8	28	120
100	97.03	2	63	9	29	120
112	111.35	13	73	19	40	125
125	127.35	4	61	10	29	110
140	143.53	5	59	10	29	105
160	156.99	20	75	27	46	120
180	174.68	23	75	29	47	115
200	193.59	22	73	29	46	110
224	219.39	25	74	31	48	110
250	247.25	25	72	31	47	105
280	287.23	26	70	32	47	99
315	331.02	25	66	30	45	92

31991203/EN – 08/2025

P..032e, n1=750 min^{-1}						Mn2 = 69620
		P_{TH} 20 °C / kW				
i_N	i_{ex}	ADP 	ADPF 	AMP 	DM 	AMPF/DMF 
16	15.73	24	165	30	70	185
18	18	41	170	47	83	185
20	20.11	49	165	55	88	185
22	23.01	63	170	68	97	185
25	27.26	70	165	74	100	175
28	30.21	72	160	76	99	175
32	34.04	72	155	76	98	165
40	39.23	70	145	74	94	155
50	53.42	50	77	49	60	120
56	61.13	49	75	48	59	115
63	68.3	48	73	47	58	110
71	78.16	47	71	47	57	110
80	87.32	54	78	54	63	115
100	99.93	56	78	55	64	110
112	114.35	54	76	54	62	110
125	131.16	55	75	54	62	105
140	150.09	50	69	49	57	99
160	160.39	52	71	51	59	99
180	177.75	51	69	50	58	97
200	197	49	67	48	55	93
224	222.01	47	64	46	53	89
250	250.21	46	62	45	52	87
280	288.36	44	59	44	50	83
315	332.32	42	56	41	47	78

P..032e, n1=1000 min^{-1}						Mn2 = 69620
16	15.73	*)	130	*)	*)	160
18	18	*)	155	*)	29	180
20	20.11	*)	160	*)	48	185
22	23.01	18	175	29	74	195
25	27.26	42	180	53	91	200
28	30.21	51	175	60	95	195
32	34.04	55	170	64	95	185
40	39.23	58	160	66	93	175
50	53.42	27	71	29	45	120
56	61.13	27	69	30	45	115
63	68.3	27	68	30	44	110
71	78.16	28	66	30	44	110
80	87.32	43	79	45	57	120
100	99.93	47	82	49	61	120
112	114.35	46	80	48	60	115
125	131.16	51	82	53	63	115
140	150.09	43	74	45	55	105
160	160.39	47	77	49	59	110
180	177.75	47	76	49	59	105
200	197	46	73	47	56	105
224	222.01	44	70	45	54	99
250	250.21	44	69	45	53	96
280	288.36	43	67	44	52	93
315	332.32	40	63	42	49	87

31991203/EN – 08/2025

P..032e, n1=1500 min^{-1}						Mn2 = 69620
i_N	i_{ex}	P_{TH} 20 °C / kW				
		ADP 	ADPF 	AMP 	DM 	AMPF/DMF 
16	15.73	*)	*)	*)	*)	*)
18	18	*)	37	*)	*)	83
20	20.11	*)	83	*)	*)	125
22	23.01	*)	145	*)	*)	185
25	27.26	*)	180	*)	34	215
28	30.21	*)	190	*)	57	225
32	34.04	*)	195	16	73	225
40	39.23	9	190	33	83	215
50	53.42	*)	31	*)	*)	98
56	61.13	*)	34	*)	*)	97
63	68.3	*)	35	*)	*)	96
71	78.16	*)	38	*)	*)	96
80	87.32	3	72	13	33	125
100	99.93	16	81	27	46	130
112	114.35	18	79	28	46	125
125	131.16	32	89	42	57	130
140	150.09	18	73	28	43	115
160	160.39	28	81	37	52	125
180	177.75	32	83	40	55	125
200	197	31	81	39	53	120
224	222.01	30	77	38	51	115
250	250.21	32	78	39	52	110
280	288.36	33	76	41	52	110
315	332.32	32	72	38	49	105

P..032e, n1=1800 min^{-1}						Mn2 = 69620
16	15.73	*)	*)	*)	*)	*)
18	18	*)	*)	*)	*)	*)
20	20.11	*)	*)	*)	*)	47
22	23.01	*)	93	*)	*)	145
25	27.26	*)	165	*)	*)	210
28	30.21	*)	185	*)	18	225
32	34.04	*)	195	*)	45	235
40	39.23	*)	195	*)	68	235
50	53.42	*)	*)	*)	*)	65
56	61.13	*)	*)	*)	*)	69
63	68.3	*)	*)	*)	*)	70
71	78.16	*)	5	*)	*)	73
80	87.32	*)	59	*)	10	120
100	99.93	*)	76	8	31	135
112	114.35	*)	75	10	32	130
125	131.16	15	89	31	51	140
140	150.09	*)	71	12	33	120
160	160.39	11	81	26	45	130
180	177.75	17	83	31	49	130
200	197	17	81	31	48	125
224	222.01	17	78	30	47	120
250	250.21	22	79	34	49	120
280	288.36	25	80	36	51	115
315	332.32	24	75	34	48	110

31991203/EN – 08/2025

P..042e, n1=750 min^{-1}						Mn2 = 100170
		P_{TH} 20 °C / kW				
i_N	i_{ex}	ADP 	ADPF 	AMP 	DM 	AMPF/DMF 
16	15.73	15	195	13	58	180
18	18	41	205	39	83	190
20	20.11	59	210	57	97	195
22	23.01	77	210	76	110	200
25	27.26	87	205	86	115	200
28	30.21	89	200	89	115	190
32	34.04	91	195	90	115	190
40	39.23	87	180	86	110	175
50	53.42	58	97	59	70	135
56	61.13	58	95	59	69	130
63	68.3	57	94	58	68	125
71	78.16	56	91	58	67	125
80	87.32	65	99	67	76	130
100	99.93	68	100	69	78	130
112	114.35	66	97	67	75	125
125	131.16	68	97	69	76	125
140	150.09	61	88	62	69	115
160	160.39	64	91	65	72	115
180	177.75	63	89	64	70	115
200	197	60	85	61	67	110
224	222.01	58	82	59	65	105
250	250.21	57	80	58	64	100
280	288.36	55	77	56	61	97
315	332.32	51	71	51	56	89

P..042e, Pn1=1000 min^{-1}						Mn2 = 100170
16	15.73	*)	140	*)	*)	130
18	18	*)	180	*)	4	170
20	20.11	*)	200	*)	39	190
22	23.01	21	220	25	77	215
25	27.26	53	225	58	100	220
28	30.21	64	220	68	105	215
32	34.04	71	215	75	110	210
40	39.23	73	200	77	105	195
50	53.42	27	89	29	46	130
56	61.13	28	88	31	47	125
63	68.3	29	87	32	48	125
71	78.16	30	85	33	48	120
80	87.32	49	100	51	65	135
100	99.93	57	105	59	72	140
112	114.35	56	105	58	70	135
125	131.16	63	105	65	76	135
140	150.09	52	95	54	65	120
160	160.39	58	100	60	70	125
180	177.75	59	99	61	71	125
200	197	56	95	58	68	120
224	222.01	55	92	56	66	115
250	250.21	55	90	56	65	115
280	288.36	54	87	55	63	110
315	332.32	49	80	51	58	100

31991203/EN – 08/2025

P..042e, n1=1500 min^{-1}						Mn2 = 100170
		P_{TH} 20 °C / kW				
i_N	i_{ex}	ADP 	ADPF 	AMP 	DM 	AMPF/DMF 
16	15.73	*)	*)	*)	*)	*)
18	18	*)	15	*)	*)	16
20	20.11	*)	100	*)	*)	100
22	23.01	*)	185	*)	*)	185
25	27.26	*)	235	*)	22	235
28	30.21	*)	245	*)	53	250
32	34.04	*)	250	14	77	255
40	39.23	18	240	35	91	245
50	53.42	*)	38	*)	*)	87
56	61.13	*)	42	*)	*)	90
63	68.3	*)	45	*)	*)	91
71	78.16	*)	49	*)	*)	92
80	87.32	*)	92	*)	28	130
100	99.93	17	105	22	47	145
112	114.35	18	105	23	48	140
125	131.16	40	120	45	67	150
140	150.09	19	96	24	46	125
160	160.39	34	110	38	59	140
180	177.75	40	110	44	64	140
200	197	39	105	43	61	135
224	222.01	38	105	42	60	130
250	250.21	41	105	45	62	130
280	288.36	43	105	47	63	125
315	332.32	40	95	44	58	115

P..042e, n1=1800 min^{-1}						Mn2 = 100170
16	15.73	*)	*)	*)	*)	*)
18	18	*)	*)	*)	*)	*)
20	20.11	*)	*)	*)	*)	*)
22	23.01	*)	120	*)	*)	130
25	27.26	*)	215	*)	*)	225
28	30.21	*)	240	*)	*)	250
32	34.04	*)	255	*)	37	265
40	39.23	*)	255	*)	68	265
50	53.42	*)	*)	*)	*)	34
56	61.13	*)	*)	*)	*)	41
63	68.3	*)	*)	*)	*)	46
71	78.16	*)	*)	*)	*)	52
80	87.32	*)	75	*)	*)	120
100	99.93	*)	100	*)	24	145
112	114.35	*)	100	*)	27	140
125	131.16	20	120	27	57	155
140	150.09	*)	93	*)	28	130
160	160.39	12	110	19	48	145
180	177.75	22	115	28	55	145
200	197	22	110	28	54	140
224	222.01	22	105	28	52	135
250	250.21	28	110	34	57	135
280	288.36	33	110	39	60	135
315	332.32	31	100	36	56	125

31991203/EN – 08/2025

P..052e, n1=750 min^{-1}						Mn2 = 124060
		P_{TH} 20 °C / kW				
i_N	i_{ex}	ADP 	ADPF 	AMP 	DM 	AMPF/DMF 
16	15.73	*)	210	*)	33	155
18	18	11	225	22	69	175
20	20.11	36	235	48	92	190
22	23.01	65	240	76	115	200
25	27.26	82	235	92	125	205
28	30.21	89	235	97	125	200
32	34.04	92	225	99	125	195
40	39.23	91	215	98	120	185
50	53.42	56	110	59	79	135
56	61.13	57	110	60	78	130
63	68.3	56	110	59	77	130
71	78.16	56	105	59	76	125
80	87.32	66	115	69	85	135
100	99.93	71	115	74	89	135
112	114.35	70	115	72	87	130
125	131.16	74	115	76	90	130
140	150.09	64	105	67	80	120
160	160.39	69	110	71	84	125
180	177.75	69	105	71	83	120
200	197	66	100	68	80	115
224	222.01	63	98	65	77	110
250	250.21	63	96	64	75	110
280	288.36	61	92	63	73	105
315	332.32	57	86	59	68	98

P..052e, Pn1=1000 min^{-1}						Mn2 = 124060
16	15.73	*)	120	*)	*)	67
18	18	*)	175	*)	*)	135
20	20.11	*)	210	*)	11	170
22	23.01	*)	240	9	62	210
25	27.26	21	255	52	99	225
28	30.21	39	250	69	110	225
32	34.04	52	245	79	115	220
40	39.23	61	230	85	120	210
50	53.42	12	100	18	44	125
56	61.13	14	98	21	46	125
63	68.3	16	97	22	47	120
71	78.16	18	96	24	49	120
80	87.32	40	115	46	69	135
100	99.93	53	120	58	79	145
112	114.35	52	120	58	78	140
125	131.16	64	125	69	88	145
140	150.09	50	110	55	73	130
160	160.39	58	120	63	81	135
180	177.75	60	120	65	82	135
200	197	59	115	63	79	130
224	222.01	56	110	61	76	125
250	250.21	57	110	61	76	125
280	288.36	57	105	61	75	120
315	332.32	54	98	57	70	110

31991203/EN – 08/2025

P..052e, n1=1500 min^{-1}						Mn2 = 124060
i_N	i_{ex}	P_{TH} 20 °C / kW				
		ADP 	ADPF 	AMP 	DM 	AMPF/DMF 
16	15.73	*)	*)	*)	*)	*)
18	18	*)	*)	*)	*)	*)
20	20.11	*)	29	*)	*)	27
22	23.01	*)	155	*)	*)	150
25	27.26	*)	230	*)	*)	230
28	30.21	*)	255	*)	32	255
32	34.04	*)	260	*)	64	265
40	39.23	*)	260	30	90	265
50	53.42	*)	23	*)	*)	62
56	61.13	*)	30	*)	*)	68
63	68.3	*)	34	*)	*)	72
71	78.16	*)	40	*)	*)	76
80	87.32	*)	91	*)	11	125
100	99.93	*)	115	5	41	145
112	114.35	*)	115	8	43	145
125	131.16	28	135	42	72	165
140	150.09	*)	105	11	43	130
160	160.39	19	125	33	62	150
180	177.75	30	130	42	70	155
200	197	29	125	42	68	150
224	222.01	29	120	40	65	145
250	250.21	35	125	46	70	145
280	288.36	40	120	50	72	145
315	332.32	38	115	47	68	135

P..052e, n1=1800 min^{-1}						Mn2 = 124060
16	15.73	*)	*)	*)	*)	*)
18	18	*)	*)	*)	*)	*)
20	20.11	*)	*)	*)	*)	*)
22	23.01	*)	31	*)	*)	63
25	27.26	*)	175	*)	*)	205
28	30.21	*)	225	*)	*)	250
32	34.04	*)	250	*)	12	275
40	39.23	*)	260	*)	56	285
50	53.42	*)	*)	*)	*)	*)
56	61.13	*)	*)	*)	*)	*)
63	68.3	*)	*)	*)	*)	10
71	78.16	*)	*)	*)	*)	20
80	87.32	*)	61	*)	*)	105
100	99.93	*)	100	*)	6	140
112	114.35	*)	100	*)	10	140
125	131.16	*)	135	17	57	170
140	150.09	*)	97	*)	15	130
160	160.39	*)	120	6	44	155
180	177.75	*)	130	20	56	160
200	197	3	125	21	55	155
224	222.01	4	120	21	54	150
250	250.21	14	125	31	62	155
280	288.36	24	130	39	68	155
315	332.32	23	120	37	64	145

31991203/EN – 08/2025

P..062e, n1=750 min^{-1}						Mn2 = 185660
		P_{TH} 20 °C / kW				
i_N	i_{ex}	ADP 	ADPF 	AMP 	DM 	AMPF/DMF 
16	15.73	*)	---	*)	---	285
18	18	9	---	25	---	360
20	20.11	51	---	72	---	410
22.4	23.01	110	---	130	---	460
28	27.26	155	---	175	---	480
31.5	30.21	170	---	190	---	485
35.5	34.04	185	---	205	---	490
40	39.23	190	---	210	---	480
56	53.42	65	160	64	83	140
63	61.13	65	165	65	83	140
71	68.3	65	165	65	86	145
80	78.16	65	165	64	88	145
90	87.32	89	190	88	115	170
100	99.93	100	190	100	125	175
112	114.35	105	185	100	125	170
125	131.16	115	185	115	135	170
140	150.09	100	165	99	120	155
160	160.39	110	170	110	125	160
180	177.75	105	165	105	120	155
200	197	100	160	100	115	145
224	222.01	97	150	97	110	140
250	250.21	95	145	95	105	135
280	288.36	90	135	90	100	130
315	332.32	84	130	84	94	120

P..062e, n1=1000 min^{-1}						Mn2 = 185660
16	15.73	*)	---	*)	---	81
18	18	*)	---	*)	---	245
20	20.11	*)	---	*)	---	350
22.4	23.01	*)	---	*)	---	450
28	27.26	40	---	76	---	520
31.5	30.21	75	---	115	---	540
35.5	34.04	105	---	140	---	540
40	39.23	125	---	160	---	530
56	53.42	8	130	11	40	115
63	61.13	13	135	15	43	115
71	68.3	16	135	18	45	115
80	78.16	19	140	21	47	120
90	87.32	52	185	54	75	165
100	99.93	66	210	68	97	190
112	114.35	68	205	70	99	190
125	131.16	92	210	95	120	195
140	150.09	67	185	70	98	170
160	160.39	85	195	88	115	180
180	177.75	92	190	95	120	180
200	197	91	180	94	115	170
224	222.01	90	175	92	110	165
250	250.21	92	170	94	110	160
280	288.36	90	160	92	105	150
315	332.32	84	150	86	99	140

31991203/EN – 08/2025

P..062e, n1=1500 min^{-1}						Mn2 = 185660
		P_{TH} 20 °C / kW				
i_N	i_{ex}	ADP 	ADPF 	AMP 	DM 	AMPF/DMF 
16	15.73	*)	---	*)	---	*)
18	18	*)	---	*)	---	*)
20	20.11	*)	---	*)	---	53
22.4	23.01	*)	---	*)	---	300
28	27.26	*)	---	*)	---	500
31.5	30.21	*)	---	*)	---	570
35.5	34.04	*)	---	*)	---	620
40	39.23	*)	---	31	---	640
56	53.42	*)	46	*)	*)	28
63	61.13	*)	55	*)	*)	39
71	68.3	*)	62	*)	*)	46
80	78.16	*)	67	*)	*)	53
90	87.32	*)	145	*)	*)	130
100	99.93	*)	190	5	43	175
112	114.35	*)	190	9	44	180
125	131.16	43	245	52	80	230
140	150.09	*)	185	13	44	175
160	160.39	32	220	41	69	210
180	177.75	43	225	51	85	215
200	197	42	215	49	84	205
224	222.01	41	205	49	83	200
250	250.21	51	205	61	96	200
280	288.36	60	200	70	105	195
315	332.32	58	185	68	100	180

P..062e, n1=1800 min^{-1}						Mn2 = 185660
16	15.73	*)	---	*)	---	*)
18	18	*)	---	*)	---	*)
20	20.11	*)	---	*)	---	*)
22.4	23.01	*)	---	*)	---	115
28	27.26	*)	---	*)	---	430
31.5	30.21	*)	---	*)	---	550
35.5	34.04	*)	---	*)	---	630
40	39.23	*)	---	*)	---	690
56	53.42	*)	*)	*)	*)	*)
63	61.13	*)	*)	*)	*)	*)
71	68.3	*)	*)	*)	*)	*)
80	78.16	*)	*)	*)	*)	*)
90	87.32	*)	110	*)	*)	100
100	99.93	*)	170	*)	*)	160
112	114.35	*)	175	*)	*)	165
125	131.16	8	240	24	61	235
140	150.09	*)	170	*)	8	165
160	160.39	*)	220	9	46	215
180	177.75	13	235	28	60	230
200	197	14	225	28	58	220
224	222.01	15	215	28	58	210
250	250.21	28	220	40	75	215
280	288.36	38	215	50	89	215
315	332.32	36	205	49	87	200

31991203/EN – 08/2025

P..072e, n1=750 min^{-1}						Mn2 = 245660
		P_{TH} 20 °C / kW				
i_N	i_{ex}	ADP 	ADPF 	AMP 	DM 	AMPF/DMF 
16	15.75	*)	---	*)	---	---
18	17.98	*)	---	*)	---	---
20	20.04	20	---	55	---	---
22.4	22.86	89	---	135	---	---
28	26.92	155	---	200	---	---
31.5	29.71	185	---	225	---	---
35.5	33.31	205	---	240	---	---
40	38.1	215	---	255	---	---
56	53.48	67	215	73	92	115
63	61.07	69	220	75	93	115
71	68.07	69	225	75	91	120
80	77.63	69	225	74	94	125
90	87.03	95	255	105	125	160
100	99.59	115	260	120	145	175
112	113.57	115	250	120	145	175
125	130.72	130	245	140	160	180
140	147.64	110	225	120	140	160
160	158.42	125	230	135	150	170
180	175.57	130	225	130	145	165
200	193.79	125	215	125	140	160
224	217.21	120	205	120	135	150
250	244.8	115	200	120	130	145
280	282.12	110	190	115	125	140
315	322.69	105	175	105	120	130

P..072e, n1=1000 min^{-1}						Mn2 = 245660
16	15.75	*)	---	*)	---	---
18	17.98	*)	---	*)	---	---
20	20.04	*)	---	*)	---	---
22.4	22.86	*)	---	*)	---	---
28	26.92	*)	---	61	---	---
31.5	29.71	40	---	115	---	---
35.5	33.31	75	---	155	---	---
40	38.1	110	---	185	---	---
56	53.48	*)	175	*)	26	98
63	61.07	*)	180	6	33	100
71	68.07	*)	185	10	37	100
80	77.63	*)	185	15	41	100
90	87.03	46	250	62	83	155
100	99.59	67	280	81	105	190
112	113.57	67	275	82	110	190
125	130.72	95	280	115	140	220
140	147.64	65	250	83	110	185
160	158.42	87	260	105	135	200
180	175.57	97	260	115	140	200
200	193.79	96	245	115	140	195
224	217.21	95	235	115	135	185
250	244.8	100	230	120	135	180
280	282.12	105	220	115	130	175
315	322.69	99	205	110	125	165

31991203/EN – 08/2025

P..072e, n1=1500 min^{-1}						Mn2 = 245660
		P_{TH} 20 °C / kW				
i_N	i_{ex}	ADP 	ADPF 	AMP 	DM 	AMPF/DMF 
16	15.75	*)	---	*)	---	---
18	17.98	*)	---	*)	---	---
20	20.04	*)	---	*)	---	---
22.4	22.86	*)	---	*)	---	---
28	26.92	*)	---	*)	---	---
31.5	29.71	*)	---	*)	---	---
35.5	33.31	*)	---	*)	---	---
40	38.1	*)	---	18	---	---
56	53.48	*)	56	*)	*)	*)
63	61.07	*)	73	*)	*)	*)
71	68.07	*)	81	*)	*)	*)
80	77.63	*)	88	*)	*)	19
90	87.03	*)	195	*)	*)	130
100	99.59	*)	255	*)	34	185
112	113.57	*)	255	*)	39	190
125	130.72	23	325	63	89	260
140	147.64	*)	250	10	41	185
160	158.42	9	295	48	74	240
180	175.57	28	300	62	92	255
200	193.79	29	290	61	92	245
224	217.21	29	275	59	92	235
250	244.8	39	275	74	105	240
280	282.12	47	270	88	120	235
315	322.69	46	255	85	120	220

P..072e, n1=1800 min^{-1}						Mn2 = 245660
16	15.75	*)	---	*)	---	---
18	17.98	*)	---	*)	---	---
20	20.04	*)	---	*)	---	---
22.4	22.86	*)	---	*)	---	---
28	26.92	*)	---	*)	---	---
31.5	29.71	*)	---	*)	---	---
35.5	33.31	*)	---	*)	---	---
40	38.1	*)	---	*)	---	---
56	53.48	*)	*)	*)	*)	*)
63	61.07	*)	*)	*)	*)	*)
71	68.07	*)	*)	*)	*)	*)
80	77.63	*)	*)	*)	*)	*)
90	87.03	*)	145	*)	*)	100
100	99.59	*)	225	*)	*)	170
112	113.57	*)	230	*)	*)	175
125	130.72	*)	315	26	64	270
140	147.64	*)	230	*)	*)	175
160	158.42	*)	290	6	44	245
180	175.57	*)	310	32	65	275
200	193.79	*)	300	33	64	270
224	217.21	*)	285	34	63	260
250	244.8	*)	290	49	80	265
280	282.12	19	290	63	100	265
315	322.69	19	275	62	98	250

31991203/EN – 08/2025

P..082e, n1=750 min^{-1}						Mn2 = 359400
		P_{TH} 20 °C / kW				
i_N	i_{ex}	ADP 	ADPF 	AMP 	DM 	AMPF/DMF 
16	15.96	*)	---	*)	---	---
18	18.19	*)	---	*)	---	---
20	20.23	*)	---	*)	---	---
22.4	22.99	*)	---	62	---	---
28	26.94	90	---	170	---	---
31.5	29.62	140	---	215	---	---
35.5	33.04	180	---	255	---	---
40	37.53	210	---	280	---	---
56	54.2	52	255	60	---	110
63	61.76	57	265	65	---	110
71	68.7	60	270	67	---	110
80	78.08	63	275	69	---	110
90	87.83	100	335	105	---	165
100	100.51	125	345	135	---	195
112	114.24	125	335	135	---	195
125	131.93	155	335	160	---	220
140	147.19	125	305	135	---	190
160	158.52	145	310	155	---	210
180	175.69	155	305	160	---	205
200	193.19	150	295	160	---	200
224	215.47	150	280	155	---	190
250	242.84	145	275	150	---	185
280	279.86	140	260	145	---	180
315	317.93	135	245	140	---	170

P..082e, n1=1000 min^{-1}						Mn2 = 359400
16	15.96	*)	---	*)	---	---
18	18.19	*)	---	*)	---	---
20	20.23	*)	---	*)	---	---
22.4	22.99	*)	---	*)	---	---
28	26.94	*)	---	*)	---	---
31.5	29.62	*)	---	48	---	---
35.5	33.04	*)	---	105	---	---
40	37.53	45	---	170	---	---
56	54.2	*)	200	*)	---	31
63	61.76	*)	200	*)	---	41
71	68.7	*)	205	*)	---	47
80	78.08	*)	210	*)	---	54
90	87.83	31	315	47	---	130
100	100.51	70	370	83	---	170
112	114.24	72	370	83	---	175
125	131.93	105	385	120	---	230
140	147.19	69	340	80	---	175
160	158.52	95	360	110	---	215
180	175.69	110	355	125	---	230
200	193.19	110	340	125	---	225
224	215.47	110	325	125	---	215
250	242.84	120	320	135	---	215
280	279.86	130	310	145	---	210
315	317.93	125	290	135	---	195

31991203/EN – 08/2025

P..082e, n1=1500 min^{-1}						Mn2 = 359400
		P_{TH} 20 °C / kW				
i_N	i_{ex}	ADP 	ADPF 	AMP 	DM 	AMPF/DMF 
16	15.96	*)	---	*)	---	---
18	18.19	*)	---	*)	---	---
20	20.23	*)	---	*)	---	---
22.4	22.99	*)	---	*)	---	---
28	26.94	*)	---	*)	---	---
31.5	29.62	*)	---	*)	---	---
35.5	33.04	*)	---	*)	---	---
40	37.53	*)	---	*)	---	---
56	54.2	*)	*)	*)	---	*)
63	61.76	*)	18	*)	---	*)
71	68.7	*)	33	*)	---	*)
80	78.08	*)	51	*)	---	*)
90	87.83	*)	230	*)	---	97
100	100.51	*)	330	*)	---	170
112	114.24	*)	330	*)	---	170
125	131.93	12	440	46	---	285
140	147.19	*)	325	*)	---	175
160	158.52	*)	405	23	---	255
180	175.69	22	415	52	---	290
200	193.19	24	405	52	---	290
224	215.47	25	390	52	---	285
250	242.84	44	390	67	---	295
280	279.86	58	385	85	---	295
315	317.93	56	360	83	---	280

P..082e, n1=1800 min^{-1}						Mn2 = 359400
16	15.96	*)	---	*)	---	---
18	18.19	*)	---	*)	---	---
20	20.23	*)	---	*)	---	---
22.4	22.99	*)	---	*)	---	---
28	26.94	*)	---	*)	---	---
31.5	29.62	*)	---	*)	---	---
35.5	33.04	*)	---	*)	---	---
40	37.53	*)	---	*)	---	---
56	54.2	*)	*)	*)	---	*)
63	61.76	*)	*)	*)	---	*)
71	68.7	*)	*)	*)	---	*)
80	78.08	*)	*)	*)	---	*)
90	87.83	*)	170	*)	---	29
100	100.51	*)	285	*)	---	155
112	114.24	*)	295	*)	---	160
125	131.93	*)	430	*)	---	300
140	147.19	*)	295	*)	---	155
160	158.52	*)	395	*)	---	260
180	175.69	*)	430	*)	---	305
200	193.19	*)	415	*)	---	305
224	215.47	*)	400	*)	---	305
250	242.84	*)	415	30	---	335
280	279.86	20	415	55	---	340
315	317.93	20	390	53	---	320

*) Contact SEW-EURODRIVE.

31991203/EN – 08/2025

11 Dimension sheets

11.1 P2.e DM DRN.. planetary gearmotors

P2PS002e/B DM..

45 003 01 22

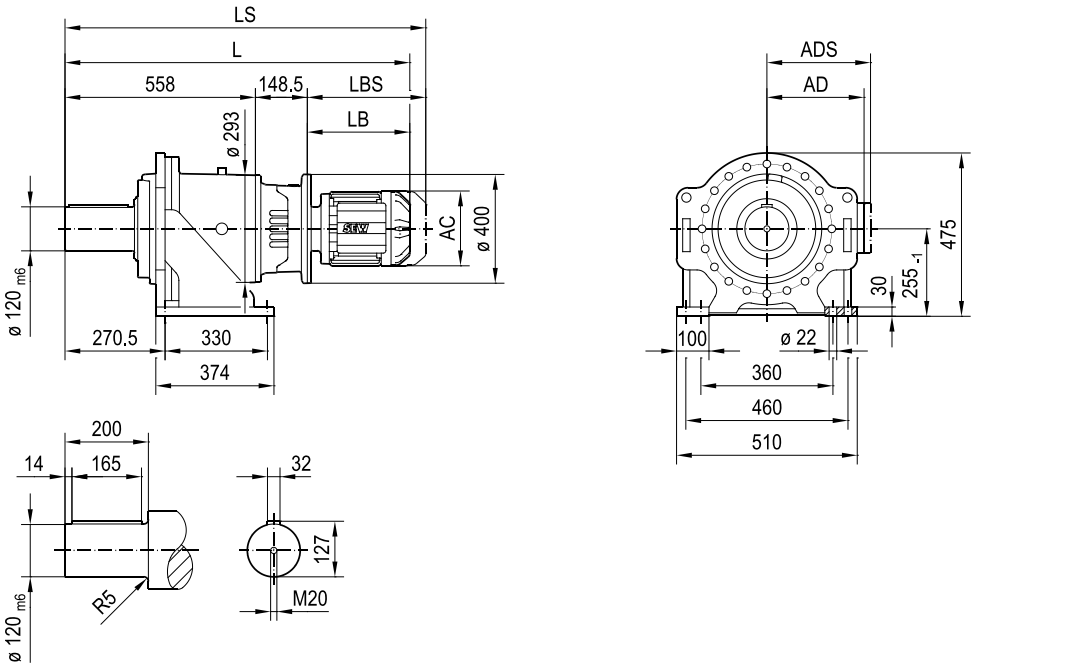

P2PH002e/B..

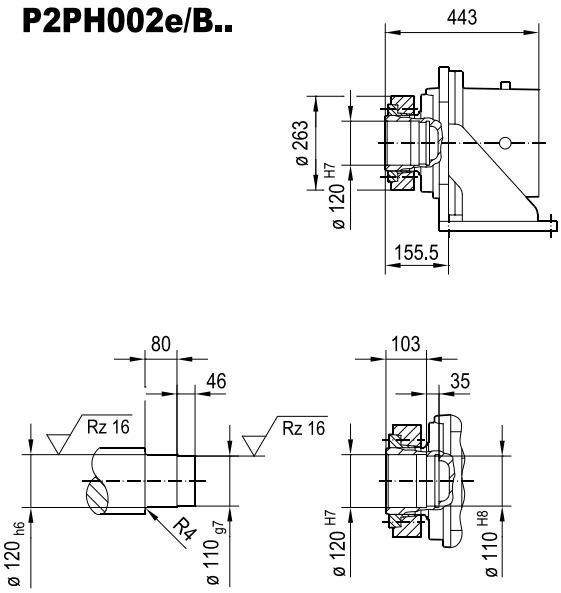

(→ 📖 -)	DRN							
	160..	180..	200L	225..	250M			
AC	314	357	394	434	495			
AD	253	268	283	305	394			
ADS	253	268	283	305	394			
L	1223	1246	1355	1330	1467			
LS	1412	1435	1560	1535	1707			
LB	516	539	649	623	760			
LBS	705	728	854	828	1000			

31991203/EN – 08/2025

P2PS002e/F DM..

45 005 01 22

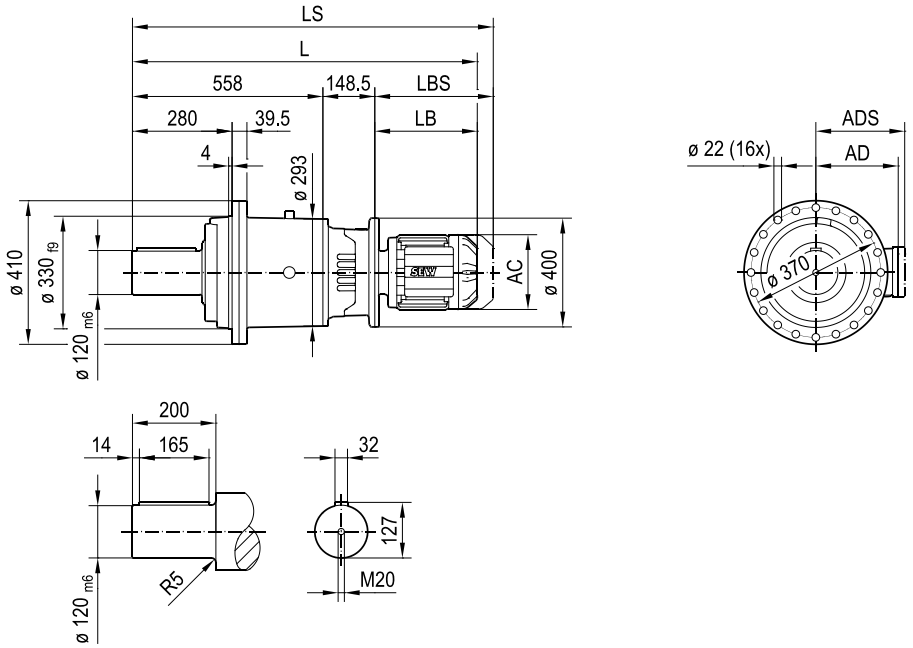

P2PH002e/F..

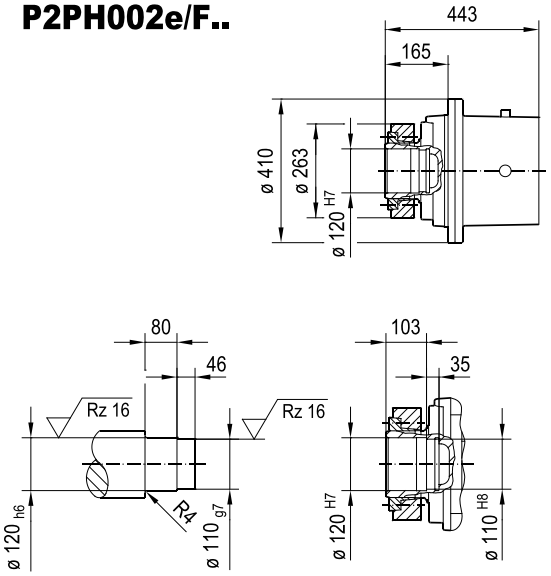

P2P.002e/T..

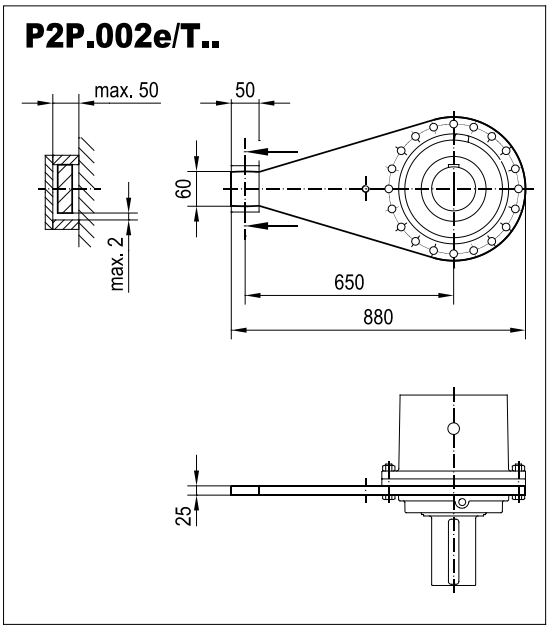

(→ 📖 -)	DRN							
	160..	180..	200L	225..	250M			
AC	314	357	394	434	495			
AD	253	268	283	305	394			
ADS	253	268	283	305	394			
L	1223	1246	1355	1330	1467			
LS	1412	1435	1560	1535	1707			
LB	516	539	649	623	760			
LBS	705	728	854	828	1000			

31991203/EN – 08/2025

P3PS002e/B DM..

45 004 01 22

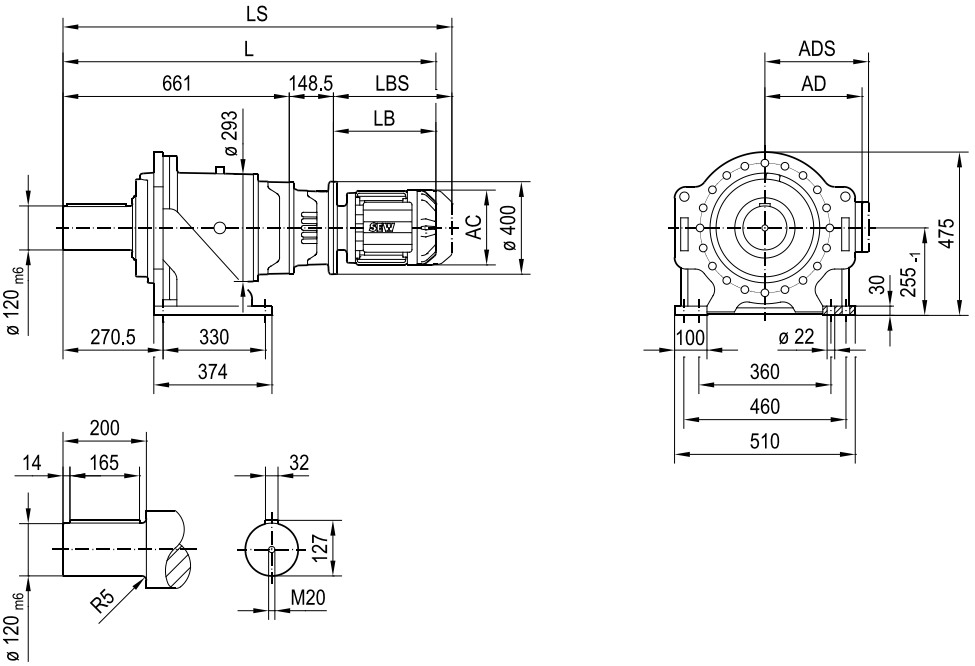

P3PH002e/B..

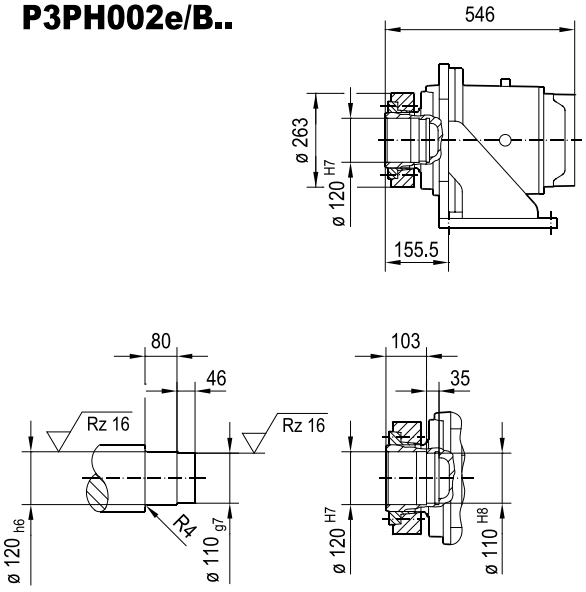

(→ 📖 -)	DRN							
	132S	132M	132L	160..	180..	200L	225..	
AC	221	261	261	314	357	394	434	
AD	170	228	228	253	268	283	305	
ADS	172	228	228	253	268	283	305	
L	1216	1234	1259	1326	1349	1458	1433	
LS	1328	1371	1396	1515	1538	1663	1638	
LB	406	424	450	516	539	649	623	
LBS	518	562	587	705	728	854	828	

31991203/EN – 08/2025

P3PS002e/F DM..

45 006 01 22

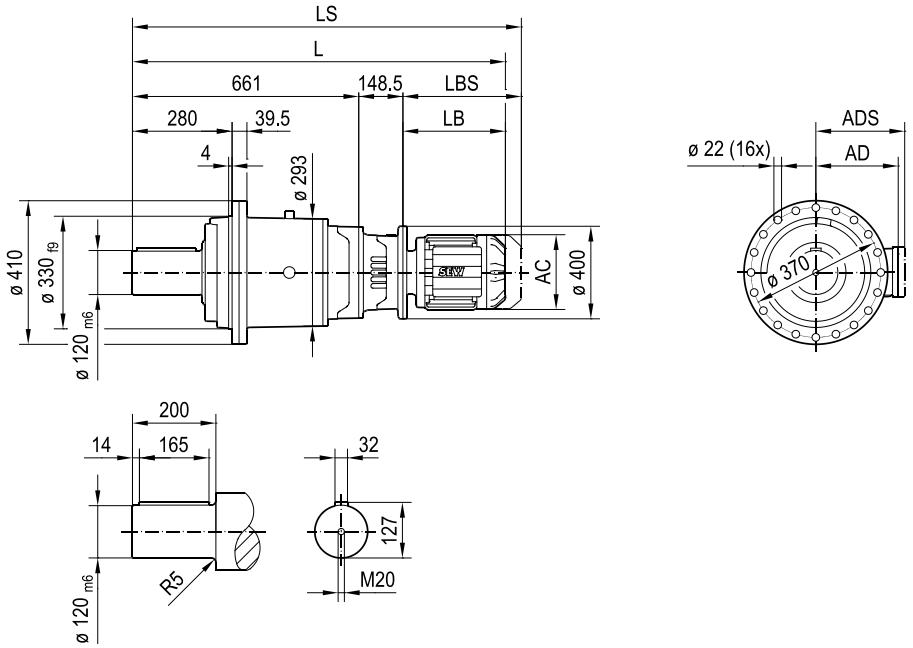

P3PH002e/F..

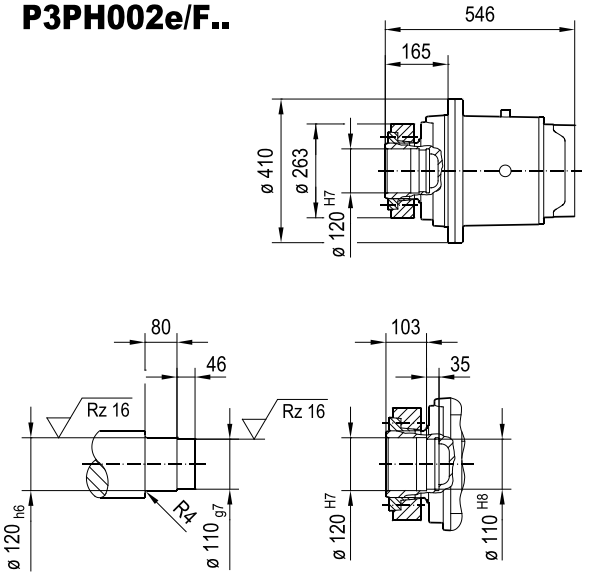

P3P.002e/T..

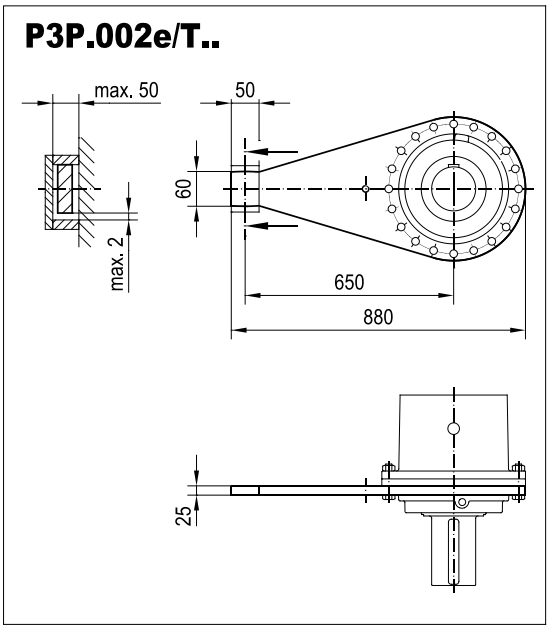

(→ 📖 -)	DRN							
	132S	132M	132L	160..	180..	200L	225..	
AC	221	261	261	314	357	394	434	
AD	170	228	228	253	268	283	305	
ADS	172	228	228	253	268	283	305	
L	1216	1234	1259	1326	1349	1458	1433	
LS	1328	1371	1396	1515	1538	1663	1638	
LB	406	424	450	516	539	649	623	
LBS	518	562	587	705	728	854	828	

31991203/EN – 08/2025

P2PS012e/B DM..

45 011 02 22

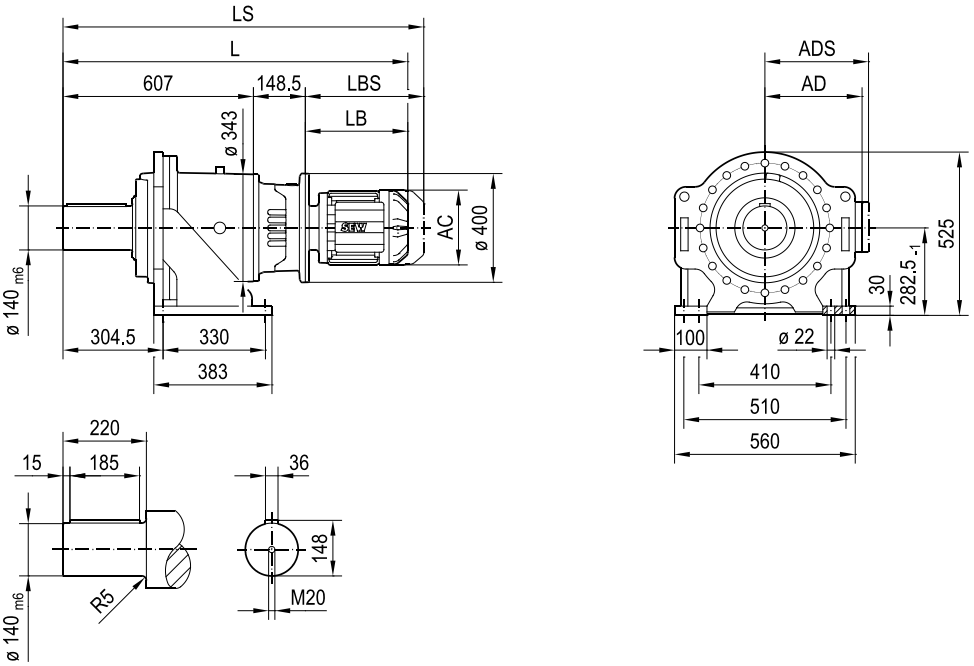

P2PH012e/B..

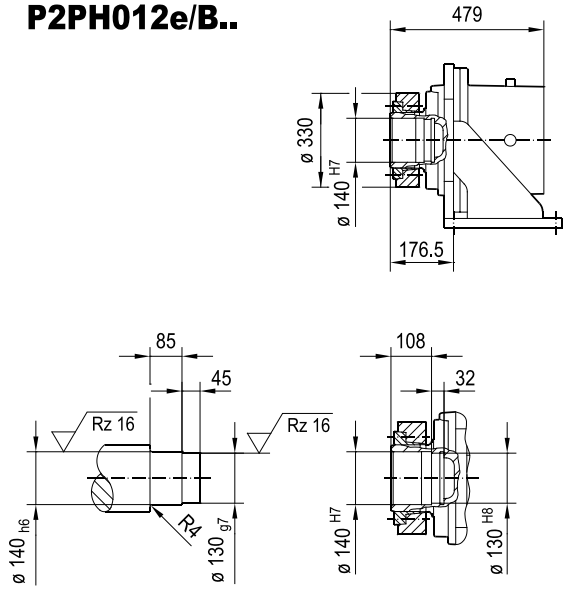

(→ 📖 -)	DRN							
	160..	180..	200L	225..	250M	280S	280M	
AC	314	357	394	434	495	495	495	
AD	253	268	283	305	394	394	394	
ADS	253	268	283	305	394	394	394	
L	1272	1295	1404	1379	1516	1516	1611	
LS	1461	1484	1609	1584	1756	1756	1851	
LB	516	539	649	623	760	760	855	
LBS	705	728	854	828	1000	1000	1095	

31991203/EN – 08/2025

P2PS012e/F DM..

45 013 02 22

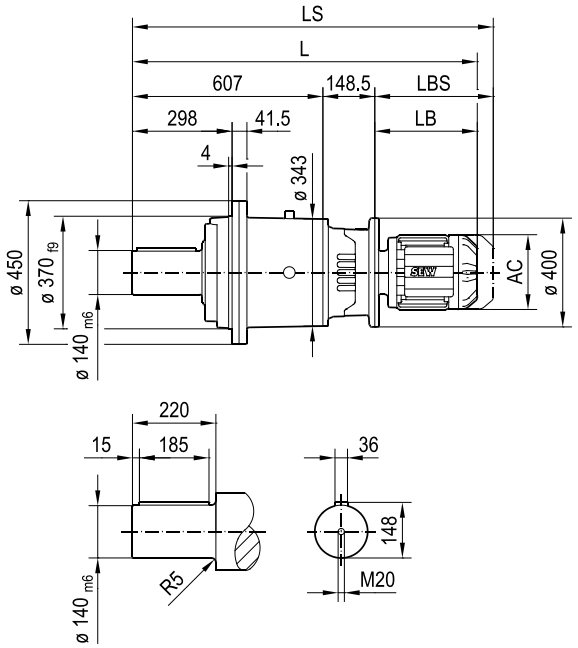

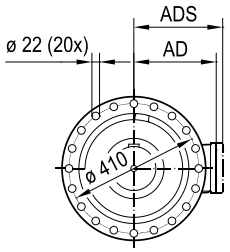

P2PH012e/F..

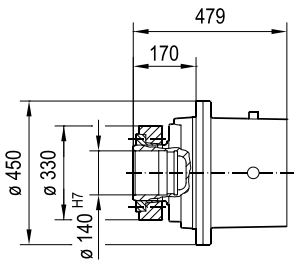

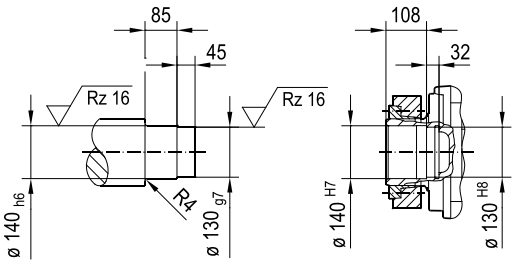

P2P.012e/T..

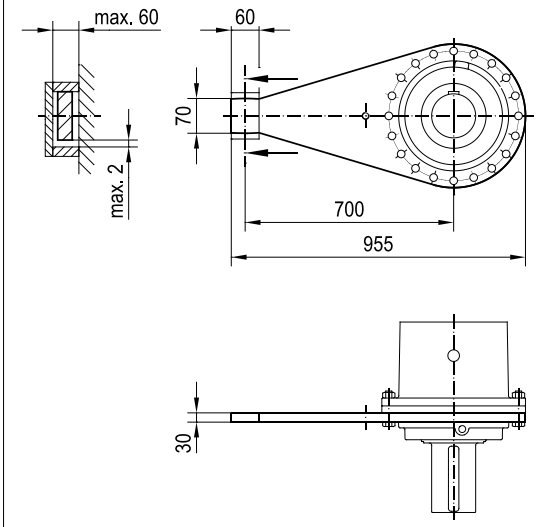

(→ 📖 -)	DRN							
	160..	180..	200L	225..	250M	280S	280M	
AC	314	357	394	434	495	495	495	
AD	253	268	283	305	394	394	394	
ADS	253	268	283	305	394	394	394	
L	1272	1295	1404	1379	1516	1516	1611	
LS	1461	1484	1609	1584	1756	1756	1851	
LB	516	539	649	623	760	760	855	
LBS	705	728	854	828	1000	1000	1095	

31991203/EN – 08/2025

P3PS012e/B DM..

45 012 02 22

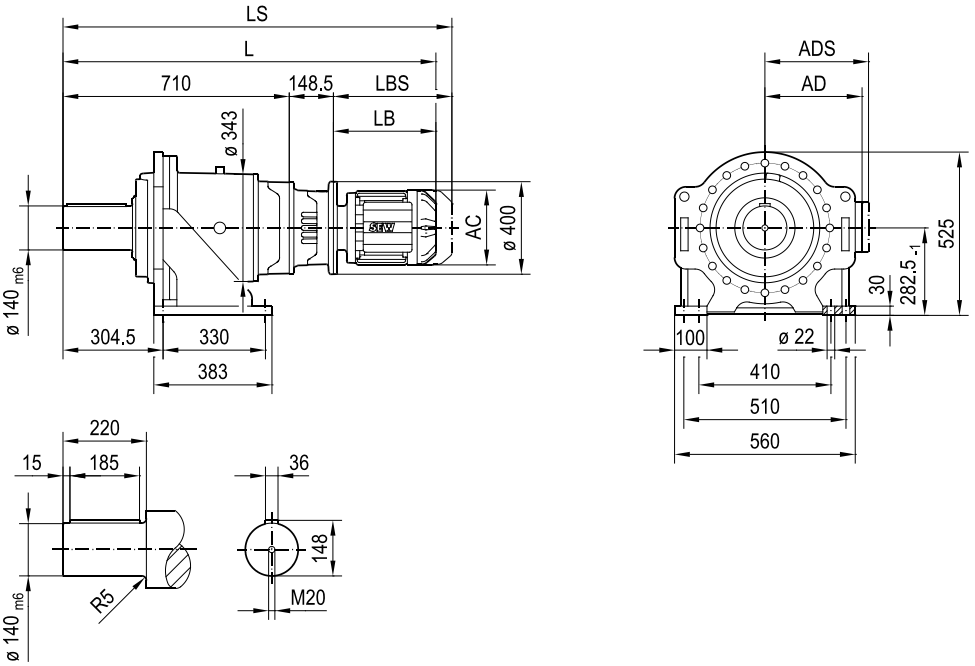

P3PH012e/B..

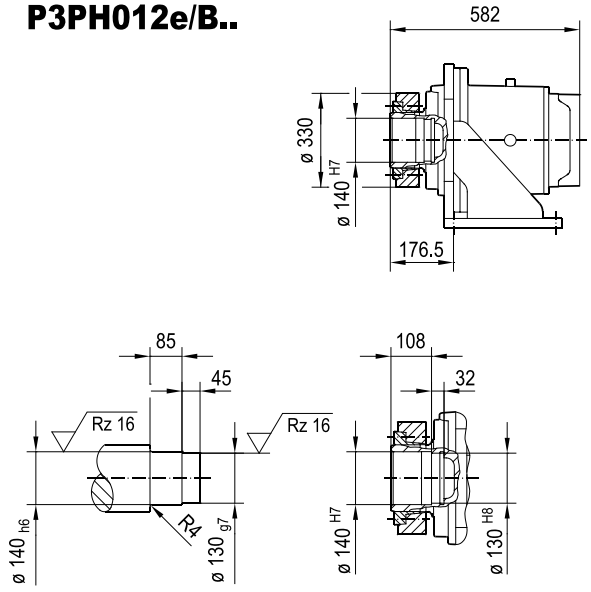

(→ 📖 -)	DRN							
	132S	132M	132L	160..	180..	200L	225..	
AC	221	261	261	314	357	394	434	
AD	170	228	228	253	268	283	305	
ADS	172	228	228	253	268	283	305	
L	1265	1283	1308	1375	1398	1507	1482	
LS	1377	1420	1445	1564	1587	1712	1687	
LB	406	424	450	516	539	649	623	
LBS	518	562	587	705	728	854	828	

31991203/EN – 08/2025

P3PS012e/F DM..

45 014 02 22

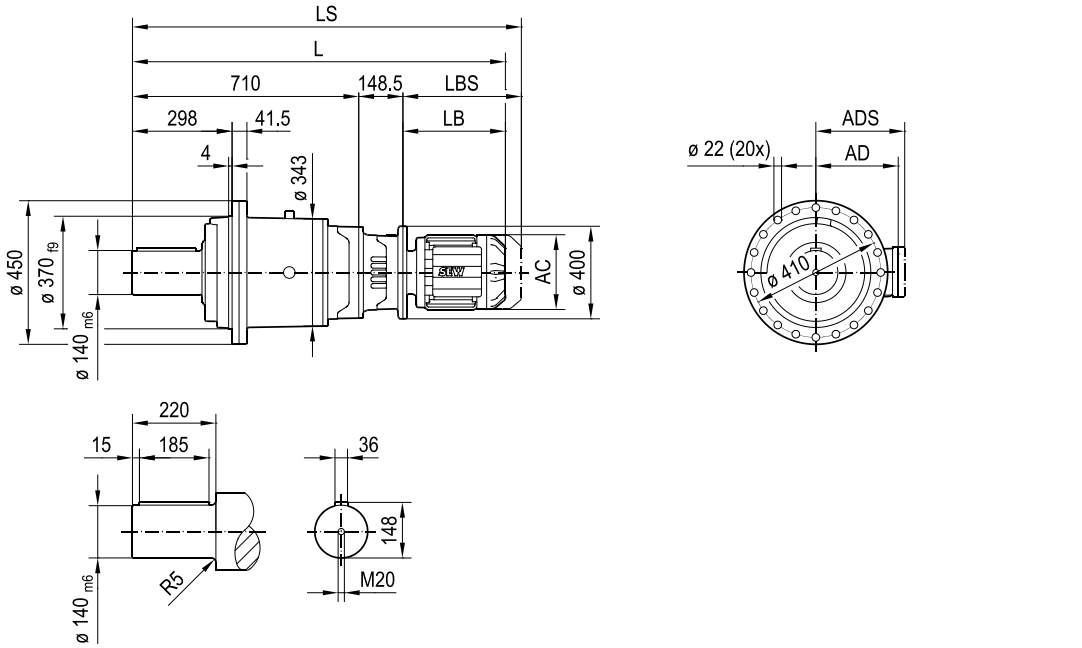

P3PH012e/F..

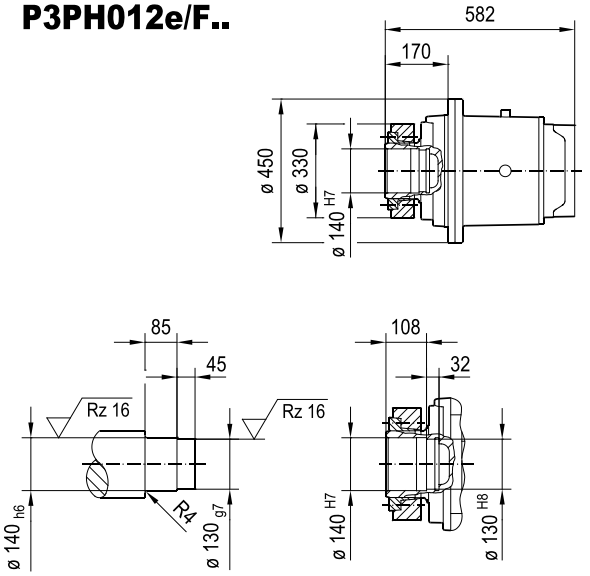

P3P.012e/T..

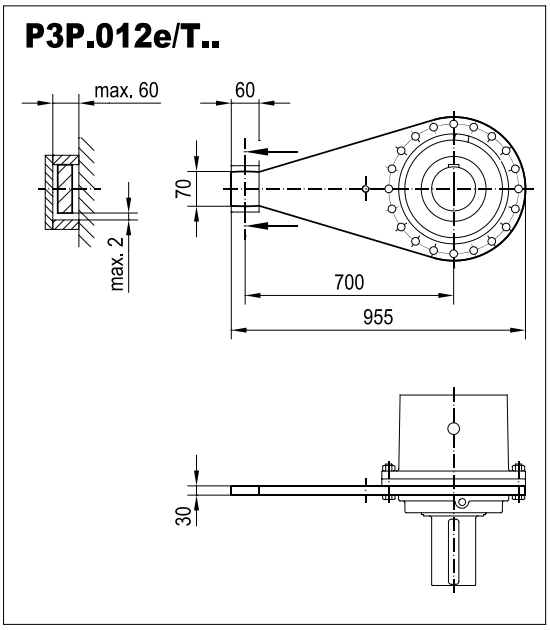

(→ 📖 -)	DRN							
	132S	132M	132L	160..	180..	200L	225..	
AC	221	261	261	314	357	394	434	
AD	170	228	228	253	268	283	305	
ADS	172	228	228	253	268	283	305	
L	1265	1283	1308	1375	1398	1507	1482	
LS	1377	1420	1445	1564	1587	1712	1687	
LB	406	424	450	516	539	649	623	
LBS	518	562	587	705	728	854	828	

31991203/EN – 08/2025

P2PS022e/B DM..

45 019 01 22

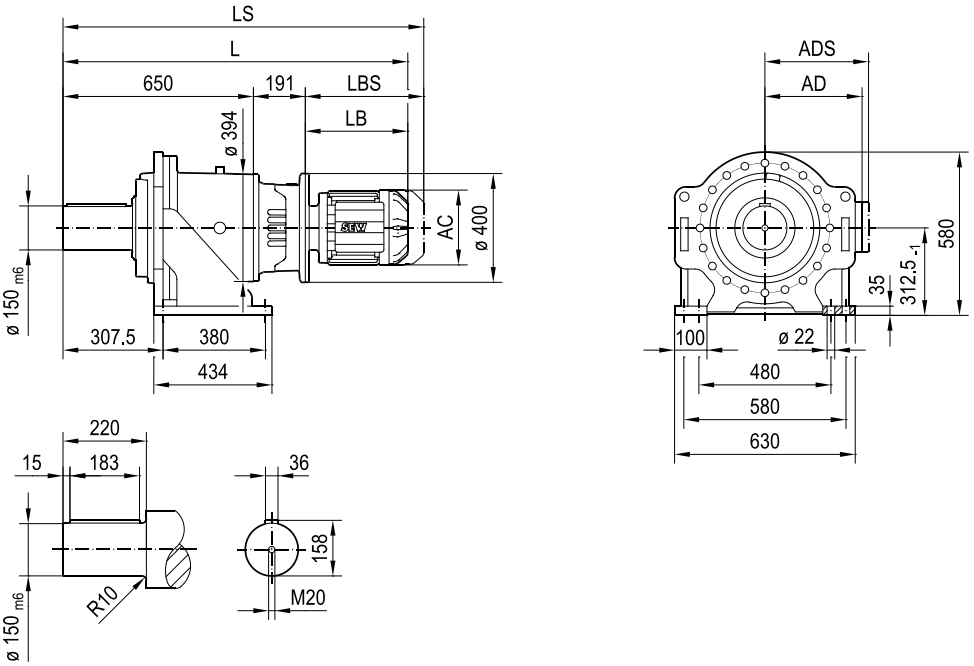

P2PH022e/B..

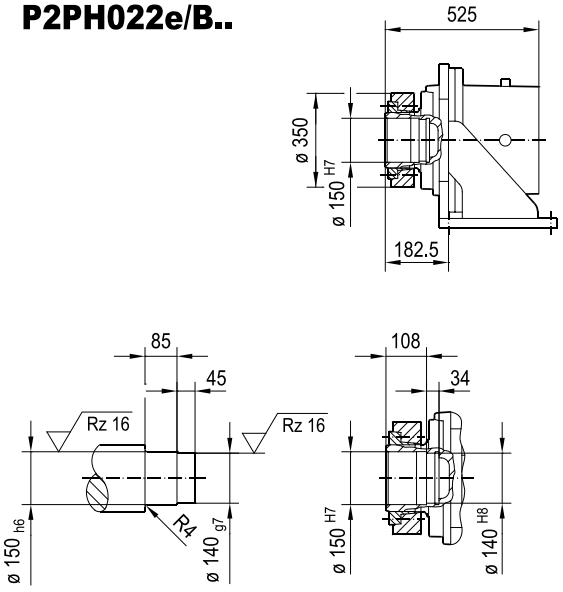

(→ 📖 -)	DRN							
	180..	200L	225..	250M	280S	280M		
AC	357	394	434	495	495	495		
AD	268	283	305	394	394	394		
ADS	268	283	305	394	394	394		
L	1380	1490	1464	1601	1601	1696		
LS	1569	1695	1669	1841	1841	1936		
LB	539	649	623	760	760	855		
LBS	728	854	828	1000	1000	1095		

31991203/EN – 08/2025

P2PS022e/F DM..

45 021 01 22

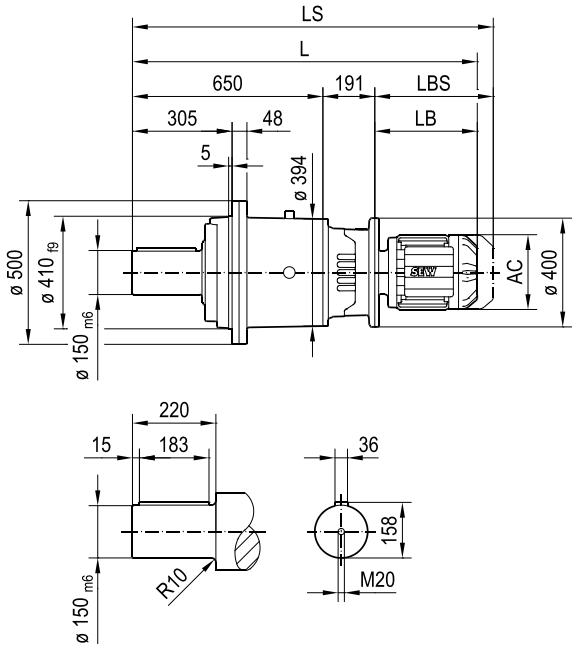

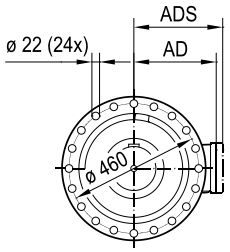

P2PH022e/F..

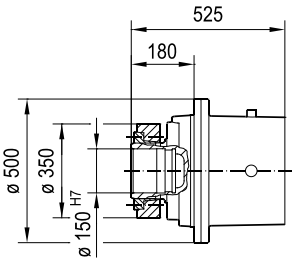

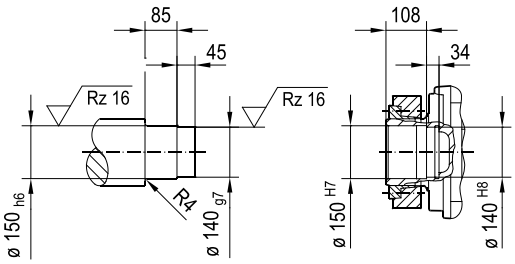

P2P.022e/T..

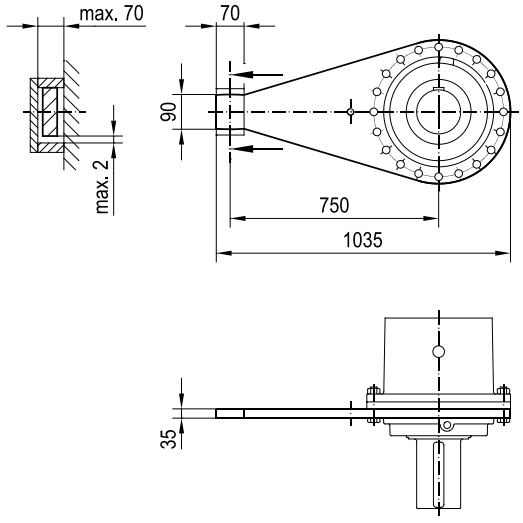

(→ 📖 -)	DRN							
	180..	200L	225..	250M	280S	280M		
AC	357	394	434	495	495	495		
AD	268	283	305	394	394	394		
ADS	268	283	305	394	394	394		
L	1380	1490	1464	1601	1601	1696		
LS	1569	1695	1669	1841	1841	1936		
LB	539	649	623	760	760	855		
LBS	728	854	828	1000	1000	1095		

31991203/EN – 08/2025

P3PS022e/B DM..

45 020 01 22

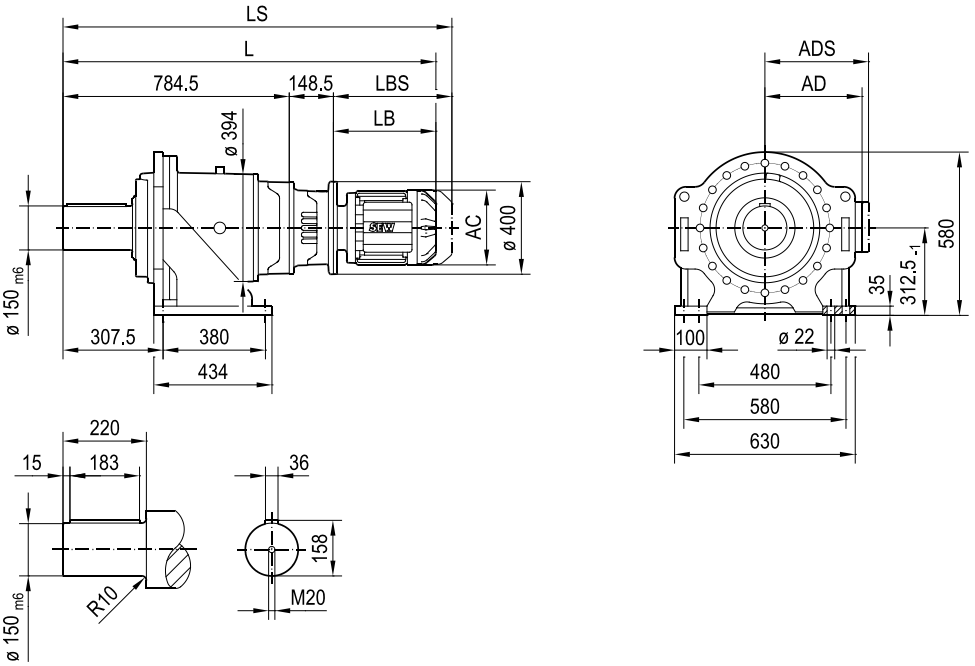

P3PH022e/B..

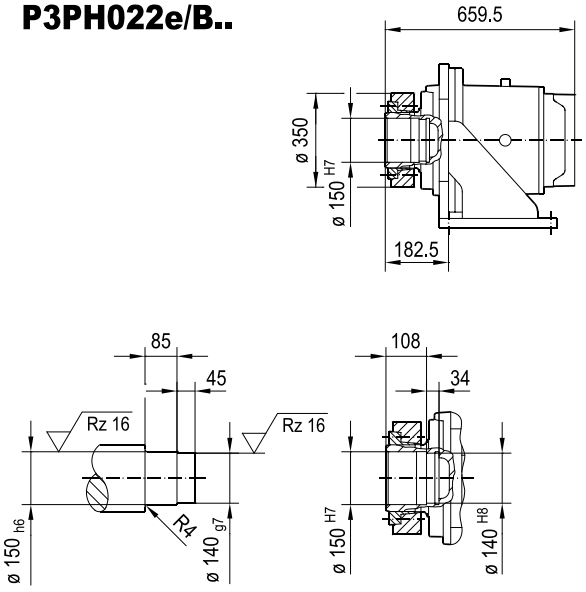

(→ 📖 -)	DRN							
	132M	132L	160..	180..	200L	225..	250M	
AC	261	261	314	357	394	434	495	
AD	228	228	253	268	283	305	394	
ADS	228	228	253	268	283	305	394	
L	1357	1383	1449	1472	1582	1556	1693	
LS	1495	1520	1638	1661	1787	1761	1933	
LB	424	450	516	539	649	623	760	
LBS	562	587	705	728	854	828	1000	

31991203/EN – 08/2025

P3PS022e/F DM..

45 022 01 22

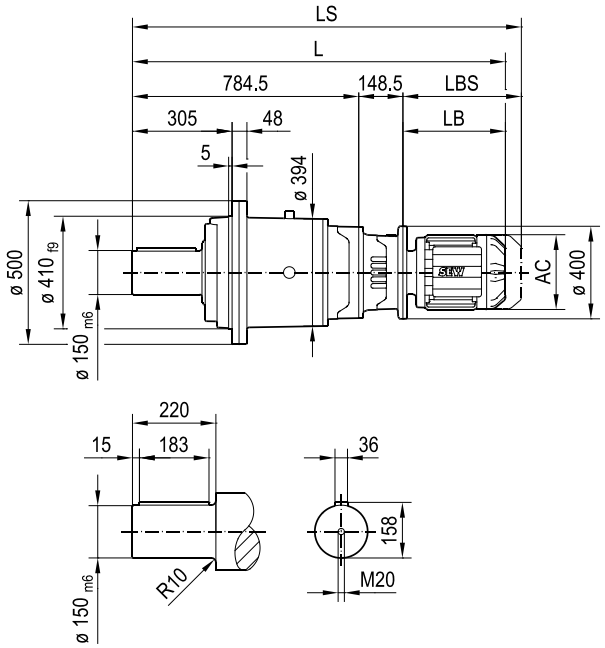

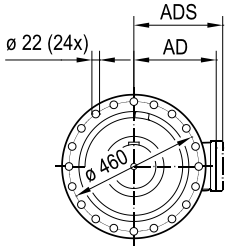

P3PH022e/F..

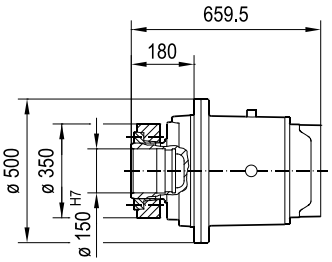

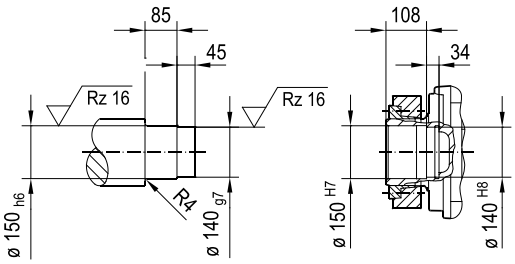

P3P.022e/T..

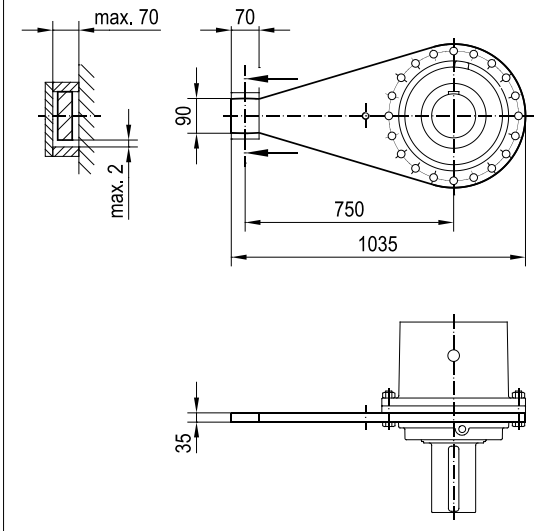

(→ 📖 -)	DRN							
	132M	132L	160..	180..	200L	225..	250M	
AC	261	261	314	357	394	434	495	
AD	228	228	253	268	283	305	394	
ADS	228	228	253	268	283	305	394	
L	1357	1383	1449	1472	1582	1556	1693	
LS	1495	1520	1638	1661	1787	1761	1933	
LB	424	450	516	539	649	623	760	
LBS	562	587	705	728	854	828	1000	

31991203/EN – 08/2025

P2PS032e/B DM..

45 012 01 23

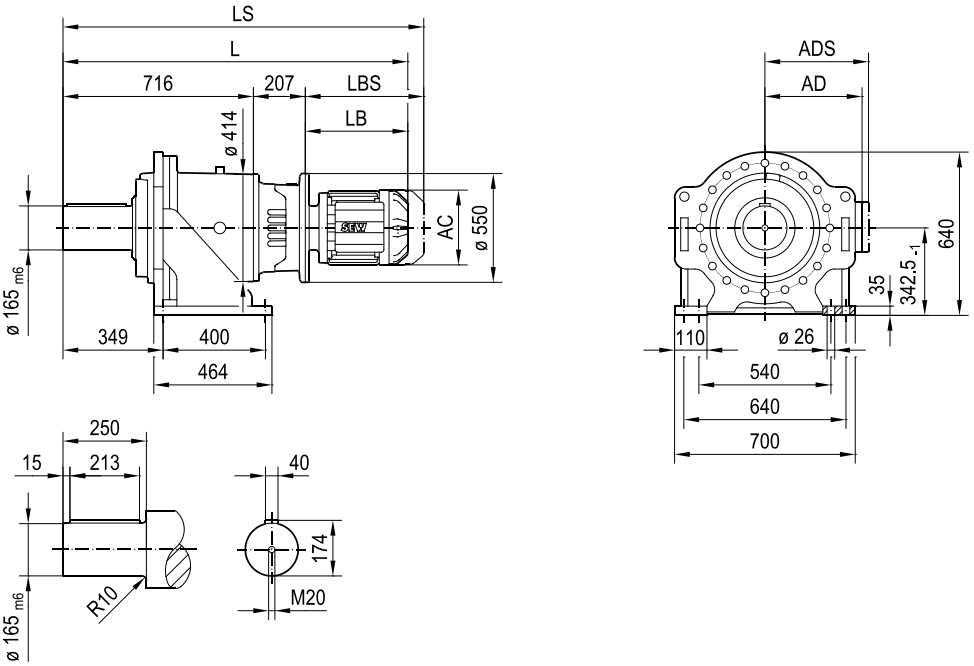

P2PH032e/B..

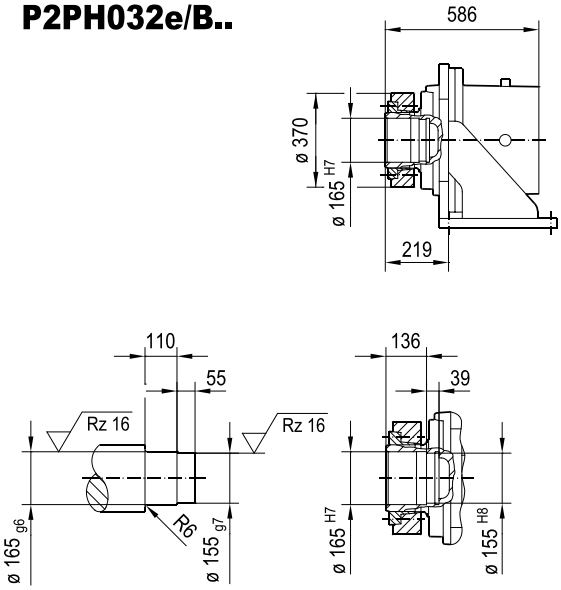

(→ 📖 -)	DRN							
	200L	225..	250M	280S	280M	315S-M	315ME-H	
AC	394	434	495	495	495	624	624	
AD	283	305	394	394	394	506	506	
ADS	283	305	394	394	394	506	506	
L	1556	1530	1667	1667	1762	1864	1994	
LS	1761	1735	1907	1907	2002	2115	2245	
LB	633	607	744	744	839	941	1071	
LBS	838	812	984	984	1079	1192	1322	

31991203/EN – 08/2025

P2PS032e/F DM..

45 013 01 23

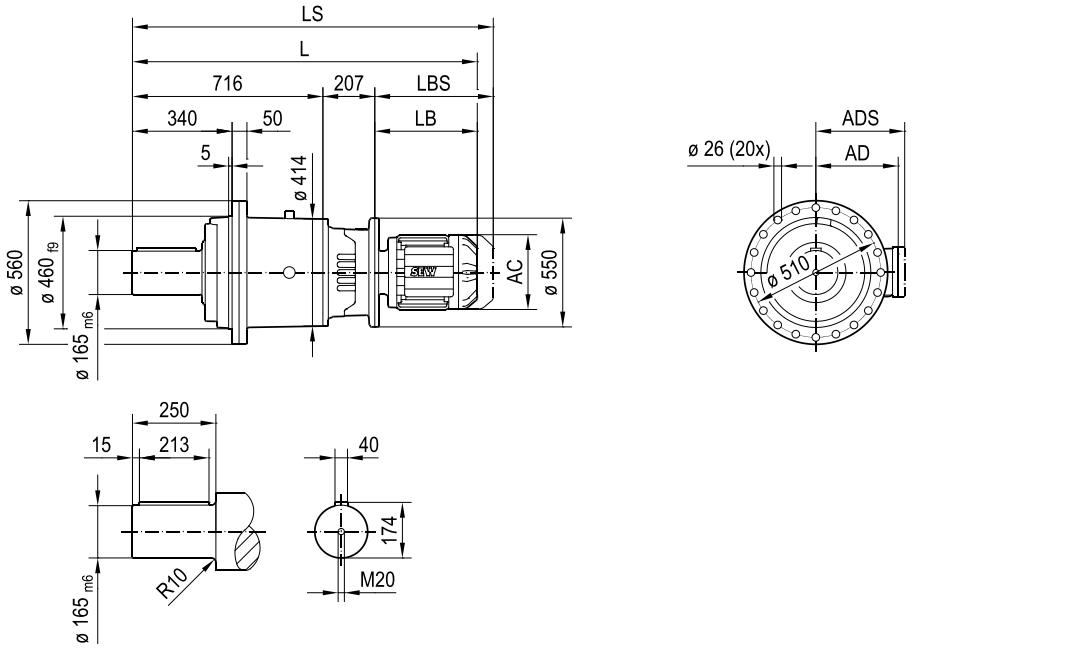

P2PH032e/F..

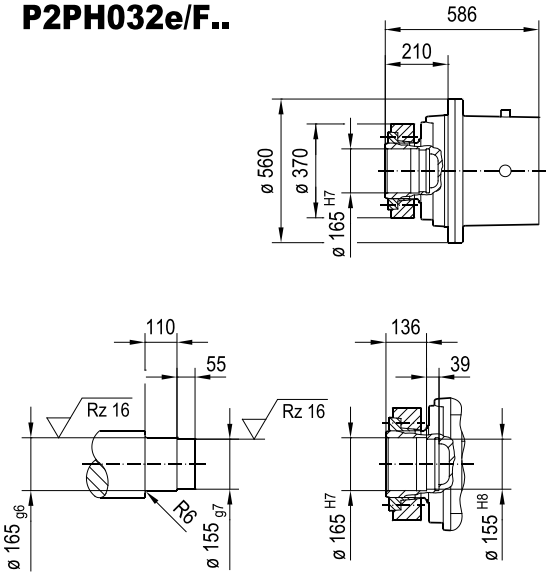

P2P.032e/T..

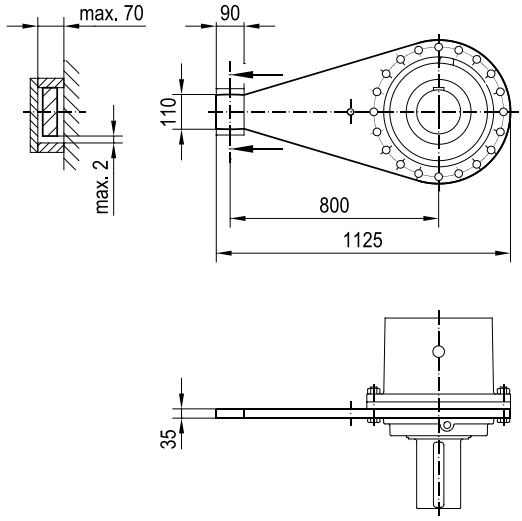

(→ 📖 -)	DRN							
	200L	225..	250M	280S	280M	315S-M	315ME-H	
AC	394	434	495	495	495	624	624	
AD	283	305	394	394	394	506	506	
ADS	283	305	394	394	394	506	506	
L	1556	1530	1667	1667	1762	1864	1994	
LS	1761	1735	1907	1907	2002	2115	2245	
LB	633	607	744	744	839	941	1071	
LBS	838	812	984	984	1079	1192	1322	

31991203/EN – 08/2025

P3PS032e/B DM..

45 014 01 23

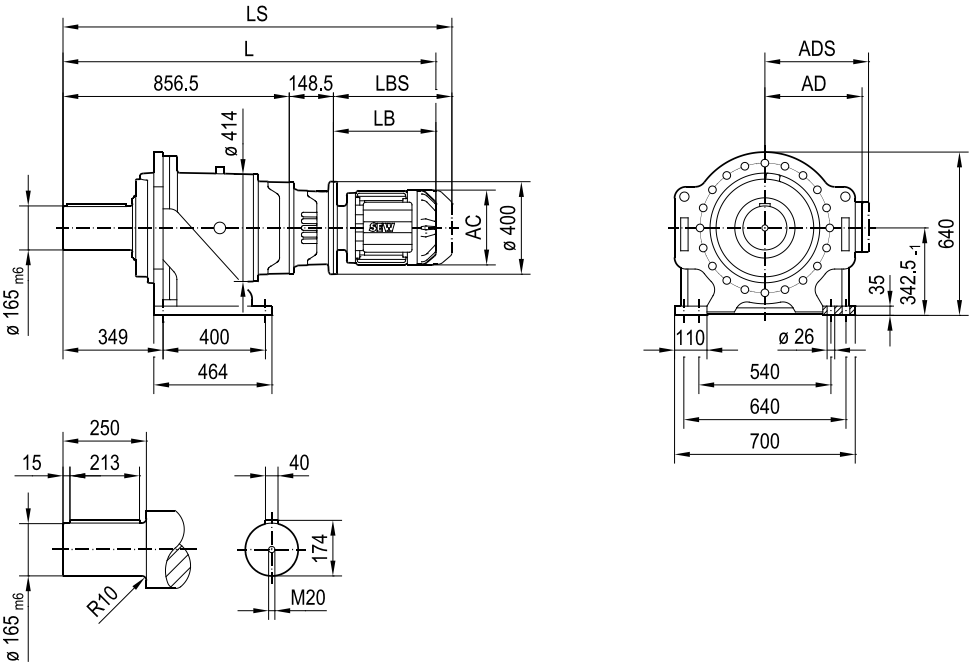

P3PH032e/B..

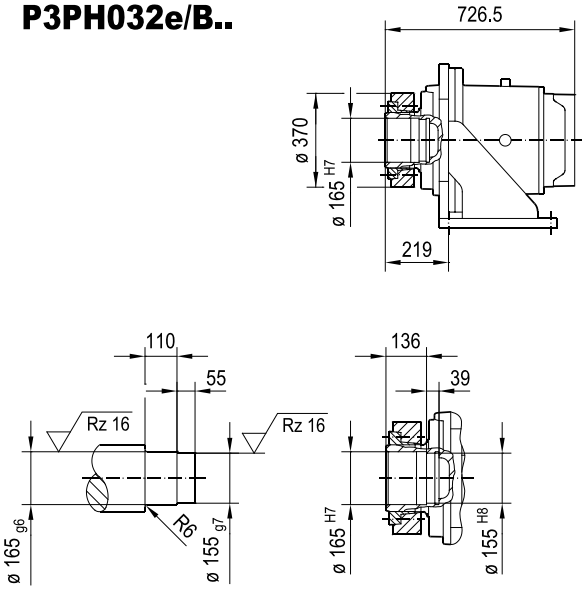

(→ 📖 -)	DRN							
	160..	180..	200L	225..	250M			
AC	314	357	394	434	495			
AD	253	268	283	305	394			
ADS	253	268	283	305	394			
L	1521	1544	1654	1628	1765			
LS	1710	1733	1859	1833	2005			
LB	516	539	649	623	760			
LBS	705	728	854	828	1000			

31991203/EN – 08/2025

P3PS032e/F DM..

45 015 01 23

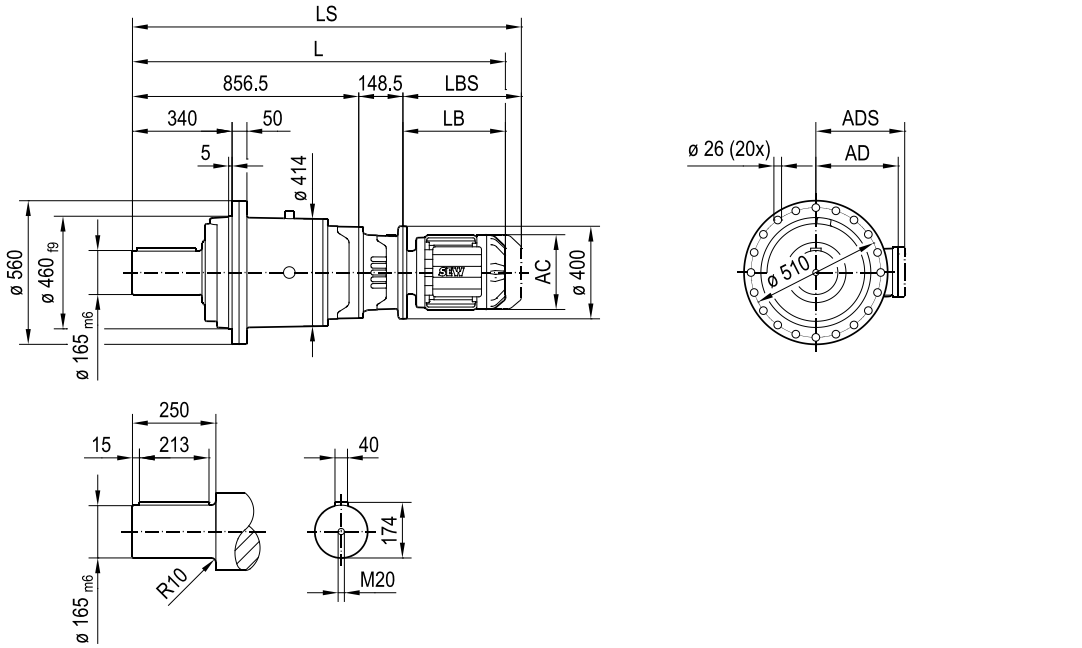

P3PH032e/F..

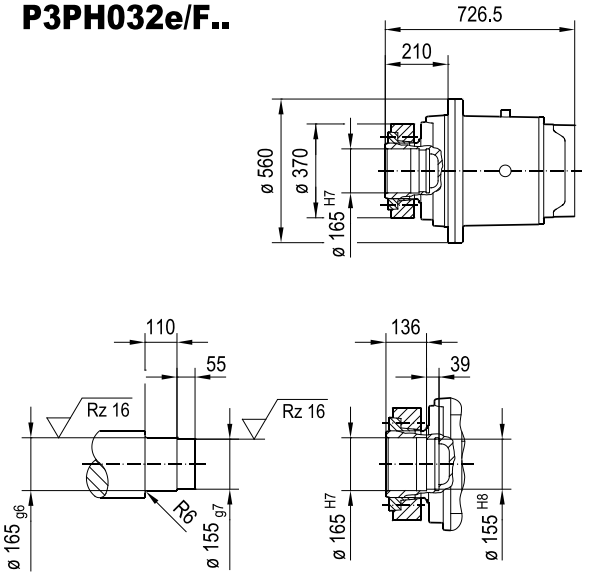

P3P.032e/T..

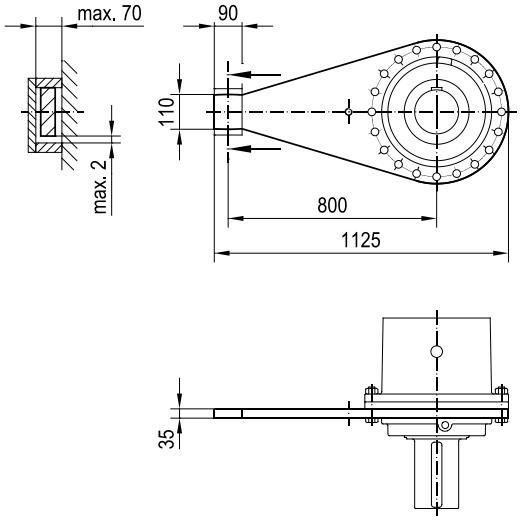

(→ 📖 -)	DRN							
	160..	180..	200L	225..	250M			
AC	314	357	394	434	495			
AD	253	268	283	305	394			
ADS	253	268	283	305	394			
L	1521	1544	1654	1628	1765			
LS	1710	1733	1859	1833	2005			
LB	516	539	649	623	760			
LBS	705	728	854	828	1000			

P2PS042e/B DM..

45 002 02 21

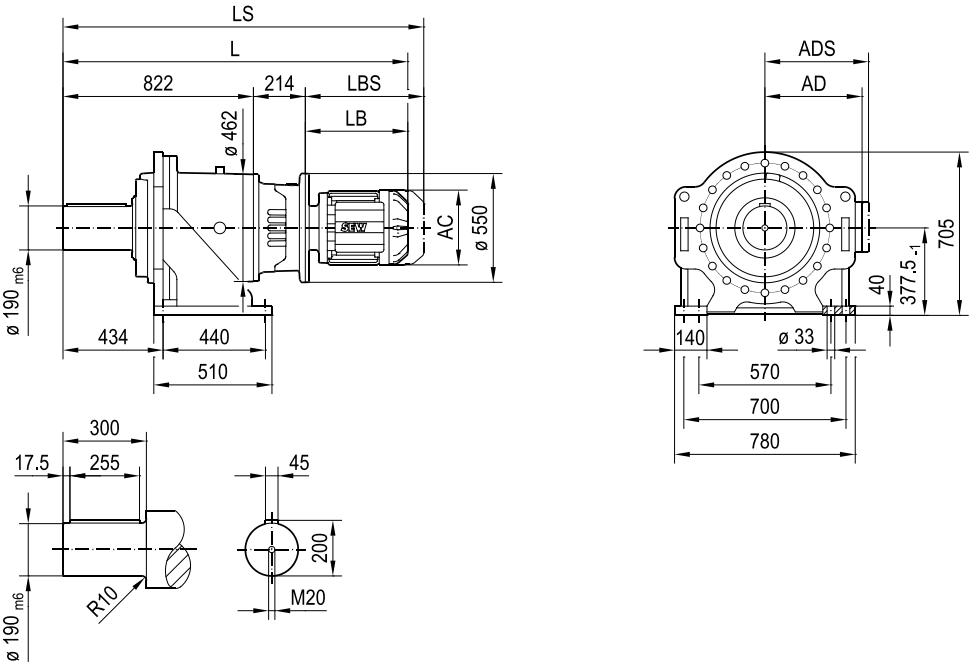

P2PH042e/B..

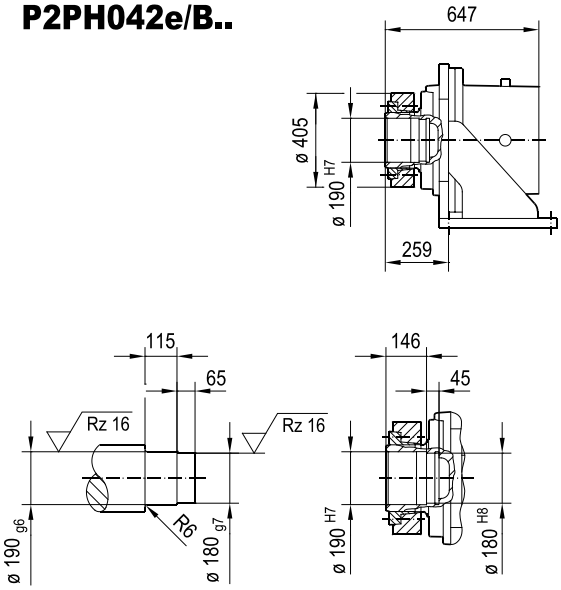

(→ 📖 -)	DRN							
	200L	225..	250M	280S	280M	315S-M	315ME-H	
AC	394	434	495	495	495	624	624	
AD	283	305	394	394	394	506	506	
ADS	283	305	394	394	394	506	506	
L	1669	1643	1780	1780	1875	1977	2107	
LS	1874	1848	2020	2020	2115	2228	2358	
LB	633	607	744	744	839	941	1071	
LBS	838	812	984	984	1079	1192	1322	

31991203/EN – 08/2025

P2PS042e/F DM..

45 004 02 21

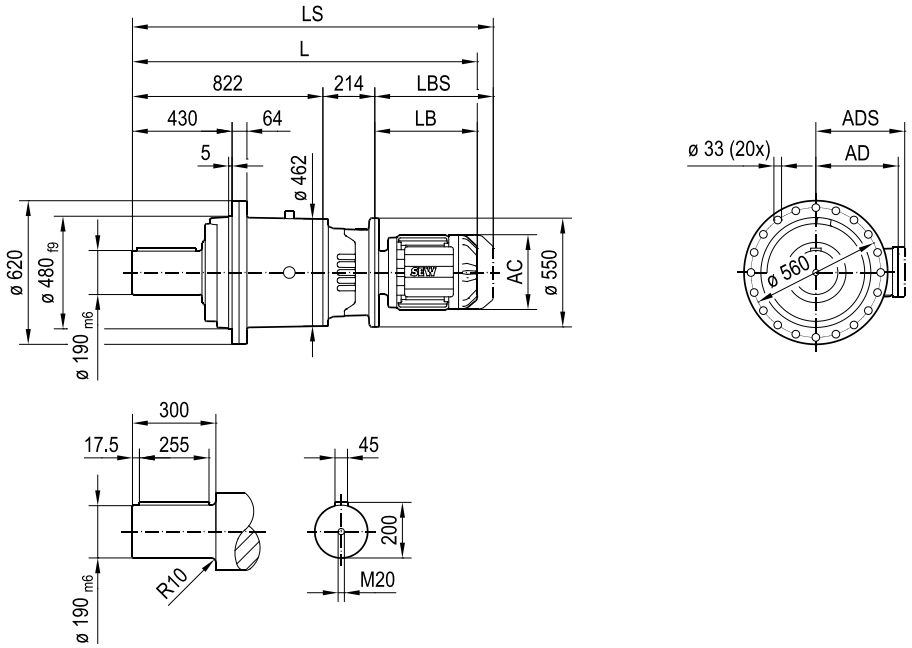

P2PH042e/F..

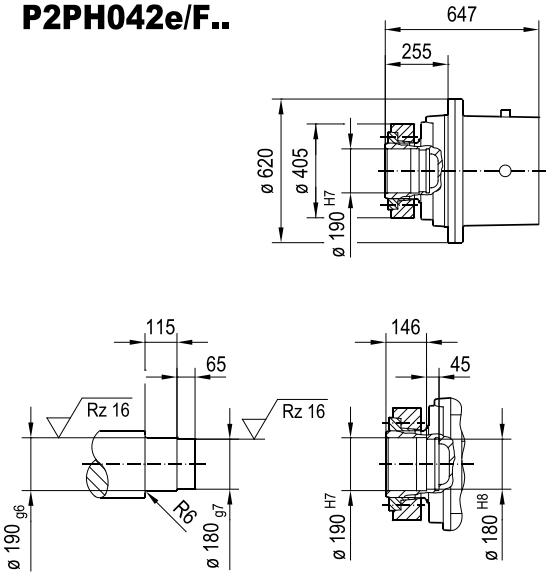

P2P.042e/T..

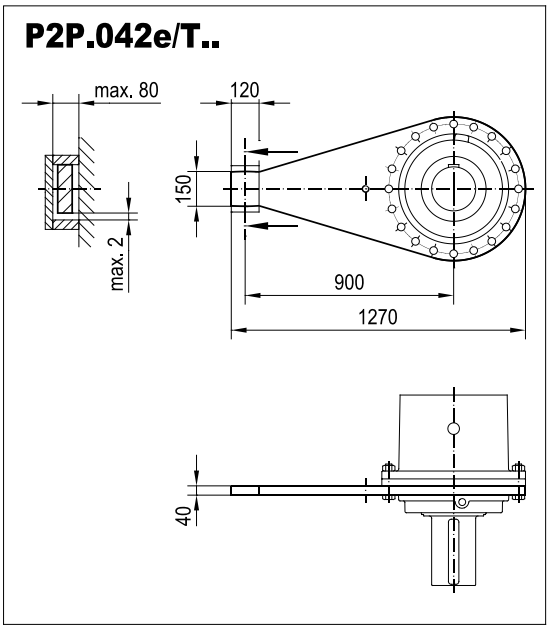

(→ 📖 -)	DRN							
	200L	225..	250M	280S	280M	315S-M	315ME-H	
AC	394	434	495	495	495	624	624	
AD	283	305	394	394	394	506	506	
ADS	283	305	394	394	394	506	506	
L	1669	1643	1780	1780	1875	1977	2107	
LS	1874	1848	2020	2020	2115	2228	2358	
LB	633	607	744	744	839	941	1071	
LBS	838	812	984	984	1079	1192	1322	

31991203/EN – 08/2025

P3PS042e/B DM..

45 003 02 21

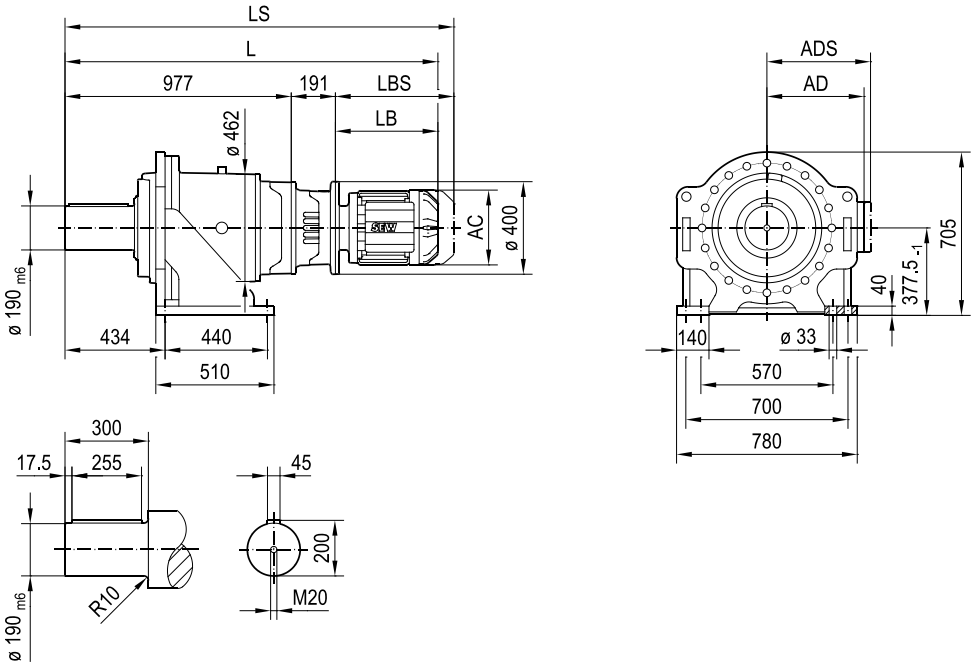

P3PH042e/B..

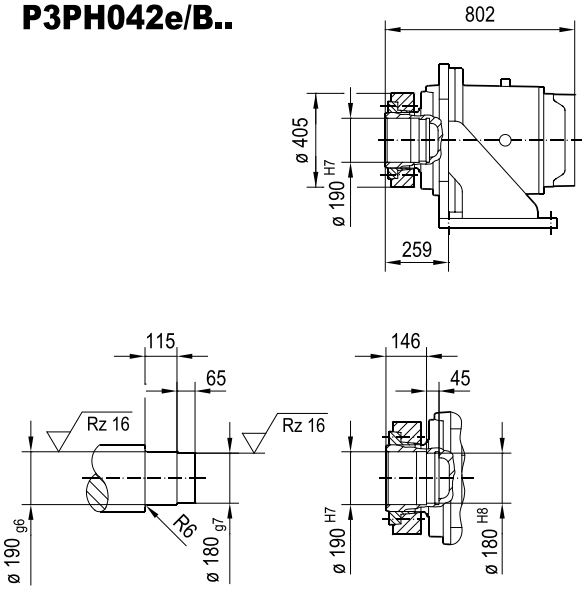

(→ 📖 -)	DRN							
	180..	200L	225..	250M	280S	280M		
AC	357	394	434	495	495	495		
AD	268	283	305	394	394	394		
ADS	268	283	305	394	394	394		
L	1707	1817	1791	1928	1928	2023		
LS	1896	2022	1996	2168	2168	2263		
LB	539	649	623	760	760	855		
LBS	728	854	828	1000	1000	1095		

31991203/EN – 08/2025

P3PS042e/F DM..

45 005 02 21

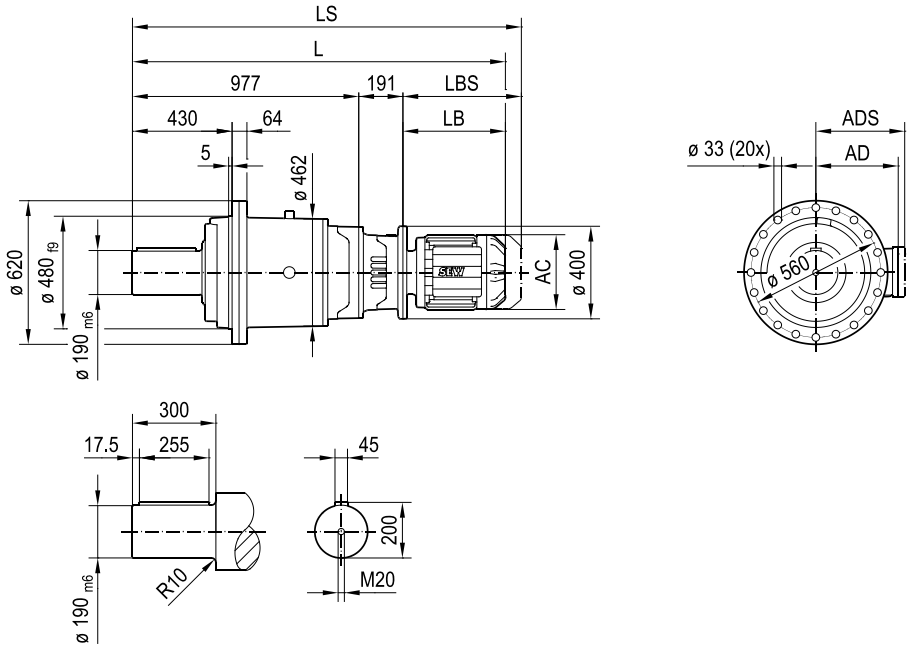

P3PH042e/F..

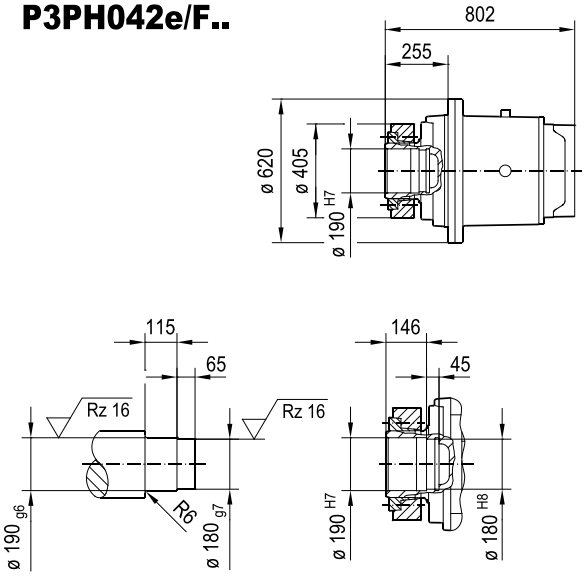

P3P.042e/T..

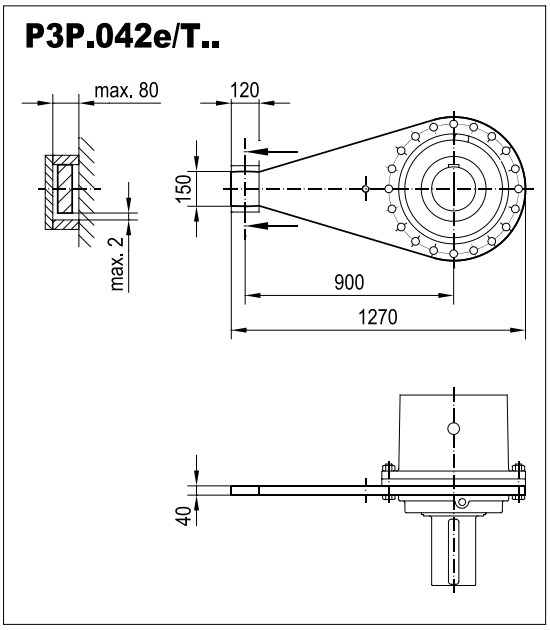

(→ 📖 -)	DRN							
	180..	200L	225..	250M	280S	280M		
AC	357	394	434	495	495	495		
AD	268	283	305	394	394	394		
ADS	268	283	305	394	394	394		
L	1707	1817	1791	1928	1928	2023		
LS	1896	2022	1996	2168	2168	2263		
LB	539	649	623	760	760	855		
LBS	728	854	828	1000	1000	1095		

31991203/EN – 08/2025

P2PS052e/B DM..

45 020 01 23

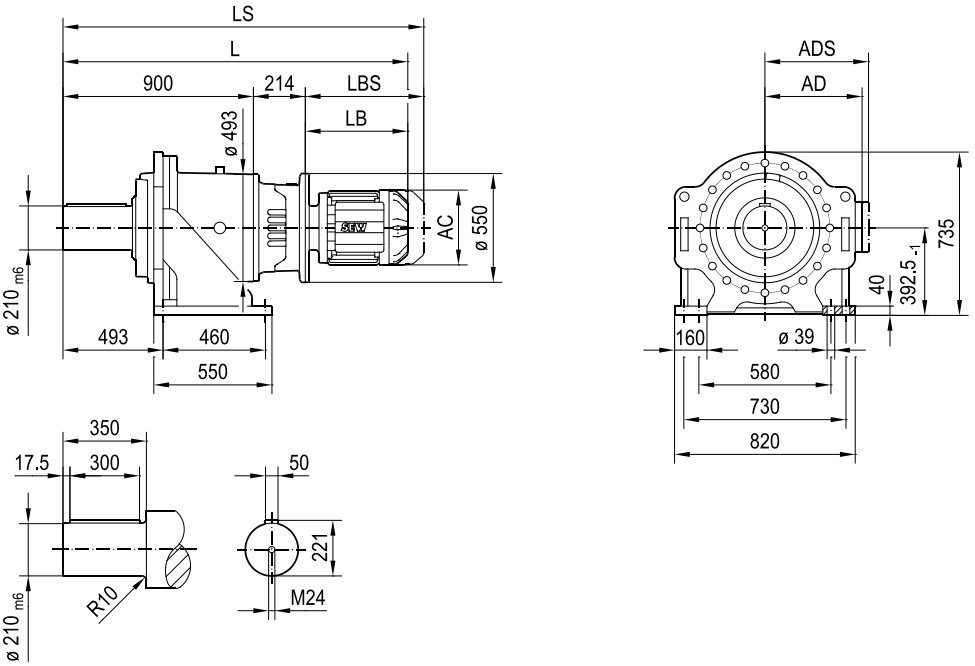

P2PH052e/B..

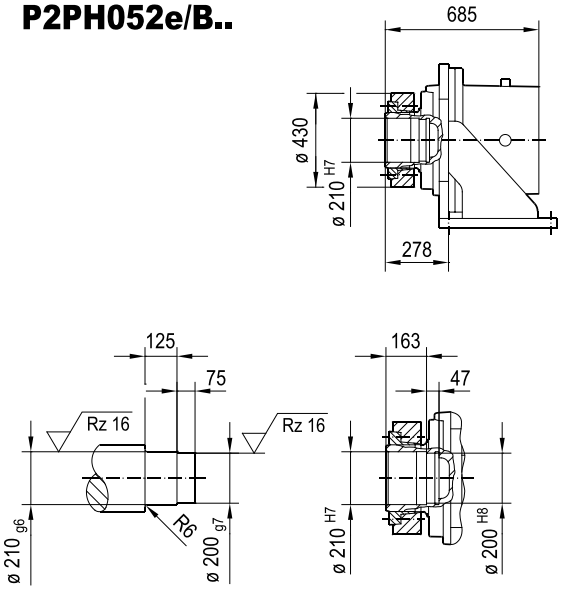

(→ 📖 -)	DRN							
	200L	225..	250M	280S	280M	315S-M	315ME-H	
AC	394	434	495	495	495	624	624	
AD	283	305	394	394	394	506	506	
ADS	283	305	394	394	394	506	506	
L	1747	1721	1858	1858	1953	2055	2185	
LS	1952	1926	2098	2098	2193	2306	2436	
LB	633	607	744	744	839	941	1071	
LBS	838	812	984	984	1079	1192	1322	

31991203/EN – 08/2025

P2PS052e/F DM..

45 021 01 23

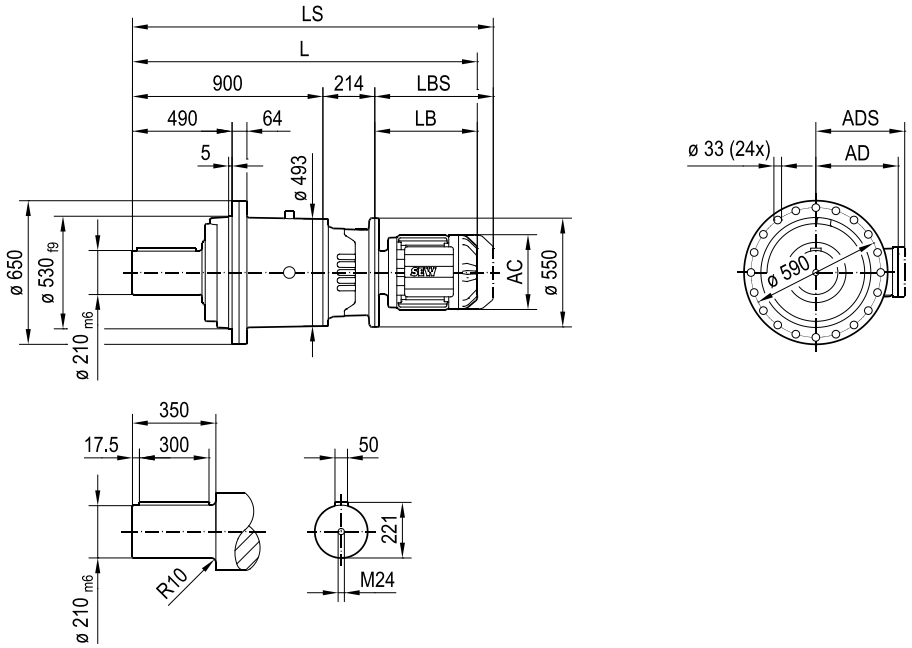

P2PH052e/F..

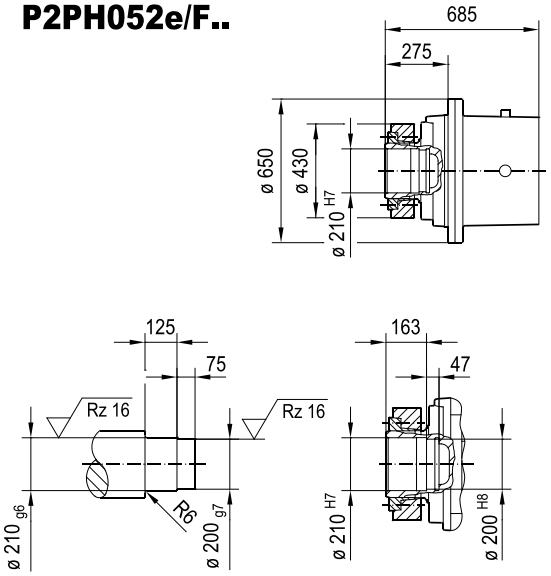

P2P.052e/T..

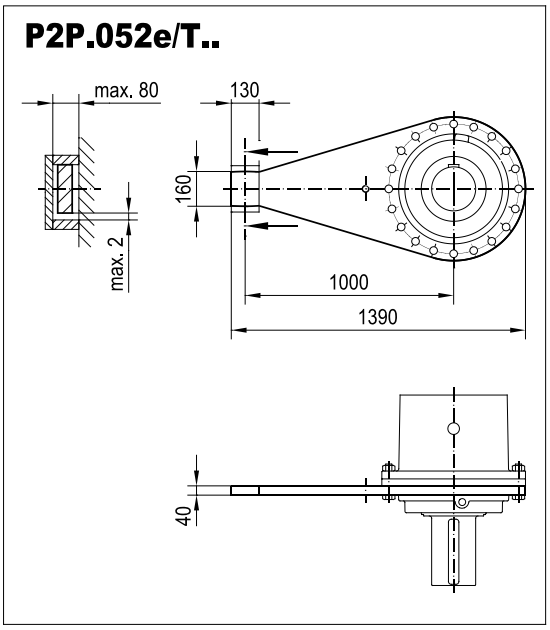

(→ 📖 -)	DRN							
	200L	225..	250M	280S	280M	315S-M	315ME-H	
AC	394	434	495	495	495	624	624	
AD	283	305	394	394	394	506	506	
ADS	283	305	394	394	394	506	506	
L	1747	1721	1858	1858	1953	2055	2185	
LS	1952	1926	2098	2098	2193	2306	2436	
LB	633	607	744	744	839	941	1071	
LBS	838	812	984	984	1079	1192	1322	

31991203/EN – 08/2025

P3PS052e/B DM..

45 022 01 23

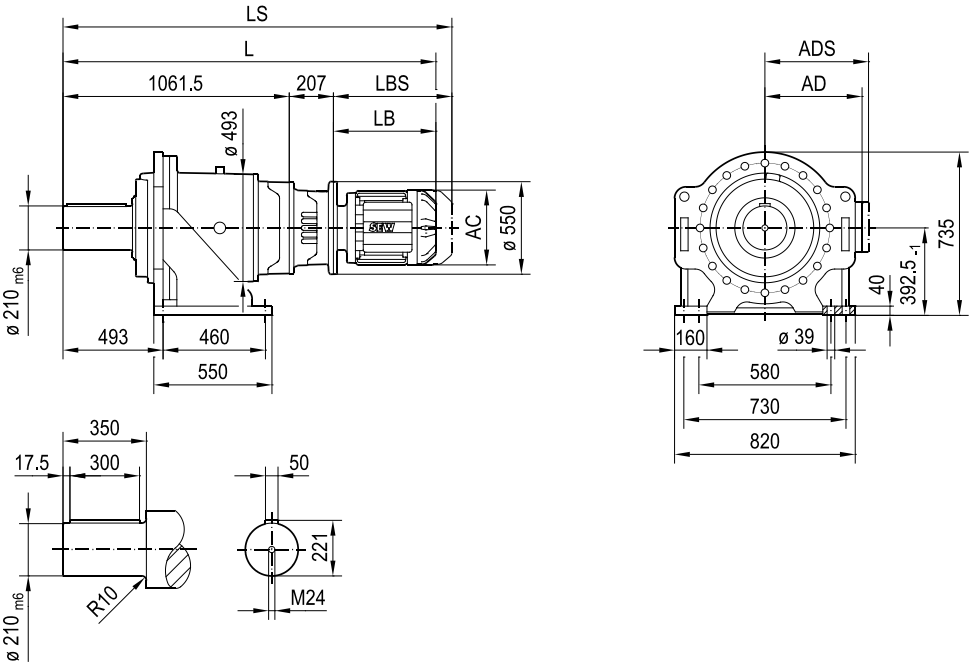

P3PH052e/B..

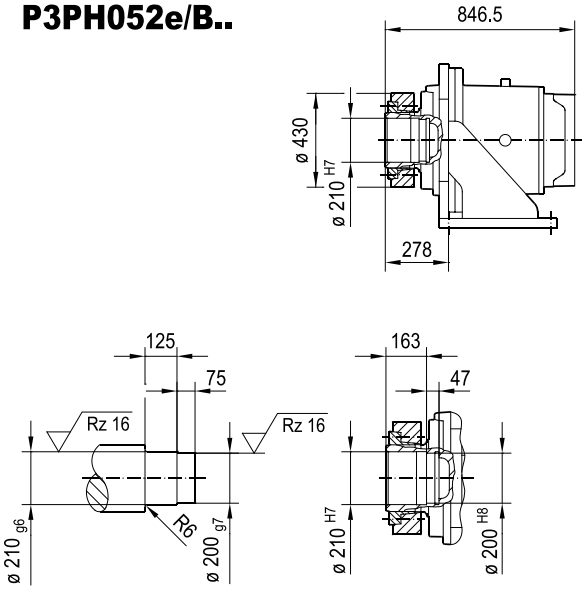

(→ 📖 -)	DRN							
	180..	200L	225..	250M	280S	280M	315S-M	315ME-H
AC	357	394	434	495	495	495	624	624
AD	268	283	305	394	394	394	506	506
ADS	268	283	305	394	394	394	506	506
L	1792	1901	1876	2013	2013	2108	2210	2340
LS	1981	2106	2081	2253	2253	2348	2461	2591
LB	523	633	607	744	744	839	941	1071
LBS	712	838	812	984	984	1079	1192	1322

31991203/EN – 08/2025

P3PS052e/F DM..

45 023 01 23

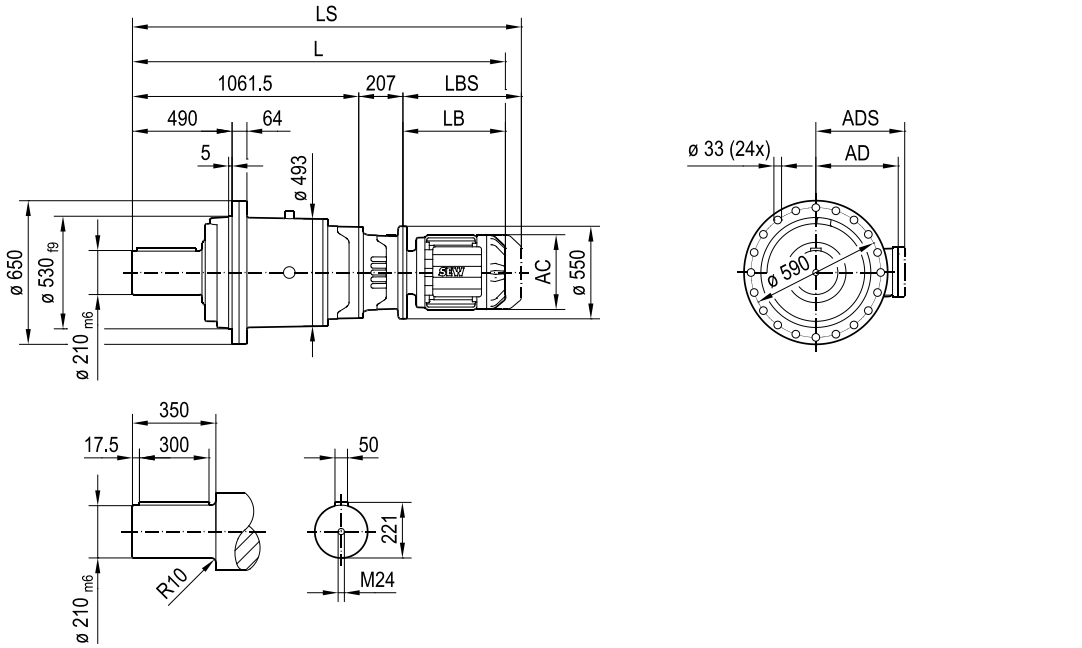

P3PH052e/F..

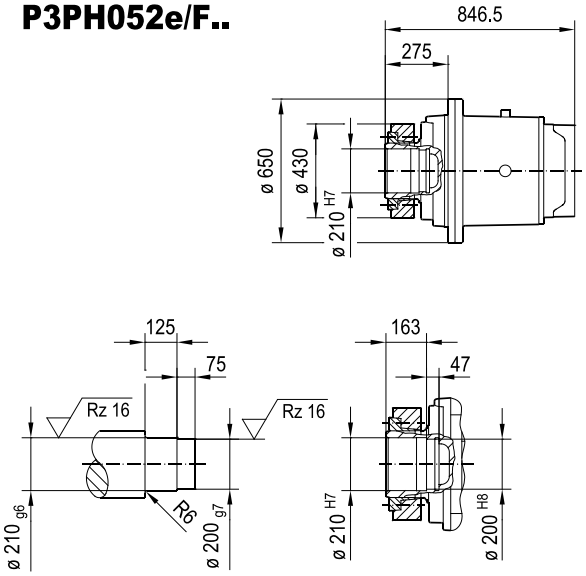

P3P.052e/T..

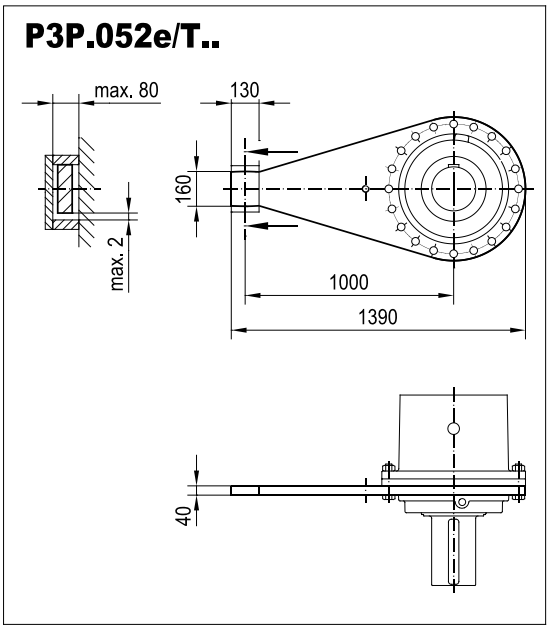

(→ 📖 -)	DRN							
	180..	200L	225..	250M	280S	280M	315S-M	315ME-H
AC	357	394	434	495	495	495	624	624
AD	268	283	305	394	394	394	506	506
ADS	268	283	305	394	394	394	506	506
L	1792	1901	1876	2013	2013	2108	2210	2340
LS	1981	2106	2081	2253	2253	2348	2461	2591
LB	523	633	607	744	744	839	941	1071
LBS	712	838	812	984	984	1079	1192	1322

31991203/EN – 08/2025

P2PS062e/B..

45 029 01 25

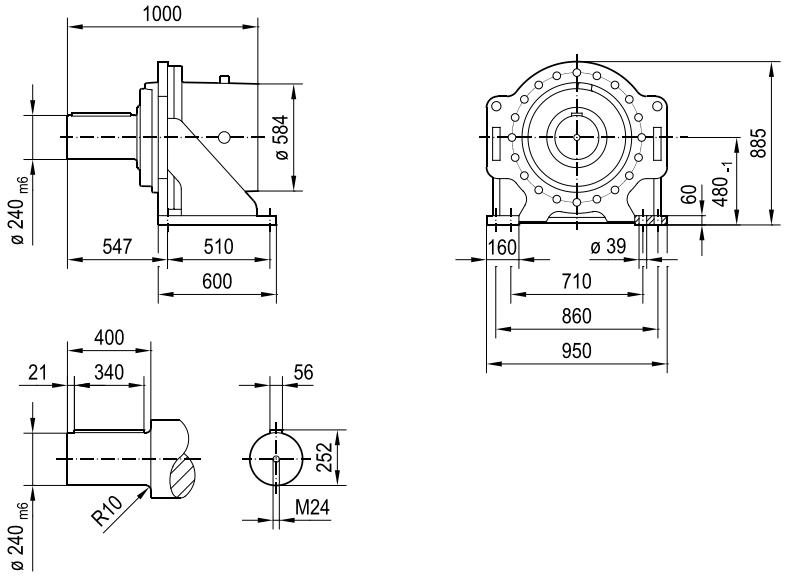

P2PH062e/B..

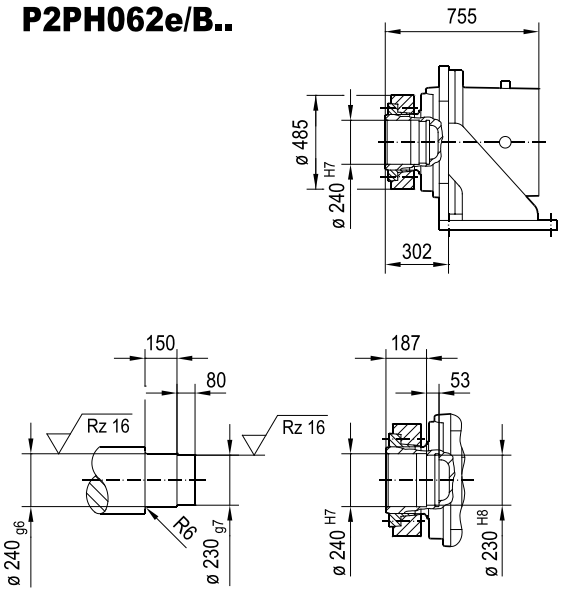

31991203/EN – 08/2025

P2PS062e/F..

45 030 01 25

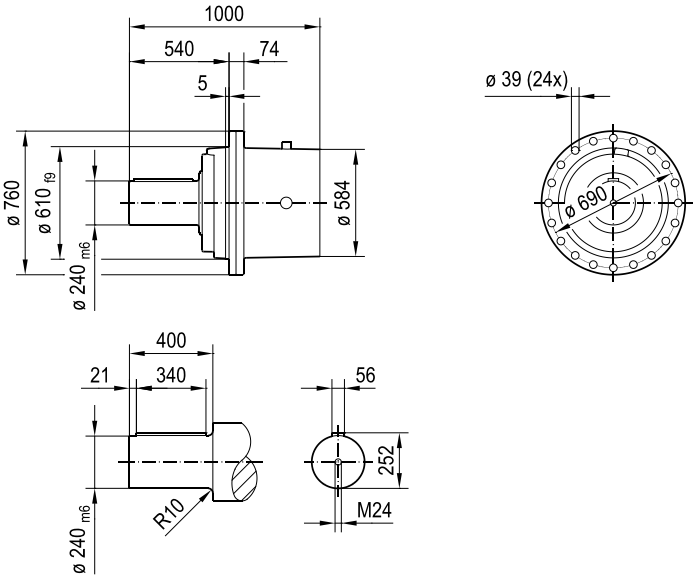

P2PH062e/F..

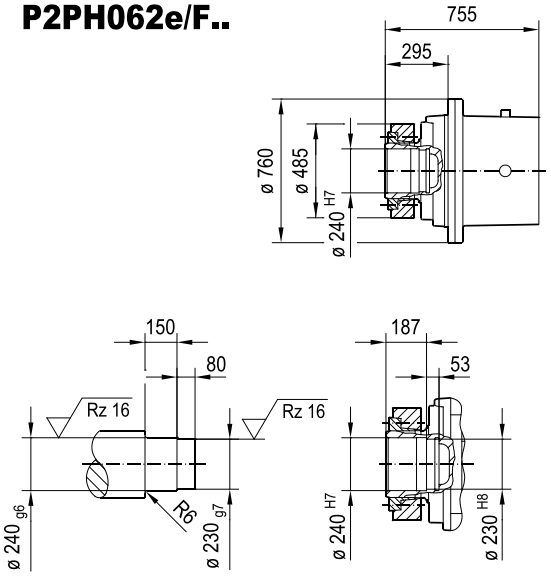

P2P.062e/T..

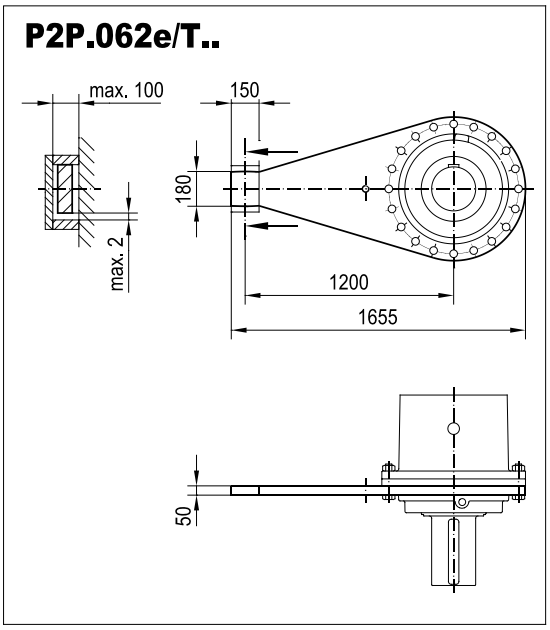

P3PS062e/B DM..

45 017 01 25

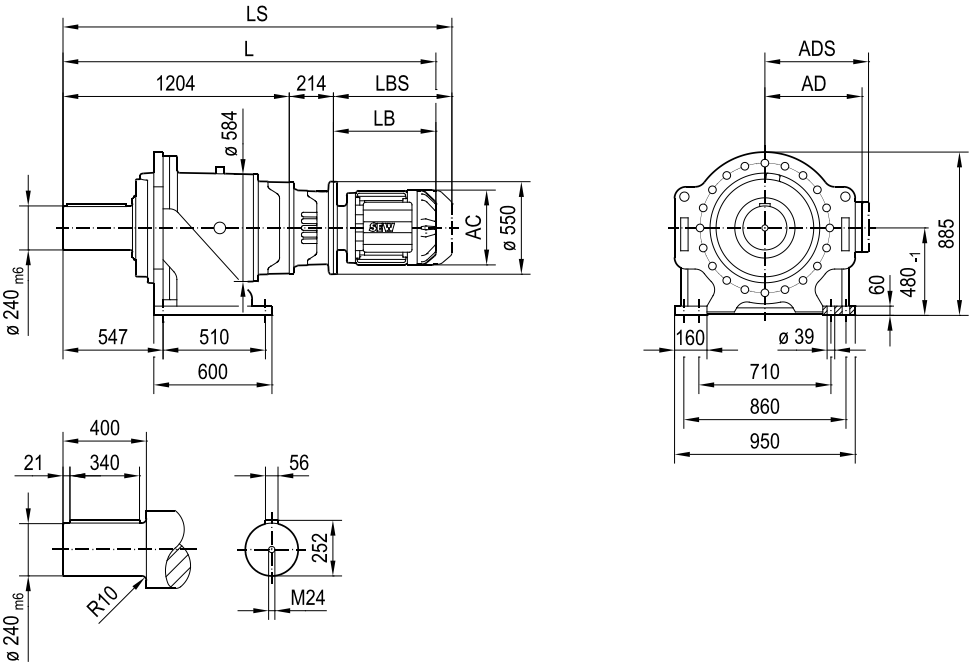

P3PH062e/B..

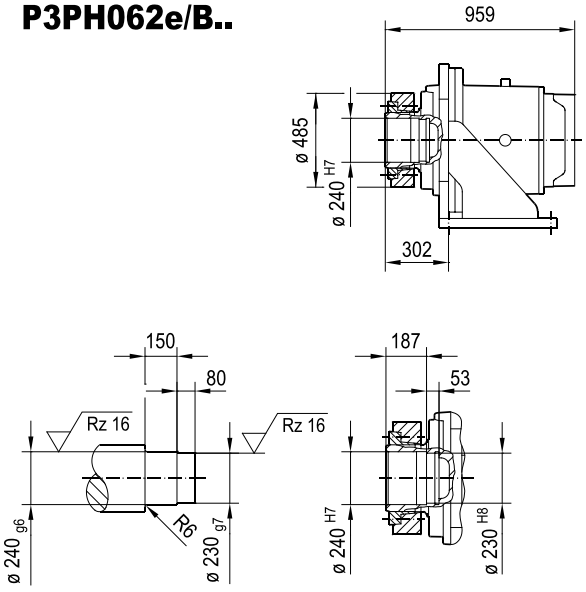

(→ 📖 -)	DRN							
	200L	225..	250M	280S	280M	315S-M	315ME-H	
AC	394	434	495	495	495	624	624	
AD	283	305	394	394	394	506	506	
ADS	283	305	394	394	394	506	506	
L	2051	2025	2162	2162	2257	2359	2489	
LS	2256	2230	2402	2402	2497	2610	2740	
LB	633	607	744	744	839	941	1071	
LBS	838	812	984	984	1079	1192	1322	

31991203/EN – 08/2025

P3PS062e/F DM..

45 018 01 25

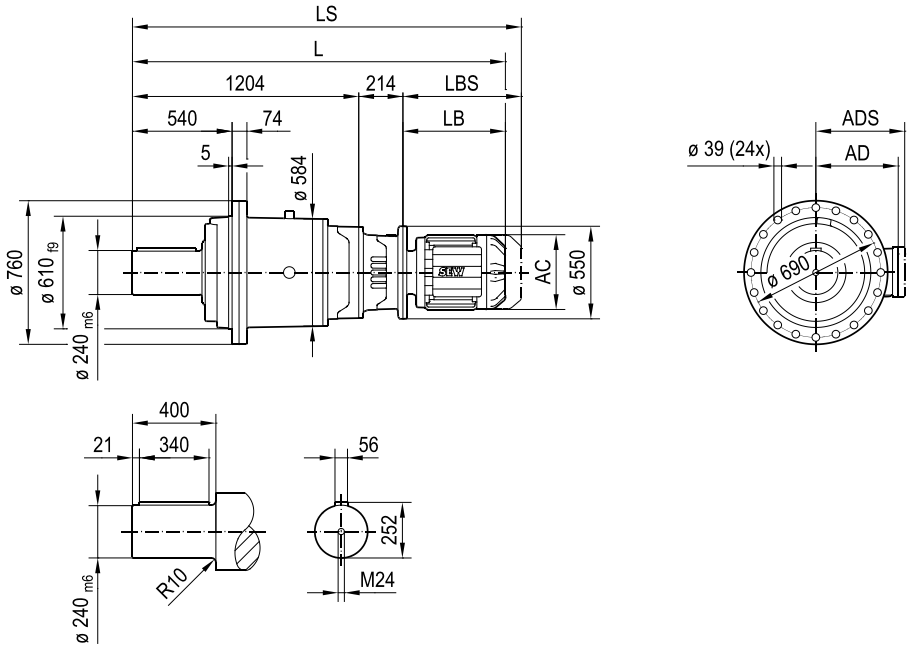

P3PH062e/F..

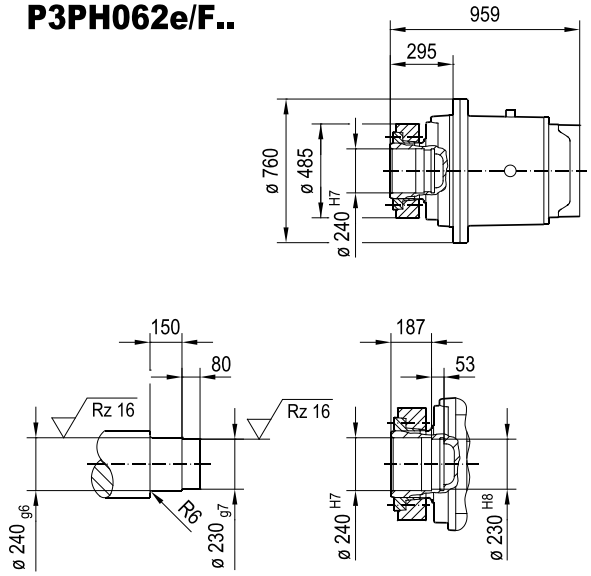

P3P.062e/T..

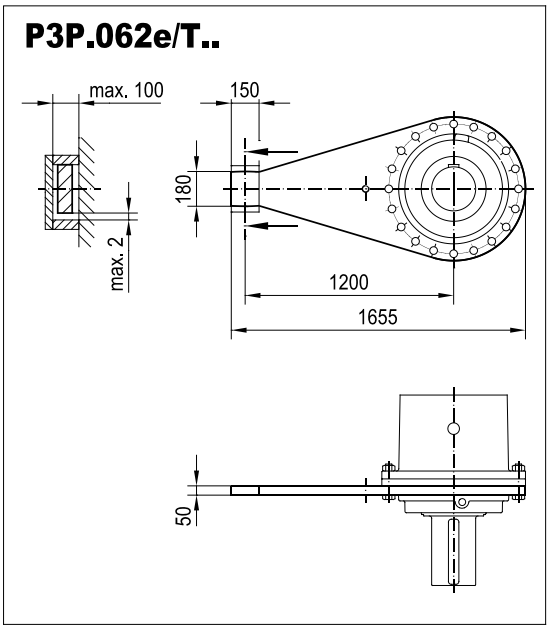

(→ 📖 -)	DRN							
	200L	225..	250M	280S	280M	315S-M	315ME-H	
AC	394	434	495	495	495	624	624	
AD	283	305	394	394	394	506	506	
ADS	283	305	394	394	394	506	506	
L	2051	2025	2162	2162	2257	2359	2489	
LS	2256	2230	2402	2402	2497	2610	2740	
LB	633	607	744	744	839	941	1071	
LBS	838	812	984	984	1079	1192	1322	

31991203/EN – 08/2025

P2PS072e/B..

45 031 01 25

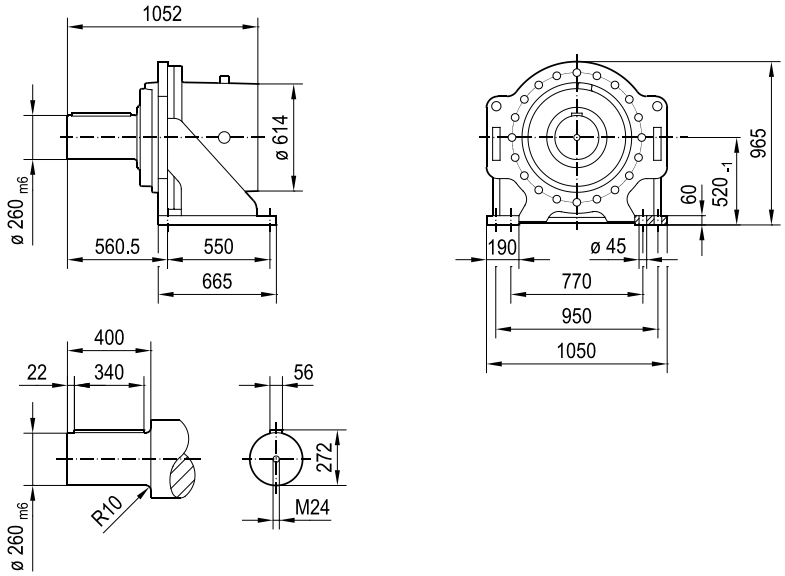

P2PH072e/B..

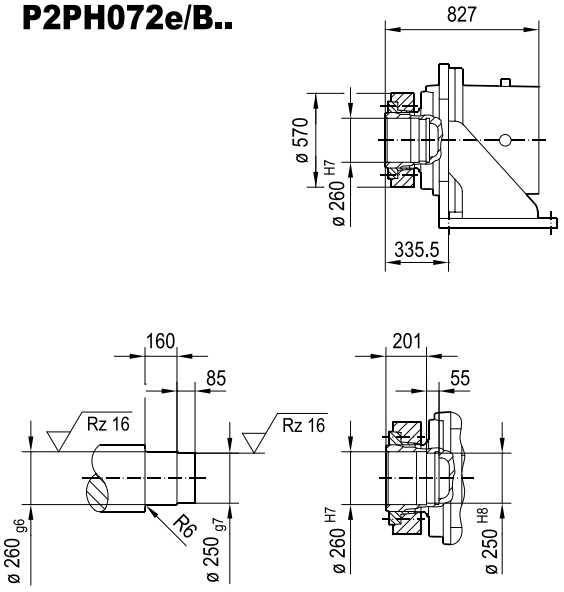

31991203/EN – 08/2025

P2PS072e/F..

45 032 01 25

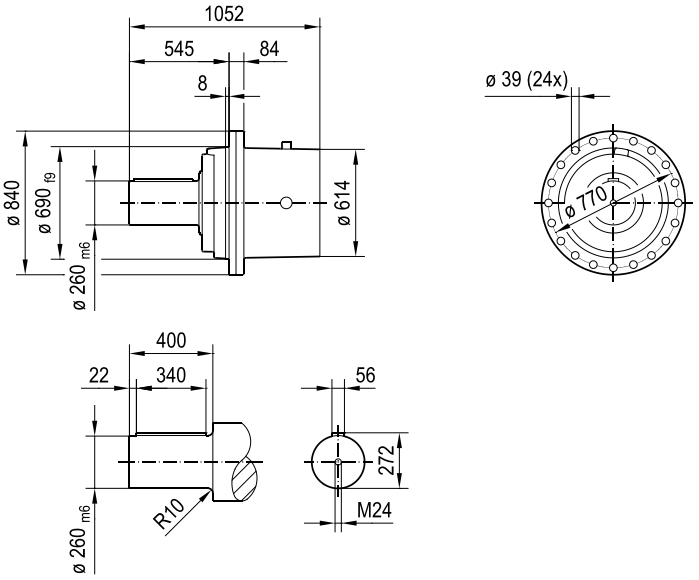

P2PH072e/F..

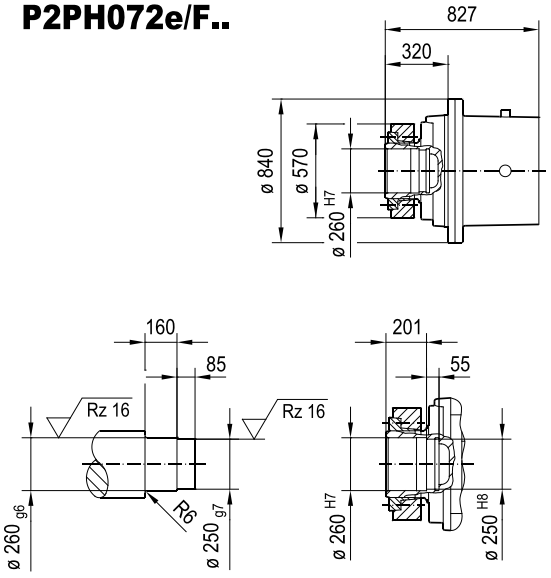

P2P.072e/T..

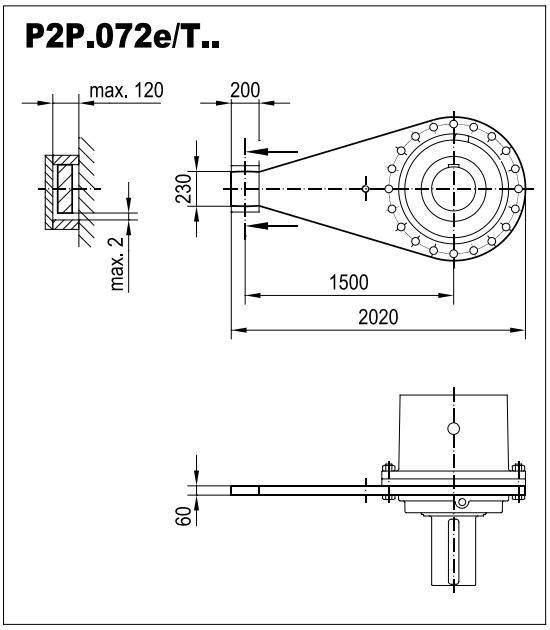

31991203/EN – 08/2025

P3PS072e/B DM..

45 019 01 25

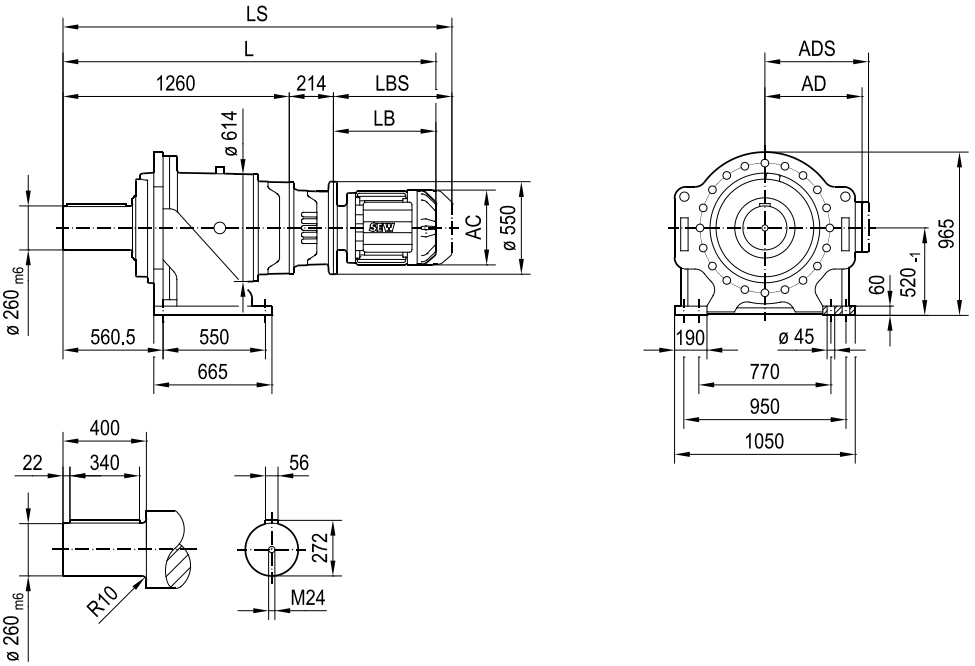

P3PH072e/B..

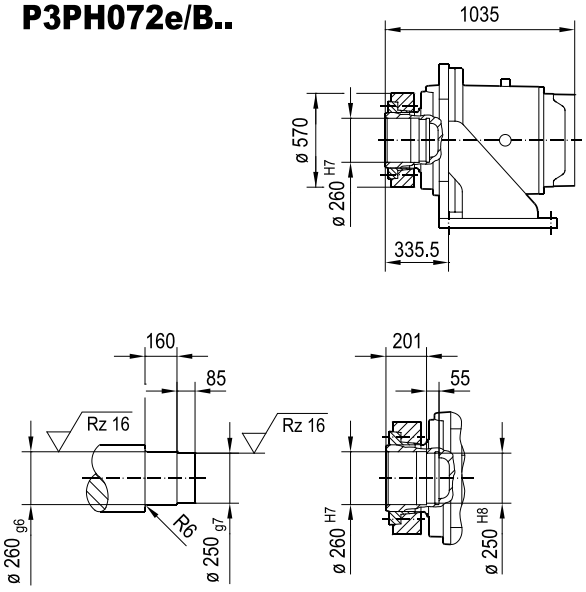

(→ 📖 -)	DRN							
	225..	250M	280S	280M	315S-M	315ME-H		
AC	434	495	495	495	624	624		
AD	305	394	394	394	506	506		
ADS	305	394	394	394	506	506		
L	2081	2218	2218	2313	2415	2545		
LS	2286	2458	2458	2553	2666	2796		
LB	607	744	744	839	941	1071		
LBS	812	984	984	1079	1192	1322		

31991203/EN – 08/2025

P3PS072e/F DM..

45 020 01 25

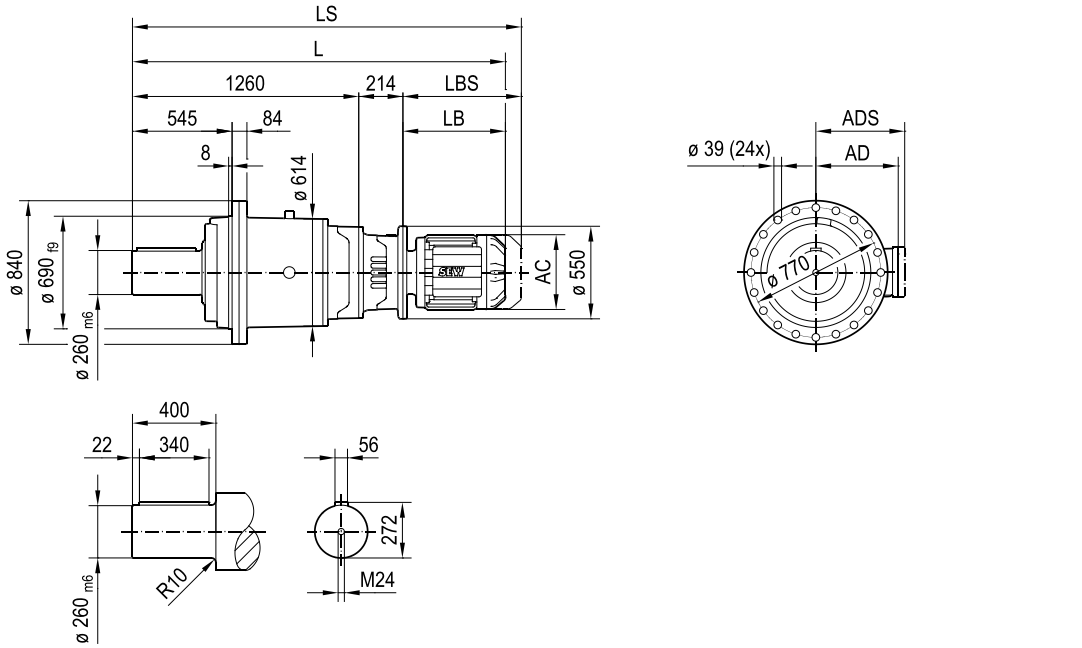

P3PH072e/F..

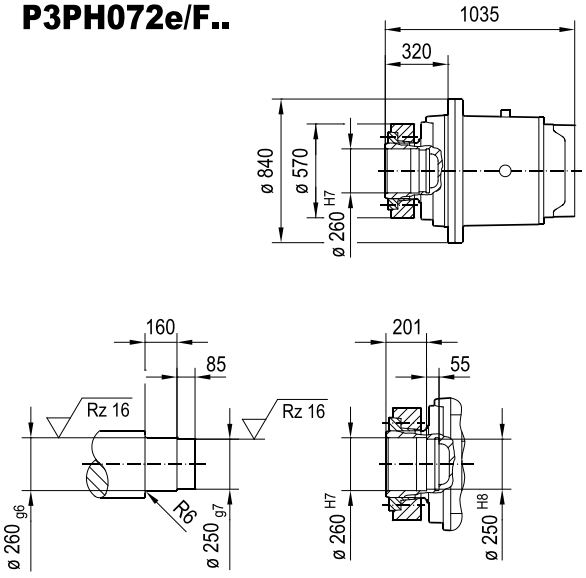

P3P.072e/T..

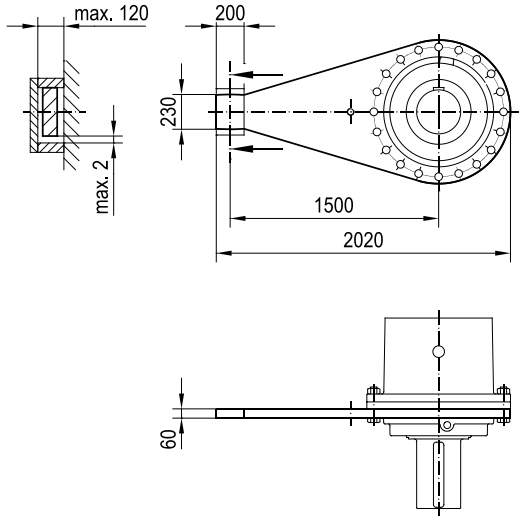

(→ 📖 -)	DRN							
	225..	250M	280S	280M	315S-M	315ME-H		
AC	434	495	495	495	624	624		
AD	305	394	394	394	506	506		
ADS	305	394	394	394	506	506		
L	2081	2218	2218	2313	2415	2545		
LS	2286	2458	2458	2553	2666	2796		
LB	607	744	744	839	941	1071		
LBS	812	984	984	1079	1192	1322		

31991203/EN – 08/2025

P2PS082e/B..

45 033 01 25

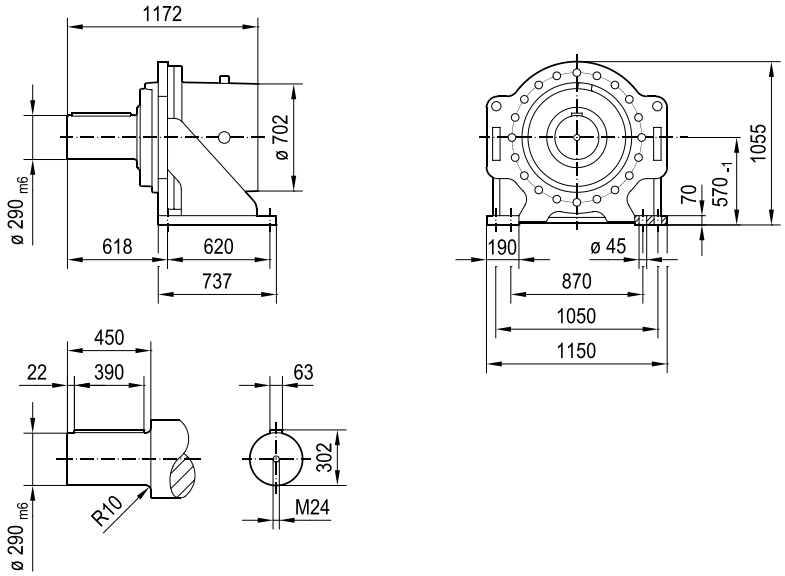

P2PH082e/B..

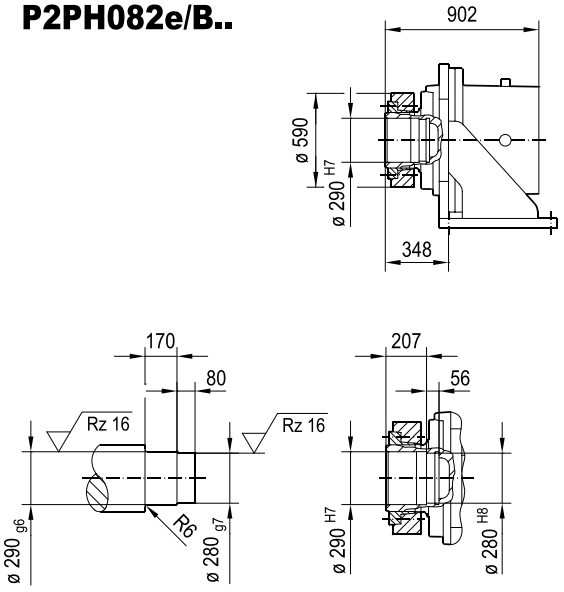

31991203/EN – 08/2025

P2PS082e/F..

45 034 01 25

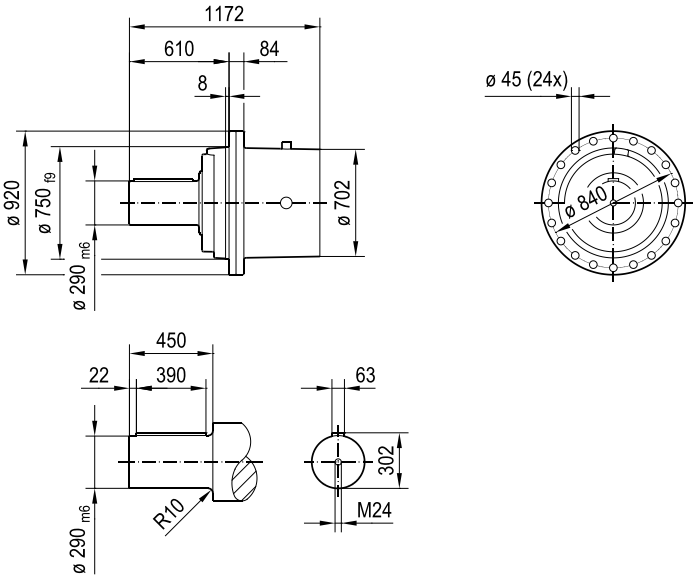

P2PH082e/F..

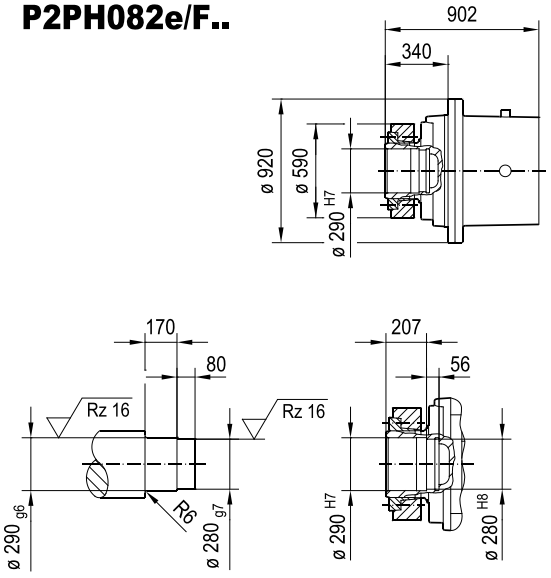

P2P.082e/T..

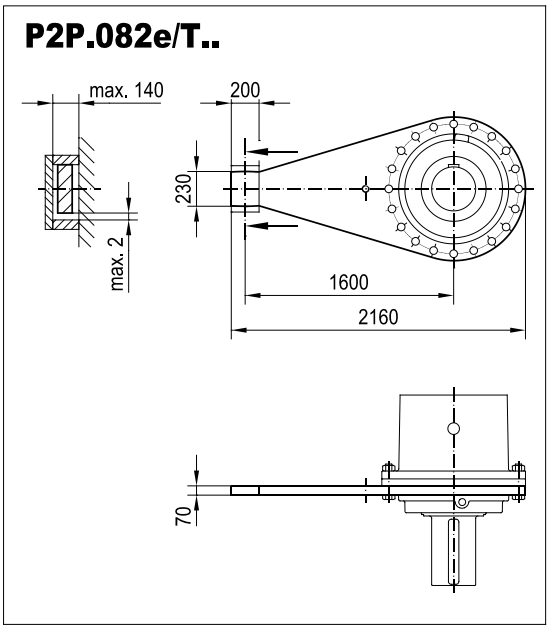

P3PS082e/B..

45 035 01 25

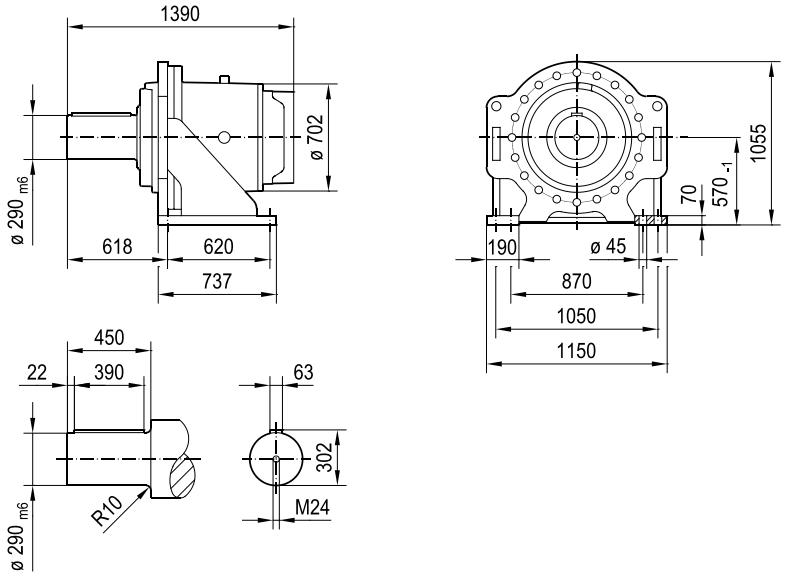

P3PH082e/B..

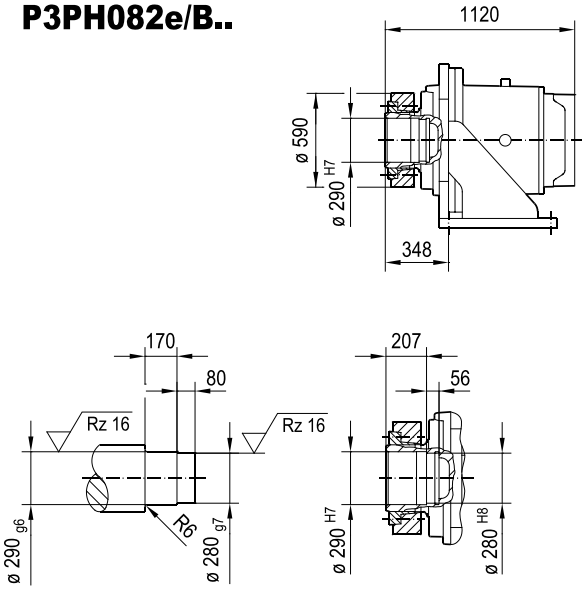

31991203/EN – 08/2025

P3PS082e/F..

45 036 01 25

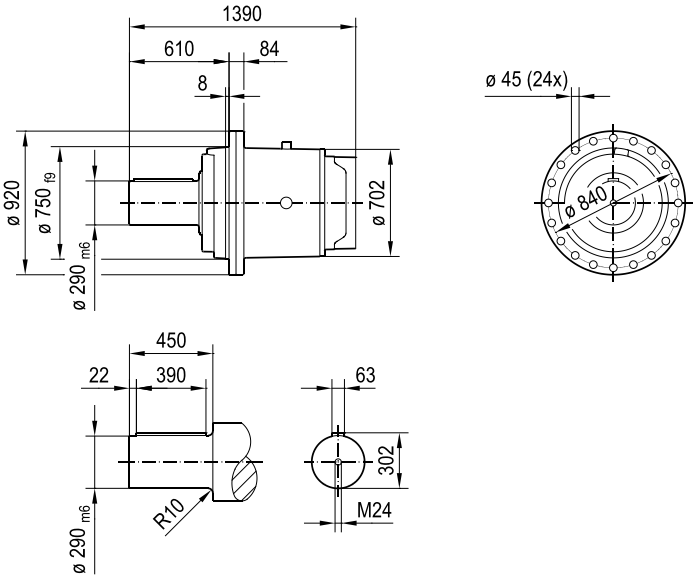

P3PH082e/F..

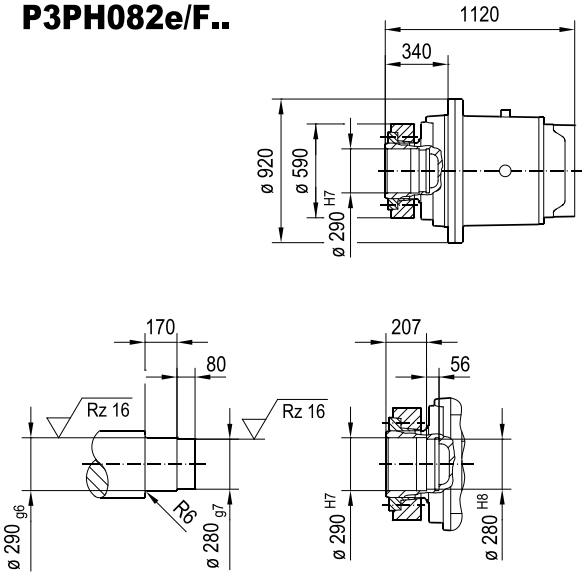

P3P.082e/T..

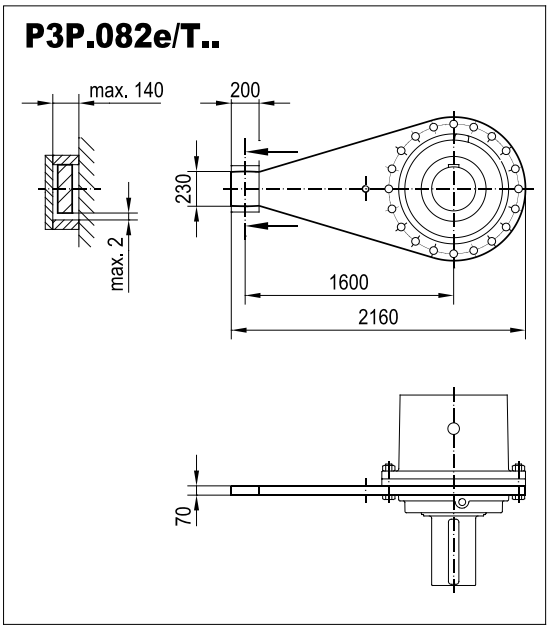

11.2 P2.e DMF DRN.. planetary gearmotors

P2PS002e/B DMF..

45 007 01 22

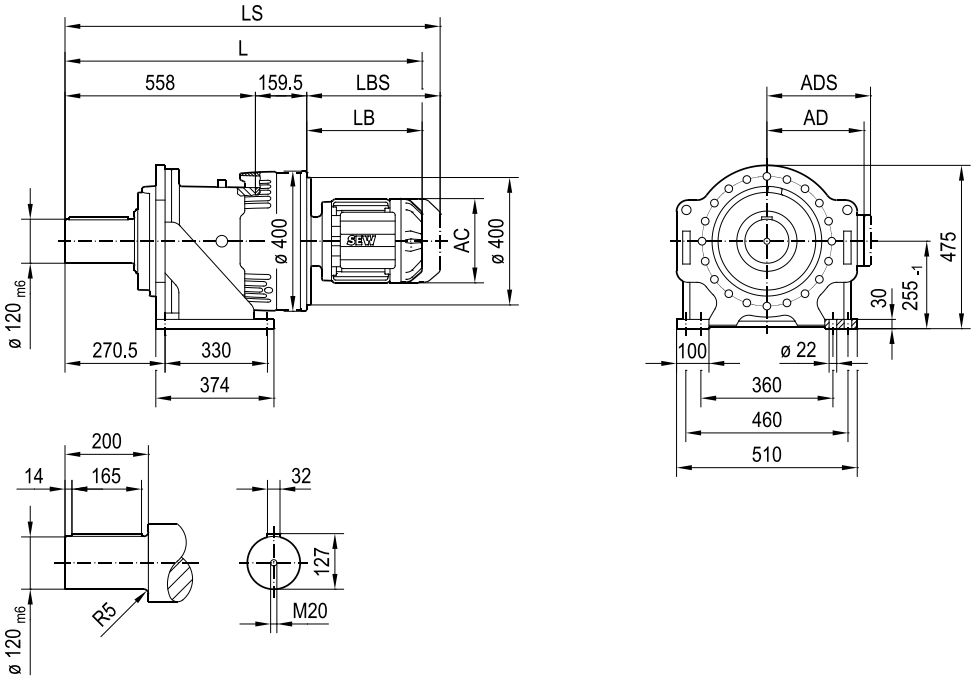

P2PH002e/B..

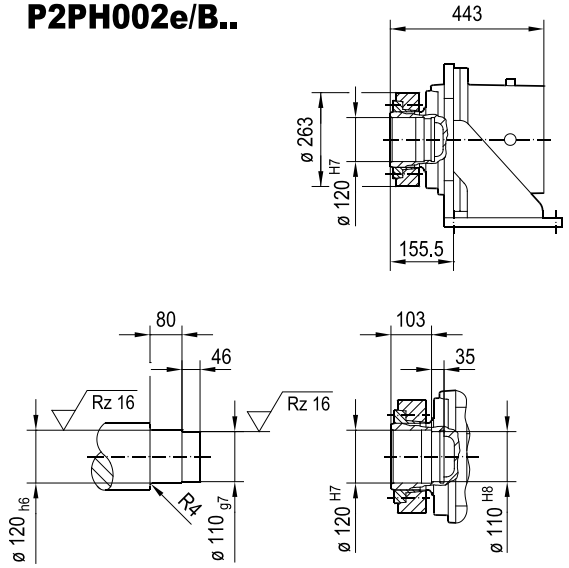

(→ 📖 -)	DRN							
	160..	180..	200L	225..	250M			
AC	314	357	394	434	495			
AD	253	268	283	305	394			
ADS	253	268	283	305	394			
L	1234	1257	1366	1341	1478			
LS	1423	1446	1571	1546	1718			
LB	516	539	649	623	760			
LBS	705	728	854	828	1000			

31991203/EN – 08/2025

P2PS002e/F DMF..

45 009 01 22

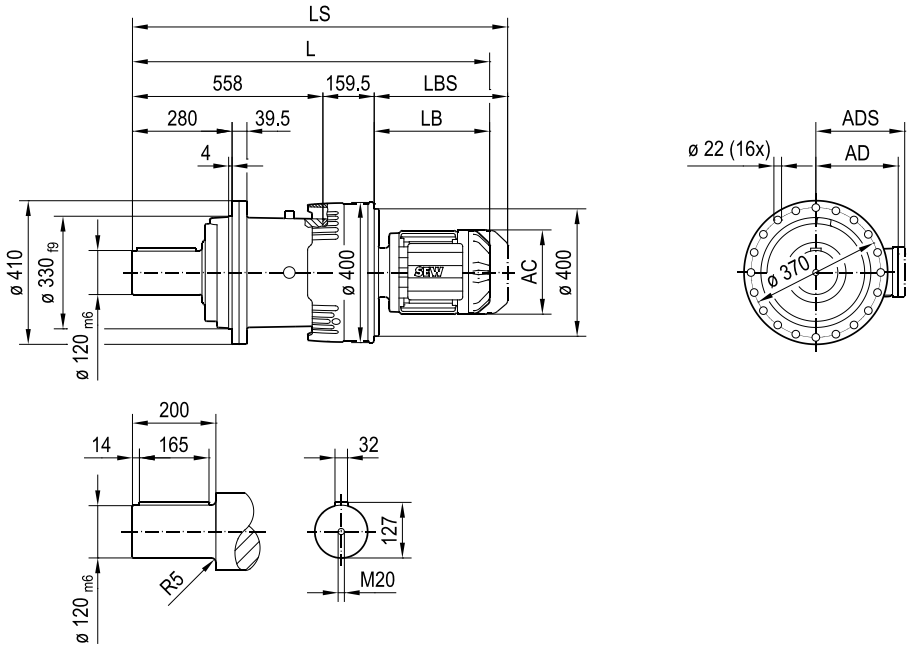

P2PH002e/F..

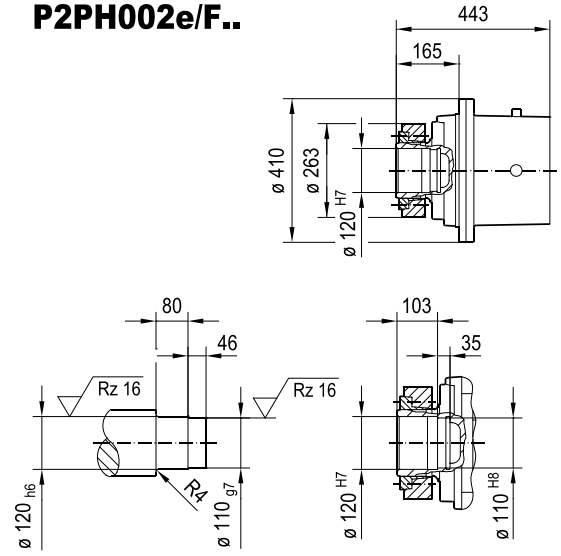

P2P.002e/T..

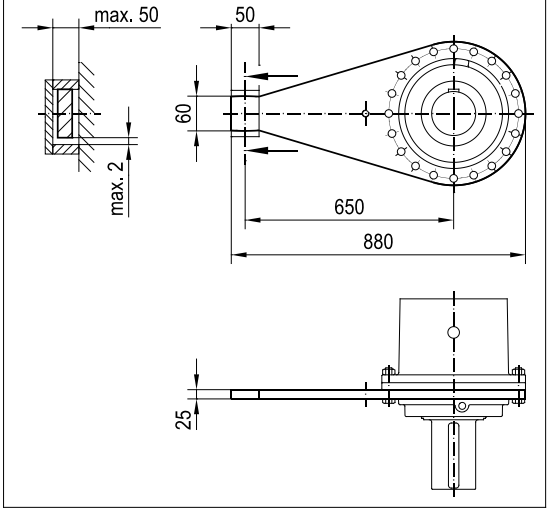

(→ 📖 -)	DRN							
	160..	180..	200L	225..	250M			
AC	314	357	394	434	495			
AD	253	268	283	305	394			
ADS	253	268	283	305	394			
L	1234	1257	1366	1341	1478			
LS	1423	1446	1571	1546	1718			
LB	516	539	649	623	760			
LBS	705	728	854	828	1000			

31991203/EN – 08/2025

P3PS002e/B DMF..

45 008 01 22

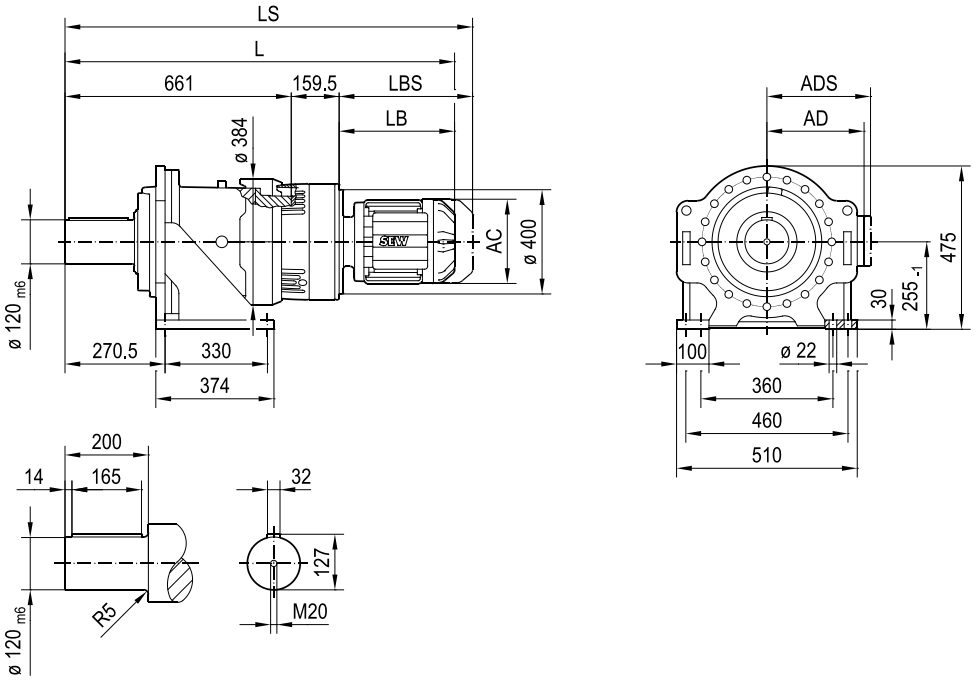

P3PH002e/B..

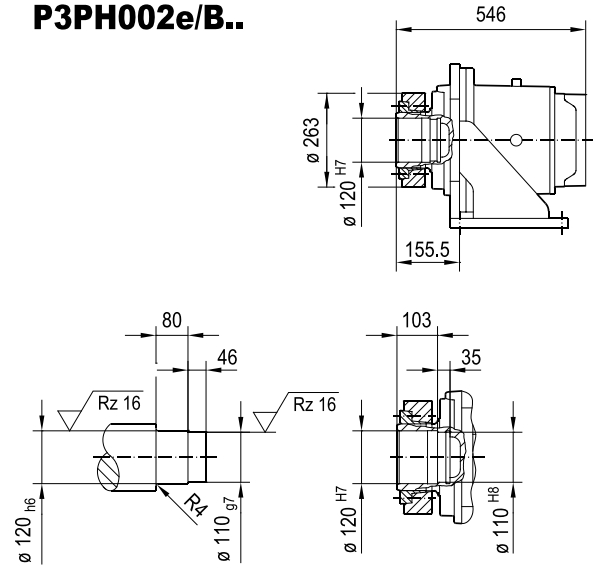

(→ 📖 -)	DRN							
	132S	132M	132L	160..	180..	200L	225..	
AC	221	261	261	314	357	394	434	
AD	170	228	228	253	268	283	305	
ADS	172	228	228	253	268	283	305	
L	1227	1245	1270	1337	1360	1469	1444	
LS	1339	1382	1407	1526	1549	1674	1649	
LB	406	424	450	516	539	649	623	
LBS	518	562	587	705	728	854	828	

31991203/EN – 08/2025

P3PS002e/F DMF..

45 010 01 22

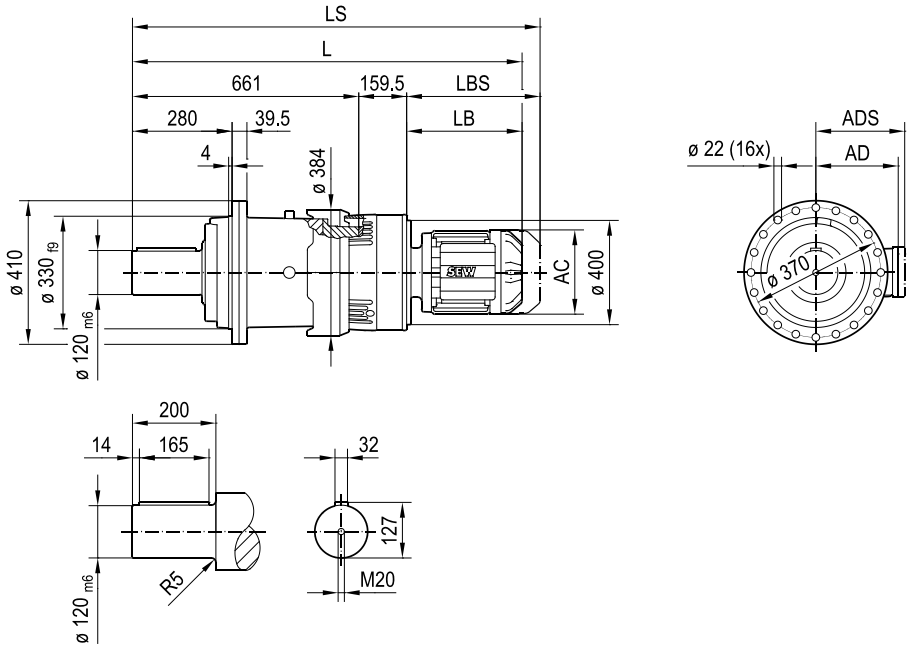

P3PH002e/F..

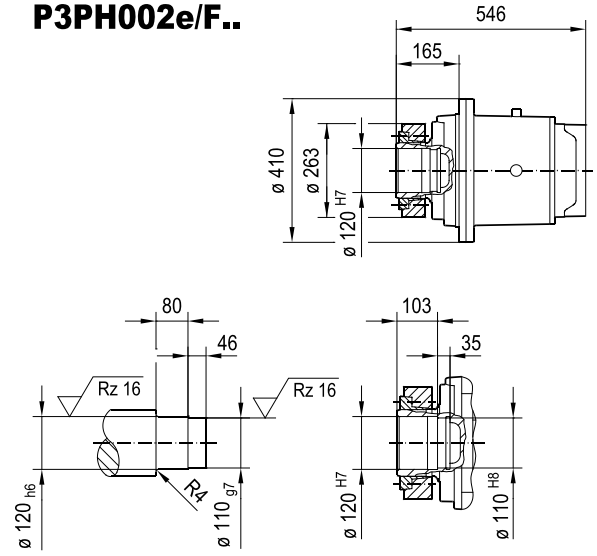

P3P.002e/T..

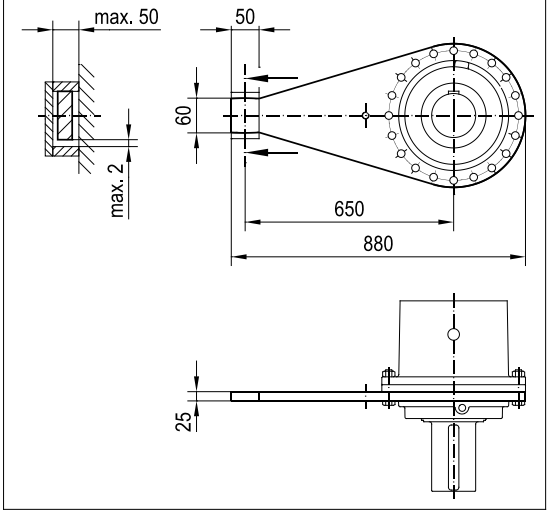

(→ 📖 -)	DRN							
	132S	132M	132L	160..	180..	200L	225..	
AC	221	261	261	314	357	394	434	
AD	170	228	228	253	268	283	305	
ADS	172	228	228	253	268	283	305	
L	1227	1245	1270	1337	1360	1469	1444	
LS	1339	1382	1407	1526	1549	1674	1649	
LB	406	424	450	516	539	649	623	
LBS	518	562	587	705	728	854	828	

31991203/EN – 08/2025

P2PS012e/B DMF..

45 015 02 22

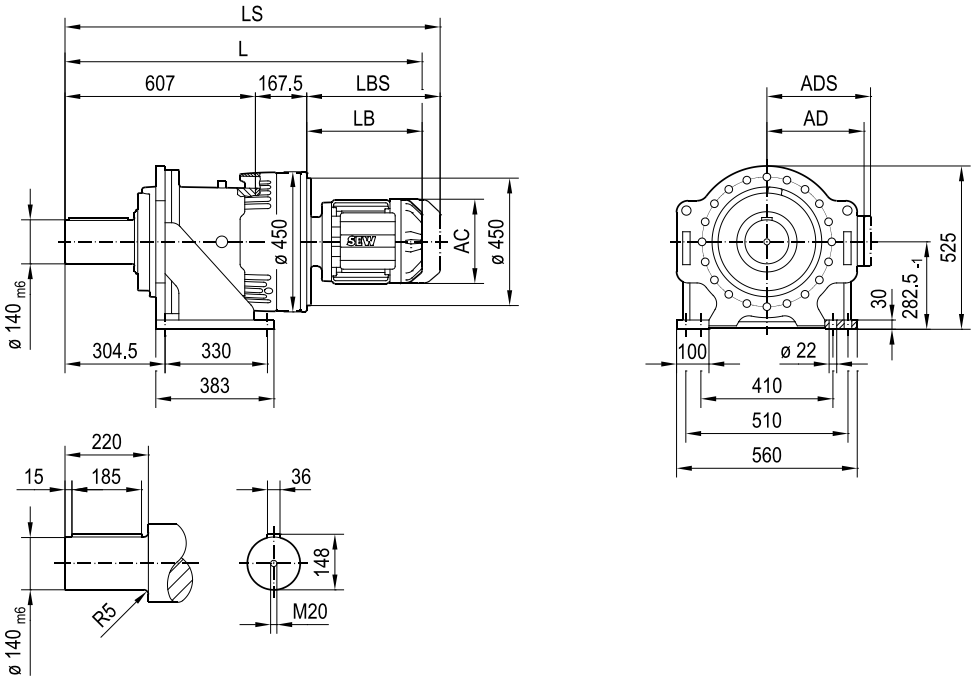

P2PH012e/B..

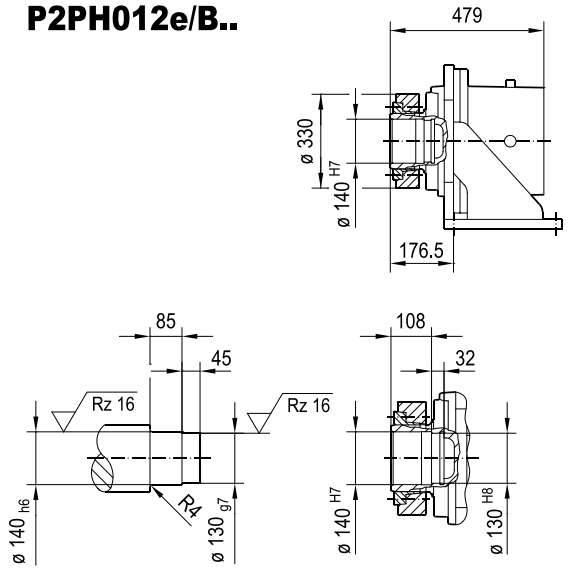

(→ 📖 -)	DRN							
	160..	180..	200L	225..	250M	280S	280M	
AC	314	357	394	434	495	495	495	
AD	253	268	283	305	394	394	394	
ADS	253	268	283	305	394	394	394	
L	1283	1306	1415	1390	1527	1527	1622	
LS	1472	1495	1620	1595	1767	1767	1862	
LB	508	531	641	615	752	752	847	
LBS	697	720	846	820	992	992	1087	

31991203/EN – 08/2025

P2PS012e/F DMF..

45 017 02 22

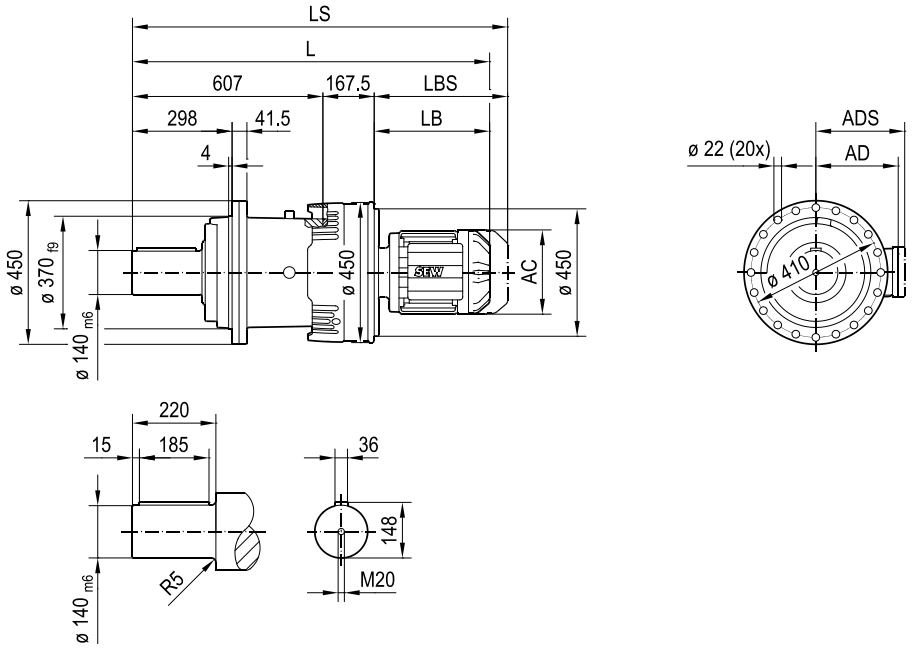

P2PH012e/F..

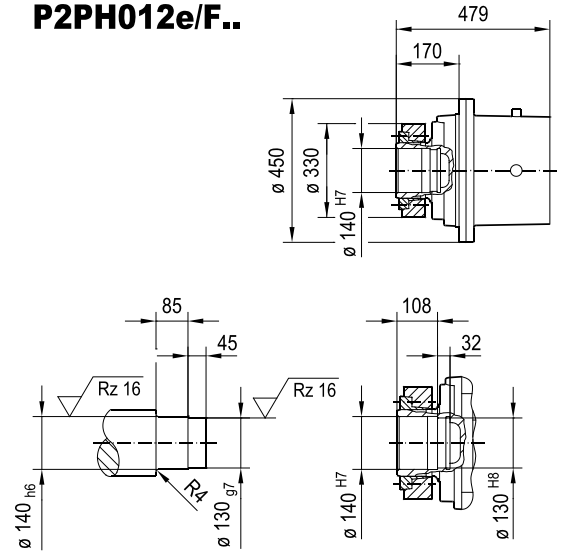

P2P.012e/T..

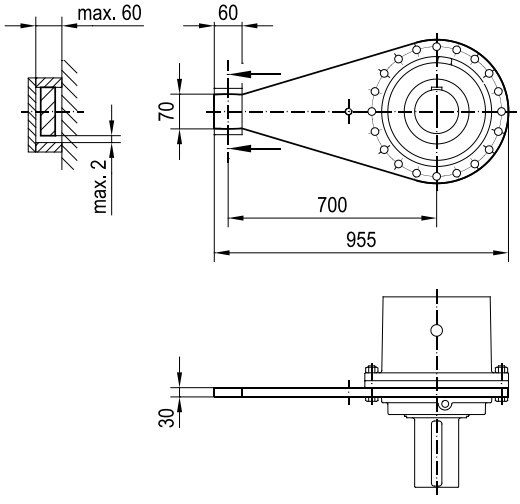

(→ 📖 -)	DRN							
	160..	180..	200L	225..	250M	280S	280M	
AC	314	357	394	434	495	495	495	
AD	253	268	283	305	394	394	394	
ADS	253	268	283	305	394	394	394	
L	1283	1306	1415	1390	1527	1527	1622	
LS	1472	1495	1620	1595	1767	1767	1862	
LB	508	531	641	615	752	752	847	
LBS	697	720	846	820	992	992	1087	

31991203/EN – 08/2025

P3PS012e/B DMF..

45 016 02 22

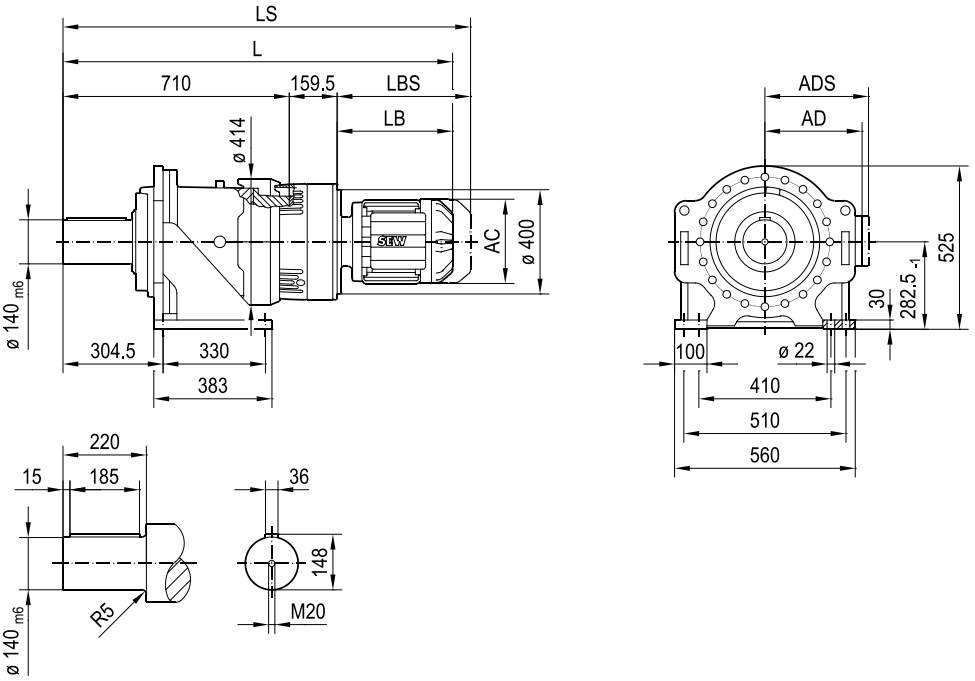

P3PH012e/B..

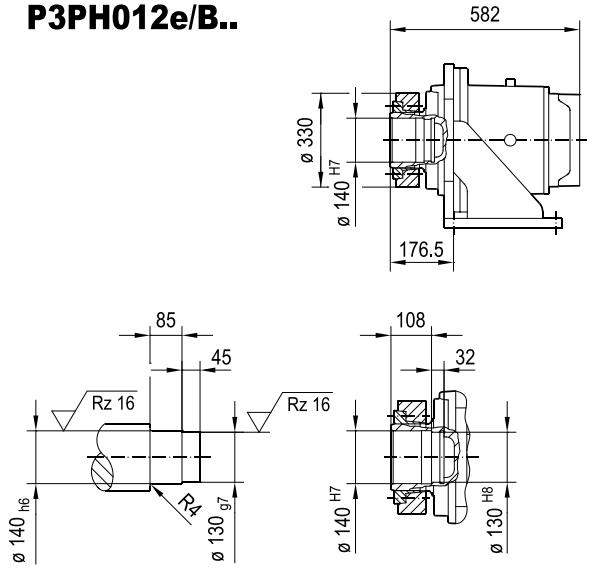

(→ 📖 -)	DRN							
	132S	132M	132L	160..	180..	200L	225..	
AC	221	261	261	314	357	394	434	
AD	170	228	228	253	268	283	305	
ADS	172	228	228	253	268	283	305	
L	1276	1294	1319	1386	1409	1518	1493	
LS	1388	1431	1456	1575	1598	1723	1698	
LB	406	424	450	516	539	649	623	
LBS	518	562	587	705	728	854	828	

31991203/EN – 08/2025

P3PS012e/F DMF..

45 018 02 22

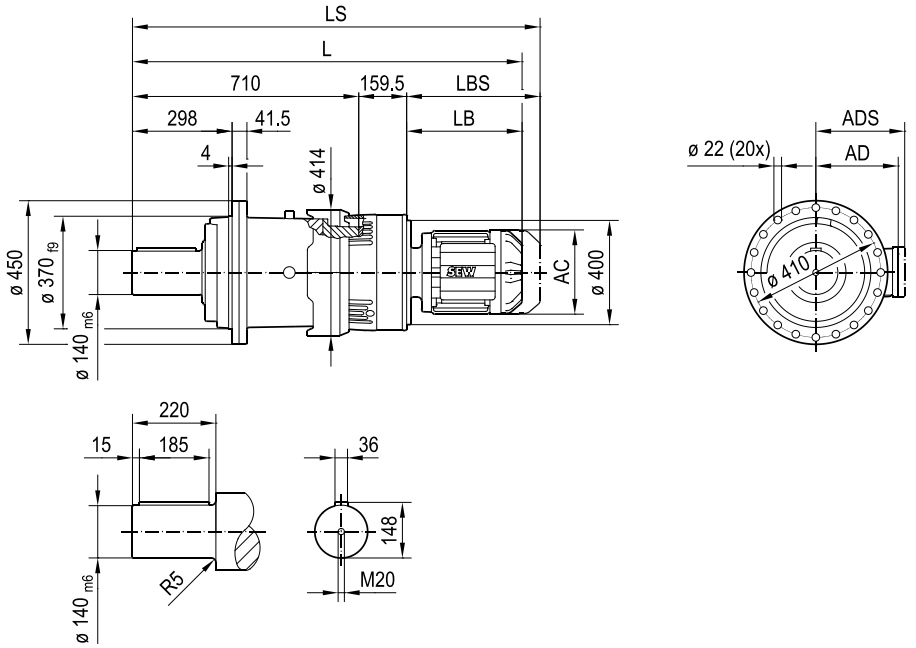

P3PH012e/F..

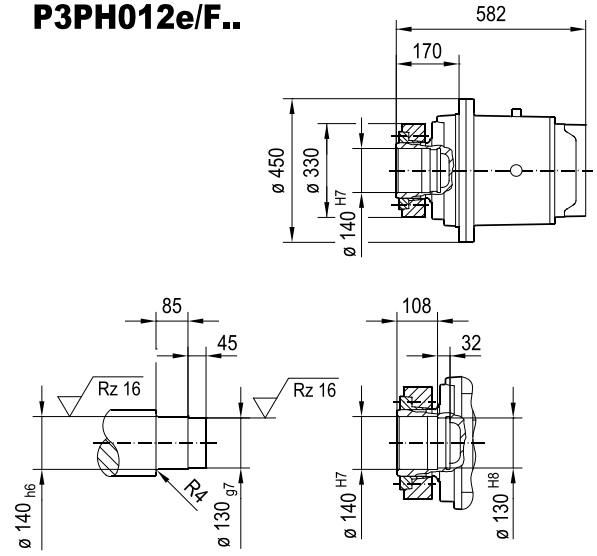

P3P.012e/T..

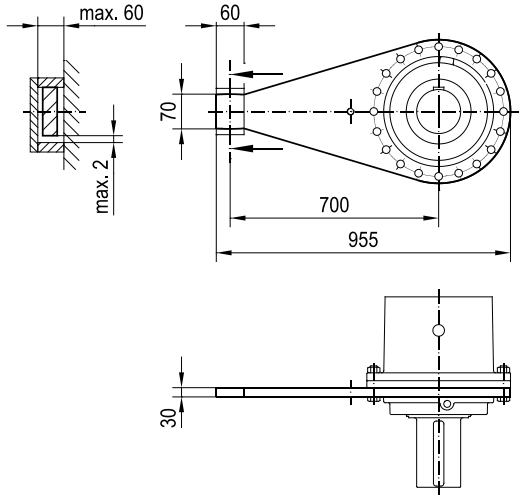

(→ 📖 -)	DRN							
	132S	132M	132L	160..	180..	200L	225..	
AC	221	261	261	314	357	394	434	
AD	170	228	228	253	268	283	305	
ADS	172	228	228	253	268	283	305	
L	1276	1294	1319	1386	1409	1518	1493	
LS	1388	1431	1456	1575	1598	1723	1698	
LB	406	424	450	516	539	649	623	
LBS	518	562	587	705	728	854	828	

31991203/EN – 08/2025

P2PS022e/B DMF..

45 023 01 22

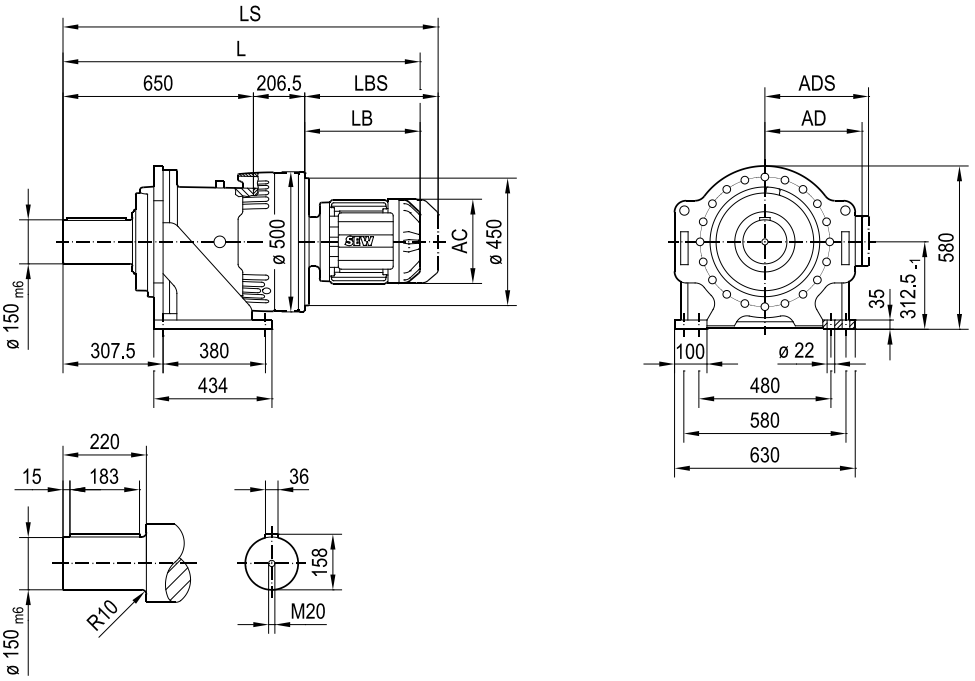

P2PH022e/B..

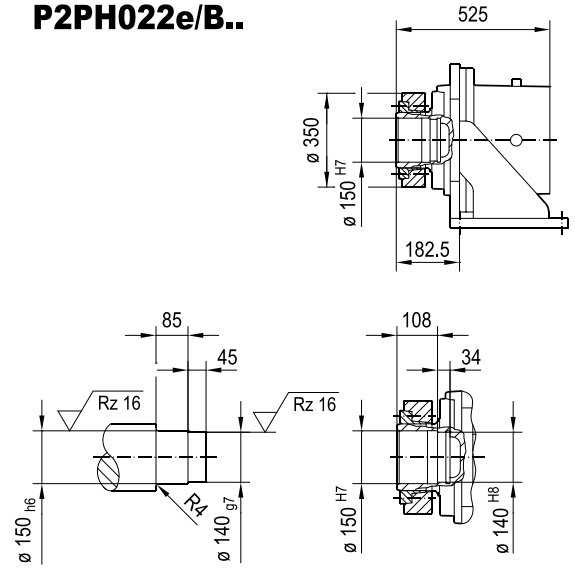

(→ 📖 -)	DRN							
	180..	200L	225..	250M	280S	280M		
AC	357	394	434	495	495	495		
AD	268	283	305	394	394	394		
ADS	268	283	305	394	394	394		
L	1388	1497	1472	1609	1609	1704		
LS	1577	1702	1677	1849	1849	1944		
LB	531	641	615	752	752	847		
LBS	720	846	820	992	992	1087		

31991203/EN – 08/2025

P2PS022e/F DMF..

45 025 01 22

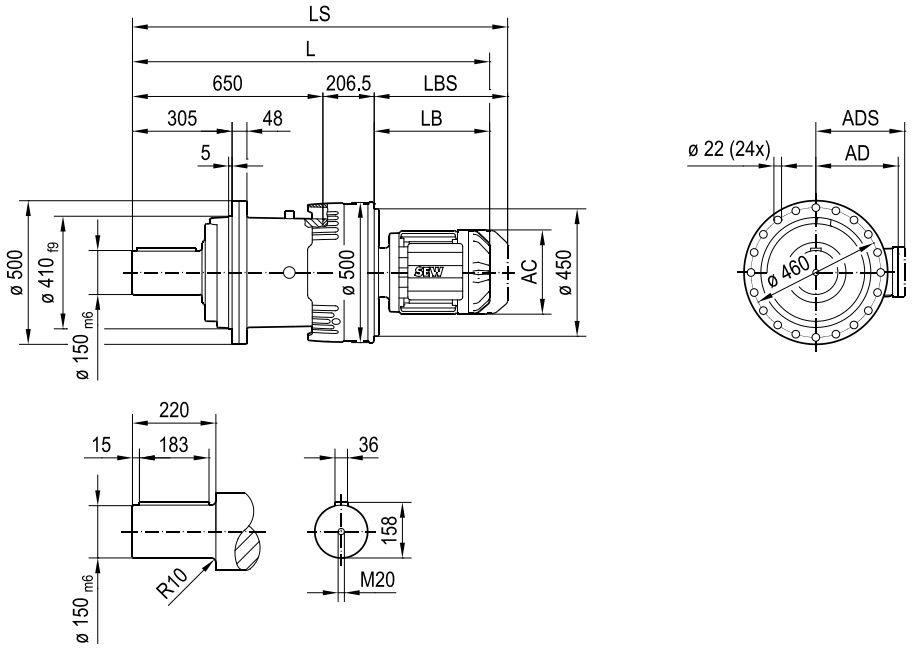

P2PH022e/F..

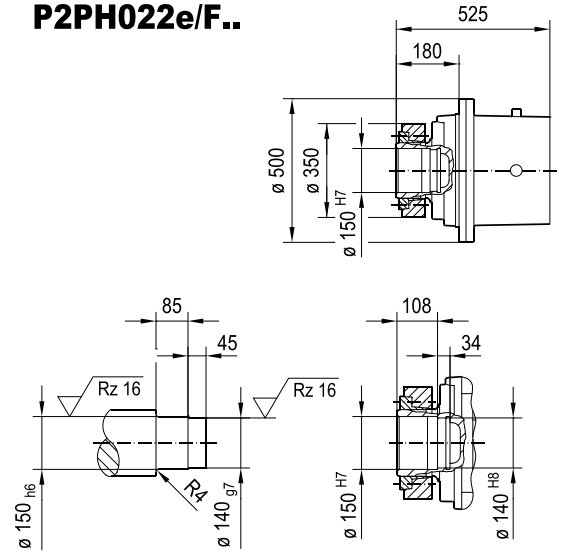

P2P.022e/T..

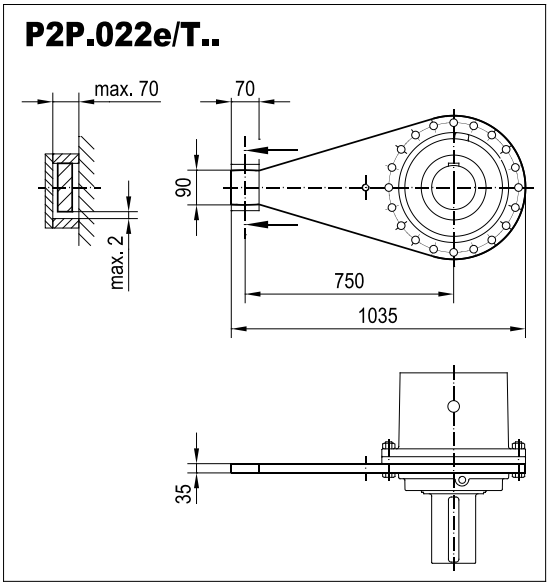

(→ 📖 -)	DRN							
	180..	200L	225..	250M	280S	280M		
AC	357	394	434	495	495	495		
AD	268	283	305	394	394	394		
ADS	268	283	305	394	394	394		
L	1388	1497	1472	1609	1609	1704		
LS	1577	1702	1677	1849	1849	1944		
LB	531	641	615	752	752	847		
LBS	720	846	820	992	992	1087		

31991203/EN – 08/2025

P3PS022e/B DMF..

45 024 01 22

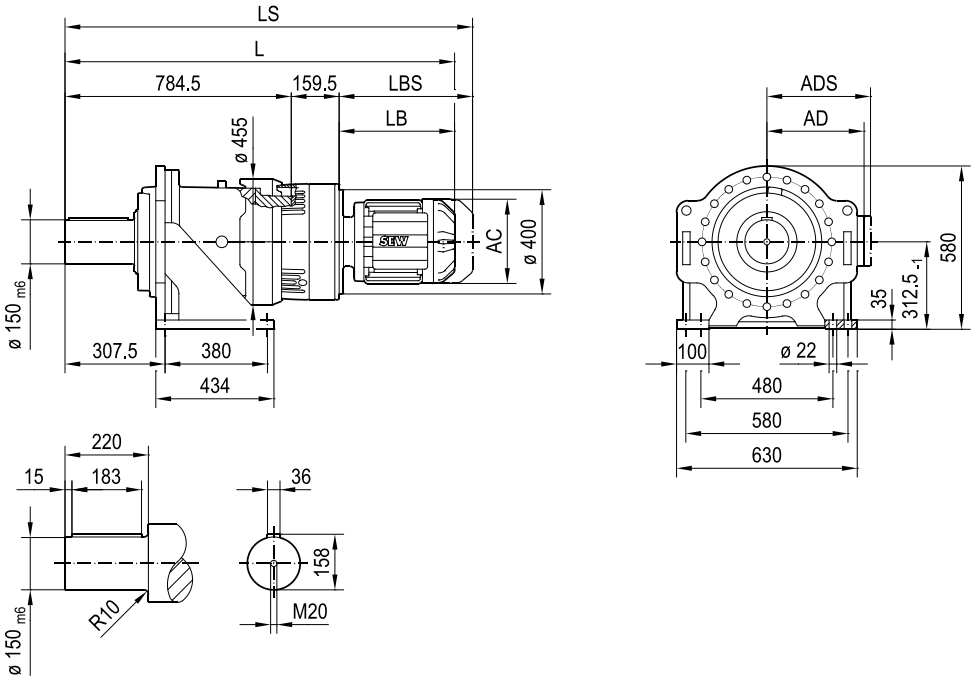

P3PH022e/B..

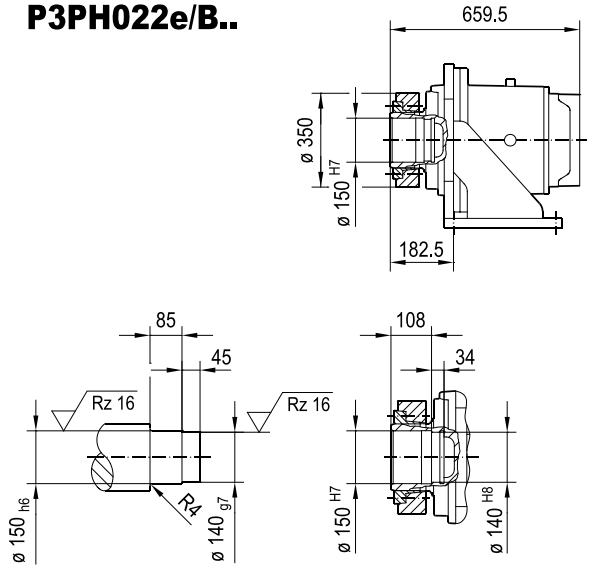

(→ 📖 -)	DRN							
	132M	132L	160..	180..	200L	225..	250M	
AC	261	261	314	357	394	434	495	
AD	228	228	253	268	283	305	394	
ADS	228	228	253	268	283	305	394	
L	1368	1394	1460	1483	1593	1567	1704	
LS	1506	1531	1649	1672	1798	1772	1944	
LB	424	450	516	539	649	623	760	
LBS	562	587	705	728	854	828	1000	

31991203/EN – 08/2025

P3PS022e/F DMF..

45 026 01 22

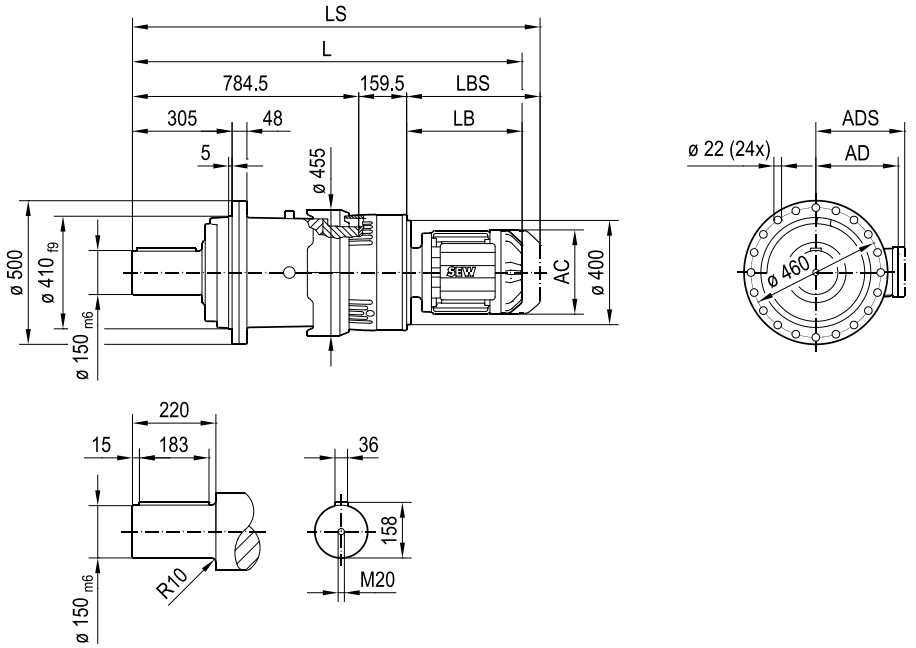

P3PH022e/F..

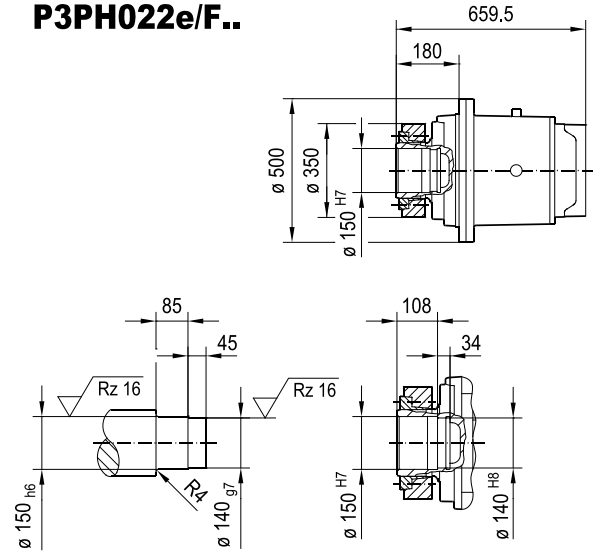

P3P.022e/T..

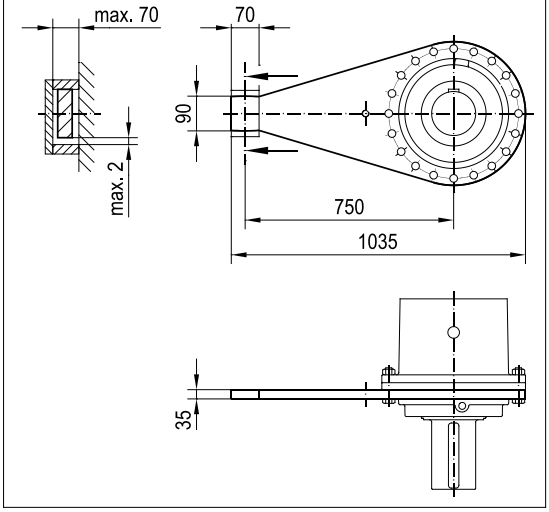

(→ 📖 -)	DRN							
	132M	132L	160..	180..	200L	225..	250M	
AC	261	261	314	357	394	434	495	
AD	228	228	253	268	283	305	394	
ADS	228	228	253	268	283	305	394	
L	1368	1394	1460	1483	1593	1567	1704	
LS	1506	1531	1649	1672	1798	1772	1944	
LB	424	450	516	539	649	623	760	
LBS	562	587	705	728	854	828	1000	

31991203/EN – 08/2025

P2PS032e/B DMF..

45 016 01 23

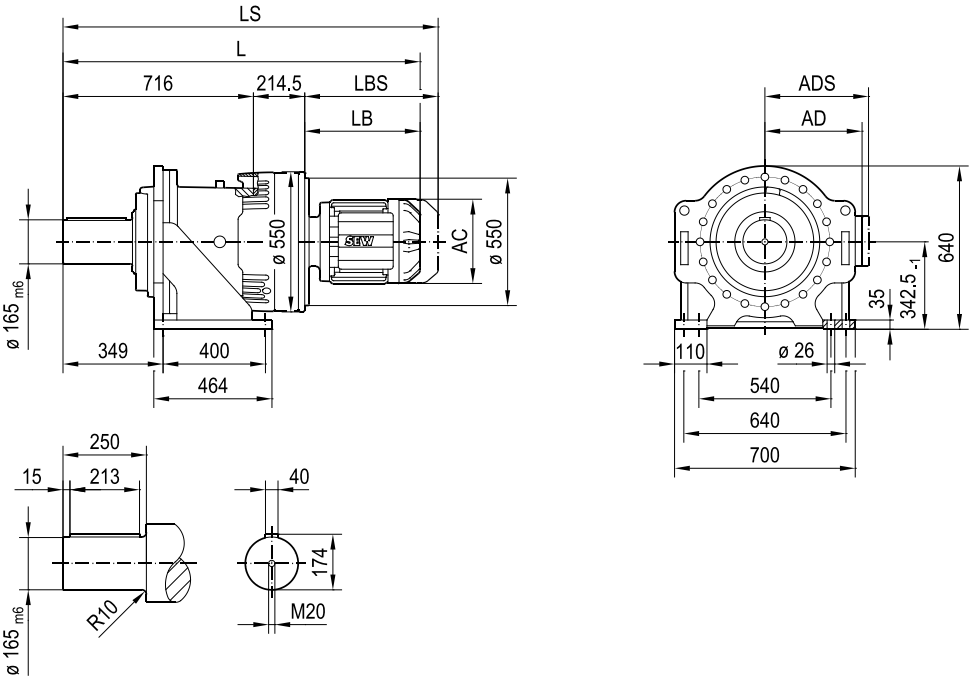

P2PH032e/B..

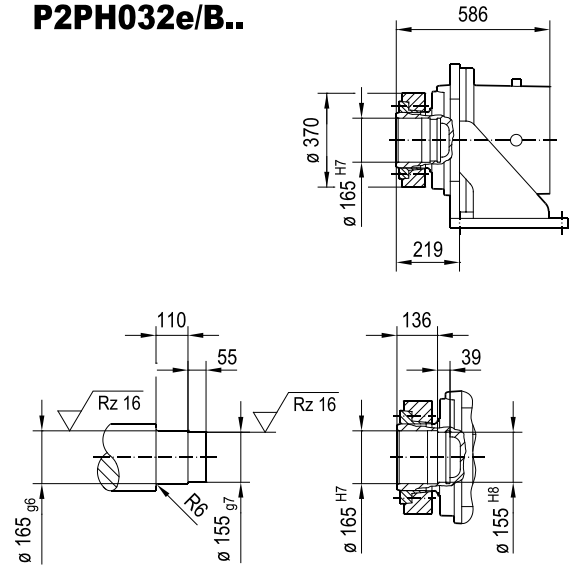

(→ 📖 -)	DRN							
	200L	225..	250M	280S	280M	315S-M	315ME-H	
AC	394	434	495	495	495	624	624	
AD	283	305	394	394	394	506	506	
ADS	283	305	394	394	394	506	506	
L	1563	1538	1675	1675	1770	1872	2002	
LS	1768	1743	1915	1915	2010	2123	2253	
LB	633	607	744	744	839	941	1071	
LBS	838	812	984	984	1079	1192	1322	

31991203/EN – 08/2025

P2PS032e/F DMF..

45 017 01 23

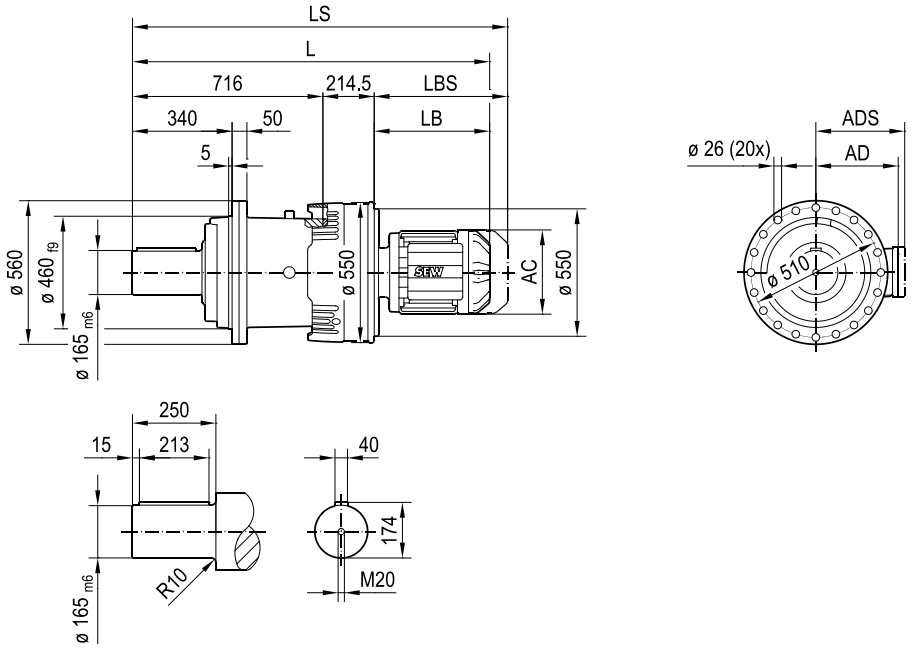

P2PH032e/F..

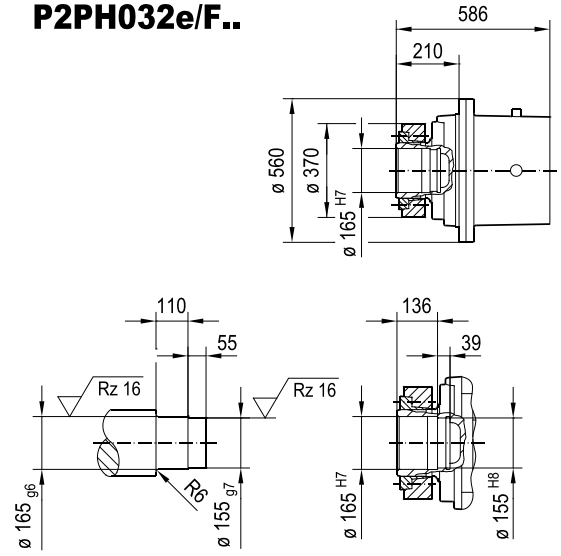

P2P.032e/T..

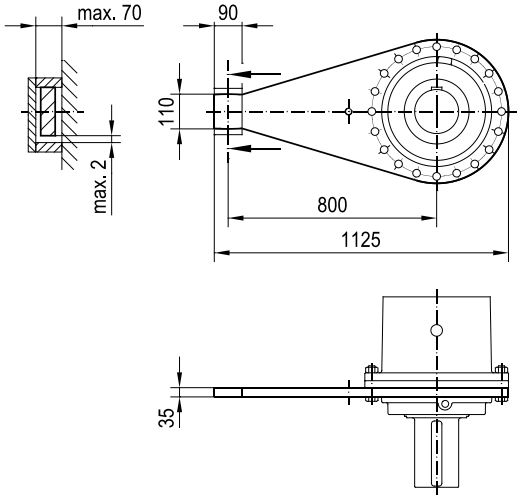

(→ 📖 -)	DRN							
	200L	225..	250M	280S	280M	315S-M	315ME-H	
AC	394	434	495	495	495	624	624	
AD	283	305	394	394	394	506	506	
ADS	283	305	394	394	394	506	506	
L	1563	1538	1675	1675	1770	1872	2002	
LS	1768	1743	1915	1915	2010	2123	2253	
LB	633	607	744	744	839	941	1071	
LBS	838	812	984	984	1079	1192	1322	

31991203/EN – 08/2025

P3PS032e/B DMF..

45 018 01 23

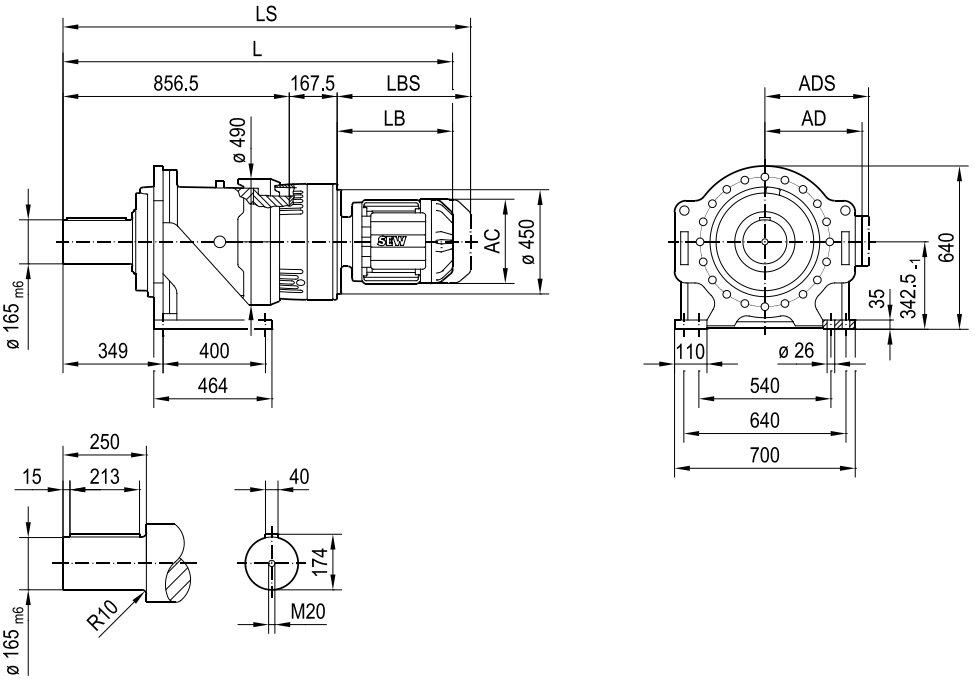

P3PH032e/B..

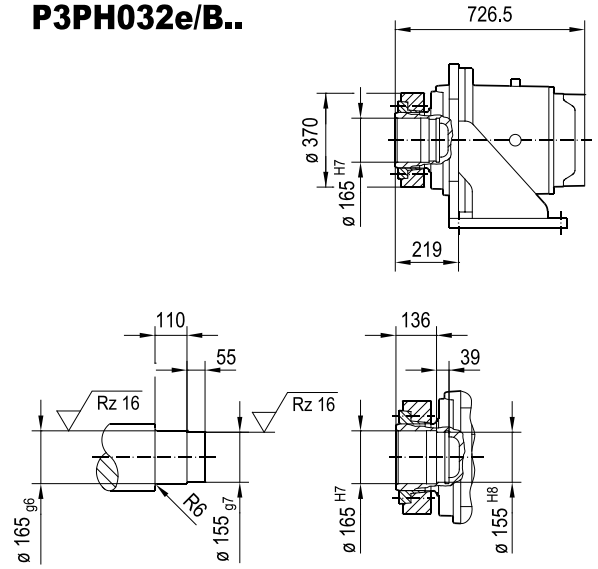

(→ 📖 -)	DRN							
	160..	180..	200L	225..	250M			
AC	314	357	394	434	495			
AD	253	268	283	305	394			
ADS	253	268	283	305	394			
L	1532	1555	1665	1639	1776			
LS	1721	1744	1870	1844	2016			
LB	508	531	641	615	752			
LBS	697	720	846	820	992			

31991203/EN – 08/2025

P3PS032e/F DMF..

45 019 01 23

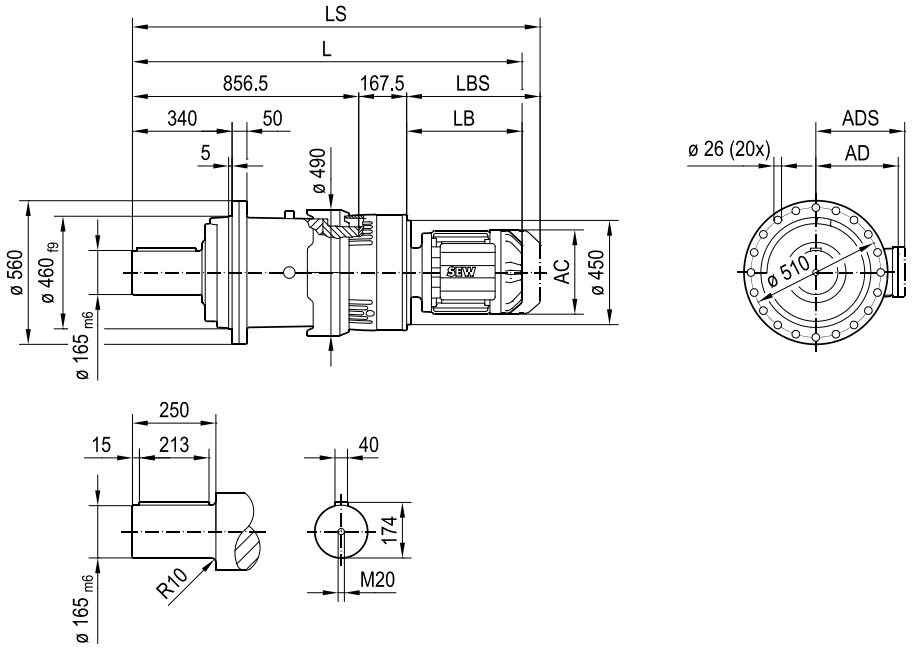

P3PH032e/F..

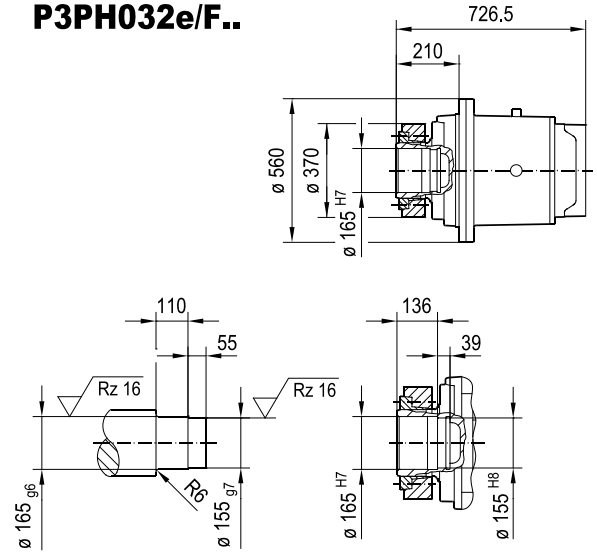

P3P.032e/T..

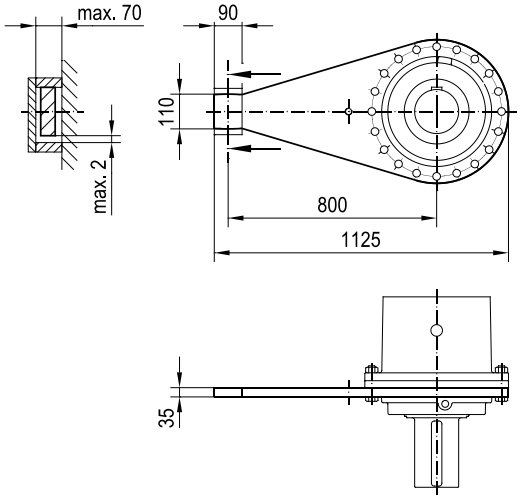

(→ 📖 -)	DRN							
	160..	180..	200L	225..	250M			
AC	314	357	394	434	495			
AD	253	268	283	305	394			
ADS	253	268	283	305	394			
L	1532	1555	1665	1639	1776			
LS	1721	1744	1870	1844	2016			
LB	508	531	641	615	752			
LBS	697	720	846	820	992			

31991203/EN – 08/2025

P2PS042e/B DMF..

45 006 02 21

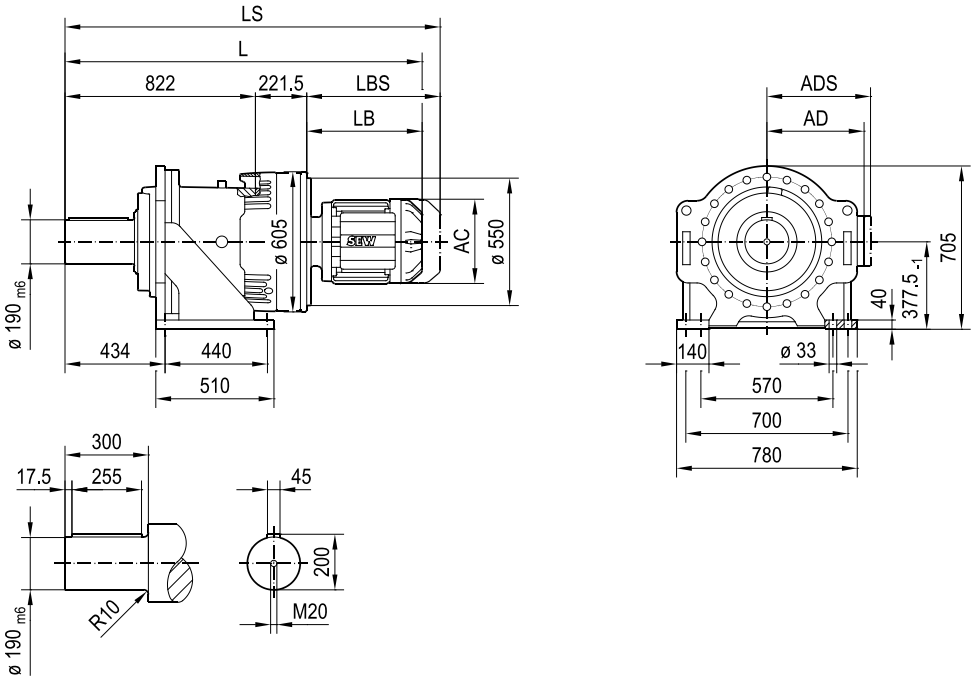

P2PH042e/B..

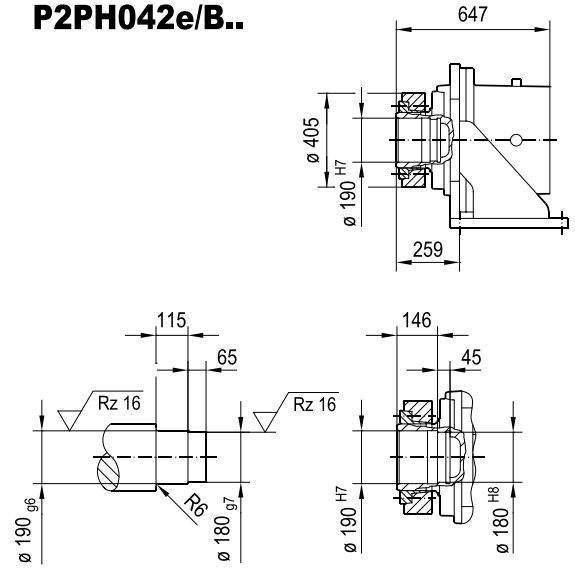

(→ 📖 -)	DRN							
	200L	225..	250M	280S	280M	315S-M	315ME-H	
AC	394	434	495	495	495	624	624	
AD	283	305	394	394	394	506	506	
ADS	283	305	394	394	394	506	506	
L	1676	1651	1788	1788	1883	1985	2115	
LS	1881	1856	2028	2028	2123	2236	2366	
LB	633	607	744	744	839	941	1071	
LBS	838	812	984	984	1079	1192	1322	

31991203/EN – 08/2025

P2PS042e/F DMF..

45 008 02 21

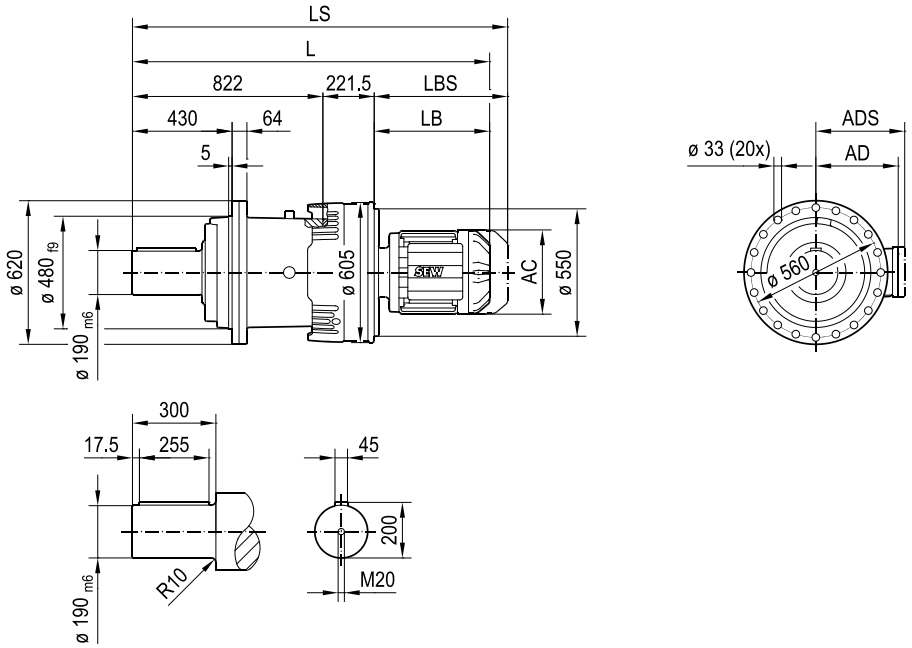

P2PH042e/F..

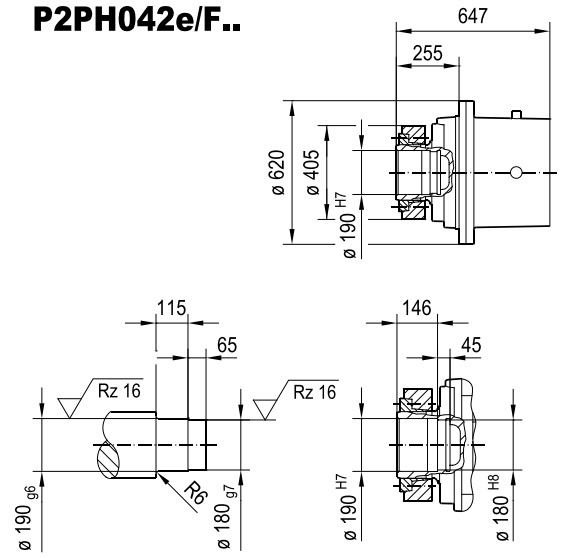

P2P.042e/T..

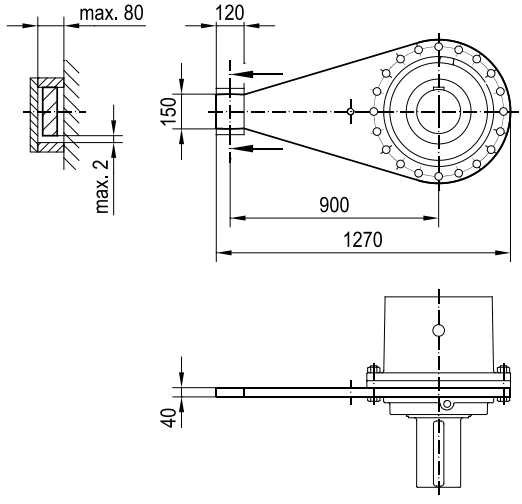

(→ 📖 -)	DRN							
	200L	225..	250M	280S	280M	315S-M	315ME-H	
AC	394	434	495	495	495	624	624	
AD	283	305	394	394	394	506	506	
ADS	283	305	394	394	394	506	506	
L	1676	1651	1788	1788	1883	1985	2115	
LS	1881	1856	2028	2028	2123	2236	2366	
LB	633	607	744	744	839	941	1071	
LBS	838	812	984	984	1079	1192	1322	

31991203/EN – 08/2025

P3PS042e/B DMF..

45 007 02 21

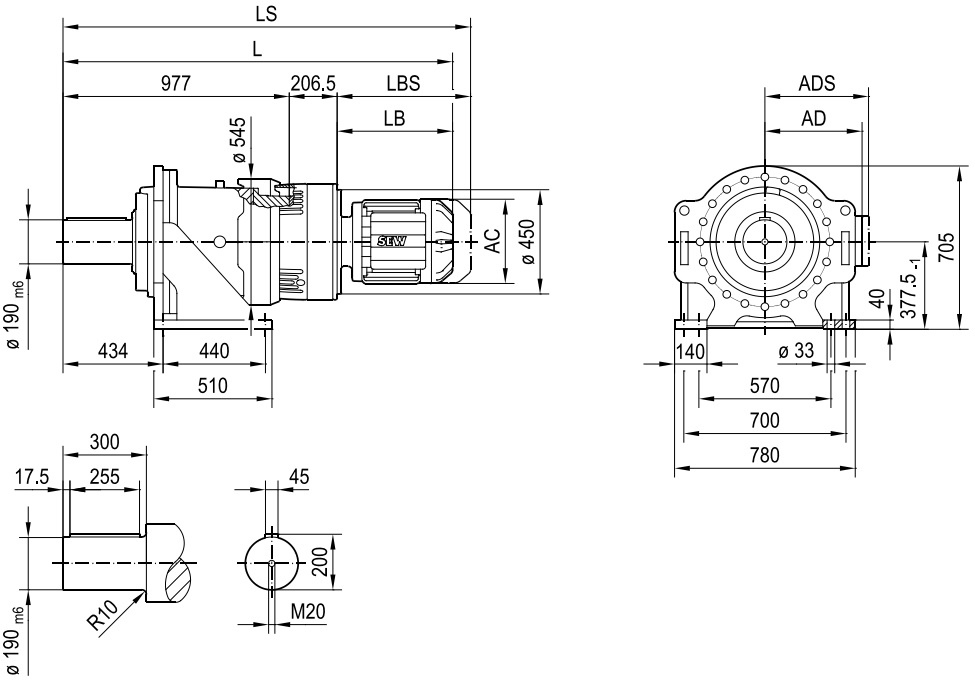

P3PH042e/B..

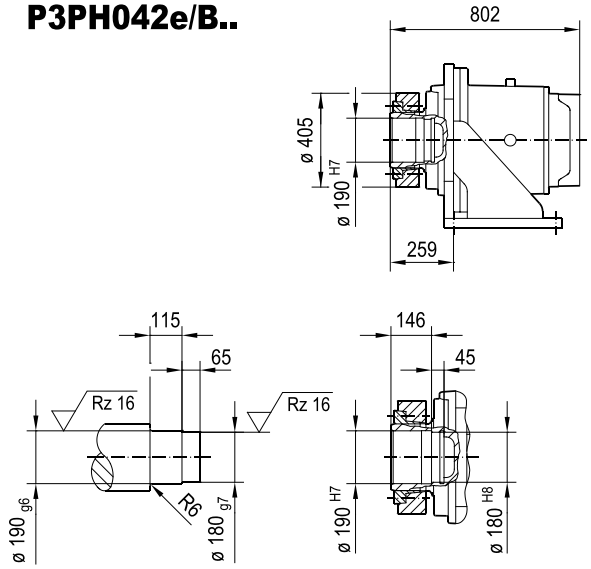

(→ 📖 -)	DRN							
	180..	200L	225..	250M	280S	280M		
AC	357	394	434	495	495	495		
AD	268	283	305	394	394	394		
ADS	268	283	305	394	394	394		
L	1715	1824	1799	1936	1936	2031		
LS	1904	2029	2004	2176	2176	2271		
LB	531	641	615	752	752	847		
LBS	720	846	820	992	992	1087		

31991203/EN – 08/2025

P3PS042e/F DMF..

45 009 02 21

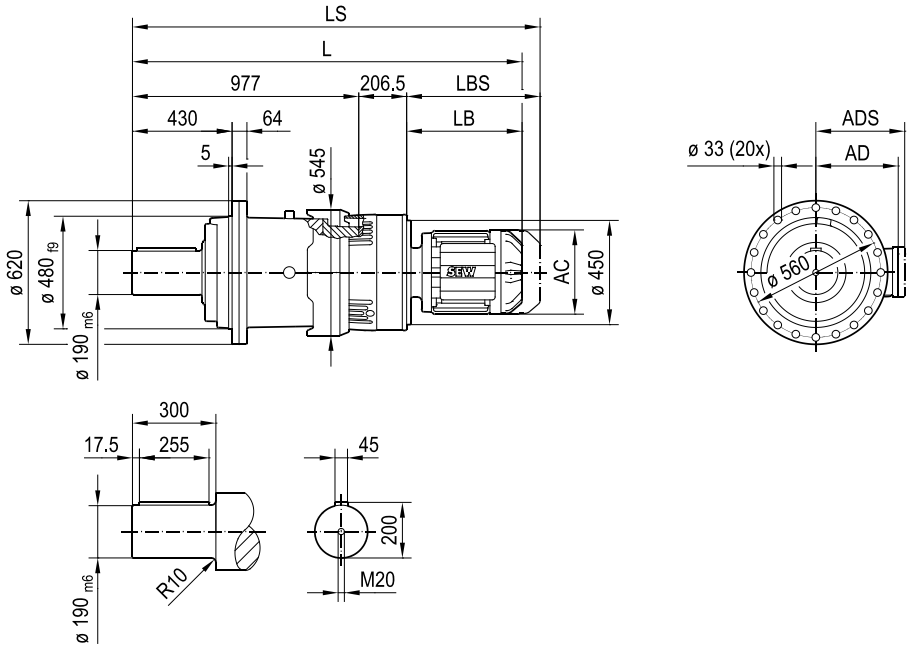

P3PH042e/F..

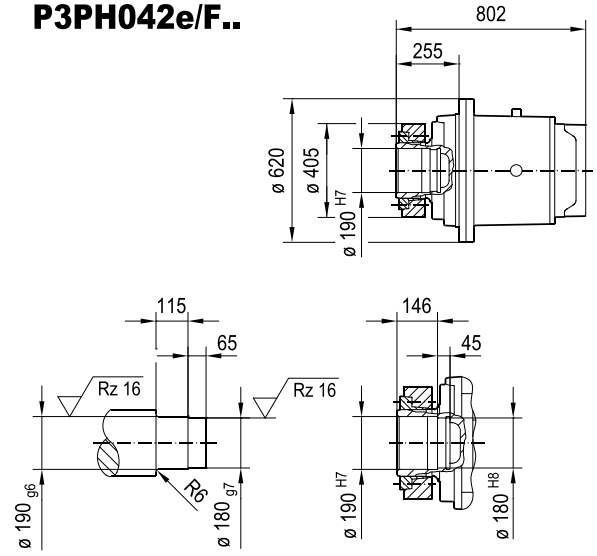

P3P.042e/T..

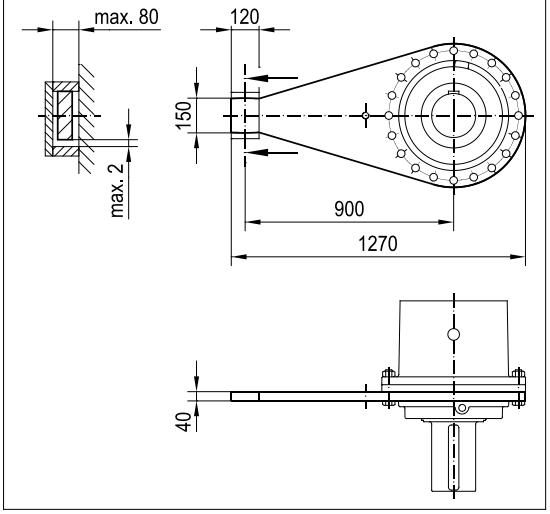

(→ 📖 -)	DRN							
	180..	200L	225..	250M	280S	280M		
AC	357	394	434	495	495	495		
AD	268	283	305	394	394	394		
ADS	268	283	305	394	394	394		
L	1715	1824	1799	1936	1936	2031		
LS	1904	2029	2004	2176	2176	2271		
LB	531	641	615	752	752	847		
LBS	720	846	820	992	992	1087		

31991203/EN – 08/2025

P2PS052e/B DMF..

45 024 01 23

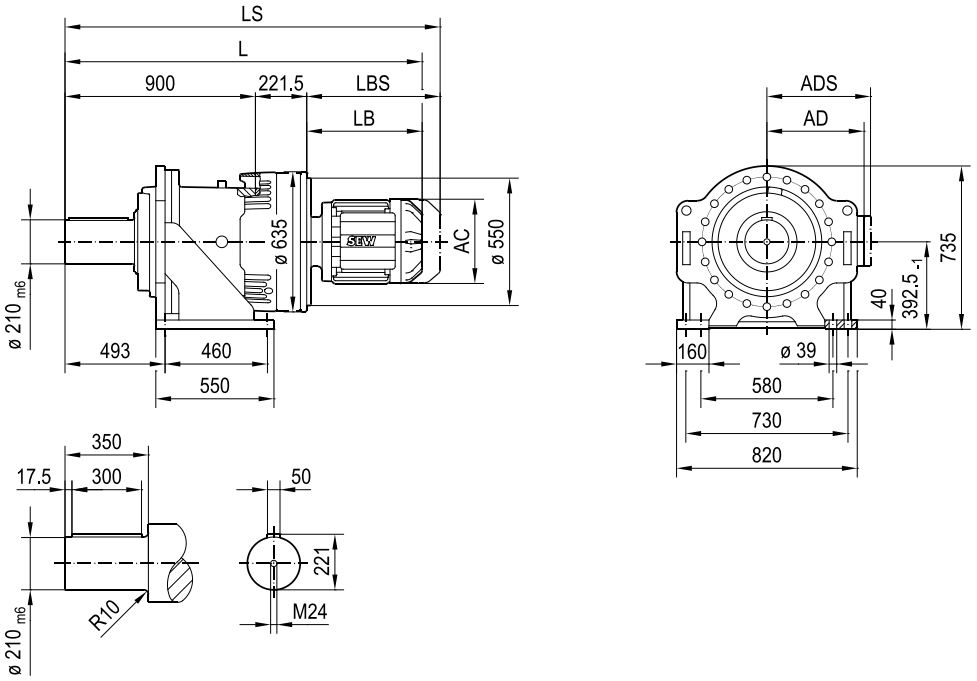

P2PH052e/B..

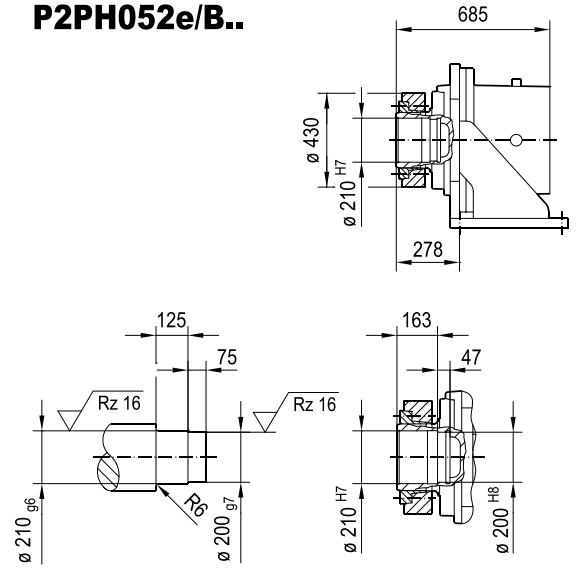

(→ 📖 -)	DRN							
	200L	225..	250M	280S	280M	315S-M	315ME-H	
AC	394	434	495	495	495	624	624	
AD	283	305	394	394	394	506	506	
ADS	283	305	394	394	394	506	506	
L	1754	1729	1866	1866	1961	2063	2193	
LS	1959	1934	2106	2106	2201	2314	2444	
LB	633	607	744	744	839	941	1071	
LBS	838	812	984	984	1079	1192	1322	

31991203/EN – 08/2025

P2PS052e/F DMF..

45 025 01 23

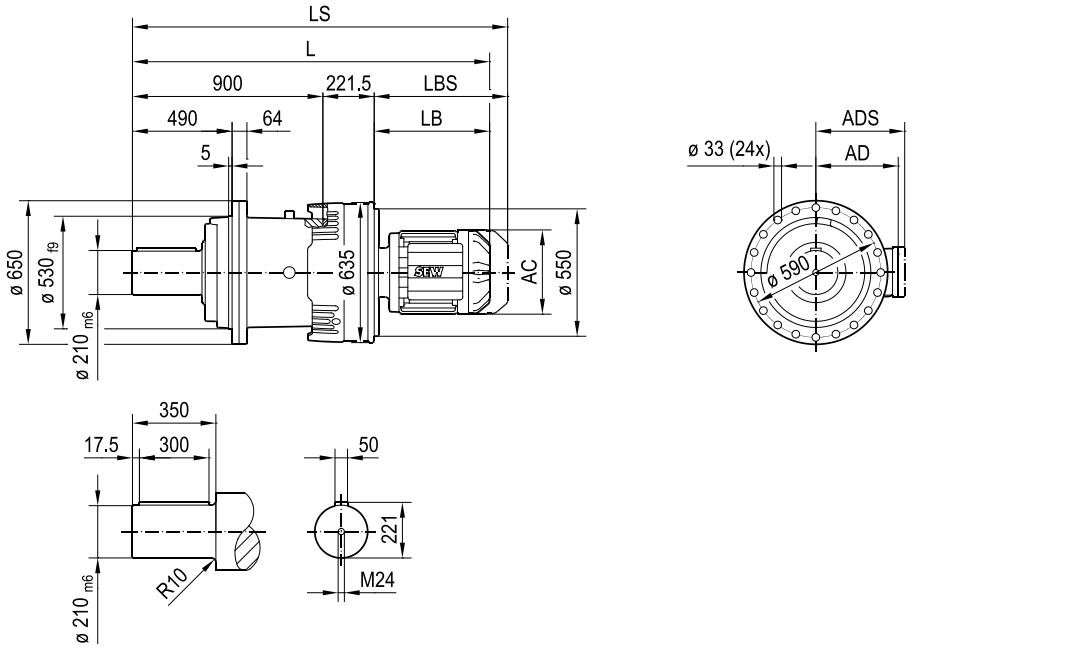

P2PH052e/F..

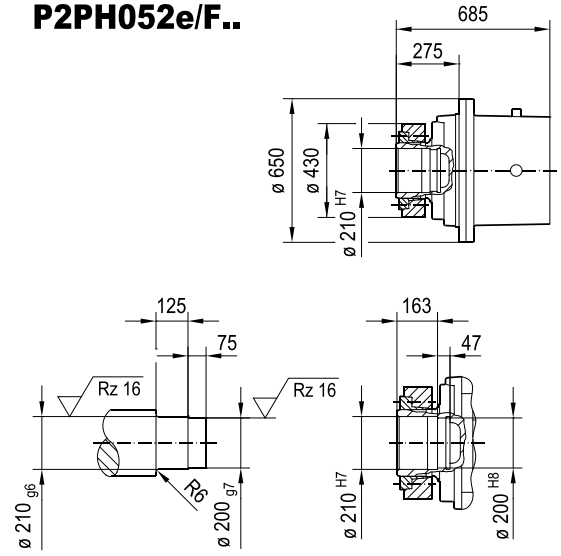

P2P.052e/T..

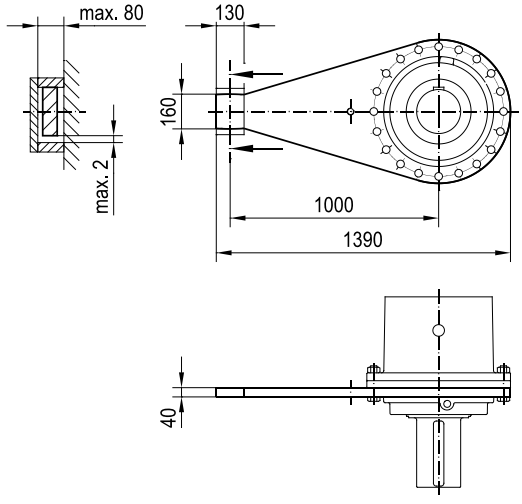

(→ 📖 -)	DRN							
	200L	225..	250M	280S	280M	315S-M	315ME-H	
AC	394	434	495	495	495	624	624	
AD	283	305	394	394	394	506	506	
ADS	283	305	394	394	394	506	506	
L	1754	1729	1866	1866	1961	2063	2193	
LS	1959	1934	2106	2106	2201	2314	2444	
LB	633	607	744	744	839	941	1071	
LBS	838	812	984	984	1079	1192	1322	

31991203/EN – 08/2025

P3PS052e/B DMF..

45 026 01 23

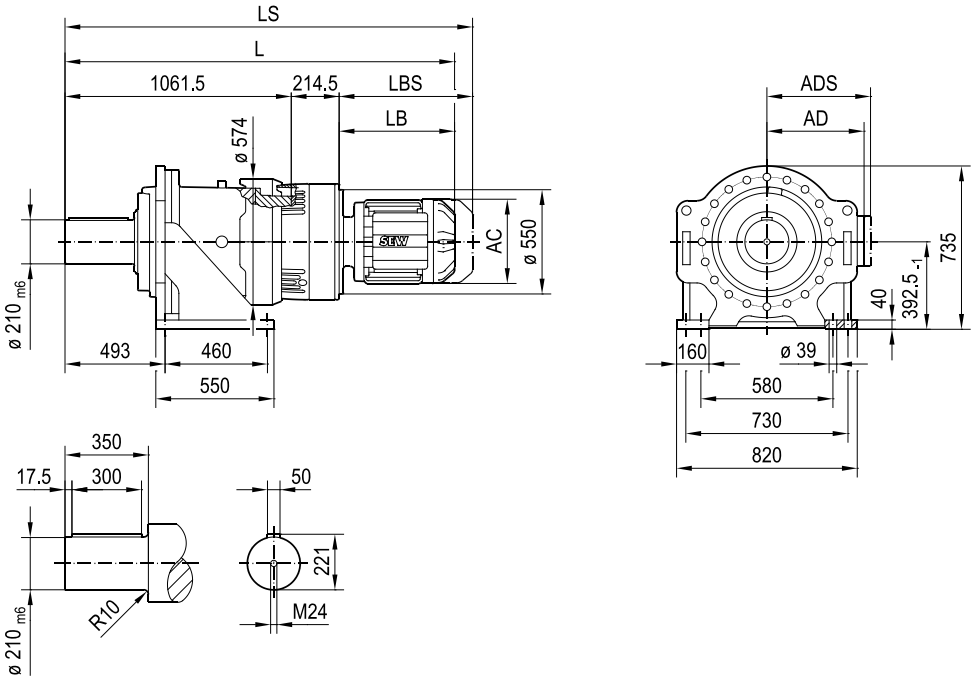

P3PH052e/B..

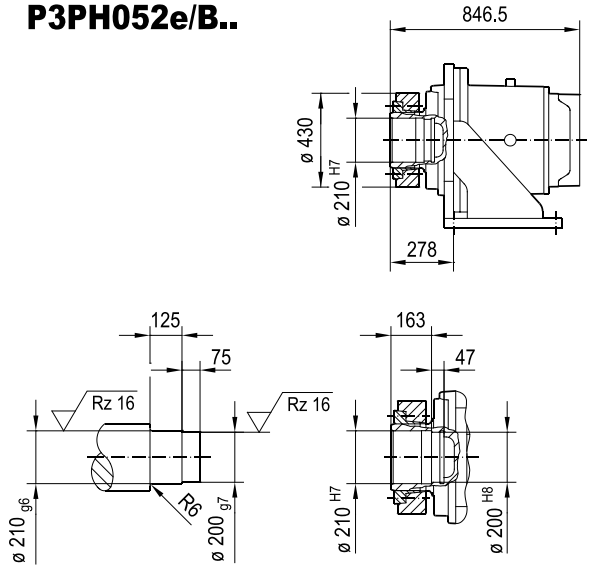

(→ 📖 -)	DRN							
	180..	200L	225..	250M	280S	280M	315S-M	315ME-H
AC	357	394	434	495	495	495	624	624
AD	268	283	305	394	394	394	506	506
ADS	268	283	305	394	394	394	506	506
L	1799	1909	1883	2020	2020	2115	2217	2347
LS	1988	2114	2088	2260	2260	2355	2468	2598
LB	523	633	607	744	744	839	941	1071
LBS	712	838	812	984	984	1079	1192	1322

31991203/EN – 08/2025

P3PS052e/F DMF..

45 027 01 23

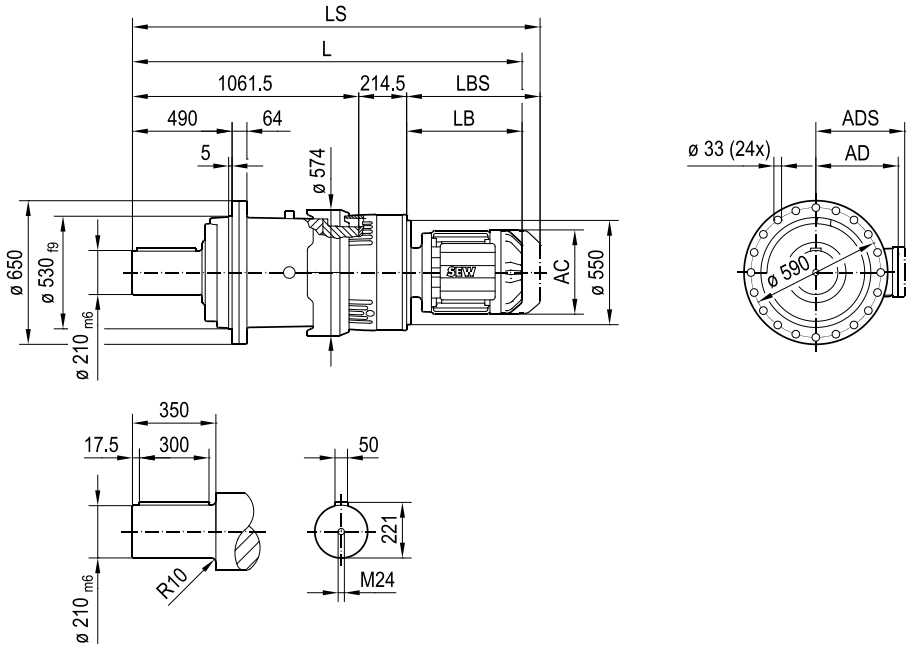

P3PH052e/F..

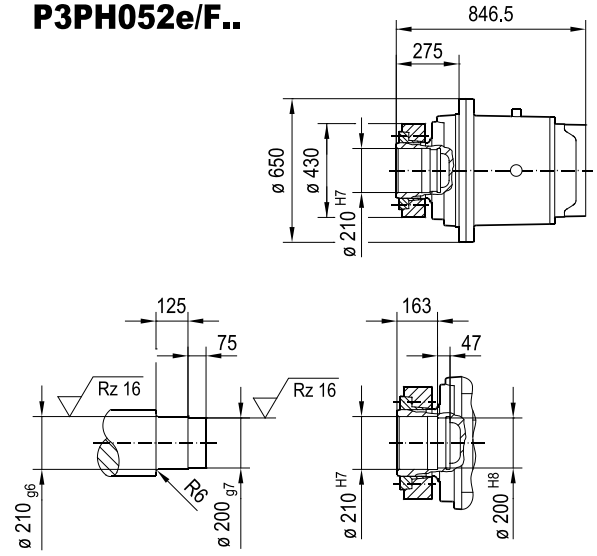

P3P.052e/T..

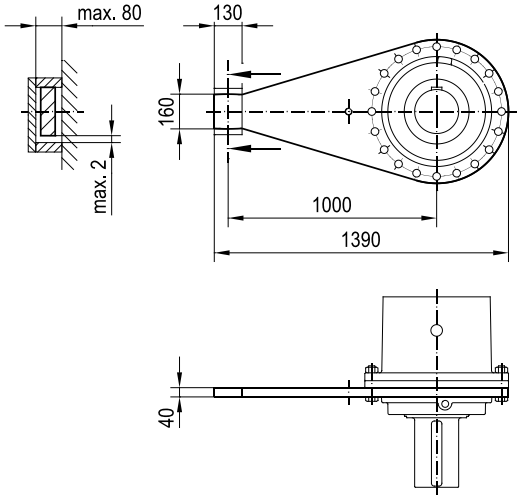

(→ 📖 -)	DRN							
	180..	200L	225..	250M	280S	280M	315S-M	315ME-H
AC	357	394	434	495	495	495	624	624
AD	268	283	305	394	394	394	506	506
ADS	268	283	305	394	394	394	506	506
L	1799	1909	1883	2020	2020	2115	2217	2347
LS	1988	2114	2088	2260	2260	2355	2468	2598
LB	523	633	607	744	744	839	941	1071
LBS	712	838	812	984	984	1079	1192	1322

31991203/EN – 08/2025

P3PS062e/B DMF..

45 021 01 25

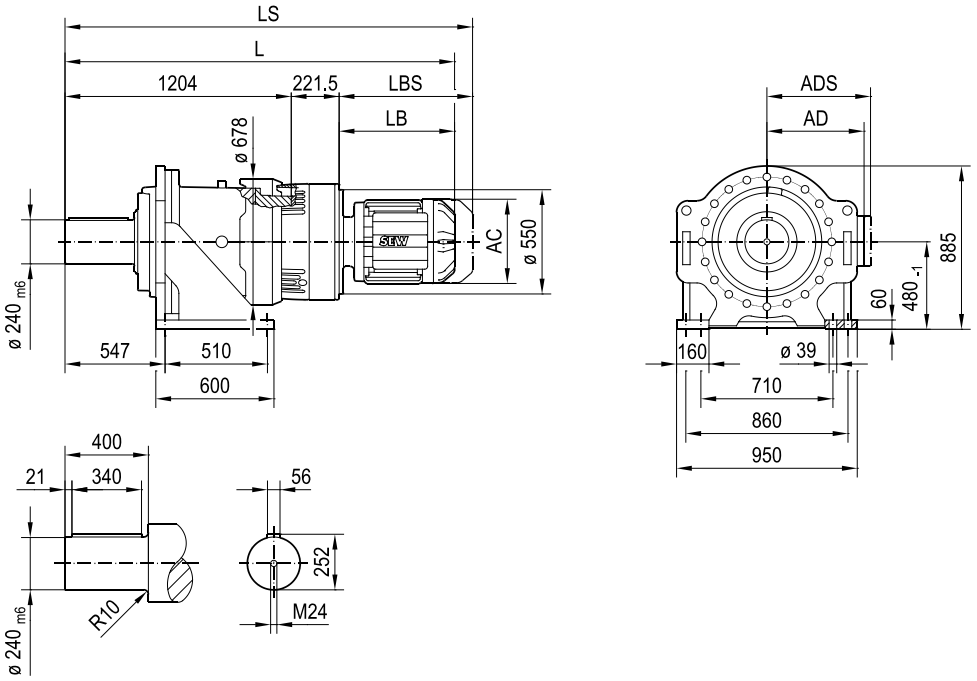

P3PH062e/B..

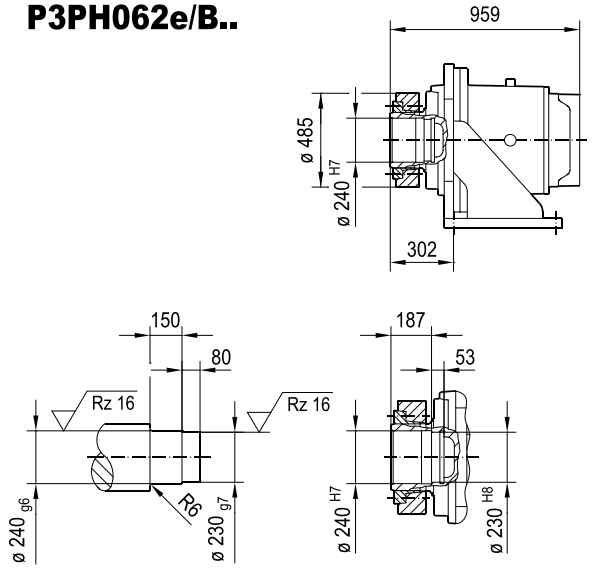

(→ 📖 -)	DRN							
	200L	225..	250M	280S	280M	315S-M	315ME-H	
AC	394	434	495	495	495	624	624	
AD	283	305	394	394	394	506	506	
ADS	283	305	394	394	394	506	506	
L	2058	2033	2170	2170	2265	2367	2497	
LS	2263	2238	2410	2410	2505	2618	2748	
LB	633	607	744	744	839	941	1071	
LBS	838	812	984	984	1079	1192	1322	

31991203/EN – 08/2025

P3PS062e/F DMF..

45 022 01 25

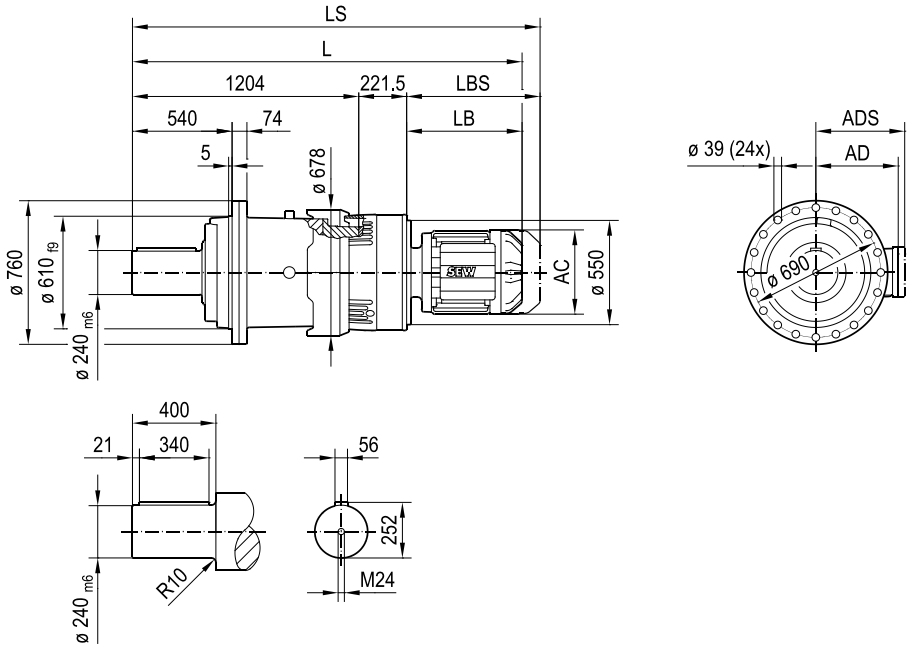

P3PH062e/F..

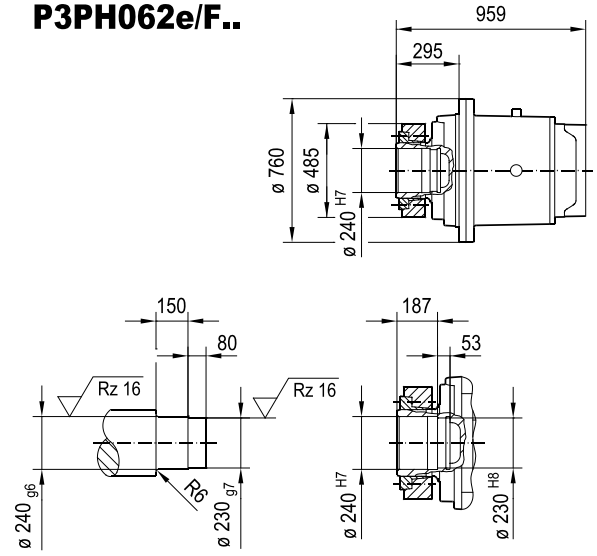

P3P.062e/T..

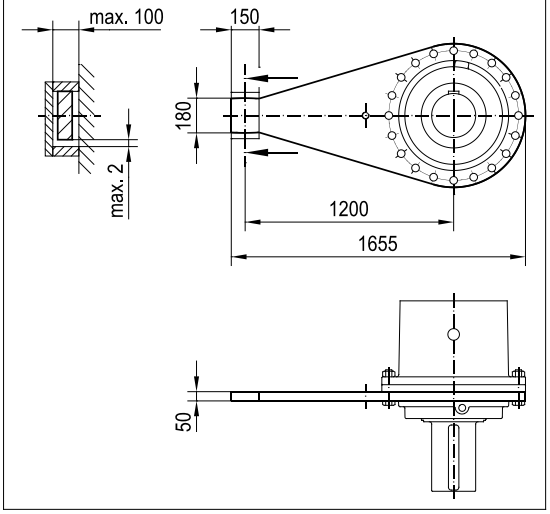

(→ 📖 -)	DRN							
	200L	225..	250M	280S	280M	315S-M	315ME-H	
AC	394	434	495	495	495	624	624	
AD	283	305	394	394	394	506	506	
ADS	283	305	394	394	394	506	506	
L	2058	2033	2170	2170	2265	2367	2497	
LS	2263	2238	2410	2410	2505	2618	2748	
LB	633	607	744	744	839	941	1071	
LBS	838	812	984	984	1079	1192	1322	

31991203/EN – 08/2025

P3PS072e/B DMF..

45 023 01 25

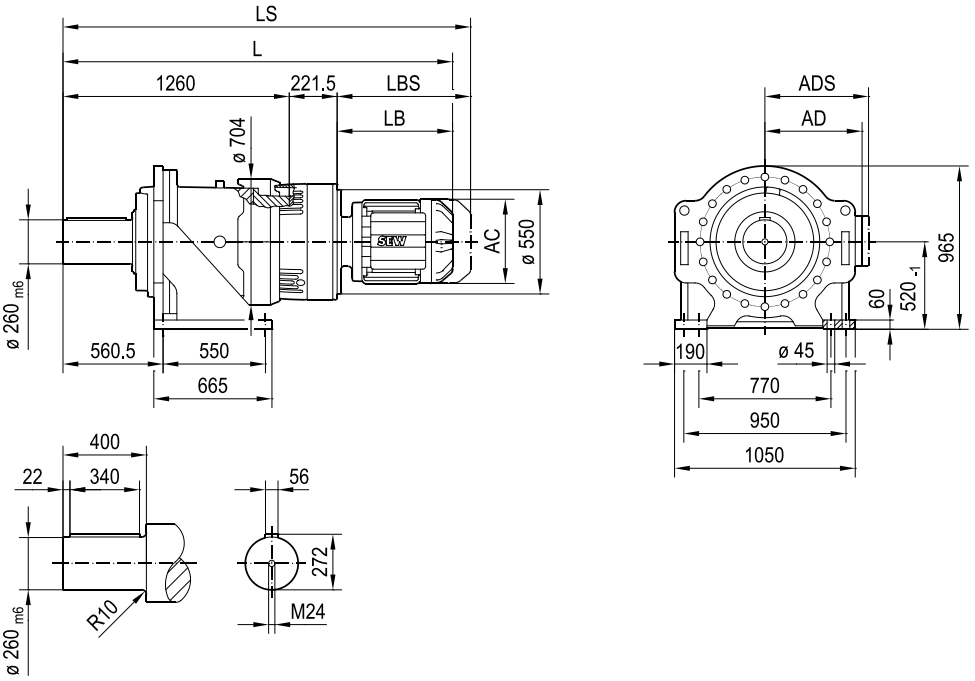

P3PH072e/B..

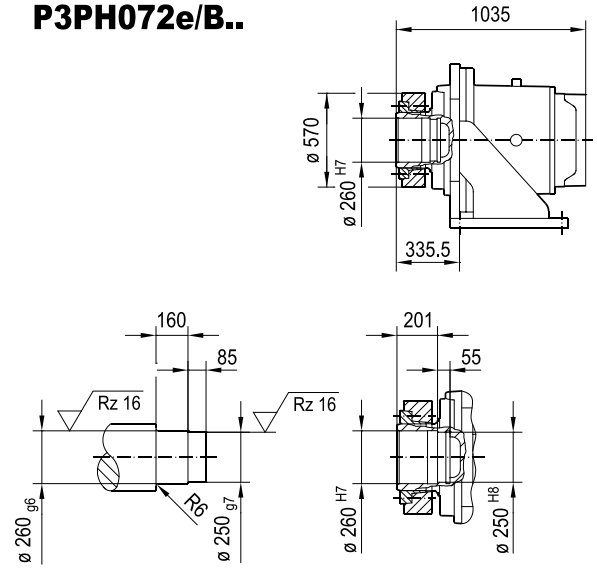

(→ 📖 -)	DRN							
	225..	250M	280S	280M	315S-M	315ME-H		
AC	434	495	495	495	624	624		
AD	305	394	394	394	506	506		
ADS	305	394	394	394	506	506		
L	2089	2226	2226	2321	2423	2553		
LS	2294	2466	2466	2561	2674	2804		
LB	607	744	744	839	941	1071		
LBS	812	984	984	1079	1192	1322		

31991203/EN – 08/2025

P3PS072e/F DMF..

45 024 01 25

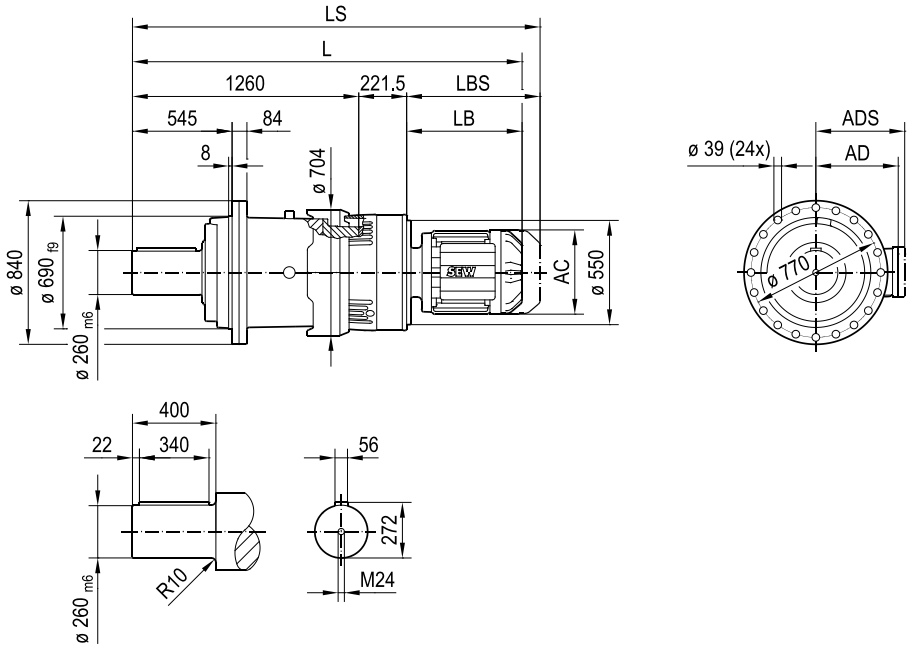

P3PH072e/F..

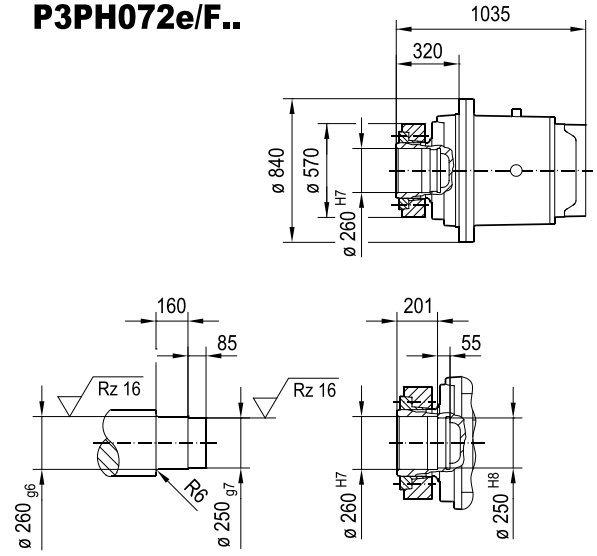

P3P.072e/T..

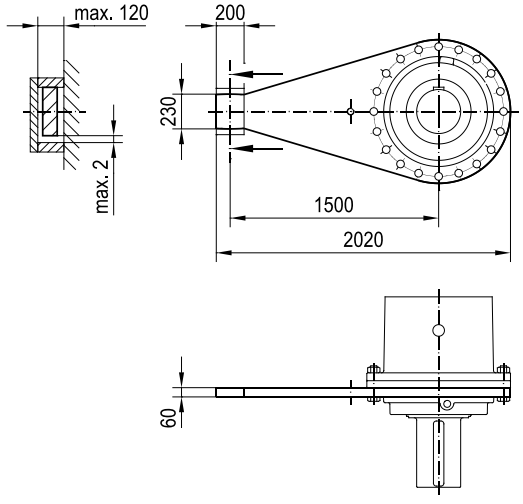

(→ 📖 -)	DRN							
	225..	250M	280S	280M	315S-M	315ME-H		
AC	434	495	495	495	624	624		
AD	305	394	394	394	506	506		
ADS	305	394	394	394	506	506		
L	2089	2226	2226	2321	2423	2553		
LS	2294	2466	2466	2561	2674	2804		
LB	607	744	744	839	941	1071		
LBS	812	984	984	1079	1192	1322		

31991203/EN – 08/2025

11.3 P2.e DM DRU.. planetary gearmotors

P2PS002e/B DM..

45 028 01 23

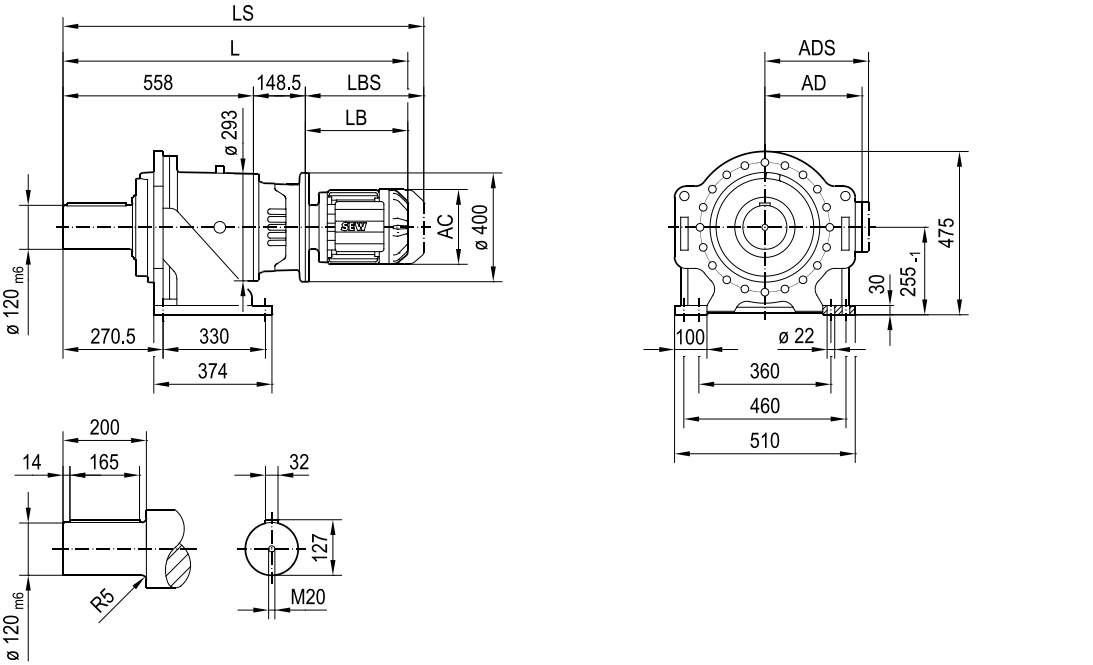

P2PH002e/B..

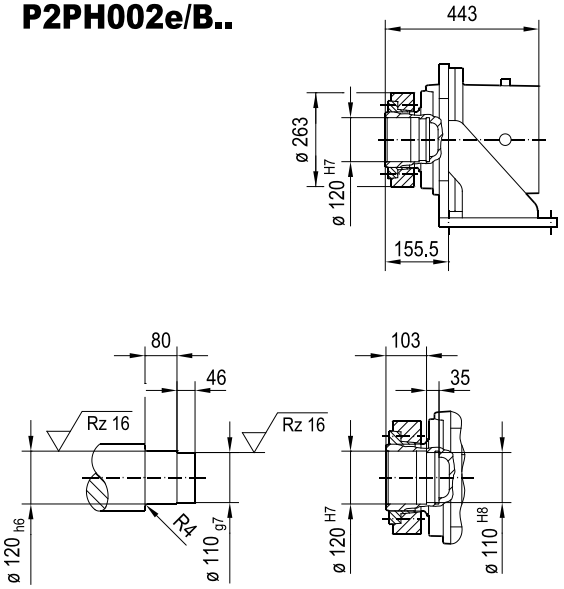

(→ 📖 -)	DRU							
	160..	180..	200L	225S	225ME	250M		
AC	314	357	394	434	434	495		
AD	253	268	283	305	305	394		
ADS	253	268	283	305	305	394		
L	1223	1246	1355	1330	1410	1467		
LS	1412	1435	1560	1535	1615	1707		
LB	516	539	649	623	703	760		
LBS	705	728	854	828	908	1000		

31991203/EN – 08/2025

P2PS002e/F DM..

45 029 01 23

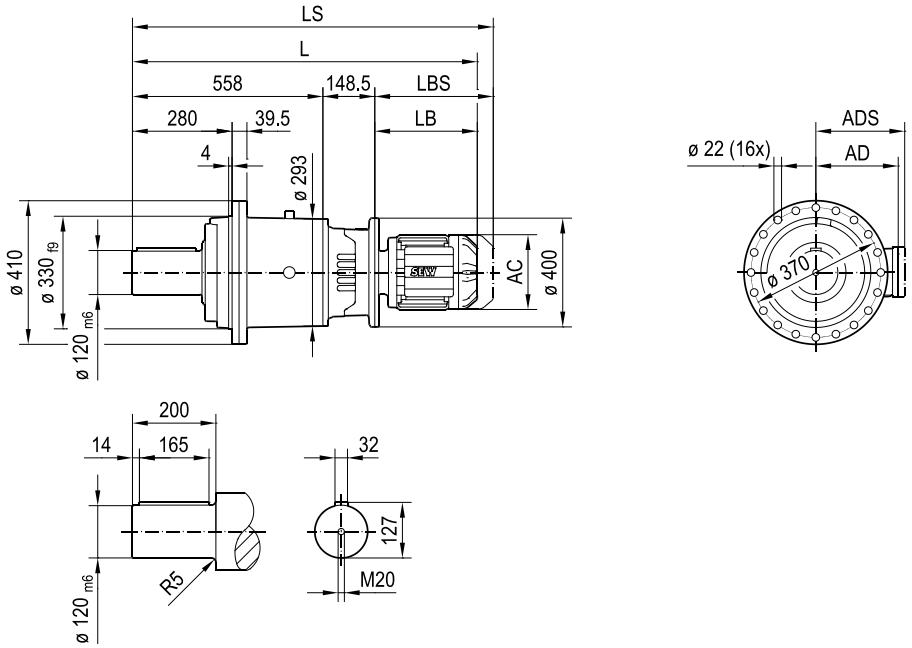

P2PH002e/F..

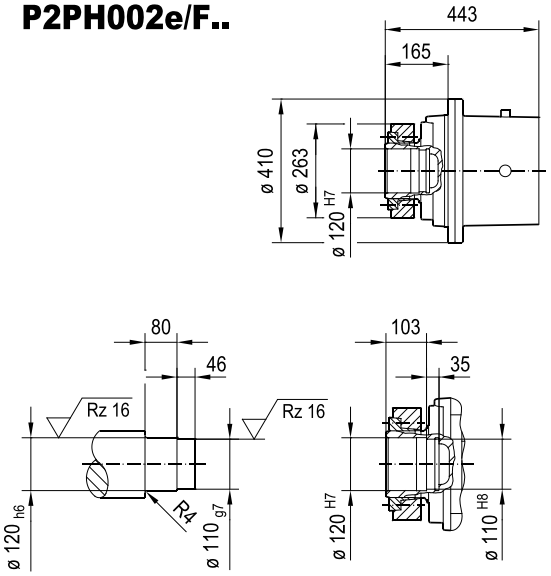

P2P.002e/T..

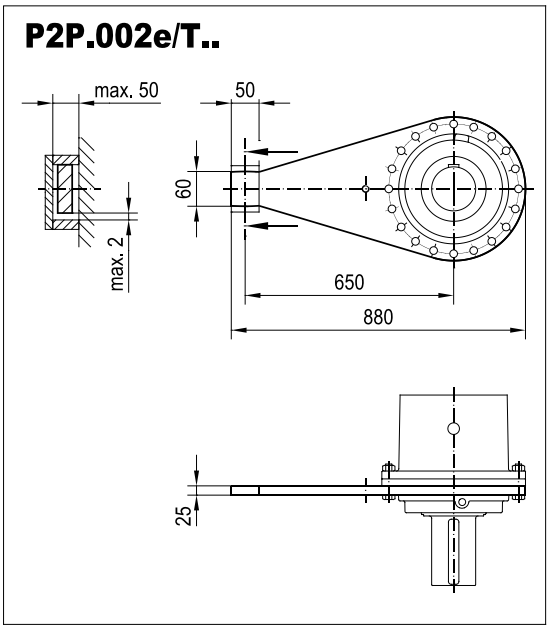

(→ 📖 -)	DRU							
	160..	180..	200L	225S	225ME	250M		
AC	314	357	394	434	434	495		
AD	253	268	283	305	305	394		
ADS	253	268	283	305	305	394		
L	1223	1246	1355	1330	1410	1467		
LS	1412	1435	1560	1535	1615	1707		
LB	516	539	649	623	703	760		
LBS	705	728	854	828	908	1000		

31991203/EN – 08/2025

P3PS002e/B DM..

45 030 01 23

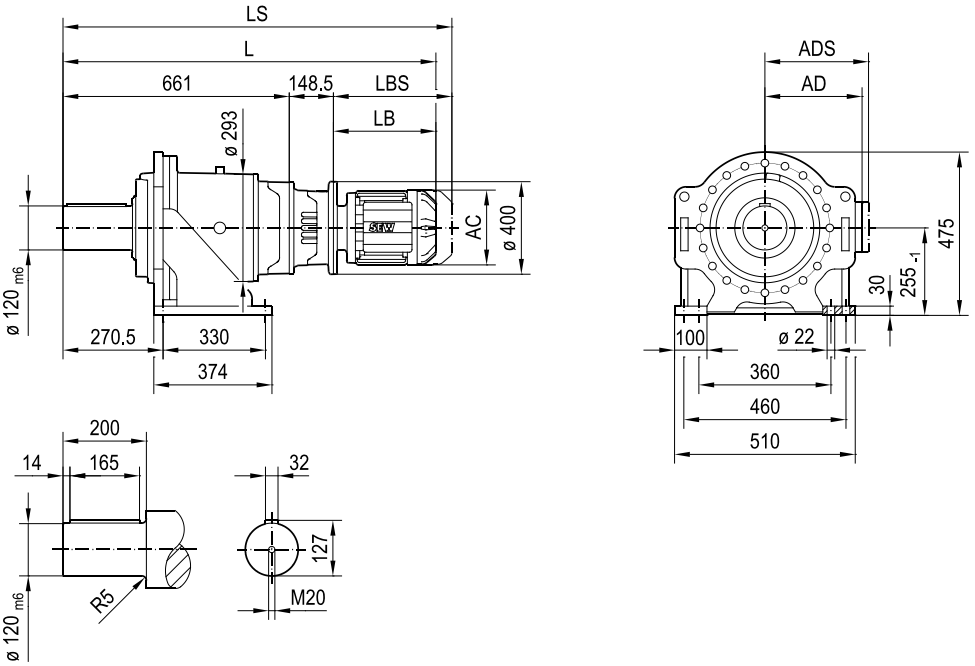

P3PH002e/B..

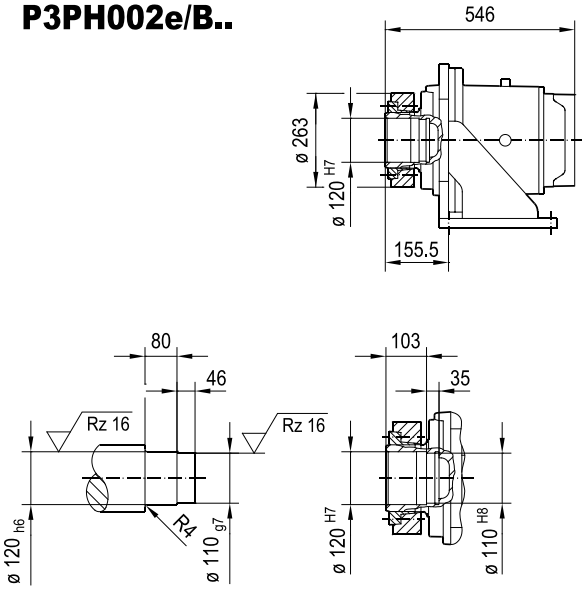

(→ 📖 -)	DRU							
	132S	132M	160..	180..	200L	225S	225ME	
AC	221	261	314	357	394	434	434	
AD	170	228	253	268	283	305	305	
ADS	172	228	253	268	283	305	305	
L	1216	1234	1326	1349	1458	1433	1513	
LS	1328	1371	1515	1538	1663	1638	1718	
LB	406	424	516	539	649	623	703	
LBS	518	562	705	728	854	828	908	

31991203/EN – 08/2025

P3PS002e/F DM..

45 031 01 23

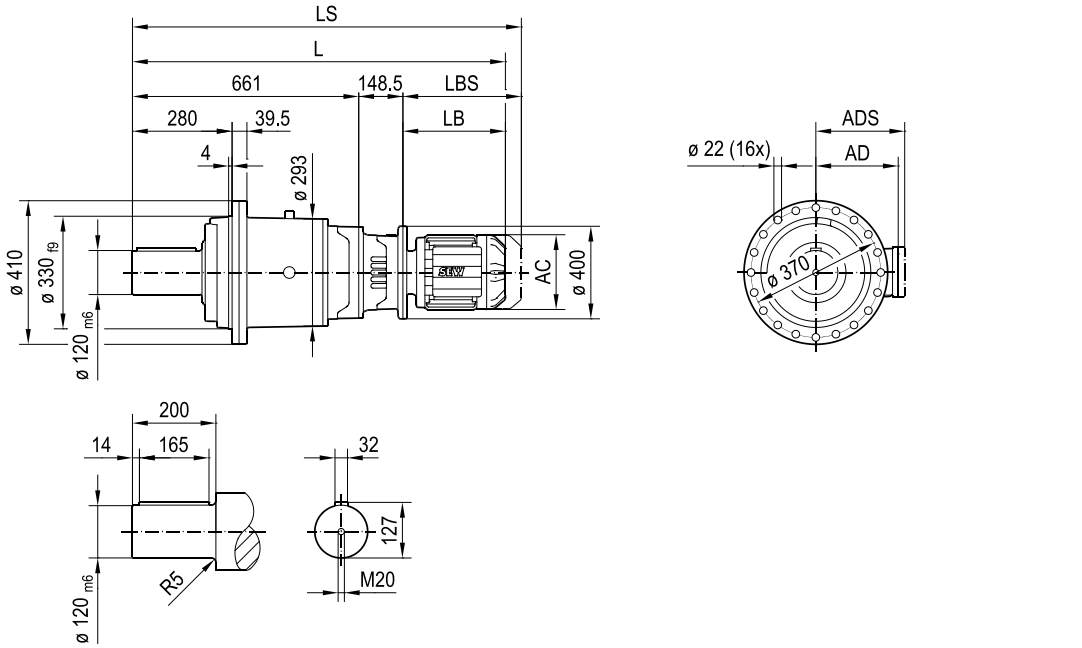

P3PH002e/F..

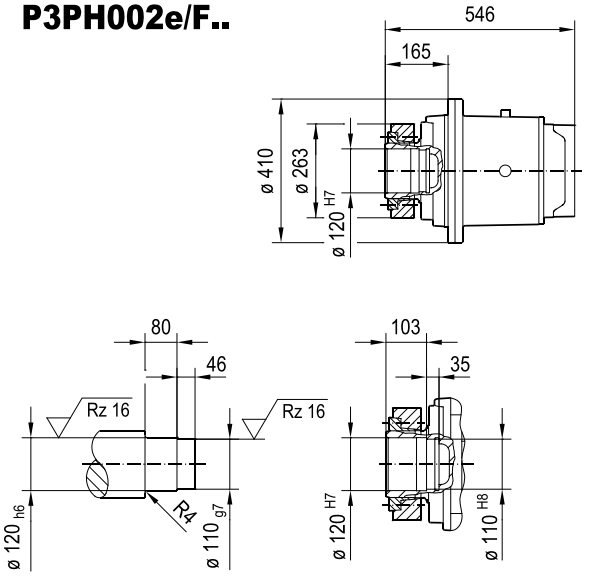

P3P.002e/T..

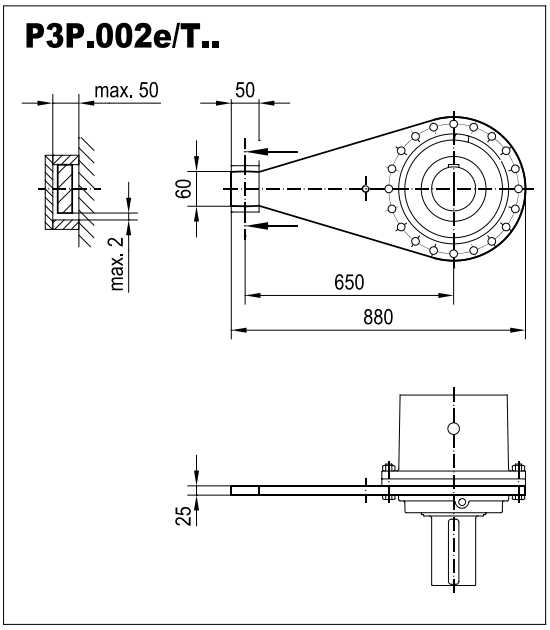

(→ 📖 -)	DRU							
	132S	132M	160..	180..	200L	225S	225ME	
AC	221	261	314	357	394	434	434	
AD	170	228	253	268	283	305	305	
ADS	172	228	253	268	283	305	305	
L	1216	1234	1326	1349	1458	1433	1513	
LS	1328	1371	1515	1538	1663	1638	1718	
LB	406	424	516	539	649	623	703	
LBS	518	562	705	728	854	828	908	

31991203/EN – 08/2025

P2PS012e/B DM..

45 032 01 23

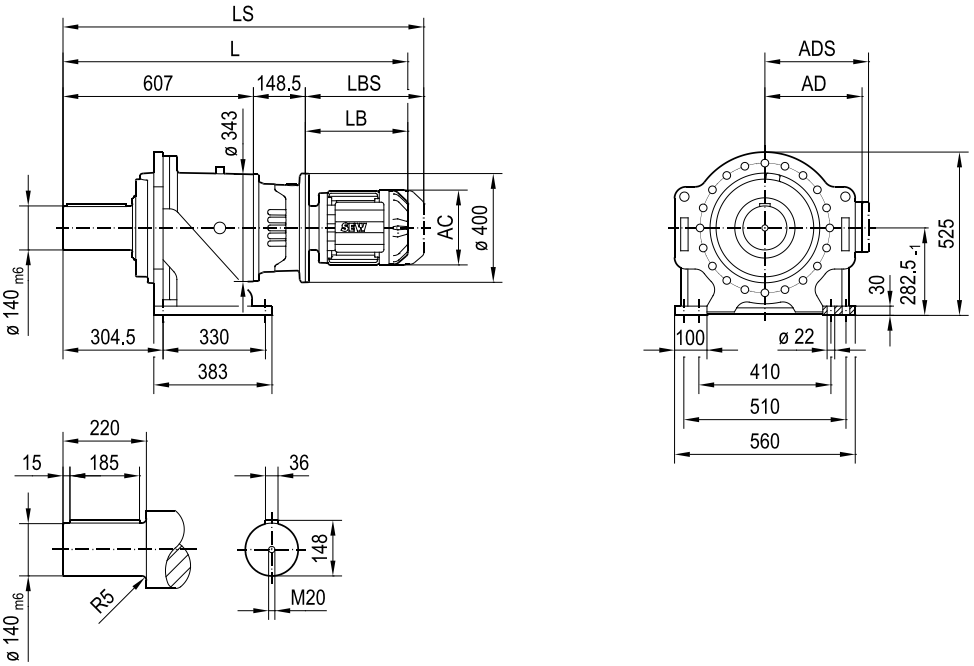

P2PH012e/B..

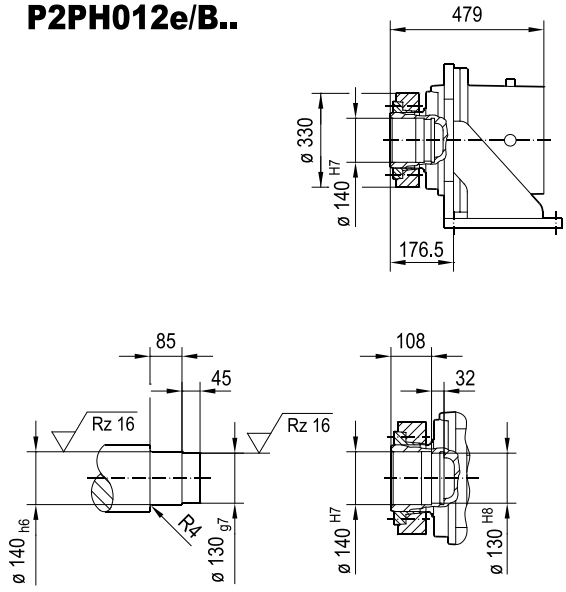

(→ 📖 -)	DRU							
	180..	200L	225S	225ME	250M	280M		
AC	357	394	434	434	495	495		
AD	268	283	305	305	394	394		
ADS	268	283	305	305	394	394		
L	1295	1404	1379	1459	1516	1611		
LS	1484	1609	1584	1664	1756	1851		
LB	539	649	623	703	760	855		
LBS	728	854	828	908	1000	1095		

31991203/EN – 08/2025

P2PS012e/F DM..

45 033 01 23

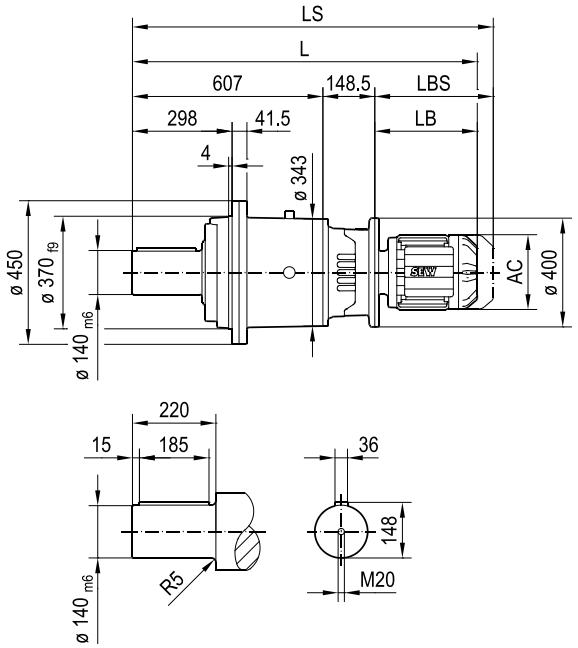

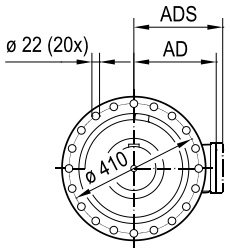

P2PH012e/F..

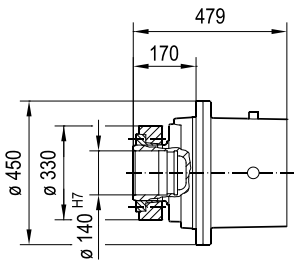

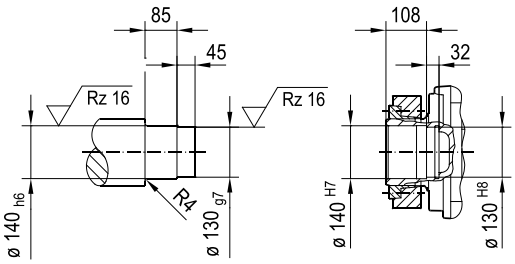

P2P.012e/T..

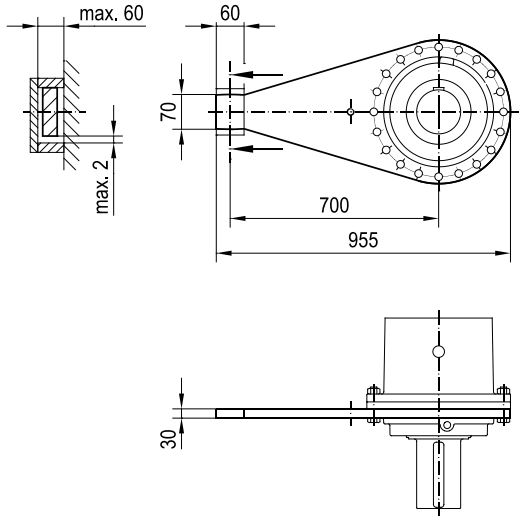

(→ 📖 -)	DRU							
	180..	200L	225S	225ME	250M	280M		
AC	357	394	434	434	495	495		
AD	268	283	305	305	394	394		
ADS	268	283	305	305	394	394		
L	1295	1404	1379	1459	1516	1611		
LS	1484	1609	1584	1664	1756	1851		
LB	539	649	623	703	760	855		
LBS	728	854	828	908	1000	1095		

31991203/EN – 08/2025

P3PS012e/B DM..

45 034 01 23

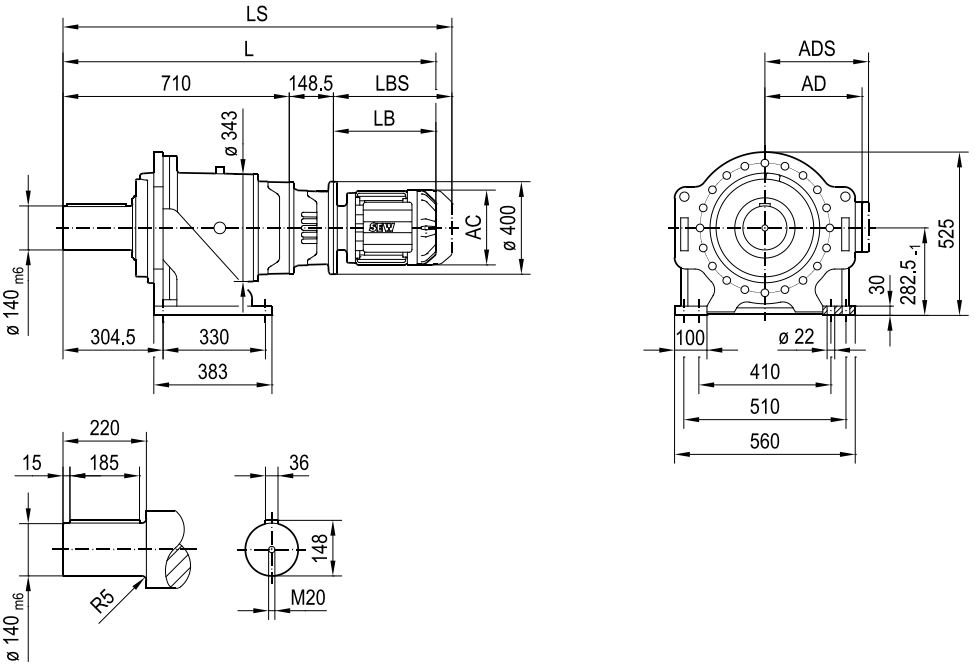

P3PH012e/B..

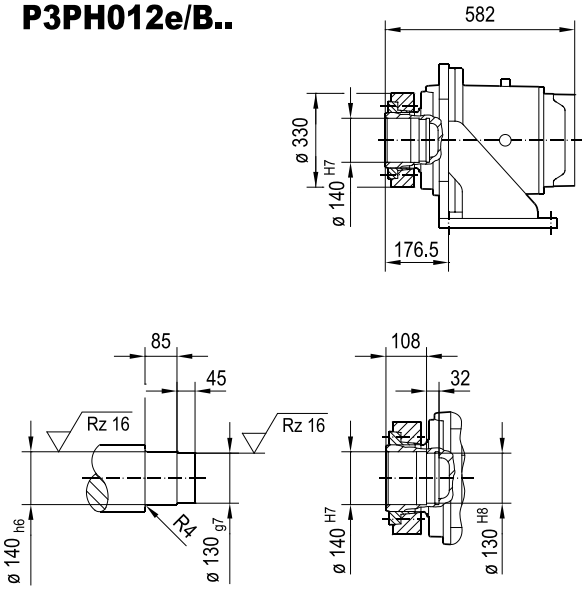

(→ 📖 -)	DRU							
	132M	160..	180..	200L	225S	225ME		
AC	261	314	357	394	434	434		
AD	228	253	268	283	305	305		
ADS	228	253	268	283	305	305		
L	1283	1375	1398	1507	1482	1562		
LS	1420	1564	1587	1712	1687	1767		
LB	424	516	539	649	623	703		
LBS	562	705	728	854	828	908		

31991203/EN – 08/2025

P3PS012e/F DM..

45 035 01 23

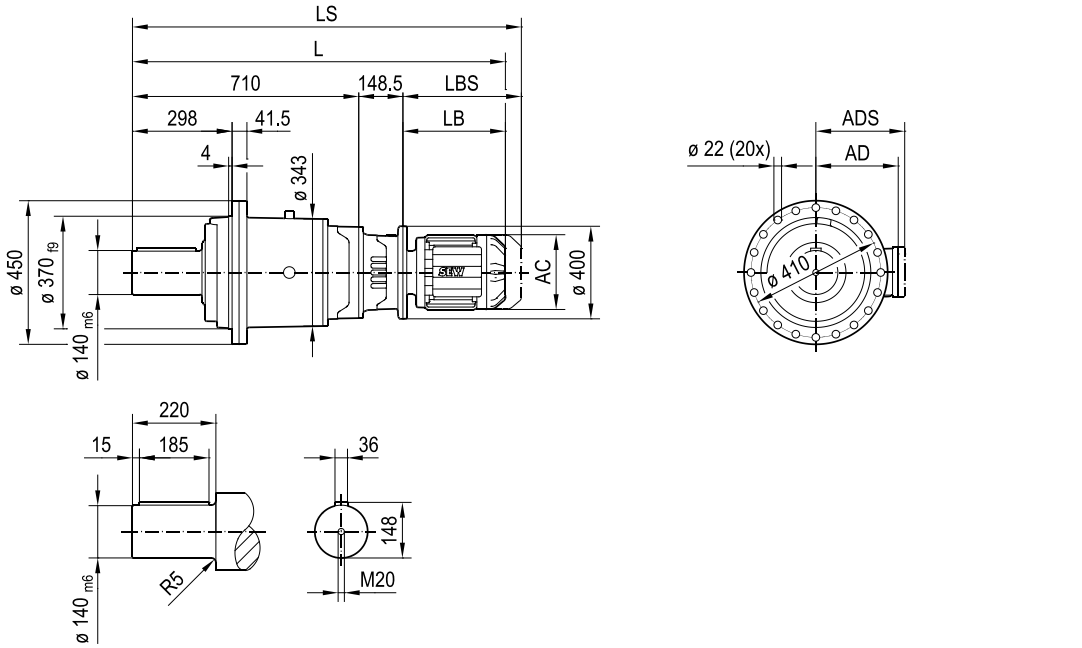

P3PH012e/F..

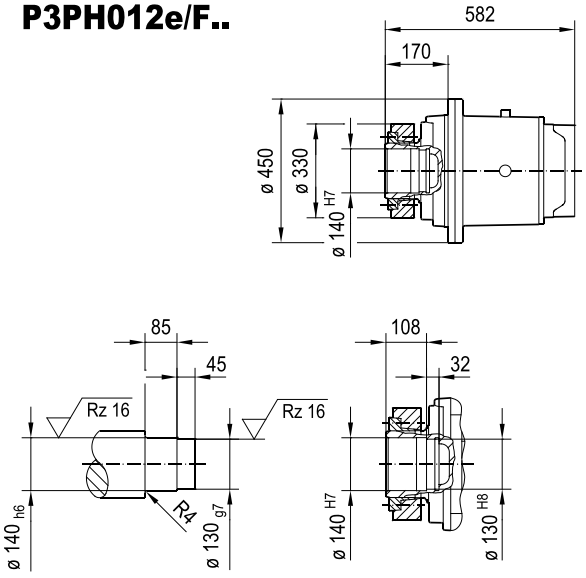

P3P.012e/T..

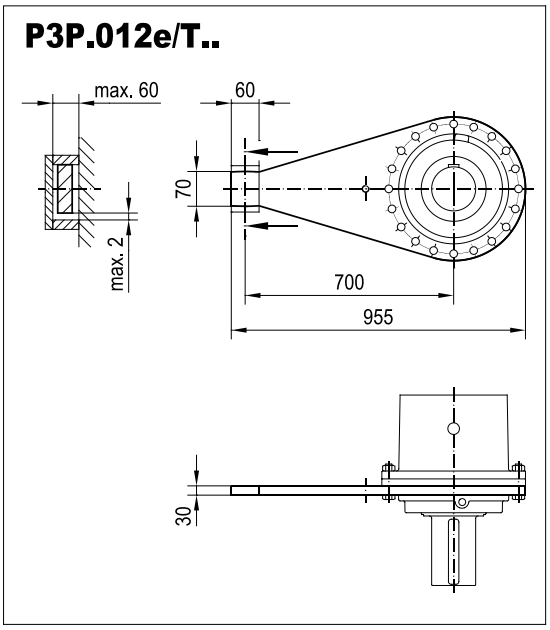

(→ 📖 -)	DRU							
	132M	160..	180..	200L	225S	225ME		
AC	261	314	357	394	434	434		
AD	228	253	268	283	305	305		
ADS	228	253	268	283	305	305		
L	1283	1375	1398	1507	1482	1562		
LS	1420	1564	1587	1712	1687	1767		
LB	424	516	539	649	623	703		
LBS	562	705	728	854	828	908		

31991203/EN – 08/2025

P2PS022e/B DM..

45 036 01 23

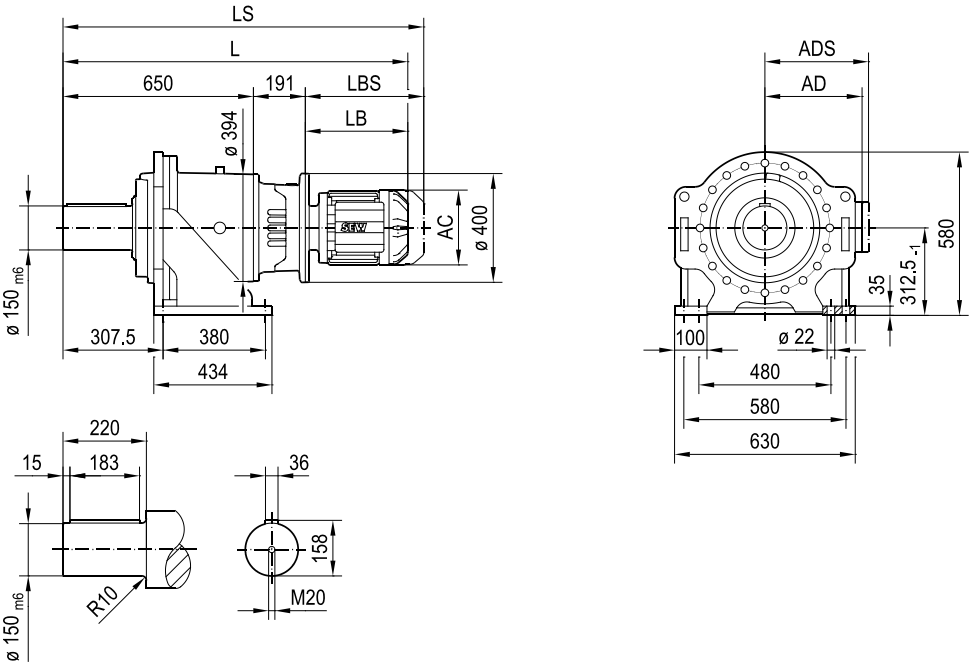

P2PH022e/B..

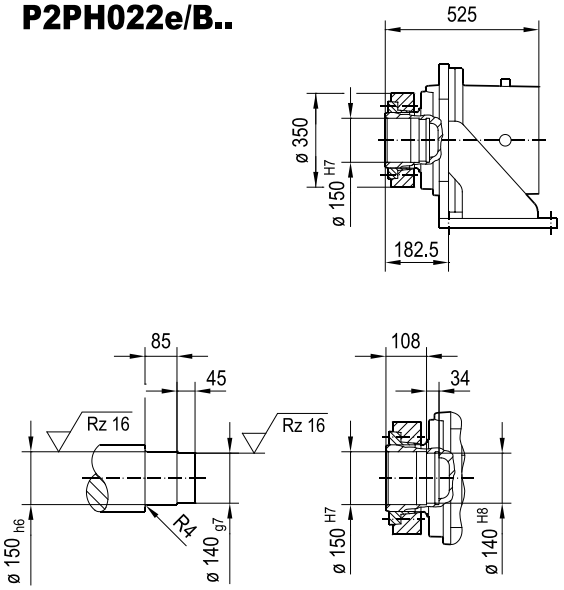

(→ 📖 -)	DRU							
	200L	225S	225ME	250M	280M			
AC	394	434	434	495	495			
AD	283	305	305	394	394			
ADS	283	305	305	394	394			
L	1490	1464	1544	1601	1696			
LS	1695	1669	1749	1841	1936			
LB	649	623	703	760	855			
LBS	854	828	908	1000	1095			

31991203/EN – 08/2025

P2PS022e/F DM..

45 037 01 23

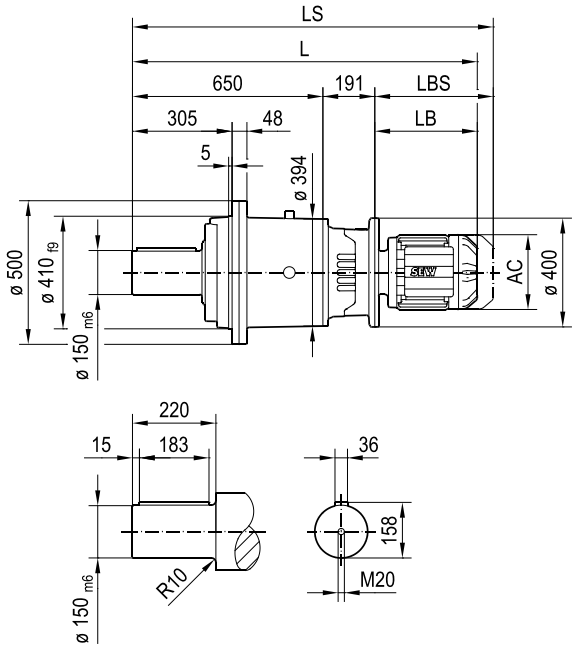

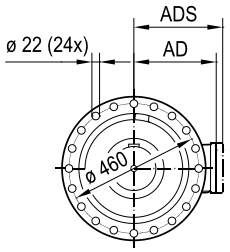

P2PH022e/F..

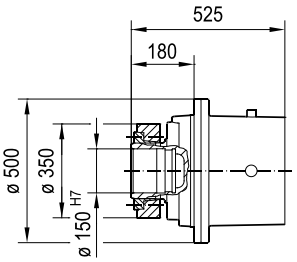

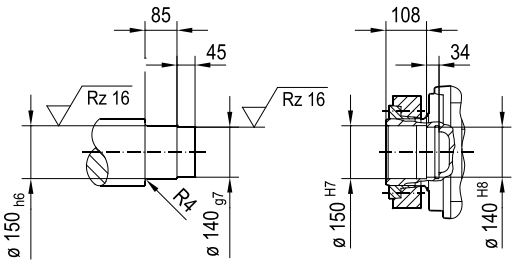

P2P.022e/T..

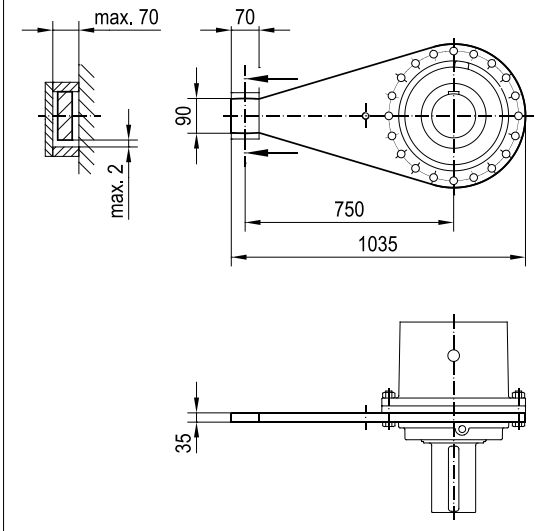

(→ 📖 -)	DRU							
	200L	225S	225ME	250M	280M			
AC	394	434	434	495	495			
AD	283	305	305	394	394			
ADS	283	305	305	394	394			
L	1490	1464	1544	1601	1696			
LS	1695	1669	1749	1841	1936			
LB	649	623	703	760	855			
LBS	854	828	908	1000	1095			

P3PS022e/B DM..

45 038 01 23

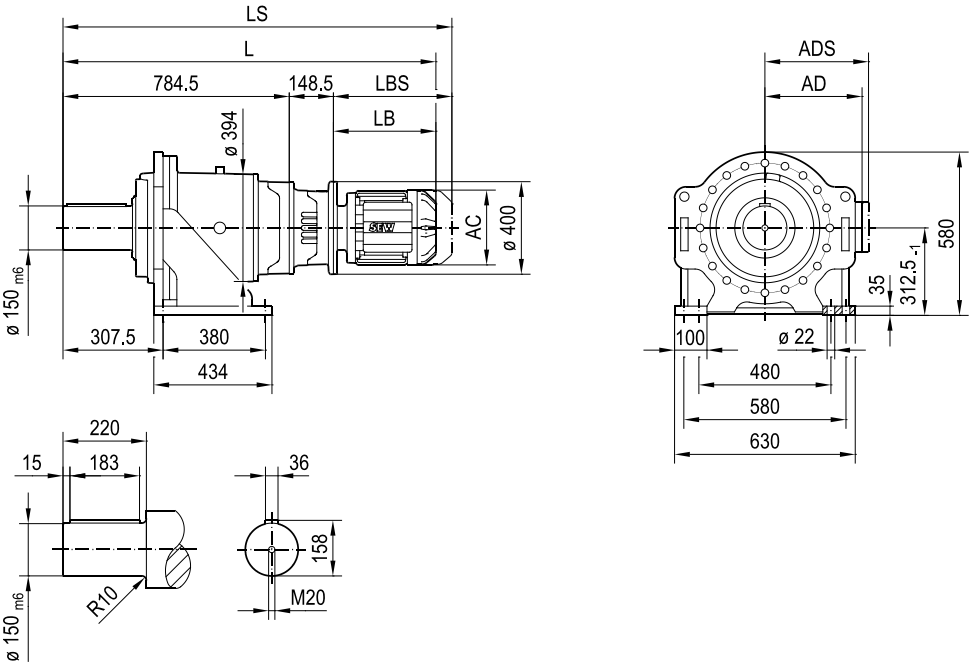

P3PH022e/B..

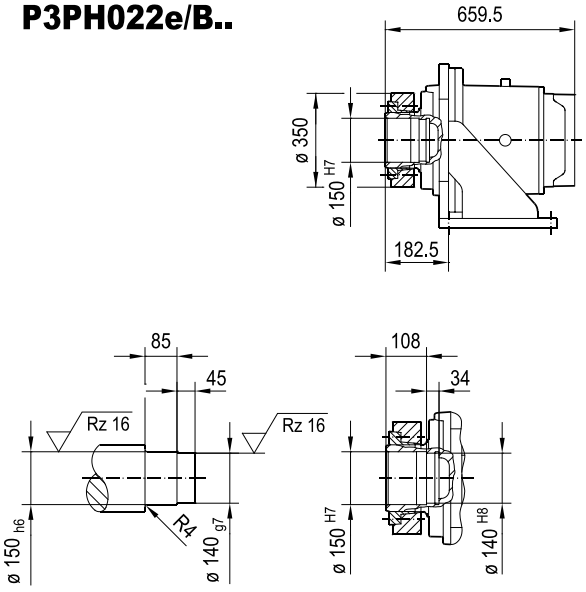

(→ 📖 -)	DRU							
	160..	180..	200L	225S	225ME	250M		
AC	314	357	394	434	434	495		
AD	253	268	283	305	305	394		
ADS	253	268	283	305	305	394		
L	1449	1472	1582	1556	1636	1693		
LS	1638	1661	1787	1761	1841	1933		
LB	516	539	649	623	703	760		
LBS	705	728	854	828	908	1000		

31991203/EN – 08/2025

P3PS022e/F DM..

45 039 01 23

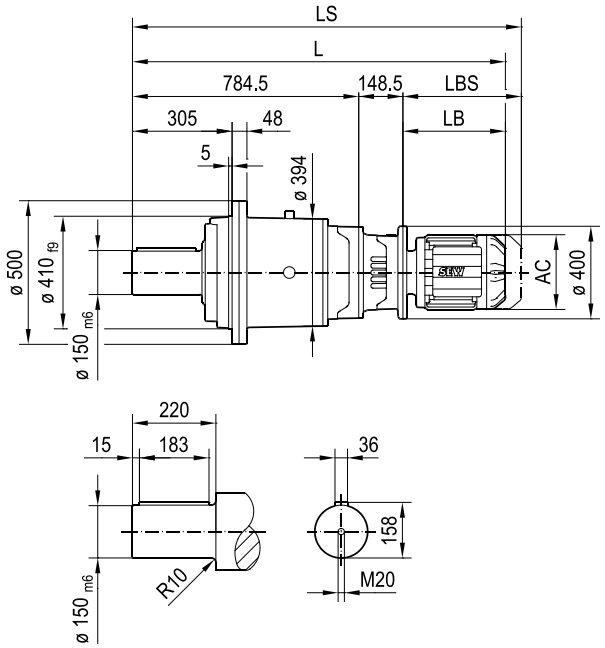

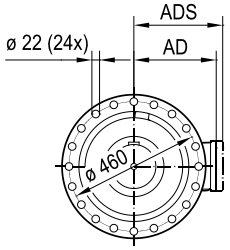

P3PH022e/F..

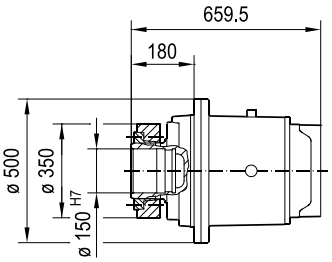

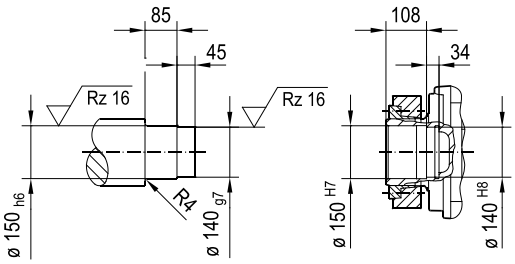

P3P.022e/T..

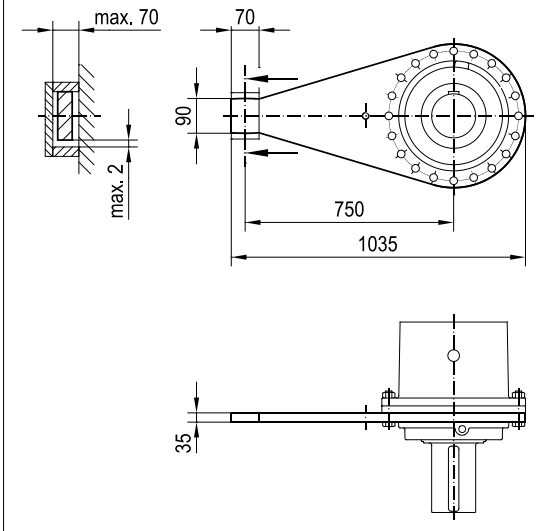

(→ 📖 -)	DRU							
	160..	180..	200L	225S	225ME	250M		
AC	314	357	394	434	434	495		
AD	253	268	283	305	305	394		
ADS	253	268	283	305	305	394		
L	1449	1472	1582	1556	1636	1693		
LS	1638	1661	1787	1761	1841	1933		
LB	516	539	649	623	703	760		
LBS	705	728	854	828	908	1000		

31991203/EN – 08/2025

P2PS032e/B DM..

45 040 01 23

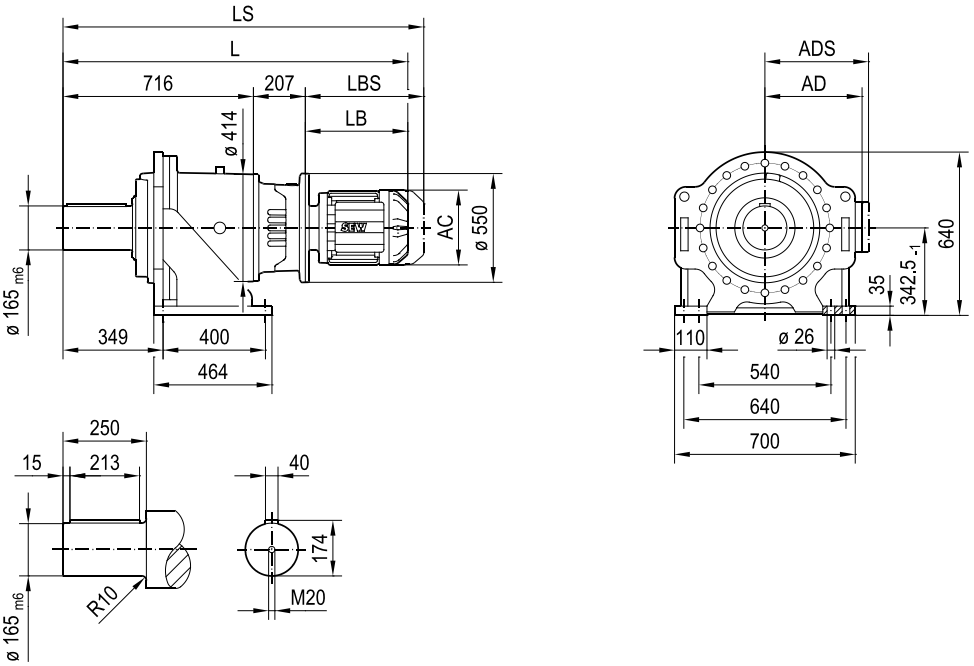

P2PH032e/B..

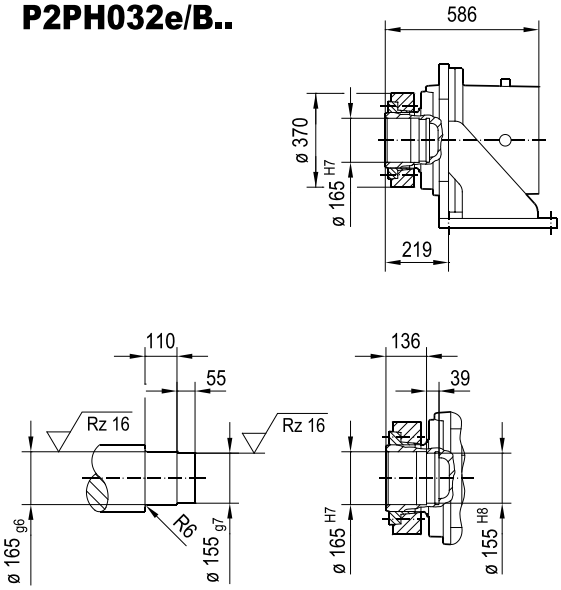

(→ 📖 -)	DRU							
	225S	225ME	250M	280M	315S-M	315ME-H		
AC	434	434	495	495	624	624		
AD	305	305	394	394	506	506		
ADS	305	305	394	394	506	506		
L	1530	1610	1667	1762	1864	1994		
LS	1735	1815	1907	2002	2115	2245		
LB	607	687	744	839	941	1071		
LBS	812	892	984	1079	1192	1322		

31991203/EN – 08/2025

P2PS032e/F DM..

45 041 01 23

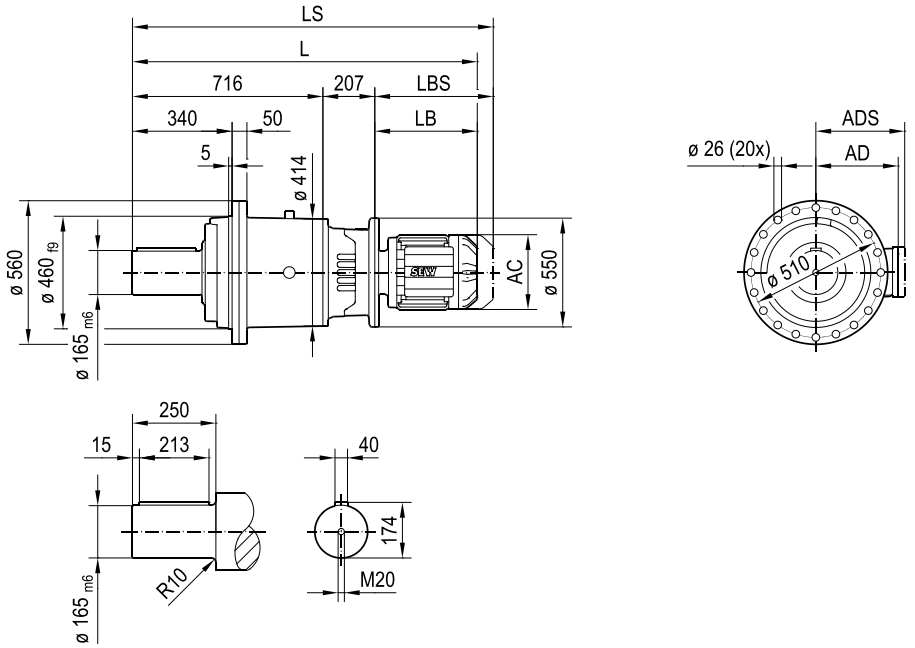

P2PH032e/F..

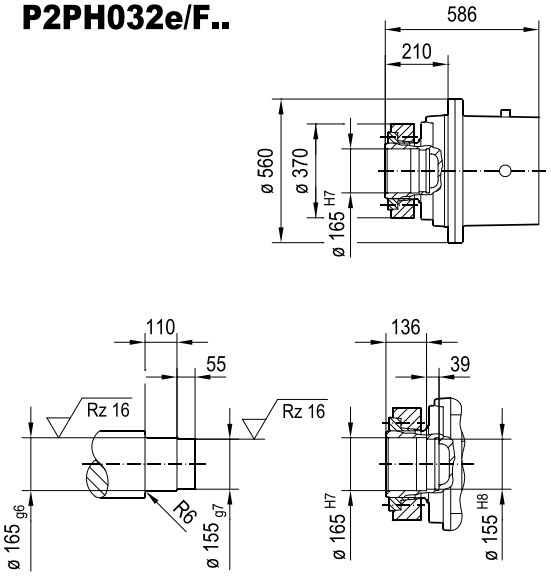

P2P.032e/T..

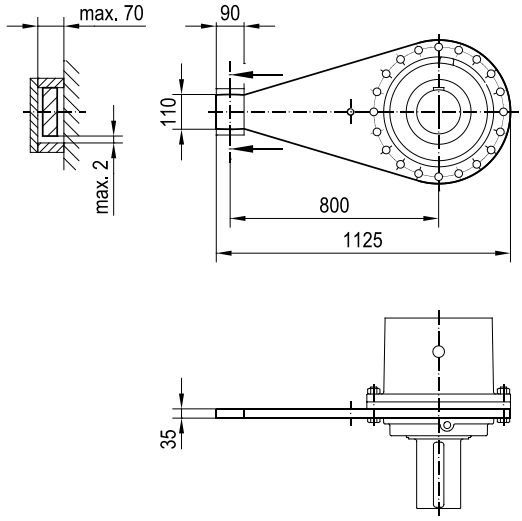

(→ 📖 -)	DRU							
	225S	225ME	250M	280M	315S-M	315ME-H		
AC	434	434	495	495	624	624		
AD	305	305	394	394	506	506		
ADS	305	305	394	394	506	506		
L	1530	1610	1667	1762	1864	1994		
LS	1735	1815	1907	2002	2115	2245		
LB	607	687	744	839	941	1071		
LBS	812	892	984	1079	1192	1322		

31991203/EN – 08/2025

P3PS032e/B DM..

45 042 01 23

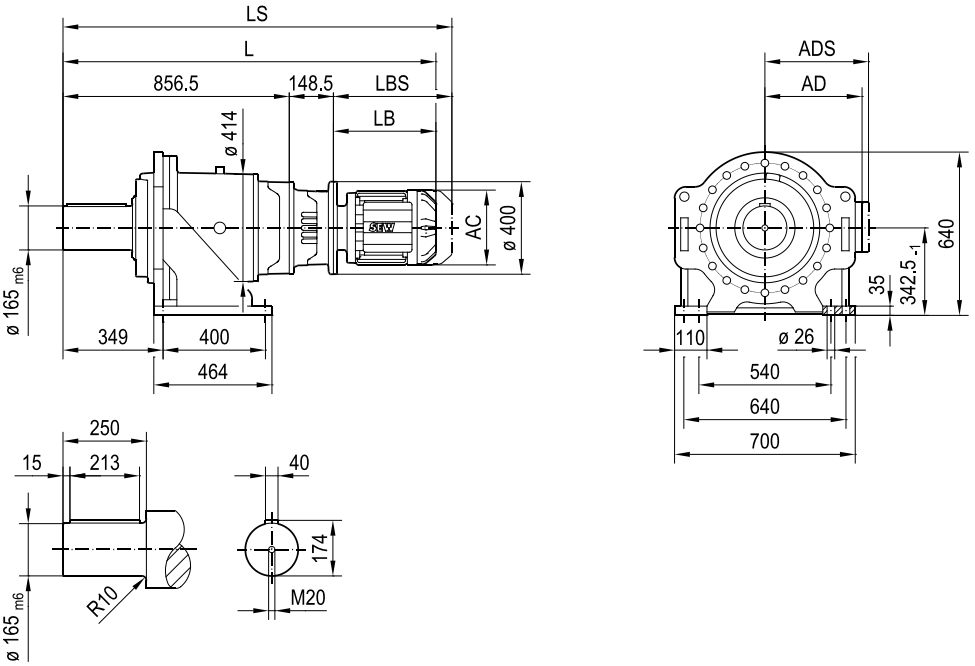

P3PH032e/B..

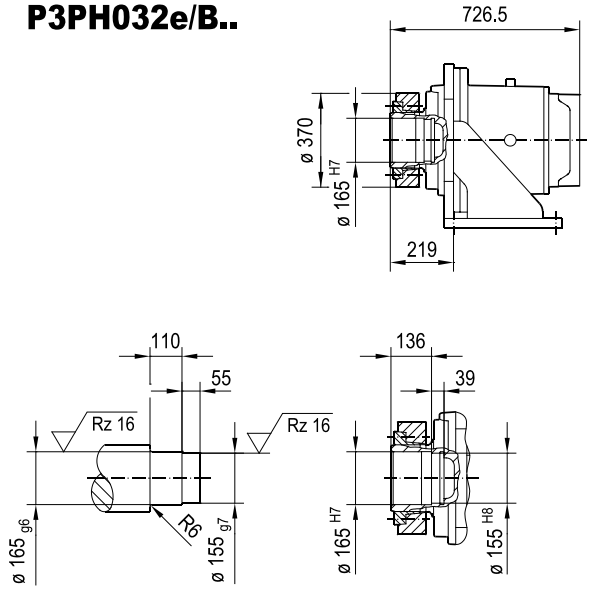

(→ 📖 -)	DRU							
	160..	180..	200L	225S	225ME	250M		
AC	314	357	394	434	434	495		
AD	253	268	283	305	305	394		
ADS	253	268	283	305	305	394		
L	1521	1544	1654	1628	1708	1765		
LS	1710	1733	1859	1833	1913	2005		
LB	516	539	649	623	703	760		
LBS	705	728	854	828	908	1000		

31991203/EN – 08/2025

P3PS032e/F DM..

45 043 01 23

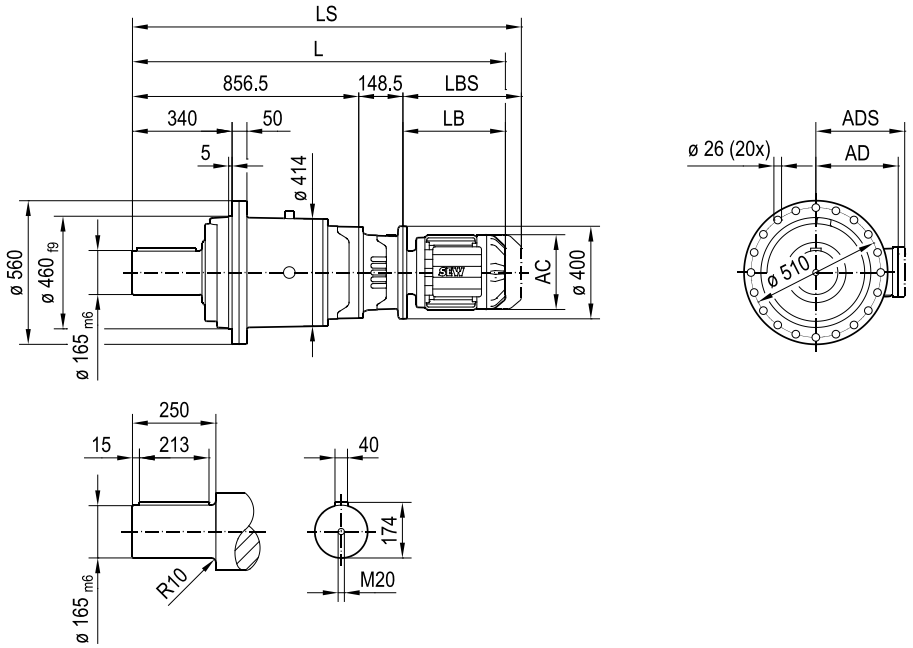

P3PH032e/F..

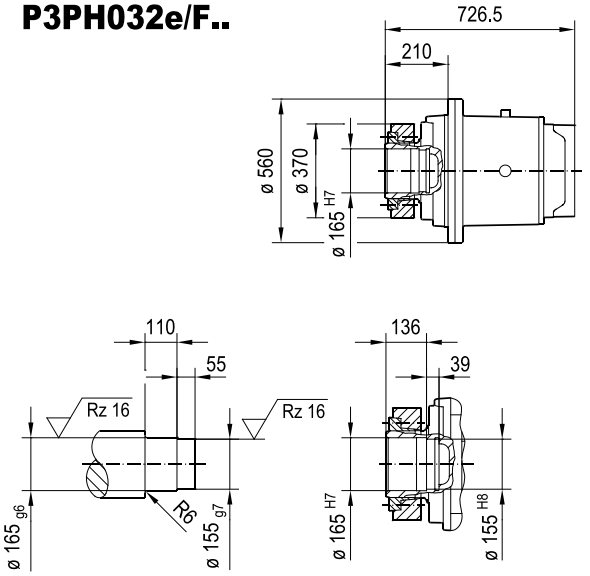

P3P.032e/T..

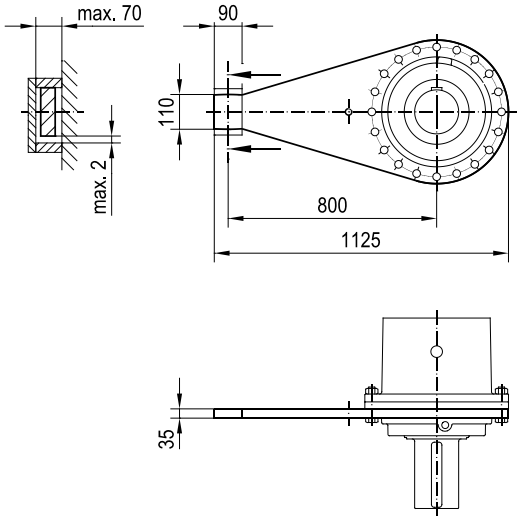

(→ 📖 -)	DRU							
	160..	180..	200L	225S	225ME	250M		
AC	314	357	394	434	434	495		
AD	253	268	283	305	305	394		
ADS	253	268	283	305	305	394		
L	1521	1544	1654	1628	1708	1765		
LS	1710	1733	1859	1833	1913	2005		
LB	516	539	649	623	703	760		
LBS	705	728	854	828	908	1000		

31991203/EN – 08/2025

P2PS042e/B DM..

45 044 01 23

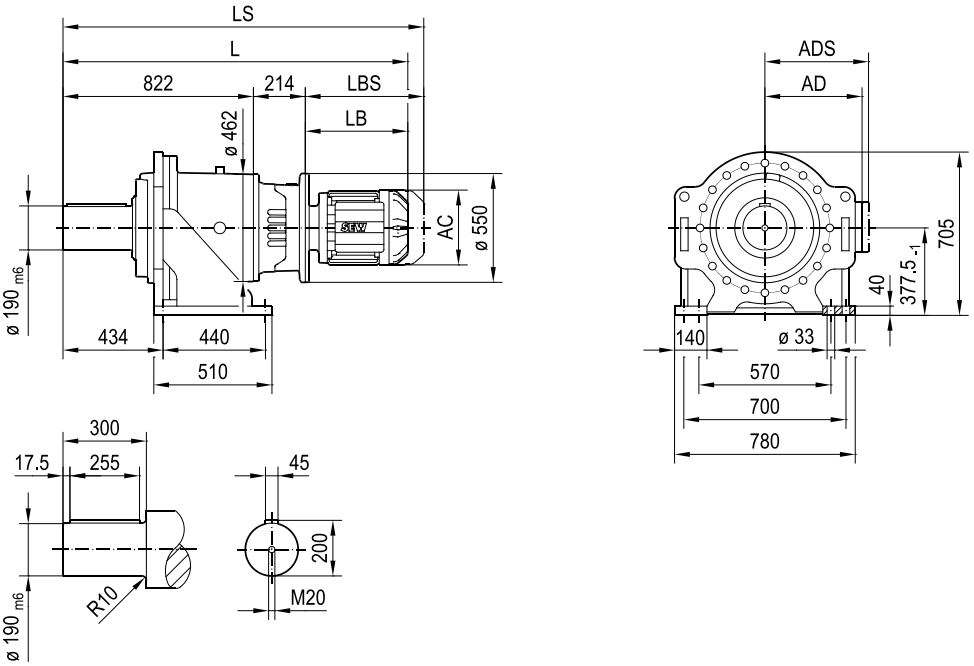

P2PH042e/B..

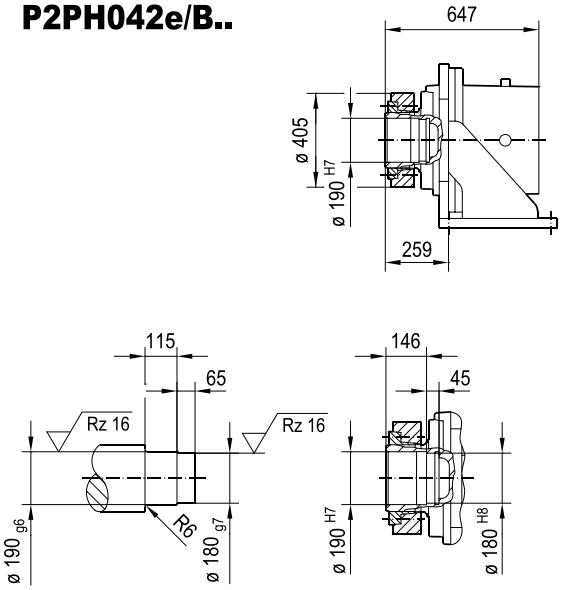

(→ 📖 -)	DRU							
	225S	225ME	250M	280M	315S-M	315ME-H		
AC	434	434	495	495	624	624		
AD	305	305	394	394	506	506		
ADS	305	305	394	394	506	506		
L	1643	1723	1780	1875	1977	2107		
LS	1848	1928	2020	2115	2228	2358		
LB	607	687	744	839	941	1071		
LBS	812	892	984	1079	1192	1322		

31991203/EN – 08/2025

P2PS042e/F DM..

45 045 01 23

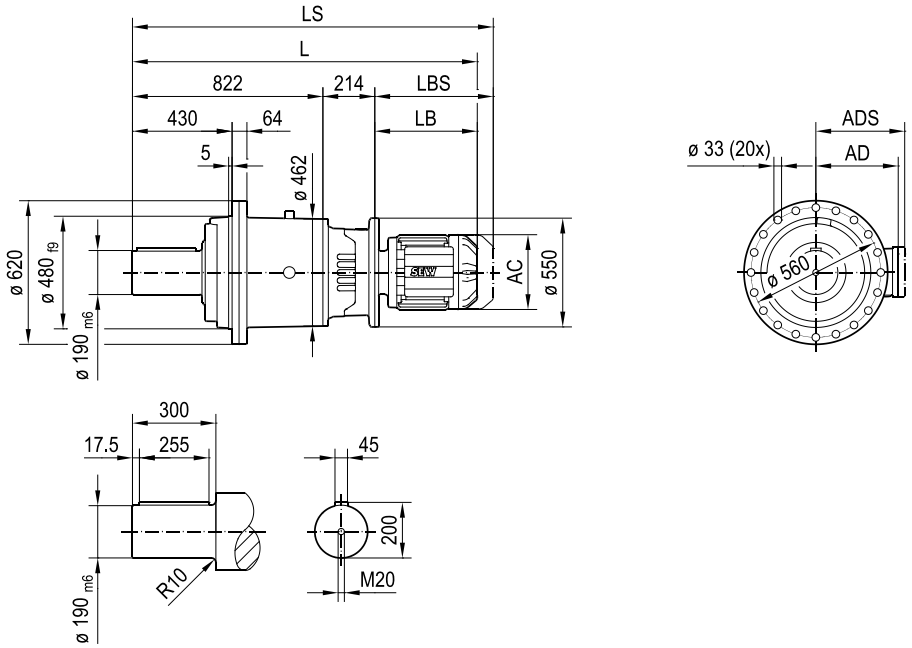

P2PH042e/F..

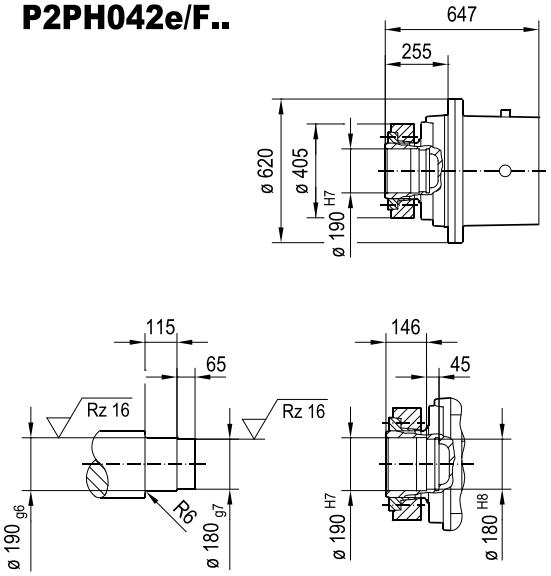

P2P.042e/T..

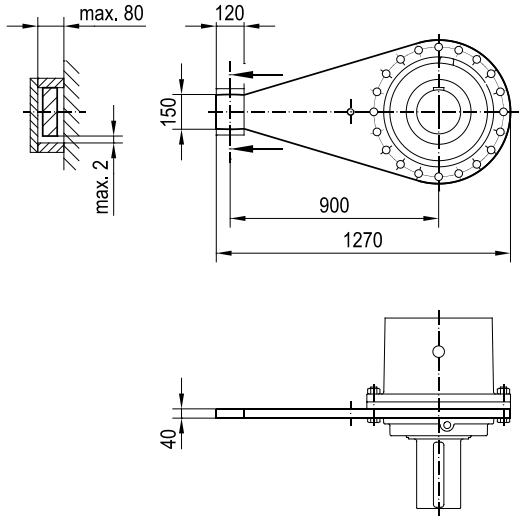

(→ 📖 -)	DRU							
	225S	225ME	250M	280M	315S-M	315ME-H		
AC	434	434	495	495	624	624		
AD	305	305	394	394	506	506		
ADS	305	305	394	394	506	506		
L	1643	1723	1780	1875	1977	2107		
LS	1848	1928	2020	2115	2228	2358		
LB	607	687	744	839	941	1071		
LBS	812	892	984	1079	1192	1322		

31991203/EN – 08/2025

P3PS042e/B DM..

45 046 01 23

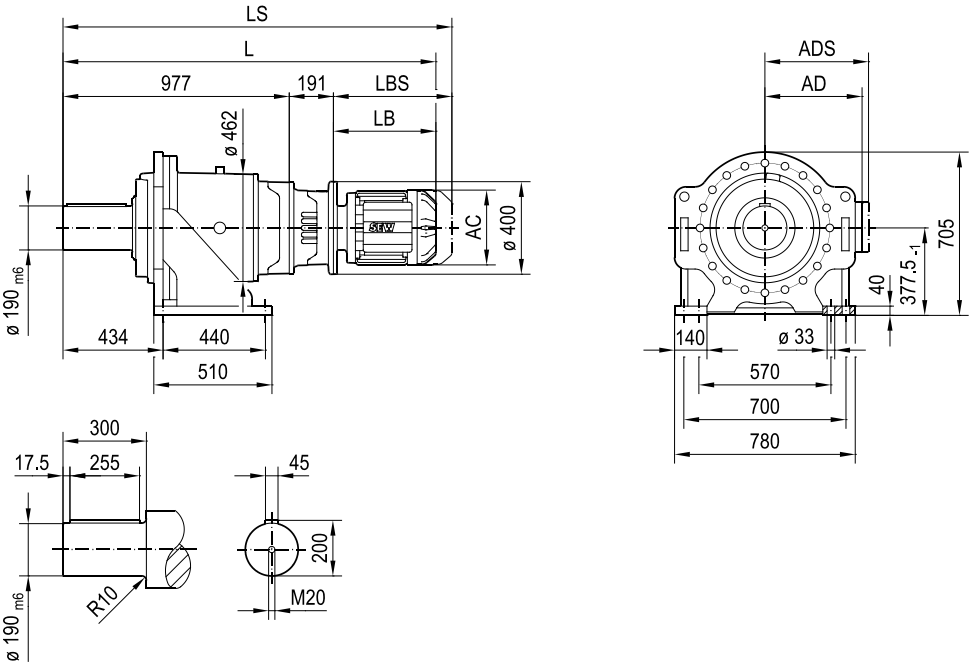

P3PH042e/B..

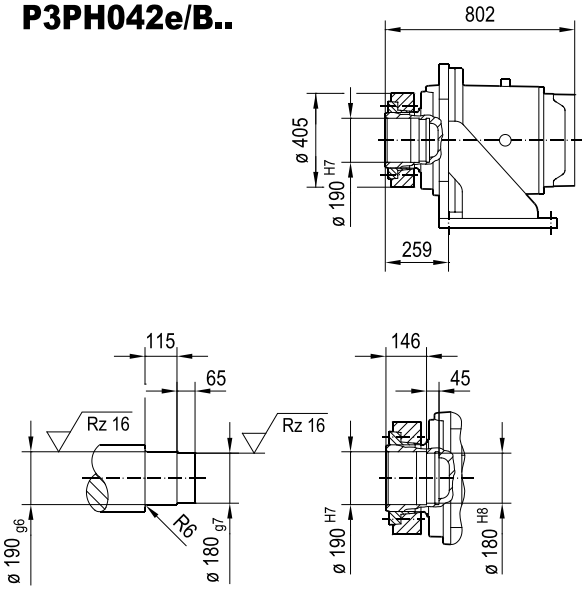

(→ 📖 -)	DRU							
	180..	200L	225S	225ME	250M	280M		
AC	357	394	434	434	495	495		
AD	268	283	305	305	394	394		
ADS	268	283	305	305	394	394		
L	1707	1817	1791	1871	1928	2023		
LS	1896	2022	1996	2076	2168	2263		
LB	539	649	623	703	760	855		
LBS	728	854	828	908	1000	1095		

31991203/EN – 08/2025

P3PS042e/F DM..

45 047 01 23

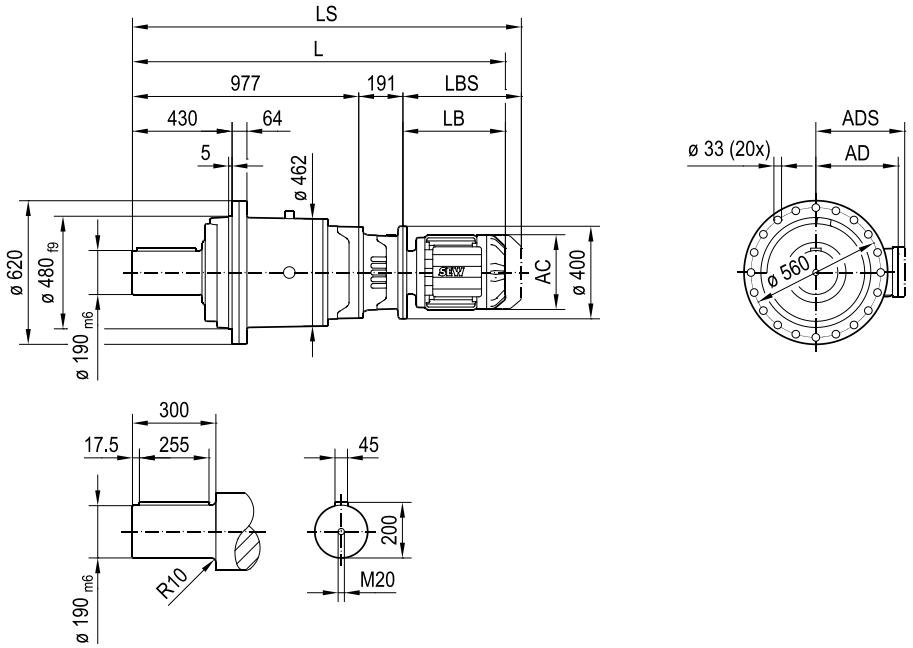

P3PH042e/F..

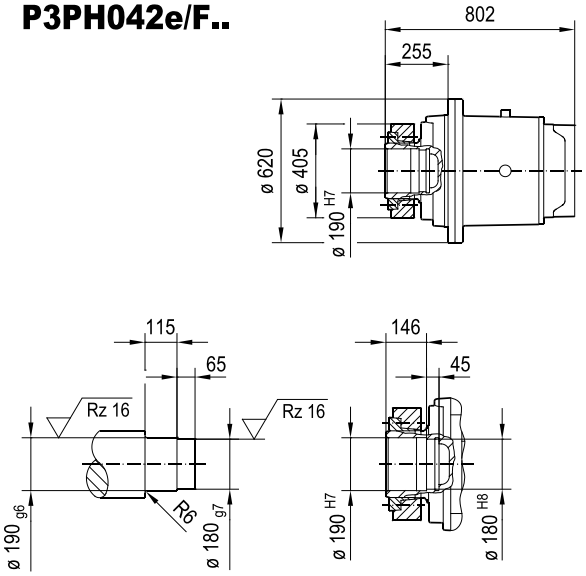

P3P.042e/T..

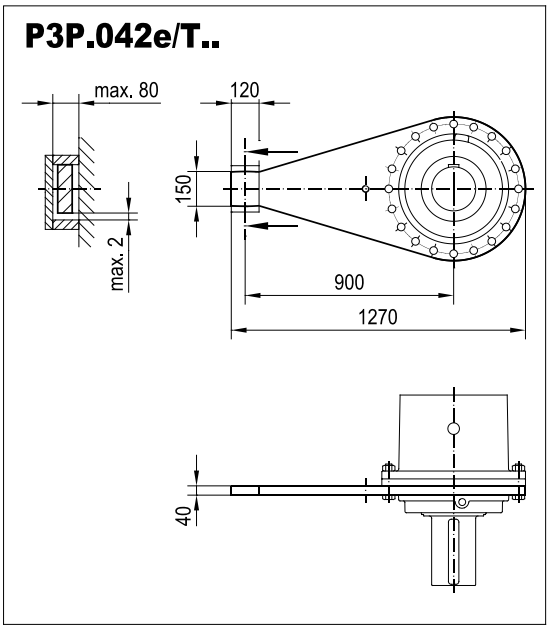

(→ 📖 -)	DRU							
	180..	200L	225S	225ME	250M	280M		
AC	357	394	434	434	495	495		
AD	268	283	305	305	394	394		
ADS	268	283	305	305	394	394		
L	1707	1817	1791	1871	1928	2023		
LS	1896	2022	1996	2076	2168	2263		
LB	539	649	623	703	760	855		
LBS	728	854	828	908	1000	1095		

31991203/EN – 08/2025

P2PS052e/B DM..

45 048 01 23

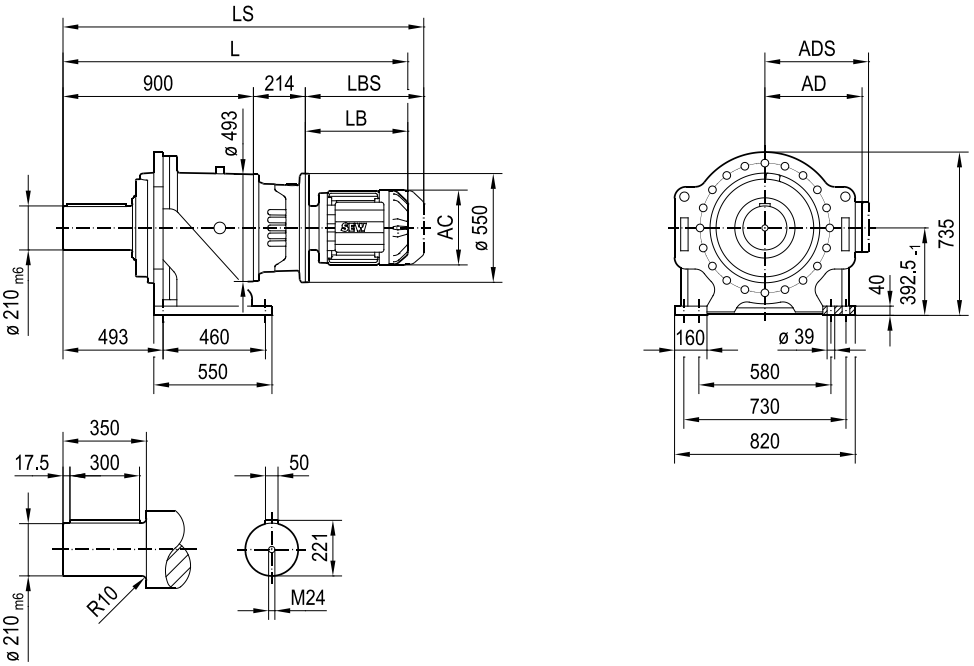

P2PH052e/B..

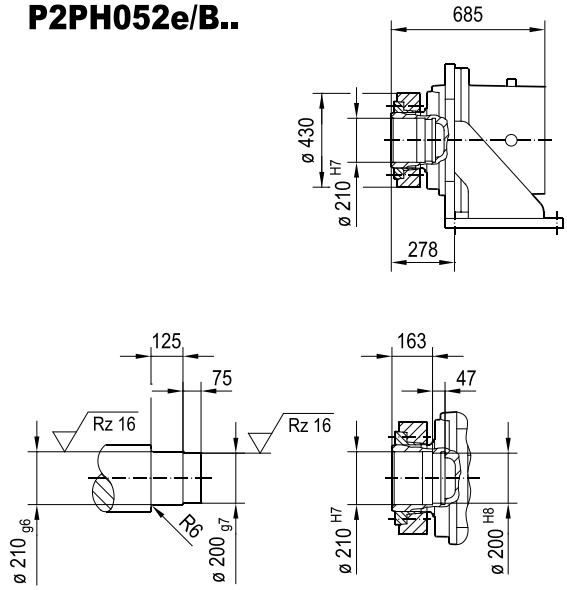

(→ 📖 -)	DRU							
	225S	225ME	250M	280M	315S-M	315ME-H		
AC	434	434	495	495	624	624		
AD	305	305	394	394	506	506		
ADS	305	305	394	394	506	506		
L	1721	1801	1858	1953	2055	2185		
LS	1926	2006	2098	2193	2306	2436		
LB	607	687	744	839	941	1071		
LBS	812	892	984	1079	1192	1322		

31991203/EN – 08/2025

P2PS052e/F DM..

45 049 01 23

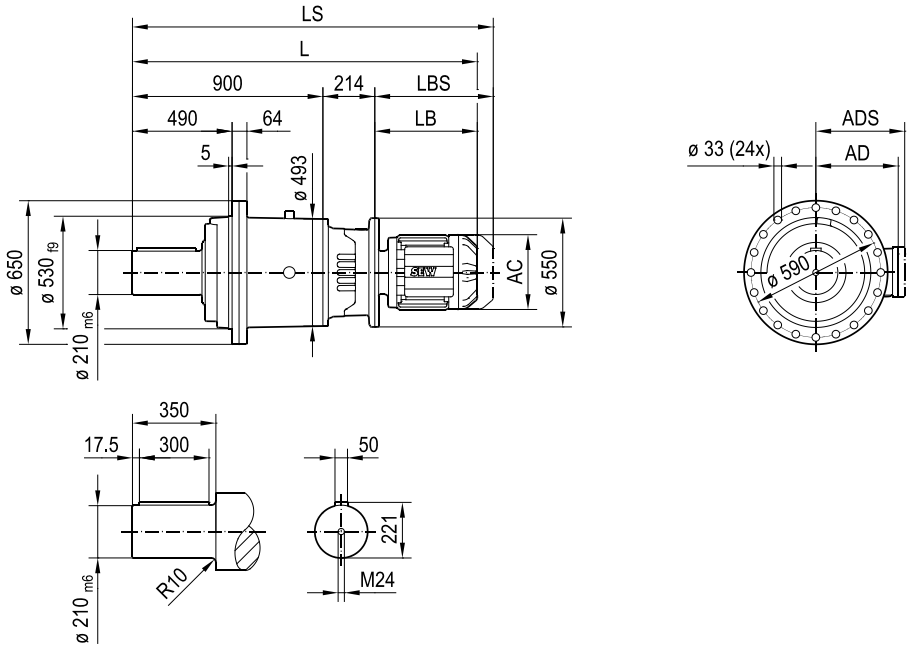

P2PH052e/F..

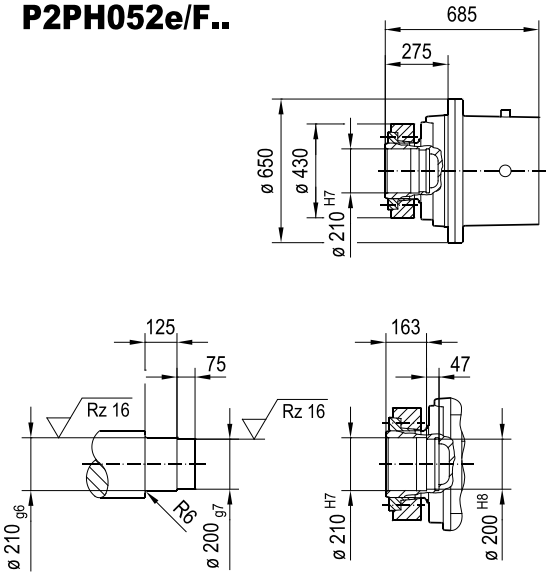

P2P.052e/T..

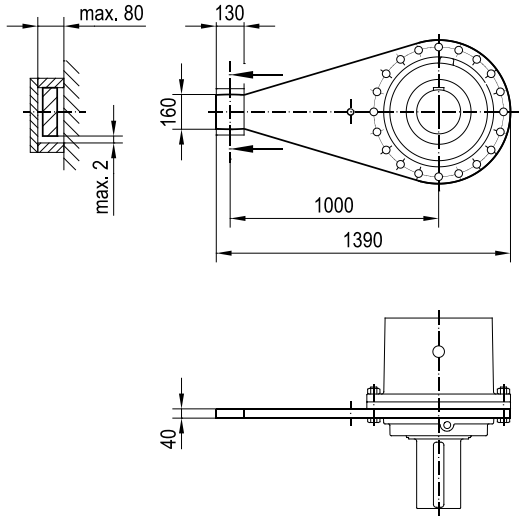

(→ 📖 -)	DRU							
	225S	225ME	250M	280M	315S-M	315ME-H		
AC	434	434	495	495	624	624		
AD	305	305	394	394	506	506		
ADS	305	305	394	394	506	506		
L	1721	1801	1858	1953	2055	2185		
LS	1926	2006	2098	2193	2306	2436		
LB	607	687	744	839	941	1071		
LBS	812	892	984	1079	1192	1322		

31991203/EN – 08/2025

P3PS052e/B DM..

45 050 01 23

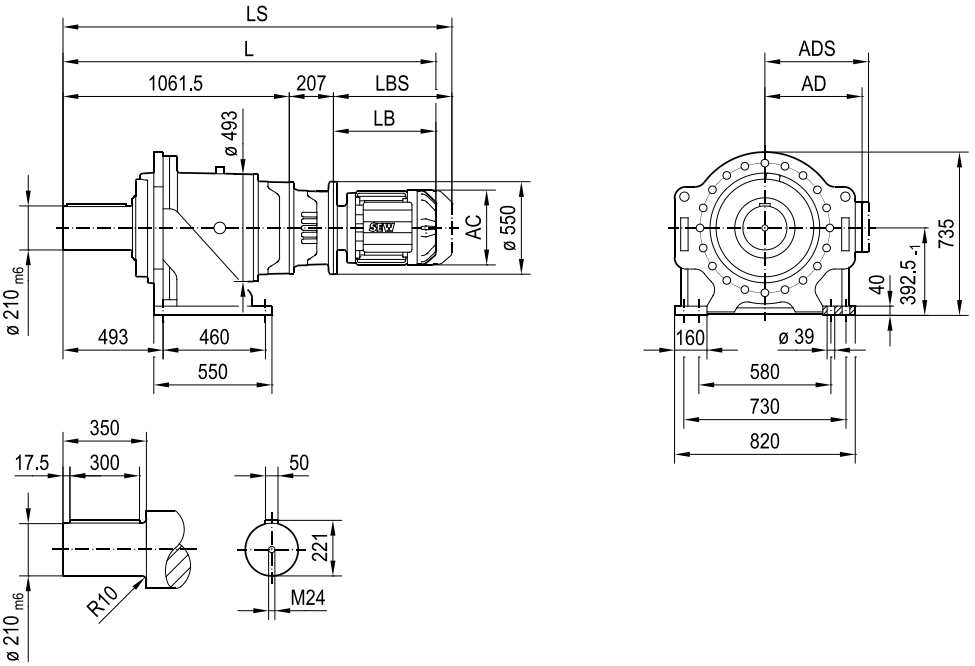

P3PH052e/B..

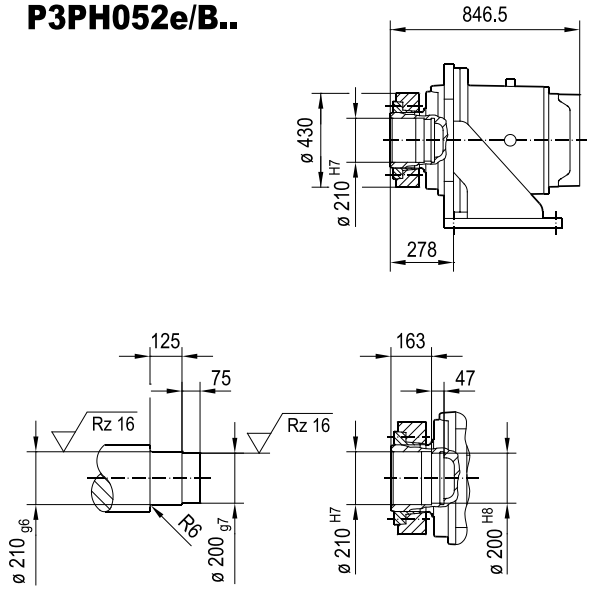

(→ 📖 -)	DRU							
	200L	225S	225ME	250M	280M	315S-M	315ME-H	
AC	394	434	434	495	495	624	624	
AD	283	305	305	394	394	506	506	
ADS	283	305	305	394	394	506	506	
L	1901	1876	1956	2013	2108	2210	2340	
LS	2106	2081	2161	2253	2348	2461	2591	
LB	633	607	687	744	839	941	1071	
LBS	838	812	892	984	1079	1192	1322	

31991203/EN – 08/2025

P3PS052e/F DM..

45 051 01 23

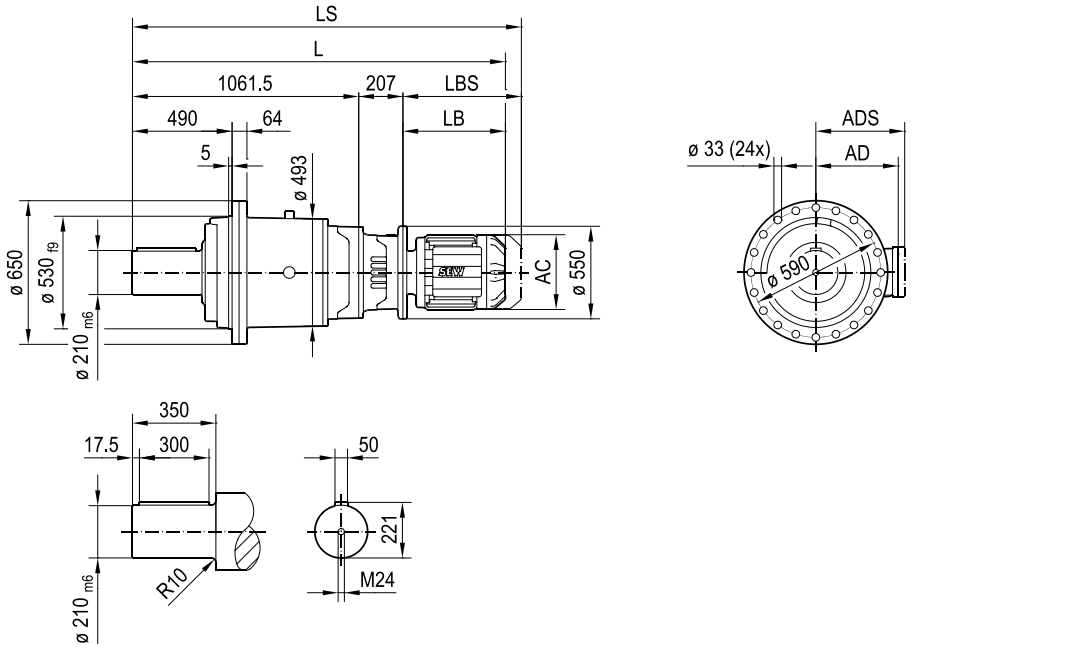

P3PH052e/F..

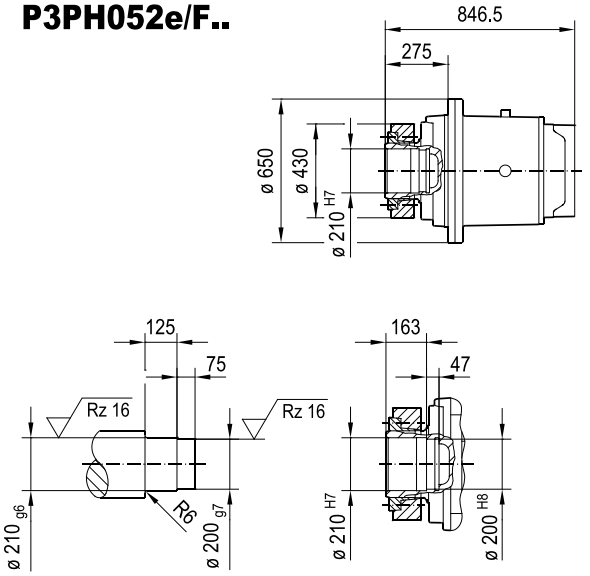

P3P.052e/T..

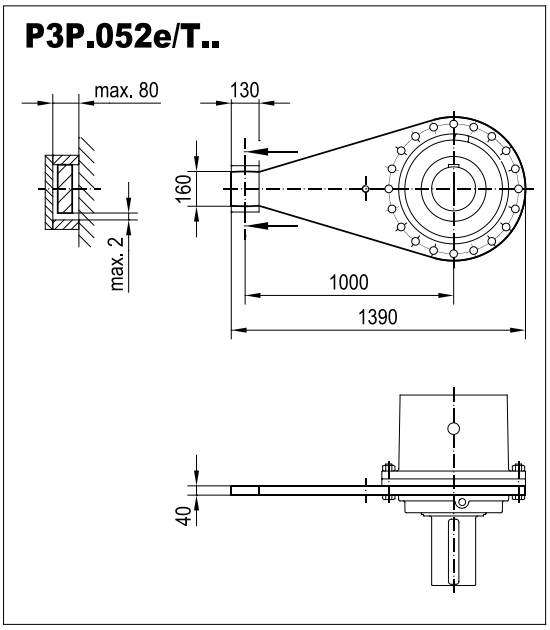

(→ 📖 -)	DRU							
	200L	225S	225ME	250M	280M	315S-M	315ME-H	
AC	394	434	434	495	495	624	624	
AD	283	305	305	394	394	506	506	
ADS	283	305	305	394	394	506	506	
L	1901	1876	1956	2013	2108	2210	2340	
LS	2106	2081	2161	2253	2348	2461	2591	
LB	633	607	687	744	839	941	1071	
LBS	838	812	892	984	1079	1192	1322	

31991203/EN – 08/2025

P2PS062e/B..

45 039 01 25

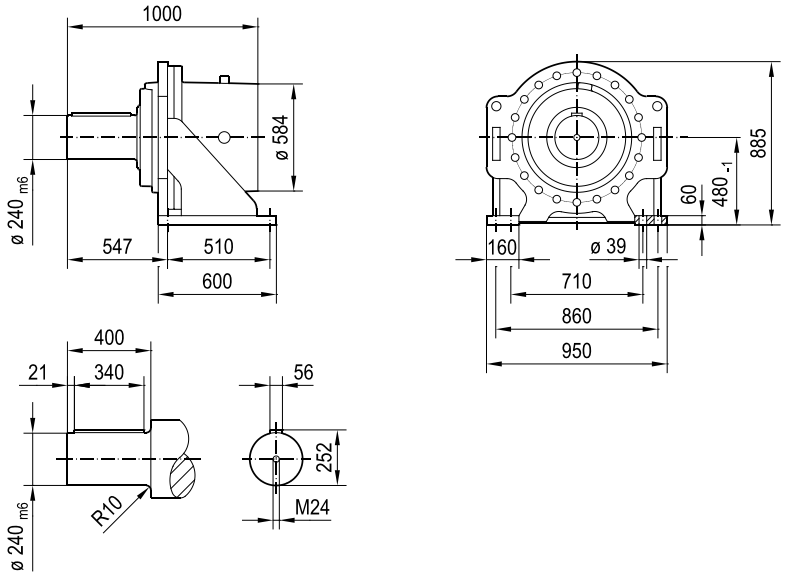

P2PH062e/B..

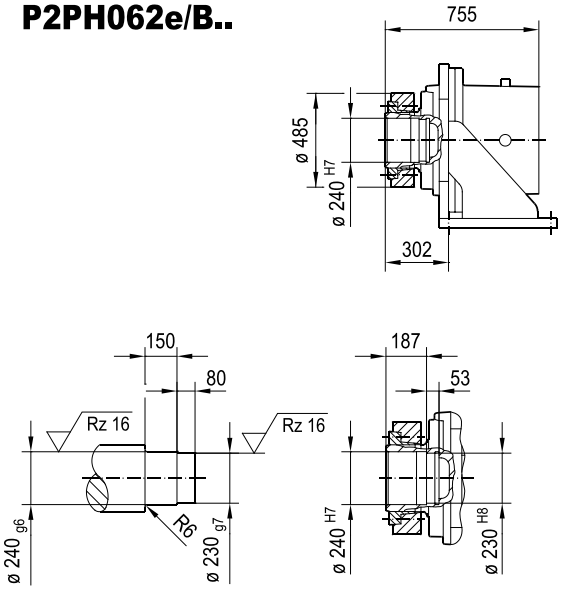

31991203/EN – 08/2025

P2PS062e/F..

45 040 01 25

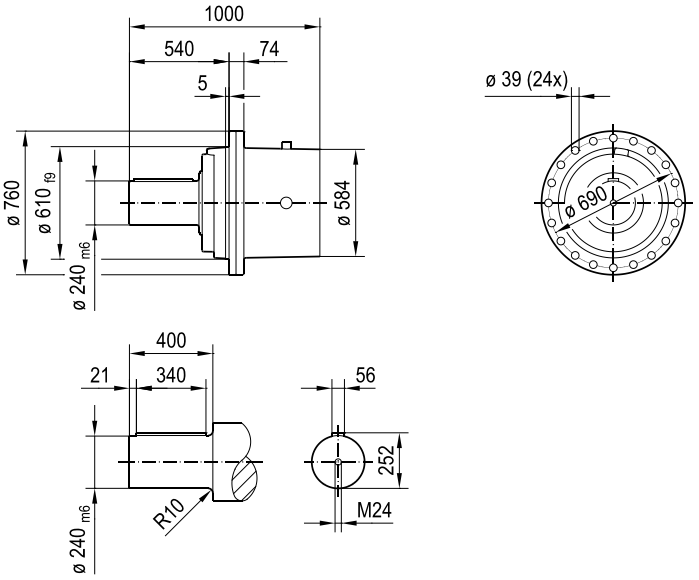

P2PH062e/F..

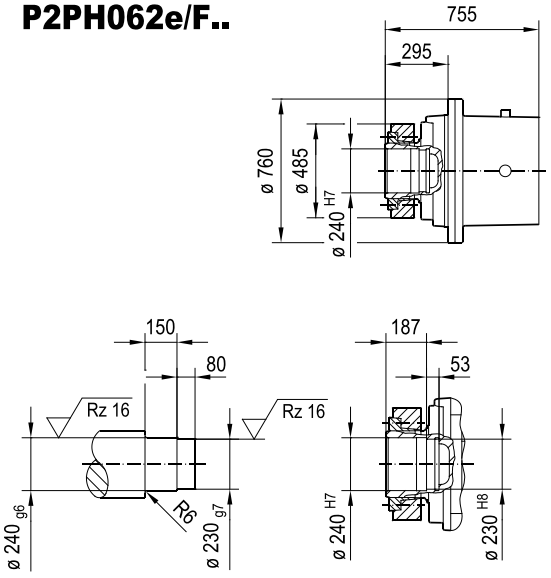

P2P.062e/T..

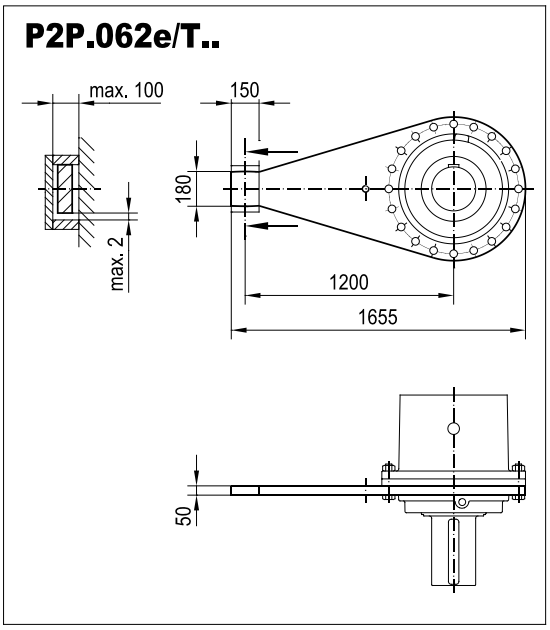

31991203/EN – 08/2025

P3PS062e/B DM..

45 041 01 25

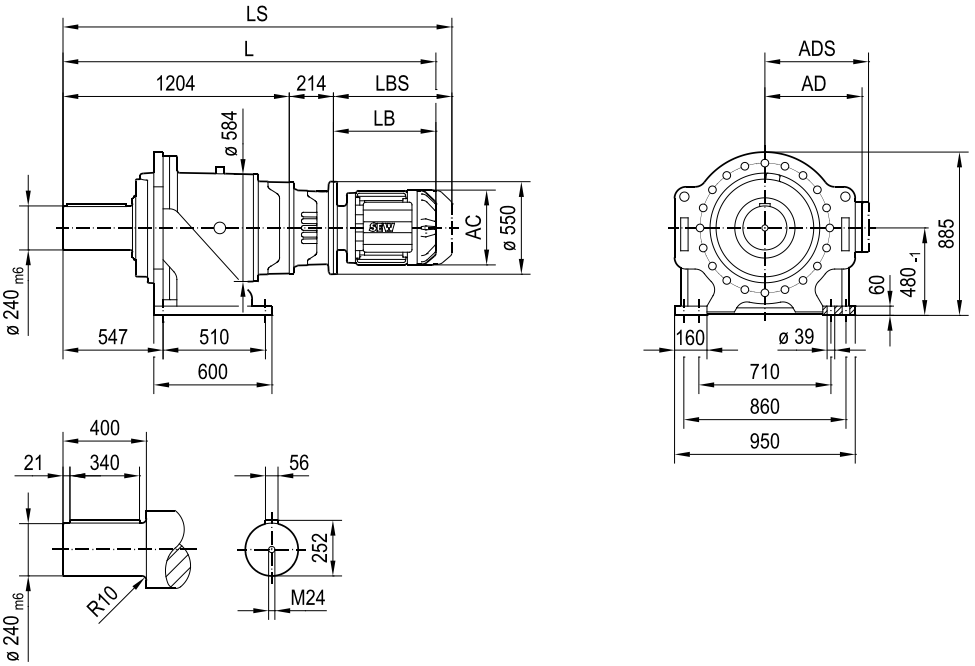

P3PH062e/B..

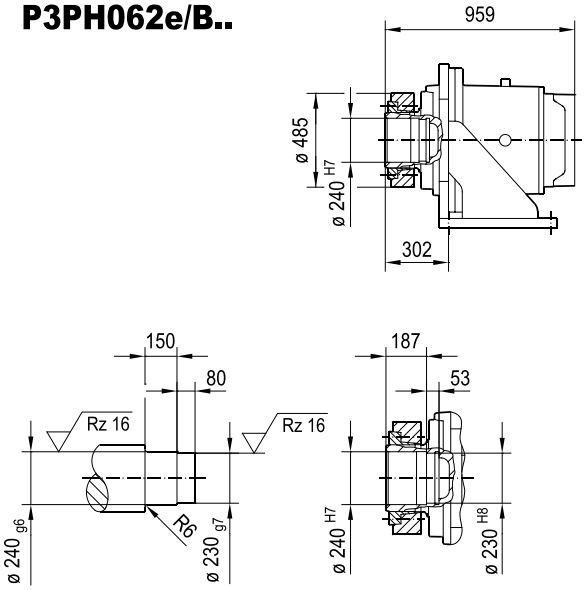

(→ 📖 -)	DRU							
	225S	225ME	250M	280M	315S-M	315ME-H		
AC	434	434	495	495	624	624		
AD	305	305	394	394	506	506		
ADS	305	305	394	394	506	506		
L	2025	2105	2162	2257	2359	2489		
LS	2230	2310	2402	2497	2610	2740		
LB	607	687	744	839	941	1071		
LBS	812	892	984	1079	1192	1322		

31991203/EN – 08/2025

P3PS062e/F DM..

45 042 01 25

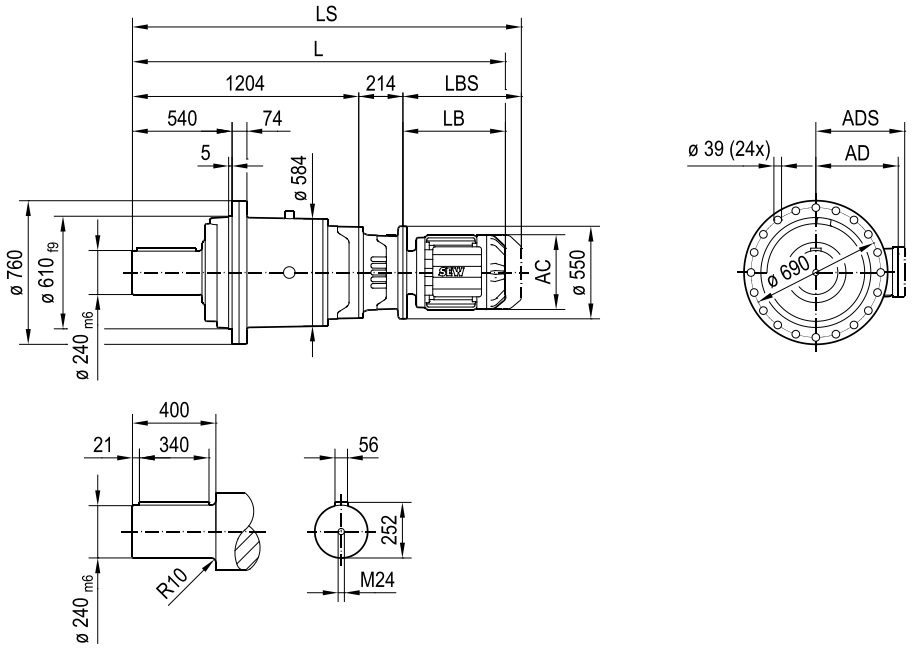

P3PH062e/F..

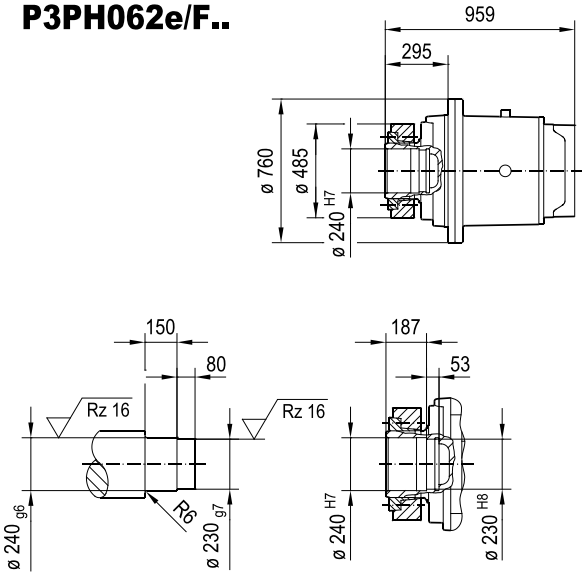

P3P.062e/T..

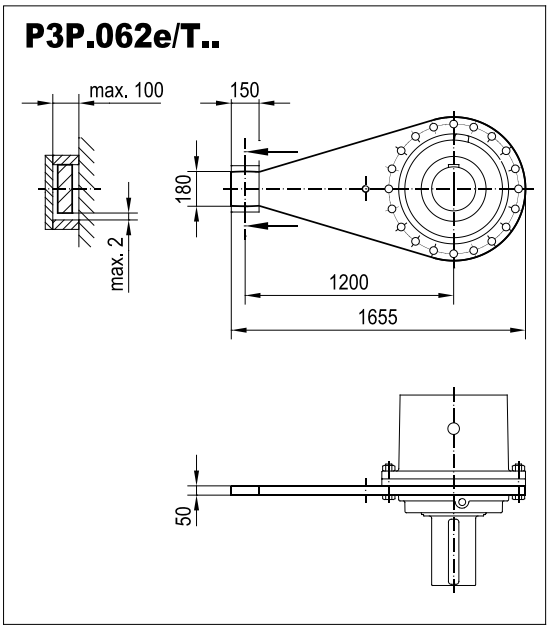

(→ 📖 -)	DRU							
	225S	225ME	250M	280M	315S-M	315ME-H		
AC	434	434	495	495	624	624		
AD	305	305	394	394	506	506		
ADS	305	305	394	394	506	506		
L	2025	2105	2162	2257	2359	2489		
LS	2230	2310	2402	2497	2610	2740		
LB	607	687	744	839	941	1071		
LBS	812	892	984	1079	1192	1322		

31991203/EN – 08/2025

P2PS072e/B..

45 043 01 25

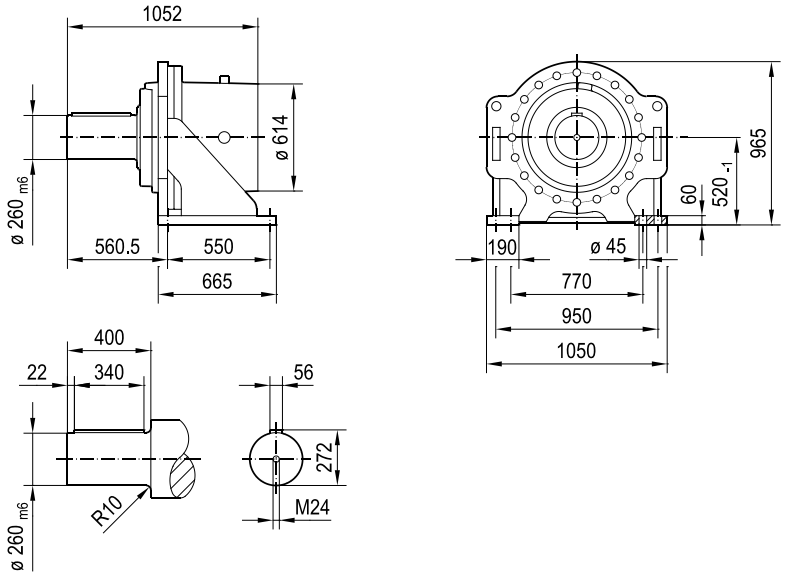

P2PH072e/B..

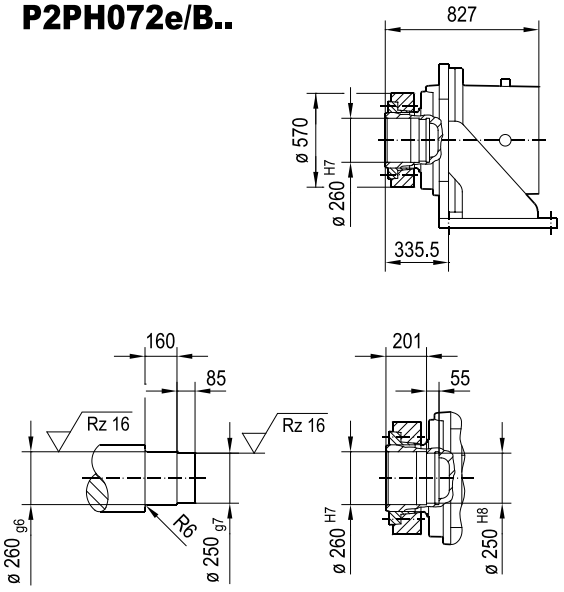

31991203/EN – 08/2025

P2PS072e/F..

45 044 01 25

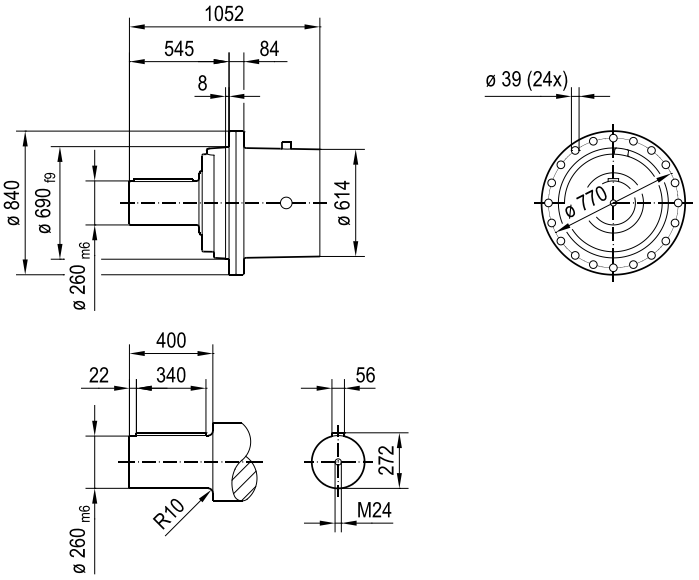

P2PH072e/F..

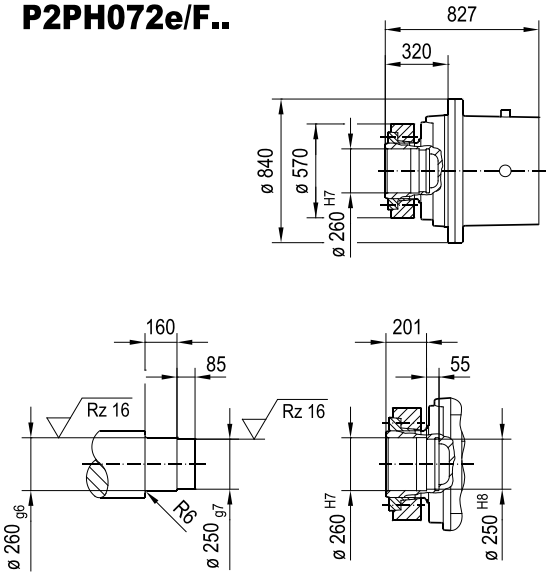

P2P.072e/T..

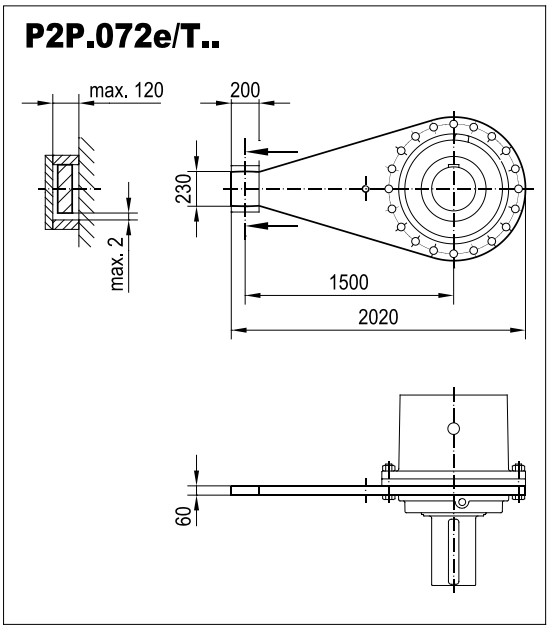

31991203/EN – 08/2025

P3PS072e/B DM..

45 045 01 25

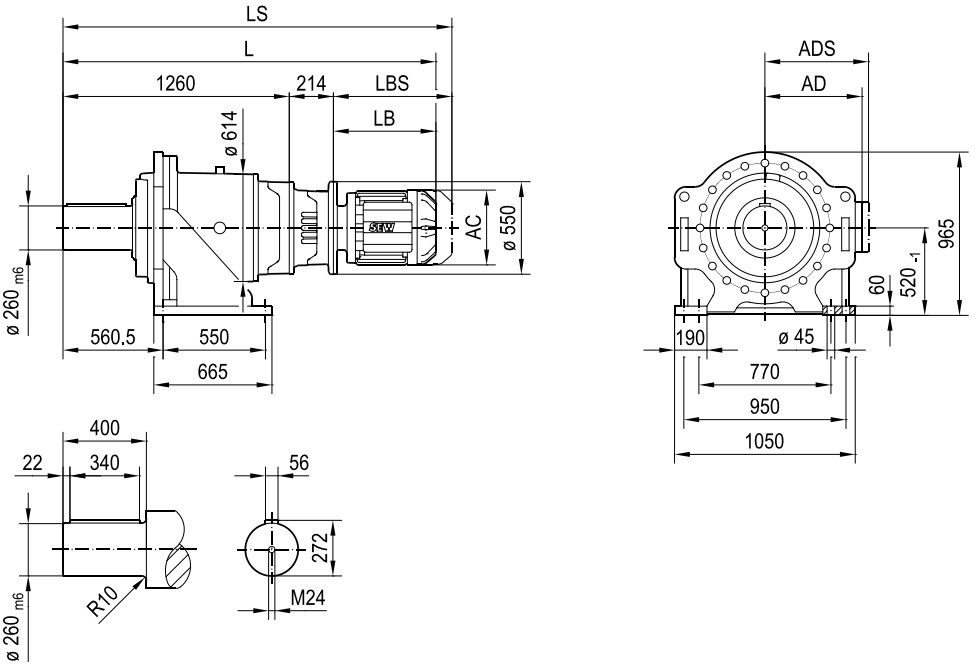

P3PH072e/B..

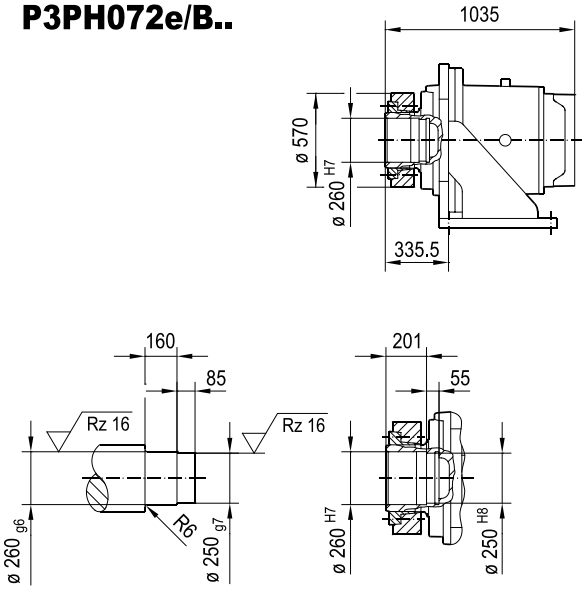

(→ 📖 -)	DRU							
	225ME	250M	280M	315S-M	315ME-H			
AC	434	495	495	624	624			
AD	305	394	394	506	506			
ADS	305	394	394	506	506			
L	2161	2218	2313	2415	2545			
LS	2366	2458	2553	2666	2796			
LB	687	744	839	941	1071			
LBS	892	984	1079	1192	1322			

31991203/EN – 08/2025

P3PS072e/F DM..

45 046 01 25

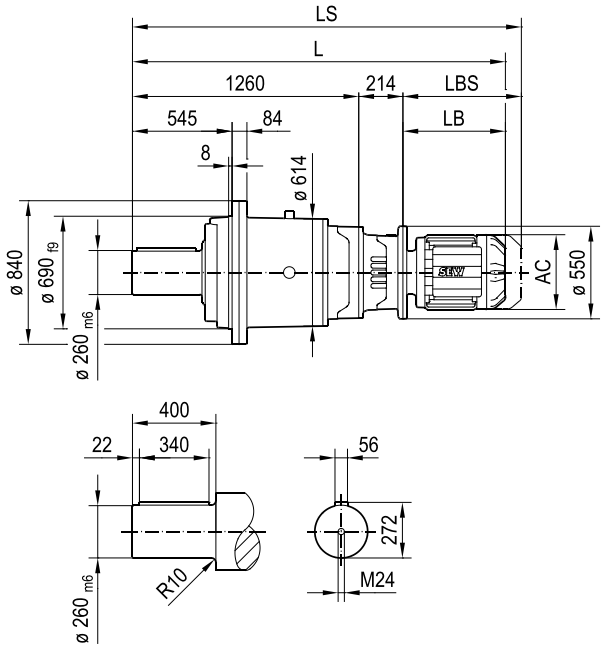

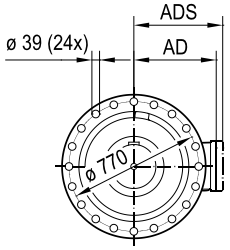

P3PH072e/F..

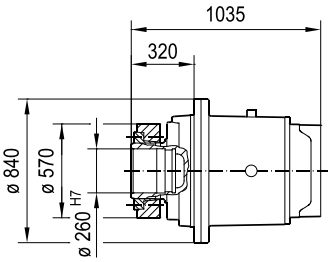

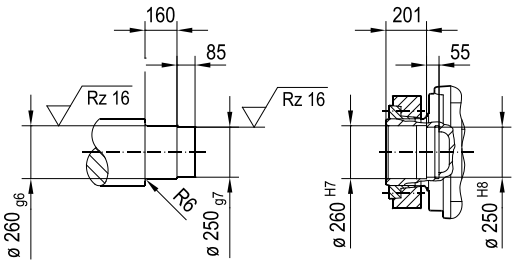

P3P.072e/T..

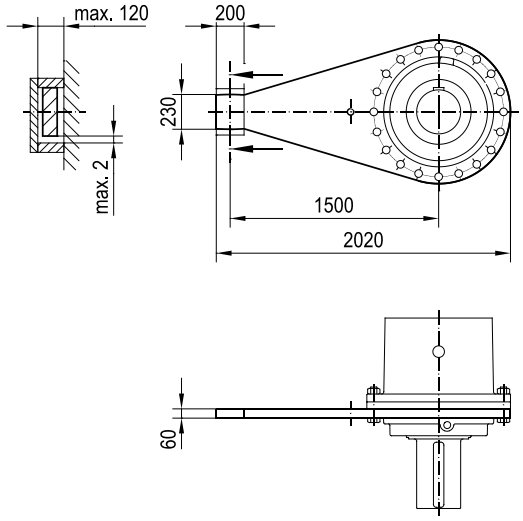

(→ 📖 -)	DRU							
	225ME	250M	280M	315S-M	315ME-H			
AC	434	495	495	624	624			
AD	305	394	394	506	506			
ADS	305	394	394	506	506			
L	2161	2218	2313	2415	2545			
LS	2366	2458	2553	2666	2796			
LB	687	744	839	941	1071			
LBS	892	984	1079	1192	1322			

31991203/EN – 08/2025

P2PS082e/B..

45 047 01 25

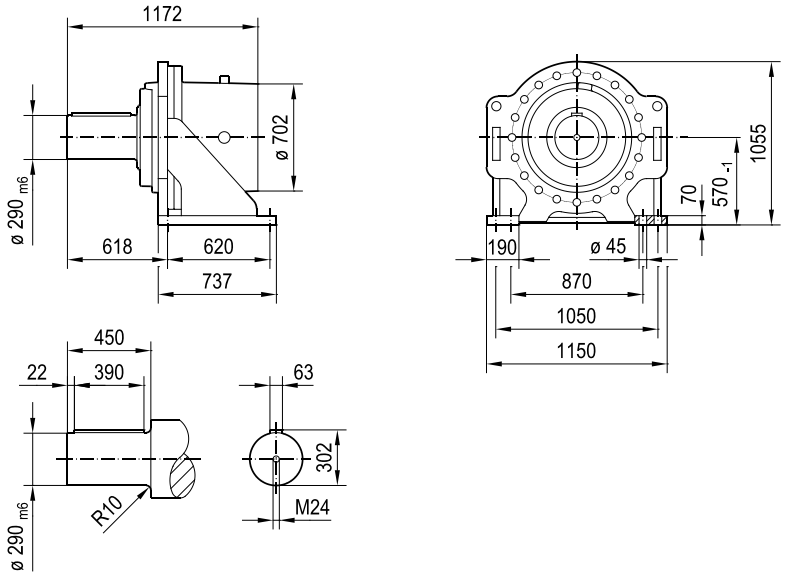

P2PH082e/B..

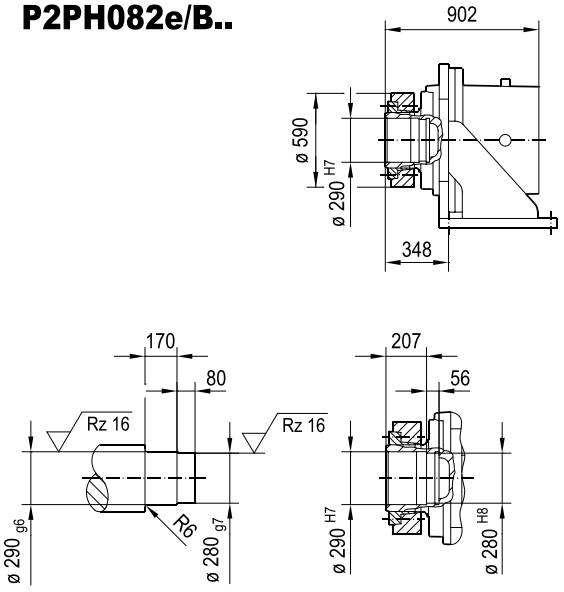

31991203/EN – 08/2025

P2PS082e/F..

45 048 01 25

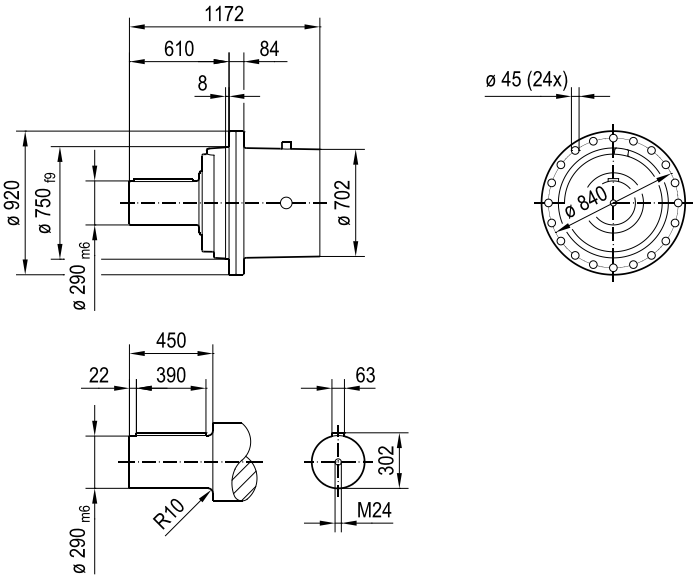

P2PH082e/F..

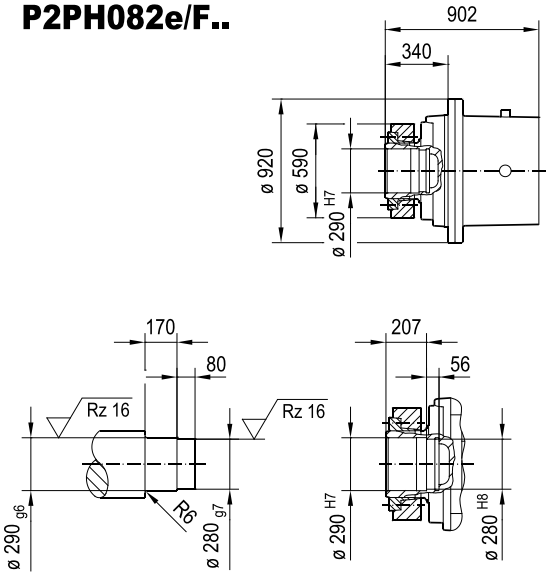

P2P.082e/T..

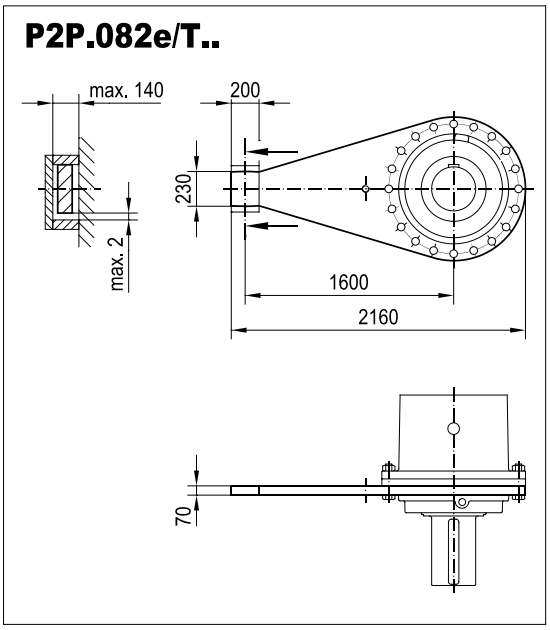

31991203/EN – 08/2025

P3PS082e/B..

45 049 01 25

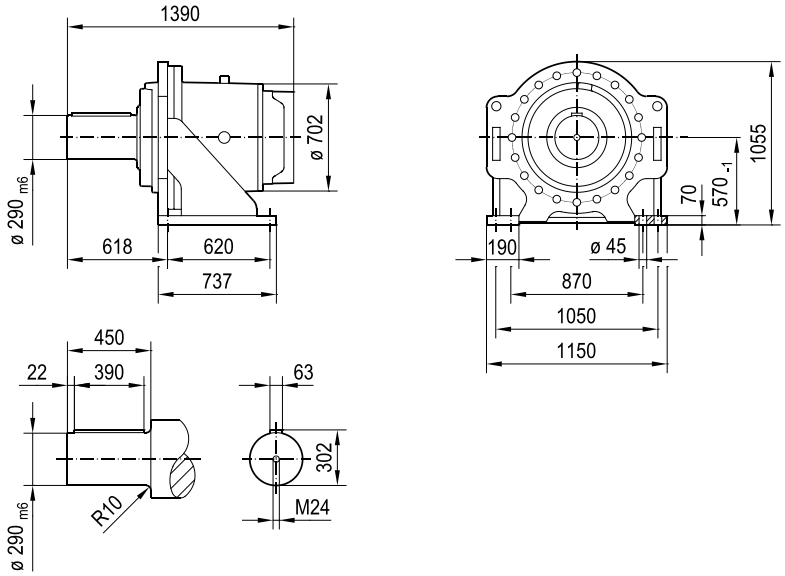

P3PH082e/B..

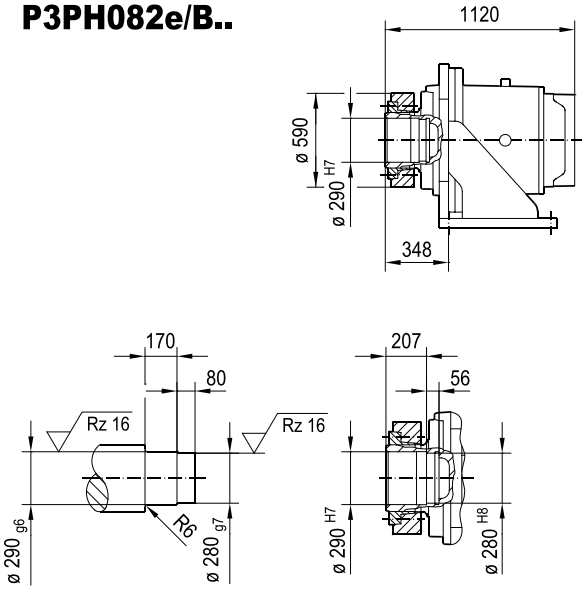

31991203/EN – 08/2025

P3PS082e/F..

45 050 01 25

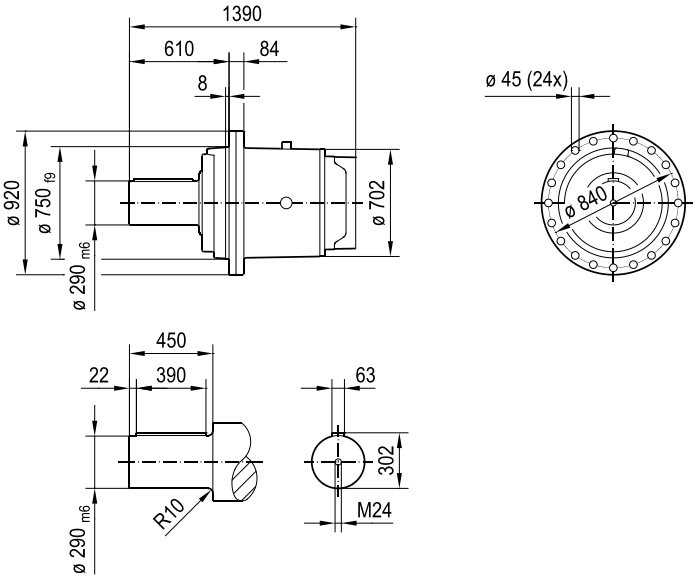

P3PH082e/F..

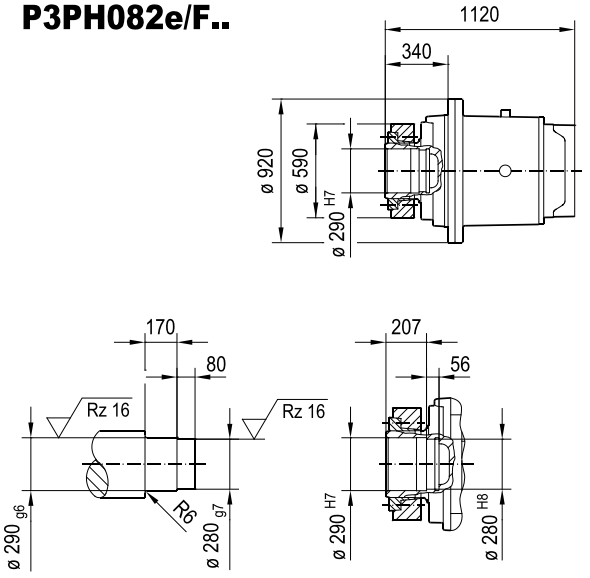

P3P.082e/T..

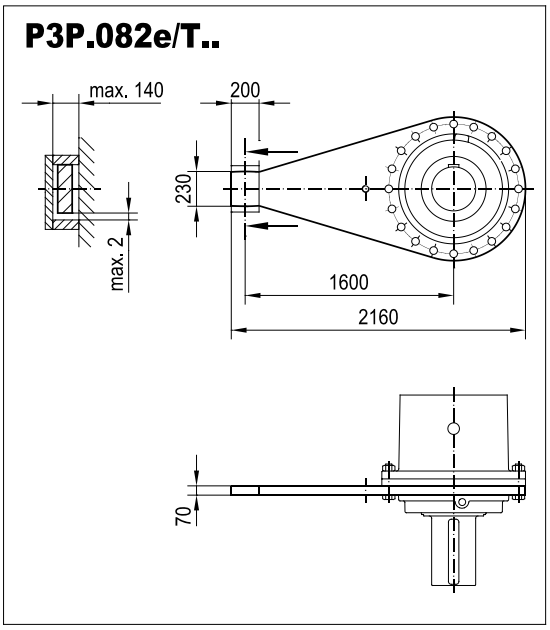

11.4 P2.e DMF DRU.. planetary gearmotors

P2PS002e/B DMF..

45 052 01 23

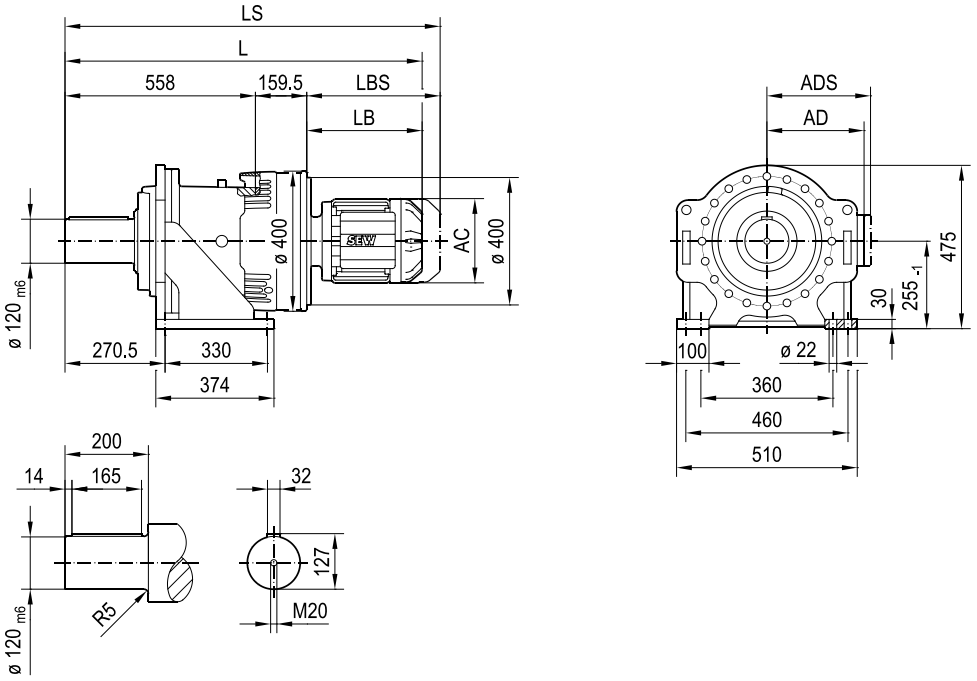

P2PH002e/B..

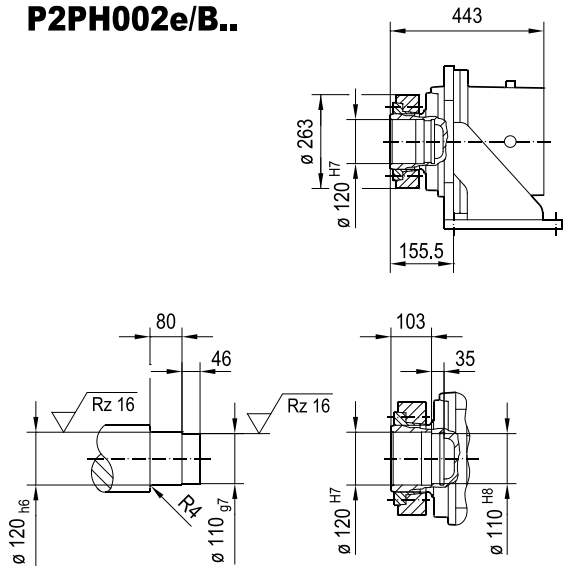

(→ 📖 -)	DRU							
	160..	180..	200L	225S	225ME	250M		
AC	314	357	394	434	434	495		
AD	253	268	283	305	305	394		
ADS	253	268	283	305	305	394		
L	1234	1257	1366	1341	1421	1478		
LS	1423	1446	1571	1546	1626	1718		
LB	516	539	649	623	703	760		
LBS	705	728	854	828	908	1000		

31991203/EN – 08/2025

P2PS002e/F DMF..

45 053 01 23

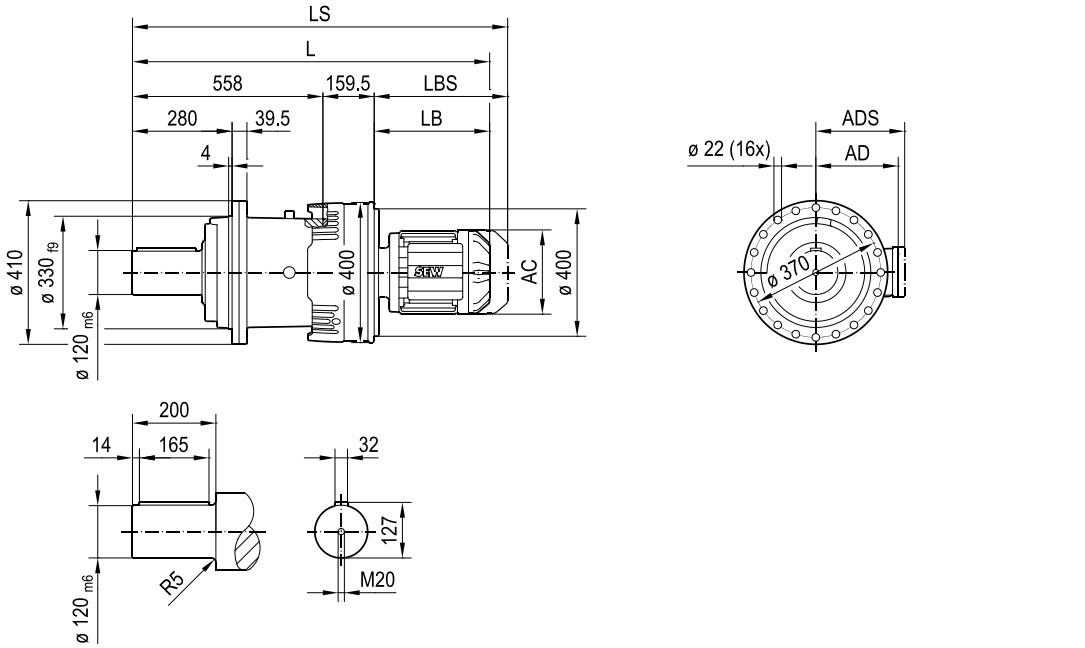

P2PH002e/F..

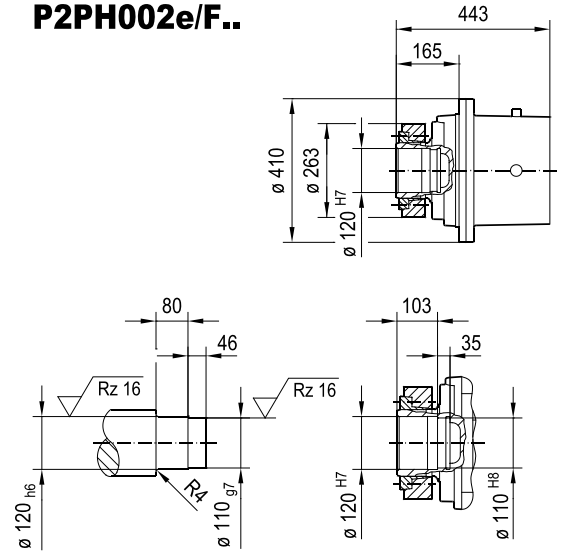

P2P.002e/T..

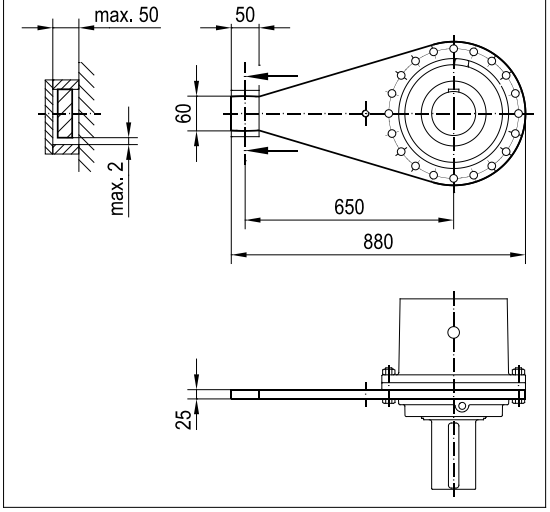

(→ 📖 -)	DRU							
	160..	180..	200L	225S	225ME	250M		
AC	314	357	394	434	434	495		
AD	253	268	283	305	305	394		
ADS	253	268	283	305	305	394		
L	1234	1257	1366	1341	1421	1478		
LS	1423	1446	1571	1546	1626	1718		
LB	516	539	649	623	703	760		
LBS	705	728	854	828	908	1000		

31991203/EN – 08/2025

P3PS002e/B DMF..

45 054 01 23

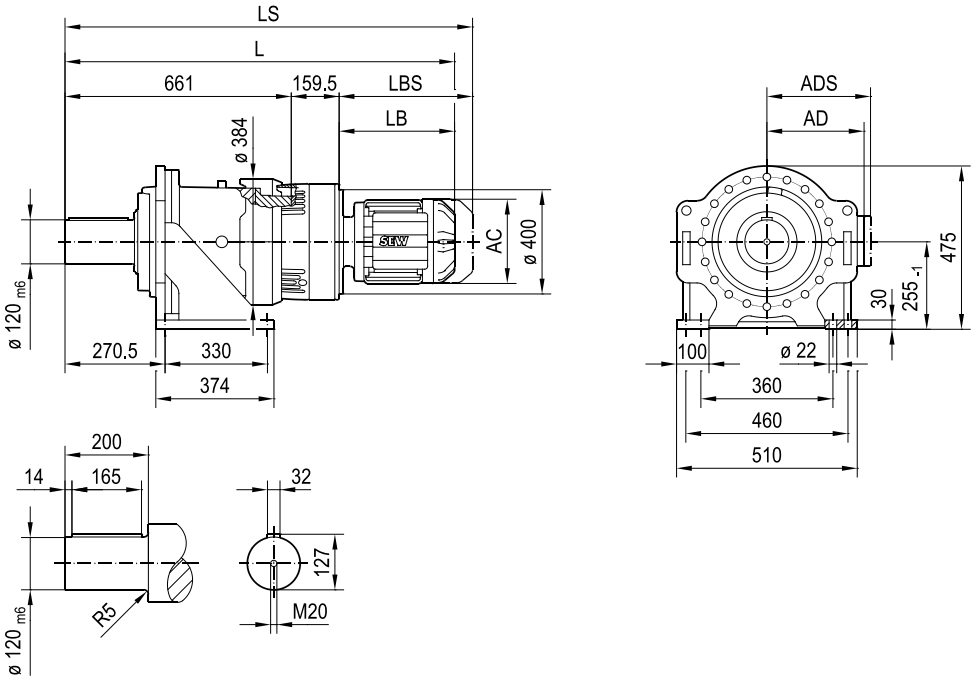

P3PH002e/B..

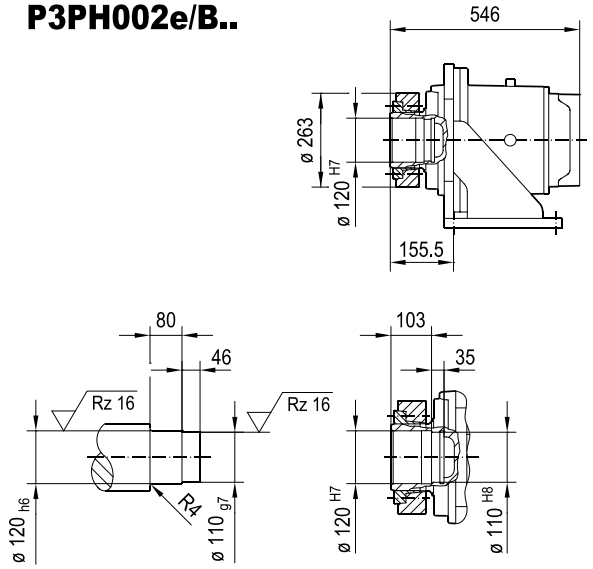

(→ 📖 -)	DRU							
	132S	132M	160..	180..	200L	225S	225ME	
AC	221	261	314	357	394	434	434	
AD	170	228	253	268	283	305	305	
ADS	172	228	253	268	283	305	305	
L	1227	1245	1337	1360	1469	1444	1524	
LS	1339	1382	1526	1549	1674	1649	1729	
LB	406	424	516	539	649	623	703	
LBS	518	562	705	728	854	828	908	

31991203/EN – 08/2025

P3PS002e/F DMF..

45 055 01 23

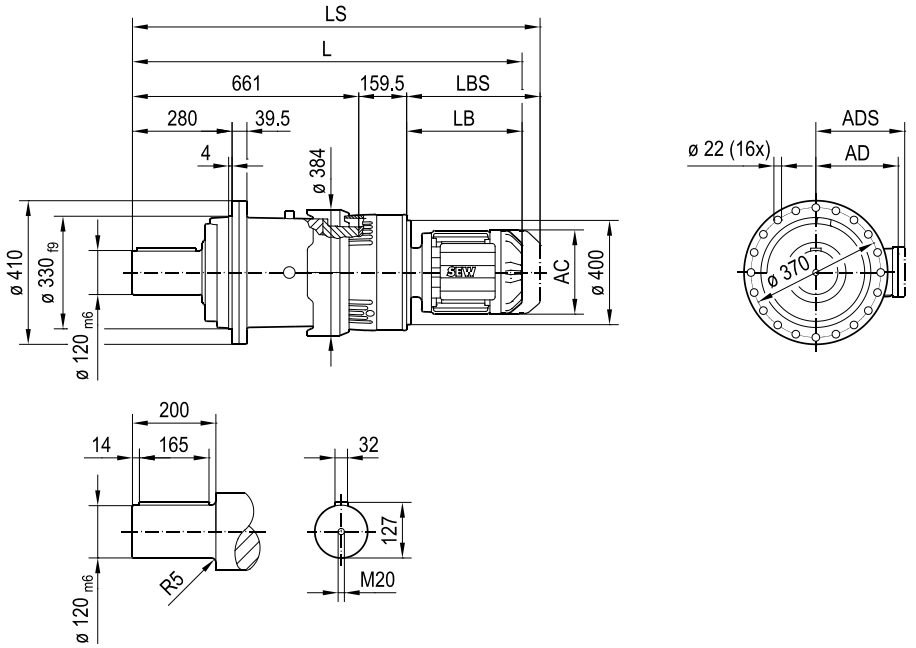

P3PH002e/F..

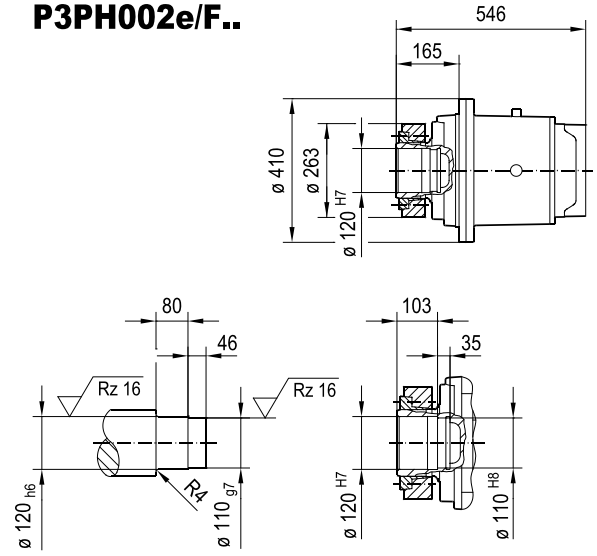

P3P.002e/T..

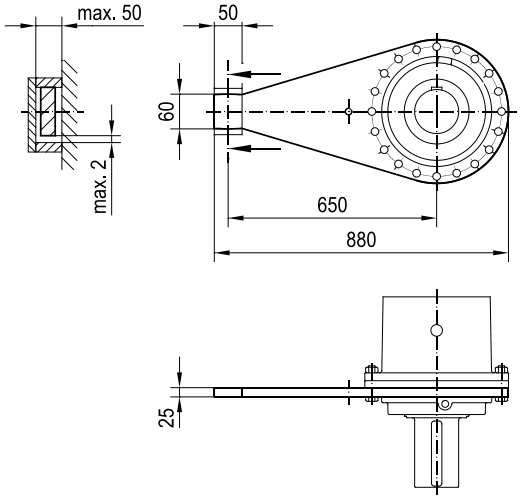

(→ 📖 -)	DRU							
	132S	132M	160..	180..	200L	225S	225ME	
AC	221	261	314	357	394	434	434	
AD	170	228	253	268	283	305	305	
ADS	172	228	253	268	283	305	305	
L	1227	1245	1337	1360	1469	1444	1524	
LS	1339	1382	1526	1549	1674	1649	1729	
LB	406	424	516	539	649	623	703	
LBS	518	562	705	728	854	828	908	

31991203/EN – 08/2025

P2PS012e/B DMF..

45 056 01 23

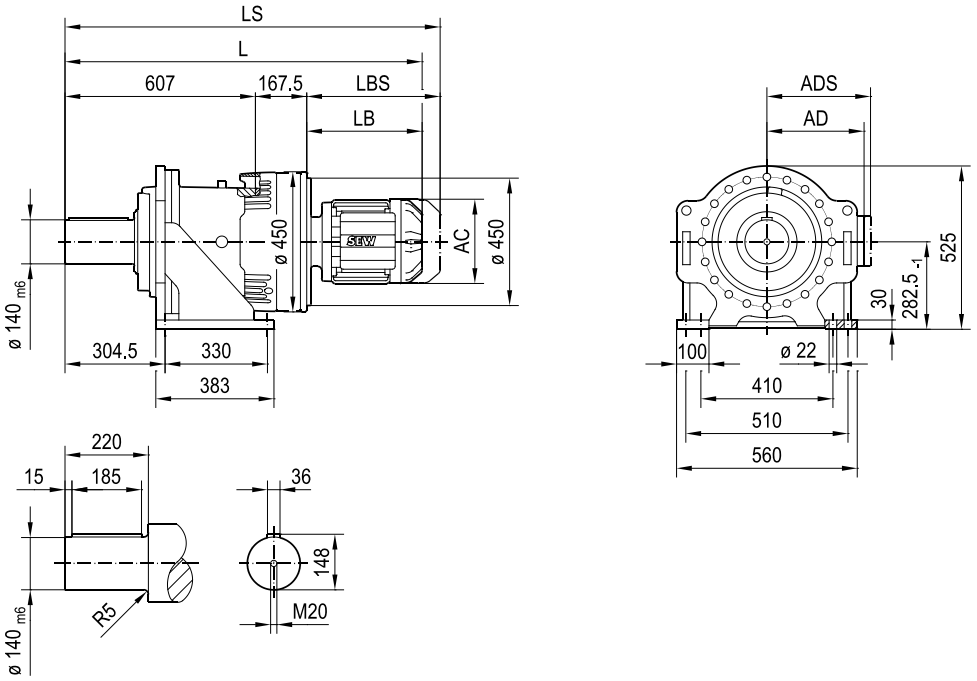

P2PH012e/B..

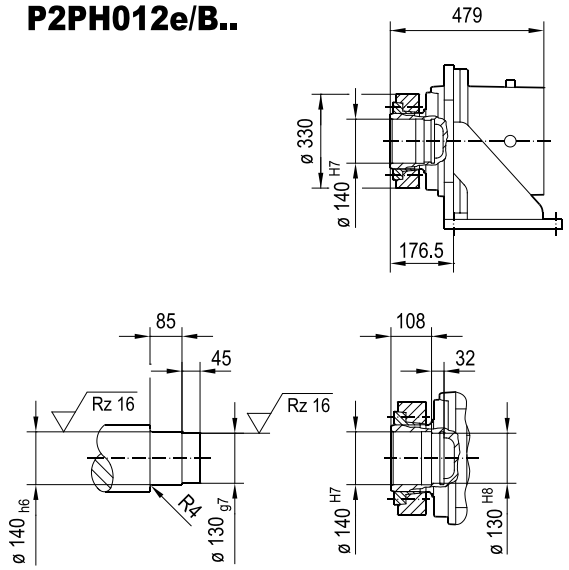

(→ 📖 -)	DRU							
	180..	200L	225S	225ME	250M	280M		
AC	357	394	434	434	495	495		
AD	268	283	305	305	394	394		
ADS	268	283	305	305	394	394		
L	1306	1415	1390	1470	1527	1622		
LS	1495	1620	1595	1675	1767	1862		
LB	531	641	615	695	752	847		
LBS	720	846	820	900	992	1087		

31991203/EN – 08/2025

P2PS012e/F DMF..

45 057 01 23

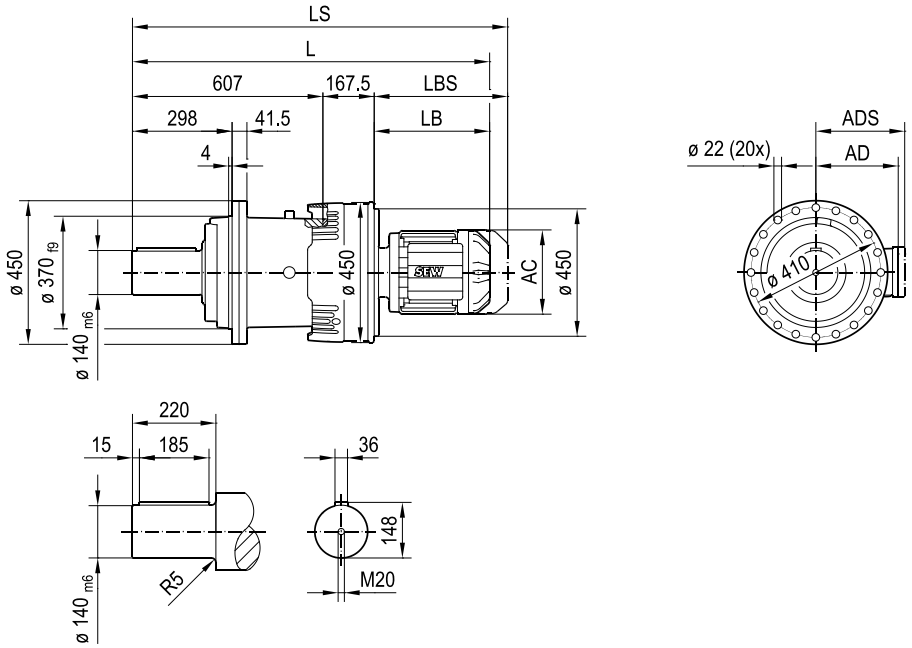

P2PH012e/F..

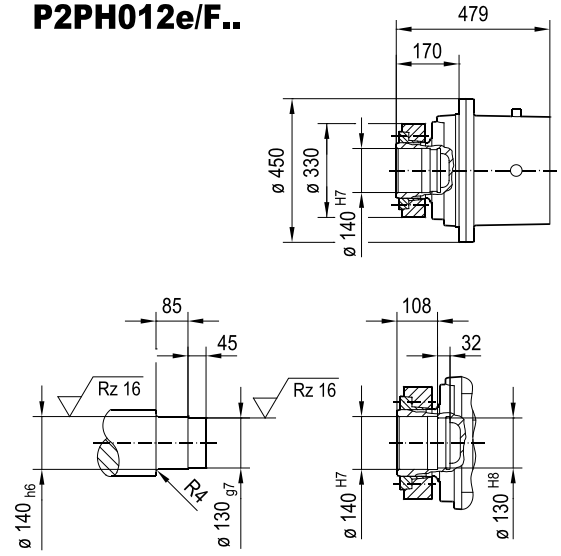

P2P.012e/T..

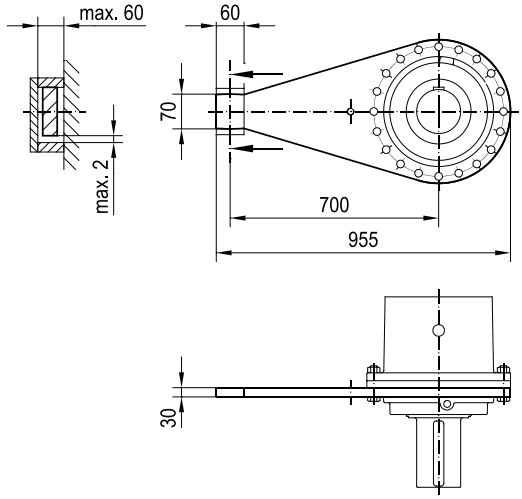

(→ 📖 -)	DRU							
	180..	200L	225S	225ME	250M	280M		
AC	357	394	434	434	495	495		
AD	268	283	305	305	394	394		
ADS	268	283	305	305	394	394		
L	1306	1415	1390	1470	1527	1622		
LS	1495	1620	1595	1675	1767	1862		
LB	531	641	615	695	752	847		
LBS	720	846	820	900	992	1087		

31991203/EN – 08/2025

P3PS012e/B DMF..

45 058 01 23

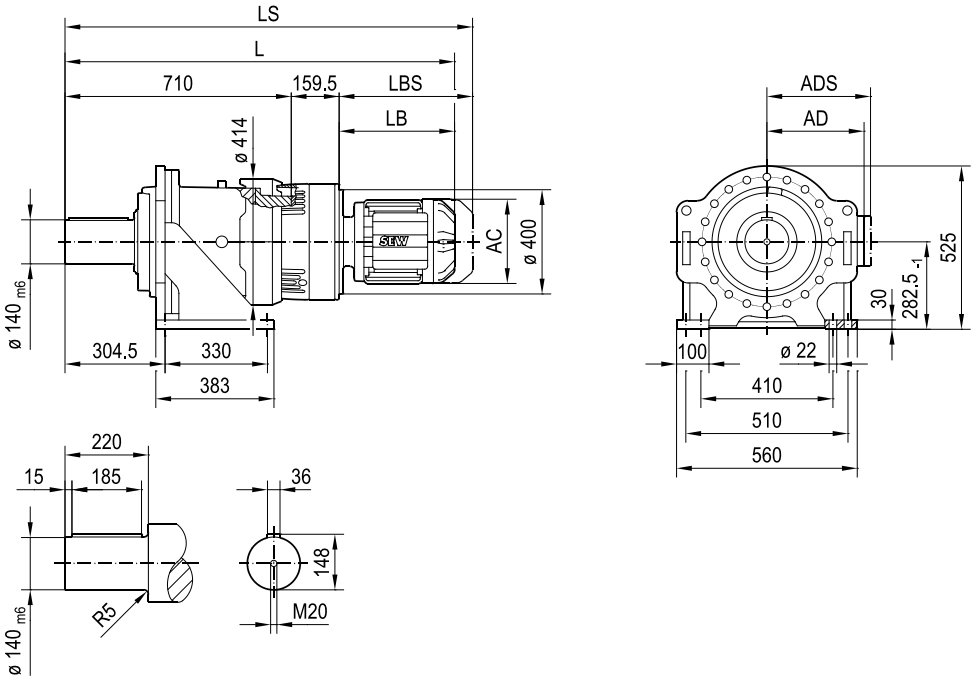

P3PH012e/B..

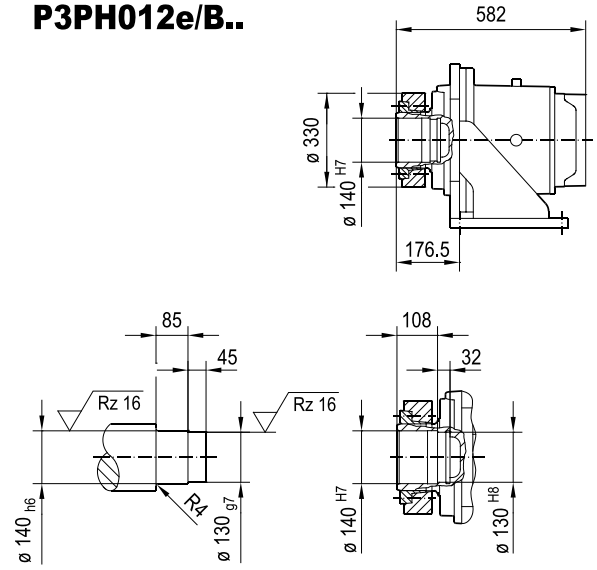

(→ 📖 -)	DRU							
	132M	160..	180..	200L	225S	225ME		
AC	261	314	357	394	434	434		
AD	228	253	268	283	305	305		
ADS	228	253	268	283	305	305		
L	1294	1386	1409	1518	1493	1573		
LS	1431	1575	1598	1723	1698	1778		
LB	424	516	539	649	623	703		
LBS	562	705	728	854	828	908		

31991203/EN – 08/2025

P3PS012e/F DMF..

45 059 01 23

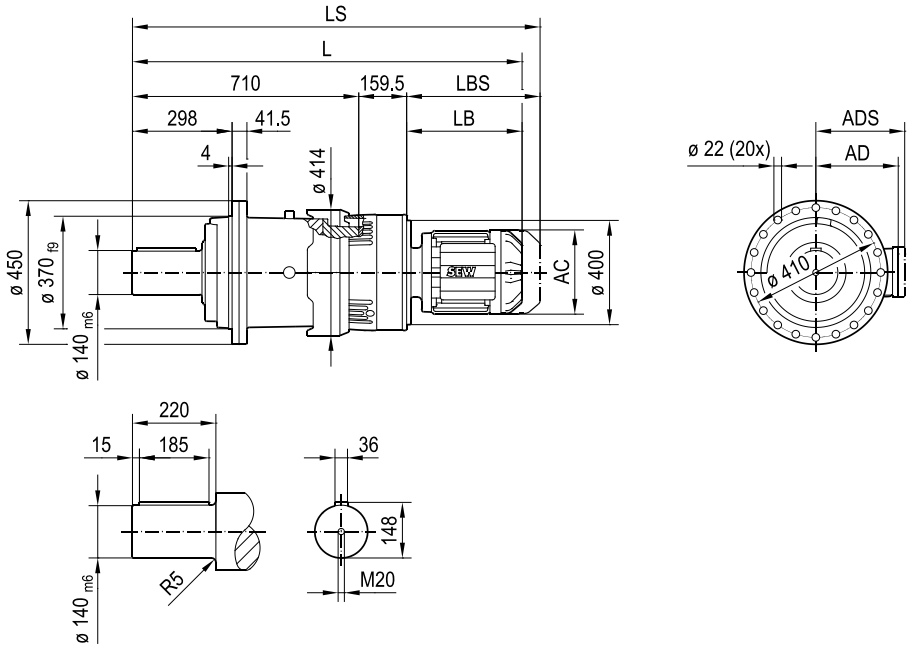

P3PH012e/F..

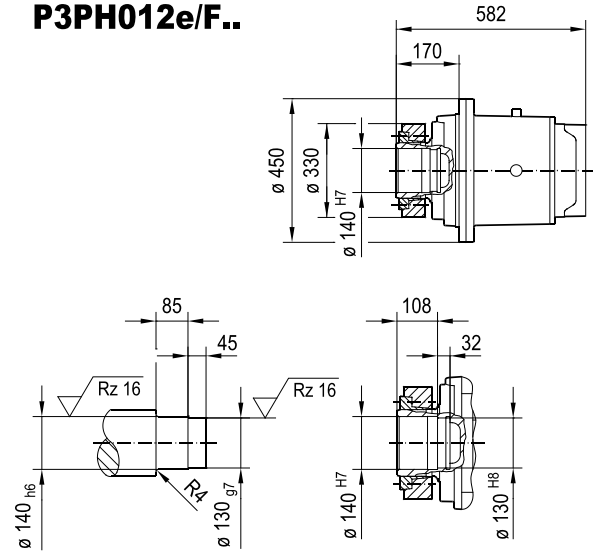

P3P.012e/T..

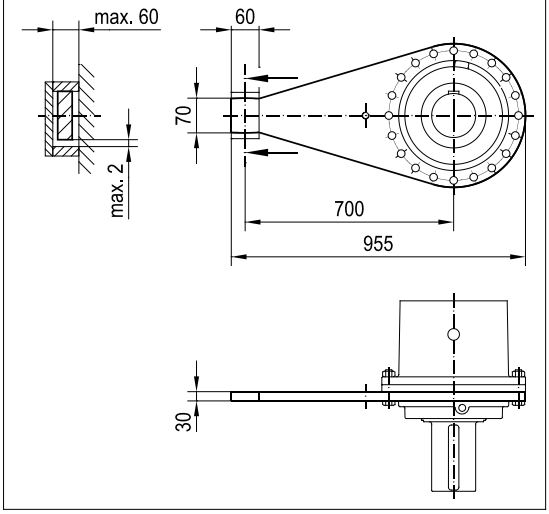

(→ 📖 -)	DRU							
	132M	160..	180..	200L	225S	225ME		
AC	261	314	357	394	434	434		
AD	228	253	268	283	305	305		
ADS	228	253	268	283	305	305		
L	1294	1386	1409	1518	1493	1573		
LS	1431	1575	1598	1723	1698	1778		
LB	424	516	539	649	623	703		
LBS	562	705	728	854	828	908		

31991203/EN – 08/2025

P2PS022e/B DMF..

45 060 01 23

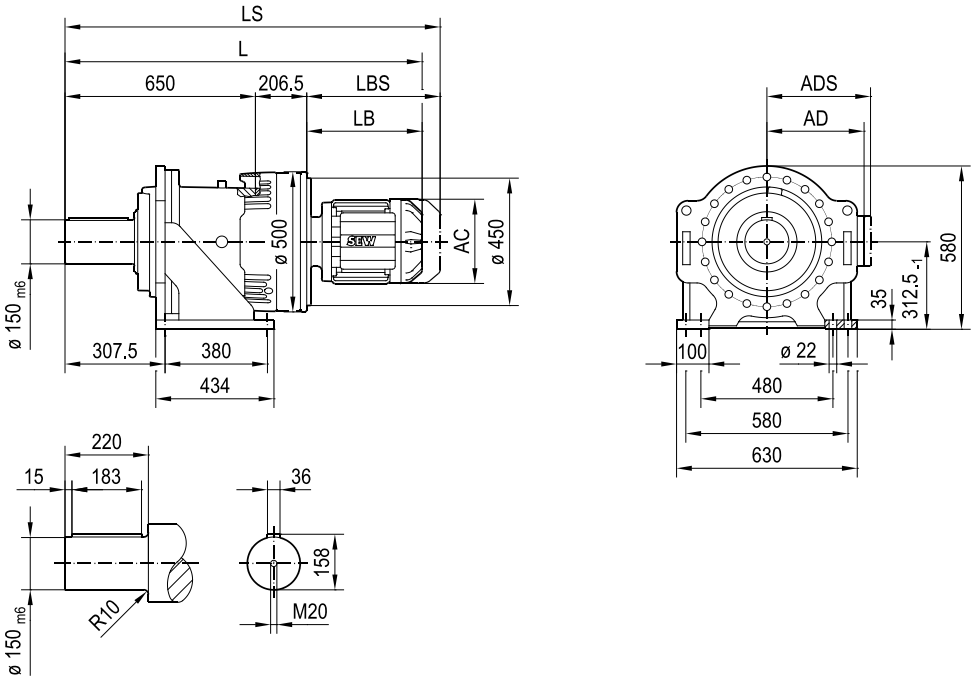

P2PH022e/B..

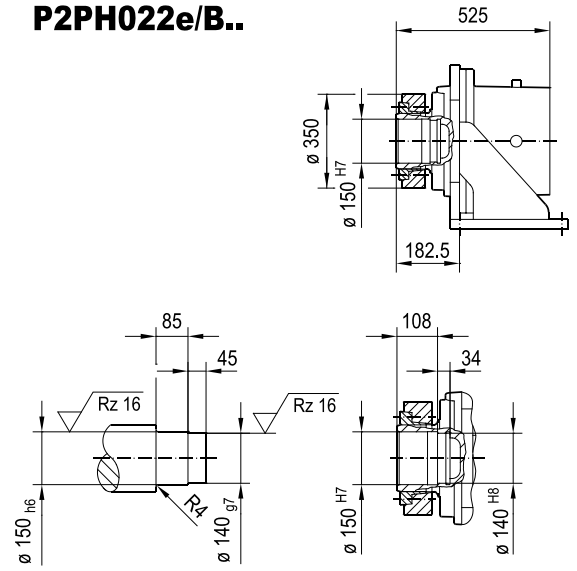

(→ 📖 -)	DRU							
	200L	225S	225ME	250M	280M			
AC	394	434	434	495	495			
AD	283	305	305	394	394			
ADS	283	305	305	394	394			
L	1497	1472	1552	1609	1704			
LS	1702	1677	1757	1849	1944			
LB	641	615	695	752	847			
LBS	846	820	900	992	1087			

31991203/EN – 08/2025

P2PS022e/F DMF..

45 061 01 23

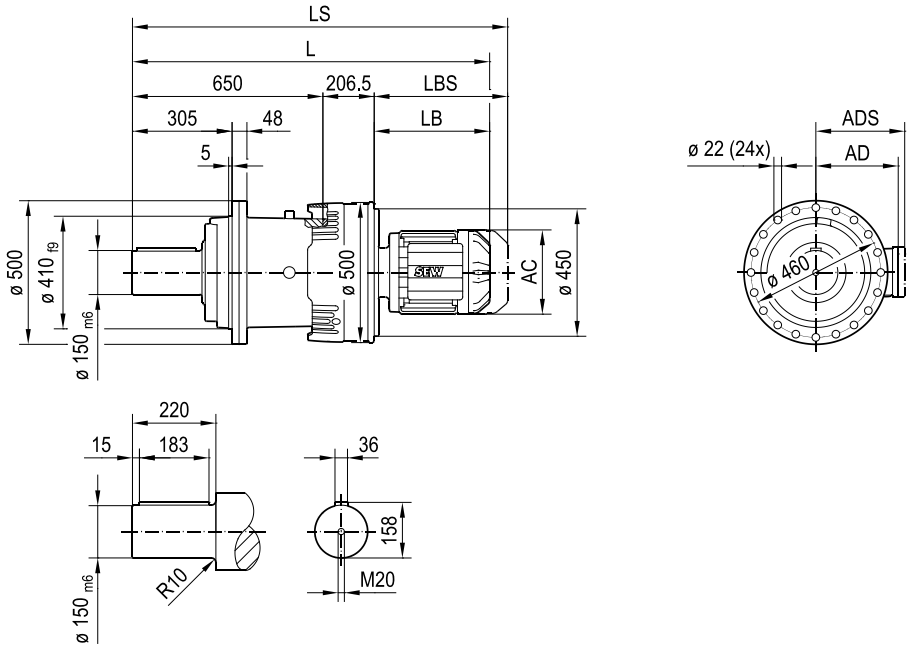

P2PH022e/F..

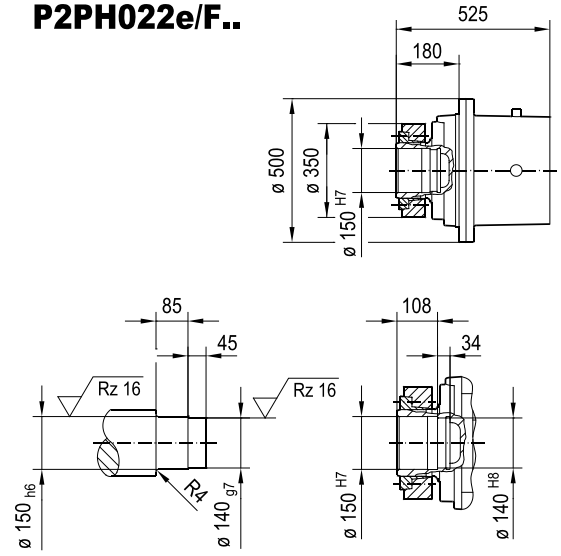

P2P.022e/T..

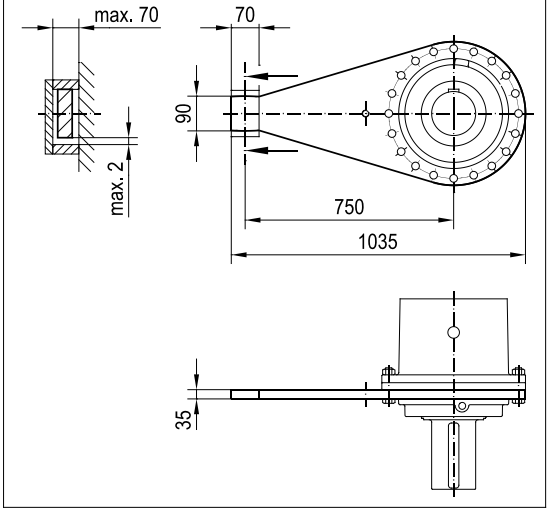

(→ 📖 -)	DRU							
	200L	225S	225ME	250M	280M			
AC	394	434	434	495	495			
AD	283	305	305	394	394			
ADS	283	305	305	394	394			
L	1497	1472	1552	1609	1704			
LS	1702	1677	1757	1849	1944			
LB	641	615	695	752	847			
LBS	846	820	900	992	1087			

31991203/EN – 08/2025

P3PS022e/B DMF..

45 062 01 23

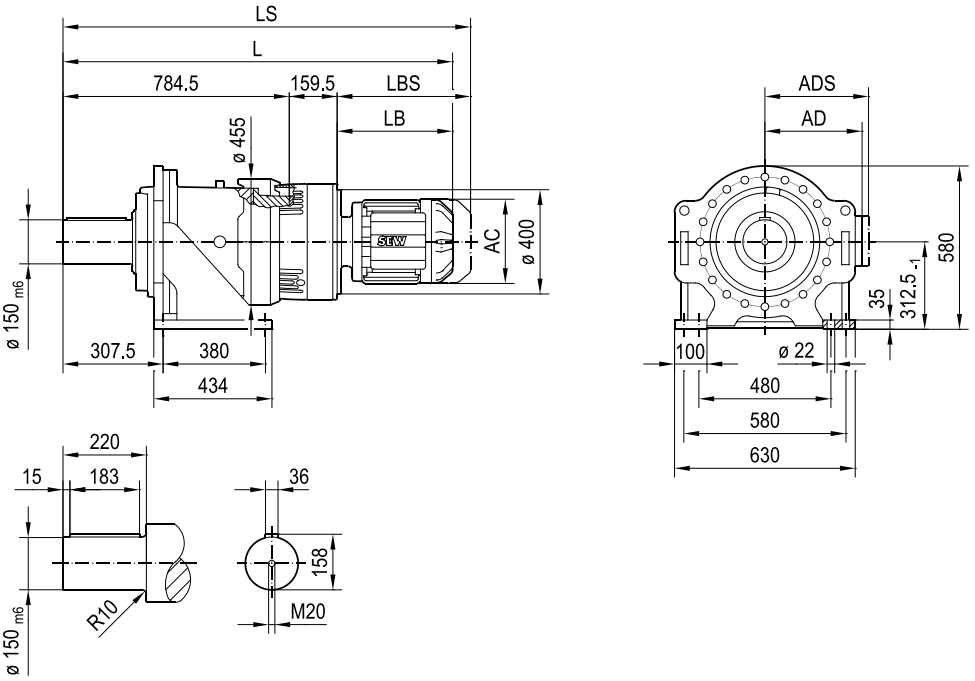

P3PH022e/B..

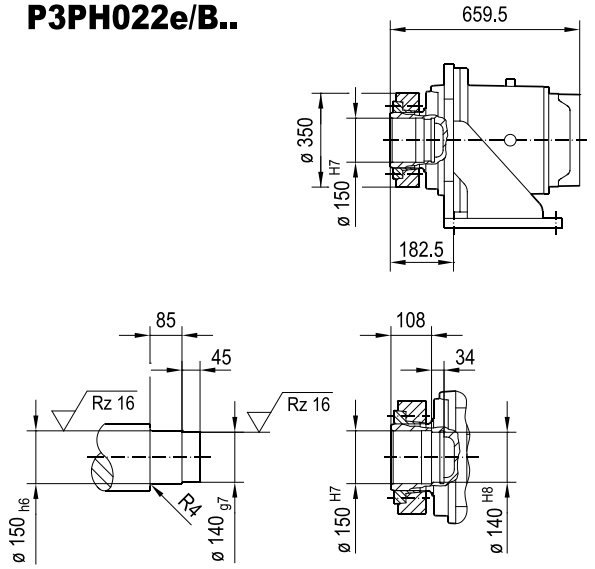

(→ 📖 -)	DRU							
	160..	180..	200L	225S	225ME	250M		
AC	314	357	394	434	434	495		
AD	253	268	283	305	305	394		
ADS	253	268	283	305	305	394		
L	1460	1483	1593	1567	1647	1704		
LS	1649	1672	1798	1772	1852	1944		
LB	516	539	649	623	703	760		
LBS	705	728	854	828	908	1000		

31991203/EN – 08/2025

P3PS022e/F DMF..

45 063 01 23

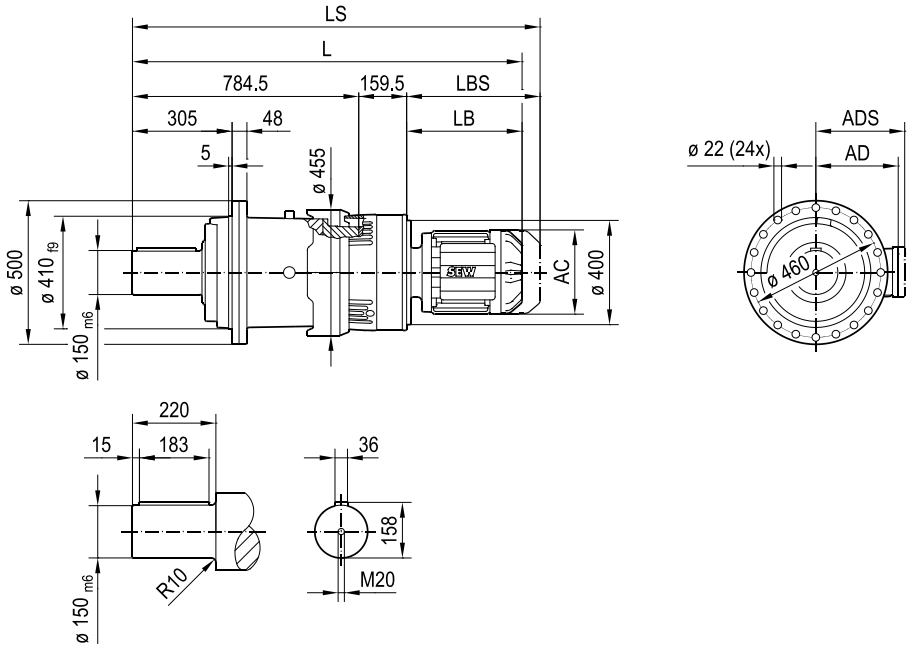

P3PH022e/F..

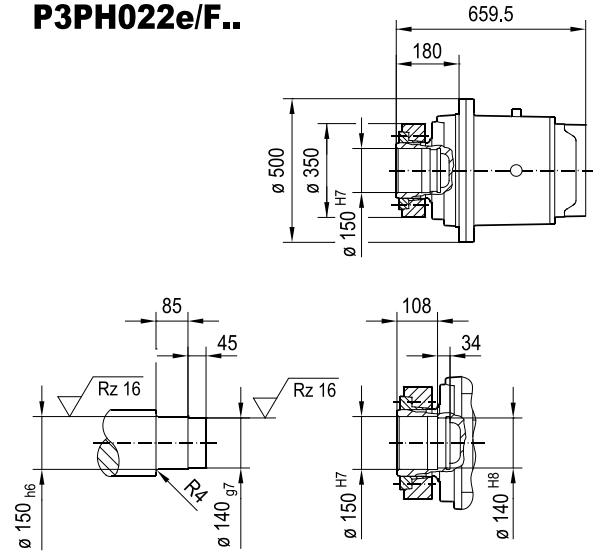

P3P.022e/T..

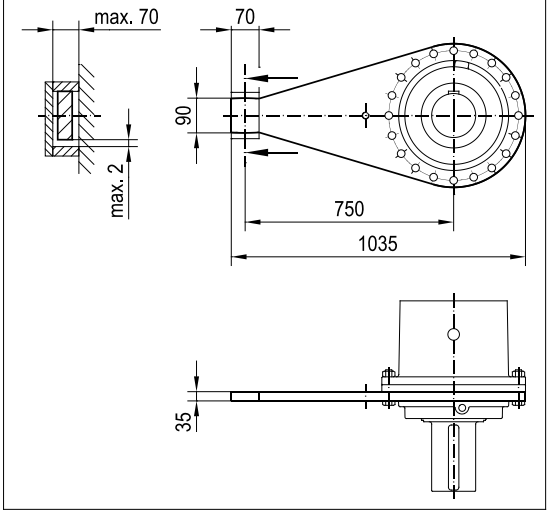

(→ 📖 -)	DRU							
	160..	180..	200L	225S	225ME	250M		
AC	314	357	394	434	434	495		
AD	253	268	283	305	305	394		
ADS	253	268	283	305	305	394		
L	1460	1483	1593	1567	1647	1704		
LS	1649	1672	1798	1772	1852	1944		
LB	516	539	649	623	703	760		
LBS	705	728	854	828	908	1000		

31991203/EN – 08/2025

P2PS032e/B DMF..

45 064 01 23

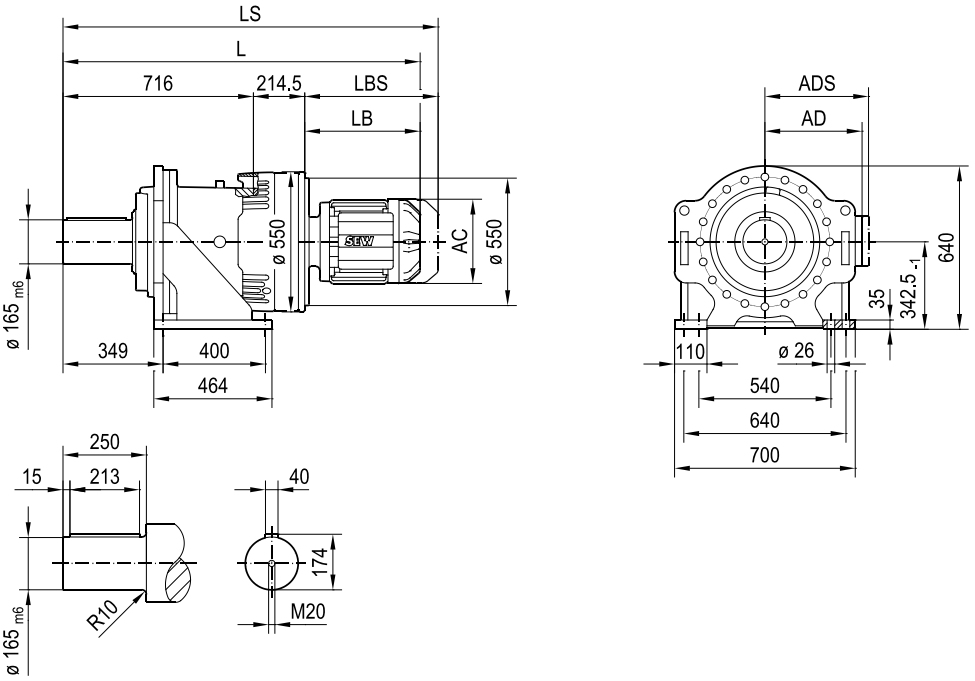

P2PH032e/B..

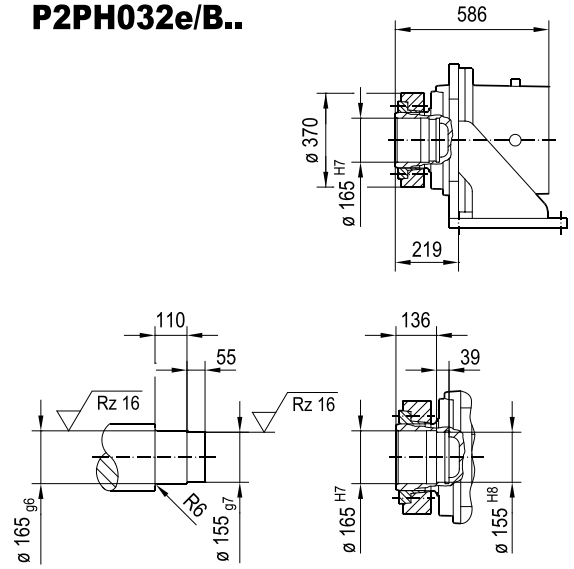

(→ 📖 -)	DRU							
	225S	225ME	250M	280M	315S-M	315ME-H		
AC	434	434	495	495	624	624		
AD	305	305	394	394	506	506		
ADS	305	305	394	394	506	506		
L	1538	1618	1675	1770	1872	2002		
LS	1743	1823	1915	2010	2123	2253		
LB	607	687	744	839	941	1071		
LBS	812	892	984	1079	1192	1322		

31991203/EN – 08/2025

P2PS032e/F DMF..

45 065 01 23

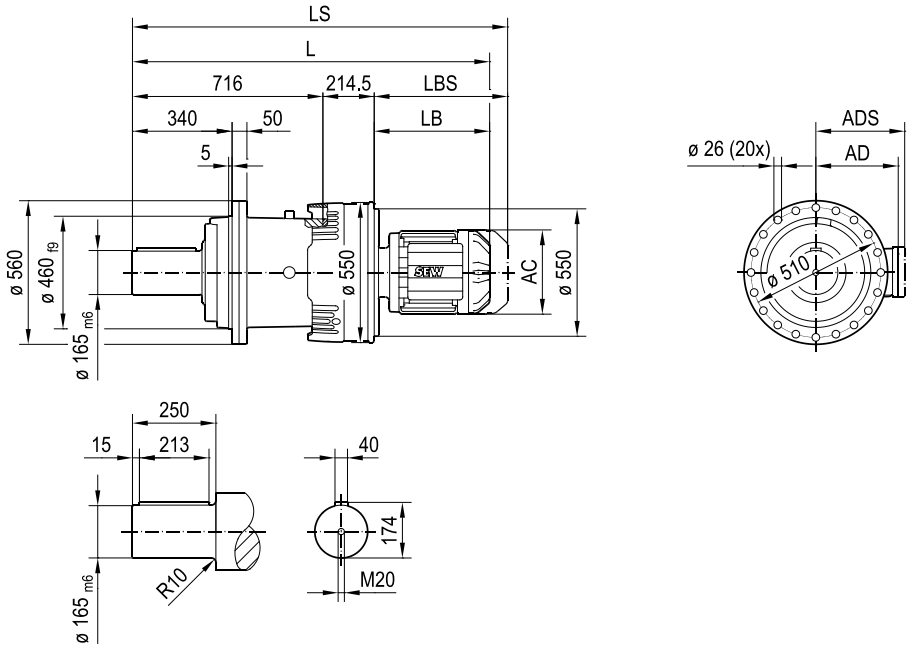

P2PH032e/F..

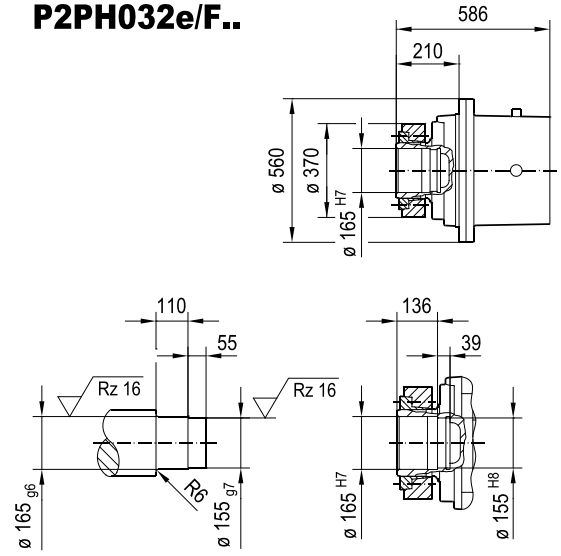

P2P.032e/T..

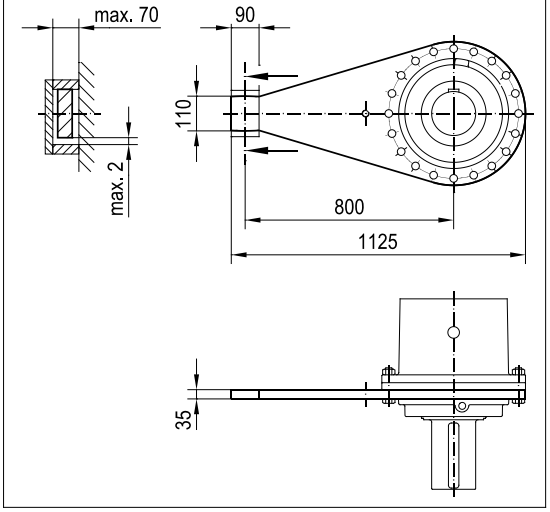

(→ 📖 -)	DRU							
	225S	225ME	250M	280M	315S-M	315ME-H		
AC	434	434	495	495	624	624		
AD	305	305	394	394	506	506		
ADS	305	305	394	394	506	506		
L	1538	1618	1675	1770	1872	2002		
LS	1743	1823	1915	2010	2123	2253		
LB	607	687	744	839	941	1071		
LBS	812	892	984	1079	1192	1322		

31991203/EN – 08/2025

P3PS032e/B DMF..

45 066 01 23

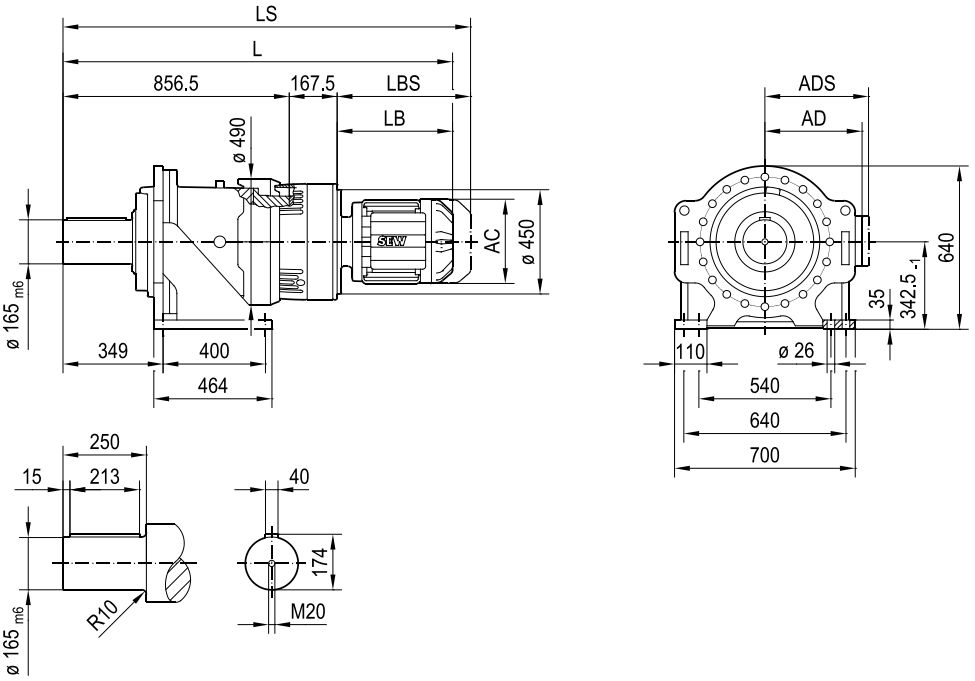

P3PH032e/B..

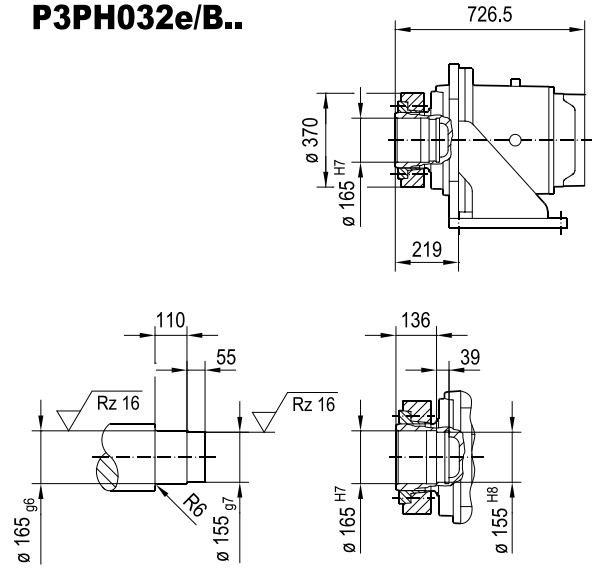

(→ 📖 -)	DRU							
	160..	180..	200L	225S	225ME	250M		
AC	314	357	394	434	434	495		
AD	253	268	283	305	305	394		
ADS	253	268	283	305	305	394		
L	1532	1555	1665	1639	1719	1776		
LS	1721	1744	1870	1844	1924	2016		
LB	508	531	641	615	695	752		
LBS	697	720	846	820	900	992		

31991203/EN – 08/2025

P3PS032e/F DMF..

45 067 01 23

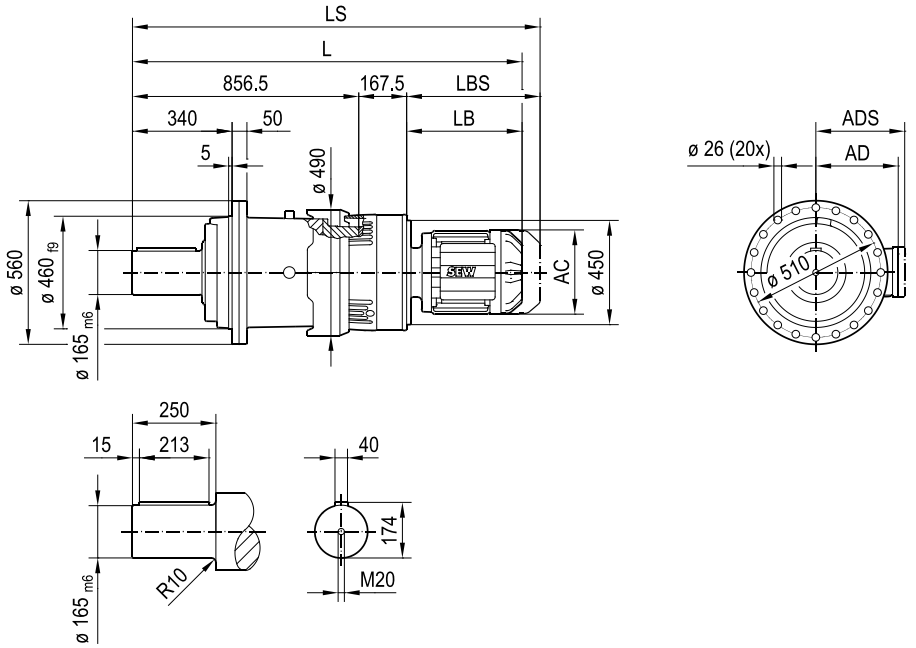

P3PH032e/F..

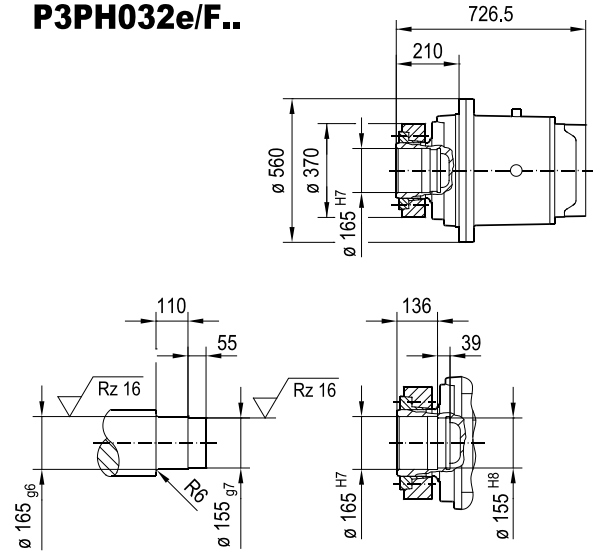

P3P.032e/T..

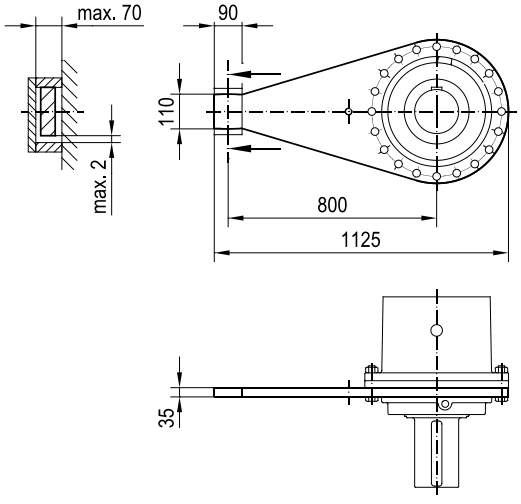

(→ 📖 -)	DRU							
	160..	180..	200L	225S	225ME	250M		
AC	314	357	394	434	434	495		
AD	253	268	283	305	305	394		
ADS	253	268	283	305	305	394		
L	1532	1555	1665	1639	1719	1776		
LS	1721	1744	1870	1844	1924	2016		
LB	508	531	641	615	695	752		
LBS	697	720	846	820	900	992		

31991203/EN – 08/2025

P2PS042e/B DMF..

45 068 01 23

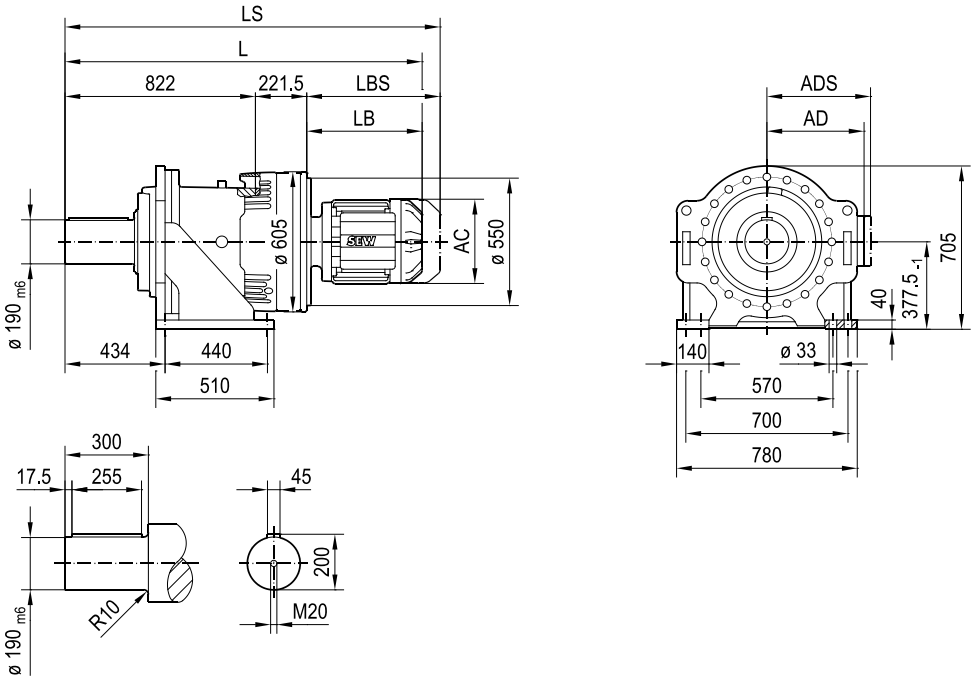

P2PH042e/B..

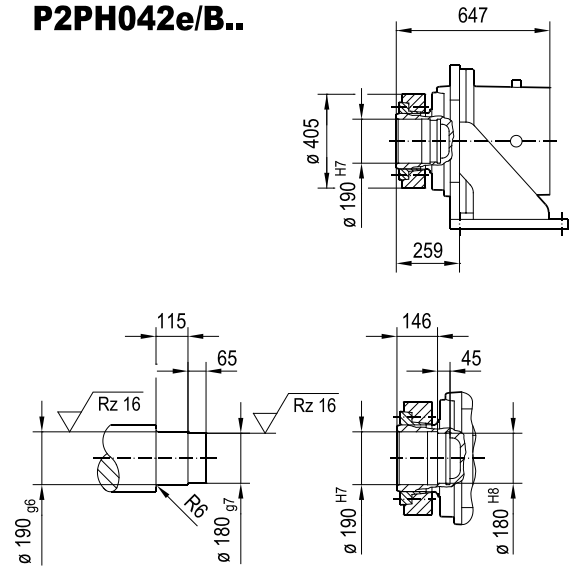

(→ 📖 -)	DRU							
	225S	225ME	250M	280M	315S-M	315ME-H		
AC	434	434	495	495	624	624		
AD	305	305	394	394	506	506		
ADS	305	305	394	394	506	506		
L	1651	1731	1788	1883	1985	2115		
LS	1856	1936	2028	2123	2236	2366		
LB	607	687	744	839	941	1071		
LBS	812	892	984	1079	1192	1322		

31991203/EN – 08/2025

P2PS042e/F DMF..

45 069 01 23

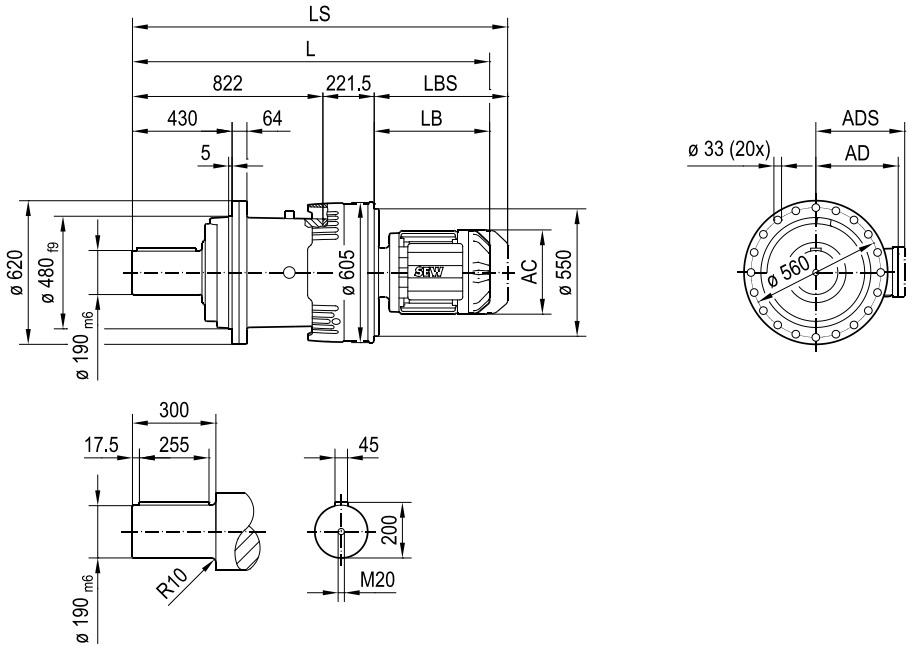

P2PH042e/F..

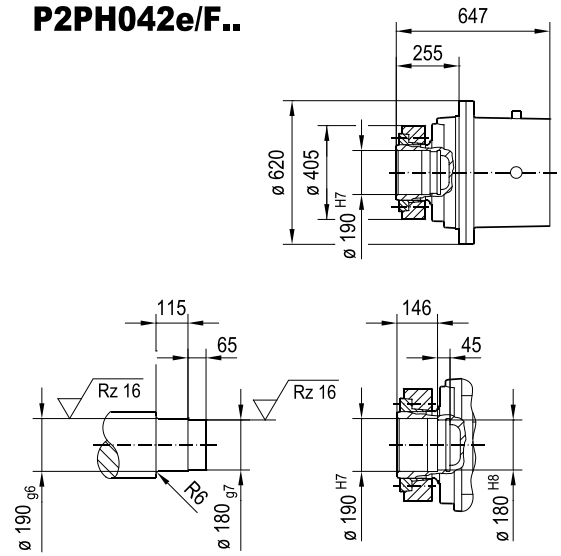

P2P.042e/T..

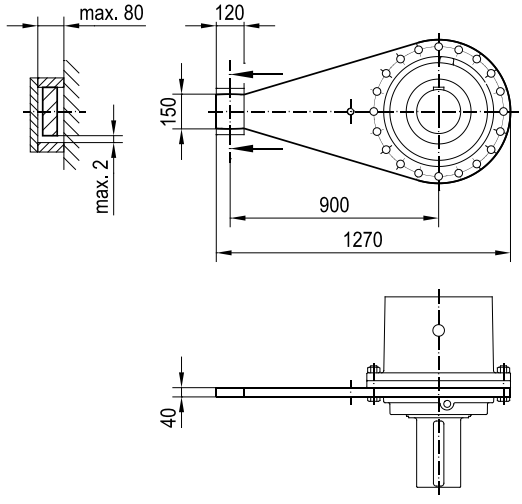

(→ 📖 -)	DRU							
	225S	225ME	250M	280M	315S-M	315ME-H		
AC	434	434	495	495	624	624		
AD	305	305	394	394	506	506		
ADS	305	305	394	394	506	506		
L	1651	1731	1788	1883	1985	2115		
LS	1856	1936	2028	2123	2236	2366		
LB	607	687	744	839	941	1071		
LBS	812	892	984	1079	1192	1322		

31991203/EN – 08/2025

P3PS042e/B DMF..

45 070 01 23

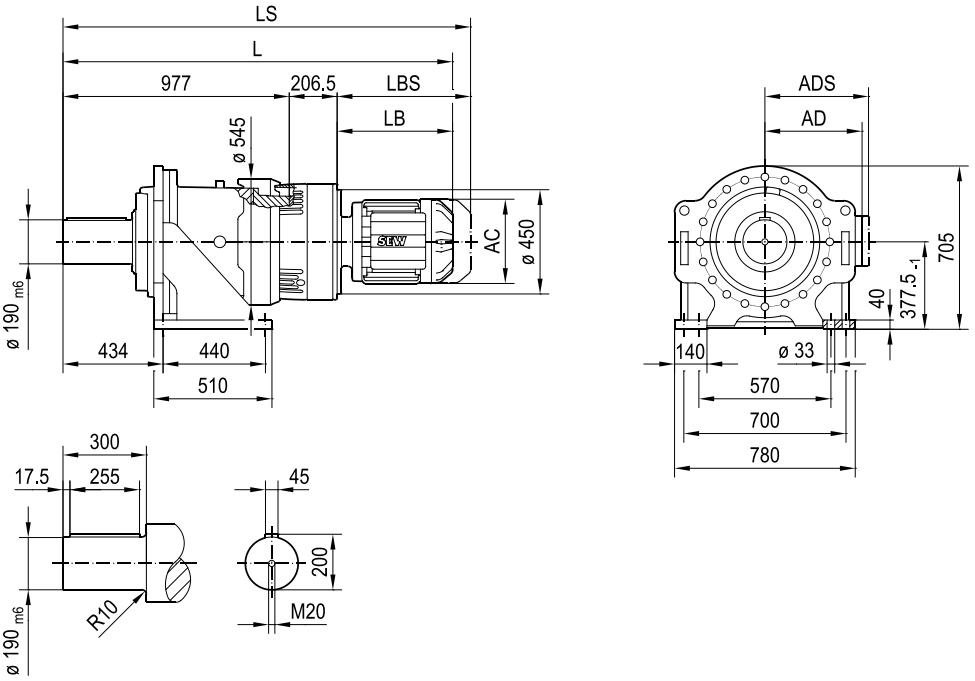

P3PH042e/B..

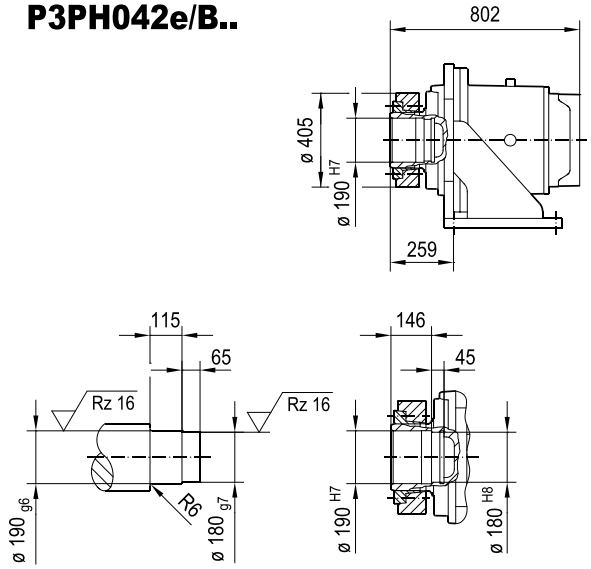

(→ 📖 -)	DRU							
	180..	200L	225S	225ME	250M	280M		
AC	357	394	434	434	495	495		
AD	268	283	305	305	394	394		
ADS	268	283	305	305	394	394		
L	1715	1824	1799	1879	1936	2031		
LS	1904	2029	2004	2084	2176	2271		
LB	531	641	615	695	752	847		
LBS	720	846	820	900	992	1087		

31991203/EN – 08/2025

P3PS042e/F DMF..

45 071 01 23

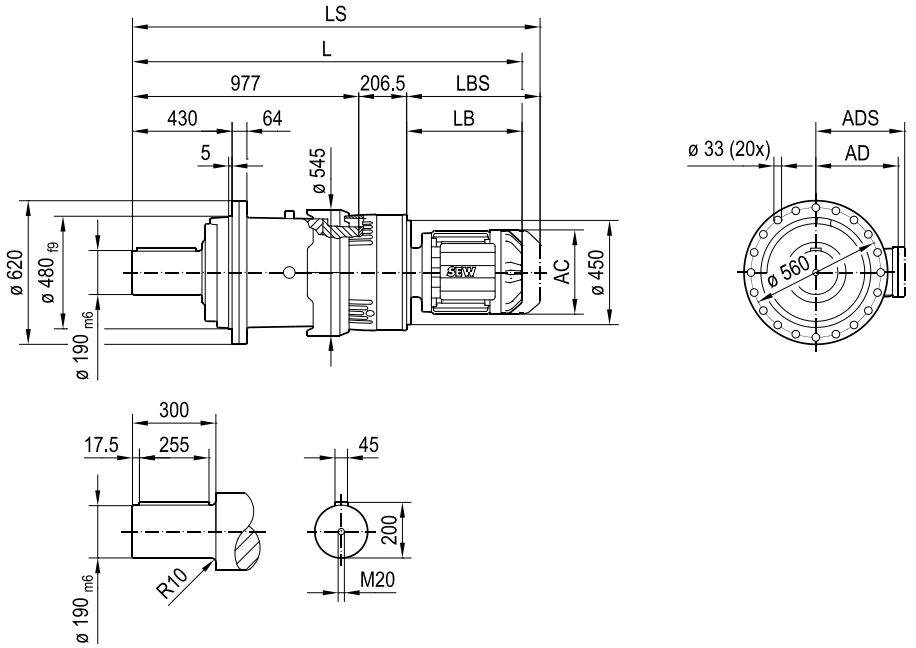

P3PH042e/F..

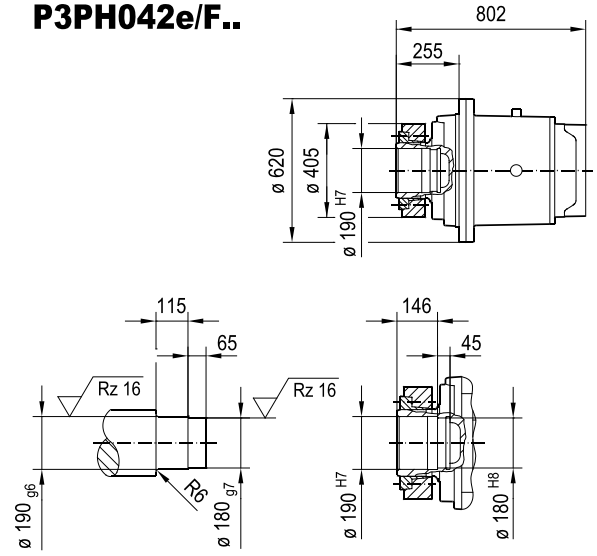

P3P.042e/T..

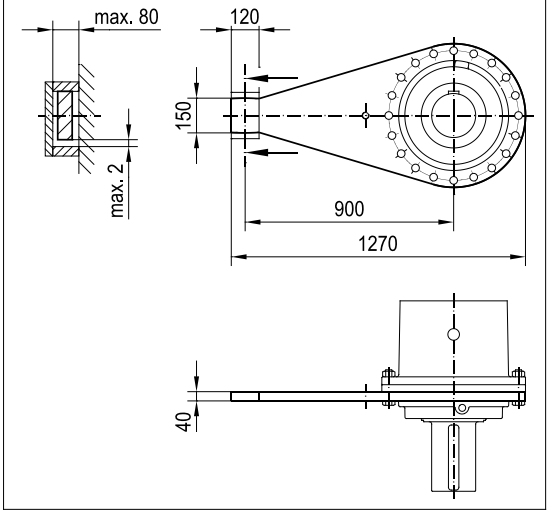

(→ 📖 -)	DRU							
	180..	200L	225S	225ME	250M	280M		
AC	357	394	434	434	495	495		
AD	268	283	305	305	394	394		
ADS	268	283	305	305	394	394		
L	1715	1824	1799	1879	1936	2031		
LS	1904	2029	2004	2084	2176	2271		
LB	531	641	615	695	752	847		
LBS	720	846	820	900	992	1087		

31991203/EN – 08/2025

P2PS052e/B DMF..

45 072 01 23

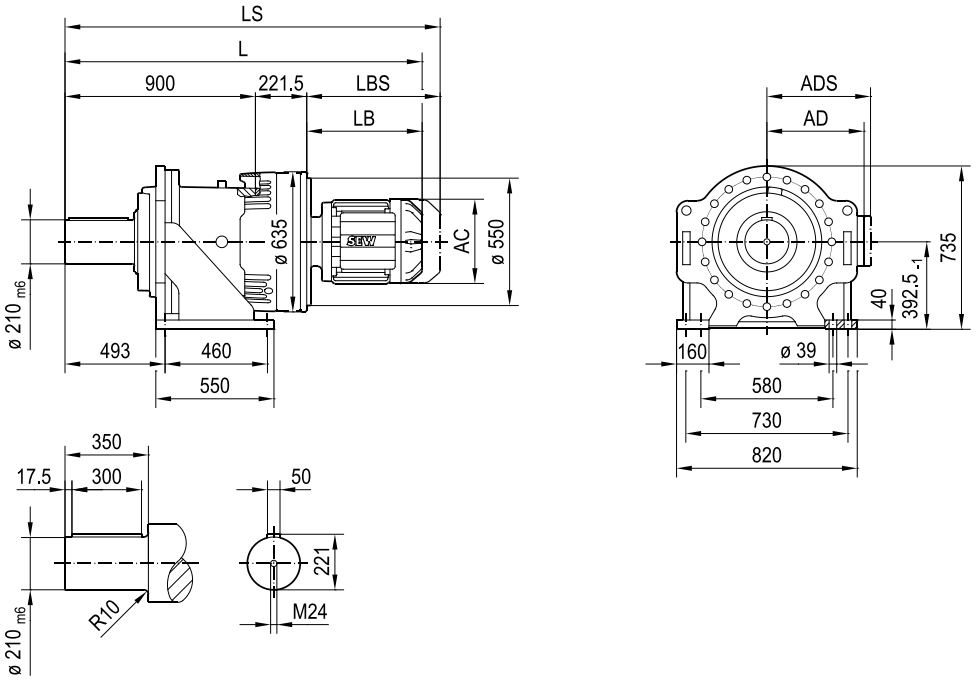

P2PH052e/B..

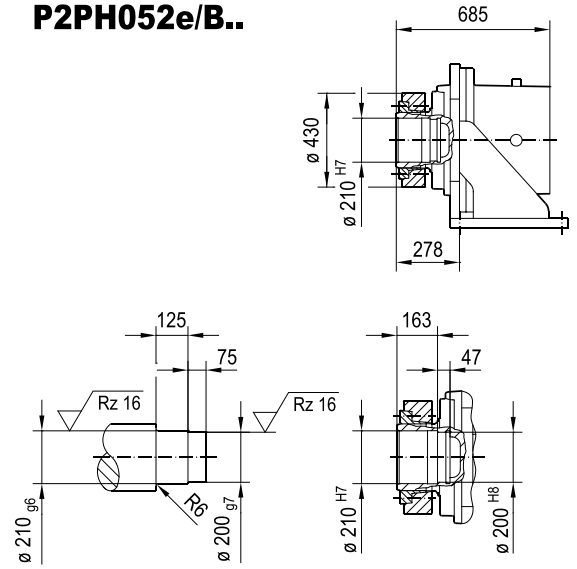

(→ 📖 -)	DRU							
	225S	225ME	250M	280M	315S-M	315ME-H		
AC	434	434	495	495	624	624		
AD	305	305	394	394	506	506		
ADS	305	305	394	394	506	506		
L	1729	1809	1866	1961	2063	2193		
LS	1934	2014	2106	2201	2314	2444		
LB	607	687	744	839	941	1071		
LBS	812	892	984	1079	1192	1322		

31991203/EN – 08/2025

P2PS052e/F DMF..

45 073 01 23

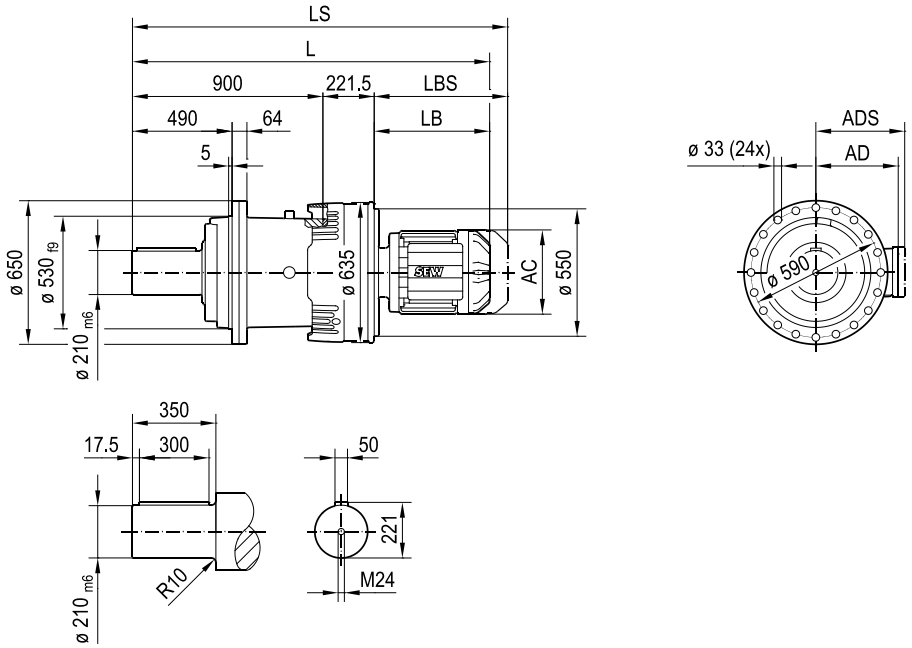

P2PH052e/F..

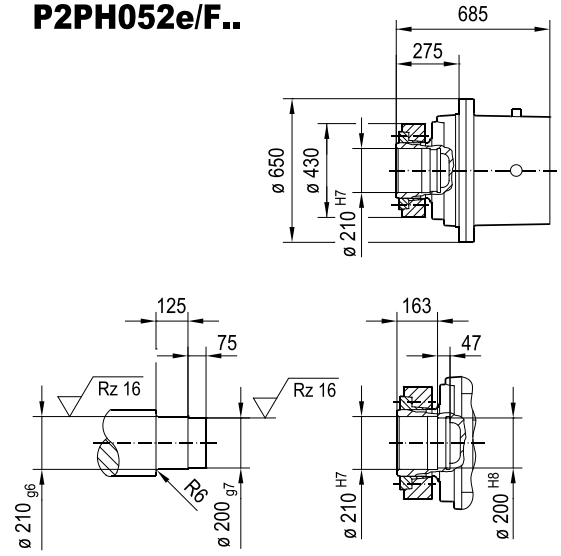

P2P.052e/T..

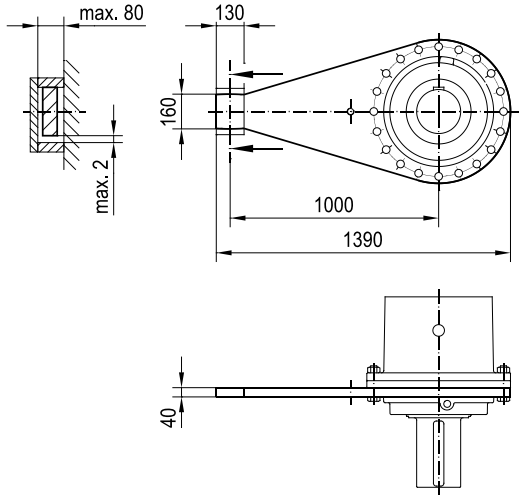

(→ 📖 -)	DRU							
	225S	225ME	250M	280M	315S-M	315ME-H		
AC	434	434	495	495	624	624		
AD	305	305	394	394	506	506		
ADS	305	305	394	394	506	506		
L	1729	1809	1866	1961	2063	2193		
LS	1934	2014	2106	2201	2314	2444		
LB	607	687	744	839	941	1071		
LBS	812	892	984	1079	1192	1322		

31991203/EN – 08/2025

P3PS052e/B DMF..

45 074 01 23

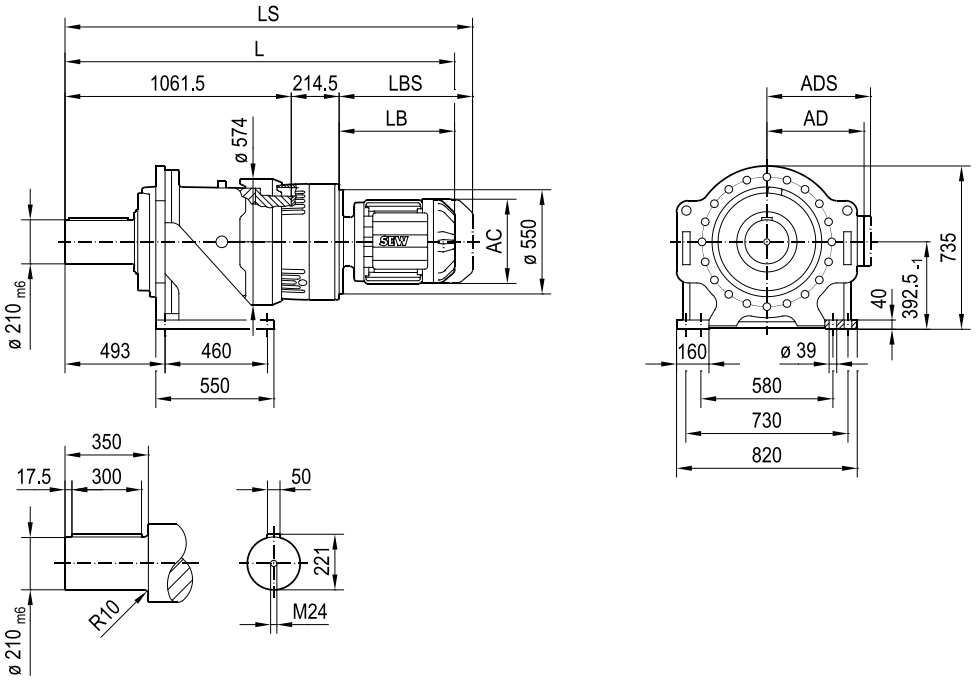

P3PH052e/B..

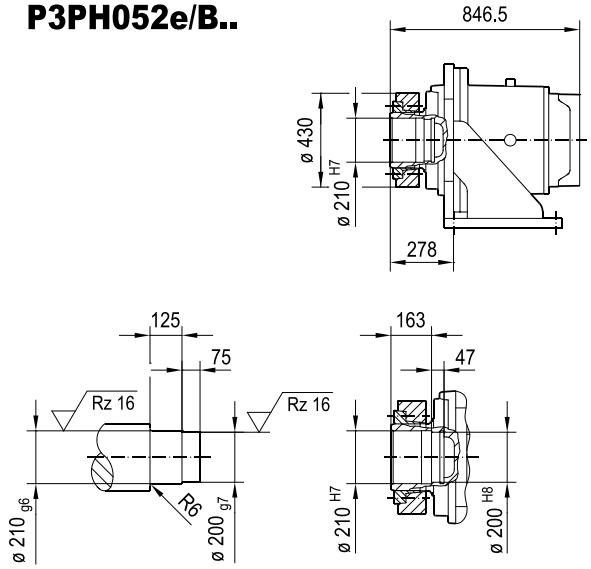

(→ 📖 -)	DRU							
	200L	225S	225ME	250M	280M	315S-M	315ME-H	
AC	394	434	434	495	495	624	624	
AD	283	305	305	394	394	506	506	
ADS	283	305	305	394	394	506	506	
L	1909	1883	1963	2020	2115	2217	2347	
LS	2114	2088	2168	2260	2355	2468	2598	
LB	633	607	687	744	839	941	1071	
LBS	838	812	892	984	1079	1192	1322	

31991203/EN – 08/2025

P3PS052e/F DMF..

45 075 01 23

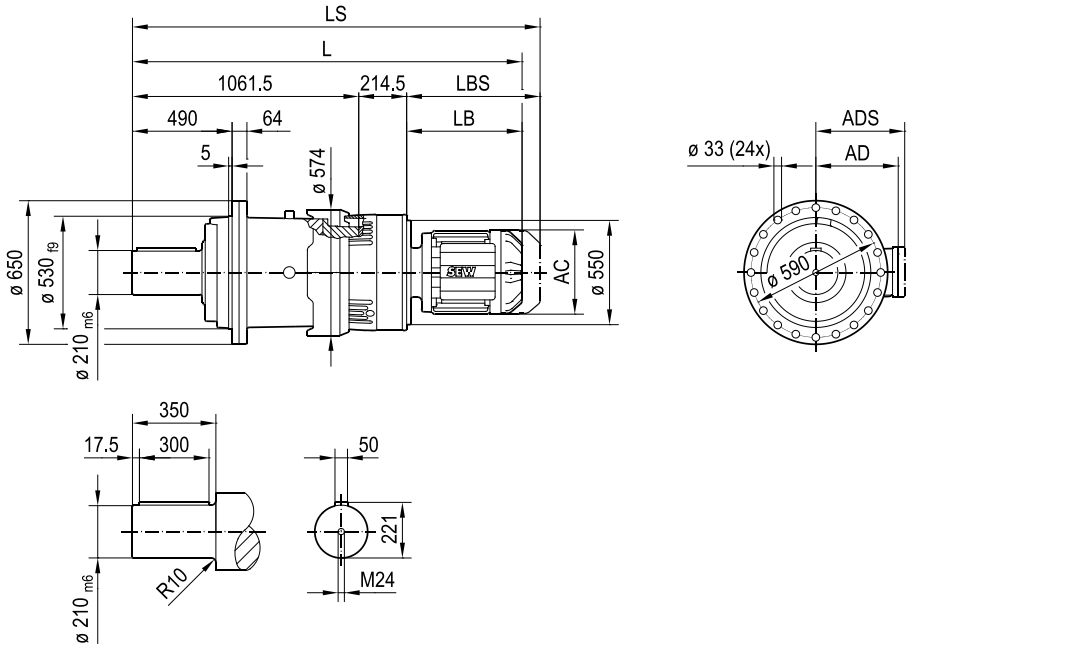

P3PH052e/F..

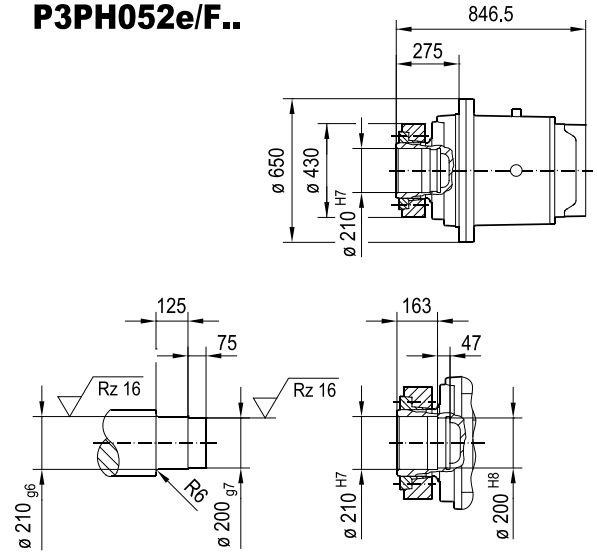

P3P.052e/T..

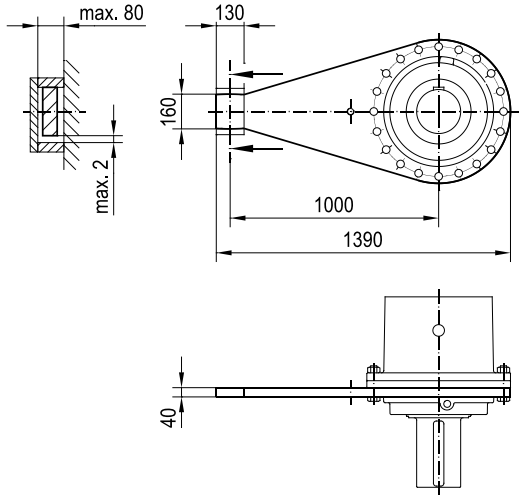

(→ 📖 -)	DRU							
	200L	225S	225ME	250M	280M	315S-M	315ME-H	
AC	394	434	434	495	495	624	624	
AD	283	305	305	394	394	506	506	
ADS	283	305	305	394	394	506	506	
L	1909	1883	1963	2020	2115	2217	2347	
LS	2114	2088	2168	2260	2355	2468	2598	
LB	633	607	687	744	839	941	1071	
LBS	838	812	892	984	1079	1192	1322	

31991203/EN – 08/2025

P3PS062e/B DMF..

45 051 01 25

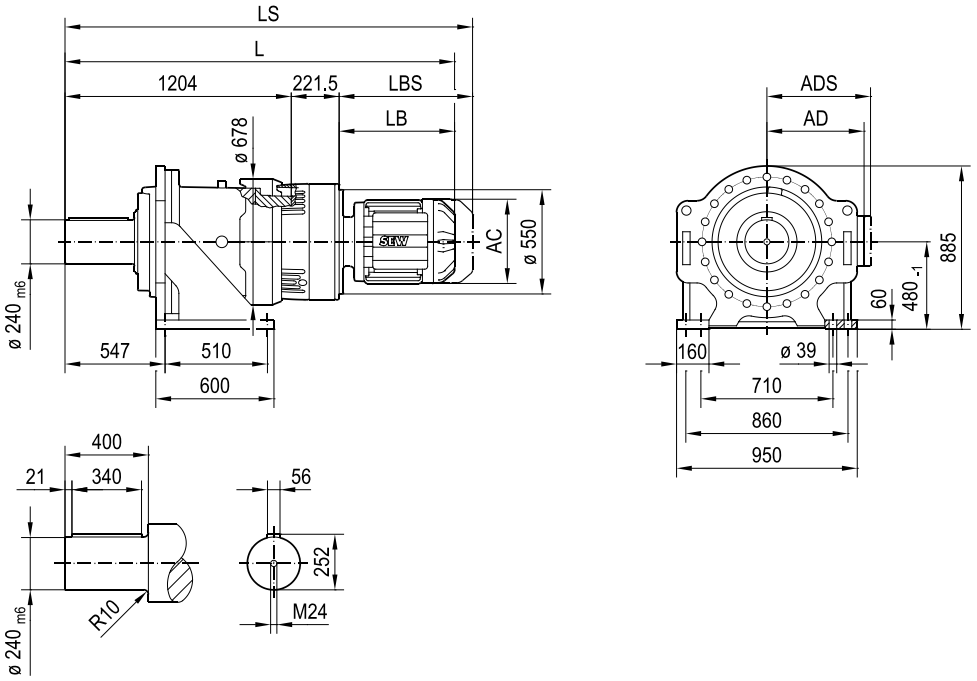

P3PH062e/B..

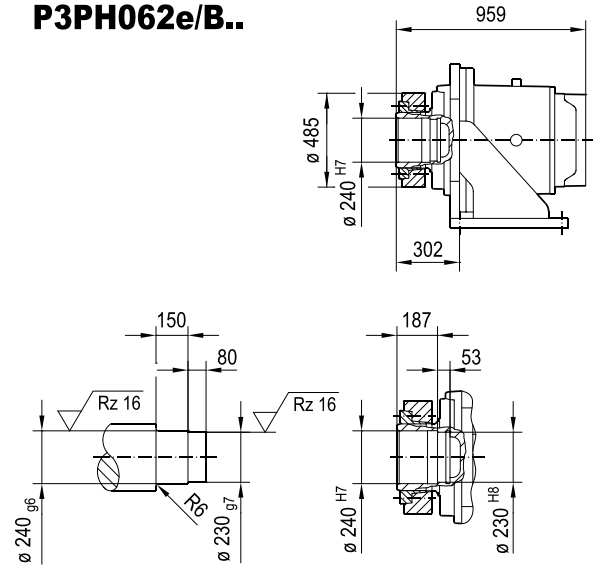

(→ 📖 -)	DRU							
	225S	225ME	250M	280M	315S-M	315ME-H		
AC	434	434	495	495	624	624		
AD	305	305	394	394	506	506		
ADS	305	305	394	394	506	506		
L	2033	2113	2170	2265	2367	2497		
LS	2238	2318	2410	2505	2618	2748		
LB	607	687	744	839	941	1071		
LBS	812	892	984	1079	1192	1322		

31991203/EN – 08/2025

P3PS062e/F DMF..

45 052 01 25

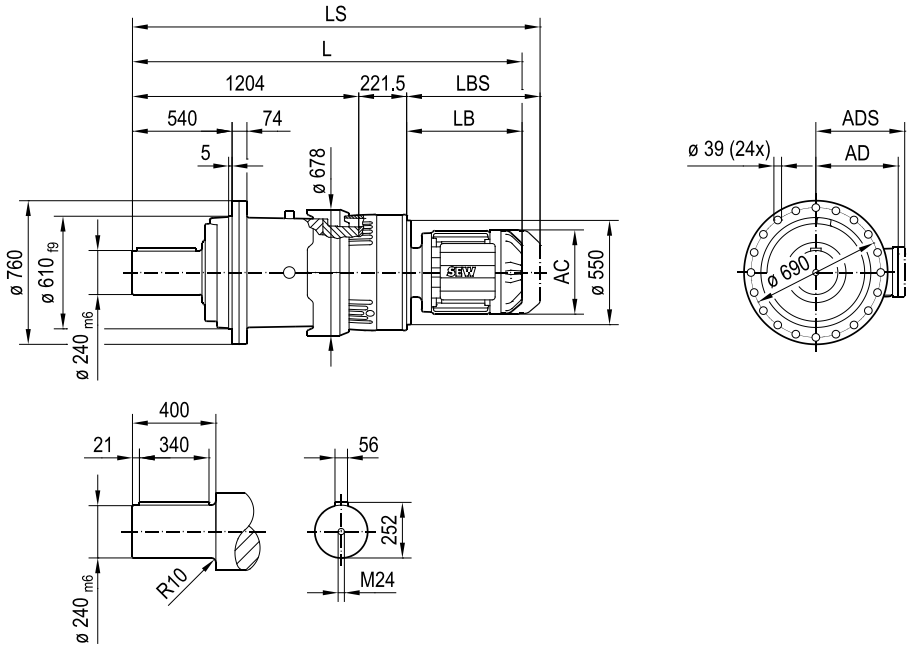

P3PH062e/F..

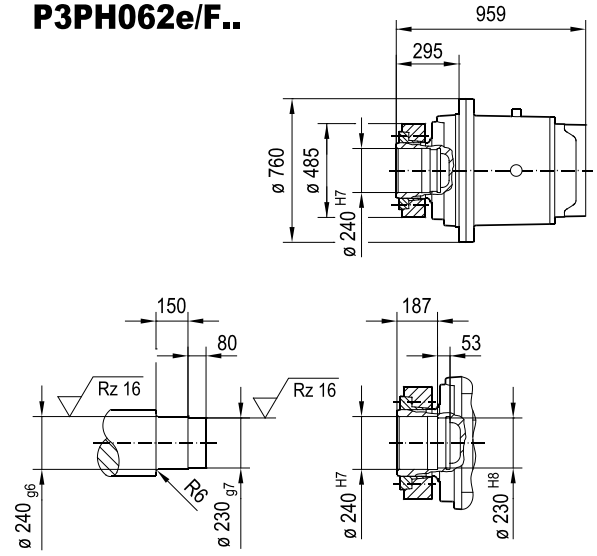

P3P.062e/T..

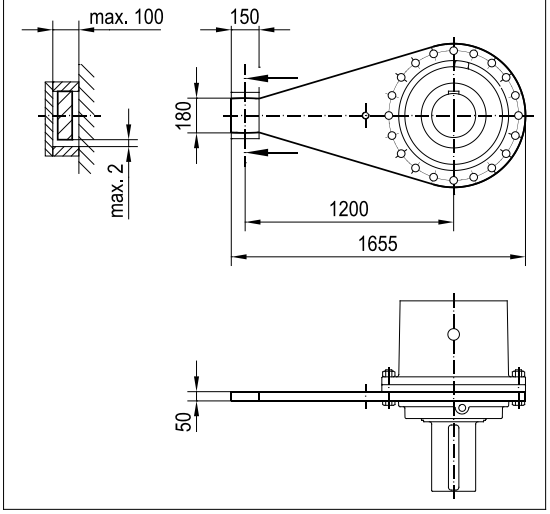

(→ 📖 -)	DRU							
	225S	225ME	250M	280M	315S-M	315ME-H		
AC	434	434	495	495	624	624		
AD	305	305	394	394	506	506		
ADS	305	305	394	394	506	506		
L	2033	2113	2170	2265	2367	2497		
LS	2238	2318	2410	2505	2618	2748		
LB	607	687	744	839	941	1071		
LBS	812	892	984	1079	1192	1322		

31991203/EN – 08/2025

P3PS072e/B DMF..

45 053 01 25

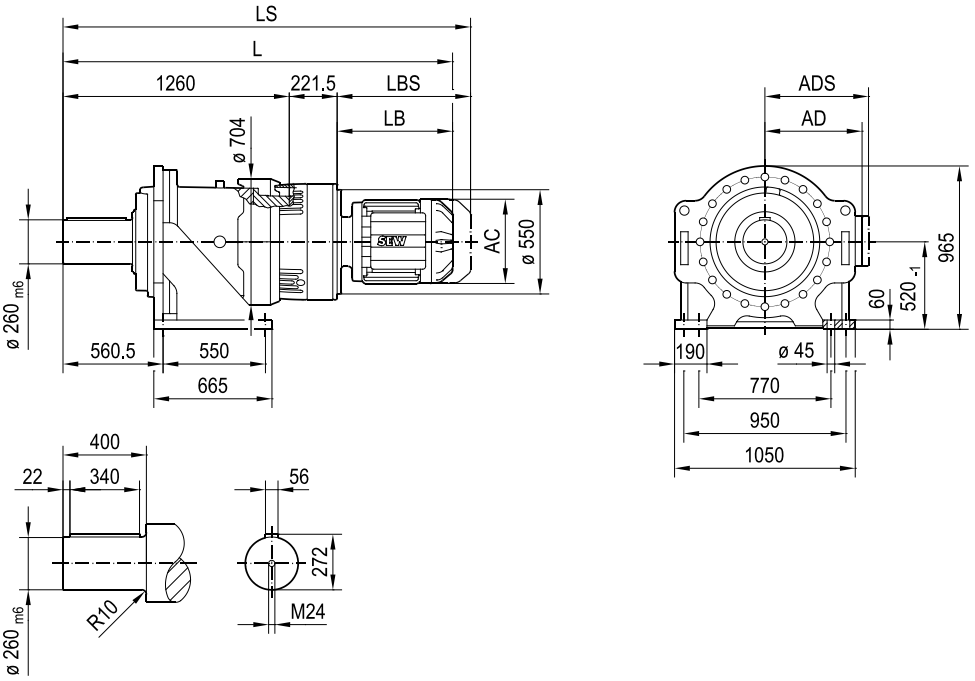

P3PH072e/B..

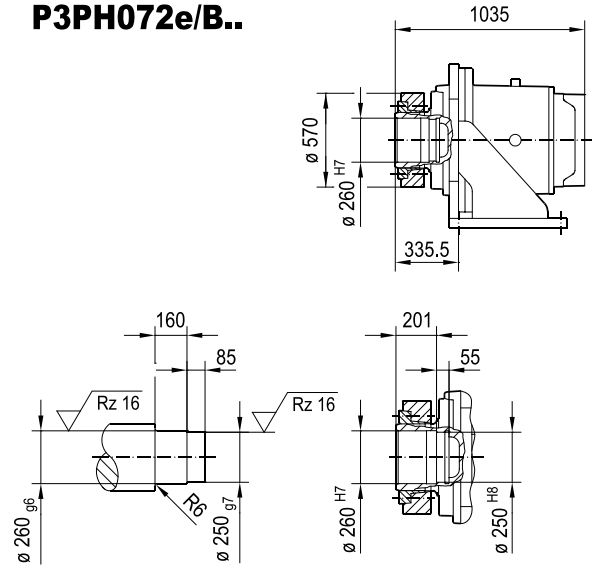

(→ 📖 -)	DRU							
	225ME	250M	280M	315S-M	315ME-H			
AC	434	495	495	624	624			
AD	305	394	394	506	506			
ADS	305	394	394	506	506			
L	2169	2226	2321	2423	2553			
LS	2374	2466	2561	2674	2804			
LB	687	744	839	941	1071			
LBS	892	984	1079	1192	1322			

31991203/EN – 08/2025

P3PS072e/F DMF..

45 054 01 25

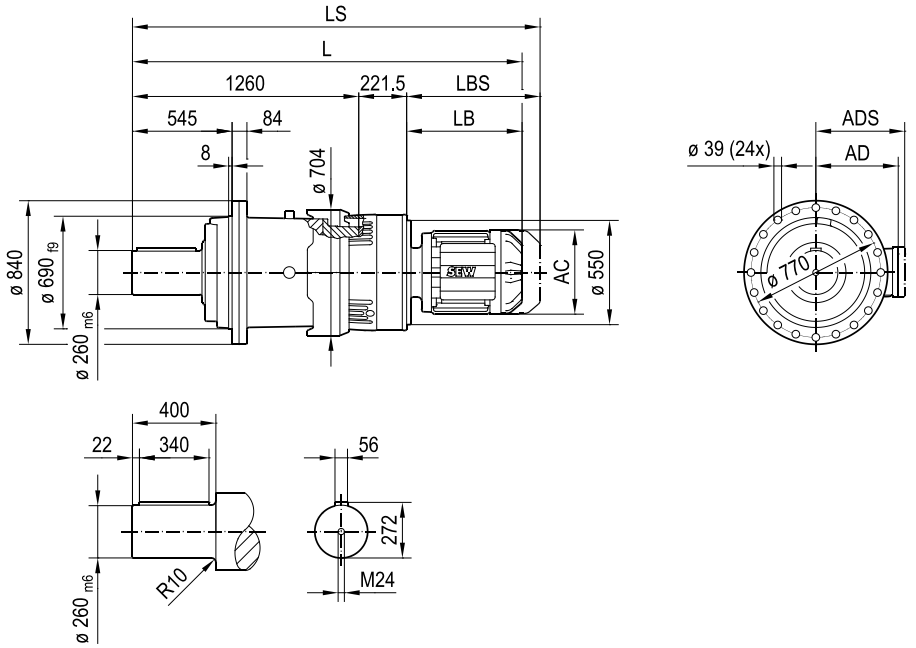

P3PH072e/F..

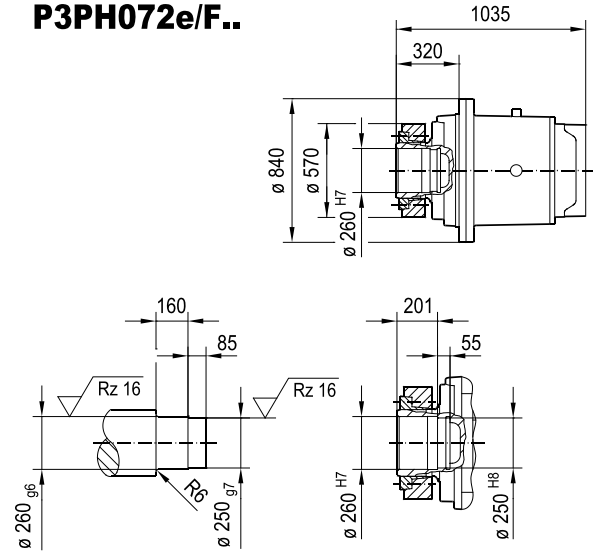

P3P.072e/T..

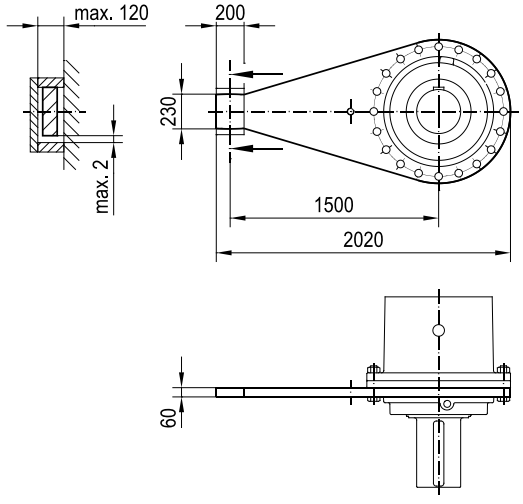

(→ 📖 -)	DRU							
	225ME	250M	280M	315S-M	315ME-H			
AC	434	495	495	624	624			
AD	305	394	394	506	506			
ADS	305	394	394	506	506			
L	2169	2226	2321	2423	2553			
LS	2374	2466	2561	2674	2804			
LB	687	744	839	941	1071			
LBS	892	984	1079	1192	1322			

31991203/EN – 08/2025

11.5 Input shaft assembly /ADP

45 010 01 21

P2P.. ADP

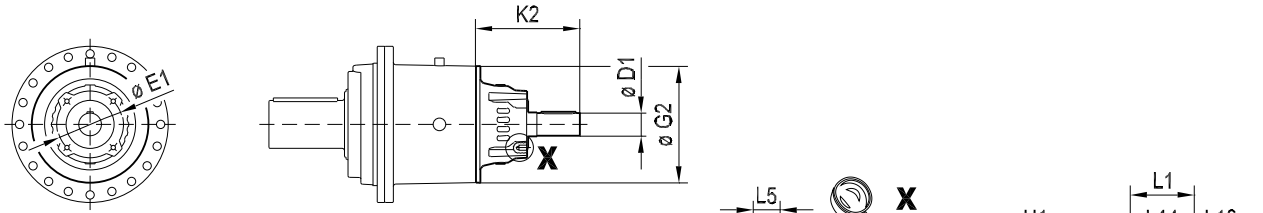

P3P.. ADP

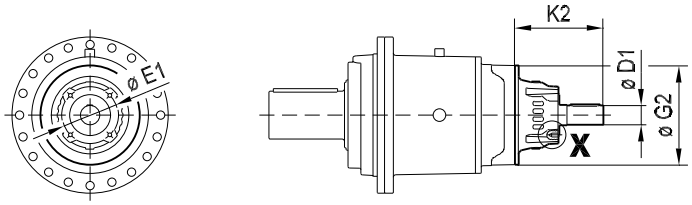

Type	G2	K2	E1	S2	L5	D1	L1	L13	L14	T1	U1	DIN 332 DR..
P2P.002e	293	277	195	M12	20	60_{m6}	105	7.5	90	64	18	M8
P3P.002e	293	253.5	195	M12	20	48_{k6}	82	6	70	51.5	14	M8
P2P.012e	344	343.5	225	M16	26	80_{m6}	130	10	110	85	22	M10
P3P.012e	293	253.5	195	M12	20	48_{k6}	82	6	70	51.5	14	M8
P2P.022e	394	343.5	225	M16	26	80_{m6}	130	10	110	85	22	M10
P3P.022e	293	277	195	M12	20	60_{m6}	105	7.5	90	64	18	M8
P2P.032e	414	412.5	260	M16	26	90_{m6}	170	15	140	95	25	M12
P3P.032e	344	343.5	225	M16	26	80_{m6}	130	10	110	85	22	M10
P2P.042e	463	412.5	260	M20	30	90_{m6}	170	15	140	95	25	M12
P3P.042e	394	343.5	225	M16	26	80_{m6}	130	10	110	85	22	M10
P2P.052e	493	513.5	351	M20	30	110_{m6}	210	25	160	116	28	M12
P3P.052e	414	412.5	260	M16	26	90_{m6}	170	15	140	95	25	M12
P2P.062e	584	513.5	351	M20	30	110_{m6}	210	25	160	116	28	M16
P3P.062e	463	412.5	260	M20	30	90_{m6}	170	15	140	95	25	M12
P2P.072e	614	566.5	410	M24	36	110_{m6}	210	25	160	116	28	M16
P3P.072e	493	513.5	351	M20	30	110_{m6}	210	15	160	116	28	M12
P2P.082e	705.5	566.5	410	M24	36	110_{m6}	210	25	160	116	28	M16
P3P.082e	584	513.5	351	M20	30	110_{m6}	210	15	160	116	28	M16

31991203/EN – 08/2025

11.6 Input shaft assembly /ADPF

45 028 01 25

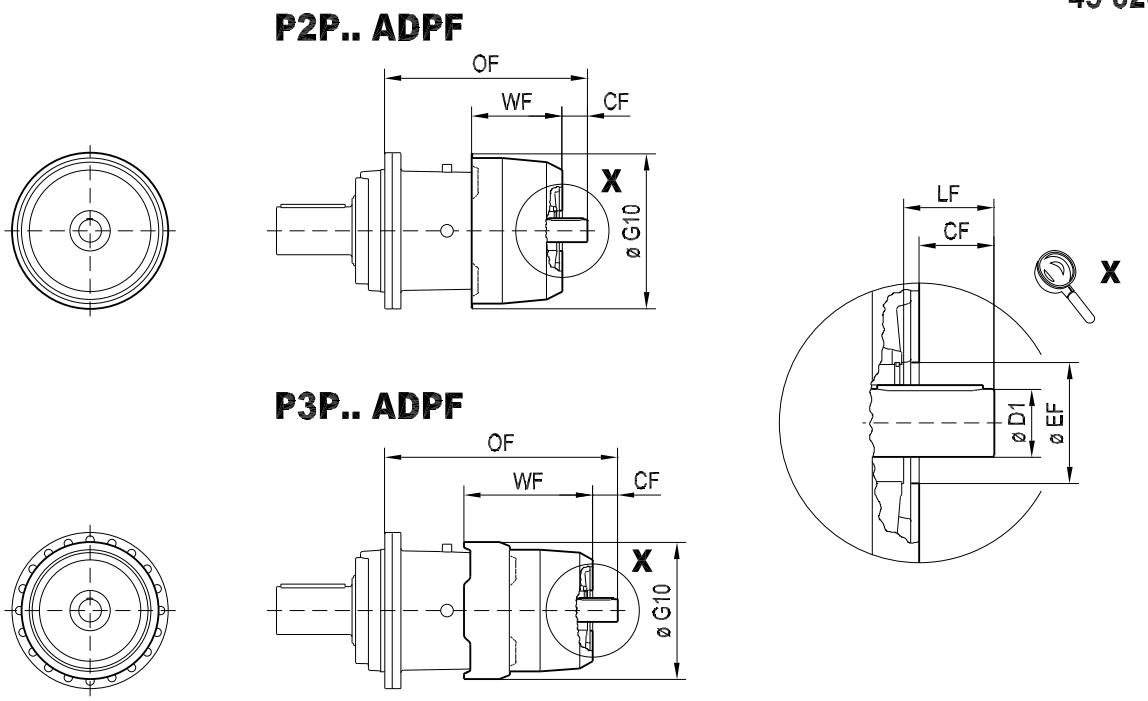

Type	CF	D1	EF	G10	LF	OF	WF
P2P.002e	54.5	60	120	400	70	555	269
P3P.002e	32	48	105	384	52	634.5	379
P2P.012e	75.5	80	140	454	90	652.5	316
P3P.012e	32	48	105	414	52	665.5	384
P2P.022e	65	80	140	510	85	688.5	331
P3P.022e	54.5	60	120	455	70	756.5	419
P2P.032e	105	90	160	570	120	788.5	355
P3P.032e	75.5	80	140	490	90	860	471
P2P.042e	99.5	90	180	615	120	804.5	360
P3P.042e	65	80	140	544	85	890.5	511
P2P.052e	143.3	110	180	646.5	160	923.5	422
P3P.052e	105	90	160	574	120	984	532
P3P.062e	99.5	90	160	677.5	120	1076.5	600
P3P.072e	143.3	110	180	703.5	160	1228.5	662
P3P.082e	133	110	200	824	155	1293.5	644

31991203/EN – 08/2025

11.7 Motor adapter /AMP for mounting IEC motors

45 011 01 21

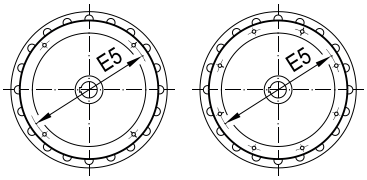

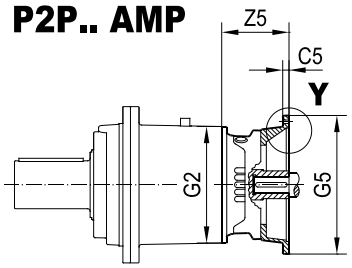

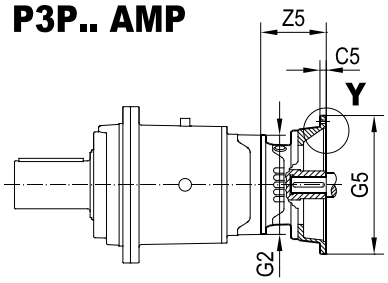

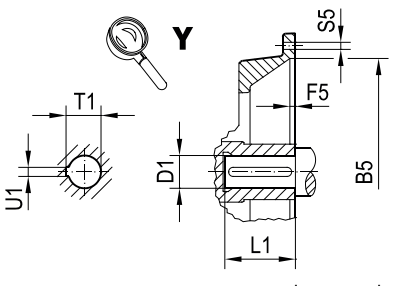

Type	Mounted component	AMP											
		B5	C5	E5	F5	G2	G5	S5	Z5	D1	L1	T1	U1
P2P.002e	IEC160	250	16	300	6	293	350	M16	178.5	42	110	45.3	12
	IEC180	250	16	300	6	293	350	M16	178.5	48	110	51.8	14
	IEC200	300	20	350	7	293	400	M16	190.5	55	110	59.3	16
	IEC225	350	20	400	7	293	450	M16	220.5	60	140	64.4	18
	IEC250	450	25	500	7	293	550	M16	250.5	65	140	69.4	18
P3P.002e	IEC132	230	16	265	5	293	300	M12	150.5	38	80	41.3	10
	IEC160	250	16	300	6	293	350	M16	178.5	42	110	45.3	12
	IEC180	250	16	300	6	293	350	M16	178.5	48	110	51.8	14
	IEC200	300	20	350	7	293	400	M16	190.5	55	110	59.3	16
	IEC225	350	20	400	7	293	450	M16	220.5	60	140	64.4	18
P2P.012e	IEC160	250	16	300	6	344	350	M16	178.5	42	110	45.3	12
	IEC180	250	16	300	6	344	350	M16	178.5	48	110	51.8	14
	IEC200	300	20	350	7	344	400	M16	190.5	55	110	59.3	16
	IEC225	350	20	400	7	344	450	M16	220.5	60	140	64.4	18
	IEC250	450	25	500	7	344	550	M16	250.5	65	140	69.4	18
P3P.012e	IEC132	230	16	265	5	293	300	M12	150.5	38	80	41.3	10
	IEC160	250	16	300	6	293	350	M16	178.5	42	110	45.3	12
	IEC180	250	16	300	6	293	350	M16	178.5	48	110	51.8	14
	IEC200	300	20	350	7	293	400	M16	190.5	55	110	59.3	16
	IEC225	350	20	400	7	293	450	M16	220.5	60	140	64.4	18
P2P.022e	IEC180	250	22	300	5	394	350	M16	193	48	110	51.8	14
	IEC200	300	20	350	6	394	400	M16	220	55	110	59.3	16
	IEC225	350	20	400	6	394	450	M16	250	60	140	64.4	18
	IEC250	450	25	500	7	394	550	M16	260	65	140	69.4	18
	IEC280	450	25	500	7	394	550	M16	260	75	140	79.9	20
P3P.022e	IEC132	230	16	265	5	293	300	M12	150.5	38	80	41.3	10
	IEC160	250	16	300	6	293	350	M16	178.5	42	110	45.3	12
	IEC180	250	16	300	6	293	350	M16	178.5	48	110	51.8	14
	IEC200	300	20	350	7	293	400	M16	190.5	55	110	59.3	16
	IEC225	350	20	400	7	293	450	M16	220.5	60	140	64.4	18
	IEC250	450	25	500	7	293	550	M16	250.5	65	140	69.4	18

31991203/EN – 08/2025

Type	Mounted component	AMP											
		B5	C5	E5	F5	G2	G5	S5	Z5	D1	L1	T1	U1
P2P.032e	IEC180	250	22	300	5	414	350	M16	193	48	110	51.8	14
	IEC200	300	20	350	6	414	400	M16	220	55	110	59.3	16
	IEC225	350	20	400	6	414	450	M16	250	60	140	64.4	18
	IEC250	450	25	500	7	414	550	M16	260	65	140	69.4	18
	IEC280	450	25	500	7	414	550	M16	260	75	140	79.9	20
	IEC315S-L	550	25	600	7	414	660	M20	299	80	170	85.4	22
P3P.032e	IEC160	250	16	300	6	344	350	M16	178.5	42	110	45.3	12
	IEC180	250	16	300	6	344	350	M16	178.5	48	110	51.8	14
	IEC200	300	20	350	7	344	400	M16	190.5	55	110	59.3	16
	IEC225	350	20	400	7	344	450	M16	220.5	60	140	64.4	18
	IEC250	450	25	500	7	344	550	M16	250.5	65	140	69.4	18
P2P.042e	IEC200	300	20	350	6	463	400	M16	227	55	110	59.3	16
	IEC225	350	20	400	6	463	450	M16	257	60	140	64.4	18
	IEC250	450	25	500	7	463	550	M16	267	65	140	69.4	18
	IEC280	450	25	500	7	463	550	M16	267	75	140	79.9	20
	IEC315	550	25	600	7	463	660	M20	306	80	170	85.4	22
P3P.042e	IEC180	250	16	300	6	394	350	M16	193	48	110	51.8	14
	IEC200	300	20	350	6	394	400	M16	220	55	110	59.3	16
	IEC225	350	20	400	6	394	450	M16	250	60	140	64.4	18
	IEC250	450	25	500	7	394	550	M16	260	65	140	69.4	18
	IEC280	450	25	500	7	394	550	M16	260	75	140	79.9	20
P2P.052e	IEC200	300	20	350	6	493	400	M16	227	55	110	59.3	16
	IEC225	350	20	400	6	493	450	M16	257	60	140	64.4	18
	IEC250	450	25	500	7	493	550	M16	267	65	140	69.4	18
	IEC280	450	25	500	7	493	550	M16	267	75	140	79.9	20
	IEC315S-L	550	25	600	7	493	660	M20	306	80	170	85.4	22
P3P.052e	IEC180	250	22	300	5	414	350	M16	193	48	110	51.8	14
	IEC200	300	20	350	6	414	400	M16	220	55	110	59.3	16
	IEC225	350	20	400	6	414	450	M16	250	60	140	64.4	18
	IEC250	450	25	500	7	414	550	M16	260	65	140	69.4	18
	IEC280	450	25	500	7	414	550	M16	260	75	140	79.9	20
	IEC315S-L	550	25	600	7	414	660	M20	299	80	170	85.4	22
P2P.062e	IEC280	450	25	500	7	584	550	M16	304	75	140	79.9	20
	IEC315S-L	550	25	600	7	584	660	M20	343	80	170	85.4	22
	IEC355	680	30	740	7	584	800	M20	419	100	210	59.3	28
P3P.062e	IEC200	300	20	350	6	463	400	M16	227	55	110	59.3	16
	IEC225	350	20	400	6	463	450	M16	257	60	140	64.4	18
	IEC250	450	25	500	7	463	550	M16	267	65	140	69.4	18
	IEC280	450	25	500	7	463	550	M16	267	75	140	79.9	20
	IEC315S-L	550	25	600	7	463	660	M20	306	80	170	85.4	22
P2P.072e	IEC315S--L	550	25	600	7	614	660	M20	343	80	170	85.4	22
	IEC355	680	30	740	7	614	800	M20	419	100	210	106.4	28
P3P.072e	IEC200	300	20	350	6	493	400	M16	227	55	110	59.3	16
	IEC225	350	20	400	6	493	450	M16	257	60	140	64.4	18
	IEC250	450	25	500	7	493	550	M16	267	65	140	69.4	18
	IEC280	450	25	500	7	493	550	M16	267	75	140	79.9	20
	IEC315S-L	550	25	600	7	493	660	M20	306	80	170	85.4	22
P2P.082e	IEC315S--L	550	25	600	7	702	660	M20	343	80	170	85.4	22
	IEC355	680	30	740	7	702	800	M20	419	100	210	106.4	28
P3P.082e	IEC280	450	25	500	7	584	550	M16	304	75	140	79.9	20
	IEC315S-L	550	25	600	7	584	660	M20	343	80	170	85.4	22
	IEC355	680	30	740	7	584	800	M20	419	100	210	59.3	28

31991203/EN – 08/2025

11.8 Motor adapter /AMP for mounting NEMA motors

45 212 01 23

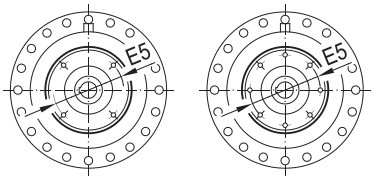

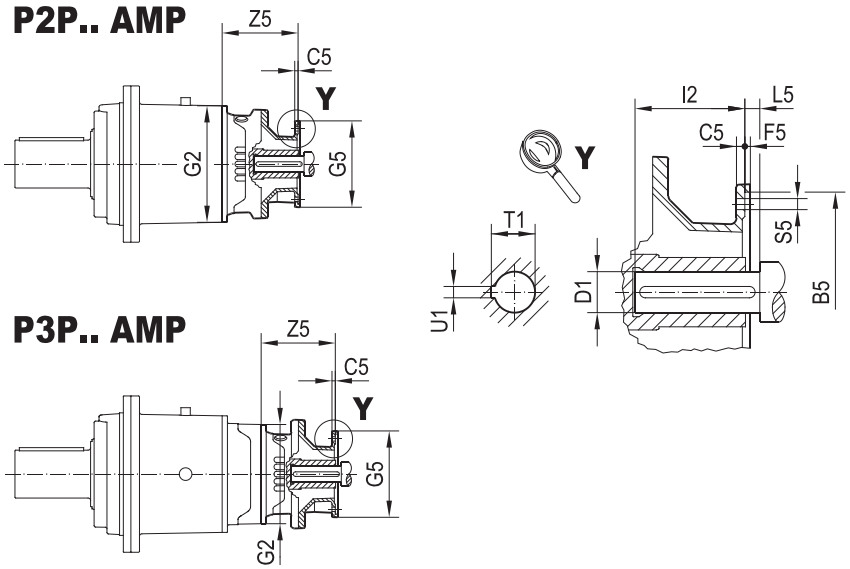

Type	Mounted component	AMP												
		B5	C5	E5	F5	G2	G5	S5	Z5	D1	I2	L5	T1	U1
P2P.002e	NEMA254-256	8 ½	0.55	7 ¼	0.2	11.54	9	0.59 (4x)	6.56	1 ⅝	3 ¾	¼	1.795	⅜
	NEMA284-286	10 ½	0.59	9	0.2	11.54	11 ¼	0.59 (4x)	7.50	1 ⅞	4 ⅜	¼	2.098	½
	NEMA324-326	12 ½	0.71	11	0.2	11.54	13	0.69 (4x)	8.48	2 ⅛	5	¼	2.350	½
	NEMA364-365	12 ½	0.71	11	0.2	11.54	13	0.69 (8x)	9.35	2 ⅜	5 ⅝	¼	2.657	⅝
P3P.002e	NEMA213-215	8 ½	0.55	7 ¼	0.2	11.54	9	0.59 (4x)	5.77	1 ⅜	3 ⅛	¼	1.524	⅜
	NEMA254-256	8 ½	0.55	7 ¼	0.2	11.54	9	0.59 (4x)	6.56	1 ⅝	3 ¾	¼	1.795	⅜
	NEMA284-286	10 ½	0.59	9	0.2	11.54	11 ¼	0.59 (4x)	7.50	1 ⅞	4 ⅜	¼	2.098	½
	NEMA324-326	12 ½	0.71	11	0.2	11.54	13	0.69 (4x)	8.48	2 ⅛	5	¼	2.350	½
P2P.012e	NEMA256	8 ½	0.55	7 ¼	0.2	13.54	9	0.59 (4x)	6.56	1 ⅝	3 ¾	¼	1.795	⅜
	NEMA284-286	10 ½	0.59	9	0.2	13.54	11 ¼	0.59 (4x)	7.50	1 ⅞	4 ⅜	¼	2.098	½
	NEMA324-326	12 ½	0.71	11	0.2	13.54	13	0.69 (4x)	8.48	2 ⅛	5	¼	2.350	½
	NEMA364-365	12 ½	0.71	11	0.2	13.54	13	0.69 (8x)	9.35	2 ⅜	5 ⅝	¼	2.657	⅝
P3P.012e	NEMA213-215	8 ½	0.55	7 ¼	0.2	11.54	9	0.59 (4x)	5.77	1 ⅜	3 ⅛	¼	1.524	⅜
	NEMA254-256	8 ½	0.55	7 ¼	0.2	11.54	9	0.59 (4x)	6.56	1 ⅝	3 ¾	¼	1.795	⅜
	NEMA284-286	10 ½	0.59	9	0.2	11.54	11 ¼	0.59 (4x)	7.50	1 ⅞	4 ⅜	¼	2.098	½
	NEMA324-326	12 ½	0.71	11	0.2	11.54	13	0.69 (4x)	8.48	2 ⅛	5	¼	2.350	½
P2P.022e	NEMA284-286	10 ½	0.59	9	0.2	15.51	11 ¼	0.59 (4x)	7.46	1 ⅞	4 ⅜	¼	2.098	½
	NEMA324-326	12 ½	0.67	11	0.2	15.51	13	0.69 (4x)	9.37	2 ⅛	5	¼	2.350	½
	NEMA364-365	12 ½	0.67	11	0.2	15.51	13	0.69 (8x)	9.37	2 ⅜	5 ⅝	¼	2.657	⅝
	NEMA404-405	12 ½	0.67	11	0.2	15.51	13	0.69 (8x)	11.37	2 ⅞	7	¼	3.209	¾
P3P.022e	NEMA215	8 ½	0.55	7 ¼	0.2	11.54	9	0.59 (4x)	5.77	1 ⅜	3 ⅛	¼	1.524	⅜
	NEMA254-256	8 ½	0.55	7 ¼	0.2	11.54	9	0.59 (4x)	6.56	1 ⅝	3 ¾	¼	1.795	⅜
	NEMA284-286	10 ½	0.59	9	0.2	11.54	11 ¼	0.59 (4x)	7.50	1 ⅞	4 ⅜	¼	2.098	½
	NEMA324-326	12 ½	0.71	11	0.2	11.54	13	0.69 (4x)	8.48	2 ⅛	5	¼	2.350	½
	NEMA364-365	12 ½	0.71	11	0.2	11.54	13	0.69 (8x)	9.35	2 ⅜	5 ⅝	¼	2.657	⅝
P2P.032e	NEMA324-326	12 ½	0.67	11	0.2	16.30	13	0.69 (4x)	9.37	2 ⅛	5	¼	2.350	½
	NEMA364-365	12 ½	0.67	11	0.2	16.30	13	0.69 (8x)	9.37	2 ⅜	5 ⅝	¼	2.657	⅝
	NEMA404-405	12 ½	0.67	11	0.2	16.30	13	0.69 (8x)	11.73	2 ⅞	7	¼	3.209	¾
	NEMA444-445	16	0.79	14	0.2	16.30	16 ⅜	0.69 (8x)	14.76	3 ⅜	8 ¼	¼	3.776	⅞
	NEMA447-449	16	0.79	14	0.2	16.30	16 ⅜	0.69 (8x)	14.76	3 ⅜	8 ¼	¼	3.776	⅞

31991203/EN – 08/2025

Type	Mounted component	AMP												
		B5	C5	E5	F5	G2	G5	S5	Z5	D1	I2	L5	T1	U1
P3P.032e	NEMA254-256	8 ½	0.55	7 ¼	0.2	13.54	9	0.59 (4x)	6.56	1 ⅝	3 ¾	¼	1.795	⅜
	NEMA284-286	10 ½	0.59	9	0.2	13.54	11 ¼	0.59 (4x)	7.50	1 ⅞	4 ⅜	¼	2.098	½
	NEMA324-326	12 ½	0.71	11	0.2	13.54	13	0.69 (4x)	8.48	2 ⅛	5	¼	2.350	½
	NEMA364-365	12 ½	0.71	11	0.2	13.54	13	0.69 (8x)	9.35	2 ⅜	5 ⅝	¼	2.657	⅝
P2P.042e	NEMA324-326	12 ½	0.67	11	0.2	18.23	13	0.69 (4x)	9.65	2 ⅛	5	¼	2.350	½
	NEMA364-365	12 ½	0.67	11	0.2	18.23	13	0.69 (8x)	9.65	2 ⅜	5 ⅝	¼	2.657	⅝
	NEMA404-405	12 ½	0.67	11	0.2	18.23	13	0.69 (8x)	12.01	2 ⅞	7	¼	3.209	¾
	NEMA444-445	16	0.79	14	0.2	18.23	16 ⅜	0.69 (8x)	15.04	3 ⅜	8 ¼	¼	3.776	⅞
	NEMA447-449	16	0.79	14	0.2	18.23	16 ⅜	0.69 (8x)	15.04	3 ⅜	8 ¼	¼	3.776	⅞
P3P.042e	NEMA284-286	10 ½	0.59	9	0.2	15.51	11 ¼	0.59 (4x)	7.64	1 ⅞	4 ⅜	¼	2.098	½
	NEMA324-326	12 ½	0.67	11	0.2	15.51	13	0.69 (4x)	9.37	2 ⅛	5	¼	2.350	½
	NEMA364-365	12 ½	0.67	11	0.2	15.51	13	0.69 (8x)	9.37	2 ⅜	5 ⅝	¼	2.657	⅝
	NEMA404-405	12 ½	0.67	11	0.2	15.51	13	0.69 (8x)	11.73	2 ⅞	7	¼	3.209	¾
P2P.052e	NEMA324-326	12 ½	0.67	11	0.2	19.41	13	0.69 (4x)	9.65	2 ⅛	5	¼	2.350	½
	NEMA364-365	12 ½	0.67	11	0.2	19.41	13	0.69 (8x)	9.65	2 ⅜	5 ⅝	¼	2.657	⅝
	NEMA404-405	12 ½	0.67	11	0.2	19.41	13	0.69 (8x)	12.01	2 ⅞	7	¼	3.209	¾
	NEMA444-445	16	0.79	14	0.2	19.41	16 ⅜	0.69 (8x)	15.04	3 ⅜	8 ¼	¼	3.776	⅞
	NEMA447-449	16	0.79	14	0.2	19.41	16 ⅜	0.69 (8x)	15.04	3 ⅜	8 ¼	¼	3.776	⅞
P3P.052e	NEMA284-286	10 ½	0.59	9	0.2	16.30	11 ¼	0.59 (4x)	7.64	1 ⅞	4 ⅜	¼	2.098	½
	NEMA324-326	12 ½	0.67	11	0.2	16.30	13	0.69 (4x)	9.37	2 ⅛	5	¼	2.350	½
	NEMA364-365	12 ½	0.67	11	0.2	16.30	13	0.69 (8x)	9.37	2 ⅜	5 ⅝	¼	2.657	⅝
	NEMA404-405	12 ½	0.67	11	0.2	16.30	13	0.69 (8x)	11.73	2 ⅞	7	¼	3.209	¾
	NEMA444-445	16	0.79	14	0.2	16.30	16 ⅜	0.69 (8x)	14.76	3 ⅜	8 ¼	¼	3.776	⅞
	NEMA447-449	16	0.79	14	0.2	16.30	16 ⅜	0.69 (8x)	14.76	3 ⅜	8 ¼	¼	3.776	⅞
P3P.062e	NEMA364-365	12 ½	0.67	11	0.2	22.99	13	0.69 (8x)	11.10	2 ⅜	5 ⅝	¼	2.657	⅝
	NEMA404-405	12 ½	0.67	11	0.2	22.99	13	0.69 (8x)	13.46	2 ⅞	7	¼	3.213	¾
	NEMA444-445	16	0.79	14	0.2	22.99	16 ⅜	0.69 (8x)	16.50	3 ⅜	8 ¼	¼	3.768	⅞
	NEMA447-449	16	0.79	14	0.2	22.99	16 ⅜	0.69 (8x)	16.50	3 ⅜	8 ¼	¼	3.768	⅞
P3P.062e	NEMA284-286	10 ½	0.59	9	0.2	18.23	11 ¼	0.59 (4x)	7.91	1 ⅞	4 ⅜	¼	2.102	½
	NEMA324-326	12 ½	0.67	11	0.2	18.23	13	0.69 (4x)	9.65	2 ⅛	5	¼	2.358	½
	NEMA364-365	12 ½	0.67	11	0.2	18.23	13	0.69 (8x)	9.65	2 ⅜	5 ⅝	¼	2.657	⅝
	NEMA404-405	12 ½	0.67	11	0.2	18.23	13	0.69 (8x)	12.01	2 ⅞	7	¼	3.213	¾
	NEMA444-445	16	0.79	14	0.2	18.23	16 ⅜	0.69 (8x)	15.04	3 ⅜	8 ¼	¼	3.768	⅞
	NEMA447-449	16	0.79	14	0.2	18.23	16 ⅜	0.69 (8x)	15.04	3 ⅜	8 ¼	¼	3.768	⅞
P2P.072e	NEMA444-445	16	0.79	14	0.2	24.17	16 ⅜	0.69 (8x)	16.50	3 ⅜	8 ¼	¼	3.768	⅞
	NEMA447-449	16	0.79	14	0.2	24.17	16 ⅜	0.69 (8x)	16.50	3 ⅜	8 ¼	¼	3.768	⅞
P3P.072e	NEMA284-286	10 ½	0.59	9	0.2	19.41	11 ¼	0.59 (4x)	7.91	1 ⅞	4 ⅜	¼	2.102	½
	NEMA324-326	12 ½	0.67	11	0.2	19.41	13	0.69 (4x)	9.65	2 ⅛	5	¼	2.358	½
	NEMA364-365	12 ½	0.67	11	0.2	19.41	13	0.69 (8x)	9.65	2 ⅜	5 ⅝	¼	2.657	⅝
	NEMA404-405	12 ½	0.67	11	0.2	19.41	13	0.69 (8x)	12.01	2 ⅞	7	¼	3.213	¾
	NEMA444-445	16	0.79	14	0.2	19.41	16 ⅜	0.69 (8x)	15.04	3 ⅜	8 ¼	¼	3.768	⅞
	NEMA447-449	16	0.79	14	0.2	19.41	16 ⅜	0.69 (8x)	15.04	3 ⅜	8 ¼	¼	3.768	⅞
P2P.082e	NEMA444-445	16	0.79	14	0.2	27.64	16 ⅜	0.69 (8x)	16.50	3 ⅜	8 ¼	¼	3.768	⅞
	NEMA447-449	16	0.79	14	0.2	27.64	16 ⅜	0.69 (8x)	16.50	3 ⅜	8 ¼	¼	3.768	⅞
P3P.082e	NEMA364-365	12 ½	0.67	11	0.2	22.99	13	0.69 (8x)	11.10	2 ⅜	5 ⅝	¼	2.657	⅝
	NEMA404-405	12 ½	0.67	11	0.2	22.99	13	0.69 (8x)	13.46	2 ⅞	7	¼	3.213	¾
	NEMA444-445	16	0.79	14	0.2	22.99	16 ⅜	0.69 (8x)	16.50	3 ⅜	8 ¼	¼	3.768	⅞
	NEMA447-449	16	0.79	14	0.2	22.991	16 ⅜	0.69 (8x)	16.50	3 ⅜	8 ¼	¼	3.768	⅞

31991203/EN – 08/2025

11.9 Motor adapter /AMPF for mounting IEC motors

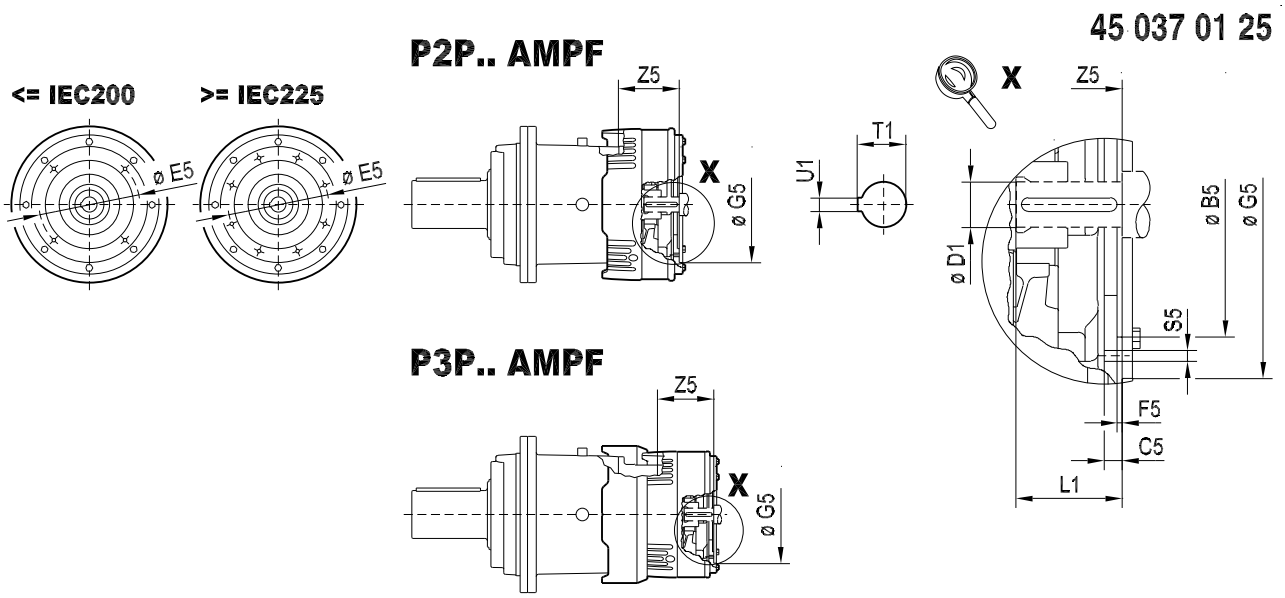

Type	Mounted component	AMPF										
		B5	C5	E5	F5	G5	S5	Z5	D1	L1	T1	U1
P2P.002e	IEC160	250	23	300	6	350	M16	177.5	42	110	45.3	12
	IEC180	250	23	300	6	350	M16	177.5	48	110	51.8	14
	IEC200	300	18.5	350	7	400	M16	178	55	110	59.3	16
	IEC225	350	44	400	7	450	M16	203.5	60	140	64.4	18
	IEC250	450	19	500	7	550	M16	202.5	65	140	69.4	18
P3P.002e	IEC132	230	22.5	265	6	300	M12	177	38	80	41.3	10
	IEC160	250	23	300	6	300	M16	177.5	42	110	45.3	12
	IEC180	250	23	300	6	350	M16	177.5	48	110	51.8	14
	IEC200	300	18.5	350	6	400	M16	178	55	110	59.3	16
	IEC225	350	44	400	7	450	M16	203.5	60	140	64.4	18
P2P.012e	IEC160	250	15	300	6	300	M16	177.5	42	110	45.3	12
	IEC180	250	15	300	6	350	M16	177.5	48	110	51.8	14
	IEC200	300	25.5	350	6	350	M16	188	55	110	59.3	16
	IEC225	350	36	400	6	400	M16	203.5	60	140	64.4	18
	IEC250	450	25	500	7	450	M16	210.5	65	140	69.4	18
P3P.012e	IEC132	230	22.5	265	7	550	M12	177	38	80	41.3	10
	IEC160	250	23	300	6	300	M16	177.5	42	110	45.3	12
	IEC180	250	23	300	6	350	M16	177.5	48	110	51.8	14
	IEC200	300	18.5	350	6	400	M16	178	55	110	59.3	16
	IEC225	350	44	400	7	450	M16	203.5	60	140	64.4	18
P2P.022e	IEC180	250	28.5	300	6	350	M16	230	48	110	51.8	14
	IEC200	300	31	350	6	400	M16	232.5	55	110	59.3	16
	IEC225	350	36	400	6	450	M16	242.5	60	140	64.4	18
	IEC250	450	25	500	7	550	M16	249.5	65	140	69.4	18
	IEC280	450	25	500	7	550	M16	249.5	75	140	79.9	20
P3P.022e	IEC132	230	22.5	265	6	300	M12	177	38	80	41.3	10
	IEC160	250	23	300	6	350	M16	177.5	42	110	45.3	12
	IEC180	250	23	300	6	350	M16	177.5	48	110	51.8	14
	IEC200	300	18.5	350	7	400	M16	178	55	110	59.3	16
	IEC225	350	44	400	7	450	M16	203.5	60	140	64.4	18
	IEC250	450	19	500	7	550	M16	202.5	65	140	69.4	18

31991203/EN – 08/2025

Type	Mounted component	AMPF										
		B5	C5	E5	F5	G5	S5	Z5	D1	L1	T1	U1
P3P.032e	IEC200	300	23	350	6	400	M16	232.5	55	110	59.3	16
	IEC225	350	23	400	6	450	M16	232.5	60	140	64.4	18
	IEC250	450	23	500	7	550	M16	237.5	65	140	69.4	18
	IEC280	450	23	500	7	550	M16	237.5	75	140	79.9	20
	IEC315S-L	550	38	600	8	660	M20	252.5	80	170	85.4	22
P3P.032e	IEC160	250	15	300	6	350	M16	177.5	42	110	45.3	12
	IEC180	250	15	300	6	350	M16	177.5	48	110	51.8	14
	IEC200	300	25.5	350	6	400	M16	188	55	110	59.3	16
	IEC225	350	36	400	6	450	M16	203.5	60	140	64.4	18
	IEC250	450	25	500	7	550	M16	210.5	65	140	69.4	18
	IEC280	450	25	500	7	550	M16	210.5	75	140	79.9	20
P2P.042e	IEC200	300	23	350	6	400	M16	239.5	55	110	59.3	16
	IEC225	350	23	400	6	450	M16	239.5	60	140	64.4	18
	IEC250	450	23	500	7	550	M16	244.5	65	140	69.4	18
	IEC280	450	23	500	7	550	M16	244.5	75	140	79.9	20
	IEC315	550	38	600	8	660	M20	259.5	80	170	85.4	22
P3P.042e	IEC180	250	28.5	300	6	350	M16	230	48	110	51.8	14
	IEC200	300	31	350	6	400	M16	232.5	55	110	59.3	16
	IEC225	350	36	400	6	450	M16	242.5	60	140	64.4	18
	IEC250	450	25	500	7	550	M16	249.5	65	140	69.4	18
	IEC280	450	25	500	7	550	M16	249.5	75	140	79.9	20
P2P.052e	IEC200	300	23	350	6	400	M16	239.5	55	110	59.3	16
	IEC225	350	23	400	6	450	M16	239.5	60	140	64.4	18
	IEC250	450	23	500	7	550	M16	244.5	65	140	69.4	18
	IEC280	450	23	500	7	550	M16	244.5	75	140	79.9	20
	IEC315	550	38	600	8	660	M20	259.5	80	170	85.4	22
P3P.052e	IEC180	250	20.5	300	6	350	M16	230	48	110	51.8	14
	IEC200	300	23	350	6	400	M16	232.5	55	110	59.3	16
	IEC225	350	23	400	6	450	M16	232.5	60	140	64.4	18
	IEC250	450	23	500	7	550	M16	237.5	65	140	69.4	18
	IEC280	450	23	500	7	550	M16	237.5	75	140	79.9	20
	IEC315S-L	550	38	600	8	660	M20	252.5	80	170	85.4	22
P2P.062e	IEC280	450	23	500	6	550	M16	356	75	140	79.9	20
	IEC315S-L	550	23	600	6	660	M20	356	80	170	85.4	22
	IEC355	680	21	740	30	800	M20	338	100	210	106.4	28
P3P.062e	IEC200	300	23	350	6	400	M16	239.5	55	110	59.3	16
	IEC225	350	23	400	6	450	M16	239.5	60	140	64.4	18
	IEC250	450	23	500	7	550	M16	244.5	65	140	69.4	18
	IEC280	450	23	500	7	550	M16	244.5	75	140	79.9	20
	IEC315S-L	550	38	600	8	660	M20	259.5	80	170	85.4	22
P3P.072e	IEC200	300	23	350	6	400	M16	239.5	55	110	59.3	16
	IEC225	350	23	400	6	450	M16	239.5	60	140	64.4	18
	IEC250	450	23	500	7	550	M16	244.5	65	140	69.4	18
	IEC280	450	23	500	7	550	M16	244.5	75	140	79.9	20
	IEC315S-L	550	38	600	8	660	M20	259.5	80	170	85.4	22
P3P.082e	IEC280	450	23	500	6	550	M16	356	75	140	79.9	20
	IEC315S-L	550	23	600	6	660	M20	356	80	170	85.4	22
	IEC355	680	21	740	30	800	M20	338	100	210	106.4	28

31991203/EN – 08/2025

11.10 Motor adapter /AMPF for mounting NEMA motors

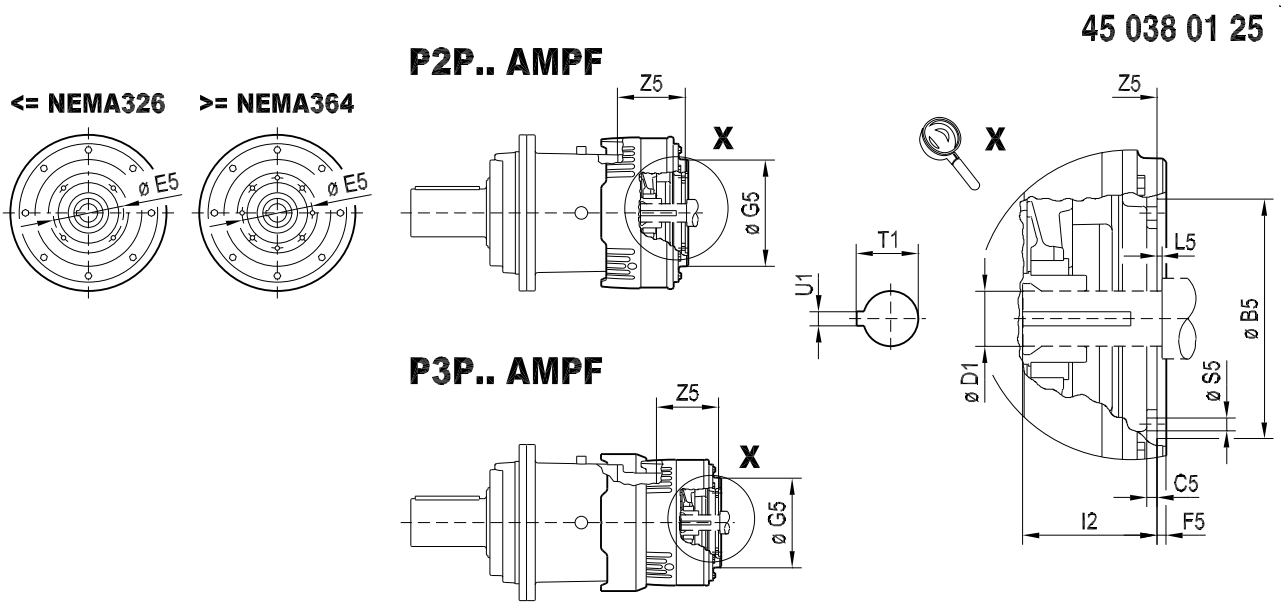

Type	Mounted component	AMPF											
		B5	C5	E5	F5	G5	S5	Z5	D1	I2	L5	T1	U1
P2P.002e	NEMA254-256	8 ½	1.42	7 ¼	0.2	9	0.59 (4x)	7.50	1 ⅝	3 ¾	¼	1.803	⅜
	NEMA284-286	10 ½	1.54	9	0.2	11 ¼	0.59 (4x)	7.62	1 ⅞	4 ⅜	¼	2.102	½
	NEMA324-326	12 ½	0.63	11	0.2	13	0.69 (4x)	8.01	2 ⅛	5	¼	2.358	½
	NEMA364-365	12 ½	0.63	11	0.2	13	0.69 (8x)	8.01	2 ⅜	5 ⅝	¼	2.657	⅝
P3P.002e	NEMA213-215	8 ½	1.42	7 ¼	0.2	9	0.59 (4x)	7.50	1 ⅜	3 ⅛	¼	1.528	⅓
	NEMA254-256	8 ½	1.42	7 ¼	0.2	9	0.59 (4x)	7.50	1 ⅝	3 ¾	¼	1.803	⅜
	NEMA284-286	10 ½	1.54	9	0.2	11 ¼	0.59 (4x)	7.62	1 ⅞	4 ⅜	¼	2.102	½
	NEMA324-326	12 ½	0.63	11	0.2	13	0.69 (4x)	8.01	2 ⅛	5	¼	2.358	½
P2P.012e	NEMA254-256	8 ½	0.51	7 ¼	0.2	9	0.59 (4x)	7.50	1 ⅝	3 ¾	¼	1.803	⅜
	NEMA284-286	10 ½	0.63	9	0.2	11 ¼	0.59 (4x)	7.62	1 ⅞	4 ⅜	¼	2.102	½
	NEMA324-326	12 ½	1.61	11	0.2	13	0.69 (4x)	8.01	2 ⅛	5	¼	2.358	½
	NEMA364-365	12 ½	1.61	11	0.2	13	0.69 (8x)	8.01	2 ⅜	5 ⅝	¼	2.657	⅝
P3P.012e	NEMA213-215	8 ½	1.42	7 ¼	0.2	9	0.59 (4x)	7.50	1 ⅜	3 ⅛	¼	1.528	⅓
	NEMA254-256	8 ½	1.42	7 ¼	0.2	9	0.59 (4x)	7.50	1 ⅝	3 ¾	¼	1.803	⅜
	NEMA284-286	10 ½	1.54	9	0.2	11 ¼	0.59 (4x)	7.62	1 ⅞	4 ⅜	¼	2.102	½
	NEMA324-326	12 ½	0.63	11	0.2	13	0.69 (4x)	8.01	2 ⅛	5	¼	2.358	½
P2P.022e	NEMA284-286	10 ½	0.63	9	0.2	11 ¼	0.59 (4x)	9.15	1 ⅞	4 ⅜	¼	2.102	½
	NEMA324-326	12 ½	1.61	11	0.2	13	0.69 (4x)	9.55	2 ⅛	5	¼	2.358	½
	NEMA364-365	12 ½	1.61	11	0.2	13	0.69 (8x)	9.55	2 ⅜	5 ⅝	¼	2.657	⅝
	NEMA404-405	12 ½	2.99	11	0.2	13	0.69 (8x)	10.93	2 ⅞	7	¼	3.213	¾
P3P.022e	NEMA213-215	8 ½	1.42	7 ¼	0.2	9	0.59 (4x)	7.50	1 ⅜	3 ⅛	¼	1.528	⅓
	NEMA254-256	8 ½	1.42	7 ¼	0.2	9	0.59 (4x)	7.50	1 ⅝	3 ¾	¼	1.803	⅜
	NEMA284-286	10 ½	1.54	9	0.2	11 ¼	0.59 (4x)	7.62	1 ⅞	4 ⅜	¼	2.102	½
	NEMA324-326	12 ½	0.63	11	0.2	13	0.69 (4x)	8.01	2 ⅛	5	¼	2.358	½
	NEMA364-365	12 ½	0.63	11	0.2	13	0.69 (8x)	8.01	2 ⅜	5 ⅝	¼	2.657	⅝
P2P.032e	NEMA324-326	12 ½	0.91	11	0.2	13	0.69 (4x)	9.15	2 ⅛	5	¼	2.358	½
	NEMA364-365	12 ½	0.91	11	0.2	13	0.69 (8x)	9.15	2 ⅜	5 ⅝	¼	2.657	⅝
	NEMA404-405	12 ½	0.54	11	0.2	13	0.69 (8x)	10.26	2 ⅞	7	¼	3.213	¾
	NEMA444-445	16	1.78	14	0.2	16 ⅜	0.69 (8x)	11.50	3 ⅜	8 ¼	¼	3.768	⅞
P3P.032e	NEMA254-256	8 ½	0.51	7 ¼	0.2	9	0.59 (4x)	7.50	1 ⅝	3 ¾	¼	1.803	⅜
	NEMA284-286	10 ½	0.63	9	0.2	11 ¼	0.59 (4x)	7.62	1 ⅞	4 ⅜	¼	2.102	½
	NEMA324-326	12 ½	1.61	11	0.2	13	0.69 (4x)	8.01	2 ⅛	5	¼	2.358	½
	NEMA364-365	12 ½	1.61	11	0.2	13	0.69 (8x)	8.01	2 ⅜	5 ⅝	¼	2.657	⅝

31991203/EN – 08/2025

Type	Mounted component	AMPF											
		B5	C5	E5	F5	G5	S5	Z5	D1	I2	L5	T1	U1
P2P.042e	NEMA324-326	12 ½	0.91	11	0.2	13	0.69 (4x)	9.43	2 ⅛	5	¼	2.358	½
	NEMA364-365	12 ½	0.91	11	0.2	13	0.69 (8x)	9.43	2 ⅜	5 ⅝	¼	2.657	⅝
	NEMA404-405	12 ½	0.54	11	0.2	13	0.69 (8x)	10.53	2 ⅞	7	¼	3.213	¾
	NEMA444-449	16	1.78	14	0.2	16 ⅜	0.69 (8x)	11.77	3 ⅜	8 ¼	¼	3.768	⅞
P3P.042e	NEMA284-286	10 ½	0.63	9	0.2	11 ¼	0.59 (4x)	9.15	1 ⅞	4 ⅜	¼	2.102	½
	NEMA324-326	12 ½	1.61	11	0.2	13	0.69 (4x)	9.55	2 ⅛	5	¼	2.358	½
	NEMA364-365	12 ½	1.61	11	0.2	13	0.69 (8x)	9.55	2 ⅜	5 ⅝	¼	2.657	⅝
	NEMA404-405	12 ½	2.99	11	0.2	13	0.69 (8x)	10.93	2 ⅞	7	¼	3.213	¾
P2P.052e	NEMA324-326	12 ½	0.91	11	0.2	13	0.69 (4x)	9.43	2 ⅛	5	¼	2.358	½
	NEMA364-365	12 ½	0.91	11	0.2	13	0.69 (8x)	9.43	2 ⅜	5 ⅝	¼	2.657	⅝
	NEMA404-405	12 ½	0.54	11	0.2	13	0.69 (8x)	10.53	2 ⅞	7	¼	3.213	¾
	NEMA**444-449**	16	1.78	14	0.2	16 ⅜	0.69 (8x)	11.77	3 ⅜	8 ¼	¼	3.768	⅞
P3P.052e	NEMA284-286	10 ½	0.91	9	0.2	11 ¼	0.59 (4x)	9.15	1 ⅞	4 ⅜	¼	2.102	½
	NEMA324-326	12 ½	0.91	11	0.2	13	0.69 (4x)	9.15	2 ⅛	5	¼	2.358	½
	NEMA364-365	12 ½	0.91	11	0.2	13	0.69 (8x)	9.15	2 ⅜	5 ⅝	¼	2.657	⅝
	NEMA404-405	12 ½	0.54	11	0.2	13	0.69 (8x)	10.26	2 ⅞	7	¼	3.213	¾
	NEMA**444-449**	16	1.78	14	0.2	16 ⅜	0.69 (8x)	11.50	3 ⅜	8 ¼	¼	3.768	⅞
P3P.062e	NEMA284-286	10 ½	0.91	9	0.2	11 ¼	0.59 (4x)	9.43	1 ⅞	4 ⅜	¼	2.102	½
	NEMA324-326	12 ½	0.91	11	0.2	13	0.69 (4x)	9.43	2 ⅛	5	¼	2.358	½
	NEMA364-365	12 ½	0.91	11	0.2	13	0.69 (8x)	9.43	2 ⅜	5 ⅝	¼	2.657	⅝
	NEMA404-405	12 ½	0.54	11	0.2	13	0.69 (8x)	10.53	2 ⅞	7	¼	3.213	¾
	NEMA**444-449**	16	1.78	14	0.2	16 ⅜	0.69 (8x)	11.77	3 ⅜	8 ¼	¼	3.768	⅞
P3P.072e	NEMA324-326	12 ½	0.91	11	0.2	13	0.69 (4x)	9.43	2 ⅛	5	¼	2.358	½
	NEMA364-365	12 ½	0.91	11	0.2	13	0.69 (8x)	9.43	2 ⅜	5 ⅝	¼	2.657	⅝
	NEMA404-405	12 ½	0.54	11	0.2	13	0.69 (8x)	10.53	2 ⅞	7	¼	3.213	¾
	NEMA**444-449**	16	1.78	14	0.2	16 ⅜	0.69 (8x)	11.77	3 ⅜	8 ¼	¼	3.768	⅞
P3P.082e	NEMA364-365	12 ½	0.71	11	0.2	12 ⅜	0.69 (8x)	13.82	2 ⅜	5 ⅝	¼	2.657	⅝
	NEMA404-405	12 ½	0.71	11	0.2	12 ⅜	0.69 (8x)	13.82	2 ⅞	7	¼	3.213	¾
	NEMA**444-449**	16	0.91	14	0.2	16 ⅜	0.69 (8x)	14.02	3 ⅜	8 ¼	¼	3.768	⅞

31991203/EN – 08/2025

11.11 Oil expansion tank for mounting position M2

P..002e - P..052e
M2

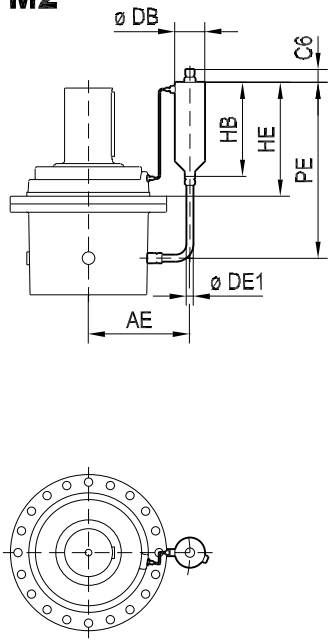

P..062e - P..082e
M2

45 012 02 21

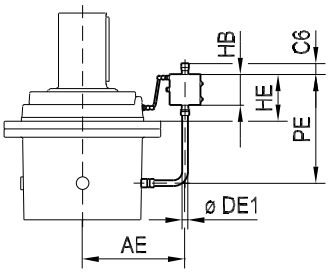

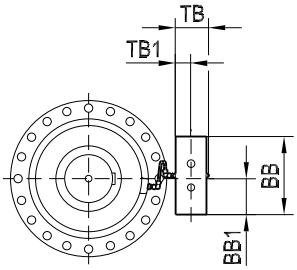

Type	AE	BB	BB1	C6	DB	DE1	HB	HE	PE	TB	TB1
P2P.002e	312	–	–	51	123	28	245	249	420	–	–
P3P.002e	312	–	–	51	123	28	245	249	420	–	–
P2P.012e	339	–	–	51	123	28	245	231	420	–	–
P3P.012e	339	–	–	51	123	28	245	231	420	–	–
P2P.022e	363	–	–	51	120	28	375	330	550	–	–
P3P.022e	363	–	–	51	120	28	375	330	550	–	–
P2P.032e	376	–	–	51	120	28	375	416	647	–	–
P3P.032e	376	–	–	51	120	28	375	416	647	–	–
P2P.042e	399	–	–	51	120	28	375	453	700	–	–
P3P.042e	399	–	–	51	120	28	375	453	700	–	–
P2P.052e	430	–	–	51	120	28	375	448	699	–	–
P3P052e	430	–	–	51	120	28	375	448	699	–	–
P2P.062e	499	380	175	53	–	28	150	251	531	162	75
P3P.062e	499	380	175	53	–	28	150	251	531	162	75
P2P.072e	516	380	175	53	–	28	150	274	561	162	75
P3P.072e	516	380	175	53	–	28	150	247	561	162	75
P2P.082e	570	380	175	53	–	28	150	256	609	162	75
P3P.082e	570	380	175	53	–	28	150	256	609	162	75

31991203/EN – 08/2025

11.12 Oil expansion tank for mounting position M4

11.12.1 ADP input cover / AMP motor adapter

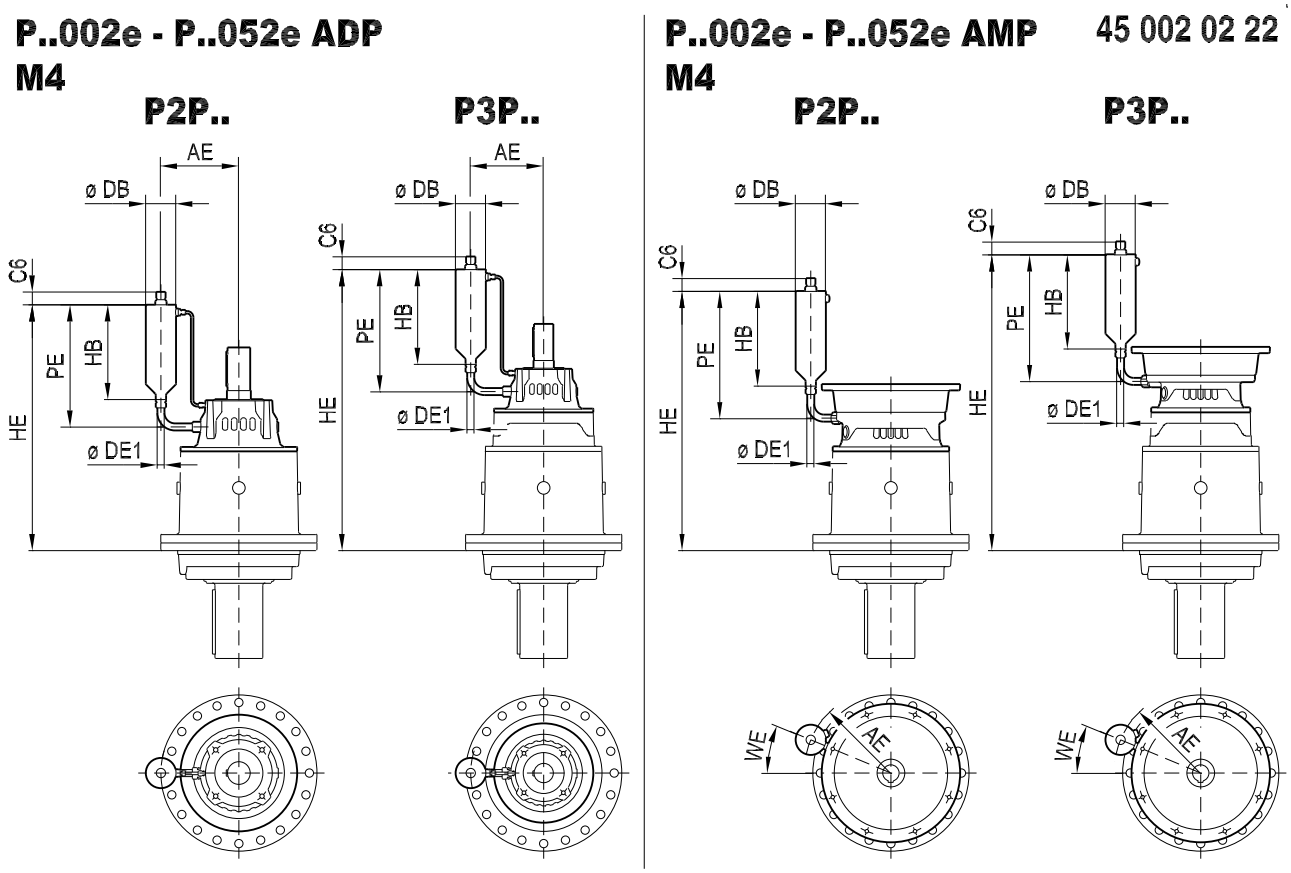

Type	ADP						
	AE	C6	DB	DE1	HB	HE	PE
P2P.002e	273	51	123	28	245	644	304
P3P.002e	273	51	123	28	245	747	304
P2P.012e	293	51	123	28	245	695	304
P3P.012e	273	51	123	28	245	778	304
P2P.022e	293	51	120	28	375	912	485
P3P.022e	286	51	120	28	375	1032	491
P2P.032e	324	51	120	28	375	964	491
P3P.032e	305	51	120	28	375	1089	491
P2P.042e	310	51	120	28	375	974	485
P3P.042e	291	51	120	28	375	1114	485
P2P.052e	368	51	120	28	375	1032	491
P3P.052e	324	51	120	28	375	1159	491

Type	Mounted component	AMP							
		AE	C6	DB	DE1	HB	HE	PE	WE
P2P.002e	NEMA254-365	267	51	123	28	245	747	379	22.5°
	IEC160-200	267	51	123	28	245	747	379	22.5°
	IEC225-250	347	51	123	28	245	747	379	22.5°
P3P.002e	NEMA213-326	268	51	123	28	245	850	379	22.5°
	IEC132-200	268	51	123	28	245	850	379	22.5°
	IEC225	348	51	123	28	245	850	379	22.5°

31991203/EN – 08/2025

Type	Mounted component	AMP							
		AE	C6	DB	DE1	HB	HE	PE	WE
P2P.012e	NEMA256-365	290	51	123	28	245	774	375	22.5°
	IEC160-225	290	51	123	28	245	774	375	22.5°
	IEC250	348	51	123	28	245	774	375	22.5°
P3P.012e	NEMA213-326	289	51	123	28	245	877	375	22.5°
	IEC132-225	289	51	123	28	245	877	375	22.5°
P2P.022e	NEMA284-405	342	51	120	28	375	973	505	22.5°
	IEC180-280	342	51	120	28	375	973	505	22.5°
P3P.022e	NEMA215-365	263	51	120	28	375	1074	505	22.5°
	IEC132-200	263	51	120	28	375	1074	505	22.5°
	IEC225-250	347	51	120	28	375	1074	505	22.5°
P2P.032e	NEMA324-449	342	51	120	28	375	1004	505	22.5°
	IEC180-280	342	51	120	28	375	1004	505	22.5°
	IEC315	406	51	120	28	375	1004	505	22.5°
P3P.032e	NEMA254-365	263	51	120	28	375	1111	505	22.5°
	IEC160-200	263	51	120	28	375	1111	505	22.5°
	IEC225	327	51	120	28	375	1111	505	22.5°
	IEC250	347	51	120	28	375	1111	505	22.5°
P2P.042e	NEMA324-449	342	51	120	28	375	1029	505	22.5°
	IEC200-280	342	51	120	28	375	1029	505	22.5°
	IEC315	406	51	120	28	375	1029	505	22.5°
P3P.042e	NEMA284-405	342	51	120	28	375	1178	505	22.5°
	IEC180-280	342	51	120	28	375	1178	505	22.5°
P2P.052e	NEMA324-449	342	51	120	28	375	1045	505	22.5°
	IEC200-280	342	51	120	28	375	1045	505	22.5°
	IEC315	406	51	120	28	375	1045	505	22.5°
P3P.052e	NEMA284-449	342	51	120	28	375	1199	505	22.5°
	IEC180-280	342	51	120	28	375	1199	505	22.5°
	IEC315	406	51	120	28	375	1199	505	22.5°

31991203/EN – 08/2025

11.12.2 AMPF/DMF motor adapter

P..002e - P..052e AMPF / DMF M4

45 001 02 22

P2P..

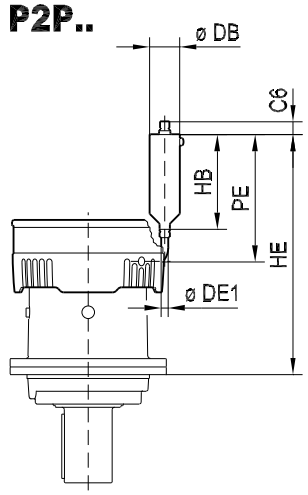

P3P..

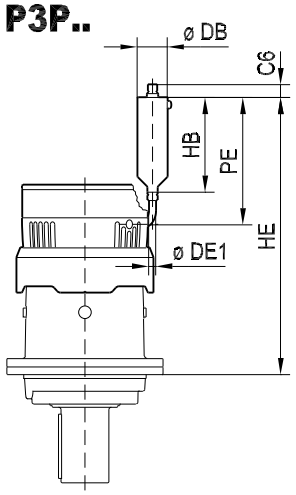

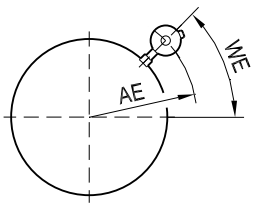

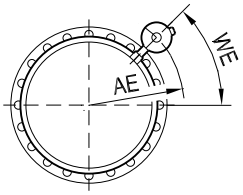

Type	AMPF / DMF							
	AE	C6	DB	DE1	HB	HE	PE	WE
P2P.002e	325	51	123	28	245	691	379	36°
P3P.002e	325	51	123	28	245	794	379	36°
P2P.012e	336	51	123	28	245	726	379	36°
P3P.012e	307	51	123	28	245	825	379	36°
P2P.022e	380	51	120	28	375	899	505	45°
P3P.022e	321	51	120	28	375	1019	505	36°
P2P.032e	408	51	120	28	375	930	505	45°
P3P.032e	348	51	120	28	375	1059	505	36°
P2P.042e	430	51	120	28	375	954	505	45°
P3P.042e	380	51	120	28	375	1101	505	45°
P2P.052e	446	51	120	28	375	969	505	45°
P3P.052e	404	51	120	28	375	1126	505	45°

31991203/EN – 08/2025

11.12.3 AMP motor adapter

P..062e - P..082e.. AMP M4

45 026 01 25

P2P..

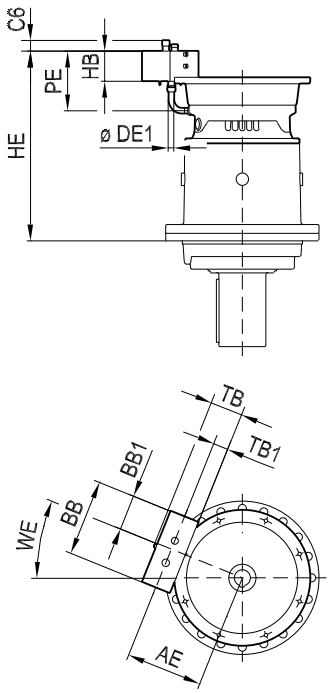

P3P..

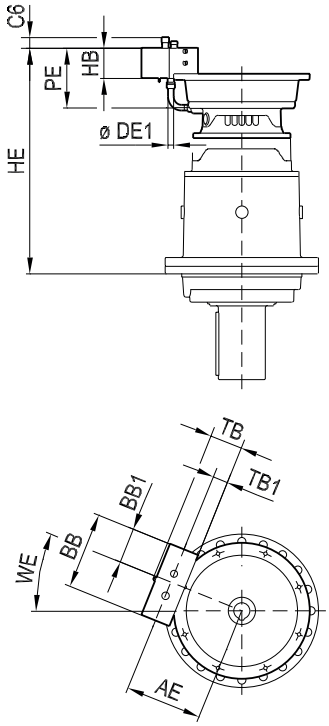

Type	Mounted component	AE	BB	BB1	C6	DE1	HB	HE	PE	TB	TB1	WE
P2P.062e	IEC280	377	380	175	53	28	150	866	297	162	75	22.5°
	IEC315	441	380	175	53	28	150	866	297	162	75	22.5°
	IEC355	519	380	175	53	28	150	884	315	162	75	22.5°
	NEMA364-449	377	380	175	53	28	150	866	297	162	75	22.5°
P3P.062e	IEC200-225	342	380	175	53	28	150	1091	297	162	75	22.5°
	IEC250-280	406	380	175	53	28	150	1091	297	162	75	22.5°
	IEC315	436	380	175	53	28	150	1091	297	162	75	22.5°
	NEMA284-449	342	380	175	53	28	150	1091	297	162	75	22.5°
P2P.072e	IEC315	440	380	175	53	28	150	911	297	162	75	22.5°
	IEC355	518	380	175	53	28	150	929	315	162	75	22.5°
	NEMA444-449	440	380	175	53	28	150	911	297	162	75	22.5°
P3P.072e	IEC200-225	342	380	175	53	28	150	1142	297	162	75	22.5°
	IEC250-280	406	380	175	53	28	150	1142	297	162	75	22.5°
	IEC315	436	380	175	53	28	150	1142	297	162	75	22.5°
	NEMA284-449	342	380	175	53	28	150	1142	297	162	75	22.5°
P2P.082e	IEC315	441	380	175	53	28	150	971	297	162	75	22.5°
	IEC355	519	380	175	53	28	150	989	315	162	75	22.5°
	NEMA444-449	377	380	175	53	28	150	971	297	162	75	22.5°
P3P.082e	IEC280	377	380	175	53	28	150	1184	297	162	75	22.5°
	IEC315	441	380	175	53	28	150	1184	297	162	75	22.5°
	IEC355	519	380	175	53	28	150	1202	315	162	75	22.5°
	NEMA364-447	377	380	175	53	28	150	1184	297	162	75	22.5°

31991203/EN – 08/2025

11.12.4 ADP motor adapter

P..062e - P..082e ADP M4

45 025 01 25

P2P..

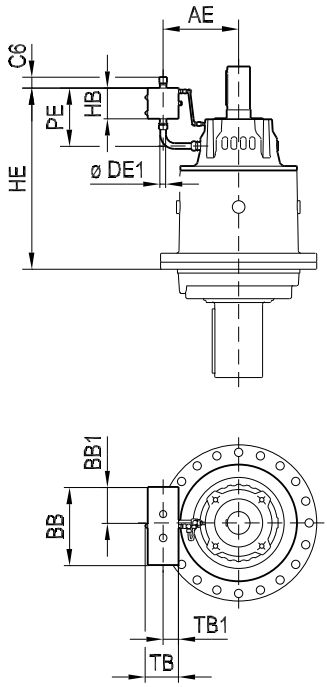

P3P..

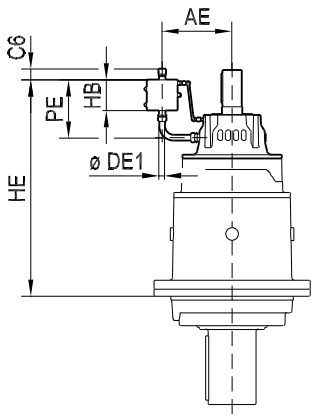

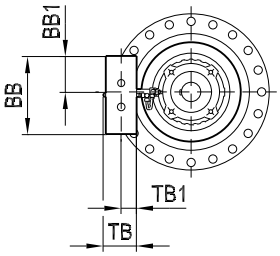

Type	AE	BB	BB1	C6	DE1	HB	HE	PE	TB	TB1
P2P.062e	368	380	175	53	28	150	874	283	162	75
P3P.062e	324	380	175	53	28	150	1044	283	162	75
P2P.072e	403	380	175	53	28	150	945	283	162	75
P2P.072e	368	380	175	53	28	150	1129	283	162	75
P2P.082e	403	380	175	53	28	150	1000	283	162	75
P2P.082e	368	380	175	53	28	150	1194	283	162	75

31991203/EN – 08/2025

11.12.5 AMPF/DMF motor adapter

P..062e - P..082e AMPF / DMF M4

45 027 01 25

P2P..

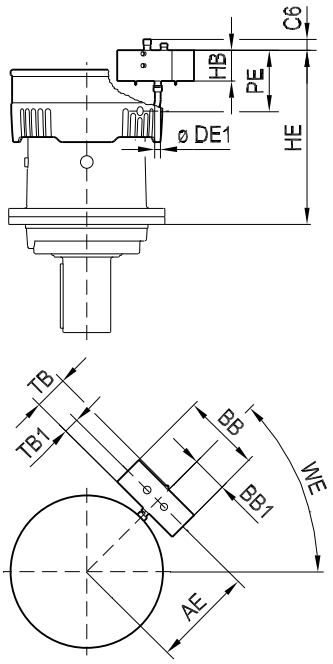

P3P..

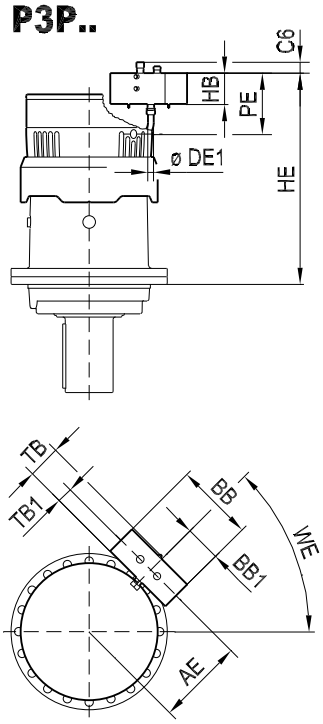

Type	AE	BB	BB1	C6	DE1	HB	HE	PE	TB	TB1	WE
P2P.062e	517	380	175	53	28	150	825	297	162	75	45°
P3P.062e	425	380	175	53	28	150	1018	297	162	75	45°
P3P.072e	446	380	175	53	28	150	1066	297	162	75	45°
P3P.082e	517	380	175	53	28	150	1145	297	162	75	45°

31991203/EN – 08/2025

11.13 Output shafts

11.13.1 P.. solid shaft with 2 keys

45 002 01 14

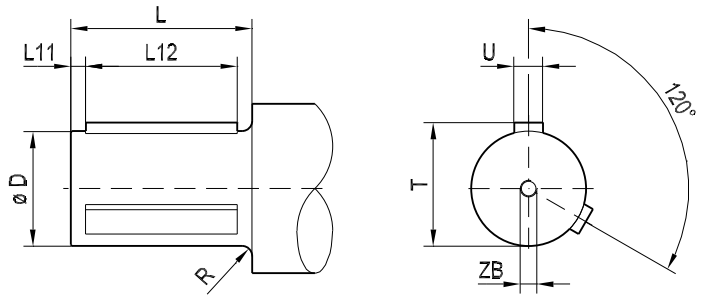

Type	ø D	L11	L12	L	T	U	ZB	R
P..002e	120_{m6}	14	165	200	127	32	M20	5
P..012e	140_{m6}	15	185	220	148	36	M20	5
P..022e	150_{m6}	15	183	220	158	36	M20	10
P..032e	165_{m6}	15	213	250	174	40	M20	10
P..042e	190_{m6}	17.5	255	300	200	45	M20	10
P..052e	210_{m6}	17.5	300	350	221	50	M24	10
P..062e	240_{m6}	21	340	400	252	56	M24	10
P..072e	260_{m6}	22	340	400	272	56	M24	10
P..082e	290_{m6}	22	390	450	302	63	M24	10

11.13.2 P.R.. smooth solid shaft

45 003 01 14

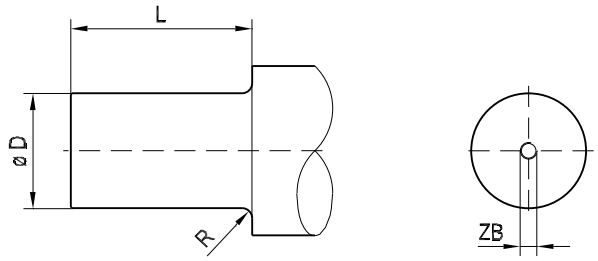

Type	ø D	L	ZB	R
P..002e	120_{v6}	200	M20	5
P..012e	140_{v6}	220	M20	5
P..022e	150_{v6}	220	M20	10
P..032e	165_{v6}	250	M20	10
P..042e	190_{v6}	300	M20	10
P..052e	210_{v6}	350	M24	10
P..062e	240_{v6}	400	M24	10
P..072e	260_{v6}	400	M24	10
P..082e	290_{v6}	450	M24	10

31991203/EN – 08/2025

11.13.3 P.L.. splined solid shaft

45 002 02 16

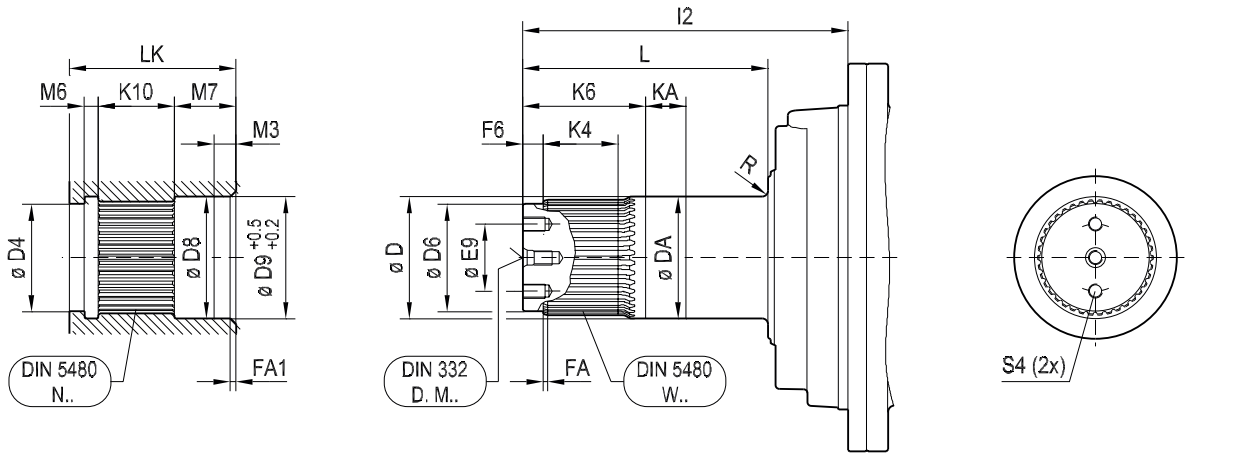

DIN 5480 – Solid shaft															
Type	**ø D**	**ø DA**	**ø D6**	**KA**	**F6**	**L**	**I2**	**K6**	**K4**	**R**	**ø E9**	**DIN 332 D.M..**	**S4 (2 ×)**	**FA**	**DIN 5480-W..**
P.L.002e	120_{h9}	120_{m6}	95_{m6}	20	20	200	280	135	80	5	-	M20	-	8	110x5x30x20x8f
P.L.012e	140_{h9}	140_{m6}	115_{m6}	25	25	220	298	145	85	5	-	M20	-	8	130x5x30x24x8f
P.L.022e	150_{h9}	150_{m6}	125_{m6}	25	25	220	305	155	95	10	-	M20	-	8	140x5x30x26x8f
P.L.032e	165_{h9}	165_{m6}	145_{m6}	25	25	250	340	157	100	10	90	M20	M20	8	160x5x30x30x8f
P.L.042e	190_{h9}	190_{m6}	165_{m6}	30	30	300	430	175	110	10	125	M20	M20	8	180x5x30x34x8f
P.L.052e	210_{h9}	210_{m6}	185_{m6}	35	35	350	490	180	110	10	140	M24	M24	8	200x5x30x38x8f
P.L.062e	240_{h9}	240_{m6}	205_{m6}	35	35	400	540	210	130	10	160	M24	M24	8	220x5x30x42x8f
P.L.072e	260_{h9}	260_{m6}	235_{m6}	40	40	400	545	215	135	10	160	M24	M24	8	250x5x30x48x8f
P.L.082e	290_{h9}	290_{m6}	265_{m6}	40	40	450	610	235	155	10	190	M24	M24	8	280x5x30x54x8f

Recommendations for customer shaft										
Type	**ø D4**	**ø D8**	**ø D9**	**M6**	**M7**	**M3**	**K10**	**FA1**	**LK**	**DIN 5480-N..**
P.L.002e	95^{F7}	120^{F7}	120	10	102	45	70	12×45°	200	110×5×30×20×9H
P.L.012e	115^{F7}	140^{F7}	140	10	112	50	75	12×45°	220	130×5×30×24×9H
P.L.022e	125^{F7}	150^{F7}	150	10	102	40	85	12×45°	220	140×5×30×26×9H
P.L.032e	145^{F7}	165^{F7}	165	10	127	68	90	12×45°	250	160×5×30×30×9H
P.L.042e	165^{F7}	190^{F7}	190	12	162	95	100	12×45°	300	180×5×30×34×9H
P.L.052e	185^{F7}	210^{F7}	210	12	207	135	100	12×45°	350	200×5×30×38×9H
P.L.062e	205^{F7}	240^{F7}	240	12	237	155	120	12×45°	400	220×5×30×42×9H
P.L.072e	235^{F7}	260^{F7}	260	12	227	145	125	12×45°	400	250×5×30×48×9H
P.L.082e	265^{F7}	290^{F7}	290	12	257	175	145	12×45°	450	280×5×30×54×9H

INFORMATION

For applications with overhung loads, consult SEW-EURODRIVE.

31991203/EN – 08/2025

11.13.4 P.V.. splined hollow shaft

45 001 01 16

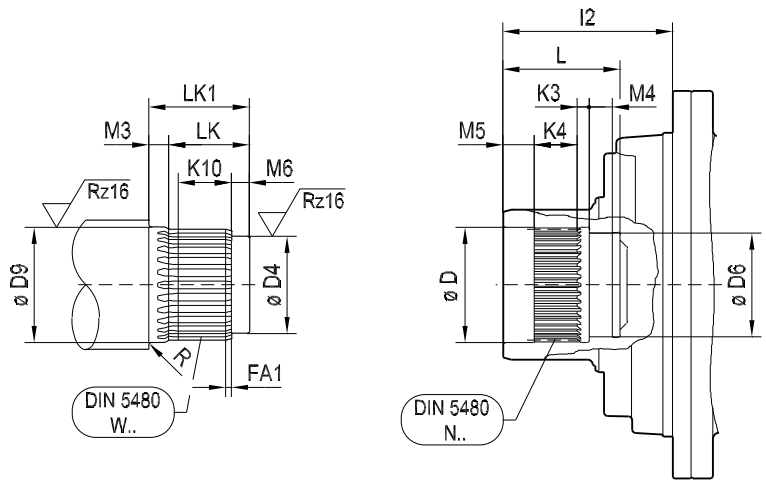

DIN 5480 – Hollow shaft									
Type	**ø D**	**ø D6**	**M5**	**M4**	**L**	**I2**	**K4**	**K3**	**DIN 5480-N..**
P.V.002e	132^{H7}	110^{H7}	35	20	138	165	50	18	130x5x30x24x9H
P.V.012e	152^{H7}	130^{H7}	35	20	140	170	54	19	150x5x30x28x9H
P.V.022e	162^{H7}	140^{H7}	35	20	152.5	180	65	19.5	160x5x30x30x9H
P.V.032e	182^{H7}	155^{H7}	45	25	175	210	70	20	180x5x30x34x9H
P.V.042e	202^{H7}	180^{H7}	45	30	191	255	80	21	200x5x30x38x9H
P.V.052e	222^{H7}	200^{H7}	55	35	210	275	82	23	220x5x30x42x9H
P.V.062e	252^{H7}	230^{H7}	60	35	240	295	95	32	250x5x30x48x9H
P.V.072e	282^{H7}	250^{H7}	60	37	256	320	98	43	280x5x30x54x9H
P.V.082e	302^{H7}	280^{H7}	60	38	263	340	125	22	300x5x30x58x9H

Recommendations for customer shaft										
Type	**ø D9**	**ø D4**	**M3**	**M6**	**LK1**	**LK**	**K10**	**R**	**FA1**	**DIN 5480-W..**
P.V.002e	132_{g6}	110_{g6}	24	30	125	101	62	3	8×30°	130x5x30x24x8f
P.V.012e	152_{g6}	130_{g6}	24	31	130	106	66	3	8×30°	150x5x30x28x8f
P.V.022e	162_{g6}	140_{g6}	24	31.5	141.5	117.5	77	3	8×30°	160x5x30x30x8f
P.V.032e	182_{g6}	155_{g6}	34	37	162	128	82	5	8×30°	180x5x30x34x8f
P.V.042e	202_{g6}	180_{g6}	34	43	178	144	92	5	8×30°	200x5x30x38x8f
P.V.052e	222_{g6}	200_{g6}	44	50	197	153	94	5	8×30°	220x5x30x42x8f
P.V.062e	252_{g6}	230_{g6}	49	59	224	175	107	5	8×30°	250x5x30x48x8f
P.V.072e	282_{g6}	250_{g6}	49	72	240	191	110	6	8×30°	280x5x30x54x8f
P.V.082e	302_{g6}	280_{g6}	49	52	247	198	137	6	8×30°	300x5x30x58x8f

INFORMATION

For applications with overhung loads, consult SEW-EURODRIVE.

31991203/EN – 08/2025

11.13.5 Hollow shaft with forcing bore

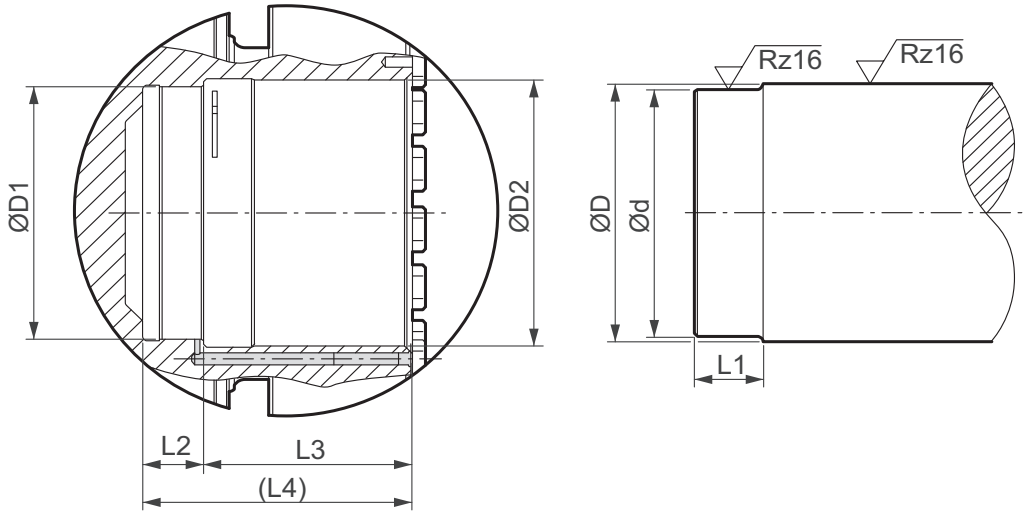

The following figure shows the cross section of a disassembly bore [1]. If the customer shaft has a shaft shoulder, dimension "L" must be large enough to connect the oil pump(s).

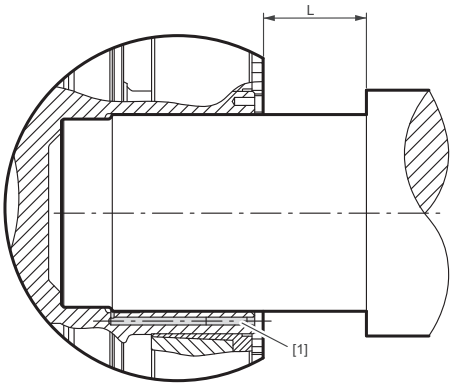

Type	Planetary carrier hollow shaft					Customer shaft		
	Ø D1 mm	Ø D2 mm	L2 mm	L3 mm	L4 mm	Ø D mm	Ø d mm	L1 mm
P.002	110^{H8}	120^{H7}	35	103	138	120_{h6}	110_{g7}	46
P.012	130^{H8}	140^{H7}	32	108	140	140_{h6}	130_{g7}	45
P.022	140^{H8}	150^{H7}	34	108	142	150_{h6}	140_{g7}	45
P.032	155^{H8}	165^{H7}	39	136	175	160_{g6}	155_{g7}	55
P.042	180^{H8}	190^{H7}	45	146	191	190_{g6}	180_{g7}	65
P.052	200^{H8}	210^{H7}	47	163	210	210_{g6}	200_{g7}	75
P.062	230^{H8}	240^{H7}	53	187	240	240_{g6}	230_{g7}	80
P.072	250^{H8}	260^{H7}	55	201	256	260_{g6}	250_{g7}	85
P.082	280^{H8}	290^{H7}	56	207	263	290_{g6}	280_{g7}	80

31991203/EN – 08/2025

11.14 Locking screws of the shrink disk

45 001 00 20

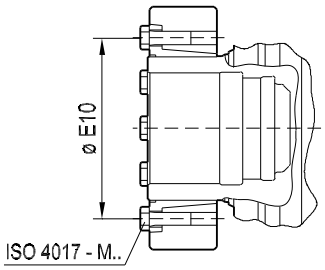

Gear unit type	Size	Ø E10	ISO
P.H..	002e	196	ISO 4017 – M16x45
P.H..	012e	224	ISO 4017 – M16x70
P.H..	022e	240	ISO 4017 – M16x70
P.H..	032e	270	ISO 4017 – M20x60
P.H..	042e	296	ISO 4017 – M20x60
P.H..	052e	318	ISO 4017 – M20x60
P.H..	062e	360	ISO 4017 – M24x80
P.H..	072e	402	ISO 4017 – M24x80
P.H..	082e	424	ISO 4017 – M24x80

31991203/EN – 08/2025

11.15 Protection cover for shrink disk

45 133 02 08

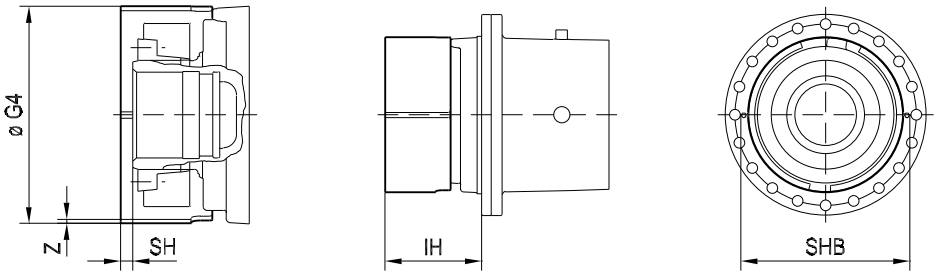

Size	SHB	ø G4	IH	Z	SH
P..002e	350	307	176	2	11
P..012e	396	353	182.5	2	12.5
P..022e	452	409	193	2	13
P..032e	472	429	224.5	2	14.5
P..042e	522	479	269	2	14
P..052e	566	523	293	2	18
P..062e	636	593	312	2	17
P..072e	712	669	335.5	2	15.5
P..082e	776	733	360	2	20

31991203/EN – 08/2025

12 Mass moments of inertia

The mass moments of inertia in kgm² are reduced to the HSS input shaft.

P..002e		kgm²				
i_N	i_{ex}	ADP 	ADPF 	AMP 	DM 	DMF / AMPF 
16	15.23	0.0150	0.0351	0.0133	0.0125	0.0244
18	17.45	0.0119	0.0320	0.0103	0.0095	0.0213
20	19.53	0.0099	0.0300	0.0083	0.0075	0.0193
22.4	22.41	0.0081	0.0282	0.0065	0.0057	0.0176
25	26.68	0.0063	0.0265	0.0047	0.0039	0.0158
31.5	29.68	0.0057	0.0258	0.0041	0.0033	0.0151
35.5	33.64	0.0050	0.0252	0.0034	0.0026	0.0145
40	39.08	0.0045	0.0246	0.0029	0.0021	0.0139
50	51.73	0.0080	0.0191	0.0064	0.0056	0.0175
56	59.26	0.0078	0.0189	0.0062	0.0054	0.0172
63	66.32	0.0076	0.0187	0.0060	0.0052	0.0171
80	75.77	0.0055	0.0166	0.0039	0.0031	0.0150
90	84.79	0.0054	0.0165	0.0038	0.0030	0.0149
100	97.03	0.0047	0.0158	0.0031	0.0023	0.0142
112	111.35	0.0047	0.0157	0.0031	0.0023	0.0141
125	127.35	0.0038	0.0148	0.0021	0.0013	0.0132
140	146.16	0.0037	0.0148	0.0021	0.0013	0.0132
160	164.72	0.0035	0.0146	0.0019	0.0011	0.0129
200	193.59	0.0037	0.0147	0.0020	0.0012	0.0131
224	219.39	0.0036	0.0147	0.0020	0.0012	0.0131
250	251.44	0.0032	0.0143	0.0016	0.0008	0.0127
280	284.95	0.0032	0.0143	0.0016	0.0008	0.0127
315	331.02	0.0032	0.0143	0.0016	0.0008	0.0127

31991203/EN – 08/2025

P..012e		kgm²				
i_N	i_{ex}	ADP 	ADPF 	AMP 	DM 	DMF / AMPF 
16	15.73	0.0297	0.0562	0.0250	0.0243	0.0452
18	18.00	0.0219	0.0484	0.0173	0.0165	0.0374
20	20.11	0.0182	0.0447	0.0136	0.0128	0.0337
22.4	23.01	0.0150	0.0415	0.0104	0.0096	0.0305
25	27.26	0.0119	0.0384	0.0073	0.0065	0.0274
31.5	30.21	0.0108	0.0373	0.0062	0.0054	0.0263
35.5	34.04	0.0097	0.0363	0.0051	0.0043	0.0252
40	39.23	0.0087	0.0353	0.0041	0.0033	0.0243
50	53.42	0.0091	0.0201	0.0074	0.0066	0.0185
56	61.13	0.0084	0.0195	0.0068	0.0060	0.0178
63	68.30	0.0081	0.0191	0.0064	0.0057	0.0175
80	78.16	0.0078	0.0189	0.0062	0.0054	0.0172
90	87.32	0.0057	0.0168	0.0041	0.0033	0.0151
100	99.93	0.0050	0.0160	0.0033	0.0025	0.0144
112	114.35	0.0048	0.0159	0.0032	0.0024	0.0143
125	131.16	0.0039	0.0150	0.0023	0.0015	0.0133
140	150.09	0.0047	0.0157	0.0030	0.0022	0.0141
160	169.15	0.0046	0.0157	0.0030	0.0022	0.0141
200	197.00	0.0037	0.0148	0.0021	0.0013	0.0132
224	222.01	0.0037	0.0148	0.0021	0.0013	0.0131
250	250.21	0.0035	0.0145	0.0018	0.0010	0.0129
280	288.36	0.0033	0.0143	0.0016	0.0008	0.0127
315	332.32	0.0032	0.0143	0.0016	0.0008	0.0127

31991203/EN – 08/2025

P..022e		kgm²				
i_N	i_{ex}	ADP 	ADPF 	AMP 	DM 	DMF / AMPF 
16	15.73	0.0490	0.1079	0.0474	0.0436	0.0741
18	18.00	0.0378	0.0967	0.0362	0.0324	0.0628
20	20.11	0.0322	0.0911	0.0306	0.0268	0.0573
22.4	23.01	0.0262	0.0851	0.0245	0.0207	0.0512
28	27.26	0.0200	0.0789	0.0183	0.0145	0.0450
31.5	30.21	0.0175	0.0764	0.0159	0.0121	0.0426
35.5	34.04	0.0154	0.0743	0.0138	0.0100	0.0404
40	39.23	0.0133	0.0722	0.0117	0.0079	0.0384
50	51.73	0.0143	0.0344	0.0126	0.0119	0.0237
56	59.19	0.0132	0.0334	0.0116	0.0108	0.0227
63	66.13	0.0127	0.0328	0.0111	0.0103	0.0222
80	75.68	0.0122	0.0323	0.0105	0.0097	0.0216
90	84.79	0.0085	0.0286	0.0069	0.0061	0.0180
100	97.03	0.0082	0.0283	0.0066	0.0058	0.0176
112	111.35	0.0068	0.0269	0.0052	0.0044	0.0163
125	127.35	0.0077	0.0278	0.0061	0.0053	0.0171
140	143.53	0.0076	0.0277	0.0059	0.0052	0.0170
160	156.99	0.0052	0.0254	0.0036	0.0028	0.0147
180	174.68	0.0048	0.0249	0.0032	0.0024	0.0142
200	193.59	0.0047	0.0249	0.0031	0.0023	0.0142
224	219.39	0.0043	0.0244	0.0027	0.0019	0.0138
250	247.25	0.0043	0.0244	0.0026	0.0018	0.0137
280	287.23	0.0039	0.0240	0.0023	0.0015	0.0134
315	331.02	0.0039	0.0240	0.0022	0.0015	0.0133

31991203/EN – 08/2025

P..032e		kgm²				
i_N	i_{ex}	ADP 	ADPF 	AMP 	DM 	DMF / AMPF 
16	15.73	0.0746	0.1079	0.0682	0.0644	0.1272
18	18.00	0.0584	0.0967	0.0520	0.0482	0.1110
20	20.11	0.0497	0.0911	0.0432	0.0394	0.1023
22.4	23.01	0.0404	0.0851	0.0340	0.0302	0.0930
28	27.26	0.0314	0.0789	0.0249	0.0212	0.0840
31.5	30.21	0.0278	0.0764	0.0213	0.0175	0.0804
35.5	34.04	0.0246	0.0743	0.0181	0.0143	0.0772
40	39.23	0.0215	0.0722	0.0150	0.0112	0.0741
56	53.42	0.0279	0.0344	0.0233	0.0225	0.0434
63	61.13	0.0265	0.0334	0.0219	0.0211	0.0420
71	68.30	0.0258	0.0328	0.0211	0.0203	0.0413
80	78.16	0.0250	0.0323	0.0203	0.0195	0.0405
90	87.32	0.0158	0.0286	0.0112	0.0104	0.0313
100	99.93	0.0132	0.0283	0.0086	0.0078	0.0287
112	114.35	0.0128	0.0269	0.0082	0.0074	0.0283
125	131.16	0.0097	0.0278	0.0051	0.0043	0.0252
140	150.09	0.0123	0.0277	0.0077	0.0069	0.0278
160	160.39	0.0101	0.0254	0.0055	0.0047	0.0256
180	177.75	0.0093	0.0249	0.0047	0.0039	0.0248
200	197.00	0.0092	0.0249	0.0046	0.0038	0.0247
224	222.01	0.0091	0.0244	0.0045	0.0037	0.0247
250	250.21	0.0084	0.0244	0.0038	0.0030	0.0240
280	288.36	0.0078	0.0240	0.0031	0.0024	0.0233
315	332.32	0.0077	0.0240	0.0031	0.0023	0.0232

31991203/EN – 08/2025

P..042e		kgm²				
i_N	i_{ex}	ADP 	ADPF 	AMP 	DM 	DMF / AMPF 
16	15.73	0.1175	0.2439	0.1111	0.1073	0.1951
18	18.00	0.0889	0.2153	0.0824	0.0786	0.1664
20	20.11	0.0732	0.1996	0.0667	0.0629	0.1507
22.4	23.01	0.0582	0.1846	0.0517	0.0479	0.1357
28	27.26	0.0434	0.1698	0.0369	0.0331	0.1209
31.5	30.21	0.0377	0.1641	0.0313	0.0275	0.1153
35.5	34.04	0.0325	0.1589	0.0260	0.0222	0.1100
40	39.23	0.0278	0.1542	0.0213	0.0175	0.1054
50	53.42	0.0462	0.1051	0.0446	0.0408	0.0713
56	61.13	0.0437	0.1026	0.0421	0.0383	0.0688
63	68.30	0.0424	0.1013	0.0408	0.0370	0.0674
80	78.16	0.0411	0.1000	0.0395	0.0357	0.0661
90	87.32	0.0281	0.0870	0.0265	0.0227	0.0532
100	99.93	0.0230	0.0819	0.0214	0.0176	0.0481
112	114.35	0.0224	0.0813	0.0208	0.0170	0.0475
125	131.16	0.0157	0.0746	0.0141	0.0103	0.0408
140	150.09	0.0216	0.0805	0.0200	0.0162	0.0467
160	160.39	0.0169	0.0758	0.0152	0.0115	0.0419
180	177.75	0.0150	0.0739	0.0134	0.0096	0.0400
200	197.00	0.0149	0.0738	0.0132	0.0094	0.0399
224	222.01	0.0147	0.0736	0.0131	0.0093	0.0398
250	250.21	0.0132	0.0721	0.0116	0.0078	0.0383
280	288.36	0.0117	0.0706	0.0100	0.0063	0.0367
315	332.32	0.0116	0.0705	0.0100	0.0062	0.0367

31991203/EN – 08/2025

P..052e		kgm²				
i_N	i_{ex}	ADP 	ADPF 	AMP 	DM 	DMF / AMPF 
16	15.73	0.1837	0.3101	0.1567	0.1529	0.2742
18	18.00	0.1381	0.2645	0.1111	0.1073	0.2286
20	20.11	0.1158	0.2423	0.0888	0.0850	0.2063
22.4	23.01	0.0952	0.2216	0.0682	0.0644	0.1857
28	27.26	0.0752	0.2017	0.0482	0.0444	0.1657
31.5	30.21	0.0673	0.1937	0.0403	0.0365	0.1578
35.5	34.04	0.0604	0.1868	0.0334	0.0296	0.1509
40	39.23	0.0540	0.1804	0.0269	0.0232	0.1445
50	53.42	0.0684	0.1523	0.0620	0.0582	0.1211
56	61.13	0.0645	0.1483	0.0581	0.0543	0.1171
63	68.30	0.0626	0.1464	0.0561	0.0523	0.1152
80	78.16	0.0608	0.1446	0.0543	0.0505	0.1134
90	87.32	0.0423	0.1261	0.0359	0.0321	0.0949
100	99.93	0.0348	0.1186	0.0283	0.0246	0.0874
112	114.35	0.0340	0.1178	0.0275	0.0237	0.0866
125	131.16	0.0245	0.1083	0.0180	0.0143	0.0771
140	150.09	0.0328	0.1167	0.0264	0.0226	0.0854
160	160.39	0.0262	0.1100	0.0198	0.0160	0.0788
180	177.75	0.0235	0.1074	0.0171	0.0133	0.0762
200	197.00	0.0233	0.1072	0.0169	0.0131	0.0760
224	222.01	0.0232	0.1070	0.0167	0.0130	0.0758
250	250.21	0.0210	0.1048	0.0145	0.0107	0.0736
280	288.36	0.0187	0.1026	0.0123	0.0085	0.0714
315	332.32	0.0187	0.1025	0.0122	0.0084	0.0713

31991203/EN – 08/2025

P..062e		kgm²				
i_N	i_{ex}	ADP 	ADPF 	AMP 	DM 	DMF / AMPF 
16	15.73	0.3708	-	0.3518	-	0.8288
18	18.00	0.2925	-	0.2734	-	0.7504
20	20.11	0.2421	-	0.2230	-	0.7001
22.4	23.01	0.1960	-	0.1769	-	0.6540
28	27.26	0.1485	-	0.1294	-	0.6065
31.5	30.21	0.1289	-	0.1099	-	0.5869
35.5	34.04	0.1119	-	0.0929	-	0.5699
40	39.23	0.0950	-	0.0759	-	0.5530
56	53.42	0.1112	0.2376	0.1047	0.1010	0.1888
63	61.13	0.1044	0.2308	0.0979	0.0942	0.1820
71	68.30	0.1000	0.2264	0.0936	0.0898	0.1776
80	78.16	0.0960	0.2224	0.0896	0.0858	0.1736
90	87.32	0.0625	0.1889	0.0560	0.0522	0.1400
100	99.93	0.0500	0.1764	0.0435	0.0397	0.1276
112	114.35	0.0481	0.1745	0.0417	0.0379	0.1257
125	131.16	0.0330	0.1594	0.0265	0.0227	0.1105
140	150.09	0.0454	0.1718	0.0390	0.0352	0.1230
160	160.39	0.0348	0.1613	0.0284	0.0246	0.1124
180	177.75	0.0308	0.1572	0.0243	0.0205	0.1083
200	197.00	0.0303	0.1567	0.0239	0.0201	0.1079
224	222.01	0.0299	0.1563	0.0235	0.0197	0.1075
250	250.21	0.0263	0.1527	0.0199	0.0161	0.1039
280	288.36	0.0232	0.1496	0.0167	0.0129	0.1007
315	332.32	0.0229	0.1493	0.0165	0.0127	0.1005

31991203/EN – 08/2025

P..072e		kgm²				
i_N	i_{ex}	ADP 	ADPF 	AMP 	DM 	DMF / AMPF 
16	15.75	0.5617	-	0.5040	-	-
18	17.98	0.4395	-	0.3817	-	-
20	20.04	0.3705	-	0.3128	-	-
22.4	22.86	0.3037	-	0.2460	-	-
28	26.92	0.2335	-	0.1758	-	-
31.5	29.71	0.2068	-	0.1491	-	-
35.5	33.31	0.1833	-	0.1255	-	-
40	38.10	0.1603	-	0.1025	-	-
56	53.48	0.1712	0.2976	0.1442	0.1404	0.2617
63	61.07	0.1606	0.2870	0.1336	0.1298	0.2511
71	68.07	0.1546	0.2810	0.1276	0.1238	0.2451
80	77.63	0.1488	0.2752	0.1218	0.1180	0.2393
90	87.03	0.0980	0.2245	0.0710	0.0672	0.1885
100	99.59	0.0816	0.2081	0.0546	0.0508	0.1721
112	113.57	0.0789	0.2054	0.0519	0.0481	0.1694
125	130.72	0.0594	0.1859	0.0324	0.0286	0.1499
140	147.64	0.0750	0.2014	0.0480	0.0442	0.1655
160	158.42	0.0616	0.1880	0.0346	0.0308	0.1521
180	175.57	0.0562	0.1826	0.0292	0.0254	0.1467
200	193.79	0.0556	0.1820	0.0286	0.0248	0.1461
224	217.21	0.0550	0.1815	0.0280	0.0242	0.1455
250	244.80	0.0507	0.1771	0.0237	0.0199	0.1412
280	282.12	0.0467	0.1731	0.0197	0.0159	0.1372
315	322.69	0.0464	0.1728	0.0193	0.0155	0.1368

31991203/EN – 08/2025

P..082e		kgm²				
i_N	i_{ex}	ADP 	ADPF 	AMP 	DM 	DMF / AMPF 
16	15.96	0.9445	-	0.8868	-	-
18	18.19	0.7046	-	0.6469	-	-
20	20.23	0.5834	-	0.5257	-	-
22.4	22.99	0.4655	-	0.4078	-	-
28	26.94	0.3450	-	0.2873	-	-
31.5	29.62	0.2995	-	0.2417	-	-
35.5	33.04	0.2598	-	0.2021	-	-
40	37.53	0.2209	-	0.1632	-	-
56	54.20	0.3412	0.5857	0.3221	-	0.7992
63	61.76	0.3204	0.5649	0.3013	-	0.7784
71	68.70	0.3099	0.5544	0.2908	-	0.7679
80	78.08	0.2997	0.5441	0.2806	-	0.7577
90	87.83	0.2048	0.4493	0.1858	-	0.6628
100	100.51	0.1675	0.4120	0.1484	-	0.6255
112	114.24	0.1627	0.4072	0.1437	-	0.6207
125	131.93	0.1124	0.3568	0.0933	-	0.5703
140	147.19	0.1560	0.4005	0.1369	-	0.6140
160	158.52	0.1213	0.3658	0.1022	-	0.5793
180	175.69	0.1068	0.3512	0.0877	-	0.5647
200	193.19	0.1057	0.3502	0.0866	-	0.5637
224	215.47	0.1048	0.3492	0.0857	-	0.5627
250	242.84	0.0929	0.3374	0.0739	-	0.5509
280	279.86	0.0807	0.3251	0.0616	-	0.5386
315	317.93	0.0801	0.3246	0.0610	-	0.5381

31991203/EN – 08/2025

13 Abbreviation key

d_0	Mean diameter of the installed transmission element	mm
η	Efficiency	-
f_1	Altitude factor	-
f_L	Service life factor	-
f_T	Temperature factor	-
f_z	Transmission element factor	-
F_{A1}	Axial load on HSS	N
F_{A2}	Axial load on LSS	N
F_F	Peak load factor	-
F_R	Overhung load	N
F_{R2}	Radial load on LSS	N
$F_{R\ per}$	Permitted overhung load	N
$F_{R\ max}$	Maximum overhung load	N
F_{Start}	Start factor	-
$F_{S\ min}$	Application-specific service factor	-
F_S	Service factor = MN2 / MK2 = PN1 / PK1	-
H	Installation altitude above sea level	m
HSS	High-speed gear shaft (usually the input shaft)	-
i	Gear ratio	-
i_N	Nominal gear ratio	-
i_{ex}	Exact gear ratio	-
IP...	Degree of protection of electrical instruments	-
$L_{h\ min.}$	Required minimum bearing life of the gear unit	h
LSS	Low-speed gear shaft (usually output shaft)	-
m	Mass	kg
M_a	Output torque in relation to the motor power	Nm
$M_{a\ LH}$	Gear unit torque dependent on service life	Nm
$M_{b,all.1}$	Permitted bending torque	Nm
M_{K1}	Input torque (= operating torque at HSS)	Nm
$M_{K1\ max}$	Peak input torque (= peak operating torque at HSS)	Nm
M_{K2}	Output torque (= operating torque at LSS)	Nm
$M_{K2\ max}$	Peak output torque (= peak operating torque at LSS)	Nm
$M_{K2\ perm}$	Permitted peak output torque	Nm
M_M	Nominal motor torque	Nm
M_{N2}	Nominal gear unit torque	Nm
n_1	Input speed	min^{-1}
n_2	Output speed	min^{-1}
n_M	Motor speed	min^{-1}
P_{K1}	Operating power at HSS	kW
$P_{K1\ max}$	Peak operating power at HSS	kW
$P_{K1\ perm}$	Permitted peak power at HSS	kW
P_{K2}	Operating power at LSS	kW
P_M	Nominal motor power	kW
P_{N1}	Nominal gear unit power (based on HSS)	kW
P_T	Thermal rating of the gear unit	kW
P_{TH}	Nominal thermal rating of the gear unit	kW
S_{Dy}	Dynamic safety according to shaft strength	-
S_{St}	Static safety according to shaft strength	-
t	Time under load within a cycle	s
T_{amb}	Ambient temperature	°C

31991203/EN – 08/2025

SEW EURODRIVE

Index

A

Additional documentation 9
Area of application 12

B

Backstop 51
Bearing greases 82
Benefits at a glance 12
Brakemotors 16
Breather
  Breather with filter insert /PI 42
  Desiccant breather filter /DC 43
  Standard 41

C

Cable entry 49
Churning losses 57
Coating system
  OS 1 26
  OS 2 26
  OS 3 26
  OS 4 27
Configuration 54
Configuration example 66
Connection screws, scope of delivery 83
Copyright notice 9

D

Decimal separator 9
Desiccant breather filter 43
Design features 12
Dimension sheets, note 86
Direction of rotation with backstop 51
Documentation, additional 9
DRN 30
DRU 30

E

Efficiency 57
External preservation 28

G

General information 15

H

Hollow shaft with shrink disk 20

I

Internal conservation 28

K

Keys 86

L

Lubricant
  Compatibility with oil seal 75
Lubricating greases 82

M

M1 – M6 45
Motor options 87
Motor terminal box 49
Motor, dimensions 87
Motors
  DRN.. 30
  DRU.. 30
Mounting position 45

N

Nameplate 24
Noise 15

O

Oil bath lubrication 35
Oil drain valve 34
Oil expansion tank 35, 86
  Mounting position M2 35
  Mounting position M4 36
Oil riser pipe 86
Oil seal
  Lubricant compatibility 75
Oil selection
  Information 71
  Mineral oil 71
  Synthetic oil 71
Operating torque 57
Order information 49
Output shaft variants 20

31991203/EN – 08/25

P

Packaging 28
Painting 15
Pivoted mounting position 46
Product description, general information 15
Product names 9
Project planning procedure 53
Pt100 temperature sensor 44
  Dimensions 44

S

Sample orders 51
Scope of delivery 83
Sealing grease 82
Selection tables, structure 85
Service factor, application-specific 57
SEW-EURODRIVE
  Group of companies 5
Shrink disk
  Locking screws 367
Shrink disk cover 368
Solid shaft with key 20
Splash lubrication 33
Storage conditions 28

T

Technical data 17
Temperature sensor Pt100
  Electrical connection 44
  Technical data 44
Tolerances 86
Torque arm 50
Trademarks 9
Transport conditions 28
Type designation 22

V

Variants 18
Volume 15

31991203/EN – 08/25

14 Contacting SEW-EURODRIVE

You can find the worldwide contact data and locations on the **SEW-EURODRIVE website** via the following link or the QR code shown below.

https://www.sew-eurodrive.de/contacts-worldwide



31991203/EN – 08/2025

IoT App
DriveRadar®

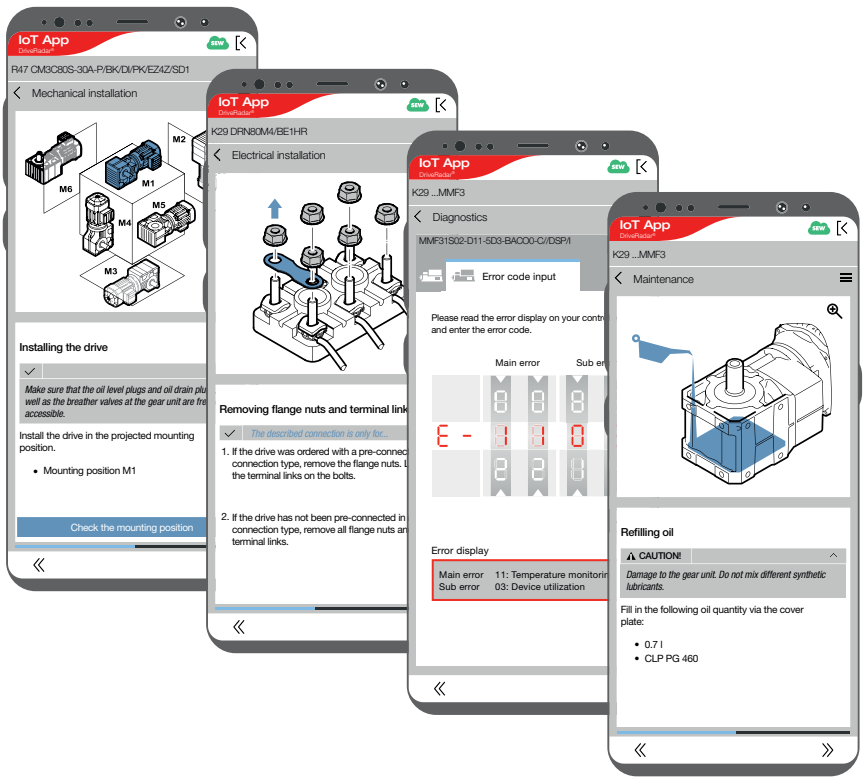

https://iotapp.io

Google Play App Store

THE GREEN SIDE OF DRIVE

Documentation and technical information on your smartphone – paperless and always available





SEW-EURODRIVE GmbH & Co KG
Ernst-Blickle-Str. 42
76646 BRUCHSAL
GERMANY
Tel. +49 7251 75-0
Fax +49 7251 75-1970
sew@sew-eurodrive.com
→ www.sew-eurodrive.com