SEW EURODRIVE

Assembly and Operating Instructions



Industrial Gear Units
X..e Series – /HC Design

Edition 08/2024

31975062/EN



Table of Contents

1 General information 7
1.1 About this documentation 7
1.2 Structure of the safety notes 7
1.2.1 Meaning of signal words 7
1.2.2 Structure of section-related safety notes 7
1.2.3 Structure of embedded safety notes 8
1.3 Decimal separator in numerical values 9
1.4 Product names and trademarks 9
1.5 Copyright notice 9
1.6 Rights to claim under limited warranty 9
1.7 Recycling, reprocessing, reuse 9
1.8 Other applicable documentation 9

2 Safety notes 11
2.1 Preliminary information 11
2.2 Duties of the user 11
2.3 Target group 11
2.4 Designated use 12
2.5 Other applicable documentation 13
2.6 Safety symbols on the gear unit 13
2.7 Weights 15
2.8 Symbols on the packaging 16
2.9 Transport 17
2.9.1 General information 17
2.10 Storage and transport conditions 19
2.10.1 Internal preservation 19
2.10.2 Exterior preservation 19
2.10.3 Packaging 19
2.10.4 Storage conditions 20

3 Gear unit structure 21
3.1 Structure 21
3.2 Type designation 22
3.3 Mounting position 23
3.3.1 Definition 23
3.3.2 Deviating mounting positions 23
3.4 Mounting positions 24
3.4.1 Torque arm 24
3.4.2 Foot-mounted design 24
3.4.3 Three-point mounting 24
3.5 Shaft positions 25
3.5.1 X.F.. 25
3.6 Housing design 26
3.6.1 Hoist housing /HC 26
3.7 Combination overview of housing types and options 26
3.7.1 Crane housing 26

31975062/EN – 08/2024

3.8 Output shaft connection type 27
3.8.1 XFCC: Solid shaft with key 27
3.8.2 XFAC: Hollow shaft with key 27
3.8.3 XFVC: Splined hollow shaft 27
3.9 Brake connection 28
3.10 Coating and surface protection systems 29
3.11 Sealing system 31
3.11.1 Input shaft 31
3.11.2 Output shaft 32
3.12 Lubrication types 33
3.12.1 Splash lubrication 33
3.13 Accessories 33
3.13.1 General accessories 33

4 Structure of options and additional features 34
4.1 Motor adapter /MA 34
4.2 Oil heater /OH 35
4.2.1 Structure 35
4.3 Torque arm /T 36

5 Installation/assembly 37
5.1 Required tools/resources 37
5.2 Important notes 37
5.3 Prerequisites for installation 40
5.3.1 Extended storage 40
5.4 Installing the gear unit 41
5.4.1 Tightening torques: Retaining screws of gear unit mount-on parts 41
5.4.2 Tightening torques: Gear unit mounting of foot-mounted design 41
5.4.3 Foundation 42
5.4.4 Aligning the shaft axis 42
5.5 Filling the gear unit with oil 43
5.5.1 General information 43
5.6 Gear units with solid shaft 44
5.6.1 Mounting input and output components 44
5.7 Operation at low temperatures and permitted dead load 45
5.8 Output shaft as a hollow shaft with keyed connection /..A 46
5.8.1 General information 46
5.8.2 Dimensions of the machine shaft 47
5.8.3 Mounting the gear unit onto the machine shaft 48
5.8.4 Removing the gear unit from the machine shaft 53
5.9 Output shaft as a splined hollow shaft /..V 58
5.9.1 General information 58
5.9.2 Dimensions of the machine shaft 58
5.9.3 Mounting the gear unit onto the machine shaft 59
5.9.4 Disassembling the gear unit from the machine shaft 63
5.10 Torque arm /T 63
5.10.1 Notes 63

31975062/EN – 08/2024

5.10.2 Procedure if an SEW torque arm is included in the scope of delivery 64
5.10.3 Procedure for mounting a torque arm by the operator 66
5.11 Motor adapter /MA 67
5.11.1 Maximum permitted motor weight 67
5.11.2 Claw coupling 68
5.12 Limit temperature for gear unit startup 73
5.13 Oil heater /OH 73
5.13.1 Information on the function of the oil heater 73
5.13.2 Thermostat 75
5.13.3 Connection power and electrical connection of resistor element 77
5.14 Brake 78

6 Startup 79
6.1 Important notes 79
6.2 Oil heater /OH 80
6.2.1 Positioning the thermostat 80
6.3 Starting up the gear unit at low ambient temperatures 81
6.4 Gear unit shutdown / gear unit preservation 81
6.4.1 Internal conservation 81
6.4.2 External corrosion protection 82

7 Inspection/maintenance 83
7.1 Preliminary work regarding inspection and maintenance 83
7.2 Inspection and maintenance intervals 85
7.3 Lubricant change intervals 86
7.4 Checking the oil consistency 87
7.5 Checking the oil level 88
7.5.1 General information 88
7.5.2 Standard procedure 88
7.6 Changing the oil 89
7.6.1 Notes 89
7.6.2 Standard procedure 90
7.7 Filling up sealing system (except Drywell) 90
7.8 Oil heater /OH 92
7.9 Replacing the breather 93
7.10 Motor adapter 94

8 Permitted lubricants 95
8.1 Lubricant selection 95
8.2 Structure of the tables and abbreviations 96
8.3 Explanation of the various lubricants 97
8.4 Lubricant tables 98
8.5 Lubricant fill quantities 101
8.6 Sealing greases/rolling bearing greases 102

9 Malfunctions/remedy 103
9.1 Troubleshooting information 103
9.2 Service 103

31975062/EN – 08/2024

9.3 Possible malfunctions/remedy 104
9.4 Waste disposal..... 105
10 Address list..... 106

31975062/EN – 08/2024

1 General information

1.1 About this documentation

The documentation at hand is the original.

This documentation is an integral part of the product. The documentation is intended for all employees who perform work on the product.

Make sure this documentation is accessible and legible. Ensure that persons responsible for the systems and their operation as well as persons who work on the product independently have read through the documentation carefully and understood it. If you are unclear about any of the information in this documentation or if you require further information, contact SEW-EURODRIVE.

1.2 Structure of the safety notes

1.2.1 Meaning of signal words

The following table shows the graduation and meaning of the signal words in the safety notes.

Signal word	Meaning	Consequences if not observed
⚠ **DANGER**	Imminent danger	Death or severe injuries
⚠ **WARNING**	Possibly dangerous situation	Death or severe injuries
⚠ **CAUTION**	Possibly dangerous situation	Minor injuries
NOTICE	Possible damage to property	Damage to the product or its environment
INFORMATION	Useful information or tip: Simplifies handling of the product.	

1.2.2 Structure of section-related safety notes

Section-related safety notes do not apply to a specific action but to several actions pertaining to one subject. The hazard symbols used either indicate a general hazard or a specific hazard.

This is the formal structure of a safety note for a specific section:



SIGNAL WORD

Type and source of hazard.

Possible consequence(s) if disregarded.

- Measure(s) to prevent the hazard.

31975062/EN – 08/2024

Meaning of the hazard symbols

The hazard symbols in the safety notes have the following meaning:

Hazard symbol	Meaning
	General hazard
	Warning of dangerous electrical voltage
	Warning of hot surfaces
	Warning about suspended load
	Warning of automatic restart

1.2.3 Structure of embedded safety notes

Embedded safety notes are directly integrated into the instructions just before the description of the dangerous step.

This is the formal structure of an embedded safety note:

⚠ **SIGNAL WORD!** Type and source of danger. Possible consequence(s) if disregarded. Measure(s) to prevent danger.

31975062/EN – 08/2024

1.3 Decimal separator in numerical values

In this document, a period is used to indicate the decimal separator.

Example: 30.5 kg

1.4 Product names and trademarks

The product names mentioned in this documentation are trademarks or registered trademarks of the respective titleholders.

1.5 Copyright notice

© 2024 SEW-EURODRIVE. All rights reserved. Copyright law prohibits the unauthorized reproduction, modification, distribution and use of this document – in whole or in part.

1.6 Rights to claim under limited warranty

Read the information in this documentation. This is essential for fault-free operation and fulfillment of any rights to claim under limited warranty. Read the documentation before you start working with the product.

1.7 Recycling, reprocessing, reuse

SEW-EURODRIVE GmbH & Co KG strives to use as few new natural resources as possible in the production of its products. An important aspect of this is the circular economy with the recycling of materials as well as the inspection and/or reprocessing of returned components and their reuse in new products. SEW-EURODRIVE GmbH & Co KG only uses these processes if the resulting materials and components are of the same quality as new parts.

1.8 Other applicable documentation

The following documentation should also be observed:

- Order documents, such as technical specification, spare and wear parts list, dimension sheet, order confirmation, etc.
- If required, the operating instructions of the options installed such as:
  - Oil cooling system
  - Oil supply system
  - Flange coupling
  - Swing base and base frame
  - AC motors
  - DriveRadar®
  - Brake

31975062/EN – 08/2024

  - Coupling
- Separate assembly and operating instructions are available for the following gear units:
  - Bucket elevator gear unit
  - Hoist gear units /HC
  - Agitator gear unit /HM

For up-to-date information about industrial gear units, visit:

www.sew-eurodrive.com

31975062/EN – 08/2024

2 Safety notes

2.1 Preliminary information

The following general safety notes serve the purpose of preventing injury to persons and damage to property. They primarily apply to the use of products described in this documentation. If you use additional components, also observe the relevant warning and safety notes.

2.2 Duties of the user

As the user, you must ensure that the basic safety notes are observed and complied with. Make sure that persons responsible for the machinery and its operation as well as persons who work on the device independently have read through the documentation carefully and understood it.

As the user, you must ensure that all of the work listed in the following is carried out only by qualified specialists:

- Setup and installation
- Installation and connection
- Startup
- Maintenance and repairs
- Shutdown
- Disassembly

Ensure that the persons who work on the product pay attention to the following regulations, conditions, documentation, and information:

- The national and regional regulations governing safety and the prevention of accidents
- Product safety label on the product
- All other associated project planning documents, installation and startup instructions, as well as wiring diagrams
- Do not assemble, install or operate damaged products
- All system-specific specifications and regulations

Ensure that systems in which the product is installed are equipped with additional monitoring and protection devices. Observe the applicable safety regulations and legislation governing technical work equipment and accident prevention regulations.

2.3 Target group

Specialist for mechanical work

Any mechanical work may be performed only by adequately qualified specialists. Specialists in the context of this documentation are persons who are familiar with the design, mechanical installation, troubleshooting, and maintenance of the product, and who possess the following qualifications:

- Qualifications in the field of mechanics in accordance with the national regulations
- Familiarity with this documentation

31975062/EN – 08/2024

Specialist for electrotechnical work

Any electrotechnical work may be performed only by electrically skilled persons with a suitable education. Electrically skilled persons in the context of this documentation are persons who are familiar with electrical installation, startup, troubleshooting, and maintenance of the product, and who possess the following qualifications:

- Qualifications in the field of electrical engineering in accordance with the national regulations
- Familiarity with this documentation

Additional qualifications

In addition to that, these persons must be familiar with the valid safety regulations and laws, as well as with the requirements of the standards, directives, and laws specified in this documentation.

The persons must have the express authorization of the company to operate, program, parameterize, label, and ground devices, systems, and circuits in accordance with the standards of safety technology.

Instructed persons

All work in the areas of transport, storage, installation, operation and waste disposal may only be carried out by persons who are trained and instructed appropriately. These instructions must enable the persons to carry out the required activities and work steps safely and in accordance with regulations.

2.4 Designated use

The industrial gear units of the X.F/HC series are gear units driven by motors that were designed especially to be used as hoist gear units in conveyor systems and hoists.

The gear unit may only be installed and operated within the conditions (utilization category, classification, load spectrum, …) specified in the service and delivery contract and with the parameters specified in the order confirmation. Shut down the gear unit when the projected operating life has been reached. An official expert on cranes may decide on the further operating life or the extent of a general overhaul of the gear unit (cf. FEM 9.755). The further operating life is not extended in case of a maintenance (replacement of individual components even with finite fatigue strength) within the safe operating period.

A general overhaul (required exchange of all components dimensioned with finite fatigue strength) can extend operation for another safe operating period. An official expert on cranes may decide on the further operating life of the gear unit (cf. FEM 9.755). This requires that the actual load during use has actually been lower than the dimensioned load.

Implementing gear unit loads that deviate from the permitted values or operating the gear units in areas of application other than industrial and commercial systems are permitted only after consultation with SEW-EURODRIVE.

The industrial gear units of the X.F/HC series are not designed for transportation of persons. Contact SEW-EURODRIVE if necessary.

Using these products in potentially explosive atmospheres is prohibited, unless specifically designated otherwise.

In compliance with the Machinery Directive 2006/42/EC, the X.F/HC.. series industrial gear units are components for installation in machinery and systems. Within the scope of the Machinery Directive 2006/42/EC, you must not operate the machine in the designated fashion until you have established that the end product complies with the Machinery Directive 2006/42/EC.

In case of questions or ambiguities, contact SEW-EURODRIVE.

31975062/EN – 08/2024

Any violation of the contents of this operating instructions constitutes improper use. In such cases, SEW-EURODRIVE reserves the right to refuse warranty claims or claims for damages.

2.5 Other applicable documentation

Consult also the following documentation:

- Order documents, e.g. dimension sheet, technical specifications, order confirmation, etc.
- If required, the operating instructions of the options installed such as:
  - Oil cooling system
  - Oil supply system
  - Flange coupling
  - Swing base and base frame
  - AC motors
  - Brake
  - Coupling

2.6 Safety symbols on the gear unit



⚠ CAUTION

Safety/caution signs and safety symbols can become dirty or illegible over time.

Risk of injury due to illegible symbols.

- Always make sure that safety, warning, and operating notes are legible.
- Replace damaged safety/caution signs and safety symbols.

The safety symbols on the gear unit must be observed. They have the following meaning:

Safety symbols	Meaning
	Indicates the **oil filling location**. Also serves as proper venting during the oil change.
	Indicates the **oil drain**.
	Indicates the position of the **breather**. Serves to avoid mistaking the oil measuring position for the venting position.
	Indicates the position of the **temperature sensor/temperature switch.**

31975062/EN – 08/2024

Safety symbols	Meaning
	Helps avoid errors caused by lack of understanding. Read the information in the operating instructions.
	For pivoted mounting positions, this symbol on the information sign indicates the mounting position of the gear unit for **checking the oil**.
	Caution: Risk of burns caused by hot surface.
	Caution: Removing the dipstick during operation may result in damage to the gear unit.
	Caution: Risk of burns due to hot gear oil.

After startup, you may remove the following labels from the gear unit.

Meaning
The gear unit is protected against corrosion with VCI.

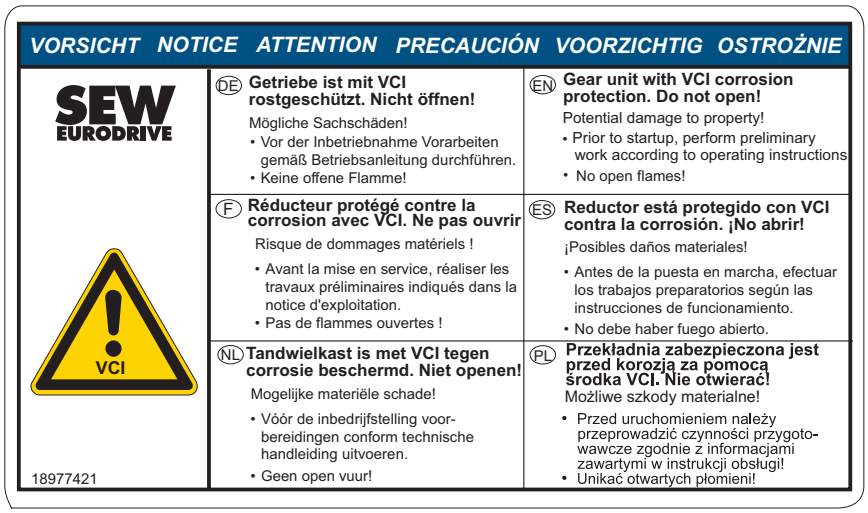

9007204570575499

Meaning
Gear unit is supplied without oil.

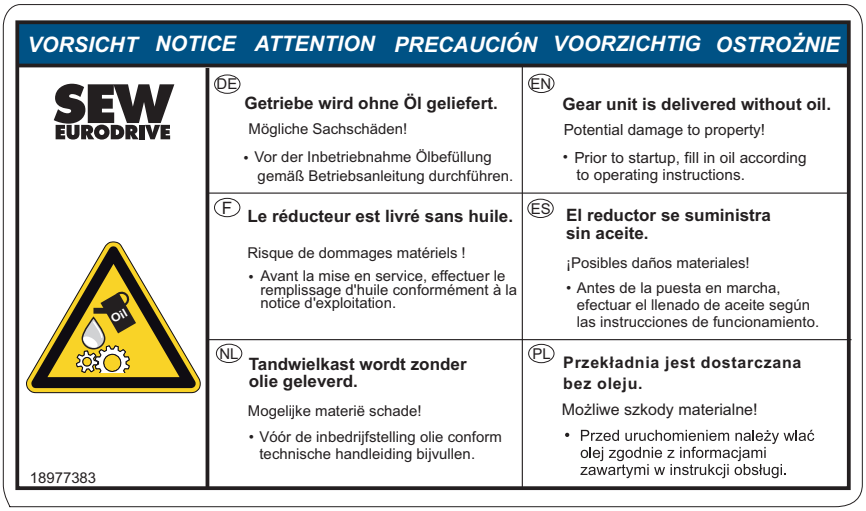

9007204570577675

2.7 Weights

The following table shows guide values for the gear unit weight. For the correct weight, refer to the nameplate.

The gear unit specifications includes the basic gear unit shaft design X.FC...

All specifications exclude the oil fill.

Size	Weight in kg
X4FCC120	360
X4FCC130	410
X4FCC140	530
X4FCC150	650
X3FCC160	850
X4FCC160	830
X3FCC170	950
X4FCC170	970
X3FCC180	1270
X4FCC180	1310
X3FCC190	1370
X4FCC190	1380
X3FCC200	1860
X4FCC200	1870
X3FCC210	1960
X4FCC210	2010
X3FCC220	2440
X4FCC220	2550
X3FCC230	2700
X4FCC230	2900
X3FCC240	3900
X4FCC240	4100
X3FCC250	4000
X4FCC250	4200

2.8 Symbols on the packaging

The symbols on the packaging must be observed. They have the following meaning:

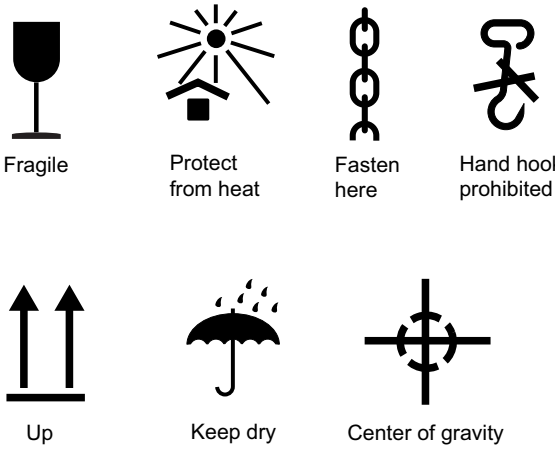

1811486091

2.9 Transport

2.9.1 General information



⚠ WARNING

Suspended loads can fall.

Severe or fatal injuries.

- Do not stand under the suspended load.
- Secure the danger zone.
- Use suitable, sufficiently rated, and undamaged handling equipment.
- Consider the gear unit dimensions, the center of gravity, and the weight that has to be moved when selecting lifting equipment or a crane (see dimension drawing). The weight to be moved is the total weight of the drive package including mount-on components (not only the weight of the gear unit).



⚠ CAUTION

Risk of slipping of unsecured mount-on components, such as keys.

Potential risk of crushing due to falling parts.

- Secure the mount-on components.



⚠ CAUTION

Risk of slipping due to lubricant leaking from damaged seals.

Minor injuries.

- Check the gear unit and mount-on components for leaking lubricant.

NOTICE

Improper transport can damage the gear unit.

Possible damage to property.

- Observe the following notes.

- Inspect the shipment for damage as soon as you receive the delivery. Inform the shipping company immediately about any damage. It may be necessary to suspend startup.
- The weight of the gear unit (without oil) is indicated on the nameplate or on the dimension sheet. Observe the loads and specifications given there.
- If possible, transport the gear unit without oil fill. If this is not possible, note that the weight indicated on the nameplate refers only to the no-load weight of the gear unit, and replace the breather with a screw plug.

31975062/EN – 08/2024

- The gear unit must be transported in a manner that prevents damage to the gear unit and to mount-on components. For example, impacts against exposed shaft ends can damage the gear unit.
- Use only the prescribed suspension points [1] to transport the gear unit (see order documents). The load suspensions of the motor or mount-on components are provided for stabilization purposes only.
- Note that transportation at 2 attachment points is not permitted.
- Note that the eyebolts must be screwed in completely and must be flush to the contact surface. The following types of lifting eyebolt are suitable for gear unit transport.

Size	Thread
X120 – 170	M20
X180 – 210	M24
X220 – 230	M30
X240 – 250	M36

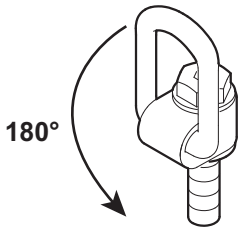

9007215322651019

The following figure shows a transport example.

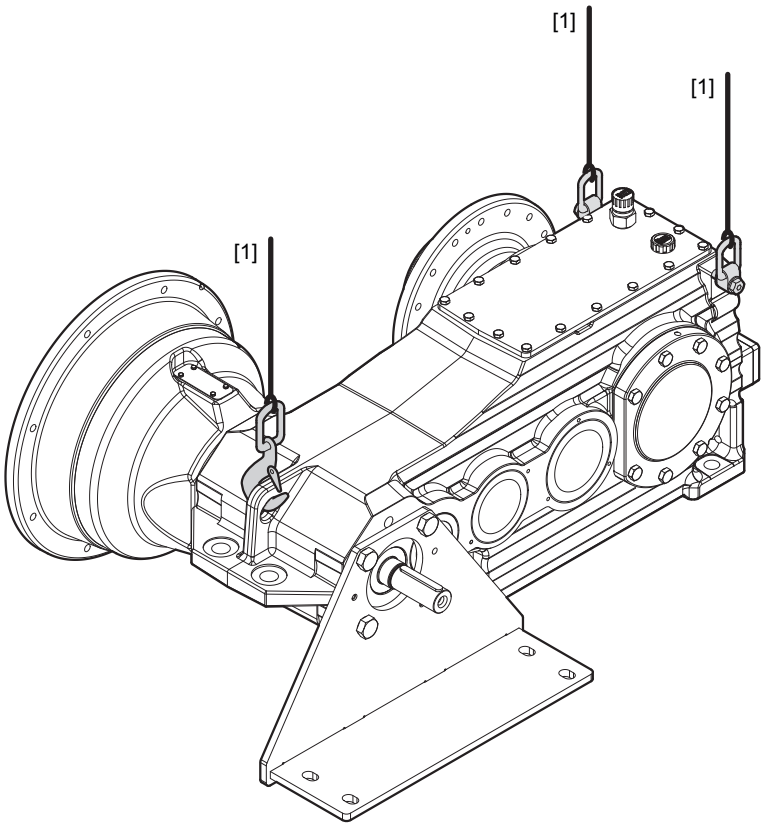

16251179019

31975062/EN – 08/2024

2.10 Storage and transport conditions

The gear units can be shipped with the following protection and packaging types depending on the storage and transport conditions.

2.10.1 Internal preservation

Standard preservation

After the test run, the test oil fill is drained out of the gear unit. The remaining oil film protects the gear unit against corrosion for a limited period of time. If specified in the order, the gear unit can be delivered with oil. Refer to the order documents for more information.

Long-term preservation

After the test run, the test oil fill is drained out of the gear unit and the interior space is filled with a vapor phase inhibitor. The breather is replaced by a screw plug and included in the gear unit delivery.

Preservation with VCI anti-corrosion agent is not permitted for gear units that are operated with food grade lubricants. Contact SEW-EURODRIVE in such cases.

2.10.2 Exterior preservation

The following measures are taken for exterior corrosion protection:

- Anti-corrosion agent is applied to bare, non-painted functional surfaces of shafts, flanges, mounting and foot surfaces of the housing. The anti-corrosion agent must be removed only with a suitable solvent that does not damage the oil seal.
- Small spare parts and loose pieces, such as bolts, nuts, etc., are packed in corrosion protection plastic bags (VCI corrosion protection bags).
- Threaded holes and blind holes are covered with plastic plugs.
- If the gear unit is stored longer than 6 months, you must regularly check the protective coating of unpainted areas as well as the paint coating. Renew areas with damaged protective coating/paint.

2.10.3 Packaging

Standard packaging

The gear unit is delivered on a pallet without cover.

Use: transport by truck or rail

Long-term packaging

The gear unit is delivered in a wooden box that is also appropriate for sea transport.

Use: transport by ship and/or extended storage

31975062/EN – 08/2024

2.10.4 Storage conditions

NOTICE

Improper storage may result in damage to the gear unit.

Possible damage to property.

- While in storage until startup, the gear unit must be stored in a shock-free manner to prevent damage to the rolling bearing raceways.
- Only fill gear units with oil up to the uppermost rolling element. This ensures a remaining air volume for the oil to expand in case of higher temperatures. Add VCI Anticorit to the oil and tightly seal the gear unit (replace the breather with a screw plug).
- The permissible storage temperature is -30 °C to +50 °C.

INFORMATION

The gear units are delivered without oil as standard; different protection systems are required depending on the storage period and storage conditions as shown in the following table.

Corrosion protection + packaging	Storage location	Storage duration
Standard corrosion protection + standard packaging	Under a roof and enclosed at constant temperature and atmospheric humidity (5 °C < ϑ < 60 °C, < 50% relative humidity). No sudden temperature fluctuations. Controlled ventilation with filter (free from dust and dirt). No aggressive vapors and no shocks.	The storage time is max. 6 months with intact surface protection.
Long-term corrosion protection + standard packaging	Under a roof and enclosed at constant temperature and atmospheric humidity (5 °C < ϑ < 60 °C, < 50% relative humidity). No sudden temperature fluctuations. Controlled ventilation of the storage location with filter (free from dust and dirt). No aggressive vapors and no shocks.	The storage time is max. 3 years with regular inspection and checking for intactness.
Long-term corrosion protection + long-term packaging	Under a roof, protected against rain and free from shocks.	The storage time is max. 3 years with regular inspection and checking for intactness.

INFORMATION

If stored in tropical zones, provide for sufficient protection against insect damage. Contact SEW-EURODRIVE in the case of differing requirements.

31975062/EN – 08/2024

3 Gear unit structure

3.1 Structure

The following figure shows the structure of the gear unit.

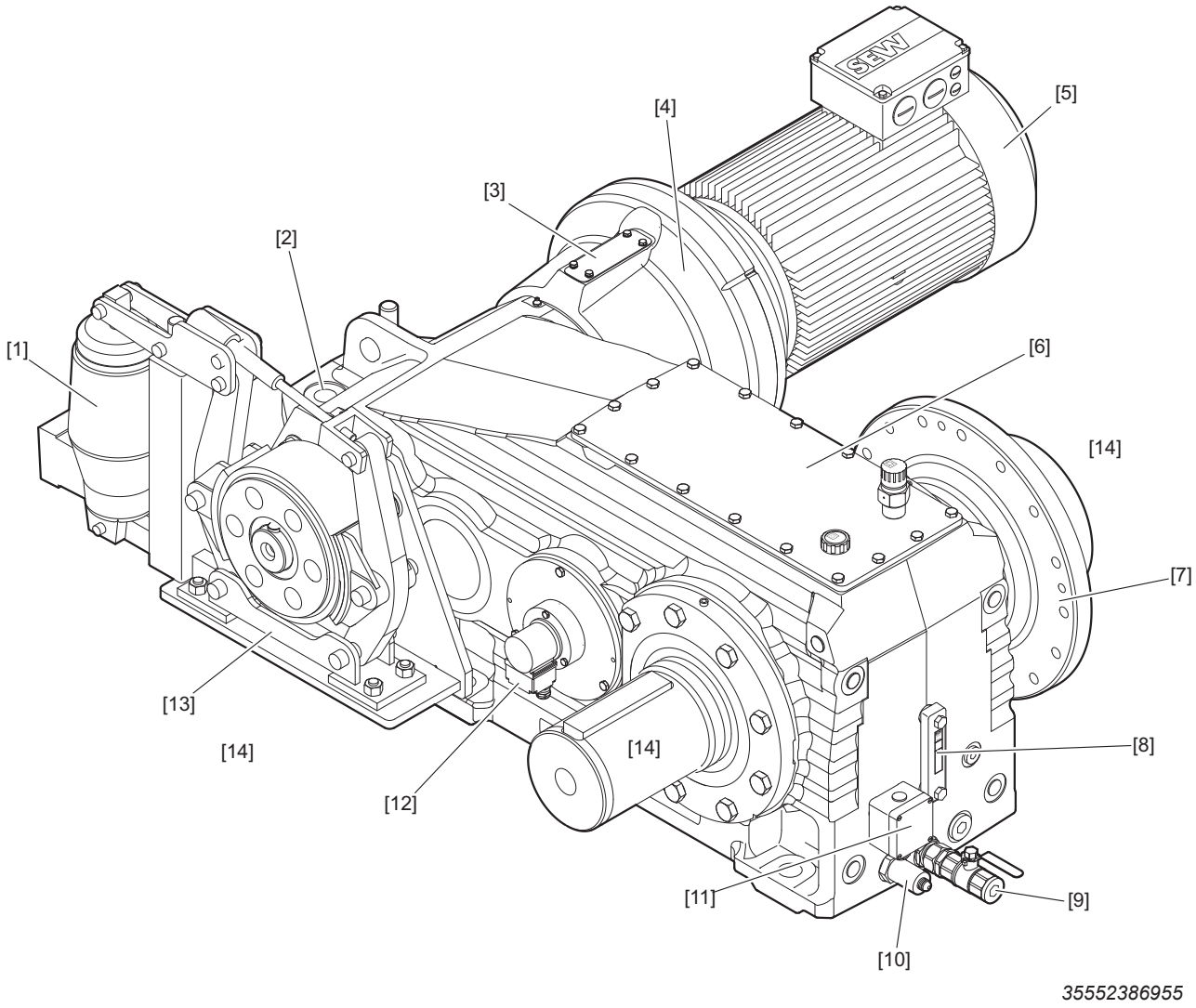

35552386955

[1] Drum brake (optional)
[2] Torque bracket connection
[3] Intermediate flange with inspection opening
[4] Motor adapter (optional)
[5] Motor
[6] Inspection cover with breather cap and oil dipstick
[7] Flange coupling (optional)
[8] Oil level glass (optional)
[9] Oil drain valve (optional)
[10] Electric heater (optional)
[11] Thermostat (optional)
[12] Encoder (optional)
[13] Brake bracket according to DIN 15435 for drum brake 250/315/400 mm (optional)
[14] Double input or output shaft (optional)

31975062/EN – 08/2024

3.2 Type designation

The following example shows the structure of the type designation:

X3FCC160e /HC /T	
X	Industrial gear unit series
3	Number of gear unit stages • 3 = 3 stages • 4 = 4 stages
F	Helical gear unit
C	Type of output shaft • A = Hollow shaft with key • C = Reinforced solid shaft with key • V = Splined hollow shaft
C	Application • C = Hoist gear unit
160	Gear unit sizes • 120 - 250
e	Generation X.e
HC	Housing design • HC = Hoist housing
T	Gear unit mounting • /B = Foot • /T = Torque arm

31975062/EN – 08/2024

3.3 Mounting position

3.3.1 Definition

The mounting position defines the spatial position of the gear unit housing and is designated with **M1 – M6**.

X..e series /HC gear units are used in mounting position **M1**.

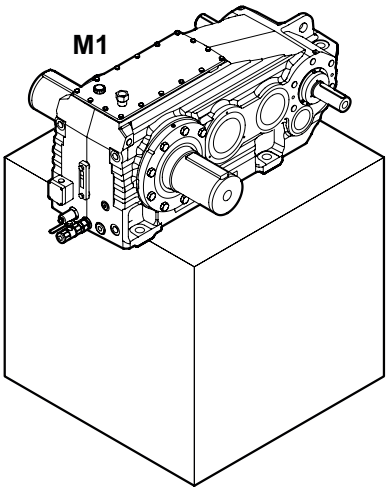

3.3.2 Deviating mounting positions

Note that the following deviating mounting positions are permitted. The information is based on a gear unit without pivoted mounting position.

X..120 – 250 Mounting position M1
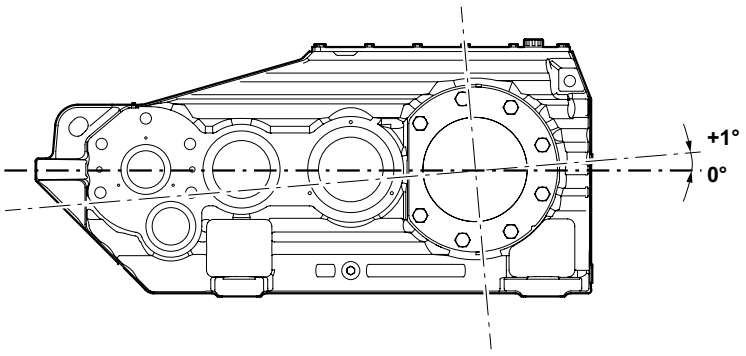
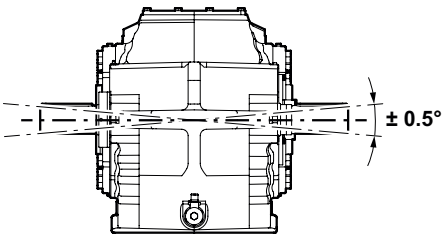

31975062/EN – 08/2024

3.4 Mounting positions

3.4.1 Torque arm

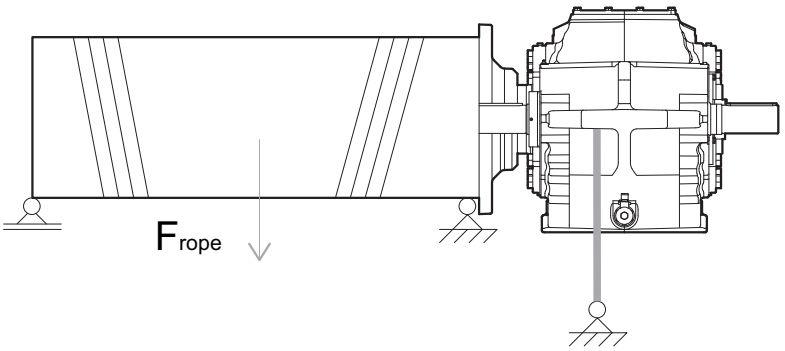

35569977227

3.4.2 Foot-mounted design

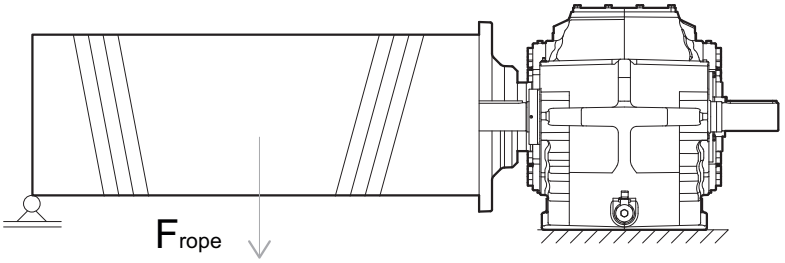

35552380299

3.4.3 Three-point mounting

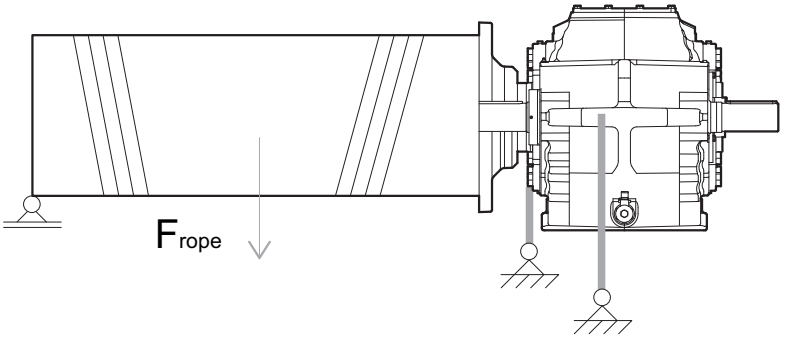

9007234807105163

31975062/EN – 08/2024

3.5 Shaft positions

The shaft positions (**1 – 4**) shown in the following figures apply to solid and hollow output shafts. For other shaft positions, contact SEW-EURODRIVE.

3.5.1 X.F..

Shaft position X.FC..

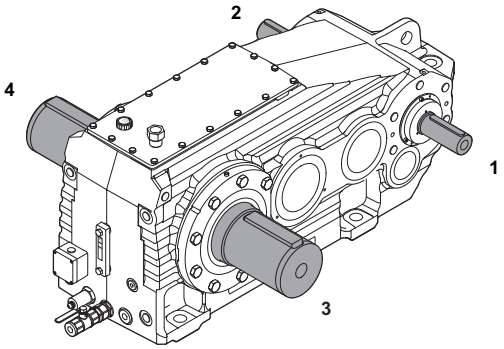

Shaft position X.FA..

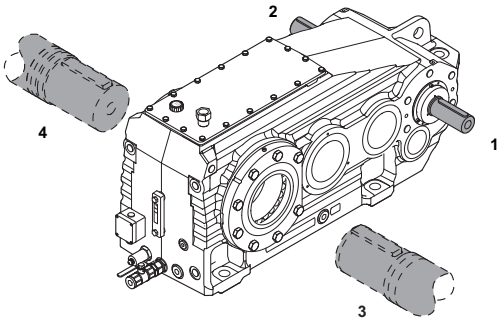

31975062/EN – 08/2024

3.6 Housing design

3.6.1 Hoist housing /HC

The housing of the hoist is designed for mounting position M1. This housing design is non-reversible. Due to its extended center distance, the housing offers greater flexibility when cable drums are used.

The gear units are designed as single-piece housings for gear unit sizes X120 to X250.

The following figure shows an example of a housing for gear unit size 150.

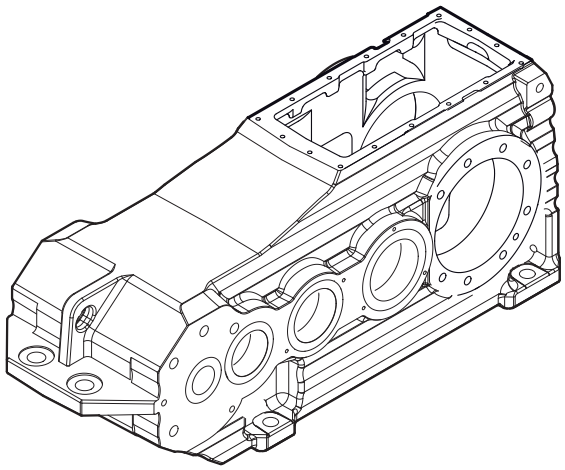

24919461899

3.7 Combination overview of housing types and options

3.7.1 Crane housing

The crane housing **(HC)** allows for a wide range of possible variants. The following table shows the options that can be combined with the crane housing **(HC)**.

Abbreviations	Options
/HSST	Through-going input shaft
/MA	Motor adapter
/T	Torque arm
/OD	Oil dipstick
/ODV	Oil drain valve
/OH	Oil heater
/B	Foot mounting

31975062/EN – 08/2024

3.8 Output shaft connection type

3.8.1 XFCC: Solid shaft with key

- Reinforced output shaft and bearing.
- Option: Flange coupling for direct drum connection.

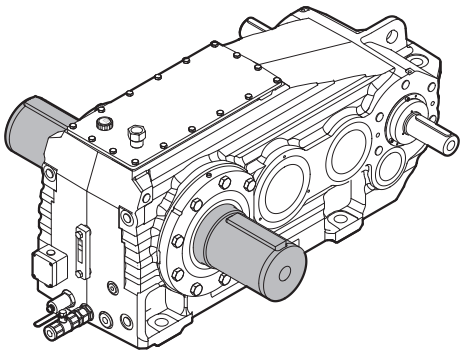

3.8.2 XFAC: Hollow shaft with key

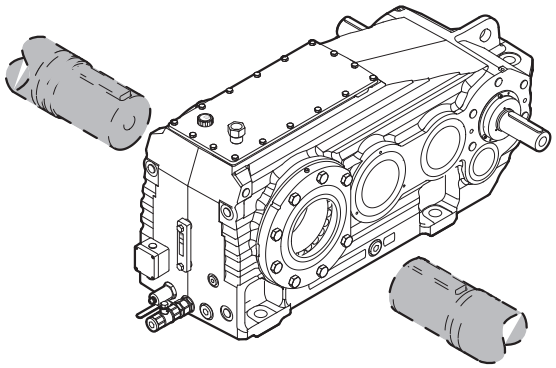

3.8.3 XFVC: Splined hollow shaft

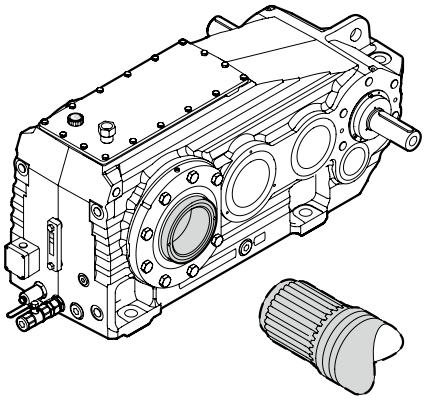

31975062/EN – 08/2024

3.9 Brake connection

As standard variant, a double-shoe brake according to DIN 15435 is mounted.

The brake connection is performed using welded brackets [1]. The brake can be mounted on gear unit side F3 and F4.

The brake connection is only standardized for brake sizes 250, 350 and 400.

Contact SEW-EURODRIVE when you wish to mount a disk brake.

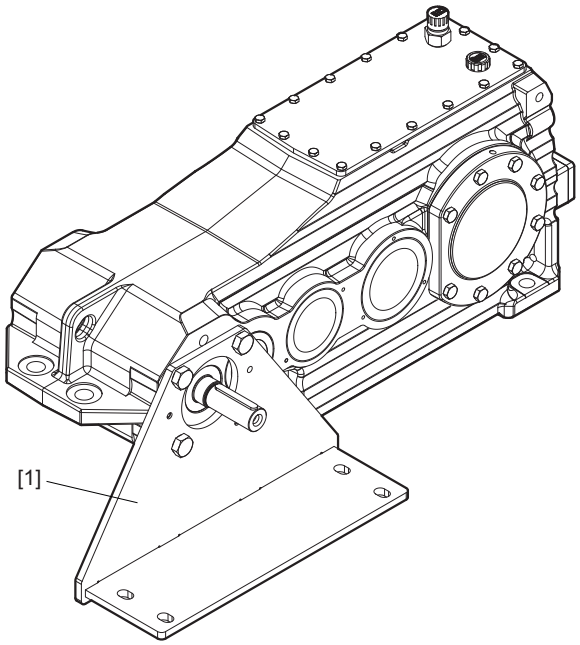

19495956491

31975062/EN – 08/2024

3.10 Coating and surface protection systems

Used as surface protection under typical ambient conditions, corrosivity category DIN EN ISO 12944-2. The following tables give an overview of coating and surface protection systems.

The gear unit is equipped with the following surface protection.

OS 1 low environmental pollution	
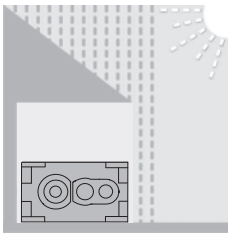	For environments prone to condensation and atmospheres with low humidity or contamination, such as outdoor applications under roof or with protection, unheated buildings where condensation can build up. According to corrosivity category: C2 (low)
Sample applications	• Systems in saw mills • Agitators and mixers
Condensation test ISO 6270	120 h
Salt spray test ISO 7253	–

OS 2 medium environmental pollution	
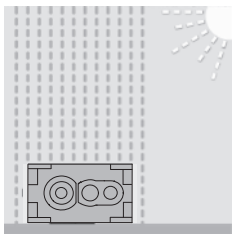	For environments with high humidity or moderate atmospheric contamination, such as applications outdoors subject to direct weathering. According to corrosivity category: C3 (moderate)
Sample applications	• Applications in gravel plants • Cableways
Condensation test ISO 6270	120 h
Salt spray test ISO 7253	240 h

31975062/EN – 08/2024

OS 3 high environmental pollution	
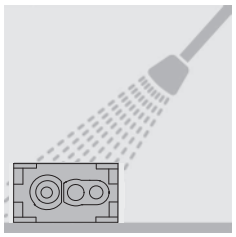	For environments with high humidity and occasionally severe atmospheric and chemical contamination. Occasional acidic or caustic wet cleaning. Also for applications in coastal areas with moderate salt load. According to corrosivity category: C4 (high)
Sample applications	• Port cranes • Sewage treatment plants • Mining applications
Condensation test ISO 6270	240 h
Salt spray test ISO 7253	480 h

OS 4 very high environmental pollution	
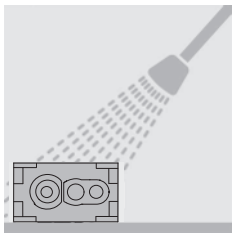	Suitable for environments with permanent humidity or severe atmospheric or chemical contamination. Regular acidic and caustic wet cleaning also with chemical cleaning agents. Based on corrosivity category: C5 (very high)
Sample applications	• Drives in malting plants • Wet areas in the beverage industry • Conveyor belts in the food industry
Condensation test ISO 6270	360 h
Salt spray test ISO 7253	600 h

INFORMATION

- Standard top coat color RAL 7031, can deviate depending on the order, see order documents.
- Color according to RAL
- Water and hand perspiration repelling rust preventive for external preservation applied to uncoated parts, shaft ends/flanges.
- Sheet metal parts (such as protection covers) are painted in RAL 1003 as standard.
- If you need surface protection systems of a higher quality, contact SEW-EURODRIVE.

31975062/EN – 08/2024

3.11 Sealing system

3.11.1 Input shaft

Non-regreasable seal

Designation	Property	Environment	Figure
Standard	Single (optional double) oil seal with dust protection lip	Normal environment	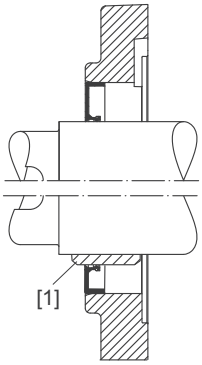

[1] Optional with oil seal sleeve

Regreasable seal

Designation	Property	Environment	Illustration
Radial labyrinth seal (Taconite), regreasable	Single oil seal with radial labyrinth seal	**Very high** dust load with abrasive particles	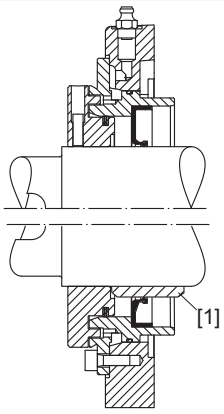

[1] Optional with oil seal sleeve

31975062/EN – 08/2024

3.11.2 Output shaft

Non-regreasable seal

Designation	Property	Environment	Figure
Standard	Single (optional double) oil seal with dust protection lip	Normal environment	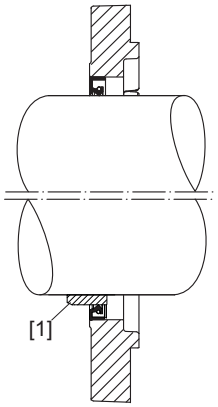

[1] Optional with oil seal sleeve

Regreasable seal

Designation	Property	Environment	Illustration
Radial labyrinth seal (Taconite), regreasable	Single oil seal with radial labyrinth seal	**Very high** dust load with abrasive particles	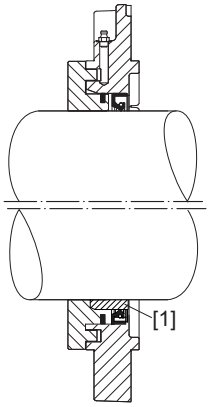

[1] Optional with oil seal sleeve

31975062/EN – 08/2024

3.12 Lubrication types

3.12.1 Splash lubrication

All components to be lubricated are partially submerged into the oil bath.

3.13 Accessories

3.13.1 General accessories

The following figure shows the general accessories.

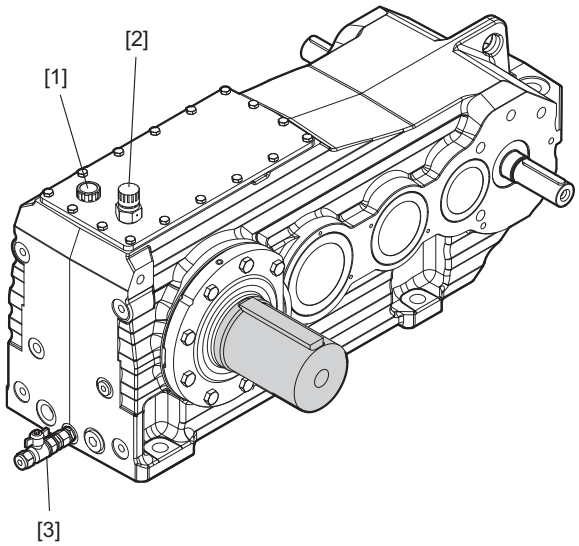

19496008587

[1] Oil dipstick
[2] Breather
[3] Oil drain valve

Visual oil level check

The gear unit includes an oil dipstick as standard.

Breather

The breather serves to prevent non-permitted pressure generated by heating during operation. The gear units are equipped with a high-quality breather with a filter mesh of 2 µm as standard.

Oil drain

As standard the oil drain is performed via the oil drain valve.

31975062/EN – 08/2024

4 Structure of options and additional features

4.1 Motor adapter /MA

The following figure shows an example of the motor adapter [1] connected to the gear unit:

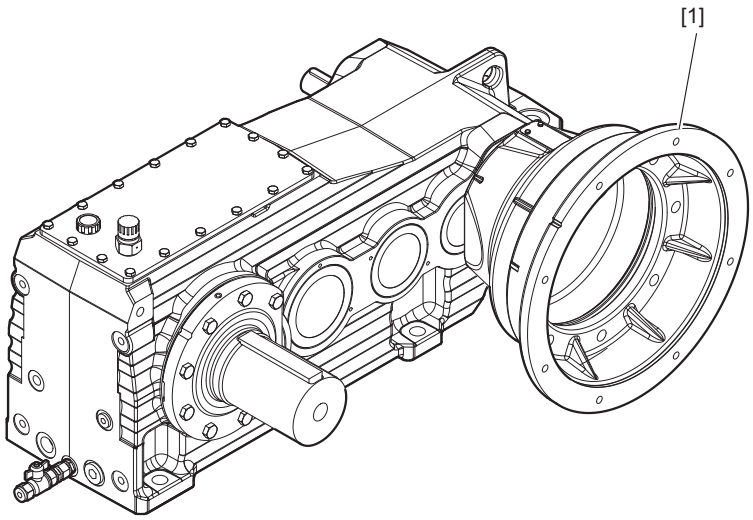

19495981067

Motor adapters [1] are available for mounting the following IEC motors.

Size	Gear ratio	IEC
X4F.C120 – 130	14 – 40 / 18 – 50 45 – 125 / 56 – 160 140 – 200 / 180 – 250	200/225/250/280 160/180/200/225/250/280 132/160/180/200/225/250/280
X4F.C140 – 150	14 – 200 / 18 – 250	180/200/225/250/280/315 S-M
X3F.C160 – 170	14 – 40 / 18 – 50	250/280/315 S-M
X4F.C160 – 170	45 – 200 / 56 – 250	180/200/225/250/280/315 S-M
X.F.C180 – 190	16 – 28 / 18 – 31.5 31.5 – 225 / 35.5 – 250	315 S-M 225/250/280/315 S-M
X.F.C200 – 210	16 – 45 / 18 – 50 50 – 225 / 56 – 250	315 S-M 225/250/280/315 S-M
X.F.C220 – 230	16 – 45 50 – 225	315 S-M 250/280/315 S-M
X.F.C240 – 250	14 – 40 / 16 – 45 45 – 200 / 50 – 225	250/280/315 S-L/315/355 250/280/315 S-L/315/355

INFORMATION

- The gear unit must be installed in such a way that liquids cannot enter the motor adapter (HSS end) and accumulate there. Otherwise, the oil seal can be damaged, and subsequent damage can create a possible ignition source.
- An elastic claw coupling is included in the scope of delivery.

31975062/EN – 08/2024

4.2 Oil heater /OH

An oil heater may be required to ensure lubrication during a cold gear unit startup when the ambient temperature is low.

4.2.1 Structure

The oil heater consists of 2 basic parts:

1. Heating element [1] in the oil sump ("oil heater") with connection unit
2. Thermostat with integrated temperature sensor [2]

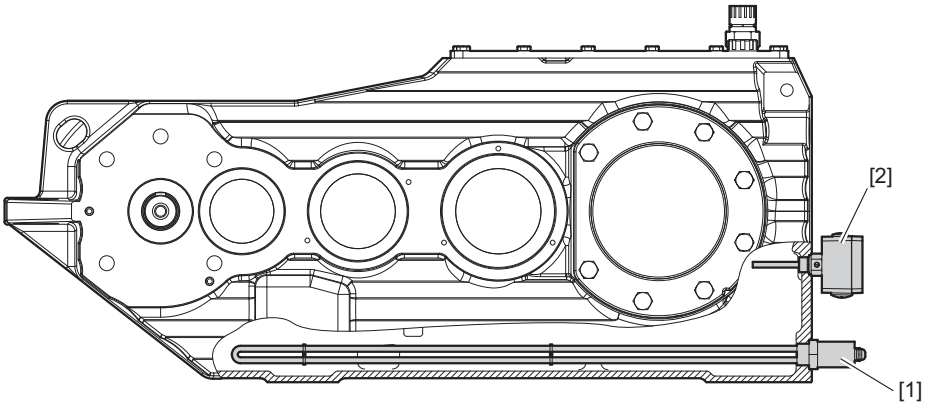

9007218750737803

4.3 Torque arm /T

The torque arm [1] is also available as an option. The length of the torque arm can be adjusted within a certain range.

The following illustration serves as an example.

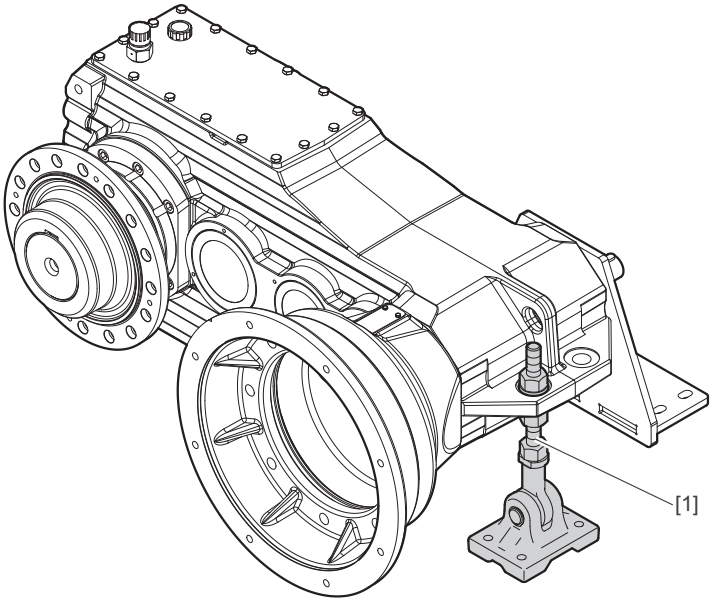

20850601611

31975062/EN – 08/2024

5 Installation/assembly

5.1 Required tools/resources

Not included in the delivery:

- Set of wrenches
- Torque wrench
- Mounting device
- Compensation elements (washers, spacing rings), if necessary
- Fasteners for input and output elements
- Lubricant, e.g. NOCO® fluid from SEW-EURODRIVE → except for hollow shaft gear units
- For hollow shaft gear units → aids for mounting onto/removal from the machine shaft
- Fasteners for the gear unit base

5.2 Important notes

Read the following information prior to installation/mounting.

⚠ WARNING



Risk of crushing if the drive starts up unintentionally.

Severe or fatal injuries.

- Work on the gear unit only when the machine is not in use. Secure the drive unit against unintentional power-up. Attach an information sign near the ON switch to warn that the gear unit is being worked on.

⚠ WARNING



Danger due to mounting in impermissible mounting position.

Severe or fatal injuries.

- Install/mount the gear unit only in the specified mounting position on a level, vibration-damping, and torsionally rigid support structure. Do not twist housing legs and mounting flanges against each other.
- Contact SEW-EURODRIVE before mounting the gear unit in another mounting position than the one permitted.

⚠ WARNING



Danger due to freely accessible, rotating parts.

Severe or fatal injuries.

- Secure rotating components such as shafts, couplings, gears or belt drives using suitable protection covers.
- Ensure that installed protection covers are sufficiently attached.

31975062/EN – 08/2024



⚠ WARNING

An operator's machine that is not appropriately secured can fall during gear unit installation or removal.

Severe or fatal injuries.

- Protect the operator's machine against unintentional movement when installing or removing the gear unit.
- Before releasing shaft connections, make sure that there are no active torsional moments present (tensions within the system).



⚠ WARNING

Danger due to installing impermissible components.

Severe or fatal injuries.

- Do not mount any impermissible components to the gear unit.
- Mounting impermissible components may lead to material failure at the gear unit. This may cause the gear unit to fall over or down.



⚠ WARNING

Risk of burns due to hot gear unit and hot gear unit oil.

Severe injuries.

- Let the gear unit cool down before you start working on it.
- Carefully remove the oil level plug and the oil drain plug.



⚠ CAUTION

Danger due to unsecured mount-on components, such as keys.

Possible injury to persons due to falling parts.

- Install appropriate protective devices.
- Secure the mount-on components.



⚠ CAUTION

Danger due to lubricant leaking from damaged seals and the breather.

Minor injuries.

- Check the gear unit and mount-on components for leaking lubricant.
- The seals must not come in contact with cleaning agent as this may damage the seals.
- Protect the breather against damage.
- Make sure that there is not too much oil in the gear unit. If the oil level is too high and the temperature rises, lubricant may escape from the breather.



⚠ CAUTION

Risk of injury due to protruding parts.

Minor injuries.

- Gear units and mount-on components must not protrude into footways.

31975062/EN – 08/2024

NOTICE

Improper installation and assembly can damage the gear unit.

Possible damage to property.

- Observe the following information.

- Make sure that the customer components are designed for the load.
- The gear units are delivered without oil fill as standard.
- Do not change the mounting position without prior consultation with SEW-EURODRIVE. The warranty will become void without prior consultation.
- The most important technical data is provided on the nameplate.

  Additional data relevant for operation is available in drawings, on the order confirmation or in any order-specific documentation.
- Do not modify the gear unit or the mount-on components without prior consultation of SEW-EURODRIVE.
- Install/mount the gear unit only in the specified mounting position on a level, vibration-damping, and torsionally rigid support structure. Do not twist housing legs and mounting flanges against each other.
- Make sure that the oil level plugs and oil drain plugs, as well as the breather are freely accessible.
- Use plastic inserts if there is a risk of electrochemical corrosion between the gear unit and the driven machine (connection between different metals such as cast iron and stainless steel). Likewise, fit the screws with plastic washers. Always ground the gear unit housing.
- It is important that only authorized personnel is allowed to assemble gear head units with motors and adapters. Contact SEW-EURODRIVE.
- Do not weld anywhere on the drive. Do not use the drives as a ground point for welding work. Welding may destroy gearing components and bearings.
- Units installed outdoors must be protected from the sun. Suitable protective devices are required, such as covers or roofs. Avoid heat build-up. The user must ensure that foreign objects do not impair the function of the gear unit (e.g. falling objects or coverings).
- Protect the gear unit from direct cold air currents. Condensation may cause water to accumulate in the oil.
- For use in damp areas or outdoors, the gear units can be supplied with a suitable painting. Repair any damage to the paint work (e.g. on the breather).
- Do not modify the existing piping.
- For gear units that are filled with oil at the factory, check to see that the breather is installed before you start up the gear unit.
- Strictly observe the safety notes in the individual chapters.

31975062/EN – 08/2024

5.3 Prerequisites for installation

NOTICE

Danger due to insufficiently cleaned flange surfaces.

Possible damage to property.

- Clean the output shafts and flange surfaces thoroughly to ensure they are free of anti-corrosion agents, contamination or similar. Use a commercially available solvent. Do not let the solvent come into contact with the oil seals.

Check that the following conditions have been met:

- The specifications on the nameplate of the motor and the electrical components match the voltage supply system.
- The drive has not been damaged during transportation or storage.
- The ambient temperature matches the information in the order documents.
- No harmful oils, acids, gases, vapors, radiation etc. in the vicinity.

5.3.1 Extended storage

Observe the following: The service life of the lubricant in the bearings is reduced if the unit is stored for ≥ 1 year (applies only to bearings with grease lubrication).

Replace the breather with a screw plug.

31975062/EN – 08/2024

5.4 Installing the gear unit

5.4.1 Tightening torques: Retaining screws of gear unit mount-on parts

Observe the notes in chapter "Important information" (→ 🗎 37).

Tighten the screws of gear unit mount-on parts, protection and safety covers using the following tightening torque.

INFORMATION

The tightening torques do not apply to mounting types such as the flange coupling, torque arm, mounting flange, hollow shaft with shrink disk, etc. These features are described in the individual chapters.

Screw/nut	Tightening torque in Nm Strength class 8.8	Tightening torque in Nm Strength class 10.9
M6	11.3	16.5
M8	27.3	40.1
M10	54	79
M12	93	137
M14	148	218
M16	230	338
M20	464	661
M24	795	1120

INFORMATION

Do not lubricate the bolts during assembly.

5.4.2 Tightening torques: Gear unit mounting of foot-mounted design

The following table shows the thread size and tightening torque for foot mounting.

Size	Screw/nut	Tightening torque in Nm Strength class 8.8
X120 – 130	M20	464
X140 – 150	M24	798
X160 – 190	M30	1597
X200 – 230	M42	3995
X240 – 250	M48	6650

INFORMATION

Do not lubricate the bolts during assembly.

31975062/EN – 08/2024

5.4.3 Foundation

To ensure quick and successful gear unit mounting, the proper foundation should be selected and the mounting carefully planned in advance. Foundation drawings with all necessary construction and dimension details should be available.

When mounting the gear unit on a steel construction, ensure adequate stiffness to avoid harmful vibrations and oscillations. The foundation must be dimensioned according to the weight and torque of the gear unit, taking into account the forces acting on the gear unit.

Tighten retaining screws or nuts to the specified torque. Use the bolts and tightening torques specified in chapter "Installing the gear unit" (→ 🗎 41).

NOTICE

An improper foundation may result in damage to the gear unit.

Possible damage to property.

- The foundation must be level and flat; the gear unit may not be deformed when tightening the retaining screws. Unevenness must be leveled out appropriately.
- Observe the weight specified on the nameplate.

5.4.4 Aligning the shaft axis



⚠ WARNING

Shafts can break if the shaft axis is not aligned accurately.

Severe or fatal injuries.

- Refer to the separate operation instructions regarding the requirements of the couplings.

The service life of the shafts, bearings and couplings depends on the precision of the alignment of the shaft axes with each other.

Always try to obtain a deviation = 0. When doing so, you should also consult the special operating instructions regarding the requirements of the couplings, for example.

31975062/EN – 08/2024

5.5 Filling the gear unit with oil

The gear unit is delivered without oil fill as standard. Observe the following procedure.

5.5.1 General information

Observe the notes in chapter "Important information" (→ 🗎 37).

Information

- Use an oil from the current lubricant table:
  www.sew-eurodrive.de/lubricants
- Fill in the oil when the gear unit is in the intended mounting position.
- Make sure the oil is fluid when filling it into the gear unit. The fluidity can be improved by prior heating, e.g. by using an oil heater. SEW-EURODRIVE recommends an oil temperature of 20 °C to 40 °C for filling in oil.
- Fill the gear unit with the oil grade specified on the nameplate. The oil quantity specified on the nameplate is an approximate quantity. The markings [1] and [2] on the oil dipstick or oil level glass are the decisive indicators of the correct oil quantity to be filled in.
- Check the oil level only when the gear unit is cool and in idle state. SEW-EURODRIVE recommends checking the oil level at an oil temperature of 20 °C to 40 °C. The oil level must be between the markings [1] and [2] and should ideally be in the middle. Observe chapter "Checking the oil level" (→ 🗎 88).
- The required oil fill quantity is higher when additional attachments are mounted to the gear unit, such as an oil supply system. In this case, observe the respective "Oil Cooling System" operating instructions from SEW-EURODRIVE.
- For gear units with external supply pipes, e.g. oil cooling systems, establish the connections before filling the oil.
- Use a clean filling aid (plastic funnel or similar) for filling the oil. Avoid using galvanized filling aids.

Procedure

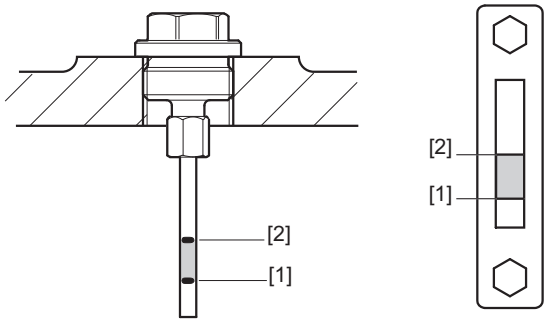

32672059019

1. Open the oil fill plug.
2. Fill in oil until the oil level is in the middle between marking [1] and marking [2].
3. Screw in the oil fill plug.

31975062/EN – 08/2024

5.6 Gear units with solid shaft

5.6.1 Mounting input and output components

Observe the notes in chapter "Important information" (→ 🗎 37).

NOTICE

The bearing, housing, or shaft may be damaged due to improper assembly.

Possible damage to property.

- Only use a mounting device for installing input and output elements. Use the centering bore and the thread on the shaft end for positioning.
- Never force belt pulleys, couplings, pinions, etc. onto the shaft end by hitting them with a hammer. Doing so can damage bearings, housing, and shaft.
- Make sure the belt of belt pulleys is tensioned correctly in accordance with the manufacturer's specifications.

The following figure shows a mounting device for installing couplings or hubs on gear unit ends or motor shaft ends. It may be possible to dispense with the thrust bearing on the mounting device.

Mounting is easier if you first apply assembly paste to the input and output element and/or heat it up briefly (to 80 – 100 °C).

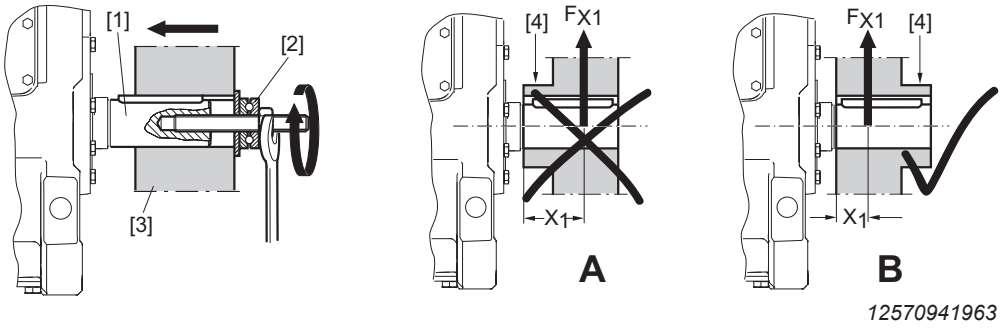

[1]	Shaft end	A	Incorrect
[2]	Thrust bearing	B	Correct
[3]	Coupling hub		
[4]	Hub		

To avoid impermissibly high overhung load: Install gear or chain sprockets as shown in figure **B**.

31975062/EN – 08/2024

5.7 Operation at low temperatures and permitted dead load

NOTICE

Improper operation of the oil heater may damage to the gear unit.

Possible damage to property.

- The gear unit may only be taken into operation when the minimum oil viscosity is obtained, see chapter "Limit temperature for gear unit startup" (→ 🗎 73). Observe the addition information in chapter "Permitted lubricants" (→ 🗎 95).

Operating state Oil temperature	Action	Dead load	
		without oil heater	with oil heater
up to -20 °C	The gear unit may only be taken into operation when the minimum oil viscosity is obtained. Observe chapter "Limit temperature for gear unit startup" (→ 🗎 73) and the specifications in chapter "Permitted lubricants" (→ 🗎 73).	Dead load not restricted.	
-20 °C to -30 °C	Oil heater required.The gear unit must be preheated to the minimum oil temperature using an oil heater, see chapter "Limit temperature for gear unit startup" (→ 🗎 73). When the oil temperature, monitored by the thermostat, required for startup is reached (min. -20 °C) the gear unit can be operated without restrictions.	Dead load max. 50% of the nominal crane load.	Dead load not restricted. Requires the oil heater to be running even at gear unit standstill, and the oil bath temperature to match the specifications in chapter "Limit temperature for gear unit startup" (→ 🗎 73) (min. -20 °C).
< -30 °C	Gear unit STOP Operation is only permitted at an ambient temperature ≥ -30 °C.	Dead load max. 20% of the nominal crane load.	

Definition: Dead load

The dead load is the load constantly present at the gear unit, without taking up any payload (for example hoists, clamping flanges, weight of the wires).

31975062/EN – 08/2024

5.8 Output shaft as a hollow shaft with keyed connection /..A

5.8.1 General information

The material and the keyed connection of the machine shaft (for design X..A) should be dimensioned by the customer according to the loads (e.g. impacts) that will occur.

Depending on the gear unit size, the material of the shaft must have the following minimum yield point for transferring the nominal torque:

- R_e = 320 N/mm^2 for the sizes X..A100 – X..A290
- R_e = 360 N/mm^2 for the sizes X..A300 – X..A320

The material of the key must be selected according to the loads that will occur.

The minimum key length given in the dimension sheets (see next page) must be observed. If a longer key is used, it should be aligned symmetrically to the hollow shaft.

With a continuous machine shaft or axial forces, SEW-EURODRIVE recommends that the machine shaft is designed with a contact shoulder. To prevent the retaining screw of the machine shaft from loosening upon a reversing load direction, it should be secured with a suitable threadlocker. If necessary, two eccentric retaining screws may be used.

31975062/EN – 08/2024

5.8.2 Dimensions of the machine shaft

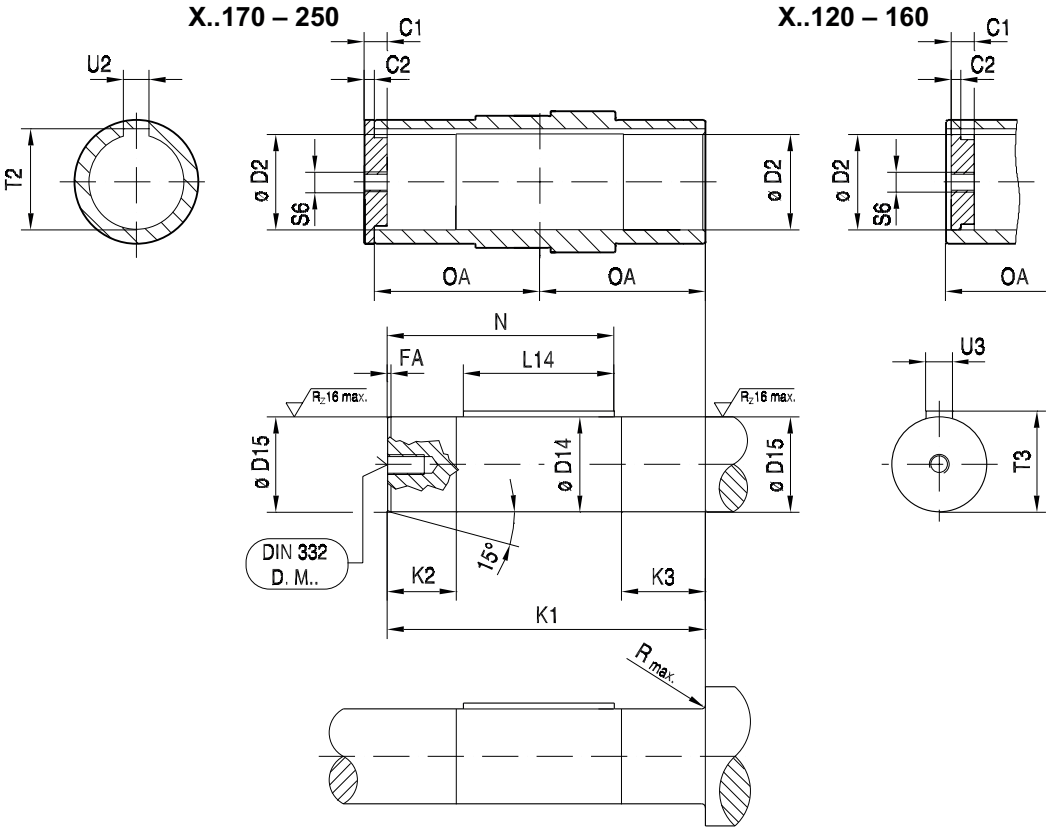

X.F	C1	C2	ø D2	ø D14	ø D15	FA	K1	K2	K3	L14	N	OA	Rmax.	S6	T2	T3	U2	U3	DIN 332 DR.M..
X..A120	30	14	95^{H8}	95_{h11}	95_{js7}	2	342	53	92	140	244.5	190.5	1.6	M30	100.4	100	25^{JS9}	25_{h9}	M24
X..A130	30	14	105^{H8}	105_{h11}	105_{js7}	2	347	68	109	160	258	194	1.6	M30	111.4	111	28^{JS9}	28_{h9}	M24
X..A140	30	14	115^{H8}	115_{h11}	115_{js7}	2	403	61	102	200	306	222	1.6	M30	122.4	122	32^{JS9}	32_{h9}	M24
X..A150	30	14	125^{H8}	125_{h11}	125_{js7}	3	408	76	117	200	308.5	224.5	1.6	M30	132.4	132	32^{JS9}	32_{h9}	M24
X..A160	36	16	135^{H8}	135_{h11}	135_{js7}	3	465	80	127	250	361	256	1.6	M36	143.4	143	36^{JS9}	36_{h9}	M30
X..A170	36	17	150^{H8}	150_{h11}	150_{js7}	3	493	96	115	280	377	256	1.6	M36	158.4	158	36^{JS9}	36_{h9}	M30
X..A180	36	17	165^{H8}	165_{h11}	165_{js7}	3	565	109	128	300	423	292	2	M36	174.4	174	40^{JS9}	40_{h9}	M30
X..A190	36	17	165^{H8}	165_{h11}	165_{js7}	3	565	109	128	300	423	292	2	M36	174.4	174	40^{JS9}	40_{h9}	M30
X..A200	36	17	180^{H8}	180_{h11}	180_{js7}	3	620	130	149	320	460.5	319.5	2	M36	190.4	190	45^{JS9}	45_{h9}	M30
X..A210	36	17	190^{H8}	190_{h11}	190_{js7}	3	620	130	149	320	460.5	319.5	2	M36	200.4	200	45^{JS9}	45_{h9}	M30
X..A220	36	17	210^{H8}	210_{h11}	210_{js7}	3	686	133	152	370	518.5	352.5	2.5	M36	221.4	221	50^{JS9}	50_{h9}	M30
X..A230	36	17	210^{H8}	210_{h11}	210_{js7}	3	686	133	152	370	518.5	352.5	2.5	M36	221.4	221	50^{JS9}	50_{h9}	M30
X..A240	45	22	230^{H8}	230_{h11}	230_{js7}	3	778	147	170	370	562.5	400.5	2.5	M42	241.4	241	50^{JS9}	50_{h9}	M36
X..A250	45	22	240^{H8}	240_{h11}	240_{js7}	3	778	147	170	370	562.5	400.5	2.5	M42	252.4	252	56^{JS9}	56_{h9}	M36

31975062/EN – 08/2024

5.8.3 Mounting the gear unit onto the machine shaft

1. Make sure the dimensions of the machine shaft correspond to SEW-EURODRIVE specifications. Observe chapter "Dimensions of the machine shaft".
2. Remove the retaining screws holding the protection cover.
3. Remove the protection cover.

Size X120 – 160

Observe the notes in chapter "Important information" (→ 🗎 37).

INFORMATION

- Included in the delivery:
  - 2 × retaining ring [8]/[9] and end plate [4]
- **Not** included in the delivery:
  - Threaded rod [2], nut [5], retaining screw [6], ejector screw [8]

1. Apply assembly paste, such as Rivolta F.L.A. to the hollow shaft [7] and the machine shaft end [1].

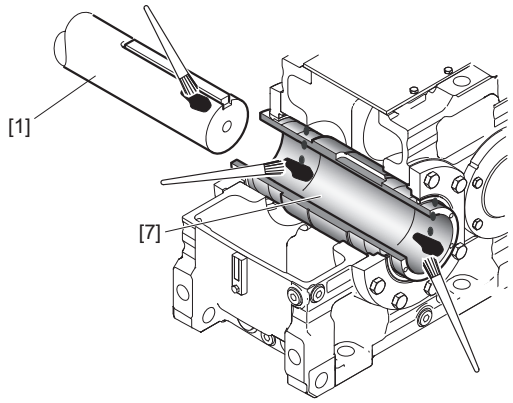

18014415349412619

[1] Machine shaft
[7] Hollow shaft

2. Attach the inner retaining ring [8] to the hollow shaft [7]. Secure the end plate [4] using the outer retaining ring [9]. Thread the threaded rod [2] into the machine shaft [1]. Observe the following thread size of the threaded rod [2].

Size	Threaded rod strength class 8.8
X..A120 – 150	M24
X..A160	M30

Observe the following information on the retaining rings [8][9].

Size	2x retaining ring (Bore) DIN 472
X..A120	95x3
X..A130	105x4
X..A140	115x4
X..A150	125x4
X..A160	135x4

31975062/EN – 08/2024

INFORMATION

Applying lubricant to the threaded rod and nut prior to assembly makes the job easier.

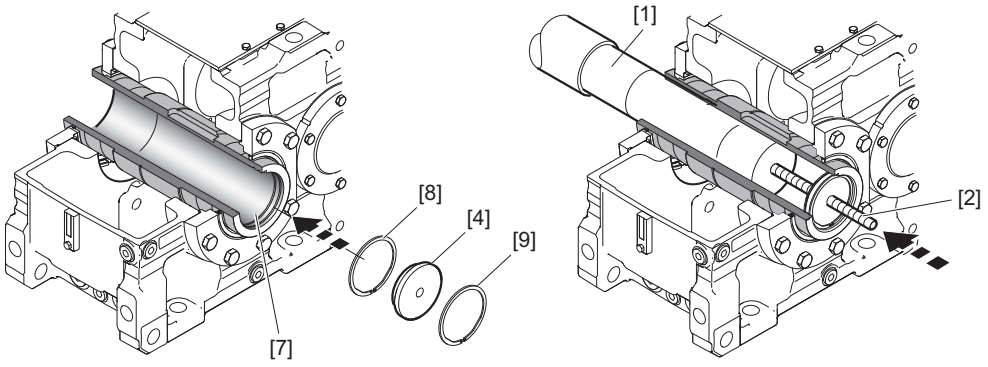

9007202143065995

[1]	Machine shaft	[7]	Hollow shaft
[2]	Threaded rod	[8]	Retaining ring, inside
[4]	End plate	[9]	Retaining ring, outside

3. Screw the nut [5] onto the threaded rod up to the end plate [4]. Tighten the nut [5] until the shoulders of the machine shaft [1] and the hollow shaft meet.

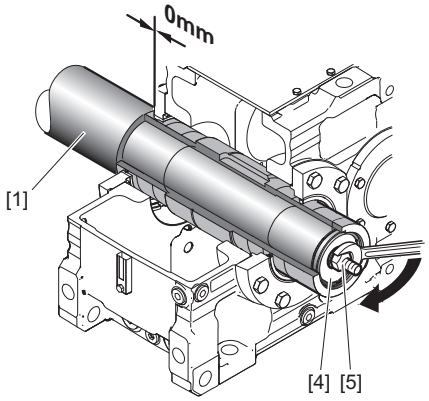

18014401397909131

[1]	Machine shaft
[4]	End plate
[5]	Nut

31975062/EN – 08/2024

4. Loosen the nut [5]. Screw out the threaded rod [2].

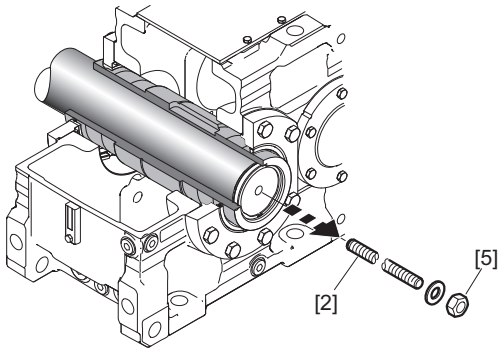

9007202142726155

[2] Threaded rod
[5] Nut

5. Secure the machine shaft [1] with the retaining screw [6]. The retaining screw should also be locked with a suitable thread locker. Observe the following information on the retaining screw [6].

Size	Retaining screw	Tightening torque in Nm Strength class 8.8
X..A120 – 150	M24	798
X..A160	M30	1597

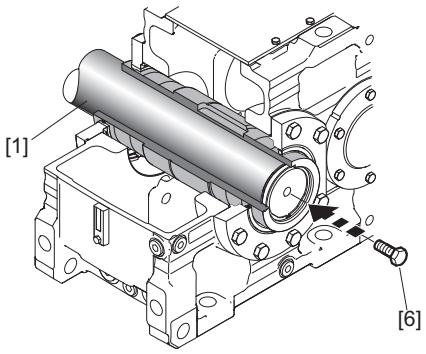

27021600643528587

[1] Machine shaft
[6] Retaining screw

NOTICE

Improper assembly of the protection cover may result in risk of injury due to rotating parts. Dust and dirt may damage the sealing system of the gear unit.

Risk of injury to persons and damage to property.

- Be sure to properly attach the protection cover after completing assembly (dust proof).

31975062/EN – 08/2024

Size X170 – 250

Observe the notes in chapter "Important information" (→ 🗎 37).

INFORMATION

- The scope of delivery includes the following:
  - Retaining screws [3] and end plate [4]
- **Not** included in the scope of delivery:
  - Threaded rod [2], nut [5], retaining screw [6], ejector screw [8]

1. Apply some assembly paste, such as NOCO® fluid or F.L.A. from Rivolta onto the hollow shaft [7] and onto the shaft end of the machine shaft [1].

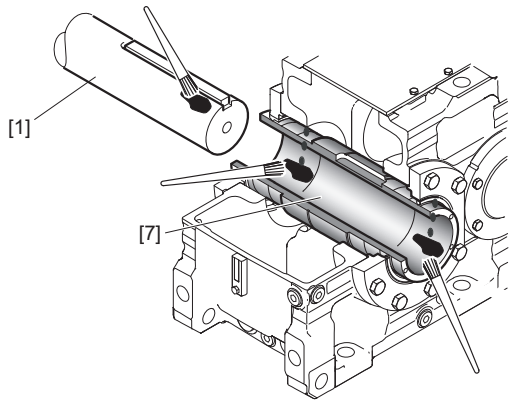

18014415349412619

[1] Machine shaft
[7] Hollow shaft

2. Use the retaining screws [3] to attach the end plate [4] centrically to the hollow shaft [7] and screw the threaded rod [2] onto the machine shaft [1]. Observe the following thread size of the threaded rod [2].

Size	Threaded rod strength class 8.8
X..A170 – 230	M30
X..A240 – 250	M36

Observe the following information on the retaining screw [3].

Size	Thread size for 6 × retaining screws Strength class 10.9	Tightening torque	
		Assembly/ operating state Nm	Disassembly Nm
X..A170 – 190	M10x30	78	Tighten by hand
X..A200 – 230	M12x30	135	Tighten by hand
X..A240 – 250	M16x30	330	Tighten by hand

INFORMATION

Applying lubricant to the threaded rod and nut prior to assembly makes the job easier.

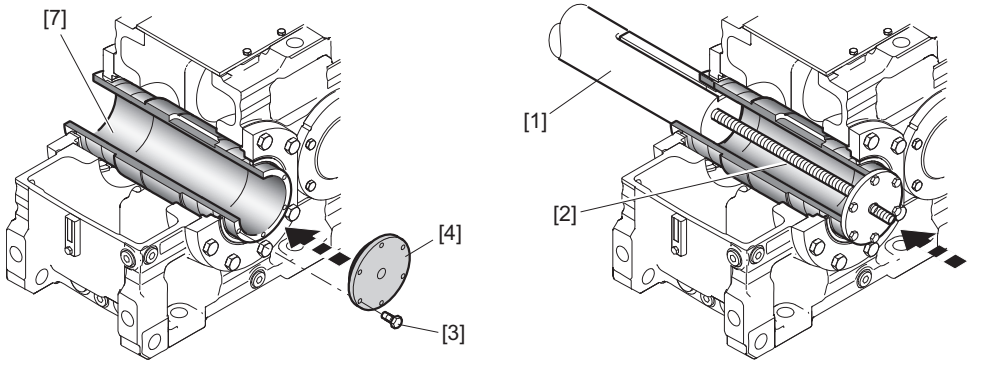

9007199565093003

[1] Machine shaft
[2] Threaded rod
[3] Retaining screw
[4] End plate
[7] Hollow shaft

3. Tighten the machine shaft [1] with the nut [5] until the shaft end of the machine shaft [1] and the end plate [4] meet.

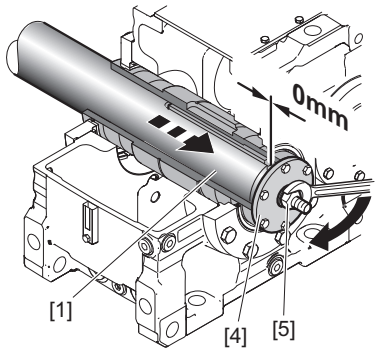

9007199565148299

[1] Machine shaft
[4] End plate
[5] Nut

4. Loosen the nut [5]. Unscrew the threaded rod [2].

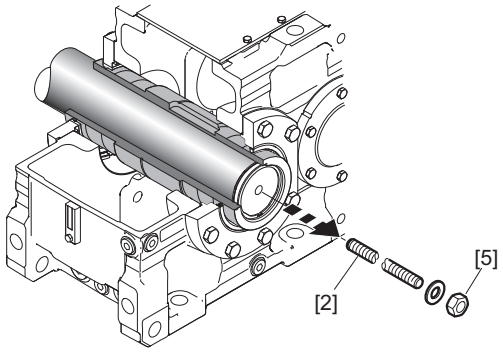

9007202142726155

[2] Threaded rod
[5] Nut

5. Secure the machine shaft [1] with the retaining screw [6]. The retaining screw should also be locked with a suitable threadlocker. Observe the following information on the retaining screw [6].

31975062/EN – 08/2024

Size	Retaining screw	Tightening torque in Nm Strength class 8.8
X..A170 – 230	M30	1590
X..A240 – 250	M36	2760

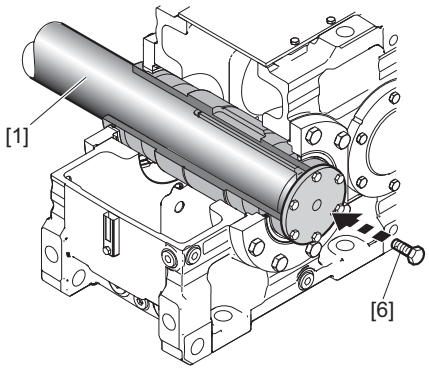

9007199565156875

[1] Machine shaft
[6] Retaining screw



⚠ CAUTION

Improper assembly of the protection cover may result in risk of injury due to rotating parts.

Possible injury to persons.

- After assembly, make sure that the protection cover is properly attached.

NOTICE

Dust and dirt may damage the sealing system of the gear unit.

Possible damage to property.

- Make sure to attach the protection cover correctly and dust-tight after completing assembly.

5.8.4 Removing the gear unit from the machine shaft

NOTICE

Improper disassembly may damage bearings and other components.

Possible damage to property.

- You may only use the hollow shaft as a support for disassembly. Note that supporting on any other parts of the gear unit may damage the material.

Size X120 – 160

Observe the notes in chapter "Important information" (→ 🗎 37).

1. Loosen the retaining screw [6]. Remove the outer retaining ring [8] and the end plate [4].

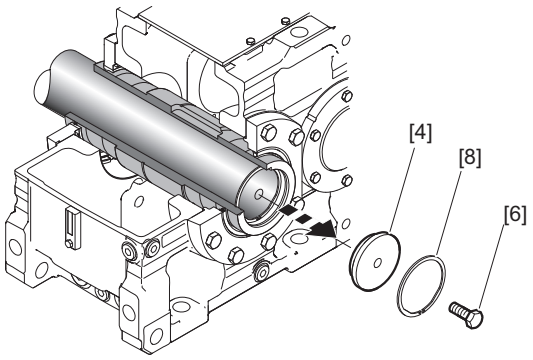

9007202105918859

[4] End plate
[6] Retaining screw
[8] Retaining ring

2. To protect the centering bore, screw the retaining screw [6] into the machine shaft [1].

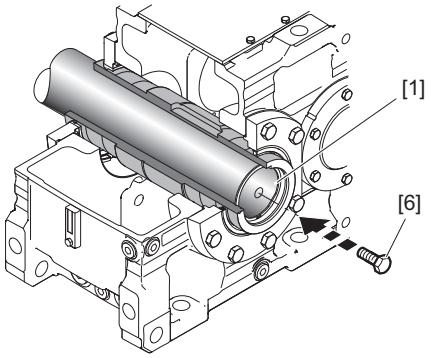

9007202105921291

[1] Machine shaft
[6] Retaining screw

3. Turn the end plate [4] and remount it with the outer retaining ring [8].

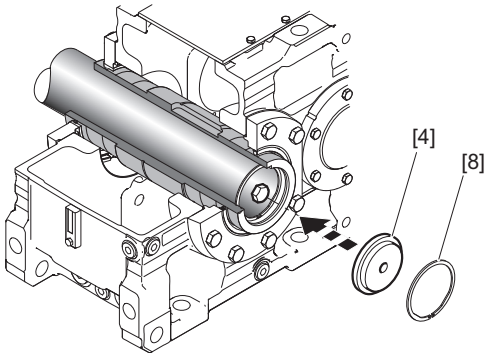

9007202105924619

[4] End plate
[8] Retaining ring

4. Thread the ejector screw [9] into the end plate [4] to remove the gear unit from the machine shaft [1].

31975062/EN – 08/2024

INFORMATION

Disassembly is easier if you first apply lubricant to the ejector screw [9] and the thread in the end plate [4].

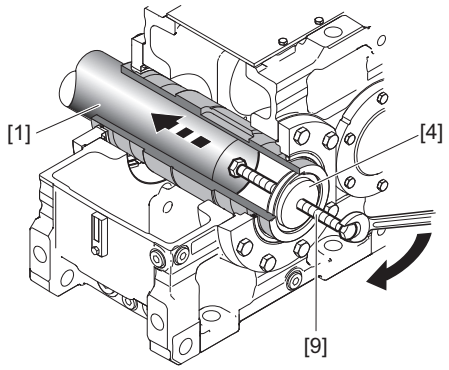

27021600615410571

[1] Machine shaft
[4] End plate
[9] Ejector screw

Size X170 – 250

Observe the notes in chapter "Important information" (→ 🗎 37).

1. Loosen the retaining screw [6].

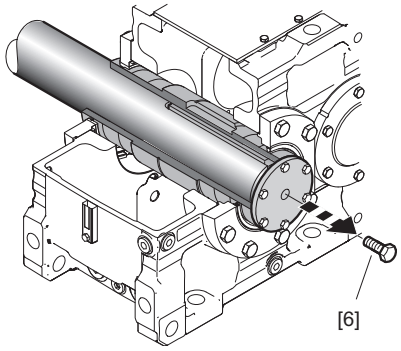

310460043

[6] Retaining screw

2. Remove the retaining screws [3] and the end plate [4].

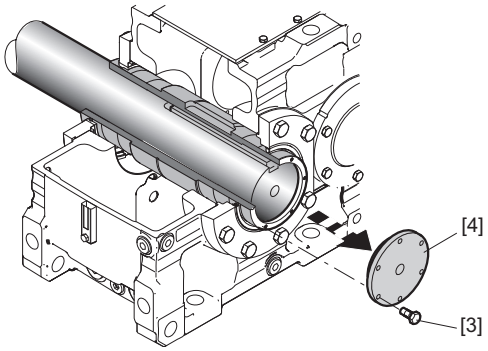

310464523

[3] Retaining screw
[4] End plate

3. To protect the centering bore, screw the retaining screw [6] into the machine shaft [1].

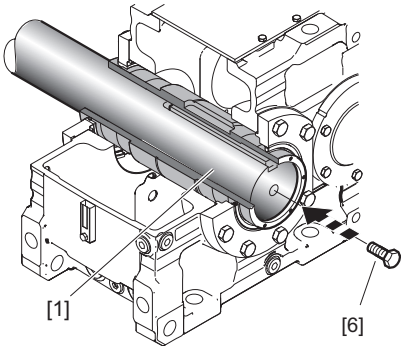

310470027

[1] Machine shaft
[6] Retaining screw

31975062/EN – 08/2024

4. To disassemble the gear unit, flip the end plate [4] over and use the retaining screws [3] to reattach it centrically to the hollow shaft [7]. The retaining screws [3] should be tightened hand-tight.

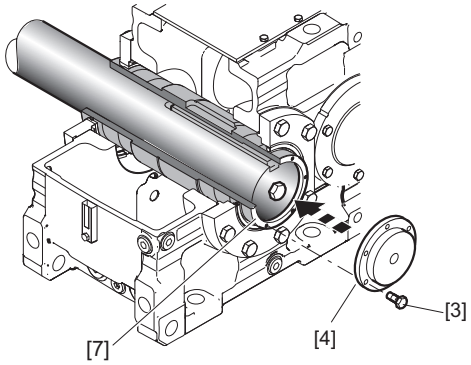

310474123

[3] Retaining screw
[4] End plate
[7] Hollow shaft

5. Thread the ejector screw [8] into the end plate [4] to remove the gear unit from the machine shaft [1].

INFORMATION

Disassembly is easier if you first apply lubricant to the ejector screw [8] and the thread in the end plate [4].

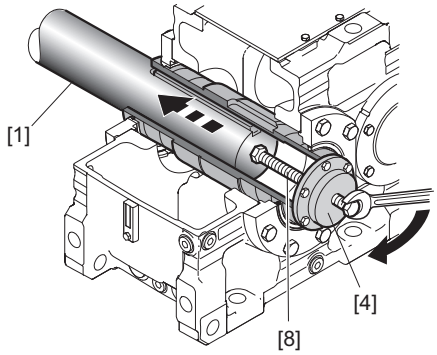

310478219

[1] Machine shaft
[4] End plate
[8] Ejector screw

31975062/EN – 08/2024

5.9 Output shaft as a splined hollow shaft /..V

5.9.1 General information

The material of the machine shaft should be dimensioned by the customer according to the loads that will occur (e.g. impact). The shaft material must have the following minimum yield point for transferring the nominal torque:

R_e = 320 N/mm² for the sizes X..100 – X..320

5.9.2 Dimensions of the machine shaft

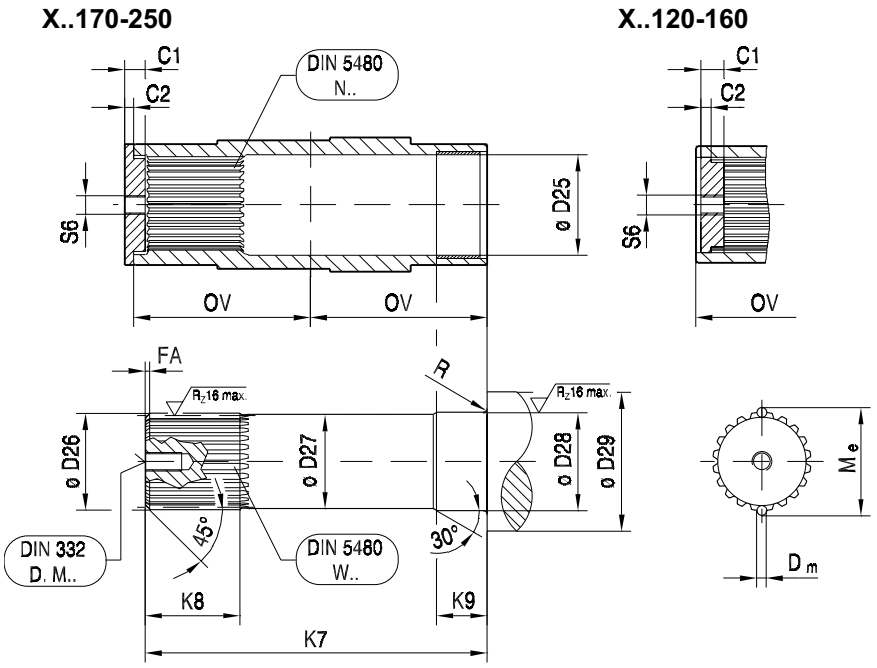

9007218129677451

X.F..	C1	C2	ø D25	ø D26	ø D27	ø D28	ø D29	Dm	FA	K7	K8	K9	Me	OV	R	S6	DIN 332 DR.M..	DIN 5480
X..120	30	14	101^{H9}	94.4_{h10}	93	101_{m6}	115	6	3	341_{-1}	91	52_{-1}	$101.141^{-0.068}_{-0.122}$	190.5	3	M30	M24	W 95x3x30x30x8f N 95x3x30x30x9H
X..130	30	14	111^{H9}	109.4_{h10}	108	111_{m6}	125	6	3	346_{-1}	86	52_{-1}	$116.076^{-0.078}_{-0.139}$	194	3	M30	M24	W 110x3x30x35x8f N 110x3x30x35x9H
X..V140	30	14	121^{H9}	119.4_{h10}	118	121_{m6}	135	6	3	402_{-1}	101	62_{-1}	$126.095^{-0.078}_{-0.138}$	222	3	M30	M24	W 120x3x30x38x8f N 120x3x30x38x9H
X..150	30	14	131^{H9}	129.4_{h10}	128	131_{m6}	145	6	3	407_{-1}	101	62_{-1}	$136.329^{-0.081}_{-0.144}$	224.5	3	M30	M24	W 130x3x30x42x8f N 130x3x30x42x9H
X..160	36	16	141^{H9}	139.4_{h10}	138	141_{m6}	155	6	3	464_{-1}	111	73_{-1}	$146.167^{-0.080}_{-0.143}$	256	4	M36	M30	W 140x3x30x45x8f N 140x3x30x45x9H
X..170	36	17	151^{H9}	149.4_{h10}	148	151_{m6}	165	6	3	492_{-1}	121	73_{-1}	$156.172^{-0.079}_{-0.141}$	256	4	M36	M30	W 150x3x30x48x8f N 150x3x30x48x9H
X..180	36	17	166^{H9}	159_{h10}	158	166_{m6}	180	10	5	564_{-1}	166	83_{-1}	$170.009^{-0.086}_{-0.152}$	292	4	M36	M30	W 160x5x30x30x8f N 160x5x30x30x9H
X..190	36	17	166^{H9}	159_{h10}	158	166_{m6}	180	10	5	564_{-1}	166	83_{-1}	$170.009^{-0.086}_{-0.152}$	292	4	M36	M30	W 160x5x30x30x8f N 160x5x30x30x9H
X..200	36	17	191^{H9}	179_{h10}	178	191_{m6}	205	10	5	619_{-1}	176	83_{-1}	$190.090^{-0.087}_{-0.155}$	319.5	4	M36	M30	W 180x5x30x34x8f N 180x5x30x34x9H
X..210	36	17	191^{H9}	179_{h10}	178	191_{m6}	205	10	5	619_{-1}	176	83_{-1}	$190.090^{-0.087}_{-0.155}$	319.5	4	M36	M30	W 180x5x30x34x8f N 180x5x30x34x9H
X..220	36	17	211^{H9}	199_{h10}	198	211_{m6}	230	10	5	685_{-1}	201	108_{-1}	$210.158^{-0.088}_{-0.157}$	352.5	5	M36	M30	W 200x5x30x38x8f N 200x5x30x38x9H
X..230	36	17	211^{H9}	199_{h10}	198	211_{m6}	230	10	5	685_{-1}	201	108_{-1}	$210.158^{-0.088}_{-0.157}$	352.5	5	M36	M30	W 200x5x30x38x8f N 200x5x30x38x9H
X..240	45	22	231^{H9}	219_{h10}	218	231_{m6}	250	10	5	777_{-1}	216	108_{-1}	$230.215^{-0.102}_{-0.179}$	400.5	5	M36	M30	W 220x5x30x42x8f N 220x5x30x42x9H
X..250	45	22	241^{H9}	219_{h10}	218	241_{m6}	260	10	5	777_{-1}	216	108_{-1}	$230.215^{-0.102}_{-0.179}$	400.5	5	M36	M30	W 220x5x30x42x8f N 220x5x30x42x9H

31975062/EN – 08/2024

5.9.3 Mounting the gear unit onto the machine shaft

1. Observe the documentation of the shrink disk manufacturer.
2. Make sure the dimensions of the machine shaft correspond to SEW-EURODRIVE specifications. Observe chapter "Dimensions of the machine shaft".
3. Remove the retaining screws holding the protection cover.
4. Remove the protection cover.

Size X120 – 160

Observe the notes in chapter "Important information" (→ 🗎 37).

INFORMATION

- The scope of delivery includes the following:
  - 2 × retaining rings [8][9] and end plate [4]
- **Not** included in the scope of delivery:
  - Threaded rod [2], nut [5], retaining screw [6], ejector screw [8]

Apply some assembly paste, such as NOCO® fluid or Rivolta F.L.A. to the machine shaft in the area of the bushing and the splining.

Mount the gear unit to the machine shaft as described in chapter "Mounting the gear unit to the machine shaft" (→ 🗎 48).

Observe the following information on the retaining rings.

Size	2 x retaining ring (bore) DIN 472
X..V120	100 × 3
X..V130	110 × 4
X..V140	125 × 4
X..V150	130 × 4
X..V160	140 × 4

Observe the following information.

Size	Recommended thread size		Tightening torque in Nm Retaining screw Strength class 8.8
	Ejector screw (threads in the end plate)	Threaded rod Nut (DIN 934) Retaining screw Strength class 8.8	
X..V120 – 150	M30	M24	795
X..V160	M36	M30	1590

Size X170 – 250

Observe the notes in chapter "Important information" (→ 🗎 37).

INFORMATION

- The scope of delivery includes the following:
  - Retaining screws [3] and end plate [4].
- **Not** included in the scope of delivery:
  - Threaded rod [2], nut [5], retaining screw [6], ejector screw [8].

31975062/EN – 08/2024

1. Apply some NOCO® fluid on the machine shaft [1] around the bushing [11] and the splining.

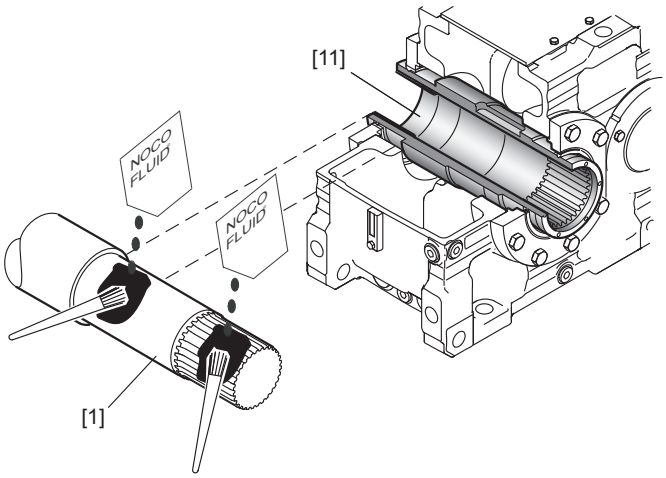

9007200026427915

[1] Machine shaft
[11] Socket

2. Push the gear unit onto the machine shaft. The splining of the hollow shaft must mesh with the splining of the machine shaft.
3. Tighten the retaining screws [3] and screw the threaded rod [2] onto the machine shaft [1]. Observe the following thread size of the threaded rod [2].

Size	Strength class 8.8
X..V170 – 220	M30
X..V240 – 250	M36

Observe the following information on the retaining screw [3].

Size	Thread size for 6 × retaining screws Strength class 10.9	Tightening torque	
		Assembly/operating state Nm	Disassembly Nm
X..V170 – 190	M10x30	78	Tighten by hand
X..V200 – 230	M12x30	135	Tighten by hand
X..V240 – 250	M16x40	330	Tighten by hand

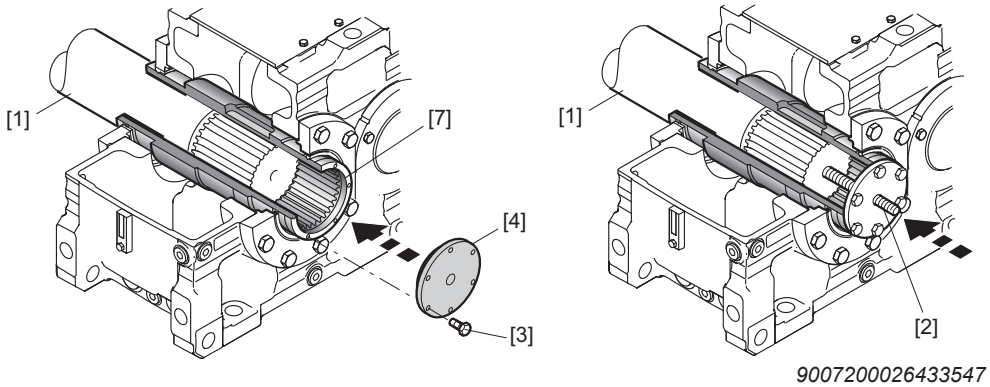

9007200026433547

[1] Machine shaft
[2] Threaded rod
[3] Retaining screws
[4] End plate
[7] Hollow shaft

31975062/EN – 08/2024

4. Tighten the machine shaft [1] with the nut [5] until the shoulders of the machine shaft and the hollow shaft [7] meet.

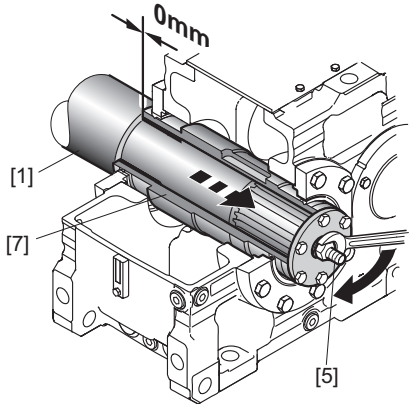

771696651

[1] Machine shaft
[5] Nut
[7] Hollow shaft

5. Loosen the nut [5]. Unscrew the threaded rod [2].

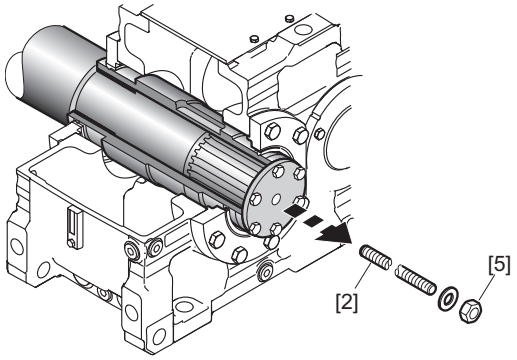

771752587

[2] Threaded rod
[5] Nut

6. Secure the machine shaft [1] with the retaining screw [6]. The retaining screw should also be locked with a suitable threadlocker. Observe the following information on the retaining screw [6].

Size	Retaining screw	Tightening torque in Nm Strength class 8.8
X..V170 – 230	M30	1590
X..V240 – 250	M36	2760

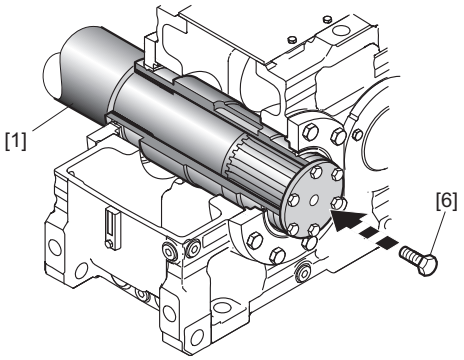

771756683

[1] Machine shaft
[6] Retaining screw

⚠ CAUTION



Improper assembly of the protection cover may result in risk of injury due to rotating parts.

Possible injury to persons.

- After assembly, make sure that the protection cover is properly attached.

NOTICE

Dust and dirt may damage the sealing system of the gear unit.

Possible damage to property.

- Make sure to attach the protection cover correctly and dust-tight after completing assembly.

31975062/EN – 08/2024

5.9.4 Disassembling the gear unit from the machine shaft

NOTICE

Improper disassembly of the gear unit and machine shaft may damage bearings and other components.

Possible damage to property.

- You may only use the hollow shaft as a support for disassembly. Note that supporting on any other parts of the gear unit may damage the material.

Size X120 – 160

Disassemble the gear unit from the machine shaft as described in chapter "Disassembling the gear unit from the machine shaft" (→ 🗎 53).

Size X170 – 250

Disassemble the gear unit from the machine shaft as described in chapter "Disassembling the gear unit from the machine shaft" (→ 🗎 56).

5.10 Torque arm /T

Observe the notes in chapter "Important information" (→ 🗎 37).

5.10.1 Notes

⚠ WARNING



Insufficiently secured gear units can fall during disassembly and assembly.

Severe or fatal injuries.

- Secure the gear unit during disassembly and assembly. Support the gear unit using an appropriate tool.

NOTICE

Danger due to overhung loads acting on the torque arm.

Possible damage to the gear unit.

- Note that the torque arm can only transmit tensile/compressive forces in its supporting direction. If forces occur in the transverse direction, they are transferred to the housing and the output shaft bearing and may cause damage and failure of the torque arm or other gear unit elements.
- The preferred design results in a load under tension in the torque arm.
- If a torque arm by SEW-EURODRIVE is modified or used outside of the technical specifications, SEW-EURODRIVE reserves the right to refuse warranty claims or claims for damages.
- In case of questions or ambiguities, contact SEW-EURODRIVE.

31975062/EN – 08/2024

5.10.2 Procedure if an SEW torque arm is included in the scope of delivery

This chapter describes the installation of an SEW torque arm.

1. Mount the torque arm [1] at the bore [3] oriented toward the output [2].
2. Align the yoke plate [4] with the long side [A] parallel to the gear unit, as depicted in the following figure.

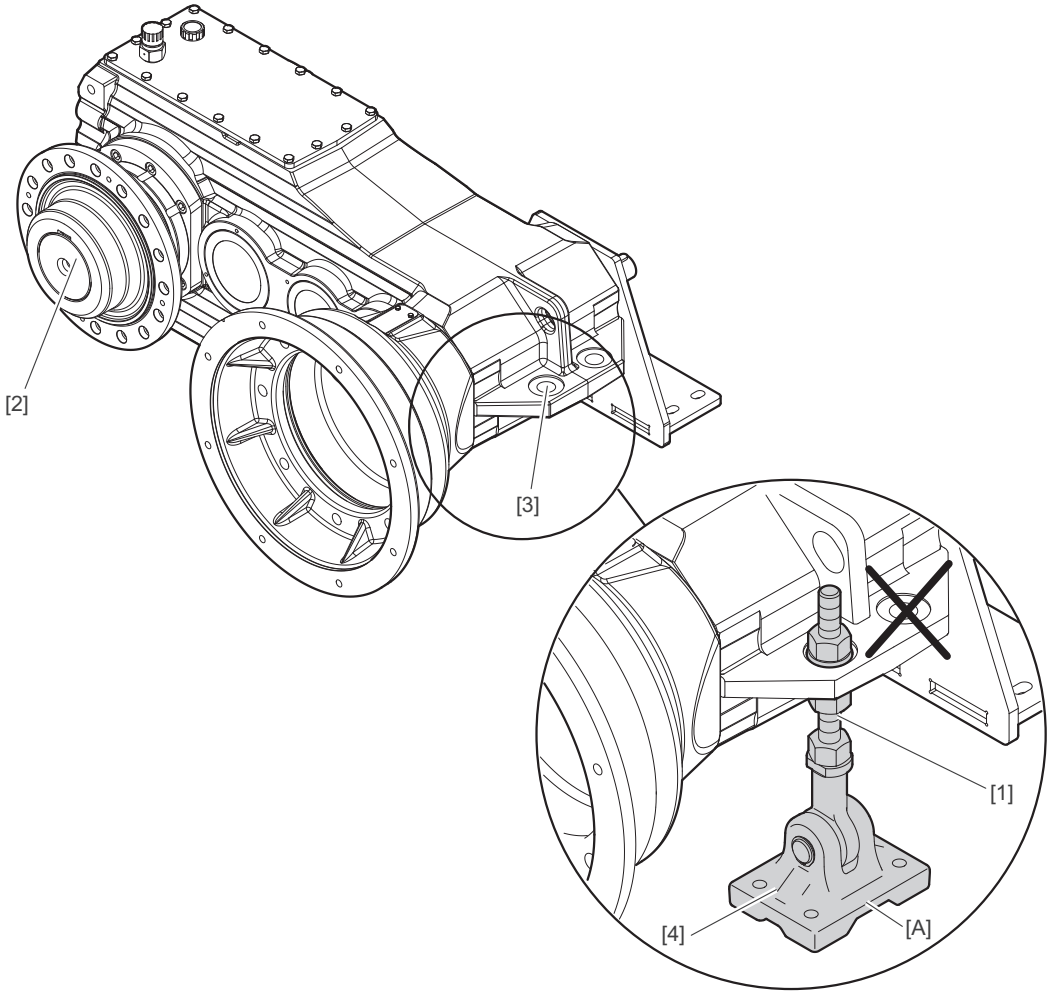

20847629323

3. Align the gear unit with the stud bolt [5] and the nuts [6] of the torque arm.

31975062/EN – 08/2024

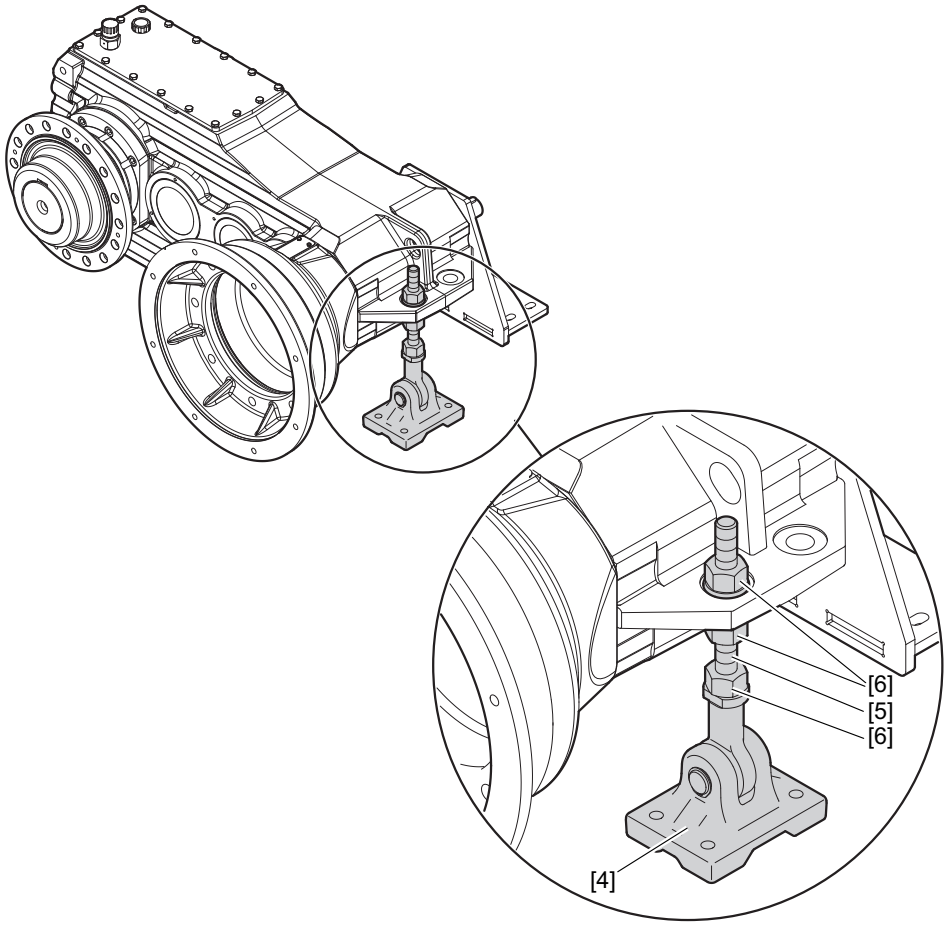

18014419358183563

4. Make sure that dimension HT is within the specified range, see the following table.

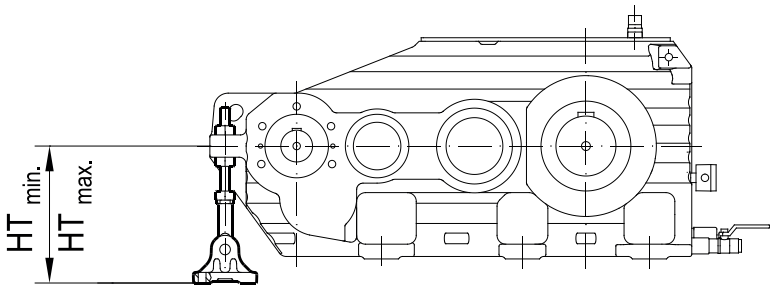

51473567627

Size	$HT_{min.}$	$HT_{max.}$	Size	$HT_{min.}$	$HT_{max.}$
X120	230	265	**X190**	293.2	338.2
X130	230	265	**X200**	324	369
X140	279.2	324.2	**X210**	324	369
X150	279.2	324.2	**X220**	324	369
X160	285.2	330.2	**X230**	355	400
X170	285.2	330.2	**X240**	355	400
X180	293.2	338.2	**X250**	355	400

5. All nuts [6] must be additionally secured with suitable threadlocker to prevent self-loosening. Coat the first few turns of the thread with a thread locking compound (e.g. Loctite® 243).
6. After the alignment process, tighten the nuts [6] with the tightening torques listed in the following table.

Size	Screw/nut	Tightening torque
		Nm
X120 – 130	M24	160
X140 – 190	M30	320
X200 – 220	M36	550
X230 – 250	M42	900

7. Attach the torque arm to the foundation using the yoke plate [4] without overhung load.

5.10.3 Procedure for mounting a torque arm by the operator

NOTICE

Danger due to overhung loads acting on the torque arm.

Possible damage to the gear unit.

- Note that the torque arm can only transmit tensile/compressive forces in its supporting direction. If forces occur in the transverse direction, they are transferred to the housing and the output shaft bearing and may cause damage and failure of the torque arm or other gear unit elements.
- When connecting the torque arm, ensure that the torque arm is correctly positioned. "Procedure if an SEW torque arm is included in the scope of delivery" (→ 🗎 64)
- Ensure that the torque arm is connected without overhung load.
- The preferred design results in a load under tension in the torque arm.
- The strength verification must be performed in accordance with the usual procedures for designing mechanical components, taking into account all relevant safety factors.
- If a torque arm by SEW-EURODRIVE is modified or used outside of the technical specifications, SEW-EURODRIVE reserves the right to refuse warranty claims or claims for damages.
- In case of questions or ambiguities, contact SEW-EURODRIVE.

31975062/EN – 08/2024

5.11 Motor adapter /MA

5.11.1 Maximum permitted motor weight

When mounting a motor onto the gear unit, check the maximum motor weight depending on gear unit design and fastening type. The motor weight may not be exceeded.

Maximum motor weight depends on motor adapter size

The following maximum loads on the motor adapter must not be exceeded.

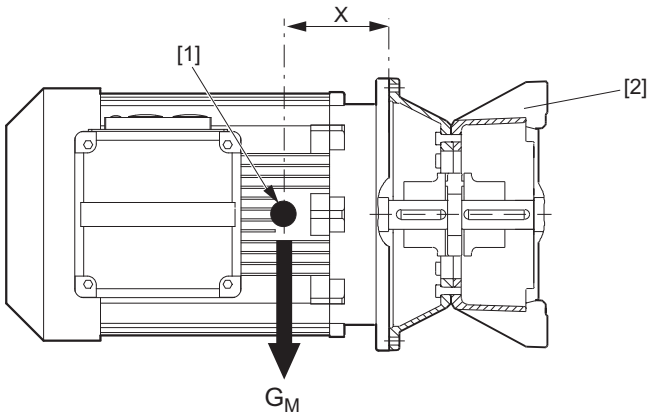

17112506251

[1] Center of gravity of the motor
[2] Motor adapter
X = Distance from the center of gravity
G_M = Weight of the mounted motor

INFORMATION

The table only applies to stationary applications. For mobile applications (e.g. travel drives), contact SEW-EURODRIVE.

Sizes X120 – 230

Motor adapter	G_M	X
IEC	kg	mm
132	70	200
160/180	170	290
200	220	290
225	300	340
250/280	580	420
315S-M	1200	590

Sizes X240 – 250

Motor adapter	G_M	X
IEC	kg	mm
250/280	820	480
315S-L	1450	680
315	2000	740
355	2500	740

The maximum permitted weight G_M must be linearly reduced if the centroidal distance **X** is increased. G_M cannot be increased if the centroidal distance is reduced.

31975062/EN – 08/2024

5.11.2 Claw coupling

INFORMATION

Observe the operating instructions of the respective coupling manufacturer.

ROTEX® coupling

INFORMATION

Spacing rings [1] (laser-cut or punched sheet metal) are required for gear unit shaft and motor shaft with keyway. The spacing rings are mounted on the gear unit side [2] together with the coupling half [3] at the factory. The coupling half on the motor side [4] with spacing elements [1] is included in the delivery.

Observe the notes in chapter "Preliminary work regarding inspection and maintenance" (→ 🗎 83).

Torsionally flexible jaw-type coupling

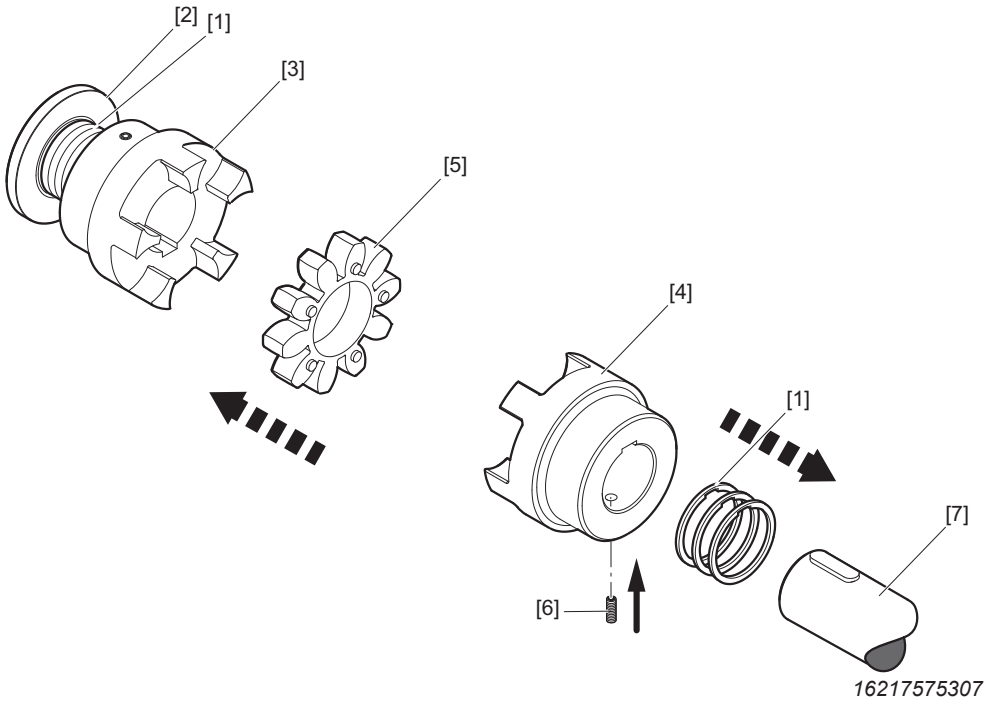

1. Insert the elastic element [5] into the claws of the coupling hub [3] on the gear unit side.

31975062/EN – 08/2024

2. Clean the motor shaft and flange surfaces of the motor and the motor adapter. These must be dry and free of grease!

INFORMATION

To avoid contact corrosion, SEW-EURODRIVE recommends applying assembly paste, such as Rivolta F.L.A., to the motor shaft before mounting the coupling half.

3. Push spacing elements [1] and coupling hub [4] onto the motor shaft [7] until they are flush. To prevent noise, the spacing elements [1] must be installed with zero clearance. If required, the coupling must be pulled towards the spacing elements [1] using the centering thread of the motor shaft [7]. For the dimensions of the required spacing elements [1], refer to the following table under L_M. The coupling size and the type are noted on the coupling.

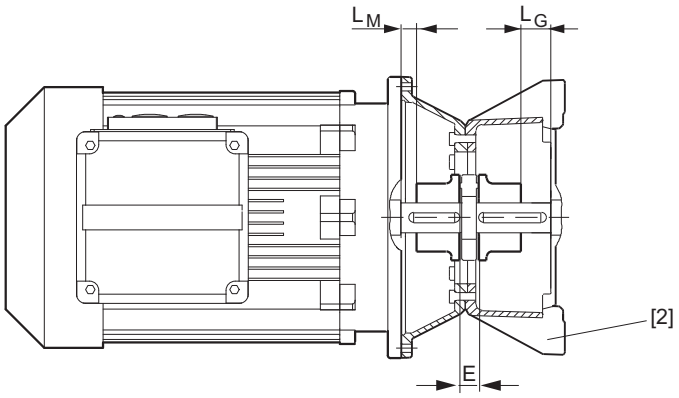

17112371723

[1] Motor adapter
E Mounting dimension
L_M Distance: Face of the coupling hub toward the motor
L_G Distance: Face of the coupling hub toward the gear unit

Size	Gear ratio	Motor size	Coupling size	L_G mm	L_M mm
X4F.C120 – 130	14 – 40/18 – 50	IEC200	RT48	45	67
		IEC225	RT55	35	87
		IEC250	RT65	25	82
		IEC280	RT75	15	67
		IEC315S–M	RT90	10	76
X4F.C120 – 130	45 – 125/56 – 160	IEC160	RT38	40	71
		IEC180	RT48	25	60
		IEC200	RT48	40	72
		IEC225	RT55	30	92
		IEC250	RT65	20	87
		IEC280	RT75	10	72
X4F.C120 – 130	140 – 200/180 – 250	IEC132	RT38	35	43
		IEC160	RT38	40	71
		IEC180	RT48	25	60
		IEC200	RT48	40	72
		IEC225	RT55	30	92
		IEC250	RT65	20	87
		IEC280	RT75	10	72

Size	Gear ratio	Motor size	Coupling size	L_G mm	L_M mm
X4F.C140 – 150	14 – 200/18 – 250	IEC180	RT48	30	53
		IEC200	RT48	55	55
		IEC225	RT55	45	75
		IEC250	RT65	35	70
		IEC280	RT75	25	55
		IEC315S–M	RT90	10	74
X3F.C160 – 170	14 – 40/18 – 50	IEC250	RT65	70	65.5
		IEC280	RT75	60	50.5
		IEC315S–M	RT90	50	64.5
X4F.C160 – 170	45 – 125/56 – 160	IEC180	RT55	75	19.5
		IEC200	RT48	85	56.5
		IEC225	RT55	80	71.5
		IEC250	RT65	70	66.5
		IEC280	RT75	60	51.5
		IEC315S–M	RT90	45	70.5
X4F.C160 – 170	140 – 200/180 – 250	IEC180	RT48	59	55.5
		IEC200	RT48	75	66.5
		IEC225	RT55	65	86.5
		IEC250	RT65	55	81.5
		IEC280	RT75	45	66.5
		IEC315S–M	RT90	10	105.5
X3F.C180 – 190	16 – 28/18 – 31.5	IEC315S–M	RT90	70	45
X3F.C180 – 190	3.5 – 45/35.5 – 50	IEC225	RT75	55	46
		IEC250	RT75	55	56
		IEC280	RT75	55	56
		IEC315S–M	RT90	40	75
X3F.C180 – 190	50 – 140/56 – 160	IEC225	RT55	75	80
		IEC250	RT65	65	75
		IEC280	RT75	55	60
		IEC315S–M	RT90	40	79
X3F.C180 - 190	160 - 225/180–250	IEC225	RT55	60	95
		IEC250	RT65	50	90
		IEC280	RT75	35	80
		IEC315S–M	RT90	20	99
X4F.C200 - 210	16 – 45/18 – 50	IEC315S-M	RT90	75	64
X4F.C200 – 210	50 – 140/56 – 160	IEC225	RT75	70	59
		IEC250	RT75	70	69
		IEC280	RT75	70	69
		IEC315S–M	RT90	60	83
X4F.C200 – 210	160 – 225/180 – 250	IEC225	RT55	95	84
		IEC250	RT65	85	79
		IEC280	RT75	75	64
		IEC315S–M	RT90	60	83
X3F.C220 – 230	16 – 45/18 – 50	IEC315S–M	RT90	110	31
X4F.C220 – 230	50 – 140/56 – 160	IEC250	RT75	85	63
		IEC280	RT75	85	63
		IEC315S–M	RT90	75	77
X4F.C220 – 230	160 – 225/180 – 250	IEC250	RT65	85	88
		IEC280	RT75	75	73
		IEC315S–M	RT90	60	92
X3F.C240 – 250	16 – 45/18 – 50	IEC315S–M	RT90	110	43
		IEC315	RT100	100	64
		IEC355	RT110	90	89

31975062/EN – 08/2024

Size	Gear ratio	Motor size	Coupling size	L_G mm	L_M mm
X4F.C240–250	50 – 140/56 – 160	IEC250	RT75	100	60
		IEC280	RT75	100	60
		IEC315S–M	RT90	80	84
		IEC315	RT100	95	80
		IEC355	RT110	70	120
X4F.C240–250	160 – 225/180 – 250	IEC250	RT75	80	80
		IEC280	RT75	80	80
		IEC315S–M	RT90	70	94
		IEC315	RT100	70	105
		IEC355	RT110	60	130

4. Secure the coupling hub [4] using the set screw [6].
5. Mount the motor onto the motor adapter, making sure that the claws of the coupling hub [4][3] engage each other.
6. After assembly, you must check dimension E to ensure that the elastic element remains axially flexible during operation. Adjust the dimension E by varying the spacing elements if necessary. The dimension E is listed in the following table.

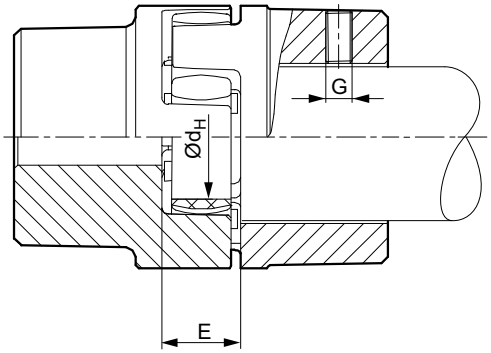

16333591435

Coupling size	Mounting dimensions		Retaining screw	
	E [mm]	d_H [mm]	G	Tightening torque [Nm]
14	13	10	M4	1.5
19	16	18	M5	2
24	18	27	M5	2
28	15	30	M8	10
38	18	38	M8	10
42	20	46	M8	10
48	21	51	M8	10
55	22	60	M10	17
65	26	68	M10	17
75	30	80	M10	17
90	34	100	M12	40
100	38	113	M12	40
110	42	127	M16	80
125	46	147	M16	80
140	50	165	M20	140
160	57	190	M20	140
180	64	220	M20	140

Attaching the motor to the motor adapter

Observe the notes in chapter "Important information" (→ 🗎 37).

1. Clean the motor shaft and flange surfaces of the motor and the motor adapter. They must be dry and free of grease.

INFORMATION

To avoid contact corrosion, SEW-EURODRIVE recommends the application of NOCO® fluid to the motor shaft before mounting the coupling half.

2. Push the coupling half onto the motor shaft and position it. When doing this, observe the information in chapter "Claw coupling" (→ 🗎 68) and the figure below. The coupling size and type are indicated on the coupling.

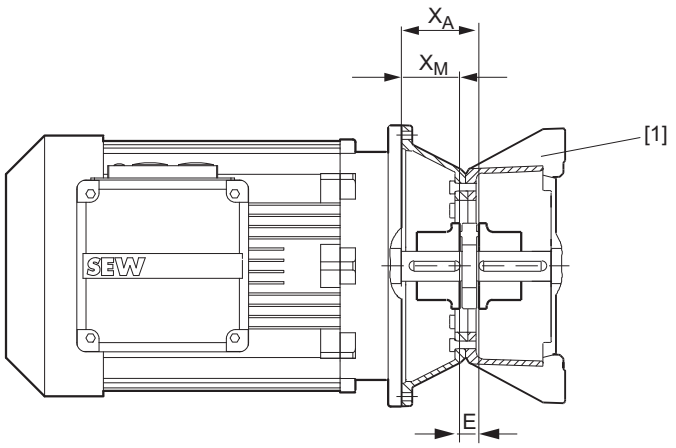

18014398960476683

[1]	Motor adapter	XA	Distance between the coupling and the motor adapter flange surface
E	Installation dimension → XM = XA - E	XM	Distance between the coupling and the motor flange surface

3. Secure the coupling half using the set screw.
4. Mount the motor onto the motor adapter, making sure that the claws of the coupling engage with each other.

31975062/EN – 08/2024

5.12 Limit temperature for gear unit startup

The minimum permitted ambient temperature/oil temperature for gear unit startup depends on the viscosity of the oil used and the lubrication type of the gear unit.

INFORMATION

Before startup, it might be necessary to heat up the oil with an oil heater to the temperature specified under "Initial temperature". Observe the lubricant table in chapter "Permitted lubricants" (→ 🗎 95).

5.13 Oil heater /OH

⚠ WARNING



Danger of electric shock.

Severe or fatal injuries.

- Before you start working on the unit, de-energize the oil heater and the thermostat.
- Secure the oil heater and thermostat against accidental activation.

NOTICE

Improper operation of the oil heater may result in damage to the gear unit.

Possible damage to property.

- It is important that the heating elements are completely immersed in the oil bath.

NOTICE

Improper changes to the mounting position of the gear unit can lead to malfunctions of the gear unit heater.

Possible damage to property.

- Do not change the mounting position without prior consultation with SEW-EURODRIVE. The warranty will become void without prior consultation.

INFORMATION

For more information on the oil heater and the dimension sheet, refer to the overall documentation for the gear unit.

5.13.1 Information on the function of the oil heater

- The heater is screwed into the gear unit housing at the factory and is controlled by a thermostat. The set trip temperature on the thermostat under the oil is set at the factory depending on the lubricant used.

31975062/EN – 08/2024

- The trip point of the oil heater thermostat is factory-set to a temperature of about 5 K above the respective limit temperature initial temperature for gear unit startup; see chapter "Limit temperature for gear unit startup" (→ 🗎 73).

  At this temperature, the thermostat disables the oil heater, see chapter "Limit temperature for gear unit startup" (→ 🗎 73). The gear unit may not be started up until then. The thermostat activates the oil heater again once the temperature is about 5 K below the switching point.
- In order to prevent the oil from burning, the heating elements of the heater have a maximum surface load. This is why the heating process for cold gear unit oil can take between one and several hours. The exact duration of the heating process before the start varies depending on the gear unit size, design, mounting position, oil quantity, and ambient temperature.

  This is why the thermostat has to be energized permanently even when the drive is at a brief standstill.

  If the drive is at standstill over a longer period and the thermostat is not energized, you have to make sure that the thermostat is energized in due time before the drive is started up.
- Thermostat and oil heater are installed in the gear unit and are ready for operation. Prior to startup, wire them properly and connect them to the current supply.
- Contact SEW-EURODRIVE if a differing oil viscosity class is used or if ambient temperatures fall below the specified limit temperature.
- During installation, check the thermostat setting according to chapter "Thermostat" (→ 🗎 75).

31975062/EN – 08/2024

5.13.2 Thermostat

Electrical connection



⚠ WARNING

Risk of injury due to electric shock.

Severe or fatal injuries.

- Disconnect the unit from the supply system if live parts can be touched during work on the unit.

The following figure shows the electrical connection.

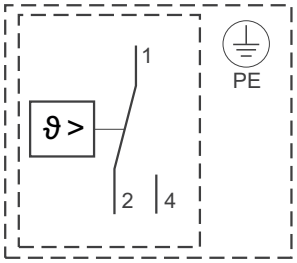

36028797469957003

- Connect to terminals (1, 2 and 4) as shown in the wiring diagram
- Connect the protective earth to terminal "PE"

INFORMATION



- Observe the manufacturer's documentation.

Technical data

Maximum switching capacity:		
AMTHs-SW-2	Voltage	Current
		Terminal 2/4
	AC 230 + 10% cosφ = 1 (0.6)	10 A
	DC 230 + 10%	0.25 A

Contact reliability:	
To ensure greatest possible contact reliability, the manufacturer recommends a minimum load of AC/DC 24 V, 100 mA for silver contacts.	
Nominal impulse voltage:	2500 V
Overvoltage category II	(via the switching contacts 400 V)
Required fusing:	See maximum switching current

- Permitted ambient temperature: -40 °C to +80 °C
- Permitted storage temperature: min. -50 °C, max. +50 °C
- Scale range: -40 °C to +100 °C
- Cable entry: M20 ×1.5 for cable cross sections 6 to 13 mm
- IP65 degree of protection according to EN 60529

The following figure shows the possible setting range of the thermostat. In this example, the pointer is on 50 °C.

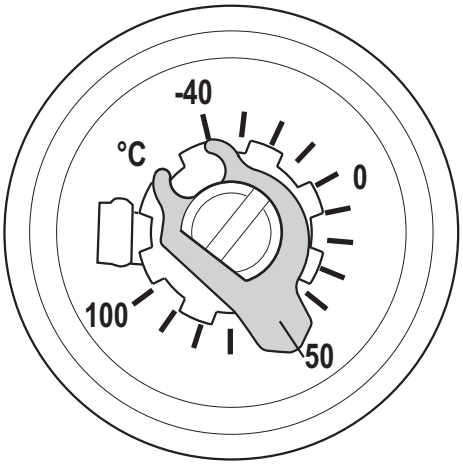

16834938379

31975062/EN – 08/2024

5.13.3 Connection power and electrical connection of resistor element

The gear unit heater comes equipped with cable glands and jumpers. They are included in the scope of delivery of the screw-in heaters and are already preassembled. The gear unit heater is connected to the current supply via terminal studs. They do not depend on the size of the heater and always have an M4 thread. We recommend using RKS4 ring cable lugs with small grommets.

AC voltage / 1-phase / 230 V / parallel connection

The following figure shows the wiring ex works (as viewed into the connection space):

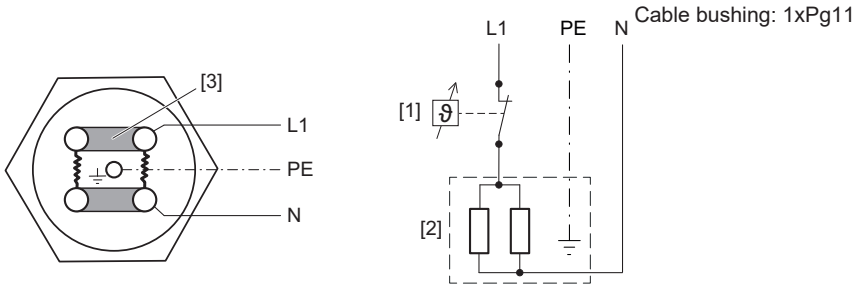

Observe the electrical characteristic data of the control zone.

[1] Thermostat

[2] Heating element

[3] Jumper

The following table shows the connected load of the heater that can be installed.

Gear unit	1 heating element	
Size	**X3F.. P_{inst} in kW**	**X4F.. P_{inst} in kW**
X120	–	0.80
X130	–	0.94
X140	–	0.94
X150	–	1.10
X160	1.10	0.94
X170	1.10	1.10
X180	1.82	1.55
X190	1.82	1.82
X200	1.82	1.82
X210	1.82	1.82
X220	2.20	2.20
X230	2.20	2.20
X240	2.60	2.60
X250	2.60	2.60

P_{inst} = Power of the installed heater

31975062/EN – 08/2024

5.14 Brake

INFORMATION

Observe the operating instructions of the respective brake manufacturer.

NOTICE

Improper mounting of the brake may result in damage to the gear unit.

Possible damage to property

- To ensure a fault-free operation of the brake [1], the brake and brake mounting bracket must be aligned with spacers [2] by the operator during installation.

The following table lists the dimension L_{B1} to be set.

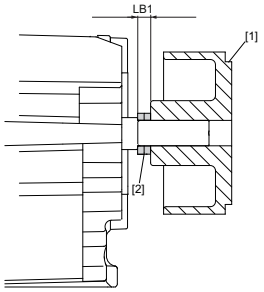

17198530955

Size	Gear ratio	Brake size 250 L_{B1} in mm	Brake size 315 L_{B1} in mm	Brake size 400 L_{B1} in mm
X4F.C120/HC	14 – 200	15	15	15
X4F.C130/HC	18 – 250	15	15	15
X4F.C140/HC	14 – 200	15	15	15
X4F.C150/HC	18 – 250	15	15	15
X3F.C160/HC	14 – 40	10	10	10
X4F.C160/HC	45 – 200	10	10	10
X3F.C170/HC	18 – 50	10	10	10
X4F.C170/HC	56 – 250	10	10	10
X3F.C180/HC	16 – 45	13	13	13
X4F.C180/HC	50 – 225	13	13	13
X3F.C190/HC	18 – 50	13	13	13
X4F.C190/HC	56 – 250	13	13	13
X3F.C200/HC	16 – 45	–	10	10
X4F.C200/HC	50 – 225	–	10	10
X3F.C210/HC	18 – 50	–	10	10
X4F.C210/HC	56 – 250	–	10	10
X3F.C220/HC	16 – 45	–	10	10
X4F.C220/HC	50 – 225	–	20	20
X3F.C230/HC	18 – 50	–	10	10
X4F.C230/HC	56 – 250	–	20	20
X3F.C240/HC	14 – 40	–	10	10
X4F.C240/HC	45 – 200	–	20	20
X3F.C250/HC	16 – 45	–	10	10
X4F.C250/HC	50 – 225	–	20	20

31975062/EN – 08/2024

6 Startup

6.1 Important notes

NOTICE

Improper startup may result in damage to the gear unit.

Possible damage to property.

- Observe the following notes.

- Fill the gear unit with the oil grade specified on the nameplate. The oil quantity specified on the nameplate is an approximate quantity. The mark on the oil dipstick is the decisive indicator of the correct oil quantity. For additional information, refer to chapter "Checking the oil level" (→ 🗎 88) and chapter "Changing the oil" (→ 🗎 89).

  Check the oil level again after a few operating hours, see chapter "Checking the oil level" (→ 🗎 88).
- The most important technical data is provided on the nameplate. Additional data relevant for operation is available in drawings, on the order confirmation or any order-specific documentation.
- Prior to startup, make sure that the monitoring devices (temperature switch, etc.) are fully operational.
- Avoid a no-load operation independent of the driven machine as operation with a load below the minimum load may damage the rolling bearing of the gear unit.
- After having installed the gear unit, check to see that all retaining screws are tight.
- Make sure that the alignment has not changed after tightening the mounting elements.
- Prior to startup, ensure that rotating shafts as well as couplings are equipped with suitable protective covers.
- If there are any oil drain valves, ensure that they cannot be opened unintentionally.
- If an oil level glass is used for checking the oil level, ensure that it is protected against damage.
- It is essential that there is no open fire or risk of sparks when working on the gear unit.
- Make sure that the gear unit is grounded. Electrical mount-on components, such as motors, frequency inverters, etc. must be grounded separately.
- Protect the gear unit from falling objects.
- When operated in areas with low ambient temperatures, observe the "limit temperature for gear unit startup". Allow for a sufficient heating period.
- For gear units with long-term protection: Replace the screw plug at the location indicated on the gear unit with a breather plug (position → see order documents).
- Remove transport protection prior to startup.
- Strictly observe the safety notes in the individual chapters.

31975062/EN – 08/2024

6.2 Oil heater /OH

NOTICE

Malfunctioning oil heater when changing the mounting position

Possible damage to property.

- Do not change the mounting position without prior consultation with SEW-EURODRIVE, otherwise proper functioning is no longer ensured.

6.2.1 Positioning the thermostat

The required position of the thermostat may vary depending on the installation space.

Proceed as follows to position the thermostat:

1. Open the clamping screws [2].
2. **NOTICE!** Observe the position of the cable gland. Possible damage to property. Mount it in such a way that no moisture can enter. Turn the thermostat to the required position.
3. Tighten the clamping screws [2].

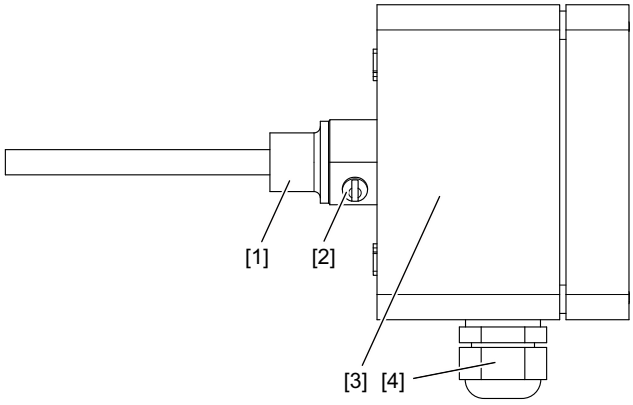

2338432139

[1] Threaded jacket
[2] Clamping screw
[3] Thermostat
[4] Cable gland

A threaded jacket prevents oil from leaking. The sensor of the thermostat is inserted in the threaded jacket and attached via the 2 clamping screws.

INFORMATION

Observe the manufacturer's documentation.

31975062/EN – 08/2024

6.3 Starting up the gear unit at low ambient temperatures

NOTICE

Starting up the gear unit below the permitted minimum oil temperature for gear unit startup may damage the unit.

Possible damage to property.

- Note that prior to gear unit startup, the oil must be heated at least to the lowest cold start temperature by the oil heater (→ 🗎 95).

6.4 Gear unit shutdown / gear unit preservation

⚠ WARNING



Risk of crushing if the drive starts up unintentionally.

Severe or fatal injuries.

- Work on the gear unit only when the machine is not in use. Secure the drive unit against unintentional power-up. Attach an information sign near the ON switch to warn that the gear unit is being worked on.

INFORMATION



Gear units with water cooling system: disrupt the cooling water supply and drain the water from the cooling circuit. For oil supply systems, please contact SEW-EURODRIVE.

Additional conservation measures are required if the gear unit is to be shut-down for a longer period. Note the installation site, ambient conditions and lubricant condition of the gear unit, depending on which conservation may be necessary after only a few weeks of downtime.

6.4.1 Internal conservation

- **New or hardly used gear units:**
  - SEW-EURODRIVE recommends the VCI conservation method for internal conservation of the gear unit.
  - Apply the required amount of VCI anti-corrosion agent to the inside of the gear unit (e.g. FUCHS Anticorit VCI UNI O-40, www.fuchs.com). The amount depends on the free space inside the gear unit. Any existing oil may usually remain in the drive.

    Corrosion protection with VCI anti-corrosion agent is not permitted for gear units that are operated with food grade lubricants. Contact SEW-EURODRIVE in such cases.
  - Replace the breather with a screw plug and close the gear unit so that it is air tight. Mount a new breather prior to startup.
- **After longer gear unit operation:**

31975062/EN – 08/2024

– The oil might be contaminated (oil sludge, water, etc.) after long periods of operation. Therefore, drain the oil and thoroughly rinse the inside of the gear unit with new oil prior to conservation. Observe the information in chapter "Changing the oil" (→ 🗎 89) in the corresponding operating instructions. The inside of the gear unit can then be conserved as described above.

For gear units without "contactless sealing systems", you may also use the oil type indicated on the nameplate to perform the conservation. In this case, the gear unit must be completely filled with clean oil. Replace the breather with a screw plug and fill in the oil from the highest point of the gear unit. To ensure sufficient conservation, all the gearing components and bearing components must be completely covered in oil.

For gear units with "contactless sealing systems", contact SEW-EURODRIVE.

Before startup, mount a new breather. Observe the information on the nameplate regarding the oil grade and oil quantity.

6.4.2 External corrosion protection

- Clean the respective surfaces.
- To separate the sealing lip of the oil seal from the corrosion protection agent, apply grease to the shaft in the area of the dust lip.
- Apply a wax-based protective coating to shaft ends and unpainted surfaces as external corrosion protection (e.g. Herm. Hölterhoff Hölterol MF 1424, www.hoelterhoff.de).

INFORMATION

Consult the respective supplier regarding the compatibility with the oil that is used and the length of corrosion protection for your particular gear unit version.

Also observe the information in the operating instructions in chapter "Storage and transport conditions" (→ 🗎 19). This chapter provides information on the possible storage periods in conjunction with adequate packaging – depending on the storage location.

31975062/EN – 08/2024

7 Inspection/maintenance

7.1 Preliminary work regarding inspection and maintenance

Observe the following notes before starting inspection/maintenance work.



⚠ WARNING

Risk of crushing if the drive starts up unintentionally.

Severe or fatal injuries.

- Work on the gear unit only when the machine is not in use. Secure the drive unit against unintentional power-up. Attach an information sign near the ON switch to warn that the gear unit is being worked on.



⚠ WARNING

An operator's machine that is not appropriately secured can fall during gear unit installation or removal.

Severe or fatal injuries.

- Protect the operator's machine against unintentional movement when installing or removing the gear unit.
- Before releasing shaft connections, make sure that there are no active torsional moments present (tensions within the system).



⚠ WARNING

Danger due to using impermissible gear unit oil.

Severe or fatal injuries.

- Only use food-grade oils when the gear unit is used in the food industry.



⚠ WARNING

Risk of burns due to hot gear unit and hot gear unit oil.

Severe injuries.

- Let the gear unit cool down before you start working on it.
- Remove the oil drain plug very carefully.



⚠ CAUTION

Danger due to lubricant leaking from damaged seals and the breather.

Minor injuries.

- Check the gear unit and mount-on components for leaking lubricant.
- The seals must not come in contact with cleaning agent as this may damage the seals.
- Protect the breather against damage.
- Make sure that there is not too much oil in the gear unit. If the oil level is too high and the temperature rises, lubricant may escape from the breather.

31975062/EN – 08/2024



⚠ CAUTION

Danger due to leakage of lubricant.

Injuries.

- Remove any dripping oil immediately with oil binding agent.

NOTICE

Filling in the wrong oil may result in significantly different lubricant characteristics.

Possible damage to property.

- Do not mix oils of different types and from different manufacturers.

NOTICE

Improper maintenance may result in damage to the gear unit.

Possible damage to property.

- Observe the following notes.

- Strict adherence to the inspection and maintenance intervals is absolutely necessary to ensure safe working conditions.
- Strict adherence to the inspection and maintenance intervals is absolutely necessary to ensure safe working conditions.
- If you remove the gear unit cover, you must apply new sealing compound to the sealing surface. Otherwise, the sealing properties of the gear unit may be impaired. Consult SEW-EURODRIVE in this case.
- Use only original spare parts according to the delivered spare and wearing parts lists.
- When using primary gearmotors, also observe the maintenance notes for motors and primary gear units in the accompanying operating instructions.
- Prevent foreign particles from entering into the gear unit during maintenance and inspection work.
- Never clean the gear unit using a high-pressure cleaning device. Water might enter the gear unit and the seals might be damaged.
- Replace any damaged seals.
- The gear unit must be cleaned in such a way that liquids cannot enter the motor adapter (HSS end) or the mounting flange (LSS end) and accumulate there.
- Perform a safety check and functional check following all maintenance and repair work.
- For third-party parts, such as cooling systems, observe the separate inspection and maintenance intervals of the manufacturer's documentation.
- Strictly observe the safety notes in the individual chapters.

31975062/EN – 08/2024

7.2 Inspection and maintenance intervals

Adhere to the following inspection and maintenance intervals:

Frequency	What is to be done?
Daily	• Check the oil bath temperature: – max. permitted oil bath temperature according to lubricant table • Check gear unit noise
Once a month	• Check the gear unit for signs of leakage • Checking the oil level
After 500 operating hours	• First oil change after initial startup
Every 6 months	• Check the screw fittings and piping for leakage • Check elastic element of the claw coupling mounted in the motor adapter
Every 3000 operating hours, at least every 6 months	• Check the oil consistency
Depending on the operating conditions, at the latest every 12 months	• Check whether retaining screws are tightly secured • Check if the gear unit surface is free of dust and dirt, so that the gear unit can be optimally cooled. • Replacing the breather • Check alignment on input and output shaft
At least every 3 years depending on the operating conditions (see figure on next page)	• Change mineral oil
At least every 5 years, depending on the operating conditions (see figure on next page)	• Change synthetic oil
Varying (depending on external factors)	• Touch up or renew the surface/corrosion protection • Check the oil heater /OH (at same time as the oil change): – Are all connecting leads and terminals tightened securely and free from corrosion? – Clean encrusted heating elements, replace if necessary

INFORMATION

The specified intervals depend mainly on the operating conditions of the gear unit. The intervals refer to the following conditions:

- Daily operating time: 8 h
- Cyclic duration factor CDF 60%
- Input speed 1500 min^{-1}
- max. oil bath temperature according to lubricant table

31975062/EN – 08/2024

7.3 Lubricant change intervals

It might be necessary to change the oil more frequently when using special designs or under more severe/aggressive ambient conditions.

INFORMATION

Mineral CLP lubricants and synthetic polyalphaolefin-based (PAO) lubricants are used for lubrication. The synthetic lubricant CLP HC (according to DIN 51502) shown in the following figure corresponds to the PAO oils:

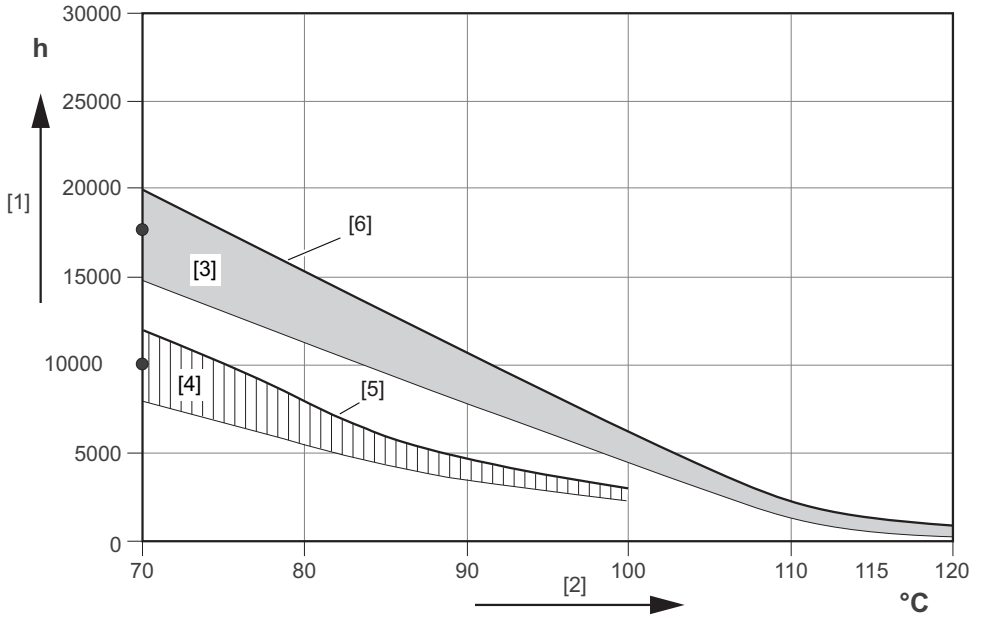

45035996684258699

[1] Operating hours
[2] Sustained oil bath temperature – average value per oil type at 70 °C
[3] CLP HC/CLP HC NSF H1
[4] CLP (CC)/E
[5] SEW GearOil Base
[6] SEW GearOil Synth

INFORMATION

SEW-EURODRIVE recommends that the gear unit oil is analyzed regularly (see chapter "Checking the oil consistency" (→ 🗎 87)) to optimize the lubricant change intervals.

31975062/EN – 08/2024

7.4 Checking the oil consistency

Observe the notes in chapter "Preliminary work regarding inspection and maintenance" (→ 🗎 83).

Proceed as follows to check the oil consistency:

1. ⚠ **WARNING!** Risk of burns due to hot gear unit and hot gear unit oil. Serious injury. Let the gear unit cool down below 50 °C before you start working on it.
2. Start the gear unit for a short time for the oil to mix with suspended particles.
3. Determine the oil drain position and place a container underneath.
4. Slowly open the oil drain and drain some oil.
5. Close the oil drain valve.
6. Check the oil consistency:

- Check the drained oil for appearance, color, and contamination.
- If the oil sample is severely contaminated, e.g. water, cloudiness, change in color, dirt, consult a specialist to find out the cause.

INFORMATION

A detailed and reliable examination of the oil consistency is not possible with the naked eye. If you are unsure whether the oil is in good condition or whether an oil change is required, we recommend performing a laboratory analysis of the oil.

SEW-EURODRIVE offers a laboratory analysis in which the oil is checked for wear, water and contamination. Furthermore, the viscosity, acid value and additive content of the oil is checked. For this purpose, contact SEW-EURODRIVE.

31975062/EN – 08/2024

7.5 Checking the oil level

7.5.1 General information

Note the following when checking the oil level:

NOTICE

Improper checking of the oil level may result in damage to the gear unit.

Possible damage to property.

- Check the oil level only when the gear unit is at standstill.
- When the gear unit is equipped with an oil dipstick and an oil sight glass, refer to the oil dipstick for the correct oil level. The oil level of the oil sight glass is only a guide value.
- Elements for controlling the oil level, oil drain, and oil fill openings are indicated on the gear unit by safety symbols.
- Check the oil level again after a few operating hours.

7.5.2 Standard procedure

Oil dipstick

Observe the notes in chapter "Preliminary work regarding inspection and maintenance" (→ 🗎 83).

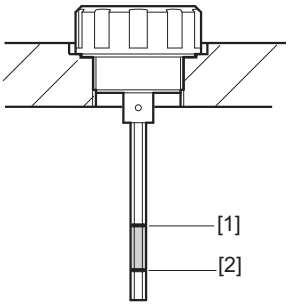

17185819787

1. Unscrew the oil dipstick and remove it.
2. Clean the oil dipstick and re-insert it by turning it hand-tight into the gear unit up to the stop.
3. Remove the oil dipstick and check the oil level. The oil level must be between the markings [1] and [2].
4. Proceed as follows if the oil level is too low:
   - Open the oil fill plug.
   - Fill in oil of the same oil grade until the oil level is between the markings [1] and [2].
5. If you filled in too much oil, proceed as follows:
   - Adjust the oil level. The oil level must be between the markings [1] and [2].
6. Screw in the oil fill plug.
7. Insert the oil dipstick.

31975062/EN – 08/2024

7.6 Changing the oil

7.6.1 Notes

Observe the following information when changing the oil:



⚠ WARNING

Risk of burns due to hot gear unit and hot gear unit oil.

Severe injury.

- Let the gear unit cool down before you start working on it.
- Remove the oil drain plug very carefully.

NOTICE

Improper oil change can damage the gear unit.

Possible damage to property.

- Observe the following information.

- Perform the oil change quickly after you have switched off the gear unit to prevent solids from settling. If possible, drain the oil while it is still warm. Avoid oil temperatures above 50 °C.
- Oil grade and oil viscosity are listed on the nameplate of the gear unit.

  The required oil fill quantity is higher when additional attachments are mounted to the gear unit, such as an oil supply system. Observe the operating instructions of the oil supply system.
- Always fill the gear unit with the same oil grade as before. Mixing oils of different grades and/or manufacturers is not permitted. Synthetic oils in particular must not be mixed with mineral oils or other synthetic oils. When switching from mineral oil and/or when switching from synthetic oil of one basis to synthetic oil of another basis, thoroughly flush the gear unit with the new oil grade.

  Refer to the lubricant table for information on the permitted oil of the various lubricant manufacturers.
- When changing the oil, flush the interior of the gear unit thoroughly with oil to remove oil sludge, oil residue, and abrasion. Use the same oil grade as for operating the gear unit. Fill in fresh oil only after all residues have been removed.
- An oil level above the max. marking might indicate that foreign liquids (e.g. water) have entered. An oil level below the min. marking might indicate a leakage. Find out and eliminate the cause before you fill in new oil.
- Replace any damaged seals on the oil drain plug.
- If present, clean the magnetic oil drain plug and the oil dipstick with magnet tip.
- Empty the oil-bearing system of gear units with oil cooling system and oil supply system according to the manufacturer's maintenance instructions. If required, empty accessories such as oil filters and pipes.
- Elements for controlling the oil level, oil drain, and oil fill openings are indicated by safety symbols on the gear unit.
- For gear units with reduced oil level, observe chapter "Gear units with reduced oil level".

31975062/EN – 08/2024

7.6.2 Standard procedure

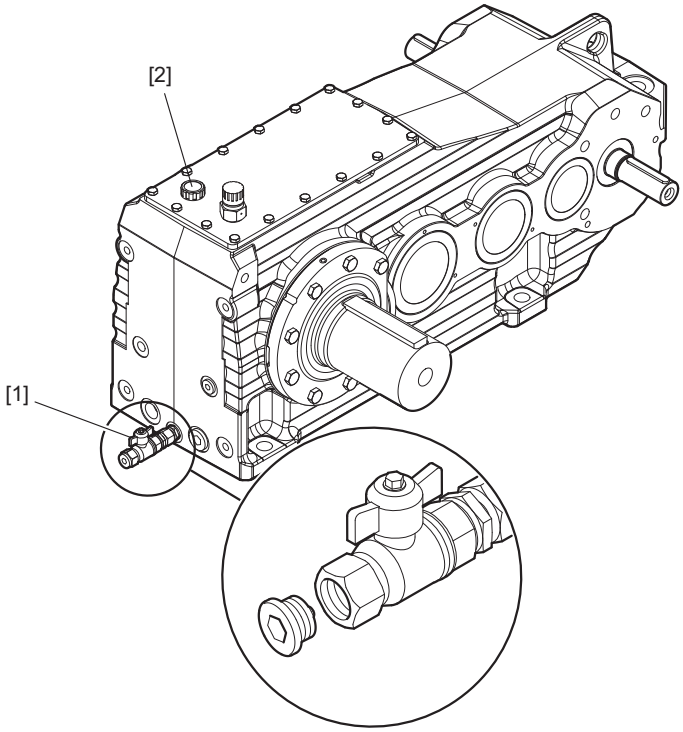

19495999755

Observe the notes in chapter "Preliminary work regarding inspection and maintenance" (→ 🗎 83).

1. Place a suitable container underneath the oil drain valve [1].
2. Remove the oil dipstick [2].
3. Remove the screw plug [3].
4. Open the oil drain valve [1] and drain all the oil into the container.
5. Close the oil drain valve [1].
6. Insert the screw plug [3].
7. Fill in new oil of the same grade through the oil filling hole [2].

- Use a filling filter to fill the oil into the gear unit (max. filter mesh 25 µm).
- The oil quantity specified on the nameplate is an approximate quantity. The mark on the oil dipstick [2] is the decisive indicator of the correct oil quantity, see chapter "Checking the oil level" (→ 🗎 88).

8. Insert the oil dipstick [2].

7.7 Filling up sealing system (except Drywell)

Standard procedure, not valid for gear units with drywell design.

⚠ WARNING



Risk of crushing due to rotating parts.

Severe or fatal injuries.

- Make sure to provide for sufficient safety measures for relubrication.

31975062/EN – 08/2024

Observe the notes in chapter "Preliminary work regarding inspection and maintenance" (→ 🗎 83).

Regreasable sealing systems may be filled with "grease" (→ 🗎 102). Use moderate pressure to force grease into each lubrication point until new grease leaks out of the sealing gap.

In this way, used grease, including contaminants and sand, is pressed out of the sealing gap.

INFORMATION

Immediately remove the old grease that leaked out.

31975062/EN – 08/2024

7.8 Oil heater /OH



⚠ WARNING

Danger of electric shock.

Severe or fatal injuries.

- De-energize the oil heater before you start working on the unit.
- Secure the oil heater against unintended power-up.

Observe the notes in chapter "Preliminary work regarding inspection and maintenance" (→ 🗎 83).

1. Before disassembling the oil heater, drain the "oil" (→ 🗎 89).
2. Disassemble the oil heater.
3. **NOTICE!** Improper cleaning of the oil heater may damage the heating elements. Possible damage to property.
   Do not destroy the heating elements by scratching or scraping. Clean the tubular heating elements with solvent. Replace the defective heating elements.
4. Apply LOCTITE® 577 to 2 threads and screw on the oil heater and tighten the hex head screw.
5. Close the oil drain valve.
6. Fill in new oil of the same grade via the oil fill plug.

- Use a filling filter to fill the oil into the gear unit (max. filter mesh 25 µm).
- Fill in the oil according to the oil quantity specified on the nameplate. The oil quantity specified on the nameplate is an approximate value.
- Check to see that the oil level is correct, refer to chapter "Checking the oil level" (→ 🗎 88).

7. Connect the oil heater.

31975062/EN – 08/2024

7.9 Replacing the breather

NOTICE

Improper cleaning of the breather may damage the gear unit.

Possible damage to property.

- Prevent foreign particles from entering into the gear unit when performing the following work.

Observe the notes in chapter "Preliminary work regarding inspection and maintenance" (→ 🗎 83).

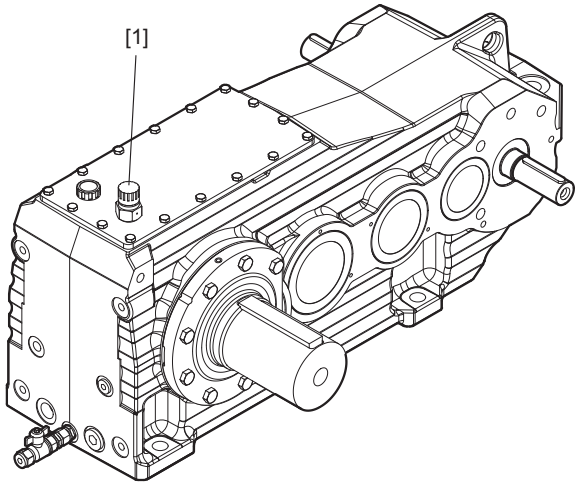

19495975179

1. Remove any deposits near the breather [1].
2. Replace the clogged breather [1] with a new one.

31975062/EN – 08/2024

7.10 Motor adapter

Observe the notes in chapter "Preliminary work regarding inspection and maintenance" (→ 🗎 83).

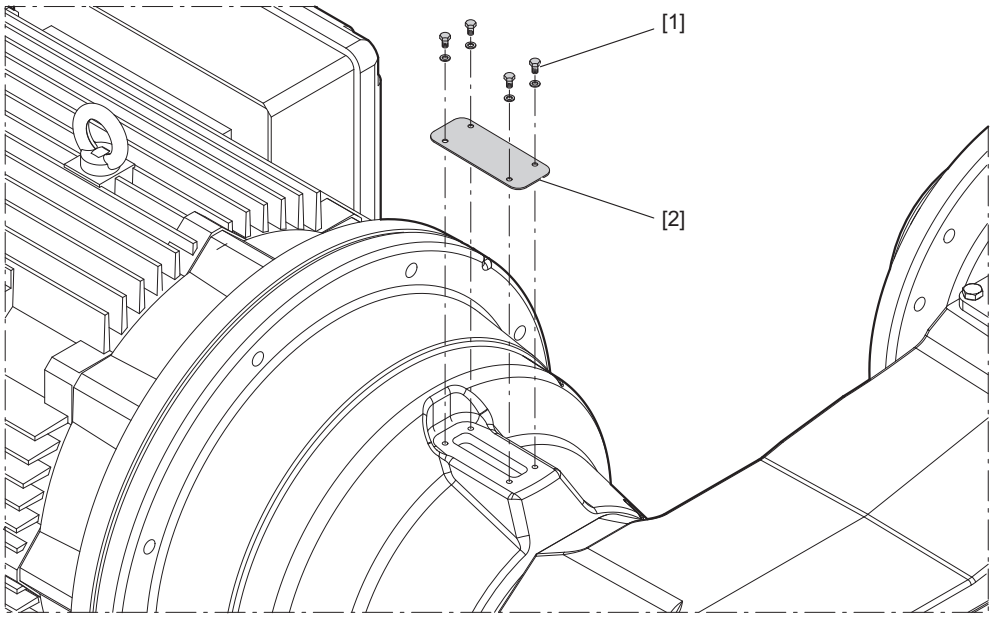

16127109643

1. Loosen the 4 screws [1] and remove the cover [2].
2. Check the elastic element for deformation and cracks.
3. Mount the cover [2] using the 4 screws [1].

31975062/EN – 08/2024

8 Permitted lubricants

This chapter describes the permitted lubricants and the permitted temperatures for industrial gear units from SEW-EURODRIVE.

8.1 Lubricant selection

Note the following when selecting the lubricants.

NOTICE

Selecting improper lubricants may damage the gear unit.

Possible damage to property.

- Observe the following information.

- The oil viscosity and type (mineral/synthetic) to be used are determined by SEW-EURODRIVE specifically for each order. This information is noted in the order confirmation and on the gear unit's nameplate.

  If other lubricants are used in the gear units and/or in other temperature ranges as those recommended, the right to claim under warranty will become invalid. Exceptions are application-specific approvals that have to be confirmed by SEW-EURODRIVE in written form.

  The lubricant recommendation in the lubricant table in no way represents a guarantee regarding the quality of the lubricant delivered by each respective supplier. Each lubricant manufacturer is responsible for the quality of its product.
- Oils of the same viscosity class from different manufacturers do not have the same characteristics. In particular, the minimum permitted oil bath temperatures are manufacturer-specific. These temperatures are specified in the lubricant tables.
- The minimum permitted oil bath temperatures depend on the lubrication type used. These temperatures are specified in the lubricant tables. The values correspond to the maximum permitted viscosity of the individual lubricants.
- The values specified in the lubricant tables apply as of the time of printing of this document. The data of the lubricants is subject to dynamic change on the part of the lubricant manufacturers. For up-to-date information about the lubricants, visit:

  www.sew-eurodrive.de/lubricants
- Do not mix different synthetic lubricants and do not mix synthetic lubricants with mineral lubricants.
- Check the compatibility of the greases and oils used.
- Observe the safety notes in the individual chapters.

31975062/EN – 08/2024

8.2 Structure of the tables and abbreviations

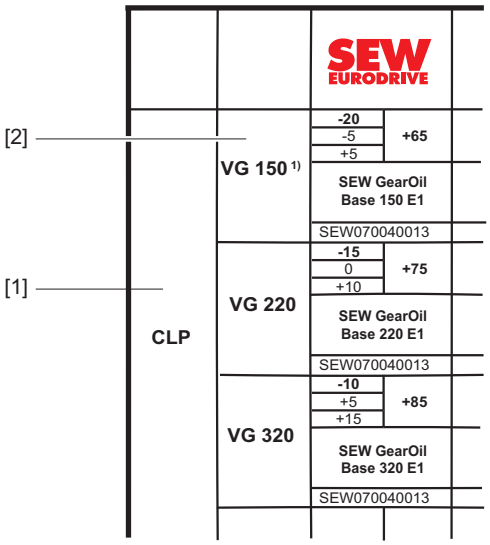

27021615684069515

[1] Lubricant type
[2] Viscosity class

Abbreviations

Icons	Designation
CLP	= Mineral oil
CLP HC	= Synthetic polyalphaolefin (PAO)
E	= Ester-based oil
	= Mineral lubricant
	= Synthetic lubricant
	= Lubricant for the food industry (**NSF H1**-compliant)
	= Biodegradable oil (lubricant for agriculture, forestry, and water management)
1)	= Lubricants may only be used if service factor $F_s \geq 1.3$

31975062/EN – 08/2024

8.3 Explanation of the various lubricants

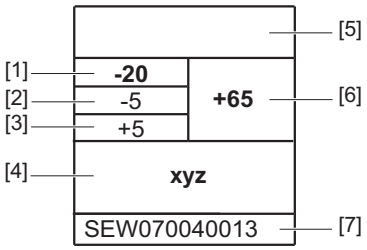

18014416413363467

[1] Lowest cold start temperature in °C for splash lubrication[1)]
[2] Lowest cold start temperature in °C for drives with pumps up to a max. oil viscosity of 5000 cSt[1)]
[3] Lowest cold start temperature in °C for drives with pumps up to a max. oil viscosity of 2000 cSt[1)]
[4] Trade name
[5] Manufacturer
[6] Highest oil bath temperature in °C[2)]
[7] Approvals

1) In case of lower temperatures, the oil must be heated to the specified minimum temperature, for example, by using an oil heater.
2) Service life is significantly reduced when exceeded. Note the contents of the chapter "Lubricant change intervals".

31975062/EN – 08/2024

8.4 Lubricant tables

This lubricant table is valid when the document is published. Refer to www.sew-eurodrive.de/lubricants for the latest version of the table.

[1]	[2]	SEW EURODRIVE			Castrol			FUCHS			Mobil			KLÜBER LUBRICATION			SINOPEC			TOTAL		
CLP	VG 150	-20	-5	+5	-20	-5	+5	-20	-5	+5	-20	-5	+5	-20	-5	+5	-20	-5	+5			
		SEW GearOil Base 150 E1 / US1 / CN1 / BR1		+65	Optigear BM 150		+65	Renolin CLP 150 Plus		+65	Mobilgear 600 XP 150		+65	Klüberoil GEM 1-150 N		+65	AP-SGO 150		+65			
		SEW070040013						SEW070030013			SEW070030013						SEW070030013					
	VG 220	-15	0	+10	-15	0	+10	-15	0	+10	-15	0	+10	-15	0	+10	-15	0	+10	-15	0	+10
		SEW GearOil Base 220 E1 / US1 / CN1 / BR1		+75	Optigear BM 220		+75	Renolin CLP 220 Plus		+75	Mobilgear 600 XP 220		+75	Klüberoil GEM 1-220 N		+75	AP-SGO 220		+75	Carter EP 220		+75
		SEW070040013						SEW070030013			SEW070030013						SEW070030013					
	VG 320	-10	+5	+15	-10	+5	+15	-10	+5	+15	-10	+5	+15	-10	+5	+15	-10	+5	+15	-10	+5	+15
		SEW GearOil Base 320 E1 / US1 / CN1 / BR1		+85	Optigear BM 320		+80	Renolin CLP 320 Plus		+80	Mobilgear 600 XP 320		+80	Klüberoil GEM 1-320 N		+80	AP-SGO 320		+80	Carter EP 320		+80
		SEW070040013						SEW070030013			SEW070030013						SEW070030013					
	VG 460	-5	+10	+20	-5	+10	+20	-5	+10	+20	-5	+10	+20	-5	+10	+20	-5	+10	+20	-5	+10	+20
		SEW GearOil Base 460 E1 / US1 / CN1 / BR1		+90	Optigear BM 460		+90	Renolin CLP 460 Plus		+90	Mobilgear 600 XP 460		+90	Klüberoil GEM 1-460 N		+90	AP-SGO 460		+90	Carter EP 460		+90
		SEW070040013						SEW070030013			SEW070030013						SEW070030013					
	VG 680	0	+15	+25	0	+15	+25	0	+15	+25	0	+15	+25	0	+15	+25	-5	+10	+20	0	+15	+25
		SEW GearOil Base 680 E1 / US1 / CN1 / BR1		+90	Optigear BM 680		+90	Renolin CLP 680 Plus		+90	Mobilgear 600 XP 680		+90	Klüberoil GEM 1-680 N		+90	AP-SGO 460		+90	Carter EP 680		+90
		SEW070040013						SEW070030013			SEW070030013						SEW070030013					
	VG 1000	+5	+20	+30	Optigear BM 1000		+90															

36028821504162699

This lubricant table is valid when the document is published. Refer to www.sew-eurodrive.de/lubricants for the latest version of the table.

[1]	[2]	SEW EURODRIVE	Castrol	FUCHS	Mobil®	KLÜBER LUBRICATION	TOTAL
CLP HC	VG 32 [1]				-40 / -30 / -25 +30 SHC 624		
	VG 68 [1]			-35 / -20 / -10 +50 Renolin Unisyn CLP 68	-40 / -25 / -15 +50 SHC 626	-35 / -20 / -10 +50 Klübersynth GEM 4-68 N	
	VG 150 [1]	-35 / -15 / -5 +75 GearOil Synth 150 E1 SEW 07004031 3	-25 / -10 / 0 +70 Alphasyn EP 150	-30 / -10 / +0 +70 Renolin Unisyn CLP 150	-30 / -10 / 0 +75 SHC 629	-25 / -10 / 0 70 Klübersynth GEM 4-150 N	-35 / -15 / -5 +75 Carter SH 150
	VG 220	-30 / -10 / 0 +85 GearOil Synth 220 E1 SEW 07004031 3	-25 / -5 / +5 +80 Alphasyn EP 220	-25 / -5 / +5 +80 Renolin Unisyn CLP 220	-25 / -5 / 0 +85 SHC 630	-25 / -5 / +5 +80 Klübersynth GEM 4-220 N	-25 / -5 / +5 +80 Carter SH 220
	VG 320	-25 / -5 / +5 +100 GearOil Synth 320 E1 SEW 07004031 3	-20 / 0 / +10 +90 Alphasyn EP 320	-20 / 0 / +10 +90 Renolin Unisyn CLP 320	-20 / 0 / +10 +95 SHC 632	-20 / 0 / +10 +95 Klübersynth GEM 4-320 N	-20 / 0 / +10 +90 Carter SH 320
	VG 460	-20 / 0 / +15 +110 GearOil Synth 460 E1 SEW 07004031 3	-15 / +5 / +15 +100 Alphasyn EP 460	-15 / +5 / +15 +100 Renolin Unisyn CLP 460	-15 / +5 / +15 +105 SHC 634	-15 / +5 / +20 +105 Klübersynth GEM 4-460 N	-15 / +5 / +15 +100 Carter SH 460
	VG 680	-15 / +5 / +20 +110 GearOil Synth 680 E1 SEW 07004031 3	-10 / +10 / +25 +110 Optigear Synthetic X 680	-10 / +10 / +25 +110 Renolin Unisyn CLP 680	-10 / +10 / +25 +110 SHC 636	-10 / +10 / +25 +110 Klübersynth GEM 4-680 N	-10 / +10 / +25 +110 Carter SH 680
	VG 1000				-10 / +15 / +30 +110 SHC 639	-10 / +15 / +30 +110 SHC Gear 1000	0 / +20 / +30 +110 Klübersynth EG4-1000
	VG 460		-15 / +5 / +15 +100 Optigear Synthetic X 460	-15 / +5 / +15 +100 Renolin Unisyn CLP 460	-20 / 0 / +15 +110 SHC Gear 460	-15 / +10 / +25 +110 SHC Gear 680	
	VG 680		-10 / +10 / +25 +110 Optigear Synthetic X 680	-10 / +10 / +25 +110 Renolin Unisyn CLP 680	-15 / +10 / +25 +110 SHC Gear 680	-10 / +10 / +25 +110 Klübersynth GEM 4-680 N	-10 / +10 / +25 +110 Carter SH 680

27021622255674379

This lubricant table is valid when the document is published. Refer to www.sew-eurodrive.de/lubricants for the latest version of the table.

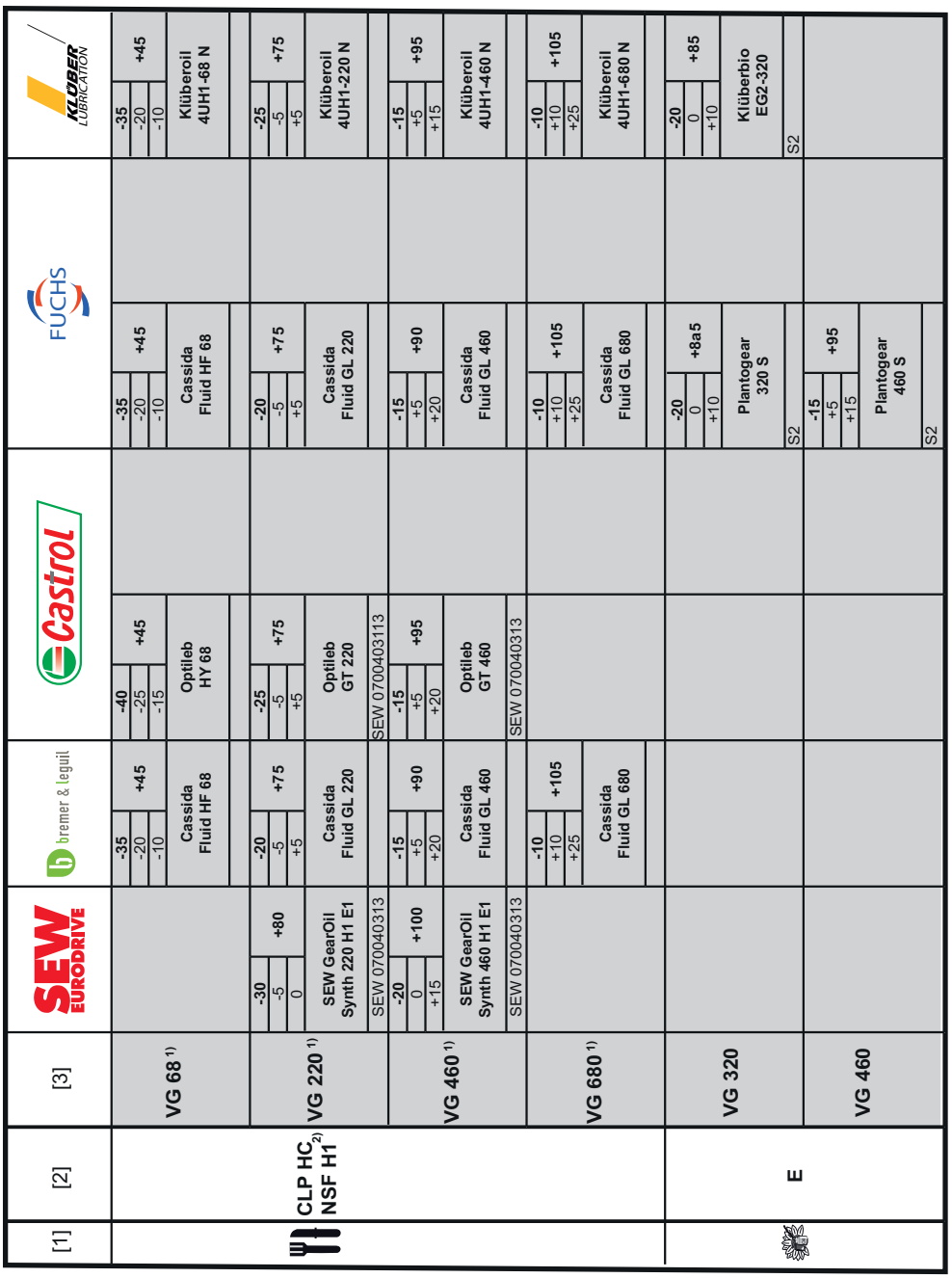

[1]	[2]	[3]	SEW EURODRIVE	bremer & leguil	Castrol	FUCHS	KLÜBER LUBRICATION
	CLP HC 2) NSF H1	VG 68 1)	-30 -5 0 +80	-35 -20 -10 +45 Cassida Fluid HF 68	-40 -25 -15 +45 Optileb HY 68	-35 -20 -10 +45 Cassida Fluid HF 68	-35 -20 -10 +45 Klüberoil 4UH1-68 N
		VG 220 1)	-20 -5 0 +100 SEW GearOil Synth 220 H1 E1	-20 -5 +5 +75 Cassida Fluid GL 220	-25 -5 +5 +75 Optileb GT 220	-20 -5 +5 +75 Cassida Fluid GL 220	-25 -5 +5 +75 Klüberoil 4UH1-220 N
			SEW 070040313	SEW 070040313	SEW 070040313		
		VG 460 1)	-20 0 +15 +100 SEW GearOil Synth 460 H1 E1	-15 +5 +20 +90 Cassida Fluid GL 460	-15 +5 +20 +95 Optileb GT 460	-15 +5 +20 +90 Cassida Fluid GL 460	-15 +5 +15 +95 Klüberoil 4UH1-460 N
			SEW 070040313	SEW 070040313	SEW 070040313		
		VG 680 1)	-10 +10 +25 +105 Cassida Fluid GL 680	-10 +10 +25 +105 Cassida Fluid GL 680		-10 +10 +25 +105 Cassida Fluid GL 680	-10 +10 +25 +105 Klüberoil 4UH1-680 N
	E	VG 320				-20 0 +10 +8a5 Plantogear 320 S S2	-20 0 +10 +85 Klüberbio EG2-320 S2
		VG 460				-15 +5 +15 +95 Plantogear 460 S S2	

27021622249424139

1) Lubricants may only be used
if the service factor F_s and peak load factor $F_F \geq 1.6$.
The peak output torque $MK2_{per}$ is limited as follows: $F_F \geq 1.6 \rightarrow M_{K2per} \leq 1.25 \times MN2$ (nominal torque) $\rightarrow M_{K2per} \leq 2 \times M_{N2}/F_F = 2/1.6 \times M_{N2}$.
In case of deviations, contact SEW-EURODRIVE.

2) NSF-H1 registered oils for the food processing industry cannot be combined with the gear unit option "Extended storage" (a VCI anti-corrosion agent is added).

NOTICE:
Also observe the thermal application limits of the oil seal materials, see chapter "Lubricant compatibility with oil seal".

31975062/EN – 08/2024

8.5 Lubricant fill quantities

INFORMATION

- The specified lubricant fill quantities are guide values. The exact values vary depending on the number of gear stages and the gear ratio.
- The mark on the oil dipstick or the oil level glass is the decisive indicator of the correct oil quantity.
- For pivoted mounting positions, the lubricant fill quantity on the nameplate may deviate from the standard. The fill quantity specified on the nameplate is a guide value. The mark on the oil dipstick or the oil level glass is the decisive indicator of the correct oil quantity.

Size	Oil quantity splash lubrication in liters	
	3F	4F
X120	–	25
X130	–	29
X140	–	39
X150	–	47
X160	53	51
X170	64	65
X180	81	79
X190	83	80
X200	109	109
X210	112	113
X220	173	169
X230	169	171
X240	228	230
X250	230	231

31975062/EN – 08/2024

8.6 Sealing greases/rolling bearing greases

INFORMATION

- Do not mix permitted greases from different areas of application.
- If users want to use a grease that is not listed, it is their responsibility to ensure that the grease is suitable for the intended application.

The table shows the greases recommended by SEW-EURODRIVE with the "lower operating temperature".

The permitted operating temperature of the lubricant used must be taken into account for the lower and upper operating temperature. For further information, refer to chapter "Lubricant table" (→ 🗎 98).

Area of application	Manufacturer	Grease	Lower service temperature
Standard	SEW-EURODRIVE	**SEW Grease HL 2 E1**[1)]	-40 °C
	Fuchs	Renolit CX TOM 15 OEM	-40 °C
	BP	Energrease LS EP-2	-30 °C
	Castrol	Longtime PD 2/ Tribol GR 100-1 PD	-35 °C
		Spheerol EPL 2	-20 °C
	Klüber	Centoplex EP 2	-20 °C
		Petamo GHY 133 N	-40 °C
	Mobil	Mobilux EP 2	-20 °C
	Shell	Gadus S2 V220 2	-20 °C
	Total	Multis EP 2	-20 °C
	SEW	**SEW Grease HL 2 H1 E1**[1)]	-40 °C
	Bremer & Leguil	Cassida Grease GTS2	-40 °C
	Fuchs	**Plantogel 2 S**[1)]	-40 °C

1) Use the greases used at the factory if possible.

31975062/EN – 08/2024

9 Malfunctions/remedy

9.1 Troubleshooting information

Read the following information before you proceed with troubleshooting:

⚠ WARNING



Risk of crushing if the drive starts up unintentionally.

Severe or fatal injuries.

- Work on the gear unit only when the machine is not in use. Secure the drive unit against unintentional power-up. Attach an information sign near the ON switch to warn that the gear unit is being worked on.

⚠ WARNING



Risk of burns due to hot gear unit and hot gear unit oil.

Severe injury.

- Let the gear unit cool down before you start working on it.
- Remove the oil drain plug very carefully.

NOTICE

Improper handling of the gear unit and the motor may lead to damage.

Possible damage to property.

- Only qualified personnel are permitted to separate the drive and motor and to carry out repair work on drives by SEW-EURODRIVE.
- Contact SEW-EURODRIVE.

9.2 Service

The following information is required prior to service work:

- Complete nameplate data
- Type and extent of the malfunction.
- Time the problem occurred and any accompanying circumstances
- Assumed cause
- A digital photograph, if possible

31975062/EN – 08/2024

9.3 Possible malfunctions/remedy

Fault	Possible cause	Measure
Unusual noise in the area where the gear unit is mounted	• Gear unit mounting has loosened	• Tighten retaining screws and nuts to the specified torque • Replace the damaged/defective retaining screws or nuts
Operating temperature too high	• Too much oil	• Check oil level, correct if necessary
	• Oil too old	• Check when the oil was last changed; change the oil, if necessary
	• The oil is heavily contaminated	• Analyze the oil to determine the cause; take measures, if necessary; change the oil
	• Ambient temperature too high	• Protect the gear unit from external heat sources (e.g. provide shade)
	• Gear units with fan: Air intake opening/gear unit housing contaminated	• Check air intake openings, clean them if necessary; clean the gear unit housing
	• For gear units with built-in cooling: Cooling liquid flow rate too low; cooling liquid temperature too high; deposits in cooling system	• Check the cooling liquid flow rate; check the entry temperature of the cooling liquid; clean the cooling system
	• Malfunctions of the oil/air or oil-water cooling system	• Observe the separate operating instructions for the oil-water and oil-air cooling system.
	• Malfunction in the water cooling (water cooling cover, water cooling cartridge)	• Check the cooling water throughput and the entry temperature of the cooling water, clean the cooling system
Temperature at bearing points too high	• Not enough oil	• Check oil level; correct if necessary
	• Oil too old	• Check when the oil was last changed; change the oil if necessary
	• Bearing damaged	• Check the bearing and replace it if necessary. Contact SEW-EURODRIVE
Oil leaking • From cover plate • From inspection cover • From bearing cover • From mounting flange	• Seal not tight at: – Cover plate – Inspection cover – Bearing cover – Mounting flange	• Tighten the bolts on the respective cover. Observe the gear unit. Contact SEW-EURODRIVE if oil is still leaking
Oil leaking[1)] • From oil seal	• Too much oil	• Check oil level; correct if necessary
	• Sealing lip of the oil seal turned up	• Vent the gear unit, observe the gear unit. Contact SEW-EURODRIVE if oil is still leaking.
	• Oil seal damaged/worn	• Check oil seals; replace if necessary

31975062/EN – 08/2024

Fault	Possible cause	Measure
Oil leaking • At the gear unit breather	• Too much oil • Drive not installed in proper mounting position • Frequent cold starts (oil foaming) and/or high oil level	• Check oil level, correct if necessary • Install gear unit breather correctly and adjust the oil level • Install oil expansion tank
Oil leaking • From the screw plug • From the oil drain valve	• Seal not tight • Fittings loosened	• Retighten the screw • Retighten the fitting and screw
Gear unit does not reach cold start temperature	• Thermostat set incorrectly • Oil heating defective or connected incorrectly • Heat dissipation too great due to unfavorable climatic conditions	• Check the setting of the thermostat • Check the oil heater for proper connection and function; replace if necessary • Protect the gear unit from cooling off during the warm-up phase

1) During the run-in phase (24-hour runtime), it is normal for (small amounts of) oil/grease to leak from the oil seal (see also DIN 3761).

9.4 Waste disposal

Dispose of the product and all parts separately in accordance with their material structure and the national regulations. Put the product through a recycling process or contact a specialist waste disposal company. If possible, divide the product into the following categories:

- Stainless steel
- Iron, steel or cast iron

The following materials are hazardous to health and the environment. These materials must be collected and disposed of separately:

- Oil and grease

  Collect used oil and grease separately according to type. Ensure that the used oil is not mixed with solvent. Dispose of used oil and grease correctly.

31975062/EN – 08/2024

10 Address list

Argentina			
Assembly Sales	Buenos Aires	SEW EURODRIVE ARGENTINA S.A. Ruta Panamericana Km 37.5, Lote 35 (B1619IEA) Centro Industrial Garín Prov. de Buenos Aires	Tel. +54 3327 4572-84 Fax +54 3327 4572-21 http://www.sew-eurodrive.com.ar sewar@sew-eurodrive.com.ar
Australia			
Assembly Sales Service	Melbourne	SEW-EURODRIVE PTY. LTD. 27 Beverage Drive Tullamarine, Victoria 3043	Tel. +61 3 9933-1000 Fax +61 3 9933-1003 http://www.sew-eurodrive.com.au enquires@sew-eurodrive.com.au
	Sydney	SEW-EURODRIVE PTY. LTD. 9, Sleigh Place, Wetherill Park New South Wales, 2164	Tel. +61 2 9725-9900 Fax +61 2 9725-9905 enquires@sew-eurodrive.com.au
Service	Tomago	SEW-EURODRIVE PTY. LTD. 8 Epson Drive Tomago, New South Wales, 2322	Tel. +61 2 49505585 mail@sew-eurodrive.com.au
Austria			
Assembly Sales Service	Vienna	SEW-EURODRIVE Ges.m.b.H. Richard-Strauss-Straße 24 1230 Wien	Tel. +43 1 617 55 00-0 Fax +43 1 617 55 00-30 http://www.sew-eurodrive.at sew@sew-eurodrive.at
Bangladesh			
Sales	Bangladesh	SEW-EURODRIVE INDIA PRIVATE LIMITED 345 DIT Road East Rampura Dhaka-1219, Bangladesh	Tel. +88 01729 097309 salesdhaka@seweurodrivebangladesh.com
Belgium			
Assembly Sales Service	Brussels	SEW-EURODRIVE n.v./s.a. Researchpark Haasrode 1060 Evenementenlaan 7 3001 Haasrode	Tel. +32 16 386-311 Fax +32 16 386-336 http://www.sew-eurodrive.be info@sew-eurodrive.be
Service Competence Center	Industrial Gears	SEW-EURODRIVE n.v./s.a. Rue du Parc Industriel, 31 6900 Marche-en-Famenne	Tel. +32 84 219-878 Fax +32 84 219-879 http://www.sew-eurodrive.be info@sew.be
Brazil			
Production Sales Service	São Paulo	SEW-EURODRIVE Brasil Ltda. Estrada Municipal José Rubim, 205 – Rodovia Santos Dumont Km 49 Indaiatuba – 13347-510 – SP	Tel. +55 19 3835-8000 sew@sew.com.br
Assembly Sales Service	Rio Claro	SEW-EURODRIVE Brasil Ltda. Rodovia Washington Luiz, Km 172 Condomínio Industrial Conpark Caixa Postal: 327 13501-600 – Rio Claro / SP	Tel. +55 19 3522-3100 Fax +55 19 3524-6653 montadora.rc@sew.com.br
	Joinville	SEW-EURODRIVE Brasil Ltda. Jvl / Ind Rua Dona Francisca, 12.346 – Pirabeiraba 89239-270 – Joinville / SC	Tel. +55 47 3027-6886 Fax +55 47 3027-6888 filial.sc@sew.com.br
Bulgaria			
Sales	Sofia	BEVER-DRIVE GmbH Bogdanovetz Str.1 1606 Sofia	Tel. +359 2 9151160 Fax +359 2 9151166 bever@bever.bg
Cameroon			
Sales	Douala	SEW-EURODRIVE SARLU Ancienne Route Bonabéri P.O. Box B.P 8674 Douala-Cameroun	Tel. +237 233 39 12 35 Fax +237 233 39 02 10 www.sew-eurodrive.ci/ info@sew-eurodrive.cm

31975062/EN – 08/2024

Canada			
Assembly Sales Service	Toronto	SEW-EURODRIVE CO. OF CANADA LTD. 210 Walker Drive Bramalea, ON L6T 3W1	Tel. +1 905 791-1553 Fax +1 905 791-2999 http://www.sew-eurodrive.ca l.watson@sew-eurodrive.ca
	Vancouver	SEW-EURODRIVE CO. OF CANADA LTD. Tilbury Industrial Park 7188 Honeyman Street Delta, BC V4G 1G1	Tel. +1 604 946-5535 Fax +1 604 946-2513 b.wake@sew-eurodrive.ca
	Montreal	SEW-EURODRIVE CO. OF CANADA LTD. 2001 Ch. de l'Aviation Dorval Quebec H9P 2X6	Tel. +1 514 367-1124 Fax +1 514 367-3677 n.paradis@sew-eurodrive.ca
Chile			
Assembly Sales Service	Santiago de Chile	SEW-EURODRIVE CHILE LTDA Las Encinas 1295 Parque Industrial Valle Grande LAMPA Santiago de Chile P.O. Box Casilla 23 Correo Quilicura - Santiago - Chile	Tel. +56 2 2757 7000 Fax +56 2 2757 7001 http://www.sew-eurodrive.cl ventas@sew-eurodrive.cl
China			
Production Assembly Sales Service	Tianjin	SEW-EURODRIVE (Tianjin) Co., Ltd. No. 78, 13th Avenue, TEDA Tianjin 300457	Tel. +86 22 25322612 Fax +86 22 25323273 http://www.sew-eurodrive.cn info@sew-eurodrive.cn
Assembly Sales Service	Suzhou	SEW-EURODRIVE (Suzhou) Co., Ltd. 333, Suhong Middle Road Suzhou Industrial Park Jiangsu Province, 215021	Tel. +86 512 62581781 Fax +86 512 62581783 suzhou@sew-eurodrive.cn
	Guangzhou	SEW-EURODRIVE (Guangzhou) Co., Ltd. No. 9, JunDa Road East Section of GETDD Guangzhou 510530	Tel. +86 20 82267890 Fax +86 20 82267922 guangzhou@sew-eurodrive.cn
	Shenyang	SEW-EURODRIVE (Shenyang) Co., Ltd. 10A-2, 6th Road Shenyang Economic Technological Development Area Shenyang, 110141	Tel. +86 24 25382538 Fax +86 24 25382580 shenyang@sew-eurodrive.cn
	Taiyuan	SEW-EURODRIVE (Taiyuan) Co,. Ltd. No.3, HuaZhang Street, TaiYuan Economic & Technical Development Zone ShanXi, 030032	Tel. +86-351-7117520 Fax +86-351-7117522 taiyuan@sew-eurodrive.cn
	Wuhan	SEW-EURODRIVE (Wuhan) Co., Ltd. 10A-2, 6th Road No. 59, the 4th Quanli Road, WEDA 430056 Wuhan	Tel. +86 27 84478388 Fax +86 27 84478389 wuhan@sew-eurodrive.cn
	Xi'An	SEW-EURODRIVE (Xi'An) Co., Ltd. No. 12 Jinye 2nd Road Xi'An High-Technology Industrial Development Zone Xi'An 710065	Tel. +86 29 68686262 Fax +86 29 68686311 xian@sew-eurodrive.cn
Assembly	Tianjin	SEW-EURODRIVE (Tianjin) Co., Ltd. No. 66, 10th Avenue, TEDA Tianjin 300457	Tel. +86 22 25322612 Fax +86 22 25322611 http://www.sew-sew-eurodrive.cn info@sew-eurodrive.cn
Sales Service	Hong Kong	SEW-EURODRIVE LTD. Unit No. 801-806, 8th Floor Hong Leong Industrial Complex No. 4, Wang Kwong Road Kowloon, Hong Kong	Tel. +852 36902200 Fax +852 36902211 contact@sew-eurodrive.hk

31975062/EN – 08/2024

Colombia			
Assembly Sales Service	Bogota	SEW-EURODRIVE COLOMBIA LTDA. Calle 17 No. 132-18 Interior 2 Bodega 6, Manzana B Santafé de Bogotá	Tel. +57 1 54750-50 Fax +57 1 54750-44 http://www.sew-eurodrive.com.co sew@sew-eurodrive.com.co
Croatia			
Sales Service	Zagreb	KOMPEKS d. o. o. Zeleni dol 10 10 000 Zagreb	Tel. +385 1 4613-158 Fax +385 1 4613-158 kompeks@inet.hr
Czech Republic			
Assembly Sales Service	Hostivice	SEW-EURODRIVE CZ s.r.o. Floriánova 2459 253 01 Hostivice	Tel. +420 255 709 601 Fax +420 235 350 613 http://www.sew-eurodrive.cz sew@sew-eurodrive.cz
Denmark			
Assembly Sales Service	Copenhagen	SEW-EURODRIVEA/S Geminivej 28-30 2670 Greve	Tel. +45 43 95 8500 Fax +45 43 9585-09 http://www.sew-eurodrive.dk sew@sew-eurodrive.dk
Service	Vejle	SEW-EURODRIVE A/S Bødkervej 2 7100 Vejle	Tel. +45 43 9585 00 http://www.sew-eurodrive.dk sew@sew-eurodrive.dk
Egypt			
Technical Office	Cairo	SEW-EURODRIVE Representative Office in Egypt REGUS Paramount Business Complex, Block 1258M, Unit 1, Ground Floor, Sheraton Heli-opolis Cairo	Tel. +20 2 2503 2807 Fax +20 2 2503 2801 info@sew-eurodrive.eg
Estonia			
Sales	Tallin	ALAS-KUUL AS Loomäe tee 1, Lehmja küla 75306 Rae vald Harjumaa	Tel. +372 6593230 Fax +372 6593231 http://www.alas-kuul.ee info@alas-kuul.ee
Finland			
Assembly Sales Service	Hollola	SEW-EURODRIVE OY Vesimäentie 4 15860 Hollola	Tel. +358 201 589-300 Fax +358 3 780-6211 http://www.sew-eurodrive.fi sew@sew.fi
Service	Hollola	SEW-EURODRIVE OY Keskikankaantie 21 15860 Hollola	Tel. +358 201 589-300 Fax +358 3 780-6211 http://www.sew-eurodrive.fi sew@sew.fi
	Tornio	SEW-EURODRIVE Oy Lossirannankatu 5 95420 Tornio	Tel. +358 201 589 300 Fax +358 3 780 6211 http://www.sew-eurodrive.fi sew@sew.fi
Production Assembly	Karkkila	SEW Industrial Gears Oy Santasalonkatu 6, PL 8 03620 Karkkila, 03601 Karkkila	Tel. +358 201 589-300 Fax +358 201 589-310 http://www.sew-eurodrive.fi sew@sew.fi
France			
Production Sales	Haguenau	SEW USOCOME 48-54 route de Soufflenheim B. P. 20185 67506 Haguenau Cedex	Tel. +33 3 88 73 67 00 http://www.usocome.com sew@usocome.com
Production	Forbach	SEW USOCOME Zone industrielle Technopôle Forbach Sud B. P. 30269 57604 Forbach Cedex	Tel. +33 3 87 29 38 00

31975062/EN – 08/2024

France			
	Brumath	SEW USOCOME 1 Rue de Bruxelles 67670 Mommenheim Cedex	Tel. +33 3 88 37 48 00
Assembly Sales Service	Bordeaux	SEW USOCOME Parc d'activités de Magellan 62 avenue de Magellan – B. P. 182 33607 Pessac Cedex	Tel. +33 5 57 26 39 00 dtcbordeaux@usocome.com
	Haguenau	SEW USOCOME 48-54 route de Soufflenheim B. P. 20185 67506 Haguenau Cedex	Tel. +33 3 88 73 67 00 dtchaguenau@usocome.com
	Lyon	SEW USOCOME 75 rue Antoine Condorcet 38090 Vaulx-Milieu	Tel. +33 4 74 99 60 00 dtclyon@usocome.com
	Nantes	SEW USOCOME Parc d'activités de la forêt 4 rue des Fontenelles 44140 Le Bignon	Tel. +33 2 40 78 42 00 dtcnantes@usocome.com
	Paris	SEW USOCOME Zone industrielle 2 rue Denis Papin 77390 Verneuil l'Étang	Tel. +33 1 64 42 40 80 dtcparis@usocome.com
Gabon			
Representation: Cameroon			
Germany			
Headquarters Production Sales	Bruchsal	SEW-EURODRIVE GmbH & Co KG Ernst-Blickle-Straße 42 76646 Bruchsal	Tel. +49 7251 75-0 Fax +49 7251 75-1970 http://www.sew-eurodrive.de sew@sew-eurodrive.de
Production / Industrial Gears	Bruchsal	SEW-EURODRIVE GmbH & Co KG Christian-Pähr-Str. 10 76646 Bruchsal	Tel. +49 7251 75-0 Fax +49 7251 75-2970
Production / Precision Gear Units	Bruchsal	SEW-EURODRIVE GmbH & Co KG Ernst-Blickle-Straße 42 76646 Bruchsal	Tel. +49 7251 75-0 Fax +49 7251 75-1970 sew@sew-eurodrive.de
Production	Graben	SEW-EURODRIVE GmbH & Co KG Ernst-Blickle-Straße 1 76676 Graben-Neudorf	Tel. +49 7251 75-0 Fax +49 7251-2970
Service Competence Center	Mechanics / Mechatronics	SEW-EURODRIVE GmbH & Co KG Ernst-Blickle-Straße 1 76676 Graben-Neudorf	Tel. +49 7251 75-1710 Fax +49 7251 75-1711 scc-mechanik@sew-eurodrive.de
	Electronics	SEW-EURODRIVE GmbH & Co KG Christian-Pähr-Straße 12 76646 Bruchsal	Tel. +49 7251 75-1780 Fax +49 7251 75-1769 scc-elektronik@sew-eurodrive.de
	MAXOLUTION® Factory Automation	SEW-EURODRIVE GmbH & Co KG Eisenbahnstraße 11 76646 Bruchsal	Tel. +49 7251 75-0 Fax +49 7251 75-1970 sew@sew-eurodrive.de
Drive Technology Center	North	SEW-EURODRIVE GmbH & Co KG Alte Ricklinger Straße 43 30823 Garbsen (Hannover)	Tel. +49 5137 8798-30 Fax +49 5137 8798-55 dtc-nord@sew-eurodrive.de
	East	SEW-EURODRIVE GmbH & Co KG Dänkritzer Weg 1 08393 Meerane (Zwickau)	Tel. +49 3764 7606-0 Fax +49 3764 7606-20 dtc-ost@sew-eurodrive.de
	South	SEW-EURODRIVE GmbH & Co KG Domagkstraße 5 85551 Kirchheim (München)	Tel. +49 89 909551-21 Fax +49 89 909551-50 dtc-sued@sew-eurodrive.de
	West	SEW-EURODRIVE GmbH & Co KG Siemensstraße 1 40764 Langenfeld (Düsseldorf)	Tel. +49 2173 8507-10 Fax +49 2173 8507-50 dtc-west@sew-eurodrive.de
Drive Center	Berlin	SEW-EURODRIVE GmbH & Co KG Melitta-Schiller-Straße 8 12526 Berlin	Tel. +49 306331131-30 Fax +49 306331131-36 dc-berlin@sew-eurodrive.de

31975062/EN – 08/2024

Germany			
	Bremen	SEW-EURODRIVE GmbH & Co KG Allerkai 4 28309 Bremen	Tel. +49 421 33918-10 Fax +49 421 33918-22 dc-bremen@sew-eurodrive.de
	Hamburg	SEW-EURODRIVE GmbH & Co KG Hasselbinnen 11 22869 Schenefeld	Tel. +49 40298109-60 Fax +49 40298109-70 dc-hamburg@sew-eurodrive.de
	Saarland	SEW-EURODRIVE GmbH & Co KG Gottlieb-Daimler-Straße 4 66773 Schwalbach Saar – Hülzweiler	Tel. +49 6831 48946 10 Fax +49 6831 48946 13 dc-saarland@sew-eurodrive.de
	Ulm	SEW-EURODRIVE GmbH & Co KG Dieselstraße 18 89160 Dornstadt	Tel. +49 7348 9885-0 Fax +49 7348 9885-90 dc-ulm@sew-eurodrive.de
	Würzburg	SEW-EURODRIVE GmbH & Co KG Nürnbergerstraße 118 97076 Würzburg-Lengfeld	Tel. +49 931 27886-60 Fax +49 931 27886-66 dc-wuerzburg@sew-eurodrive.de
Drive Service Hotline / 24 Hour Service			0 800 SEWHELP 0 800 7394357
Great Britain			
Assembly Sales Service	Normanton	SEW-EURODRIVE Ltd. DeVilliers Way Trident Park Normanton West Yorkshire WF6 1GX	Tel. +44 1924 893-855 Fax +44 1924 893-702 http://www.sew-eurodrive.co.uk info@sew-eurodrive.co.uk
Greece			
Sales	Athens	Christ. Boznos & Son S.A. 12, K. Mavromichali Street P.O. Box 80136 18545 Piraeus	Tel. +30 2 1042 251-34 Fax +30 2 1042 251-59 http://www.boznos.gr info@boznos.gr
Hungary			
Sales Service	Budapest	SEW-EURODRIVE Kft. Csillaghegyí út 13. 1037 Budapest	Tel. +36 1 437 06-58 Fax +36 1 437 06-50 http://www.sew-eurodrive.hu office@sew-eurodrive.hu
Iceland			
Sales	Reykjavik	Varma & Vélaverk ehf. Knarrarvogi 4 104 Reykjavík	Tel. +354 585 1070 Fax +354 585)1071 https://vov.is/ vov@vov.is
India			
Registered Office Assembly Sales Service	Vadodara	SEW-EURODRIVE India Private Limited 302, NOTUS IT PARK, Sarabhai Campus, Beside Notus Pride, Genda Circle, Vadodara 390023 Gujarat	Tel. +91 265 3045200 Fax +91 265 3045300 https://www.seweurodriveindia.com salesvadodara@seweurodriveindia.com
Assembly Sales Service	Chennai	SEW-EURODRIVE India Private Limited Plot No. K3/1, Sipcot Industrial Park Phase II Mambakkam Village Sriperumbudur - 602105 Kancheepuram Dist, Tamil Nadu	Tel. +91 44 37188888 Fax +91 44 37188811 saleschennai@seweurodriveindia.com
	Pune	SEW-EURODRIVE India Private Limited Plant: Plot No. D236/1, Chakan Industrial Area Phase- II, Warale, Tal- Khed, Pune-410501, Maharashtra	Tel. +91 21 35 628700 Fax +91 21 35 628715 salespune@seweurodriveindia.com
	Tapukara	SEW-EURODRIVE India Private Limited Plot No SP-6-46, Tapukara, Karoli Industrial Area, No. 1, district : Alwar , Rajasthan - 301707	Tel. +91 265 3045200 Fax +91 265 3045300 tapukara.plant@seweurodriveindia.com

31975062/EN – 08/2024

India			
Sales	Gurgaon	SEW-EURODRIVE India Private Limited Global Business Park, Sector -26, M.G. Road, Sikanderpur Unit No. 205, 2nd Floor, Tower – D Gurugram 122002, Haryana	Tel. +91 9958376669 salesgurgaon@seweurodriveindia.com
Drive Center	Raipur	SEW-EURODRIVE India Private Limited Plot unit no. 129/17 P.O. GSI-Mandhar District: Raipur, State: Chhattisgarh	Tel. +91 8294630772 salesraipur@seweurodriveindia.com
Indonesia			
Registered Office Sales Service	Jakarta	PT SEW EURODRIVE INDONESIA Palma Tower, 16th Floor, Unit H & I, Jl R.A. Kartini II-S Kav 06 Pondok Pinang, Kebayoran Lama Jakarta Selatan 12310	Tel. +62 21 7593 0272 Fax +62 21 7593 0273 sales.indonesia@sew-eurodrive.com https://www.sew-eurodrive.com.sg
Sales	Medan	PT. Serumpun Indah Lestari Jl.Pulau Solor no. 8, Kawasan Industri Medan II Medan 20252	Tel. +62 61 687 1221 Fax +62 61 6871429 / +62 61 6871458 / +62 61 30008041 sil@serumpunindah.com serumpunindah@yahoo.com http://www.serumpunindah.com
	Jakarta	PT. Cahaya Sukses Abadi Komplek Rukan Puri Mutiara Blok A no 99, Sunter Jakarta 14350	Tel. +62 21 65310599 Fax +62 21 65310600 csajkt@cbn.net.id
	Jakarta	PT. Agrindo Putra Lestari JL.Pantai Indah Selatan, Komplek Sentra Industri Terpadu, Pantai indah Kapuk Tahap III, Blok E No. 27 Jakarta 14470	Tel. +62 21 2921-8899 Fax +62 21 2921-8988 aplindo@indosat.net.id http://www.aplindo.com
	Surabaya	PT. TRIAGRI JAYA ABADI Jl. Sukosemolo No. 63, Galaxi Bumi Permai G6 No. 11 Surabaya 60111	Tel. +62 31 5990128 Fax +62 31 5962666 sales@triagri.co.id http://www.triagri.co.id
	Surabaya	CV. Multi Mas Jl. Raden Saleh 43A Kav. 18 Surabaya 60174	Tel. +62 31 5458589 Fax +62 31 5317220 sianhwa@sby.centrin.net.id http://www.cvmultimas.com
Ireland			
Sales Service	Dublin	Alperton Engineering Ltd. 48 Moyle Road Dublin Industrial Estate Glasnevin, Dublin 11	Tel. +353 1 830-6277 Fax +353 1 830-6458 http://www.alperton.ie info@alperton.ie
Israel			
Sales	Tel Aviv	Liraz Handasa Ltd. Ahofer Str 34B / 228 58858 Holon	Tel. +972 3 5599511 Fax +972 3 5599512 http://www.liraz-handasa.co.il office@liraz-handasa.co.il
Italy			
Assembly Sales Service	Milan	SEW-EURODRIVE S.a.s. di SEW S.r.l. & Co. Via Bernini,12 20033 Solaro (Milano)	Tel. +39 02 96 980229 Fax +39 02 96 980 999 http://www.sew-eurodrive.it milano@sew-eurodrive.it
Ivory Coast			
Sales	Abidjan	SEW-EURODRIVE SARL Ivory Coast Rue des Pêcheurs, Zone 3 26 BP 916 Abidjan 26	Tel. +225 27 21 21 81 05 Fax +225 27 21 25 30 47 info@sew-eurodrive.ci http://www.sew-eurodrive.ci
Japan			
Assembly Sales Service	Iwata	SEW-EURODRIVE JAPAN CO., LTD 250-1, Shimoman-no, Iwata Shizuoka 438-0818	Tel. +81 538 373811 Fax +81 538 373814 http://www.sew-eurodrive.co.jp sewjapan@sew-eurodrive.co.jp

31975062/EN – 08/2024

Kazakhstan			
Sales Service	Almaty	SEW-EURODRIVE LLP 291-291A, Tole bi street 050031, Almaty	Tel. +7 (727) 350 5156 Fax +7 (727) 350 5156 http://www.sew-eurodrive.com kazakhstan@sew-eurodrive.com
	Tashkent	Representative Office SEW-EURODRIVE Representative office in Uzbekistan 95A Amir Temur ave, office 401/3 100084 Tashkent	Tel. +998 97 134 01 99 http://www.sew-eurodrive.uz sew@sew-eurodrive.uz
	Ulaanbaatar	IM Trading LLC Olympic street 28B/3 Sukhbaatar district, Ulaanbaatar 14230, MN	Tel. +976-77109997 Fax +976-77109997 imt@imt.mn
Latvia			
Sales	Riga	SIA Alas-Kuul Katlakalna 11C 1073 Riga	Tel. +371 6 7139253 Fax +371 6 7139386 http://www.alas-kuul.lv info@alas-kuul.com
Lebanon			
Sales (Lebanon)	Beirut	Gabriel Acar & Fils sarl B. P. 80484 Bourj Hammoud, Beirut	Tel. +961 1 510 532 Fax +961 1 494 971 ssacar@inco.com.lb
Sales (Jordan, Kuwait , Saudi Arabia, Syria)	Beirut	Middle East Drives S.A.L. (offshore) Sin El Fil. B. P. 55-378 Beirut	Tel. +961 1 494 786 Fax +961 1 494 971 http://www.medrives.com info@medrives.com
Lithuania			
Sales	Alytus	UAB Irseva Statybininku 106C 63431 Alytus	Tel. +370 315 79204 Fax +370 315 56175 http://www.irseva.lt irmantas@irseva.lt
Luxembourg			
Representation: Belgium			
Macedonia			
Sales	Skopje	Boznos DOOEL Dime Anicin 2A/7A 1000 Skopje	Tel. +389 23256553 Fax +389 23256554 http://www.boznos.mk
Malaysia			
Assembly Sales Service	Johor	SEW-EURODRIVE SDN BHD No. 95, Jalan Seroja 39, Taman Johor Jaya 81000 Johor Bahru, Johor West Malaysia	Tel. +60 7 3549409 Fax +60 7 3541404 sales@sew-eurodrive.com.my
Mexico			
Assembly Sales Service	Quéretaro	SEW-EURODRIVE MEXICO S.A. de C.V. SEM-981118-M93 Tequisquiapan No. 102 Parque Industrial Quéretaro C.P. 76220 Querétaro, México	Tel. +52 442 1030-300 Fax +52 442 1030-301 http://www.sew-eurodrive.com.mx scmexico@seweurodrive.com.mx
Sales Service	Puebla	SEW-EURODRIVE MEXICO S.A. de C.V. Calzada Zavaleta No. 3922 Piso 2 Local 6 Col. Santa Cruz Buenavista C.P. 72154 Puebla, México	Tel. +52 (222) 221 248 http://www.sew-eurodrive.com.mx scmexico@seweurodrive.com.mx
Mongolia			
Technical Office	Ulaanbaatar	IM Trading LLC Olympic street 28B/3 Sukhbaatar district, Ulaanbaatar 14230, MN	Tel. +976-77109997 Tel. +976-99070395 Fax +976-77109997 http://imt.mn/ imt@imt.mn

31975062/EN – 08/2024

Morocco			
Sales Service Assembly	Bouskoura	SEW-EURODRIVE Morocco SARL Parc Industriel CFCIM, Lot. 55/59 27182 Bouskoura Grand Casablanca	Tel. +212 522 88 85 00 Fax +212 522 88 84 50 http://www.sew-eurodrive.ma sew@sew-eurodrive.ma
Namibia			
Sales	Swakopmund	DB MINING & INDUSTRIAL SUPPLIES CC Einstein Street Strauss Industrial Park Unit1 Swakopmund	Tel. +264 64 462 738 Fax +264 64 462 734 anton@dbminingnam.com
Netherlands			
Assembly Sales Service	Rotterdam	SEW-EURODRIVE B.V. Industrieweg 175 3044 AS Rotterdam Postbus 10085 3004 AB Rotterdam	Tel. +31 10 4463-700 Fax +31 10 4155-552 Service: 0800-SEWHELP http://www.sew-eurodrive.nl info@sew-eurodrive.nl
New Zealand			
Assembly Sales Service	Auckland	SEW-EURODRIVE NEW ZEALAND LTD. P.O. Box 58-428 82 Greenmount drive East Tamaki Auckland	Tel. +64 9 2745627 Fax +64 9 2740165 http://www.sew-eurodrive.co.nz sales@sew-eurodrive.co.nz
	Christchurch	SEW-EURODRIVE NEW ZEALAND LTD. 30 Lodestar Avenue, Wigram Christchurch	Tel. +64 3 384-6251 Fax +64 3 384-6455 sales@sew-eurodrive.co.nz
Nigeria			
Sales	Lagos	Greenpeg Nig. Ltd 64C Toyin Street Opebi-Allen Ikeja Lagos-Nigeria	Tel. +234-701-821-9200-1 http://www.greenpegltd.com sales@greenpegltd.com
Norway			
Assembly Sales Service	Moss	SEW-EURODRIVE A/S Hornebergvegen 11 B 7038 Trondheim	Tel. +47 69 24 10 20 Fax +47 69 24 10 40 http://www.sew-eurodrive.no sew@sew-eurodrive.no
Pakistan			
Sales	Karachi	Industrial Power Drives Al-Fatah Chamber A/3, 1st Floor Central Commercial Area, Sultan Ahmed Shah Road, Block 7/8, Karachi	Tel. +92 21 452 9369 Fax +92-21-454 7365 seweurodrive@cyber.net.pk
Paraguay			
Sales	Fernando de la Mora	SEW-EURODRIVE PARAGUAY S.R.L Nu Guazu No. 642 casi Campo Esperanza Santisima Trinidad Asuncion	Tel. +595 991 519695 Fax +595 21 3285539 sewpy@sew-eurodrive.com.py
Peru			
Assembly Sales Service	Lima	SEW EURODRIVE DEL PERU S.A.C. Los Calderos, 120-124 Urbanizacion Industrial Vulcano, ATE, Lima	Tel. +51 1 3495280 Fax +51 1 3493002 http://www.sew-eurodrive.com.pe sewperu@sew-eurodrive.com.pe
Philippines			
Sales	Makati	P.T. Cerna Corporation 4137 Ponte St., Brgy. Sta. Cruz Makati City 1205	Tel. +63 2 519 6214 Fax +63 2 890 2802 mech_drive_sys@ptcerna.com http://www.ptcerna.com
Poland			
Assembly Sales Service	Łódź	SEW-EURODRIVE Polska Sp.z.o.o. ul. Techniczna 5 92-518 Łódź	Tel. +48 42 293 00 00 Fax +48 42 293 00 49 http://www.sew-eurodrive.pl sew@sew-eurodrive.pl

31975062/EN – 08/2024

Poland			
	Service	Tel. +48 42 293 0030 Fax +48 42 293 0043	24 Hour Service Tel. +48 602 739 739 (+48 602 SEW SEW) serwis@sew-eurodrive.pl
Portugal			
Assembly Sales Service	Coimbra	SEW-EURODRIVE, LDA. Av. da Fonte Nova, n.º 86 3050-379 Mealhada	Tel. +351 231 20 9670 Fax +351 231 20 3685 http://www.sew-eurodrive.pt infosew@sew-eurodrive.pt
Romania			
Sales Service	Bucharest	Sialco Trading SRL str. Brazilia nr. 36 011783 Bucuresti	Tel. +40 21 230-1328 Fax +40 21 230-7170 http://www.sialco.ro sialco@sialco.ro
Senegal			
Sales	Dakar	SENEMECA Mécanique Générale Km 8, Route de Rufisque B.P. 3251, Dakar	Tel. +221 338 494 770 Fax +221 338 494 771 http://www.senemeca.com senemeca@senemeca.sn
Serbia			
Sales	Belgrade	DIPAR d.o.o. Ustanicka 128a PC Košum, IV floor 11000 Beograd	Tel. +381 11 347 3244 / +381 11 288 0393 Fax +381 11 347 1337 office@dipar.rs
Singapore			
Assembly Sales Service	Singapore	SEW-EURODRIVE PTE. LTD. 9, Tuas Drive 2 Singapore 638644	Tel. +65 68621701 Fax +65 68612827 http://www.sew-eurodrive.com.sg sewsingapore@sew-eurodrive.com
Slovakia			
Drive Technology Center	Bernolákovo	SEW-Eurodrive SK s.r.o. Priemyselná ulica 6267/7 900 27 Bernolákovo	Tel.+421 2 48 212 800 http://www.sew-eurodrive.sk sew@sew-eurodrive.sk
Slovenia			
Representation: Austria			
South Africa			
Assembly Sales Service	Johannesburg	SEW-EURODRIVE (PROPRIETARY) LIMITED 32 O'Connor Place Eurodrive House Aeroton Johannesburg 2190 P.O.Box 90004 Bertsham 2013	Tel. +27 11 248-7000 Fax +27 11 248-7289 http://www.sew.co.za info@sew.co.za
	Cape Town	SEW-EURODRIVE (PROPRIETARY) LIMITED Rainbow Park Cnr. Racecourse & Omuramba Road Montague Gardens Cape Town P.O.Box 36556 Chempet 7442	Tel. +27 21 552-9820 Fax +27 21 552-9830 Telex 576 062 bgriffiths@sew.co.za
	Durban	SEW-EURODRIVE (PROPRIETARY) LIMITED 48 Prospecton Road Isipingo Durban P.O. Box 10433, Ashwood 3605	Tel. +27 31 902 3815 Fax +27 31 902 3826 cdejager@sew.co.za
	Nelspruit	SEW-EURODRIVE (PROPRIETARY) LIMITED 7 Christie Crescent Vintonia P.O.Box 1942 Nelspruit 1200	Tel. +27 13 752-8007 Fax +27 13 752-8008 robermeyer@sew.co.za

31975062/EN – 08/2024

South Korea			
Assembly Sales Service	Ansan	SEW-EURODRIVE Korea Co., Ltd. 7, Dangjaengi-ro, Danwon-gu, Ansan-si, Gyeonggi-do, Zip 425-839	Tel. +82 31 492-8051 Fax +82 31 492-8056 http://www.sew-eurodrive.kr master.korea@sew-eurodrive.com
	Busan	SEW-EURODRIVE Korea Co., Ltd. 28, Noksansandan 262-ro 50beon-gil, Gangseo-gu, Busan, Zip 618-820	Tel. +82 51 832-0204 Fax +82 51 832-0230
Assembly Service	Siheung	SEW-EURODRIVE Korea Co., Ltd. 35, Emtibeui 26-ro 58beon-gil, Siheung-si, Gyeonggi-do	http://www.sew-eurodrive.kr
Spain			
Assembly Sales Service	Bilbao	SEW-EURODRIVE ESPAÑA, S.L. Parque Tecnológico, Edificio, 302 48170 Zamudio (Vizcaya)	Tel. +34 94 43184-70 http://www.sew-eurodrive.es sew.spain@sew-eurodrive.es
Sri Lanka			
Sales	Colombo	SM International (Pte) Ltd 254, Galle Raod Colombo 4, Sri Lanka	Tel. +94 1 2584887 Fax +94 1 2582981
Swaziland			
Sales	Manzini	C G Trading Co. (Pty) Ltd Simunye street Matsapha, Manzini	Tel. +268 7602 0790 Fax +268 2 518 5033 charles@cgtrading.co.sz www.cgtradingswaziland.com
Sweden			
Assembly Sales Service	Jönköping	SEW-EURODRIVE AB Gnejsvägen 6-8 553 03 Jönköping Box 3100 S-550 03 Jönköping	Tel. +46 36 34 42 00 Fax +46 36 34 42 80 http://www.sew-eurodrive.se jonkoping@sew.se
Switzerland			
Assembly Sales Service	Basel	Alfred Imhof AG Jurastrasse 10 CH-4142 Münchenstein bei Basel	Tel. +41 61 417 17 17 http://www.imhof-sew.ch info@imhof-sew.ch
Taiwan			
Sales	Taipei	Ting Shou Trading Co., Ltd. 6F-3, No. 267, Sec. 2 Tung Huw S. Road Taipei	Tel. +886 2 27383535 Fax +886 2 27368268 Telex 27 245 sewtwn@ms63.hinet.net http://www.tingshou.com.tw
	Nan Tou	Ting Shou Trading Co., Ltd. No. 55 Kung Yeh N. Road Industrial District Nan Tou 540	Tel. +886 49 255353 Fax +886 49 257878 sewtwn@ms63.hinet.net http://www.tingshou.com.tw
Tanzania			
Sales	Daressalam	SEW-EURODRIVE PTY LIMITED TANZANIA Plot 52, Regent Estate PO Box 106274 Dar Es Salaam	Tel. +255 0 22 277 5780 Fax +255 0 22 277 5788 http://www.sew-eurodrive.co.tz info@sew.co.tz
Thailand			
Assembly Sales Service	Chonburi	SEW-EURODRIVE (Thailand) Ltd. 700/456, Moo.7, Donhuaroh Muang Chonburi 20000	Tel. +66 38 454281 Fax +66 38 454288 sewthailand@sew-eurodrive.com https://www.sew-eurodrive.co.th
Tunisia			
Sales	Tunis	T. M.S. Technic Marketing Service Zone Industrielle Mghira 2 Lot No. 39 2082 Fouchana	Tel. +216 79 40 88 77 Fax +216 79 40 88 66 http://www.tms.com.tn tms@tms.com.tn

31975062/EN – 08/2024

Turkey			
Assembly Sales Service	Kocaeli-Gebze	SEW-EURODRIVE Ana Merkez Gebze Organize Sanayi Böl. 400 Sok No. 401 41480 Gebze Kocaeli	Tel. +90 262 9991000 04 Fax +90 262 9991009 http://www.sew-eurodrive.com.tr sew@sew-eurodrive.com.tr
Ukraine			
Assembly Sales Service	Dnipropetrovsk	SEW-EURODRIVE, LLC Robochya str., bld. 23-B, office 409 49008 Dnipro	Tel. +380 56 370 3211 Fax +380 56 372 2078 http://www.sew-eurodrive.ua sew@sew-eurodrive.ua
United Arab Emirates			
Drive Technology Center	Dubai	SEW-EURODRIVE FZE PO Box 263835 Jebel Ali Free Zone – South, P.O. Box Dubai, United Arab Emirates	Tel. +971 (0)4 8806461 Fax +971 (0)4 8806464 info@sew-eurodrive.ae
Uruguay			
Assembly Sales	Montevideo	SEW-EURODRIVE Uruguay, S. A. Jose Serrato 3569 Esqina Corumbe CP 12000 Montevideo	Tel. +598 2 21181-89 Fax +598 2 21181-90 sewuy@sew-eurodrive.com.uy
USA			
Production Sales Service	Southeast Region	SEW-EURODRIVE INC. 1295 Old Spartanburg Highway P.O. Box 518 Lyman, S.C. 29365	Tel. +1 864 439-7537 Fax Sales +1 864 439-7830 Fax Production +1 864 439-9948 Fax Assembly +1 864 439-0566 Fax Confidential/HR +1 864 949-5557 http://www.seweurodrive.com cslyman@seweurodrive.com
Assembly Sales Service	Northeast Region	SEW-EURODRIVE INC. Pureland Ind. Complex 2107 High Hill Road, P.O. Box 481 Bridgeport, New Jersey 08014	Tel. +1 856 467-2277 Fax +1 856 845-3179 csbridgeport@seweurodrive.com
	Midwest Region	SEW-EURODRIVE INC. 2001 West Main Street Troy, Ohio 45373	Tel. +1 937 335-0036 Fax +1 937 332-0038 cstroy@seweurodrive.com
	Southwest Region	SEW-EURODRIVE INC. 202 W. Danieldale Rd. DeSoto, TX 75115	Tel. +1 214 330-4824 Fax +1 214 330-4724 csdallas@seweurodrive.com
	Western Region	SEW-EURODRIVE INC. 30599 San Antonio St. Hayward, CA 94544	Tel. +1 510 487-3560 Fax +1 510 487-6433 cshayward@seweurodrive.com
	Wellford	SEW-EURODRIVE INC. 148/150 Finch Rd. Wellford, S.C. 29385	Tel. +1 864 439-7537 Fax +1 864 661 1167 IGOrders@seweurodrive.com
		SEW-EURODRIVE INC. 220 Finch Rd. Wellford, S.C. 29385-9630	
	Additional addresses for service provided on request!		
Vietnam			
Sales	Ho Chi Minh City	SEW-EURODRIVE PTE. LTD. RO at Hochiminh City Floor 8, KV I, Loyal building, 151-151 Bis Vo Thi Sau street, ward 6, District 3, Ho Chi Minh City, Vietnam	Tel. +84 937 299 700 huytam.phan@sew-eurodrive.com
	Hanoi	MICO LTD Quảng Trị - North Vietnam / All sectors except Construction Materials 8th Floor, Ocean Park Building, 01 Dao Duy Anh St, Ha Noi, Viet Nam	Tel. +84 4 39386666 Fax +84 4 3938 6888 nam_ph@micogroup.com.vn http://www.micogroup.com.vn
Zambia			
Representation: South Africa			

31975062/EN – 08/2024

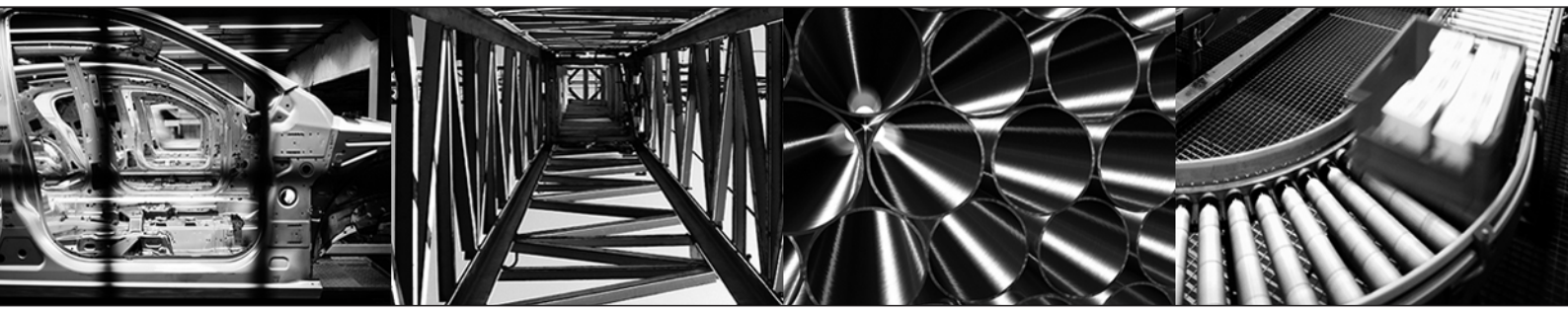

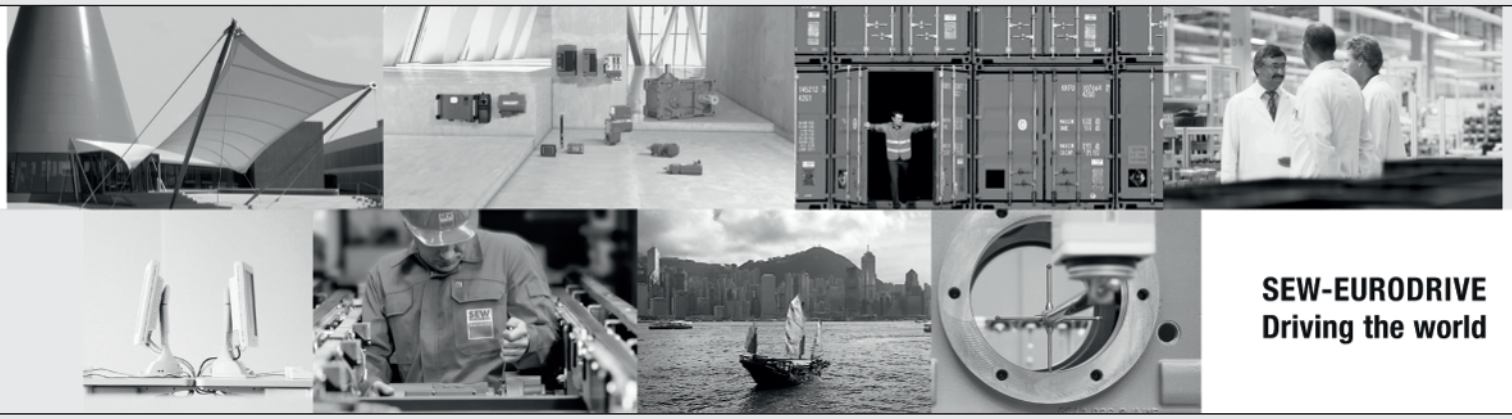

SEW-EURODRIVE
Driving the world

SEW-EURODRIVE GmbH & Co KG
Ernst-Blickle-Str. 42
76646 BRUCHSAL
GERMANY
Tel. +49 7251 75-0
Fax +49 7251 75-1970
sew@sew-eurodrive.com
➞ **www.sew-eurodrive.com**