SEW EURODRIVE

Operating Instructions

Explosion-protected AC Motors

EDR..71 – 315, EDRN63 – 315

IECEx

Edition 11/2023

31555454/EN

Table of Contents

1 General information ... 6
- 1.1 About this documentation ... 6
- 1.2 Structure of the safety notes ... 6
- 1.3 Rights to claim under limited warranty ... 7
- 1.4 Product names and trademarks ... 7
- 1.5 Copyright notice ... 8
- 1.6 Other applicable documentation ... 8

2 Safety notes ... 9
- 2.1 Preliminary information ... 9
- 2.2 Duties of the user ... 9
- 2.3 Target group ... 10
- 2.4 Designated use ... 11
- 2.5 Transportation/storage ... 11
- 2.6 Installation/assembly ... 12
- 2.7 Electrical work ... 13
- 2.8 Startup/operation ... 15

3 Motor structure ... 16
- 3.1 Basic structure of EDRN63 motors ... 16
- 3.2 Basic structure of EDR..71 – 132, EDRN71 – 132S motors ... 17
- 3.3 Basic structure of EDR..160 – 180, EDRN132M – 180 motors ... 18
- 3.4 Basic structure of EDR..200 – 225, EDRN200 – 225 motors ... 19
- 3.5 Basic structure of EDR..250 – 280, EDRN250 – 280 motors ... 20
- 3.6 Basic structure of EDR..315, EDRN315 motors ... 21
- 3.7 Nameplate ... 22
- 3.8 Motor type designations ... 28
- 3.9 Designs and options ... 29
- 3.10 Functional safety ... 33

4 Mechanical installation ... 34
- 4.1 Before you start ... 34
- 4.2 Preliminary work after longer periods of storage ... 35
- 4.3 Motor installation notes ... 38
- 4.4 Installation tolerances ... 40
- 4.5 Assembling the input elements ... 40
- 4.6 Encoder mounting adapter ... 41
- 4.7 Terminal box ... 45
- 4.8 Coating ... 52
- 4.9 Retrofitting (option /F.A) or modifying (option /F.B) motor feet ... 53
- 4.10 Options ... 57

5 Electrical installation ... 61
- 5.1 General information ... 61
- 5.2 Additional regulations ... 61
- 5.3 Wiring diagrams and terminal assignment diagrams ... 61
- 5.4 Cable entries ... 62

31555454/EN – 11/2023

5.5 Equipotential bonding ... 62
5.6 Wiring notes ... 62
5.7 Special aspects for operation with a frequency inverter ... 63
5.8 Exterior grounding at the terminal box, LF grounding ... 64
5.9 Improving the grounding (EMC), HF grounding ... 66
5.10 Special aspects in switching operation ... 69
5.11 Ambient conditions during operation ... 70
5.12 Motors of design 2G-b, 2D-b, 2GD-b, 3G-c, 3D-c and 3GD-c ... 72
5.13 Notes regarding the connection of the motor ... 74
5.14 Motor connection via terminal board ... 76
5.15 Connecting the motor via terminal strip ... 80
5.16 Connecting the brake ... 82
5.17 Connecting the encoder ... 86
5.18 Options ... 89

6 Duty types and limit values ... 95
6.1 Permitted duty types ... 95
6.2 Line operation ... 97
6.3 Inverter operation ... 99
6.4 Safe operation of motors with EPL "Gb" and "Db" on inverters ... 101
6.5 Safe operation of motors with EPL "Gc" and "Dc" on inverters ... 111
6.6 Typical application ... 121
6.7 Special application ... 125
6.8 Group drive ... 137

7 Startup ... 138
7.1 General information ... 138
7.2 Before startup ... 138
7.3 Parameter setting: Frequency inverters for motors with EPL "Gb" and "Db" ... 139
7.4 Parameter setting: Frequency inverters for motors with EPL "Gc" and "Dc" ... 144
7.5 Motors with backstop /RS ... 146

8 Inspection/maintenance ... 147
8.1 General information ... 147
8.2 Inspection and maintenance intervals ... 149
8.3 Bearing lubrication ... 152
8.4 Reinforced bearings ... 153
8.5 Motor and brake maintenance – preliminary work ... 154
8.6 Inspection/maintenance work for EDRN63 – 315 motors ... 186
8.7 Inspection/maintenance work EDR..71 – 315, EDRN63 – 315 brakemotors ... 188
8.8 Altering the blocking direction on motors with a backstop ... 212

9 Technical data ... 215
9.1 Braking torques ... 215
9.2 Braking work, working air gap, and brake lining carrier thickness ... 217
9.3 Operating currents ... 218
9.4 Resistors ... 222
9.5 Brake control ... 228

31555454/EN – 11/2023

9.6 Permitted rolling bearings ... 236
9.7 Lubricant tables ... 239
9.8 Order information for lubricants, anti-corrosion agents and sealants ... 240
9.9 Encoders ... 241

10 Malfunctions ... 251
10.1 General information ... 251
10.2 Motor malfunctions ... 251
10.3 Brake malfunctions ... 254
10.4 Malfunctions when operated with a frequency inverter ... 255
10.5 Customer service ... 255
10.6 Waste disposal ... 255

11 Appendix ... 257
11.1 Wiring diagrams ... 257
11.2 Operation and maintenance instructions for forced cooling fan /VE with part number groups 2097... and 2098... ... 269
11.3 Certificates ... 275

12 Address list ... 276

Index ... 287

31555454/EN – 11/2023

1 General information

1.1 About this documentation

The documentation at hand is the original.

This documentation is an integral part of the product. The documentation is intended for all employees who perform work on the product.

Make sure this documentation is accessible and legible. Ensure that persons responsible for the systems and their operation as well as persons who work on the product independently have read through the documentation carefully and understood it. If you are unclear about any of the information in this documentation or if you require further information, contact SEW-EURODRIVE.

1.2 Structure of the safety notes

1.2.1 Meaning of signal words

The following table shows the graduation and meaning of the signal words for safety notes.

Signal word	Meaning	Consequences if disregarded
⚠ **DANGER**	Imminent hazard	Severe or fatal injuries
⚠ **WARNING**	Possible dangerous situation	Severe or fatal injuries
⚠ **CAUTION**	Possible dangerous situation	Minor injuries
NOTICE	Possible damage to property	Damage to the product or its environment
INFORMATION ON EXPLOSION PROTECTION	Important information about explosion protection	
INFORMATION	Useful information or tip: Simplifies handling of the product.	

1.2.2 Structure of section-related safety notes

Section-related safety notes do not apply to a specific action but to several actions pertaining to one subject. The hazard symbols used either indicate a general hazard or a specific hazard.

This is the formal structure of a safety note for a specific section:

SIGNAL WORD

Type and source of hazard.

Possible consequence(s) if disregarded.

- Measure(s) to prevent the hazard.

31555454/EN – 11/2023

Meaning of the hazard symbols

The hazard symbols in the safety notes have the following meaning:

Hazard symbol	Meaning
	General hazard
	Warning of dangerous electrical voltage
	Warning of hot surfaces
	Warning of automatic restart
	Note on explosion protection
	Warning of explosions

1.2.3 Structure of embedded safety notes

Embedded safety notes are directly integrated into the instructions just before the description of the dangerous action.

This is the formal structure of an embedded safety note:

⚠ **SIGNAL WORD!** Type and source of hazard. Possible consequence(s) if disregarded. Measure(s) to prevent the hazard.

1.3 Rights to claim under limited warranty

Read the information in this documentation. This is essential for fault-free operation and fulfillment of any rights to claim under limited warranty. Read the documentation before you start working with the product.

1.4 Product names and trademarks

The brands and product names in this documentation are trademarks or registered trademarks of their respective titleholders.

31555454/EN – 11/2023

1.5 Copyright notice

© 2023 SEW-EURODRIVE. All rights reserved. Unauthorized reproduction, modification, distribution or any other use of the whole or any part of this documentation is strictly prohibited.

1.6 Other applicable documentation

Observe the corresponding documentation for all additional components.

31555454/EN – 11/2023

2 Safety notes

2.1 Preliminary information

The following general safety notes serve the purpose of preventing injury to persons and damage to property. They primarily apply to the use of products described in this documentation. If you use additional components, also observe the relevant warning and safety notes.

2.2 Duties of the user

As the user, you must ensure that the basic safety notes are observed and complied with. Make sure that persons responsible for the machinery and its operation as well as persons who work on the device independently have read through the documentation carefully and understood it.

As the user, you must ensure that all of the work listed in the following is carried out only by qualified specialists:

- Setup and installation
- Installation and connection
- Startup
- Maintenance and repairs
- Shutdown
- Disassembly

Ensure that the persons who work on the product pay attention to the following regulations, conditions, documentation, and information:

- National and regional safety and accident prevention regulations
- Warning and safety signs on the product
- All other relevant project planning documents, installation and startup instructions, and wiring diagrams
- Do not assemble, install or operate damaged products
- All system-specific specifications and conditions

Ensure that systems in which the product is installed are equipped with additional monitoring and protection devices. Observe the applicable safety regulations and legislation governing technical work equipment and accident prevention regulations.

31555454/EN – 11/2023

2.3 Target group

Specialist for mechanical work

Any mechanical work may be performed only by adequately qualified specialists. Specialists in the context of this documentation are persons who are familiar with the design, mechanical installation, troubleshooting, and maintenance of the product, and who possess the following qualifications:

- Qualifications in the field of mechanics in accordance with the national regulations
- Familiarity with this documentation

Specialist for electrotechnical work

Any electrotechnical work may be performed only by electrically skilled persons with a suitable education. Electrically skilled persons in the context of this documentation are persons who are familiar with electrical installation, startup, troubleshooting, and maintenance of the product, and who possess the following qualifications:

- Qualifications in the field of electrical engineering in accordance with the national regulations
- Familiarity with this documentation

Additional qualifications

In addition to that, these persons must be familiar with the valid safety regulations and laws, as well as with the requirements of the standards, directives, and laws specified in this documentation.

The persons must have the express authorization of the company to operate, program, parameterize, label, and ground devices, systems, and circuits in accordance with the standards of safety technology.

Instructed persons

All work in the areas of transportation, storage, operation and waste disposal must be carried out by persons who are trained appropriately. The purpose of the training is to give persons the ability to perform the required tasks and work steps in a safe and correct manner.

31555454/EN – 11/2023

2.4 Designated use

The product is intended for use in industrial and commercial systems.

In the case of installation in electrical systems or machines, it is prohibited to start the proper operation of the product until it is determined that the machine meets the requirements stipulated in the local laws and directives.

INFORMATION

- A motor may only be operated on an inverter if the requirements of the IECEx Certificate of Conformity, this documentation, and the information on the nameplate of the motor are fulfilled.
- The motor must not be operated in areas/applications that produce strong charges on the motor housing.
  – Example: As a fan motor inside a tube. Dust transported in the tube can generate an electrostatic charge. The dust can ignite as a result of electrostatic discharge.

2.5 Transportation/storage

Inspect the shipment for damage as soon as you receive the delivery. Inform the shipping company immediately about any damage. If the product is damaged, it must not be assembled, installed or started up.

The lifting eyebolts are designed to carry only the weight of the motor without gear unit. Tighten installed lifting eyebolts. Mounted gear units have separate suspension attachments, which must be used according to the gear unit operating instructions when lifting the gearmotor. Do not mount any additional loads.

The installed lifting eyebolts are in accordance with DIN 580. Observe the loads and regulations specified there. The tension force vector of the slings must not exceed a 45° angle in accordance with DIN 580.

If necessary, use suitable, sufficiently dimensioned handling equipment.

Observe the following notes when transporting the device:

- Always use all attachment points if available. The attachment points are designed to carry only the mass of the product. Severe or fatal injuries. Do not apply any additional loads.
- Ensure that the product is not subject to mechanical impact.

If the product is not immediately installed, it must be stored in a dry and dust-free location. The product can be stored for up to 9 months without requiring any special measures before startup. Do not store the product outdoors.

Do not transport or store the product on the fan guard.

31555454/EN – 11/2023

2.6 Installation/assembly

Note the following points during installation:

- Make sure that the supports are even, the foot and flange mounting is correct and if there is direct coupling, align with precision.
- Avoid resonance between the rotational frequency and the double supply system frequency.
- Release the brake (for motors with mounted brake).
- Turn the rotor by hand and listen for unusual grinding noise.
- Check the direction of rotation in decoupled state.
- Only install or remove belt pulleys and couplings using suitable devices (heat up). Cover the belt pulleys and couplings with a touch guard. Avoid unacceptable belt tension.
- Establish any necessary pipe connections.
- Mounting positions with the shaft end pointing upward must be equipped with a cover to prevent foreign objects from falling into the fan. Ensure that ventilation openings are not obstructed and that used air cannot be drawn in again straight away. The same applies to air from adjacent units.

See also the information in chapter "Mechanical installation" (→ 🗎 34).

2.6.1 Restrictions of use

The following applications are prohibited unless the device is explicitly designed for such use:

- Use in areas exposed to harmful oils, acids, gases, vapors, dust, and radiation
- Operation in applications with impermissibly high mechanical vibration and shock loads in excess of the regulations stipulated in EN 61800-5-1

31555454/EN – 11/2023

2.7 Electrical work

2.7.1 Carrying out electrical work safely

Observe the following information to carry out electrical work safely during installation and maintenance:

- Electrical work may only be carried out by electrically skilled persons.
- Always adhere to the 5 safety rules for working on electrical components:
  - Disconnect
  - Secure the drive against restart
  - Check that no voltage is applied
  - Ground and short-circuit it
  - Cover or safeguard neighboring live parts
- When the device is switched on, dangerous voltages are present at all power connections as well as at any connected cables and terminals. This also applies even when the product is inhibited and the motor is at standstill.

2.7.2 Electrical connection

Exceeding the tolerances stated in IEC 60034-1 (VDE 0530, Part 1) – voltage ± 5%, frequency ± 2%, curve shape, symmetry – increases the heating and influences electromagnetic compatibility. Also comply with the standard DIN IEC 60364 "Erection of low-voltage installations" and the local regulations for the operation of electrical installations, e.g. EN 50110.

In addition to the generally applicable installation regulations for low-voltage electrical equipment, you must observe the special regulations for the installation of electrical systems in potentially explosive areas applicable in the country of use. In Australia and New Zealand, relevant standards for hazardous locations are standards AS/NZS60079 and AS/NZS3000, in Brazil ABNT NBR IEC 60079 and IEC 60079-14.

Observe the wiring information and differing data on the nameplate as well as the provided wiring diagram.

The connection must be a permanently safe electrical connection (no protruding wire ends). Use the corresponding cable-end equipment. Establish a safe PE connection.

When the motor is connected, the distances to non-insulated and live parts must not be shorter than the minimum values. Adhere to the national specifications. According to the standards in the table, the minimum distances must not be shorter than the following values:

Protection type/ protection level	Standard	Minimum distance at nominal voltage U_N	
		≤ 500 V	> 500 V ≤ 690 V
e	IEC 60079-7:2007	8 mm	10 mm
nA	IEC 60079-15:2010	5 mm	5.5 mm
eb	IEC 60079-7:2015	8 mm	10 mm
ec	IEC 60079-7:2015	5 mm	5.5 mm

The terminal box must be free from foreign objects, dirt and humidity. Unused cable entry openings and the connection box itself must be sealed so that they are dust- and water-proof.

Secure the key(s) for the test run without output elements.

When operating low-voltage machines with brakes, check that the brake is functioning properly before startup.

Observe the notes in chapter "Electrical installation".

31555454/EN – 11/2023

2.8 Startup/operation

Risk of burns: The surface temperature of the product can exceed 60 °C during operation. Do not touch the product during operation. Let the product cool down before touching it.

Do not deactivate monitoring and protection devices of the machine or system, even for a test run.

Depending on the degree of protection, products may have live, uninsulated, and sometimes moving or rotating parts as well as hot surfaces during operation.

Make sure that any existing transport protection is removed.

In the event of deviations from normal operation, switch off the product. Possible deviations are increased temperatures, noise, or vibration, for example. Determine the cause. Contact SEW-EURODRIVE if necessary.

Ensure that the terminal box is closed and screwed down before applying the supply voltage.

Additional preventive measures may be required for applications with increased hazard potential. Be sure to check the effectiveness of the protection devices after every modification.

Mechanical blocking or internal protective functions of the product can cause a motor standstill. Eliminating the cause of the problem or performing a reset may result in the drive restarting automatically. If, for safety reasons, this is not permitted for the drive-controlled machine, first disconnect the product from the supply system and then start troubleshooting.

Explosion due to overheating when using motors with backstop /RS

At low motor speeds, the centrifugal forces are so low that the sprags rub against the inner and outer ring. This results in overheating of the friction surfaces.

- Do not permanently operate motors with backstop /RS below lift-off speed.

3 Motor structure

3.1 Basic structure of EDRN63 motors

The following figure shows an example of the basic structure of an EDRN63 motor:

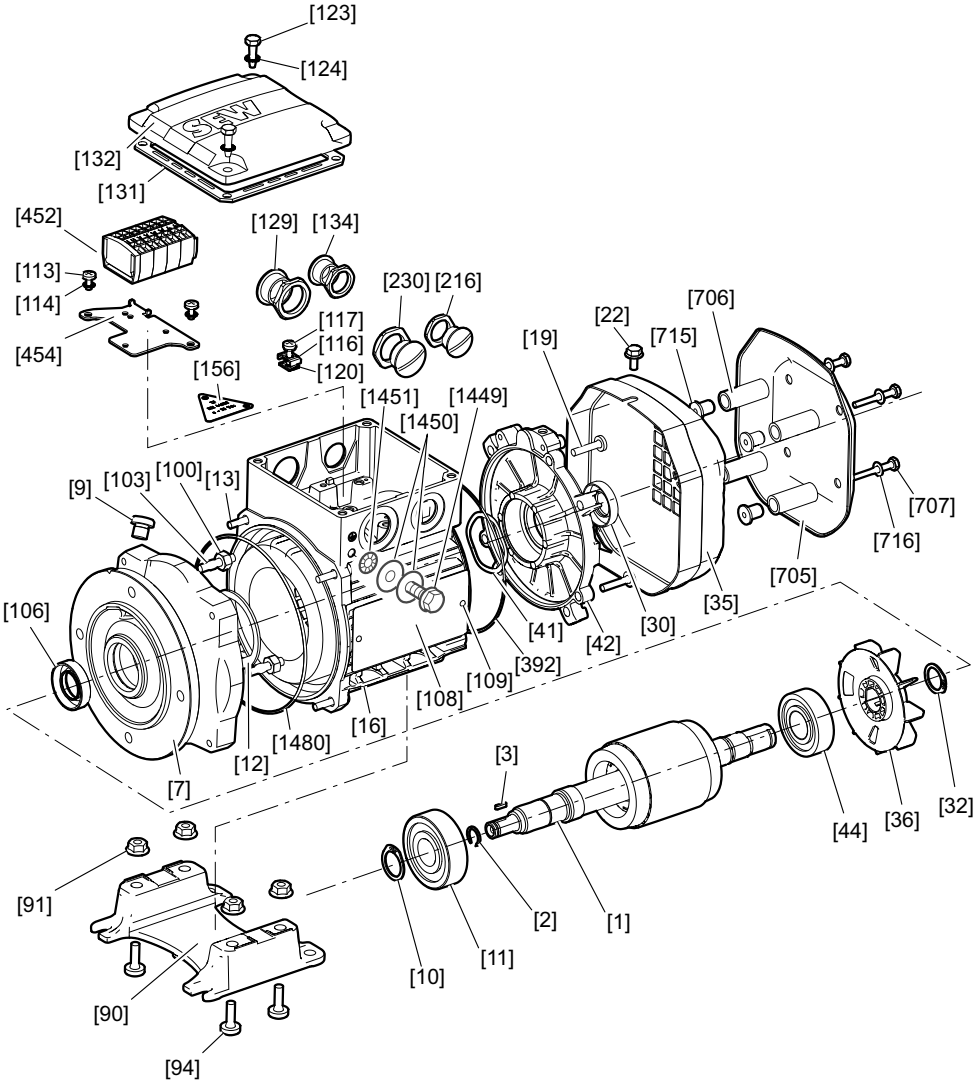

9007227492461451

[1]	Rotor	[35]	Fan guard	[114]	Tooth lock washer	[452]	Terminal strip
[2]	Retaining ring	[36]	Fan	[116]	Terminal clip	[454]	Retaining plate
[3]	Key	[41]	Equalizing ring	[117]	Hex head screw	[705]	Canopy
[7]	Flanged endshield	[42]	Rear endshield	[120]	Support plate	[706]	Spacer
[9]	Screw plug	[44]	Deep groove ball bearing	[123]	Hex head screw	[707]	Pan head screw
[10]	Retaining ring	[90]	Bed plate	[124]	Tooth lock washer	[715]	Blind rivet
[11]	Deep groove ball bearing	[91]	Hex nut	[129]	Screw plug	[716]	Washer
[12]	Retaining ring	[94]	Flat head screw	[131]	Gasket for cover	[1449]	Screw
[13]	Cap screw	[100]	Hex nut	[132]	Terminal box cover	[1450]	Washer
[16]	Stator	[103]	Stud	[134]	Screw plug	[1451]	Serrated lock washer
[19]	Screw	[106]	Oil seal	[156]	Information sign	[1480]	O-ring
[22]	Hex head screw	[108]	Nameplate	[216]	Hex nut		
[30]	Oil seal	[109]	Grooved pin	[230]	Hex nut		
[32]	Retaining ring	[113]	Pan head screw	[392]	Gasket		

31555454/EN – 11/2023

3.2 Basic structure of EDR..71 – 132, EDRN71 – 132S motors

The following figure shows an example of the basic structure of EDR..71 – 132, EDRN71 – 132S motors with cage clamp:

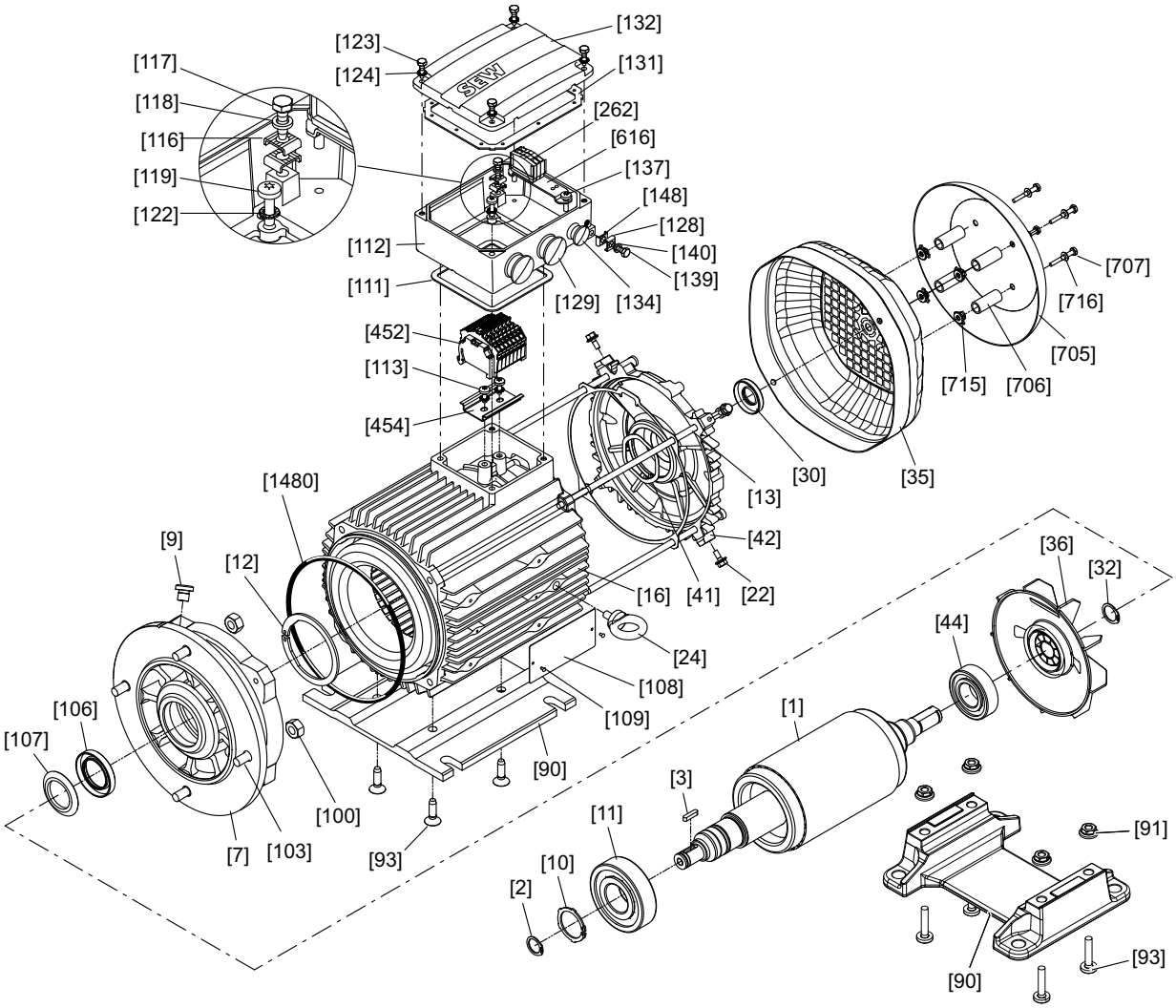

[1]	Rotor	[36]	Fan	[113]	Pan head screw	[139]	Hex head screw
[2]	Retaining ring	[41]	Equalizing ring	[116]	Retaining clip	[140]	Lock washer
[3]	Key	[42]	B-side endshield	[117]	Hex head screw	[148]	Retaining clip
[7]	Flanged endshield	[44]	Deep groove ball bearing	[118]	Lock washer	[262]	Terminal
[9]	Screw plug	[90]	Bed plate	[119]	Pan head screw	[392]	Gasket
[10]	Retaining ring	[91]	Hex nut	[122]	Tooth lock washer	[452]	Terminal strip
[11]	Deep groove ball bearing	[93]	Countersunk screw	[123]	Hex head screw	[454]	Support rail
[12]	Retaining ring	[100]	Hex nut	[124]	Tooth lock washer	[616]	Retaining plate
[13]	Cap screw	[103]	Stud	[128]	Retaining clip	[705]	Canopy
[16]	Stator	[106]	Oil seal	[129]	Screw plug	[706]	Spacer
[22]	Hex head screw	[107]	Oil flinger	[131]	Gasket for cover	[707]	Pan head screw
[24]	Lifting eyebolt	[108]	Nameplate	[132]	Terminal box cover	[715]	Blind rivet
[30]	Oil seal	[109]	Grooved pin	[134]	Screw plug	[716]	Washer
[32]	Retaining ring	[111]	Gasket for lower part	[137]	Screw	[1480]	O-ring
[35]	Fan guard	[112]	Terminal box lower part				

31555454/EN – 11/2023

3.3 Basic structure of EDR..160 – 180, EDRN132M – 180 motors

The following figure shows an example of the basic structure of EDR..160 – 180, EDRN132M – 180 motors with anti-twist frame:

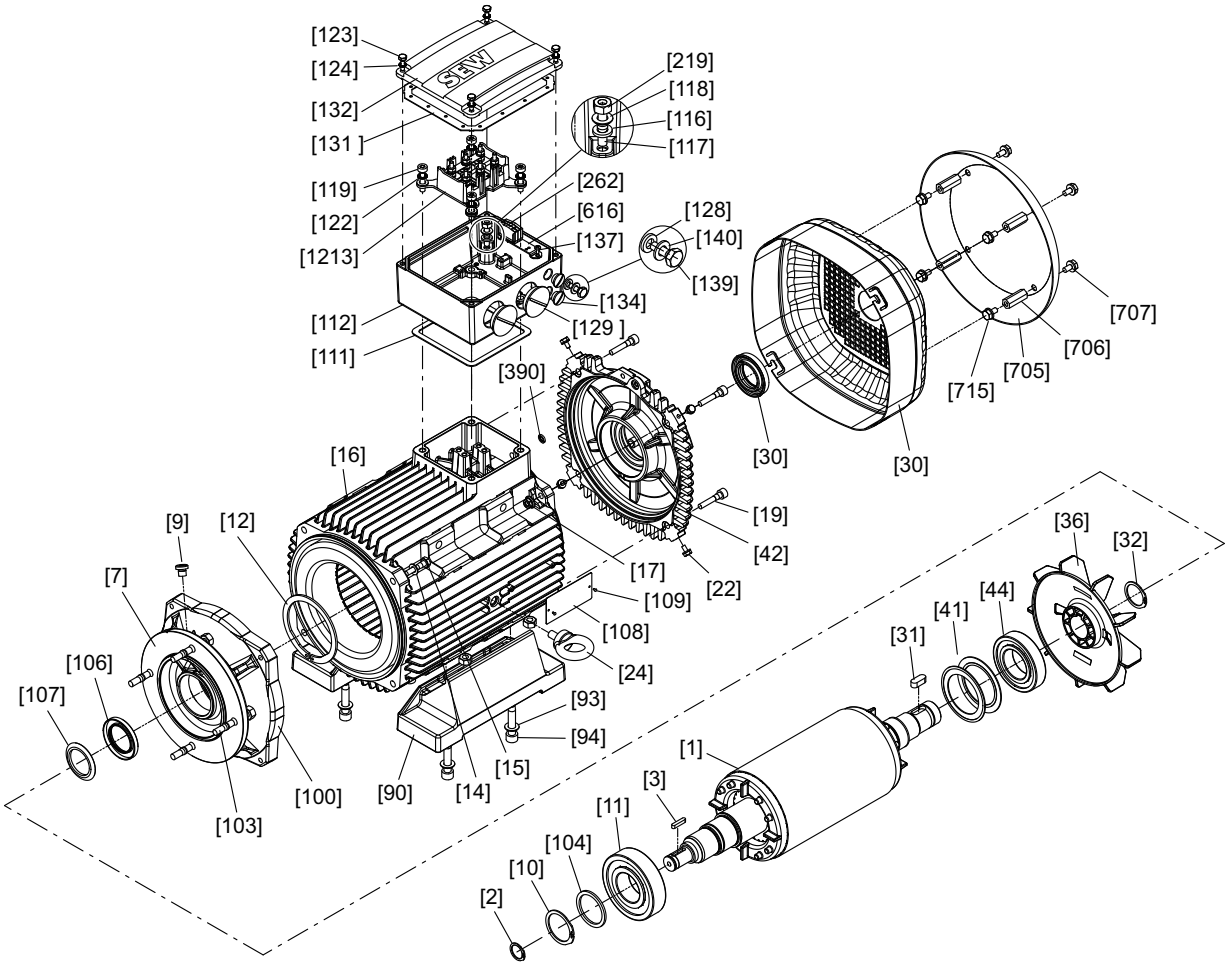

[1]	Rotor	[30]	Sealing ring	[106]	Oil seal	[131]	Gasket for cover
[2]	Retaining ring	[31]	Key	[107]	Oil flinger	[132]	Terminal box cover
[3]	Key	[32]	Retaining ring	[108]	Nameplate	[134]	Screw plug
[7]	Flange	[35]	Fan guard	[109]	Grooved pin	[139]	Hex head screw
[9]	Screw plug	[36]	Fan	[111]	Gasket for lower part	[140]	Washer
[10]	Retaining ring	[41]	Cup spring	[112]	Terminal box lower part	[390]	O-ring
[11]	Deep groove ball bearing	[42]	Rear endshield	[116]	Serrated lock washer	[219]	Hex nut
[12]	Retaining ring	[44]	Deep groove ball bearing	[117]	Stud	[705]	Canopy
[14]	Washer	[90]	Foot	[118]	Washer	[706]	Spacer
[15]	Hex head screw	[91]	Hex nut	[119]	Cap screw	[707]	Hex head screw
[16]	Stator	[93]	Washer	[122]	Tooth lock washer	[715]	Hex head screw
[17]	Hex nut	[94]	Cap screw	[123]	Hex head screw	[1213]	Kit [1)]
[19]	Cap screw	[100]	Hex nut	[124]	Tooth lock washer		
[22]	Hex head screw	[103]	Stud	[128]	Serrated lock washer		
[24]	Lifting eyebolt	[104]	Supporting ring	[129]	Screw plug		

1) 1 anti-twist frame, 1 terminal board, 4 sleeves, 2 screws, 2 nuts

31555454/EN – 11/2023

3.4 Basic structure of EDR..200 – 225, EDRN200 – 225 motors

The following figure shows an example of the basic structure of EDR..200 – 225, EDRN200 – 225 motors with anti-twist frame:

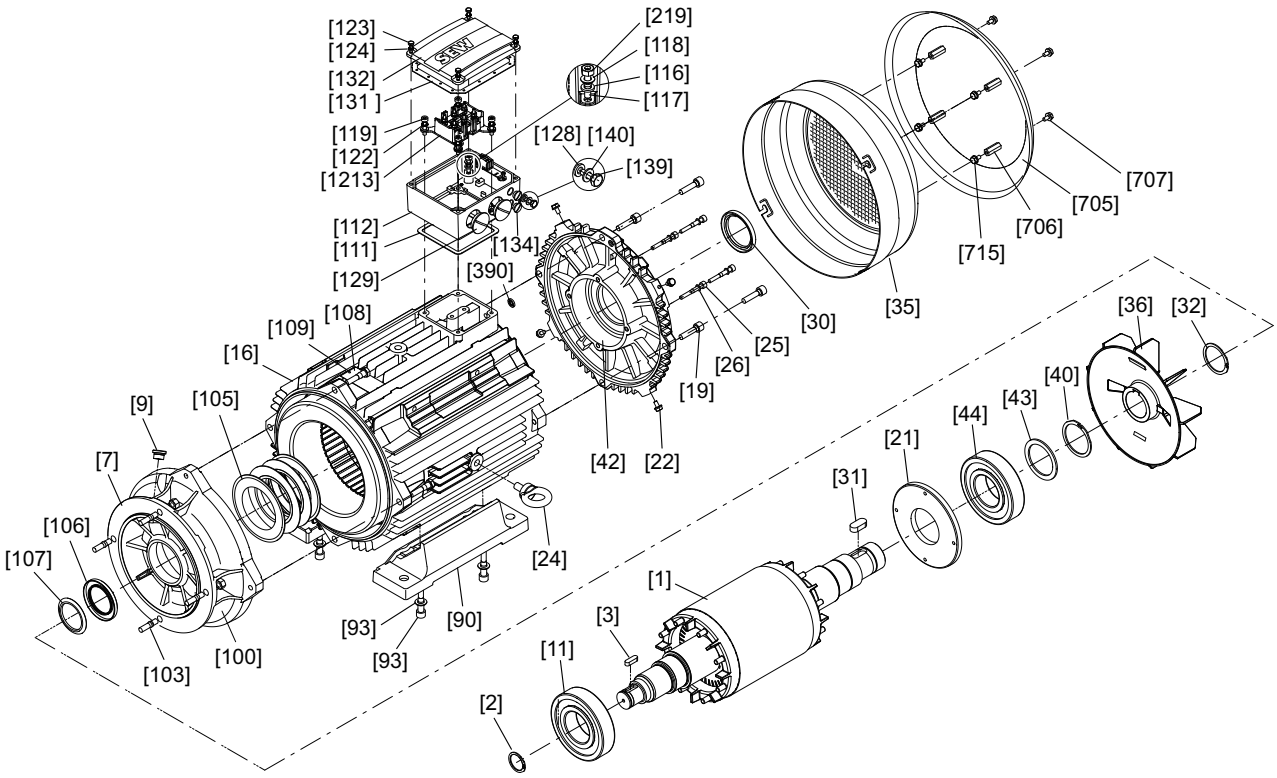

[1]	Rotor	[31]	Key	[107]	Oil flinger	[132]	Terminal box cover
[2]	Retaining ring	[32]	Retaining ring	[108]	Nameplate	[134]	Screw plug
[3]	Key	[35]	Fan guard	[109]	Grooved pin	[139]	Hex head screw
[7]	Flange	[36]	Fan	[111]	Gasket for lower part	[140]	Washer
[9]	Screw plug	[40]	Retaining ring	[112]	Terminal box lower part	[390]	O-ring
[11]	Deep groove ball bearing	[42]	Rear endshield	[116]	Serrated lock washer	[219]	Hex nut
[15]	Cap screw	[43]	Supporting ring	[117]	Stud	[705]	Canopy
[16]	Stator	[44]	Deep groove ball bearing	[118]	Washer	[706]	Spacer bolt
[19]	Cap screw	[90]	Foot	[119]	Cap screw	[707]	Hex head screw
[21]	Oil seal flange	[93]	Washer	[122]	Tooth lock washer	[715]	Hex head screw
[22]	Hex head screw	[94]	Cap screw	[123]	Hex head screw	[1213]	Kit [1)]
[24]	Lifting eyebolt	[100]	Hex nut	[124]	Tooth lock washer		
[25]	Cap screw	[103]	Stud	[128]	Serrated lock washer		
[26]	Shield ring	[105]	Cup spring	[129]	Screw plug		
[30]	Oil seal	[106]	Oil seal	[131]	Gasket for cover		

1) 1 anti-twist frame, 1 terminal board, 4 sleeves, 2 screws, 2 nuts

31555454/EN – 11/2023

3.5 Basic structure of EDR..250 – 280, EDRN250 – 280 motors

The following figure shows an example of the basic structure of EDR..250 – 280, EDRN250 – 280 motors with anti-twist frame:

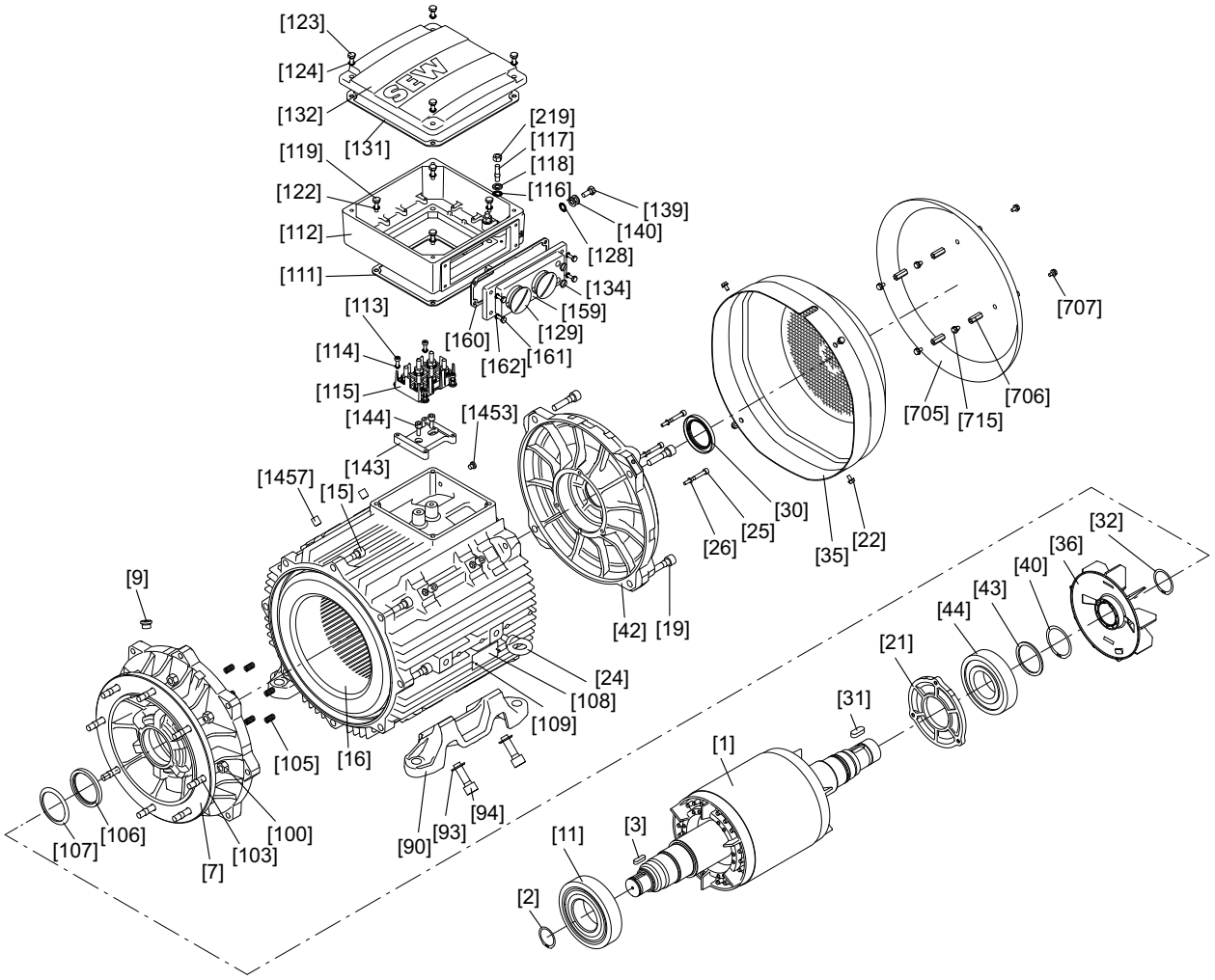

14397384075

[1]	Rotor	[35]	Fan guard	[112]	Terminal box lower part	[143]	Adapter plate
[2]	Retaining ring	[36]	Fan	[113]	Cap screw	[144]	Cap screw
[3]	Key	[40]	Retaining ring	[114]	Tooth lock washer	[159]	Connection piece
[7]	Flange	[42]	Rear endshield	[116]	Serrated lock washer	[160]	Connection piece seal
[9]	Screw plug	[43]	Supporting ring	[117]	Stud	[161]	Hex head screw
[11]	Deep groove ball bearing	[44]	Deep groove ball bearing	[118]	Washer	[162]	Tooth lock washer
[15]	Cap screw	[90]	Foot	[119]	Cap screw	[219]	Hex nut
[16]	Stator	[93]	Washer	[122]	Tooth lock washer	[705]	Canopy
[19]	Cap screw	[94]	Cap screw	[123]	Hex head screw	[706]	Spacer bolt
[21]	Oil seal flange	[100]	Hex nut	[124]	Tooth lock washer	[707]	Hex head screw
[22]	Hex head screw	[103]	Stud	[128]	Serrated lock washer	[715]	Hex head screw
[24]	Lifting eyebolt	[105]	Compression spring	[129]	Screw plug	[1457]	Set screw
[25]	Cap screw	[106]	Oil seal	[131]	Gasket for cover	[1453]	Screw plug
[26]	Shield ring	[107]	Oil flinger	[132]	Terminal box cover	[143]	Adapter plate
[30]	Oil seal	[108]	Nameplate	[134]	Screw plug		
[31]	Key	[109]	Grooved pin	[139]	Hex head screw		
[32]	Retaining ring	[111]	Gasket for lower part	[140]	Washer		

31555454/EN – 11/2023

3.6 Basic structure of EDR..315, EDRN315 motors

The following figure shows an example of the basic structure of EDR..315, EDRN315 with anti-twist frame:

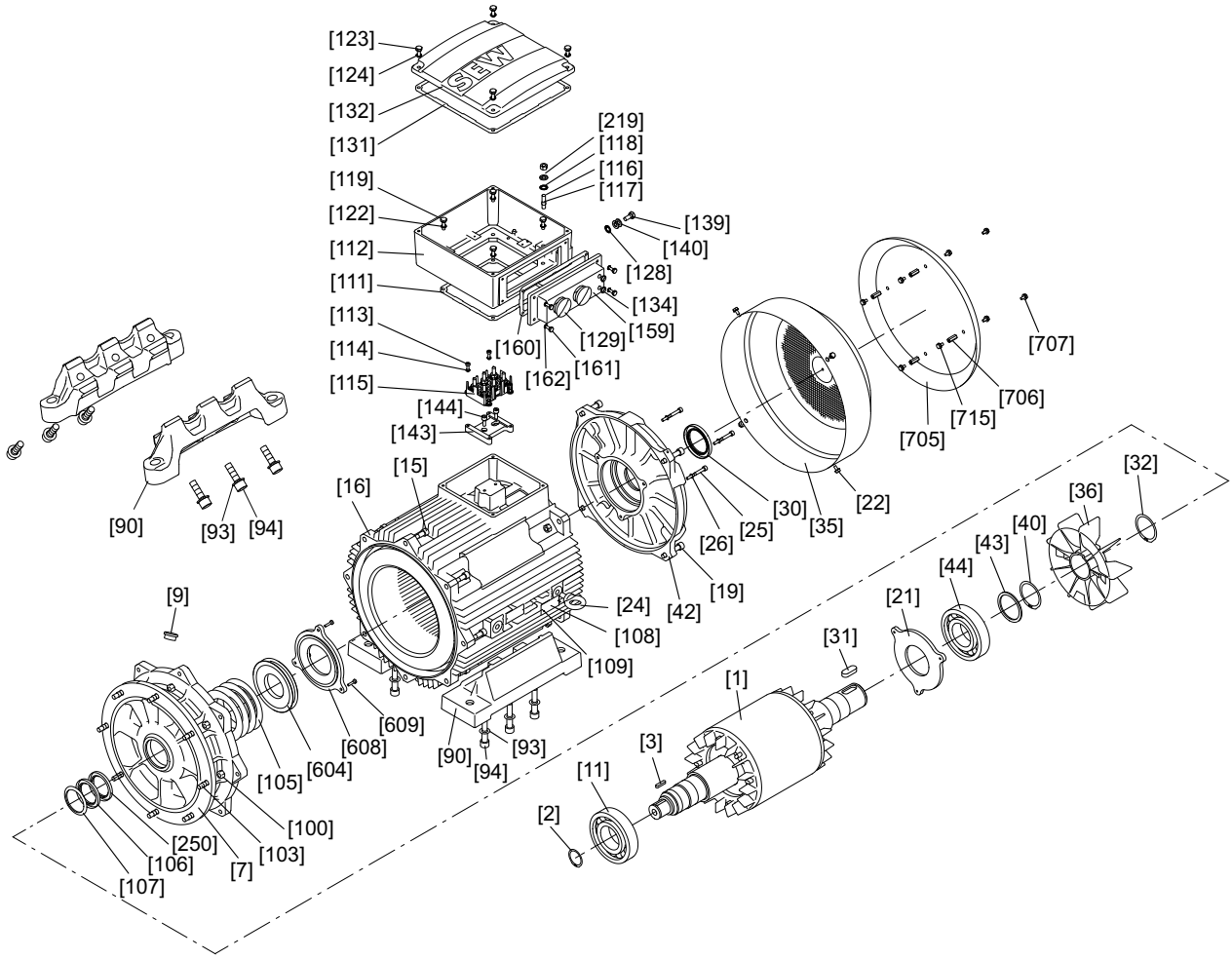

9007213690531979

[1]	Rotor	[35]	Fan guard	[112]	Terminal box lower part	[143]	Adapter plate
[2]	Retaining ring	[36]	Fan	[113]	Cap screw	[144]	Cap screw
[3]	Key	[40]	Retaining ring	[114]	Tooth lock washer	[159]	Connection piece
[7]	Flange	[42]	Rear endshield	[116]	Serrated lock washer	[160]	Connection piece seal
[9]	Screw plug	[43]	Supporting ring	[117]	Stud	[161]	Hex head screw
[11]	Deep groove ball bearing	[44]	Deep groove ball bearing	[118]	Washer	[162]	Tooth lock washer
[15]	Cap screw	[90]	Foot	[119]	Cap screw	[219]	Hex nut
[16]	Stator	[93]	Washer	[122]	Tooth lock washer	[250]	Oil seal
[19]	Cap screw	[94]	Cap screw	[123]	Hex head screw	[604]	Lubrication ring
[21]	Oil seal flange	[100]	Hex nut	[124]	Tooth lock washer	[608]	Oil seal flange
[22]	Hex head screw	[103]	Stud	[128]	Serrated lock washer	[609]	Oil seal
[24]	Lifting eyebolt	[105]	Cup spring	[129]	Screw plug	[705]	Canopy
[25]	Cap screw	[106]	Oil seal	[131]	Gasket for cover	[706]	Spacer bolt
[26]	Shield ring	[107]	Oil flinger	[132]	Terminal box cover	[707]	Hex head screw
[30]	Oil seal	[108]	Nameplate	[134]	Screw plug	[715]	Hex head screw
[31]	Key	[109]	Grooved pin	[139]	Hex head screw		
[32]	Retaining ring	[111]	Gasket for lower part	[140]	Washer		

31555454/EN – 11/2023

3.7 Nameplate

3.7.1 EDR../EDRN.. motor nameplate

The following figure shows an example nameplate of a motor:

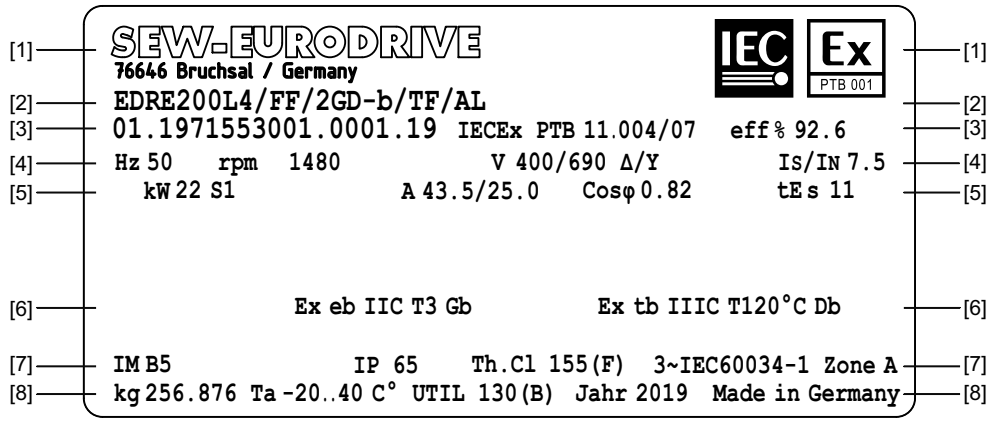

9007219506832651

Line	Information
[1]	• Manufacturer, address • IECEx marking and the number of the approval authority The marks on the upper edge of the nameplate are only present when the motor has been certified accordingly or when it includes the relevant components.
[2]	• Type designation
[3]	• Serial number • Certificate number IECEx for line operation • Rated efficiency for motors included in the scope of the IEC 60034-30-1 standard
[4]	• Rated frequency • Rated speed • Rated voltage • Relation between starting current and rated current
[5]	• Rated power, duty type • Rated current • Power factor for AC motors • Heating time
[6]	• Ex eb = Protection type IIC = Gas group T3 = Temperature class (gas) Gb = EPL (Equipment Protection Level) • Ex tb = Protection type IIIC = Dust group T120°C = Surface temperature (dust) Db = EPL (Equipment Protection Level)

31555454/EN – 11/2023

Line	Information
[7]	• Mounting position • Degree of protection according to IEC 600345 • Thermal class • Number of phases and underlying rating and performance standards (IEC 60034-X and/or equivalent national standard) • Zone A = Section A from IEC 60034-1
[8]	• Motor/gearmotor weight • Ambient temperature • Thermal capacity utilization of the motor • Year of manufacture • Country of manufacture

3.7.2 Additional nameplate for EDR../EDRN.. motors in frequency inverter operation

The following figure shows an example of the additional nameplate for an EDRS motor in design 2GD-b for frequency inverter operation (short: additional FI nameplate):

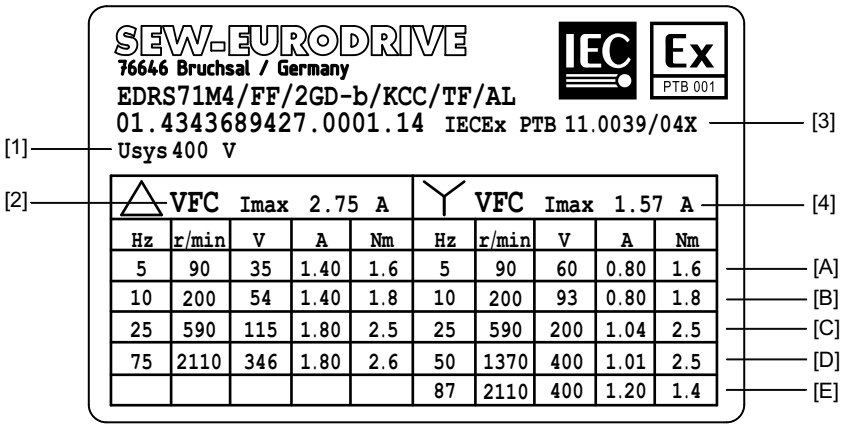

20252318987

Line	Information
[1]	System voltage – line voltage of the frequency inverter
[2]	(Voltage Mode Flux Control) Voltage-controlled control mode of the frequency inverter and connection type
[3]	Certificate of Conformity (IECEx CoC) for frequency inverter operation
[4]	Maximum permitted peak current, e.g. when accelerating with VFC control mode
[A]	The additional frequency inverter nameplate lists the thermal limit characteristic curve of the motor in a table (A to E) taking account of voltage and frequency, see chapter "Limit characteristic curves of EDR.., EDRN.. motors in inverter operation" (→ 🗎 122). The minimum and maximum frequency can deviate depending on the option.
[B]	
[C]	
[D]	
[E]	

31555454/EN – 11/2023

3.7.3 Additional nameplate motors with approval for Brazil according to ABNT/INMETRO

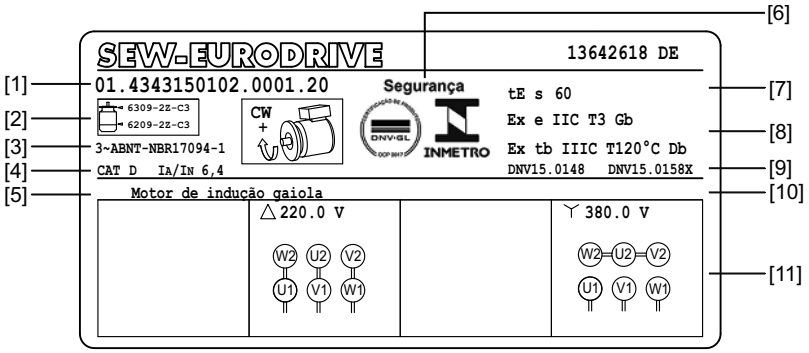

32379174411

Line	Information
[1]	• Serial number
[2]	• Rolling bearings used • Direction of rotation, for motors with fixed direction of rotation
[3]	• Motor standard
[4]	• Startup behavior • Relation between starting current and rated current
[5]	• Motor type: induction motor with squirrel-cage rotor
[6]	• INMETRO logo, ExCB logo and number
[7]	• Heating time
[8]	• Explosion protection identification
[9]	• Certificate numbers
[10]	• Energy efficiency class
[11]	• Wiring diagrams

Warning label according to INMETRO

9007218145219467

Packaging label according to INMETRO

32379273995

3.7.4 Nameplate of motors with approval for the Republic of Korea

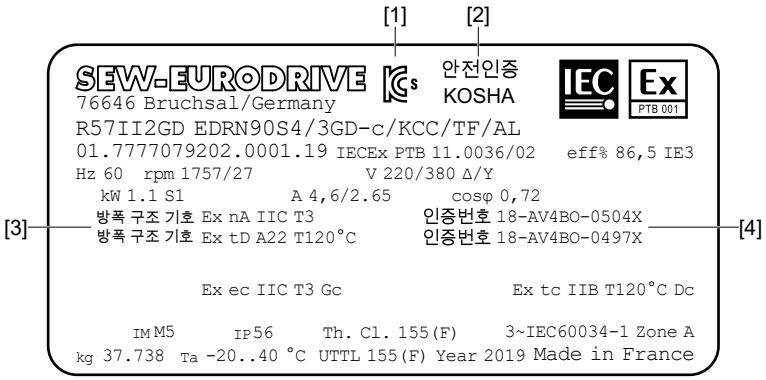

32625696267

[1] KCs logo
[2] Local approval authority KOSHA
[3] Explosion protection marking according to Korean standard
[4] Certificate numbers gas and dust

In addition to the markings according to IEC/IECEx, the nameplate also has the KCs logo (Korea Certification safety) with certificate number and the markings of Korean explosion protection. If necessary, the nameplate also has the KEL (Korean Energy Label).

If a motor may be operated on the inverter, the motor is equipped with an additional nameplate with inverter data. The corresponding certificate numbers of KOSHA are indicated on the additional nameplate.

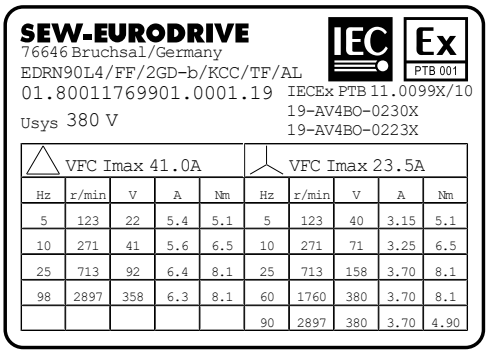

32376834443

3.7.5 Markings

The following table lists all the markings that can be provided on a nameplate or attached to the motor, and an explanation of what they mean.

IEC Ex PTB 001	IECEx conformity marking. Confirmation of the conformity by a notified authority (PTB in Braunschweig, Germany)
Segurança CERTIFICAÇÃO DE PRODUTOS DNV·GL OCP 0017 INMETRO	Conformity marking INMETRO. Confirmation of the conformity for Brazil by DNV in São Paulo, Brazil.
KCs 안전인증 KOSHA	KC mark of conformity (Korea Certification). Confirmation of the conformity for Korea by KOSHA in Ulsan, REPUBLIC OF KOREA.
FS 02	FS logo with 2-digit number for identification of installed functional safety motor options.
≥ 90° C 1363 527 1	For operation with an inverter or at ambient temperatures > 40 °C, cable entries and cables must be used that are suited for temperatures of ≥ 90 °C. The used cables must be selected regarding their temperature resistance according to standard requirements and operating conditions.
STECKER NICHT IN EXPLOSIONS-FÄHIGER ATMOSPHÄRE ÖFFNEN, TRENNEN ODER VERBINDEN! DO NOT OPEN, CONNECT OR DISCONNECT CONNECTOR IN EXPLOSIVE ATMOSPHERE! 21020132	Do not connect, disconnect or open the connector of the cone shaft encoder in potentially explosive atmospheres. Make sure no dust or humidity enters the wiring space of the encoder while it is open.

Special indication "X"

If the special indication "X" appears after the certificate number on the Certificate of Conformity (IECEx CoC), this indicates the certificate contains special conditions for the safe application of the motors.

For motors of the equipment protection level b, inverter operation is regarded as a special operating condition. For this reason, the certificate number is followed by the special indication "X". The special operating conditions include the permitted speed range as well as the inverter properties defined in the IECEx Certificate of Conformity (IECEx CoC).

3.7.6 Serial number

The following table lists the structure of a serial number:

Example: 01. 12212343 01. 0001. 18	
01.	Sales organization
12212343	Order number (8 digits)
01.	Order item (2 digits)
0001	Quantity (4 digits)

Example: 01. 12212343 01. 0001. 18	
18	End digits of the year of manufacture (2 digits)

3.8 Motor type designations

The following diagram shows the structure of the motor type designation:

EDRN80M4 /BE2 /FI /3GD-c /KCC /TF /ES7S	
E	Explosion-protected design
DR	Product family
N	Code for product line identification
80M	Size and length
4	Number of poles
/BE2	Brake
/FI	Output designs
/3GD-c	Explosion protection design
/KCC	Alternative connections
/TF	Thermal motor protection
/ES7S	Encoder

3.8.1 Designation of the motors

EDRS..	Explosion-protected AC motor, standard efficiency IE1
EDRE..	Explosion-protected AC motor, high efficiency IE2
EDRN..	Explosion-protected AC motor, premium efficiency IE3
63 – 315	Sizes: 63, 71, 80, 90, 100, 112, 132, 160, 180, 200, 225, 250, 280, 315
K, S, MK, MS, M, ME, LS, LM, L, LC, H	Lengths
4	Number of poles

31555454/EN – 11/2023

3.9 Designs and options

3.9.1 Explosion-protected motors

The following table shows the relation between the design and the equipment protection level /EPL:

Design	Equipment protection level according to IEC 60079-0[1)]
/2G-b	Gb
/2D-b	Db
/2GD-b	Gb, Db
/3G-c	Gc
/3D-c	Dc
/3GD-c	Gc, Dc

1) The abbreviation "EPL" stands for "Equipment Protection Level".

3.9.2 Output types

The following table shows possible output designs:

Designation	Design	Option
/FI	/2G-b, /2D-b, /2GD-b /3G-c, /3D-c, /3GD-c	IEC foot-mounted motor
/F.A, /F.B		Universal foot-mounted motor
/FG		7-series integral motor, as stand-alone motor
/FF		IEC flange-mounted motor with bore
/FT		IEC flange-mounted motor with threads
/FL		General flange-mounted motor (other than IEC)
/FM		7-series integral motor with IEC feet
/FE		IEC flange-mounted motor with bore and IEC feet
/FY		IEC flange-mounted motor with thread and IEC feet
/FK		General flange-mounted motor (other than IEC) with feet

3.9.3 Mechanical attachments

The following table shows possible mechanical attachments:

Designation	Design	Option
/BE..	/3G-c, /3D-c, /3GD-c	Spring-loaded brake with specification of size
HR		Manual brake release of the brake, re-engaging
HF		Manual brake release, lockable
/RS	/2G-b, /2D-b, /2GD-b /3G-c, /3D-c, /3GD-c	Backstop

31555454/EN – 11/2023

3.9.4 Temperature sensor/temperature detection

The following table shows the thermal protection options:

Designation	Design	Option
/TF	/2G-b, /2D-b, /2GD-b /3G-c, /3D-c, /3GD-c	Temperature sensor (PTC thermistor or PTC resistor)
/KY		Temperature sensor KTY84 – 130
/PK		Pt1000 temperature sensor
/PT		1 or 3 Pt100 temperature sensors

3.9.5 Encoders

The following table shows possible encoder designs:

Designation	Design	Option
/EK8S[1], /EK8R, /EK8C	/3G-c, /3D-c, /3GD-c	Incremental encoder
/AK8Y[1], /AK8W[1]		Multi-turn absolute encoder
/EV8S, /EV8R, /EV8C		Incremental encoder
/AV8Y, /AV8W		Multi-turn absolute encoder
/ES7S[1], /EG7S[1], /EH7S		Add-on speed sensor with sin/cos interface
/EV7S		Add-on speed sensor ES7S with sin/cos interface, spread shaft via mounting adapter for third-party encoders
/ES7R, /EG7R, /EH7R		Add-on speed sensor with TTL (RS422) interface
/EV7R		Add-on speed sensor ES7S with TTL (RS422) interface, spread shaft via mounting adapter for third-party encoders
/ES7C, /EG7C, /EH7C		Add-on speed sensor with HTL interface
/EV7C		Add-on speed sensor ES7S with HTL and interface, spread shaft via mounting adapter for third-party encoders
/AS7W[1], /AG7W[1]		Add-on absolute encoder with RS485 interface (multi-turn)
/AV7W		Add-on absolute encoder AS7W with RS485 interface (multi-turn), spread shaft via mounting adapter for third-party encoders
/AS7Y[1], /AG7Y[1], /AH7Y[1]		Add-on absolute encoder with SSI interface (multi-turn)
/AV7Y		Add-on absolute encoder AS7Y with SSI interface (multi-turn), spread shaft via mounting adapter for third-party encoders
/ES7A /EG7A		Mounting adapter for speed sensors with solid shaft
/EH7T		Add-on speed sensor with TTL (RS422) interface
/XV.A		Mounting adapter for third-party speed sensors
/XV..		Mounted third-party speed sensors

1) Also available in design for functional safety

31555454/EN – 11/2023

3.9.6 Connection options

The following table shows designs of the power connection. Designs with terminal board do not have an extra type designation.

Designation	Design	Included in the delivery
/KCC	/2G-b, /2D-b, /2GD-b /3G-c, /3D-c, /3GD-c	Terminal strip with cage clamps
None	/2G-b, /2D-b, /2GD-b /3G-c, /3D-c, /3GD-c	Terminal strip with cage clamps only with EDRN63
None	/2G-b, /2D-b, /2GD-b /3G-c, /3D-c, /3GD-c	Terminal board

31555454/EN – 11/2023

3.9.7 Storage

The following table shows possible bearings for motors:

Designation	Design	Option
/NS	/2G-b, /2D-b, /2GD-b /3G-c, /3D-c, /3GD-c	Relubrication device
/ERF		Reinforced bearings on A-side with cylindrical roller bearing
/NIB		Insulated bearing B-side

3.9.8 Ventilation

The following table shows possible ventilation variants:

Designation	Design	Option
/VE	/3G-c, /3D-c, /3GD-c	Forced cooling fan
/AL	/2G-b, /2D-b, /2GD-b /3G-c, /3D-c, /3GD-c	Metal fan
None	/2G-b, /3G-c	Standard fan (plastic)
/C	/2G-b, /2D-b, /2GD-b /3G-c, /3D-c, /3GD-c	Canopy for fan guard

3.9.9 Other additional features

The following table shows further additional feature:

Designation	Design	Option
/2W	/2G-b, /2D-b, /2GD-b /3G-c, /3D-c, /3GD-c	Second shaft end on the motor

31555454/EN – 11/2023

3.10 Functional safety

Motors from SEW-EURODRIVE are optionally available with functionally safe motor options. These are designed for implementing safety functions.

SEW-EURODRIVE labels a functionally safe motor option at the drive with an FS logo and a 2-digit number on the motor nameplate. The number is a code that indicates which components in the drive are safety-related. This allows for unique identification of an available functionally safe motor option via the motor nameplate.

FS logo	Available functionally safe motor option		
	Decentralized inverters	Safety brake	Safety encoder
FS 01	X		
FS 02		X	
FS 04			X
FS 07	X		X
FS 11		X	X

If the "FS" logo, e.g. with the code "FS 11" is present on the motor nameplate, the combination of safety encoder and safety brake is available at the motor. If an FS logo is available, adhere to the information specified in the corresponding documentation.

If the drive bears the FS logo on the nameplate, adhere to the information in the following document:

- Addendum to the operating instructions "Safety Encoders and Safety Brakes, AC Motors DR.., DRN.., DR2.., EDR.., EDRN.. – Functional Safety"

To determine the safety level for systems and machines yourself, refer to the characteristic safety values in chapter "Characteristic safety values".

31555454/EN – 11/2023

4 Mechanical installation

4.1 Before you start

INFORMATION

Observe the safety notes in chapter 2 of this documentation for the mechanical installation.

INFORMATION

The mounting position for installation must correspond with the specifications on the nameplate.

Make sure that the following requirements are met before you start installing the unit:

- The specifications on the nameplate of the drive correspond to the supply system or the output voltage of the inverter.
- The drive is undamaged (no damage caused by transportation or storage).
- All transport protection has been removed.
- The following provisions are met:
  - Ambient temperature as specified on the nameplate.

    Note that the temperature range of the gear unit may also be restricted (see "Gear unit" operating instructions).

    Also observe the deviating information on the nameplate.
  - The drive must not be exposed to oils, acids, gases, vapors, radiation, etc. Otherwise, the drive needs to be explicitly designed for these ambient conditions.
  - The installation altitude is max. 1000 m above sea level.

    Observe the section "Designated use" in chapter 2.
  - Make sure all mounted options (such as encoders or brakes) are suitable for the ambient conditions.

The aforementioned information refers to standard orders. The conditions might be different when you order drives other than the standard. Refer to the order confirmation for deviating conditions.

Functional safety

If the drive has the FS logo on the nameplate, observe the information on mechanical installation in the corresponding addendum to the operating instructions.

31555454/EN – 11/2023

4.2 Preliminary work after longer periods of storage

Depending on the duration and ambient conditions during storage, corrosion, aging of lubricants, embrittlement of sealing elements, and moisture absorption in the insulation can occur.

Perform the measures described below on any drives that have been stored for longer than 9 months.

Corrosion

1. Check for damage to the motor and/or components (coating, shafts, connection and fastening parts).
2. Correct the corrosion damage.

Embrittlement of seals

3. Visually inspect seals and look for fissures, hardening, and embrittlement.
4. Replace any damaged seals.

Reduced grease service life

If the drives are stored for longer than a year, the service life of the bearing grease is reduced due to aging and de-oiling of the lubricant.

5. Check the condition and usability of the rolling bearings.
6. Replace any damaged rolling bearings.

Reduced grease quantity

7. If motors with relubrication devices are stored for longer than 5 years, relubricate the motor as specified on the lubrication plate.

Moisture absorption

8. Check to see that the wiring space of the motor is dry and clean.
9. Remove moisture and dirt.
10. If the motor has absorbed moisture, measure the insulation resistance (see chapter "Measuring the insulation resistance" (→ 🗎 36)) and dry the motor (see chapter "Drying the electric cylinder" (→ 🗎 37)).

4.2.1 Checking the brake

If motors with brake have been stored or non-operational for longer than 9 months, check their function before taking them into operation.

31555454/EN – 11/2023

4.2.2 Measuring the insulation resistance

The insulation resistance (see following figure) varies greatly depending on the temperature.

If the measured resistance is within the range of the limit characteristic curve (depending on the ambient temperature), the insulation resistance is sufficient. If the value is below the limit characteristic curve, dry the motor.

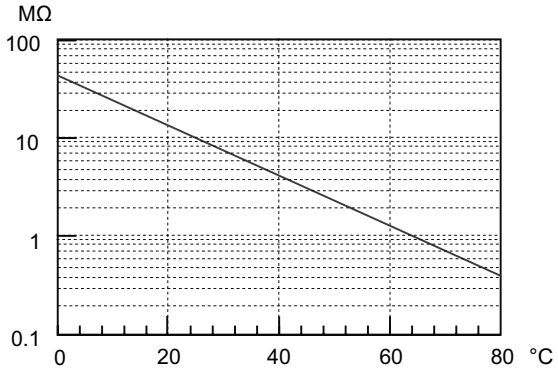

18014398682805003

4.2.3 Drying the electric cylinder

Drying the motor with warm air

1. Dry the motor with warm air.
2. End the drying process when the minimum insulation resistance is exceeded.

Drying the motor with an isolation transformer

1. Connect the windings in series.
2. Auxiliary AC voltage supply max. 10% of the nominal voltage with max. 20% of the rated current.

Connect the windings in series: Wiring diagram R13

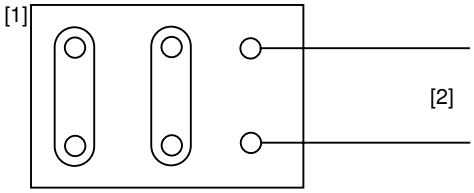

9007201590991243

[1] Motor terminal board [2] Transformer

Connect the windings in series: Wiring diagram C13

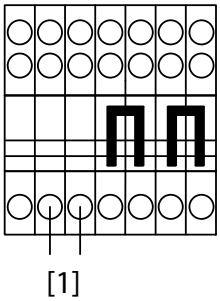

3955447819

[1] Transformer

Connect the windings in series: Wiring diagram A13

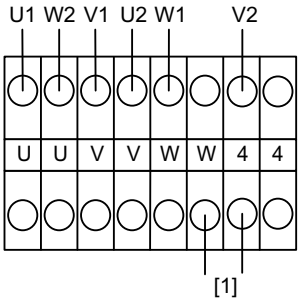

27511350155

[1] Transformer

31555454/EN – 11/2023

4.3 Motor installation notes

Observe the following when setting up the motor:

⚠ CAUTION

Sharp edges due to open keyway.

Risk of cutting injuries.

- Insert the key into the keyway.
- Pull a protective tubing over the shaft.

- Remove any anti-corrosion agent and dirt from motor shaft ends and flange surfaces. Use a commercially available solvent. Do not allow the solvent to come in contact with the bearings or sealing rings.
- The mounting position for installation must correspond with the specifications on the nameplate.
- Only install the gearmotor in the specified mounting position on a level, vibration-free and torsionally rigid support structure.
- Make sure the customer's counter-bearing is unobstructed and can move freely.
- Align the motor and the driven machine carefully in order to prevent the output shaft from being exposed to unacceptable strain. Observe the permitted overhung and axial forces.
- Do not jolt or hammer the shaft end.
- Balance components for subsequent mounting on the shaft with a half key (motor shafts are balanced with a half key).
- Make sure that there is sufficient clearance around the motor to provide for adequate cooling air supply, and that the motor does not draw in warm exhaust air from other units. Observe the minimum distances specified in chapter "Cooling air supply distances" (→ 🗎 38).

4.3.1 Cooling air supply distances

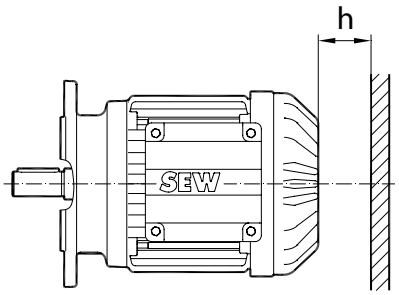

2963373195

Motors	h in mm
EDR..71 – 80, EDRN63 – 80	15
EDRE90 – 100, EDRN90 – 100	20
EDRE112 – 132, EDRN112 – 132S	25
EDRE160, EDRN132M/L	30
EDRE180, EDRN180	35

31555454/EN – 11/2023

Motors	h in mm
EDRE200 – 225, EDRN200 – 225	45
EDRE250 – 280, EDRN250 – 280	50
EDRE315, EDRN315	55

4.3.2 Using belt pulleys

The following conditions must be met when using belt pulleys:

- Use only belts that do not build up an electrostatic charge.
- Do not exceed the maximum permitted overhung load.

4.3.3 Cover for motors in vertical mounting position

Motors in vertical mounting position with the motor output shaft pointing upwards or downwards (e.g. M4/V1 or M2/V3 mounting positions) must be equipped with a cover to prevent objects from falling into the drive. The cover must meet the following conditions:

- Requirements according to IEC 60079-0 and/or IEC 60079-7.
- The cover must not obstruct the supply of cooling air.

4.3.4 Mounting the motor with aluminum feet

To mount motors with a foot made of aluminum, you have to use washers with an outer diameter that is at least twice the screw diameter (e.g. DIN EN ISO 7090).

Use bolts of strength class 8.8 up to max. 10.9.

Tightening torque according to VDI 2230-1.

Motors	Maximum permitted screw lengths
EDRN63 – 71	M6 × 25
EDRN80 – 90	M10 × 25
EDRN100 – 132S	M10 × 25

4.3.5 Installation in damp locations or outdoors

- Use suitable cable glands for the incoming cable (use reducing adapters if necessary) according to the installation instructions.
- If possible, arrange the terminal box in such a way that the cable entries are pointing downwards.
- Seal the cable entry properly.
- Clean the sealing surfaces of the terminal box and the terminal box cover carefully before re-assembly; replace embrittled gaskets.
- If required, touch up the corrosion protection (especially at the eyebolts).
- Check the degree of protection.
- Protect the shaft against corrosion using a suitable anti-corrosion agent.

31555454/EN – 11/2023

4.4 Installation tolerances

Shaft end	Flanges
Diameter tolerance according to EN 50347 • ISO j6 with Ø ≤ 28 mm • ISO k6 with Ø ≥ 38 mm up to ≤ 48 mm • ISO m6 with Ø ≥ 55 mm • Centering bore according to DIN 332, shape DR	Centering shoulder tolerance according to EN 50347 • ISO j6 with Ø ≤ 250 mm • ISO h6 with Ø ≥ 300 mm

4.5 Assembling the input elements

Drive components that are installed on the motor shaft end, e.g. pinions, must be warmed up prior to assembly in order to prevent damage, e.g. to the encoder of stand-alone motors.

⚠ WARNING

Unsecured key skidding out of the keyway.

Severe or fatal injuries due to flying parts.

- Only operate the motor with attached customer output element (e.g. gear unit), or with a suitably secured key.

⚠ WARNING

Generating of sparks due to unsecured key.

Severe or fatal injuries from explosion.

- Only operate the motor with attached customer output element (e.g. gear unit), or with a suitably secured key.

31555454/EN – 11/2023

4.6 Encoder mounting adapter

If a drive was ordered with encoder mounting adapter, SEW-EURODRIVE will deliver the drive with enclosed coupling. Do not connect the coupling for operation without the encoder.

4.6.1 Encoder mounting adapter XV../EV.. for EDR..71 – 225, EDRN71 – 225 motors

If you have ordered the XV.. or EV.. encoder mounting adapter, the adapter [A] and the coupling [B – E] are enclosed with the motor and are to be assembled by the customer.

The following figure shows how to assemble the coupling and the adapter:

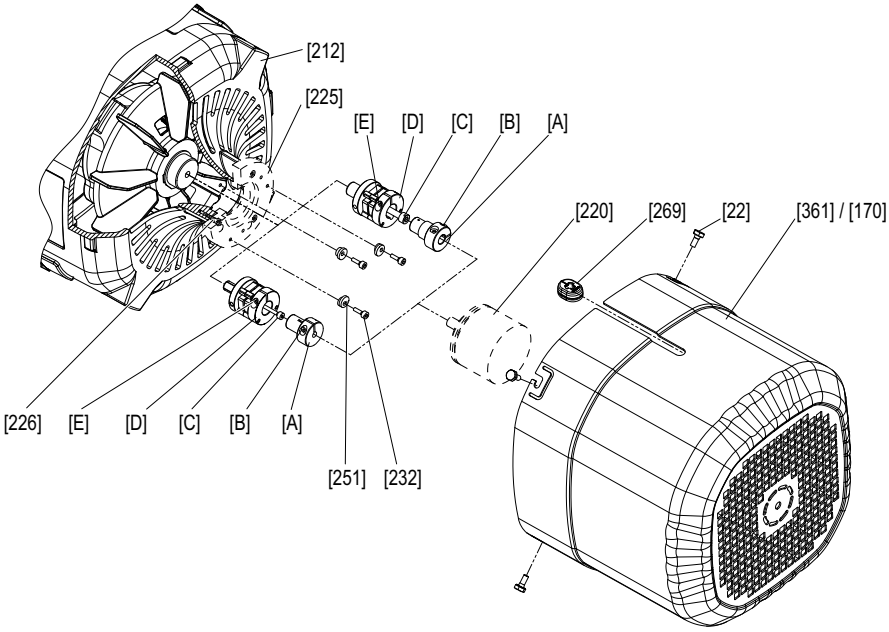

9007202887904779

[22]	Screw	[361]	Safety cover
[170]	Forced cooling fan guard	[269]	Cable grommet
[212]	Fan guard with encoder mount	[A]	Adapters
[220]	Encoder	[B]	Retaining screw
[225]	Intermediate flange (XV1A)	[C]	Central retaining screw
[232]	Screws (XV1A, XV2A)	[D]	Coupling (spread- or solid shaft coupling)
[251]	Conical spring washers (XV1A, XV2A)	[E]	Retaining screw
		[226]	Screw

31555454/EN – 11/2023

Mounting encoders to encoder mounting adapters XV../EV.. at EDR..71 – 225, EDRN71 – 225 motors

1. Remove the safety cover [361], or the forced cooling fan if required.
2. **For XV2A, XV3A, and XV4A:** Remove the intermediate flange [225].
3. Screw the coupling [D] to the bore at the shaft end using screw [C].
4. Plug the adapter [A] onto the pin of the encoder [220].
5. Tighten the central retaining screw [B].
6. **For XV2A, XV3A, XV4A:** Mount the intermediate flange [225] using the screws [226].
7. Plug the encoder [220] with adapter [A] onto the coupling [D].
8. Tighten the retaining screw [E].
9. **For XV1A, XV2A:** Re-install the retaining screws [232] with conical spring washers.
10. **For XV3A, XV4A:** Installed by the customer via bores in the encoder plate.

Motor	Screw	Tightening torque
		Nm
EDR..71 – 132 EDRN71 to 132S	[C]	3
EDR..160 – 225 EDRN132M – 225	[C]	8
EDR..71 – 225 EDRN71 – 225	[226]	3
EDR..71 – 225 EDRN71 – 225	[B]	3
EDR..71 – 225 EDRN71 – 225	[E]	3
EDR..71 – 225 EDRN71 – 225	[232]	3

31555454/EN – 11/2023

4.6.2 XV../EV.. encoder mounting adapter to EDR..250 – 280, EDRN250 – 280 motors

If you have ordered the XV../EV.. encoder mounting adapter, the coupling [233] is enclosed with the motor and must be installed by the customer.

The following figure shows an example of how the coupling is installed:

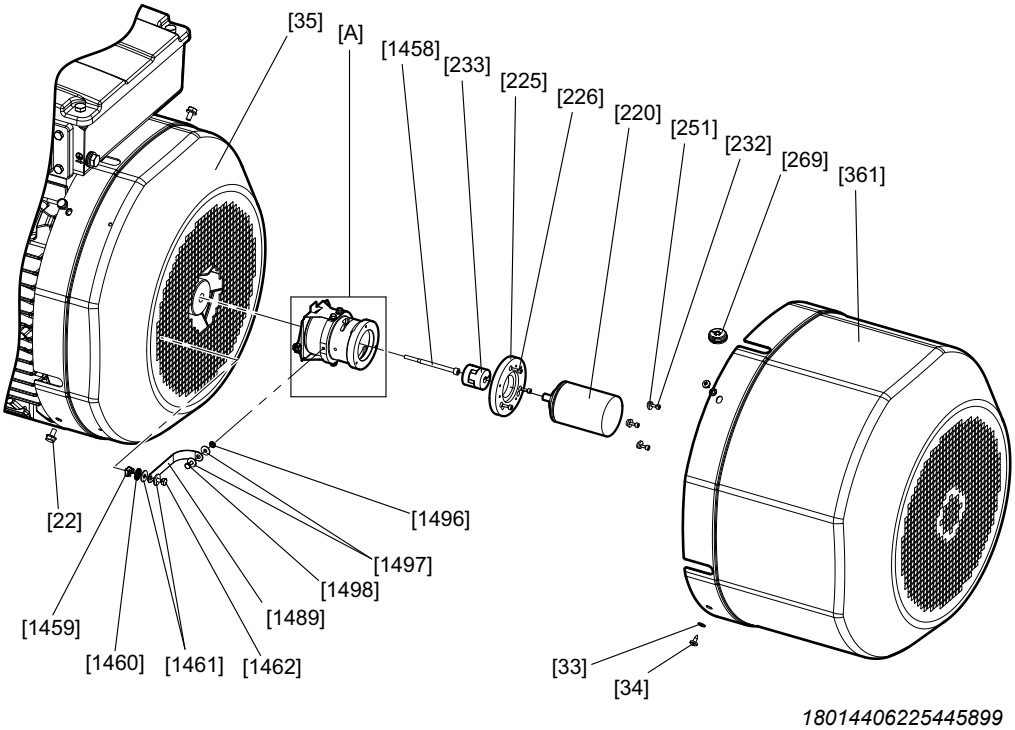

[22]	Screw	[361]	Safety cover (normal/long)
[33]	Washer	[1458]	Screw
[34]	Screw	[1459]	Cage nut
[35]	Fan guard	[1460]	Serrated lock washer
[220]	Encoder	[1461]	Washer
[225]	Intermediate flange (optional)	[1462]	Screw
[226]	Screw	[1489]	Ground strap
[232]	Screws (.V1A, .V2A)	[1496]	Serrated lock washer
[233]	Coupling	[1497]	Washer
[251]	Conical spring washers (.V1A, .V2A)	[1498]	Screw
[269]	Cable grommet	[A]	Encoder mounting adapter

31555454/EN – 11/2023

Mounting encoders in XV../EV.. encoder mounting adapter to EDR..250 – 280, EDRN250 – 280 motors

1. Remove the safety cover [361], or the forced cooling fan if required.
2. Place the coupling [233] onto the pin of the encoder mounting adapter [A].
3. Tighten the screw of the coupling [233] via the slots in the encoder mounting adapter.
4. **For XV2A, XV3A, XV4A:** Mount the intermediate flange [225] to the encoder mounting adapter [A] using screw [226].
5. **For XV1A, XV2A:** Insert the screws [232] with eccentric disk spring washers [251] in the encoder mounting adapter [A].
6. Fasten the encoder [220] to the encoder mounting adapter [A] or the intermediate flange [225].
7. Plug the encoder [220] into the coupling [233].
8. To secure the eccentric disks [251], insert the screws [232].
9. **For XV1A, XV2A:** Tighten the screws [232] while turning the eccentric disks [251] in clockwise direction into the groove of the encoder [220].
10. Tighten the screw of the coupling [233].
11. Insert the encoder cable into the cable grommet [269].
12. Insert the cable grommet [269] into the recess of the safety cover [361] or the forced cooling fan.
13. Mount the safety cover [361] onto the forced cooling fan.

Motor	Screw	Tightening torque
		Nm
EDR..250 – 280 EDRN250 – 280	Screw of the coupling [233]	3.3 Nm
EDR..250 – 280 EDRN250 to 280	[226]	3.3 Nm
EDR..250 – 280 EDRN250 – 280	[232]	2.25 Nm

4.6.3 XH.A encoder mounting adapter

The XH1A, XH7A and XH8A encoder mounting adapters for hollow shaft encoders are premounted on delivery.

To mount the encoder, proceed as described in chapter "Motor and brake maintenance – preliminary work" (→ 🗎 154).

31555454/EN – 11/2023

4.7 Terminal box

4.7.1 Turning the terminal box – tightening torques

The following table shows all the tightening torques required for this procedure:

Motor	Screw/bolt	Tightening torque
		Nm
M6 stud	[115]/[1213]	3
M8 stud		6
M12 stud		15.5
M16 stud		30
EDRN63	[113]	2
EDR..71 – 132, 315, EDRN71 – 132S, 315	[113]	5
EDRN63	[117]	2
EDR..71 – 132, EDRN71 – 132S	[117]	6.5
EDR..160, EDRN132M/L		27.3
EDR..180 – 225 (aluminum), EDRN180 – 225 (aluminum)		27.3
EDR..180 – 225 (gray cast iron), EDRN180 – 225 (gray cast iron)		50
EDE..250 – 315, EDRN250 – 315		85
EDR..71 – 132, EDRN71 – 132S	[119]	5
EDR..160 – 225, EDRN132M – 225		27.3
EDR..250 – 315, EDNR250 – 315		54
EDR..71 – 132, EDRN63 – 132S	[123]	4
EDR..160, EDRN132M/L		11.3
EDR..180 – 225 (aluminum), EDRN180 – 225 (aluminum)		11.3
EDR..180 – 225 (gray cast iron), EDRN180 – 225 (gray cast iron)		27.3
EDR..250 – 315, EDRN250 – 315		54
EDR..71 – 132S, EDRN63 – 132S	[139]	6
EDR..160 – 225, EDRN132M – 225		25
EDR..71 – 225, EDRN80 – 225		10
EDR..250 – 315, EDRN250 – 315		85
EDR..71 – 315, EDRN71 – 315	[137]/[629]/[632]	2

31555454/EN – 11/2023

4.7.2 Turning the terminal box with cage clamp power connection /KCC

The following figure shows the terminal box option with cage clamps /KCC:

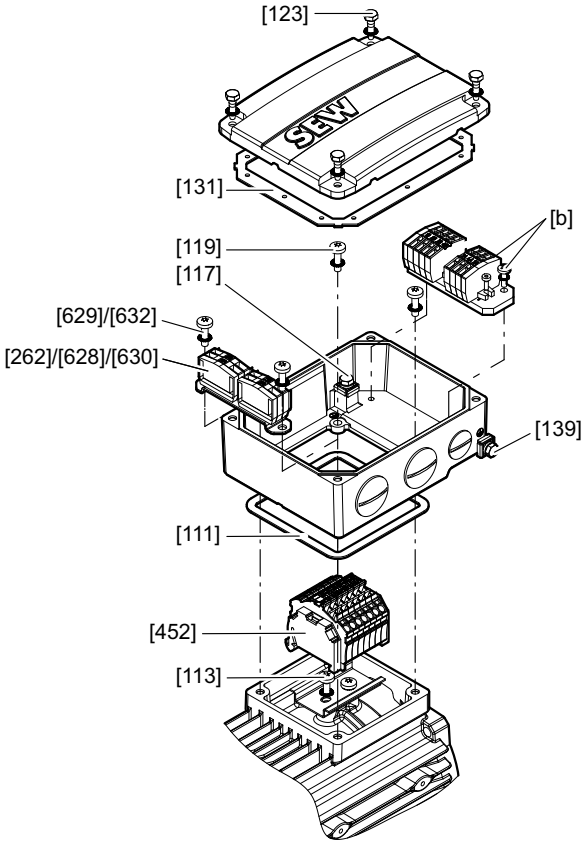

45035999025947915

[111]	Gasket
[113]	Pan head screw for mounting rail installation
[117]	Hex head screw for grounding inside
[119]	Terminal box retaining screws + lock washers (4 x each)
[123]	Terminal box cover retaining screws + lock washers (4 x each)
[131]	Gasket
[137]	Screw for option terminal/rectifier
[139]	Hex head screw for grounding outside
[b]	Terminal strip 1 with screws and nuts
[a]	Terminal strip 2 + retaining plate
[452]	Power terminal
[629]/ [632]	Screw

Proceed as follows to turn the terminal box:

1. Loosen the screws [123] of the terminal box cover. Remove the terminal box cover.
2. Remove the screws [629]/[632].
3. Remove the terminal [b].
4. Remove the retaining screws [119] of the terminal box.
5. Clean the sealing surfaces at the stator shoulder, terminal box lower part and terminal box cover.

31555454/EN – 11/2023

6. Check the gaskets [111] and [131] for damage.
7. Replace any damaged gaskets.
8. ⚠ **DANGER!** Electric shock due to damaged cables. Severe or fatal injuries. When installing the terminal box lower part or the terminal board, make sure the cables are not crushed or twisted. Do not use sharp or pointed objects to align the cables.
   Turn the terminal box to the required position.
9. Make sure that the gasket [111] is positioned correctly.
10. Attach the terminal box lower part.
11. Place the washers under the screws [119] and tighten the screws [119] of the lower part of the terminal box with the respective tightening torque.
12. Refer to chapter "Appendix" (→ 🗎 257) for the arrangement of the auxiliary terminals.
13. Secure terminal [b] with screws [629]/[632].
14. Make sure that the gasket [131] is positioned correctly.
15. Attach the terminal box cover to the terminal box lower part.
16. Place the washers under the screws [123] and tighten the screws [123] of the terminal box cover with the respective tightening torque.
17. To make sure that the cables have not been damaged, perform an insulation test after reassembly, see chapter "Preliminary work after longer periods of storage" (→ 🗎 35).

31555454/EN – 11/2023

4.7.3 Turning the terminal box with terminal board and anti-twist frame

The following figure shows a terminal box with anti-twist frame:

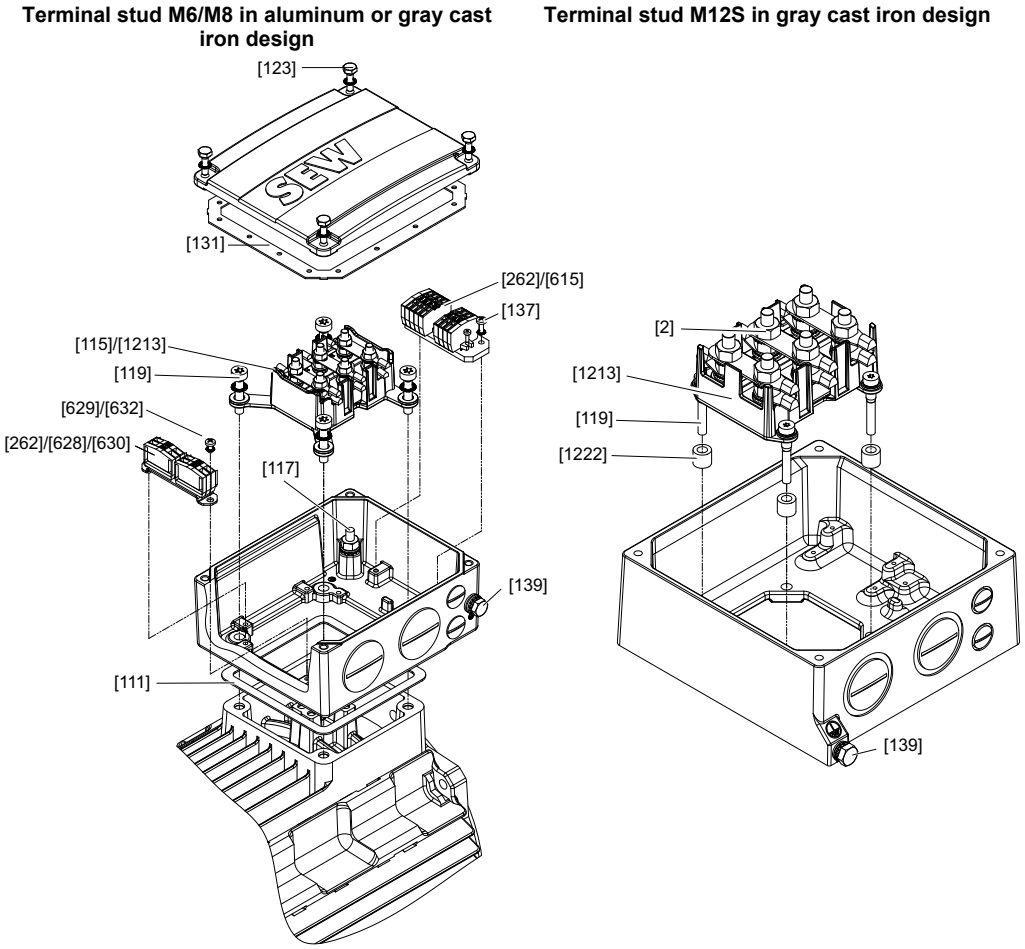

[2]	Terminal stud nut
[111]	Gasket
[115/] [1213]	Kit (1 anti-twist frame, 1 terminal board, 4 sleeves, 2 screws, 2 nuts)
[117]	Hex head screw for grounding inside
[119]	Terminal box retaining screws + lock washers (4 × each)
[123]	Terminal box cover retaining screws + lock washers (4 × each)
[131]	Gasket
[140]	Hex head screw for grounding outside
[1222]	Spacer bushing
[a]	Terminal strip 1
[a1]	Screw for option terminal/rectifier
[a2]	Flat head screw option terminal

Proceed as follows to turn the terminal box:

1. Loosen the screws [123] of the terminal box cover. Remove the terminal box cover.
2. If available, remove the terminals [262]/[615].
3. Remove the retaining screws [119] of the terminal box.

31555454/EN – 11/2023

4. Clean the sealing surfaces at the stator shoulder, terminal box lower part and terminal box cover.
5. Check the gaskets [111] and [131] for damage.
6. Replace any damaged gaskets.
7. Loosen any cables that have already been connected to the terminal board.
8. Remove the terminal board with anti-twist frame from the terminal box.
9. ⚠ **DANGER!** Electric shock due to damaged cables. Severe or fatal injuries. When installing the terminal box lower part or the terminal board, make sure the cables are not crushed or twisted. Do not use sharp or pointed objects to align the cables.
   Turn the terminal box to the required position.
10. Make sure that the gasket [111] is positioned correctly.
11. Attach the terminal box lower part.
12. Turn the terminal board with anti-twist frame like the terminal box.
13. Install the spacer bushings [1222] below the terminal board.
14. Insert the terminal board with anti-twist frame again. The terminal board designations U1, V1 and W1 must be pointing towards the cable outputs afterwards.
15. Place the washers under the screws [119] and tighten the screws [119] of the lower part of the terminal box with the respective tightening torque.
16. Secure terminal [b] with screws [629]/[632].
17. Reconnect any removed cables according to the following table.

Yellow	White	Brown	Black	Red	Blue
W2/T4	U2/T5	V2/T6	U1/T1	V1/T2	W1/T3

18. Tighten the nuts of the terminal studs with the respective tightening torque.
19. Make sure that the gasket [131] is positioned correctly.
20. Attach the terminal box cover to the terminal box lower part.
21. Place the washers under the screws [123] and tighten the screws [123] of the terminal box cover with the respective tightening torque.
22. To make sure that the cables have not been damaged, perform an insulation test after reassembly, see chapter "Preliminary work after longer periods of storage" (→ 🗎 35).

31555454/EN – 11/2023

4.7.4 Turning the terminal box with and without anti-twist frame for EDR..250 – 315, EDRN250 – 315 motors

The following figure shows an example of the terminal box structure:

M12S terminal stud with anti-twist frame in gray cast iron design | **M16 terminal stud without anti-twist frame in gray cast iron design**

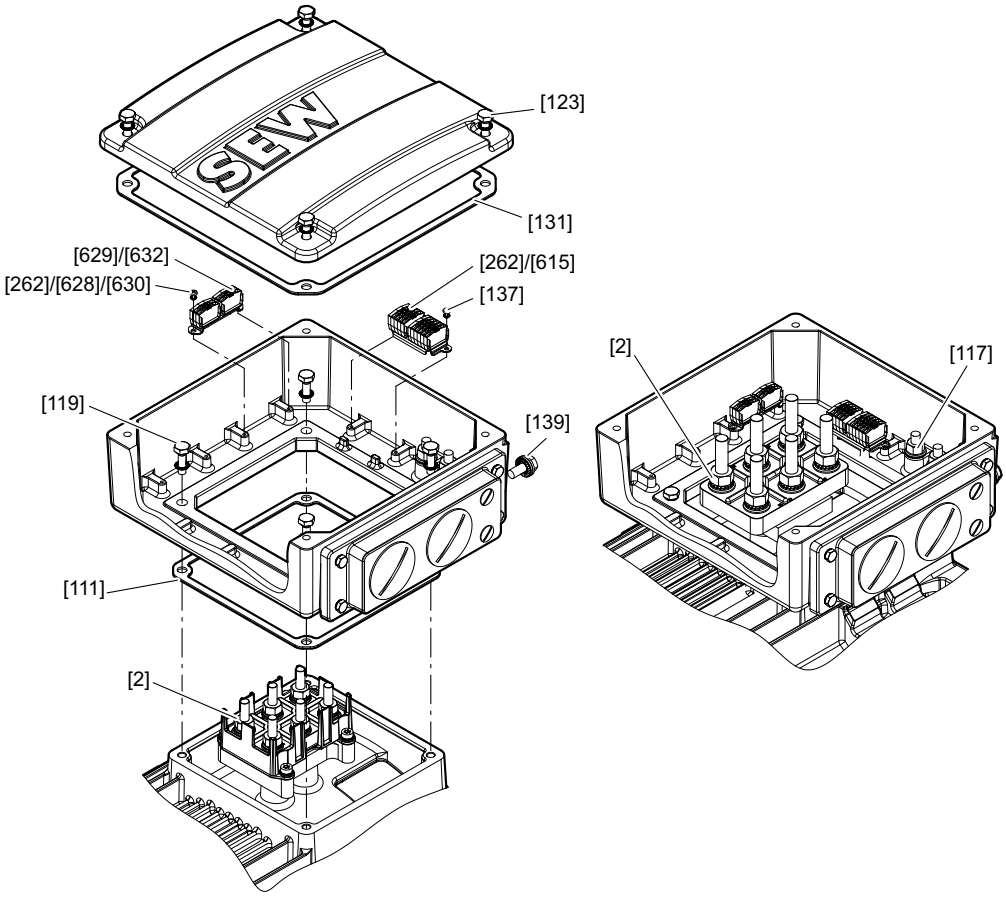

[2]	Terminal stud nut
[111]	Gasket
[117]	Hex head screw for grounding inside
[119]	Terminal box retaining screws + lock washers (4 × each)
[123]	Terminal box cover retaining screws + lock washers (4 × each)
[131]	Gasket
[140]	Hex head screw for grounding outside
[1222]	Spacer bushing
[a]	Terminal strip 1
[a1]	Screw for option terminal/rectifier
[b]	Terminal strip
[b1]	Screw option terminal

Proceed as follows to turn the terminal box:

1. Loosen the screws [123] of the terminal box cover. Remove the terminal box cover.
2. If available, remove the terminals [262]/[615].
3. Remove the retaining screws [119] of the terminal box.

31555454/EN – 11/2023

4. Clean the sealing surfaces at the stator shoulder, terminal box lower part and terminal box cover.
5. Check the gaskets [111] and [131] for damage.
6. Replace any damaged gaskets.
7. Loosen any cables that have already been connected to the terminal board.
8. ⚠ **DANGER!** Electric shock due to damaged cables. Severe or fatal injuries. When installing the terminal box lower part or the terminal board, make sure the cables are not crushed or twisted. Do not use sharp or pointed objects to align the cables.
   Turn the terminal box to the required position.
9. Make sure that the gasket [111] is positioned correctly.
10. Attach the terminal box lower part.
11. Place the washers under the screws [119] and tighten the screws [119] of the lower part of the terminal box with the respective tightening torque.
12. Secure terminal [b] with screws [629]/[632].
13. Reconnect any removed cables according to the following table.

Yellow	White	Brown	Black	Red	Blue
W2/T4	U2/T5	V2/T6	U1/T1	V1/T2	W1/T3

14. Tighten the nuts of the terminal studs with the respective tightening torque.
15. Make sure that the gasket [131] is positioned correctly.
16. Attach the terminal box cover to the terminal box lower part.
17. Place the washers under the screws [123] and tighten the screws [123] of the terminal box cover with the respective tightening torque.
18. To make sure that the cables have not been damaged, perform an insulation test after reassembly, see chapter "Preliminary work after longer periods of storage" (→ 🗎 35).

31555454/EN – 11/2023

4.8 Coating

SEW-EURODRIVE delivers the drives with a painting that complies with the requirements for preventing electrostatic charging according to IEC 60079-0.

⚠ WARNING

Risk of explosion due to electrostatic charge and sparks caused by improper painting.

Severe or fatal injuries from explosion.

- If the motor is repainted, observe the requirements for painting to avoid electrostatic charge according to IEC 60079-0.

31555454/EN – 11/2023

4.9 Retrofitting (option /F.A) or modifying (option /F.B) motor feet

4.9.1 EDRN63 – 132S motors

The following figure shows a motor with option /F.A (retrofit foot).

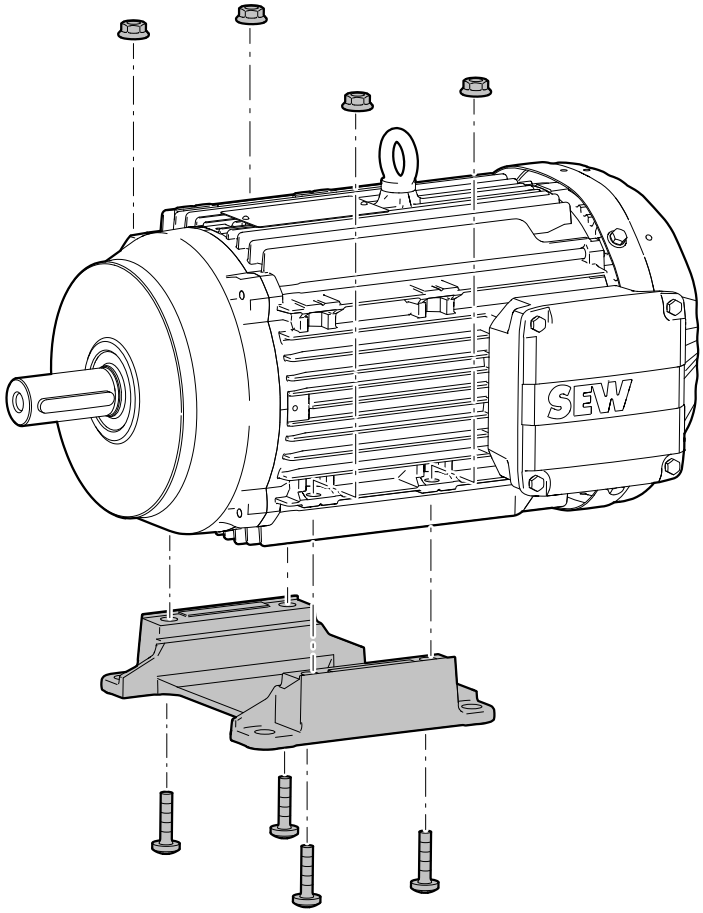

22845053579

✓ The contact surfaces at the foot [90] and stator [16] are painted.

1. Observe the following figure when selecting the contact surfaces. The figure illustrates the possible terminal box positions with reference to the retrofittable motor feet.

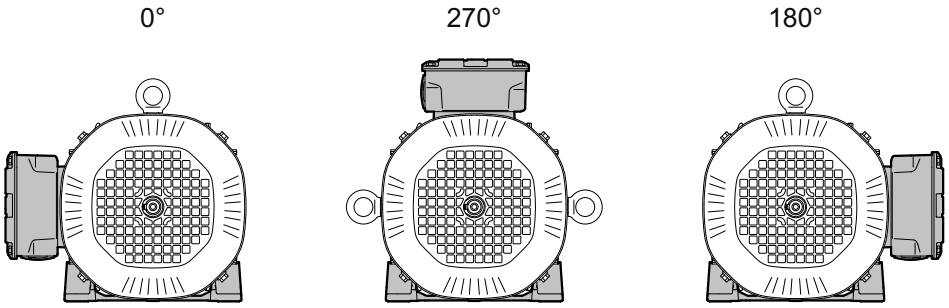

22845056011

2. Remove the paint from the stator [16] contact surface where the foot is to be screwed on.
3. Apply a thin layer of corrosion protection to the contact surfaces after the paint has been removed.
4. Remove the paint from the contact surfaces of the foot [90].

5. Apply a thin layer of corrosion protection to the contact surfaces after the paint has been removed.
6. Attach the foot [90] to the motor using the screws [94] and washers [91]. Tighten the screws in diametrically opposite sequence. The screws are micro-encapsulated. This is why you have to screw in and tighten the screws quickly.
7. If necessary, you can apply paint or corrosion protection at the joint after attaching the foot [90].

Changing the motor foot position

For converting the motor foot to another position, observe the following points:

- After removing the screws [94], check for damage to the thread or other similar damage.
- When changing the position of the motor foot, apply corrosion protection to unpainted surfaces.

Tightening torques

Motor	Screw	Tightening torque
EDRN63 – 90	M6	11.3 Nm
EDRN100 – 132S	M8	27.3 Nm

4.9.2 EDR..250 – 315, EDRN225 – 315 motors

The following figure shows a motor with option /F.A (retrofit feet).

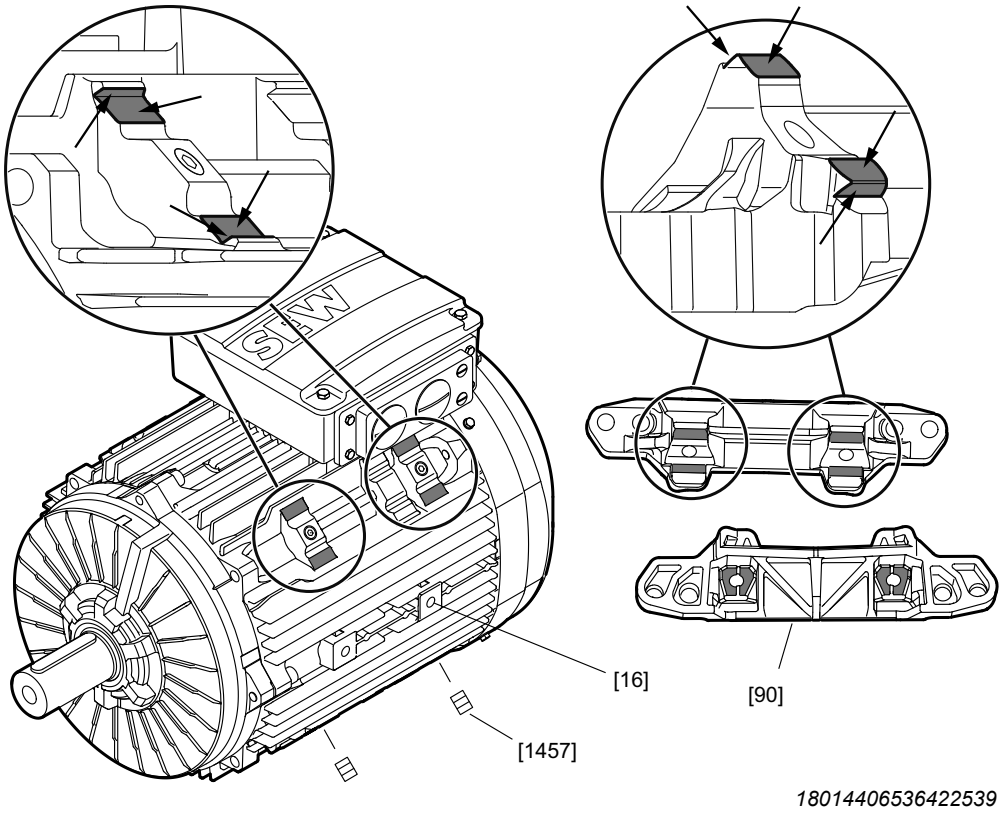

[16] Stator [1457] Set screw

31555454/EN – 11/2023

[90] Foot — Remove the paint from the marked surfaces.

✓ The tapped holes of the foot mounting surfaces are closed with set screws [1457]. The contact surfaces at the feet [90] and stator [16] are painted.

1. Observe the following figure when selecting the contact surfaces. The figure illustrates the possible terminal box positions with reference to the retrofittable motor feet.

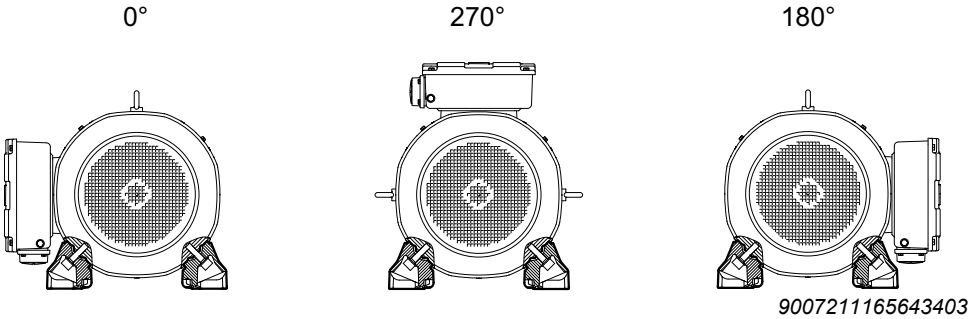

2. Remove the set screws [1457] from those threads into which you will screw the foot screws [94].
   - ⇨ Size 225 – 280: 8 set screws
   - ⇨ Size 315: 12 set screws
3. Remove the paint from the contact surfaces of the stator [16] where the feet are to be screwed on.
   - ⇨ Size 225 – 280: 8 surfaces
   - ⇨ Size 315: 12 surfaces
4. Apply a thin layer of corrosion protection to the contact surfaces after the paint has been removed.
5. Remove the paint from the contact surfaces of the feet [90].
6. Apply a thin layer of corrosion protection to the contact surfaces after the paint has been removed.
7. Attach the feet [90] to the motor using the screws [94] and washers [93]. The screws are micro-encapsulated. This is why you have to screw in and tighten the screws quickly.
8. Apply paint or corrosion protection at the parting line after attaching the feet [90].

Changing motor feet positions

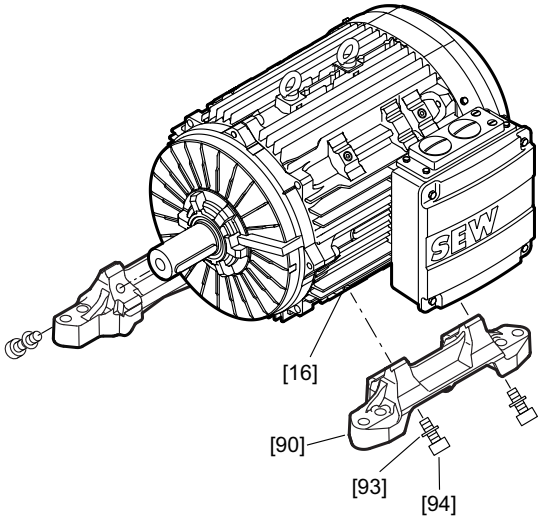

9007206996709387

[16] Stator
[90] Foot
[93] Washer
[94] Screw

For converting the motor feet to another position, observe the following points:

- After removing the screws [94], check for damage to the thread or other similar damage.
- Remove the old micro-encapsulation.
- Clean the threads of the screws [94].
- Apply a high-strength thread locker to the screw threads [94] before inserting the screws again.
- The set screws removed from the new mounting position can be reused for the bores of the old mounting position. After inserting the set screw [1457] into the open tapped holes in the stator [16], paint or corrosion protection can be applied on the bare joining surfaces of the stator.
- When the position of the motor feet is changed, apply corrosion protection to the unpainted surfaces.

Tightening torques

Motor	Screw	Tightening torque
EDRN225	M16	230 Nm
EDR..250/EDRN250	M20	464 Nm
EDR..280/EDRN280	M20	464 Nm
EDR..315/EDRN315	M20	464 Nm

31555454/EN – 11/2023

4.10 Options

4.10.1 /HR, /HF Manual brake release

The option manual brake release /HR, /HF is preinstalled and set at the factory for some brake sizes. If your drive was not delivered with manual brake release and you wish to retrofit it, observe the instructions in chapter "Retrofitting the /HR, /HF manual brake release" (→ 🗎 211).

Activating and loosening the /HF manual brake release

⚠ WARNING

No brake function due to activated manual brake release.

Severe or fatal injuries.

- Before startup, make sure that the hand lever has been removed or secured against unintentional activation to prevent unintentional brake release during operation.

You can use the option /HF (lockable manual brake release) to continuously mechanically release the BE.. brake with a set screw and a releasing lever.

On delivery, the set screw is inserted far enough to not fall out and to not affect the brake performance. The set screw is self-locking. This prevents it from unintended turning in or from falling out.

In case of BE03 brakes, the set screw is stored in the grommets between the stator fins.

Activating the /HF manual brake release with BE03 brake

Proceed as follows:

1. Screw in the set screw until there is no more clearance at the releasing lever.
2. To release the brake manually, screw in the set screw by 1/2 – 1 turn.

Activating the /HF manual brake release with BE05 – BE122 brake

Proceed as follows:

1. Screw in the set screw until there is no more clearance at the releasing lever.
2. To release the brake manually, screw in the set screw by 1/4 – 1/2 turn.

Loosening the /HF manual brake release with BE03 brake

Proceed as follows:

1. Remove the set screw completely from the thread.
2. Fasten the set screw between the stator fins with both grommets.

Loosening the /HF manual brake release with BE05 – BE122 brake

Proceed as follows:

1. Loosen the set screw at least until the floating clearance of the manual brake release has completely returned, see chapter "Retrofitting the /HR, /HF manual brake release".

Activating and loosening the /HR manual brake release

⚠ WARNING

No brake function due to activated manual brake release.

Severe or fatal injuries.

- Before startup, make sure that the hand lever has been removed or secured against unintentional activation to prevent unintentional brake release during operation.

You can use the option /HF manual brake release to mechanically release the BE.. brake for a short time via a combination of releasing lever and hand lever. It is designed with a spring mechanism, so that it reengages automatically.

During assembly, the mechanics inside the fan guard is preset at the factory. A hand lever is included in the delivery that is attached to the stator housing.

Activating the /HR manual brake release

Proceed as follows:

1. Remove the hand lever from the stator housing.
2. Screw the thread of the hand lever completely into the thread of the releasing lever.
3. To release the brake, pull the hand lever in the direction away from the terminal box. The correct direction of use is indicated by an arrow symbol on the fan guard or on the closing part on the fan guard opening.

Loosening the /HR manual brake release

INFORMATION

The releasing procedure can be performed with usual force application, do not apply too much force to the lever to avoid damage to the drive.

Proceed as follows:

1. Let go of the lever in the actuated state. The lever automatically reengages to the initial position and the brake is applied.
2. Screw out the hand lever and keep it safe. With motors of sizes 63 – 280, you can attach the hand lever to the stator housing with the provided grommets or clamps.

4.10.2 2nd shaft end with optional cover

SEW-EURODRIVE delivers motors with the 2nd shaft end option /2W with the key inserted and secured by transport protection. This transport protection is not suitable for operation.

⚠ WARNING

Rotating shaft end or attachements.

Severe or fatal injuries.

- Only start the motor with installed protective cover at the second shaft end.

31555454/EN – 11/2023

⚠ WARNING

Unsecured key skidding out of the keyway.

Severe or fatal injuries due to flying parts.

- Only operate the motor with attached customer output element (e.g. gear unit), or with a suitably secured key.

⚠ WARNING

Generating of sparks due to unsecured key.

Severe or fatal injuries from explosion.

- Only operate the motor with attached customer output element (e.g. gear unit), or with a suitably secured key.

INFORMATION

Observe the impact resistance requirements according to IEC 60079-0 for selection and mounting the customer-provided cover.

A cover for the second shaft end is not included in the delivery as standard. The cover can be ordered optionally for EDR..71 – 280, EDRN63 – 280 motors. If no optional cover is selected, the customer must provide a protection cover to ensure a suitable touch guard.

The following figure shows the dimensions of the optional cover. The optional cover is standard for EDR..71 – 132 and EDR..250 – 280, EDRN63 – 132S, EDRN250 – 280, and optional for EDR..160 – 225, EDRN132M – 225 motors.

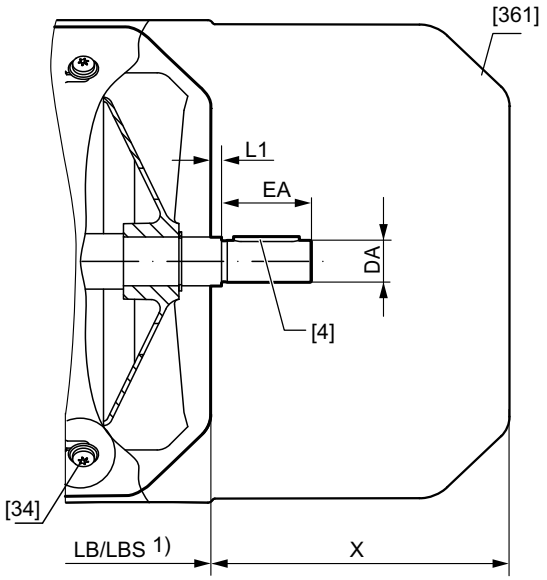

18014402029073931

[4]	Keyway
[34]	Tapping screw
[361]	Safety cover
LB/LBS	Length of the motor/brakemotor

1) Refer to the "AC Motors" catalog for dimensions

Dimensions for the optional cover

Motors		DA	EA	L1	X
EDR..	**EDRN..**	**mm**	**mm**	**mm**	**mm**
–	EDRN63	11	23	2	78
–	EDRN63 /BE				
EDR..71	EDRN71	11	23	2	91.5
EDR..71 /BE	EDRN71 /BE				88
EDR..80	EDRN80	14	30	2	95.5
EDR..80 /BE	EDRN80 /BE				94.5
EDR..90	EDRN90	14	30	2	88.5
EDR..90 /BE	EDRN90 /BE				81
EDR..100	EDRN100	14	30	2	87.5
EDR..100 /BE	EDRN100 /BE				81
EDR..112 – 132	EDRN112 – 132S	19	40	3.5	125
EDR..112 – 132 /BE	EDRN112 – 132S /BE				120.5
EDR..160	EDRN132M/L	28	60	4	193
EDR..160 /BE	EDRN132M/L /BE				187
EDR..180	EDRN160 – 180	38	80	4	233
EDR..180 /BE	EDRN160 – 180 /BE				236
EDR..200 – 225	EDRN200 – 225	48	110	5	230
EDR..200 – 225 /BE	EDRN200 – 225 /BE				246
EDR..250 – 280	EDRN250 to 280	55	110	3	243.5
EDR..250 – 280 /BE	EDRN250 – 280 /BE				

31555454/EN – 11/2023

5 Electrical installation

5.1 General information

⚠ WARNING

Electric shock due to incorrect installation.

Severe or fatal injuries.

- Use switch contacts in utilization category AC-3 IEC 60947-4-1 for switching the motor.
- When motors are powered by inverters, you must adhere to the wiring instructions in the frequency inverter operating instructions.

5.2 Additional regulations

The generally applicable installation regulations for low-voltage electric equipment (such as DIN IEC 60364, DIN EN 50110) must be complied with when setting up electrical machinery.

5.3 Wiring diagrams and terminal assignment diagrams

Connect the motor as shown in the wiring connection diagrams provided with the motor. You can obtain the valid wiring diagrams free of charge from SEW-EURODRIVE.

INFORMATION

Do not connect or start up the motor if the wiring diagram is missing.

31555454/EN – 11/2023

5.4 Cable entries

The terminal boxes have metric threaded holes according to EN 50262 or NPT threaded holes according to ANSI B1.20.1-1983. All bores are equipped with explosion-protected closing plugs upon delivery.

For a correct cable entry, replace the closing plugs by cable glands with strain relief that are certified for use in the respective hazardous location. Select the cable gland according to the outer diameter of the cable used. For the tightening torque of the cable entry, refer to the operating/installation instructions or the IECEx Certificate of Conformity of the cable glands. The IP degree of protection of the cable entry must be at least as high as the IP degree of protection of the motor.

Only use connection glands with screw heads that fit into the existing countersink.

The following table shows the sizes of the flat bottom counter sinking with the corresponding screw sizes:

Counter sinking in mm	19	24	30	35	45	56	64	75
Screw fitting	M12	M16	M20	M25	M32	M40	M50	M63

All cable entries that are not required must be sealed off with a closing plug after completion of the installation in order to maintain the degree of protection. A closing plug may only be replaced with another explosion-protected closing plug.

5.5 Equipotential bonding

In accordance with IEC 60079-14, the unit must be connected to an equipotential bonding system. A second grounding screw is available for this connection on the outside of the terminal box. Observe chapter "Improving the grounding (EMC), HF grounding" (→ 🗎 66).

5.6 Wiring notes

During installation observe the safety notes in chapter 2 and 5.

5.6.1 Protecting the brake control system against interference

Brake cables must always be routed separately from other unshielded power cables with phased currents to prevent interference with brake control. In particular, power cables with phased currents include:

- Output cables from frequency inverters and servo inverters, soft start units and brake units
- Supply cables for braking resistors and similar options

For line-operated motors and when using AC and DC circuit cut-off, the connection between the brake rectifier and the external switch contact must be in a different power cable that is separate from the motor power supply.

31555454/EN – 11/2023

5.6.2 Protecting the motor protection devices against interference

Adhere to the following points to protect motor protection devices by SEW-EURODRIVE against interference:

- You may route separately shielded supply cables together with power cables in one cable.
- Do not route unshielded supply cables together with power lines in one cable.

5.7 Special aspects for operation with a frequency inverter

When motors are powered from inverters, you must observe the wiring instructions issued by the inverter manufacturer. It is essential to observe chapter "Duty types and limit values" (→ 🗎 95) and the operating instructions of the frequency inverter.

If a drive has an earth leakage current higher than AC or DC 10 mA on a line connection, one or more of the following requirements must be met for the protective earth system:

- The PE must have a minimum cross section over its entire length of 10 mm^2 with copper or 16 mm^2 with aluminum.
- Where the PE has a cross section of less than 10 mm^2 with copper or 16 mm^2 with aluminum, a second PE with at least the same cross section is required to the point where the PE has a cross section of not less than 10 mm^2 with copper or 16 mm^2 with aluminum.

  The drive might need to be equipped with a separate connection for a second PE.

5.8 Exterior grounding at the terminal box, LF grounding

In addition to the interior PE connection, an NF grounding can be installed on the outside of the terminal box for an improved, low-impedance grounding in case of low frequencies. Installed as standard.

The option can be combined with "Improving the grounding (EMC), HF grounding" (→ 🗎 66).

EDRN63 motor

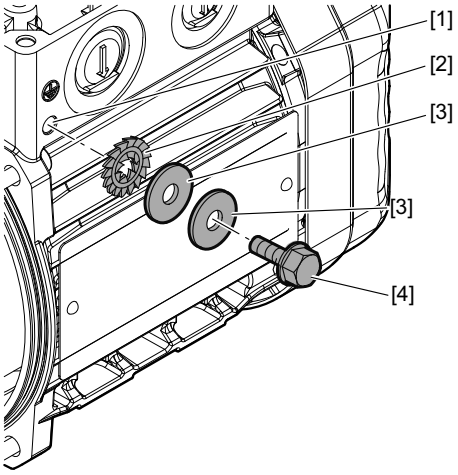

32631576971

[1] Use of the pre-cast bore at the stator housing
[2] Serrated lock washer
[3] Disk ISO 7093
[4] Self-tapping screw DIN 7500 M × 16, tightening torque 5 Nm

EDR..71 – 132, EDRN71 – 132S motors

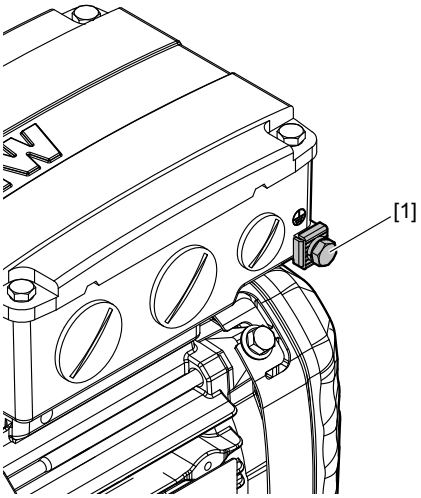

9007207279069579

[1] LF grounding at the terminal box

EDRE160 – 225, EDRN132M – 225 motors

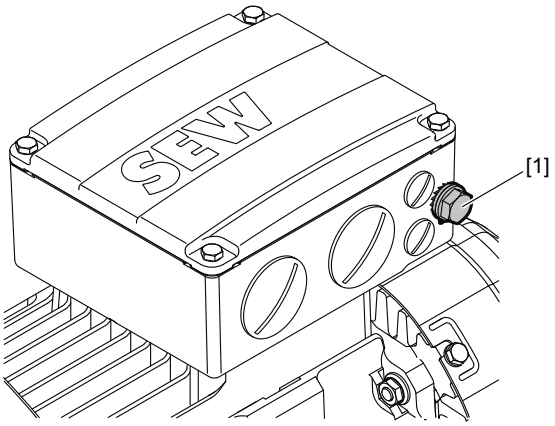

8026938379

[1] LF grounding at the terminal box

5.9 Improving the grounding (EMC), HF grounding

For improved, low-impedance grounding at high frequencies, we recommend using the following connections with corrosion protected connection elements:

HF grounding is not installed as standard.

The HF grounding option can be combined with LF grounding at the terminal box.

If you require LF grounding in addition to HF grounding, you can connect the conductor to the same point.

The HF grounding option can be ordered as follows:

- Completely pre-assembled at the factory
- As "grounding terminal" kit for customer installation; part numbers listed in the following table.

Motors	Part number of "Grounding terminal" kit
EDRN63	21014817
EDRS71, EDRN71 EDRE80, EDRN80	21015988
EDRE90, EDRN90	
EDRE100M, EDRN100LS	
EDRE100L – 132, EDRN100L – 132S	13633945
EDRE160 – 225, EDRN132M – 225 with aluminum terminal box	

INFORMATION

If 2 or more ground straps are used, you must attach them with a longer screw. The specified tightening torques refer to a strap thickness of t ≤ 3 mm.

5.9.1 EDRN63 motors with HF (+NF) grounding

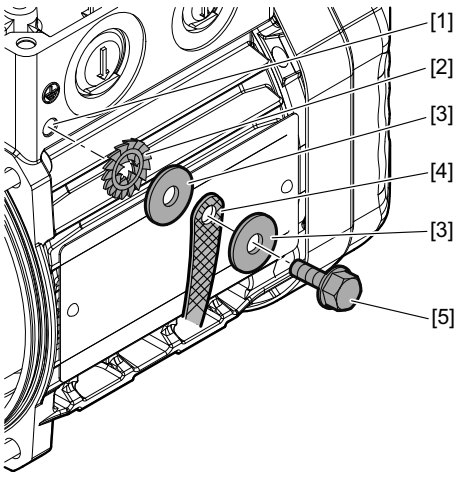

22297406859

[1] Use of the pre-cast bore at the stator housing
[2] Serrated lock washer
[3] Disk ISO 7093
[4] Ground strap (not included in the delivery)
[5] Self-tapping screw DIN 7500 M5 × 16, tightening torque 5 Nm

31555454/EN – 11/2023

5.9.2 EDRS71, EDRE80, EDRN71 – 80 motors with HF (+NF) grounding

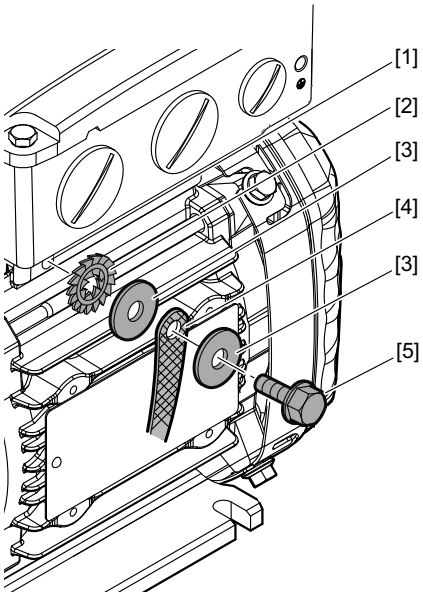

8026768011

[1] Use of the pre-cast bore at the stator housing
[2] Serrated lock washer
[3] Washer ISO 7093
[4] Ground strap (not included in the delivery)
[5] Self-tapping screw DIN 7500 M6 × 16, tightening torque 10 Nm

5.9.3 EDRE90, EDRN90 motors with HF (+LF) grounding

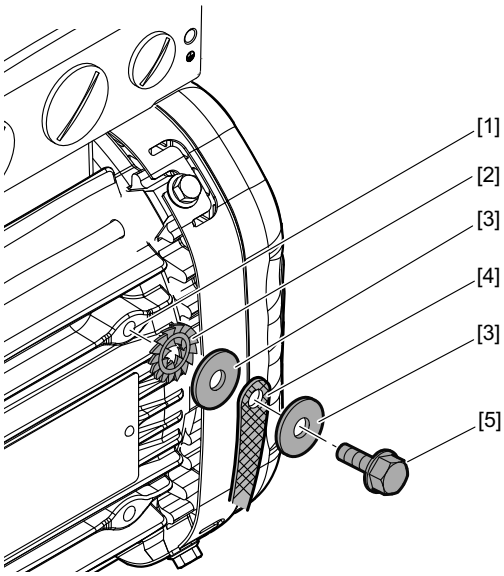

8026773131

[1] Use of the pre-cast bore at the stator housing
[2] Serrated lock washer
[3] Washer ISO 7093
[4] Ground strap (not included in the delivery)
[5] Self-tapping screw DIN 7500 M6 × 16, tightening torque 10 Nm

31555454/EN – 11/2023

5.9.4 EDRE100M, EDRN100LS motors with HF (+LF) grounding

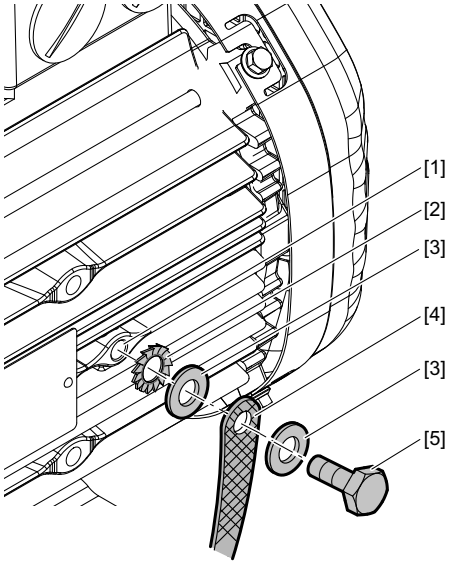

18014402064551947

[1] Use of the pre-cast bore at the stator housing
[2] Serrated lock washer
[3] Washer ISO 7093
[4] Ground strap (not included in the delivery)
[5] Self-tapping screw DIN 7500 M6 × 16, tightening torque 10 Nm

5.9.5 EDRE100L – 132, EDRN100L – 132S motors with HF (+LF) grounding

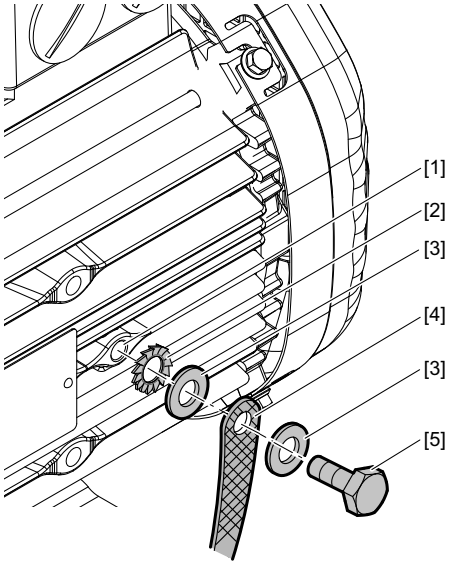

18014402064551947

[1] Use of tapped hole for lifting eyes
[2] Serrated lock washer DIN 6798
[3] Washer ISO 7089/ISO 7090
[4] Ground strap (not included in the delivery)
[5] Hex head screw ISO 4017 M8 × 18, tightening torque 10 Nm

31555454/EN – 11/2023

5.9.6 EDRE160 – 225, EDRN132M – 315 motors with HF (+LF) grounding

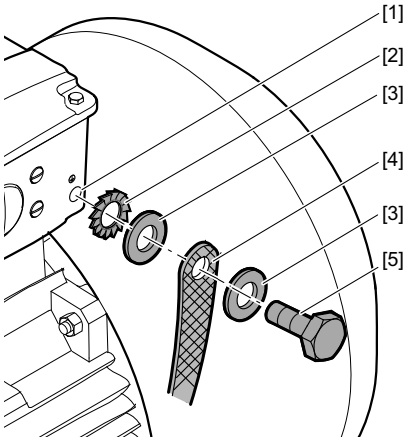

18014402076409099

[1] Use of the tapped holes at the terminal box
[2] Serrated lock washer DIN 6798
[3] Washer ISO 7089/ISO 7090
[4] Ground strap (not included in the delivery)
[5]
- Hex head screw ISO 4017 M8 × 18 (with aluminum terminal boxes of EDRE160 – 225, EDRN132M – 225 motors), tightening torque 10 Nm
- Hex head screw ISO 4017 M10 × 25 (with gray cast iron terminal boxes of EDRE160 – 225, EDRN132M – 225 motors), tightening torque 10 Nm
- Hex head screw ISO 4017 M12 × 30 (terminal boxes of EDRN250 – 315 motors), tightening torque 15.5 Nm

For EDRE160 – 225, EDRN132M – 225 motors with gray cast iron terminal boxes, the grounding is always pre-installed upon delivery.

5.10 Special aspects in switching operation

When the motors are used in switching operation, possible interference of the switchgear must be excluded by ensuring suitable wiring. According to IEC 60204 (electrical equipment of machines), motor windings must have interference suppression to protect the numerical or programmable logic controllers. As it is primarily switching operations that cause interference, SEW-EURODRIVE recommends installing protective circuitry in the switching devices.

31555454/EN – 11/2023

5.11 Ambient conditions during operation

5.11.1 Ambient temperature

The temperature range of -20 °C to +40 °C must be ensured unless otherwise specified on the nameplate.

Motors intended for use in higher or lower ambient temperatures will have the respective designation on the nameplate.

If the motors are used at an ambient temperature above +40 °C (max. +60 °C), the cables and cable glands must be suitable for temperatures ≥ 90 °C.

Temperatures below -20 °C (max. -40 °C) require anti-condensation heating. In addition, the cables and screw fittings must be selected according to the relevant temperature.

5.11.2 Installation altitude

The maximum installation altitude of the motors is 1000 m above sea level.

31555454/EN – 11/2023

5.11.3 Hazardous radiation

Motors must not be subjected to hazardous radiation (such as ionizing radiation). Consult SEW-EURODRIVE, if necessary.

5.11.4 Hazardous gases, vapors and dusts

If used according to their designated use, explosion-protected motors are incapable of igniting explosive gases, vapors or dusts. However, explosion-protected motors may not be subjected to gases, vapors or dusts that endanger operational safety, for example through

- Corrosion
- Damage to the protective coating
- Damage to the sealing material, etc.

Gasket selection

If the motor is operated in environments with high environmental impact, such as increased ozone values, the motors can be optionally equipped with gaskets of a higher quality. If you have doubts regarding the stability of the gaskets when subjected to the respective environmental impacts, contact SEW-EURODRIVE.

5.12 Motors of design 2G-b, 2D-b, 2GD-b, 3G-c, 3D-c and 3GD-c

The EDR../EDRN.. explosion-protected motors by SEW-EURODRIVE are designed for use in the following zones:

Design	Protection type/ protection level	Usage
/2G-b	eb	Can be used in zones 1 and 2
/2D-b	tb	Can be used in zones 21 and 22
/2GD-b	eb, tb	Can be used in zones 1 and 2, as well as in zones 21 and 22
/3G-c	ec	Can be used in zone 2
/3D-c	tc	Can be used in zone 22
/3GD-c	ec, tc	Can be used in zones 2 and 22

5.12.1 Temperature classes

3G-c, 3GD-c — For temperature classes of motor types 3G-c, 3GD-c, refer to the nameplate or the IECEx Certificate of Conformity (IECEx CoC).

2G-b, 2GD-b — For temperature classes of motor types 2G-b, 2GD-b, refer to the nameplate or the IECEx Certificate of Conformity (IECEx CoC).

5.12.2 Surface temperatures

3D-c, 3GD-c — For surface temperatures of motor types 3D-c and 3GD-c, refer to the nameplate or the IECEx Certificate of Conformity (IECEx CoC).

2D-b, 2GD-b — For surface temperatures of motors types 2D-b, 2GD-b, refer to the nameplate or the IECEx Certificate of Conformity (IECEx CoC).

31555454/EN – 11/2023

5.12.3 Protection against excessively high surface temperatures

Protection exclusively with motor protection switch

Note the following when installing motors with S1 identification and motor circuit breaker according to IEC 60947:

- For types 2G-b and 2GD-b: With starting current ratio I_A/I_N listed on the nameplate, the response time of the motor circuit breaker must be less than the heating time t_E of the motor.
- The motor circuit breaker must disconnect all poles in the event of a phase failure.
- The motor circuit breaker must be approved by a notified body and provided with a corresponding marking of explosion protection..
- The motor circuit breaker must be adjusted to the rated motor current indicated on the nameplate. For types 2G-b, 2D-b, and 2GD-b, the permitted rated motor current is also specified in the IECEx Certificate of Conformity (IECEx CoC).

Protection exclusively with PTC thermistor (/TF)

Motors with S1, S4/50% identification that are equipped with a PTC thermistor: The PTC thermistor must be evaluated using a suitable device. Observe the applicable installation regulations.

⚠ WARNING

Destruction of the temperature sensor, resulting in risk of explosion due to impermissible heating of the motor.

Fatal or serious injuries caused by explosion.

- Do not connect a voltages > 30 V.

The PTC thermistors comply with DIN VDE V 0898-1-401.

Resistance measurement (measuring device with U ≤ 2.5 V or I < 1 mA):

- Standard measured values: 20 – 500 Ω, hot resistance > 4000 Ω

The PTC thermistor (/TF) is required in order to maintain a safe isolation and for thermal monitoring.

The evaluation function of the temperature monitoring must be activated in connection with the temperature sensor measuring circuit and must become effective in the event of an overtemperature.

Protection with motor protection switch and additional PTC thermistor

The conditions stated for exclusive protection with motor circuit breaker also apply here. Protection with PTC thermistors (/TF) only represents a supplementary preventive measure which is irrelevant to certification for potentially explosive atmospheres.

5.13 Notes regarding the connection of the motor

⚠ WARNING

Risk of explosion due to contaminated terminal box.

Severe or fatal injuries.

- Seal the terminal box and unused cable entries against dust and humidity.
- Remove foreign objects, dirt and humidity from the terminal box.

INFORMATION

It is essential to comply with the valid wiring diagram. Do not connect or start up the motor if this wiring diagram is missing. You can obtain the valid wiring diagrams free of charge from SEW-EURODRIVE.

Observe the following points when you connect the motor:

- Check the cable cross section.
- Arrange the terminal links correctly. see the chapters "Motor connection via terminal board" (→ 🗎 76) and "Connecting the motor via terminal strip" (→ 🗎 80).
- Tighten connections and protective earth securely.
- Make sure that the connection cables are not cramped to prevent the cable insulation from being damaged.
- Adhere to the air gaps, see chapter "Electrical installation".
- Check the winding connections in the terminal box and tighten them, if necessary.
- Connect the motors according to the enclosed wiring diagram.
- Avoid protruding wire ends.
- Connect the motor according to the specified direction of rotation.

5.13.1 Wiring diagrams

The following wiring diagrams can be obtained from SEW-EURODRIVE by specifying the order number of the motor (see chapter "Nameplate" (→ 🗎 22)):

Motors	Number of poles	Connection	Corresponding wiring diagram (designation/number) xx = placeholder for version
EDR..71 – EDR..315	4	△ / ⅄	C13: 68184xx08
EDRN71 – EDRN315			R13: 68001xx06
EDRN63			A13: 68404xx17

31555454/EN – 11/2023

5.13.2 Connection types

The motors are supplied and connected differently depending on the size and electrical design.

Comply with the connection type specified in the following table:

Motors	Connection
EDRN63	• Motor connection via cage clamp (terminal strip)
EDR..71 – EDR..132, EDRN71 – 132S	• With V < 500 V and I < 17 A: Motor connection via cage clamp • With V > 500 V or I > 17 A: Motor connection via terminal board
EDR..160 – EDR..315, EDRN132M – 315	• Motor connection via terminal board

5.14 Motor connection via terminal board

5.14.1 Double-sided supply with high load currents

In case of high load currents, a double-sided supply must be realized for EDR../EDRN250 – 315 motors. This applies to load currents higher than the following values:

- M12: 213 A
- M16: 280 A

Arrangement of terminal links with △ connection

EDR../EDRN250 – 315 motors
(double-sided supply):

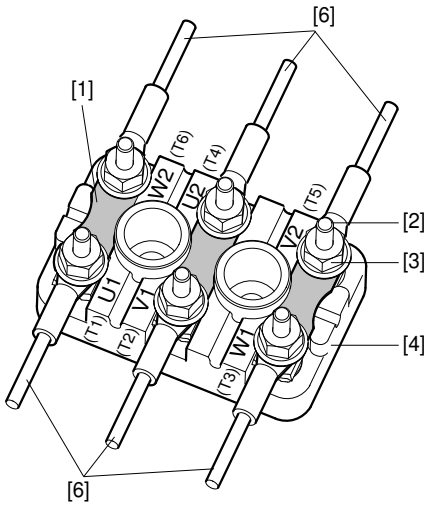

9007199734852747

[1]	Terminal link	[4]	Terminal board
[2]	Terminal studs	[6]	Customer connection with divided connection cable
[3]	Flange nut		

31555454/EN – 11/2023

5.14.2 Connection variants via terminal board

The motors are supplied and connected in different ways depending on the electrical design. Arrange the terminal links as shown in the wiring diagram and screw them on firmly. Observe the tightening torques specified in the following tables:

EDR..71 – EDR..132, EDRN71 – 132S motors							
Terminal stud	**Tightening torque hex nut**	**Connection by customer**	**Design**	**Connection type**	**Scope of delivery (small connection accessories)**	**PE terminal stud**	**Design**
Ø		**Cross section**				**Ø**	
M6	**3.0 Nm**	**≤ 6 mm²**	**1**	**Ring cable lug/ solid wire**	Enclosed in bag	M5	4
M6	3.0 Nm	≤ 35 mm²	1	Ring cable lug		M5	2

EDR..160, EDRN132M/L motors							
Terminal stud	**Tightening torque hex nut**	**Connection by customer**	**Design**	**Connection type**	**Scope of delivery (small connection accessories)**	**PE terminal stud**	**Design**
Ø		**Cross section**				**Ø**	
M6	3.0 Nm	≤ 6 mm²	1	Ring cable lug/ solid wire	Enclosed in bag	M8	2
M6	**3.0 Nm**	**≤ 35 mm²**	**1**	**Ring cable lug**		M8	2
M8	6.0 Nm	≤ 70 mm²	1	Ring cable lug		M10	2

EDR..180 – EDR..225, EDRN160 – 225 motors							
Terminal stud	**Tightening torque hex nut**	**Connection by customer**	**Design**	**Connection type**	**Scope of delivery (small connection accessories)**	**PE terminal stud**	**Design**
Ø		**Cross section**				**Ø**	
M6	3.0 Nm	≤ 6 mm²	1	Ring cable lug/ solid wire	Enclosed in bag	M8	2
M8	**6.0 Nm**	**≤ 70 mm²**	**1**	**Ring cable lug**		M8	2
M12	15.5 Nm	35 mm² – 95 mm²	1	Ring cable lug	Preassembled	M12	2

EDR..250 – EDR..315, EDRN250 – 315 motors							
Terminal stud	**Tightening torque hex nut**	**Connection by customer**	**Design**	**Connection type**	**Scope of delivery**	**PE terminal stud**	**Design**
Ø		**Cross section**				**Ø**	
M12	15.5 Nm	35 mm² – 95 mm²	1	Ring cable lug	Preassembled	M12	2
M16	30 Nm	35 mm²	3	Ring cable lug	Enclosed in bag	M12	2

The designs in bold print apply to S1 duty type for the standard voltages and standard frequencies according to the data in the catalog. Other designs may have different connections, for example, different terminal stud diameters and/or a different scope of delivery.

⚠ WARNING

Risk of explosion due to incorrect tubular cable lugs.

Severe or fatal injuries.

- Do not use tubular cable lugs according to DIN 46235, as the air gaps may be less than the minimum permitted values.
- Use tubular cable lugs according to DIN 46234 and DIN 46237.

31555454/EN – 11/2023

Variant 1

The following figure shows the 2 possible customer connections:

Customer connection with ring cable lug:

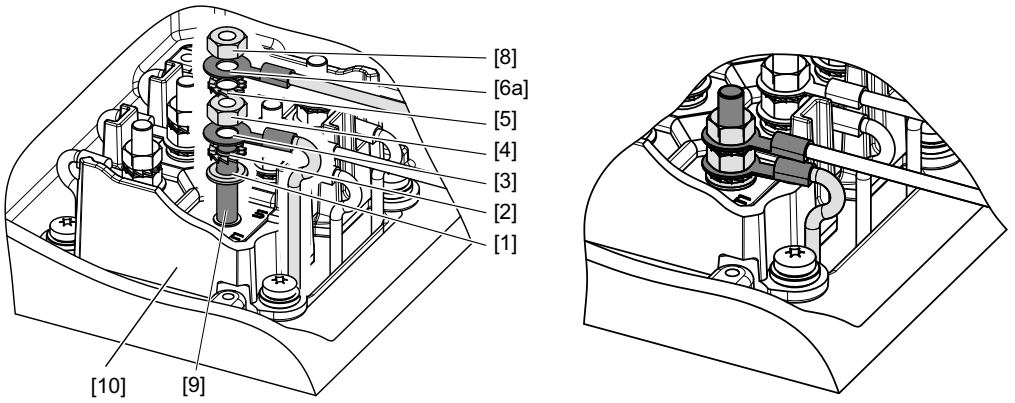

9007203244266635

Customer connection with solid wire:

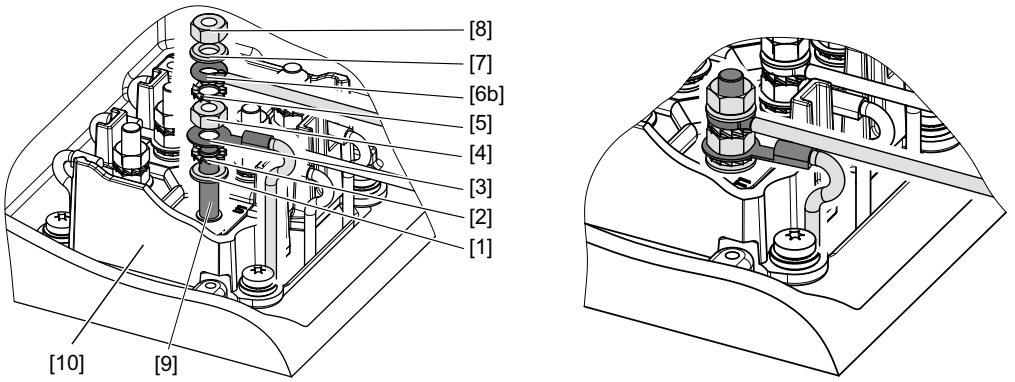

18014401143876491

[1]	Washer	[6b]	Winding connection with solid wire, U-shaped
[2]	Serrated lock washer	[7]	Serrated lock washer
[3]	Winding connection with ring cable lug	[8]	Top nut
[4]	Bottom nut	[9]	Terminal studs
[5]	Serrated lock washer	[10]	Anti-twist frame to secure the air gaps (not with M16 terminal stud)
[6a]	Winding connection with ring cable lug, e.g. according to DIN 46237 or DIN 46234.		

Variant 2

The following figure shows the design for PE connection:

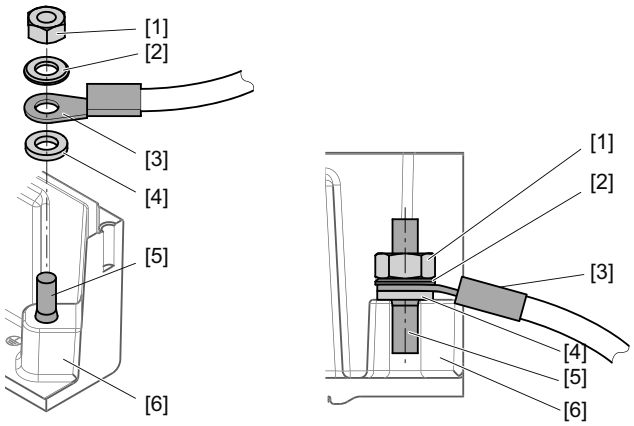

18014401330284043

[1]	Hex nut	[4]	Serrated lock washer
[2]	Washer	[5]	Stud
[3]	PE conductor with cable lug	[6]	Terminal box

Variant 3

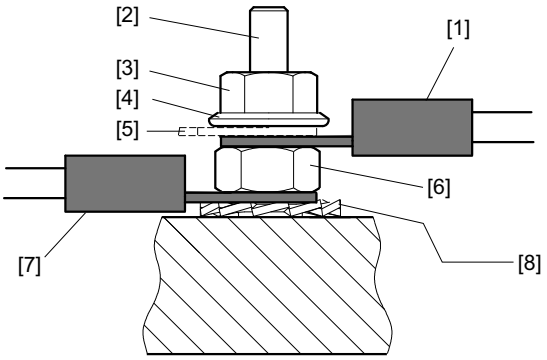

9007199454382091

[1]	External connection with ring cable lug, according to DIN 46237 or DIN 46234, for example	[5]	Terminal link
[2]	Terminal stud	[6]	Bottom nut
[3]	Upper nut	[7]	Winding connection with ring cable lug
[4]	Washer	[8]	Serrated lock washer

Variant 4

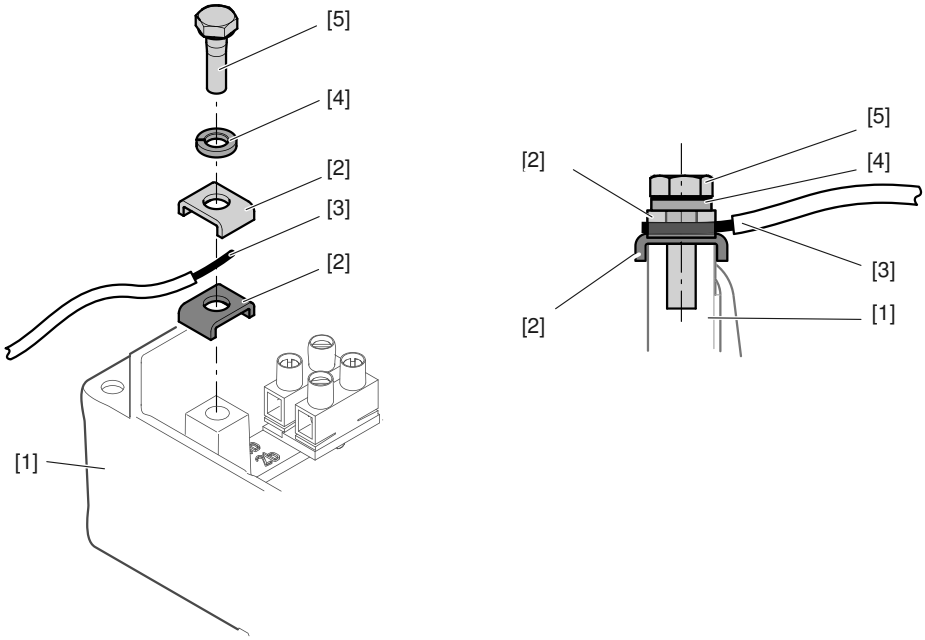

18014399649088651

[1]	Terminal box	[4]	Lock washer
[2]	Terminal clip	[5]	Hex head screw
[3]	PE conductor		

5.15 Connecting the motor via terminal strip

5.15.1 According to wiring diagram A13 with terminal strip

1. Connect the motor according to the enclosed wiring diagram.
2. Check the maximum cable cross section.
   - ⇨ 2.5 mm^2 rigid
   - ⇨ 2.5 mm^2 flexible
   - ⇨ 1.5 mm^2 flexible with conductor end sleeve
3. The stripping length must be 8 – 9 mm.

5.15.2 According to wiring diagram C13 with terminal strip /KCC

1. Connect the motor according to the enclosed wiring diagram.
2. Check the maximum cable cross section.
   - ⇨ 4 mm^2 rigid
   - ⇨ 4 mm^2 flexible
   - ⇨ 2.5 mm^2 flexible with conductor end sleeve
3. Check the winding connections in the terminal box and tighten them, if necessary.
4. The stripping length must be 10 – 12 mm.

Arrangement of terminal links with ⅄ connection

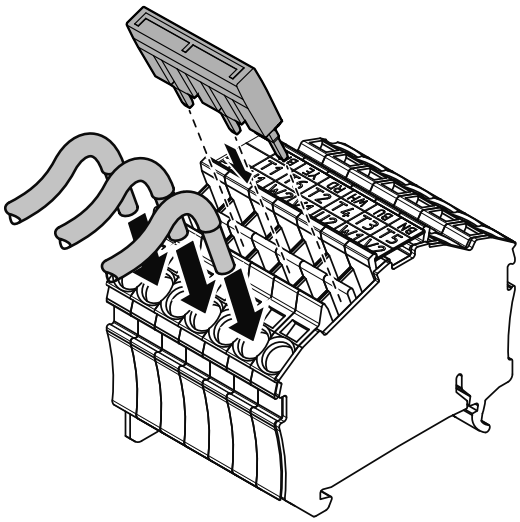

18014399506064139

Arrangement of terminal links with △ connection

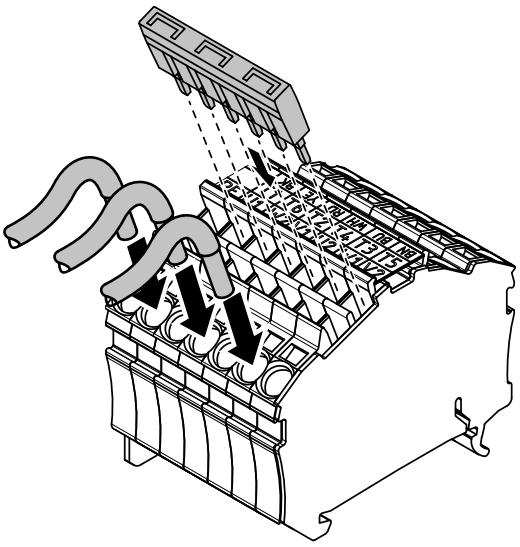

18014399506066059

5.16 Connecting the brake

BE.. brakes are powered by energized DC voltage and are released electrically. The brake is applied mechanically when the voltage supply is disconnected.

⚠ WARNING

Delayed brake application or unintentional brake release due to incorrect control or connection.

Severe or fatal injuries, e.g. due to falling hoist.

- Comply with the applicable regulations issued by the relevant employer's liability insurance association regarding phase failure protection and the associated circuit/circuit modification.
- Connect the brake according to the enclosed wiring diagram.
- In case of emergency off, always disconnect all poles of the brake control from the supply voltage.
- Only use suitable contactors with sufficient contact rating (utilization category according to IEC 60947-4-1/IEC 60947-5-1, see chapter "Brake voltage supply" (→ 🗎 84)).
- For contactor selection, observe the inductive load to switch, and the high current load while switching the brake.

5.16.1 Connecting the brake control

The brake is powered by a brake control system with protection circuit. For design 3D-c, the brake control can either be installed in the motor's terminal box or in the control cabinet. For designs 3G-c, 3GD-c, the control must be located in the control cabinet. If the motor is prepared for the brake control in the control cabinet, the brake supply cables are connected to a terminal strip in the motor terminal box.

Screw terminals are usually used as terminals on the brake control. The terminal strip is designed with cage clamps.

The connectable cable cross sections are restricted to 2.5 mm^2. If you use larger cable cross sections due to application reasons, additional intermediate terminals must be used.

The brake is internally connected to the motor PE. An additional connection for the brake is not necessary.

⚠ WARNING

Delayed brake application or unintentional brake release due to incorrect control or connection.

Severe or fatal injuries, e.g. due to falling hoist.

- Observe the specifications of this documentation for connecting the brake.
- If you are uncertain about brake control, voltage supply type and design, or overvoltage and short circuit protection, contact the plant manufacturer or SEW-EURODRIVE.

31555454/EN – 11/2023

5.16.2 Permitted brake controls

INFORMATION

The following specifications refer to motors designed for operation at ambient temperatures of -20 °C to +40 °C, and with thermal class 130 (B) or 155 (F). Deviations may occur depending on the installed motor options.

In individual cases, always also observe the additional specifications in the order confirmation and on the motor nameplate.

The brake is designed for operation with AC voltage or DC voltage, depending on the design. A brake control by SEW-EURODRIVE is used that is either installed in the motor terminal box (design 3D-c) or in the control cabinet (design 3G-c, 3GD-c).

BE03 – 2 brakes can also be operated without brake control by SEW-EURODRIVE with DC voltage. Observe the information on the motor nameplate. In this case, a suitable overvoltage protection must be installed at the terminal strips in the terminal box using varistors. The varistors are not included in the delivery of the motor.

The following brake control types are not permitted:

- Operation with AC voltage without brake control by SEW-EURODRIVE with BE03 – BE122 brakes.
- Operation with DC voltage without brake control by SEW-EURODRIVE with BE5 – BE122 brakes.
- Operation with third-party brake control systems.

For an overview of available brake controls by SEW-EURODRIVE and of the technical data, refer to chapter "Brake control" (→ 🗎 228).

⚠ WARNING

Severe or fatal injuries

Great and unexpected elongation of the stopping distance.

- Operate each brake with a separate brake control.
- Observe the notes on dimensioning in the catalog, or contact SEW-EURODRIVE.

5.16.3 Optional separation of DC and AC circuits

In case of brakes operated with AC voltage, make sure the disconnection type designated by the manufacturer is applied correctly during the brake connection. The following types are distinguished:

- Cut-off in the AC circuit with normal application time
- Cut-off in AC circuit and DC circuit with shortened application time

The correct switch-off type must be ensured through appropriate wiring. Certain brake controls by SEW–EURODRIVE implement the same AC and DC cut-off via integrated switching relays (e.g. BMP1.5), or via mounted relays (e.g. BSR or BUR for design 3D-c).

The switch-off type is specified on the included wiring diagrams by a pictogram.

31555454/EN – 11/2023

⚠ WARNING

Delayed brake application or unintentional ongoing brake release due to incorrect switch-off.

Severe or fatal injuries, e.g. due to falling hoist or extended coasting.

- During project planning, consider the required cut-off type and the effects on the expected stopping distance in particular.
- Only use the faster cut-off in the DC and AC circuit for hoists and hoist-like applications.
- If it is unclear whether the application is a hoist-like application, contact SEW-EURODRIVE.
- Make sure that the configured cut-off type (AC or AC-DC) is implemented correctly during startup, regardless of the type of application.

5.16.4 Brake voltage supply

The brake voltage supply must match the values specified on the nameplate of the motor. The brake must be supplied via the designated brake control.

The specifications on the nameplate have a tolerance of +/-5% of the stated nominal value, or of the mean value of the stated connection range. Observe order-specific deviations.

Make sure the voltage supply is sufficiently stable by using cable cross sections and voltage sources that are dimensioned accordingly. Make sure the supply voltage does not drop below 90% of the nominal value during starting. This could be caused by an increased inrush current, see chapter "Operating currents" (→ 🗎 218).

In case of single-speed drives of design 3D-c with brake control in the terminal box that are operated directly at the supply system (meaning without frequency inverter or soft start devices), the brake supply voltage can also be picked off from the terminal board of the motor. Adhere to the following restrictions:

- The nominal brake voltage must either match the phase-to-neutral voltage, or the phase-to-phase voltage of the motor (observe nameplate and motor switching type).
- In case of hoists or hoist-like applications, the BSR.. brake control must be used for cut-off in the DC and AC circuits.
- For combinations with BMP3.1 brake control (BE60 – 122) a voltage supply via the terminal board is not permitted.

INFORMATION

In variable-speed motors and motors operated with soft start devices, the brake voltage must not be picked up at the motor terminal board because the voltage there is not constant.

31555454/EN – 11/2023

5.16.5 Switching equipment

The high current utilization during switching the brake (inductive load) requires suitable contactors/switch contacts, to obtain the correct function of the brake.

Depending on brake type and type design, the switch contacts must meet the specifications in the following utilization categories:

- Switch contacts for the supply voltage at AC voltage operation: AC-3 according to IEC 60947-4-1 or AC-15 according to IEC 60947-5-1.
- Switch contact for the supply voltage at DC voltage operation: Preferably AC-3 or DC-3 according to IEC 60947-4-1. As an alternative, contacts in utilization category DC-13 according to IEC 60947-5-1 are also permitted.
- Switch contacts for optional separation on DC side: AC-3 according to IEC 60947-4-1.

Observe the specifications on the provided wiring diagram.

Using a semi-conductor relay is not permitted.

5.16.6 Brake controls with functional control input

In addition to the voltage supply, the optional brake controls of the BMK., BMKB. and BMV. series offer a control input for a DC 24 V signal with which the brakes can be switched via a PLC.

It is a purely functional input that is not "functionally safe" with respect to safety technology.

Due to their operating principle, fault states can occur in these devices that lead to unintentional ongoing brake release, even if the control voltage has been switched off.

⚠ WARNING

Unintentional ongoing brake release due to unrecognized malfunction of the brake control.

Severe or fatal injuries, e.g. due to falling hoist or extended coasting.

- Always disconnect all poles of the supply and control voltage for hoists and hoist-like applications.
- Ensure that a malfunction of the control input can be detected through additional, suitable diagnostic measures e.g. by monitoring the braking current to meet increased safety and reliability requirements.
- For applications with functional safety, use a safety-related brake control e.g. the BST.. brake control.
- If you have any questions regarding the handling of the control input, contact SEW-EURODRIVE.

5.16.7 Damage protection against overvoltage and short circuit

To obtain protection against overvoltage damages (e.g. due to short circuit), a sufficiently dimensioned fusing must be used at the supply cables.

Observe the notes on dimensioning in the catalog, or contact SEW-EURODRIVE.

31555454/EN – 11/2023

5.17 Connecting the encoder

5.17.1 Overview of add-on encoders

Refer to the wiring connection diagrams on information on how to connect incremental encoders:

En-coders	Motors	Encoder type	Mounting type	Supply	Signal	Wiring dia-gram
				DC V		
EK8S	EDRN71 – 315	Incremental	Shaft-centered	7 – 30	1 V_{PP} sin/cos	63083078
EK8C	EDRN71 – 315	Incremental	Shaft-centered	4.5 – 30	HTL/TTL (RS-422)	63181649
EK8R	EDRN71 – 315	Incremental	Shaft-centered	7 – 30	TTL (RS-422)	63181649
AK8W	EDRN71 – 315	Absolute value	Shaft-centered	7 – 30	1 V_{PP} sin/cos + RS485	63147378
AK8Y	EDRN71 – 315	Absolute value	Shaft-centered	7 – 30	1 V_{PP} sin/cos + SSI	63120291
EV8S	EDRN71 – 280	Incremental	Flange-centered	7 – 30	1 V_{PP} sin/cos	68180xx08
EV8C	EDRN71 – 280	Incremental	Flange-centered	4.5 – 30	HTL / TTL (RS-422)	68179xx08
EV8R	EDRN71 – 280	Incremental	Flange-centered	7 – 30	TTL (RS-422)	68179xx08
AV8W	EDRN71 – 280	Absolute value	Flange-centered	7 – 30	1 V_{PP} sin/cos + RS485	68181xx08
AV8Y	EDRN71 – 280	Absolute value	Flange-centered	7 – 30	1 V_{PP} sin/cos + SSI	68182xx08
ES7S	EDR..71 – 132, EDRN80M – 132S	Incremental	Shaft-centered	7 – 30	1 V_{PP} sin/cos	68180xx08
ES7R	EDR..71 – 132, EDRN80M – 132S	Incremental	Shaft-centered	7 – 30	TTL (RS422)	68179xx08
ES7C	EDR..71 – 132, EDRN80M – 132S	Incremental	Shaft-centered	4.75 – 30	HTL/TTL (RS422)	68179xx08
AS7W	EDR..71 – 132, EDRN80M – 132S	Absolute value	Shaft-centered	7 – 30	1 V_{PP} sin/cos +RS485	68181xx08
AS7Y	EDR..71 – 132, EDRN80M – 132S	Absolute value	Shaft-centered	7 – 30	1 V_{PP} sin/cos + SSI	68182xx07
EG7S	EDR..160 – 280, EDRN132M – 280	Incremental	Shaft-centered	7 – 30	1 V_{PP} sin/cos	68180xx08
EG7R	EDR..160 – 280, EDRN132M – 280	Incremental	Shaft-centered	7 – 30	TTL (RS422)	68179xx08
EG7C	EDR..160 – 280, EDRN132M – 280	Incremental	Shaft-centered	4.75 – 30	HTL/TTL (RS422)	68179xx08
AG7W	EDR..160 – 280, EDRN132M – 280	Absolute value	Shaft-centered	7 – 30	1 V_{PP} sin/cos +RS485	68181xx08
AG7Y	EDR..160 – 280, EDRN132M – 280	Absolute value	Shaft-centered	7 – 30	1 V_{PP} sin/cos + SSI	68182xx07
EH7C	EDR../EDRN315	Incremental	Shaft-centered	10 – 30	HTL	08511xx08

31555454/EN – 11/2023

En-coders	Motors	Encoder type	Mounting type	Supply	Signal	Wiring dia-gram
				DC V		
EH7R	EDR../EDRN315	Incremental	Shaft-centered	10 – 30	TTL (RS422)	08511xx08
EH7S	EDR../EDRN315	Incremental	Shaft-centered	10 – 30	1 V_{PP} sin/cos	08511xx08
EH7T	EDR../EDRN315	Incremental	Shaft-centered	5 (±5%)	TTL (RS422)	08511xx08
AH7Y	EDR../EDRN315	Incremental	Shaft-centered	9 – 30	TTL+SSI (RS422)	08259xx07
EV7C	EDR..71 – 280 EDRN80M – 280	Incremental	Flange-centered	4.75 – 30	HTL/TTL (RS-422)	68179xx08
EV7R	EDR..71 – 280 EDRN80M – 280	Incremental	Flange-centered	7 – 30	TTL (RS422)	68179xx08
EV7S	EDR..71 – 280 EDRN80M – 280	Incremental	Flange-centered	7 – 30	1 V_{PP} sin/cos	68180xx08
AV7W	EDR..71 – 280 EDRN80M – 280	Absolute value	Flange-centered	7 – 30	1 V_{PP} sin/cos (RS485)	68181xx08
AV7Y	EDR..71 – 280 EDRN80M – 280	Absolute value	Flange-centered	7 – 30	1 V_{PP} sin/cos + SSI	68182xx08

5.17.2 Installation notes

For cable routing, use only cables and cable glands that meet the following criteria:

- The clamping range is suitable for the cables used.
- The IP degree of protection and operating temperature range of the encoder connection corresponds to at least the IP degree of protection and operating temperature range of the encoder.

If you use cables with a different diameter, replace the supplied cable gland with a suitable cable gland.

Depending on the encoder design, observe the following requirements for the cable gland:

Encoder	Clamping range in mm	Tightening torque in Nm
.K8., .V8.	5 – 9.5	2[1)]
.S7., .V7., .G7. with SW17	5 – 9	3
.S7., .V7., .G7. with SW20	5 – 10	3

1) For cables from SEW-EURODRIVE with a diameter of 8.5 – 9 mm, 5 cable pairs, shielded, PU coated. For other cables or operation subject to strong vibration, use adapted tightening torques.

Encoders .K8./.V8.

Specifications regarding the connection cover with prefabricated cable (provided by the customer):

- Connect the M23 connector only outside of the explosion-protected area, or connect it to a device that meets explosion-protection requirements.
- Connect the D-sub connector only outside of the explosion-protected area, or connect it to a device that meets explosion-protection requirements.
- If you use a cable carrier installation, adhere to the minimum ambient temperature of -20 °C.

31555454/EN – 11/2023

5.17.3 Connecting .8K./.V8. encoders

1. Loosen the screws of the connection cover [619] and remove it.
2. Connect the encoder as shown in the wiring diagram. Observe the stripping length of 8 mm when connecting the encoder to the terminal block in the connection cover [1164].
3. ⚠ **WARNING!** Risk of explosion due to contamination. Fatal or serious injuries. Before you position the connection cover [619] make sure the wiring space is free from dust and humidity. Remove any dirt from the wiring space.
   Place the connection cover [619] onto the connection adapter [1164].
4. Screw the screws [E] through the bores on the connection cover [619] into the bores on the connection adapter [1164].
   ⇨ Secure the screws [E] using a medium-strength thread locker. The tightening torque is 2.5 Nm.
5. Tighten the cable gland. For tightening torques, refer to the preceding table.
6. Provide a strain relief in accordance with IEC 60079-14. Do not damage the signal cables.

5.17.4 Connecting .S7./.V7./.G7. encoders

1. Remove the safety cover [361], or the forced cooling fan if required.
2. Loosen the screws of the connection cover [619] and remove it.
3. Connect the encoder as shown in the wiring diagram.
4. Screw on the connection cover [619].
   ⇨ Tightening torque 2.25 Nm
5. Tighten the cable gland. For tightening torques, refer to the preceding table.
6. Provide a strain relief in accordance with IEC 60079-14. Do not damage the signal cables.
7. Mount the safety cover [361] onto the forced cooling fan.

5.17.5 Connecting third-party encoders

When using third-party encoders, observe the installation requirements of the supplied manufacturer's operating instructions.

31555454/EN – 11/2023

5.18 Options

Connect options as shown in the wiring diagram(s) provided with the motor. Do not connect any options if the wiring diagram is missing. You can obtain the valid wiring diagrams free of charge from SEW-EURODRIVE.

The following options are not available for every equipment protection level /EPL, see the following table:

Option	EPL Gb, Db	EPL Gc, Dc
Temperature sensor /TF	x	x
Temperature detection /KY	x	x
Temperature detection /PK	x	x
Temperature detection /PT	x	x
Forced cooling fan /VE	–	x
Add-on encoder	–	x
Anti-condensation heating	x	x

31555454/EN – 11/2023

5.18.1 Temperature sensor /TF

⚠ WARNING

Explosion caused by impermissible heating of the motor due to defective temperature sensor /TF.

Severe or fatal injuries.

- Do not connect any voltages > 30 V to the temperature sensor /TF.
- Observe the provided wiring diagram for the connection of the temperature sensor /TF.

The PTC thermistors comply with DIN VDE V 0898-1-401.

Resistance measurement (measuring instrument with V ≤ 2.5 V or I < 1 mA):

- Standard measured values: 20 – 500 Ω, hot resistance > 4000 Ω

When using the temperature sensor for thermal monitoring, the evaluation function must be activated to maintain reliable isolation of the temperature sensor circuit. The thermal protection function must become active in case of overtemperature.

If there is a second terminal box for the temperature sensor /TF, this is where you must connect the temperature sensor.

Observe the provided wiring diagram for connecting the temperature sensor /TF. If the wiring diagram is not enclosed, you can obtain it from SEW-EURODRIVE free of charge.

The below figure shows the characteristic curve of /TF with reference to the nominal response temperature (referred to as T_{NF}).

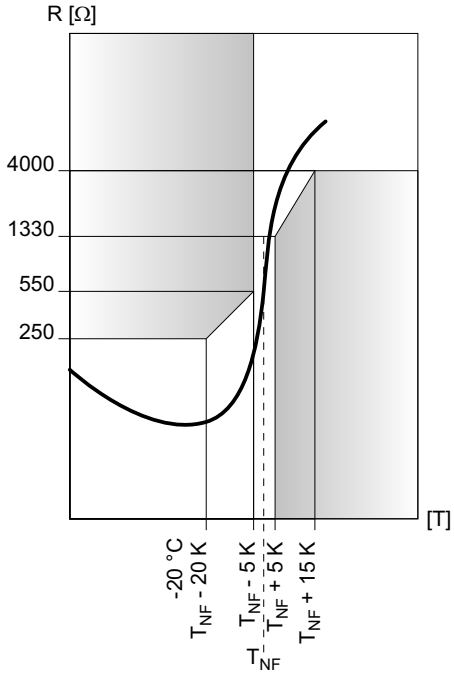

9007204724894475

31555454/EN – 11/2023

5.18.2 Temperature detection /KY (KTY84 – 130)

NOTICE

Excessive self-heating of the temperature sensor can damage the insulation of the temperature detection as well as the motor winding.

The drive system might be damaged.

- Use currents > 3 mA in the KTY circuit.
- Observe the correct connection of the KTY to ensure correct evaluation of the temperature detection.
- Observe the polarity during connection.

The characteristic curve in the following figure shows the resistance curve subject to the motor temperature with a measuring current of 2 mA and correct pole connection:

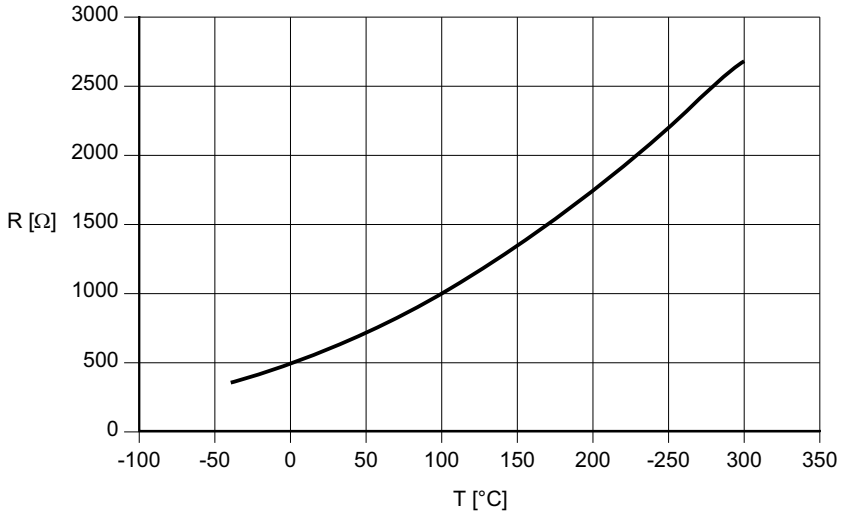

1140975115

Technical data	KTY84 – 130
Connection	Red (+) Blue (−)
Total resistance at 20 – 25 °C	540 Ω < R < 640 Ω
Test current	< 3 mA

5.18.3 Temperature detection /PK (PT1000)

NOTICE

Excessive self-heating of the temperature sensor can damage the insulation of the temperature detection as well as the motor winding.

The drive system might be damaged.

- Avoid currents > 3 mA in the circuit of the PT1000.
- Observe the correct connection of the PT1000 to ensure correct evaluation of the temperature detection.

The characteristic curve in the following figure shows the resistance curve subject to the motor temperature.

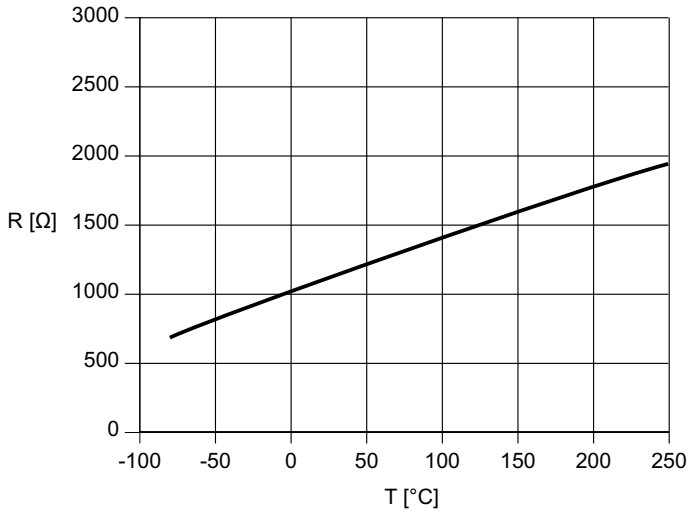

17535480203

Technical data	PT1000
Connection	Black/red
Resistance at 20 – 25 °C per PT1000	1077 Ω < R < 1098 Ω
Test current	< 3 mA

5.18.4 Temperature sensor /PT (PT100)

NOTICE

Excessive self-heating of the temperature detection can damage the insulation of the temperature detection as well as the motor winding.

The drive system might be damaged.

- Avoid currents > 3 mA in the circuit of the PT100.
- Observe the correct connection of the PT100 to ensure correct evaluation of the temperature detection.

The characteristic curve in the following figure shows the resistance curve subject to the motor temperature.

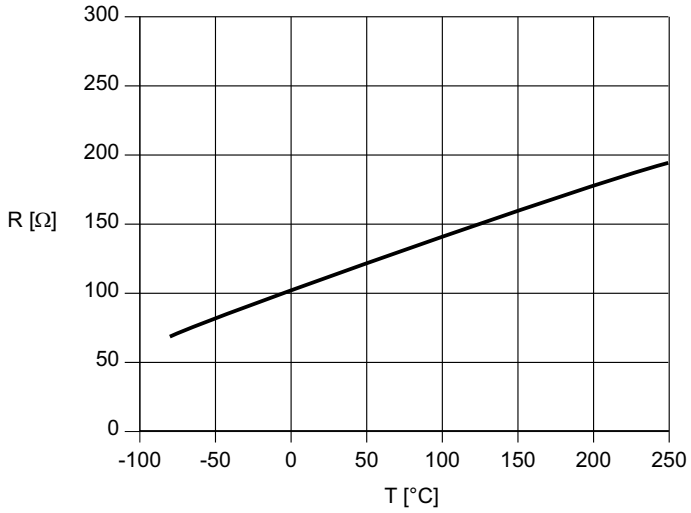

1145838347

Technical data	PT100
Connection	Red/white
Resistance at 20 – 25 °C per PT100	107.8 Ω < R < 109.7 Ω
Test current	< 3 mA

5.18.5 Forced cooling fan /VE

Motors can be equipped with a forced cooling fan as an option. For information on connection and safe operation, refer to chapter "Operation and maintenance instructions for forced cooling fan /VE".

5.18.6 Anti-condensation heating

If explosion-protected motors are operated at ambient temperatures below -20 °C, the use of an anti-condensation heating is required.

Anti-condensation heating can optionally be used for applications operated at ambient temperatures above -20 °C where moisture condensation is expected.

The strip heaters are controlled according to the following principle:

- Motor switched off → anti-condensation heating activated
- Motor switched on → anti-condensation heating deactivated

Observe the permitted voltage according to the nameplate and the enclosed terminal assignment diagram.

31555454/EN – 11/2023

6 Duty types and limit values

6.1 Permitted duty types

6.1.1 Permitted operating modes and protection concept for motors with EPL "Gb" and "Db"

Design	Duty types acc. to nameplate	Additional nameplate	Permitted duty types	Protection against excessive heating	Identification on the nameplate
2G-b 2D-b 2GD-b	S1	–	Line operation: S1	Motor circuit breaker[1)]	Time t_E and relation I_A/I_N 2D-b: without t_E time
	S1, S4 50%	–	Line operation: S1, S4 50%	PTC thermistor /TF[2)]	t_A time, PTC according to DIN VDE V 0898-1-401, relay functionally tested according to II(2)G
	S1	VFC	Line operation: S1	Motor circuit breaker[1)]	Time t_E and relation I_A/I_N 2D-b: without t_E time
	S1	VFC	Inverter operation	PTC thermistor /TF[2)] and speed-dependent current limiting in the inverter[3)]	Additional nameplate: X identification and permitted continuous currents are indicated depending on the frequency

1) Monitoring device for protecting explosion-protected drives (e.g. Directive 2014/34/EU).
2) The catalog designation for PTC thermistors is "/TF". Monitoring of the PTC thermistor by a thermistor monitoring device for protecting explosion-protected drives (e.g. Directive 2014/34/EU).
3) The frequency inverter must comply with the requirements of the IECEx Certificate of Conformity (IECEx CoC).

6.1.2 Permitted operating modes and protection concept for motors with EPL "Gc" and "Dc"

Design	Duty types acc. to nameplate	Additional nameplate	Permitted duty types	Protection against excessive heating	Identification on the nameplate
3G-c 3D-c 3GD-c	S1	–	Line operation: S1	Motor circuit breaker[1)]	–
	S1	–	Line operation: Switching operation, soft starter, heavy starting	PTC thermistor /TF[2)]	Option designation /TF[2)]
	S1	VFC	Line operation: S1	Motor circuit breaker[1)]	–
	S1	VFC	Line operation: S1	PTC thermistor /TF[2)]	Option designation /TF[2)]
	S1	VFC	Line operation: Switching operation, soft starter, heavy starting	PTC thermistor /TF[2)]	Option designation /TF[2)]
	S1	VFC	Inverter operation, group drive (only 3D-c)	PTC thermistor /TF[2)]	Additional nameplate: Permitted continuous currents listed depending on the frequency

1) Monitoring device for protecting explosion-protected drives (e.g. Directive 2014/34/EU).
2) The catalog designation for PTC thermistors is "/TF". Monitoring of the PTC thermistor by a thermistor "monitoring device for protecting explosion-protected drives" (e.g. Directive 2014/34/EU)

INFORMATION

All motors must be protected from impermissible heating according to IEC 60079-14. Safety equipment required for safe operation is affected by these standards and must be certified for this reason.

31555454/EN – 11/2023

6.2 Line operation

6.2.1 Motors with EPL "Gb" and "Db"

Continuous duty

The motors are designed for continuous duty at a constant power rating (S1) and are marked accordingly. This includes low load startup at a small number of starts per hour that cause hardly any additional heating.

Overload protection must be ensured using a time delayed, current-controlled overload protection device.

The protective device not only monitors the motor current, but also the stopped motor during the t_E time.

Switching operation

Operate motors marked with S1, S4/50% only in the duty types S1 and S4/50%.

S4 duty type takes account of start-up and load changes. S4 duty type is extended by the relative cyclic duration factor (cdf), the mass moment of inertia of the motor (J_M) and mass moment of inertia of the load (J_{ext}). Both mass moments of inertia refer to the motor shaft. The mass moments of inertia are indicated on the nameplate.

To calculate the permitted cycles per hour, use the formula for calculating the switching frequency.

The permitted no-load starting frequency (Z_0) required for the calculation and referring to 50%, is specified in the IECEx Certificate of Conformity (IECEx CoC).

The evaluation of PTC thermistors (/TF) is the only measure to prevent overheating.

6.2.2 Motors with EPL "Gc" and "Dc"

Continuous duty

The motors are designed for continuous duty at a constant power rating (S1) and are marked accordingly. This includes low load startup at a small number of starts per hour that cause hardly any additional heating.

Overload protection must be ensured using a time delayed, current-controlled overload protection device.

Switching operation

In case of switching frequencies that are assigned to duty types S3, S4, and S6, the load changes must be considered in addition to start-up. This is ensured by calculating the permitted switching frequency.

To calculate the permitted cycles per hour, use the formula for calculating the switching frequency.

The evaluation of PTC thermistors (/TF) is the only measure to prevent overheating.

Important notes on the brake

In line operation, the brake is applied at rated speed of the motor when the drive is switched off or in case of an emergency stop. The braking work may not exceed the permitted maximum braking work per braking operation. Observe the information in the manual "Project Planning for BE.. Brakes – DR.., DRN.., DR2.., EDR.., EDRN.. AC Motors – Standard Brake/Safety Brake".

The evaluation of a PTC thermistor (/TF) is the only measure to prevent overheating. The brakemotors from SEW-EURODRIVE are equipped with PTC thermistors (/TF).

6.2.3 Calculating the starting frequency

You can determine the permitted switching frequency Z of the motor in cycles/hour using the following formula:

$$Z = Z_0 \times K_J \times K_M \times K_P$$

You can determine the factors $_J$, K_M, and K_P using the following diagrams:

Depending on the additional moment of inertia

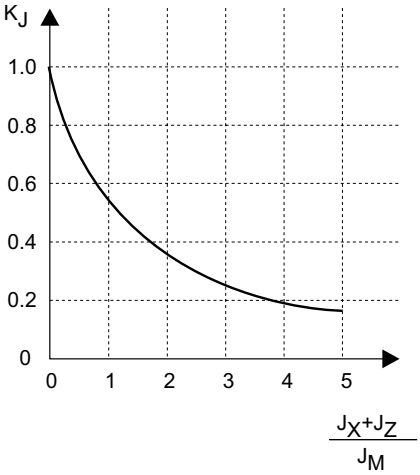

19214810891

Depending on the counter-torque at startup

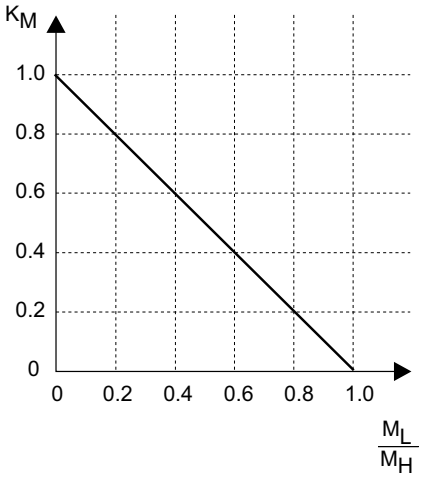

19214806027

Depending on the static power and the relative cyclic duration factor cdf

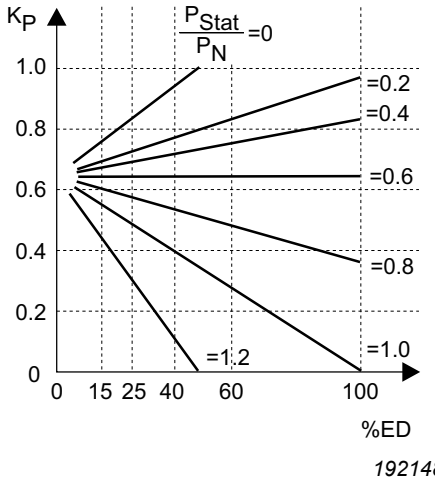

19214808459

J_X	Total of all external mass moments of inertia in relation to the motor axis	M_H	Acceleration torque of the motor
J_Z	Mass moment of inertia flywheel fan	P_{Stat}	Power demand after run-up (static power)
J_M	Motor's mass moment of inertia	P_N	Rated motor power
M_L	Counter-torque during startup	% cdf	Relative cyclic duration factor

Z_0 is the no-load starting frequency defined by the manufacturer.

The permitted starting frequency Z of a motor is calculated using the formula for calculating the starting frequency. Z_0 indicates the number of times per hour that the motor can accelerate the mass moment of inertia of its rotor up to nominal speed without counter-torque.

6.2.4 Soft starter/soft start units

Soft start devices are permitted for motors with EPL "Gc" and "Dc" when the motors are equipped with a /TF temperature sensor and meet the requirements of IEC 60079-14.

During startup, you must detect and document whether temperature monitoring is effective and whether the motor starts up correctly. When the protection device trips, disconnect the motor from the supply system.

31555454/EN – 11/2023

6.3 Inverter operation

6.3.1 Permitted voltage stress in inverter operation

Operating motors from SEW-EURODRIVE on inverters is permitted if the pulse voltages at the motor terminals indicated in the following figure are not exceeded:

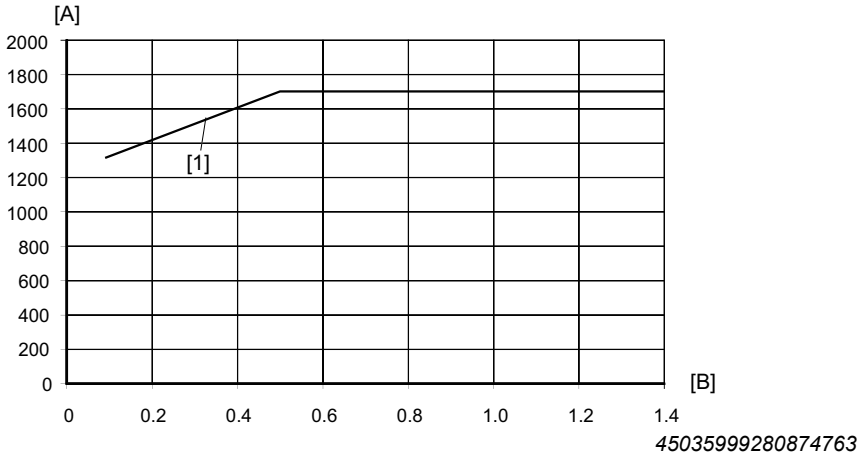

[A] Permitted pulse U_{LL} in V
[B] Rise time in µs
[1] Permitted pulse voltage for EDR../EDRN.. motors

INFORMATION

The permitted maximum PE voltage of 1200 V must not be exceeded in IT system operation even in the event of an error.

INFORMATION

If the permitted pulse voltage is exceeded, you have to provide for according measures to limit it. Consult the manufacturer of the inverter.

INFORMATION

The maximum permitted nominal motor voltage for inverter operation is 500 V.

SEW-EURODRIVE frequency inverters

When using frequency inverters from SEW-EURODRIVE at line voltages of up to 500 V and in non-regenerative operation, the maximally permitted limit values of the motors are met.

The pulse voltage at the motor terminals (caused by reflections) depends among others on the level of the DC link voltage and the cable length between frequency inverter and motor.

If regenerative operation cannot be ruled out, a braking resistor must be configured and connected to the frequency inverter to avoid an increased DC link voltage.

Regenerative power supply

The regenerative power supply module of MOVIDRIVE® or MOVIAXIS® with the necessary options can be used without restrictions. Regenerative power supply prevents high DC link voltages and ensures that the limit values are not exceeded.

Frequency inverters from third-party manufacturers

If the maximum permitted limit values cannot be met with frequency inverters from other manufacturers, you must take limiting measures. Contact the manufacturer of the frequency inverter for more information.

IT system

In an IT system, an insulation fault between a phase and ground is tolerated. The ground fault on the motor could mean that the maximum permitted limit value for phase/ground of 1200 V is exceeded in regenerative operation. To prevent this effectively, you have to install suitable protection elements between the frequency inverter and the motor. Usually, sine filters are installed between the frequency inverter and motor in this case. For detailed information about component selection and wiring, please contact the manufacturer of the frequency inverter.

31555454/EN – 11/2023

6.4 Safe operation of motors with EPL "Gb" and "Db" on inverters

Project planning is the basic requirement for safe operation of explosion-protected motors. The following points have to be considered:

- Checking the conditions of the typical application.
- With deviations from the typical application: Calculate the motor terminal voltage.
- Adhere to the thermal torque limit characteristic curve.
- Adhere to the dynamic limit torque.
- Adhere to the motor limit frequency.
- Select a suitable frequency inverter, see chapter "Motor/inverter assignment for motors of type 2G-b, 2D-b and 2GD-b" (→ 🗎 102).
- Use a braking resistor if regenerative operation cannot be ruled out.
- Check the overhung and axial loads on the motor shaft of stand-alone motors.
- Observe the maximum gear unit input speed, see n_{emax} on the nameplate.
- Observe the maximum gear unit output torque, see M_{amax} on the nameplate.

6.4.1 Motor terminal voltage

The calculation of the motor terminal voltage is an important component of project planning.

If the conditions differ from the typical application, you have to calculate the start of field weakening f_{D*} and the torque M_{E*}, see chapter "Special application" (→ 🗎 125).

6.4.2 Maximum permitted torques

The thermal torque limit characteristic curve shows the permitted maximum torque for continuous operation of the motor.

If the effective operating point is below the thermal limit characteristic curve, the values may be exceeded briefly, see chapter "Typical application" (→ 🗎 121).

The permitted maximum dynamic limit torque is determined by the short-term current limitation (150% $I_{N\ motor}$).

6.4.3 Maximum and minimum permitted frequencies

The maximum and minimum frequencies are indicated on the nameplate. The actual values may not exceed or fall below these specifications.

6.4.4 Motor/inverter assignment for motors of type 2G-b, 2D-b and 2GD-b

MOVITRAC® B can be used for the basic control range and for the field weakening range.

MOVIDRIVE® B is only suitable for the basic setting range. This means the *maximum speed* parameter must be limited to the beginning of the field weakening range.

Only use frequency inverters which meet the requirements listed in the IECEx Certificate of Conformity (IECEx CoC).

Combinations for motor voltages other than 230/400 V can be requested from SEW-EURODRIVE.

INFORMATION

The maximum speed values may be lower due to options and connection of a gear unit. Refer to the nameplate for the permitted values.

EDR.. motors in ⅄ connection at a motor voltage of 230/400 V, 50 Hz, 2G-b, 2GD-b

Motors	P_N	I_N	n_{max}	Inverter power										
	kW	A	min^{-1}	kW										
				0.25	0.37	0.55	0.75	1.1	1.5	2.2	3	4	5.5	7.5
EDRS71S4	0.25	0.78	2385	x	–	–	–	–	–	–	–	–	–	–
EDRS71M4	0.37	1.2	2110	o	x	o	o	–	–	–	–	–	–	–
EDRS80S4	0.55	1.38	2410	o	o	x	o	–	–	–	–	–	–	–
EDRE80M4	0.55	1.33	2500	o	o	x	o	–	–	–	–	–	–	–
EDRE80M4	0.75	1.8	2465	–	o	o	x	o	–	–	–	–	–	–
EDRE90M4	1.1	2.55	2455	–	–	o	o	x	o	–	–	–	–	–
EDRE90L4	1.5	3.5	2395	–	–	–	–	o	x	o	o	–	–	–
EDRE100M4	2.2	4.9	2455	–	–	–	–	–	o	x	o	o	–	–
EDRE100L4	2.2	5.2	2470	–	–	–	–	–	o	x	o	o	–	–
EDRE100LC4	3	6.4	2480	–	–	–	–	–	–	o	x	o	o	–
EDRE112M4	3	6.4	1695	–	–	–	–	–	–	o	x	o	o	–
EDRE132S4	4	8.1	1730	–	–	–	–	–	–	–	o	x	o	o
EDRE132M4	5.5	11.5	1685	–	–	–	–	–	–	–	–	o	x	o

Motors	P_N	I_N	n_{max}	Inverter power											
	kW	A	min^{-1}	kW											
				5.5	7.5	11	15	22	30	37	45	55	75	90	110
EDRE160S4	7.5	15.4	1730	o	x	o	–	–	–	–	–	–	–	–	–
EDRE160M4	9.2	20	1755	–	o	x	o	–	–	–	–	–	–	–	–
EDRE180S4	11	22	2325	–	o	x	o	–	–	–	–	–	–	–	–
EDRE180M4	15	29.5	2325	–	–	o	x	o	–	–	–	–	–	–	–
EDRE180L4	18.5	36	2325	–	–	–	o	x	o	–	–	–	–	–	–
EDRE200L4	22	45	2365	–	–	–	o	x	o	o	o	–	–	–	–
EDRE225S4	30	58.5	2365	–	–	–	–	o	x	o	o	o	–	–	–
EDRE 225M4	37	71.5	2065	–	–	–	–	–	o	x	o	o	o	–	–

x = recommended o = permitted – = not permitted

31555454/EN – 11/2023

EDR.. motors in△ connection at a motor voltage of 230/400 V, 50 Hz, 2G-b, 2GD-b

Motors	P_N	I_N	n_{max}	Inverter power												
	kW	A	min^{-1}	kW												
				0.25	0.37	0.55	0.75	1.1	1.5	2.2	3	4	5.5	7.5	11	15
EDRS71S4	0.25	1.35	2510	o	x	o	o	–	–	–	–	–	–	–	–	–
EDRS71M4	0.37	2.1	2465	–	o	o	x	o	o	–	–	–	–	–	–	–
EDRS80S4	0.55	2.4	2525	–	–	o	x	o	o	–	–	–	–	–	–	–
EDRE80M4	0.5	2.4	2540	–	–	o	x	o	o	–	–	–	–	–	–	–
EDRE80M4	0.75	3.1	2535	–	–	–	o	o	x	o	–	–	–	–	–	–
EDRE90M4	1.1	4.4	2530	–	–	–	–	o	o	x	o	–	–	–	–	–
EDRE90L4	1.5	6	2535	–	–	–	–	–	–	o	x	o	–	–	–	–
EDRE100M4	2.2	8.5	2530	–	–	–	–	–	–	–	o	x	o	o	–	–
EDRE100L4	2.2	9	2540	–	–	–	–	–	–	–	o	x	o	o	–	–
EDRE100LC4	3	11.1	2555	–	–	–	–	–	–	–	–	o	x	o	–	–
EDRE112M4	3	11.1	1740	–	–	–	–	–	–	–	–	o	x	o	–	–
EDRE132S4	4	14	1760	–	–	–	–	–	–	–	–	–	o	x	o	–
EDRE132M4	5.5	19.9	1730	–	–	–	–	–	–	–	–	–	–	o	x	o

Motors	P_N	I_N	n_{max}	Inverter power									
	kW	A	min^{-1}	kW									
				11	15	22	30	37	45	55	75	90	110
EDRE160S4	7.5	26.6	1750	o	x	o	–	–	–	–	–	–	–
EDRE160M4	9.2	34.6	1760	–	o	x	o	–	–	–	–	–	–
EDRE180S4	11	38	2340	–	o	x	o	o	–	–	–	–	–
EDRE180M4	15	51	2330	–	–	o	x	o	o	–	–	–	–
EDRE180L4	18.5	62.3	2340	–	–	o	o	x	o	o	–	–	–
EDRE200L4	22	77.9	2375	–	–	–	o	o	x	o	o	–	–
EDRE225S4	30	101.2	2375	–	–	–	–	o	o	x	o	o	o
EDRE225M4	37	123.7	2075	–	–	–	–	–	o	o	x	o	o

x = recommended o = permitted – = not permitted

31555454/EN – 11/2023

EDRN.. motors in⅄ connection at a motor voltage of 230/400 V, 50 Hz, 2G-b, 2D-b, 2GD-b

Motors	P_N	I_N	n_{max}	Inverter power											
	kW	A	min^{-1}	kW											
				0.25	0.37	0.55	0.75	1.1	1.5	2.2	3	4	5.5	7.5	11
EDRN63MS4	0.12	0.41	3245	–	–	–	–	–	–	–	–	–	–	–	–
EDRN63M4	0.18	0.56	3175	x	–	–	–	–	–	–	–	–	–	–	–
EDRN71MS4	0.25	0.77	3190	x	–	–	–	–	–	–	–	–	–	–	–
EDRN71M4	0.37	1.1	3185	o	x	o	–	–	–	–	–	–	–	–	–
EDRN80MK4	0.55	1.37	3390	o	o	x	o	–	–	–	–	–	–	–	–
EDRN80M4	0.75	1.8	2856	–	o	o	x	o	–	–	–	–	–	–	–
EDRN90S4	1.1	2.6	2881	–	–	o	o	x	o	–	–	–	–	–	–
EDRN90L4	1.5	3.5	2897	–	–	–	–	o	x	o	o	–	–	–	–
EDRN100LS4	2.2	4.9	2878	–	–	–	–	–	o	x	o	o	–	–	–
EDRN100L4	3	6.6	2890	–	–	–	–	–	–	o	x	o	o	–	–
EDRN112M4	4	8.4	2884	–	–	–	–	–	–	–	o	x	o	o	–
EDRN132S4	5.5	10.7	2879	–	–	–	–	–	–	–	–	o	x	o	–
EDRN132M4	7.5	15.3	2869	–	–	–	–	–	–	–	–	–	o	x	o
EDRN132L4	9.2	19.4	2887	–	–	–	–	–	–	–	–	–	–	o	x
EDRN160M4	11	21	2905	–	–	–	–	–	–	–	–	–	–	o	x
EDRN160L4	15	29	2912	–	–	–	–	–	–	–	–	–	–	–	o
EDRN180L4[1)]	17.5	31	2565	–	–	–	–	–	–	–	–	–	–	–	o

Motors	P_N	I_N	n_{max}	Inverter power												
	kW	A	min^{-1}	kW												
				15	22	30	37	45	55	75	90	110	132	160	200	250
EDRN132L4	9.2	19.4	2887	o	–	–	–	–	–	–	–	–	–	–	–	–
EDRN160M4	11	21	2905	o	–	–	–	–	–	–	–	–	–	–	–	–
EDRN160L4	15	29	2912	x	o	–	–	–	–	–	–	–	–	–	–	–
EDRN180M4[2)]	18.5	34.5	2559	o	x	o	–	–	–	–	–	–	–	–	–	–
EDRN180L4[1)]	17.5	31	2565	x	o	o	–	–	–	–	–	–	–	–	–	–
EDRN180L4[2)]	22	39	2560	o	x	o	o	–	–	–	–	–	–	–	–	–
EDRN200L4[1)]	24	45.5	2572	o	x	o	o	o	–	–	–	–	–	–	–	–
EDRN200L4[2)]	30	57	2567	–	o	x	o	o	o	–	–	–	–	–	–	–
EDRN225S4[2)]	37	65	1835	–	o	o	x	o	o	o	–	–	–	–	–	–
EDRN225M4[2)]	45	82	1835	–	–	o	o	x	o	o	–	–	–	–	–	–
EDRN250M4[1)]	30	59	1838	–	o	x	o	o	o	–	–	–	–	–	–	–
EDRN250M4[2)]	55	108	1837	–	–	–	–	o	x	o	o	o	–	–	–	–
EDRN280S4[1)]	36	69	1834	–	–	o	x	o	o	o	–	–	–	–	–	–
EDRN280S4[2)]	75	129	1840	–	–	–	–	–	o	x	o	o	o	–	–	–
EDRN280M4[1)]	44	84	1830	–	–	o	o	x	o	o	–	–	–	–	–	–
EDRN280M4[2)]	90	164	1833	–	–	–	–	–	–	o	x	o	o	o	–	–

1) Only designs 2G-b, 2GD-b
2) Only design 2D-b

x = recommended o = permitted – = not permitted

31555454/EN – 11/2023

EDRN.. motors in△ connection at a motor voltage of 230/400 V, 50 Hz, 2G-b, 2D-b, 2GD-b

Motors	P_N	I_N	n_{max}	Inverter power											
	kW	A	min^{-1}	kW											
				0.25	0.37	0.55	0.75	1.1	1.5	2.2	3	4	5.5	7.5	11
EDRN63MS4	0.12	0.72	3435	x	–	–	–	–	–	–	–	–	–	–	–
EDRN63M4	0.18	0.99	3440	x	o	–	–	–	–	–	–	–	–	–	–
EDRN71MS4	0.25	1.37	3460	o	x	o	o	–	–	–	–	–	–	–	–
EDRN71M4	0.37	1.92	3470	–	o	x	o	o	–	–	–	–	–	–	–
EDRN80MK4	0.55	2.4	3505	–	–	o	x	o	o	–	–	–	–	–	–
EDRN80M4	0.75	3.1	2923	–	–	–	o	x	o	o	–	–	–	–	–
EDRN90S4	1.1	4.5	2945	–	–	–	–	–	o	x	o	–	–	–	–
EDRN90L4	1.5	6.1	2948	–	–	–	–	–	–	o	x	o	–	–	–
EDRN100LS4	2.2	8.6	2933	–	–	–	–	–	–	–	o	x	o	o	–
EDRN100L4	3	11.4	2939	–	–	–	–	–	–	–	–	o	x	o	–
EDRN112M4	4	14.5	2935	–	–	–	–	–	–	–	–	–	o	x	o
EDRN132S4	5.5	18.7	2939	–	–	–	–	–	–	–	–	–	–	o	x
EDRN132M4	7.5	26.5	2953	–	–	–	–	–	–	–	–	–	–	–	o
EDRN132L4	9.2	34	2957	–	–	–	–	–	–	–	–	–	–	–	o

Motors	P_N	I_N	n_{max}	Inverter power												
	kW	A	min^{-1}	kW												
				15	22	30	37	45	55	75	90	110	132	160	200	250
EDRN132S4	5.5	18.7	2939	o	–	–	–	–	–	–	–	–	–	–	–	–
EDRN132M4	7.5	26.5	2953	x	o	–	–	–	–	–	–	–	–	–	–	–
EDRN132L4	9.2	34	2957	o	x	o	–	–	–	–	–	–	–	–	–	–
EDRN160M4	11	37	2960	o	x	o	o	–	–	–	–	–	–	–	–	–
EDRN160L4	15	50	2960	–	o	x	o	o	–	–	–	–	–	–	–	–
EDRN180M4[2)]	18.5	60	2584	–	o	x	o	o	o	–	–	–	–	–	–	–
EDRN180L4[1)]	17.5	54	2587	–	o	x	o	o	o	–	–	–	–	–	–	–
EDRN180L4[2)]	22	68	2582	–	–	o	x	o	o	o	–	–	–	–	–	–
EDRN200L4[1)]	24	79	2591	–	–	o	o	x	o	o	–	–	–	–	–	–
EDRN200L4[2)]	30	100	2586	–	–	–	o	o	x	o	o	o	–	–	–	–
EDRN225S4[2)]	37	113	1835	–	–	–	–	o	o	x	o	o	–	–	–	–
EDRN225M4[2)]	45	142	1835	–	–	–	–	–	o	o	x	o	o	–	–	–
EDRN250M4[1)]	30	102	1838	–	–	–	o	o	x	o	o	o	–	–	–	–
EDRN250M4[2)]	55	187	1837	–	–	–	–	–	–	–	o	x	o	o	–	–
EDRN280S4[1)]	36	120	1834	–	–	–	–	o	o	x	o	o	–	–	–	–
EDRN280S4[2)]	75	225	1840	–	–	–	–	–	–	–	o	o	x	o	o	–
EDRN280M4[1)]	44	145	1830	–	–	–	–	–	o	o	x	o	o	–	–	–
EDRN280M4[2)]	90	285	1833	–	–	–	–	–	–	–	–	o	o	x	o	o
EDRN315S4[1), 3)]	58	102	1848	–	–	–	o	o	x	o	o	o	–	–	–	–
EDRN315S4[1), 3)]	70	123	1844	–	–	–	–	o	o	x	o	o	–	–	–	–
EDRN315S4[2), 3)]	110	191	1846	–	–	–	–	–	–	–	o	x	o	o	o	–
EDRN315M4[1), 3)]	84	148	1840	–	–	–	–	–	o	o	x	o	o	–	–	–
EDRN315M4[2), 3)]	132	240	1840	–	–	–	–	–	–	–	o	o	x	o	o	o
EDRN315L4[2), 3)]	160	245	1840	–	–	–	–	–	–	–	–	o	x	o	o	o
EDRN315H4[1), 3)]	110	205	1841	–	–	–	–	–	–	–	o	o	x	o	o	–
EDRN315H4[2), 3)]	200	360	1845	–	–	–	–	–	–	–	–	–	–	o	x	o

1) Only designs 2G-b, 2GD-b
2) Only design 2D-b
3) Only 400 V with 50 Hz characteristic curve possible with this size

x = recommended o = permitted – = not permitted

31555454/EN – 11/2023

EDR.. motors in ⅄ connection at a motor voltage of 220/380 V, 60 Hz, 2G-b, 2GD-b

Motors	P_N	I_N	n_{max}	Inverter power									
	kW	A	min^{-1}	kW									
				0.25	0.37	0.55	0.75	1.1	1.5	2.2	3	4	5.5
EDRS71S4	0.25	0.91	2405	x	o	–	–	–	–	–	–	–	–
EDRS71M4	0.37	1.10	2160	o	x	o	–	–	–	–	–	–	–
EDRE80M4	0.55	1.40	2515	o	o	x	o	–	–	–	–	–	–
EDRS80S4	0.55	1.43	2430	–	o	x	o	–	–	–	–	–	–
EDRE80M4	0.75	1.85	2475	–	o	o	x	o	–	–	–	–	–
EDRE90M4	1.10	2.70	2470	–	–	o	o	x	o	–	–	–	–
EDRE90L4	1.50	3.65	2415	–	–	–	–	o	x	o	o	–	–
EDRE100L4	2.20	5.40	2512	–	–	–	–	–	o	x	o	o	–
EDRE100LC4	3.00	6.80	2490	–	–	–	–	–	–	o	x	o	o
EDRE112M4	3.00	6.70	1725	–	–	–	–	–	–	o	x	o	o
EDRE132S4	4.00	8.80	1750	–	–	–	–	–	–	–	o	x	o
EDRE132M4	5.50	11.90	1725	–	–	–	–	–	–	–	–	o	x
EDRE160S4	7.50	16.20	1740	–	–	–	–	–	–	–	–	–	o
EDRE160M4	9.20	20.00	1755	–	–	–	–	–	–	–	–	–	–
EDRE180S4	11.00	23.00	1770	–	–	–	–	–	–	–	–	–	–
EDRE180M4	15.00	31.00	2325	–	–	–	–	–	–	–	–	–	–
EDRE180L4	18.50	37.50	2323	–	–	–	–	–	–	–	–	–	–
EDRE200L4	22.00	45.50	2365	–	–	–	–	–	–	–	–	–	–
EDRE225S4	30.00	61.00	1770	–	–	–	–	–	–	–	–	–	–
EDRE225M4	37.00	76.00	1770	–	–	–	–	–	–	–	–	–	–

Motors	P_N	I_N	n_{max}	Inverter power										
	kW	A	min^{-1}	kW										
				7.5	11	15	22	30	37	45	55	75	90	110
EDRS71S4	0.25	0.91	2405	–	–	–	–	–	–	–	–	–	–	–
EDRS71M4	0.37	1.10	2160	–	–	–	–	–	–	–	–	–	–	–
EDRE80M4	0.55	1.40	2515	–	–	–	–	–	–	–	–	–	–	–
EDRS80S4	0.55	1.43	2430	–	–	–	–	–	–	–	–	–	–	–
EDRE80M4	0.75	1.85	2475	–	–	–	–	–	–	–	–	–	–	–
EDRE90M4	1.10	2.70	2470	–	–	–	–	–	–	–	–	–	–	–
EDRE90L4	1.50	3.65	2415	–	–	–	–	–	–	–	–	–	–	–
EDRE100L4	2.20	5.40	2512	–	–	–	–	–	–	–	–	–	–	–
EDRE100LC4	3.00	6.80	2490	–	–	–	–	–	–	–	–	–	–	–
EDRE112M4	3.00	6.70	1725	–	–	–	–	–	–	–	–	–	–	–
EDRE132S4	4.00	8.80	1750	o	–	–	–	–	–	–	–	–	–	–
EDRE132M4	5.50	11.90	1725	o	–	–	–	–	–	–	–	–	–	–
EDRE160S4	7.50	16.20	1740	x	o	o	–	–	–	–	–	–	–	–
EDRE160M4	9.20	20.00	1755	o	x	o	–	–	–	–	–	–	–	–
EDRE180S4	11.00	23.00	1770	–	x	o	–	–	–	–	–	–	–	–
EDRE180M4	15.00	31.00	2325	–	o	x	o	o	–	–	–	–	–	–
EDRE180L4	18.50	37.50	2323	–	–	o	x	o	o	–	–	–	–	–
EDRE200L4	22.00	45.50	2365	–	–	o	x	o	o	o	–	–	–	–
EDRE225S4	30.00	61.00	1770	–	–	–	o	x	o	o	o	–	–	–
EDRE225M4	37.00	76.00	1770	–	–	–	–	o	x	o	o	o	–	–

x = recommended o = permitted – = not permitted

EDR.. motors in △ connection at a motor voltage of 220/380 V, 60 Hz, 2G-b, 2GD-b

Motors	P_N	I_N	n_{max}	Inverter power									
	kW	A	min^{-1}	kW									
				0.25	0.37	0.55	0.75	1.1	1.5	2.2	3	4	5.5
EDRS71S4	0.25	1.58	2515	–	x	o	o	o	–	–	–	–	–
EDRS71M4	0.37	1.91	2475	–	o	x	o	o	–	–	–	–	–
EDRE80M4	0.55	2.42	2550	–	–	o	x	o	o	–	–	–	–
EDRS80S4	0.55	2.48	2530	–	–	o	x	o	o	–	–	–	–
EDRE80M4	0.75	3.20	2540	–	–	–	o	o	x	o	–	–	–
EDRE90M4	1.10	4.68	2535	–	–	–	–	–	o	x	o	–	–
EDRE90L4	1.50	6.32	2540	–	–	–	–	–	–	o	x	o	o
EDRE100L4	2.20	9.35	2933	–	–	–	–	–	–	–	o	x	o
EDRE100LC4	3.00	11.78	2555	–	–	–	–	–	–	–	–	o	x
EDRE112M4	3.00	11.60	1725	–	–	–	–	–	–	–	–	o	x
EDRE132S4	4.00	15.24	1750	–	–	–	–	–	–	–	–	–	o
EDRE132M4	5.50	20.61	1725	–	–	–	–	–	–	–	–	–	–
EDRE160S4	7.50	28.06	1740	–	–	–	–	–	–	–	–	–	–
EDRE160M4	9.20	34.64	1755	–	–	–	–	–	–	–	–	–	–
EDRE180S4	11.00	39.84	1770	–	–	–	–	–	–	–	–	–	–
EDRE180M4	15.00	53.69	2330	–	–	–	–	–	–	–	–	–	–
EDRE180L4	18.50	64.95	2340	–	–	–	–	–	–	–	–	–	–
EDRE200L4	22.00	78.81	2375	–	–	–	–	–	–	–	–	–	–
EDRE225S4	30.00	105.66	1770	–	–	–	–	–	–	–	–	–	–
EDRE225M4	37.00	131.64	1770	–	–	–	–	–	–	–	–	–	–

Motors	P_N	I_N	n_{max}	Inverter power										
	kW	A	min^{-1}	kW										
				7.5	11	15	22	30	37	45	55	75	90	110
EDRS71S4	0.25	1.58	2515	–	–	–	–	–	–	–	–	–	–	–
EDRS71M4	0.37	1.91	2475	–	–	–	–	–	–	–	–	–	–	–
EDRE80M4	0.55	2.42	2550	–	–	–	–	–	–	–	–	–	–	–
EDRS80S4	0.55	2.48	2530	–	–	–	–	–	–	–	–	–	–	–
EDRE80M4	0.75	3.20	2540	–	–	–	–	–	–	–	–	–	–	–
EDRE90M4	1.10	4.68	2535	–	–	–	–	–	–	–	–	–	–	–
EDRE90L4	1.50	6.32	2540	–	–	–	–	–	–	–	–	–	–	–
EDRE100L4	2.20	9.35	2933	o	–	–	–	–	–	–	–	–	–	–
EDRE100LC4	3.00	11.78	2555	o	–	–	–	–	–	–	–	–	–	–
EDRE112M4	3.00	11.60	1725	o	–	–	–	–	–	–	–	–	–	–
EDRE132S4	4.00	15.24	1750	x	o	–	–	–	–	–	–	–	–	–
EDRE132M4	5.50	20.61	1725	o	x	o	–	–	–	–	–	–	–	–
EDRE160S4	7.50	28.06	1740	–	o	x	o	–	–	–	–	–	–	–
EDRE160M4	9.20	34.64	1755	–	–	o	x	o	–	–	–	–	–	–
EDRE180S4	11.00	39.84	1770	–	–	o	x	o	o	–	–	–	–	–
EDRE180M4	15.00	53.69	2330	–	–	–	o	x	o	o	o	–	–	–
EDRE180L4	18.50	64.95	2340	–	–	–	o	o	x	o	o	–	–	–
EDRE200L4	22.00	78.81	2375	–	–	–	–	o	o	x	o	o	–	–
EDRE225S4	30.00	105.66	1770	–	–	–	–	–	–	o	o	x	o	–
EDRE225M4	37.00	131.64	1770	–	–	–	–	–	–	–.	o	o	x	o

x = recommended o = permitted – = not permitted

EDRN.. motors in⅄ connection at a motor voltage of 220/380 V, 60 Hz, 2G-b, 2D-b, 2GD-b

Motors	P_N	I_N	n_{max}	Inverter power											
	kW	A	min^{-1}	kW											
				0.25	0.37	0.55	0.75	1.1	1.5	2.2	3	4	5.5	7.5	11
EDRN63MS4	0.12	0.42	3230	–	–	–	–	–	–	–	–	–	–	–	–
EDRN63M4	0.18	0.59	3230	x	–	–	–	–	–	–	–	–	–	–	–
EDRN71MS4	0.25	0.75	3350	x	–	–	–	–	–	–	–	–	–	–	–
EDRN71M4	0.37	1.08	3370	o	x	o	–	–	–	–	–	–	–	–	–
EDRN80MK4	0.55	1.37	3380	o	o	x	o	–	–	–	–	–	–	–	–
EDRN80M4	0.75	1.9	3014	–	o	o	x	o	–	–	–	–	–	–	–
EDRN90S4	1.1	2.9	3037	–	–	–	o	x	o	o	–	–	–	–	–
EDRN90L4	1.5	3.7	3048	–	–	–	–	o	x	o	o	–	–	–	–
EDRN100LM4	2.2	5.1	3037	–	–	–	–	–	o	x	o	o	–	–	–
EDRN100L4	3	7.1	3040	–	–	–	–	–	–	o	x	o	o	–	–
EDRN112M4	4	8.7	2992	–	–	–	–	–	–	–	o	x	o	o	–
EDRN132S4	5.5	11.2	3039	–	–	–	–	–	–	–	–	o	x	o	–
EDRN132M4	7.5	16.2	3051	–	–	–	–	–	–	–	–	–	o	x	o
EDRN132L4	9.2	20.1	3059	–	–	–	–	–	–	–	–	–	–	o	x
EDRN160M4	11	22.5	3062	–	–	–	–	–	–	–	–	–	–	o	x
EDRN160L4	15	30	3064	–	–	–	–	–	–	–	–	–	–	–	o
EDRN180M4[1)]	18.5	36	2574	–	–	–	–	–	–	–	–	–	–	–	–
EDRN180L4[2)]	17.5	33	2577	–	–	–	–	–	–	–	–	–	–	–	o

Motors	P_N	I_N	n_{max}	Inverter power												
	kW	A	min^{-1}	kW												
				15	22	30	37	45	55	75	90	110	132	160	200	250
EDRN132M4	7.5	16.2	3051	o	–	–	–	–	–	–	–	–	–	–	–	–
EDRN132L4	9.2	20.1	3059	o	–	–	–	–	–	–	–	–	–	–	–	–
EDRN160M4	11	22.5	3062	o	–	–	–	–	–	–	–	–	–	–	–	–
EDRN160L4	15	30	3064	x	o	o	–	–	–	–	–	–	–	–	–	–
EDRN180M4[1)]	18.5	36	2574	o	x	o	–	–	–	–	–	–	–	–	–	–
EDRN180L4[2)]	17.5	33	2577	o	x	o	–	–	–	–	–	–	–	–	–	–
EDRN180L4[1)]	22	42	2577	o	x	o	o	–	–	–	–	–	–	–	–	–
EDRN200L4[2)]	24	47	2580	–	o	x	o	o	–	–	–	–	–	–	–	–
EDRN200L4[1)]	30	59	2578	–	o	x	o	o	o	–	–	–	–	–	–	–
EDRN225S4[1)]	37	68	1840	–	–	o	x	o	o	o	–	–	–	–	–	–
EDRN225M4[1)]	45	86	1841	–	–	o	o	x	o	o	o	–	–	–	–	–
EDRN250ME4[2)]	30	60	1847	–	o	x	o	o	o	–	–	–	–	–	–	–
EDRN250ME4[1)]	55	110	1843	–	–	–	–	o	x	o	o	o	–	–	–	–
EDRN280S4[2)]	36	73	1841	–	–	o	x	o	o	o	–	–	–	–	–	–
EDRN280S4[1)]	75	153	1841	–	–	–	–	–	–	o	x	o	o	o	–	–
EDRN280M4[2)]	44	86	1839	–	–	o	o	x	o	o	o	–	–	–	–	–
EDRN280M4[1)]	90	171	1839	–	–	–	–	–	–	o	x	o	o	o	–	–

1) Only for design 2D-b.
2) Only for designs 2G-b, 2GD-b.

x = recommended o = permitted – = not permitted

31555454/EN – 11/2023

EDRN.. motors in△ connection at a motor voltage of 220/380 V, 60 Hz, 2G-b, 2D-b, 2GD-b

Motors	P_N	I_N	n_{max}	Inverter power											
	kW	A	min^{-1}	kW											
				0.25	0.37	0.55	0.75	1.1	1.5	2.2	3	4	5.5	7.5	11
EDRN63MS4	0.12	0.72	3435	x	–	–	–	–	–	–	–	–	–	–	–
EDRN63M4	0.18	1.03	3420	x	o	o	–	–	–	–	–	–	–	–	–
EDRN71MS4	0.25	1.30	3465	o	x	o	o	–	–	–	–	–	–	–	–
EDRN71M4	0.37	1.88	3475	–	o	x	o	o	–	–	–	–	–	–	–
EDRN80MK4	0.55	2.37	3500	–	–	o	x	o	o	–	–	–	–	–	–
EDRN80M4	0.75	3.2	3060	–	–	–	o	o	x	o	–	–	–	–	–
EDRN90S4	1.1	5	3077	–	–	–	–	–	o	x	o	o	–	–	–
EDRN90L4	1.5	6.4	3080	–	–	–	–	–	–	o	x	o	o	–	–
EDRN100LM4	2.2	8.7	3075	–	–	–	–	–	–	–	o	x	o	o	–
EDRN100L4	3	12	3073	–	–	–	–	–	–	–	–	o	x	o	o
EDRN112M4	4	14.6	3074	–	–	–	–	–	–	–	–	–	o	x	o
EDRN132S4	5.5	19.2	3075	–	–	–	–	–	–	–	–	–	–	o	x
EDRN132M4	7.5	27.2	3085	–	–	–	–	–	–	–	–	–	–	–	o
EDRN132L4	9.2	34.2	3089	–	–	–	–	–	–	–	–	–	–	–	o

Motors	P_N	I_N	n_{max}	Inverter power												
	kW	A	min^{-1}	kW												
				15	22	30	37	45	55	75	90	110	132	160	200	250
EDRN132S4	5.5	19.2	3075	o	–	–	–	–	–	–	–	–	–	–	–	–
EDRN132M4	7.5	27.2	3085	x	o	–	–	–	–	–	–	–	–	–	–	–
EDRN132L4	9.2	34.2	3089	o	x	o	–	–	–	–	–	–	–	–	–	–
EDRN160M4	11	38	3090	o	x	o	o	–	–	–	–	–	–	–	–	–
EDRN160L4	15	52	3090	–	o	x	o	o	–	–	–	–	–	–	–	–
EDRN180M4[1)]	18.5	63	2577	–	o	o	x	o	o	–	–	–	–	–	–	–
EDRN180L4[2)]	17.5	57	2580	–	o	x	o	o	o	–	–	–	–	–	–	–
EDRN180L4[1)]	22	72	2580	–	–	o	x	o	o	o	–	–	–	–	–	–
EDRN200L4[2)]	24	82	2597	–	–	o	o	x	o	o	–	–	–	–	–	–
EDRN200L4[1)]	30	102	2597	–	–	–	o	o	x	o	o	o	–	–	–	–
EDRN225S4[1)]	37	118	1840	–	–	–	–	o	o	x	o	o	–	–	–	–
EDRN225M4[1)]	45	148	1841	–	–	–	–	–	o	o	x	o	o	–	–	–
EDRN250ME4[2)]	30	104	1847	–	–	–	o	o	x	o	o	o	–	–	–	–
EDRN250ME4[1)]	55	191	1843	–	–	–	–	–	–	–	o	x	o	o	o	–
EDRN280S4[2)]	36	126	1841	–	–	–	–	o	o	x	o	o	o	–	–	–
EDRN280S4[1)]	75	266	1841	–	–	–	–	–	–	–	–	o	o	x	o	o
EDRN280M4[2)]	44	148	1839	–	–	–	–	–	o	o	x	o	o	–	–	–
EDRN280M4[1)]	90	295	1839	–	–	–	–	–	–	–	–	–	o	x	o	o

1) Only for design 2D-b.
2) Only for designs 2G-b, 2GD-b.

x = recommended o = permitted – = not permitted

For power ratings > 90 kW, contact SEW-EURODRIVE.

31555454/EN – 11/2023

6.4.5 Notes for safe operation

General

Install the frequency inverter outside the potentially explosive atmosphere.

Thermal motor protection

Thermal motor protection is ensured by the following measures:

- Winding temperature monitoring through PTC thermistors (/TF) built into the winding. The /TF is monitored via an evaluation unit that complies with Directive 2014/34/EU and is labeled with the explosion protection identification II(2)GD/ II(2)G.
- Monitoring of the motor current must comply with the IECEx Certificate of Conformity (IECEx CoC).
- Limitation of the motor torque must comply with the IECEx Certificate of Conformity (IECEx CoC).

Overvoltage at the motor terminals

When operating the motors on frequency inverters, observe chapter "Permitted voltage stress in inverter operation" (→ 🗎 99).

EMC measures

The following components are permitted for the MOVIDRIVE® and MOVITRAC® inverter series:

- Line filters of the NF..-.. series
- Output chokes of the HD.. series
- Output filter (sine filter) HF..

  When using an output filter, take account of the voltage drop via the filter. Observe chapter "Special application" (→ 🗎 125).

Gear unit according to Directive 2014/34/EU

When parameterizing frequency inverter controlled gearmotors, observe the n_{emax} and M_{amax} values of the gear unit.

In the following illustration, the values are inserted in the nameplate as an example:

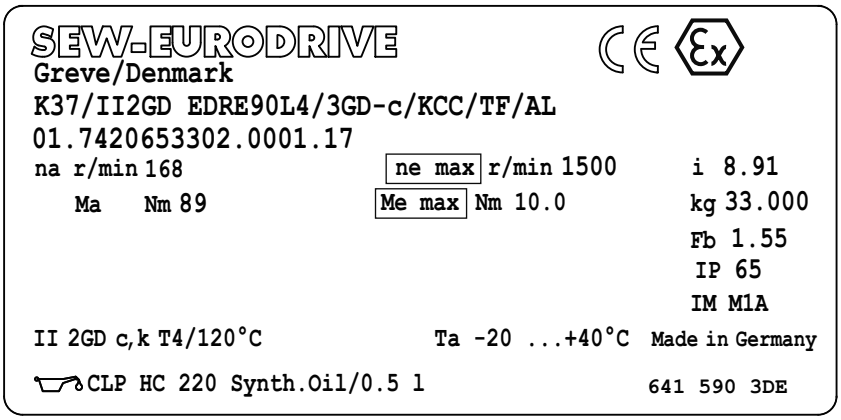

20303627147

31555454/EN – 11/2023

6.5 Safe operation of motors with EPL "Gc" and "Dc" on inverters

Project planning is the basic requirement for safe operation of explosion-protected motors. The following points have to be considered:

- Checking the conditions of the typical application.
- With deviations from the typical application: Calculate the motor terminal voltage.
- Adhere to the thermal torque limit characteristic curve.
- Adhere to the dynamic limit torque.
- Adhere to the motor limit frequency.
- Select a suitable frequency inverter, see chapter "Motor/inverter assignment for motors of design 3G-c, 3D-c and 3GD-c" (→ 🗎 112).
- Use a braking resistor if regenerative operation cannot be ruled out.
- Check the overhung and axial loads on the motor shaft of stand-alone motors.
- Observe the maximum gear unit input speed, see n_{emax} on the nameplate.
- Observe the maximum gear unit output torque, see M_{amax} on the nameplate.
- The maximum permitted braking work per emergency stop must be observed.

6.5.1 Motor terminal voltage

The calculation of the motor terminal voltage is an important component of project planning.

If the conditions differ from the typical application, you have to calculate the start of field weakening f_{D*} and the torque M_{E*}, see chapter "Special application" (→ 🗎 125).

6.5.2 Maximum permitted torques

The thermal torque limit characteristic curve shows the permitted maximum torque for continuous operation of the motor.

If the effective operating point is below the thermal limit characteristic curve, the values may be exceeded briefly, see chapter "Typical application" (→ 🗎 121).

The maximum dynamic limit torque of motors of equipment protection level c must not exceed 150% of M_N.

6.5.3 Maximum and minimum permitted frequencies

The maximum and minimum frequencies are indicated on the nameplate. The actual values may not exceed or fall below these specifications.

31555454/EN – 11/2023

6.5.4 Motor/inverter assignment for motors of design 3G-c, 3D-c and 3GD-c

Frequency inverters that have similar values with respect to output current and output voltage can also be used. For more information, refer to the standard IEC 60079-15 for EDR.. and IEC 60079-7 for EDRN.. motors.

Combinations for motor voltages other than 230/400 V can be requested from SEW-EURODRIVE.

INFORMATION

The maximum speed values may be lower due to options and connection of a gear unit. Refer to the nameplate for the permitted values.

EDR.. motors in ⅄ connection at a motor voltage of 230/400 V, 50 Hz, 3D-c, 3GD-c

Motors	P_N	I_N	n_{max}	Inverter power											
	kW	A	min^{-1}	kW											
				0.25	0.37	0.55	0.75	1.1	1.5	2.2	3	4	5.5	7.5	11
EDRS71S4	0.12	0.38	2470	o	–	–	–	–	–	–	–	–	–	–	–
EDRS71S4	0.18	0.57	2445	o	–	–	–	–	–	–	–	–	–	–	–
EDRS71S4	0.25	0.86	2415	x	o	o	–	–	–	–	–	–	–	–	–
EDRS71M4	0.37	1	2185	o	x	o	o	–	–	–	–	–	–	–	–
EDRS80S4	0.55	1.38	2750	o	o	x	o	o	–	–	–	–	–	–	–
EDRE80M4	0.55	1.33	2870	o	o	x	o	o	–	–	–	–	–	–	–
EDRE80M4	0.75	1.73	2820	–	o	o	x	o	o	–	–	–	–	–	–
EDRE90M4	1.1	2.55	2790	–	–	o	o	x	o	o	–	–	–	–	–
EDRE90L4	1.5	3.5	2780	–	–	–	–	o	x	o	o	–	–	–	–
EDRE100M4	2.2	4.9	2805	–	–	–	–	–	o	x	o	o	–	–	–
EDRE100L4	2.2	4.75	2825	–	–	–	–	–	o	x	o	o	–	–	–
EDRE100LC4	3	6.4	2850	–	–	–	–	–	–	o	x	o	o	–	–
EDRE112M4	3	6.4	2460	–	–	–	–	–	–	o	x	o	o	–	–
EDRE132S4	4	8.4	2510	–	–	–	–	–	–	–	o	x	o	o	–
EDRE132M4	5.5	11.3	2445	–	–	–	–	–	–	–	-	o	x	o	o

Motors	P_N	I_N	n_{max}	Inverter power															
	kW	A	min^{-1}	kW															
				5.5	7.5	11	15	22	30	37	45	55	75	90	110	132	160	200	250
EDRE160S4	7.5	15.4	2500	o	x	o	o	–	–	–	–	–	–	–	–	–	–	–	–
EDRE160M4	9.2	19.1	2540	–	o	x	o	o	–	–	–	–	–	–	–	–	–	–	–
EDRE180S4	11	22	2545	–	o	x	o	o	–	–	–	–	–	–	–	–	–	–	–
EDRE180M4	15	29.5	2530	–	–	o	x	o	o	o	–	–	–	–	–	–	–	–	–
EDRE180L4	18.5	36	2535	–	–	–	o	x	o	o	o	–	–	–	–	–	–	–	–
EDRE200L4	22	43	2560	–	–	–	o	x	o	o	o	o	–	–	–	–	–	–	–
EDRE225S4	30	59	2565	–	–	–	–	o	x	o	o	o	o	–	–	–	–	–	–
EDRE225M4	37	71	2560	–	–	–	–	–	o	x	o	o	o	o	–	–	–	–	–
EDRE250M4	45	88	2450	–	–	–	–	–	–	o	x	o	o	o	o	–	–	–	–
EDRE280S4	55	106	2450	–	–	–	–	–	–	–	o	x	o	o	o	o	–	–	–
EDRE280M4	75	144	2465	–	–	–	–	–	–	–	–	o	x	o	o	o	o	–	–
EDRE315K4	90	159	2470	–	–	–	–	–	–	–	–	–	o	x	o	o	o	o	–
EDRE315S4	110	198	2110	–	–	–	–	–	–	–	–	–	–	o	x	o	o	o	o
EDRE315M4	132	240	1780	–	–	–	–	–	–	–	–	–	–	o	o	x	o	o	o
EDRE315L4	160	280	1780	–	–	–	–	–	–	–	–	–	–	–	o	o	x	o	o

x = recommended o = permitted – = not permitted

31555454/EN – 11/2023

EDR.. motors in △ connection at a motor voltage of 230/400 V, 50 Hz, 3D-c, 3GD-c

Motors	P_N	I_N	n_{max}	Inverter power													
	kW	A	min^{-1}	kW													
				0.25	0.37	0.55	0.75	1.1	1.5	2.2	3	4	5.5	7.5	11	15	22
EDRS71S4	0.12	0.7	2910	o	o	–	–	–	–	–	–	–	–	–	–	–	–
EDRS71S4	0.18	1.0	2445	x	o	o	o	–	–	–	–	–	–	–	–	–	–
EDRS71S4	0.25	1.5	2900	–	x	o	o	o	–	–	–	–	–	–	–	–	–
EDRS71M4	0.37	1.7	2850	–	o	x	o	o	o	–	–	–	–	–	–	–	–
EDRS80S4	0.55	2.4	2900	–	–	o	x	o	o	o	–	–	–	–	–	–	–
EDRE80M4	0.55	2.4	2930	–	–	o	x	o	o	o	–	–	–	–	–	–	–
EDRE80M4	0.75	3.0	2910	–	–	–	o	x	o	o	o	–	–	–	–	–	–
EDRE90M4	1.1	4.4	2860	–	–	–	–	o	o	x	o	o	–	–	–	–	–
EDRE90L4	1.5	6.1	2920	–	–	–	–	–	–	o	x	o	o	–	–	–	–
EDRE100M4	2.2	8.5	2905	–	–	–	–	–	–	–	o	x	o	o	–	–	–
EDRE100L4	2.2	8.2	2930	–	–	–	–	–	–	–	o	x	o	o	–	–	–
EDRE100LC4	3	11.1	2935	–	–	–	–	–	–	–	–	o	x	o	o	–	–
EDRE112M4	3	11.1	2545	–	–	–	–	–	–	–	–	o	x	o	o	–	–
EDRE132S4	4	14.5	2565	–	–	–	–	–	–	–	–	–	o	x	o	o	–
EDRE132M4	5.5	19.6	2535	–	–	–	–	–	–	–	–	–	–	o	x	o	o

Motors	P_N	I_N	n_{max}	Inverter power													
	kW	A	min^{-1}	kW													
				11	15	22	30	37	45	55	75	90	110	132	160	200	250
EDRE160S4	7.5	26.6	2560	o	x	o	o	–	–	–	–	–	–	–	–	–	–
EDRE160M4	9.2	33.0	2570	o	o	x	o	o	–	–	–	–	–	–	–	–	–
EDRE180S4	11	38.1	2580	–	o	x	o	o	o	–	–	–	–	–	–	–	–
EDRE180M4	15	51.0	2565	–	–	o	x	o	o	o	–	–	–	–	–	–	–
EDRE180L4	18.5	62.3	2575	–	–	o	o	x	o	o	o	–	–	–	–	–	–
EDRE200L4	22	74.4	2585	–	–	–	o	o	x	o	o	o	–	–	–	–	–
EDRE225S4	30	102	2580	–	–	–	–	o	o	x	o	o	o	o	–	–	–
EDRE225M4	37	123	2585	–	–	–	–	–	o	o	x	o	o	o	o	–	–
EDRE250M4	45	152	2465	–	–	–	–	–	–	–	o	x	o	o	o	o	–
EDRE280S4	55	183	2465	–	–	–	–	–	–	–	o	o	x	o	o	o	–
EDRE280M4	75	249	2470	–	–	–	–	–	–	–	–	–	o	x	o	o	o
EDRE315K4	90	275	2475	–	–	–	–	–	–	–	–	–	o	o	x	o	o
EDRE315S4	110	343	2110	–	–	–	–	–	–	–	–	–	–	o	o	x	o
EDRE315M4	132	415	1785	–	–	–	–	–	–	–	–	–	–	–	o	o	x
EDRE315L4	160	484	1785	–	–	–	–	–	–	–	–	–	–	–	–	o	o

x = recommended o = permitted – = not permitted

31555454/EN – 11/2023

EDRN.. motors in ⅄ connection at a motor voltage of 230/400 V, 50 Hz, 3G-c, 3D-c, 3GD-c

Motors	P_N	I_N	n_{max}	Inverter power											
	kW	A	min^{-1}	kW											
				0.25	0.37	0.55	0.75	1.1	1.5	2.2	3	4	5.5	7.5	11
EDRN63MS4	0.12	0.41	3245	x	–	–	–	–	–	–	–	–	–	–	–
EDRN63M4	0.18	0.56	3175	x	–	–	–	–	–	–	–	–	–	–	–
EDRN71MS4	0.25	0.77	3190	x	o	–	–	–	–	–	–	–	–	–	–
EDRN71M4	0.37	1.1	3185	o	x	o	o	–	–	–	–	–	–	–	–
EDRN80MK4	0.55	1.37	3390	o	o	x	o	o	–	–	–	–	–	–	–
EDRN80M4	0.75	1.8	2856	–	o	o	x	o	o	–	–	–	–	–	–
EDRN90S4	1.1	2.6	2881	–	–	o	o	x	o	o	–	–	–	–	–
EDRN90L4	1.5	3.5	2897	–	–	–	–	o	x	o	o	–	–	–	–
EDRN100LS4	2.2	4.9	2878	–	–	–	–	–	o	x	o	o	–	–	–
EDRN100L4	3	6.6	2890	–	–	–	–	–	–	o	x	o	o	o	–
EDRN112M4	4	8.4	2884	–	–	–	–	–	–	–	o	x	o	o	–
EDRN132S4	5.5	10.7	2879	–	–	–	–	–	–	–	–	o	x	o	o
EDRN132M4	7.5	15.3	2869	–	–	–	–	–	–	–	–	–	o	x	o
EDRN132L4	9.2	19.9	2887	–	–	–	–	–	–	–	–	–	–	o	x
EDRN160M4	11	21	2905	–	–	–	–	–	–	–	–	–	–	o	x
EDRN160L4	15	29	2912	–	–	–	–	–	–	–	–	–	–	–	o
EDRN180M4	18.5	34	2559	–	–	–	–	–	–	–	–	–	–	–	o

Motors	P_N	I_N	n_{max}	Inverter power												
	kW	A	min^{-1}	kW												
				15	22	30	37	45	55	75	90	110	132	160	200	250
EDRN132M4	7.5	15.3	2869	o	–	–	–	–	–	–	–	–	–	–	–	–
EDRN132L4	9.2	19.9	2887	o	o	–	–	–	–	–	–	–	–	–	–	–
EDRN160M4	11	21	2905	o	o	–	–	–	–	–	–	–	–	–	–	–
EDRN160L4	15	29	2912	x	o	o	–	–	–	–	–	–	–	–	–	–
EDRN180M4	18.5	34	2559	o	x	o	o	–	–	–	–	–	–	–	–	–
EDRN180L4	22	39	2560	o	x	o	o	o	–	–	–	–	–	–	–	–
EDRN200L4	30	57	2567	–	o	x	o	o	o	o	–	–	–	–	–	–
EDRN225S4	37	65	1835	–	o	o	x	o	o	o	–	–	–	–	–	–
EDRN225M4	45	82	1835	–	–	o	o	x	o	o	o	o	–	–	–	–
EDRN250M4	55	108	1837	–	–	–	–	o	x	o	o	o	o	–	–	–
EDRN280S4	75	144	1840	–	–	–	–	–	o	x	o	o	o	o	–	–
EDRN280M4	90	164	1833	–	–	–	–	–	–	o	x	o	o	o	o	–
EDRN315S4	110	193	1846	–	–	–	–	–	–	–	o	x	o	o	o	o

x = recommended o = permitted – = not permitted

31555454/EN – 11/2023

EDRN.. motors in △ connection at a motor voltage of 230/400 V, 50 Hz, 3G-c, 3D-c, 3GD-c

Motors	P_N	I_N	n_{max}	Inverter power											
	kW	A	min^{-1}	kW											
				0.25	0.37	0.55	0.75	1.1	1.5	2.2	3	4	5.5	7.5	11
EDRN63MS4	0.12	0.72	3435	x	o	–	–	–	–	–	–	–	–	–	–
EDRN63M4	0.18	0.99	3440	x	o	o	o	–	–	–	–	–	–	–	–
EDRN71MS4	0.25	1.37	3460	o	x	o	o	o	–	–	–	–	–	–	–
EDRN71M4	0.37	1.92	3470	–	o	x	o	o	o	–	–	–	–	–	–
EDRN80MK4	0.55	2.4	3505	–	–	o	x	o	o	o	–	–	–	–	–
EDRN80M4	0.75	3.1	2923	–	–	–	o	x	o	o	o	–	–	–	–
EDRN90S4	1.1	4.5	2945	–	–	–	–	–	o	x	o	o	–	–	–
EDRN90L4	1.5	6.1	2948	–	–	–	–	–	–	o	x	o	o	–	–
EDRN100LS4	2.2	8.6	2933	–	–	–	–	–	–	–	o	x	o	o	–
EDRN100L4	3	11.4	2939	–	–	–	–	–	–	–	–	o	x	o	o
EDRN112M4	4	14.5	2935	–	–	–	–	–	–	–	–	–	o	x	o
EDRN132S4	5.5	18.7	2939	–	–	–	–	–	–	–	–	–	–	o	x
EDRN132M4	7.5	26.5	2953	–	–	–	–	–	–	–	–	–	–	–	o

Motors	P_N	I_N	n_{max}	Inverter power												
	kW	A	min^{-1}	kW												
				15	22	30	37	45	55	75	90	110	132	160	200	250
EDRN112M4	4	14.5	2935	o	–	–	–	–	–	–	–	–	–	–	–	–
EDRN132S4	5.5	18.7	2939	o	o	–	–	–	–	–	–	–	–	–	–	–
EDRN132M4	7.5	26.5	2953	x	o	o	–	–	–	–	–	–	–	–	–	–
EDRN132L4	9.2	34.5	2957	o	x	o	o	–	–	–	–	–	–	–	–	–
EDRN160M4	11	37	2960	o	x	o	o	o	–	–	–	–	–	–	–	–
EDRN160L4	15	50	2960	–	o	x	o	o	o	–	–	–	–	–	–	–
EDRN180M4	18.5	60	2584	–	o	x	o	o	o	o	–	–	–	–	–	–
EDRN180L4	22	68	2582	–	–	o	x	o	o	o	o	–	–	–	–	–
EDRN200L4	30	100	2586	–	–	–	o	o	x	o	o	o	o	–	–	–
EDRN225S4	37	113	1835	–	–	–	–	o	o	x	o	o	o	–	–	–
EDRN225M4	45	142	1835	–	–	–	–	–	o	o	x	o	o	o	–	–
EDRN250M4	55	187	1837	–	–	–	–	–	–	–	o	x	o	o	o	–
EDRN280S4	75	250	1840	–	–	–	–	–	–	–	–	o	x	o	o	o
EDRN280M4	90	285	1833	–	–	–	–	–	–	–	–	o	o	x	o	o
EDRN315S4	110	335	1846	–	–	–	–	–	–	–	–	–	o	o	x	o
EDRN315M4[1)]	132	240	1840	–	–	–	–	–	–	–	o	o	x	o	o	o
EDRN315L4[1)]	160	280	1840	–	–	–	–	–	–	–	–	o	o	x	o	o
EDRN315H4[1)]	200	360	1845	–	–	–	–	–	–	–	–	–	–	o	x	o

1) Only 400 V with 50 Hz characteristic curve possible with this size

x = recommended o = permitted – = not permitted

31555454/EN – 11/2023

EDR.. motors in ⅄ connection at a motor voltage of 220/380 V, 60 Hz, 3D-c, 3GD-c

Motors	P_N	I_N	n_{max}	Inverter power									
	kW	A	min^{-1}	kW									
				0.25	0.37	0.55	0.75	1.1	1.5	2.2	3	4	5.5
EDRS71S4	0.25	0.91	2405	x	o	o	–	–	–	–	–	–	–
EDRS71M4	0.37	1.10	2160	o	x	o	o	–	–	–	–	–	–
EDRE80M4	0.55	1.40	3020	o	o	x	o	o	–	–	–	–	–
EDRS80S4	0.55	1.43	2935	–	o	x	o	o	–	–	–	–	–
EDRE80M4	0.75	1.77	2980	–	o	o	x	o	o	–	–	–	–
EDRE90M4	1.10	2.70	2975	–	–	o	o	x	o	o	–	–	–
EDRE90L4	1.50	3.65	2920	–	–	–	–	o	x	o	o	–	–
EDRE100L4	2.20	5.40	2985	–	–	–	–	–	o	x	o	o	o
EDRE100LC4	3.00	6.80	2995	–	–	–	–	–	–	o	x	o	o
EDRE112M4	3.00	6.70	2475	–	–	–	–	–	–	o	x	o	o
EDRE132S4	4.00	8.80	2520	–	–	–	–	–	–	–	o	x	o
EDRE132M4	5.50	11.90	2460	–	–	–	–	–	–	–	–	o	x
EDRE160S4	7.50	16.20	2510	–	–	–	–	–	–	–	–	–	o
EDRE160M4	9.20	20.00	2545	–	–	–	–	–	–	–	–	–	–
EDRE180S4	11.00	23.00	2550	–	–	–	–	–	–	–	–	–	–
EDRE180M4	15.00	31.00	2535	–	–	–	–	–	–	–	–	–	–
EDRE180L4	18.50	36.00	2540	–	–	–	–	–	–	–	–	–	–
EDRE200L4	22.00	45.50	2565	–	–	–	–	–	–	–	–	–	–
EDRE225S4	30.00	57.00	2565	–	–	–	–	–	–	–	–	–	–
EDRE225M4	37.00	71.00	2565	–	–	–	–	–	–	–	–	–	–
EDRE225M4	45.00	86.00	2450	–	–	–	–	–	–	–	–	–	–

Motors	P_N	I_N	n_{max}	Inverter power										
	kW	A	min^{-1}	kW										
				7.5	11	15	22	30	37	45	55	75	90	110
EDRS71S4	0.25	0.91	2405	–	–	–	–	–	–	–	–	–	–	–
EDRS71M4	0.37	1.10	2160	–	–	–	–	–	–	–	–	–	–	–
EDRE80M4	0.55	1.40	3020	–	–	–	–	–	–	–	–	–	–	–
EDRS80S4	0.55	1.43	2935	–	–	–	–	–	–	–	–	–	–	–
EDRE80M4	0.75	1.77	2980	–	–	–	–	–	–	–	–	–	–	–
EDRE90M4	1.10	2.70	2975	–	–	–	–	–	–	–	–	–	–	–
EDRE90L4	1.50	3.65	2920	–	–	–	–	–	–	–	–	–	–	–
EDRE100L4	2.20	5.40	2985	–	–	–	–	–	–	–	–	–	–	–
EDRE100LC4	3.00	6.80	2995	o	–	–	–	–	–	–	–	–	–	–
EDRE112M4	3.00	6.70	2475	o	–	–	–	–	–	–	–	–	–	–
EDRE132S4	4.00	8.80	2520	o	–	–	–	–	–	–	–	–	–	–
EDRE132M4	5.50	11.90	2460	o	o	–	–	–	–	–	–	–	–	–
EDRE160S4	7.50	16.20	2510	x	o	o	–	–	–	–	–	–	–	–
EDRE160M4	9.20	20.00	2545	o	x	o	o	–	–	–	–	–	–	–
EDRE180S4	11.00	23.00	2550	–	x	o	o	–	–	–	–	–	–	–
EDRE180M4	15.00	31.00	2535	–	o	x	o	o	o	–	–	–	–	–
EDRE180L4	18.50	36.00	2540	–	–	o	x	o	o	o	–	–	–	–
EDRE200L4	22.00	45.50	2565	–	–	o	x	o	o	o	o	–	–	–
EDRE225S4	30.00	57.00	2565	–	–	–	o	x	o	o	o	o	–	–
EDRE225M4	37.00	71.00	2565	–	–	–	–	o	x	o	o	o	o	–
EDRE225M4	45.00	86.00	2450	–	–	–	–	–	o	x	o	o	o	o

x = recommended o = permitted – = not permitted

31555454/EN – 11/2023

EDR.. motors in △ connection at a motor voltage of 220/380 V, 60 Hz, 3D-c, 3GD-c

Motors	P_N	I_N	n_{max}	Inverter power									
	kW	A	min^{-1}	kW									
				0.25	0.37	0.55	0.75	1.1	1.5	2.2	3	4	5.5
EDRS71S4	0.25	1.58	3015	–	x	o	o	o	–	–	–	–	–
EDRS71M4	0.37	1.91	2965	–	o	x	o	o	o	–	–	–	–
EDRE80M4	0.55	2.42	3055	–	–	o	o	x	o	o	–	–	–
EDRS80S4	0.55	2.48	3035	–	–	o	o	x	o	o	–	–	–
EDRE80M4	0.75	3.07	3045	–	–	–	o	x	o	o	o	–	–
EDRE90M4	1.10	4.68	3040	–	–	–	–	–	o	x	o	o	–
EDRE90L4	1.50	6.32	3045	–	–	–	–	–	–	o	x	o	o
EDRE100L4	2.20	9.35	3050	–	–	–	–	–	–	–	o	x	o
EDRE100LC4	3.00	11.78	3060	–	–	–	–	–	–	–	–	o	x
EDRE112M4	3.00	11.60	2550	–	–	–	–	–	–	–	–	o	x
EDRE132S4	4.00	15.24	2565	–	–	–	–	–	–	–	–	–	o
EDRE132M4	5.50	20.61	2540	–	–	–	–	–	–	–	–	–	–
EDRE160S4	7.50	28.06	2565	–	–	–	–	–	–	–	–	–	–
EDRE160M4	9.20	34.64	2570	–	–	–	–	–	–	–	–	–	–
EDRE180S4	11.00	39.84	2580	–	–	–	–	–	–	–	–	–	–
EDRE180M4	15.00	53.69	2565	–	–	–	–	–	–	–	–	–	–
EDRE180L4	18.50	62.35	2575	–	–	–	–	–	–	–	–	–	–
EDRE200L4	22.00	78.81	2585	–	–	–	–	–	–	–	–	–	–
EDRE225S4	30.00	98.73	2580	–	–	–	–	–	–	–	–	–	–
EDRE225M4	37.00	122.98	2585	–	–	–	–	–	–	–	–	–	–
EDRE225M4	45.00	148.96	2465	–	–	–	–	–	–	–	–	–	–

Motors	P_N	I_N	n_{max}	Inverter power										
	kW	A	min^{-1}	kW										
				7.5	11	15	22	30	37	45	55	75	90	110
EDRS71S4	0.25	1.58	3015	–	–	–	–	–	–	–	–	–	–	–
EDRS71M4	0.37	1.91	2965	–	–	–	–	–	–	–	–	–	–	–
EDRE80M4	0.55	2.42	3055	–	–	–	–	–	–	–	–	–	–	–
EDRS80S4	0.55	2.48	3035	–	–	–	–	–	–	–	–	–	–	–
EDRE80M4	0.75	3.07	3045	–	–	–	–	–	–	–	–	–	–	–
EDRE90M4	1.10	4.68	3040	–	–	–	–	–	–	–	–	–	–	–
EDRE90L4	1.50	6.32	3045	–	–	–	–	–	–	–	–	–	–	–
EDRE100L4	2.20	9.35	3050	o	–	–	–	–	–	–	–	–	–	–
EDRE100LC4	3.00	11.78	3060	o	o	–	–	–	–	–	–	–	–	–
EDRE112M4	3.00	11.60	2550	o	o	–	–	–	–	–	–	–	–	–
EDRE132S4	4.00	15.24	2565	x	o	o	–	–	–	–	–	–	–	–
EDRE132M4	5.50	20.61	2540	o	x	o	o	–	–	–	–	–	–	–
EDRE160S4	7.50	28.06	2565	–	o	x	o	o	–	–	–	–	–	–
EDRE160M4	9.20	34.64	2570	–	–	o	x	o	o	–	–	–	–	–
EDRE180S4	11.00	39.84	2580	–	–	o	x	o	o	o	–	–	–	–
EDRE180M4	15.00	53.69	2565	–	–	–	o	x	o	o	o	o	–	–
EDRE180L4	18.50	62.35	2575	–	–	–	o	o	x	o	o	o	–	–
EDRE200L4	22.00	78.81	2585	–	–	–	–	o	o	x	o	o	o	–
EDRE225S4	30.00	98.73	2580	–	–	–	–	–	o	o	x	o	o	–
EDRE225M4	37.00	122.98	2585	–	–	–	–	–	–	o	o	x	o	o
EDRE225M4	45.00	148.96	2465	–	–	–	–	–	–	–	o	o	x	o

x = recommended o = permitted – = not permitted

31555454/EN – 11/2023

EDRN.. motors in ⅄ connection at a motor voltage of 220/380 V, 60 Hz, 3G-c, 3D-c, 3GD-c

Motors	P_N	I_N	n_{max}	Inverter power											
	kW	A	min^{-1}	kW											
				0.25	0.37	0.55	0.75	1.1	1.5	2.2	3	4	5.5	7.5	11
EDRN63MS4	0.12	0.42	3230	x	–	–	–	–	–	–	–	–	–	–	–
EDRN63M4	0.18	0.59	3230	x	–	–	–	–	–	–	–	–	–	–	–
EDRN71MS4	0.25	0.75	3350	x	o	–	–	–	–	–	–	–	–	–	–
EDRN71M4	0.37	1.08	3370	o	x	o	o	–	–	–	–	–	–	–	–
EDRN80MK4	0.55	1.37	3380	o	o	x	o	o	–	–	–	–	–	–	–
EDRN80M4	0.75	2	3014	–	o	o	x	o	o	–	–	–	–	–	–
EDRN90S4	1.1	2.9	3037	–	–	–	o	x	o	o	o	–	–	–	–
EDRN90L4	1.5	3.7	3048	–	–	–	–	o	x	o	o	–	–	–	–
EDRN100LM4	2.2	5.1	3037	–	–	–	–	–	o	x	o	o	o	–	–
EDRN100L4	3	7.1	3040	–	–	–	–	–	–	o	x	o	o	o	–
EDRN112M4	4	8.7	2992	–	–	–	–	–	–	–	o	x	o	o	–
EDRN132S4	5.5	11.2	3039	–	–	–	–	–	–	–	–	o	x	o	o
EDRN132M4	7.5	16.2	3051	–	–	–	–	–	–	–	–	–	o	x	o
EDRN132L4	9.2	20.1	3059	–	–	–	–	–	–	–	–	–	–	o	x
EDRN160M4	11	22.5	3062	–	–	–	–	–	–	–	–	–	–	o	x
EDRN160L4	15	30	3064	–	–	–	–	–	–	–	–	–	–	–	o

Motors	P_N	I_N	n_{max}	Inverter power												
	kW	A	min^{-1}	kW												
				15	22	30	37	45	55	75	90	110	132	160	200	250
EDRN132M4	7.5	16.2	3051	o	–	–	–	–	–	–	–	–	–	–	–	–
EDRN132L4	9.2	20.1	3059	o	o	–	–	–	–	–	–	–	–	–	–	–
EDRN160M4	11	22.5	3062	o	o	–	–	–	–	–	–	–	–	–	–	–
EDRN160L4	15	30	3064	x	o	o	o	–	–	–	–	–	–	–	–	–
EDRN180M4	18.5	36	2574	o	x	o	o	o	–	–	–	–	–	–	–	–
EDRN180L4	22	42	2577	o	x	o	o	o	–	–	–	–	–	–	–	–
EDRN200L4	30	59	2578	–	o	x	o	o	o	o	–	–	–	–	–	–
EDRN225S4	37	68	1840	–	–	o	x	o	o	o	o	–	–	–	–	–
EDRN225M4	45	86	1841	–	–	o	o	x	o	o	o	o	–	–	–	–
EDRN250ME4	55	110	1843	–	–	–	–	o	x	o	o	o	o	–	–	–
EDRN280S4	75	153	1841	–	–	–	–	–	–	o	x	o	o	o	o	–
EDRN280M4	90	171	1839	–	–	–	–	–	–	o	x	o	o	o	o	–

x = recommended o = permitted – = not permitted

31555454/EN – 11/2023

EDRN.. motors in △ connection at a motor voltage of 220/380 V, 60 Hz, 3G-c, 3D-c, 3GD-c

Motors	P_N	I_N	n_{max}	Inverter power											
	kW	A	min^{-1}	kW											
				0.25	0.37	0.55	0.75	1.1	1.5	2.2	3	4	5.5	7.5	11
EDRN63MS4	0.12	0.72	3435	x	o	–	–	–	–	–	–	–	–	–	–
EDRN63M4	0.18	1.03	3420	x	o	o	o	–	–	–	–	–	–	–	–
EDRN71MS4	0.25	1.30	3465	o	x	o	o	o	–	–	–	–	–	–	–
EDRN71M4	0.37	1.88	3475	–	o	x	o	o	o	–	–	–	–	–	–
EDRN80MK4	0.55	2.37	3500	–	–	o	x	o	o	o	–	–	–	–	–
EDRN80M4	0.75	3.2	3060	–	–	–	o	o	x	o	o	–	–	–	–
EDRN90S4	1.1	5	3077	–	–	–	–	–	o	x	o	o	–	–	–
EDRN90L4	1.5	6.4	3080	–	–	–	–	–	–	o	x	o	o	–	–
EDRN100LM4	2.2	8.7	3075	–	–	–	–	–	–	–	o	x	o	o	–
EDRN100L4	3	12.2	3073	–	–	–	–	–	–	–	–	o	x	o	o
EDRN112M4	4	14.6	3074	–	–	–	–	–	–	–	–	–	o	x	o
EDRN132S4	5.5	19.2	3075	–	–	–	–	–	–	–	–	–	–	o	x
EDRN132M4	7.5	27.2	3085	–	–	–	–	–	–	–	–	–	–	–	o
EDRN132L4	9.2	34.2	3089	–	–	–	–	–	–	–	–	–	–	–	o

Motors	P_N	I_N	n_{max}	Inverter power												
	kW	A	min^{-1}	kW												
				15	22	30	37	45	55	75	90	110	132	160	200	250
EDRN112M4	4	14.6	3074	o	–	–	–	–	–	–	–	–	–	–	–	–
EDRN132S4	5.5	19.2	3075	o	o	–	–	–	–	–	–	–	–	–	–	–
EDRN132M4	7.5	27.2	3085	x	o	o	–	–	–	–	–	–	–	–	–	–
EDRN132L4	9.2	34.2	3089	o	x	o	o	–	–	–	–	–	–	–	–	–
EDRN160M4	11	38	3090	o	x	o	o	o	–	–	–	–	–	–	–	–
EDRN160L4	15	52	3090	–	o	x	o	o	o	o	–	–	–	–	–	–
EDRN180M4	18.5	63	2577	–	o	o	x	o	o	o	–	–	–	–	–	–
EDRN180L4	22	72	2580	–	–	o	x	o	o	o	o	–	–	–	–	–
EDRN200L4	30	102	2597	–	–	–	o	o	x	o	o	o	o	–	–	–
EDRN225S4	37	118	1840	–	–	–	–	o	o	x	o	o	o	–	–	–
EDRN225M4	45	148	1841	–	–	–	–	–	o	o	x	o	o	o	–	–
EDRN250ME4	55	191	1843	–	–	–	–	–	–	–	o	x	o	o	o	o
EDRN280S4	75	266	1841	–	–	–	–	–	–	–	–	o	o	x	o	o
EDRN280M4	90	295	1839	–	–	–	–	–	–	–	–	–	o	x	o	o

x = recommended o = permitted – = not permitted

For power ratings > 90 kW, contact SEW-EURODRIVE.

31555454/EN – 11/2023

6.5.5 Notes for safe operation

General

Install the frequency inverter outside the potentially explosive atmosphere.

Thermal motor protection

Only motors that are equipped with a PTC thermistor /TF are permitted for operation on an inverter to ensure that the permitted limit temperature is not exceeded. This must be evaluated using an appropriate device.

Overvoltage at the motor terminals

When operating the motors on frequency inverters, observe chapter "Permitted voltage stress in inverter operation" (→ 🗎 99).

EMC measures

The following components are permitted for the MOVIDRIVE® and MOVITRAC® inverter series:

- Line filters of the NF..-.. series
- Output chokes of the HD.. series
- Output filter (sine filter) HF..

  When using an output filter, take account of the voltage drop via the filter. Observe chapter "Special application" (→ 🗎 125).

Gear unit to Directive 2014/34/EU

When parameterizing frequency inverter controlled gearmotors, observe the n_{emax} and M_{amax} values of the gear unit.

In the following illustration, the values are inserted in the nameplate as an example:

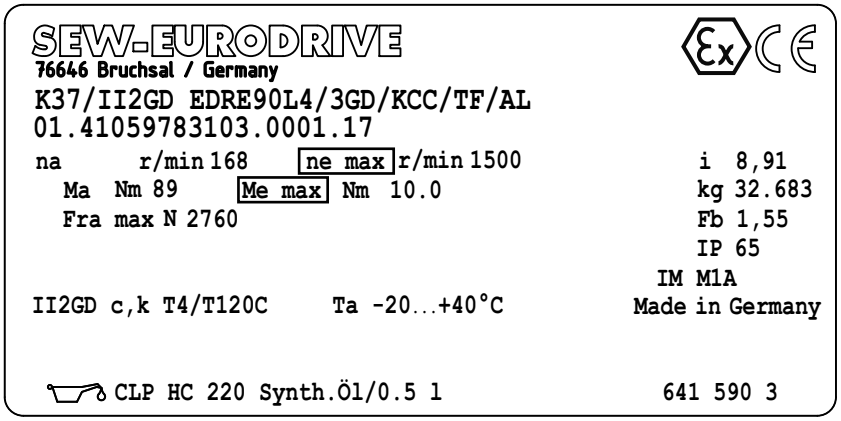

19547295243

31555454/EN – 11/2023

6.6 Typical application

The following conditions must be met:

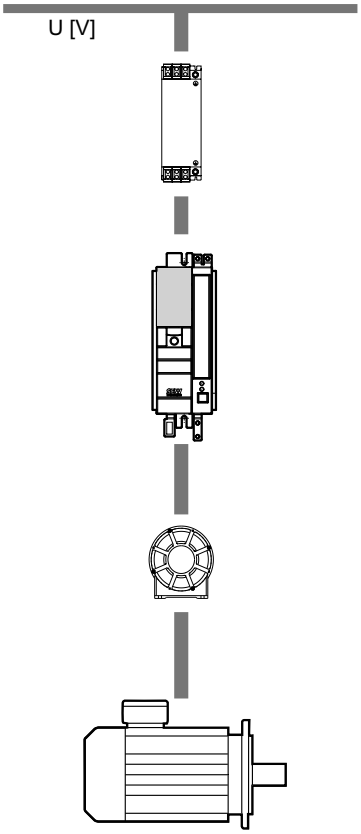

9007204712625163

- Supply system tolerance: ± 5%
- Installation with and without external NF line filter
- Frequency inverter:
  - MOVITRAC® B
  - MOVIDRIVE® B
- Installation without line choke and without sine filter
- Installation of HD output choke
- Max. motor cable length 100 m

  Maximum permitted voltage drop: 10 V
- Rated motor voltage[1]: 219 – 241 V /

  380 – 420 V or 230 / 400 V (here for V_{line} = 400 V)

1) Choose the rated motor voltage depending on the line voltage.

6.6.1 Motor terminal voltage

The thermal torque limit curves are based on the assumption that all conditions of a typical application are fulfilled.

The motor terminal voltage must only be dimensioned if the conditions of a typical application are not met. For further information, refer to chapter "Calculating the motor terminal voltage" (→ 🗎 126).

6.6.2 Limit characteristic curves of EDR.., EDRN.. motors in inverter operation

The thermal torque limit curves show the permitted maximum torque ratings for continuous operation.

The maximum permitted dynamic limit torque is 150% of the rated motor torque.

If the effective operating point is below the thermal limit curve, the values may be exceeded briefly.

EPL "Gc" and "Dc"

The following diagram shows the typical limit characteristic curve for EDR..71 – 225, EDRN63 – 225 motors. Refer to the nameplate for the exact values.

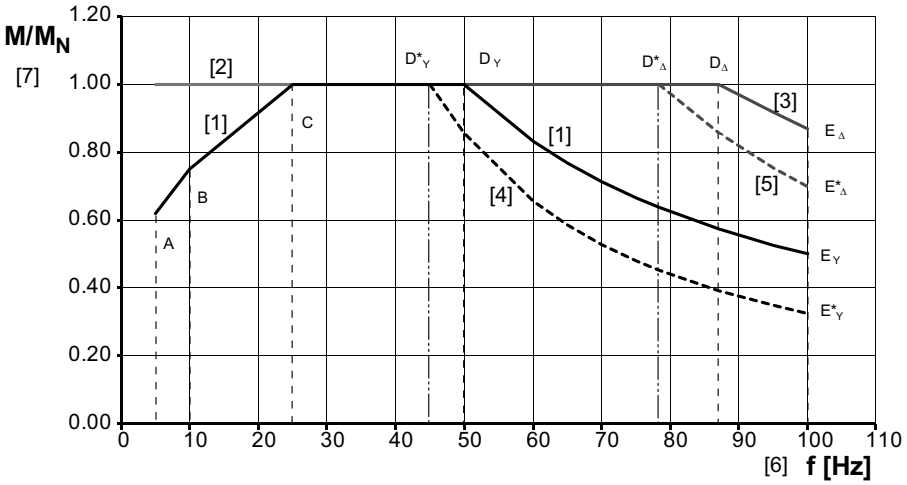

36028800670915979

[1] Star connection
[2] Forced cooling fan /VE
[3] Delta connection
[4] Typical application – star connection
[5] Typical application – delta connection
[6] Supply frequency of the motor
[7] Torque ratio M/M_N

The following diagram shows the typical limit characteristic curve for EDR..250 – 315, EDRN250 – 315 motors. Refer to the nameplate for the exact values.

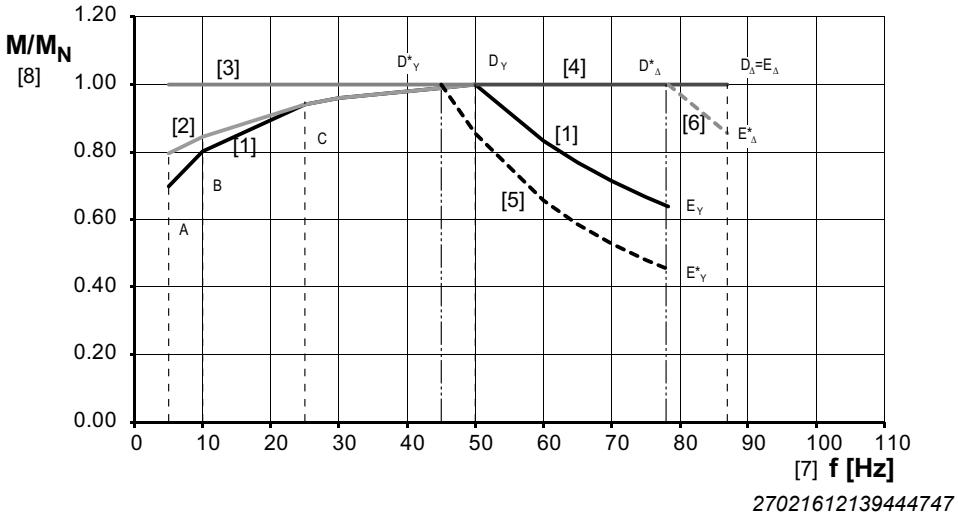

[1]	Star connection for EDR..250/280	[5]	Typical application – star connection
[2]	Star connection for EDR..315	[6]	Typical application – delta connection
[3]	Forced cooling fan /VE	[7]	Supply frequency of the motor
[4]	Delta connection	[8]	Torque ratio M/M_N

EPL "Gb" and "Db"

The following diagram shows the typical limit characteristic curve for EDR..71 – 225, EDRN63 – 315 motors. Refer to the nameplate for the exact values.

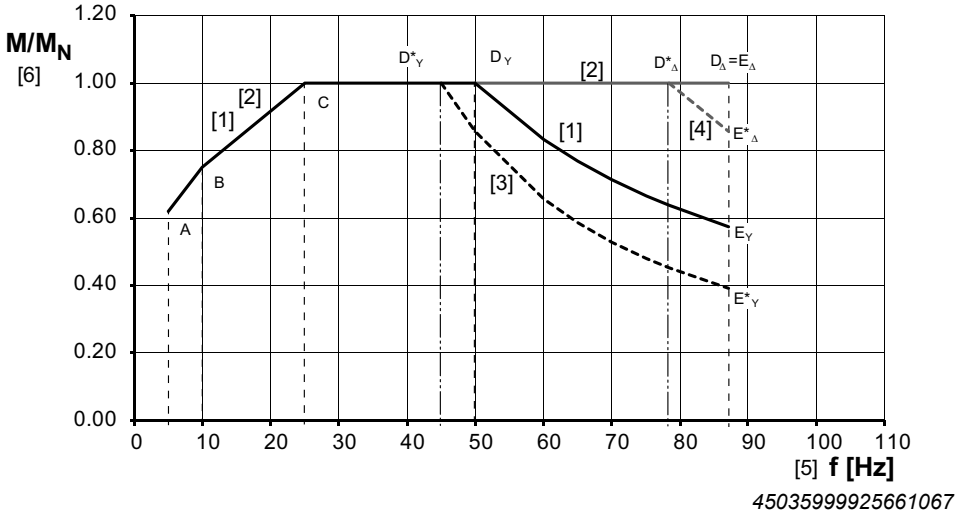

[1]	Star connection	[5]	Supply frequency of the motor
[2]	Delta connection	[6]	Torque ratio M/M_N
[3]	Typical application – star connection		
[4]	Typical application – delta connection		

Points A, B and C

These 3 points limit the torque in the lower speed range in order to protect the motor from overheating due to the reduced cooling. They do not have to be projected. The variables are included in the startup software and are automatically assigned the permitted values during startup.

Points D, E

The two points illustrate the progress of the torque characteristic in the field weakening if the motor terminal voltage corresponds to the rated motor voltage (ideal case). Field weakening begins at point D. Point E is the permitted torque at limit speed.

Points D*, E* (typical application)

The typical application is characterized by the fact that due to the voltage drop the motor terminal board is not provided with the entire supply voltage. This causes a shift of the field weakening progress. The field weakening starts in point D*.

For the limit speed, the shift of the characteristic results in a reduced torque E*.

The startup software calculates both points D* and E* for the typical application and sets the respective parameters.

31555454/EN – 11/2023

6.7 Special application

If the conditions of the typical application are not met, the motor terminal voltage can deviate and, as a result, the motor can heat up excessively.

The deviating motor terminal voltage changes the shape of the thermal characteristic curve. The calculation and observation of points D (field weakening f_{D*}) and E (current limit I_{E*} and torque M_{E*}) during startup prevents the motor from overheating.

You have to calculate the current limit I_{E*} only for drives with EPL "Gb" and "Db".

The project planning procedure is as follows:

- Calculate the motor terminal voltage
- Calculating the field weakening f_{D*}
- Calculate the torque characteristics M_{E*}
- Calculate the current limit IE* for motors of EPL b

31555454/EN – 11/2023

6.7.1 Calculating the motor terminal voltage

The calculation of the motor terminal voltage is an important component of project planning. The results must be considered during startup and corrected, if necessary, to prevent excessive heating of the motor.

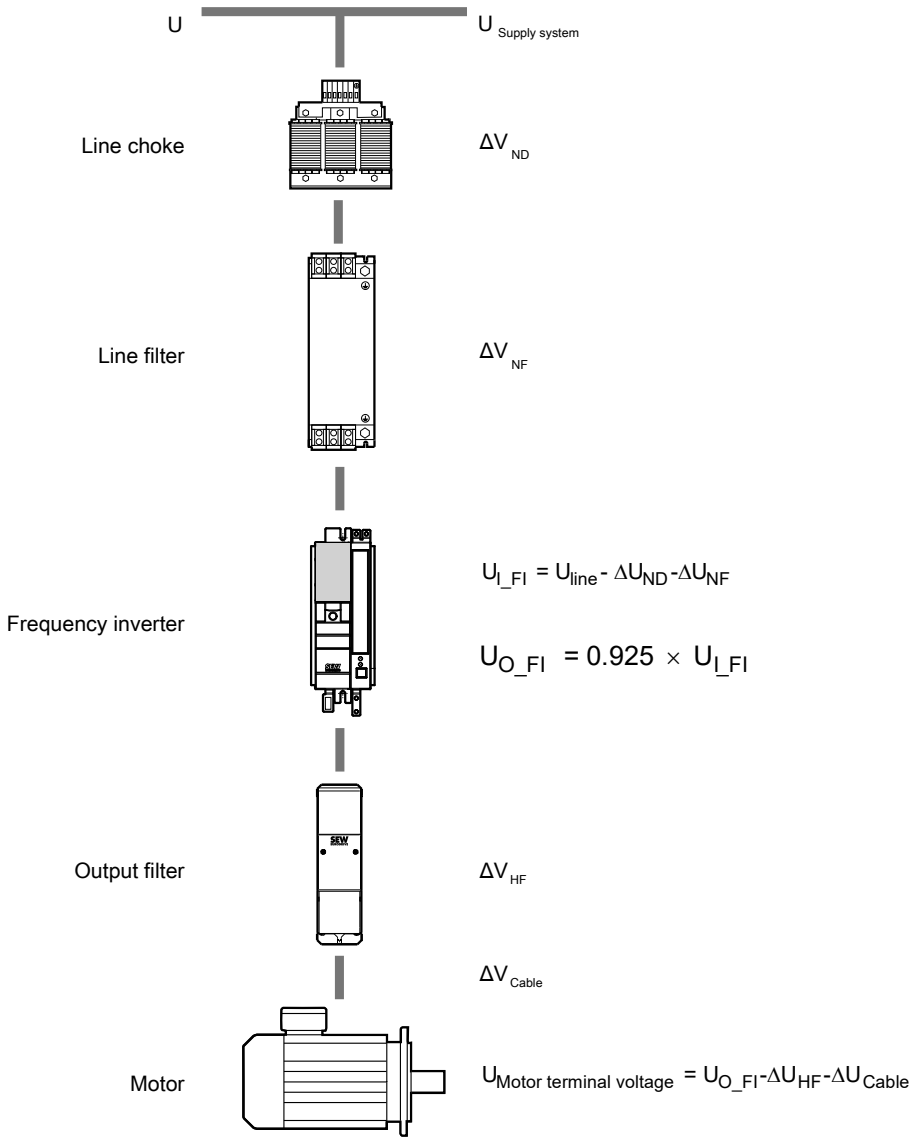

18014427511920779

U_{line}	Line voltage
ΔU_{ND}	Voltage drop at the line choke in V
ΔU_{NF}	Voltage drop at the line filter in V
U_{I_FI}	Inverter input voltage in V
U_{O_FI}	Inverter output voltage in V
ΔU_{HF}	Voltage drop at the output filter in V
ΔU_{cable}	Voltage drop at the motor cable in V

Line voltage V_{line}

The line voltage is determined via direct measurement with multimeter or by reading off the DC link voltage ($V_{DC\ link}$) in the inverter ($V_{line} = V_{DC\ link} / \sqrt{2}$).

31555454/EN – 11/2023

Voltage drop at the line choke Δ $U_{line\ choke}$

The voltage drop can be calculated in 2 ways:

- Calculation based on an equation
- Calculation based on table values

Both ways are illustrated below.

Calculation based on an equation

The extent of the voltage drop is determined by the main inductance and the ohmic share of the inductance.

Typical connection pattern

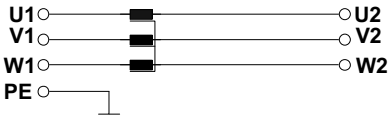

Equation for calculating the voltage drop

$$\Delta U_{ND} = I_{I_FI} \times \sqrt{3} \times \sqrt{(2 \times \pi \times f \times L_{ND})^2 + R_{ND}^2}$$

L_{ND}	Inductance of the line choke in H
R_{ND}	Ohmic resistance of the line choke in Ω
ΔU_{ND}	Voltage drop across line choke in V
I_{I_FI}	Nominal input current of the inverter

For the inductance L and the ohmic resistance R of the inductance, refer to the documents for the line choke.

Calculation based on table values

The following table shows the voltage drop of the line voltage when using a line choke.

Inverter power	Nominal supply system current inverter	Line choke	Voltage drop
kW	A		% U_N
0.25	0.9	ND020-013	0
0.37	1.4		
0.55	1.8		
0.75	2.2		
1.1	2.8		
1.5	3.6		
2.2	5		
3	6.3		
4	8.6		
5.5	11.3		
7.5	14.4		

31555454/EN – 11/2023

Inverter power	Nominal supply system current inverter	Line choke	Voltage drop
kW	A		% U_N
11	21.6	ND030-023	1
15	28.8		
22	41.4	ND045-013	1
30	54	ND085-013	1.5
37	65.7		
45	80.1		
55	94.5	ND150-013	2
75	117		
90	153	ND200-0033	1
110	180		
132	225	ND300-0053	1.5

31555454/EN – 11/2023

Voltage drop at the line filter ΔU_{NF}

The line filter consists of current-compensated radio interference suppression chokes. The current flows through the winding of the chokes and the resulting magnetic fields compensate each other.

This is why the inverter current that flows through the line filter is only dampened by the ohmic share of the inductance and by the leakage inductance. The leakage inductance is very low compared to the main inductance. The voltage drop across the line filter can therefore be neglected.

Typical connection pattern

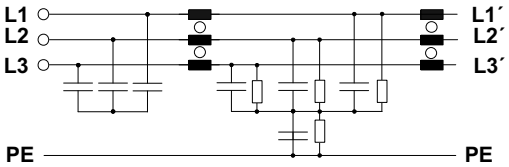

Equation for calculating the voltage drop

$$\Delta U_{NF} = I_{I_FI} \times \sqrt{3} \times \sqrt{(2 \times \pi \times f \times L_{Leak})^2 + R_{NF}{}^2}$$

ΔU_{NF}	Voltage drop across line filter, in V
I_{I_FI}	Nominal input current of the inverter in A
L_{leak}	Leakage inductance in H
R_{NF}	Ohmic resistance in Ω

Determining the inverter input voltage ΔU_{I_FI}

The inverter input voltage is determined by doing the following:

- Measuring the line voltage
- Calculating the voltage according to the formula

  $$U_{I_FI} = V_{Line} - \Delta U_{ND} - \Delta U_{NF}$$

- Reading-off the DC link voltage in the inverter

Determining the inverter output voltage ΔU_{O_FI}

The voltage drop at the inverter is determined by the following:

- Voltages across the rectifier path
- Voltages at the output stage transistors
- The principle of converting supply voltage into DC link voltage and into the rotating field voltage
- Anti-overlap times resulting from the clocking of the output stage and the missing voltage-time areas
- Modulation process
- Load state and energy dissipation of the DC link capacitors

INFORMATION

To simplify the calculation, use the value of 7.5% of the nominal input voltage. This value is to be taken as the maximum possible voltage drop at the inverter. This allows for a reliable project planning. $U_{O_FI} = 0.925 \times U_{I_FI}$.

31555454/EN – 11/2023

If you use an inverter of another manufacturer, ask the manufacturer for the voltage drop.

Voltage drop at the output filter ΔU_{HF}

The voltage drop at the output filter is proportional to the modulated fundamental output frequency and the motor current. It must be requested from the manufacturer of the output filter in individual cases. The voltage drop of SEW output filters can be read from the table.

$$\Delta V_{Outp.Filter} = I \times \sqrt{3} \times \sqrt{(2 \times \pi \times f \times L)^2 + R^2}$$

9007199524175499

Since the resistance R is small enough to be neglected compared to the inductance L, the equation can be simplified to:

$$\Delta V_{Outp.Filter} = I \times \sqrt{3} \times 2 \times \pi \times f \times L$$

9007199615800459

Filter			Choke	Voltage drop					
Type	IN400	IN500	L	U = 400 V			U = 500 V		
				50 Hz	60 Hz	87 Hz	50 Hz	60 Hz	87 Hz
	A	A	mH	V	V	V	V	V	V
HF 008-503	2.5	2	11	15	18	26	12	14	21
HF 015-503	4	3	9	20	24	34	15	18	26
HF 022-503	6	5	7	23	27	40	19	23	33
HF 030-503	8	6	5.5	24	29	42	18	22	31
HF 040-503	10	8	4.5	24	29	43	20	24	34
HF 055-503	12	10	3.2	21	25	36	17	21	30
HF 075-503	16	13	2.4	21	25	36	17	20	30
HF 023-403	23	19	1.6	20	24	35	17	20	29
HF 033-403	33	26	1.2	22	26	37	17	20	30
HF 047-403	47	38	0.8	20	25	36	17	20	29
HF 450-503	90	72	0.38	19	22	32	15	18	26
HF 180-403	180	144	0.24	23	28	41	19	23	33
HF 325-403	325	260	0.13	23	28	40	18	22	32

HD.. output chokes

The voltage drop is negligible (current-compensated) for SEW-EURODRIVE output chokes (HD..).

31555454/EN – 11/2023

Voltage drop at the motor cable ΔU_{cable}

The voltage drop of the motor cable depends on the motor current and the cross section, length and material of the cable. The voltage drop can be read from the following table.

Cable cross section mm²	Load with I A									
	4	6	8	10	13	16	20	25	30	40
Copper	Voltage drop ΔU in V with length = 100 m and ϑ = 70 °C									
1.5	5.3	8	10.6[1]	13.3[1]	17.3[1]	21.3[1]	[2]	[2]	[2]	[2]
2.5	3.2	4.8	6.4	8.1	10.4	12.8[1]	16[1]	[2]	[2]	[2]
4	1.9	2.8	3.8	4.7	6.5	8.0	10	12.5[1]	[2]	[2]
6					4.4	5.3	6.4	8.3	9.9	[2]
10						3.2	4.0	5.0	6.0	8.2
16								3.3	3.9	5.2
25									2.5	3.3

1) This value is not recommended by SEW-EURODRIVE.
2) Load not permitted according to IEC 60364-5-52.

Cable cross section mm²	Load with I A								
	50	63	80	100	125	150	200	250	300
Copper	Voltage drop ΔU in V with length = 100 m and ϑ = 70 °C								
10	10.2	[1]	[1]	[1]	[1]	[1]	[1]	[1]	[1]
16	6.5	7.9	10.0	[1]	[1]	[1]	[1]	[1]	[1]
25	4.1	5.1	6.4	8.0	[1]	[1]	[1]	[1]	[1]
35	2.9	3.6	4.6	5.7	7.2	8.6	[1]	[1]	[1]
50				4.0	5.0	6.0	[1]	[1]	[1]
70							4.6	[1]	[1]
95							3.4	4.2	[1]
150								2.7	3.3
185									2.7

1) Load not permitted according to IEC 60364-5-52.

INFORMATION

The voltage drop at the cable is compensated by the IxR compensation. SEW-EURODRIVE frequency inverters adjust this value in the "Automatic calibration ON" mode every time the frequency inverter is started. In order to provide for a voltage reserve in the frequency inverter for this compensation, you have to take into account the voltage loss via the motor cable.

31555454/EN – 11/2023

6.7.2 Calculating the field weakening f_{D*}

The following diagram illustrates the S1 limit curve of the EDRE90L4 of equipment protection level b.

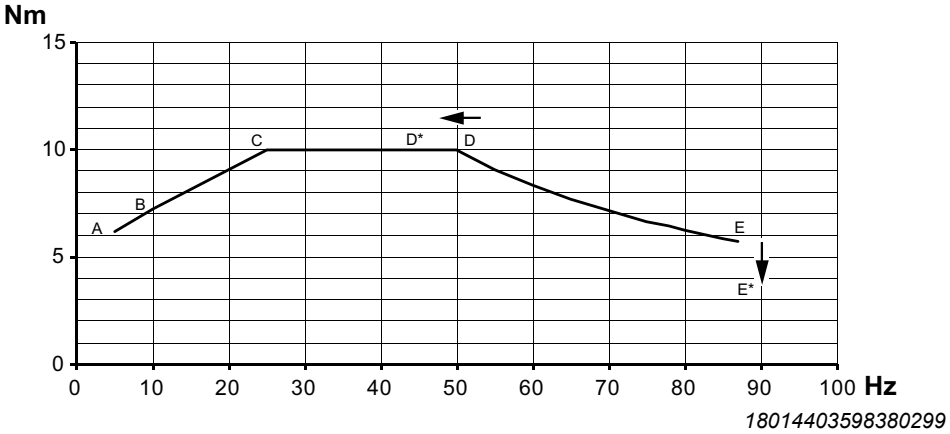

Field weakening

The field weakening is calculated using the following formula:

$$f_{D*} = \frac{U_{Motor\ terminal\ voltage}}{U_{Nominal\ motor\ voltage}} \times f_D$$

f_D Beginning of field weakening (ideal case, motor terminal voltage = nominal motor voltage)

f_{D*} Beginning of field weakening (depending on the actual motor terminal voltage)

6.7.3 Calculating the torque curve M_{E*}

The torque curve is calculated using the following formula:

$$M_{E*} = M_{Nom} \times \frac{\left(\frac{f_{D*}}{f_I} + \left(\frac{f_{D*}}{f_I} \right)^2 \right)}{2}$$

9007204283228683

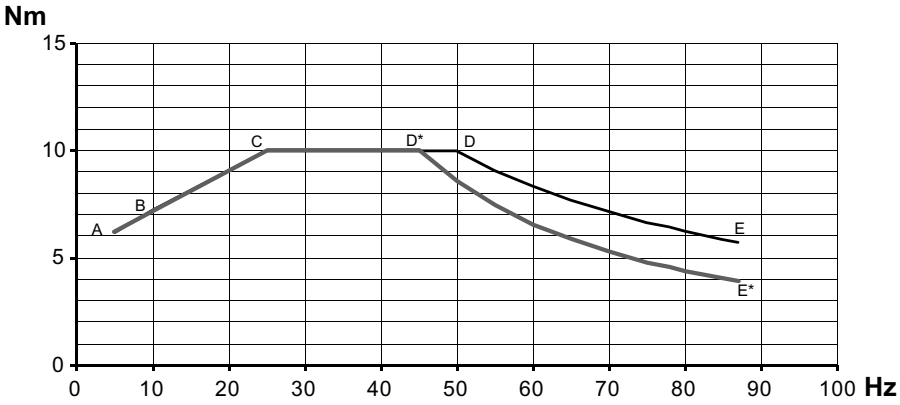

9007204343645707

f_{IN} Maximum frequency
M_{E*} Reduced torque at maximum speed (depending on the actual motor terminal voltage)

INFORMATION

You have to calculate several auxiliary points to determine an exact curve progression.

Maximum frequencies

Motors		50 Hz motors	60 Hz motors
	P	f_{IN}	f_{IN}
	kW	Hz	Hz
EDRN63MS	0.12	120	120
EDRN63M	0.18	120	120
EDRN71MS	0.25	120	120
EDRN71M	0.37	120	120
EDRN80MK	0.55	120	120
EDRN80M4	0.75	100	104
EDRN90S4	1.1	100	104
EDRN90L4	1.5	100	104
EDRN100LS4	2.2	100	–
EDRN100LM4[1)]		–	104
EDRN100L4	3	100	104
EDRN112M4	4	100	104

Motors		50 Hz motors	60 Hz motors
	P	f_{IN}	f_{IN}
	kW	Hz	Hz
EDRN132S4	5,5	100	104
EDRN132M4	7,5	100	104
EDRN132L4	9,2	100	104
EDRN160M4	11	100	104
EDRN160L4	15	100	104
EDRN180M4	18.5	87	
EDRN180L4	22	87	
EDRN200L4	30	87	
EDRN225S4	37	62	
EDRN225M4	45	62	
EDRN250M4 EDRN250ME4[1)]	55	62	
EDRN280S4	75	62	
EDRN280M4	90	62	
EDRN315S4	110	62[2)]	
EDRN315M4 EDRN315ME4[1)]	132	62[2)]	
EDRN315L4	160	62[2)]	
EDRN315H4	200	62[2)]	

1) Only available as motors with 60 Hz.
2) Values only available for delta connection

6.7.4 Calculating the current limit I_{E*} for motors of category 2/EPL .b

The current limit I_{E*} is calculated using the following formula:

$$I_{E*} = I_E \times \frac{M_{E*}}{M_E}$$

26589305867

I_E Current (ideal case, motor terminal voltage = rated motor voltage)
I_{E*} Current (depending on the actual motor terminal voltage)
M_E Torque at maximum frequency (ideal case, motor terminal voltage = rated motor voltage)

Torque M_E and current I_E

50 Hz motors						60 Hz motors					
Motors	P	M_E		I_E		Motors	P	M_E		I_E	
	kW	Nm		A			kW	Nm		A	
		⅄	△	⅄	△			⅄	△	⅄	△
EDRN63MS4	0.12	0.33	0.6	0.3	0.57	EDRN63MS4	0.12	0.29	0.58	0.32	0.6
EDRN63M4	0.18	0.54	0.9	0.49	0.81	EDRN63M4	0.18	0.45	0.88	0.45	0.86
EDRN71MS4	0.25	0.7	1.24	0.72	1.11	EDRN71MS4	0.25	0.56	1.2	0.54	1.08
EDRN71M4	0.37	1.1	1.81	1.06	1.56	EDRN71M4	0.37	0.84	1.78	0.77	1.56
EDRN80MK4	0.55	1.52	2.65	1.26	2.1	EDRN80MK4	0.55	1.5	2.6	1.18	1.99
EDRN80M4	0.75	2.5	4.5	1.6	3	EDRN80M4	0.75	2.8	4.1	1.4	2.8
EDRN90S4	1.1	3.6	6.5	2.5	4.4	EDRN90S4	1.1	3.3	6	2.3	4.1
EDRN90L4	1.5	4.9	8.8	3.2	5.8	EDRN90L4	1.5	4.5	8.1	2.8	5.4
EDRN100LS4	2.2	7.2	13	4.4	8.2	EDRN100LM4	2.2	6.5	11.9	3.9	7.5
EDRN100L4	3	9.8	17.7	5.8	10.9	EDRN100L4	3	8.9	16.2	5.5	10.1
EDRN112M4	4	10.4	23.5	7.6	14.4	EDRN112M4	4	11.8	21.5	8.2	12.6
EDRN132S4	5.5	18	32.5	10.8	18.7	EDRN132S4	5.5	16.2	29.5	9	16.6
EDRN132M4	7.5	24.5	44	17	26	EDRN132M4	7.5	22.5	40.5	13.2	23.5
EDRN132L4	9.2	30	54	20.5	32.5	EDRN132L4	9.2	27	49.5	16	29.5
EDRN160M4	11	36	64	23	37	EDRN160M4	11	32.5	59	18.5	33
EDRN160L4	15	49	87	30	50	EDRN160L4	15	44.5	81	25	45
EDRN180M4	18.5	69	120	34	60	EDRN180M4	18.5	68	99	31	54
EDRN180L4	17.5	65	113	31	54	EDRN180L4	17.5	65	94	28.5	49.5
EDRN180L4	22	82	142	39	68	EDRN180L4	22	81	118	36	62
EDRN200L4	24	89	155	45.5	79	EDRN200L4	24	89	129	41	71
EDRN200L4	30	111	194	57	100	EDRN200L4	30	111	161	51	88
EDRN225S4	37	194	240	65	113	EDRN225S4	37	192	198	59	102
EDRN225M4	45	234	290	82	142	EDRN225M4	45	232	240	74	128
EDRN250M4	30	156	193	59	102	EDRN250ME4	30	155	160	52	90
EDRN250M4	55	286	355	108	187	EDRN250ME4	55	285	295	95	165
EDRN280S4	36	185	230	69	120	EDRN280S4	36	187	193	63	109
EDRN280S4	75	339	420	129	225	EDRN280S4	75	387	400	132	230
EDRN280M4	44	230	285	84	145	EDRN280M	44	227	235	74	128
EDRN280M4	90	468	580	164	285	EDRN280M4	90	465	480	148	255
EDRN315S4	58	–	300	–	102	EDRN315S4	58	–	300	–	94
EDRN315S4	70	–	365	–	123	EDRN315S4	70	–	365	–	112
EDRN315S4	110	–	570	–	191	EDRN315S4	110	–	570	–	177
EDRN315M4	84	–	435	–	148	EDRN315ME4	84	–	435	–	132

31555454/EN – 11/2023

50 Hz motors						60 Hz motors					
Motors	P	M_E		I_E		Motors	P	M_E		I_E	
	kW	Nm		A			kW	Nm		A	
		⅄	△	⅄	△			⅄	△	⅄	△
EDRN315M4	132	–	690	–	240	EDRN315ME4	132	–	680	–	210
EDRN315L4	160	–	730	–	245	EDRN315L4	160	–	830	–	250
EDRN315H4	110	–	570	–	205	EDRN315H4	110	–	570	–	168
EDRN315H4	200	–	1030	–	360	EDRN315H4	200	–	1040	–	325

31555454/EN – 11/2023

6.8 Group drive

Group drive means that several motors are operated simultaneously on one inverter.

INFORMATION

Only EDR../EDRN.. motors with EPL "Dc" may be operated as group drive.

Motors in 3D-c design may be used as group drives in zone 22 if each individual motor of the group has been configured, designed, and identified for inverter operation.

The following restrictions apply:

- For applications, the individual motors must be connected slip-free, non-positive, or positive.
- Only identical motors may be used, which means motors with the same rated data (power, speed, voltage, and frequency).
- The following condition must be met:

  Nominal output current of inverter ≤ 1.5 × sum of nominal motor currents.
- Each motor must be designed with a thermal motor protection (PTC thermistor).
- Each individual temperature sensor must be externally monitored by a separate evaluation unit.
- If one evaluation unit trips, all motors of the group must be stopped.

31555454/EN – 11/2023

7 Startup

7.1 General information

⚠ WARNING

Electric shock due to incorrect installation.

Severe or fatal injuries.

- Use switch contacts in utilization category AC-3 according to EN 60947-4-1 for switching the motor.
- When motors are powered by inverters, you must adhere to the wiring instructions in the frequency inverter operating instructions.

INFORMATION

Limit the maximum speed at the inverter. For information on the procedure, refer to the documentation of the inverter.

⚠ CAUTION

The surfaces on the drive can be very hot during operation.

Risk of burns.

- Let the motor cool down sufficiently before you start working on it.

7.2 Before startup

Prior to startup make sure that:

- The drive is undamaged and not blocked.
- Any transport locks have been removed.
- The measures stipulated in chapter "Preliminary work after longer periods of storage" (→ 🗎 35) are performed after storage periods longer than 9 months.
- All connections have been made correctly.
- The direction of rotation of the motor/gearmotor is correct.
  - Motor rotating clockwise: U, V, W (T1, T2, T3) to L1, L2, L3
- All protective covers are installed correctly.
- All motor protection equipment is active and set for the rated motor current.
- There are no other sources of danger.
- Loose elements like keys are appropriately secured.
- The brake is not manually released.
  - The set screw of /HF option is loosened correctly.
  - The hand lever of the /HR option has been removed and correctly attached to the stator using the designated clamps.

31555454/EN – 11/2023

7.3 Parameter setting: Frequency inverters for motors with EPL "Gb" and "Db"

INFORMATION

When you start up the frequency inverter, observe the operating instructions of the respective frequency inverter as well as the operating instructions of the gear unit if you use a gearmotor.

7.3.1 Before startup

Prior to startup, check that all the conditions for the typical application are met, see chapter "Typical application" (→ 🗎 121). In the event of deviations from these conditions, you have to calculate the maximum terminal voltage, the field weakening range, and the torque characteristics prior to startup. The effective operating point must be below the new thermal characteristic curve.

7.3.2 Startup procedure for MOVITRAC® 07B

Observe the following points during startup:

- Use the latest MOVITOOLS® MotionStudio software version for guided startup.
- Startup can only be activated in parameter set 1 due to the current limiting function for motors with EPL "Gb" and "Db".
- The system configuration allows only single drives.
- As the control mode, you can set both "V/f" and "vector controlled" (VFC).
- Only speed control can be selected for the application. The options "Hoist", "DC braking" or "Flying start function" must not be used.
- The operating mode must always be set to "4-quadrant operation".
- Select the matching motor series in the "Motor type" window.
- In the "Motor selection" window, choose the equipment category, the line voltage, the motor voltage, the connection type, and the type of plant configuration in addition to the motor.

Current limit

In guided startup, the *current limit* parameter is set to 150% $I_{N\ Mot}$ in the application window. This value must be reduced according to the permitted maximum output torque at the gear unit M_{amax}.

31555454/EN – 11/2023

Current monitoring

The parameters that need to be set for monitoring the current depend on the motor.

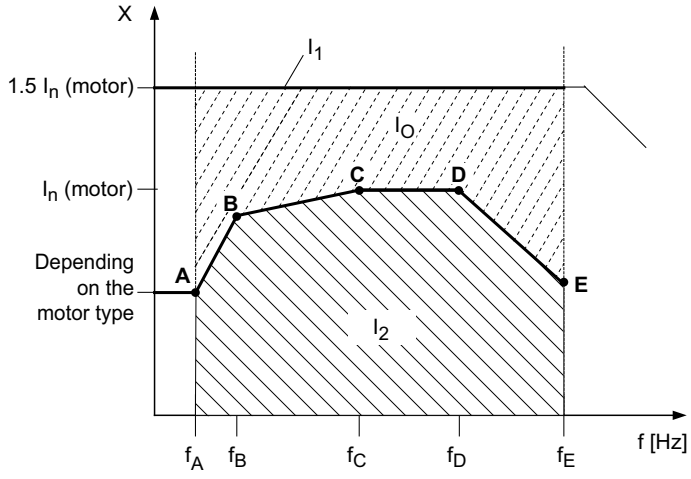

18014401599876235

I_n	Nominal current in A	X	Current limiting
I_1	Permitted max. current in A	f	Frequency in Hz
I_2	Permitted continuous current range in A	A, B, C, D, E	Limiting points
I_O	Overload current in A		

After motor startup, current limitation I_1 is active. Current limitation I_2 determines the current that is permanently permitted. The Ex-e motor current limiting function is activated automatically during startup for SEW-EURODRIVE motors with EPL "Gb" and "Db".

The speed-dependent current limit is activated by the according motor selection and all the parameters of group P560 are set for points A to E, see the following parameter table.

Additionally, the values are listed in the IECEx Certificate of Conformity (CoC).

Parameter	Point A	Point B	Point C	Point D	Point E
Frequency in Hz	P561	P563	P565	P567	P570
Calculation	Via startup software				
Current limit in % of $I_{N\ FI}$	P562	P564	P566	P568	P571
Calculation	Via startup software				

In the event of deviations from the typical application, you have to recalculate and manually adapt the parameters for points D (field weakening f_D) and E (current limit I_E), see the following table:

Parameter	Point A	Point B	Point C	Point D	Point E
Frequency in Hz	P561	P563	P565	P567	P570
Calculation	Via startup software			Is required + manual input of f_D.	Via startup software
Current limit in % of $I_{N\ FI}$	P562	P564	P566	P568	P571

Parameter	Point A	Point B	Point C	Point D	Point E
Calculation	Via startup software				Is required + manual input of f_{E*} $I_{E*} = I_E \times M_{E*}/M_E$

Maximum motor speed

The maximum motor speed must be limited in the "System limits" window. Observe the following when you set the parameter *maximum speed*:

- Maximum speed ≤ start of field weakening
- Maximum speed ≤ motor limit speed
- Maximum speed ≤ maximum gear unit input speed n_{emax} (see gear unit nameplate) if you use a gear unit according to Directive 2014/34/EU.

Automatic adjustment

The *automatic adjustment* parameter is activated via guided startup. Thus, the frequency inverter sets parameter *IxR value* with each enable signal. A manual change is not permitted.

7.3.3 Startup procedure for MOVIDRIVE® B

INFORMATION

MOVIDRIVE® B devices are only suited for operation in the basic control range, i.e. the connected motor of equipment protection level "Gb" and "Db" must not be operated in the field weakening range. Otherwise the approval for operation in explosion-protected areas becomes void.

Observe the following points during startup:

- Use the latest MOVITOOLS® MotionStudio software version for guided startup.
- Startup can only be activated in parameter set 1 due to the current limiting function for motors with EPL "Gb" and "Db".
- The first startup must always be a complete startup.
- As the control mode, you can set both "V/f" and "vector controlled" (VFC).
- Select the matching motor series in the "Motor type" window.
- In the "Motor selection" window, choose the equipment category, the line voltage, the motor voltage, the connection type, and the type of plant configuration in addition to the motor.
- Only speed control can be selected for the application. The options "Hoist", "DC braking" or "Flying start function" must not be used.
- The operating mode must always be set to "4-quadrant operation".

Current limit

In guided startup, the *current limit* parameter is set to 150% $I_{N\ Mot}$ in the application window. This value must be reduced according to the permitted maximum output torque at the gear unit M_{amax}.

31555454/EN – 11/2023

Current monitoring

The parameters that need to be set for monitoring the current depend on the motor.

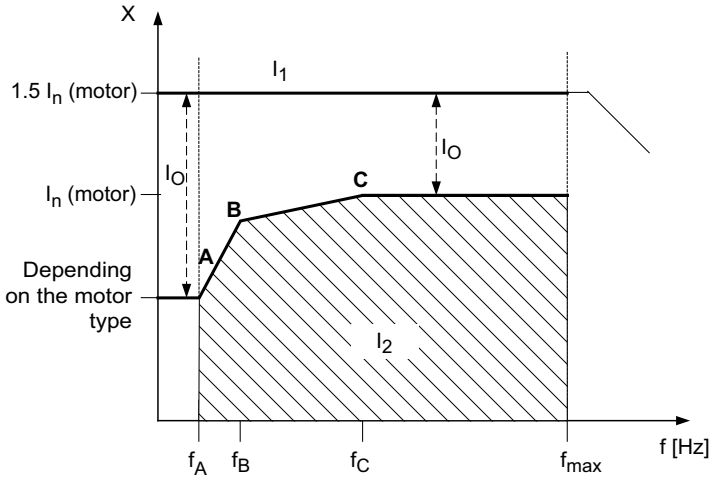

18014402587324043

I_n	Nominal current in A	X	Current limiting
I_1	Permitted max. current in A	f	Frequency in Hz
I_2	Permitted continuous current range in A	A, B, C	Limiting points
I_O	Overload current in A		

After motor startup, current limitation I_1 is active. Current limitation I_2 determines the current that is permanently permitted. The Ex-e motor current limiting function is activated automatically during startup for SEW-EURODRIVE motors with EPL "Gb" and "Db".

The characteristic curve for MOVIDRIVE® B is defined by operating points A, B, and C. The parameters of group P560 are preset during startup, see the following table. Additionally, the values are listed in the IECEx Certificate of Conformity (CoC).

Parameter	Point A	Point B	Point C
Frequency in Hz	P561	P563	P565
Current limit in % of $I_{N\,FI}$	P562	P564	P566

Maximum motor speed

The maximum motor speed must be limited in the "System limits" window. Observe the following when you set the parameter *maximum speed*:

- Maximum speed ≤ start of field weakening
- Maximum speed ≤ motor limit speed
- Maximum speed ≤ maximum gear unit input speed n_{emax} (see gear unit nameplate) if you use a gear unit according to Directive 2014/34/EU.

Automatic adjustment

The parameter *automatic adjustment* is activated via guided startup. Thus, the frequency inverter sets parameter *IxR value* with each enable signal. A manual change is not permitted.

Monitoring function:

A 24 V backup mode prevents that the current-time monitoring is reset in case of a disconnection from the supply system, see chapter "Overload protection".

INFORMATION

If the mains is switched off without 24 V backup mode, the monitoring function is reset completely.

In this case the approval for operation in explosion-protected areas becomes invalid.

7.3.4 Overload protection

The requirements for the overload protection of the motor are defined in the IECEx Certificate of Conformity (IECEx CoC). The following section describes the overload protection implemented in MOVITRAC® B and MOVIDRIVE® B inverters.

Operation above the permitted current range is permitted for 60 seconds. After about 50 seconds, the current is reduced to the permitted value along a ramp within 10 seconds to prevent a sudden reduction of the current limitation and thus torque shocks. The current can exceed the permitted range again after a recovery time of 10 minutes. Operation below 5 Hz is permitted for 60 seconds. After this time has elapsed, the unit switches off with fault F110 "Ex e protection" and performs an emergency stop as fault response.

The digital inputs P62_ can be parameterized to "Ex e current limitation active".

Conditions for the output being set ("1" signal):

- Current limit 1 exceeded
- Recovery time not yet elapsed
- Operation < 5 Hz longer than 60 seconds

The current-time monitoring is not reset by a fault reset.

The current-time monitoring is active for both mains operation and 24 V backup mode.

INFORMATION

Third-party inverters must comply with the overload protection requirements in the IECEx Certificate of Conformity (IECEx CoC).

7.4 Parameter setting: Frequency inverters for motors with EPL "Gc" and "Dc"

INFORMATION

When you start up the frequency inverter, observe the operating instructions of the respective frequency inverter as well as the operating instructions of the gear unit if you use a gearmotor.

7.4.1 Before startup

Prior to startup, check that all the conditions for the typical application are met, see chapter "Typical application" (→ 🗎 121). In the event of deviations from these conditions, you have to calculate the maximum terminal voltage, the field weakening range, and the torque characteristics prior to startup. The effective operating point must be below the new thermal characteristic curve.

7.4.2 Startup procedure for MOVITRAC® 07B

Observe the following points during startup:

- Use the latest MOVITOOLS® MotionStudio software version for guided startup.
- Startup and operation of motors with EPL "Gc" and "Dc" is possible in parameter sets 1 and 2.
- As the control mode, you can set both "V/f" and "vector controlled" (VFC).
- For the application, you can only select speed control and hoist application. Do not use the options "DC braking" or "Flying start function".
- The operating mode must always be set to "4-quadrant operation".
- Select the matching motor series in the "Motor type" window.
- In the "Motor selection" window, choose the equipment category, the line voltage, the motor voltage, the connection type, and the type of plant configuration in addition to the motor.

Current limit

In guided startup, the *current limit* parameter is set to 150% $I_{N\ Mot}$ in the application window. This value must be reduced according to the permitted maximum output torque at the gear unit M_{amax}.

Maximum motor speed

The maximum motor speed must be limited in the "System limits" window. Observe the following when you set the parameter *maximum speed*:

- Maximum speed ≤ motor limit speed
- Maximum speed ≤ maximum gear unit input speed n_{emax} (see gear unit nameplate) if you use a gear unit according to Directive 2014/34/EU.

Automatic adjustment

The *automatic adjustment* parameter is activated via guided startup. Thus, the frequency inverter sets parameter *IxR value* with each enable signal. A manual change is not permitted.

31555454/EN – 11/2023

7.4.3 Startup procedure for MOVIDRIVE® B

Observe the following points during startup:

- Use the latest MOVITOOLS® MotionStudio software version for guided startup.
- Startup and operation of motors with EPL "Gc" and "Dc" is possible in parameter sets 1 and 2.
- The first startup must always be a complete startup.
- As the control mode, you can set both "V/f" and "vector controlled" (VFC).
- Select the matching motor series in the "Motor type" window.
- In the "Motor selection" window, choose the equipment category, the line voltage, the motor voltage, the connection type, and the type of plant configuration in addition to the motor.
- For the application, you can only select speed control and hoist application. Do not use the options "DC braking" or "Flying start function".
- The operating mode must always be set to "4-quadrant operation".

Current limit

In guided startup, the *current limit* parameter is set to 150% $I_{N\ Mot}$ in the application window. This value must be reduced according to the permitted maximum output torque at the gear unit M_{amax}.

Maximum motor speed

The maximum motor speed must be limited in the "System limits" window. Observe the following when you set the parameter *maximum speed*:

- Maximum speed ≤ start of field weakening
- Maximum speed ≤ motor limit speed
- Maximum speed ≤ maximum gear unit input speed n_{emax} (see gear unit nameplate) if you use a gear unit according to Directive 2014/34/EU.

Automatic adjustment

The *automatic adjustment* parameter is activated via guided startup. Thus, the frequency inverter sets parameter *IxR value* with each enable signal. A manual change is not permitted.

31555454/EN – 11/2023

7.5 Motors with backstop /RS

An /RS backstop is used to block/prevent a direction of rotation of the motor. The direction of rotation is indicated by an arrow on the fan guard of the motor or on the device housing.

Observe the direction of rotation of the end shaft and the number of stages when you mount the motor to the gear unit. Do not start up the motor in blocking direction (note the correct phase angle when connecting the motor). For inspection purposes, you can operate the backstop once with half the motor voltage in blocking direction.

If a conversion is required to change the blocking direction, follow the instructions in chapter "Altering the blocking direction on motors with a backstop" (→ 🗎 212).

7.5.1 Limit speed of the backstop

If a motor is equipped with a backstop, the sprag lift-off speed represents the lower speed limit during operation on an inverter.

Motors		Locking torque	Lift-off speed of clamping parts	Maximum speed
		Nm	min^{-1}	min^{-1}
–	EDRN63	95	890	5000
EDRS71	EDRN71	95	890	5000
EDR..80	EDRN80	130	860	5000
EDRE90/100	EDRN90/100	370	750	5000
EDRE112/132	EDRN112/132S	490	730	5000
EDRE160	EDRN132M/L	700	700	4500
EDRE180	EDRN160/180	1400	610	4500
EDRE200/225	EDRN200/225	2500	400	3500
EDRE250/280	EDNR250/280	2600	400	2600
EDRE315	EDRN315	6300	320	2500

31555454/EN – 11/2023

8 Inspection/maintenance

8.1 General information

⚠ WARNING

Risk of injury if the drive starts up unintentionally.

Severe or fatal injuries.

- Before you start working on the unit, disconnect the motor and all connected options from the power supply.
- Secure the motor against unintended power-up.

⚠ CAUTION

Inhalation and swallowing brake abrasion when releasing the brake.

Irritation of the respiratory tract and respiratory organs.

✓ Wear a respirator of class FFP2 during the maintenance of brakemotors.

- Avoid swirling of the brake abrasion.
- Remove the brake abrasion with suitable extraction systems or damp cloths that bind dust.
- Make sure that there is adequate ventilation in the work environment.

⚠ CAUTION

The surfaces on the drive can be very hot during operation.

Risk of burns.

- Let the motor cool down sufficiently before you start working on it.

NOTICE

Damage to the oil seals if the temperature is too low during installation.

Possible damage to the oil seals.

- Before assembly, make sure that the ambient temperature and the temperature of the oil seal are not below 0 °C.

INFORMATION

Apply grease with a grease depot to the lip of the oil seal before assembly. For further information on lubricants, refer to chapter "Order information for lubricants, anti-corrosion agents and sealants" (→ 🗎 240).

31555454/EN – 11/2023

INFORMATION

- Only use genuine spare parts in accordance with the valid spare and wearing parts list, otherwise the approval for use in explosion-protected areas becomes void.
- The routine test must be repeated whenever motor parts relating to explosion protection are replaced.
- Ensure that the motor is assembled correctly and all openings have been plugged after service and maintenance work.
- If the motor is opened during inspection/maintenance, it must be cleaned before closing it again.
- Clean motors in explosion-protected areas regularly. Prevent dust from building up higher than 5 mm. Do not use processes for cleaning that cause strong electrical charge.
- Explosion protection largely depends on the IP degree of protection. Therefore, always check that the seals are fitted correctly and are in perfect condition when performing any work on the machine.
- Explosion protection can only be ensured if motors are serviced and maintained correctly.
- If you repaint motors or gearmotors, observe the requirements for preventing electrostatic charging according to IEC 60079-0.

INFORMATION

Safe operation requires regular maintenance. The user is responsible for maintenance of the drive. Adhere to the Industrial Safety Regulation, as well as to IEC 60079-17.

Repairs

If you repair explosion-protected units, strictly observe the country-specific standards. In Germany, the operating safety regulations (BetrSichV) and the Product Safety Act (ProdSG) apply.

In case of a repair, observe the important information on checking and maintaining electrical systems as well as on repairs and maintenance of electrical devices provided in the standards IEC 60079-17 and IEC 60079-19. Only the SEW-EURODRIVE Service or repair workshops that have the necessary expertise may repair the motor.

31555454/EN – 11/2023

8.2 Inspection and maintenance intervals

The following table lists the inspection and maintenance intervals:

Device/part of device	Time interval	What to do?
Brake BE03	• **If used as a working brake:** At least every 3000 operating hours[1)] • **If used as a holding brake:** Every 0.5 to 4 years, depending on the operating conditions[1)]	Inspect the brake • Measure the working air gap • Inspect the switch contacts and replace them, if necessary (e.g. in case of burn-out)
Brakes BE05 – BE122	• **If used as a working brake:** At least every 3000 operating hours[1)] • **If used as a holding brake:** Every 0.5 to 4 years, depending on the operating conditions[1)]	Inspect the brake: • Measure the brake disk thickness • Brake disk, lining • Measure and set the working air gap • Pressure plate • Driver/gearing • Pressure rings • Suck off any abrasion • Inspect the switch contacts and replace them, if necessary (e.g. in case of burn-out)
Motor	• **Every 10 000 operating hours**[2)3)]	Inspect the motor: • Check rolling bearings, replace if necessary • Replace oil seals • Clean cooling air ducts
Drive	• Differing[3)]	• Touch up or renew the surface/anti-corrosion coating • Check and clean the air filter. • If applicable, clean condensation drain hole at the bottom of the fan guard • Clean clogged bores
Connection cable	• as for the motor	Inspect cable • Check for damage. If necessary, replace connection cable. • Check all cable glands and retighten them, if necessary.

1) Wear times are subject to many factors and can be quite short. The system manufacturer must calculate the required inspection/maintenance intervals individually in accordance with the project planning documents.
2) For EDRN225 – 315 motors with relubrication device, note the shortened relubrication periods in chapter "Bearing lubrication for EDRN225 – 315 motors with relubrication device /NS".
3) The interval depends on outer influences and can be very short, e.g. in the event of high dust concentration in the environment.

31555454/EN – 11/2023

8.2.1 Sealing points

Perform the maintenance of seals according to the following table:

Sealing point			
Item no.	**Position**	**Use**	**Maintenance/inspection**
[26]	Shield ring	EDR..200 – 315	• Exchange during each disassembly
[28]	Closing plug (for BE20 – 122, if no manual brake release is installed)	BE20 – 122	• Exchange during each disassembly
[30]	Oil seal at non-input end	BE60 – 122	• Every 10 000 operating hours[1)]
[37]	Backstop sealing ring	EDRN63 – 315	• Every 10 000 operating hours[1)] • Check the sealing ring seat for corrosion (rust). • Replace the brake, if necessary.
[47]	O-ring of manual brake release	BE03 – 122	• Every 10 000 operating hours at the latest[1)] • Exchange during each disassembly
[61]	Nut Contact surface for the nuts on the magnet body	BE05 – 122	• SEW-L-Spezial must be replaced during each inspection or maintenance. • The nuts must be replaced during each disassembly.
[66]	Sealing strip	BE05 – 122	• Check the sealing strip for plastic deformation during each inspection or maintenance and replace it if necessary. If the sealing strip seats show signs of corrosion, replace the brake. • Replace the sealing strip at least every 10 000 operating hours.
[95]	Sealing ring (BE05 – 11, incl. manual brake release seal)	BE03 – 122	• Every 10 000 operating hours[1)] • Check the sealing ring seat for corrosion (rust). If the seats show signs of corrosion, replace the brake or the magnet body.
[106]/ [250]	Input end oil seal	EDRN..	• Every 10 000 operating hours[1)]
[390]	Cable bushing Stator (Brake) endshield	BE20 – 62	• Exchange during each disassembly
[392]	Stator B-side endshield, brake endshield, or backstop endshield	EDRN63 – 132S	• Exchange during each disassembly

31555454/EN – 11/2023

Sealing point			
Item no.	**Position**	**Use**	**Maintenance/inspection**
[901]/ [1607]	Friction disk brake endshield	EDRN63 – 132S /BE.. or /RS (flat gasket)	• Exchange during each disassembly
	Backstop housing brake endshield	EDRN132M – 315 with /BE.. or /RS (O-ring)	
[703]/ [900]	Friction disk screw Backstop housing	EDRN100 /BE.. or /RS	• Exchange during each disassembly (pressure-tight thread locker e.g. precote® 85-8)

1) The interval depends on outer influences and can be very short, e.g. in the event of high dust concentration in the environment.

8.3 Bearing lubrication

8.3.1 Bearing lubrication for EDR..71 – 280, EDRN63 – 280 motors

In standard design, the bearings are lubricated for life.

8.3.2 Bearing lubrication for EDRE250 – 280, EDRN225 – 315 motors with relubrication device /NS

EDRE250 – 280, EDRN225 – 315 motors can be equipped with a relubrication device. The following figure shows the positions of the lubrication devices.

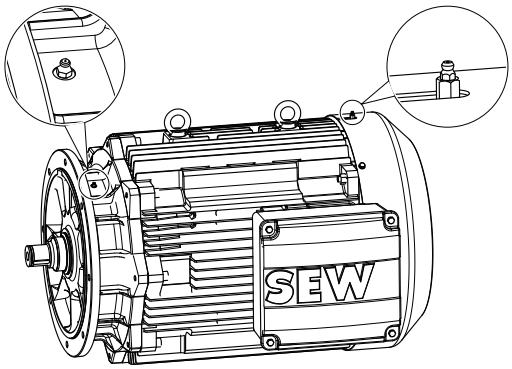

9007199630094091

[1] Relubrication device in type A according to DIN 71412

Under normal operating conditions and at an ambient temperature between -20 °C to +40 °C, SEW-EURODRIVE uses Mobil Polyrex EM (K2P-20 DIN 51825), a polyurea-based mineral high-performance, high-temperature grease for initial lubrication.

For motors in the low temperature range up to -40 °C SEW-EURODRIVE uses SKF GXN or LGHP2, which is also a polyurea-based mineral grease.

Relubrication

The grease can be purchased from SEW-EURODRIVE in 400 g cartridges. For the relevant order information, refer to chapter "Order information for lubricants, anti-corrosion agents and sealants" (→ 🗎 240).

INFORMATION

Only mix lubricants of the same thickness type, the same base oil and the same consistency (NLGI class).

Grease the motor bearings in accordance with the information on the lubricant plate. The used grease collects inside the motor and should be removed every 6 to 8 relubrication cycles during an inspection. Each time you relubricate the bearings, ensure that the bearing is two-thirds full.

Start up the motors slowly after lubrication so that the grease is distributed evenly.

The relubrication channels leading the grease from the grease nipples to the bearings must always be filled with grease. This is usually ensured by adhering to the relubrication intervals. During maintenance work, the grease may remain in the channels and does not need to be removed.

31555454/EN – 11/2023

Re-lubrication period

For the relubrication intervals of the bearings, adhere to the requirements stated in the table:

- Ambient temperature: -20 °C to +40 °C
- Rated speed that corresponds to that of a 4-pole AC motor
- Normal load

In case of higher ambient temperatures, higher speeds, or larger loads, the relubrication intervals are shorter. Use 1.5 times of the stated quantity for the initial filling.

The relubrication channels leading the grease from the grease nipples to the bearings must always be filled with grease. This is usually ensured by adhering to the relubrication intervals. During maintenance work, the grease may remain in the channels and does not need to be removed.

	Horizontal mounting position		Vertical mounting position	
Motors	**Duration**	**Quantity**	**Duration**	**Quantity**
EDRN225 /NS	5000 h	40 g	3000 h	60 g
EDRE250 – 315 /NS **EDRN250 – 315 /NS**	5000 h	50 g	3000 h	70 g
EDRE250 – 315 /ERF /NS **EDRN250 – 315 /ERF /NS**	3000 h	50 g	2000 h	70 g

8.4 Reinforced bearings

⚠ WARNING

Risk of explosion due to impermissible heating of bearing and motor.

Severe or fatal injuries.

- Do not operate cylindrical roller bearings without overhung load.

In the /ERF (reinforced bearing) option, cylindrical rolling bearings are installed on the A-side. The reinforced bearings must have overhung load applied to them and must never be operated without overhung load.

The reinforced bearings are only offered with the /NS (relubrication) option so as to facilitate optimal lubrication of the bearing.

For lubricating the bearings, observe the notes in chapter "Bearing lubrication for EDRE250 – 280, EDRN225 – 315 motors with relubrication device /NS" (→ 🗎 152).

31555454/EN – 11/2023

8.5 Motor and brake maintenance – preliminary work

⚠ WARNING

Risk of injury if the drive starts up unintentionally.

Severe or fatal injuries.

- Before you start working on the unit, disconnect the motor and all connected options from the power supply.
- Secure the motor against unintended power-up.

8.5.1 Removing rotary encoders from EDR..71 – 132, EDRN80 – 132S motors

The following figure illustrates the disassembly procedure using the ES7. rotary encoder as an example:

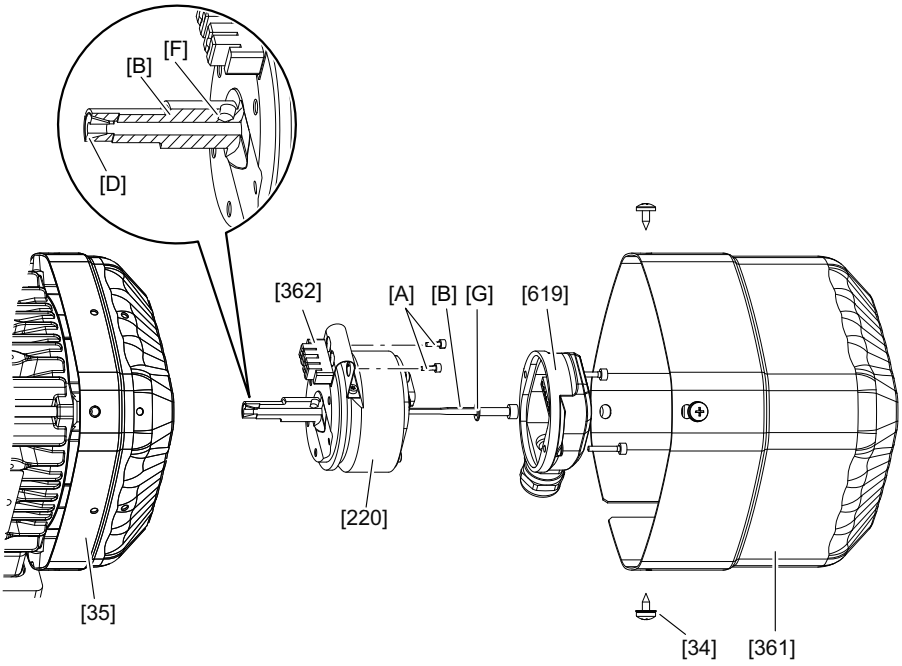

9007201837842187

[34]	Tapping screw	[A]	Retaining screws on the torque bracket
[35]	Fan guard	[B]	Central retaining screw
[220]	Encoder	[D]	Cone
[361]	Safety cover	[F]	Bore
[362]	Expansion anchor	[G]	Tooth lock washer
[619]	Connection cover		

31555454/EN – 11/2023

Disassembling ES7./AS7.encoders

1. Remove the safety cover [361], or the forced cooling fan if required.
2. Loosen the screws of the connection cover [619] and remove it. Do not disconnect the encoder cable.
3. Make sure the cone [D] does not fall out while the central retaining screw [B] is loosened. Loosen the central retaining screw [B] by 2 – 3 turns. Loosen the cone [D] by tapping lightly onto the screw head.
4. To loosen the expansion anchor [362], remove the retaining screw of the torque bracket [A]. Carefully pull the encoder [220] from the rotor bore.

Reassembly

1. Apply a contact corrosion prevention compound, e.g. NOCO® fluid to the encoder pin.
2. Attach the expansion anchor [362] to the torque bracket of the encoder.
3. Push the encoder into the bore in the shaft end to the stop.
4. Tighten the central retaining screw [B] with the inserted tooth lock washer [G].
   ⇨ Tightening torque 2.75 Nm.
5. Press the expansion anchor [362] into the fan guard [35] and check if it is seated correctly.
6. Screw the retaining screws of the torque bracket [A] into the expansion anchor [362] up to the stop. Tighten the retaining screws of the torque bracket [A].
   ⇨ Tightening torque 2.25 Nm.
7. Screw on the connection cover [619].
   ⇨ Tightening torque 2.25 Nm.
8. Mount the safety cover [361] onto the forced cooling fan.

8.5.2 Installing/removing rotary encoders from EDR..160 – 280, EDRN132M – 280 motors

The following figure illustrates the disassembly procedure using the EG7. rotary encoder as an example:

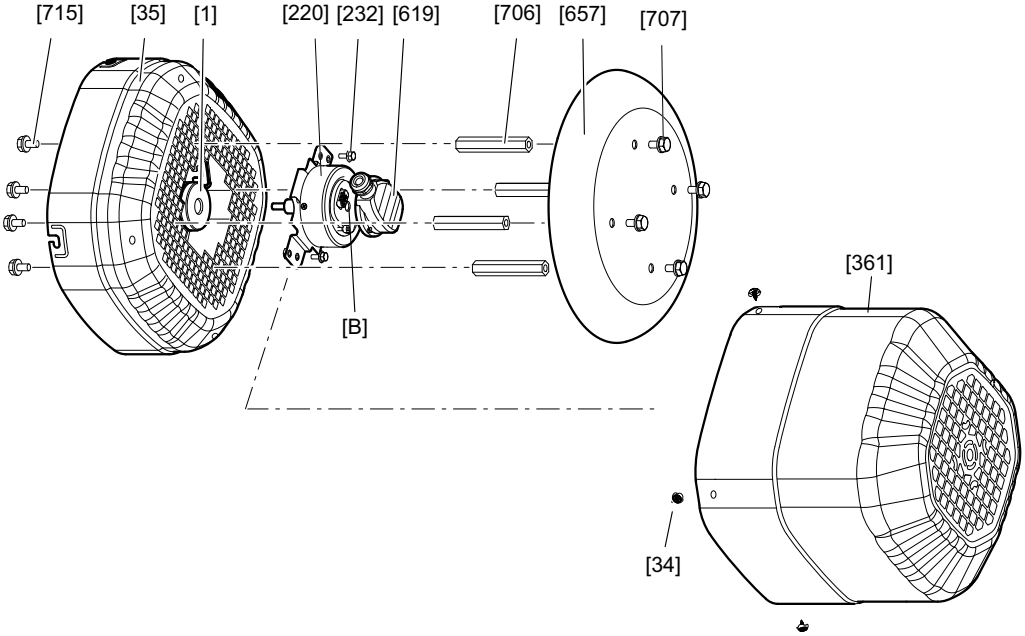

18014400901307275

[1]	Rotor	[367]	Retaining screw
[34]	Tapping screw	[619]	Connection cover
[35]	Fan guard	[657]	Canopy
[220]	Encoder	[706]	Spacer bolt
[232]	Screws	[707] [715]	Screws
[361]	Safety cover	[B]	Central retaining screw

Removing EG7., AG7. encoders

1. Proceed as follows, depending on the design:
   - ⇨ **With canopy:** Remove the screws [707] to disassemble the canopy [657]. If required, counter using a hexagon wrench SW13 on the spacer bolt [706].
   - ⇨ **Without canopy:** Remove the screws [34] to disassemble the safety cover [361].
2. Remove the forced cooling fan if required.
3. Loosen the screws of the connection cover [619] and remove it. Do not disconnect the encoder cable.
4. Remove the retaining screws of the torque bracket [232].
5. Loosen the central retaining screw [B] by 2 – 3 turns to pull off the encoder [220].

Reassembly

1. Apply a contact corrosion prevention compound, e.g. NOCO® fluid to the encoder pin.
2. Push the encoder into the bore in the shaft end to the stop.
3. Tighten the central retaining screw [B] with the inserted tooth lock washer [G].
   - ⇨ Tightening torque 8 Nm.
4. Tighten the retaining screws of the torque bracket [232].
   - ⇨ Tightening torque 6 Nm
5. Screw on the connection cover [619].
   - ⇨ Tightening torque 2.25 Nm
6. Mount the safety cover [361] onto the forced cooling fan.
7. Mount the canopy [657] if necessary.

8.5.3 Removing the rotary encoders from EDR..160 – 225, EDRN132M – 225 motors with forced cooling fan option /VE

The following figure illustrates the disassembly procedure using the EG7. rotary encoder as an example:

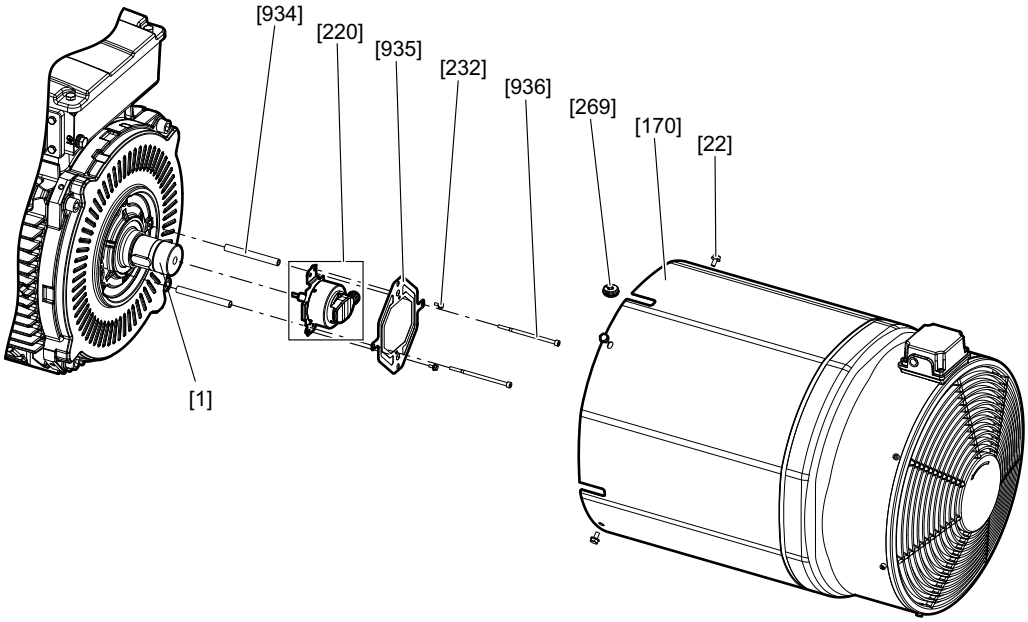

9007206970702987

[22]	Screw	[935]	Torque arm
[170]	Forced cooling fan guard	[936]	Screw
[232]	Screws	[934]	Spacer bushing
[269]	Grommet	[A]	Encoder

Removing EG7., AG7. encoders

1. Remove the screws [22] to disassemble the forced cooling fan [170].
2. Remove the cable grommet [269] with the encoder cable from the forced cooling fan [170].
3. Remove the screws [232] and [936] to disassemble the torque bracket [935].
4. Loosen the screws of the connection cover [619] and remove it. Do not disconnect the encoder cable.
5. Loosen the central retaining screw [B] by 2 – 3 turns to pull off the encoder [220].

31555454/EN – 11/2023

Reassembly

1. Apply a contact corrosion prevention compound, e.g. NOCO® fluid to the encoder pin.
2. Push the encoder into the bore in the shaft end to the stop.
3. Tighten the central retaining screw [B] with the inserted tooth lock washer [G].
   ⇨ Tightening torque 8 Nm.
4. Place the torque bracket [935] onto the spacer bushing [934] and tighten the screws [936].
   ⇨ Tightening torque 11 Nm.
5. Tighten the retaining screws of the torque bracket [232].
   ⇨ Tightening torque 6 Nm
6. Insert the cable grommet [269] into the forced cooling fan [170].
7. Mount the forced cooling fan [170] and tighten the screws [22].
   ⇨ Tightening torque 28 Nm.

8.5.4 Removing the rotary encoder from EDR..315, EDRN 315 motors

The following figure illustrates the disassembly procedure using the EH7. and AH7. rotary encoders as an example:

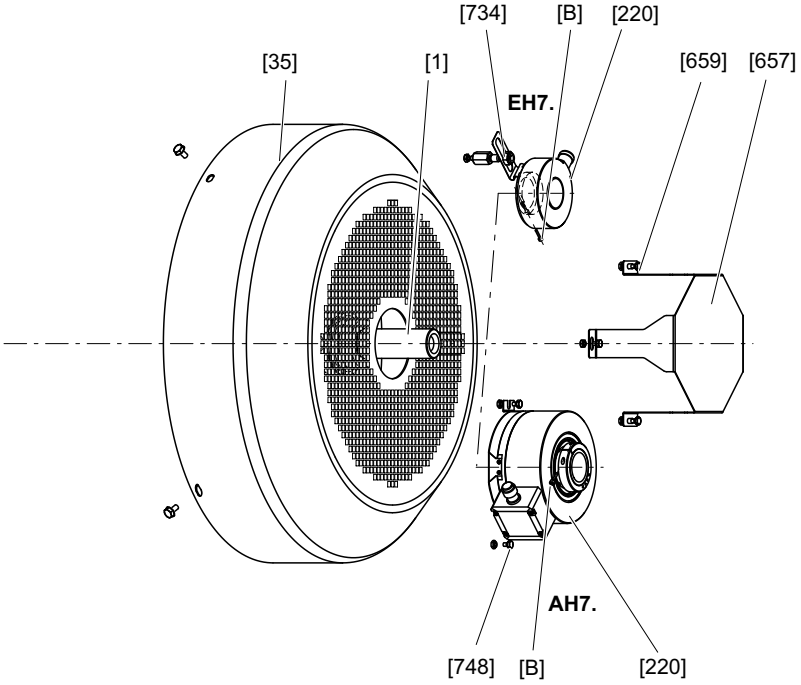

18014398917111435

[35]	Fan guard	[659]	Screw
[220]	Encoder	[734]	Nut
[367]	Retaining screw	[748]	Screw
[657]	Cover plate		

Removing EH7., AH7. encoders

1. Remove the screws [659] to disassemble the cover plate [657].
2. Depending on the design, remove the encoder [220] from the fan guard [35] as follows:
   - ⇨ **EH7.:** Remove the nut [734].
   - ⇨ **AH7.:** Remove screw [748].
3. Loosen the central retaining screw [B] by 2 – 3 turns to pull off the encoder [220].

Reassembly

1. Push the encoder into the bore in the shaft end to the stop.
2. Tighten the central retaining screw [B].
   - ⇨ **EH7.:** Tightening torque 3 Nm.
   - ⇨ **AH7.:** Tightening torque 2 Nm.
3. Proceed as follows, depending on the encoder:
   - ⇨ **EH7.:** Install the nut [734].
   - ⇨ **AH7.:** Insert and tighten the screw [748].
4. Mount the cover plate [657] using the screws [659].

31555454/EN – 11/2023

8.5.5 Mounting/removing rotary encoders with XV../EV../AV.. mounting adapter for EDR..71 – 225, EDRN80 – 225

The following figure illustrates the disassembly procedure using a third-party encoder as an example:

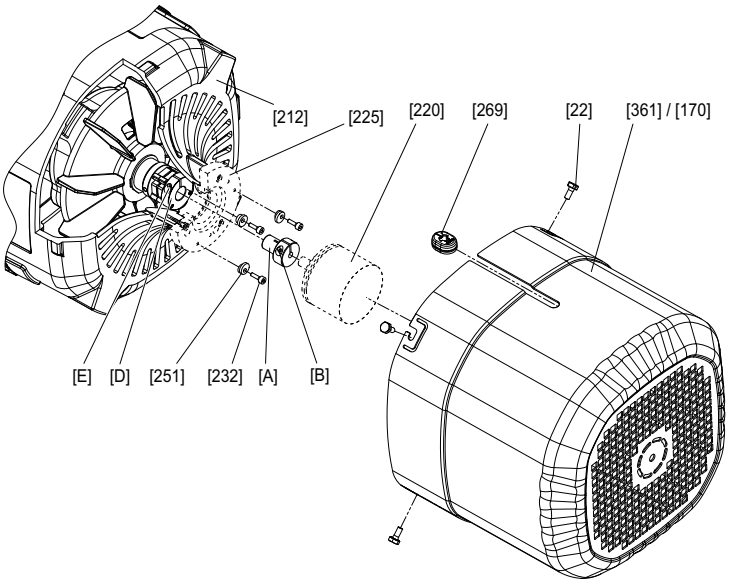

9007202887906699

[22]	Screw	[361]	Safety cover (normal/long)
[170]	Forced cooling fan guard	[269]	Grommet
[212]	Fan guard with encoder mount	[A]	Adapter
[220]	Encoder	[B]	Clamping screw
[225]	Intermediate flange (not with XV1A)	[D]	Coupling (spread- or solid shaft coupling)
[232]	Screws (enclosed with XV1A and XV2A)	[E]	Clamping screw
[251]	Conical spring washers (enclosed with XV1A and XV2A)		

Removing XV.., EV.., AV.. encoders

1. Remove the safety cover [361], or the forced cooling fan if required.
2. Loosen the retaining screws [232] and turn the conical spring washers [251] outwards.
3. Loosen the clamping screw [E] of the coupling.
4. Remove adapter [A] and encoder [220].

Reassembly

1. Proceed as described in chapter "Encoder mounting adapter" (→ 🗎 41) to mount the encoder.

31555454/EN – 11/2023

8.5.6 Mounting/removing rotary encoders with XV../EV../AV.. mounting adapter for EDR..250 – 280, EDRN250 – 280

The following figure illustrates the disassembly procedure using a third-party encoder as an example:

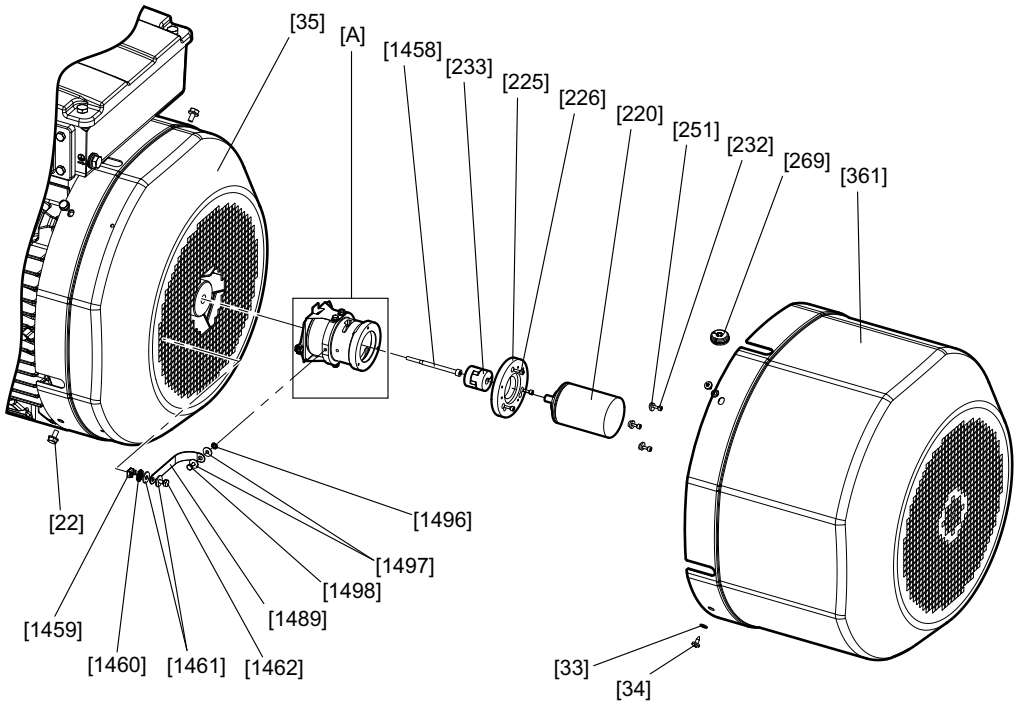

18014406225445899

[22]	Screw	[361]	Safety cover (normal/long)
[33]	Washer	[1458]	Screw
[34]	Screw	[1459]	Cage nut
[35]	Fan guard	[1460]	Serrated lock washer
[220]	Encoder	[1461]	Washer
[225]	Intermediate flange (optional)	[1462]	Screw
[226]	Screw	[1489]	Ground strap
[232]	Screws (enclosed with .V1A and .V2A)	[1496]	Serrated lock washer
[233]	Coupling	[1497]	Washer
[251]	Conical spring washers (enclosed with .V1A and .V2A)	[1498]	Screw
[269]	Grommet	[A]	Encoder mounting adapter

Removing the encoder mounting adapter

1. Remove the screws [34] to disassemble the safety cover [361].
2. Remove the encoder [220], see chapter "Removing EV.., AV.. encoders" (→ 🗎 164).
3. In order to remove the ground strap [1489] from the encoder mounting adapter [A], loosen the serrated lock washer [1496], washer [1497], and screw [1498].

4. Remove the screws [22] to disassemble the fan guard [35].
5. Loosen the screw [1458] to remove the encoder mounting adapter [A].
   ⇨ **If the encoder mounting adapter cannot easily be removed:** Screw an M6 set screw (length 20 – 35 mm) hand tight in the rotor bore. Screw an M8 set screw (length > 10 mm) into the same bore and push the encoder mounting adapter [A] off the rotor [1]. Remove the M6 set screw from the rotor bore.

Removing EV.., AV.. encoders

1. Remove the screws [34] to disassemble the safety cover [361].
2. Pull out the cable grommet [269] together with the encoder cable from the safety cover [361].
3. Loosen the retaining screws [232] and turn the conical spring washers [251] outwards.
4. Loosen the screw at the coupling clamping hub [233] at the encoder end, the screw can be accessed through the slots of the encoder mounting adapter [A].
5. Remove the encoder [220] from the encoder mounting adapter [A] or the intermediate flange [225].

Reassembly

1. Proceed as described in chapter "Encoder mounting adapter" (→ 🗎 41) to mount the encoder.

31555454/EN – 11/2023

8.5.7 Mounting/removing rotary encoders with EV../AV../XV.. encoder mounting adapter for EDR..250 – 280, EDRN250 – 280 motors with forced cooling fan option /VE

The following figure illustrates the disassembly procedure using a non-SEW encoder as an example:

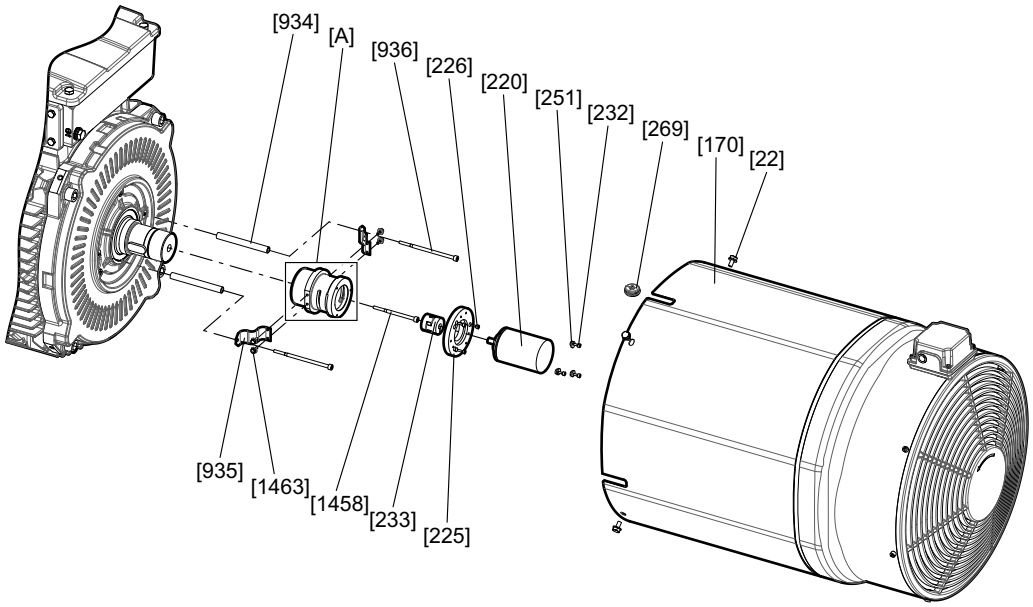

7715965835

[22]	Screw	[269]	Grommet
[170]	Forced cooling fan guard	[934]	Spacer bushing
[220]	Encoder	[935]	Torque arm
[225]	Intermediate flange (optional)	[936]	Screw
[226]	Screw	[1458]	Screw
[232]	Screws (enclosed with .V1A and .V2A)	[1463]	Screw
[233]	Coupling	[A]	Encoder mounting adapter
[251]	Conical spring washers (enclosed with .V1A and .V2A)		

Removing the encoder mounting adapter

1. Loosen the screws [22] and remove the forced cooling fan guard [170].
2. Remove the cable grommet [269] from the fan guard [170].
3. Loosen the screws [232] and turn the conical spring washers [251] to the side. Loosen the screw of the coupling clamping hub [233] on the encoder end and remove the encoder [220]. The intermediate flange [225] and screws [226] can remain at the encoder mounting adapter [A].
4. Loosen the screws [1458] and [936] and remove the encoder mounting adapter [A]. The torque brackets [935] and screws [1463] can remain at the encoder mounting adapter [A].
   - If the encoder mounting adapter [A] cannot easily be removed: Screw in a set screw M6 with 20 – 35 mm length into the rotor bore (bore for screw [1458]) and tighten it finger-tight. Screw in a set screw M8 with > 10 mm length or a screw M8 with min. 80 mm length into the same bore and push out the encoder mounting adapter [A] from the rotor [1]. Then remove the set screw M6 from the rotor again.

Removing EV.., AV.., and XV. encoders

1. Loosen the screws [22] and remove the forced cooling fan guard [170].
2. Remove the cable grommet [269] with encoder cable from the forced cooling fan guard [170].
3. Turn the conical spring washers of the encoder [220] outwards and loosen the screws [232]. Loosen the screw of the coupling clamping hub [233] on the encoder end.
4. Remove the encoder [220] from the encoder mounting adapter [A] or intermediate flange [225].

Reassembly

1. Proceed as described in chapter "Encoder mounting adapter" (→ 🗎 41) to mount the encoder.

31555454/EN – 11/2023

8.5.8 Removing and mounting cone shaft encoders of EDRN71 – 132S motors

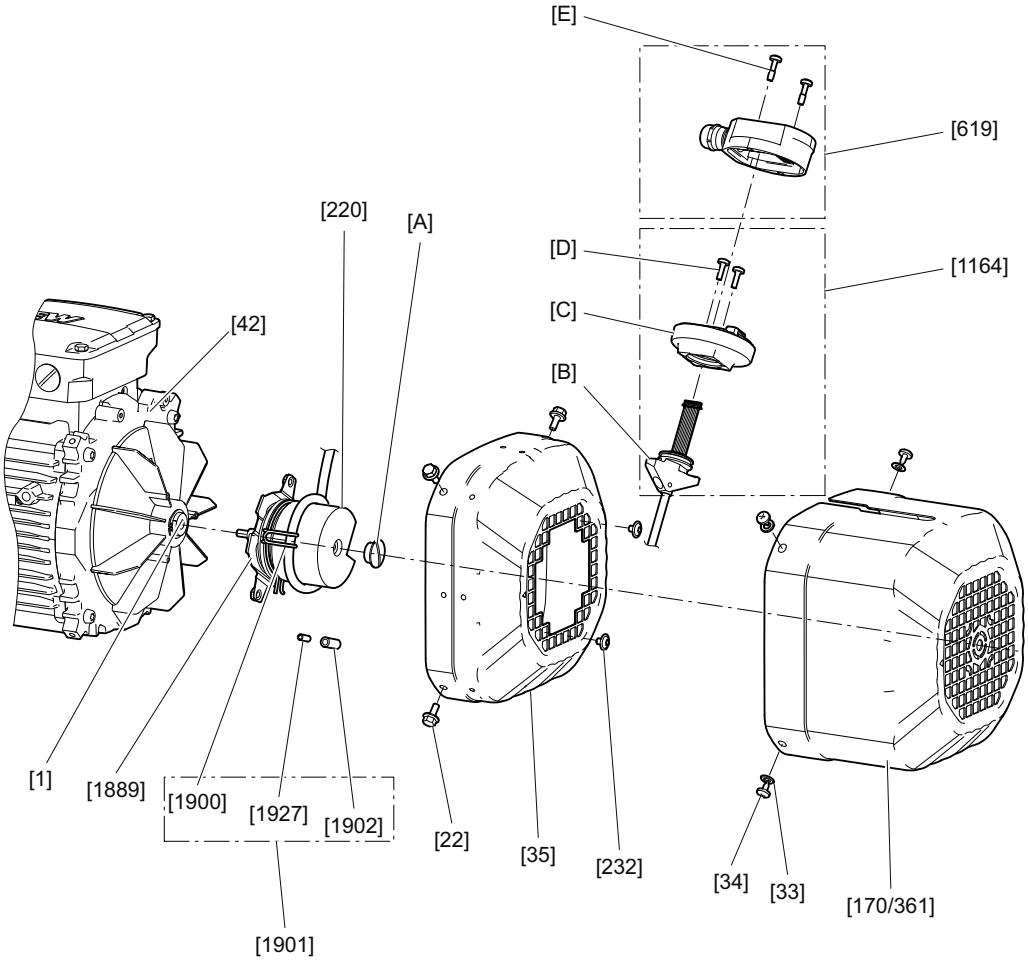

[1]	Rotor	[1164]	Connection adapter
[22]	Screw (hexagonal)	[1889]	Torque arm
[33]	Washer	[1900]	Cable retainer
[34]	Screw (cross recess)	[1901]	Accessory bag
[35]	Fan guard	[1902]	Threaded sleeve
[42]	Rear endshield	[1927]	Set screw
[170]	Forced cooling fan	[A]	Screw plug
[220]	Encoder	[B]	T-slot nut
[232]	Screw (hexalobular)	[C]	Lower part
[361]	Safety cover	[D]	Screw
[619]	Connection cover	[E]	Screw

Removing encoder EK8./AK8.

1. Unscrew the screws [E].
2. Remove the connection cover [619] from the connection adapter [1164].
3. Loosen the screws [D] in the lower part [C].
   ⇨ Only unscrew the screws [D] to such an extent that the connection adapter [1164] can be moved in the recess of the safety cover [361].
4. Unscrew the screws [34].

31555454/EN – 11/2023

5. Remove the safety cover [361] from the motor. When doing this, slide the connection adapter [1164] out of the recess.
6. Unscrew the screws [232].
7. Unscrew the screws [22].
8. Remove the fan guard [35] over the encoder [220]. Guide the connection adapter [1164] with the signal cable through the cutout of the fan guard [35].
9. Unscrew the central screw plug [A] of the encoder [220].
10. Loosen the central retaining screw of the encoder [220].
    ⇨ If the central retaining screw of the encoder [220] cannot be loosened, counter-tighten the spanner flat SW10 of the encoder shaft.
11. Loosen the cone connection.
    ⇨ Encoder EK8., AK8W, AK8Y: To loosen the cone connection, continue turning the central retaining screw of the encoder [220] counterclockwise.
    ⇨ Encoder AK8H: Continue turning the central retaining screw of the encoder [220] counterclockwise. To loosen the cones, screw an M6 screw (≥ 70 mm long) into the bore.
12. Remove the encoder [220] from the rotor [1].

Mounting encoder EK8./AK8.

1. Clean the cone of the encoder [220] and the rotor [1].
2. Remove the central screw plug [A].
3. Insert the encoder [220] into the conical bore of the rotor [1].
4. To secure the encoder [220] in place, tighten the central retaining screw.
    ⇨ Counter-tighten the spanner flat SW10 of the insulation coupling.
    ⇨ Tightening torque 3.3 Nm
5. To seal the encoder [220], screw in the central screw plug [A].
    ⇨ Tightening torque 1.8 Nm
6. Mount the fan guard [35] over the encoder [220]. When doing this, guide the connection adapter [1164] with the signal cable through the central grille cutout of the fan guard [35].
7. Use the screws [22] to secure the fan guard [35] to the rear endshield or brake endshield [42] of the motor.
    ⇨ For metal hoods: Tightening torque 3.3 Nm.
    ⇨ For plastic hoods: Tightening torque 2 Nm.
8. Screw the screws [232] through the grille of the fan guard [35] and into the nuts of the torque arm [1889].
    ⇨ If you need to turn the encoder [220] in order for the screws to reach the nuts of the torque arm, turn the encoder [220] clockwise.
    ⇨ Make sure the signal cable is of a sufficient length so that the connection adapter [1164] can be inserted into the recess of the safety cover [361].
    ⇨ Tightening torque 3.3 Nm
9. Push the connection adapter [1164] into the cutout on the safety cover [361] as far as the end of the cutout on the forced cooling fan [170] that faces away from the motor.

31555454/EN – 11/2023

10. Place the safety cover [361] onto the fan guard [35].
    - ⇨ The arrow that is cast in the lower part [C] of the connection adapter [1164] indicates the direction of the subsequent cable outlet for the connection cover [619].
    - ⇨ If you wish to change the direction of the cable outlet: Unscrew the screws [D]. Twist the lower part [C] against the T-slot nut [B]. Screw in the screws [D]. When doing so, only tighten the screws [D] lightly.
11. Fasten the safety cover [361] with the screws [34] and washers [33].
    - ⇨ Tightening torque 2 Nm
12. Turn the connection adapter [1164] clockwise up to the stop.
13. Secure the connection adapter [1164] in place by tightening the screws [D].
    - ⇨ Secure the screws [D] in place with medium-strength thread locker. Tightening torque 2 Nm.
14. ⚠ **WARNING!** Risk of explosion due to contamination. Fatal or serious injuries. Before you position the connection cover [619] make sure the wiring space is free from dust and humidity. Remove any dirt from the wiring space.
    Place the connection cover [619] onto the connection adapter [1164].
15. Screw the screws [E] through the bores on the connection cover [619] into the bores on the connection adapter [1164].
    - ⇨ Secure the screws [E] using a medium-strength thread locker. The tightening torque is 2.5 Nm.

Removing encoder EK8./AK8. with optional forced cooling fan

1. Unscrew the screws [E].
2. Remove the connection cover [619] from the connection adapter [1164].
3. Loosen the screws [D] in the lower part [C].
    - ⇨ Only unscrew the screws [D] to such an extent that the connection adapter [1164] can be moved in the recess of the forced cooling fan [170].
4. Loosen the screws [22].
5. Unscrew the screws [34].
6. Remove the forced cooling fan [170] from the motor. When doing this, slide the connection adapter [1164] out of the recess.
7. Unscrew the screws [232].
8. Remove the signal cable from the slot of the cable retainer [1900].
9. Unscrew the screws [22].
10. Remove the fan guard [35] over the encoder [220]. Guide the connection adapter [1164] with the signal cable through the cutout of the fan guard [35].
11. Unscrew the central screw plug [A] of the encoder [220].
12. Loosen the central retaining screw of the encoder [220].
    - ⇨ If the central retaining screw of the encoder [220] cannot be loosened, counter-tighten the spanner flat SW10 of the encoder shaft.
13. Loosen the cone connection.
    - ⇨ Encoder EK8., AK8W, AK8Y: To loosen the cone connection, continue turning the central retaining screw of the encoder [220] counterclockwise.

- ⇨ Encoder AK8H: Continue turning the central retaining screw of the encoder [220] counterclockwise. To loosen the cones, screw an M6 screw (≥ 70 mm long) into the bore.

14. Remove the encoder [220] from the rotor [1].

Mounting encoder EK8./AK8. with optional forced cooling fan

1. Clean the cone of the encoder [220] and the rotor [1].
2. Remove the central screw plug [A].
3. Insert the encoder [220] into the conical bore of the rotor [1].
4. To secure the encoder [220] in place, tighten the central retaining screw.
   - ⇨ Counter-tighten the spanner flat SW10 of the encoder shaft.
   - ⇨ Tightening torque 3.3 Nm
5. To seal the encoder [220], screw in the central screw plug [A].
   - ⇨ Tightening torque 1.8 Nm
6. Mount the fan guard [35] over the encoder [220]. When doing this, guide the connection adapter [1164] with the signal cable through the central grille cutout of the fan guard [35].
7. Position the screws [22] of the fan guard [35] on the rear or brake endshield [42] of the motor.
8. Screw the screws [232] through the grille of the fan guard [35] and into the nuts of the torque arm [1889].
   - ⇨ If you need to turn the encoder [220] in order for the screws to reach the nuts of the torque arm, turn the encoder [220] clockwise.
   - ⇨ Make sure the signal cable is of a sufficient length so that the connection adapter [1164] can be inserted into the recess of the forced cooling fan [170].
   - ⇨ Tightening torque 3.3 Nm
9. ⚠ **CAUTION!**
   Improper mounting can cause damage to the equipment. Damage to the signal cable. Insert the signal cable of the encoder [220] into the curve of the cable support [1900] so that the signal cable does not touch the rotating forced cooling fan.
10. To turn the cable retainer [1900], loosen the set screw [1927].
11. To secure the cable retainer [1900] in place, tighten the set screw [1927].
    - ⇨ Tightening torque 1.8 Nm
12. Place the forced cooling fan [170] onto the fan guard [35].
13. Insert the connection adapter [1164] into the recess of the forced cooling fan [170]. The standard alignment of the recess points towards the terminal box.
    - ⇨ The arrow that is cast in the lower part [C] of the connection adapter [1164] indicates the direction of the subsequent cable outlet for the connection cover [619].
    - ⇨ If you wish to change the direction of the cable outlet: Unscrew the screws [D]. Twist the lower part [C] against the T-slot nut [B]. Screw in the screws [D]. When doing so, only tighten the screws [D] lightly.
14. Use the screws [22] to secure the fan guard [35] to the rear endshield or brake endshield [42] of the motor.
    - ⇨ For metal hoods: Tightening torque 3.3 Nm.

31555454/EN – 11/2023

⇨ For plastic hoods: Tightening torque 2 Nm.

15. Fasten the forced cooling fan with the screws [34] and washers [33].
    ⇨ Tightening torque 2 Nm
16. Push the connection adapter [1164] into the cutout on the safety cover [361] as far as the end of the cutout on the forced cooling fan [170] that faces away from the motor.
17. Turn the connection adapter [1164] clockwise up to the stop.
18. Secure the connection adapter [1164] in place by tightening the screws [D].
    ⇨ Secure the screws [D] in place with medium-strength thread locker. Tightening torque 2 Nm.
19. ⚠ **WARNING!** Risk of explosion due to contamination. Fatal or serious injuries. Before you position the connection cover [619] make sure the wiring space is free from dust and humidity. Remove any dirt from the wiring space.
    Place the connection cover [619] onto the connection adapter [1164].
20. Screw the screws [E] through the bores on the connection cover [619] into the bores on the connection adapter [1164].
    ⇨ Secure the screws [E] using a medium-strength thread locker. The tightening torque is 2.5 Nm.

8.5.9 Removing and mounting cone shaft encoders of EDRN132M – 315 motors

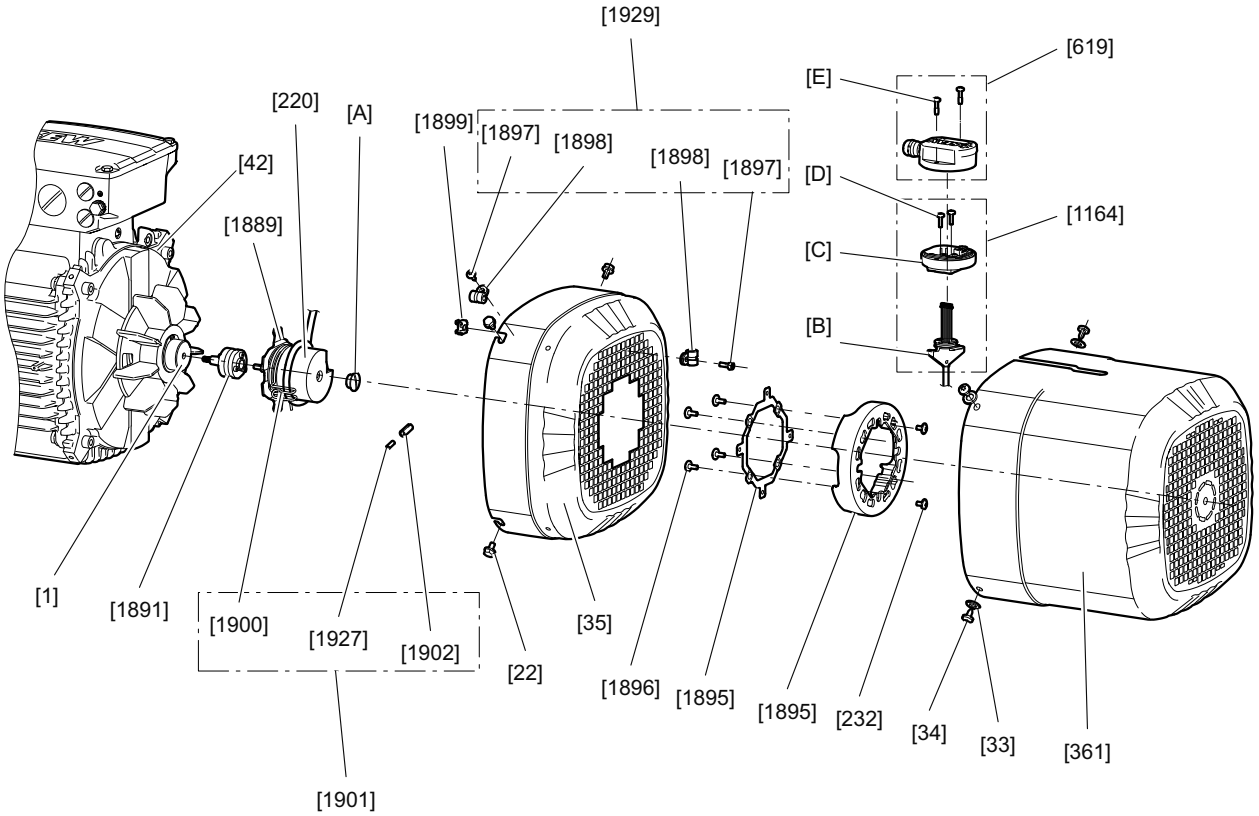

9007227788914699

[1]	Rotor	[1898]	Clamp
[22]	Screw (hexagonal)	[1899]	Cage nut
[33]	Washer	[1900]	Cable retainer
[34]	Screw (cross recess)	[1901]	Accessory bag
[220]	Encoder	[1902]	Threaded sleeve

[232]	Screw (hexalobular)	[1927]	Set screw
[361]	Safety cover	[1929]	Accessory bag
[619]	Connection cover	[A]	Screw plug
[1164]	Connection adapter	[B]	T-slot nut
[1891]	Insulation coupling	[C]	Lower part
[1895]	Support ring/spacer ring	[D]	Screw
[1896]	Screw (hexalobular)	[E]	Screw
[1897]	Screw (hexagon socket)		

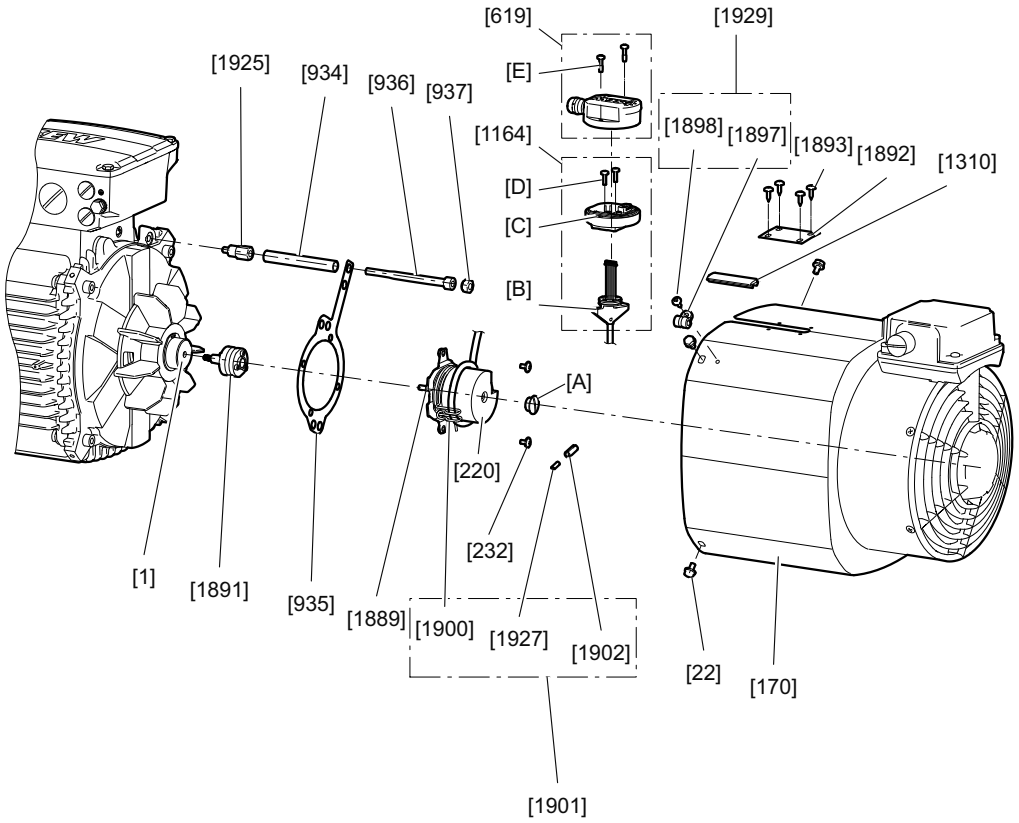

18014427053575691

[1]	Rotor	[1892]	Support plate
[22]	Screw (hexagonal)	[1893]	Screw (cross recess)
[33]	Washer	[1897]	Screw (hexagon socket)
[34]	Screw (cross recess)	[1900]	Cable retainer
[220]	Encoder	[1901]	Accessory bag
[232]	Screw (hexalobular)	[1902]	Threaded sleeve
[361]	Safety cover	[1925]	Spacer bolt
[619]	Connection cover	[1927]	Set screw
[934]	Spacer bushing	[1929]	Accessory bag
[935]	Torque arm	[A]	Screw plug
[936]	Cap screw	[B]	T-slot nut
[937]	Hex nut	[C]	Lower part
[1310]	Sealing strip	[D]	Screw
[1889]	Torque arm	[E]	Screw

Removing encoder EK8./AK8.

1. Unscrew the screws [E].
2. Remove the connection cover [619] from the connection adapter [1164].

3. Loosen the screws [D] in the lower part [C].
   ⇨ Only unscrew the screws [D] to such an extent that the connection adapter [1164] can be moved in the recess of the safety cover [361].
4. Unscrew the screws [34].
5. Remove the safety cover [361] from the motor. When doing this, slide the connection adapter [1164] out of the recess.
6. Unscrew the screws [232].
7. Unscrew the screws [22].
8. Remove the fan guard [35] over the encoder [220]. Guide the connection adapter [1164] with the signal cable through the cutout of the fan guard [35].
9. Unscrew the central screw plug [A] of the encoder [220].
10. Loosen the central retaining screw of the encoder [220].
    ⇨ If the central retaining screw of the encoder [220] cannot be loosened, counter-tighten the spanner flat SW10 of the encoder shaft.
11. Loosen the cone connection.
    ⇨ Encoder EK8., AK8W, AK8Y: To loosen the cone connection, continue turning the central retaining screw of the encoder [220] counterclockwise.
    ⇨ Encoder AK8H: Continue turning the central retaining screw of the encoder [220] counterclockwise. To loosen the cones, screw an M6 screw (≥ 70 mm long) into the bore.
12. Remove the encoder [220] from the rotor [1].
13. For optional insulation coupling: Remove the encoder [220] from the insulation coupling [1891].

Mounting encoder EK8./AK8.

1. Clean the cone of the encoder [220] and the rotor [1].
2. For optional insulation coupling: Clean the cones of the insulation coupling [1891].
3. Remove the central screw plug [A].
4. For optional insulation coupling: The insulation coupling [1891] must be mounted before the encoder is mounted. Insert the insulation coupling [1891] into the conical bore of the rotor [1]. To secure the insulation coupling in place, tighten the central retaining screw.
   ⇨ Counter-tighten the spanner flat SW10 of the insulation coupling.
   ⇨ Tightening torque 3.3 Nm
5. Insert the encoder [220] into the conical bore of the rotor [1].
6. In the case of the insulation coupling option: Insert the encoder [220] into the conical bore of the insulation coupling [1891].
7. To secure the encoder [220] in place, tighten the central retaining screw.
   ⇨ Counter-tighten the spanner flat SW10 of the encoder shaft.
   ⇨ Tightening torque 3.3 Nm
8. To seal the encoder [220], screw in the central screw plug [A].
   ⇨ Tightening torque 1.8 Nm

9. Mount the fan guard [35] over the encoder [220]. When doing this, guide the connection adapter [1164] with the signal cable through the central grille cutout of the fan guard [35].
10. Use the screws [22] to secure the fan guard [35] to the rear endshield or brake endshield [42] of the motor.
    - ⇨ EDRN132M – L: Tightening torque 11.3 Nm
    - ⇨ EDRN160M – L: Tightening torque 27.3 Nm
    - ⇨ EDRN315: Secure the screws [22] using a medium-strength thread locker. Tightening torque 5 Nm.
11. Screw the screws [232] through the support ring/spacer ring [1895] or the grille on the fan guard [35] into the nuts on the torque arm [1889].
    - ⇨ Make sure the signal cable is of a sufficient length so that the connection adapter [1164] can be inserted into the recess of the safety cover [361].
    - ⇨ Tightening torque 3.3 Nm
12. Place the safety cover [361] onto the fan guard [35].
    - ⇨ The standard alignment of the recess points towards the terminal box.
    - ⇨ The arrow that is cast in the lower part [C] of the connection adapter [1164] indicates the direction of the subsequent cable outlet for the connection cover [619].
    - ⇨ If you wish to change the direction of the cable outlet: Unscrew the screws [D]. Twist the lower part [C] against the T-slot nut [B]. Screw in the screws [D]. When doing so, only tighten the screws [D] lightly.
13. Fasten the safety cover [361] with the screws [34] and washers [33].
    - ⇨ Tightening torque 4.5 Nm
14. Push the connection adapter [1164] into the cutout on the safety cover [361] as far as the end of the cutout on the forced cooling fan [170] that faces away from the motor.
15. Turn the connection adapter [1164] clockwise up to the stop.
16. Secure the connection adapter [1164] in place by tightening the screws [D].
    - ⇨ Secure the screws [D] in place with medium-strength thread locker. Tightening torque 2 Nm.
17. ⚠ **WARNING!** Risk of explosion due to contamination. Fatal or serious injuries. Before you position the connection cover [619] make sure the wiring space is free from dust and humidity. Remove any dirt from the wiring space.
    Place the connection cover [619] onto the connection adapter [1164].
18. Screw the screws [E] through the bores on the connection cover [619] into the bores on the connection adapter [1164].
    - ⇨ Secure the screws [E] using a medium-strength thread locker. The tightening torque is 2.5 Nm.

Removing encoder EK8./AK8. with optional forced cooling fan

1. In motors of sizes 250 – 315: If the screws [1893] are available, unscrew the screws. Remove the supporting plate [1892]. Push the sealing profile [1310]/[1965] out of the cutout.
2. Unscrew the screws [E].
3. Remove the connection cover [619] from the connection adapter [1164].

31555454/EN – 11/2023

4. Loosen the screws [D] in the lower part [C].
   ⇨ Only unscrew the screws [D] to such an extent that the connection adapter [1164] can be moved in the recess of the forced cooling fan [170].
5. Unscrew the screws [22].
6. Remove the forced cooling fan [170] from the motor. When doing this, slide the connection adapter [1164] out of the recess.
7. Unscrew the screws [232].
8. Remove the signal cable from the slot of the cable retainer [1900].
9. To remove the torque bracket [935], loosen the screw [936]/hex nut [937]. Guide the connection adapter [1164] with the signal cable through the cutout of the torque bracket [935].
10. Loosen the central retaining screw of the encoder [220].
    ⇨ If the central retaining screw of the encoder [220] cannot be loosened, counter-tighten the spanner flat SW10 of the encoder shaft.
11. Loosen the cone connection.
    ⇨ Encoder EK8., AK8W, AK8Y: To loosen the cone connection, continue turning the central retaining screw of the encoder [220] counterclockwise.
    ⇨ Encoder AK8H: Continue turning the central retaining screw of the encoder [220] counterclockwise. To loosen the cones, screw an M6 screw (≥ 70 mm long) into the bore.
12. Remove the encoder [220] from the rotor [1].
13. For optional insulation coupling: Remove the encoder [220] from the insulation coupling [1891].

Mounting encoder EK8./AK8. with optional forced cooling fan

1. Clean the cone of the encoder [220] and the rotor [1].
2. For optional insulation coupling: Clean the cones of the insulation coupling [1891].
3. Remove the central screw plug [A].
4. For optional insulation coupling: The insulation coupling [1891] must be mounted before the encoder is mounted. Insert the insulation coupling [1891] into the conical bore of the rotor [1]. To secure the insulation coupling in place, tighten the central retaining screw.
   ⇨ Counter-tighten the spanner flat SW10 of the encoder shaft.
   ⇨ Tightening torque 3.3 Nm
5. Insert the encoder [220] into the conical bore of the rotor [1].
6. In the case of the insulation coupling option: Insert the encoder [220] into the conical bore of the insulation coupling [1891].
7. To secure the encoder [220] in place, tighten the central retaining screw.
   ⇨ Counter-tighten the spanner flat SW10 of the encoder shaft.
   ⇨ Tightening torque 3.3 Nm
8. To seal the encoder [220], screw in the central screw plug [A].
   ⇨ Tightening torque 1.8 Nm
9. Guide the torque arm [935] over the connection adapter [1164] and the encoder [220].

10. For optional insulation coupling: Mount the spacer bolt [1625].
    - ⇨ M6 screw: Tightening torque 11.3 Nm
    - ⇨ M8 screw: Tightening torque 27.3 Nm
11. When mounting the torque arm [935], make sure it is aligned centrally to the encoder [220]. Screw in the screw [936]/hex nut [937] with the spacer bushings [934].
    - ⇨ M6 screw: Tightening torque 11.3 Nm
    - ⇨ M8 screw: Tightening torque 27.3 Nm
12. ⚠ **CAUTION!**
    Improper mounting can cause damage to the equipment. Damage to the signal cable. Insert the signal cable of the encoder [220] into the curve of the cable support [1900] so that the signal cable does not touch the rotating forced cooling fan.
13. To turn the cable retainer [1900], loosen the set screw [1927].
14. To secure the cable retainer [1900] in place, tighten the set screw [1927].
    - ⇨ Tightening torque 1.8 Nm
15. To secure the torque arm [1889] of the encoder in place, screw the screws [232] into the bores of the torque arm [935].
    - ⇨ Make sure the signal cable is of a sufficient length so that the connection adapter [1164] can be inserted into the recess of the forced cooling fan [170].
16. Place the forced cooling fan [170] onto the rear endshield or brake endshield [42].
17. Insert the connection adapter [1164] into the recess of the forced cooling fan [170]. The standard alignment of the recess points towards the terminal box.
    - ⇨ The arrow that is cast in the lower part [C] of the connection adapter [1164] indicates the direction of the subsequent cable outlet for the connection cover [619].
    - ⇨ If you wish to change the direction of the cable outlet: Unscrew the screws [D]. Twist the lower part [C] against the T-slot nut [B]. Screw in the screws [D]. When doing so, only tighten the screws [D] lightly.
18. Fasten the forced cooling fan [170] with the screws [22] on the rear or brake endshield [42] of the motor.
    - ⇨ EDRN132M – L: Tightening torque 11.3 Nm
    - ⇨ EDRN160M – L: Tightening torque 27.3 Nm
    - ⇨ EDRN315: Secure the screws [22] using a medium-strength thread locker. Tightening torque 5 Nm.
19. Push the connection adapter [1164] into the cutout on the safety cover [361] as far as the end of the cutout on the forced cooling fan [170] that faces away from the motor.
20. In motors of sizes 250 – 315: To fasten the supporting plate [1892], screw in the screws [1893]. Push the sealing profile [1310]/[1965] into the cutout.
21. Secure the connection adapter [1164] in place by tightening the screws [D].
    - ⇨ Secure the screws [D] in place with medium-strength thread locker. Tightening torque 2 Nm.

31555454/EN – 11/2023

22. ⚠ **WARNING!** Risk of explosion due to contamination. Fatal or serious injuries. Before you position the connection cover [619] make sure the wiring space is free from dust and humidity. Remove any dirt from the wiring space.
    Place the connection cover [619] onto the connection adapter [1164].
23. Screw the screws [E] through the bores on the connection cover [619] into the bores on the connection adapter [1164].
    ⇨ Secure the screws [E] using a medium-strength thread locker. The tightening torque is 2.5 Nm.

8.5.10 Encoder mounting adapter EK8A

The EK8A... encoder mounting adapter

Content of the accessory bag [1634]

- Screws [232] for fastening the torque arm of the encoder [220]
- For size EDRN180 and larger: Insulation coupling [1891]

Mounting the encoder mounting adapter EK8A

1. Unscrew the screws [22].
2. Remove the fan guard [35] from the motor.
3. Remove the protection cap [1143] from the recess of the fan guard [35].
   ⇨ Dispose of the protection cap [1143].
4. Remove the closing plug [950] from the rotor [1].
   ⇨ Dispose of the closing plug [950].

Then proceed with the installation process as described in chapter "Mounting cone shaft encoders EK8./AK8.".

8.5.11 EV8./AV8. encoder with coupling

Removing and mounting EV8./AV8. encoder with coupling from EDRN71 – 225 motors

Removing encoder EV8./AV8. with coupling

1. Unscrew the screws [E].
2. Remove the connection cover [619] from the connection adapter [1164].
3. Loosen the screws [D] in the lower part [C].
   ⇨ Only unscrew the screws [D] to such an extent that the connection adapter [1164] can be moved in the recess of the safety cover [361].
4. Unscrew the screws [22].
5. Remove the safety cover [361] from the motor. When doing this, slide the connection adapter [1164] out of the recess.
6. Unscrew the screws [232].
7. Remove the eccentric disks [251] from the circumferential groove of the encoder [220].
8. Unscrew the central screw plug [A] of the encoder [220].
9. Loosen the central retaining screw of the encoder [220].
   ⇨ If the central retaining screw of the encoder [220] cannot be loosened, exert counter-pressure at the Ø 4.1 mm bore of the rear coupling half.
10. Remove the encoder [220] from the coupling [233].

Mounting encoder EV8./AV8. with coupling

1. Remove the central screw plug [A].
2. If the closing plate [646] is present: Unscrew the screws [232] and remove the closing plate [646].
3. Clean the cone of the rotor [1], the encoder [220] and the coupling [233].
4. Insert the coupling [233] into the conical bore of the rotor.
5. To secure the coupling [233] in place, screw in the central retaining screw [F].
   - ⇨ Tightening torque 4 Nm
   - ⇨ Exert counter-pressure at the Ø 4.1 mm bore of the rear coupling half.
6. To remove the torque arm [1889] from the encoder, unscrew the screws [1888].
7. Remove the central screw plug [A].
   - ⇨ For size DRN132M/L: Place the spacer ring [225] between the encoder [220] and the fan guard with encoder mount [212].
8. Insert the encoder [220] into the coupling half with conical bore [233].
9. To secure the encoder [220] in place, tighten the central retaining screw.
   - ⇨ Tightening torque 3.3 Nm
   - ⇨ Exert counter-pressure at the Ø 4.1 mm bore of the rear coupling half.
10. To seal the encoder [220], screw in the central screw plug [A].
    - ⇨ Tightening torque 1.8 Nm
11. Insert the screws [232] to fasten the conical spring washers [251].
12. Tighten the screws [232] while turning the eccentric disks [251] in clockwise direction into the groove of the encoder [220].
    - ⇨ Tightening torque 3 Nm
    - ⇨ Make sure the signal cable is of a sufficient length so that the connection adapter [1164] can be inserted into the recess of the safety cover [361].
13. Insert the connection adapter [1164] into the recess of the safety cover [361]. The standard alignment of the recess points towards the terminal box.
14. Place the safety cover [361] onto the fan guard [35].
    - ⇨ The arrow that is cast in the lower part [C] of the connection adapter [1164] indicates the direction of the subsequent cable outlet for the connection cover [619].
    - ⇨ If you wish to change the direction of the cable outlet: Unscrew the screws [D]. Twist the lower part [C] against the T-slot nut [B]. Screw in the screws [D]. When doing so, only tighten the screws [D] lightly.
15. Secure the safety cover [361] in place by using the screws [22].
    - ⇨ EDRN71 – 132S: Tightening torque 3.3 Nm
    - ⇨ EDRN132M – L: Tightening torque 11.3 Nm
    - ⇨ EDRN160M – L: Tightening torque 27.3 Nm
16. Push the connection adapter [1164] into the cutout on the safety cover [361] as far as the end of the cutout on the forced cooling fan [170] that faces away from the motor.
17. Turn the connection adapter [1164] clockwise up to the stop.

31555454/EN – 11/2023

18. Secure the connection adapter [1164] in place by tightening the screws [D].
    ⇨ Secure the screws [D] in place with medium-strength thread locker. Tightening torque 2 Nm.
19. ⚠ **WARNING!** Risk of explosion due to contamination. Fatal or serious injuries. Before you position the connection cover [619] make sure the wiring space is free from dust and humidity. Remove any dirt from the wiring space.
    Place the connection cover [619] onto the connection adapter [1164].
20. Screw the screws [E] through the bores on the connection cover [619] into the bores on the connection adapter [1164].
    ⇨ Secure the screws [E] using a medium-strength thread locker. The tightening torque is 2.5 Nm.

Removing encoder EV8./AV8. with coupling and optional forced cooling fan

1. Unscrew the screws [E].
2. Remove the connection cover [619] from the connection adapter [1164].
3. Loosen the screws [D] in the lower part [C].
    ⇨ Only unscrew the screws [D] to such an extent that the connection adapter [1164] can be moved in the recess of the safety cover [361].
4. Loosen the screws [22].
5. Unscrew the screws [34].
6. Remove the forced cooling fan [170] from the motor. When doing this, slide the connection adapter [1164] out of the recess.
7. Remove the signal cable from the slot of the cable retainer [1900].
8. Unscrew the screws [232].
9. Remove the eccentric disks [251] from the circumferential groove of the encoder [220].
10. Unscrew the central screw plug [A] of the encoder [220].
11. Loosen the central retaining screw of the encoder [220].
    ⇨ If the central retaining screw of the encoder [220] cannot be loosened, exert counter-pressure at the Ø 4.1 mm bore of the rear coupling half.
12. Remove the encoder [220] from the coupling [233].

Mounting encoder EV8./AV8. with coupling and optional forced cooling fan

1. Remove the central screw plug [A].
2. If the closing plate [646] is present: Unscrew the screws [232] and remove the closing plate [646].
3. Clean the cone of the rotor [1], the encoder [220] and the coupling [233].
4. Insert the coupling [233] into the conical bore of the rotor.
5. To secure the coupling [233] in place, screw in the central retaining screw [F].
    ⇨ Tightening torque 3.3 Nm
    ⇨ Exert counter-pressure at the Ø 4.1 mm bore of the rear coupling half.
6. To remove the torque arm [1889] from the encoder, unscrew the screws [1888].

7. Remove the central screw plug [A].
   ⇨ For size EDRN132M/L: Place the spacer ring [225] between the encoder [220] and the fan guard with encoder mount [212].
8. Insert the encoder [220] into the coupling half with conical bore [233].
9. To secure the encoder [220] in place, tighten the central retaining screw.
   ⇨ Tightening torque 3.3 Nm
   ⇨ Exert counter-pressure at the Ø 4.1 mm bore of the rear coupling half.
10. To seal the encoder [220], screw in the central screw plug [A].
    ⇨ Tightening torque 1.8 Nm
11. Insert the screws [232] to fasten the conical spring washers [251].
12. Tighten the screws [232] while turning the eccentric disks [251] in clockwise direction into the groove of the encoder [220].
    ⇨ Tightening torque 3 Nm
    ⇨ Make sure the signal cable is of a sufficient length so that the connection adapter [1164] can be inserted into the recess of the forced cooling fan [170].
13. ⚠ **CAUTION!**
    Improper mounting can cause damage to the equipment. Damage to the signal cable. Insert the signal cable of the encoder [220] into the curve of the cable support [1900] so that the signal cable does not touch the rotating forced cooling fan.
14. To turn the cable retainer [1900], loosen the set screw [1927].
15. To secure the cable retainer [1900] in place, tighten the set screw [1927].
    ⇨ Tightening torque 1.8 Nm
16. Place the forced cooling fan [170] onto the fan guard with encoder mount [212].
17. Insert the connection adapter [1164] into the recess of the forced cooling fan [170]. The standard alignment of the recess points towards the terminal box.
    ⇨ The arrow that is cast in the lower part [C] of the connection adapter [1164] indicates the direction of the subsequent cable outlet for the connection cover [619].
    ⇨ If you wish to change the direction of the cable outlet: Unscrew the screws [D]. Twist the lower part [C] against the T-slot nut [B]. Screw in the screws [D]. When doing so, only tighten the screws [D] lightly.
18. Use the screws [22] to secure the forced cooling fan [170] to the fan guard with encoder mount [212] of the motor.
    ⇨ EDRN71 – 132S: Tightening torque 3.3 Nm
    ⇨ EDRN132M – L: Tightening torque 11.3 Nm
    ⇨ EDRN160M – L: Tightening torque 27.3 Nm
19. Push the connection adapter [1164] into the cutout on the safety cover [361] as far as the end of the cutout on the forced cooling fan [170] that faces away from the motor.
20. Turn the connection adapter [1164] clockwise up to the stop.
21. Secure the connection adapter [1164] in place by tightening the screws [D].
    ⇨ Secure the screws [D] in place with medium-strength thread locker. Tightening torque 2 Nm.

31555454/EN – 11/2023

22. ⚠ **WARNING!** Risk of explosion due to contamination. Fatal or serious injuries. Before you position the connection cover [619] make sure the wiring space is free from dust and humidity. Remove any dirt from the wiring space.
    Place the connection cover [619] onto the connection adapter [1164].
23. Screw the screws [E] through the bores on the connection cover [619] into the bores on the connection adapter [1164].
    ⇨ Secure the screws [E] using a medium-strength thread locker. The tightening torque is 2.5 Nm.

Removing and mounting encoder EV8./AV8. with coupling from EDRN250 – 280 motors

Removing encoder EV8./AV8. with coupling

1. Unscrew the screws [E].
2. Remove the connection cover [619] from the connection adapter [1164].
3. Loosen the screws [D] in the lower part [C].
   ⇨ Only unscrew the screws [D] to such an extent that the connection adapter [1164] can be moved in the recess of the safety cover [361].
4. Unscrew the screws [34].
5. Remove the safety cover [361] from the motor. When doing this, slide the connection adapter [1164] out of the recess.
6. Unscrew the screws [232].
7. Remove the eccentric disks [251] from the circumferential groove of the encoder [220].
8. Remove the encoder [220] from the intermediate flange [225].
9. Unscrew the central screw plug [A] of the encoder [220].
10. Loosen the central retaining screw of the encoder [220].
11. Remove the encoder with the mounted rear coupling half [233] from the mounting adapter [1499].
    ⇨ If the central retaining screw of the encoder [220] cannot be loosened, countertighten the spanner flat SW10 of the encoder shaft.
12. Remove the encoder [220] from the coupling [233].

Mounting encoder EV8./AV8. with coupling

1. Clean the cone of the rotor [1], the encoder mounting adapter [1499] and the coupling [233].
2. Insert the encoder mounting adapter [1499] into the conical bore of the rotor [1].
3. To secure the encoder mounting adapter [1499] in place, screw in the central retaining screw [1458].
   ⇨ Tightening torque 3.3 Nm
4. Use the screws [22] to secure the fan guard [35] to the rear endshield or brake endshield [42] of the motor.
   ⇨ While doing so, the plastic dampers [1486] of the torque arm for the encoder mounting adapter [1499] must engage into the grille of the fan guard [35].
   ⇨ Tightening torque 27.3 Nm.

31555454/EN – 11/2023

5. To secure the ground strap [1495] to the encoder mounting adapter [1499], screw in the screw [1498].
   ⇨ Tightening torque 6.5 Nm
6. To secure the ground strap [1495] to the fan guard [35], screw the screw [1462] into the cage nut [1459].
   ⇨ Tightening torque 11.3 Nm.
7. Place the coupling half with cylindrical internal bore [233] onto the inner pin of the encoder mounting adapter [1499].
8. To secure the coupling half with cylindrical internal bore [233] in place, screw the screw into the conical spring washer of the coupling [233].
   ⇨ Tightening torque 3.3 Nm
9. To secure the intermediate flange [225] to the encoder mounting adapter [1499], screw in the screw [226].
   ⇨ Tightening torque 3.3 Nm
10. To remove the torque arm [1889] from the encoder, unscrew the screws [1888].
11. Remove the central screw plug [A].
12. Insert the encoder [220] into the coupling half with conical bore [233].
13. To secure the encoder [220] in place, tighten the central retaining screw.
    ⇨ Tightening torque 3.3 Nm
    ⇨ Counter-tighten the spanner flat SW10 of the encoder shaft.
14. To seal the encoder [220], screw in the central screw plug [A].
    ⇨ Tightening torque 1.8 Nm
15. Insert the encoder [220] with mounted coupling half into the centering of the intermediate flange [225]. The two coupling halves must interlock via the plastic coupling star.
16. Insert the screws [232] to fasten the conical spring washers [251].
17. Tighten the screws [232] while turning the eccentric disks [251] in clockwise direction into the groove of the encoder [220].
    ⇨ Tightening torque 3 Nm
    ⇨ Make sure the signal cable is of a sufficient length so that the connection adapter [1164] can be inserted into the recess of the safety cover [361].
18. Insert the connection adapter [1164] into the recess of the safety cover [361]. The standard alignment of the recess points towards the terminal box.
19. Place the safety cover [361] onto the fan guard [35].
    ⇨ The arrow that is cast in the lower part [C] of the connection adapter [1164] indicates the direction of the subsequent cable outlet for the connection cover [619].
    ⇨ If you wish to change the direction of the cable outlet: Unscrew the screws [D]. Twist the lower part [C] against the T-slot nut [B]. Screw in the screws [D]. When doing so, only tighten the screws [D] lightly.
20. Fasten the safety cover [361] with the screws [34] and washers [33].
    ⇨ Tightening torque 4.5 Nm
21. Push the connection adapter [1164] into the cutout on the safety cover [361] as far as the end of the cutout on the forced cooling fan [170] that faces away from the motor.

31555454/EN – 11/2023

22. Turn the connection adapter [1164] clockwise up to the stop.
23. Secure the connection adapter [1164] in place by tightening the screws [D].
    ⇨ Tightening torque 2 Nm
24. ⚠ **WARNING!** Risk of explosion due to contamination. Fatal or serious injuries. Before you position the connection cover [619] make sure the wiring space is free from dust and humidity. Remove any dirt from the wiring space.
    Place the connection cover [619] onto the connection adapter [1164].
25. Screw the screws [E] through the bores on the connection cover [619] into the bores on the connection adapter [1164].
    ⇨ Tightening torque 2.5 Nm

Removing encoder EV8./AV8. with coupling and optional forced cooling fan

1. Unscrew the screws [E].
2. Remove the connection cover [619] from the connection adapter [1164].
3. Loosen the screws [D] in the lower part [C].
    ⇨ Only unscrew the screws [D] to such an extent that the connection adapter [1164] can be moved in the recess of the forced cooling fan [170].
4. Unscrew the screws [22].
5. Remove the forced cooling fan [170] from the motor. When doing this, slide the connection adapter [1164] out of the recess.
6. If necessary, loosen the set screw [1927].
7. Remove the signal cable from the slot of the cable retainer [1900].
8. Unscrew the screws [232].
9. Remove the eccentric disks [251] from the circumferential groove of the encoder [220].
10. Remove the encoder [220] from the intermediate flange [225].
11. Unscrew the central screw plug [A] of the encoder [220].
12. Loosen the central retaining screw of the encoder [220].
13. Remove the encoder with the mounted rear coupling half [233] from the mounting adapter [1499].
    ⇨ If the central retaining screw of the encoder [220] cannot be loosened, counter-tighten the spanner flat SW10 of the encoder shaft.
14. Remove the encoder [220] from the coupling [233].

Mounting encoder EV8./AV8. with coupling and optional forced cooling fan

1. Clean the cone of the rotor [1], the encoder mounting adapter [1499] and the coupling [233].
2. Insert the encoder mounting adapter [1499] into the conical bore of the rotor [1].
3. To secure the encoder mounting adapter [1499] in place, screw in the central retaining screw [1458].
    ⇨ Tightening torque 3.3 Nm
4. Use the screws [1485] to secure the torque arm [935] to the mounting adapter [1499].
    ⇨ Tightening torque 6 Nm

5. Use the sleeves [934], screws [936] and washers [1666] to secure the torque arm [935] to the rear endshield or brake endshield [42].
   ⇨ Tightening torque 11.3 Nm.
6. Use the screws [22] to secure the fan guard [35] to the rear endshield or brake endshield [42] of the motor.
   ⇨ While doing so, the plastic dampers [1486] of the torque arm for the encoder mounting adapter [1499] must engage into the grille of the fan guard [35].
   ⇨ Tightening torque 27.3 Nm.
7. Place the coupling half with cylindrical internal bore [233] onto the inner pin of the encoder mounting adapter [1499].
8. To secure the coupling half with cylindrical internal bore [233] in place, screw the screw into the conical spring washer of the coupling [233].
   ⇨ Tightening torque 3.3 Nm
9. To secure the intermediate flange [225] to the encoder mounting adapter [1499], screw in the screw [226].
   ⇨ Tightening torque 3.3 Nm
10. To remove the torque arm [1889] from the encoder, unscrew the screws [1888].
11. Remove the central screw plug [A].
12. Insert the encoder [220] into the coupling half with conical bore [233].
13. To secure the encoder [220] in place, tighten the central retaining screw.
    ⇨ Tightening torque 3.3 Nm
    ⇨ Counter-tighten the spanner flat SW10 of the encoder shaft.
14. To seal the encoder [220], screw in the central screw plug [A].
    ⇨ Tightening torque 1.8 Nm
15. Insert the encoder [220] with mounted coupling half into the centering of the intermediate flange [225]. The two coupling halves must interlock via the plastic coupling star.
16. Insert the screws [232] to fasten the conical spring washers [251].
17. Tighten the screws [232] while turning the eccentric disks [251] in clockwise direction into the groove of the encoder [220].
    ⇨ Tightening torque 3 Nm
    ⇨ Make sure the signal cable is of a sufficient length so that the connection adapter [1164] can be inserted into the recess of the safety cover [361].
18. ⚠ **CAUTION!**
    Improper mounting can cause damage to the equipment. Damage to the signal cable. Insert the signal cable of the encoder [220] into the curve of the cable support [1900] so that the signal cable does not touch the rotating forced cooling fan.
19. To turn the cable retainer [1900], loosen the set screw [1927].
20. To secure the cable retainer [1900] in place, tighten the set screw [1927].
    ⇨ Tightening torque 1.8 Nm
21. Insert the connection adapter [1164] into the recess of the forced cooling fan [170]. The standard alignment of the recess points towards the terminal box.
    ⇨ The arrow that is cast in the lower part [C] of the connection adapter [1164] indicates the direction of the subsequent cable outlet for the connection cover [619].

31555454/EN – 11/2023

⇨ If you wish to change the direction of the cable outlet: Unscrew the screws [D]. Twist the lower part [C] against the T-slot nut [B]. Screw in the screws [D]. When doing so, only tighten the screws [D] lightly.

22. Fasten the forced cooling fan [170] with the screws [22] on the rear or brake end-shield [42] of the motor.

    ⇨ Tightening torque 27.3 Nm.

23. Push the connection adapter [1164] into the cutout on the safety cover [361] as far as the end of the cutout on the forced cooling fan [170] that faces away from the motor.

24. In motors of sizes 250 – 315: To fasten the supporting plate [1892], screw in the screws [1893]. Push the sealing profile [1310]/[1965] into the cutout.

25. Secure the connection adapter [1164] in place by tightening the screws [D].

    ⇨ Tightening torque 2 Nm

26. ⚠ **WARNING!** Risk of explosion due to contamination. Fatal or serious injuries. Before you position the connection cover [619] make sure the wiring space is free from dust and humidity. Remove any dirt from the wiring space.
    Place the connection cover [619] onto the connection adapter [1164].

27. Screw the screws [E] through the bores on the connection cover [619] into the bores on the connection adapter [1164].

    ⇨ Tightening torque 2.5 Nm

8.5.12 Mounting the forced cooling fan /VE

The following figure shows a forced cooling fan /VE:

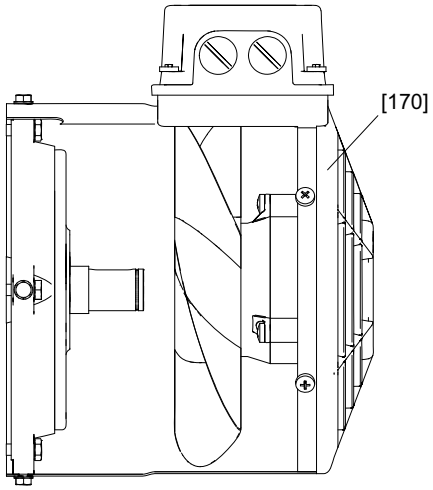

9007199576904075

[1] Forced cooling fan

1. Observe the operating instructions of the forced cooling fan in chapters "Operating and maintenance instructions for WISTRO forced cooling fan", "Operation and maintenance instructions for forced cooling fan /VE with part number groups 2097... and 2098..." (→ 🗎 269).
2. Before installing the forced cooling fan [170], check to see that the fan wheel and the fan motor are not damaged.
3. After installation, turn the fan wheel to make sure that the fan wheel does not rub in any place. The clearance between the fan wheel and fixed parts must be at least 1 mm.

8.6 Inspection/maintenance work for EDRN63 – 315 motors

8.6.1 Inspection steps for EDRN63 – 315 motors

⚠ WARNING

Risk of crushing if the drive starts up unintentionally.

Severe or fatal injuries.

- Disconnect the motor and all connected options from the power supply before you start working.
- Secure the motor against unintended power-up.

1. For gearmotors: Remove the motor from the gear unit.

   Remove pinion and oil flinger [107].
2. Remove forced cooling fan and rotary encoder, if installed, see chapter "Motor and brake maintenance – preliminary work" (→ 🗎 154).
3. Remove the fan guard [35] and fan [36].
4. Removing the stator:
   - **EDRN71 – 132S motors:** Remove cap screws [13] from flanged endshield [7] and rear endshield [42]. Remove stator [16] from flanged endshield [7].
   - **EDRN63, EDRN132M – 180 motors:** Loosen cap screws [19] and remove the rear endshield [42]. Loosen hex head screw [13]/[15] and remove the stator from the flanged endshield [7].
   - **EDRN200 motors**
     – Loosen hex head screw [15] and remove the flanged endshield [7] from the stator.
     – Loosen cap screws [19] and remove the complete rotor [1] together with the rear endshield [42].
     – Loosen cap screws [25] and remove the complete rotor [1] from the rear endshield [42].
   - **EDRN225 – 280 motors without** /ERF or /NS option
     – Loosen cap screws [15] and remove the flange [7].
     – Loosen cap screws [19] and remove the rear endshield [42] together with the rotor [1].
     – Loosen cap screws [25] and remove the rear endshield [42] from the rotor [1].
   - **EDRN225 – 280 motors with** /ERF or /NS option, or **EDRN315 motors**
     – Loosen cap screws [19] and [25] and remove the rear endshield [42].
     – Loosen cap screws [15] and remove the flange [7] together with the rotor [1].

       Apply tension or pressure to the rotor [1], carry the flange [7] evenly.
     – Loosen hex head screws [609] and remove the flange [7] from the rotor [1].
     – Before disassembly, protect the oil seal seat from damage using adhesive tape or a protective sleeve.
5. Visual inspection: Is there any moisture or gear oil inside the stator?
   - If not, proceed with step 7.
   - If there is moisture, proceed with step 6.

31555454/EN – 11/2023

- If there is gear oil, have the motor repaired by a specialist workshop.

6. If there is moisture inside the stator:
   - For gearmotors: Remove the motor from the gear unit.
   - For motors without a gear unit: Remove the A-flange.
   - Remove the rotor [1].
   - Clean the winding, dry it and check it electrically, see chapter "Drying the electric cylinder" (→ 🗎 37).
7. Replace the rolling bearing [11], [44] with permitted rolling bearing types, see chapter "Permitted rolling bearings" (→ 🗎 236).

   Apply tension or pressure to the inner ring of the bearings.
8. **EDRN225 – 280 motors with** /ERF or /NS option, or **EDRN315 motors**
   - Fill the rolling bearing with grease until it is two-thirds full, see chapter "Bearing lubrication" (→ 🗎 152).
   - Notice: Place the oil seal flanges [608] and [21] onto the rotor shaft before installing the bearings.
   - Mount the motor vertically starting on the A-side.
   - Place the springs [105] and lubrication ring [604] into the bearing bore of the flange [7].
   - Hang the rotor [1] onto the B-side thread, and guide it into the flange [7].
   - Fasten the oil seal flange [608] to the flange [7] using the hex head screws [609].
9. Resealing the shaft:
   - A-side: Replace the oil seal [106].
   - B-side: Replace the oil seal [30].

     Coat the sealing lip with grease (Klüber Petamo GHY 133).
10. Resealing the stator seat:
    - Seal the sealing surface with duroplastic sealing compound (operating temperature -40 °C to +180 °C), such as "SEW-L-Spezial".
    - For **EDRN63 – 132S** motors: Replace the seal [392].
    - For **EDRN63 – 132S** motors: Replace the O-ring [1480] if it is deformed or damaged. Instead of the O-ring, you can use "SEW-L-Spezial" for example.
11. Install the motor and options.

8.7 Inspection/maintenance work EDR..71 – 315, EDRN63 – 315 brakemotors

8.7.1 Basic structure of EDR..71 – 80, EDRN63 – 80 brakemotors

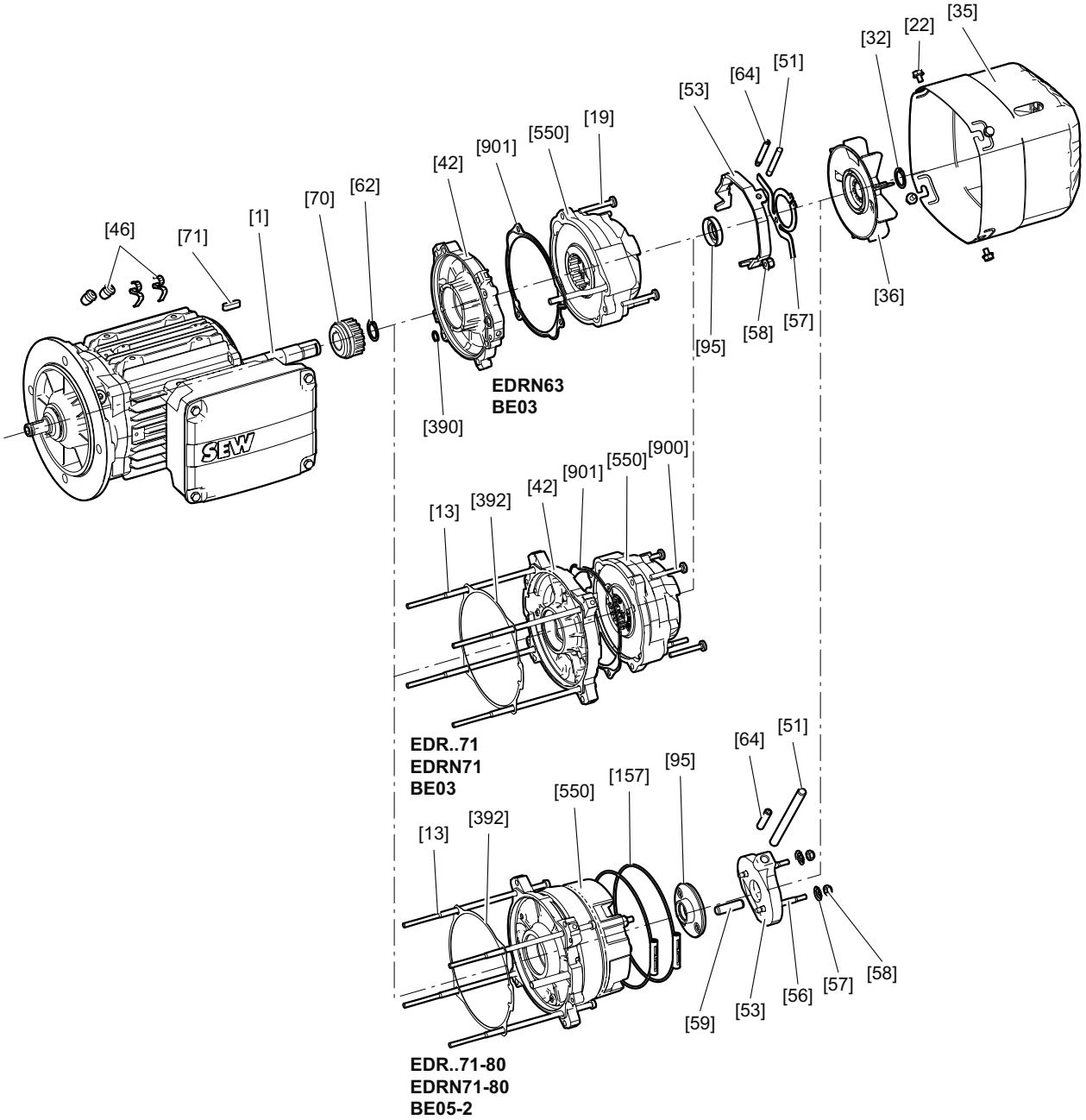

9007227459873163

[1]	Motor	[51]	Hand lever (/HR)	[70]	Driver
[13]	Cap screw	[53]	Releasing lever	[71]	Key
[19]	Screw	[56]	Stud	[95]	Sealing ring
[22]	Hex head screw	[57]	Conical spring	[157]	Clamping strap (optional)
[32]	Retaining ring	[58]	Hex nut	[392]	Gasket
[35]	Fan guard	[59]	Parallel pin	[550]	Pre-assembled brake
[36]	Fan wheel	[62]	Retaining ring	[900]	Screw
[42]	Brake endshield	[64]	Set screw (/HF)	[901]	Flat gasket
[46]	Clip				

8.7.2 Basic structure of EDR..90 – 132, EDRN90 – 132S brakemotors

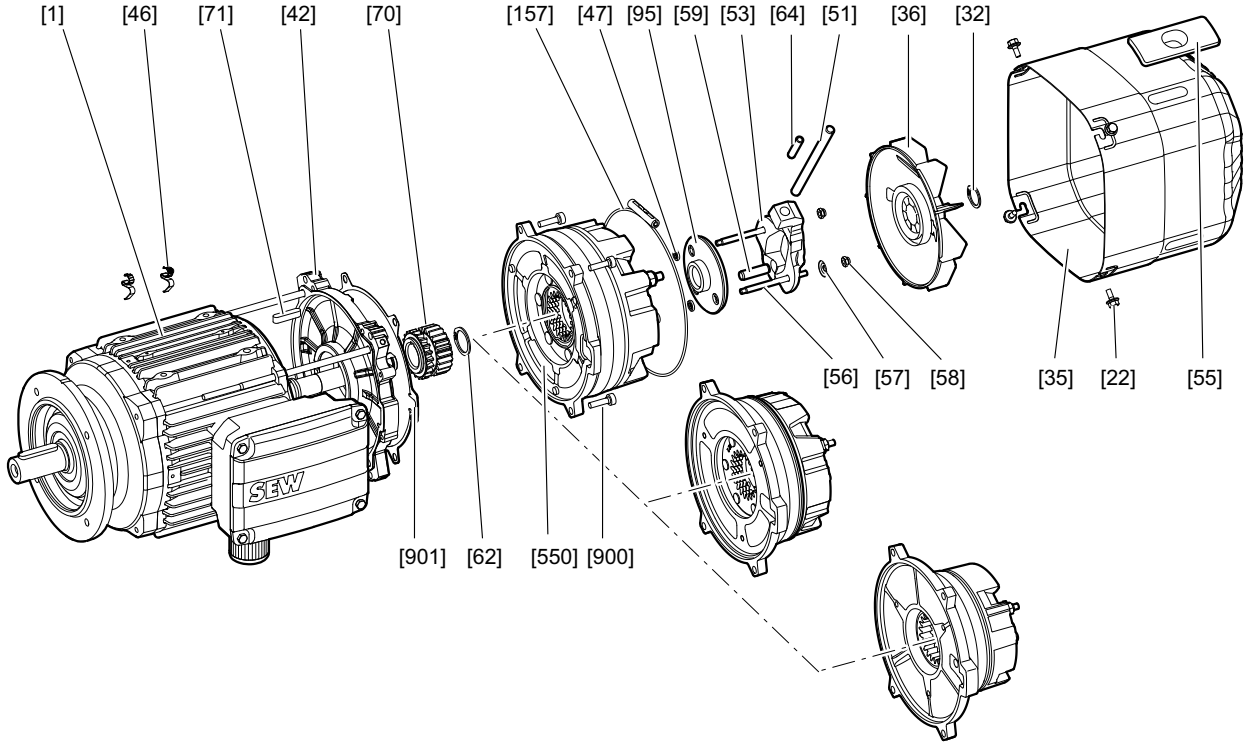

18014398689463947

[1]	Motor	[56]	Stud	[71]	Key
[22]	Hex head screw	[57]	Conical spring	[95]	Sealing ring
[32]	Retaining ring	[58]	Hex nut	[157]	Clamping strap
[35]	Fan guard	[59]	Parallel pin	[550]	Pre-assembled brake
[36]	Fan wheel	[62]	Retaining ring	[900]	Screw
[42]	Brake endshield	[64]	Set screw (/HF)	[901]	Gasket
[46]	Clamp	[70]	Driver		
[47]	O-ring				
[51]	Hand lever (/HR)				
[53]	Releasing lever				
[55]	Fan guard closing piece (EDR..112 – 132, EDRN112 – 132S motors)				

31555454/EN – 11/2023

8.7.3 Basic structure of EDR..160 – 315, EDRN132M – 315 brakemotor

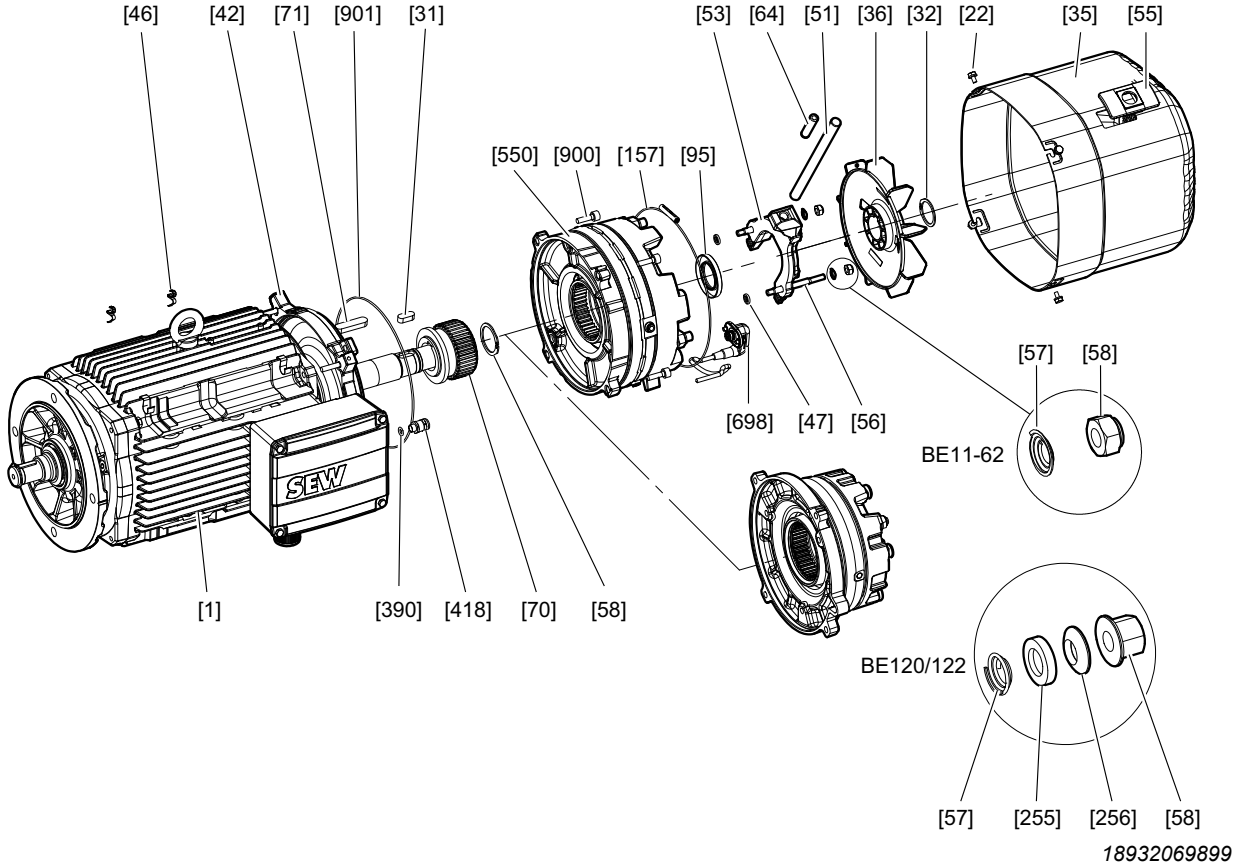

[1]	Motor with brake endshield	[53]	Releasing lever	[95]	Sealing ring
[22]	Hex head screw	[55]	Closing piece	[157]	Clamping strap
[31]	Key	[56]	Stud	[255]	Conical seat
[32]	Retaining ring	[57]	Conical spring	[256]	Spherical washer
[35]	Fan guard	[58]	Hex nut	[390]	O-ring (EDR..160 – 225, EDRN132M – 225 motors)
[36]	Fan	[58]	Adjusting nut	[418]	Cable gland
[42]	Brake endshield	[62]	Retaining ring	[550]	Pre-assembled brake
[46]	Clamp	[64]	Set screw (/HF)	[698]	Connector complete (BE20 – BE122)
[47]	O-ring	[70]	Driver	[900]	Screw
[51]	Hand lever	[71]	Key	[901]	O-ring/seal (EDR..160 – 225, EDRN132M – 225 motors)
				[1607]	O-ring (EDR..250 – 280, EDRN250 – 280 motors)

8.7.4 Inspection steps for EDR..71 – 315, EDRN63 – 315 brakemotors

⚠ WARNING

Risk of crushing if the drive starts up unintentionally.

Severe or fatal injuries.

- Disconnect the motor and all connected options from the power supply before you start working.
- Secure the motor against unintended power-up.

1. With gearmotors: Remove the motor from the gear unit. Remove pinion and oil flinger [107].
2. Remove forced cooling fan and rotary encoder, if installed. See chapter "Motor and brake maintenance – preliminary work" (→ 🗎 154).
3. Remove the fan guard with encoder mount [212] or fan guard [35] and the fan fan impeller [36].
4. **EDR..90 – 315, EDRN63 – 315 motors**: Remove the brake cpl. [550] (if applicable) with mounted /HR, /HF option manual brake release.
   - **BE03 – 11**: Remove the terminal box cover and loosen the brake cable from the connection terminals.
   - **BE20 – 122**: Loosen locking screws of the brake plug connector [698] and remove plug connector.
   - Loosen screws [13]/[19]/[900], press brake [550] off the endshield [42], and carefully lift off the brake.
5. Remove stator:
   - **EDR..71 – 132, EDRN63 – 132S motors:** Remove cap screws [13] from flanged endshield [7] and B-side endshield [42]. Remove stator [16] from flanged endshield [7].
   - **EDR..160 – 180, EDRN132M – 180 motors:** Loosen hex head screw [19] and remove B-side endshield [42]. Loosen hex head screw [13]/[15] and remove stator from flanged endshield [7].
   - **EDR..200 – 225, EDRN200 – 225 motors**
     - Loosen hex head screw [15] and remove flanged endshield [7] from stator.
     - Loosen cap screws [19] and remove the complete rotor [1] together with the B-side endshield [42].
     - Loosen cap screws [25] and remove the complete rotor [1] from the B-side endshield [42].
   - **EDR..250 – 280, EDRN225 – 280 motors without** /ERF or /NS option
     - Loosen cap screws [15] and remove the flange [7].

       Push or pull the rotor [1] and take the flange [7] along evenly.
     - Loosen cap screws [19] and remove the B-side endshield [42] together with the rotor [1].
     - Loosen cap screws [25] and remove the B-side endshield [42] from the rotor [1].
   - **EDR..250 – 280, EDRN225 – 280 motors with** /ERF or /NS option, or **EDR../EDRN315 motors**
     - Loosen cap screws [19] and [25] and remove the B-side endshield [42].

31555454/EN – 11/2023

- Loosen cap screws [15] and remove the flange [7] together with the rotor [1].

  Push or pull the rotor [1] and take the flange [7] along evenly.
- Loosen hex head screws [609] and remove the flange [7] from the rotor [1].
- Before disassembly, preferably protect the oil seal seat from damage using adhesive tape or a protective sleeve.

6. Pull the stator back by approx. 3 to 4 cm.
7. Visual inspection: Is there any moisture or gear unit oil inside the stator?
   - If not, proceed with step 10.
   - If there is moisture, proceed with step 9.
   - If there is gear oil, have the motor repaired by a specialist workshop.
8. If there is moisture inside the stator:
   - With gearmotors: Remove the motor from the gear unit
   - With motors without a gear unit: Remove the A-flange
   - Remove the rotor [1]
   - Clean the winding, dry it and check it electrically, see chapter "Drying the electric cylinder" (→ 🗎 37).
9. Remove retaining ring [62]. Preheat the driver [70] and remove it using suitable tools. Remove key [71].
10. Replace the rolling bearing [11], [44] with permitted rolling bearing types, see chapter "Permitted rolling bearings" (→ 🗎 236).

    Push or pull the inner ring of the bearings.
11. Install key [71] and driver [70]:
    - Preheat the driver to allow for easier installation (joining temperature +85 °C to +115 °C).
    - **EDR..71, EDRN63 – 71 motors:** Clean the driver seat at the rotor [1] before installation. Glue in the driver using Loctite 649. Join the retaining ring [62] flush to the driver. Protect the sealing surface for the oil seal from scratches.
    - **EDR..80 – 315, EDRN80 – 315 motors**: Clean the driver at the rotor [1] and coat with anti-corrosion agent NOCO® fluid before fitting. Next mount the retaining ring [62].
12. Seal the stator again and install it:
    - **EDR..71 – 132, EDRN63 – 132S motors**: Replace gasket [392]
    - **EDR..160 – 225, EDRN63, EDRN132M – 225 motors:** Replace O-ring [390].
    - **EDR..160 – 315, EDRN132M – 315 motors**: Seal the sealing surfaces with duroplastic sealing compound (operating temperature -40 °C to +180 °C), such as "SEW-L-Spezial".
13. **EDR..250 – 280, EDRN225 – 280 motors with** /ERF or /NS option, or with **EDR../EDRN315 motors**
    - Fill the rolling bearing with grease until it is two-thirds full, see chapter "Bearing lubrication" (→ 🗎 152).
    - Notice: Place the oil seal flange [608], [21] onto the rotor shaft before installing the bearings.
    - Mount the motor vertically starting on the A-side.
    - Place the springs [105] and lubrication ring [604] into the bearing bore of the flange [7].

31555454/EN – 11/2023

- Hang the rotor [1] onto the B-side thread, and guide it into the flange [7].
- Fasten the oil seal flange [608] to the flange [7] using the hex head screws [609].
- Screw in the stator [16] and flange [7] with screws [15].

  Notice: Protect the winding overhang from damage.
- Before mounting the B-side endshield, screw in the M8 set screw (approximately 200 mm) into the oil seal flange [21].
- Before mounting the B-side endshield [42], insert the set screw in through a bore for the screw [25]. Screw B-side endshield to stator [16] using cap screws [19] and hex nuts [17]. Lift the oil seal flange [21] with the set screw, and fasten using 2 screws [25]. Remove the set screw and screw in the remaining screws [25].

14. Reseal the shaft:
    - Replace the oil seal [106] on the A-side.
    - **EDR..315, EDRN315 motors with /FG option:** Replace the oil seal [250] on the A-side.
    - **EDR..250 – 315, EDRN225 – 315 motors with /NS option:** Replace the oil seal [30] on the B-side.
    - Apply suitable grease to the sealing lip, see chapter "Order information for lubricants, anti-corrosion agents and sealants" (→ 🗎 240).
15. Seal the friction disk of the brake [550] again at the brake endshield [42]:
    - **EDRN63 – 71 motors with BE03:** Replace flat gasket [901].
    - **EDR..71 – 132, EDRN71 – 132S** motors: Replace the seal [901].
    - **EDR..160 – 280, EDRN132M – 280** motors: Replace O-ring [901] or [1607].
    - **EDR..315, EDRN315** motors: Seal the sealing surface with duroplastic sealing compound (operating temperature -40 °C to +180 °C), such as "SEW-L-Spezial".
16. Reinstall the brake [550]: Insert the brake cable into the terminal box when installing the brake. Install the brake. Observe the alignment of the brake. (Cams at the endshield, manual brake release position).
    - **BE03 brake**: The self-tapping screws must be distributed around the brake and tightened evenly to avoid the brake from being tilted.
    - **EDRN63 motors with BE03**: Tighten screw [19] M5x35 (self-tapping) with a tightening torque of 5 Nm. The screws can be re-used.
    - **EDRN71 motors with BE03:** Tighten screws [900] M5x20 (self-tapping) with a tightening torque torque of 5 Nm. New screws must be used each time the brake is mounted again.
    - **EDR..71 – 80, EDRN71 – 80** motors: Install cap screws [13]. Tightening torque: 5 Nm
    - **EDR..90 – 315, EDRN90 – 315 motors:** Install the cap screws [900].

EDR..	**90 – 100**	**112 – 160**	**180**	**200 – 225**	**250 – 315**
EDRN..	**90 – 100**	**112 – 132**	**160 – 180**	**200 – 225**	**250 – 315**
Tightening torque	10.3 Nm	25.5 Nm	50 Nm	87.3 Nm	230 Nm

17. Connect the brake connection cable.
    - **BE03 – 11**: Reconnect the brake cable according to the wiring diagram.

- **BE20 – 122**: Plug in the brake plug connector [698] again. Tighten the retaining screws again (tightening torque: 3 Nm)

18. Coat a new sealing ring [95] with a grease suitable for EPP material and fit in the sealing ring seat, see chapter "Order information for lubricants, anti-corrosion agents and sealants" (→ 🗎 240).
19. Install the fan [36] and the fan guard [35] or fan guard with encoder mount [212] and the available optional equipment.
20. With gearmotors: Replace oil flinger [107] and install the pinion.

31555454/EN – 11/2023

8.7.5 Basic structure of BE03 brakes

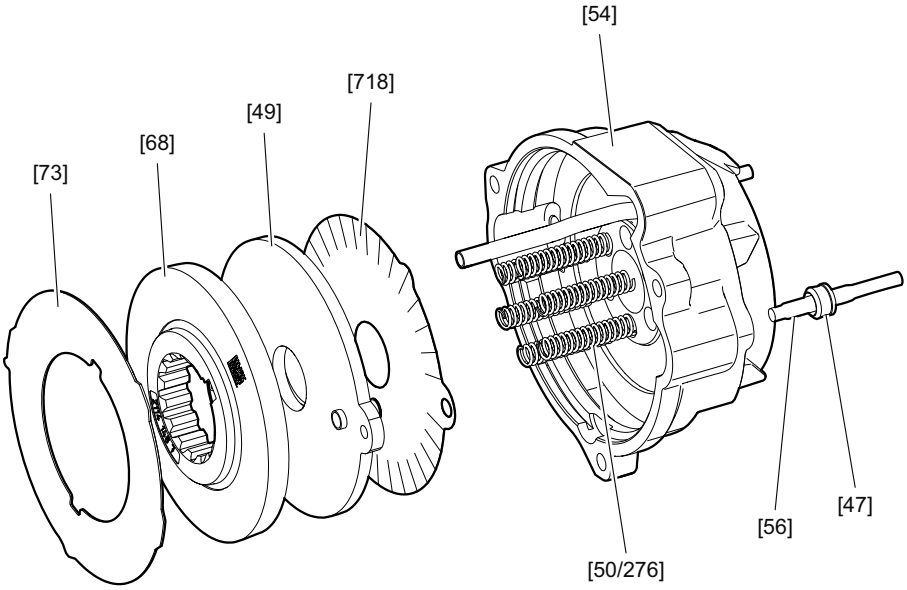

22473863947

[47]	Sealing element	[54]	Magnet body, complete	[73]	Friction plate
[49]	Pressure plate	[56]	Stud	[276]	Brake spring
[50]	Brake spring	[68]	Brake disk (complete)	[718]	Damping plate

8.7.6 Basic structure of BE05 – 2 brakes

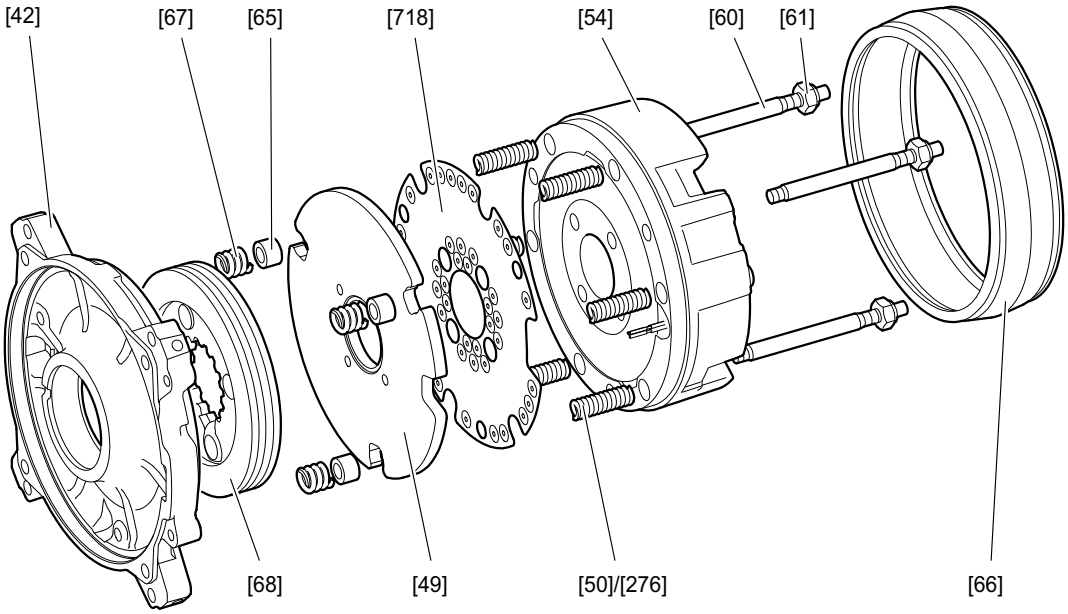

28202353803

[42]	Brake endshield	[61]	Hex nut	[276]	Brake spring (blue)
[49]	Pressure plate	[65]	Pressure ring	[718]	Damping plate
[50]	Brake spring (normal)	[66]	Sealing strip		
[54]	Magnet body, complete	[67]	Counter spring		
[60]	Stud	[68]	Brake lining carrier		

31555454/EN – 11/2023

8.7.7 Basic structure of BE05 – 20 brakes

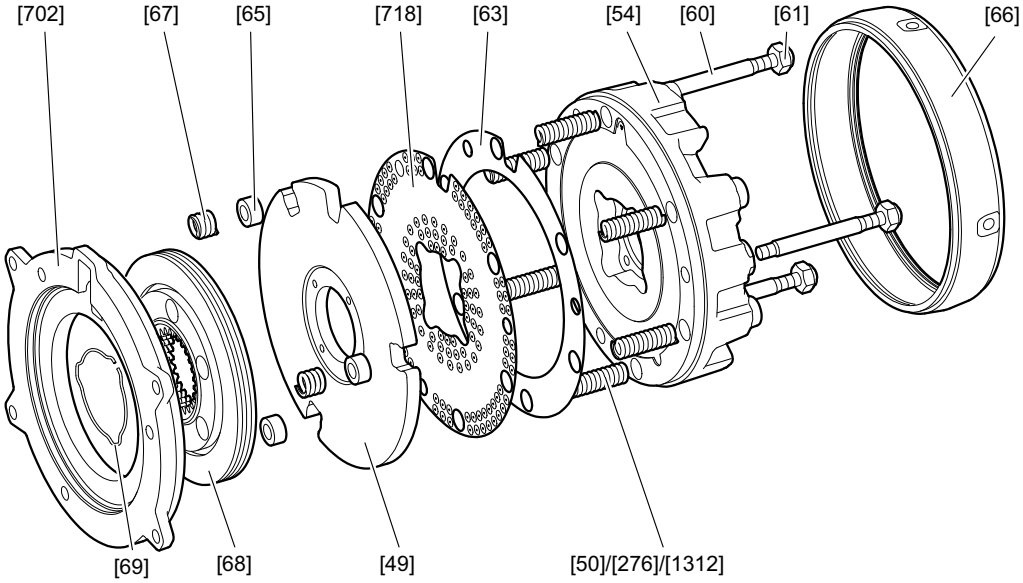

28203771275

[49]	Pressure plate	[65]	Pressure ring	[702]	Friction disk
[50]	Brake spring (normal)	[66]	Sealing strip	[718]	Damping plate (BE05 – 11)
[54]	Magnet body, complete	[67]	Counter spring	[1312]	Brake spring (white)
[60]	Stud	[68]	Brake lining carrier		
[61]	Hex nut	[69]	Circular spring/clasp (BE5 – 20)		
[63]	Pole sheet	[276]	Brake spring (blue)		

8.7.8 Basic structure of BE30, 60, 120 brakes

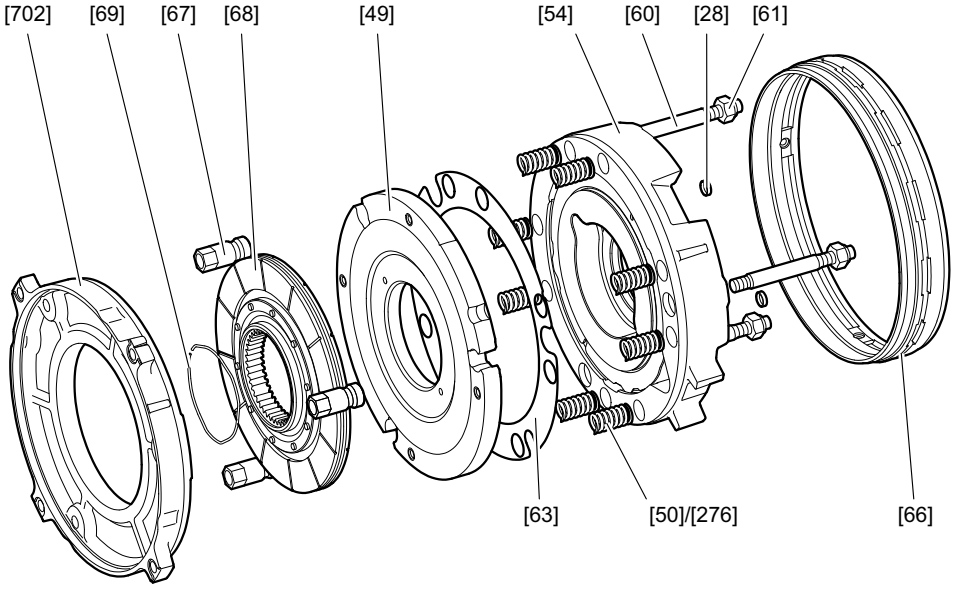

18234907019

[28]	Closing cap	[61]	Hex nut	[69]	Circular spring
[49]	Pressure plate	[63]	Pole sheet	[276]	Brake spring (blue)
[50]	Brake spring (normal)	[66]	Sealing strip	[702]	Friction disk
[54]	Magnet body, complete	[67]	Setting sleeve		
[60]	Stud	[68]	Complete brake disk		

31555454/EN – 11/2023

8.7.9 Basic structure of BE32, 62, 122 brakes

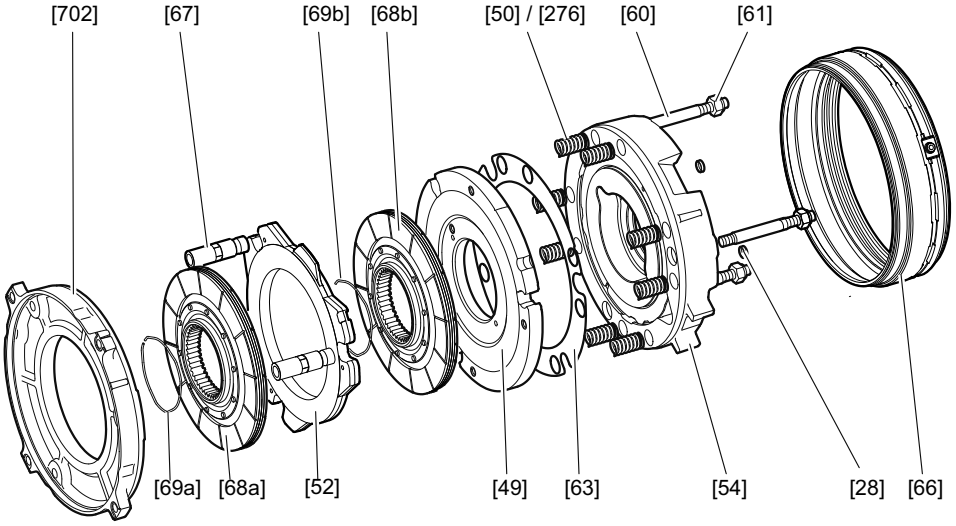

18234909451

[28]	Closing cap	[61]	Hex nut	[69a]	Circular spring
[49]	Pressure plate	[63]	Pole sheet	[69b]	Circular spring
[50]	Brake spring (normal)	[66]	Sealing strip	[276]	Brake spring (blue)
[52]	Brake plate complete	[67]	Setting sleeve	[702]	Friction disk
[54]	Magnet body, complete	[68a]	Complete brake disk		
[60]	Stud	[68b]	Complete brake disk		

8.7.10 Measuring the wear of BE03 brakes

The working air gap of BE03 brakes cannot be adjusted. Check the stroke of the pressure plate during maintenance.

Replacing individual parts of the brake is not permitted.

✓ The motor and all connected options are disconnected from the power supply.

✓ The motor is protected against unintended restart.

1. Measure the dimension "X" at the stroke of the studs when the brake is released or applied using a depth gauge or slide gauge.
   ⇨ The difference between both values is the working air gap.

⇨ The maximum permitted working air gap is 0.65 mm. Replace the brake in case this value is exceeded.

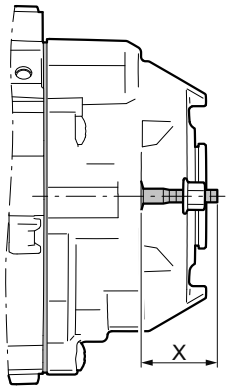

23652168459

8.7.11 Setting the working air gap of BE05 – BE122 brakes

✓ The motor and all connected options are disconnected from the power supply.

✓ The motor is protected against unintended restart.

1. Disassemble the following parts:
   ⇨ Forced cooling fan and rotary encoder, if installed, see chapter "Motor and brake maintenance – preliminary work" (→ 🗎 154).
   ⇨ Fan guard with encoder mount [212] or fan guard [35], retaining ring [32]/[62] and fan [36]
2. To move the sealing strip [66], loosen the clamping strap [157].
3. Remove brake abrasion by suction.
4. Measure the brake lining carrier [68].
   ⇨ For the minimum thickness of the brake lining, see chapter "Technical data" (→ 🗎 215).
   ⇨ If necessary, replace the brake lining carrier, see chapter "Replacing the brake disk of BE05 – BE122 brakes" (→ 🗎 201).
5. **BE30 – 122:** To loosen the setting sleeves [67], turn the setting sleeves [67] towards the B-side endshield.
6. Measure the working air gap A with a feeler gauge according to the figure at 3 points offset by 120°.
   ⇨ **BE05 – 11**: between pressure plate [49] and damping plate [718].
   ⇨ **BE20 – 122**: between pressure plate [49] and magnet body [54].

31555454/EN – 11/2023

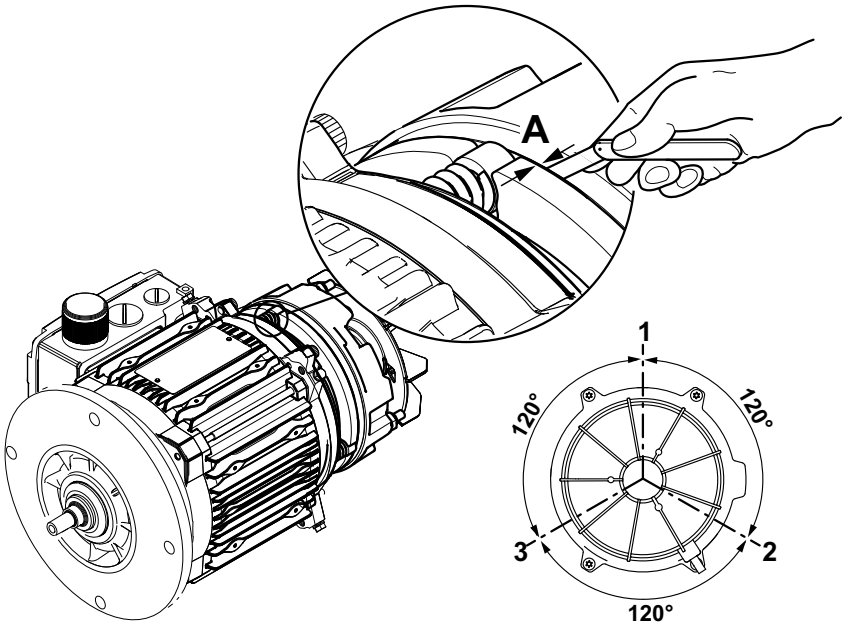

27021597944201611

7. Set the working air gap A.
   - ⇨ **BE05 – 20:** Tighten the hex nuts [61] until the working air gap is set correctly, see chapter "Braking work, working air gap, and brake lining carrier thickness" (→ 🗎 217).
   - ⇨ **BE30 – 122:** Tighten the hex nuts [61] until the working air gap is 0.05 to 0.1 mm smaller than the desired setting value (for default values, see chapter "Braking work, working air gap, and brake lining carrier thickness" (→ 🗎 217)).
8. **BE30 – 122:** In order to position the setting sleeves [67] evenly against the friction disk [702], screw the setting sleeves [67] out of the magnet body [54].
   - ⇨ Tighten the hex nuts [61] with the following tightening torque. Check the working air gap and adjust it if necessary.

Brake	Tightening torque
BE30 – BE32	93 Nm
BE60 – BE62	40 Nm
BE120 – BE122	230 Nm

9. If you are mounting **BE32, BE62**, **BE122** in a vertical position, set the 3 springs of the brake plate [52] to the following dimension X:

Brake	Dimension X in mm
BE32	7.3
BE62	10.0
BE122	10.0

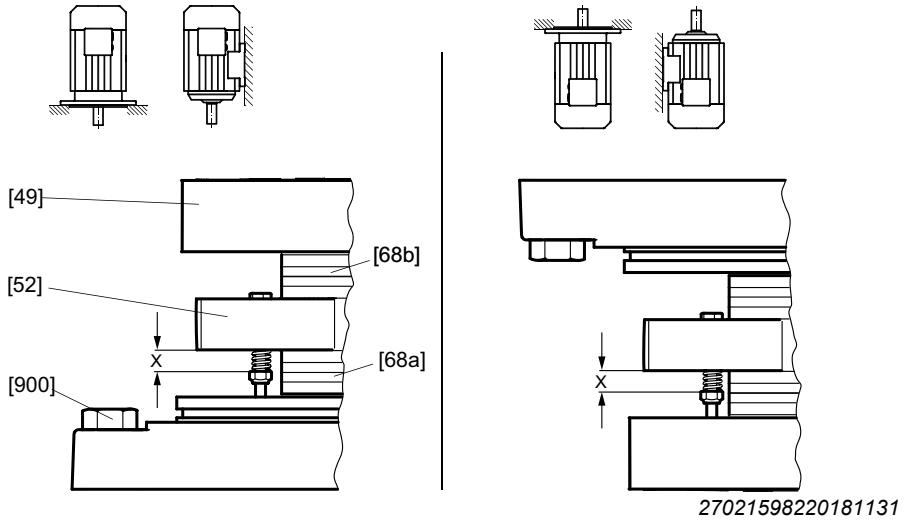

10. **BE30 – 122:** Screw the setting sleeves [67] to the magnet body until the working air gap is set correctly, see chapter "Technical data" (→ 🗎 215).
11. Check the sealing strip [66] for plastic deformation and other damage. If necessary, replace the sealing strip [66]. Mount the clamping strap [157]. Make sure the sealing strip and clamping strap are positioned correctly.
12. Seal the hex nuts [61] with SEW-L-Spezial.
13. Install the disassembled parts of the motor.

8.7.12 Replacing the brake disk of BE05 – BE122 brakes

In addition to the brake elements listed in column "BE brake" (see chapter "Inspection and maintenance intervals" (→ 🗎 149)), check the hex nuts [61] for wear when you replace the brake disk. Always replace the hex nuts [61] when you replace the brake lining carrier.

INFORMATION

- With EDR..71 – 80, EDRN80 motor with BE05 – 2, the brake cannot be removed from the motor because the /BE brake is directly installed on the brake endshield of the motor.

1. Before starting to perform any work on the motor, disconnect the motor and all mounted options from the power supply before and secure the motor against unintentional power-up.
2. Remove the following:
   - Forced cooling fan and rotary encoder, if installed, see chapter "Motor and brake maintenance – preliminary work" (→ 🗎 154).
   - Fan guard with encoder mount or fan guard [35], retaining ring [32], and fan [36]
3. Remove the brake cable
   - **BE05 – 11:** Loosen the terminal box cover and unfasten the brake cable from the rectifier.
   - **BE20 – 122:** Loosen locking screws of the brake plug connector [698] and remove plug connector.
4. Remove the clamping strap [157] and sealing strip [66].
5. Remove manual brake release if necessary.
   - Adjusting nuts [58], conical springs [57], studs [56], releasing lever [53], conical seat [255], spherical washer [256]
6. Loosen the hex nuts [61], carefully pull off the magnet body [54] (brake cable!) and remove the brake springs [50]/[276]/[1312].
7. **BE05 – 11:** Remove the damping plate [718], pressure plate [49] and brake disk [68]

   BE20, BE30, BE60, BE120: Remove the pressure plate [49], pole sheet [63] and brake disk [68]

   BE32, BE62, BE122: Remove the pressure plate [49], brake disk [68a] and [68b], as well as the brake plate [52].
8. Clean the brake components.
9. Install new brake lining carrier(s).
10. Assemble the brake parts again as described in chapter "Inspection steps for EDR..71 – 315, EDRN63 – 315 brakemotors" (→ 🗎 191).
    - Use the new hex nuts [61] and clean the contact surfaces of the nuts at the magnet body of any residues of sealing compound.
    - Do so except for the fan [36] and the fan guard [35] because the working air gap has to be set first, see chapter "Setting the working air gap of BE05 – BE122 brakes" (→ 🗎 198).
    - After having set the working air gap, make sure the areas at sealing strip [66] and hex nuts [61] are correctly sealed.

31555454/EN – 11/2023

11. In case of manual brake release: Use the adjusting nuts to adjust the floating clearance "s" between the conical springs (pressed flat) and the adjusting nuts (see chapter "Retrofitting the /HR, /HF manual brake release" (→ 🗎 211).

⚠ WARNING

No braking due to incorrectly set floating clearance "s".

Severe or fatal injuries.

- Make sure the floating clearance "s" is correctly set, so that the pressure plate can move up as the brake lining wears.

12. Assemble the remaining parts of the motor you have removed before.

INFORMATION

After replacing the brake disk, the maximum braking torque is reached only after several cycles.

8.7.13 Changing the braking torque of BE05 – BE122 brakes

You can alter the braking torque in stages. This can be done in various ways:

- By changing the type and number of brake springs.
- By changing the complete magnet body (only possible for BE05 and BE1).
- By changing the brake (for motor size 90 and larger)
- By changing to a double disk brake (only possible for BE30, BE60, BE120)

For possible braking torque steps, refer to chapter "Technical data" (→ 🗎 215).

31555454/EN – 11/2023

8.7.14 Changing the brake spring of BE05 – BE122 brakes

⚠ WARNING

Risk of crushing if the drive starts up unintentionally.

Severe or fatal injuries.

- Disconnect the motor and all connected options from the power supply before you start working.
- Secure the motor against unintended power-up.

1. Remove the following:
   - Forced cooling fan and rotary encoder, if installed, see chapter "Motor and brake maintenance – preliminary work" (→ 🗎 154).
   - Fan guard with encoder mount or fan guard [35], retaining ring [32]/[62], and fan [36]
2. Remove the brake cable.
   - **BE05 – 11:** Remove the terminal box cover. Remove the brake cable from the rectifier.
   - **BE20 – 122:** Loosen the locking screws of the brake plug connector [698]. Remove the plug connector.
3. Remove the clamping strap [157] and sealing strip [66].
4. Remove manual brake release if necessary.
   - Adjusting nuts [58], conical springs [57], studs [56], releasing lever [53], conical seat [255], spherical washer [256]
5. Unfasten the hex nuts [61] and pull off the magnet body [54]
   - By approx. 50 mm (watch the brake cable!)
6. Replace or add brake springs [50/276/1312]
   - Arrange brake springs symmetrically
7. Assemble the brake parts again as described in chapter "Inspection steps for EDR..71 – 315, EDRN63 – 315 brakemotors" (→ 🗎 191).
   - Use the new hex nuts [61] and clean the contact surfaces of the nuts at the magnet body of any residues of sealing compound.
   - Do so except for the fan [36] and the fan guard [35] because the working air gap has to be set first, see chapter "Setting the working air gap of BE05 – BE122 brakes" (→ 🗎 198).
   - After having set the working air gap, make sure the areas at sealing strip [66] and hex nuts [61] are correctly sealed.
8. In case of manual brake release: Use the adjusting nuts to adjust the floating clearance "s" between the conical springs (pressed flat) and the adjusting nuts (see chapter "Retrofitting the /HR, /HF manual brake release" (→ 🗎 211).

⚠ WARNING

No braking due to incorrectly set floating clearance "s".

Severe or fatal injuries.

- Make sure the floating clearance "s" is correctly set, so that the pressure plate can move up as the brake lining wears.

9. Assemble the remaing parts of the motor you have removed before.

INFORMATION

Replace the setting sleeves [58] if the removal procedure is repeated.

8.7.15 Changing the magnet body of BE05 – BE122 brakes

⚠ WARNING

Risk of crushing if the drive starts up unintentionally.

Severe or fatal injuries.

- Disconnect the motor and all connected options from the power supply before you start working.
- Secure the motor against unintended power-up.

1. Remove the following:
   - Forced cooling fan and rotary encoder, if installed, see chapter "Motor and brake maintenance – preliminary work" (→ 🗎 154).
   - Fan guard with encoder mount or fan guard [35], retaining ring [32], and fan [36]
2. Remove the brake cable.
   - **BE05 – 11:** Remove the terminal box cover. Remove the brake cable from the rectifier.
   - **BE20 – 122:** Loosen the locking screws of the brake plug connector [698]. Remove the plug connector.
3. Remove the clamping strap [157] and sealing strip [66].
4. Loosen hex nuts [61], remove complete magnet body [54], remove brake springs [50]/[276]/[1312].
5. Install new magnet body with brake springs. For possible braking torque steps, refer to chapter "Technical data" (→ 🗎 215).
6. Mount the parts of the brake again as described in chapter "Inspection steps for EDR..71 – 315, EDRN63 – 315 brakemotors" (→ 🗎 191).
   - Use the new hex nuts [61] and clean the contact surfaces of the nuts at the magnet body of any residues of sealing compound.
   - Do so except for the fan [36] and the fan guard [35] because the working air gap has to be set first, see chapter "Setting the working air gap of BE05 – BE122 brakes" (→ 🗎 198).
   - After having set the working air gap, make sure the areas at sealing strip [66] and hex nuts [61] are correctly sealed.
7. In case of manual brake release: Use the adjusting nuts to adjust the floating clearance "s" between the conical springs (pressed flat) and the adjusting nuts (see chapter "Retrofitting the /HR, /HF manual brake release" (→ 🗎 211).

31555454/EN – 11/2023

⚠ WARNING

No braking due to incorrectly set floating clearance "s".

Severe or fatal injuries.

- Make sure the floating clearance "s" is correctly set, so that the pressure plate can move up as the brake lining wears.

8. Assemble the remaing parts of the motor you have removed before.
9. Replace the brake control in the event of an interturn short circuit or a short circuit to frame.

INFORMATION

Replace the setting sleeves [58] if the removal procedure is repeated.

8.7.16 Replacing BE03 brakes of EDRN63 – 71 motors

✓ The motor and all connected options are disconnected from the power supply.

✓ The motor is protected against unintended restart.

1. Disassemble the following parts:
   - ⇨ Forced cooling fan and rotary encoder, if installed, see chapter "Motor and brake maintenance – preliminary work" (→ 🗎 154).
   - ⇨ Fan guard with encoder mount [212] or fan guard [35], retaining ring [32]/[62] and fan [36]
2. Remove the terminal box cover and loosen the brake cable from the brake control/ terminals. Attach trailing wire to brake cables, if necessary.
3. Remove the screws and brake (with brake endshield if necessary) from the stator.
   - ⇨ EDRN63 motor: Screws [19]
   - ⇨ EDRN71 motor: Screws [900]
4. Replace the gasket [901]. Observe the alignment of the gasket, if necessary.
5. If necessary, replace driver [70], key [71], and retaining ring [62], see chapter "Inspection steps for EDR..71 – 315, EDRN63 – 315 brakemotors" (→ 🗎 191)
6. Insert the brake cable of the new brake into the terminal box.
7. Position the new brake. Make sure the cable outlet and brake lining carrier gearing are correctly aligned.
8. Fasten the brake using screws [19] or [900]. Distribute the screws around the brake and tighten them one after the other.
   - ⇨ EDRN63 motor: The screws [19] can be reused. Tightening torque 5 Nm, tolerance ±10%
   - ⇨ EDRN71 motor: Use new screws [900]. Tightening torque 5 Nm, tolerance ±10%
9. Seal the shaft.
10. Replace the sealing ring [95].
11. Apply grease to the sealing lip, see chapter "Order information for lubricants, anti-corrosion agents and sealants" (→ 🗎 240).

12. ⚠ **DANGER!** No braking due to incorrectly set floating clearance "s". Severe or fatal injuries. Make sure the floating clearance "s" is set correctly so that the pressure plate can move up as the brake lining wears.
    Manual brake release option: Set the floating clearance "s" using the adjusting nuts, see chapter "Retrofitting the /HR, /HF manual brake release" (→ 🗎 211).
13. Install the disassembled parts of the motor.

31555454/EN – 11/2023

8.7.17 Replacing BE05 – 2 brakes of EDR..71 – 80, EDRN71 – 80 motors

✓ The motor and all connected options are disconnected from the power supply.

✓ The motor is protected against unintended restart.

1. Disassemble the following parts:
   - ⇨ Forced cooling fan and rotary encoder, if installed, see chapter "Motor and brake maintenance – preliminary work" (→ 🗎 154).
   - ⇨ Fan guard with encoder mount [212] or fan guard [35], retaining ring [32]/[62] and fan [36]
2. Remove the terminal box cover and loosen the brake cable from the brake control/ terminals. Attach trailing wire to brake cables, if necessary.
3. Remove the screws and brake (with brake endshield if necessary) from the stator.
   - ⇨ EDR..71 – 80, EDRN71 – 80 motors: Cap screws [13]
4. Replace gasket [392]. Observe the alignment of the gasket.
5. If necessary, replace driver [70], key [71], and retaining ring [62], see chapter "Inspection steps for EDR..71 – 315, EDRN63 – 315 brakemotors" (→ 🗎 191)
6. Insert the brake cable of the new brake into the terminal box.
7. Position the new brake. Make sure the cable outlet and brake lining carrier gearing are correctly aligned.
8. Refasten the brake using the screws.
   - ⇨ Cap screws [13]
   - ⇨ Tightening torque 5 Nm.
   - ⇨ Tolerance ±10%.
9. Seal the sealing ring seat with SEW-L-Spezial. For motors with the /HF or /HR option, additionally install O-rings [47].
10. Seal the shaft.
11. Replace the sealing ring [95].
12. Apply grease to the sealing lip, see chapter "Order information for lubricants, anti-corrosion agents and sealants" (→ 🗎 240).
13. Remove the clamping strap [157] of the old brake. Attach the clamping strip [157] to the sealing strip [66] of the new brake. Make sure that sealing strip and clamping strap are positioned correctly.
14. ⚠ **DANGER!** No braking due to incorrectly set floating clearance "s". Severe or fatal injuries. Make sure the floating clearance "s" is set correctly so that the pressure plate can move up as the brake lining wears.
    Manual brake release option: Set the floating clearance "s" using the adjusting nuts, see chapter "Retrofitting the /HR, /HF manual brake release" (→ 🗎 211).
15. Install the disassembled parts of the motor.

31555454/EN – 11/2023

8.7.18 Replacing BE05 – 62 brakes of EDR..90 – 225, EDRN90 – 225 motors

✓ The motor and all connected options are disconnected from the power supply.

✓ The motor is protected against unintended restart.

1. Disassemble the following parts:
   - ⇨ Forced cooling fan and rotary encoder, if installed, see chapter "Motor and brake maintenance – preliminary work" (→ 🗎 154).
   - ⇨ Fan guard with encoder mount [212] or fan guard [35], retaining ring [32]/[62] and fan [36]
2. Loosen the brake cable.
   - ⇨ BE05 – 11: Remove the terminal box cover and loosen the brake cable from the brake control/terminals.
   - ⇨ BE20 – 62: Loosen locking screws of the brake plug connector [698] and remove plug connector.
3. Remove the screws and brake (with brake endshield if necessary) from the stator.
4. Replace the gasket [901]. Observe the alignment of the gasket, if necessary.
5. If necessary, replace driver [70], key [71], and retaining ring [62], see chapter "Inspection steps for EDR..71 – 315, EDRN63 – 315 brakemotors" (→ 🗎 191)
6. BE05 – 11: Insert the brake cable of the new brake into the terminal box.
7. Position the new brake. Make sure the cable outlet and brake lining carrier gearing are correctly aligned.
   - ⇨ BE20 – 62 with manual brake release option: It is important that the manual brake release is positioned properly.
8. Refasten the brake using the screws.
   - ⇨ Cap screws [900]
   - ⇨ Tightening torque EDR..90 – 100, EDRN90 – 100: 10.3 Nm
   - ⇨ Tightening torque EDR..112 – 160, EDRN112 – 132: 25.5 Nm
   - ⇨ Tightening torque EDR..180, EDRN160 – 180: 50 Nm
   - ⇨ Tightening torque EDR..200 – 225, EDRN200 – 225: 87.3 Nm
   - ⇨ Tolerance ±10%.
9. Seal the sealing ring seat with SEW-L-Spezial. For motors with the /HF or /HR option, additionally install O-rings [47].
10. Seal the shaft.
11. Replace the sealing ring [95].
12. Apply grease to the sealing lip, see chapter "Order information for lubricants, anti-corrosion agents and sealants" (→ 🗎 240).
13. BE20 – 62: Insert the plug connector [698] into the brake and fasten using screws.
    - ⇨ Tightening torque 3 Nm
14. Remove the clamping strap [157] of the old brake. Attach the clamping strip [157] to the sealing strip [66] of the new brake. Make sure that sealing strip and clamping strap are positioned correctly.

31555454/EN – 11/2023

15. ⚠ **DANGER!** No braking due to incorrectly set floating clearance "s". Severe or fatal injuries. Make sure the floating clearance "s" is set correctly so that the pressure plate can move up as the brake lining wears.
    Manual brake release option: Set the floating clearance "s" using the adjusting nuts, see chapter "Retrofitting the /HR, /HF manual brake release" (→ 🗎 211).
16. Install the disassembled parts of the motor.

31555454/EN – 11/2023

8.7.19 Replacing BE60 – 122 brakes of EDR..250 – 315, EDRN250 – 315 motors

✓ The motor and all connected options are disconnected from the power supply.

✓ The motor is protected against unintended restart.

1. Disassemble the following parts:
   - ⇨ Forced cooling fan and rotary encoder, if installed, see chapter "Motor and brake maintenance – preliminary work" (→ 🗎 154).
   - ⇨ Fan guard with encoder mount [212] or fan guard [35], retaining ring [32]/[62] and fan [36]
2. Unscrew the locking screws of the brake plug connector [698] and remove the plug connector.
3. Remove the screws and brake (with brake endshield if necessary) from the stator.
   - ⇨ EDR..250 – 280, EDRN250 – 280 motors: Replace the O ring [1607].
4. If necessary, replace driver [70], key [71], and retaining ring [62], see chapter "Inspection steps for EDR..71 – 315, EDRN63 – 315 brakemotors" (→ 🗎 191)
5. Seal the shaft.
6. Replace the sealing ring [95].
7. Apply grease to the sealing lip, see chapter "Order information for lubricants, anti-corrosion agents and sealants" (→ 🗎 240).
8. Position the new brake. Make sure the cable outlet and brake lining carrier gearing are correctly aligned.
   - ⇨ Manual brake release option: It is important that the manual brake release is positioned properly.
9. Refasten the brake using the screws.
   - ⇨ Cap screws [900]
   - ⇨ Tightening torque: 230 Nm
   - ⇨ Tolerance ±10%.
10. Insert plug connector [698] in the brake and fasten using screws.
    - ⇨ Tightening torque 3 Nm
11. Remove the clamping strap [157] of the old brake. Attach the clamping strip [157] to the sealing strip [66] of the new brake. Make sure that sealing strip and clamping strap are positioned correctly.
12. ⚠ **DANGER!** No braking due to incorrectly set floating clearance "s". Severe or fatal injuries. Make sure the floating clearance "s" is set correctly so that the pressure plate can move up as the brake lining wears.
    Manual brake release option: Set the floating clearance "s" using the adjusting nuts, see chapter "Retrofitting the /HR, /HF manual brake release" (→ 🗎 211).
13. Install the disassembled parts of the motor.

31555454/EN – 11/2023

8.7.20 Retrofitting the /HR, /HF manual brake release

✓ The motor and all connected options are disconnected from the power supply.

✓ The motor is protected against unintended restart.

1. Disassemble the following parts:
   - ⇨ Forced cooling fan and rotary encoder, if installed, see chapter "Motor and brake maintenance – preliminary work" (→ 🗎 154).
   - ⇨ Fan guard with encoder mount [212] or fan guard [35], retaining ring [32]/[62] and fan [36]
2. Mount the manual brake release.
   - ⇨ BE03: Position the releasing lever [53] and the spring plate [53] correctly. Mount the flange nut [58]. Attach the hand lever [51]/set screw [64] to the stator using the grommets.
   - ⇨ BE05 – BE11: Remove the old sealing ring [95]. Screw in the studs [56] and glue them. Insert the sealing rings for the manual brake release [95]. Hammer in the parallel pin [59]. Install the releasing lever [53], the conical springs [57] and the adjusting nuts [58].
   - ⇨ BE20 – BE62: Insert O-rings [47] into the magnet body. Screw in the studs [56] and glue them. Install the releasing lever [53], the conical springs [57] and the adjusting nuts [58].
   - ⇨ BE120 – BE122: Insert O-rings [47] in the magnet body. Screw in the studs [56] and glue them.
3. ⚠ **DANGER!** No braking due to incorrectly set floating clearance "s". Severe or fatal injuries. Make sure the floating clearance "s" is set correctly so that the pressure plate can move up as the brake lining wears.
   Set the floating clearance "s" using the adjusting nuts or flange nuts.
   - ⇨ BE03: Between releasing lever and flange nut (see following illustration).
   - ⇨ BE05 – 122: Between conical springs (pressed flat) and adjusting nuts (see following illustration).

BE03	BE05 – 122
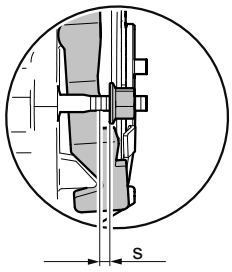	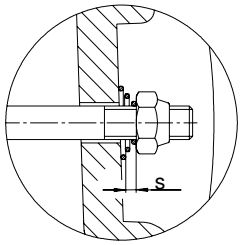

Brake	Floating clearance s mm
BE03	2.2
BE05, BE1, BE2	1.5
BE5	1.7
BE11, BE20, BE30, BE32, BE60, BE62, BE120, BE122	2

4. Install the disassembled parts of the motor.

8.8 Altering the blocking direction on motors with a backstop

8.8.1 Basic structure of EDR..71 – 80, EDRN71 – 80 motors with backstop

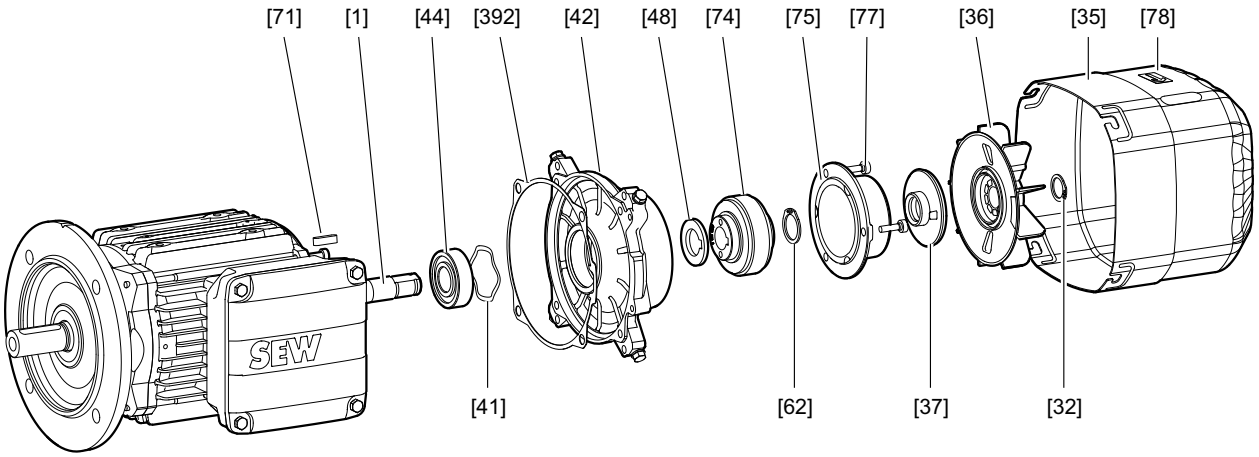

18014399652340235

[1]	Motor with brakemotor	[48]	Spacing ring
[32]	Retaining ring	[62]	Retaining ring
[35]	Fan guard	[71]	Key
[36]	Fan wheel	[74]	Backstop
[37]	Sealing ring	[75]	Sealing flange
[41]	Equalizing ring	[77]	Cap screw
[42]	Backstop endshield, complete	[78]	Direction of rotation information sign
[44]	Deep groove ball bearing	[392]	Gasket

8.8.2 Basic structure of EDR..90 – 315, EDRN63, EDRN90 – 315 motors with backstop

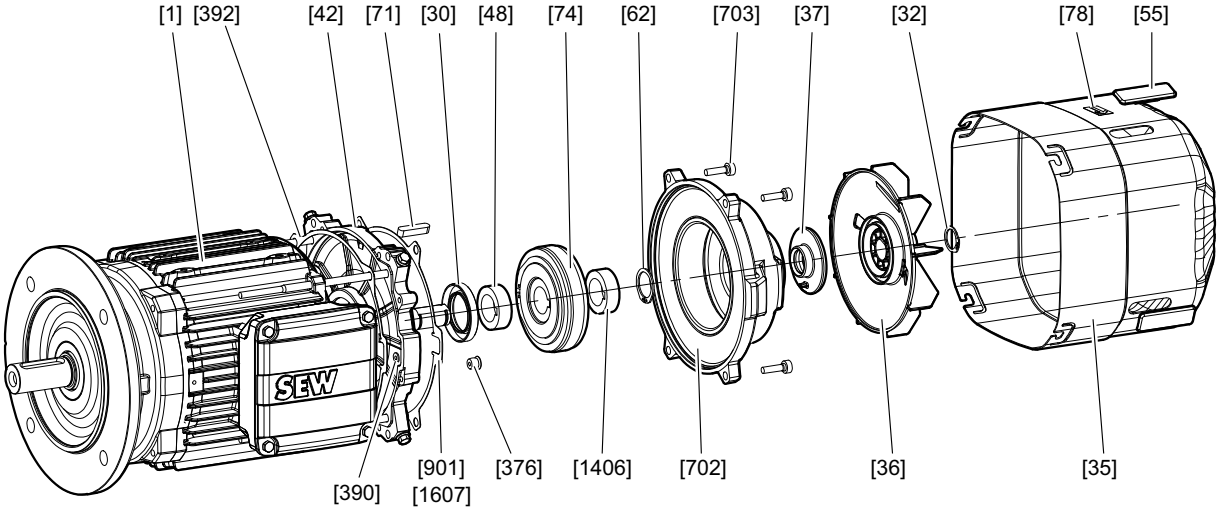

18014399652338315

[1]	Motor	[74]	Backstop
[30]	Sealing ring (EDR../EDRN250 – 315 motors)	[78]	Information sign for direction of rotation
[35]	Fan guard	[702]	Backstop housing
[36]	Fan wheel	[703]	Cap screw
[37]	Sealing ring	[376]	Screw plug (EDR..160 – 315, EDRN132M – 315 motors)
[42]	Brake endshield	[390]	O-ring (EDR..160 – 225, EDRN132M – 225 motors)
[48]	Spacing ring	[392]	Seal (EDR..90 – 132, EDRN90 – 132S motors)
[55]	Closing piece	[901]	Seal (EDR../EDRN90 – 225 motors)
[62]	Retaining ring	[1406]	Spacing ring (EDR../EDRN250 – 315 motors)
[71]	Key	[1607]	O-ring (EDR../EDRN250 – 280 motors)

31555454/EN – 11/2023

8.8.3 Changing the blocking direction

Proceed as follows to change the blocking direction:

✓ The motor and all connected options are disconnected from the power supply.

✓ The motor is protected against unintended restart.

1. Disassemble the following parts:
   - ⇨ Forced cooling fan and rotary encoder, if installed, see chapter "Motor and brake maintenance – preliminary work" (→ 🗎 154).
   - ⇨ Fan guard with encoder mount [212] or fan guard [35], retaining ring [32]/[62] and fan [36]
   - ⇨ **EDR..71 – 80, EDRN71 – 80 motors:** Sealing flange [75].
   - ⇨ **EDR..90 – 315, EDRN63, 90 – 315 motors:** Backstop housing, complete [702].
2. Remove the retaining ring [62] and, if necessary, the spacing ring [1406].
3. Dismount the backstop [74] using a puller.
4. To alter the blocking direction, turn around the backstop [74].
5. Check the old grease. If necessary, replace the grease as specified below.
   - ⇨ **EDRN63 – 71 motors**: Glue in the backstop [74] with Loctite 648/649.
   - ⇨ **EDR..71 – 315, EDRN80 – 315 motors:** Press on the backstop [74].
6. Mount the retaining ring [62].
7. Mount the following parts:
   - ⇨ **EDR..71 –80, EDRN71 – 80 motors:** Apply SEW-L-Spezial sealant to the sealing flange [75]. Mount the sealing flange [75].
   - ⇨ **EDR..90 – 315, EDRN63, 90 – 315 motors:** Replace the seals [901], [1607], and if necessary [37]. Mount the complete backstop housing [702].
8. Install the disassembled parts of the motor.
9. Replace the label [78] indicating the direction of rotation.

Lubricating the backstop

The backstop is greased at the factory with the corrosion protection low-viscosity grease LBZ 1. If you want to use another grease, make sure it complies with NLGI class 00/000 with a base oil viscosity of 42 mm^2/s at 40 °C on a lithium saponified and mineral oil base. The application temperature range is from -50 °C to +90 °C. See the following table for the amount of grease required:

EDR..	**71**	**80**	**90/100**	**112/132**	**160**	**180**	**200/225**	**250/280**	**315**
EDRN..	**63/71**	**80**	**90/100**	**112/132S**	**132M/L**	**160/180**	**200/225**	**250/280**	**315**
Amount of grease in g	9	11	15	20	30	45	80	80	120

The tolerance regarding the grease level is ± 30%.

31555454/EN – 11/2023

9 Technical data

9.1 Braking torques

The following table shows the possible braking torque combinations for various sizes of the BE05 – 122 brake. For BE03 brakes, the braking torques of each brake are preset at the factory and cannot be adjusted.

⚠ WARNING

Insufficient or excessive braking torque due to impermissible spring pack.

Severe or fatal injuries.

- Maintenance work may only be performed by a trained specialist.
- In case of a conversion, make sure the selected spring set generates nominal braking torques that are permitted for your drive combination and are suitable for the application.
- Observe the project planning note in the manual "Project Planning for BE.. Brakes – DR.., DRN.., DR2.., EDR.., EDRN.. AC Motors – Standard Brake/Safety Brake", or contact SEW-EURODRIVE.

Brake	Part number Damping plate [718][1] Pole sheet [63][2]	Braking torque settings					
		Braking torque	Type and number of brake springs			Purchase order numbers for brake springs	
		Nm	Normal [50]	Blue [276]	White [1312]	Normal	Blue/white
BE05	13740563[1]	3.5	–	6	–	0135017X	13741373
		2.5	–	4	–		
		1.8	–	3	–		
BE1	13740563[1]	7.0	4	2	–	0135017X	13741373
		5.0	3	–	–		
BE2	13740199[1]	14	2	4	–	13740245	13740520
		10	2	2	–		
		7.0	–	4	–		
		5.0	–	3	–		
BE5	13740695[1]	40	2	4	–	13740709	13740717
		28	2	2	–		
		20	–	–	6		13747738
		14	–	–	4		
BE11	13741713[1]	80	2	4	–	13741837	13741845
		55	2	2	–		
		40	–	4	–		
	13741713[1]+ 13746995[2]	28	–	3	–		
		20	–	–	4		13747789
BE20	–	150	4	2	–	13743228	13742485
	–	110	3	3	–		
	–	80	3	–	–		
	13749307[2]+ 13746758[1]	55	–	6	–		
		40	–	4	–		
BE30	–	200	4	4	–	01874551	13744356
	–	150	4	–	–		
	–	100	–	8	–		
	13749455[2]	75	–	6	–		

31555454/EN – 11/2023

Brake	Part number Damping plate [718][1] Pole sheet [63][2]	Braking torque settings					
		Braking torque	Type and number of brake springs			Purchase order numbers for brake springs	
		Nm	Normal [50]	Blue [276]	White [1312]	Normal	Blue/white
BE32	–	400	4	4	–	01874551	13744356
	–	300	4	–	–		
	–	200	–	8	–		
	13749455[1]	150	–	6	–		
	13749455[1]	100	–	4	–		
BE60	–	400	4	4	–	01868381	13745204
	–	300	4	–	–		
	–	200	–	8	–		
BE62	–	800	4	4	–	01868381	13745204
	–	600	4	–	–		
	–	400	–	8	–		
BE120	–	800	6	2	–	13608770	13608312
	–	600	4	4	–		
	–	400	4	–	–		
BE122	–	1600	6	2	–	13608770	13608312
	–	1200	4	4	–		
	–	800	4	–	–		

1) Damping plate
2) Pole sheet

9.1.1 Brake spring layout

The following table shows the brake spring layout:

BE05 – 11:					
6 springs	3 + 3 springs	4 + 2 springs	2 + 2 springs	4 springs	3 springs
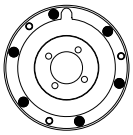	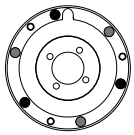	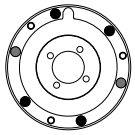	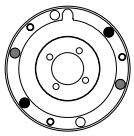	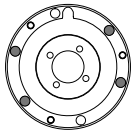	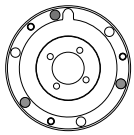
BE20:					
6 springs	4 + 2 springs	3 + 3 springs	4 springs	3 springs	
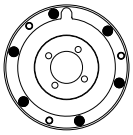	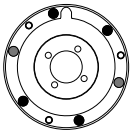	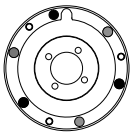	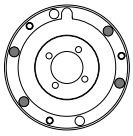	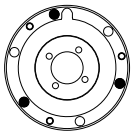	
BE30 – 122:					
8 springs	4 + 4 springs	6 + 2 springs	6 springs	4 springs	
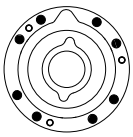	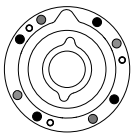	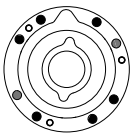	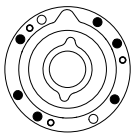	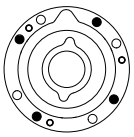	

9.2 Braking work, working air gap, and brake lining carrier thickness

If the brake is used in combination with a safety encoder, or if the brake is designed as safety brake, the maximum values for the working air gap and for the braking work until maintenance are reduced. For the new values, refer to the addendum to the operating instructions for safety brakes and safety encoders.

Brake	Braking work until maintenance[1]	Working air gap		Brake lining carrier
		min.[2]	Maximum	Minimum
	10^6 J	mm	mm	mm
BE03	200	0.25	0.65	–[3]
BE05	120	0.25	0.6	11.0
BE1	120	0.25	0.6	11.0
BE2	180	0.25	0.6	11.0
BE5	390	0.25	0.9	11.0
BE11	640	0.3	1.2	12.5
BE20	1000	0.3	1.2	12.5
BE30	1500	0.3	1.2	12.5
BE32	1500	0.4	1.2	12.5
BE60	2500	0.3	1.2	14.0
BE62	2500	0.4	1.2	14.0
BE120	390	0.6	1.2	14.0
BE122	390	0.8	1.2	14.0

1) The specified values are nominal values that were determined during rating operation. The actual braking work that can be reached before maintenance may vary depending on the actual load during operation.
2) When checking the working air gap, note: After a test run, parallelism tolerances on the brake lining carrier may give rise to deviations of ±0.15 mm.
3) The brake lining carrier cannot be replaced. When the minimum brake lining carrier thickness/maximum working air gap is reached, the brake must be replaced.

INFORMATION

In case of drives with BE32, BE62, or BE122 brake in pivoted mounting position, the specified value may be reduced by up to 50%, depending on the pivoting angle.

31555454/EN – 11/2023

9.3 Operating currents

9.3.1 General information on determining operating currents

The tables in this chapter list the operating currents of BE.. brakes at different voltages.

The acceleration current I_B (= inrush current) flows only for a short time (approx. 160 ms for BE03 – BE62, 400 ms for BE60 – BE122 with BMP3.1 brake control) when the brake is released. No increased inrush current occurs when using BG.., BS24 or BMS.. brake control and direct DC voltage supply without control unit (only possible with brake size BE03 – BE2).

The values for the holding currents I_H are rms values. Only use current measurement units that are designed to measure rms values.

INFORMATION

The following operating currents and power consumption values are nominal values. They refer to a coil temperature of +20 °C.

Operating currents and power consumption usually decrease during normal operation due to heating of the brake coil.

Note that the actual operating currents can be higher by up to 25% depending on the ambient temperature and with coil temperatures below +20 °C.

9.3.2 Legend

The following tables list the operating currents of the brakes at different voltages.

The following values are specified:

P_B	Nominal value of the electric power consumption in the brake coil in watt.
U_N	Nominal voltage (rated voltage range) of the brake in V (AC or DC).
I_H	Nominal holding current in A (AC). rms value of the braking current in the supply cable to the SEW-EURODRIVE brake control.
I_{DC}	Nominal holding current in A (DC) in the brake cable with direct DC voltage supply or Nominal holding current in A (DC) in the brake cable with DC 24 V supply via BS24, BSG, or BMV.
I_B	Acceleration current in ampere (AC or DC) when operated with SEW brake control for high-speed excitation.
I_B/I_H	Inrush current ratio ESV.
I_B/I_{DC}	Inrush current ratio ESV for DC 24 V supply with BSG or BMV.

31555454/EN – 11/2023

9.3.3 BE03, BE05, BE1, BE2 brakes

	BE03	BE05/BE1	BE2
Nominal power brake coil in W	19.5	25	34
Inrush current ratio ESV	4	4	4

Nominal voltage (rated voltage range) V_N		BE03		BE05, BE1		BE2	
		I_H	I_{DC}	I_H	I_{DC}	I_H	I_{DC}
AC V	DC V	AC A	DC A	AC A	DC A	AC A	DC A
–	24[1)]	–	0.776	–	0.93	–	1.220
60 (57-63)	24	0.597	0.776	0.720	0.93	0.940	1.220
120 (111-123)	48	0.293	0.381	0.355	0.465	0.470	0.610
147 (139-154)	60	0.238	0.309	0.285	0.370	0.375	0.475
184 (174-193)	80	0.190	0.247	0.225	0.295	0.295	0.385
208 (194-217)	90	0.174	0.226	0.200	0.265	0.265	0.340
230 (218-243)	96	0.157	0.204	0.181	0.235	0.235	0.305
254 (244-273)	110	0.140	0.182	0.160	0.210	0.210	0.275
290 (274-306)	125	0.123	0.160	0.143	0.186	0.187	0.240
330 (307-343)	140	0.107	0.139	0.128	0.166	0.167	0.215
360 (344-379)	160	0.091	0.118	0.113	0.147	0.149	0.193
400 (380-431)	180	0.081	0.105	0.101	0.131	0.133	0.172
460 (432-484)	200	0.073	0.095	0.090	0.118	0.121	0.156
500 (485-542)	220	0.065	0.084	0.080	0.105	0.108	0.139

1) Operation with control unit BSG, BS24, BMV

31555454/EN – 11/2023

9.3.4 Brakes BE5, BE11, BE20, BE30, BE32, BE60, BE62

	BE5	BE11	BE20	BE30, BE32	BE60, BE62
Nominal power brake coil in W	39	61	79	96	155
Inrush current ratio ESV	5.9	6.6	7.5	8.5	9.2

Nominal voltage (rated voltage range) V_N		BE5		BE11		BE20		BE30, BE32		BE60, BE62	
		I_H	I_{DC}	I_H	I_{DC}	I_H	I_{DC}	I_H	I_{DC}	I_H	I_{DC}
AC V	DC V	AC A	DC A	AC A	DC A	AC A	DC A	AC A	DC A	AC A	DC A
–	24[1)]	–	1.30	–	2.11	–	2.65	–	–	–	–
60 (57-63)	–	1.02	–	1.66	–	2.05	–	–	–	–	–
120 (111-123)	–	0.51	–	0.83	–	1.03	–	1.38	–	–	–
147 (139-154)	–	0.41	–	0.66	–	0.82	–	1.09	–	–	–
184 (174-193)	–	0.325	–	0.52	–	0.65	–	0.88	–	–	–
208 (194-217)	–	0.29	–	0.465	–	0.58	–	0.78	–	1.31	–
230 (218-243)	–	0.255	–	0.415	–	0.52	–	0.69	–	1.16	–
254 (244-273)	–	0.23	–	0.37	–	0.46	–	0.61	–	1.09	–
290 (274-306)	–	0.205	–	0.33	–	0.41	–	0.55	–	0.95	–
330 (307-343)	–	0.181	–	0.295	–	0.36	–	0.49	–	0.84	–
360 (344-379)	–	0.161	–	0.265	–	0.325	–	0.44	–	0.74	–
400 (380-431)	–	0.145	–	0.235	–	0.29	–	0.385	–	0.66	–
460 (432-484)	–	0.129	–	0.21	–	0.26	–	0.345	–	0.59	–
500 (485-542)	–	0.115	–	0.192	–	0.23	–	0.31	–	0.52	–

1) Operation with control unit BSG, BMV

31555454/EN – 11/2023

9.3.5 Brake BE120, BE122

	BE120, BE122
Nominal power brake coil in W	175
Inrush current ratio ESV	6

Nominal voltage (rated voltage range) V_N	BE120
	I_H
AC V	AC A
230 (218-243)	1.18
254 (244-273)	1.05
290 (274-306)	0.93
360 (344-379)	0.74
400 (380-431)	0.66
460 (432-484)	0.59
500 (485-542)	0.53

31555454/EN – 11/2023

9.4 Resistors

The depicted values apply to the standard temperature range of -20 to +40 °C. Deviating resistances may occur in other temperature ranges, especially in case of drives with permitted temperature above +60 °C, or in case of non-ventilated drives, due to modified winding configurations. The values are available from SEW-EURODRIVE on request.

9.4.1 Resistance measurement BE03 – BE122

INFORMATION

The colored cores of the brake coil must be removed from their terminals for the resistance measurement; otherwise, this could lead to incorrect measurement results.

For drives in design 3G-c, 3GD-c, the brake controller must always be installed in the control cabinet.

Brake control system in the control cabinet

The following figure shows the brake coil resistance measurement at the auxiliary terminal strip in the terminal box when the brake controller is installed in the control cabinet:

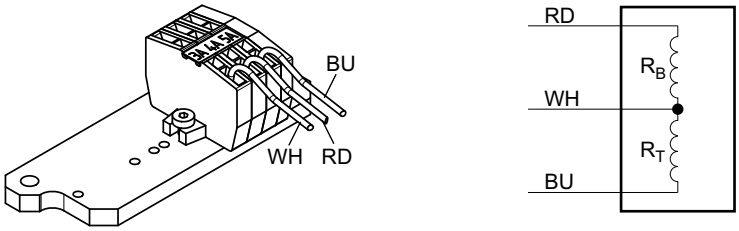

R_B	Accelerator coil resistance at 20 °C in Ω	RD	Red
R_T	Coil section resistance at 20 °C in Ω	WH	White
		BU	Blue

Brake controller in the terminal box

The following figure shows the resistance measurement when the brake controller is installed in the terminal box (cut-off in the AC circuit):

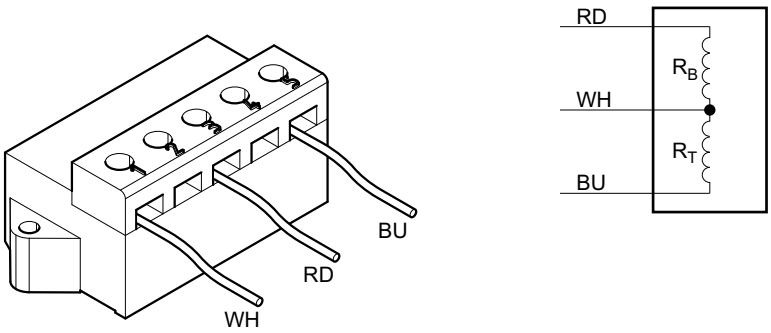

9007199497350795

31555454/EN – 11/2023

The following figure shows the resistance measurement when the brake controller is installed in the terminal box (cut-off in the DC and AC circuit):

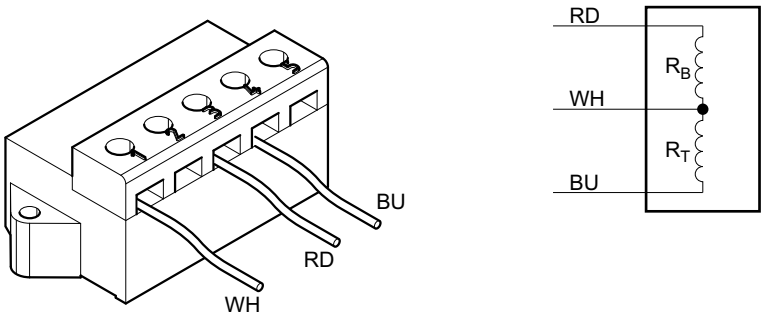

18014398752093451

R_B	Accelerator coil resistance at 20 °C in Ω	RD	Red
R_T	Coil section resistance at 20 °C in Ω	WH	White
		BU	Blue

9.4.2 BE03, BE05, BE1, BE2, BE5 brakes

	BE03	BE05, BE1	BE2	BE5
Nominal power brake coil W	19.5	25	34	39
Inrush current ratio ESV	4	4	4	5.8

Nominal voltage (rated voltage range) V_N		BE03		BE05, BE1		BE2		BE5	
AC V	DC V	R_B	R_T	R_B	R_T	R_B	R_T	R_B	R_T
60 (57-63)	24	7.86	24.3	6.2	18.7	4.55	13.8	2.75	13.2
120 (111-123)	48	32	98.7	24.5	75	18.2	55	11	53
147 (139-159)	60	49.6	153	39	118	29	87	17.4	83
184 (174-193)	80	78.1	241	62	187	45.5	139	27.5	132
208 (194-217)	90	96	296	78	235	58	174	34.5	166
230 (218-243)	96	119	367	98	295	72	220	43.5	210
254 (244-273)	110	150	462	124	375	91	275	55	265
290 (274-306)	125	191	589	156	470	115	350	69	330
330 (307-343)	140	247	762	196	590	144	440	87	420
360 (344-379)	160	326	1004	245	750	182	550	110	530
400 (380-431)	180	412	1270	310	940	230	690	138	660
460 (432-484)	200	512	1580	390	1180	280	860	174	830
500 (485-542)	220	645	1989	490	1490	355	1080	220	1050

31555454/EN – 11/2023

9.4.3 Resistance measurement BE120, BE122

The following illustration shows how to measure resistance with BMP 3.1.

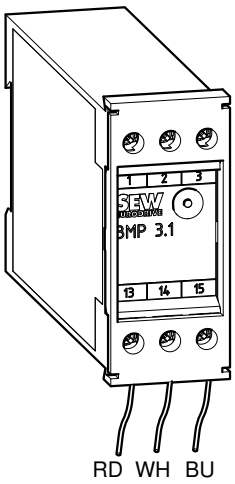

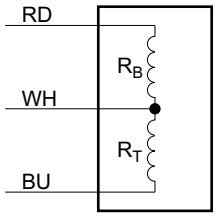

BS	Accelerator coil	RD	Red
TS	Coil section	WH	White
R_B	Accelerator coil resistance at 20 °C in Ω	BU	Blue
R_T	Coil section resistance at 20 °C in Ω		
V_N	Nominal voltage (rated voltage range)		

INFORMATION

When measuring the resistance of the coil section (R_T) or the acceleration coil (R_B), remove the white conductor from the brake rectifier; if it remains connected, the internal resistance of the brake rectifier will cause erroneous results.

9.4.4 Brakes BE11, BE20, BE30, BE32, BE60, BE62

	BE11	BE20	BE30, BE32	BE60, BE62
Nominal power brake coil in W	61	79	96	155
Inrush current ratio ESV	6.7	7.7	8.5	9.2

Nominal voltage (rated voltage range) V_N	BE11		BE20		BE30, BE32		BE60, BE62	
AC V	R_B	R_T	R_B	R_T	R_B	R_T	R_B	R_T
60 (57-63)	1.54	8.7	1.06	7.2	–	–	–	–
120 (111-123)	6.2	34.5	4.25	28.5	2.9	21.5	–	–
147 (139-159)	9.8	55.0	6.8	45.5	4.6	34.5	–	–
184 (174-193)	15.5	87	10.7	72	6.5	54	3.95	32.5
208 (194-217)	19.5	110	13.5	91	9.2	69	5	41
230 (218-243)	24.5	138	17.0	114	11.6	86	6.3	52
254 (244-273)	31.0	174	21.5	144	14.6	108	7.8	64
290 (274-306)	39.0	220	27	181	18.3	137	9.9	80
330 (307-343)	49	275	33	225	23	172	12.6	101
360 (344-379)	62	345	42.5	285	29	215	15.8	128
400 (380-431)	78	435	53	355	35	275	19.9	163
460 (432-484)	98	550	68	455	45	335	25.5	205
500 (485-542)	119	670	83	560	56	420	31.5	260

31555454/EN – 11/2023

9.4.5 Brake BE120, BE122

	BE120, BE122
Nominal power brake coil in W	175
Inrush current ratio ESV	6

Nominal voltage (rated voltage range) V_N	BE120, BE122	
AC V	**R_B**	**R_T**
60 (57-63)	–	–
120 (111-123)	–	–
147 (139-159)	–	–
184 (174-193)	–	–
208 (194-217)	7.7	37
230 (218-243)	97	47
254 (244-273)	12.2	59
290 (274-306)	15.4	74
330 (307-343)	19.4	93
360 (344-379)	24.5	118
400 (380-431)	30.5	148
460 (432-484)	38.5	187
500 (485-542)	48.5	235

31555454/EN – 11/2023

9.5 Brake control

INFORMATION

For EDR../EDRN.. motors in design 3G-c and 3GD-c, brake controllers are not permitted in the wiring space.

For EDR../EDRN.. motors in design 3D-c, brake controllers can be installed in the wiring space of the motor and in the control cabinet.

9.5.1 Installation in a control cabinet

The table below shows the standard and optional combinations of brakes and brake rectifiers for installation in control cabinets:

	BE03	BE05	BE1	BE2	BE5	BE11	BE20	BE30, BE32	BE60, BE62	BE120, BE122
BMS..	x	x	x	x	–	–	–	–	–	–
BME..	•	•	•	•	x	x	x	x	x	–
BMH..	•	•	•	•	•	•	•	•	–	–
BMP..	•	•	•	•	•	•	•	•	–	x
BMK..	•	•	•	•	•	•	•	•	–	–
BMV..	•	x	x	x	x	x	x	–	–	–

• Can be selected
x Standard for design 3G-c, 3D-c, 3GD-c
– Not permitted

Control cabinet

The following tables list the technical data of brake control systems for installation in the control cabinet. The different housings have different colors (= color code) to make them easier to distinguish.

BMS..

Half-wave rectifier without electronic switching.

Type	Nominal voltage	Nominal output current I_L	Part number	Color code
BMS1.5	AC 150 – 500 V	DC 1.5 A	08258023	Tar black
BMS3	AC 42 – 150 V	DC 3.0 A	08258031	Mahogany brown

BME..

Half-wave rectifier with electronic switching.

Type	Nominal voltage	Nominal output current I_L	Part number	Color code
BME1.5	AC 150 – 500 V	DC 1.5 A	08257221	Vermilion

31555454/EN – 11/2023

Type	Nominal voltage	Nominal output current I_L	Part number	Color code
BME3	AC 42 – 150 V	DC 3.0 A	0825723X	Light blue

BMH..

Half-wave rectifier with electronic switching and heating function

Type	Nominal voltage	Nominal output current I_L	Part number	Color code
BMH1.5	AC 150 – 500 V	DC 1.5 A	0825818X	Signal green
BMH3	AC 42 – 150 V	DC 3.0 A	08258198	Zinc yellow

BMP..

Half-wave rectifier with electronic switching and integrated voltage relay for cut-off in the DC circuit.

Type	Nominal voltage	Nominal output current I_L	Part number	Color code
BMP1.5	AC 150 – 500 V	DC 1.5 A	08256853	Light gray
BMP3	AC 42 – 150 V	DC 3.0 A	08265666	Light green
BMP3.1	AC 230 – 575 V	DC 2.8 A	08295077	–

BMK..

Half-wave rectifier with electronic switching, DC 24 V control input, and cut-off in the DC circuit.

Type	Nominal voltage	Nominal output current I_L	Part number	Color code
BMK1.5	AC 150 – 500 V	DC 1.5 A	08264635	Water blue
BMK3	AC 42 – 150 V	DC 3.0 A	08265674	Light pink

BMV..

Brake control unit with electronic switching, DC 24 V control input and fast cut-off.

Type	Nominal voltage	Nominal output current I_L	Part number	Color code
BMV5	DC 24 V	DC 5.0 A	13000063	Pure white

9.5.2 Installation in the motor terminal box

The table below shows the standard and optional combinations of brakes and brake rectifiers for installation in the wiring space of the motor:

	BE03 with EDRN63	BE03	BE05	BE1	BE2	BE5
BG..	x	x	x	x	x	–
BGE..	-	•	•	•	•	x
BS..	-	x	x	x	x	–
BSG..	-	•	•	•	•	x

	BE11	BE20	BE30, BE32	BE60, BE62	BE120, BE122
BG..	–	–	–	–	–
BGE..	x	x	x	x	–
BS..	–	–	–	–	–
BSG..	x	x	–	–	–

• Can be selected
x Standard for design 3D-c
– Not permitted

Motor terminal box

The following table shows the technical data of the brake controls for installation in the terminal box. The different housings have different colors (= color code) to make them easier to distinguish.

BG..

Half-wave rectifier without electronic switching.

Type	Nominal voltage	Nominal output current I_L	Part number	Color code
BG1.2	AC 90 – 500 V	DC 1.2 A	08269920	Jet black
BG2.4	AC 24 – 90 V	DC 2.4 A	08270198	Mahogany brown
BG1.5	AC 150 – 500 V	DC 1.5 A	08253846	Jet black
BG3	AC 24 – 500 V	DC 2.8 A	08253862	Mahogany brown

BGE..

Half-wave rectifier with electronic switching.

Type	Nominal voltage	Nominal output current I_L	Part number	Color code
BGE1.5	AC 150 – 500 V	DC 1.5 A	08253854	Vermilion
BGE3	AC 42 – 150 V	DC 2.8 A	08253870	Light blue

31555454/EN – 11/2023

BS24

Varistor overvoltage protection.

Type	Nominal voltage	Nominal output current I_L	Part number	Color code
BS24	DC 24 V	DC 5.0 A	08267634	Water blue

BSG..

Electronic switching.

Type	Nominal voltage	Nominal output current I_L	Part number	Color code
BSG	DC 24 V	DC 5.0 A	08254591	Pure white

BMP..

Half-wave rectifier with electronic switching and integrated voltage relay for cut-off in the DC circuit.

Type	Nominal voltage	Nominal output current I_L	Part number	Color code
BMP3.1[1)]	AC 230 – 575 V	DC 2.8 A	08295077	–

1) Only sizes 250 – 315

Installation in motor terminal box with additional switching relay BSR, BUR

The following tables show the technical data of the BSR.. and BUR.. brake controls, each with BGE.. brake control and SR.R current relay or UR.E voltage relay. The relays are used for the cut-off in the AC and DC circuits without additional switching contacts in the control cabinet.

The BSR.. brake control picks off the supply voltage for the brake directly from the motor terminal board. This is the reason why it may only be used with drives operated on the supply system (constant voltage). BUR brake control can also be used with variable speed drives (frequency inverter operation).

BSR brake control

Assignment

SR.E is assigned according to the nominal motor current in ⅄ connection:

The following table shows the allocation of the SR.. current relay to the nominal motor current I_N in ⅄ connection and the maximum holding current of the brake I_{Hmax}.

$I_{Hmax} = I_H \times 1.3\ A_{Ac}$

EDR..71 – 132,
EDRN63– 132S

Current relay	Nominal motor current I_N in ⅄ connection	Max. holding current of the brake I_{Hmax}
	A	A
SR10E	0.075 – 0.6	1

31555454/EN – 11/2023

Current relay	Nominal motor current I_N in ⅄ connection	Max. holding current of the brake I_{Hmax}
	A	A
SR11E	0.6 – 10	1
SR15E	10 – 50	1

EDR..160 – 225,
EDRN132M – 225

Current relay	Nominal motor current I_N in ⅄ connection	Max. holding current of the brake I_{Hmax}
	A	A
SR15E	10 – 30	1
SR19E	30 – 90	1

31555454/EN – 11/2023

BSR..

Half-wave rectifier + current relay for cut-off in the DC circuit

Type	Nominal voltage	Nominal output current I_L	Part number	Color code
BG1.2 + SR10E	AC 90 – 500 V	DC 1.0 A	08269920 08282439	Jet black –
BGE1.5 + SR10E	AC 150 – 500 V	DC 1.0 A	08253854 08282439	Vermilion –
BGE1.5 + SR11E	AC 150 – 500 V	DC 1.0 A	08253854 08282447	Vermilion –
BGE1.5 + SR15E	AC 150 – 500 V	DC 1.0 A	08253854 08282455	Vermilion –
BGE1.5 + SR19E	AC 150 – 500 V	DC 1.0 A	08253854 08283125	Vermilion –
BGE2.4 + SR10E	AC 24 – 90 V	DC 1.0 A	08253862 08282439	Mahogany brown –
BGE3 + SR10E	AC 42 – 150 V	DC 1.0 A	08253870 08282439	Light blue –
BGE3 + SR11E	AC 42 – 150 V	DC 1.0 A	08253870 08282447	Light blue –
BGE3 + SR15E	AC 42 – 150 V	DC 1.0 A	08253870 08282455	Light blue –
BGE3 + SR19E	AC 42 – 150 V	DC 1.0 A	08253870 08283125	Light blue –

31555454/EN – 11/2023

BUR.. brake control

Assignment

The BUR.. brake control combines the BGE.. control unit with an electronic voltage relay. The BGE.. control unit has a separate voltage supply because the voltage at the motor terminal board is not constant (motor operated on frequency inverter).

With a cut-off in the AC circuit, the UR.E voltage relay triggers a cut-off in the DC circuit of the brake coil almost instantaneously and the brake is applied extremely fast.

The brake voltage is defined automatically on the basis of the motor phase voltage without further customer data. Optionally, other brake voltages can be defined in accordance with the following table.

Brake	BUR.. (BGE.. + UR.E) for brake control in AC V											
	79 – 123	124 – 138	139 – 193	194 – 217	218 – 243	244 – 273	274 – 306	307 – 343	344 – 379	380 – 431	432 – 484	485 – 542
BE03												
BE05												
BE1												
BE2												
BE5												
BE11												
BE20												
BE30												
BE32												

UR15E UR11E Not possible

The assignment of UR.E depends on the selected brake voltage.

BUR..

Type	Nominal voltage	Nominal output current I_L	Part number	Color code
BG1.2 + UR15E	AC 90 – 500 V	DC 1.0 A	08269920 08283141	Jet black –
BGE1.5 + UR15E	AC 150 – 500 V	DC 1.0 A	08253854 08283141	Vermilion –
BG2.4 + UR11E	AC 24 – 90 V	DC 1.0 A	08253862 08283133	Mahogany brown –
BGE3 + UR11E	AC 42 – 150 V	DC 1.0 A	08253870 08283133	Light blue –

31555454/EN – 11/2023

9.5.3 Parallel operation of several brakes with one controller

For EDR../EDRN.. motors, parallel voltage supply of two or more brakes via a single brake controller is not permitted due to the stricter requirements of explosion protection. This means a separate brake controller must be used for each brake.

31555454/EN – 11/2023

9.6 Permitted rolling bearings

9.6.1 Rolling bearing types for EDR..71 – 280 motors

Motors	A-side bearing		B-side bearing	
	AC motor	Gearmotor	AC motor	Brakemotor
EDR..71	6204-2Z-C3	6303-2Z-C3	6203-2Z-C3	6203-2RS-C3
EDR..80	6205-2Z-C3	6304-2Z-C3	6304-2Z-C3	6304-2RS-C3
EDR..90 – 100	6306-2Z-C3		6205-2Z-C3	6205-2RS-C3
EDR..112 – 132	6308-2Z-C3		6207-2Z-C3	6207-2RS-C3
EDR..160	6309-2Z-C3		6209-2Z-C3	6209-2RS-C3
EDR..180	6312-2Z-C3		6213-2Z-C3	6213-2RS-C3
EDR..200 – 225	6314-2Z-C3		6314-2Z-C3	6314-2RS-C3
EDR..250 – 280	6317-2Z-C4		6315-2Z-C3	6315-2RS-C3

9.6.2 Rolling bearing types for EDRN63 – 280 motors

Motors	A-side bearing		B-side bearing	
	AC motor	Gearmotor	AC motor	Brakemotor
EDRN63	6202-2Z-C3	6303-2Z-C3	6203-2Z-C3	6203-2Z-C3
EDRN71	6204-2Z-C3	6303-2Z-C3	6203-2Z-C3	6203-2Z-C3
EDRN80	6205-2Z-C3	6304-2Z-C3	6304-2Z-C3	6304-2RS-C3
EDRN90	6305-2Z-C3		6205-2Z-C3	6205-2RS-C3
EDRN100	6306-2Z-C3		6205-2Z-C3	6205-2RS-C3
EDRN112	6308-2Z-C3		6207-2Z-C3	6207-2RS-C3
EDRN132S	6308-2Z-C3	6308-2Z-C3	6207-2Z-C3	6207-2RS-C3
EDRN132M/L	6308-2Z-C3	6309-2Z-C3	6209-2Z-C3	6209-2RS-C3
EDRN160	6310-2Z-C3	6312-2Z-C3	6212-2Z-C3	6212-2RS-C3
EDRN180	6311-2Z-C3	6312-2Z-C3	6212-2Z-C3	6212-2RS-C3
EDRN200	6312-2Z-C3	6314-2Z-C3	6314-2Z-C3	6314-2RS-C3
EDRN225	6314-2Z-C3		6314-2Z-C3	6314-2RS-C3
EDRN250 – 280	6317-2Z-C4		6315-2Z-C3	

31555454/EN – 11/2023

9.6.3 Rolling bearing types for EDR..315, EDRN315 motors

Motors	A-side bearing		B-side bearing	
	AC motor	Gearmotor	AC motor	Gearmotor
EDR..315K, EDRN315S	6319-C3	6319-C3	6319-C3	6319-C3
EDR..315S, EDRN315M/ME				
EDR..315M, EDRN315L	6319-C3	6322-C3	6319-C3	6322-C3
EDR..315L, EDRN315H				

9.6.4 Motors with relubrication /NS for EDR..250 – 315, EDRN225 – 315 motors

Motors	A-side bearing		B-side bearing	
	AC motor	Gearmotor	AC motor	Gearmotor
EDRN225	6314-C3	6314-C3	6314-C3	6314-C3
EDR..250 – 280 EDRN250 – 280	6317-C4	6317-C4	6315-C3	6315-C3
EDR..315K – 315S EDRN315S – 315ME	6319-C3	6319-C3	6319-C3	6319-C3
EDR..315M – 315L EDRN315L – 315H	6319-C3	6322-C3	6319-C3	6322-C3

9.6.5 Motors with reinforced bearings /ERF for EDR..250 – 315, EDRN250 – 315 motors

Motors	A-side bearing	B-side bearing	
		AC motor	Gearmotor
EDR..250 – 280, EDRN250 – 280	NU317E-C3	6315-C3	
EDR..315K, EDRN315S	NU319E	6319-C3	6319-C3
EDR..315S, EDRN315M/ME			
EDR..315M, EDRN315L			6322-C3
EDR..315L, EDRN315H			

31555454/EN – 11/2023

9.6.6 Current-insulated rolling bearings /NIB for EDR..200 – 315, EDRN200 –315 motors

Motors	B-side bearing	
	AC motor	Gearmotor
EDR..200 – 225, EDRN200 – 225	6314-C3-EI	6314-C3-EI
EDR..250 – 280, EDRN250 – 280	6315-Z-C3-EI	6315-Z-C3-EI
EDR..315K, EDRN315S	6319-C3-EI	6319-C3-EI
EDR..315S, EDRN315M/ME		
EDR..315M, EDRN315L		6322-C3-EI
EDR..315L, EDRN315H		

31555454/EN – 11/2023

9.7 Lubricant tables

9.7.1 Lubricant table for rolling bearings

INFORMATION

Use of wrong bearing grease can damage the bearings.

Motors with sealed bearings

The bearings are 2Z or 2RS closed bearings and cannot be re-lubricated. They are used for EDR..71 – 280, EDRN63 – 280 motors.

	Ambient temperature	Manufacturer	Type	DIN designation
Motor rolling bearings	-20 °C to +80 °C	Mobil	Polyrex EM[1)]	K2P-20
	+20 °C to +100 °C	Klüber	Klüberquiet BQ72-72[2)]	KX2U
	-40 °C to +60 °C	Kyodo Yushi	Multemp SRL[2)]	KE2N-40
	-20 °C to +60 °C	SKF	LHT23[2)]	KE2N-40

1) Mineral lubricant (= mineral-based bearing grease)
2) Synthetic lubricant (= synthetic-based bearing grease)

Motors with open bearings

Motors in size EDR..315 and EDRN315 always have open bearings. If EDR..250 – 280 and EDRN225 – 280 motors have the relubrication option /NS, these sizes also have open bearings.

	Ambient temperature	Manufacturer	Type	DIN designation
Rolling bearing	-20 °C to +80 °C	Mobil	Polyrex EM[1)]	K2P-20
	-40 °C to +60 °C	SKF	LGHP 2[1)]	K2N-40

1) Mineral lubricant (= mineral-based bearing grease)

31555454/EN – 11/2023

9.8 Order information for lubricants, anti-corrosion agents and sealants

Lubricants, anti-corrosion agents, and sealants can be obtained directly from SEW-EURODRIVE using the following order numbers.

Usage	Manufacturer	Type	Quantity	Purchase order number
Lubricant for rolling bearings	Mobil	Polyrex EM	400 g	09101470
	SKF	LGHP2	400 g	09101276
Lubricant for sealing rings				
Material: NBR/FKM	Klüber	Petamo GHY 133N	10 g	04963458
	FUCHS LUBRITECH	Gleitmo 100 S	1 kg	03258092
Material: EPDM/EPP	Klüber	Klübersynth BLR 46-122	10 g	03252663
Corrosion protection and lubricant	SEW-EURODRIVE	NOCO® fluid	5.5 g	09107819
Sealant	Marston Domsel	SEW-L-Spezial	80 g	09112286
Backstop lubricant	Mobil	Grease LBZ 1	400 g	03287211

31555454/EN – 11/2023

9.9 Encoders

9.9.1 Incremental encoder E.8.

Encoder		EK8S EV8S 1)	EK8R EV8R 2)	EK8C EV8C
Supply voltage	U_B	DC 7 V – 30 V		DC 4.75 V – 30 V
Supply voltage for functional safety applications	U_{B_FS}	DC 7 V – 30 V	–	
Maximum current consumption, free of load	I_{in}	100 mA (at U_B = 7 V)		
Max. pulse frequency	f_{pulse_max}	150 kHz	120 kHz	
Direction of rotation		A (cosine) before B (sine) when looking at the motor output shaft in clockwise rotation B (sine) before A (cosine) when looking at the fan guard and clockwise direction of rotation.		
Incremental tracks, periods per revolution	A, B	1024 (10 bits)		
	C	1		
Position resolution, increments per revolution	A, B	4096 (12 bits)		
Voltage output signal differential (peak-to-peak) (A' = A - $\overline{A}$; B' = B - $\overline{B}$)	U_{t_diff}	1 V ± 10%	–	
Voltage output signal non-differential (peak-to-peak)	U_t	0.5 V ± 10%	U_{Low} ≤ 0.5 V U_{High} ≥ 2.5 V	U_B ≤ 6 V: U_{Low} ≤ 0.5 V U_{High} ≥ 2.5 V U_B > 6 V: U_{Low} ≤ 3 V U_{High} ≥ U_B - 2.5 V
Signal level output, offset nominal against 0 V (A, B, C, $\overline{A}$, $\overline{B}$, $\overline{C}$)V	U_{t_o}	2.5 V ± 0.3 V	–	
Signal output		sin/cos	TTL (RS422)	HTL
Total harmonic distortion (THD)		40 dB (1%), 60 dB (0.1%) from 7th harmonic		–
Load resistance/load current differential	R_L/I_L	120 Ω ± 10%		U_B 6 V: 120 Ω ± 10% UB > 6 V: 1 – 3 kΩ
Resistance between tracks and reference ground	R_{gnd}	≥ 1 kΩ	–	
Load capacitance, output	C_o	≤ 20 nF	–	–
Voltage output signal, differential (C' = C - $\overline{C}$) (peak-to-peak)	U_{t_diff} e	0.3 – 1.4 V	–	–
C track offset	g	192 mV ± 5 mV	–	–
Voltage output signal, non-differential (C,$\overline{C}$) (peak-to-peak)	U_{t_C}	–	U_{Low} ≤ 0.5 V U_{High} ≥ 2.5 V	U_B ≤ 6 V: U_{Low} ≤ 0.5 V U_{High} ≥ 2.5 V U_B > 6 V: U_{Low} ≤ 3 V U_{High} ≥ U_B - 2.5 V
Phase angle track C', n = constant	k, l	k = 180° ± 90° l = 180° ± 90°	–	–
Signal width track C	W_C	see figure	90° electrical	
Signal logic track C		see figure	C = log 1, when A = B = log 1	
Pulse duty factor according to IEC 60469-1, n = constant		–	50% ± 10%	
Phase offset A: B; $\overline{A}$: $\overline{B}$ n = constant	d	90° ± 2°	90° ± 20°	
Accuracy of the incremental section[3)]		0.0194° (70 ")	0,033° (120 ")	

31555454/EN – 11/2023

Encoder		EK8S EV8S 1)	EK8R EV8R 2)	EK8C EV8C
Vibration resistance according to EN 60068-2-6		≤ 10 g (f > 18.5 Hz)		
Shock resistance according to EN 60068-2-27		≤ 100 g (t = 6 ms, 18 pulses)		
Maximum speed	n_{max}	6000 min^{-1}		
Maximum line length		100 m	300 m	100 m
Duration until fault message (disabled outputs)[4]		≤ 25 ms	–	
Activation time of rotary encoder internal diagnostics after switching on		≤ 200 ms	–	
Degree of protection in accordance with EN 60529		IP66		
Installation altitude	h	≤ 4000 m above sea level		
		In explosion-protected areas: Permitted external pressure 0.8 – 1.1 bar (at typical hight ≤ 1800 m above sea level)		
Explosion protection mark ATEX/IECEx		ATEX equipment category 3 (3G, 3D, 3GD) IECEx EPL .c (3G-c, 3D-c, 3GD-c)		
IECEx certificate of conformity		IECEx IBE 18.0032X		
Corrosion protection, surface protection		KS, OS1 – OS4, OSG		
Connection		Integrated encoder plug connector on the fan guard (can be pre-assembled and plugged in the field)		
Ambient temperature of motor	T_{amb}	-30 to +60 °C		
Electronic nameplate		RS485 (serial, asynchronous); 1920 bytes	–	–
Maximum degree of pollution during installation work		Degree of pollution 1 (IEC 61010-1, EN 60664-1, VDE 0110-1)		

1) see figure "Sin/cos signals and phase relationship"
2) see figure "HTL/TTL signals and phase relationship"
3) Due to the stiffness of the torque bracket, you have to take into account an automatically resetting ±0.6° twist (depending on the direction of rotation) of the encoder housing compared to the encoder shaft.
4) Sin/cos encoders have a self-diagnostics function. If an error is detected, the sensor reports it by deactivating the output signals to the encoder evaluation unit.

31555454/EN – 11/2023

Sin/cos signals and phase relationship

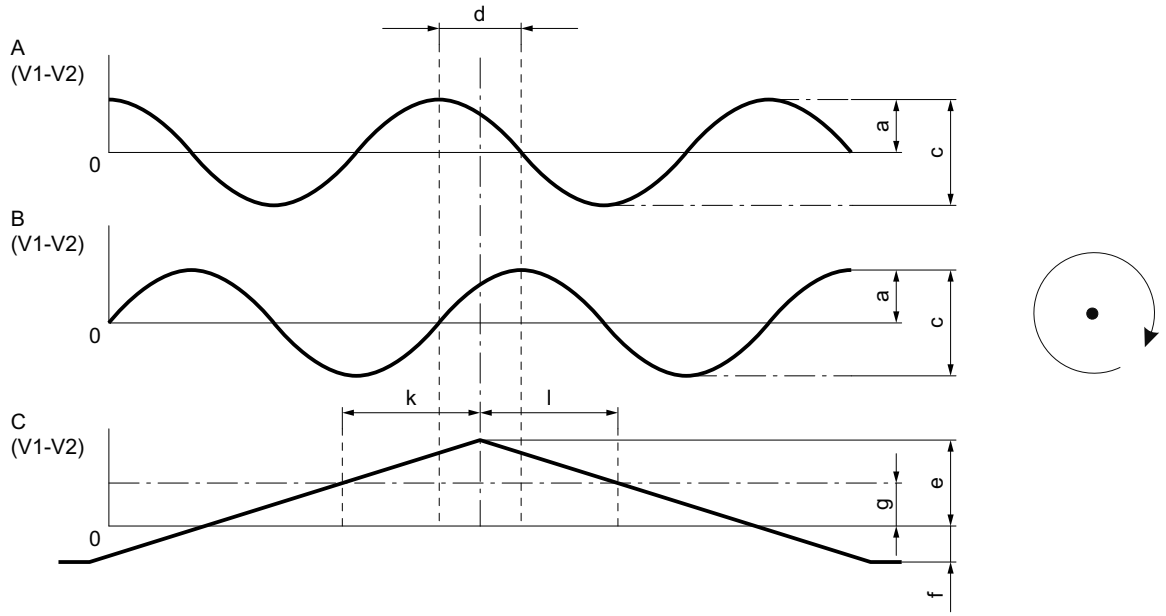

28352869387

HTL/TTL signals and phase relationship

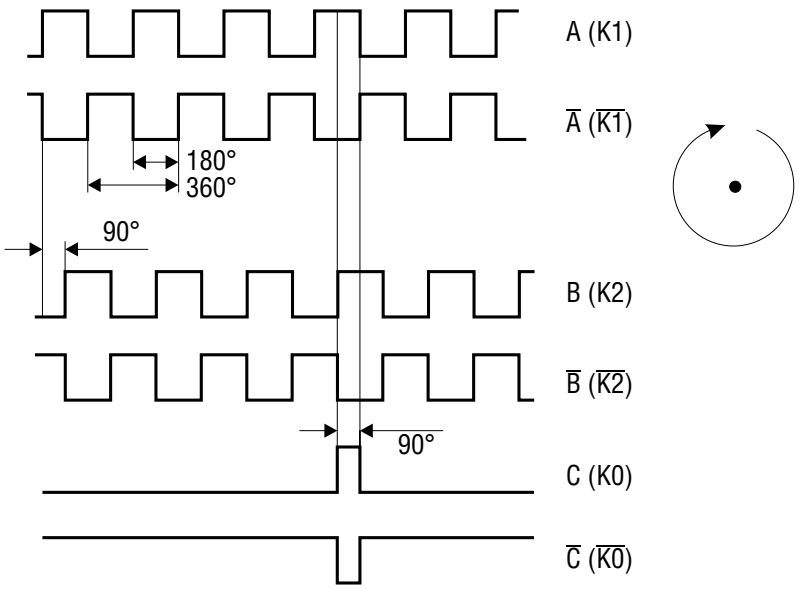

1369276939

9.9.2 ES7., AS7., EG7., AG7. encoders

This table shows the general technical data for the encoders:

Designation	Value
Operating temperature of the motor	-30 °C to +60 °C[1)]
Storage temperature	-15 °C to +70 °C
Maximum angular acceleration	10^4 rad/s^2

1) Observe the restrictions of the motors, e.g. at operating temperatures of >40 °C or at maximum speed.

31555454/EN – 11/2023

9.9.3 Incremental encoder E.7S – sin/cos

Encoder		ES7S	EV7S	EG7S	EH7S
Supply voltage	U_B	DC 7 V – 30 V			
Max. current consumption	I_{in}	140 mA_{RMS}			
Max. pulse frequency	f_{max}	150 kHz			180 kHz
Incremental tracks, periods per revolution	A, B	1024 (10 bits)			
	C	1			
Position resolution, increments per revolution	A, B				
Output amplitude per track	U_{high}	1 V_{PP}			
	U_{low}				
Signal output		sin/cos			
Output current per track	I_{out}	10 mA_{RMS}			
Pulse duty factor according to IEC 60469-1, n = constant		–			
Phase offset A: B n = constant		90° ± 3°			90° ± 10°
Accuracy[1)]		0.0194°	–	0.0194°	–
Vibration resistance according to EN 60088-2-6		≤ 100 m/s^2			
Shock resistance according to EN 60088-2-27		≤ 1000 m/s^2		≤ 2000 m/s^2	
Maximum speed	n_{max}	6000 min^{-1}			
Duration until fault message (disabled outputs)[2)]		25 ms	–	25 ms	–
Activation time of rotary encoder internal diagnostics after switching on		–			
Degree of protection in accordance with EN 60529		IP66			IP65
Connection		Terminal box on incremental encoder			12-pin plug connector
Ambient temperature	°C	-30 to +60	-30 to +80	-30 to +60	-40 to +60
Maximum degree of pollution during installation work		Degree of pollution 2 (IEC 61010-1, EN 60664-1, VDE 0110-1)			

1) Due to the stiffness of the torque bracket, you have to take into account an automatically resetting ±0.6° twist (depending of the direction of rotation) of the encoder housing compared to the encoder shaft.
2) Sin/cos encoders have a self-diagnostics function. If an error is detected, the sensor reports it by deactivating the output signals to the encoder evaluation unit.

9.9.4 Incremental encoder E.7R – TTL (RS422), 9 V ≤ U_B ≤ 30 V

Encoder		ES7R	EV7R	EG7R	EH7R
Supply voltage	U_B	DC 7 V – 30 V			DC 10 V – 30 V
Max. current consumption	I_{in}	160 mA_{RMS}			140 mA_{RMS}
Max. pulse frequency	f_{max}	120 kHz			300 kHz
Incremental tracks, periods per revolution	A, B	1024 (10 bits)			
	C	1			
Position resolution, increments per revolution	A, B	4096 (12 bits)			
Output amplitude per track	U_{high}	≥ DC 2.5 V			
	U_{low}	≤ DC 0.5 V			
Signal output		TTL (RS422)			
Output current per track	I_{out}	25 mA_{RMS}			20 mA_{RMS}
Pulse duty factor according to IEC 60469-1, n = constant		50% ± 10 %			
Phase offset A: B n = constant		90° ± 20°			
Vibration resistance according to EN 60088-2-6		≤ 100 m/s^2			

Encoder		ES7R	EV7R	EG7R	EH7R
Shock resistance according to EN 60088-2-27		≤ 1000 m/s²		≤ 2000 m/s²	
Maximum speed	n_{max}	6000 min⁻¹			6000 min⁻¹ 2500 min⁻¹ at 60 °C
Degree of protection in accordance with EN 60529		IP66			IP65
Connection		Terminal box on incremental encoder			12-pin plug connector
Ambient temperature	°C	-30 to +60	-30 to +60		-40 to +60
Maximum degree of pollution during installation work		Degree of pollution 2 (IEC 61010-1, EN 60664-1, VDE 0110-1)			

9.9.5 Incremental encoder E.7C – HTL

Encoder		ES7C	EV7C	EG7C	EH7C
Supply voltage	U_B	DC 4.75 V – 30 V			DC 10 V – 30 V
Max. current consumption	I_{in}	240 mA_{RMS}			225 mA_{RMS}
Max. pulse frequency	f_{max}	120 kHz			300 kHz
Incremental tracks, periods per revolution	A, B	1024 (10 bits)			
	C	1			
Position resolution, increments per revolution	A, B	4096 (12 bits)			
Output amplitude per track	U_{high}	V_B -2.5 V		V_B -2.5 V	V_B -2 V
	U_{low}	≤ DC 1.1 V			≤ DC 2.5 V
Signal output		HTL/TTL (RS422)		HTL/TTL (RS422)	HTL
Output current per track	I_{out}	60 mA_{RMS}			30 mA_{RMS}
Pulse duty factor according to IEC 60469-1, n = constant		50% ± 10%			50% ± 20%
Phase offset A: B n = constant		90° ± 20°			
Vibration resistance according to EN 60088-2-6		≤ 100 m/s²			
Shock resistance according to EN 60088-2-27		≤ 1000 m/s²		≤ 2000 m/s²	
Maximum speed	n_{max}	6000 min⁻¹			6000 min⁻¹ 2500 min⁻¹ at 60 °C
Degree of protection in accordance with EN 60529		IP66			IP65
Connection		Terminal box on incremental encoder			12-pin plug connector
Ambient temperature	°C	-30 to +60		-30 to +60	-40 to +60
Maximum degree of pollution during installation work		Degree of pollution 2 (IEC 61010-1, EN 60664-1, VDE 0110-1)			

9.9.6 Incremental encoder E.7T – TTL (RS422) at U_B = 5 V

Encoder		EH7T
Supply voltage	U_B	DC 5 V
Max. current consumption	I_{in}	140 mA
Max. pulse frequency f_{max}	kHz	300
Incremental tracks, periods per revolution	A, B	1024 (10 bits)
	C	1
Position resolution, increments per revolution	A, B	4096 (12 bits)
Output amplitude	U_{high}	≥ DC 2.5 V
	U_{low}	≤ DC 0.5 V
Signal output		TTL (RS422)
Output current per track	I_{out}	20 mA
Pulse duty factor according to IEC 60469-1, n = constant		50% ± 20%

Encoder		EH7T
Phase offset A: B n = constant		90° ± 20°
Vibration resistance according to EN 60088-2-6 at 10 Hz – 2 kHz		≤ 100 m/s^2
Shock resistance according to EN 60088-2-27		≤ 2000 m/s^2
Maximum speed	n_{max}	6000 min^{-1} 2500 min^{-1} at 60 °C
Degree of protection according to EN 60529		IP65
Connection		12-pin plug connector
Ambient temperature	°C	-40 to +60
Maximum degree of pollution during installation work		Degree of pollution 2 (IEC 61010-1, EN 60664-1, VDE 0110-1)

9.9.7 Multi-turn absolute encoder A.8.

Encoder		AK8Y AV8Y 1)	AK8W AV8W 1)	AK8H AV8H 1)2)
Supply voltage	U_B	DC 7 V – 30 V		DC 7 V – 12 V
Supply voltage for FS applications	U_{B_FS}	DC 7 V – 30 V		–
Max. current consumption, free of load	I_{in}	100 mA (at U_B = 7 V)		80 mA
Max. pulse frequency	f_{pulse_max}	200 kHz		
Direction of rotation		A (cosine) before B (sine) when looking at the motor output shaft in clockwise rotation B (sine) before A (cos) when looking at the fan guard and clockwise direction of rotation.		
Incremental tracks, periods per revolution	A, B	2048 (11 bits)		1024 (10 bits)
	C	–		
Position resolution, increments per revolution	A, B	4096 (12 bits) (SSI, RS422)	65536 (16 bits) (RS485)	32768 (15 bits) HIPERFACE®
Voltage output signal differential (peak-to-peak) (A' = A - $\overline{A}$; B' = B - $\overline{B}$	U_{t_diff}	1 V ± 10%		HIPERFACE®
Voltage output signal non-differential (peak-to-peak)	U_t	0.5 V ± 10%		
Signal level output, offset nominal against 0 V (A, B, C, $\overline{A}$, $\overline{B}$, $\overline{C}$)V	U_{t_o}	2.5 V ± 0.3 V		
Signal output		sin/cos + SSI, RS422	sin/cos + RS485	
Total harmonic distortion (THD)		40 dB (1%), 60 dB (0.1%) from 7th harmonic		
Load resistance/load current differential	R_L/I_L	120 Ω ± 10 %		
Resistance between track and reference ground	R_{gnd}	≥ 1 kΩ		
Load capacitance, output		≤ 20 nF		
Voltage output signal, differential (C' = C - $\overline{C}$) (peak-to-peak)	U_{t_diff} e	–	–	
C track offset	g	–	–	
Voltage output signal, non-differential (C,$\overline{C}$) (peak-to-peak)	U_{t_C}	–	–	
Phase angle track C', n = constant	k, l	–	–	
Signal width track C	W_C	–	–	–
Signal logic track C		–	–	–

Encoder		AK8Y AV8Y 1)	AK8W AV8W 1)	AK8H AV8H 1)2)
Pulse duty factor according to IEC 60469-1, n = constant		–		–
Phase offset A: B; $\overline{A}$: $\overline{B}$ n = constant		90° ± 2°		HIPERFACE®
Accuracy of the incremental section[3)]		0.0194° (70 ")		± 0.0144° (± 52 ")
Accuracy of the absolute section		±1 LSB (Least Significant Bit)		
Scanning code/counting direction		Gray code, ascending with the direction of rotation specified above	Binary code, ascending with the direction of rotation specified above	–
Multi-turn resolution		4096 revolutions (12 bits)	65536 revolutions (16 bits)	4096 revolutions (12 bits)
Communication, interface		SSI (synchronous, serial)	RS485 (asynchronous, serial)	HIPERFACE®
Communication, modules		Driver to EIA RS422	Driver to EIA RS485	
Clock frequency/bandwidth		100 – 800 kHz (100 m cable length with maximum 300 kHz)	9600 baud	HIPERFACE®
Clock-pulse space period		12 – 30 µs	–	
Vibration resistance according to EN 60068-2-6		≤ 10 g (f > 18.5 Hz)		
Shock resistance according to EN 60068-2-27		≤ 100 g (t = 6 ms, 18 pulses)		
Maximum speed	n_{max}	6000 min^{-1}		
Maximum line length		100 m		
Duration until fault message (disabled outputs)[4)]		≤ 25 ms + 3/4 revolution		HIPERFACE®
Activation time of rotary encoder internal diagnostics after switching on		200 ms		HIPERFACE®
Degree of protection in accordance with EN 60529		IP66		
Installation altitude	h	≤ 4000 m above sea level		≤ 2000 m above sea level
		In explosion-protected areas: Permitted external pressure 0.8 – 1.1 bar (at typical hight ≤ 1800 m above sea level)		
Explosion protection mark ATEX/IECEx		ATEX equipment category 3 (3G, 3D, 3GD) IECEx EPL .c (3G-c, 3D-c, 3GD-c)		–
IECEx certificate of conformity		IECEx IBE 18.0032X		–
Corrosion protection, surface protection		KS, OS1 – OS4, OSG		
Connection		Integrated encoder plug connector on the fan guard (can be pre-assembled and plugged in the field)		
Ambient temperature of motor	T_{amb}	-30 to +60 °C		
Electronic nameplate		–	RS485 (serial, asynchronous); 1920 bytes	HIPERFACE®; 1792 bytes
Maximum degree of pollution during installation work		Degree of pollution 1 (IEC 61010-1, EN 60664-1, VDE 0110-1)		
Other technical data		On request		

1) See figure "Sin/cos signals and phase relationship".
2) Observe the specification for the HIPERFACE® interface, Sick AG.
3) Due to the stiffness of the torque bracket, you have to take into account an automatically resetting ±0.6° twist (depending of the direction of rotation) of the encoder housing compared to the encoder shaft.
4) Absolute encoders A.8. and AG7Y have a self-diagnostics function. If an error is detected, the sensor reports it by deactivating the output signals to the encoder evaluation unit.

Sin/cos signals and phase relationship

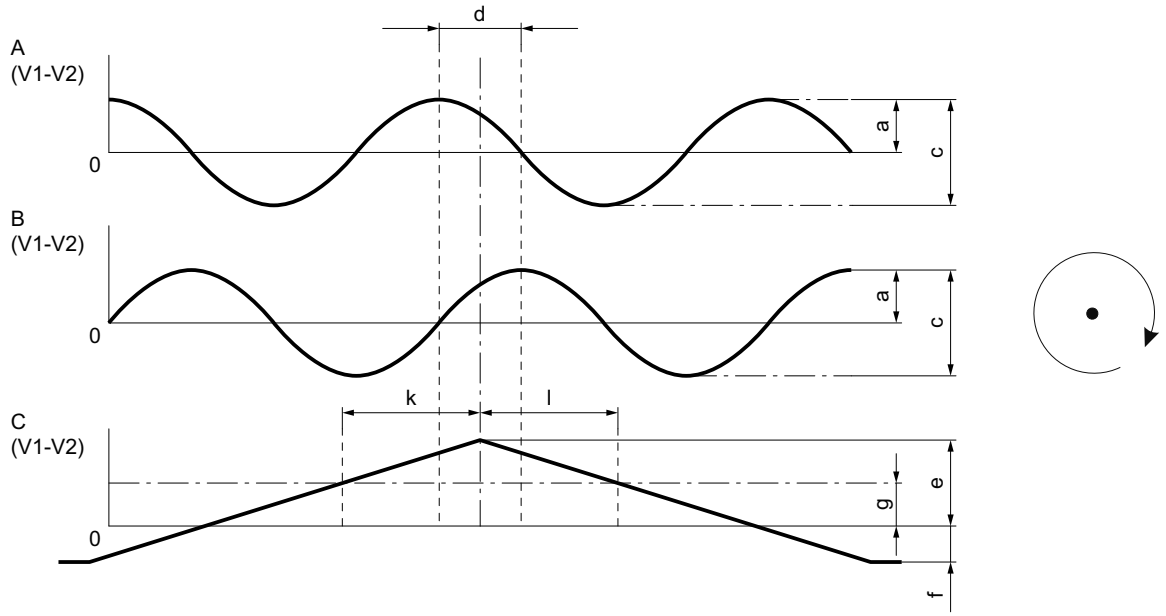

28352869387

HTL/TTL signals and phase relationship

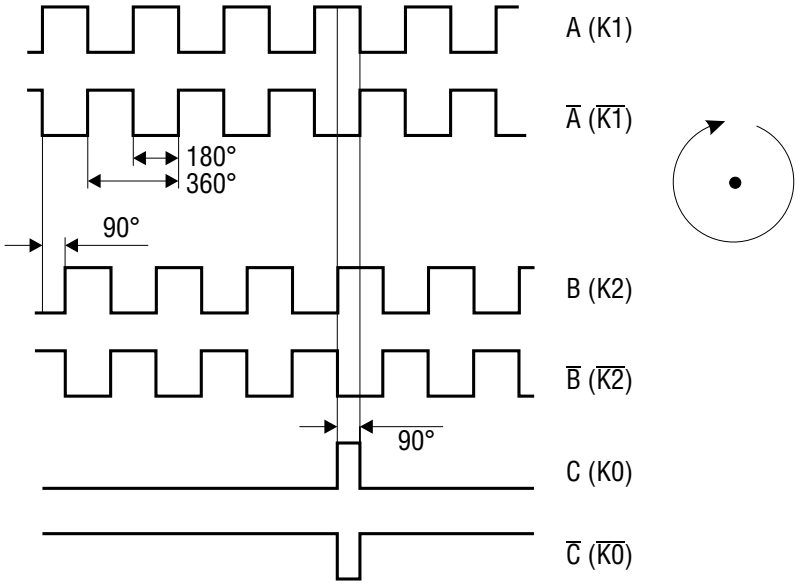

1369276939

9.9.8 Multi-turn absolute encoder A.7Y – SSI (multi-turn) + sin/cos or TTL (RS422)

Encoder		AS7Y	AV7Y	AG7Y	AH7Y
Supply voltage	U_B	DC 7 V – 30 V			DC 9 V – 30 V
Max. current consumption	I_{in}	140 mA			150 mA
Max. pulse frequency	f_{limit}	200 kHz			120 kHz
Incremental tracks, periods per revolution	A, B	2048 (11 bits)			
	C	–			–
Output amplitude per track	U_{high}	1 V_{PP}			≥ DC 2.5 V_{PP}
	U_{low}				≤ DC 0.5 V_{PP}
Signal output		sin/cos			TTL (RS422)
Output current per track	I_{out}	10 mA			20 mA

Encoder		AS7Y	AV7Y	AG7Y	AH7Y
Pulse duty factor according to IEC 60469-1, n = constant		–			50 ± 20%
Phase offset A: B n = constant		90° ± 3°			90° ± 20°
Accuracy of the incremental section[1)]		0.0194°			–
Accuracy of the absolute section		±1 LSB (Least Significant Bit)			–
Scanning code		Gray code			
Position resolution, increments per revolution	A, B	8192 (13 bits)			
Position resolution of the absolute section, increments per revolution		4096 (12 bits)			
Multi-turn resolution		4096 revolutions (12 bits)			
Data transmission		Synchronous, serial (SSI)			
Serial data output		Driver to EIA RS422			Driver to EIA RS485
Serial pulse input		Recommended receiver to EIA RS422			Optocoupler, recommended driver to EIA RS485
Clock frequency		Permitted range: 100 – 2000 kHz (max. 100 m cable length with 300 kHz)			
Clock-pulse space period		12 – 30 µs			
Vibration resistance according to EN 60088-2-6		≤ 100 m/s^2			
Shock resistance according to EN 60088-2-27		≤ 1000 m/s^2			≤ 2000 m/s^2
Maximum speed	n_{max}	6000 min^{-1}		6000 min^{-1} at T_U to 40 °C 4500 min^{-1} at T_U > 40 °C	3500 min^{-1}
Duration until fault message (disabled outputs)[2)]		25 ms + 3/4 revolution			–
Activation time of rotary encoder internal diagnostics after switching on		–			
Degree of protection in accordance with EN 60529		IP66			IP56
Connection		Terminal strip in pluggable connection cover			Terminal strip on encoder
Ambient temperature	°C	-30 to +60			-20 to +40
Maximum degree of pollution during installation work		Degree of pollution 2 (IEC 61010-1, EN 60664-1, VDE 0110-1)			

1) Due to the stiffness of the torque arm, you have to take into account an automatically resetting ±0.6° twist (depending on the direction of rotation) of the encoder housing compared to the encoder shaft.
2) Absolute encoders AS7Y, AV7Y, and AG7Y have a self-diagnostics function. If an error is detected, the sensor reports it by deactivating the output signals to the encoder evaluation unit.

9.9.9 Multi-turn absolute encoder A.7W – RS485 (multi-turn) + sin/cos

Encoder		AS7W	AV7W	AG7W
Supply voltage	U_B	DC 7 V – 30 V		
Max. current consumption	I_{in}	150 mA		
Max. pulse frequency	f_{max}	200 kHz		
Incremental tracks, periods per revolution	A, B	2048 (11 bits)		
	C	–		
Output amplitude per track	U_{high} U_{low}	1 V_{PP}		
Signal output		sin/cos		
Output current per track	I_{out}	10 mA		

Encoder		AS7W	AV7W	AG7W
Pulse duty factor according to IEC 60469-1, n = constant		–		
Phase offset A: B n = constant		90° ± 3°		
Accuracy of the incremental section[1)]		0.0194°		
Accuracy of the absolute section		±1 LSB (Least Significant Bit)		
Scanning code		Binary code		
Position resolution, increments per revolution	A, B	8192 (13 bits)		
Multi-turn resolution		65536 revolutions (16 bits)		
Data transmission		RS485		
Serial data output		Driver to EIA RS485		
Serial pulse input		Recommended driver to EIA RS485		
Clock frequency		9600 baud		
Clock-pulse space period		–		
Vibration resistance according to EN 60088-2-6		≤ 100 m/s^2		
Shock resistance according to EN 60088-2-27		≤ 1000 m/s^2		≤ 2000 m/s^2
Maximum speed	n_{max}	6000 min^{-1}	6000 min^{-1} at T_U to 40 °C 4500 min^{-1} at T_U > 40 °C	6000 min^{-1}
Duration until fault message (disabled outputs)[2)]		25 ms + 3/4 revolution		
Activation time of rotary encoder internal diagnostics after switching on		–		
Degree of protection in accordance with EN 60529		IP66		
Connection		Terminal strip in pluggable connection cover		
Ambient temperature	°C	-30 to +60		
Maximum degree of pollution during installation work		Degree of pollution 2 (IEC 61010-1, EN 60664-1, VDE 0110-1)		

1) Due to the stiffness of the torque arm, you have to take into account an automatically resetting ±0.6° twist (depending of the direction of rotation) of the encoder housing compared to the encoder shaft.
2) Absolute encoders AS7W, AV7W, and AG7W have a self-diagnostics function. If an error is detected, the sensor reports it by deactivating the output signals to the encoder evaluation unit.

9.9.10 Mounting adapters for rotary encoders with solid shaft

XV.A

Encoder mounting adapter with SI units

Mounting adapter		XV0A	XV1A	XV2A	XV3A	XV4A	XV5A
For motors		EDR..71 – 225, EDRN71 – 315					
Mounting type of encoder		Flange centered with coupling					
Design	Encoder shaft	Any	6 mm	10 mm	12 mm	11 mm	12 mm
	Centering	Any	50 mm	50 mm	80 mm	85 mm	45 mm
Suitable for encoder		Provided by the customer or by SEW-EURODRIVE on behalf of the customer.					

31555454/EN – 11/2023

10 Malfunctions

10.1 General information

⚠ WARNING

Risk of injury if the drive starts up unintentionally.

Severe or fatal injuries.

- Before you start working on the unit, disconnect the motor and all connected options from the power supply.
- Secure the motor against unintended power-up.

⚠ CAUTION

The surfaces on the drive can be very hot during operation.

Risk of burns.

- Let the motor cool down sufficiently before you start working on it.

NOTICE

Improper troubleshooting measures may damage the drive.

The drive system might be damaged.

- Use only genuine spare parts in accordance with the valid parts list.

10.2 Motor malfunctions

Fault	Possible cause	Measure
Motor does not start up	Supply cable interrupted	Check the connections and (intermediate) terminal points, correct if necessary
	Brake does not release	See "Brake malfunctions"
	Supply cable fuse has blown	Replace fuse
	Motor protection (switch) has triggered	Check that the motor protection (switch) is set correctly; current specification is on the nameplate
	Motor protection does not trip	Check motor protection control
	Malfunction in control or in the control process	Observe the switching sequence; correct if necessary

31555454/EN – 11/2023

Fault	Possible cause	Measure
Motor only starts with difficulty or does not start at all	Motor power designed for delta connection but connected in star	Correct the connection from star to delta; follow the wiring diagram
	Motor power designed for star-star connection but only connected in star	Correct the connection from star to star-star; follow the wiring diagram
	Voltage or frequency differs considerably from the setpoint, at least when switching on the motor	Provide better power supply system; reduce the power supply load; Check cross section of supply cable, replace with cable of larger cross section if necessary
Motor does not start in star connection, only in delta connection	Star connection does not provide sufficient torque	If the delta inrush current is not too high (observe the regulations of the power supplier), start up directly in delta; Check the project planning and use a larger motor or special design if necessary. Contact SEW-EURODRIVE.
	Contact fault on star/delta switch	Check the switch, replace if necessary; Check the connections
Incorrect direction of rotation	Motor connected incorrectly	Swap two phases of the motor supply cable
Motor hums and has high current consumption	Brake does not release	See "Brake malfunctions"
	Winding defective	Send motor to specialist workshop for repair
	Rotor rubbing	Send motor to specialist workshop for repair
Fuses blow or motor protection trips immediately	Short circuit in the motor supply cable	Eliminate short circuit
	Supply cables connected incorrectly	Correct the wiring, observe the wiring diagram
	Short circuit in the motor	Send motor to specialist workshop for repair
	Ground fault on motor	Send motor to specialist workshop for repair
Severe speed loss under load	Motor overload	Measure power, check project planning and use larger motor or reduce load if necessary
	Voltage drops	Check cross section of supply cable, replace with cable of larger cross section if necessary

31555454/EN – 11/2023

Fault	Possible cause	Measure
Motor heats up excessively (measure temperature)	Overload	Measure power, check project planning and use larger motor or reduce load if necessary
	Insufficient cooling	Provide for cooling air supply or clear cooling air passages, retrofit forced cooling fan if necessary. Check the air filter, clean or replace if necessary
	Ambient temperature too high	Observe the permitted temperature range, reduce the load if necessary
	Motor in delta connection instead of star connection as intended	Correct the wiring, observe the wiring diagram
	Loose contact in supply cable (one phase missing)	Tighten loose contact, check connections, observe wiring diagram
	Fuse blown	Look for and rectify cause; replace fuse
	Line voltage deviates from the rated motor voltage by more than 5% (range A) / 10% (range B).	Adjust motor to line voltage
	Nominal duty cycle (S1 to S10, DIN 57530) exceeded, e.g. caused by excessive starting frequency	Adjust the nominal duty cycle of the motor to the required operating conditions; consult a professional to determine the proper drive, if necessary
Excessively loud	Ball bearing compressed, dirty or damaged	Re-align motor and the driven machine, inspect rolling bearing and replace if necessary.
	Vibration of rotating parts	Look for the case, possibly an imbalance; correct the cause, observe method for balancing
	Foreign bodies in cooling air ducts	Clean cooling air ducts

31555454/EN – 11/2023

10.3 Brake malfunctions

Fault	Possible cause	Measure
Brake does not release	Incorrect voltage on brake control unit	Apply the correct voltage; brake voltage specified on the nameplate
	Brake control unit failed	Install a new brake control, check resistance and insulation of the brake coils (see "Resistance" chapter for resistance values) Check switchgear, replace if necessary
	Max. permitted working air gap exceeded because brake lining worn down	Measure and set working air gap. If the brake disk is too thin, replace the brake disk.
	Voltage drop along supply cable > 10%	Provide correct connection voltage: brake voltage specifications on the nameplate. Check the cable cross section of the brake cable; increase cross section if necessary
	Inadequate cooling, brake overheats	Provide for cooling air supply or clear cooling air passages, check air filter, clean or replace if necessary.
	Brake coil has interturn fault or short circuit to frame	Check resistance and insulation of the brake coils (see "Resistance" chapter for resistance values); Replace complete brake and brake control (specialist workshop), Check switchgear, replace if necessary
	Rectifier defective	Replace rectifier and brake coil; it may be more economical to replace the complete brake
Brake does not brake	Working air gap not correct	Measure and set working air gap. If the brake disk is too thin, replace the brake disk.
	Brake lining worn down	Replace entire brake disk.
	Incorrect braking torque	Check the project planning and change the braking torque if needed; see chapter "Technical Data" > "Work done, working air gap, braking torques" • by changing the type and number of brake springs. • by selecting a different brake
	Working air gap so large that setting nuts for the manual brake release come into contact	Set the working air gap.
	Manual brake release device not set correctly	Set the adjusting nuts for the manual brake release correctly
	Brake locked by manual brake release HF	Loosen the set screw, remove if needed.
Brake is applied with time lag	Brake is switched only on AC voltage side	Switch both, the DC and AC voltage sides; observe wiring diagram

31555454/EN – 11/2023

Fault	Possible cause	Measure
Noise in vicinity of brake	Gearing wear on the brake disk or the driver caused by jerky startup	Check the project planning, replace the brake disk if necessary Have a specialist workshop replace the driver
	Alternating torques due to incorrectly set frequency inverter	Check correct setting of frequency inverter according to its operating instructions, correct if necessary.

10.4 Malfunctions when operated with a frequency inverter

The symptoms described in chapter "Motor malfunctions" (→ 🗎 251) can also occur when the motor is operated with a frequency inverter. Refer to the frequency inverter operating instructions for the meaning of the problems that occur and to find information about rectifying the problems.

10.5 Customer service

Have the following information available if you require customer service assistance:

- Nameplate data (complete)
- Nature and extent of the problem
- Time the failure occurred and any accompanying circumstances
- Assumed cause
- Ambient conditions e.g.:
  - Ambient temperature
  - Humidity
  - Installation altitude
  - Dirt
  - etc.

10.6 Waste disposal

Dispose of the product and all parts separately in accordance with their material structure and the national regulations. Put the product through a recycling process or contact a specialist waste disposal company. If possible, divide the product into the following categories:

- Iron, steel or cast iron
- Stainless steel
- Aluminum
- Copper
- Plastics

31555454/EN – 11/2023

The following materials are hazardous to health and the environment. These materials must be collected and disposed of separately:

- Oil and grease

  Collect used oil and grease separately according to type. Ensure that the used oil is not mixed with solvent. Dispose of used oil and grease correctly.

31555454/EN – 11/2023

11 Appendix

11.1 Wiring diagrams

INFORMATION

The motor should be connected as shown in the connection wiring diagram or the terminal assignment diagram, which are supplied with the motor. The following section only shows a selection of the common types of connections. You can obtain the relevant wiring diagrams free of charge from SEW-EURODRIVE.

11.1.1 Wiring diagram R13 (68001 xx 06)

Delta connection

The following illustration shows the △ connection for lower voltage.

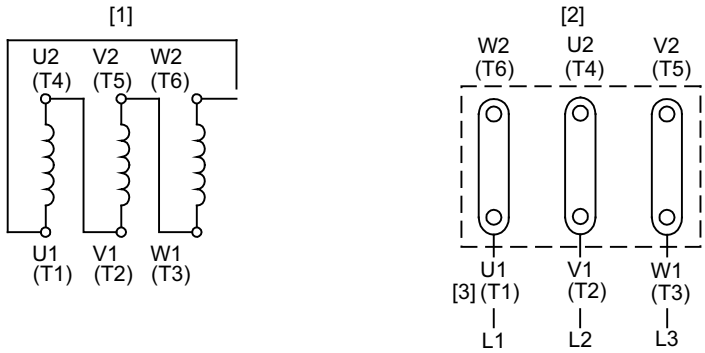

9007199497344139

[1] Motor winding
[2] Motor terminal board
[3] Supply cables

Star connection

The following illustration shows the ⅄ connection for high voltage.

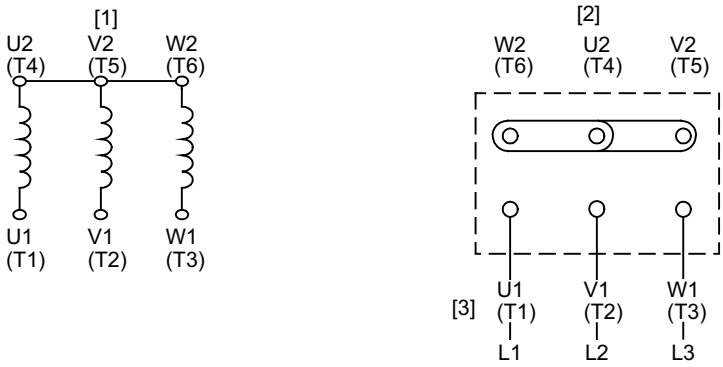

9007199497339147

[1] Motor winding
[2] Motor terminal board
[3] Supply cables

Proceed as follows to reverse the direction of rotation:

1. Swap the supply cables L1 – L2.

31555454/EN – 11/2023

11.1.2 Wiring diagram C13 (68184 xx 08)

Delta connection

The following illustration shows the △ connection for lower voltage.

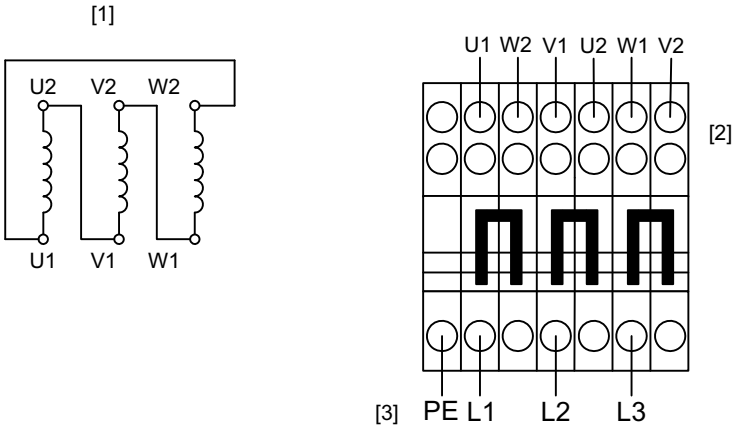

2931852427

[1] Motor winding
[2] Motor terminal board
[3] Supply cables

Star connection

The following illustration shows the ⅄ connection for high voltage.

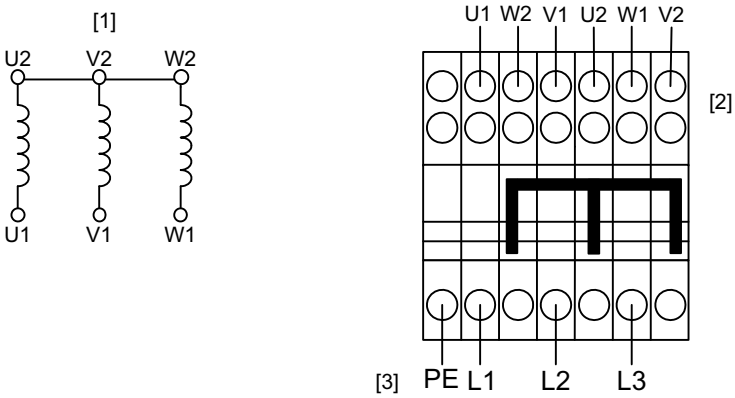

2931850507

[1] Motor winding
[2] Motor terminal board
[3] Supply cables

Proceed as follows to reverse the direction of rotation:

1. Swap the supply cables L1 – L2.

11.1.3 Wiring diagram A13 (68404 xx 17)

Delta connection

The following illustration shows the △ connection for lower voltage.

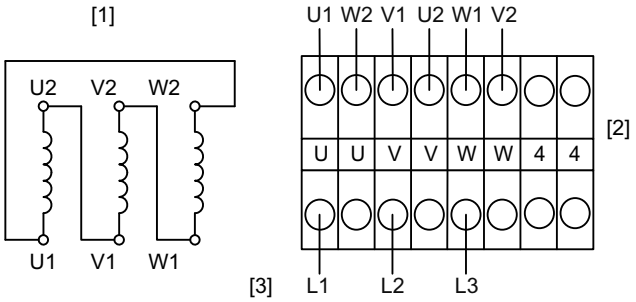

28296026891

[1] Motor winding
[2] Motor terminal board
[3] Supply cables

Star connection

The following illustration shows the ⅄ connection for high voltage.

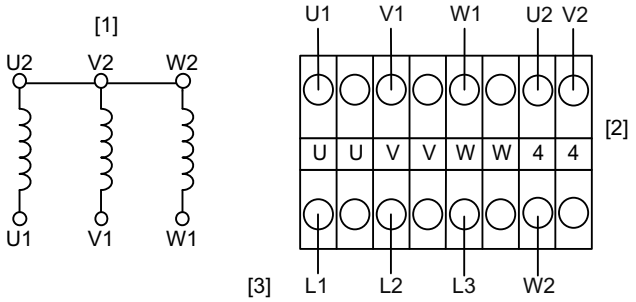

28295960843

[1] Motor winding
[2] Motor terminal board
[3] Supply cables

Proceed as follows to reverse the direction of rotation:

1. Swap the supply cables L1 – L2.

11.1.4 Brake control systems

BG1.2, BG2.4

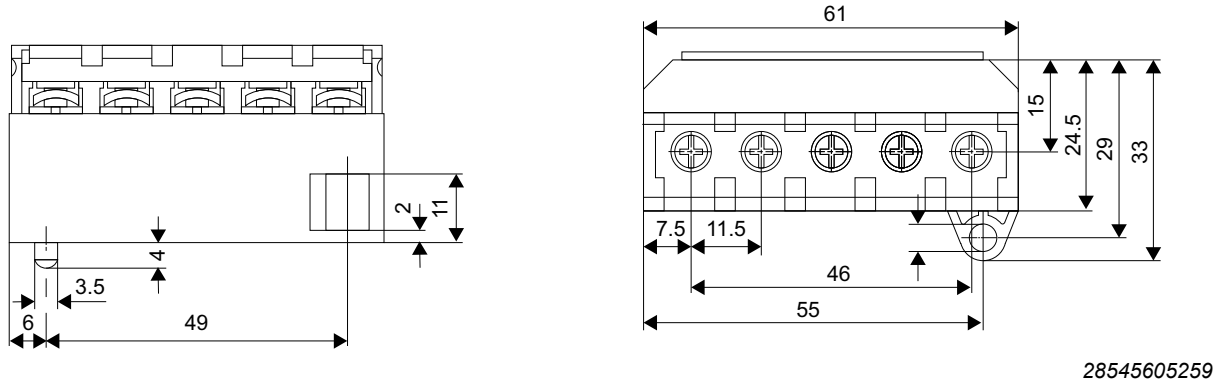

BG1.5, BG3.0, BGE.., BS24, BSG..

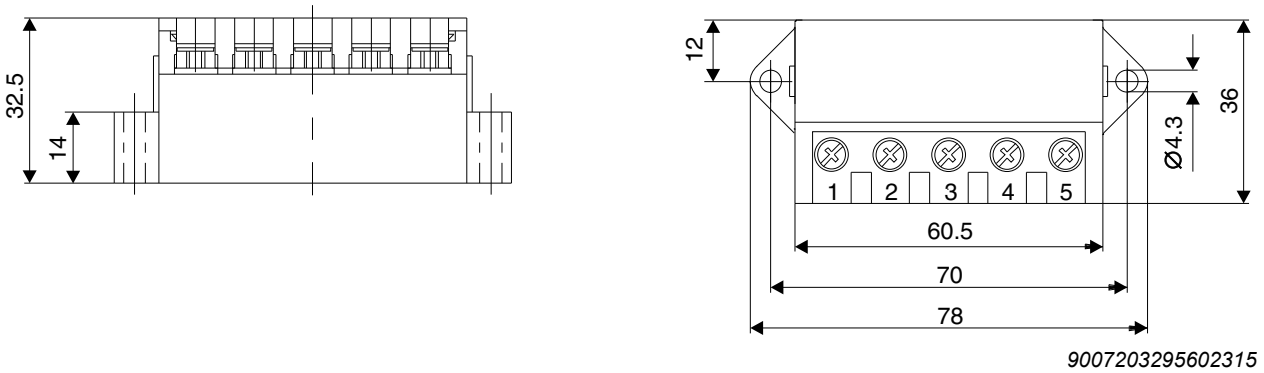

BMS.., BME.., BMH.., BMP.., BMK.., BMKB.., BMV..

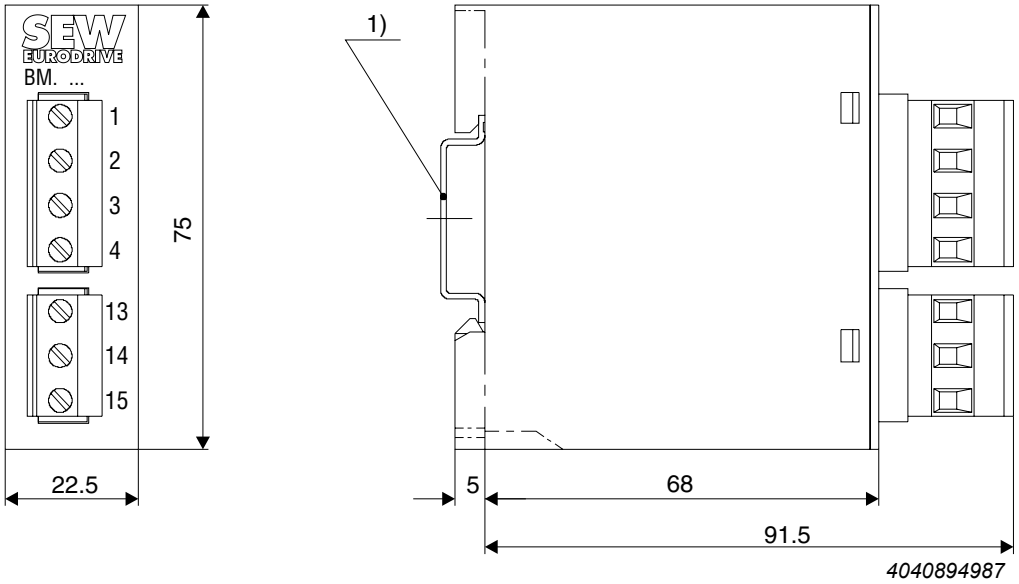

[1] Support rail mounting EN 50022-35-7.5

31555454/EN – 11/2023

Current relay

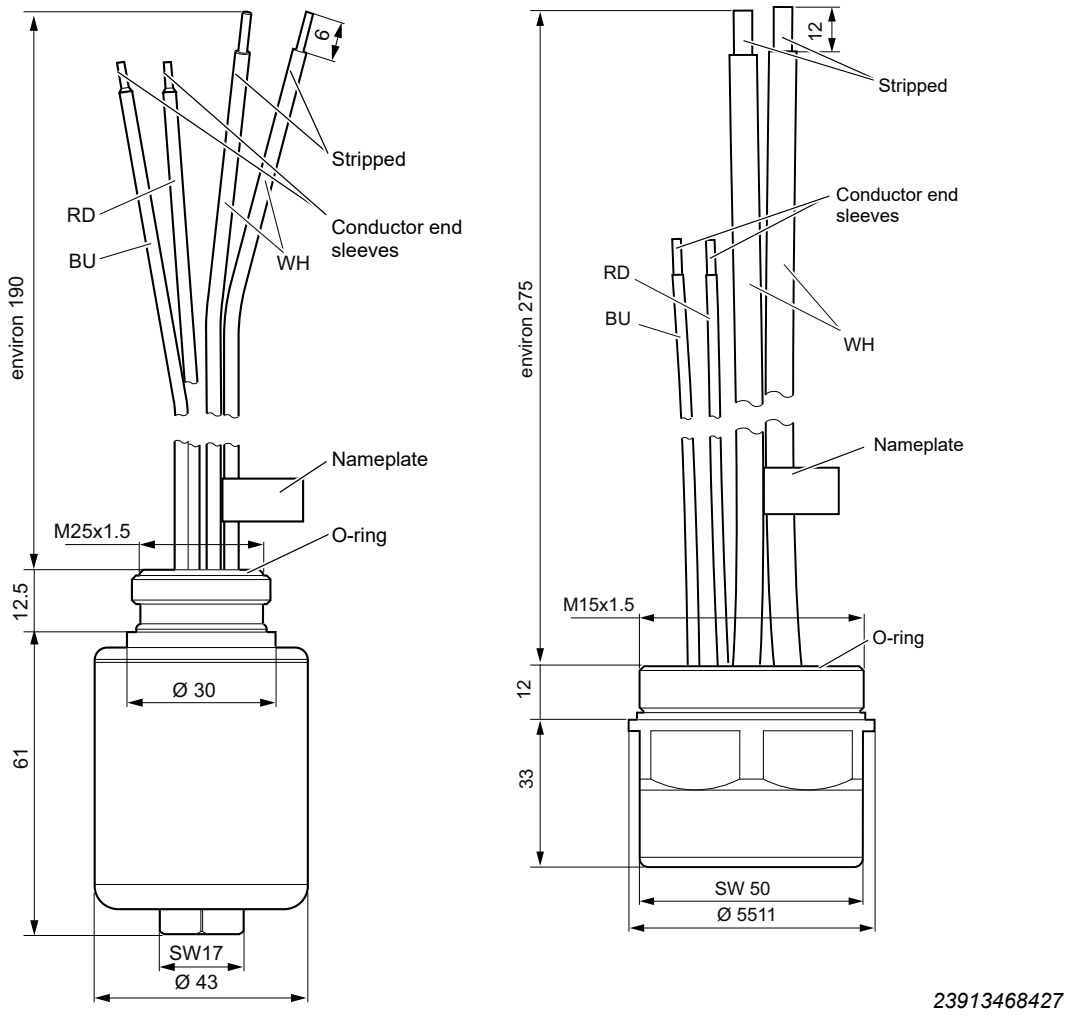

23903267979

	SR10E	SR11E	SR15E	SR19E
Maximum permitted direct current	1 A			
Max. transformer current	0.075 – 0.6 A	0.6 – 10 A	10 – 50 A	20 – 90 A
Part number	0822439	08282447	08282455	08283125
Ambient temperature[1)]	-15 to +40 °C			
Storage temperature	-25 to +125 °C			

1) Ambient temperature of the drive

31555454/EN – 11/2023

Voltage relay

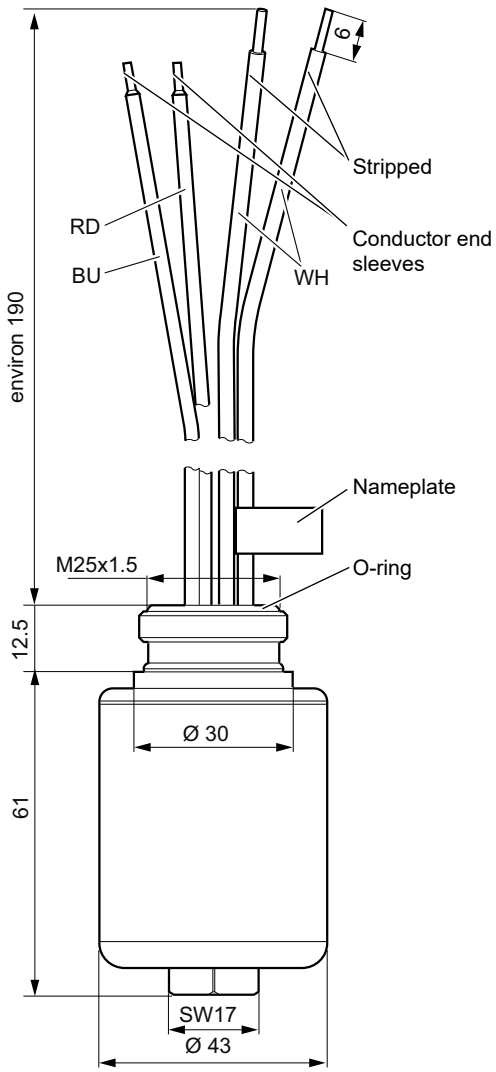

23903267979

	UR11E	UR15E
Maximum permitted direct current	1 A	
Permitted AC voltage	42 – 150 V	150 – 500 V
Part number	0823133	0823141
Ambient temperature[1)]	-15 to +40 °C	
Storage temperature	-25 to +125 °C	

1) Ambient temperature of the drive

11.1.5 Brake controller – wiring diagrams

Key

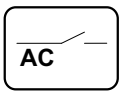	Cut-off in the AC circuit (standard application of the brake)
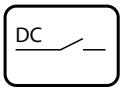	Cut-off in the DC circuit (rapid brake application)
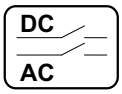	Cut-off in the DC and AC circuits (rapid brake application)
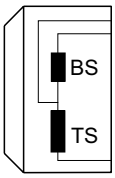	Brake BS = Accelerator coil TS = Coil section
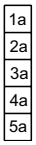	Auxiliary terminal strip in terminal box
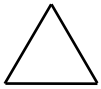	Motor with delta connection
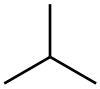	Motor with star connection
	Control cabinet limit
WH	White
RD	Red
BU	Blue
BN	Brown
BK	Black

More wiring diagrams of brake controllers are available on request.

31555454/EN – 11/2023

BGE brake control

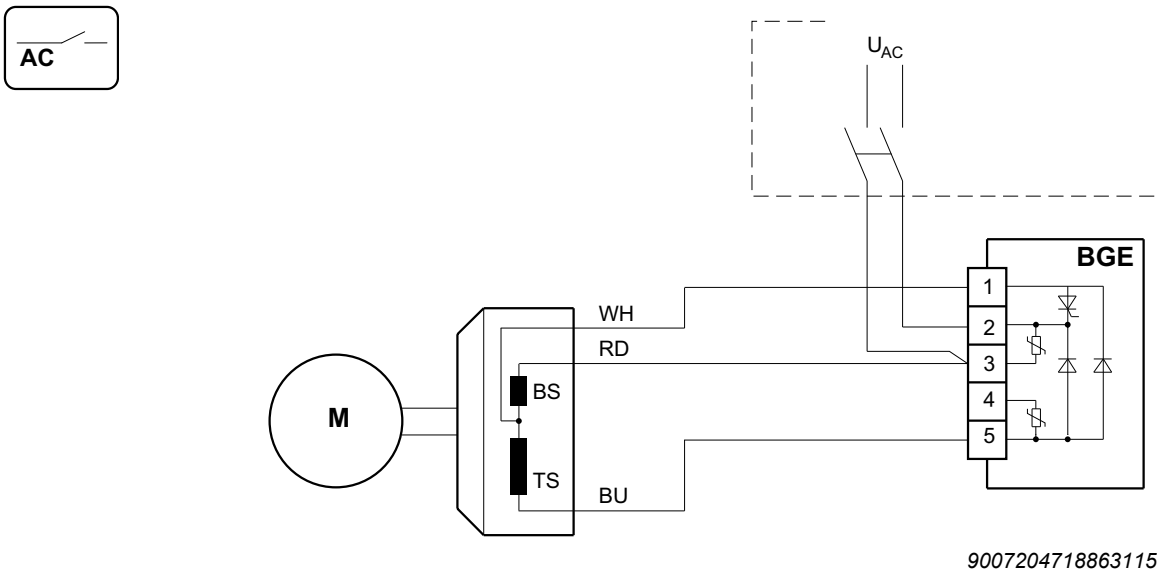

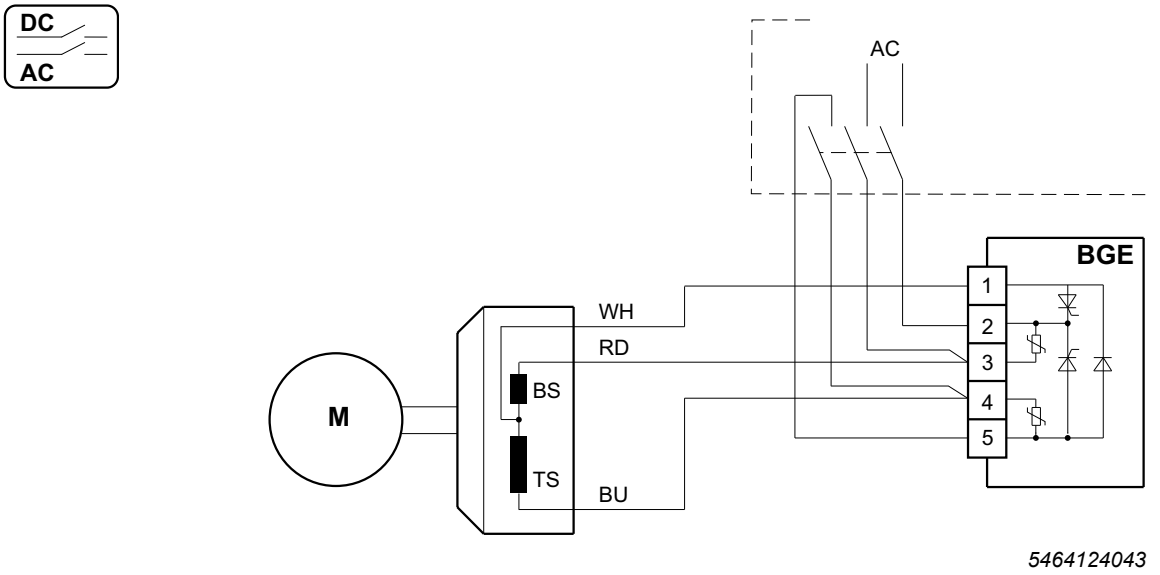

BME brake control

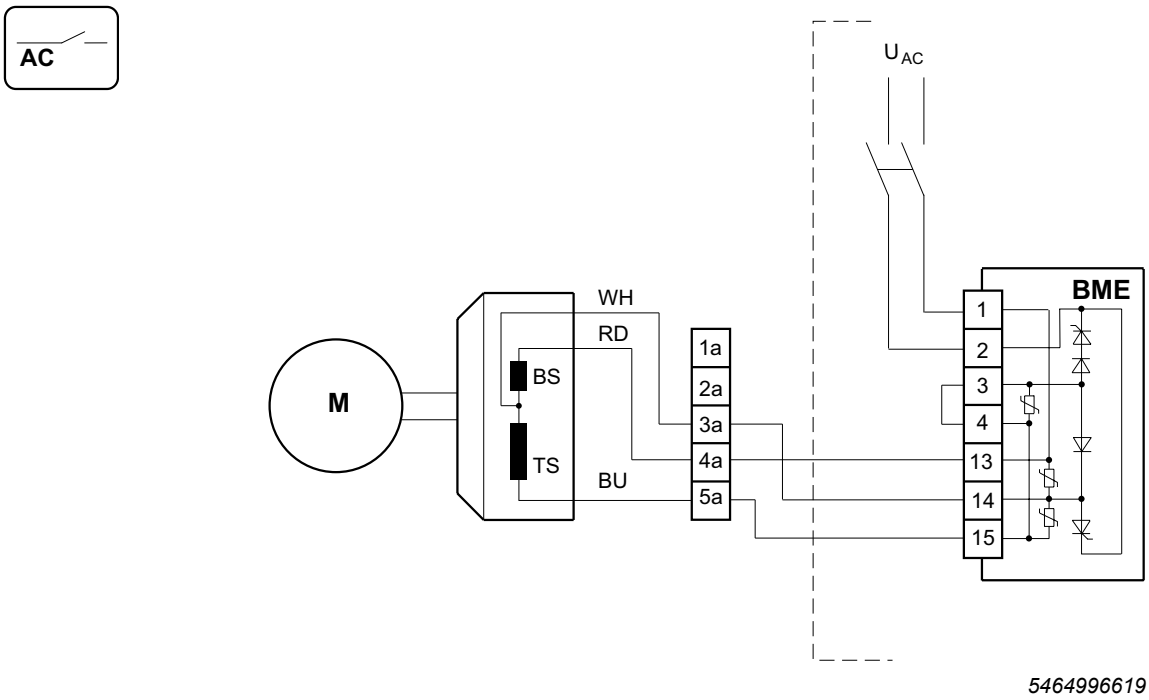

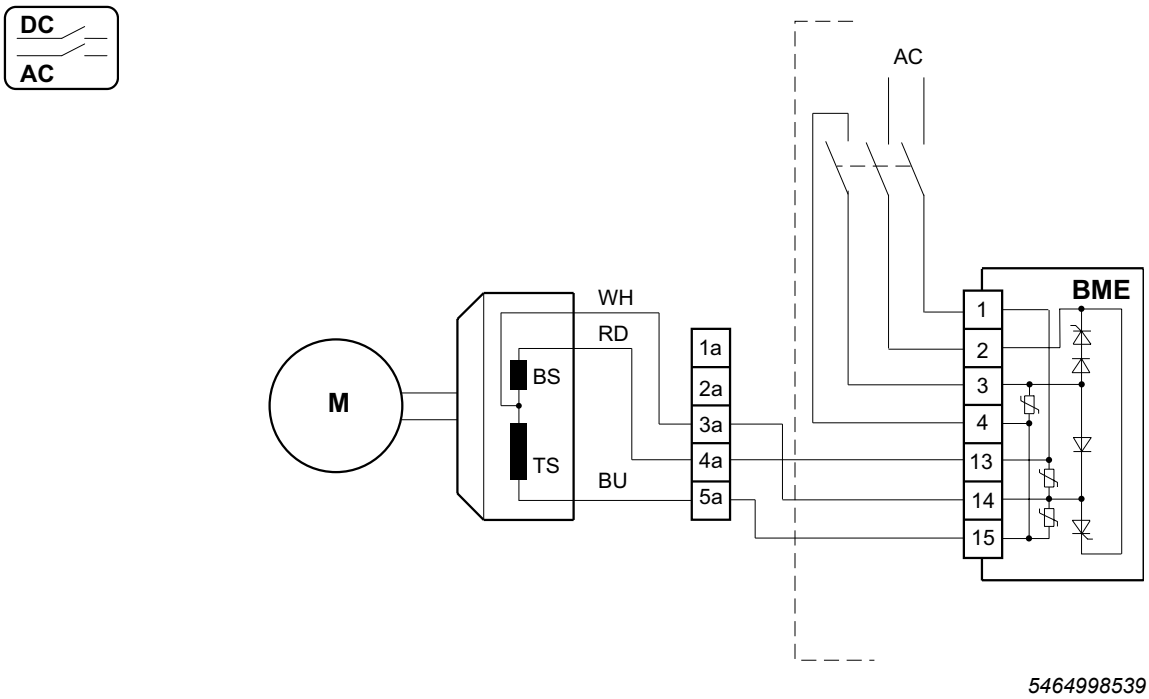

31555454/EN – 11/2023

BMP 3.1 brake control (installation in terminal box)

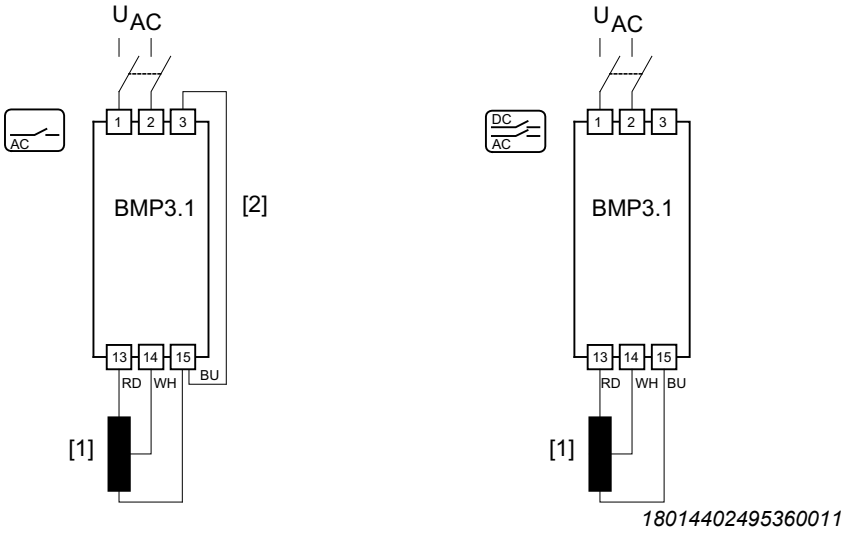

[1] Brake coil
[2] Wire jumper

BMP 3.1 brake control (installation in control cabinet)

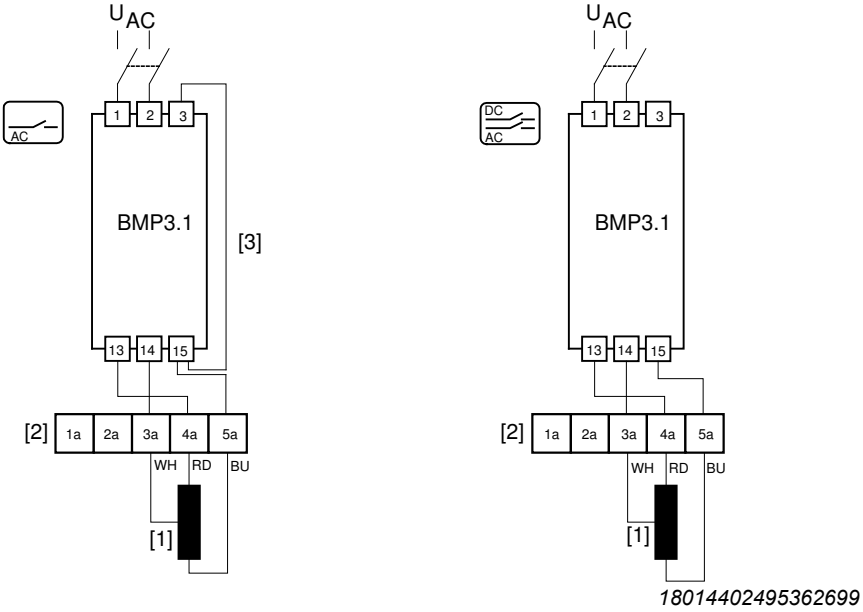

[1] Brake coil
[2] Terminal strip
[3] Wire jumper

31555454/EN – 11/2023

11.1.6 EK8., AK8., ES7., AS7., EG7., AG7. encoders

Observe the notes in chapter "Connecting the encoder" (→ 🗎 86) when connecting encoders:

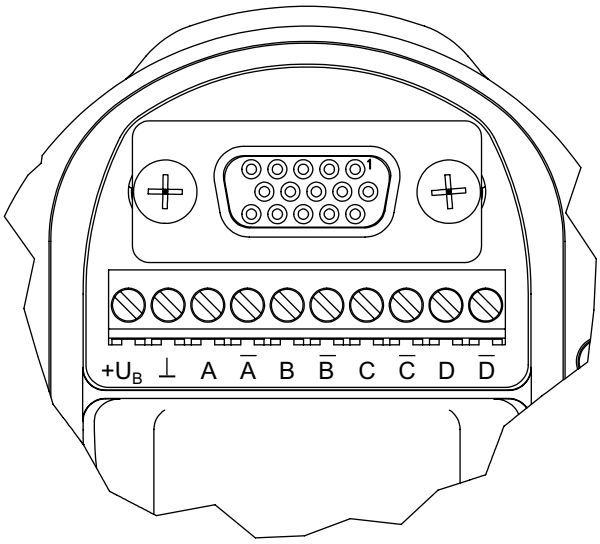

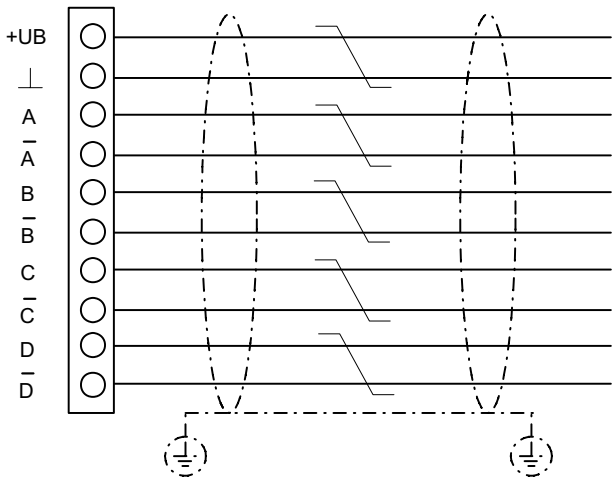

AK8W, AS7W, AG7W	AK8Y, AS7Y, AG7Y	EK8C, EK8R, ES7C, EG7C, ES7R, EG7R	EK8S, ES7S, EG7S
$+U_B$	$+U_B$	$+U_B$	$+U_B$
DGND	DGND	DGND	DGND
Cos+	Cos+	A	Cos+
Cos-	Cos-	$\overline{A}$	Cos-
Sin+	Sin+	B	Sin+
Sin-	Sin-	$\overline{B}$	Sin-
–	Clock+	C	C
–	Clock-	$\overline{C}$	$\overline{C}$
Data+	Data+	–	Data+
Data-	Data-	–	Data-

31555454/EN – 11/2023

11.1.7 Terminal strips 1 and 2

The following figure shows the correct arrangement of the terminal strips for EDR..71 – 132, EDRN80 – 132S with brake, and with aluminum terminal box in different cable entry positions. The terminal strips must be arranged after the terminal box is turned. It is significant that the axis of terminal strip 2 is always aligned in a right angle to the rotary axis of the rotor.

Cable entry 1 and 3, here using 3 as an example[1)]	Cable entry X and 2, here using X as an example[1)]

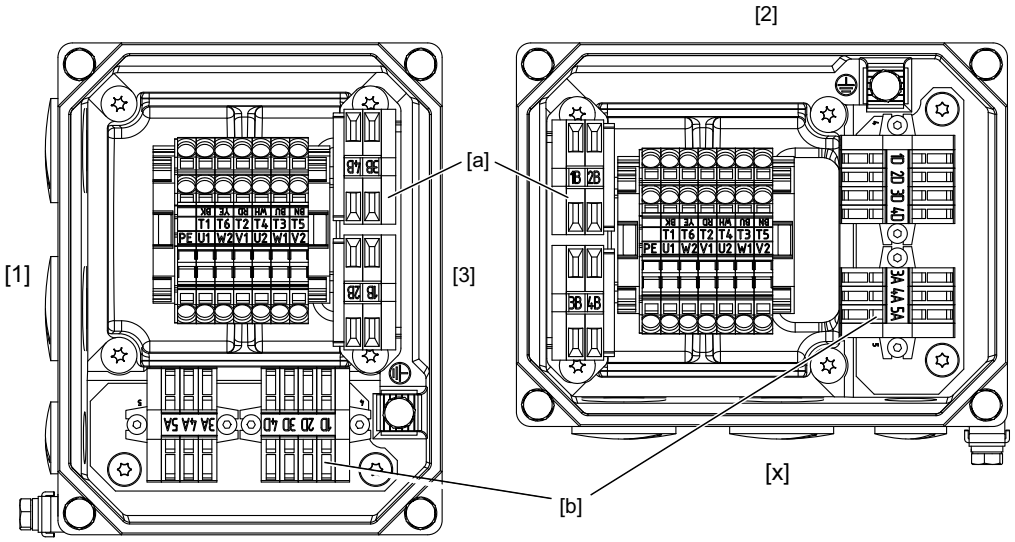

27021601036054411

1) If terminal strip 1 does not exist, you can install terminal strip 2 in the position for terminal strip 1 or for the rectifier.

[1]	Cable entry 1	[X]	Cable entry X
[2]	Cable entry 2	[a]	Terminal strip 1 (or rectifier in design 3D-c)
[3]	Cable entry 3	[b]	Terminal strip 2

The terminals can vary in appearance and design depending on the terminal box variant and the connected options.

INFORMATION

- Loosen any cables that are already connected before taking out terminal strip 2.
- The connected cables must be free from bends and twists, etc. when they are connected again.

11.2 Operation and maintenance instructions for forced cooling fan /VE with part number groups 2097... and 2098...

wistro

OPERATING AND MAINTENANCE INSTRUCTIONS
WISTRO EXPLOSION-PROTECTED EXTERNAL FAN UNITS for use in dust or gas explosion hazard areas
SERIES FLAI size 63 – 250

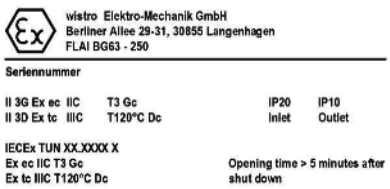

The standards applicable to these operating instructions can be found in the applicable COC.
For ATEX areas DIN EN standards are used, for IECEx areas IEC standards.

Zone division and assignment of Wistro external fans by category and protection level

	Zone	Duration of presence of the explosive atmosphere	Device category	Device protection level EPL
Gases, vapours, mists	2	rare	3G	Gc
Dusts	22	rare	3D	Dc

IECEx zone 22/2 approval

Ex ec IIC T3 Gc
Ex tc IIIC T120 °C Dc

Devices of the group IIC and IIIC for use in the remaining explosive areas (above ground) for zone 2 and 22

IEC 60079-7
Type of ignition protection: ec, non-sparking equipment
Group: IIC, group IIC gases
Temperature class: T3
EPL: Gc
IEC 60079-31
Type of ignition protection: tc, protection with housing
Group: IIIC, conductive dust
Temperature class: T=120 °C
EPL: Dc

ATEX 3D/3G approval

II 3G Ex ec IIC T3 ec
II 3D Ex tc IIIC T120 °C Dc

Devices of the group IIC and IIIC for use in the remaining explosive areas (above ground) for category 3D/3G

DIN EN 60079-7
Type of ignition protection: ec, non-sparking equipment
Group: IIC, group IIC gases
Temperature class: T3
EPL: Gc
DIN EN 60079-31
Type of ignition protection: tc, protection with housing
Group: IIIC, conductive dust
Temperature class: T=120 °C
EPL: Dc

ATEX_IECEx_BA_08052017_EN.docx 1 of 6

31555454/EN – 11/2023

wistro

The external fan is intended for the cooling of electric motors used in explosive areas of zone 2 or 22. The motor to be cooled must comply with the standard IEC/DIN EN 60079-0 and the part of standard IEC/DIN EN 60079 on which the corresponding degree of ignition protection is based. The max. permissible surface temperature is 120 °C for group IIIC and T3 for group IIC devices. The protection class for the motor and terminal box is IP66. Use of the fan for other purposes than external ventilation is not permitted within the scope of the approval the ambient temperature may be between -20 °C and +40 °C.

The unit is generally not suitable for use in chemical atmospheres nor for the transport of flammable liquids.

X identification:

- Measurement of the maximum surface temperature was carried out in accordance with DIN 60034-1 or IEC 600079-7 with a voltage deviation of ±5 % defined as range A and without dust deposits.
- The impeller must not be exposed to UV radiation.
- Due to the geometry of the threads of the terminal box cover, the cable gland / blind plug must have a sealing

The relevant safety regulation with regard to protection from touching moving parts (DIN EN ISO 13857) is fulfilled.

Before installation care must be taken that the fan wheel moves freely and the blades of the impeller are not deformed or bent. This may cause imbalance, which can have a negative effect on the operating life. Protection class IP 10 on the air outlet side must be ensured by the operator at the location of use as per IEC/ DIN EN 60034-5. If the customer applies a coating, the design test certificate is void. The resulting changes must be evaluated by the customer.

Installation of the device must be carried out in a non-explosive atmosphere by qualified personnel and must be evaluated and documented by a suitably competent person. During installation it must be ensured that the connection diameter of the motor to be cooled matches the tube diameter. Deviations result in irregular tubes and the necessary minimum air gap between the impeller and the tube might no longer be maintained.

The electrical connection is made according to the operating mode in accordance with the connection diagram (see appendix). The connection diagram has also been affixed to the terminal box cover. The specifications of IEC/ DIN EN 60079-14 must also be observed for the connection.
The internal connections are made using spring-cage terminals, the cables to be connected must be provided with wire end sleeves. Connectible conductor cross sections are rigid 0.08-4 mm² (AWG 28-12) and flexible 0.08-2.5 mm²(AWG 28-14).
Cable glands and sealing plugs must have ATEX or IECEx system approval and be suitable for the intended use.
So as to not impair the IP protection class of the machine, they must have min. IP64.
The threads in the terminal box are of M16x1.5 design (for Bg63-160 2x M16x1.5). This can be adjusted to M20x1.5 upon customer request. The cable gland / blind plug must have a seal (according to IEC 60079-31).
The unit must be earthed via the earth connection in the housing. Earthing is via the screw connection provided in the terminal box (tightening torque 4.5 Nm) using cables with wire end sleeve or ring cable lug and a serrated lock screw. The cable cross section must be min. 0.75 mm². The external earthing of the external fan must be via the attachment screws at the customer motor. The cross section must be min. 4 mm². The contact surfaces must be bare metal. The earthing screw must be protected against detachment by a suitable device (serrated lock screw, locking mesh etc.). After installation corrosion protection must be applied to retain conductivity.
The max. permissible currents can be found in the table "Operating voltage range for series IL/ILL" (see appendix). The permitted tolerance of the voltage range corresponds to range A according to DIN EN 60034-1 (±5 %). In the Bg63-160 a posistor has additionally been installed due to the low motor currents. To avoid exceeding the above-mentioned surface temperatures during a fault the use of an overvoltage protection and/or the posistor (Bg63-160) with a suitable trigger device should be ensured.

31555454/EN – 11/2023

wistro

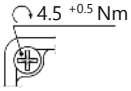

After electrical connection is complete, the terminal box must be attached with screws tightened to a torque of 4.5 Nm.

After installation and during commissioning a test run must be carried out. Here, care must be taken that the fan wheel rotates in the same as the direction of the arrow marked on the inner surface of the air intake grille and therefore blows air over the motor to be cooled.
Caution: The cooling effect is considerably lower if the direction of rotation is incorrect. There is a risk of the motor to be cooled overheating and the surface temperature of the fan motor of T=120 °C being exceeded.

During operation care must be taken that especially in dusty atmospheres that there is no excessive build-up of dust on the fan blades, as this can also result in imbalance which reduces the operating life and may result in friction which could cause ignition. This also applies to atmospheres containing particles, e.g. in the wood processing industry or in coal grinding mills.
Caution: Prior to opening the fan a cooling down phase of 5 min. must be waited.

WISTRO units are normally supplied ready for installation. The bearings are maintenance-free. The radial shaft seal has been designed for an average service life of 20,000 operating hours.
In case of longer operating periods, the external fan must be replaced with a new unit.
Repairs or modifications of the unit must only be carried out in consultation with WISTRO.

Manufacturer: WISTRO Elektro-Mechanik GmbH
Berliner Allee 29-31
D30855 Langenhagen

31555454/EN – 11/2023

wistro

Annex 1

Power Supply

3~⅄
Star connection

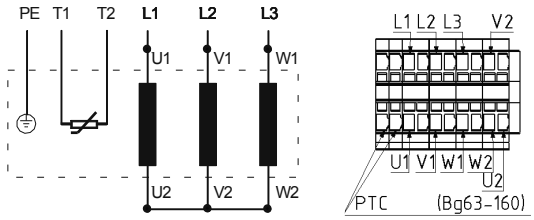

3~ △
Delta connection

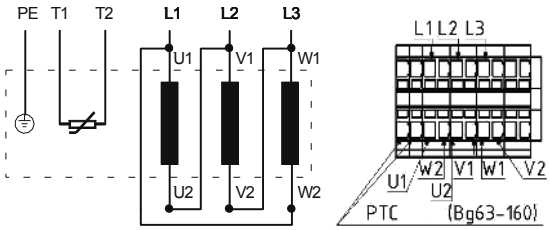

U1(T1) = black W1(T3) = brown V1(T2) = light blue
U2(T4) = green W2(T6) = yellow V2(T5) = white

ATEX_IECEx_BA_08052017_EN.docx 4 of 6

31555454/EN – 11/2023

wistro

Annex 2

Operating voltage range IL/ILI
Three-phase motors 3~230V/400V

Operating mode	Size	Motor type	Fan diameter	Voltage range		Max. permissible current	Max. power consumption	Max. permissible ambient temp.
			(mm)	50Hz	60Hz	(A)	(W)	(°C)
3~ Y	63	B20 IL-2-9	114,5	346-525	380-575	0,08	34	40
	71	B20 IL-2-9	129,6	346-525	380-575	0,08	35	40
	80	B20 IL-2-9	147,9	346-525	380-575	0,08	42	40
	90	B31 IL-2-9	168	346-525	380-575	0,25	120	40
	100	B31 IL-2-9	186,2	346-525	380-575	0,25	123	40
	112	B31 IL-2-9	210	346-525	380-575	0,24	144	40
	132	C36 IL-2-9	248,4	346-525	380-575	0,39	183	40
	132	C36 IL-4-9	248,4	346-525	380-575	0,28	91	40
	160-200	C62 IL-2-9	299,5	346-525	380-575	0,79	405	40
	160-200	C62 IL-4-9	299,5	346-525	380-575	0,27	97	40
	204-249	D48 IL-4-9	373,2	346-525	380-575	0,39	260	40
	250-450	F50 IL-4-9	466,3	346-525	380-575	0,69	509	40
3~Δ	63	B20 IL-2-9	114,5	200-303	220-332	0,13	34	40
	71	B20 IL-2-9	129,6	200-303	220-332	0,13	35	40
	80	B20 IL-2-9	147,9	200-303	220-332	0,13	42	40
	90	B31 IL-2-9	168	200-303	220-332	0,44	120	40
	100	B31 IL-2-9	186,2	200-303	220-332	0,44	123	40
	112	B31 IL-2-9	210	200-303	220-332	0,42	144	40
	132	C36 IL-2-9	248,4	200-303	220-332	0,67	183	40
	132	C36 IL-4-9	248,4	200-303	220-332	0,48	91	40
	160-200	C62 IL-2-9	299,5	200-303	220-332	1,36	405	40
	160-200	C62 IL-4-9	299,5	200-303	220-332	0,47	97	40
	204-249	D48 IL-4-9	373,2	200-303	220-332	0,68	260	40
	250-450	F50 IL-4-9	466,3	200-303	220-332	1,20	509	40

Referenced to b-side bearing cover

wistro

Operating voltage range IL/ILI

Three-phase motors 3~115 V/200 V

Operating mode	Size	Motor type	Fan diameter	Voltage range		Max. permissible current	Max. power consumption	Max. permissible ambient temp.
			(mm)	50Hz	60Hz	(A)	(W)	(°C)
3~ Y	63	B31 IL-2-10	114,5	174-210	174-234	0,58	87	40
	71	B31 IL-2-10	129,6	174-210	174-234	0,57	85	40
	80	B31 IL-2-10	147,9	174-210	174-234	0,57	88	40
	90	B31 IL-2-10	168	174-210	174-234	0,57	89	40
	100	B31 IL-2-10	186,2	174-210	174-234	0,54	97	40
	112	B31 IL-2-10	210	174-210	174-234	0,55	104	40
3~Δ	63	B31 IL-2-10	114,5	100-122	100-135	1,00	87	40
	71	B31 IL-2-10	129,6	100-122	100-135	0,98	85	40
	80	B31 IL-2-10	147,9	100-122	100-135	0,99	88	40
	90	B31 IL-2-10	168	100-122	100-135	0,98	89	40
	100	B31 IL-2-10	186,2	100-122	100-135	0,94	97	40
	112	B31 IL-2-10	210	100-122	100-135	0,96	104	40

Referenced to b-side bearing cover

11.3 Certificates

INFORMATION

The IECEx certificates for motor, encoder and forced cooling fan are not supplied.

You can find them with the IECEx certificate number specified on the nameplate at www.iecex.com.

The certificates for motors with the approval for the Brazilian market by INMETRO issued by DNV are available from SEW-EURODRIVE on request.

The certificates for motors with the approval for the Korean market issued by KOSHA are available from SEW-EURODRIVE on request.

12 Address list

Argentina			
Assembly Sales	Buenos Aires	SEW EURODRIVE ARGENTINA S.A. Ruta Panamericana Km 37.5, Lote 35 (B1619IEA) Centro Industrial Garín Prov. de Buenos Aires	Tel. +54 3327 4572-84 Fax +54 3327 4572-21 http://www.sew-eurodrive.com.ar sewar@sew-eurodrive.com.ar
Australia			
Assembly Sales Service	Melbourne	SEW-EURODRIVE PTY. LTD. 27 Beverage Drive Tullamarine, Victoria 3043	Tel. +61 3 9933-1000 Fax +61 3 9933-1003 http://www.sew-eurodrive.com.au enquires@sew-eurodrive.com.au
	Sydney	SEW-EURODRIVE PTY. LTD. 9, Sleigh Place, Wetherill Park New South Wales, 2164	Tel. +61 2 9725-9900 Fax +61 2 9725-9905 enquires@sew-eurodrive.com.au
Austria			
Assembly Sales Service	Vienna	SEW-EURODRIVE Ges.m.b.H. Richard-Strauss-Straße 24 1230 Wien	Tel. +43 1 617 55 00-0 Fax +43 1 617 55 00-30 http://www.sew-eurodrive.at sew@sew-eurodrive.at
Bangladesh			
Sales	Bangladesh	SEW-EURODRIVE INDIA PRIVATE LIMITED 345 DIT Road East Rampura Dhaka-1219, Bangladesh	Tel. +88 01729 097309 salesdhaka@seweurodrivebangladesh.com
Belarus			
Sales	Minsk	Foreign unitary production enterprise SEW-EURODRIVE Novodvorskij village council 145 223016, Minsk region	Tel. +375 17 319 47 56 / +375 17 378 47 58 Fax +375 17 378 47 54 http://www.sew-eurodrive.by sew@sew-eurodrive.by
Belgium			
Assembly Sales Service	Brussels	SEW-EURODRIVE n.v./s.a. Researchpark Haasrode 1060 Evenementenlaan 7 3001 Leuven	Tel. +32 16 386-311 Fax +32 16 386-336 http://www.sew-eurodrive.be info@sew-eurodrive.be
Service Competence Center	Industrial Gears	SEW-EURODRIVE n.v./s.a. Rue du Parc Industriel, 31 6900 Marche-en-Famenne	Tel. +32 84 219-878 Fax +32 84 219-879 http://www.sew-eurodrive.be info@sew.be
Brazil			
Production Sales Service	São Paulo	SEW-EURODRIVE Brasil Ltda. Estrada Municipal José Rubim, 205 – Rodovia Santos Dumont Km 49 Indaiatuba – 13347-510 – SP	Tel. +55 19 3835-8000 sew@sew.com.br
Assembly Sales Service	Rio Claro	SEW-EURODRIVE Brasil Ltda. Rodovia Washington Luiz, Km 172 Condomínio Industrial Conpark Caixa Postal: 327 13501-600 – Rio Claro / SP	Tel. +55 19 3522-3100 Fax +55 19 3524-6653 montadora.rc@sew.com.br
	Joinville	SEW-EURODRIVE Brasil Ltda. Jvl / Ind Rua Dona Francisca, 12.346 – Pirabeiraba 89239-270 – Joinville / SC	Tel. +55 47 3027-6886 Fax +55 47 3027-6888 filial.sc@sew.com.br
Bulgaria			
Sales	Sofia	BEVER-DRIVE GmbH Bogdanovetz Str.1 1606 Sofia	Tel. +359 2 9151160 Fax +359 2 9151166 bever@bever.bg

31555454/EN – 11/2023

Cameroon			
Sales	Douala	SEW-EURODRIVE SARLU Ancienne Route Bonabéri P.O. Box B.P 8674 Douala-Cameroun	Tel. +237 233 39 12 35 Fax +237 233 39 02 10 www.sew-eurodrive.ci/ info@sew-eurodrive.cm
Canada			
Assembly Sales Service	Toronto	SEW-EURODRIVE CO. OF CANADA LTD. 210 Walker Drive Bramalea, ON L6T 3W1	Tel. +1 905 791-1553 Fax +1 905 791-2999 http://www.sew-eurodrive.ca l.watson@sew-eurodrive.ca
	Vancouver	SEW-EURODRIVE CO. OF CANADA LTD. Tilbury Industrial Park 7188 Honeyman Street Delta, BC V4G 1G1	Tel. +1 604 946-5535 Fax +1 604 946-2513 b.wake@sew-eurodrive.ca
	Montreal	SEW-EURODRIVE CO. OF CANADA LTD. 2001 Ch. de l'Aviation Dorval Quebec H9P 2X6	Tel. +1 514 367-1124 Fax +1 514 367-3677 n.paradis@sew-eurodrive.ca
Chile			
Assembly Sales Service	Santiago de Chile	SEW-EURODRIVE CHILE LTDA Las Encinas 1295 Parque Industrial Valle Grande LAMPA Santiago de Chile P.O. Box Casilla 23 Correo Quilicura - Santiago - Chile	Tel. +56 2 2757 7000 Fax +56 2 2757 7001 http://www.sew-eurodrive.cl ventas@sew-eurodrive.cl
China			
Production Assembly Sales Service	Tianjin	SEW-EURODRIVE (Tianjin) Co., Ltd. No. 78, 13th Avenue, TEDA Tianjin 300457	Tel. +86 22 25322612 Fax +86 22 25323273 http://www.sew-eurodrive.cn info@sew-eurodrive.cn
Assembly Sales Service	Suzhou	SEW-EURODRIVE (Suzhou) Co., Ltd. 333, Suhong Middle Road Suzhou Industrial Park Jiangsu Province, 215021	Tel. +86 512 62581781 Fax +86 512 62581783 suzhou@sew-eurodrive.cn
	Guangzhou	SEW-EURODRIVE (Guangzhou) Co., Ltd. No. 9, JunDa Road East Section of GETDD Guangzhou 510530	Tel. +86 20 82267890 Fax +86 20 82267922 guangzhou@sew-eurodrive.cn
	Shenyang	SEW-EURODRIVE (Shenyang) Co., Ltd. 10A-2, 6th Road Shenyang Economic Technological Develop-ment Area Shenyang, 110141	Tel. +86 24 25382538 Fax +86 24 25382580 shenyang@sew-eurodrive.cn
	Taiyuan	SEW-EURODRIVE (Taiyuan) Co,. Ltd. No.3, HuaZhang Street, TaiYuan Economic & Technical Development Zone ShanXi, 030032	Tel. +86-351-7117520 Fax +86-351-7117522 taiyuan@sew-eurodrive.cn
	Wuhan	SEW-EURODRIVE (Wuhan) Co., Ltd. 10A-2, 6th Road No. 59, the 4th Quanli Road, WEDA 430056 Wuhan	Tel. +86 27 84478388 Fax +86 27 84478389 wuhan@sew-eurodrive.cn
	Xi'An	SEW-EURODRIVE (Xi'An) Co., Ltd. No. 12 Jinye 2nd Road Xi'An High-Technology Industrial Development Zone Xi'An 710065	Tel. +86 29 68686262 Fax +86 29 68686311 xian@sew-eurodrive.cn
Sales Service	Hong Kong	SEW-EURODRIVE LTD. Unit No. 801-806, 8th Floor Hong Leong Industrial Complex No. 4, Wang Kwong Road Kowloon, Hong Kong	Tel. +852 36902200 Fax +852 36902211 contact@sew-eurodrive.hk

Colombia			
Assembly Sales Service	Bogota	SEW-EURODRIVE COLOMBIA LTDA. Calle 17 No. 132-18 Interior 2 Bodega 6, Manzana B Santafé de Bogotá	Tel. +57 1 54750-50 Fax +57 1 54750-44 http://www.sew-eurodrive.com.co sew@sew-eurodrive.com.co
Croatia			
Sales Service	Zagreb	KOMPEKS d. o. o. Zeleni dol 10 10 000 Zagreb	Tel. +385 1 4613-158 Fax +385 1 4613-158 kompeks@inet.hr
Czech Republic			
Assembly Sales Service	Hostivice	SEW-EURODRIVE CZ s.r.o. Floriánova 2459 253 01 Hostivice	Tel. +420 255 709 601 Fax +420 235 350 613 http://www.sew-eurodrive.cz sew@sew-eurodrive.cz
Denmark			
Assembly Sales Service	Copenhagen	SEW-EURODRIVEA/S Geminivej 28-30 2670 Greve	Tel. +45 43 95 8500 Fax +45 43 9585-09 http://www.sew-eurodrive.dk sew@sew-eurodrive.dk
Service	Vejle	SEW-EURODRIVE A/S Bødkervej 2 7100 Vejle	Tel. +45 43 9585 00 http://www.sew-eurodrive.dk sew@sew-eurodrive.dk
Egypt			
Technical Office	Cairo	SEW-EURODRIVE Representative Office in Egypt REGUS Paramount Business Complex, Block 1258M, Unit 1, Ground Floor, Sheraton Heli-opolis Cairo	Tel. +20 2 2503 2807 Fax +20 2 2503 2801 info@sew-eurodrive.eg
Estonia			
Sales	Tallin	ALAS-KUUL AS Loomäe tee 1, Lehmja küla 75306 Rae vald Harjumaa	Tel. +372 6593230 Fax +372 6593231 http://www.alas-kuul.ee info@alas-kuul.ee
Finland			
Assembly Sales Service	Hollola	SEW-EURODRIVE OY Vesimäentie 4 15860 Hollola	Tel. +358 201 589-300 Fax +358 3 780-6211 http://www.sew-eurodrive.fi sew@sew.fi
Service	Hollola	SEW-EURODRIVE OY Keskikankaantie 21 15860 Hollola	Tel. +358 201 589-300 Fax +358 3 780-6211 http://www.sew-eurodrive.fi sew@sew.fi
	Tornio	SEW-EURODRIVE Oy Lossirannankatu 5 95420 Tornio	Tel. +358 201 589 300 Fax +358 3 780 6211 http://www.sew-eurodrive.fi sew@sew.fi
Production Assembly	Karkkila	SEW Industrial Gears Oy Santasalonkatu 6, PL 8 03620 Karkkila, 03601 Karkkila	Tel. +358 201 589-300 Fax +358 201 589-310 http://www.sew-eurodrive.fi sew@sew.fi
France			
Production Sales	Haguenau	SEW USOCOME 48-54 route de Soufflenheim B. P. 20185 67506 Haguenau Cedex	Tel. +33 3 88 73 67 00 http://www.usocome.com sew@usocome.com
Production	Forbach	SEW USOCOME Zone industrielle Technopôle Forbach Sud B. P. 30269 57604 Forbach Cedex	Tel. +33 3 87 29 38 00

France			
	Brumath	SEW USOCOME 1 Rue de Bruxelles 67670 Mommenheim Cedex	Tel. +33 3 88 37 48 00
Assembly Sales Service	Bordeaux	SEW USOCOME Parc d'activités de Magellan 62 avenue de Magellan – B. P. 182 33607 Pessac Cedex	Tel. +33 5 57 26 39 00 dtcbordeaux@usocome.com
	Haguenau	SEW USOCOME 48-54 route de Soufflenheim B. P. 20185 67506 Haguenau Cedex	Tel. +33 3 88 73 67 00 dtchaguenau@usocome.com
	Lyon	SEW USOCOME 75 rue Antoine Condorcet 38090 Vaulx-Milieu	Tel. +33 4 74 99 60 00 dtclyon@usocome.com
	Nantes	SEW USOCOME Parc d'activités de la forêt 4 rue des Fontenelles 44140 Le Bignon	Tel. +33 2 40 78 42 00 dtcnantes@usocome.com
	Paris	SEW USOCOME Zone industrielle 2 rue Denis Papin 77390 Verneuil l'Étang	Tel. +33 1 64 42 40 80 dtcparis@usocome.com

Gabon
Representation: Cameroon

Germany			
Headquarters Production Sales	Bruchsal	SEW-EURODRIVE GmbH & Co KG Ernst-Blickle-Straße 42 76646 Bruchsal	Tel. +49 7251 75-0 Fax +49 7251 75-1970 http://www.sew-eurodrive.de sew@sew-eurodrive.de
Production / Industrial Gears	Bruchsal	SEW-EURODRIVE GmbH & Co KG Christian-Pähr-Str. 10 76646 Bruchsal	Tel. +49 7251 75-0 Fax +49 7251 75-2970
Production / Precision Gear Units	Bruchsal	SEW-EURODRIVE GmbH & Co KG Ernst-Blickle-Straße 42 76646 Bruchsal	Tel. +49 7251 75-0 Fax +49 7251 75-1970 sew@sew-eurodrive.de
Production	Graben	SEW-EURODRIVE GmbH & Co KG Ernst-Blickle-Straße 1 76676 Graben-Neudorf	Tel. +49 7251 75-0 Fax +49 7251-2970
Service Competence Center	Mechanics / Mechatronics	SEW-EURODRIVE GmbH & Co KG Ernst-Blickle-Straße 1 76676 Graben-Neudorf	Tel. +49 7251 75-1710 Fax +49 7251 75-1711 scc-mechanik@sew-eurodrive.de
	Electronics	SEW-EURODRIVE GmbH & Co KG Christian-Pähr-Straße 12 76646 Bruchsal	Tel. +49 7251 75-1780 Fax +49 7251 75-1769 scc-elektronik@sew-eurodrive.de
	MAXOLU-TION® Factory Automation	SEW-EURODRIVE GmbH & Co KG Eisenbahnstraße 11 76646 Bruchsal	Tel. +49 7251 75-0 Fax +49 7251 75-1970 sew@sew-eurodrive.de
Drive Technology Center	North	SEW-EURODRIVE GmbH & Co KG Alte Ricklinger Straße 43 30823 Garbsen (Hannover)	Tel. +49 5137 8798-30 Fax +49 5137 8798-55 dtc-nord@sew-eurodrive.de
	East	SEW-EURODRIVE GmbH & Co KG Dänkritzer Weg 1 08393 Meerane (Zwickau)	Tel. +49 3764 7606-0 Fax +49 3764 7606-20 dtc-ost@sew-eurodrive.de
	South	SEW-EURODRIVE GmbH & Co KG Domagkstraße 5 85551 Kirchheim (München)	Tel. +49 89 909551-21 Fax +49 89 909551-50 dtc-sued@sew-eurodrive.de
	West	SEW-EURODRIVE GmbH & Co KG Siemensstraße 1 40764 Langenfeld (Düsseldorf)	Tel. +49 2173 8507-10 Fax +49 2173 8507-50 dtc-west@sew-eurodrive.de
Drive Center	Berlin	SEW-EURODRIVE GmbH & Co KG Melitta-Schiller-Straße 8 12526 Berlin	Tel. +49 306331131-30 Fax +49 306331131-36 dc-berlin@sew-eurodrive.de

Germany			
	Bremen	SEW-EURODRIVE GmbH & Co KG Allerkai 4 28309 Bremen	Tel. +49 421 33918-10 Fax +49 421 33918-22 dc-bremen@sew-eurodrive.de
	Hamburg	SEW-EURODRIVE GmbH & Co KG Hasselbinnen 11 22869 Schenefeld	Tel. +49 40298109-60 Fax +49 40298109-70 dc-hamburg@sew-eurodrive.de
	Saarland	SEW-EURODRIVE GmbH & Co KG Gottlieb-Daimler-Straße 4 66773 Schwalbach Saar – Hülzweiler	Tel. +49 6831 48946 10 Fax +49 6831 48946 13 dc-saarland@sew-eurodrive.de
	Ulm	SEW-EURODRIVE GmbH & Co KG Dieselstraße 18 89160 Dornstadt	Tel. +49 7348 9885-0 Fax +49 7348 9885-90 dc-ulm@sew-eurodrive.de
	Würzburg	SEW-EURODRIVE GmbH & Co KG Nürnbergerstraße 118 97076 Würzburg-Lengfeld	Tel. +49 931 27886-60 Fax +49 931 27886-66 dc-wuerzburg@sew-eurodrive.de
Drive Service Hotline / 24 Hour Service			0 800 SEWHELP 0 800 7394357
Great Britain			
Assembly Sales Service	Normanton	SEW-EURODRIVE Ltd. DeVilliers Way Trident Park Normanton West Yorkshire WF6 1GX	Tel. +44 1924 893-855 Fax +44 1924 893-702 http://www.sew-eurodrive.co.uk info@sew-eurodrive.co.uk
Greece			
Sales	Athens	Christ. Boznos & Son S.A. 12, K. Mavromichali Street P.O. Box 80136 18545 Piraeus	Tel. +30 2 1042 251-34 Fax +30 2 1042 251-59 http://www.boznos.gr info@boznos.gr
Hungary			
Sales Service	Budapest	SEW-EURODRIVE Kft. Csillaghegyí út 13. 1037 Budapest	Tel. +36 1 437 06-58 Fax +36 1 437 06-50 http://www.sew-eurodrive.hu office@sew-eurodrive.hu
Iceland			
Sales	Reykjavik	Varma & Vélaverk ehf. Knarrarvogi 4 104 Reykjavík	Tel. +354 585 1070 Fax +354 585)1071 https://vov.is/ vov@vov.is
India			
Registered Office Assembly Sales Service	Vadodara	SEW-EURODRIVE India Private Limited 302, NOTUS IT PARK, Sarabhai Campus, Beside Notus Pride, Genda Circle, Vadodara 390023 Gujarat	Tel. +91 265 3045200 Fax +91 265 3045300 https://www.seweurodriveindia.com salesvadodara@seweurodriveindia.com
Assembly Sales Service	Chennai	SEW-EURODRIVE India Private Limited Plot No. K3/1, Sipcot Industrial Park Phase II Mambakkam Village Sriperumbudur - 602105 Kancheepuram Dist, Tamil Nadu	Tel. +91 44 37188888 Fax +91 44 37188811 saleschennai@seweurodriveindia.com
	Pune	SEW-EURODRIVE India Private Limited Plant: Plot No. D236/1, Chakan Industrial Area Phase- II, Warale, Tal- Khed, Pune-410501, Maharashtra	Tel. +91 21 35 628700 Fax +91 21 35 628715 salespune@seweurodriveindia.com
	Tapukara	SEW-EURODRIVE India Private Limited Plot No SP-6-46, Tapukara, Karoli Industrial Area, No. 1, district : Alwar , Rajasthan - 301707	Tel. +91 265 3045200 Fax +91 265 3045300 tapukara.plant@seweurodriveindia.com

31555454/EN – 11/2023

India			
Sales	Gurgaon	SEW-EURODRIVE India Private Limited Global Business Park, Sector -26, M.G. Road, Sikanderpur Unit No. 205, 2nd Floor, Tower – D Gurugram 122002, Haryana	Tel. +91 9958376669 salesgurgaon@seweurodriveindia.com
Indonesia			
Registered Office Sales Service	Jakarta	PT SEW EURODRIVE INDONESIA Palma Tower, 16th Floor, Unit H & I, Jl R.A. Kartini II-S Kav 06 Pondok Pinang, Kebayoran Lama Jakarta Selatan 12310	Tel. +62 21 7593 0272 Fax +62 21 7593 0273 sales.indonesia@sew-eurodrive.com https://www.sew-eurodrive.com.sg
Sales	Medan	PT. Serumpun Indah Lestari Jl.Pulau Solor no. 8, Kawasan Industri Medan II Medan 20252	Tel. +62 61 687 1221 Fax +62 61 6871429 / +62 61 6871458 / +62 61 30008041 sil@serumpunindah.com serumpunindah@yahoo.com http://www.serumpunindah.com
	Jakarta	PT. Cahaya Sukses Abadi Komplek Rukan Puri Mutiara Blok A no 99, Sunter Jakarta 14350	Tel. +62 21 65310599 Fax +62 21 65310600 csajkt@cbn.net.id
	Jakarta	PT. Agrindo Putra Lestari JL.Pantai Indah Selatan, Komplek Sentra Industri Terpadu, Pantai indah Kapuk Tahap III, Blok E No. 27 Jakarta 14470	Tel. +62 21 2921-8899 Fax +62 21 2921-8988 aplindo@indosat.net.id http://www.aplindo.com
	Surabaya	PT. TRIAGRI JAYA ABADI Jl. Sukosemolo No. 63, Galaxi Bumi Permai G6 No. 11 Surabaya 60111	Tel. +62 31 5990128 Fax +62 31 5962666 sales@triagri.co.id http://www.triagri.co.id
	Surabaya	CV. Multi Mas Jl. Raden Saleh 43A Kav. 18 Surabaya 60174	Tel. +62 31 5458589 Fax +62 31 5317220 sianhwa@sby.centrin.net.id http://www.cvmultimas.com
Ireland			
Sales Service	Dublin	Alperton Engineering Ltd. 48 Moyle Road Dublin Industrial Estate Glasnevin, Dublin 11	Tel. +353 1 830-6277 Fax +353 1 830-6458 http://www.alperton.ie info@alperton.ie
Israel			
Sales	Tel Aviv	Liraz Handasa Ltd. Ahofer Str 34B / 228 58858 Holon	Tel. +972 3 5599511 Fax +972 3 5599512 http://www.liraz-handasa.co.il office@liraz-handasa.co.il
Italy			
Assembly Sales Service	Milan	SEW-EURODRIVE S.a.s. di SEW S.r.l. & Co. Via Bernini,12 20033 Solaro (Milano)	Tel. +39 02 96 980229 Fax +39 02 96 980 999 http://www.sew-eurodrive.it milano@sew-eurodrive.it
Ivory Coast			
Sales	Abidjan	SEW-EURODRIVE SARL Ivory Coast Rue des Pêcheurs, Zone 3 26 BP 916 Abidjan 26	Tel. +225 27 21 21 81 05 Fax +225 27 21 25 30 47 info@sew-eurodrive.ci http://www.sew-eurodrive.ci
Japan			
Assembly Sales Service	Iwata	SEW-EURODRIVE JAPAN CO., LTD 250-1, Shimoman-no, Iwata Shizuoka 438-0818	Tel. +81 538 373811 Fax +81 538 373814 http://www.sew-eurodrive.co.jp sewjapan@sew-eurodrive.co.jp

Kazakhstan			
Sales Service	Almaty	SEW-EURODRIVE LLP 291-291A, Tole bi street 050031, Almaty	Tel. +7 (727) 350 5156 Fax +7 (727) 350 5156 http://www.sew-eurodrive.com kazakhstan@sew-eurodrive.com
	Tashkent	Representative Office SEW-EURODRIVE Representative office in Uzbekistan 95A Amir Temur ave, office 401/3 100084 Tashkent	Tel. +998 97 134 01 99 http://www.sew-eurodrive.uz sew@sew-eurodrive.uz
	Ulaanbaatar	IM Trading LLC Olympic street 28B/3 Sukhbaatar district, Ulaanbaatar 14230, MN	Tel. +976-77109997 Fax +976-77109997 imt@imt.mn
Latvia			
Sales	Riga	SIA Alas-Kuul Katlakalna 11C 1073 Riga	Tel. +371 6 7139253 Fax +371 6 7139386 http://www.alas-kuul.lv info@alas-kuul.com
Lebanon			
Sales (Lebanon)	Beirut	Gabriel Acar & Fils sarl B. P. 80484 Bourj Hammoud, Beirut	Tel. +961 1 510 532 Fax +961 1 494 971 ssacar@inco.com.lb
Sales (Jordan, Kuwait , Saudi Arabia, Syria)	Beirut	Middle East Drives S.A.L. (offshore) Sin El Fil. B. P. 55-378 Beirut	Tel. +961 1 494 786 Fax +961 1 494 971 http://www.medrives.com info@medrives.com
Lithuania			
Sales	Alytus	UAB Irseva Statybininku 106C 63431 Alytus	Tel. +370 315 79204 Fax +370 315 56175 http://www.irseva.lt irmantas@irseva.lt
Luxembourg			
Representation: Belgium			
Macedonia			
Sales	Skopje	Boznos DOOEL Dime Anicin 2A/7A 1000 Skopje	Tel. +389 23256553 Fax +389 23256554 http://www.boznos.mk
Malaysia			
Assembly Sales Service	Johor	SEW-EURODRIVE SDN BHD No. 95, Jalan Seroja 39, Taman Johor Jaya 81000 Johor Bahru, Johor West Malaysia	Tel. +60 7 3549409 Fax +60 7 3541404 sales@sew-eurodrive.com.my
Mexico			
Assembly Sales Service	Quéretaro	SEW-EURODRIVE MEXICO S.A. de C.V. SEM-981118-M93 Tequisquiapan No. 102 Parque Industrial Quéretaro C.P. 76220 Querétaro, México	Tel. +52 442 1030-300 Fax +52 442 1030-301 http://www.sew-eurodrive.com.mx scmexico@seweurodrive.com.mx
Sales Service	Puebla	SEW-EURODRIVE MEXICO S.A. de C.V. Calzada Zavaleta No. 3922 Piso 2 Local 6 Col. Santa Cruz Buenavista C.P. 72154 Puebla, México	Tel. +52 (222) 221 248 http://www.sew-eurodrive.com.mx scmexico@seweurodrive.com.mx
Mongolia			
Technical Office	Ulaanbaatar	IM Trading LLC Olympic street 28B/3 Sukhbaatar district, Ulaanbaatar 14230, MN	Tel. +976-77109997 Tel. +976-99070395 Fax +976-77109997 http://imt.mn/ imt@imt.mn

31555454/EN – 11/2023

Morocco			
Sales Service Assembly	Bouskoura	SEW-EURODRIVE Morocco SARL Parc Industriel CFCIM, Lot. 55/59 27182 Bouskoura Grand Casablanca	Tel. +212 522 88 85 00 Fax +212 522 88 84 50 http://www.sew-eurodrive.ma sew@sew-eurodrive.ma
Namibia			
Sales	Swakopmund	DB MINING & INDUSTRIAL SUPPLIES CC Einstein Street Strauss Industrial Park Unit1 Swakopmund	Tel. +264 64 462 738 Fax +264 64 462 734 anton@dbminingnam.com
Netherlands			
Assembly Sales Service	Rotterdam	SEW-EURODRIVE B.V. Industrieweg 175 3044 AS Rotterdam Postbus 10085 3004 AB Rotterdam	Tel. +31 10 4463-700 Fax +31 10 4155-552 Service: 0800-SEWHELP http://www.sew-eurodrive.nl info@sew-eurodrive.nl
New Zealand			
Assembly Sales Service	Auckland	SEW-EURODRIVE NEW ZEALAND LTD. P.O. Box 58-428 82 Greenmount drive East Tamaki Auckland	Tel. +64 9 2745627 Fax +64 9 2740165 http://www.sew-eurodrive.co.nz sales@sew-eurodrive.co.nz
	Christchurch	SEW-EURODRIVE NEW ZEALAND LTD. 30 Lodestar Avenue, Wigram Christchurch	Tel. +64 3 384-6251 Fax +64 3 384-6455 sales@sew-eurodrive.co.nz
Nigeria			
Sales	Lagos	Greenpeg Nig. Ltd 64C Toyin Street Opebi-Allen Ikeja Lagos-Nigeria	Tel. +234-701-821-9200-1 http://www.greenpegltd.com sales@greenpegltd.com
Norway			
Assembly Sales Service	Moss	SEW-EURODRIVE A/S Hornebergvegen 11 B 7038 Trondheim	Tel. +47 69 24 10 20 Fax +47 69 24 10 40 http://www.sew-eurodrive.no sew@sew-eurodrive.no
Pakistan			
Sales	Karachi	Industrial Power Drives Al-Fatah Chamber A/3, 1st Floor Central Commercial Area, Sultan Ahmed Shah Road, Block 7/8, Karachi	Tel. +92 21 452 9369 Fax +92-21-454 7365 seweurodrive@cyber.net.pk
Paraguay			
Sales	Fernando de la Mora	SEW-EURODRIVE PARAGUAY S.R.L Nu Guazu No. 642 casi Campo Esperanza Santisima Trinidad Asuncion	Tel. +595 991 519695 Fax +595 21 3285539 sewpy@sew-eurodrive.com.py
Peru			
Assembly Sales Service	Lima	SEW EURODRIVE DEL PERU S.A.C. Los Calderos, 120-124 Urbanizacion Industrial Vulcano, ATE, Lima	Tel. +51 1 3495280 Fax +51 1 3493002 http://www.sew-eurodrive.com.pe sewperu@sew-eurodrive.com.pe
Philippines			
Sales	Makati	P.T. Cerna Corporation 4137 Ponte St., Brgy. Sta. Cruz Makati City 1205	Tel. +63 2 519 6214 Fax +63 2 890 2802 mech_drive_sys@ptcerna.com http://www.ptcerna.com
Poland			
Assembly Sales Service	Łódź	SEW-EURODRIVE Polska Sp.z.o.o. ul. Techniczna 5 92-518 Łódź	Tel. +48 42 293 00 00 Fax +48 42 293 00 49 http://www.sew-eurodrive.pl sew@sew-eurodrive.pl

31555454/EN – 11/2023

Poland			
	Service	Tel. +48 42 293 0030 Fax +48 42 293 0043	24 Hour Service Tel. +48 602 739 739 (+48 602 SEW SEW) serwis@sew-eurodrive.pl
Portugal			
Assembly Sales Service	Coimbra	SEW-EURODRIVE, LDA. Av. da Fonte Nova, n.º 86 3050-379 Mealhada	Tel. +351 231 20 9670 Fax +351 231 20 3685 http://www.sew-eurodrive.pt infosew@sew-eurodrive.pt
Romania			
Sales Service	Bucharest	Sialco Trading SRL str. Brazilia nr. 36 011783 Bucuresti	Tel. +40 21 230-1328 Fax +40 21 230-7170 http://www.sialco.ro sialco@sialco.ro
Senegal			
Sales	Dakar	SENEMECA Mécanique Générale Km 8, Route de Rufisque B.P. 3251, Dakar	Tel. +221 338 494 770 Fax +221 338 494 771 http://www.senemeca.com senemeca@senemeca.sn
Serbia			
Sales	Belgrade	DIPAR d.o.o. Ustanicka 128a PC Košum, IV floor 11000 Beograd	Tel. +381 11 347 3244 / +381 11 288 0393 Fax +381 11 347 1337 office@dipar.rs
Singapore			
Assembly Sales Service	Singapore	SEW-EURODRIVE PTE. LTD. 9, Tuas Drive 2 Singapore 638644	Tel. +65 68621701 Fax +65 68612827 http://www.sew-eurodrive.com.sg sewsingapore@sew-eurodrive.com
Slovakia			
Drive Technology Center	Bernolákovo	SEW-Eurodrive SK s.r.o. Priemyselná ulica 6267/7 900 27 Bernolákovo	Tel.+421 2 48 212 800 http://www.sew-eurodrive.sk sew@sew-eurodrive.sk
Slovenia			
Sales Service	Celje	Pakman - Pogonska Tehnika d.o.o. Ul. XIV. divizije 14 3000 Celje	Tel. +386 3 490 83-20 Fax +386 3 490 83-21 pakman@siol.net
South Africa			
Assembly Sales Service	Johannesburg	SEW-EURODRIVE (PROPRIETARY) LIMITED 32 O'Connor Place Eurodrive House Aeroton Johannesburg 2190 P.O.Box 90004 Bertsham 2013	Tel. +27 11 248-7000 Fax +27 11 248-7289 http://www.sew.co.za info@sew.co.za
	Cape Town	SEW-EURODRIVE (PROPRIETARY) LIMITED Rainbow Park Cnr. Racecourse & Omuramba Road Montague Gardens Cape Town P.O.Box 36556 Chempet 7442	Tel. +27 21 552-9820 Fax +27 21 552-9830 Telex 576 062 bgriffiths@sew.co.za
	Durban	SEW-EURODRIVE (PROPRIETARY) LIMITED 48 Prospecton Road Isipingo Durban P.O. Box 10433, Ashwood 3605	Tel. +27 31 902 3815 Fax +27 31 902 3826 cdejager@sew.co.za
	Nelspruit	SEW-EURODRIVE (PROPRIETARY) LIMITED 7 Christie Crescent Vintonia P.O.Box 1942 Nelspruit 1200	Tel. +27 13 752-8007 Fax +27 13 752-8008 robermeyer@sew.co.za

South Korea			
Assembly Sales Service	Ansan	SEW-EURODRIVE Korea Co., Ltd. 7, Dangjaengi-ro, Danwon-gu, Ansan-si, Gyeonggi-do, Zip 425-839	Tel. +82 31 492-8051 Fax +82 31 492-8056 http://www.sew-eurodrive.kr master.korea@sew-eurodrive.com
	Busan	SEW-EURODRIVE Korea Co., Ltd. 28, Noksansandan 262-ro 50beon-gil, Gangseo-gu, Busan, Zip 618-820	Tel. +82 51 832-0204 Fax +82 51 832-0230
Assembly Service	Siheung	SEW-EURODRIVE Korea Co., Ltd. 35, Emtibeui 26-ro 58beon-gil, Siheung-si, Gyeonggi-do	http://www.sew-eurodrive.kr
Spain			
Assembly Sales Service	Bilbao	SEW-EURODRIVE ESPAÑA, S.L. Parque Tecnológico, Edificio, 302 48170 Zamudio (Vizcaya)	Tel. +34 94 43184-70 http://www.sew-eurodrive.es sew.spain@sew-eurodrive.es
Sri Lanka			
Sales	Colombo	SM International (Pte) Ltd 254, Galle Raod Colombo 4, Sri Lanka	Tel. +94 1 2584887 Fax +94 1 2582981
Swaziland			
Sales	Manzini	C G Trading Co. (Pty) Ltd Simunye street Matsapha, Manzini	Tel. +268 7602 0790 Fax +268 2 518 5033 charles@cgtrading.co.sz www.cgtradingswaziland.com
Sweden			
Assembly Sales Service	Jönköping	SEW-EURODRIVE AB Gnejsvägen 6-8 553 03 Jönköping Box 3100 S-550 03 Jönköping	Tel. +46 36 34 42 00 Fax +46 36 34 42 80 http://www.sew-eurodrive.se jonkoping@sew.se
Switzerland			
Assembly Sales Service	Basel	Alfred Imhof A.G. Jurastrasse 10 4142 Münchenstein bei Basel	Tel. +41 61 417 1717 Fax +41 61 417 1700 http://www.imhof-sew.ch info@imhof-sew.ch
Taiwan			
Sales	Taipei	Ting Shou Trading Co., Ltd. 6F-3, No. 267, Sec. 2 Tung Huw S. Road Taipei	Tel. +886 2 27383535 Fax +886 2 27368268 Telex 27 245 sewtwn@ms63.hinet.net http://www.tingshou.com.tw
	Nan Tou	Ting Shou Trading Co., Ltd. No. 55 Kung Yeh N. Road Industrial District Nan Tou 540	Tel. +886 49 255353 Fax +886 49 257878 sewtwn@ms63.hinet.net http://www.tingshou.com.tw
Tanzania			
Sales	Daressalam	SEW-EURODRIVE PTY LIMITED TANZANIA Plot 52, Regent Estate PO Box 106274 Dar Es Salaam	Tel. +255 0 22 277 5780 Fax +255 0 22 277 5788 http://www.sew-eurodrive.co.tz info@sew.co.tz
Thailand			
Assembly Sales Service	Chonburi	SEW-EURODRIVE (Thailand) Ltd. 700/456, Moo.7, Donhuaroh Muang Chonburi 20000	Tel. +66 38 454281 Fax +66 38 454288 sewthailand@sew-eurodrive.com https://www.sew-eurodrive.co.th
Tunisia			
Sales	Tunis	T. M.S. Technic Marketing Service Zone Industrielle Mghira 2 Lot No. 39 2082 Fouchana	Tel. +216 79 40 88 77 Fax +216 79 40 88 66 http://www.tms.com.tn tms@tms.com.tn

Turkey			
Assembly Sales Service	Kocaeli-Gebze	SEW-EURODRIVE Ana Merkez Gebze Organize Sanayi Böl. 400 Sok No. 401 41480 Gebze Kocaeli	Tel. +90 262 9991000 04 Fax +90 262 9991009 http://www.sew-eurodrive.com.tr sew@sew-eurodrive.com.tr
Ukraine			
Assembly Sales Service	Dnipropetrovsk	SEW-EURODRIVE, LLC Robochya str., bld. 23-B, office 409 49008 Dnipro	Tel. +380 56 370 3211 Fax +380 56 372 2078 http://www.sew-eurodrive.ua sew@sew-eurodrive.ua
United Arab Emirates			
Drive Technology Center	Dubai	SEW-EURODRIVE FZE PO Box 263835 Jebel Ali Free Zone – South, P.O. Box Dubai, United Arab Emirates	Tel. +971 (0)4 8806461 Fax +971 (0)4 8806464 info@sew-eurodrive.ae
Uruguay			
Assembly Sales	Montevideo	SEW-EURODRIVE Uruguay, S. A. Jose Serrato 3569 Esqina Corumbe CP 12000 Montevideo	Tel. +598 2 21181-89 Fax +598 2 21181-90 sewuy@sew-eurodrive.com.uy
USA			
Production Sales Service	Southeast Region	SEW-EURODRIVE INC. 1295 Old Spartanburg Highway P.O. Box 518 Lyman, S.C. 29365	Tel. +1 864 439-7537 Fax Sales +1 864 439-7830 Fax Production +1 864 439-9948 Fax Assembly +1 864 439-0566 Fax Confidential/HR +1 864 949-5557 http://www.seweurodrive.com cslyman@seweurodrive.com
Assembly Sales Service	Northeast Region	SEW-EURODRIVE INC. Pureland Ind. Complex 2107 High Hill Road, P.O. Box 481 Bridgeport, New Jersey 08014	Tel. +1 856 467-2277 Fax +1 856 845-3179 csbridgeport@seweurodrive.com
	Midwest Region	SEW-EURODRIVE INC. 2001 West Main Street Troy, Ohio 45373	Tel. +1 937 335-0036 Fax +1 937 332-0038 cstroy@seweurodrive.com
	Southwest Region	SEW-EURODRIVE INC. 202 W. Danieldale Rd. DeSoto, TX 75115	Tel. +1 214 330-4824 Fax +1 214 330-4724 csdallas@seweurodrive.com
	Western Region	SEW-EURODRIVE INC. 30599 San Antonio St. Hayward, CA 94544	Tel. +1 510 487-3560 Fax +1 510 487-6433 cshayward@seweurodrive.com
	Wellford	SEW-EURODRIVE INC. 148/150 Finch Rd. Wellford, S.C. 29385	Tel. +1 864 439-7537 Fax +1 864 661 1167 IGOrders@seweurodrive.com
		SEW-EURODRIVE INC. 220 Finch Rd. Wellford, S.C. 29385-9630	
	Additional addresses for service provided on request!		
Vietnam			
Sales	Ho Chi Minh City	SEW-EURODRIVE PTE. LTD. RO at Hochiminh City Floor 8, KV I, Loyal building, 151-151 Bis Vo Thi Sau street, ward 6, District 3, Ho Chi Minh City, Vietnam	Tel. +84 937 299 700 huytam.phan@sew-eurodrive.com
	Hanoi	MICO LTD Quảng Trị - North Vietnam / All sectors except Construction Materials 8th Floor, Ocean Park Building, 01 Dao Duy Anh St, Ha Noi, Viet Nam	Tel. +84 4 39386666 Fax +84 4 3938 6888 nam_ph@micogroup.com.vn http://www.micogroup.com.vn
Zambia			
Representation: South Africa			

Index

Numerical

2nd shaft end 58

A

Add-on encoder 86
AG7. 86
AH7. 86
Alternative connections 31
Ambient conditions 70
  Ambient temperature 70
  Hazardous radiation 71
Anti-condensation heating 70, 94
Appendix 257
Application project planning
  Special 125
  Typical 121
AS7 86
Auxiliary terminals, arrangement 268

B

Backstop 212
BE05 – 2 195
Bearing
  Reinforced 153
Bearing lubrication 152
Brake
  BE05 – 2 195
  BE05 – 20 196
  BE120 196
  BE122 197
  BE30 196
  BE32 197
  BE60 196
  BE62 197
  Braking torques 217
  Braking work 217
  Dimension drawings BMS, BME, BMH, BMP, BMK, BMV 260
  Operating currents BE.. brake 218
  Working air gap 217
Brake activation
  Dimension drawings BG.., BGE.., BS.., BSG.. 260
Brake connection 82
Brake control 62
  BGE 264
  BME 265
  Connection 82
  Control cabinet 228
  Motor terminal box 230
  Motor wiring compartment 230
Brake control block diagrams
  BMP 3.1 brake control (control cabinet) 266
  BMP3.1 brake control (motor) 266
Brake control of BE brake
  Control cabinet 228
Brake malfunctions 254
Brakemotor inspection
  Brakemotor 191
Brakemotor structure
  EDR..160 – 315 190
  EDR..71 – 80 188
  EDR..90 – 132 189
Braking torques 217
Braking work 217

C

Cable entries 62
Cage clamp 46
Certificate of Conformity
  X 26
Changing the blocking direction 212
Changing the brake lining carrier
  BE05 – 122 201
Changing the brake spring
  BE05 – 122 203
Changing the braking torque
  BE05 – 122 202
Changing the magnet body
  BE05 – 122 204
Characteristic curve 122, 124
Cleaning 148
Connecting forced cooling fan 93
Connecting the motor 74
  Terminal board 77
  via terminal strip 80
Connection
  Motor 74

31555454/EN – 11/23

Notes ... 74
PE ... 79
Wiring diagram ... 74
Connection type of the motor ... 75
Continuous duty ... 97
Cooling air supply ... 38
Copyright notice ... 8
Counter sinkings ... 62
Customer service ... 255

D

DC link voltage ... 100
Degree of protection ... 148
Delta connection
A13 ... 259
C13 ... 258
R13 ... 257
Designated use ... 11
Drive components, installation ... 40
Dusts ... 71
Duty types ... 95

E

EDR.. type designation
Bearing ... 32
Explosion-protected motors ... 29
Mechanical attachments ... 29
Other additional features ... 32
Output designs ... 29
Temperature sensor and temperature detection ... 30
Ventilation ... 32
EDR../EDRN
Encoder ... 30
EG7. ... 86
EH7. ... 86
Electrical connection ... 13
Electrical installation ... 61
Electrical work
Safety notes ... 13
Electrostatic charging
Painting ... 52
Embedded safety notes ... 7
EMC ... 66, 110, 120
Encoder ... 30
AG7. ... 86
AH7. ... 86
AS7. ... 86
EG7. ... 86
EH7. ... 86
ES7. ... 86
Mounting adapter ... 41
Technical data ... 241
Wiring diagram ... 267
Encoder mounting adapter ... 43
Environmental impact ... 71
Equipotential bonding ... 62
ES7. ... 86
EV.. ... 41
Explosion-protected motors ... 29

F

Failure ... 251
Faults ... 251
Forced cooling fan, VE ... 93
Frequency inverter ... 100, 102, 112
Parameter setting EPL "Gc" and "Dc" ... 144
Frequency inverter operation ... 63

G

Gases ... 71
Gaskets ... 71
Gearmotors ... 110, 120
Grounding ... 62, 66
at the terminal box ... 64
NF ... 64
Group drive ... 137

H

Hazard symbols
Meaning ... 7
Heating ... 94
Hollow shaft rotary encoder ... 44
HR/HF manual brake release, retrofitting ... 57, 211

I

Improving the grounding ... 66
Inspection ... 147
Inspection intervals ... 149
Installation
In damp locations or outdoors ... 39
Tolerances ... 40

31555454/EN – 11/23

XH.A encoder mounting adapter 44
Installation altitude 70
Installation conditions 34
Installation regulations 61
Installation tolerances 40
Insulation resistance 36
Intervals for inspection and maintenance 149
Inverter
Operation 99
Inverter assignment 102
EPL c 112

K

KTY84-130 temperature sensor 91

L

Line voltage 126
Low-voltage equipment 61
Lubricant table 239
Lubrication 152

M

Maintenance 147
Maintenance intervals 149
Malfunctions when operating with a frequency inverter 255
Mark, nameplate 26
Mechanical attachments 29
Mechanical installation 34
Monitoring 73
Motor
Connecting the terminal strip 80
Setup 38
Motor circuit breaker 73
Types 2G-b, 2D-b, and 2GD-b 73
Motor designation 28
Motor feet
Retrofitting/modifying motor feet 53
Motor inspection
EDRN63 – 315 186
Motor malfunctions 251
Motor protection 73, 110, 120
Motor circuit breaker 73
Motor protection device 63
Motor/inverter assignment 102, 112
Mounting 38
Mounting adapter 41, 43
Encoder 41
XV.. ..... 162, 163, 165
Mounting designs 29
Mounting XH.A 44
MOVITRAC® B 102

N

Nameplate 22
Additional frequency inverter nameplate 23
Frequency inverter 23
Mark 26
Notes
Designation in the documentation 6
Meaning of the hazard symbols 7

O

Operating conditions
Special 26
Operation
Safety notes 15
Operation on a frequency inverter 63
Operation on inverter 99
Options 29, 32, 89
Mechanical 57
Output designs 29
Output filter 130

P

Painting 148
Parameter setting
Frequency inverters for EPL Gb and Db 139
Frequency inverters for equipment protection level c 144
PE connection 79
Preliminary work for motor and brake maintenance 154
Product names 7
Project planning 126
Protection device 73
Protection level 72
Protection type 72
Protective earth 63
PT100 93
PT100 temperature detection 93
PT1000 92
PT1000 temperature detection 92

31555454/EN – 11/23

PTC thermistor 73
Pulse voltage 99

R

Regenerative power supply 100
Reinforced bearings 153
Relubrication 152
Relubrication device 152
Relubrication intervals 153
Removing rotary encoder 154, 156
  EG7. and AG7. 156
  ES7. and AS7. 154
Removing the absolute encoder..... 162, 163, 165
Removing the encoder
  ..... 154, 156, 158, 160, 162, 163, 165
  EG7. and AG7. ..... 156, 158
  EH7. and AH7. 160
  ES7. and AS7. 154
  EV.., AV.., and XV.. ..... 162, 163, 165
Removing the incremental encoder... 162, 163, 165
  EV.., AV.., and XV.. ..... 162, 163, 165
Removing the rotary encoder 158, 160
  EG7. and AG7. 158
  EH7. and AH7. 160
Removing the special encoder 162, 163, 165
Repairs 148
Replacing the brake
  EDR..250 – 315, EDRN250 – 315..... 210
  EDR..71 – 80, EDRN71 – 80..... 207
  EDR..90 – 225, EDRN90 – 225..... 208
Resistance..... 222
Resistance measurement of the brake..... 222, 225
Retrofitting the HR/HF manual brake release
  ..... 57, 211
Rights to claim under limited warranty 7
Ring cable lug, connection 78
Rolling bearing 236
RS 212

S

Safe and reliable operation 101, 111
Safe operation of motors 101, 111
Safety cover 58
Safety notes
  Designated use 11
  Designation in the documentation 6
  Electrical connection 13
  Electrical work..... 13
  Meaning of the hazard symbols 7
  Preliminary information 9
  Setup 12
  Storage 11
  Structure of embedded 7
  Structure of section-related..... 6
Second shaft end 58
Section-related safety notes 6
Serial number 26
Setting the working air gap
  BE05 – 122 198
Setup 12, 38
Signal words in safety notes 6
Soft start 98
Soft starter 98
Solid wire, connection 78
Spare parts 148
Special aspects in switching operation 69
Special marking 26
Star connection
  A13 259
  C13 258
  R13 257
Startup 138
  Safety notes 15
Storage, extended 36
Strip heater 94
Structure
  Brakemotor 188, 189, 190
  EDR..160 – 180, EDRN132M – 180 18
  EDR..160 – 315 with BE 190
  EDR..200 – 225, EDRN200 – 225 19
  EDR..250 – 280, EDRN250 – 280 20
  EDR..315, EDRN315 21
  EDR..71 – 132, EDRN71 – 132S..... 17
  EDR..71 – 80 with BE 188
  EDR..90 – 132 with BE 189
  EDRN63..... 16
  Motor..... 16, 17, 18, 19, 20, 21
Surface temperature
  Type 2GD-b and 3GD-c..... 72
Switch contacts 61, 138
Switching operation 69

31555454/EN – 11/23

T

Tapped holes ... 62
Target group ... 10
Technical data
  Mounting adapter for rotary encoders with solid shaft ... 250
Technical data BE.. brake
  Operating currents BE.. brake ... 218
Temperature ... 70
Temperature class
  Type 2GD-b and 3GD-c ... 72
Temperature sensor (/TF) ... 73
Temperature sensor/temperature detection ... 30
Terminal board ... 77
Terminal box
  Tightening torques ... 45
  With cage clamp ... 46
  With terminal board and anti-twist frame ... 48
Terminal strip ... 80
Terminal strip arrangement ... 268
Terminal strips, arrangement ... 268
Terminal voltage ... 121, 125
  Calculating ... 126
TF ... 90
TF temperature sensor ... 73, 90
Thermal motor protection ... 110, 120
Tightening torques of the terminal box ... 45
Trademarks ... 7
Transportation ... 11
Type 2GD-b
  Motor circuit breaker ... 73
Type 2GD-b and 3GD-c
  Surface temperature ... 72
  Temperature classes ... 72
Type designation ... 28
  Temperature detection ... 30
Type designation EDRN..
  Connection variants ... 31
Types
  Overview ... 29

V

Vapors ... 71
VE ... 93
VE forced cooling fan
  Mounting ... 185
Ventilation ... 32

W

Wear ... 149
Wiring ... 63
Wiring diagrams ... 74, 257
  Delta connection C13 ... 258
  Encoder ... 267
  R13 delta connection ... 257
  Star connection A13 ... 259
  Star connection R13 ... 257
Working air gap ... 217

X

XV.. ... 41

31555454/EN – 11/23

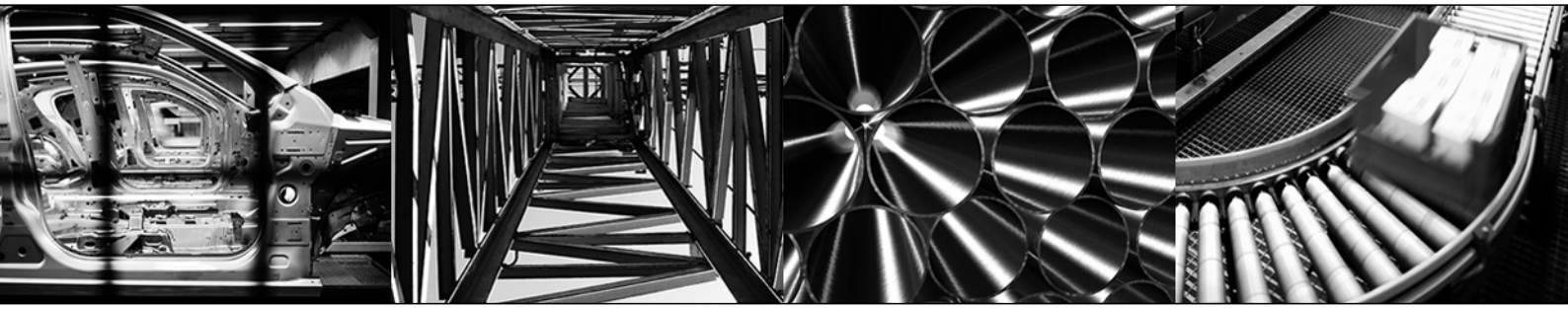

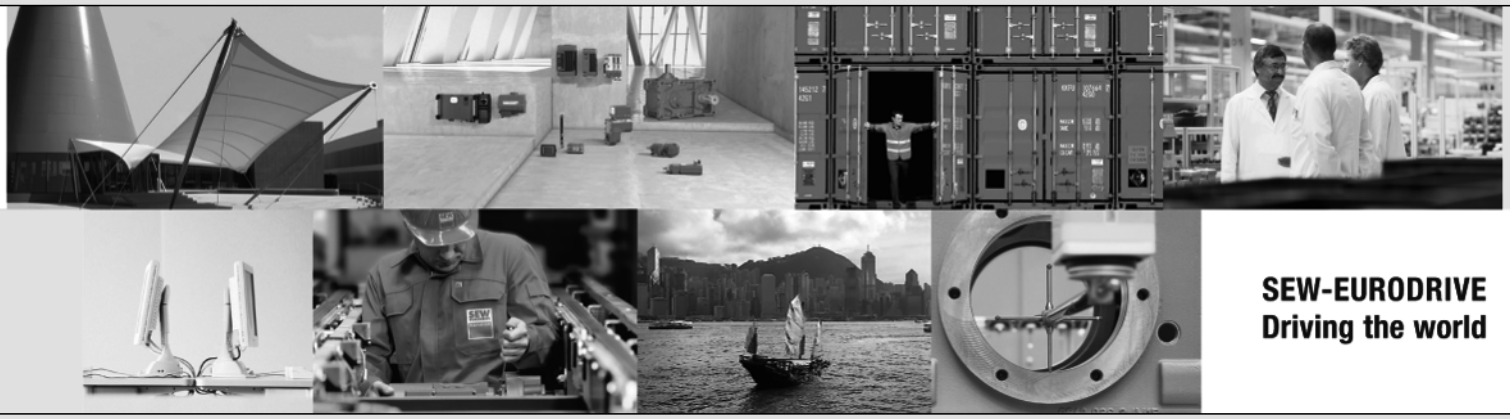

SEW-EURODRIVE GmbH & Co KG
Ernst-Blickle-Str. 42
76646 BRUCHSAL
GERMANY
Tel. +49 7251 75-0
Fax +49 7251 75-1970
sew@sew-eurodrive.com
➞ www.sew-eurodrive.com