# 9 Flachgetriebemotoren

## 9.1 Ausführungsarten F..DRN..

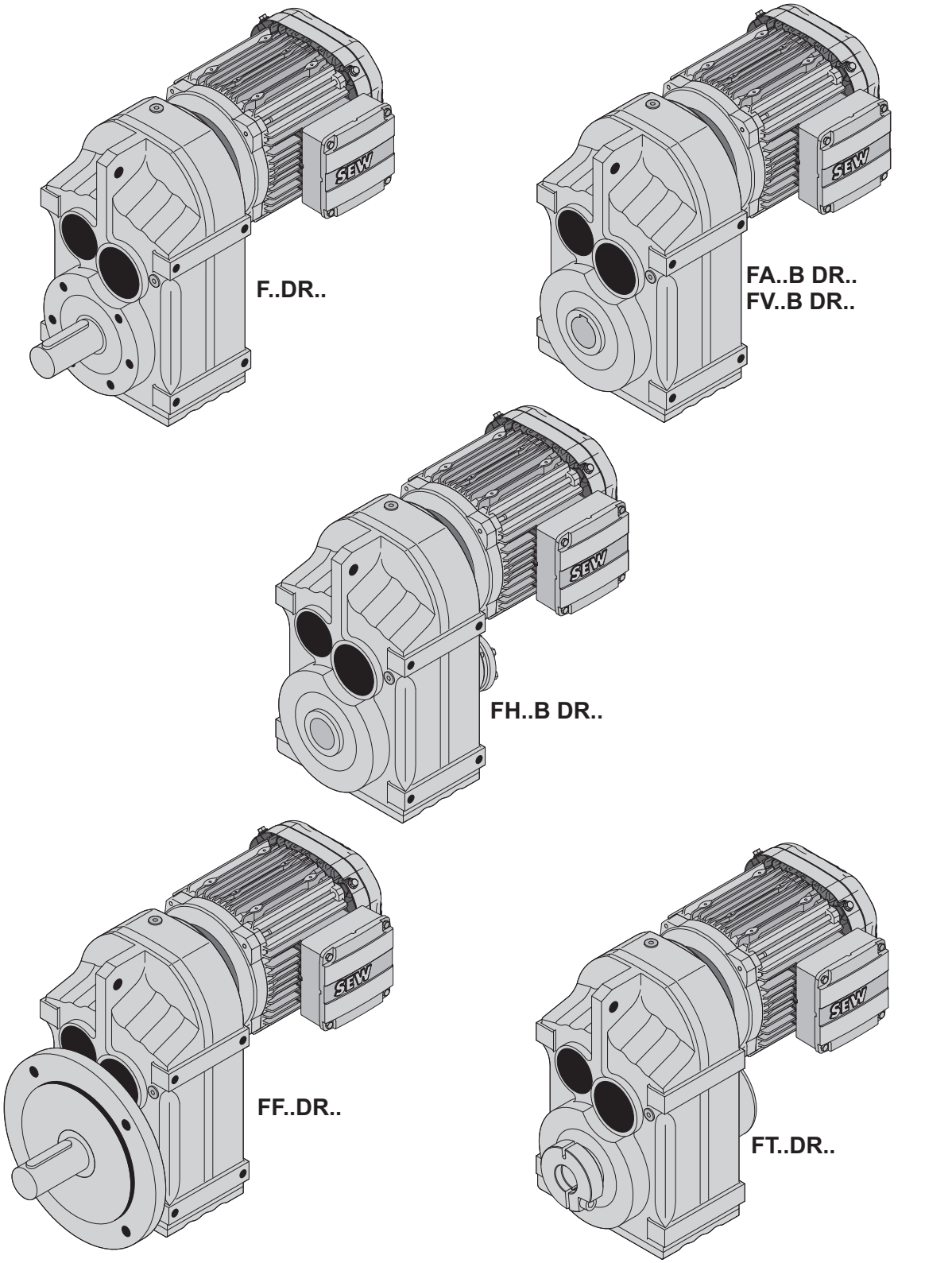


21933170/DE – 11/2015

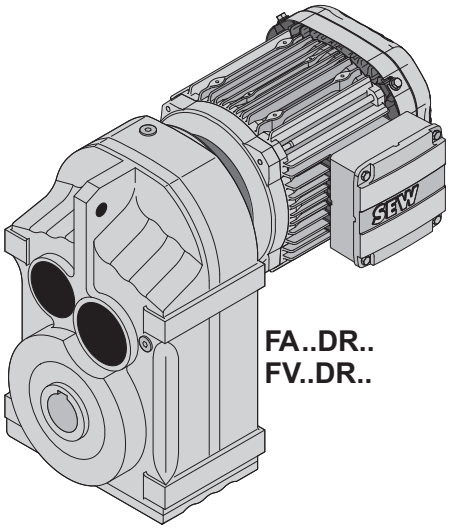


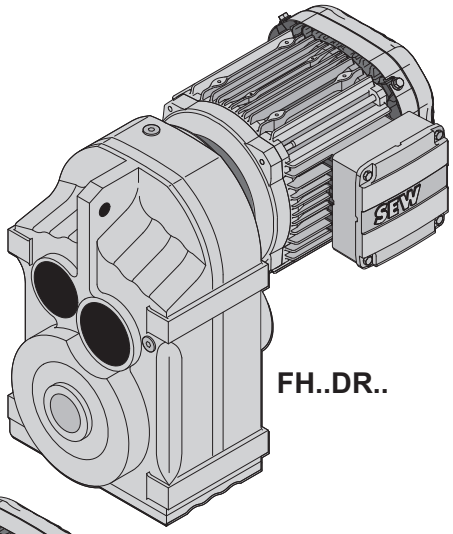


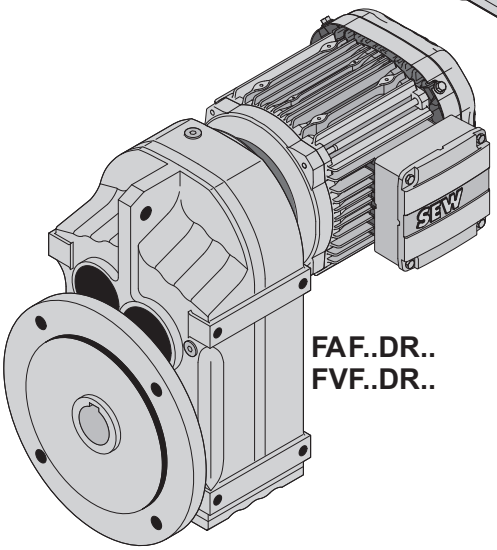


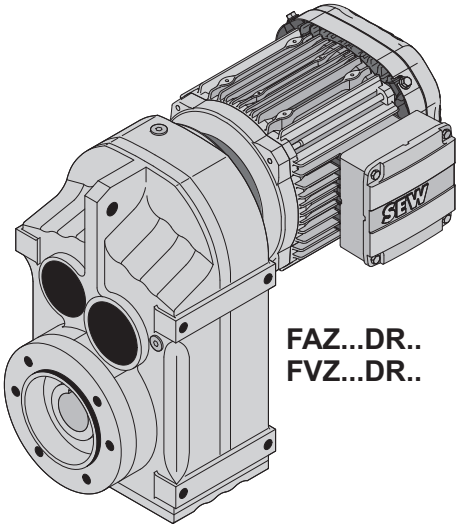


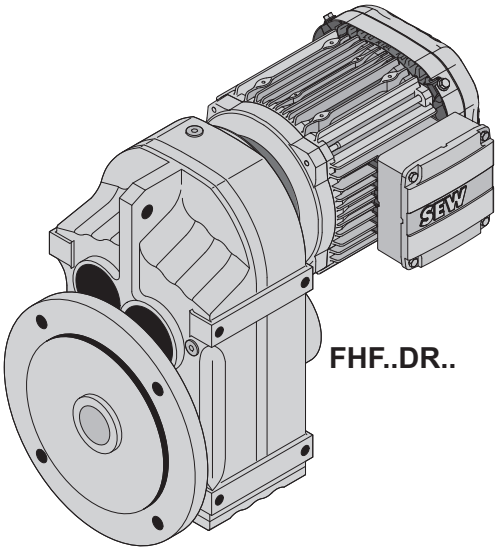


*13467470603*



21933170/DE – 11/2015

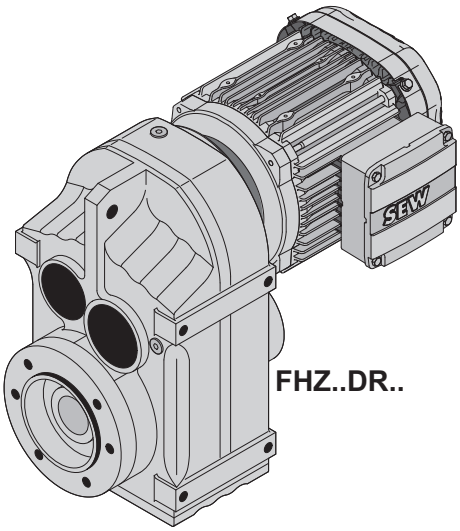


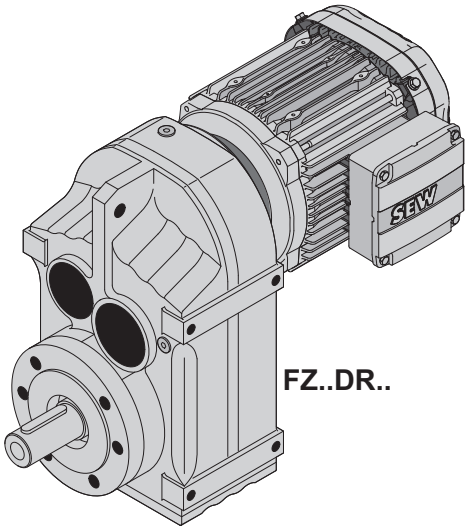


*9007212722420875*

21933170/DE – 11/2015

## 9.2 Geometrisch mögliche Kombinationen F..DRN..

| F27, $n_e$=1400 1/min | | | | | | | | 130 Nm |
|---|---|---|---|---|---|---|---|---|
| $n_a$ rpm | $M_{amax}$ Nm | $F_{Ra}$ N | $\varphi_{(/R)}$ ' | i | DR63S DR63M DR63L DRS71S DRS71M | DRN80M DRN90S | DRN90L | DRN100LS DRN100L |
| | | | | | 3 | | | |
| 9.9 | 130 | 4500 | - | 140.74 | | | | |
| 11 | 130 | 4500 | - | 129.09 | | | | |
| 13 | 130 | 4500 | - | 109.90 | | | | |
| 15 | 130 | 4500 | - | 94.76 | | | | |
| 16 | 130 | 4500 | - | 88.32 | | | | |
| 18 | 130 | 4500 | - | 77.21 | | | | |
| 19 | 130 | 4500 | - | 72.37 | | | | |
| 22 | 130 | 4400 | - | 63.86 | | | | |
| 25 | 130 | 4180 | - | 56.62 | | | | |
| 28 | 130 | 3980 | - | 50.19 | | | | |
| 30 | 130 | 3860 | - | 46.78 | | | | |
| 34 | 130 | 3640 | - | 40.89 | | | | |
| 37 | 130 | 3530 | - | 38.33 | | | | |
| 41 | 130 | 3340 | - | 33.83 | | | | |
| | | | | | 2 | | | |
| 47 | 130 | 3140 | - | 29.56 | | | | |
| 52 | 130 | 3030 | - | 27.18 | | | | |
| 60 | 130 | 2820 | - | 23.25 | | | | |
| 69 | 130 | 2630 | - | 20.15 | | | | |
| 74 | 130 | 2550 | - | 18.84 | | | | |
| 86 | 130 | 2370 | - | 16.28 | | | | |
| 101 | 130 | 2180 | - | 13.84 | | | | |
| 113 | 130 | 2060 | - | 12.35 | | | | |
| 133 | 130 | 1900 | - | 10.55 | | | | |
| 142 | 130 | 1830 | - | 9.88 | | | | |
| 149 | 130 | 1660 | - | 9.40 | | | | |
| 172 | 123 | 1580 | - | 8.13 | | | | |
| 203 | 114 | 1530 | - | 6.91 | | | | |
| 227 | 109 | 1480 | - | 6.17 | | | | |
| 266 | 100 | 1440 | - | 5.27 | | | | |
| 284 | 96 | 1420 | - | 4.93 | | | | |
| 337 | 87 | 1380 | - | 4.16 | | | | |

| F27R17, $n_e$=1400 1/min | | | | | | 130 Nm |
|---|---|---|---|---|---|---|
| $n_a$ rpm | $M_{amax}$ Nm | $F_{Ra}$ N | $\varphi_{(/R)}$ ' | i | DR63S DR63M DR63L DRS71S DRS71M | DRN80M |
| | | | | | 3 3 | |
| 0.16 | 130 | 4500 | - | 8972 | | |
| 0.18 | 130 | 4500 | - | 7736 | | |
| 0.19 | 130 | 4500 | - | 7211 | | |
| 0.22 | 130 | 4500 | - | 6303 | | |
| 0.26 | 130 | 4500 | - | 5435 | | |
| 0.29 | 130 | 4500 | - | 4855 | | |

21933170/DE – 11/2015

| F27R17, $n_e$=1400 1/min | | | | | | 130 Nm |
|---|---|---|---|---|---|---|
| $n_a$ rpm | $M_{amax}$ Nm | $F_{Ra}$ N | $\varphi_{(/R)}$ ' | i | DR63S DR63M DR63L DRS71S DRS71M | DRN80M |
| 0.33 | 130 | 4500 | - | 4243 | | |
| 0.38 | 130 | 4500 | - | 3715 | | |
| 0.43 | 130 | 4500 | - | 3247 | | |
| 0.49 | 130 | 4500 | - | 2878 | | |
| 0.56 | 130 | 4500 | - | 2515 | | |
| 0.63 | 130 | 4500 | - | 2217 | | |
| 2 3 | | | | | | |
| 0.74 | 130 | 4500 | - | 1898 | | |
| 0.85 | 130 | 4500 | - | 1645 | | |
| 0.92 | 130 | 4500 | - | 1525 | | |
| 1.1 | 130 | 4500 | - | 1322 | | |
| 1.2 | 130 | 4500 | - | 1146 | | |
| 1.4 | 130 | 4500 | - | 1013 | | |
| 1.6 | 130 | 4500 | - | 890 | | |
| 1.8 | 130 | 4500 | - | 778 | | |
| 2.1 | 130 | 4500 | - | 682 | | |
| 2.3 | 130 | 4500 | - | 602 | | |
| 2.7 | 130 | 4500 | - | 520 | | |
| 3 2 | | | | | | |
| 0.72 | 130 | 4500 | - | 1948 | | |
| 0.77 | 130 | 4500 | - | 1826 | | |
| 0.87 | 130 | 4500 | - | 1610 | | |
| 1.0 | 130 | 4500 | - | 1399 | | |
| 1.1 | 130 | 4500 | - | 1230 | | |
| 1.5 | 130 | 4500 | - | 948 | | |
| 1.7 | 130 | 4500 | - | 829 | | |
| 1.9 | 130 | 4500 | - | 731 | | |
| 2.2 | 130 | 4500 | - | 633 | | |
| 2.5 | 130 | 4500 | - | 551* | | |
| 2.9 | 130 | 4500 | - | 489 | | |
| 3.3 | 130 | 4500 | - | 427 | | |
| 3.7 | 130 | 4500 | - | 379 | | |
| 4.3 | 130 | 4500 | - | 326 | | |
| 4.9 | 130 | 4500 | - | 288 | | |
| 5.6 | 130 | 4500 | - | 251 | | |
| 6.3 | 130 | 4500 | - | 221 | | |
| 8.1 | 130 | 4500 | - | 172 | | |
| 9.2 | 130 | 4500 | - | 153 | | |
| 11 | 130 | 4500 | - | 130 | | |
| 2 2 | | | | | | |
| 3.1 | 130 | 4500 | - | 458 | | |
| 3.5 | 130 | 4500 | - | 397 | | |
| 4.1 | 130 | 4500 | - | 342 | | |
| 4.6 | 130 | 4500 | - | 302 | | |
| 5.3 | 130 | 4500 | - | 266 | | |
| 5.9 | 130 | 4500 | - | 236 | | |
| 6.6 | 130 | 4500 | - | 211 | | |
| 7.5 | 130 | 4500 | - | 186 | | |
| 9.9 | 130 | 4500 | - | 142 | | |

21933170/DE – 11/2015

## F27R17, $n_e$=1400 1/min — 130 Nm

| $n_a$ rpm | $M_{amax}$ Nm | $F_{Ra}$ N | $\varphi_{(/R)}$ ' | i | DR63S DR63M DR63L DRS71S DRS71M | DRN80M |
|---|---|---|---|---|---|---|
| 11 | 130 | 4500 | - | 124 | | |
| 13 | 130 | 4500 | - | 109 | | |
| 15 | 130 | 4500 | - | 96 | | |

## F37, $n_e$=1400 1/min — 200 Nm

| $n_a$ rpm | $M_{amax}$ Nm | $F_{Ra}$ N | $\varphi_{(/R)}$ ' | i | DR63S DR63M DR63L DRS71S DRS71M | DRN80M DRN90S | DRN90L | DRN100LS DRN100L |
|---|---|---|---|---|---|---|---|---|
| | | | | | | 3 | | |
| 11 | 200 | 4290 | 6.8 | 128.51 | | | | |
| 12 | 200 | 4290 | 6.8 | 117.88 | | | | |
| 14 | 200 | 4290 | 6.8 | 100.36 | | | | |
| 16 | 200 | 4290 | 6.8 | 86.53 | | | | |
| 17 | 200 | 4290 | 6.8 | 80.65 | | | | |
| 20 | 200 | 4290 | 6.9 | 70.50 | | | | |
| 21 | 200 | 4290 | 6.9 | 66.09 | | | | |
| 24 | 200 | 4290 | 6.9 | 58.32 | | | | |
| 26 | 200 | 4290 | 7.5 | 54.54 | | | | |
| 27 | 200 | 4290 | 6.9 | 51.70 | | | | |
| 30 | 200 | 4290 | 7.6 | 47.02 | | | | |
| 32 | 200 | 4290 | 7.6 | 43.83 | | | | |
| 37 | 200 | 4290 | 7.7 | 38.31 | | | | |
| 39 | 200 | 4290 | 7.7 | 35.91 | | | | |
| 44 | 200 | 4290 | 7.7 | 31.69 | | | | |
| 50 | 200 | 4060 | 7.8 | 28.09 | | | | |
| 59 | 200 | 3760 | 7.8 | 23.88 | | | | |
| | | | | | | 2 | | |
| 59 | 200 | 3740 | 6.1 | 23.63 | | | | |
| 68 | 200 | 3500 | 6.2 | 20.57 | | | | |
| 73 | 200 | 3390 | 6.2 | 19.27 | | | | |
| 82 | 200 | 3180 | 6.4 | 17.03 | | | | |
| 89 | 200 | 3070 | 6.4 | 15.81 | | | | |
| 98 | 200 | 2910 | 6.5 | 14.33 | | | | |
| 109 | 200 | 2750 | 6.6 | 12.87 | | | | |
| 126 | 190 | 2620 | 6.7 | 11.08 | | | | |
| 134 | 185 | 2580 | 6.8 | 10.42 | | | | |
| 156 | 175 | 2460 | 6.9 | 8.97 | | | | |
| 175 | 170 | 2360 | 7.4 | 8.01 | | | | |
| 188 | 145 | 2350 | 9.9 | 7.44 | | | | |
| 208 | 140 | 2270 | 10 | 6.74 | | | | |
| 231 | 135 | 2190 | 10.2 | 6.05 | | | | |
| 269 | 125 | 2120 | 10.5 | 5.21 | | | | |
| 286 | 120 | 2100 | 10.6 | 4.90 | | | | |
| 332 | 110 | 2030 | 10.9 | 4.22 | | | | |
| 371 | 105 | 1970 | 11.9 | 3.77 | | | | |



21933170/DE – 11/2015

| F37R17, $n_e$=1400 1/min | | | | | | 200 Nm |
|---|---|---|---|---|---|---|
| $n_a$ rpm | $M_{amax}$ Nm | $F_{Ra}$ N | $\varphi_{(/R)}$ ' | i | DR63S DR63M DR63L DRS71S DRS71M | DRN80M |
| 3 3 | | | | | | |
| 0.17 | 200 | 4290 | - | 8193 | | |
| 0.20 | 200 | 4290 | - | 7064 | | |
| 0.21 | 200 | 4290 | - | 6585 | | |
| 0.24 | 200 | 4290 | - | 5756 | | |
| 0.28 | 200 | 4290 | - | 4963 | | |
| 0.32 | 200 | 4290 | - | 4434 | | |
| 0.36 | 200 | 4290 | - | 3875 | | |
| 0.41 | 200 | 4290 | - | 3392 | | |
| 0.47 | 200 | 4290 | - | 2965 | | |
| 0.54 | 200 | 4290 | - | 2587 | | |
| 0.61 | 200 | 4290 | - | 2284 | | |
| 0.70 | 200 | 4290 | - | 1997 | | |
| 0.80 | 200 | 4290 | - | 1742 | | |
| 0.91 | 200 | 4290 | - | 1545 | | |
| 2 3 | | | | | | |
| 0.73 | 200 | 4290 | - | 1929 | | |
| 0.83 | 200 | 4290 | - | 1679 | | |
| 0.90 | 200 | 4290 | - | 1550 | | |
| 1.0 | 200 | 4290 | - | 1356 | | |
| 1.2 | 200 | 4290 | - | 1180 | | |
| 1.3 | 200 | 4290 | - | 1044 | | |
| 1.5 | 200 | 4290 | - | 914 | | |
| 1.7 | 200 | 4290 | - | 808 | | |
| 2.0 | 200 | 4290 | - | 698 | | |
| 2.3 | 200 | 4290 | - | 616 | | |
| 2.6 | 200 | 4290 | - | 544 | | |
| 3.0 | 200 | 4290 | - | 466 | | |
| 3.4 | 200 | 4290 | - | 411 | | |
| 3.8 | 200 | 4290 | - | 364 | | |
| 3 2 | | | | | | |
| 1.0 | 200 | 4290 | - | 1370 | | |
| 1.2 | 200 | 4290 | - | 1198 | | |
| 1.3 | 200 | 4290 | - | 1047 | | |
| 1.5 | 200 | 4290 | - | 915 | | |
| 1.7 | 200 | 4290 | - | 807 | | |
| 2.0 | 200 | 4290 | - | 707 | | |
| 2.3 | 200 | 4290 | - | 617 | | |
| 2.6 | 200 | 4290 | - | 538 | | |
| 2.9 | 200 | 4290 | - | 477 | | |
| 3.4 | 200 | 4290 | - | 412 | | |
| 3.8 | 200 | 4290 | - | 365 | | |
| 4.3 | 200 | 4290 | - | 322 | | |
| 5.0 | 200 | 4290 | - | 278 | | |
| 5.8 | 200 | 4290 | - | 242 | | |
| 6.3 | 200 | 4290 | - | 221 | | |
| 7.2 | 200 | 4290 | - | 195 | | |
| 8.3 | 200 | 4290 | - | 168 | | |
| 9.5 | 200 | 4290 | - | 147 | | |

21933170/DE – 11/2015

## F37R17, $n_e$=1400 1/min — 200 Nm

| $n_a$ rpm | $M_{amax}$ Nm | $F_{Ra}$ N | $\varphi_{(/R)}$ ' | i | DR63S DR63M DR63L DRS71S DRS71M | DRN80M |
|---|---|---|---|---|---|---|
| 11 | 200 | 4290 | - | 127 | | |
| 12 | 200 | 4290 | - | 121 | | |
| 13 | 200 | 4290 | - | 108 | | |
| 15 | 200 | 4290 | - | 91 | | |
| 2 2 | | | | | | |
| 4.3 | 200 | 4290 | - | 326 | | |
| 4.9 | 200 | 4290 | - | 285 | | |
| 5.6 | 200 | 4290 | - | 250 | | |
| 6.4 | 200 | 4290 | - | 219 | | |
| 7.5 | 200 | 4290 | - | 186 | | |
| 8.4 | 200 | 4290 | - | 167 | | |
| 9.7 | 200 | 4290 | - | 145 | | |
| 11 | 200 | 4290 | - | 129 | | |
| 12 | 200 | 4290 | - | 118 | | |
| 14 | 200 | 4290 | - | 98 | | |
| 16 | 200 | 4290 | - | 87 | | |

## F47, $n_e$=1400 1/min — 400 Nm

| $n_a$ rpm | $M_{amax}$ Nm | $F_{Ra}$ N | $\varphi_{(/R)}$ ' | i | DR63S DR63M DR63L DRS71S DRS71M | DRN80M DRN90S | DRN90L | DRN100LS DRN100L |
|---|---|---|---|---|---|---|---|---|
| 3 | | | | | | | | |
| 7.3 | 400 | 5920 | 6.1 | 190.76 | | | | |
| 8.0 | 400 | 5920 | 6.2 | 175.38 | | | | |
| 9.3 | 400 | 5920 | 6.2 | 150.06 | | | | |
| 11 | 400 | 5920 | 6.2 | 130.07 | | | | |
| 12 | 400 | 5920 | 6.2 | 121.57 | | | | |
| 13 | 400 | 5920 | 6.2 | 105.09 | | | | |
| 16 | 400 | 5920 | 6.2 | 89.29 | | | | |
| 18 | 400 | 5920 | 6.2 | 79.72 | | | | |
| 21 | 400 | 5920 | 6.3 | 68.09 | | | | |
| 21 | 400 | 5920 | 6.7 | 65.36 | | | | |
| 25 | 400 | 5920 | 6.8 | 56.49 | | | | |
| 29 | 400 | 5920 | 6.8 | 48.00* | | | | |
| 33 | 400 | 5920 | 6.8 | 42.86 | | | | |
| 38 | 400 | 5920 | 6.9 | 36.61 | | | | |
| 41 | 400 | 5920 | 6.9 | 34.29 | | | | |
| 48 | 400 | 5790 | 7 | 28.88 | | | | |
| 2 | | | | | | | | |
| 45 | 400 | 5920 | 5.7 | 30.86 | | | | |
| 48 | 400 | 5830 | 5.7 | 29.32 | | | | |
| 54 | 400 | 5460 | 5.8 | 25.72 | | | | |
| 64 | 400 | 5030 | 5.9 | 21.82 | | | | |
| 71 | 400 | 4770 | 5.9 | 19.70 | | | | |
| 81 | 400 | 4450 | 6 | 17.33 | | | | |
| 86 | 400 | 4320 | 6 | 16.36 | | | | |
| 101 | 400 | 3950 | 6.1 | 13.93 | | | | |

21933170/DE – 11/2015

## F47, $n_e$=1400 1/min — 400 Nm

| $n_a$ rpm | $M_{amax}$ Nm | $F_{Ra}$ N | $\varphi_{(/R)}$ ' | i | DR63S DR63M DR63L DRS71S DRS71M | DRN80M DRN90S | DRN90L | DRN100LS DRN100L |
|---|---|---|---|---|---|---|---|---|
| 111 | 400 | 3740 | 6.4 | 12.66 | | | | |
| 128 | 400 | 3440 | 6.5 | 10.97 | | | | |
| 156 | 330 | 3250 | 8 | 8.96 | | | | |
| 178 | 380 | 2630 | 8.1 | 7.88 | | | | |
| 188 | 380 | 2530 | 8.2 | 7.44* | | | | |
| 221 | 350 | 2470 | 8.4 | 6.34 | | | | |
| 243 | 340 | 2390 | 9 | 5.76 | | | | |
| 281 | 320 | 2310 | 9.2 | 4.99 | | | | |

## F47R17, $n_e$=1400 1/min — 400 Nm

| $n_a$ rpm | $M_{amax}$ Nm | $F_{Ra}$ N | $\varphi_{(/R)}$ ' | i | DR63S DR63M DR63L DRS71S DRS71M | DRN80M |
|---|---|---|---|---|---|---|
| 3 3 | | | | | | |
| 0.11 | 400 | 5920 | - | 12251 | | |
| 0.13 | 400 | 5920 | - | 10619 | | |
| 0.14 | 400 | 5920 | - | 9846 | | |
| 0.16 | 400 | 5920 | - | 8534 | | |
| 0.19 | 400 | 5920 | - | 7460 | | |
| 0.21 | 400 | 5920 | - | 6536 | | |
| 0.24 | 400 | 5920 | - | 5746 | | |
| 0.28 | 400 | 5920 | - | 5022 | | |
| 0.32 | 400 | 5920 | - | 4401 | | |
| 0.36 | 400 | 5920 | - | 3883 | | |
| 0.41 | 400 | 5920 | - | 3443 | | |
| 0.47 | 400 | 5920 | - | 2976 | | |
| 0.53 | 400 | 5920 | - | 2629 | | |
| 0.61 | 400 | 5920 | - | 2304 | | |
| 0.69 | 400 | 5920 | - | 2033 | | |
| 2 3 | | | | | | |
| 0.56 | 400 | 5920 | - | 2519 | | |
| 0.58 | 400 | 5920 | - | 2394 | | |
| 0.64 | 400 | 5920 | - | 2172 | | |
| 0.69 | 400 | 5920 | - | 2025 | | |
| 0.79 | 400 | 5920 | - | 1770 | | |
| 0.89 | 400 | 5920 | - | 1576 | | |
| 1.0 | 400 | 5920 | - | 1363 | | |
| 1.2 | 400 | 5920 | - | 1192 | | |
| 1.3 | 400 | 5920 | - | 1061 | | |
| 1.5 | 400 | 5920 | - | 931 | | |
| 1.7 | 400 | 5920 | - | 822 | | |
| 2.0 | 400 | 5920 | - | 706 | | |
| 2.3 | 400 | 5920 | - | 619 | | |
| 3 2 | | | | | | |
| 0.78 | 400 | 5920 | - | 1785 | | |
| 0.89 | 400 | 5920 | - | 1578 | | |
| 1.0 | 400 | 5920 | - | 1364 | | |

21933170/DE – 11/2015

## F47R17, $n_e$=1400 1/min — 400 Nm

| $n_a$ rpm | $M_{amax}$ Nm | $F_{Ra}$ N | $\varphi_{(/R)}$ ' | i | DR63S DR63M DR63L DRS71S DRS71M | DRN80M |
|---|---|---|---|---|---|---|
| 1.2 | 400 | 5920 | - | 1203 | | |
| 1.3 | 400 | 5920 | - | 1049 | | |
| 1.5 | 400 | 5920 | - | 918 | | |
| 1.7 | 400 | 5920 | - | 809 | | |
| 2.0 | 400 | 5920 | - | 700 | | |
| 2.3 | 400 | 5920 | - | 622 | | |
| 2.6 | 400 | 5920 | - | 543 | | |
| 2.9 | 400 | 5920 | - | 475 | | |
| 3.3 | 400 | 5920 | - | 419 | | |
| 3.8 | 400 | 5920 | - | 370 | | |
| 4.3 | 400 | 5920 | - | 324 | | |
| 4.9 | 400 | 5920 | - | 288 | | |
| 5.6 | 400 | 5920 | - | 249 | | |
| 6.4 | 400 | 5920 | - | 218 | | |
| 7.3 | 400 | 5920 | - | 193 | | |
| 8.0 | 400 | 5920 | - | 175 | | |
| 9.5 | 400 | 5920 | - | 147 | | |
| 11 | 400 | 5920 | - | 130 | | |
| 2 2 | | | | | | |
| 2.7 | 400 | 5920 | - | 524 | | |
| 2.9 | 400 | 5920 | - | 489 | | |
| 3.3 | 400 | 5920 | - | 427 | | |
| 3.7 | 400 | 5920 | - | 381 | | |
| 4.2 | 400 | 5920 | - | 334 | | |
| 4.7 | 400 | 5920 | - | 295 | | |
| 5.5 | 400 | 5920 | - | 253 | | |
| 6.5 | 400 | 5920 | - | 217 | | |
| 7.4 | 400 | 5920 | - | 190 | | |
| 7.9 | 400 | 5920 | - | 178 | | |
| 9.4 | 400 | 5920 | - | 149 | | |
| 11 | 400 | 5920 | - | 131 | | |

## F57, $n_e$=1400 1/min — 600 Nm

| $n_a$ rpm | $M_{amax}$ Nm | $F_{Ra}$ N | $\varphi_{(/R)}$ ' | i | DR63S DR63M DR63L DRS71S DRS71M | DRN80M DRN90S | DRN90L | DRN100LS DRN100L | DRN112M | DRN132S DRN132M |
|---|---|---|---|---|---|---|---|---|---|---|
| 3 | | | | | | | | | | |
| 7.0 | 600 | 9200 | 6 | 199.70 | | | | | | |
| 7.6 | 600 | 9200 | 6.1 | 183.60 | | | | | | |
| 8.9 | 600 | 9200 | 6.1 | 157.09 | | | | | | |
| 10 | 600 | 9200 | 6.1 | 136.16 | | | | | | |
| 11 | 600 | 9200 | 6.1 | 127.27 | | | | | | |
| 13 | 600 | 9200 | 6.1 | 110.01 | | | | | | |
| 15 | 600 | 9200 | 6.1 | 93.47 | | | | | | |
| 17 | 600 | 9200 | 6.1 | 83.46 | | | | | | |
| 19 | 600 | 9200 | 6.5 | 72.98 | | | | | | |
| 21 | 600 | 9200 | 6.5 | 68.22 | | | | | | |
| 24 | 600 | 9200 | 6.5 | 58.97 | | | | | | |

21933170/DE – 11/2015

## F57, $n_e$=1400 1/min — 600 Nm

| $n_a$ rpm | $M_{amax}$ Nm | $F_{Ra}$ N | $\varphi_{(/R)}$ ' | i | DR63S DR63M DR63L DRS71S DRS71M | DRN80M DRN90S | DRN90L | DRN100LS DRN100L | DRN112M | DRN132S DRN132M |
|---|---|---|---|---|---|---|---|---|---|---|
| 28 | 600 | 9200 | 6.6 | 50.10 | | | | | | |
| 31 | 600 | 9160 | 6.6 | 44.73 | | | | | | |
| 37 | 600 | 8510 | 6.6 | 38.21 | | | | | | |
| 39 | 600 | 8250 | 6.6 | 35.79 | | | | | | |
| 46 | 590 | 7650 | 6.7 | 30.15 | | | | | | |
| 2 | | | | | | | | | | |
| 35 | 290 | 10500 | 5.7 | 40.13 | | | | | | |
| 41 | 500 | 8670 | 5.7 | 34.24 | | | | | | |
| 47 | 545 | 7890 | 5.6 | 29.94 | | | | | | |
| 49 | 535 | 7760 | 5.7 | 28.45 | | | | | | |
| 56 | 575 | 7060 | 5.8 | 24.96 | | | | | | |
| 66 | 600 | 6350 | 5.8 | 21.17 | | | | | | |
| 73 | 600 | 6020 | 5.9 | 19.11 | | | | | | |
| 83 | 600 | 5620 | 5.9 | 16.81 | | | | | | |
| 88 | 600 | 5450 | 6 | 15.88 | | | | | | |
| 104 | 600 | 4980 | 6.1 | 13.52 | | | | | | |
| 114 | 600 | 4710 | 6.3 | 12.29 | | | | | | |
| 132 | 600 | 4320 | 6.4 | 10.64 | | | | | | |
| 150 | 420 | 4760 | 7.6 | 9.31 | | | | | | |
| 171 | 420 | 4450 | 7.8 | 8.19 | | | | | | |
| 181 | 420 | 4310 | 7.8 | 7.73 | | | | | | |
| 213 | 420 | 3940 | 8 | 6.58 | | | | | | |
| 234 | 420 | 3730 | 8.6 | 5.98 | | | | | | |
| 270 | 415 | 3460 | 8.8 | 5.18 | | | | | | |

## F57R37, $n_e$=1400 1/min — 600 Nm

| $n_a$ rpm | $M_{amax}$ Nm | $F_{Ra}$ N | $\varphi_{(/R)}$ ' | i | DR63S DR63M DR63L DRS71S DRS71M | DRN80M DRN90S | DRN90L | DRN100LS DRN100L |
|---|---|---|---|---|---|---|---|---|
| 3 3 | | | | | | | | |
| 0.09 | 600 | 9200 | - | 14832 | | | | |
| 0.10 | 600 | 9200 | - | 13604 | | | | |
| 0.11 | 600 | 9200 | - | 12602 | | | | |
| 0.12 | 600 | 9200 | - | 11252 | | | | |
| 0.14 | 600 | 9200 | - | 9986 | | | | |
| 0.16 | 600 | 9200 | - | 8787 | | | | |
| 0.18 | 600 | 9200 | - | 7908 | | | | |
| 0.20 | 600 | 9200 | - | 6913 | | | | |
| 0.23 | 600 | 9200 | - | 6030 | | | | |
| 0.26 | 600 | 9200 | - | 5289 | | | | |
| 0.30 | 600 | 9200 | - | 4654 | | | | |
| 0.34 | 600 | 9200 | - | 4060 | | | | |
| 0.39 | 600 | 9200 | - | 3564 | | | | |
| 0.44 | 600 | 9200 | - | 3161 | | | | |
| 0.51 | 600 | 9200 | - | 2737 | | | | |
| 0.58 | 600 | 9200 | - | 2409 | | | | |
| 0.66 | 600 | 9200 | - | 2131 | | | | |
| 0.76 | 600 | 9200 | - | 1840 | | | | |

21933170/DE – 11/2015

| F57R37, $n_e$=1400 1/min | | | | | | | | 600 Nm |
|---|---|---|---|---|---|---|---|---|
| $n_a$ rpm | $M_{amax}$ Nm | $F_{Ra}$ N | $\varphi_{(/R)}$ ' | i | DR63S DR63M DR63L DRS71S DRS71M | DRN80M DRN90S | DRN90L | DRN100LS DRN100L |
| 0.86 | 600 | 9200 | - | 1623 | | | | |
| 0.97 | 600 | 9200 | - | 1439 | | | | |
| 1.1 | 600 | 9200 | - | 1238 | | | | |
| 2 3 | | | | | | | | |
| 0.49 | 600 | 9200 | - | 2854 | | | | |
| 0.54 | 600 | 9200 | - | 2576 | | | | |
| 0.62 | 600 | 9200 | - | 2266 | | | | |
| 0.70 | 600 | 9200 | - | 2012 | | | | |
| 0.78 | 600 | 9200 | - | 1791 | | | | |
| 0.87 | 600 | 9200 | - | 1617 | | | | |
| 0.98 | 600 | 9200 | - | 1422 | | | | |
| 1.1 | 600 | 9200 | - | 1243 | | | | |
| 1.3 | 600 | 9200 | - | 1066 | | | | |
| 1.5 | 600 | 9200 | - | 949 | | | | |
| 1.6 | 600 | 9200 | - | 856 | | | | |
| 1.9 | 600 | 9200 | - | 749 | | | | |
| 2.1 | 600 | 9200 | - | 658 | | | | |
| 2.6 | 600 | 9200 | - | 549 | | | | |
| 2.9 | 600 | 9200 | - | 483 | | | | |
| 3 2 | | | | | | | | |
| 1.3 | 600 | 9200 | - | 1106 | | | | |
| 1.4 | 600 | 9200 | - | 967 | | | | |
| 1.6 | 600 | 9200 | - | 851 | | | | |
| 1.9 | 600 | 9200 | - | 738 | | | | |
| 2.2 | 600 | 9200 | - | 646 | | | | |
| 2.5 | 600 | 9200 | - | 558 | | | | |
| 2.8 | 600 | 9200 | - | 506 | | | | |
| 3.1 | 600 | 9200 | - | 452 | | | | |
| 3.6 | 600 | 9200 | - | 386 | | | | |
| 4.1 | 600 | 9200 | - | 338 | | | | |
| 5.5 | 600 | 9200 | - | 255 | | | | |
| 7.0 | 600 | 9200 | - | 201 | | | | |
| 7.7 | 600 | 9200 | - | 181 | | | | |
| 9.0 | 600 | 9200 | - | 155 | | | | |
| 2 2 | | | | | | | | |
| 3.3 | 600 | 9200 | - | 426 | | | | |
| 3.7 | 600 | 9200 | - | 382 | | | | |
| 4.2 | 600 | 9200 | - | 330 | | | | |
| 4.7 | 600 | 9200 | - | 298 | | | | |
| 5.3 | 600 | 9200 | - | 262 | | | | |
| 6.2 | 600 | 9200 | - | 226 | | | | |
| 7.0 | 600 | 9200 | - | 200 | | | | |
| 8.2 | 600 | 9200 | - | 170 | | | | |
| 9.2 | 600 | 9200 | - | 152 | | | | |
| 10 | 600 | 9200 | - | 134 | | | | |



21933170/DE – 11/2015

## F67, $n_e$=1400 1/min — 820 Nm

| $n_a$ rpm | $M_{amax}$ Nm | $F_{Ra}$ N | $\varphi_{(/R)}$ ' | i | DR63S DR63M DR63L DRS71S DRS71M | DRN80M DRN90S | DRN90L | DRN100LS DRN100L | DRN112M | DRN132S DRN132M |
|---|---|---|---|---|---|---|---|---|---|---|
| | | | | | | 3 | | | | |
| 6.1 | 820 | 10300 | 5.7 | 228.99 | | | | | | |
| 7.2 | 820 | 10300 | 5.8 | 195.39 | | | | | | |
| 8.2 | 820 | 10300 | 5.7 | 170.85 | | | | | | |
| 8.6 | 820 | 10300 | 5.7 | 162.31 | | | | | | |
| 9.8 | 820 | 10300 | 5.8 | 142.40 | | | | | | |
| 12 | 820 | 10300 | 5.8 | 120.79 | | | | | | |
| 13 | 820 | 10300 | 5.8 | 109.04 | | | | | | |
| 15 | 820 | 10300 | 5.8 | 95.94 | | | | | | |
| 15 | 820 | 10300 | 5.8 | 90.59 | | | | | | |
| 18 | 820 | 10300 | 6.3 | 79.76 | | | | | | |
| 21 | 820 | 10300 | 6.3 | 67.65 | | | | | | |
| 23 | 820 | 10300 | 6.3 | 61.07 | | | | | | |
| 26 | 820 | 10300 | 6.3 | 53.73 | | | | | | |
| 28 | 820 | 10300 | 6.3 | 50.74 | | | | | | |
| 32 | 820 | 10300 | 6.3 | 43.20 | | | | | | |
| 36 | 780 | 10700 | 6.4 | 39.26 | | | | | | |
| 41 | 740 | 11000 | 6.5 | 34.01 | | | | | | |
| | | | | | | 2 | | | | |
| 39 | 820 | 10300 | 5.3 | 36.30 | | | | | | |
| 44 | 820 | 10300 | 5.4 | 32.08 | | | | | | |
| 51 | 820 | 10300 | 5.4 | 27.41 | | | | | | |
| 56 | 820 | 10300 | 5.4 | 25.13 | | | | | | |
| 63 | 820 | 10300 | 5.5 | 22.05 | | | | | | |
| 67 | 820 | 10300 | 5.5 | 20.90* | | | | | | |
| 77 | 820 | 10300 | 5.6 | 18.29 | | | | | | |
| 85 | 820 | 10300 | 5.8 | 16.48 | | | | | | |
| 97 | 820 | 10300 | 5.7 | 14.46 | | | | | | |
| 110 | 820 | 10300 | 5.8 | 12.76 | | | | | | |
| 124 | 820 | 10300 | 6 | 11.31 | | | | | | |
| 145 | 820 | 10300 | 6.1 | 9.66 | | | | | | |
| 154 | 530 | 11400 | 8 | 9.08 | | | | | | |
| 163 | 570 | 10900 | 8.1 | 8.60 | | | | | | |
| 186 | 610 | 10100 | 8.2 | 7.53 | | | | | | |
| 206 | 620 | 9660 | 8.7 | 6.78 | | | | | | |
| 235 | 610 | 9200 | 8.6 | 5.95 | | | | | | |
| 267 | 590 | 8850 | 8.8 | 5.25 | | | | | | |
| 300 | 560 | 8590 | 9.3 | 4.66 | | | | | | |
| 353 | 500 | 8390 | 9.6 | 3.97 | | | | | | |

## F67R37, $n_e$=1400 1/min — 820 Nm

| $n_a$ rpm | $M_{amax}$ Nm | $F_{Ra}$ N | $\varphi_{(/R)}$ ' | i | DR63S DR63M DR63L DRS71S DRS71M | DRN80M DRN90S | DRN90L | DRN100LS DRN100L |
|---|---|---|---|---|---|---|---|---|
| | | | | | | 3 3 | | |
| 0.07 | 820 | 10300 | - | 19199 | | | | |
| 0.08 | 820 | 10300 | - | 17610 | | | | |

21933170/DE – 11/2015

## F67R37, $n_e$=1400 1/min — 820 Nm

| $n_a$ rpm | $M_{amax}$ Nm | $F_{Ra}$ N | $\varphi_{(/R)}$ ' | i | DR63S DR63M DR63L DRS71S DRS71M | DRN80M DRN90S | DRN90L | DRN100LS DRN100L |
|---|---|---|---|---|---|---|---|---|
| 0.09 | 820 | 10300 | - | 14992 | | | | |
| 0.11 | 820 | 10300 | - | 12926 | | | | |
| 0.12 | 820 | 10300 | - | 11480 | | | | |
| 0.14 | 820 | 10300 | - | 10220 | | | | |
| 0.16 | 820 | 10300 | - | 8933 | | | | |
| 0.18 | 820 | 10300 | - | 7940 | | | | |
| 0.20 | 820 | 10300 | - | 7096 | | | | |
| 0.23 | 820 | 10300 | - | 6080 | | | | |
| 0.26 | 820 | 10300 | - | 5341 | | | | |
| 0.30 | 820 | 10300 | - | 4690 | | | | |
| 0.34 | 820 | 10300 | - | 4091 | | | | |
| 0.39 | 820 | 10300 | - | 3574 | | | | |
| 0.45 | 820 | 10300 | - | 3133 | | | | |
| 0.51 | 820 | 10300 | - | 2756 | | | | |
| 0.57 | 820 | 10300 | - | 2439 | | | | |
| 2 3 | | | | | | | | |
| 0.41 | 820 | 10300 | - | 3377 | | | | |
| 0.48 | 820 | 10300 | - | 2912 | | | | |
| 0.52 | 820 | 10300 | - | 2714 | | | | |
| 0.59 | 820 | 10300 | - | 2372 | | | | |
| 0.66 | 820 | 10300 | - | 2126 | | | | |
| 0.75 | 820 | 10300 | - | 1859 | | | | |
| 0.86 | 820 | 10300 | - | 1631 | | | | |
| 0.97 | 820 | 10300 | - | 1437 | | | | |
| 1.1 | 820 | 10300 | - | 1256 | | | | |
| 1.2 | 820 | 10300 | - | 1126 | | | | |
| 1.4 | 820 | 10300 | - | 984 | | | | |
| 1.6 | 820 | 10300 | - | 864 | | | | |
| 1.9 | 820 | 10300 | - | 722 | | | | |
| 2.2 | 820 | 10300 | - | 634 | | | | |
| 2.6 | 820 | 10300 | - | 539 | | | | |
| 3 2 | | | | | | | | |
| 0.66 | 820 | 10300 | - | 2106 | | | | |
| 0.74 | 820 | 10300 | - | 1884 | | | | |
| 0.86 | 820 | 10300 | - | 1635 | | | | |
| 0.98 | 820 | 10300 | - | 1429 | | | | |
| 1.1 | 820 | 10300 | - | 1271 | | | | |
| 1.3 | 820 | 10300 | - | 1102 | | | | |
| 1.4 | 820 | 10300 | - | 970 | | | | |
| 1.6 | 820 | 10300 | - | 858 | | | | |
| 1.9 | 820 | 10300 | - | 755 | | | | |
| 2.2 | 820 | 10300 | - | 641 | | | | |
| 2.4 | 820 | 10300 | - | 572 | | | | |
| 2.8 | 820 | 10300 | - | 509 | | | | |
| 3.2 | 820 | 10300 | - | 437 | | | | |
| 3.6 | 820 | 10300 | - | 384 | | | | |
| 4.1 | 820 | 10300 | - | 338 | | | | |
| 4.6 | 820 | 10300 | - | 305 | | | | |
| 5.4 | 820 | 10300 | - | 257 | | | | |

21933170/DE – 11/2015

## F67R37, $n_e$=1400 1/min — 820 Nm

| $n_a$ rpm | $M_{amax}$ Nm | $F_{Ra}$ N | $\varphi_{(/R)}$ ' | i | DR63S DR63M DR63L DRS71S DRS71M | DRN80M DRN90S | DRN90L | DRN100LS DRN100L |
|---|---|---|---|---|---|---|---|---|
| 6.1 | 820 | 10300 | - | 231 | | | | |
| 6.8 | 820 | 10300 | - | 205 | | | | |
| 8.0 | 820 | 10300 | - | 175 | | | | |
| 2 2 | | | | | | | | |
| 2.8 | 820 | 10300 | - | 500 | | | | |
| 3.1 | 820 | 10300 | - | 454 | | | | |
| 3.6 | 820 | 10300 | - | 392 | | | | |
| 4.2 | 820 | 10300 | - | 333 | | | | |
| 4.7 | 820 | 10300 | - | 297 | | | | |
| 5.4 | 820 | 10300 | - | 261 | | | | |
| 5.9 | 820 | 10300 | - | 238 | | | | |
| 7.0 | 820 | 10300 | - | 200 | | | | |
| 8.0 | 820 | 10300 | - | 176 | | | | |

## F77, $n_e$=1400 1/min — 1500 Nm

| $n_a$ rpm | $M_{amax}$ Nm | $F_{Ra}$ N | $\varphi_{(/R)}$ ' | i | DR63S DR63M DR63L DRS71S DRS71M | DRN80M DRN90S | DRN90L | DRN100LS DRN100L | DRN112M | DRN132S DRN132M | DRN132L DRN160M DRN160L |
|---|---|---|---|---|---|---|---|---|---|---|---|
| 3 | | | | | | | | | | | |
| 5.0 | 1500 | 15700 | 5.4 | 281.71 | | | | | | | |
| 5.3 | 1500 | 15700 | 5.4 | 262.93 | | | | | | | |
| 6.2 | 1500 | 15700 | 5.4 | 225.79 | | | | | | | |
| 7.1 | 1500 | 15700 | 5.4 | 198.31 | | | | | | | |
| 7.4 | 1500 | 15700 | 5.4 | 188.40 | | | | | | | |
| 8.4 | 1500 | 15700 | 5.5 | 166.47 | | | | | | | |
| 9.8 | 1500 | 15700 | 5.5 | 142.27 | | | | | | | |
| 11 | 1500 | 15700 | 5.5 | 130.42 | | | | | | | |
| 12 | 1500 | 15700 | 5.5 | 114.45 | | | | | | | |
| 13 | 1500 | 15700 | 5.5 | 108.46* | | | | | | | |
| 15 | 1500 | 15700 | 5.5 | 94.93 | | | | | | | |
| 16 | 1500 | 15700 | 5.5 | 85.52 | | | | | | | |
| 19 | 1500 | 15700 | 5.5 | 75.02 | | | | | | | |
| 19 | 1500 | 15700 | 5.9 | 72.50 | | | | | | | |
| 21 | 1500 | 15700 | 5.9 | 66.46 | | | | | | | |
| 24 | 1500 | 15700 | 6 | 58.32 | | | | | | | |
| 25 | 1500 | 15700 | 6 | 55.27 | | | | | | | |
| 29 | 1500 | 15700 | 6 | 48.37 | | | | | | | |
| 32 | 1500 | 15700 | 6.1 | 43.58 | | | | | | | |
| 37 | 1500 | 15700 | 6 | 38.23 | | | | | | | |
| 41 | 1500 | 15700 | 6.1 | 33.74 | | | | | | | |
| 47 | 1500 | 15700 | 6.1 | 29.91 | | | | | | | |
| 55 | 1450 | 16100 | 6.2 | 25.54 | | | | | | | |
| 2 | | | | | | | | | | | |
| 38 | 1110 | 17900 | 4.9 | 36.58 | | | | | | | |
| 44 | 1380 | 16500 | 4.9 | 31.51 | | | | | | | |
| 49 | 1430 | 16200 | 4.9 | 28.75 | | | | | | | |
| 55 | 1500 | 15700 | 4.9 | 25.50* | | | | | | | |

21933170/DE – 11/2015

## F77, $n_e$=1400 1/min — 1500 Nm

| $n_a$ rpm | $M_{amax}$ Nm | $F_{Ra}$ N | $\varphi_{(/R)}$ ' | i | DR63S DR63M DR63L DRS71S DRS71M | DRN80M DRN90S | DRN90L | DRN100LS DRN100L | DRN112M | DRN132S DRN132M | DRN132L DRN160M DRN160L |
|---|---|---|---|---|---|---|---|---|---|---|---|
| 65 | 1500 | 15700 | 5 | 21.43 | | | | | | | |
| 71 | 1500 | 15700 | 5.1 | 19.70 | | | | | | | |
| 80 | 1500 | 15700 | 5.2 | 17.49 | | | | | | | |
| 90 | 1500 | 15700 | 5.2 | 15.64* | | | | | | | |
| 100 | 1500 | 15700 | 5.4 | 14.06 | | | | | | | |
| 115 | 1500 | 14900 | 5.4 | 12.20 | | | | | | | |
| 128 | 1500 | 14200 | 5.5 | 10.93 | | | | | | | |
| 151 | 1080 | 13800 | 7.1 | 9.30 | | | | | | | |
| 169 | 1080 | 13100 | 7.1 | 8.26 | | | | | | | |
| 189 | 1080 | 12500 | 7.2 | 7.39 | | | | | | | |
| 211 | 1080 | 12000 | 7.5 | 6.64 | | | | | | | |
| 243 | 1080 | 11300 | 7.7 | 5.76 | | | | | | | |
| 271 | 1080 | 10700 | 7.8 | 5.16 | | | | | | | |
| 327 | 1010 | 10200 | 8.1 | 4.28 | | | | | | | |

## F77R37, $n_e$=1400 1/min — 1500 Nm

| $n_a$ rpm | $M_{amax}$ Nm | $F_{Ra}$ N | $\varphi_{(/R)}$ ' | i | DR63S DR63M DR63L DRS71S DRS71M | DRN80M DRN90S | DRN90L | DRN100LS DRN100L |
|---|---|---|---|---|---|---|---|---|
| 3 3 | | | | | | | | |
| 0.07 | 1500 | 15700 | - | 19180 | | | | |
| 0.08 | 1500 | 15700 | - | 17593 | | | | |
| 0.09 | 1500 | 15700 | - | 16128 | | | | |
| 0.09 | 1500 | 15700 | - | 14978 | | | | |
| 0.10 | 1500 | 15700 | - | 13731 | | | | |
| 0.12 | 1500 | 15700 | - | 12049 | | | | |
| 0.13 | 1500 | 15700 | - | 11035 | | | | |
| 0.14 | 1500 | 15700 | - | 9683 | | | | |
| 0.17 | 1500 | 15700 | - | 8464 | | | | |
| 0.19 | 1500 | 15700 | - | 7520 | | | | |
| 0.21 | 1500 | 15700 | - | 6580 | | | | |
| 0.24 | 1500 | 15700 | - | 5808 | | | | |
| 0.28 | 1500 | 15700 | - | 5026 | | | | |
| 0.32 | 1500 | 15700 | - | 4435 | | | | |
| 0.37 | 1500 | 15700 | - | 3832 | | | | |
| 0.41 | 1500 | 15700 | - | 3381 | | | | |
| 0.47 | 1500 | 15700 | - | 2978 | | | | |
| 0.54 | 1500 | 15700 | - | 2613 | | | | |
| 0.61 | 1500 | 15700 | - | 2284 | | | | |
| 0.69 | 1500 | 15700 | - | 2029 | | | | |
| 2 3 | | | | | | | | |
| 0.28 | 1110 | 17900 | - | 4931 | | | | |
| 0.31 | 1110 | 17900 | - | 4523 | | | | |
| 0.36 | 1110 | 17900 | - | 3851 | | | | |
| 0.42 | 1110 | 17900 | - | 3320 | | | | |
| 0.45 | 1110 | 17900 | - | 3095 | | | | |
| 0.52 | 1110 | 17900 | - | 2705 | | | | |
| 0.55 | 1110 | 17900 | - | 2536 | | | | |

21933170/DE – 11/2015

## F77R37, $n_e$=1400 1/min — 1500 Nm

| $n_a$ rpm | $M_{amax}$ Nm | $F_{Ra}$ N | $\varphi_{(/R)}$ ' | i | DR63S DR63M DR63L DRS71S DRS71M | DRN80M DRN90S | DRN90L | DRN100LS DRN100L |
|---|---|---|---|---|---|---|---|---|
| 0.63 | 1110 | 17900 | - | 2238 | | | | |
| 0.69 | 1110 | 17900 | - | 2039 | | | | |
| 0.80 | 1110 | 17900 | - | 1759 | | | | |
| 0.85 | 1110 | 17900 | - | 1639 | | | | |
| 0.98 | 1110 | 17900 | - | 1433 | | | | |
| 1.0 | 1110 | 17900 | - | 1343 | | | | |
| 1.2 | 1110 | 17900 | - | 1185 | | | | |
| 1.3 | 1110 | 17900 | - | 1051 | | | | |
| 1.6 | 1110 | 17900 | - | 893 | | | | |
| 3 2 | | | | | | | | |
| 0.81 | 1500 | 15700 | - | 1728 | | | | |
| 0.91 | 1500 | 15700 | - | 1544 | | | | |
| 1.0 | 1500 | 15700 | - | 1354 | | | | |
| 1.2 | 1500 | 15700 | - | 1200 | | | | |
| 1.3 | 1500 | 15700 | - | 1053 | | | | |
| 1.5 | 1500 | 15700 | - | 910 | | | | |
| 1.7 | 1500 | 15700 | - | 810 | | | | |
| 2.0 | 1500 | 15700 | - | 710 | | | | |
| 2.3 | 1500 | 15700 | - | 615* | | | | |
| 2.6 | 1500 | 15700 | - | 538 | | | | |
| 2.9 | 1500 | 15700 | - | 480 | | | | |
| 3.4 | 1500 | 15700 | - | 413 | | | | |
| 3.8 | 1500 | 15700 | - | 367 | | | | |
| 4.3 | 1500 | 15700 | - | 323 | | | | |
| 5.0 | 1500 | 15700 | - | 280 | | | | |
| 5.7 | 1500 | 15700 | - | 247 | | | | |
| 6.3 | 1500 | 15700 | - | 221 | | | | |
| 7.0 | 1500 | 15700 | - | 199 | | | | |
| 2 2 | | | | | | | | |
| 1.7 | 1110 | 17900 | - | 815 | | | | |
| 2.0 | 1110 | 17900 | - | 706 | | | | |
| 2.1 | 1110 | 17900 | - | 660 | | | | |
| 2.5 | 1110 | 17900 | - | 571 | | | | |
| 2.9 | 1110 | 17900 | - | 485 | | | | |
| 3.2 | 1110 | 17900 | - | 433 | | | | |
| 3.8 | 1110 | 17900 | - | 370 | | | | |
| 4.0 | 1110 | 17900 | - | 346 | | | | |
| 4.8 | 1110 | 17900 | - | 292 | | | | |

## F87, $n_e$=1400 1/min — 3000 Nm

| $n_a$ rpm | $M_{amax}$ Nm | $F_{Ra}$ N | $\varphi_{(/R)}$ ' | i | DRS71M | DRN80M DRN90S | DRN90L | DRN100LS DRN100L | DRN112M | DRN132S DRN132M | DRN132L DRN160M DRN160L | DRN180M DRN180L | DRN200L |
|---|---|---|---|---|---|---|---|---|---|---|---|---|---|
| 3 | | | | | | | | | | | | | |
| 5.2 | 3000 | 19800 | 7 | 270.68 | | | | | | | | | |
| 5.5 | 3000 | 19800 | 7 | 255.37 | | | | | | | | | |
| 6.1 | 3000 | 19800 | 7 | 228.93 | | | | | | | | | |
| 7.1 | 3000 | 19800 | 7 | 197.20 | | | | | | | | | |
| 7.8 | 3000 | 19800 | 7 | 179.97 | | | | | | | | | |

21933170/DE – 11/2015

## F87, $n_e$=1400 1/min — 3000 Nm

| $n_a$ rpm | $M_{amax}$ Nm | $F_{Ra}$ N | $\varphi_{(/R)}$ ' | i | DRS71M | DRN80M DRN90S | DRN90L | DRN100LS DRN100L | DRN112M | DRN132S DRN132M | DRN132L DRN160M DRN160L | DRN180M DRN180L | DRN200L |
|---|---|---|---|---|---|---|---|---|---|---|---|---|---|
| 8.8 | 3000 | 19800 | 7 | 159.61 | | | | | | | | | |
| 10 | 3000 | 19800 | 7 | 134.16 | | | | | | | | | |
| 11 | 3000 | 19800 | 7 | 123.29 | | | | | | | | | |
| 13 | 3000 | 19800 | 7.1 | 109.49 | | | | | | | | | |
| 14 | 3000 | 19800 | 7.1 | 97.89 | | | | | | | | | |
| 16 | 3000 | 19800 | 7.1 | 88.01 | | | | | | | | | |
| 18 | 3000 | 19800 | 7.1 | 76.39 | | | | | | | | | |
| 20 | 3000 | 19600 | 7.1 | 68.40 | | | | | | | | | |
| 25 | 3000 | 17700 | 7.1 | 56.75 | | | | | | | | | |
| 28 | 2940 | 16800 | 7.5 | 50.36 | | | | | | | | | |
| 31 | 2820 | 16200 | 7.5 | 45.28 | | | | | | | | | |
| 36 | 2720 | 15400 | 7.5 | 39.30 | | | | | | | | | |
| 40 | 2610 | 14900 | 7.6 | 35.19 | | | | | | | | | |
| 48 | 2510 | 13800 | 7.6 | 29.20 | | | | | | | | | |
| 2 | | | | | | | | | | | | | |
| 41 | 2610 | 14600 | 6.6 | 33.92 | | | | | | | | | |
| 49 | 2450 | 13900 | 6.6 | 28.78 | | | | | | | | | |
| 53 | 3000 | 11100 | 6.8 | 26.50 | | | | | | | | | |
| 59 | 3000 | 10300 | 6.8 | 23.68 | | | | | | | | | |
| 66 | 3000 | 9520 | 6.8 | 21.32* | | | | | | | | | |
| 73 | 3000 | 8840 | 6.9 | 19.31 | | | | | | | | | |
| 82 | 3000 | 8040 | 6.9 | 17.12 | | | | | | | | | |
| 90 | 3000 | 7390 | 7 | 15.48 | | | | | | | | | |
| 107 | 3000 | 6370 | 7 | 13.12* | | | | | | | | | |
| 122 | 3000 | 5580 | 7.1 | 11.46 | | | | | | | | | |
| 146 | 2880 | 5050 | 7.2 | 9.58 | | | | | | | | | |
| 169 | 1530 | 8890 | 6.7 | 8.29 | | | | | | | | | |
| 190 | 1530 | 8280 | 6.8 | 7.35 | | | | | | | | | |
| 211 | 1530 | 7790 | 6.8 | 6.65 | | | | | | | | | |
| 249 | 1530 | 7020 | 7 | 5.63 | | | | | | | | | |
| 285 | 1530 | 6430 | 7.1 | 4.92 | | | | | | | | | |
| 340 | 1460 | 5980 | 7.4 | 4.12 | | | | | | | | | |

## F87R57, $n_e$=1400 1/min — 3000 Nm

| $n_a$ rpm | $M_{amax}$ Nm | $F_{Ra}$ N | $\varphi_{(/R)}$ ' | i | DR63S DR63M DR63L DRS71S DRS71M | DRN80M DRN90S | DRN90L | DRN100LS DRN100L | DRN112M | DRN132S DRN132M |
|---|---|---|---|---|---|---|---|---|---|---|
| 3 3 | | | | | | | | | | |
| 0.06 | 3000 | 19800 | - | 23042 | | | | | | |
| 0.07 | 3000 | 19800 | - | 20462 | | | | | | |
| 0.08 | 3000 | 19800 | - | 18238 | | | | | | |
| 0.09 | 3000 | 19800 | - | 15877 | | | | | | |
| 0.10 | 3000 | 19800 | - | 14099 | | | | | | |
| 0.11 | 3000 | 19800 | - | 12205 | | | | | | |
| 0.13 | 3000 | 19800 | - | 10433 | | | | | | |
| 0.15 | 3000 | 19800 | - | 9381 | | | | | | |
| 0.17 | 3000 | 19800 | - | 8142 | | | | | | |
| 0.20 | 3000 | 19800 | - | 7100 | | | | | | |
| 0.22 | 3000 | 19800 | - | 6273 | | | | | | |

21933170/DE – 11/2015

| F87R57, $n_e$=1400 1/min | | | | | | | | | | 3000 Nm |
|---|---|---|---|---|---|---|---|---|---|---|
| $n_a$ rpm | $M_{amax}$ Nm | $F_{Ra}$ N | $\varphi_{(/R)}$ ' | i | DR63S DR63M DR63L DRS71S DRS71M | DRN80M DRN90S | DRN90L | DRN100LS DRN100L | DRN112M | DRN132S DRN132M |
| 0.25 | 3000 | 19800 | - | 5510 | | | | | | |
| 0.28 | 3000 | 19800 | - | 4954 | | | | | | |
| 0.33 | 3000 | 19800 | - | 4245 | | | | | | |
| 0.38 | 3000 | 19800 | - | 3721 | | | | | | |
| 2 3 | | | | | | | | | | |
| 0.28 | 3000 | 19800 | - | 4952 | | | | | | |
| 0.31 | 3000 | 19800 | - | 4562 | | | | | | |
| 0.36 | 3000 | 19800 | - | 3919 | | | | | | |
| 0.40 | 3000 | 19800 | - | 3503 | | | | | | |
| 0.44 | 3000 | 19800 | - | 3196 | | | | | | |
| 0.49 | 3000 | 19800 | - | 2857 | | | | | | |
| 0.55 | 3000 | 19800 | - | 2524 | | | | | | |
| 0.66 | 3000 | 19800 | - | 2134 | | | | | | |
| 0.73 | 3000 | 19800 | - | 1913* | | | | | | |
| 0.82 | 3000 | 19800 | - | 1717 | | | | | | |
| 0.95 | 3000 | 19800 | - | 1476 | | | | | | |
| 1.1 | 3000 | 19800 | - | 1278 | | | | | | |
| 1.2 | 3000 | 19800 | - | 1142 | | | | | | |
| 1.4 | 3000 | 19800 | - | 988 | | | | | | |
| 1.6 | 3000 | 19800 | - | 883 | | | | | | |
| 1.9 | 3000 | 19800 | - | 748 | | | | | | |
| 3 2 | | | | | | | | | | |
| 0.43 | 3000 | 19800 | - | 3244 | | | | | | |
| 0.49 | 3000 | 19800 | - | 2881 | | | | | | |
| 0.54 | 3000 | 19800 | - | 2576 | | | | | | |
| 0.64 | 3000 | 19800 | - | 2199 | | | | | | |
| 0.73 | 3000 | 19800 | - | 1930 | | | | | | |
| 0.82 | 3000 | 19800 | - | 1709 | | | | | | |
| 0.94 | 3000 | 19800 | - | 1493 | | | | | | |
| 1.1 | 3000 | 19800 | - | 1300 | | | | | | |
| 1.2 | 3000 | 19800 | - | 1148 | | | | | | |
| 1.4 | 3000 | 19800 | - | 1010 | | | | | | |
| 1.6 | 3000 | 19800 | - | 887 | | | | | | |
| 1.8 | 3000 | 19800 | - | 780 | | | | | | |
| 2.1 | 3000 | 19800 | - | 674 | | | | | | |
| 2.3 | 3000 | 19800 | - | 609 | | | | | | |
| 2.7 | 3000 | 19800 | - | 515 | | | | | | |
| 3.1 | 3000 | 19800 | - | 452 | | | | | | |
| 4.1 | 3000 | 19800 | - | 345 | | | | | | |
| 4.7 | 3000 | 19800 | - | 300 | | | | | | |
| 5.6 | 3000 | 19800 | - | 249 | | | | | | |
| 2 2 | | | | | | | | | | |
| 2.1 | 3000 | 19800 | - | 662 | | | | | | |
| 2.4 | 3000 | 19800 | - | 592 | | | | | | |
| 2.7 | 3000 | 19800 | - | 519 | | | | | | |
| 3.0 | 3000 | 19800 | - | 468 | | | | | | |
| 3.5 | 3000 | 19800 | - | 398 | | | | | | |
| 4.0 | 3000 | 19800 | - | 350 | | | | | | |
| 4.4 | 3000 | 19800 | - | 315* | | | | | | |

21933170/DE – 11/2015

## F87R57, $n_e$=1400 1/min — 3000 Nm

| $n_a$ rpm | $M_{amax}$ Nm | $F_{Ra}$ N | $\varphi_{(/R)}$ ' | i | DR63S DR63M DR63L DRS71S DRS71M | DRN80M DRN90S | DRN90L | DRN100LS DRN100L | DRN112M | DRN132S DRN132M |
|---|---|---|---|---|---|---|---|---|---|---|
| 5.0 | 3000 | 19800 | - | 281 | | | | | | |
| 5.8 | 3000 | 19800 | - | 240 | | | | | | |
| 6.6 | 3000 | 19800 | - | 211 | | | | | | |
| 7.3 | 3000 | 19800 | - | 193 | | | | | | |

## F97, $n_e$=1400 1/min — 4300 Nm

| $n_a$ rpm | $M_{amax}$ Nm | $F_{Ra}$ N | $\varphi_{(/R)}$ ' | i | DRN80M DRN90S | DRN90L | DRN100LS DRN100L | DRN112M | DRN132S DRN132M | DRN132L DRN160M DRN160L | DRN180M DRN180L | DRN200L DRN225S |
|---|---|---|---|---|---|---|---|---|---|---|---|---|
| 3 | | | | | | | | | | | | |
| 5.1 | 4300 | 29900 | 6 | 276.77 | | | | | | | | |
| 5.5 | 4300 | 29900 | 6 | 253.41 | | | | | | | | |
| 6.3 | 4300 | 29900 | 6 | 223.88 | | | | | | | | |
| 7.4 | 4300 | 29900 | 6 | 189.92 | | | | | | | | |
| 8.0 | 4300 | 29900 | 6 | 174.87 | | | | | | | | |
| 9.0 | 4300 | 29900 | 6 | 156.30 | | | | | | | | |
| 9.9 | 4300 | 29900 | 6 | 140.71 | | | | | | | | |
| 11 | 4300 | 29900 | 6 | 127.42 | | | | | | | | |
| 12 | 4300 | 29900 | 6 | 112.99 | | | | | | | | |
| 14 | 4300 | 29900 | 6 | 102.16 | | | | | | | | |
| 14 | 4300 | 29900 | 6.2 | 97.58 | | | | | | | | |
| 16 | 4300 | 29900 | 6.3 | 89.85 | | | | | | | | |
| 16 | 4300 | 29900 | 6 | 86.59 | | | | | | | | |
| 17 | 4300 | 29900 | 6.3 | 80.31 | | | | | | | | |
| 19 | 4300 | 29900 | 6 | 75.63 | | | | | | | | |
| 19 | 4300 | 29900 | 6.3 | 72.29 | | | | | | | | |
| 21 | 4300 | 29000 | 6.3 | 65.47 | | | | | | | | |
| 24 | 4300 | 27200 | 6.3 | 58.06 | | | | | | | | |
| 27 | 4300 | 25800 | 6.3 | 52.49 | | | | | | | | |
| 31 | 4300 | 23600 | 6.4 | 44.49 | | | | | | | | |
| 36 | 4300 | 21900 | 6.4 | 38.86 | | | | | | | | |
| 43 | 4300 | 19800 | 6.4 | 32.50 | | | | | | | | |
| 2 | | | | | | | | | | | | |
| 32 | 3070 | 27600 | 5.6 | 43.28 | | | | | | | | |
| 38 | 3070 | 25500 | 5.6 | 36.64 | | | | | | | | |
| 41 | 4300 | 20300 | 5.7 | 33.91 | | | | | | | | |
| 46 | 4300 | 19000 | 5.8 | 30.39 | | | | | | | | |
| 51 | 4300 | 17900 | 5.8 | 27.44* | | | | | | | | |
| 56 | 4300 | 16800 | 5.8 | 24.92 | | | | | | | | |
| 63 | 4300 | 15600 | 5.9 | 22.11 | | | | | | | | |
| 70 | 4300 | 14600 | 5.8 | 20.07 | | | | | | | | |
| 81 | 4300 | 13200 | 5.9 | 17.25* | | | | | | | | |
| 93 | 4300 | 11900 | 5.9 | 15.06 | | | | | | | | |
| 110 | 4300 | 10500 | 6 | 12.77 | | | | | | | | |
| 125 | 4100 | 10000 | 6 | 11.16 | | | | | | | | |
| 155 | 2360 | 13400 | 8.6 | 9.06 | | | | | | | | |
| 170 | 2360 | 12600 | 8.5 | 8.22 | | | | | | | | |
| 198 | 2360 | 11500 | 8.6 | 7.07 | | | | | | | | |
| 227 | 2250 | 11100 | 8.7 | 6.17 | | | | | | | | |

21933170/DE – 11/2015

## F97, $n_e$=1400 1/min — 4300 Nm

| $n_a$ rpm | $M_{amax}$ Nm | $F_{Ra}$ N | $\varphi_{(/R)}$ ' | i | DRN80M DRN90S | DRN90L | DRN100LS DRN100L | DRN112M | DRN132S DRN132M | DRN132L DRN160M DRN160L | DRN180M DRN180L | DRN200L DRN225S |
|---|---|---|---|---|---|---|---|---|---|---|---|---|
| 268 | 2150 | 10400 | 8.8 | 5.23 | | | | | | | | |
| 306 | 2050 | 9950 | 9 | 4.57 | | | | | | | | |
| 362 | 1800 | 9960 | 9 | 3.87 | | | | | | | | |

## F97R57, $n_e$=1400 1/min — 4300 Nm

| $n_a$ rpm | $M_{amax}$ Nm | $F_{Ra}$ N | $\varphi_{(/R)}$ ' | i | DR63S DR63M DR63L DRS71S DRS71M | DRN80M DRN90S | DRN90L | DRN100LS DRN100L | DRN112M | DRN132S DRN132M |
|---|---|---|---|---|---|---|---|---|---|---|
| | | | | | | 3 3 | | | | |
| 0.05 | 4300 | 29900 | - | 29211 | | | | | | |
| 0.05 | 4300 | 29900 | - | 26911 | | | | | | |
| 0.06 | 4300 | 29900 | - | 23814 | | | | | | |
| 0.07 | 4300 | 29900 | - | 20813 | | | | | | |
| 0.08 | 4300 | 29900 | - | 18119* | | | | | | |
| 0.09 | 4300 | 29900 | - | 15472 | | | | | | |
| 0.10 | 4300 | 29900 | - | 14022 | | | | | | |
| 0.11 | 4300 | 29900 | - | 12324 | | | | | | |
| 0.13 | 4300 | 29900 | - | 10838 | | | | | | |
| 0.15 | 4300 | 29900 | - | 9576 | | | | | | |
| 0.17 | 4300 | 29900 | - | 8318 | | | | | | |
| 0.19 | 4300 | 29900 | - | 7328 | | | | | | |
| 0.22 | 4300 | 29900 | - | 6469 | | | | | | |
| 0.25 | 4300 | 29900 | - | 5615 | | | | | | |
| 0.28 | 4300 | 29900 | - | 4961* | | | | | | |
| 0.32 | 4300 | 29900 | - | 4333* | | | | | | |
| | | | | | | 2 3 | | | | |
| 0.22 | 4300 | 29900 | - | 6338 | | | | | | |
| 0.25 | 4300 | 29900 | - | 5680 | | | | | | |
| 0.28 | 4300 | 29900 | - | 5016 | | | | | | |
| 0.32 | 4300 | 29900 | - | 4367 | | | | | | |
| 0.36 | 4300 | 29900 | - | 3914 | | | | | | |
| 0.42 | 4300 | 29900 | - | 3357 | | | | | | |
| 0.47 | 4300 | 29900 | - | 3009 | | | | | | |
| 0.57 | 4300 | 29900 | - | 2448 | | | | | | |
| 0.64 | 4300 | 29900 | - | 2199 | | | | | | |
| 0.71 | 4300 | 29900 | - | 1971 | | | | | | |
| 0.80 | 4300 | 29900 | - | 1741* | | | | | | |
| 0.95 | 4300 | 29900 | - | 1468 | | | | | | |
| 1.1 | 4300 | 29900 | - | 1316 | | | | | | |
| 1.2 | 4300 | 29900 | - | 1189* | | | | | | |
| 1.4 | 4300 | 29900 | - | 1023 | | | | | | |
| | | | | | | 3 2 | | | | |
| 0.36 | 4300 | 29900 | - | 3906 | | | | | | |
| 0.42 | 4300 | 29900 | - | 3352 | | | | | | |
| 0.48 | 4300 | 29900 | - | 2907 | | | | | | |
| 0.55 | 4300 | 29900 | - | 2553 | | | | | | |
| 0.62 | 4300 | 29900 | - | 2245 | | | | | | |
| 0.71 | 4300 | 29900 | - | 1970 | | | | | | |
| 0.81 | 4300 | 29900 | - | 1722 | | | | | | |

21933170/DE – 11/2015

## F97R57, $n_e$=1400 1/min — 4300 Nm

| $n_a$ rpm | $M_{amax}$ Nm | $F_{Ra}$ N | $\varphi_{(/R)}$ ' | i | DR63S DR63M DR63L DRS71S DRS71M | DRN80M DRN90S | DRN90L | DRN100LS DRN100L | DRN112M | DRN132S DRN132M |
|---|---|---|---|---|---|---|---|---|---|---|
| 0.92 | 4300 | 29900 | - | 1527 | | | | | | |
| 1.1 | 4300 | 29900 | - | 1327 | | | | | | |
| 1.2 | 4300 | 29900 | - | 1171* | | | | | | |
| 1.4 | 4300 | 29900 | - | 1022 | | | | | | |
| 1.6 | 4300 | 29900 | - | 898 | | | | | | |
| 1.8 | 4300 | 29900 | - | 784 | | | | | | |
| 2.0 | 4300 | 29900 | - | 690 | | | | | | |
| 2.3 | 4300 | 29900 | - | 605 | | | | | | |
| 2.6 | 4300 | 29900 | - | 529 | | | | | | |
| 3.0 | 4300 | 29900 | - | 467 | | | | | | |
| 3.4 | 4300 | 29900 | - | 406 | | | | | | |
| 3.9 | 4300 | 29900 | - | 363 | | | | | | |
| 4.9 | 4300 | 29900 | - | 285 | | | | | | |
| 5.7 | 4300 | 29900 | - | 245 | | | | | | |
| 6.7 | 4300 | 29900 | - | 208 | | | | | | |
| 7.2 | 4300 | 29900 | - | 195 | | | | | | |
| | | | | | | 2 | 2 | | | |
| 1.6 | 4300 | 29900 | - | 892 | | | | | | |
| 1.8 | 4300 | 29900 | - | 760 | | | | | | |
| 2.1 | 4300 | 29900 | - | 667 | | | | | | |
| 2.5 | 4300 | 29900 | - | 569 | | | | | | |
| 2.7 | 4300 | 29900 | - | 510 | | | | | | |
| 3.0 | 4300 | 29900 | - | 473* | | | | | | |
| 3.5 | 4300 | 29900 | - | 403 | | | | | | |
| 3.9 | 4300 | 29900 | - | 361 | | | | | | |
| 4.4 | 4300 | 29900 | - | 317 | | | | | | |
| 5.1 | 4300 | 29900 | - | 275 | | | | | | |
| 5.8 | 4300 | 29900 | - | 242 | | | | | | |

## F107, $n_e$=1400 1/min — 7840 Nm

| $n_a$ rpm | $M_{amax}$ Nm | $F_{Ra}$ N | $\varphi_{(/R)}$ ' | i | DRN100LS DRN100L | DRN112M | DRN132S DRN132M | DRN132L DRN160M DRN160L | DRN180M DRN180L | DRN200L DRN225S DRN225M | DRN250M |
|---|---|---|---|---|---|---|---|---|---|---|---|
| | | | | | | 3 | | | | | |
| 5.5 | 7680 | 49800 | 5.4 | 254.40* | | | | | | | |
| 6.5 | 7680 | 49800 | 5.4 | 215.37 | | | | | | | |
| 7.0 | 7680 | 49800 | 5.4 | 199.31 | | | | | | | |
| 7.8 | 7680 | 49800 | 5.4 | 178.64 | | | | | | | |
| 8.7 | 7680 | 49800 | 5.4 | 161.28* | | | | | | | |
| 9.6 | 7680 | 49800 | 5.4 | 146.49 | | | | | | | |
| 11 | 7680 | 49800 | 5.4 | 129.97 | | | | | | | |
| 12 | 7680 | 49800 | 5.4 | 117.94 | | | | | | | |
| 14 | 7680 | 49800 | 5.4 | 101.38* | | | | | | | |
| 15 | 7680 | 49800 | 5.6 | 92.47* | | | | | | | |
| 16 | 7680 | 49800 | 5.4 | 88.49 | | | | | | | |
| 17 | 7680 | 49800 | 5.7 | 83.99 | | | | | | | |
| 19 | 7680 | 49800 | 5.7 | 74.52 | | | | | | | |
| 21 | 7680 | 49800 | 5.7 | 67.62 | | | | | | | |
| 24 | 7680 | 47800 | 5.7 | 58.12* | | | | | | | |

21933170/DE – 11/2015

## F107, $n_e$=1400 1/min — 7840 Nm

| $n_a$ rpm | $M_{amax}$ Nm | $F_{Ra}$ N | $\varphi_{(/R)}$ ' | i | DRN100LS DRN100L | DRN112M | DRN132S DRN132M | DRN132L DRN160M DRN160L | DRN180M DRN180L | DRN200L DRN225S DRN225M | DRN250M |
|---|---|---|---|---|---|---|---|---|---|---|---|
| 28 | 7680 | 45100 | 5.7 | 50.73 | | | | | | | |
| 33 | 7680 | 42000 | 5.7 | 43.03 | | | | | | | |
| 37 | 7680 | 39500 | 5.7 | 37.61 | | | | | | | |
| 44 | 7680 | 36500 | 5.8 | 31.80 | | | | | | | |
| 2 | | | | | | | | | | | |
| 41 | 7400 | 38300 | 5.1 | 33.79* | | | | | | | |
| 51 | 7840 | 33300 | 5.2 | 27.57 | | | | | | | |
| 56 | 7840 | 31500 | 5.2 | 25.14 | | | | | | | |
| 64 | 7840 | 28800 | 5.2 | 21.76* | | | | | | | |
| 73 | 7840 | 26500 | 5.2 | 19.20* | | | | | | | |
| 84 | 7840 | 23900 | 5.3 | 16.58 | | | | | | | |
| 95 | 7680 | 22400 | 5.3 | 14.67 | | | | | | | |
| 114 | 7000 | 22600 | 5.4 | 12.33 | | | | | | | |
| 141 | 6500 | 21500 | 5.4 | 9.96 | | | | | | | |
| 144 | 4910 | 23500 | 6.7 | 9.69 | | | | | | | |
| 167 | 4800 | 22000 | 6.7 | 8.37 | | | | | | | |
| 189 | 4600 | 21300 | 6.8 | 7.40 | | | | | | | |
| 225 | 4600 | 19000 | 7 | 6.22 | | | | | | | |
| 278 | 4600 | 16400 | 7 | 5.03 | | | | | | | |

## F107R77, $n_e$=1400 1/min — 7840 Nm

| $n_a$ rpm | $M_{amax}$ Nm | $F_{Ra}$ N | $\varphi_{(/R)}$ ' | i | DR63S DR63M DR63L DRS71S DRS71M | DRN80M DRN90S | DRN90L | DRN100LS DRN100L | DRN112M | DRN132S DRN132M | DRN132L DRN160M DRN160L |
|---|---|---|---|---|---|---|---|---|---|---|---|
| 3 3 | | | | | | | | | | | |
| 0.06 | 7680 | 49800 | - | 25375* | | | | | | | |
| 0.06 | 7680 | 49800 | - | 21652 | | | | | | | |
| 0.07 | 7680 | 49800 | - | 18933 | | | | | | | |
| 0.08 | 7680 | 49800 | - | 16888 | | | | | | | |
| 0.09 | 7680 | 49800 | - | 14767 | | | | | | | |
| 0.12 | 7680 | 49800 | - | 11348* | | | | | | | |
| 0.14 | 7680 | 49800 | - | 10039 | | | | | | | |
| 0.16 | 7680 | 49800 | - | 8548 | | | | | | | |
| 0.18 | 7680 | 49800 | - | 7674 | | | | | | | |
| 0.21 | 7680 | 49800 | - | 6767 | | | | | | | |
| 0.24 | 7680 | 49800 | - | 5954 | | | | | | | |
| 0.27 | 7680 | 49800 | - | 5223 | | | | | | | |
| 0.31 | 7680 | 49800 | - | 4567 | | | | | | | |
| 0.35 | 7680 | 49800 | - | 3948 | | | | | | | |
| 0.40 | 7680 | 49800 | - | 3521 | | | | | | | |
| 2 3 | | | | | | | | | | | |
| 0.26 | 7840 | 49400 | - | 5383* | | | | | | | |
| 0.30 | 7840 | 49400 | - | 4593 | | | | | | | |
| 0.35 | 7840 | 49400 | - | 4016 | | | | | | | |
| 0.37 | 7840 | 49400 | - | 3815 | | | | | | | |
| 0.42 | 7840 | 49400 | - | 3347 | | | | | | | |
| 0.49 | 7840 | 49400 | - | 2839 | | | | | | | |
| 0.55 | 7840 | 49400 | - | 2563* | | | | | | | |
| 0.62 | 7840 | 49400 | - | 2255 | | | | | | | |

21933170/DE – 11/2015

| F107R77, $n_e$=1400 1/min | | | | | | | | | | | 7840 Nm |
|---|---|---|---|---|---|---|---|---|---|---|---|
| $n_a$ rpm | $M_{amax}$ Nm | $F_{Ra}$ N | $\varphi_{(/R)}$ ' | i | DR63S DR63M DR63L DRS71S DRS71M | DRN80M DRN90S | DRN90L | DRN100LS DRN100L | DRN112M | DRN132S DRN132M | DRN132L DRN160M DRN160L |
| 0.66 | 7840 | 49400 | - | 2129 | | | | | | | |
| 0.77 | 7840 | 49400 | - | 1813 | | | | | | | |
| 0.88 | 7840 | 49400 | - | 1590 | | | | | | | |
| 0.97 | 7840 | 49400 | - | 1436 | | | | | | | |
| 1.1 | 7840 | 49400 | - | 1263 | | | | | | | |
| 1.2 | 7840 | 49400 | - | 1193 | | | | | | | |
| 1.4 | 7840 | 49400 | - | 1015 | | | | | | | |
| 1.5 | 7840 | 49400 | - | 923 | | | | | | | |
| 1.8 | 7840 | 49400 | - | 800 | | | | | | | |
| 2.0 | 7840 | 49400 | - | 696 | | | | | | | |
| 3 2 | | | | | | | | | | | |
| 0.46 | 7680 | 49800 | - | 3037 | | | | | | | |
| 0.51 | 7680 | 49800 | - | 2756 | | | | | | | |
| 0.59 | 7680 | 49800 | - | 2369 | | | | | | | |
| 0.68 | 7680 | 49800 | - | 2068 | | | | | | | |
| 0.77 | 7680 | 49800 | - | 1826 | | | | | | | |
| 0.88 | 7680 | 49800 | - | 1597 | | | | | | | |
| 1.00 | 7680 | 49800 | - | 1401 | | | | | | | |
| 1.1 | 7680 | 49800 | - | 1243 | | | | | | | |
| 1.3 | 7680 | 49800 | - | 1087 | | | | | | | |
| 1.5 | 7680 | 49800 | - | 950 | | | | | | | |
| 1.7 | 7680 | 49800 | - | 834 | | | | | | | |
| 1.9 | 7680 | 49800 | - | 736 | | | | | | | |
| 2.2 | 7680 | 49800 | - | 640 | | | | | | | |
| 2.5 | 7680 | 49800 | - | 560 | | | | | | | |
| 2.9 | 7680 | 49800 | - | 489 | | | | | | | |
| 3.2 | 7680 | 49800 | - | 436 | | | | | | | |
| 3.8 | 7680 | 49800 | - | 370 | | | | | | | |
| 4.2 | 7680 | 49800 | - | 333 | | | | | | | |
| 4.8 | 7680 | 49800 | - | 291 | | | | | | | |
| 5.5 | 7680 | 49800 | - | 255 | | | | | | | |
| 6.2 | 7680 | 49800 | - | 225* | | | | | | | |
| 7.4 | 7680 | 49800 | - | 190 | | | | | | | |
| 2 2 | | | | | | | | | | | |
| 2.2 | 7840 | 49400 | - | 644 | | | | | | | |
| 2.4 | 7840 | 49400 | - | 591 | | | | | | | |
| 2.7 | 7840 | 49400 | - | 518* | | | | | | | |
| 2.9 | 7840 | 49400 | - | 491 | | | | | | | |
| 3.3 | 7840 | 49400 | - | 430 | | | | | | | |
| 3.6 | 7840 | 49400 | - | 387 | | | | | | | |
| 4.1 | 7840 | 49400 | - | 340 | | | | | | | |
| 4.7 | 7840 | 49400 | - | 300 | | | | | | | |
| 5.3 | 7840 | 49400 | - | 266 | | | | | | | |



21933170/DE – 11/2015

## F127, $n_e$=1400 1/min — 12000 Nm

| $n_a$ rpm | $M_{amax}$ Nm | $F_{Ra}$ N | $\varphi_{(/R)}$ ' | i | DRN132S DRN132M | DRN132L DRN160M DRN160L | DRN180M DRN180L | DRN200L DRN225S DRN225M | DRN250M DRN280S DRN280M |
|---|---|---|---|---|---|---|---|---|---|
| | | | | | | 3 | | | |
| 8.2 | 12000 | 90000 | 4.9 | 170.83 | | | | | |
| 9.1 | 12000 | 90000 | 4.9 | 153.67* | | | | | |
| 11 | 12000 | 90000 | 4.9 | 125.37 | | | | | |
| 12 | 12000 | 88000 | 4.9 | 114.34 | | | | | |
| 14 | 12000 | 83000 | 4.9 | 98.95 | | | | | |
| 16 | 12000 | 79000 | 4.9 | 87.31* | | | | | |
| 19 | 12000 | 74300 | 4.9 | 75.41* | | | | | |
| 20 | 12000 | 72100 | 5.2 | 70.07 | | | | | |
| 22 | 12000 | 69400 | 5.2 | 63.91 | | | | | |
| 25 | 12000 | 65200 | 5.2 | 55.31 | | | | | |
| 29 | 12000 | 61300 | 5.2 | 48.80 | | | | | |
| 33 | 12000 | 56800 | 5.2 | 42.15 | | | | | |
| 38 | 12000 | 53200 | 5.2 | 37.28 | | | | | |
| 45 | 12000 | 48300 | 5.3 | 31.33 | | | | | |
| 55 | 12000 | 42400 | 5.3 | 25.30 | | | | | |
| | | | | | | 2 | | | |
| 52 | 8500 | 55300 | 4.6 | 26.86 | | | | | |
| 57 | 8500 | 53300 | 4.6 | 24.57 | | | | | |
| 65 | 12000 | 38000 | 4.7 | 21.38 | | | | | |
| 74 | 11000 | 38800 | 4.7 | 18.87 | | | | | |
| 86 | 11000 | 35400 | 4.7 | 16.36 | | | | | |
| 96 | 11000 | 32600 | 4.7 | 14.55 | | | | | |
| 112 | 10000 | 33300 | 4.8 | 12.54 | | | | | |
| 137 | 9500 | 30900 | 4.9 | 10.19 | | | | | |
| 158 | 7000 | 36400 | 6.3 | 8.86 | | | | | |
| 178 | 6000 | 37000 | 6.4 | 7.88 | | | | | |
| 206 | 7000 | 32200 | 6.5 | 6.80 | | | | | |
| 254 | 6000 | 31700 | 6.7 | 5.52 | | | | | |
| 299 | 6000 | 29500 | 6.8 | 4.68 | | | | | |

## F127R77, $n_e$=1400 1/min — 12000 Nm

| $n_a$ rpm | $M_{amax}$ Nm | $F_{Ra}$ N | $\varphi_{(/R)}$ ' | i | DR63S DR63M DR63L DRS71S DRS71M | DRN80M DRN90S | DRN90L | DRN100LS DRN100L | DRN112M | DRN132S DRN132M | DRN132L DRN160M DRN160L |
|---|---|---|---|---|---|---|---|---|---|---|---|
| | | | | | | 3 | 3 | | | | |
| 0.06 | 12000 | 90000 | - | 24478* | | | | | | | |
| 0.06 | 12000 | 90000 | - | 22323 | | | | | | | |
| 0.07 | 12000 | 90000 | - | 19048 | | | | | | | |
| 0.08 | 12000 | 90000 | - | 16656 | | | | | | | |
| 0.10 | 12000 | 90000 | - | 14722* | | | | | | | |
| 0.11 | 12000 | 90000 | - | 12912 | | | | | | | |
| 0.12 | 12000 | 90000 | - | 11656* | | | | | | | |
| 0.14 | 12000 | 90000 | - | 10191 | | | | | | | |
| 0.16 | 12000 | 90000 | - | 8831 | | | | | | | |
| 0.18 | 12000 | 90000 | - | 7643 | | | | | | | |
| 0.21 | 12000 | 90000 | - | 6715 | | | | | | | |
| 0.24 | 12000 | 90000 | - | 5925 | | | | | | | |
| 0.27 | 12000 | 90000 | - | 5153 | | | | | | | |

21933170/DE – 11/2015

## F127R77, $n_e$=1400 1/min — 12000 Nm

| $n_a$ rpm | $M_{amax}$ Nm | $F_{Ra}$ N | $\varphi_{(/R)}$ ' | i | DR63S DR63M DR63L DRS71S DRS71M | DRN80M DRN90S | DRN90L | DRN100LS DRN100L | DRN112M | DRN132S DRN132M | DRN132L DRN160M DRN160L |
|---|---|---|---|---|---|---|---|---|---|---|---|
| 0.31 | 12000 | 90000 | - | 4533 | | | | | | | |
| 0.36 | 12000 | 90000 | - | 3926 | | | | | | | |
| 0.41 | 12000 | 90000 | - | 3454 | | | | | | | |
| 0.46 | 12000 | 90000 | - | 3031 | | | | | | | |
| | | | | | | 3 | 2 | | | | |
| 0.52 | 12000 | 90000 | - | 2672 | | | | | | | |
| 0.59 | 12000 | 90000 | - | 2357* | | | | | | | |
| 0.69 | 12000 | 90000 | - | 2038 | | | | | | | |
| 0.78 | 12000 | 90000 | - | 1784 | | | | | | | |
| 0.87 | 12000 | 90000 | - | 1606 | | | | | | | |
| 1.0 | 12000 | 90000 | - | 1390 | | | | | | | |
| 1.1 | 12000 | 90000 | - | 1220 | | | | | | | |
| 1.3 | 12000 | 90000 | - | 1077 | | | | | | | |
| 1.5 | 12000 | 90000 | - | 930 | | | | | | | |
| 1.7 | 12000 | 90000 | - | 820 | | | | | | | |
| 1.9 | 12000 | 90000 | - | 727 | | | | | | | |
| 2.2 | 12000 | 90000 | - | 648 | | | | | | | |
| 2.6 | 12000 | 90000 | - | 549 | | | | | | | |
| 2.8 | 12000 | 90000 | - | 495 | | | | | | | |
| 3.3 | 12000 | 90000 | - | 428 | | | | | | | |
| 3.7 | 12000 | 90000 | - | 376 | | | | | | | |

## F127R87, $n_e$=1400 1/min — 12000 Nm

| $n_a$ rpm | $M_{amax}$ Nm | $F_{Ra}$ N | $\varphi_{(/R)}$ ' | i | DRN80M DRN90S | DRN90L | DRN100LS DRN100L | DRN112M | DRN132S DRN132M | DRN132L DRN160M DRN160L | DRN180M DRN180L | DRN200L |
|---|---|---|---|---|---|---|---|---|---|---|---|---|
| | | | | | | | 3 | 2 | | | | |
| 2.9 | 12000 | 90000 | - | 483 | | | | | | | | |
| 3.3 | 12000 | 90000 | - | 418 | | | | | | | | |
| 3.7 | 12000 | 90000 | - | 374 | | | | | | | | |
| 4.5 | 12000 | 90000 | - | 312 | | | | | | | | |
| 4.8 | 12000 | 90000 | - | 293 | | | | | | | | |
| 5.4 | 12000 | 90000 | - | 259 | | | | | | | | |
| 6.3 | 12000 | 90000 | - | 223 | | | | | | | | |
| 7.1 | 12000 | 90000 | - | 198 | | | | | | | | |
| 8.4 | 12000 | 90000 | - | 166 | | | | | | | | |

## F157, $n_e$=1400 1/min — 18000 Nm

| $n_a$ rpm | $M_{amax}$ Nm | $F_{Ra}$ N | $\varphi_{(/R)}$ ' | i | DRN132L DRN160M DRN160L | DRN180M DRN180L | DRN200L DRN225S DRN225M | DRN250M DRN280S DRN280M | DRN315S DRN315M | DRN315L DRN315H |
|---|---|---|---|---|---|---|---|---|---|---|
| | | | | | | 3 | | | | |
| 5.2 | 18000 | 100300 | 4.5 | 267.43 | | | | | | |
| 6.4 | 18000 | 100300 | 4.5 | 217.62* | | | | | | |
| 7.9 | 18000 | 100300 | 4.5 | 178.20* | | | | | | |
| 8.6 | 18000 | 100300 | 4.5 | 162.96 | | | | | | |
| 9.9 | 18000 | 100300 | 4.5 | 141.80* | | | | | | |
| 11 | 18000 | 100300 | 4.5 | 125.14 | | | | | | |
| 13 | 18000 | 100300 | 4.5 | 108.49 | | | | | | |

21933170/DE – 11/2015

## F157, $n_e$=1400 1/min — 18000 Nm

| $n_a$ rpm | $M_{amax}$ Nm | $F_{Ra}$ N | $\varphi_{(/R)}$ ' | i | DRN132L DRN160M DRN160L | DRN180M DRN180L | DRN200L DRN225S DRN225M | DRN250M DRN280S DRN280M | DRN315S DRN315M | DRN315L DRN315H |
|---|---|---|---|---|---|---|---|---|---|---|
| 15 | 18000 | 100300 | 4.5 | 96.53* | | | | | | |
| 16 | 18000 | 95800 | 4.8 | 85.80* | | | | | | |
| 18 | 18000 | 92300 | 4.8 | 78.46 | | | | | | |
| 21 | 18000 | 87000 | 4.8 | 68.28* | | | | | | |
| 23 | 18000 | 82500 | 4.8 | 60.25 | | | | | | |
| 27 | 18000 | 77500 | 4.8 | 52.24 | | | | | | |
| 30 | 18000 | 73600 | 4.8 | 46.48* | | | | | | |
| 35 | 18000 | 68900 | 4.9 | 40.06 | | | | | | |
| 43 | 18000 | 62500 | 4.9 | 32.55 | | | | | | |
| 51 | 18000 | 57800 | 4.9 | 27.60 | | | | | | |
| 2 | | | | | | | | | | |
| 26 | 8000 | 98300 | 4.3 | 53.55 | | | | | | |
| 32 | 10000 | 87800 | 4.3 | 43.94* | | | | | | |
| 39 | 11000 | 79300 | 4.4 | 35.75* | | | | | | |
| 49 | 17000 | 60800 | 4.4 | 28.60* | | | | | | |
| 55 | 15000 | 61500 | 4.4 | 25.43 | | | | | | |
| 63 | 18000 | 51800 | 4.4 | 22.16 | | | | | | |
| 71 | 17000 | 50900 | 4.4 | 19.77 | | | | | | |
| 83 | 18000 | 44900 | 4.5 | 16.85 | | | | | | |
| 100 | 17000 | 42500 | 4.6 | 13.96 | | | | | | |
| 117 | 16000 | 40900 | 4.6 | 11.92 | | | | | | |

## F157R97, $n_e$=1400 1/min — 18000 Nm

| $n_a$ rpm | $M_{amax}$ Nm | $F_{Ra}$ N | $\varphi_{(/R)}$ ' | i | DRS71M | DRN80M DRN90S | DRN90L | DRN100LS DRN100L | DRN112M | DRN132S DRN132M | DRN132L DRN160M DRN160L | DRN180M DRN180L | DRN200L DRN225S |
|---|---|---|---|---|---|---|---|---|---|---|---|---|---|
| 3 3 | | | | | | | | | | | | | |
| 0.04 | 18000 | 100300 | - | 31434 | | | | | | | | | |
| 0.05 | 18000 | 100300 | - | 26173 | | | | | | | | | |
| 0.06 | 18000 | 100300 | - | 23464 | | | | | | | | | |
| 0.07 | 18000 | 100300 | - | 20212 | | | | | | | | | |
| 0.08 | 18000 | 100300 | - | 17984* | | | | | | | | | |
| 0.09 | 18000 | 100300 | - | 16358 | | | | | | | | | |
| 0.10 | 18000 | 100300 | - | 13751 | | | | | | | | | |
| 0.11 | 18000 | 100300 | - | 12235 | | | | | | | | | |
| 0.14 | 18000 | 100300 | - | 10033 | | | | | | | | | |
| 0.16 | 18000 | 100300 | - | 9021 | | | | | | | | | |
| 0.17 | 18000 | 100300 | - | 8026 | | | | | | | | | |
| 0.20 | 18000 | 100300 | - | 7075 | | | | | | | | | |
| 0.22 | 18000 | 100300 | - | 6295 | | | | | | | | | |
| 0.26 | 18000 | 100300 | - | 5404 | | | | | | | | | |
| 0.29 | 18000 | 100300 | - | 4831 | | | | | | | | | |
| 0.34 | 18000 | 100300 | - | 4130* | | | | | | | | | |
| 0.39 | 18000 | 100300 | - | 3607 | | | | | | | | | |
| 0.44 | 18000 | 100300 | - | 3210 | | | | | | | | | |
| 0.50 | 18000 | 100300 | - | 2780 | | | | | | | | | |
| 0.97 | 18000 | 100300 | - | 1441 | | | | | | | | | |
| 3 2 | | | | | | | | | | | | | |
| 0.58 | 18000 | 100300 | - | 2427 | | | | | | | | | |
| 0.64 | 18000 | 100300 | - | 2185 | | | | | | | | | |

21933170/DE – 11/2015

| F157R97, $n_e$=1400 1/min | | | | | | | | | | | | | 18000 Nm |
|---|---|---|---|---|---|---|---|---|---|---|---|---|---|
| $n_a$ rpm | $M_{amax}$ Nm | $F_{Ra}$ N | $\varphi_{(/R)}$ ' | i | DRS71M | DRN80M DRN90S | DRN90L | DRN100LS DRN100L | DRN112M | DRN132S DRN132M | DRN132L DRN160M DRN160L | DRN180M DRN180L | DRN200L DRN225S |
| 0.72 | 18000 | 100300 | - | 1944* | | | | | | | | | |
| 0.84 | 18000 | 100300 | - | 1674 | | | | | | | | | |
| 1.1 | 18000 | 100300 | - | 1308 | | | | | | | | | |
| 1.2 | 18000 | 100300 | - | 1169 | | | | | | | | | |
| 1.5 | 18000 | 100300 | - | 953 | | | | | | | | | |
| 1.7 | 18000 | 100300 | - | 845 | | | | | | | | | |
| 1.8 | 18000 | 100300 | - | 764 | | | | | | | | | |
| 2.1 | 18000 | 100300 | - | 680 | | | | | | | | | |
| 2.4 | 18000 | 100300 | - | 576 | | | | | | | | | |
| 2.8 | 18000 | 100300 | - | 503 | | | | | | | | | |
| 3.1 | 18000 | 100300 | - | 446 | | | | | | | | | |
| 4.0 | 18000 | 100300 | - | 353 | | | | | | | | | |
| 4.6 | 18000 | 100300 | - | 302 | | | | | | | | | |
| 5.1 | 18000 | 100300 | - | 273 | | | | | | | | | |
| 6.0 | 18000 | 100300 | - | 232 | | | | | | | | | |
| 6.9 | 18000 | 100300 | - | 202 | | | | | | | | | |
| 7.1 | 18000 | 100300 | - | 197 | | | | | | | | | |



21933170/DE – 11/2015

## 9.3 Auswahltabellen F..DRN.. in kW

### $P_m$ = 0.12 kW

| $n_a$ rpm | $M_a$ Nm | i | $F_{Ra}$ [1] N | SEW $f_B$ | | | | | m kg | |
|---|---|---|---|---|---|---|---|---|---|---|
| **0.06** | 13900 | 22323 | 86700 | 0.85 | | | | | | |
| **0.07** | 11800 | 19048 | 90000 | 1.00 | | | | | | |
| **0.08** | 10300 | 16656 | 90000 | 1.15 | **FA** | **127R77** | **DR** | **63S4** | 425 | 456 |
| **0.09** | 9180 | 14722 | 90000 | 1.30 | **FAF** | **127R77** | **DR** | **63S4** | 465 | 456 |
| **0.11** | 7990 | 12912 | 90000 | 1.50 | **F** | **127R77** | **DR** | **63S4** | 460 | 456 |
| **0.12** | 7040 | 11656 | 90000 | 1.70 | **FF** | **127R77** | **DR** | **63S4** | 510 | 456 |
| **0.14** | 6310 | 10191 | 90000 | 1.90 | | | | | | |
| **0.09** | 9200 | 14767 | 45500 | 0.85 | | | | | | |
| **0.12** | 7070 | 11348 | 51400 | 1.10 | | | | | | |
| **0.14** | 5740 | 10039 | 54600 | 1.35 | | | | | | |
| **0.16** | 4670 | 8548 | 57000 | 1.65 | **FA** | **107R77** | **DR** | **63S4** | 275 | 456 |
| **0.18** | 4750 | 7674 | 56800 | 1.60 | **FAF** | **107R77** | **DR** | **63S4** | 295 | 456 |
| **0.20** | 4090 | 6767 | 58200 | 1.90 | **F** | **107R77** | **DR** | **63S4** | 290 | 456 |
| **0.23** | 3460 | 5954 | 59500 | 2.2 | **FF** | **107R77** | **DR** | **63S4** | 320 | 456 |
| **0.26** | 2990 | 5223 | 60400 | 2.6 | | | | | | |
| **0.30** | 2840 | 4567 | 60700 | 2.7 | | | | | | |
| **0.39** | 2120 | 3521 | 62000 | 3.6 | | | | | | |
| **0.21** | 4140 | 6469 | 30400 | 1.05 | **FA** | **97R57** | **DR** | **63S4** | 185 | 456 |
| **0.25** | 3820 | 5615 | 31300 | 1.15 | **FAF** | **97R57** | **DR** | **63S4** | 205 | 456 |
| **0.28** | 3320 | 4961 | 32500 | 1.30 | **F** | **97R57** | **DR** | **63S4** | 190 | 456 |
| **0.32** | 2900 | 4333 | 33500 | 1.50 | **FF** | **97R57** | **DR** | **63S4** | 225 | 456 |
| **0.35** | 2690 | 3906 | 34000 | 1.60 | **FA** | **97R57** | **DR** | **63S4** | 180 | 456 |
| **0.41** | 2320 | 3352 | 34800 | 1.85 | **FAF** | **97R57** | **DR** | **63S4** | 205 | 456 |
| **0.47** | 1910 | 2907 | 35500 | 2.2 | **F** | **97R57** | **DR** | **63S4** | 190 | 456 |
| **0.54** | 1750 | 2553 | 35800 | 2.4 | **FF** | **97R57** | **DR** | **63S4** | 225 | 456 |
| | | | | | **FA** | **87R57** | **DR** | **63S4** | 120 | 456 |
| **0.33** | 2760 | 4245 | 23800 | 1.10 | **FAF** | **87R57** | **DR** | **63S4** | 130 | 456 |
| **0.37** | 2210 | 3721 | 25800 | 1.35 | **F** | **87R57** | **DR** | **63S4** | 125 | 456 |
| | | | | | **FF** | **87R57** | **DR** | **63S4** | 140 | 456 |
| **0.43** | 2240 | 3244 | 25700 | 1.35 | | | | | | |
| **0.48** | 1990 | 2881 | 26500 | 1.50 | | | | | | |
| **0.54** | 1780 | 2576 | 27100 | 1.70 | | | | | | |
| **0.63** | 1510 | 2199 | 27800 | 2.00 | **FA** | **87R57** | **DR** | **63S4** | 115 | 456 |
| **0.72** | 1300 | 1930 | 28300 | 2.3 | **FAF** | **87R57** | **DR** | **63S4** | 130 | 456 |
| **0.81** | 1170 | 1709 | 28600 | 2.6 | **F** | **87R57** | **DR** | **63S4** | 125 | 456 |
| **0.92** | 1030 | 1493 | 28900 | 2.9 | **FF** | **87R57** | **DR** | **63S4** | 140 | 456 |
| **1.1** | 820 | 1300 | 29300 | 3.7 | | | | | | |
| **1.2** | 745 | 1148 | 29500 | 4.0 | | | | | | |
| | | | | | **FA** | **77R37** | **DR** | **63S4** | 65 | 456 |
| **0.53** | 1820 | 2613 | 13000 | 0.80 | **FAF** | **77R37** | **DR** | **63S4** | 72 | 456 |
| **0.60** | 1570 | 2284 | 15200 | 0.95 | **F** | **77R37** | **DR** | **63S4** | 69 | 456 |
| **0.68** | 1380 | 2029 | 16400 | 1.10 | **FF** | **77R37** | **DR** | **63S4** | 80 | 456 |
| **0.80** | 1180 | 1728 | 17500 | 1.25 | | | | | | |
| **0.89** | 1090 | 1544 | 17900 | 1.40 | | | | | | |
| **1.0** | 950 | 1354 | 18500 | 1.55 | **FA** | **77R37** | **DR** | **63S4** | 65 | 456 |
| **1.2** | 840 | 1200 | 18800 | 1.75 | **FAF** | **77R37** | **DR** | **63S4** | 72 | 456 |
| **1.3** | 740 | 1053 | 19100 | 2.0 | **F** | **77R37** | **DR** | **63S4** | 69 | 456 |
| **1.5** | 630 | 910 | 19400 | 2.4 | **FF** | **77R37** | **DR** | **63S4** | 80 | 456 |
| **1.7** | 525 | 810 | 19600 | 2.8 | | | | | | |
| **1.9** | 460 | 710 | 19800 | 3.2 | | | | | | |
| **0.97** | 960 | 1429 | 7070 | 0.85 | | | | | | |
| **1.1** | 860 | 1271 | 9840 | 0.95 | | | | | | |
| **1.2** | 725 | 1102 | 11100 | 1.15 | | | | | | |
| **1.4** | 635 | 970 | 11700 | 1.30 | **FA** | **67R37** | **DR** | **63S4** | 43 | 456 |
| **1.6** | 560 | 858 | 12100 | 1.45 | **FAF** | **67R37** | **DR** | **63S4** | 49 | 456 |
| **1.8** | 490 | 755 | 12400 | 1.65 | **F** | **67R37** | **DR** | **63S4** | 46 | 456 |
| **2.2** | 415 | 641 | 12700 | 1.95 | **FF** | **67R37** | **DR** | **63S4** | 52 | 456 |
| **2.4** | 390 | 572 | 12800 | 2.1 | | | | | | |
| **2.7** | 330 | 509 | 13000 | 2.5 | | | | | | |
| **3.2** | 285 | 437 | 13000 | 2.8 | | | | | | |

21933170/DE – 11/2015

## $P_m$ = 0.12 kW

| $n_a$ rpm | $M_a$ Nm | i | $F_{Ra}$ 1) N | SEW $f_B$ | | | | | m kg | |
|---|---|---|---|---|---|---|---|---|---|---|
| **1.6** | 610 | 851 | 9100 | 1.00 | | | | | | |
| **1.9** | 520 | 738 | 9750 | 1.15 | **FA** | **57R37** | **DR** | **63S4** | 39 | 456 |
| **2.1** | 455 | 646 | 10200 | 1.30 | **FAF** | **57R37** | **DR** | **63S4** | 45 | 456 |
| **2.5** | 385 | 558 | 10600 | 1.55 | **F** | **57R37** | **DR** | **63S4** | 39 | 456 |
| **2.7** | 345 | 506 | 10900 | 1.75 | **FF** | **57R37** | **DR** | **63S4** | 46 | 456 |
| **3.0** | 295 | 452 | 11100 | 2.0 | | | | | | |
| **3.2** | 310 | 426 | 11100 | 1.95 | | | | | | |
| **3.6** | 270 | 382 | 11300 | 2.2 | **FA** | **57R37** | **DR** | **63S4** | 38 | 456 |
| **4.2** | 230 | 330 | 11500 | 2.6 | **FAF** | **57R37** | **DR** | **63S4** | 44 | 456 |
| **4.6** | 210 | 298 | 11500 | 2.8 | **F** | **57R37** | **DR** | **63S4** | 39 | 456 |
| **5.3** | 185 | 262 | 11500 | 3.2 | **FF** | **57R37** | **DR** | **63S4** | 45 | 456 |
| | | | | | **FA** | **47R17** | **DR** | **63S4** | 24 | 456 |
| **2.5** | 385 | 543 | 6100 | 1.05 | **FAF** | **47R17** | **DR** | **63S4** | 26 | 456 |
| **2.9** | 330 | 475 | 6740 | 1.20 | **F** | **47R17** | **DR** | **63S4** | 25 | 456 |
| **3.3** | 290 | 419 | 7150 | 1.40 | **FF** | **47R17** | **DR** | **63S4** | 28 | 456 |
| **2.6** | 380 | 524 | 6190 | 1.05 | | | | | | |
| **2.8** | 350 | 489 | 6530 | 1.15 | | | | | | |
| **3.2** | 300 | 427 | 7020 | 1.30 | **FA** | **47R17** | **DR** | **63S4** | 23 | 456 |
| **3.6** | 265 | 381 | 7310 | 1.50 | **FAF** | **47R17** | **DR** | **63S4** | 26 | 456 |
| **4.1** | 235 | 334 | 7550 | 1.70 | **F** | **47R17** | **DR** | **63S4** | 24 | 456 |
| **4.7** | 205 | 295 | 7740 | 1.95 | **FF** | **47R17** | **DR** | **63S4** | 27 | 456 |
| **5.4** | 172 | 253 | 7910 | 2.3 | | | | | | |
| **4.3** | 215 | 322 | 3990 | 0.90 | **FA** | **37R17** | **DR** | **63S4** | 19 | 456 |
| **5.0** | 192 | 278 | 4400 | 1.05 | **FAF** | **37R17** | **DR** | **63S4** | 20 | 456 |
| **5.7** | 162 | 242 | 4750 | 1.25 | **F** | **37R17** | **DR** | **63S4** | 19 | 456 |
| **6.2** | 156 | 221 | 4820 | 1.30 | **FF** | **37R17** | **DR** | **63S4** | 21 | 456 |
| **4.2** | 235 | 326 | 3710 | 0.85 | | | | | | |
| **4.8** | 200 | 285 | 4250 | 1.00 | **FA** | **37R17** | **DR** | **63S4** | 19 | 456 |
| **5.5** | 177 | 250 | 4590 | 1.15 | **FAF** | **37R17** | **DR** | **63S4** | 20 | 456 |
| **6.3** | 156 | 219 | 4820 | 1.30 | **F** | **37R17** | **DR** | **63S4** | 19 | 456 |
| **7.4** | 132 | 186 | 5040 | 1.50 | **FF** | **37R17** | **DR** | **63S4** | 21 | 456 |
| **8.3** | 118 | 167 | 5140 | 1.70 | | | | | | |
| **6.2** | 155 | 221 | 4500 | 0.85 | **FA** | **27R17** | **DR** | **63S4** | 13 | 456 |
| **8.0** | 119 | 172 | 4500 | 1.10 | **FAF** | **27R17** | **DR** | **63S4** | 14 | 456 |
| **9.0** | 104 | 153 | 4500 | 1.25 | **F** | **27R17** | **DR** | **63S4** | 13 | 456 |
| **11** | 87 | 130 | 4500 | 1.50 | **FF** | **27R17** | **DR** | **63S4** | 14 | 456 |
| **6.5** | 150 | 211 | 4500 | 0.85 | | | | | | |
| **7.4** | 131 | 186 | 4500 | 1.00 | **FA** | **27R17** | **DR** | **63S4** | 13 | 456 |
| **9.7** | 102 | 142 | 4500 | 1.25 | **FAF** | **27R17** | **DR** | **63S4** | 13 | 456 |
| **11** | 88 | 124 | 4500 | 1.45 | **F** | **27R17** | **DR** | **63S4** | 13 | 456 |
| **13** | 77 | 109 | 4500 | 1.70 | **FF** | **27R17** | **DR** | **63S4** | 14 | 456 |
| **14** | 67 | 96 | 4500 | 1.95 | | | | | | |
| **3.9** | 290 | 228.99 | 13000 | 2.8 | | | | | | |
| **4.6** | 245 | 195.39 | 13000 | 3.3 | **FA** | **67** | **DR** | **63M6** | 32 | 416 |
| **5.3** | 215 | 170.85 | 13000 | 3.8 | **FAF** | **67** | **DR** | **63M6** | 38 | 415 |
| **5.6** | 205 | 162.31 | 13000 | 4.0 | **F** | **67** | **DR** | **63M6** | 35 | 414 |
| **6.3** | 181 | 142.40 | 13000 | 4.5 | **FF** | **67** | **DR** | **63M6** | 41 | 415 |
| **4.5** | 250 | 199.70 | 11400 | 2.4 | | | | | | |
| **4.9** | 230 | 183.60 | 11500 | 2.6 | **FA** | **57** | **DR** | **63M6** | 28 | 410 |
| **5.7** | 200 | 157.09 | 11500 | 3.0 | **FAF** | **57** | **DR** | **63M6** | 34 | 409 |
| **6.6** | 173 | 136.16 | 11500 | 3.5 | **F** | **57** | **DR** | **63M6** | 28 | 408 |
| **7.1** | 162 | 127.27 | 11500 | 3.7 | **FF** | **57** | **DR** | **63M6** | 35 | 409 |
| **6.9** | 166 | 199.70 | 11500 | 3.6 | **FA** | **57** | **DR** | **63S4** | 28 | 410 |
| **7.5** | 152 | 183.60 | 11500 | 3.9 | **FAF** | **57** | **DR** | **63S4** | 34 | 409 |
| **8.8** | 130 | 157.09 | 11500 | 4.6 | **F** | **57** | **DR** | **63S4** | 28 | 408 |
| **10** | 113 | 136.16 | 11500 | 5.3 | **FF** | **57** | **DR** | **63S4** | 35 | 409 |
| **4.7** | 240 | 190.76 | 7510 | 1.65 | | | | | | |
| **5.1** | 220 | 175.38 | 7640 | 1.80 | | | | | | |
| **6.0** | 191 | 150.06 | 7820 | 2.1 | **FA** | **47** | **DR** | **63M6** | 21 | 404 |
| **6.9** | 166 | 130.07 | 7940 | 2.4 | **FAF** | **47** | **DR** | **63M6** | 24 | 403 |
| **7.4** | 155 | 121.57 | 7990 | 2.6 | **F** | **47** | **DR** | **63M6** | 22 | 402 |
| **8.6** | 134 | 105.09 | 8060 | 3.0 | **FF** | **47** | **DR** | **63M6** | 25 | 403 |
| **10** | 114 | 89.29 | 8130 | 3.5 | | | | | | |
| **11** | 102 | 79.72 | 8160 | 3.9 | | | | | | |

21933170/DE – 11/2015

## $P_m$ = 0.12 kW

| $n_a$ rpm | $M_a$ Nm | i | $F_{Ra}$ 1) N | SEW $f_B$ | | | | | m kg | |
|---|---|---|---|---|---|---|---|---|---|---|
| **7.2** | 158 | 190.76 | 7970 | 2.5 | **FA** | **47** | **DR** | **63S4** | 21 | 404 |
| **7.9** | 146 | 175.38 | 8020 | 2.8 | **FAF** | **47** | **DR** | **63S4** | 24 | 403 |
| **9.2** | 125 | 150.06 | 8100 | 3.2 | **F** | **47** | **DR** | **63S4** | 22 | 402 |
| **11** | 108 | 130.07 | 8150 | 3.7 | **FF** | **47** | **DR** | **63S4** | 25 | 403 |
| **7.0** | 164 | 128.51 | 4740 | 1.20 | | | | | | |
| **7.6** | 150 | 117.88 | 4880 | 1.35 | **FA** | **37** | **DR** | **63M6** | 16 | 398 |
| **9.0** | 128 | 100.36 | 5070 | 1.55 | **FAF** | **37** | **DR** | **63M6** | 18 | 397 |
| **10** | 110 | 86.53 | 5190 | 1.80 | **F** | **37** | **DR** | **63M6** | 16 | 396 |
| **11** | 103 | 80.65 | 5240 | 1.95 | **FF** | **37** | **DR** | **63M6** | 18 | 397 |
| **11** | 107 | 128.51 | 5220 | 1.85 | | | | | | |
| **12** | 98 | 117.88 | 5270 | 2.0 | **FA** | **37** | **DR** | **63S4** | 16 | 398 |
| **14** | 83 | 100.36 | 5340 | 2.4 | **FAF** | **37** | **DR** | **63S4** | 18 | 397 |
| **16** | 72 | 86.53 | 5400 | 2.8 | **F** | **37** | **DR** | **63S4** | 16 | 396 |
| **17** | 67 | 80.65 | 5410 | 3.0 | **FF** | **37** | **DR** | **63S4** | 18 | 397 |
| **8.2** | 140 | 109.90 | 4500 | 0.95 | **FA** | **27** | **DR** | **63M6** | 9.9 | 393 |
| **9.5** | 121 | 94.76 | 4500 | 1.10 | **FAF** | **27** | **DR** | **63M6** | 11 | 392 |
| **10** | 112 | 88.32 | 4500 | 1.15 | **F** | **27** | **DR** | **63M6** | 10 | 391 |
| **12** | 98 | 77.21 | 4500 | 1.30 | **FF** | **27** | **DR** | **63M6** | 11 | 392 |
| **9.8** | 117 | 140.74 | 4500 | 1.10 | | | | | | |
| **11** | 107 | 129.09 | 4500 | 1.20 | | | | | | |
| **13** | 91 | 109.90 | 4500 | 1.40 | | | | | | |
| **15** | 79 | 94.76 | 4500 | 1.65 | | | | | | |
| **16** | 73 | 88.32 | 4500 | 1.75 | | | | | | |
| **18** | 64 | 77.21 | 4500 | 2.0 | **FA** | **27** | **DR** | **63S4** | 9.9 | 393 |
| **19** | 60 | 72.37 | 4500 | 2.2 | **FAF** | **27** | **DR** | **63S4** | 11 | 392 |
| **22** | 53 | 63.86 | 4500 | 2.4 | **F** | **27** | **DR** | **63S4** | 10 | 391 |
| **24** | 47 | 56.62 | 4500 | 2.8 | **FF** | **27** | **DR** | **63S4** | 11 | 392 |
| **28** | 42 | 50.19 | 4500 | 3.1 | | | | | | |
| **30** | 39 | 46.78 | 4500 | 3.4 | | | | | | |
| **34** | 34 | 40.89 | 4500 | 3.8 | | | | | | |
| **36** | 32 | 38.33 | 4430 | 4.1 | | | | | | |
| **41** | 28 | 33.83 | 4270 | 4.6 | | | | | | |
| **47** | 24 | 29.56 | 4100 | 5.3 | | | | | | |
| **51** | 23 | 27.18 | 4000 | 5.8 | | | | | | |
| **59** | 19 | 23.25 | 3820 | 6.7 | | | | | | |
| **68** | 17 | 20.15 | 3650 | 7.8 | | | | | | |
| **73** | 16 | 18.84 | 3580 | 8.3 | | | | | | |
| **85** | 14 | 16.28 | 3420 | 9.6 | | | | | | |
| **100** | 12 | 13.84 | 3250 | 11 | | | | | | |
| **112** | 10 | 12.35 | 3140 | 13 | **FA** | **27** | **DR** | **63S4** | 9.6 | 393 |
| **131** | 8.8 | 10.55 | 2990 | 15 | **FAF** | **27** | **DR** | **63S4** | 10 | 392 |
| **140** | 8.2 | 9.88 | 2920 | 16 | **F** | **27** | **DR** | **63S4** | 10 | 391 |
| **147** | 7.8 | 9.40 | 2870 | 17 | **FF** | **27** | **DR** | **63S4** | 11 | 392 |
| **170** | 6.7 | 8.13 | 2740 | 18 | | | | | | |
| **200** | 5.7 | 6.91 | 2600 | 20 | | | | | | |
| **224** | 5.1 | 6.17 | 2510 | 21 | | | | | | |
| **262** | 4.4 | 5.27 | 2390 | 23 | | | | | | |
| **280** | 4.1 | 4.93 | 2340 | 23 | | | | | | |
| **332** | 3.5 | 4.16 | 2210 | 25 | | | | | | |

## $P_m$ = 0.18 kW

| $n_a$ rpm | $M_a$ Nm | i | $F_{Ra}$ 1) N | SEW $f_B$ | | | | | m kg | |
|---|---|---|---|---|---|---|---|---|---|---|
| **0.10** | 13600 | 12912 | 87200 | 0.90 | | | | | | |
| **0.11** | 12100 | 11656 | 90000 | 1.00 | **FA** | **127R77** | **DR** | **63M4** | 425 | 456 |
| **0.13** | 10700 | 10191 | 90000 | 1.10 | **FAF** | **127R77** | **DR** | **63M4** | 465 | 456 |
| **0.15** | 8940 | 8831 | 90000 | 1.35 | **F** | **127R77** | **DR** | **63M4** | 460 | 456 |
| **0.17** | 7740 | 7643 | 90000 | 1.55 | **FF** | **127R77** | **DR** | **63M4** | 510 | 456 |
| **0.20** | 7130 | 6715 | 90000 | 1.70 | | | | | | |

21933170/DE – 11/2015

## $P_m$ = 0.18 kW

| $n_a$ rpm | $M_a$ Nm | i | $F_{Ra}$ [1)] N | SEW $f_B$ | | | | | m kg | |
|---|---|---|---|---|---|---|---|---|---|---|
| **0.15** | 8440 | 8548 | 47700 | 0.90 | | | | | | |
| **0.17** | 8130 | 7674 | 48600 | 0.95 | | | | | | |
| **0.20** | 7070 | 6767 | 51400 | 1.10 | **FA** | **107R77** | **DR** | **63M4** | 275 | 456 |
| **0.22** | 6080 | 5954 | 53800 | 1.25 | **FAF** | **107R77** | **DR** | **63M4** | 295 | 456 |
| **0.25** | 5290 | 5223 | 55700 | 1.45 | **F** | **107R77** | **DR** | **63M4** | 290 | 456 |
| **0.29** | 4850 | 4567 | 56600 | 1.60 | **FF** | **107R77** | **DR** | **63M4** | 320 | 456 |
| **0.37** | 3670 | 3521 | 59100 | 2.1 | | | | | | |
| **0.43** | 3250 | 3037 | 59900 | 2.4 | **FA** | **107R77** | **DR** | **63M4** | 275 | 456 |
| **0.48** | 2950 | 2756 | 60500 | 2.6 | **FAF** | **107R77** | **DR** | **63M4** | 295 | 456 |
| **0.56** | 2540 | 2369 | 61200 | 3.0 | **F** | **107R77** | **DR** | **63M4** | 290 | 456 |
| **0.64** | 2210 | 2068 | 61800 | 3.5 | **FF** | **107R77** | **DR** | **63M4** | 315 | 456 |
| | | | | | **FA** | **97R57** | **DR** | **63M4** | 185 | 456 |
| **0.30** | 4800 | 4333 | 22800 | 0.90 | **FAF** | **97R57** | **DR** | **63M4** | 205 | 456 |
| | | | | | **F** | **97R57** | **DR** | **63M4** | 190 | 456 |
| | | | | | **FF** | **97R57** | **DR** | **63M4** | 225 | 456 |
| **0.34** | 4420 | 3906 | 29500 | 0.95 | | | | | | |
| **0.39** | 3800 | 3352 | 31300 | 1.15 | | | | | | |
| **0.45** | 3210 | 2907 | 32800 | 1.35 | | | | | | |
| **0.52** | 2890 | 2553 | 33600 | 1.50 | **FA** | **97R57** | **DR** | **63M4** | 180 | 456 |
| **0.59** | 2540 | 2245 | 34300 | 1.70 | **FAF** | **97R57** | **DR** | **63M4** | 205 | 456 |
| **0.67** | 2210 | 1970 | 35000 | 1.95 | **F** | **97R57** | **DR** | **63M4** | 190 | 456 |
| **0.77** | 1950 | 1722 | 35500 | 2.2 | **FF** | **97R57** | **DR** | **63M4** | 225 | 456 |
| **0.86** | 1730 | 1527 | 35900 | 2.5 | | | | | | |
| **0.99** | 1420 | 1327 | 36400 | 3.0 | | | | | | |
| **1.1** | 1330 | 1171 | 36500 | 3.2 | | | | | | |
| **0.51** | 2920 | 2576 | 22300 | 1.00 | | | | | | |
| **0.60** | 2490 | 2199 | 24800 | 1.20 | | | | | | |
| **0.68** | 2160 | 1930 | 25900 | 1.40 | | | | | | |
| **0.77** | 1930 | 1709 | 26600 | 1.55 | **FA** | **87R57** | **DR** | **63M4** | 115 | 456 |
| **0.88** | 1690 | 1493 | 27300 | 1.75 | **FAF** | **87R57** | **DR** | **63M4** | 130 | 456 |
| **1.0** | 1390 | 1300 | 28100 | 2.1 | **F** | **87R57** | **DR** | **63M4** | 125 | 456 |
| **1.2** | 1250 | 1148 | 28400 | 2.4 | **FF** | **87R57** | **DR** | **63M4** | 140 | 456 |
| **1.3** | 1080 | 1010 | 28800 | 2.8 | | | | | | |
| **1.5** | 970 | 887 | 29000 | 3.1 | | | | | | |
| **1.7** | 830 | 780 | 29300 | 3.6 | | | | | | |
| **0.86** | 1770 | 1544 | 13500 | 0.85 | | | | | | |
| **0.98** | 1550 | 1354 | 15300 | 0.95 | | | | | | |
| **1.1** | 1380 | 1200 | 16500 | 1.10 | **FA** | **77R37** | **DR** | **63M4** | 65 | 456 |
| **1.2** | 1210 | 1053 | 17400 | 1.25 | **FAF** | **77R37** | **DR** | **63M4** | 72 | 456 |
| **1.4** | 1030 | 910 | 18200 | 1.45 | **F** | **77R37** | **DR** | **63M4** | 69 | 456 |
| **1.6** | 880 | 810 | 18700 | 1.70 | **FF** | **77R37** | **DR** | **63M4** | 80 | 456 |
| **1.9** | 780 | 710 | 19000 | 1.90 | | | | | | |
| **2.2** | 690 | 615 | 19300 | 2.2 | | | | | | |
| **1.5** | 940 | 858 | 8660 | 0.85 | | | | | | |
| **1.8** | 820 | 755 | 10200 | 1.00 | | | | | | |
| **2.1** | 700 | 641 | 11200 | 1.15 | **FA** | **67R37** | **DR** | **63M4** | 43 | 456 |
| **2.3** | 645 | 572 | 11600 | 1.25 | **FAF** | **67R37** | **DR** | **63M4** | 49 | 456 |
| **2.6** | 555 | 509 | 12100 | 1.45 | **F** | **67R37** | **DR** | **63M4** | 46 | 456 |
| **3.0** | 480 | 437 | 12500 | 1.70 | **FF** | **67R37** | **DR** | **63M4** | 52 | 456 |
| **3.4** | 430 | 384 | 12700 | 1.90 | | | | | | |
| **2.6** | 575 | 500 | 12000 | 1.40 | | | | | | |
| **2.9** | 525 | 454 | 12300 | 1.55 | | | | | | |
| **3.4** | 450 | 392 | 12600 | 1.80 | **FA** | **67R37** | **DR** | **63M4** | 42 | 456 |
| **4.0** | 380 | 333 | 12900 | 2.2 | **FAF** | **67R37** | **DR** | **63M4** | 48 | 456 |
| **4.4** | 335 | 297 | 13000 | 2.4 | **F** | **67R37** | **DR** | **63M4** | 45 | 456 |
| **5.1** | 295 | 261 | 13000 | 2.8 | **FF** | **67R37** | **DR** | **63M4** | 51 | 456 |
| **5.6** | 260 | 238 | 13000 | 3.1 | | | | | | |
| **6.6** | 215 | 200 | 13000 | 3.7 | | | | | | |
| **2.4** | 635 | 558 | 7570 | 0.95 | | | | | | |
| **2.6** | 570 | 506 | 9420 | 1.05 | **FA** | **57R37** | **DR** | **63M4** | 39 | 456 |
| **2.9** | 495 | 452 | 9930 | 1.20 | **FAF** | **57R37** | **DR** | **63M4** | 45 | 456 |
| **3.4** | 425 | 386 | 10400 | 1.40 | **F** | **57R37** | **DR** | **63M4** | 39 | 456 |
| **3.9** | 370 | 338 | 10700 | 1.60 | **FF** | **57R37** | **DR** | **63M4** | 46 | 456 |



21933170/DE – 11/2015

## $P_m$ = 0.18 kW

| $n_a$ rpm | $M_a$ Nm | i | $F_{Ra}$ 1) N | SEW $f_B$ | | | | | m kg | |
|---|---|---|---|---|---|---|---|---|---|---|
| **3.1** | 500 | 426 | 9910 | 1.20 | | | | | | |
| **3.5** | 445 | 382 | 10300 | 1.35 | | | | | | |
| **4.0** | 380 | 330 | 10700 | 1.55 | **FA** | **57R37** | **DR** | **63M4** | 38 | 456 |
| **4.4** | 340 | 298 | 10900 | 1.75 | **FAF** | **57R37** | **DR** | **63M4** | 44 | 456 |
| **5.0** | 300 | 262 | 11100 | 2.00 | **F** | **57R37** | **DR** | **63M4** | 39 | 456 |
| **5.8** | 255 | 226 | 11400 | 2.3 | **FF** | **57R37** | **DR** | **63M4** | 45 | 456 |
| **6.6** | 220 | 200 | 11500 | 2.7 | | | | | | |
| **3.6** | 410 | 370 | 5210 | 0.95 | **FA** | **47R17** | **DR** | **63M4** | 24 | 456 |
| **4.1** | 375 | 324 | 6250 | 1.05 | **FAF** | **47R17** | **DR** | **63M4** | 26 | 456 |
| **4.6** | 325 | 288 | 6810 | 1.20 | **F** | **47R17** | **DR** | **63M4** | 25 | 456 |
| **5.3** | 275 | 249 | 7250 | 1.45 | **FF** | **47R17** | **DR** | **63M4** | 28 | 456 |
| **4.0** | 385 | 334 | 6100 | 1.05 | | | | | | |
| **4.5** | 335 | 295 | 6680 | 1.20 | **FA** | **47R17** | **DR** | **63M4** | 23 | 456 |
| **5.2** | 285 | 253 | 7190 | 1.40 | **FAF** | **47R17** | **DR** | **63M4** | 26 | 456 |
| **6.1** | 250 | 217 | 7430 | 1.55 | **F** | **47R17** | **DR** | **63M4** | 24 | 456 |
| **7.0** | 220 | 190 | 7650 | 1.80 | **FF** | **47R17** | **DR** | **63M4** | 27 | 456 |
| **7.4** | 205 | 178 | 7740 | 1.95 | | | | | | |
| **7.1** | 215 | 186 | 4060 | 0.95 | **FA** | **37R17** | **DR** | **63M4** | 19 | 456 |
| **7.9** | 194 | 167 | 4380 | 1.05 | **FAF** | **37R17** | **DR** | **63M4** | 20 | 456 |
| **9.1** | 171 | 145 | 4660 | 1.15 | **F** | **37R17** | **DR** | **63M4** | 19 | 456 |
| **10** | 151 | 129 | 4870 | 1.30 | **FF** | **37R17** | **DR** | **63M4** | 21 | 456 |
| **9.3** | 166 | 142 | 4500 | 0.80 | **FA** | **27R17** | **DR** | **63M4** | 13 | 456 |
| **11** | 144 | 124 | 4500 | 0.90 | **FAF** | **27R17** | **DR** | **63M4** | 13 | 456 |
| **12** | 126 | 109 | 4500 | 1.05 | **F** | **27R17** | **DR** | **63M4** | 13 | 456 |
| **14** | 110 | 96 | 4500 | 1.20 | **FF** | **27R17** | **DR** | **63M4** | 14 | 456 |
| | | | | | **FA** | **77** | **DR** | **63L6** | 57 | 422 |
| **3.1** | 555 | 281.71 | 19600 | 2.7 | **FAF** | **77** | **DR** | **63L6** | 63 | 421 |
| **3.3** | 515 | 262.93 | 19700 | 2.9 | **F** | **77** | **DR** | **63L6** | 60 | 420 |
| **3.8** | 445 | 225.79 | 19800 | 3.4 | **FF** | **77** | **DR** | **63L6** | 71 | 421 |
| | | | | | **FA** | **67** | **DR** | **63L6** | 33 | 416 |
| **3.8** | 450 | 228.99 | 12600 | 1.80 | **FAF** | **67** | **DR** | **63L6** | 39 | 415 |
| **4.4** | 385 | 195.39 | 12900 | 2.1 | **F** | **67** | **DR** | **63L6** | 36 | 414 |
| **5.1** | 335 | 170.85 | 13000 | 2.4 | **FF** | **67** | **DR** | **63L6** | 42 | 415 |
| | | | | | **FA** | **67** | **DR** | **63M4** | 32 | 416 |
| **5.8** | 295 | 228.99 | 13000 | 2.8 | **FAF** | **67** | **DR** | **63M4** | 38 | 415 |
| **6.8** | 250 | 195.39 | 13000 | 3.2 | **F** | **67** | **DR** | **63M4** | 35 | 414 |
| **7.7** | 220 | 170.85 | 13000 | 3.7 | **FF** | **67** | **DR** | **63M4** | 41 | 415 |
| **4.4** | 390 | 199.70 | 10600 | 1.50 | | | | | | |
| **4.7** | 360 | 183.60 | 10800 | 1.65 | **FA** | **57** | **DR** | **63L6** | 29 | 410 |
| **5.5** | 310 | 157.09 | 11100 | 1.95 | **FAF** | **57** | **DR** | **63L6** | 34 | 409 |
| **6.4** | 265 | 136.16 | 11300 | 2.2 | **F** | **57** | **DR** | **63L6** | 29 | 408 |
| **6.8** | 250 | 127.27 | 11400 | 2.4 | **FF** | **57** | **DR** | **63L6** | 35 | 409 |
| **7.9** | 215 | 110.01 | 11500 | 2.8 | | | | | | |
| **6.6** | 260 | 199.70 | 11300 | 2.3 | | | | | | |
| **7.2** | 235 | 183.60 | 11500 | 2.5 | **FA** | **57** | **DR** | **63M4** | 28 | 410 |
| **8.4** | 200 | 157.09 | 11500 | 2.9 | **FAF** | **57** | **DR** | **63M4** | 34 | 409 |
| **9.7** | 177 | 136.16 | 11500 | 3.4 | **F** | **57** | **DR** | **63M4** | 28 | 408 |
| **10** | 166 | 127.27 | 11500 | 3.6 | **FF** | **57** | **DR** | **63M4** | 35 | 409 |
| **4.6** | 375 | 190.76 | 6240 | 1.05 | | | | | | |
| **5.0** | 345 | 175.38 | 6600 | 1.15 | **FA** | **47** | **DR** | **63L6** | 22 | 404 |
| **5.8** | 295 | 150.06 | 7090 | 1.35 | **FAF** | **47** | **DR** | **63L6** | 24 | 403 |
| **6.7** | 255 | 130.07 | 7410 | 1.55 | **F** | **47** | **DR** | **63L6** | 22 | 402 |
| **7.2** | 240 | 121.57 | 7530 | 1.65 | **FF** | **47** | **DR** | **63L6** | 25 | 403 |
| **6.9** | 245 | 190.76 | 7470 | 1.60 | | | | | | |
| **7.5** | 225 | 175.38 | 7600 | 1.75 | **FA** | **47** | **DR** | **63M4** | 21 | 404 |
| **8.8** | 195 | 150.06 | 7800 | 2.0 | **FAF** | **47** | **DR** | **63M4** | 24 | 403 |
| **10** | 169 | 130.07 | 7920 | 2.4 | **F** | **47** | **DR** | **63M4** | 22 | 402 |
| **11** | 158 | 121.57 | 7970 | 2.5 | **FF** | **47** | **DR** | **63M4** | 25 | 403 |
| **7.4** | 230 | 117.88 | 3750 | 0.85 | | | | | | |
| **8.7** | 198 | 100.36 | 4320 | 1.00 | **FA** | **37** | **DR** | **63L6** | 17 | 398 |
| **10** | 171 | 86.53 | 4660 | 1.15 | **FAF** | **37** | **DR** | **63L6** | 18 | 397 |
| **11** | 159 | 80.65 | 4790 | 1.25 | **F** | **37** | **DR** | **63L6** | 17 | 396 |
| **12** | 139 | 70.50 | 4970 | 1.45 | **FF** | **37** | **DR** | **63L6** | 19 | 397 |

21933170/DE – 11/2015

## $P_m$ = 0.18 kW

| $n_a$ rpm | $M_a$ Nm | i | $F_{Ra}$ [1] N | SEW $f_B$ | | | | | m kg | |
|---|---|---|---|---|---|---|---|---|---|---|
| **10** | 167 | 128.51 | 4700 | 1.20 | | | | | | |
| **11** | 154 | 117.88 | 4840 | 1.30 | | | | | | |
| **13** | 131 | 100.36 | 5040 | 1.55 | **FA** | **37** | **DR** | **63M4** | 16 | 398 |
| **15** | 113 | 86.53 | 5180 | 1.75 | **FAF** | **37** | **DR** | **63M4** | 18 | 397 |
| **16** | 105 | 80.65 | 5230 | 1.90 | **F** | **37** | **DR** | **63M4** | 16 | 396 |
| **19** | 92 | 70.50 | 5300 | 2.2 | **FF** | **37** | **DR** | **63M4** | 18 | 397 |
| **20** | 86 | 66.09 | 5330 | 2.3 | | | | | | |
| **23** | 76 | 58.32 | 5380 | 2.6 | | | | | | |
| **12** | 143 | 109.90 | 4500 | 0.90 | | | | | | |
| **14** | 123 | 94.76 | 4500 | 1.05 | | | | | | |
| **15** | 115 | 88.32 | 4500 | 1.15 | | | | | | |
| **17** | 100 | 77.21 | 4500 | 1.30 | | | | | | |
| **18** | 94 | 72.37 | 4500 | 1.40 | **FA** | **27** | **DR** | **63M4** | 9.9 | 393 |
| **21** | 83 | 63.86 | 4500 | 1.55 | **FAF** | **27** | **DR** | **63M4** | 11 | 392 |
| **23** | 74 | 56.62 | 4500 | 1.75 | **F** | **27** | **DR** | **63M4** | 10 | 391 |
| **26** | 65 | 50.19 | 4500 | 2.00 | **FF** | **27** | **DR** | **63M4** | 11 | 392 |
| **28** | 61 | 46.78 | 4500 | 2.1 | | | | | | |
| **32** | 53 | 40.89 | 4410 | 2.4 | | | | | | |
| **34** | 50 | 38.33 | 4340 | 2.6 | | | | | | |
| **39** | 44 | 33.83 | 4200 | 3.0 | | | | | | |
| **45** | 38 | 29.56 | 4040 | 3.4 | | | | | | |
| **49** | 35 | 27.18 | 3950 | 3.7 | | | | | | |
| **57** | 30 | 23.25 | 3780 | 4.3 | | | | | | |
| **65** | 26 | 20.15 | 3630 | 5.0 | | | | | | |
| **70** | 24 | 18.84 | 3560 | 5.3 | | | | | | |
| **81** | 21 | 16.28 | 3410 | 6.1 | | | | | | |
| **95** | 18 | 13.84 | 3240 | 7.2 | | | | | | |
| **107** | 16 | 12.35 | 3140 | 8.1 | **FA** | **27** | **DR** | **63M4** | 9.6 | 393 |
| **125** | 14 | 10.55 | 2990 | 9.5 | **FAF** | **27** | **DR** | **63M4** | 10 | 392 |
| **134** | 13 | 9.88 | 2930 | 10 | **F** | **27** | **DR** | **63M4** | 10 | 391 |
| **140** | 12 | 9.40 | 2870 | 11 | **FF** | **27** | **DR** | **63M4** | 11 | 392 |
| **162** | 11 | 8.13 | 2750 | 12 | | | | | | |
| **191** | 9.0 | 6.91 | 2610 | 13 | | | | | | |
| **214** | 8.0 | 6.17 | 2520 | 14 | | | | | | |
| **251** | 6.9 | 5.27 | 2400 | 14 | | | | | | |
| **268** | 6.4 | 4.93 | 2350 | 15 | | | | | | |
| **318** | 5.4 | 4.16 | 2230 | 16 | | | | | | |
| **335** | 5.1 | 8.13 | 2190 | 24 | | | | | | |
| **394** | 4.4 | 6.91 | 2080 | 26 | **FA** | **27** | **DR** | **63S2** | 9.6 | 393 |
| **441** | 3.9 | 6.17 | 2000 | 28 | **FAF** | **27** | **DR** | **63S2** | 10 | 392 |
| **516** | 3.3 | 5.27 | 1910 | 30 | **F** | **27** | **DR** | **63S2** | 10 | 391 |
| **551** | 3.1 | 4.93 | 1870 | 31 | **FF** | **27** | **DR** | **63S2** | 11 | 392 |
| **655** | 2.6 | 4.16 | 1770 | 33 | | | | | | |

## $P_m$ = 0.25 kW

| $n_a$ rpm | $M_a$ Nm | i | $F_{Ra}$ [1] N | SEW $f_B$ | | | | | m kg | |
|---|---|---|---|---|---|---|---|---|---|---|
| **0.15** | 13300 | 8831 | 87900 | 0.90 | | | | | | |
| **0.17** | 11500 | 7643 | 90000 | 1.05 | **FA** | **127R77** | **DR** | **63L4** | 425 | 456 |
| **0.19** | 10400 | 6715 | 90000 | 1.15 | **FAF** | **127R77** | **DR** | **63L4** | 465 | 456 |
| **0.22** | 9230 | 5925 | 90000 | 1.30 | **F** | **127R77** | **DR** | **63L4** | 465 | 456 |
| **0.25** | 7940 | 5153 | 90000 | 1.50 | **FF** | **127R77** | **DR** | **63L4** | 510 | 456 |
| **0.29** | 6890 | 4533 | 90000 | 1.75 | | | | | | |
| **0.22** | 9050 | 5954 | 46000 | 0.85 | **FA** | **107R77** | **DR** | **63L4** | 275 | 456 |
| **0.25** | 7890 | 5223 | 49300 | 0.95 | **FAF** | **107R77** | **DR** | **63L4** | 295 | 456 |
| **0.28** | 7120 | 4567 | 51300 | 1.10 | **F** | **107R77** | **DR** | **63L4** | 290 | 456 |
| **0.37** | 5430 | 3521 | 55300 | 1.40 | **FF** | **107R77** | **DR** | **63L4** | 320 | 456 |
| **0.43** | 4780 | 3037 | 56800 | 1.60 | | | | | | |
| **0.47** | 4340 | 2756 | 57700 | 1.75 | **FA** | **107R77** | **DR** | **63L4** | 275 | 456 |
| **0.55** | 3730 | 2369 | 59000 | 2.1 | **FAF** | **107R77** | **DR** | **63L4** | 295 | 456 |
| **0.63** | 3250 | 2068 | 59900 | 2.4 | **F** | **107R77** | **DR** | **63L4** | 290 | 456 |
| **0.81** | 2490 | 1597 | 61300 | 3.1 | **FF** | **107R77** | **DR** | **63L4** | 320 | 456 |
| **0.93** | 2150 | 1401 | 61900 | 3.6 | | | | | | |

21933170/DE – 11/2015

## $P_m$ = 0.25 kW

| $n_a$ rpm | $M_a$ Nm | i | $F_{Ra}$ [1] N | SEW $f_B$ | | | | | m kg | |
|---|---|---|---|---|---|---|---|---|---|---|
| **0.45** | 4670 | 2907 | 27500 | 0.90 | | | | | | |
| **0.51** | 4180 | 2553 | 30300 | 1.05 | | | | | | |
| **0.58** | 3670 | 2245 | 31600 | 1.15 | | | | | | |
| **0.66** | 3200 | 1970 | 32800 | 1.35 | **FA** | **97R57** | **DR** | **63L4** | 185 | 456 |
| **0.75** | 2820 | 1722 | 33700 | 1.50 | **FAF** | **97R57** | **DR** | **63L4** | 205 | 456 |
| **0.85** | 2500 | 1527 | 34400 | 1.70 | **F** | **97R57** | **DR** | **63L4** | 190 | 456 |
| **0.98** | 2090 | 1327 | 35200 | 2.0 | **FF** | **97R57** | **DR** | **63L4** | 225 | 456 |
| **1.1** | 1910 | 1171 | 35500 | 2.2 | | | | | | |
| **1.3** | 1670 | 1022 | 36000 | 2.6 | | | | | | |
| **0.67** | 3130 | 1930 | 13500 | 0.95 | | | | | | |
| **0.76** | 2790 | 1709 | 23700 | 1.05 | | | | | | |
| **0.87** | 2440 | 1493 | 25000 | 1.25 | | | | | | |
| **1.0** | 2050 | 1300 | 26300 | 1.45 | **FA** | **87R57** | **DR** | **63L4** | 120 | 456 |
| **1.1** | 1830 | 1148 | 26900 | 1.65 | **FAF** | **87R57** | **DR** | **63L4** | 130 | 456 |
| **1.3** | 1590 | 1010 | 27600 | 1.90 | **F** | **87R57** | **DR** | **63L4** | 125 | 456 |
| **1.5** | 1410 | 887 | 28000 | 2.1 | **FF** | **87R57** | **DR** | **63L4** | 140 | 456 |
| **1.7** | 1230 | 780 | 28500 | 2.4 | | | | | | |
| **1.9** | 1040 | 674 | 28900 | 2.9 | | | | | | |
| **1.2** | 1740 | 1053 | 13900 | 0.85 | | | | | | |
| **1.4** | 1490 | 910 | 15700 | 1.00 | | | | | | |
| **1.6** | 1290 | 810 | 16900 | 1.15 | **FA** | **77R37** | **DR** | **63L4** | 66 | 456 |
| **1.8** | 1130 | 710 | 17700 | 1.30 | **FAF** | **77R37** | **DR** | **63L4** | 72 | 456 |
| **2.1** | 1000 | 615 | 18300 | 1.50 | **F** | **77R37** | **DR** | **63L4** | 70 | 456 |
| **2.4** | 870 | 538 | 18700 | 1.70 | **FF** | **77R37** | **DR** | **63L4** | 80 | 456 |
| **2.7** | 775 | 480 | 19000 | 1.95 | | | | | | |
| **3.2** | 660 | 413 | 19400 | 2.3 | | | | | | |
| | | | | | **FA** | **67R37** | **DR** | **63L4** | 44 | 456 |
| **2.3** | 930 | 572 | 9150 | 0.90 | **FAF** | **67R37** | **DR** | **63L4** | 50 | 456 |
| **2.6** | 810 | 509 | 10400 | 1.00 | **F** | **67R37** | **DR** | **63L4** | 46 | 456 |
| **3.0** | 700 | 437 | 11200 | 1.15 | **FF** | **67R37** | **DR** | **63L4** | 53 | 456 |
| **2.6** | 830 | 500 | 10200 | 1.00 | | | | | | |
| **2.9** | 755 | 454 | 10800 | 1.10 | | | | | | |
| **3.3** | 650 | 392 | 11600 | 1.25 | **FA** | **67R37** | **DR** | **63L4** | 42 | 456 |
| **3.9** | 550 | 333 | 12200 | 1.50 | **FAF** | **67R37** | **DR** | **63L4** | 49 | 456 |
| **4.4** | 485 | 297 | 12500 | 1.70 | **F** | **67R37** | **DR** | **63L4** | 45 | 456 |
| **5.0** | 425 | 261 | 12700 | 1.90 | **FF** | **67R37** | **DR** | **63L4** | 51 | 456 |
| **5.5** | 385 | 238 | 12900 | 2.1 | | | | | | |
| | | | | | **FA** | **57R37** | **DR** | **63L4** | 40 | 456 |
| **3.4** | 620 | 386 | 8830 | 0.95 | **FAF** | **57R37** | **DR** | **63L4** | 45 | 456 |
| **3.8** | 540 | 338 | 9640 | 1.10 | **F** | **57R37** | **DR** | **63L4** | 40 | 456 |
| **5.1** | 405 | 255 | 10500 | 1.45 | **FF** | **57R37** | **DR** | **63L4** | 46 | 456 |
| **3.4** | 635 | 382 | 7390 | 0.95 | | | | | | |
| **3.9** | 550 | 330 | 9570 | 1.10 | | | | | | |
| **4.4** | 495 | 298 | 9950 | 1.20 | **FA** | **57R37** | **DR** | **63L4** | 39 | 456 |
| **5.0** | 435 | 262 | 10300 | 1.35 | **FAF** | **57R37** | **DR** | **63L4** | 45 | 456 |
| **5.8** | 370 | 226 | 10700 | 1.60 | **F** | **57R37** | **DR** | **63L4** | 39 | 456 |
| **6.5** | 320 | 200 | 11000 | 1.85 | **FF** | **57R37** | **DR** | **63L4** | 46 | 456 |
| **7.6** | 275 | 170 | 11300 | 2.2 | | | | | | |
| **5.2** | 400 | 249 | 5880 | 1.00 | **FA** | **47R17** | **DR** | **63L4** | 24 | 456 |
| **6.0** | 355 | 218 | 6470 | 1.10 | **FAF** | **47R17** | **DR** | **63L4** | 27 | 456 |
| **6.7** | 315 | 193 | 6920 | 1.25 | **F** | **47R17** | **DR** | **63L4** | 25 | 456 |
| **7.4** | 285 | 175 | 7180 | 1.40 | **FF** | **47R17** | **DR** | **63L4** | 28 | 456 |
| **5.1** | 410 | 253 | 4980 | 0.95 | | | | | | |
| **6.0** | 365 | 217 | 6380 | 1.10 | **FA** | **47R17** | **DR** | **63L4** | 24 | 456 |
| **6.8** | 315 | 190 | 6900 | 1.25 | **FAF** | **47R17** | **DR** | **63L4** | 26 | 456 |
| **7.3** | 295 | 178 | 7090 | 1.35 | **F** | **47R17** | **DR** | **63L4** | 25 | 456 |
| **8.7** | 245 | 149 | 7480 | 1.60 | **FF** | **47R17** | **DR** | **63L4** | 28 | 456 |
| **9.9** | 215 | 131 | 7670 | 1.85 | | | | | | |
| **8.9** | 245 | 145 | 3420 | 0.80 | **FA** | **37R17** | **DR** | **63L4** | 20 | 456 |
| **10** | 215 | 129 | 4040 | 0.90 | **FAF** | **37R17** | **DR** | **63L4** | 21 | 456 |
| **11** | 198 | 118 | 4320 | 1.00 | **F** | **37R17** | **DR** | **63L4** | 20 | 456 |
| **13** | 164 | 98 | 4740 | 1.20 | **FF** | **37R17** | **DR** | **63L4** | 22 | 456 |
| **15** | 144 | 87 | 4940 | 1.40 | | | | | | |

21933170/DE – 11/2015

## $P_m$ = 0.25 kW

| $n_a$ rpm | $M_a$ Nm | i | $F_{Ra}$ [1] N | SEW $f_B$ | | | | | m kg | |
|---|---|---|---|---|---|---|---|---|---|---|
| **3.2** | 750 | 281.71 | 19100 | 2.0 | | | | | | |
| **3.4** | 700 | 262.93 | 19300 | 2.1 | **FA** | **77** | **DRS** | **71S6** | 58 | 422 |
| **4.0** | 600 | 225.79 | 19500 | 2.5 | **FAF** | **77** | **DRS** | **71S6** | 65 | 421 |
| **4.5** | 525 | 198.31 | 19600 | 2.8 | **F** | **77** | **DRS** | **71S6** | 62 | 420 |
| **4.8** | 500 | 188.40 | 19700 | 3.0 | **FF** | **77** | **DRS** | **71S6** | 73 | 421 |
| **3.9** | 610 | 228.99 | 11800 | 1.35 | | | | | | |
| **4.6** | 520 | 195.39 | 12300 | 1.55 | **FA** | **67** | **DRS** | **71S6** | 34 | 416 |
| **5.2** | 455 | 170.85 | 12600 | 1.80 | **FAF** | **67** | **DRS** | **71S6** | 41 | 415 |
| **5.5** | 430 | 162.31 | 12700 | 1.90 | **F** | **67** | **DRS** | **71S6** | 37 | 414 |
| **6.3** | 375 | 142.40 | 12900 | 2.2 | **FF** | **67** | **DRS** | **71S6** | 43 | 415 |
| **5.7** | 420 | 228.99 | 12700 | 1.95 | | | | | | |
| **6.6** | 355 | 195.39 | 13000 | 2.3 | **FA** | **67** | **DR** | **63L4** | 33 | 416 |
| **7.6** | 310 | 170.85 | 13000 | 2.6 | **FAF** | **67** | **DR** | **63L4** | 39 | 415 |
| **8.0** | 295 | 162.31 | 13000 | 2.8 | **F** | **67** | **DR** | **63L4** | 36 | 414 |
| **9.1** | 260 | 142.40 | 13000 | 3.1 | **FF** | **67** | **DR** | **63L4** | 42 | 415 |
| **4.5** | 530 | 199.70 | 9700 | 1.15 | | | | | | |
| **4.9** | 485 | 183.60 | 9990 | 1.25 | **FA** | **57** | **DRS** | **71S6** | 31 | 410 |
| **5.7** | 415 | 157.09 | 10500 | 1.45 | **FAF** | **57** | **DRS** | **71S6** | 36 | 409 |
| **6.6** | 360 | 136.16 | 10800 | 1.65 | **F** | **57** | **DRS** | **71S6** | 31 | 408 |
| **7.0** | 335 | 127.27 | 10900 | 1.75 | **FF** | **57** | **DRS** | **71S6** | 37 | 409 |
| **8.1** | 290 | 110.01 | 11200 | 2.0 | | | | | | |
| **6.5** | 365 | 199.70 | 10800 | 1.65 | | | | | | |
| **7.1** | 335 | 183.60 | 10900 | 1.80 | **FA** | **57** | **DR** | **63L4** | 29 | 410 |
| **8.3** | 285 | 157.09 | 11200 | 2.1 | **FAF** | **57** | **DR** | **63L4** | 34 | 409 |
| **9.6** | 250 | 136.16 | 11400 | 2.4 | **F** | **57** | **DR** | **63L4** | 29 | 408 |
| **10** | 230 | 127.27 | 11500 | 2.6 | **FF** | **57** | **DR** | **63L4** | 35 | 409 |
| **12** | 200 | 110.01 | 11500 | 3.0 | | | | | | |
| **6.0** | 400 | 150.06 | 5920 | 1.00 | **FA** | **47** | **DRS** | **71S6** | 24 | 404 |
| **6.9** | 345 | 130.07 | 6590 | 1.15 | **FAF** | **47** | **DRS** | **71S6** | 26 | 403 |
| **7.4** | 320 | 121.57 | 6830 | 1.25 | **F** | **47** | **DRS** | **71S6** | 24 | 402 |
| **8.5** | 280 | 105.09 | 7230 | 1.45 | **FF** | **47** | **DRS** | **71S6** | 27 | 403 |
| **6.8** | 350 | 190.76 | 6550 | 1.15 | | | | | | |
| **7.4** | 320 | 175.38 | 6850 | 1.25 | | | | | | |
| **8.7** | 275 | 150.06 | 7270 | 1.45 | **FA** | **47** | **DR** | **63L4** | 22 | 404 |
| **10.0** | 235 | 130.07 | 7540 | 1.65 | **FAF** | **47** | **DR** | **63L4** | 24 | 403 |
| **11** | 220 | 121.57 | 7640 | 1.80 | **F** | **47** | **DR** | **63L4** | 22 | 402 |
| **12** | 193 | 105.09 | 7810 | 2.1 | **FF** | **47** | **DR** | **63L4** | 25 | 403 |
| **15** | 164 | 89.29 | 7950 | 2.4 | | | | | | |
| **10** | 235 | 128.51 | 3690 | 0.85 | | | | | | |
| **11** | 215 | 117.88 | 4040 | 0.90 | | | | | | |
| **13** | 184 | 100.36 | 4500 | 1.10 | | | | | | |
| **15** | 159 | 86.53 | 4790 | 1.25 | | | | | | |
| **16** | 148 | 80.65 | 4900 | 1.35 | | | | | | |
| **18** | 130 | 70.50 | 5060 | 1.55 | | | | | | |
| **20** | 121 | 66.09 | 5120 | 1.65 | **FA** | **37** | **DR** | **63L4** | 17 | 398 |
| **22** | 107 | 58.32 | 5210 | 1.85 | **FAF** | **37** | **DR** | **63L4** | 18 | 397 |
| **24** | 100 | 54.54 | 5260 | 2.0 | **F** | **37** | **DR** | **63L4** | 17 | 396 |
| **25** | 95 | 51.70 | 5280 | 2.1 | **FF** | **37** | **DR** | **63L4** | 19 | 397 |
| **28** | 86 | 47.02 | 5330 | 2.3 | | | | | | |
| **30** | 80 | 43.83 | 5360 | 2.5 | | | | | | |
| **34** | 70 | 38.31 | 5400 | 2.8 | | | | | | |
| **36** | 66 | 35.91 | 5420 | 3.0 | | | | | | |
| **41** | 58 | 31.69 | 5440 | 3.4 | | | | | | |
| **17** | 142 | 77.21 | 4500 | 0.90 | | | | | | |
| **18** | 133 | 72.37 | 4500 | 1.00 | | | | | | |
| **20** | 117 | 63.86 | 4500 | 1.10 | | | | | | |
| **23** | 104 | 56.62 | 4500 | 1.25 | **FA** | **27** | **DR** | **63L4** | 11 | 393 |
| **26** | 92 | 50.19 | 4440 | 1.40 | **FAF** | **27** | **DR** | **63L4** | 11 | 392 |
| **28** | 86 | 46.78 | 4370 | 1.50 | **F** | **27** | **DR** | **63L4** | 11 | 391 |
| **32** | 75 | 40.89 | 4240 | 1.75 | **FF** | **27** | **DR** | **63L4** | 12 | 392 |
| **34** | 70 | 38.33 | 4180 | 1.85 | | | | | | |
| **38** | 62 | 33.83 | 4060 | 2.1 | | | | | | |

21933170/DE – 11/2015

## $P_m$ = 0.25 kW

| $n_a$ rpm | $M_a$ Nm | i | $F_{Ra}$ 1) N | SEW $f_B$ | | | | | m kg | |
|---|---|---|---|---|---|---|---|---|---|---|
| **44** | 54 | 29.56 | 3920 | 2.4 | | | | | | |
| **48** | 50 | 27.18 | 3840 | 2.6 | | | | | | |
| **56** | 43 | 23.25 | 3690 | 3.0 | | | | | | |
| **64** | 37 | 20.15 | 3550 | 3.5 | | | | | | |
| **69** | 35 | 18.84 | 3480 | 3.8 | | | | | | |
| **80** | 30 | 16.28 | 3350 | 4.4 | | | | | | |
| **94** | 25 | 13.84 | 3200 | 5.1 | | | | | | |
| **105** | 23 | 12.35 | 3090 | 5.7 | **FA** | **27** | **DR** | **63L4** | 10 | 393 |
| **123** | 19 | 10.55 | 2950 | 6.7 | **FAF** | **27** | **DR** | **63L4** | 11 | 392 |
| **132** | 18 | 9.88 | 2900 | 7.2 | **F** | **27** | **DR** | **63L4** | 11 | 391 |
| **138** | 17 | 9.40 | 2840 | 7.5 | **FF** | **27** | **DR** | **63L4** | 12 | 392 |
| **160** | 15 | 8.13 | 2720 | 8.3 | | | | | | |
| **188** | 13 | 6.91 | 2590 | 9.0 | | | | | | |
| **211** | 11 | 6.17 | 2500 | 9.6 | | | | | | |
| **247** | 9.7 | 5.27 | 2380 | 10 | | | | | | |
| **264** | 9.1 | 4.93 | 2340 | 11 | | | | | | |
| **313** | 7.6 | 4.16 | 2220 | 11 | | | | | | |
| **327** | 7.3 | 8.13 | 2180 | 17 | | | | | | |
| **385** | 6.2 | 6.91 | 2080 | 18 | **FA** | **27** | **DR** | **63M2** | 9.6 | 393 |
| **431** | 5.5 | 6.17 | 2000 | 20 | **FAF** | **27** | **DR** | **63M2** | 10 | 392 |
| **505** | 4.7 | 5.27 | 1910 | 21 | **F** | **27** | **DR** | **63M2** | 10 | 391 |
| **539** | 4.4 | 4.93 | 1870 | 22 | **FF** | **27** | **DR** | **63M2** | 11 | 392 |
| **640** | 3.7 | 4.16 | 1770 | 24 | | | | | | |

## $P_m$ = 0.37 kW

| $n_a$ rpm | $M_a$ Nm | i | $F_{Ra}$ 1) N | SEW $f_B$ | | | | | m kg | |
|---|---|---|---|---|---|---|---|---|---|---|
| **0.21** | 14900 | 6715 | 84600 | 0.80 | | | | | | |
| **0.23** | 13200 | 5925 | 88100 | 0.90 | | | | | | |
| **0.27** | 11400 | 5153 | 90000 | 1.05 | **FA** | **127R77** | **DRS** | **71S4** | 430 | 456 |
| **0.30** | 9930 | 4533 | 90000 | 1.20 | **FAF** | **127R77** | **DRS** | **71S4** | 465 | 456 |
| **0.35** | 8690 | 3926 | 90000 | 1.40 | **F** | **127R77** | **DRS** | **71S4** | 465 | 456 |
| **0.40** | 7560 | 3454 | 90000 | 1.60 | **FF** | **127R77** | **DRS** | **71S4** | 510 | 456 |
| **0.46** | 6610 | 3031 | 90000 | 1.80 | | | | | | |
| **0.45** | 6850 | 3037 | 52000 | 1.10 | | | | | | |
| **0.50** | 6210 | 2756 | 53500 | 1.25 | **FA** | **107R77** | **DRS** | **71S4** | 275 | 456 |
| **0.58** | 5340 | 2369 | 55500 | 1.45 | **FAF** | **107R77** | **DRS** | **71S4** | 295 | 456 |
| **0.67** | 4660 | 2068 | 57000 | 1.65 | **F** | **107R77** | **DRS** | **71S4** | 290 | 456 |
| **0.86** | 3570 | 1597 | 59300 | 2.2 | **FF** | **107R77** | **DRS** | **71S4** | 320 | 456 |
| **0.70** | 4540 | 1970 | 29200 | 0.95 | | | | | | |
| **0.80** | 3990 | 1722 | 30800 | 1.10 | | | | | | |
| **0.90** | 3540 | 1527 | 32000 | 1.20 | **FA** | **97R57** | **DRS** | **71S4** | 185 | 456 |
| **1.0** | 2990 | 1327 | 33300 | 1.45 | **FAF** | **97R57** | **DRS** | **71S4** | 205 | 456 |
| **1.2** | 2710 | 1171 | 33900 | 1.60 | **F** | **97R57** | **DRS** | **71S4** | 190 | 456 |
| **1.4** | 2370 | 1022 | 34700 | 1.80 | **FF** | **97R57** | **DRS** | **71S4** | 225 | 456 |
| **1.5** | 2000 | 898 | 35400 | 2.1 | | | | | | |
| **1.1** | 2930 | 1300 | 22000 | 1.00 | | | | | | |
| **1.2** | 2610 | 1148 | 24400 | 1.15 | | | | | | |
| **1.4** | 2280 | 1010 | 25600 | 1.30 | | | | | | |
| **1.6** | 2010 | 887 | 26400 | 1.50 | **FA** | **87R57** | **DRS** | **71S4** | 120 | 456 |
| **1.8** | 1760 | 780 | 27100 | 1.70 | **FAF** | **87R57** | **DRS** | **71S4** | 130 | 456 |
| **2.0** | 1500 | 674 | 27800 | 2.00 | **F** | **87R57** | **DRS** | **71S4** | 125 | 456 |
| **2.3** | 1370 | 609 | 28100 | 2.2 | **FF** | **87R57** | **DRS** | **71S4** | 140 | 456 |
| **2.7** | 1150 | 515 | 28600 | 2.6 | | | | | | |
| **3.0** | 1020 | 452 | 28900 | 2.9 | | | | | | |
| **1.7** | 1840 | 810 | 11300 | 0.80 | | | | | | |
| **1.9** | 1620 | 710 | 14900 | 0.95 | | | | | | |
| **2.2** | 1420 | 615 | 16200 | 1.05 | **FA** | **77R37** | **DRS** | **71S4** | 68 | 456 |
| **2.6** | 1240 | 538 | 17200 | 1.20 | **FAF** | **77R37** | **DRS** | **71S4** | 74 | 456 |
| **2.9** | 1100 | 480 | 17900 | 1.35 | **F** | **77R37** | **DRS** | **71S4** | 72 | 456 |
| **3.4** | 940 | 413 | 18500 | 1.60 | **FF** | **77R37** | **DRS** | **71S4** | 82 | 456 |
| **3.8** | 840 | 367 | 18900 | 1.80 | | | | | | |
| **4.3** | 750 | 323 | 19100 | 2.0 | | | | | | |

21933170/DE – 11/2015

## $P_m$ = 0.37 kW

| $n_a$ rpm | $M_a$ Nm | i | $F_{Ra}$ [1] N | SEW $f_B$ | | | | | m kg | |
|---|---|---|---|---|---|---|---|---|---|---|
| **3.6** | 880 | 384 | 9670 | 0.95 | **FA** | **67R37** | **DRS** | **71S4** | 46 | 456 |
| **4.1** | 785 | 338 | 10600 | 1.05 | **FAF** | **67R37** | **DRS** | **71S4** | 52 | 456 |
| **4.5** | 700 | 305 | 11200 | 1.15 | **F** | **67R37** | **DRS** | **71S4** | 48 | 456 |
| **5.4** | 590 | 257 | 11900 | 1.40 | **FF** | **67R37** | **DRS** | **71S4** | 55 | 456 |
| **6.0** | 520 | 231 | 12300 | 1.55 | | | | | | |
| **5.4** | 580 | 255 | 9330 | 1.05 | **FA** | **57R37** | **DRS** | **71S4** | 42 | 456 |
| **6.9** | 455 | 201 | 10200 | 1.30 | **FAF** | **57R37** | **DRS** | **71S4** | 47 | 456 |
| **7.6** | 410 | 181 | 10500 | 1.45 | **F** | **57R37** | **DRS** | **71S4** | 42 | 456 |
| | | | | | **FF** | **57R37** | **DRS** | **71S4** | 48 | 456 |
| **5.3** | 615 | 262 | 9070 | 0.95 | | | | | | |
| **6.1** | 525 | 226 | 9740 | 1.15 | **FA** | **57R37** | **DRS** | **71S4** | 41 | 456 |
| **6.9** | 460 | 200 | 10200 | 1.30 | **FAF** | **57R37** | **DRS** | **71S4** | 47 | 456 |
| **8.1** | 390 | 170 | 10600 | 1.50 | **F** | **57R37** | **DRS** | **71S4** | 41 | 456 |
| **9.0** | 345 | 152 | 10900 | 1.70 | **FF** | **57R37** | **DRS** | **71S4** | 48 | 456 |
| **10** | 305 | 134 | 11100 | 1.95 | | | | | | |
| **7.9** | 400 | 175 | 5860 | 1.00 | **FA** | **47R17** | **DRS** | **71S4** | 26 | 456 |
| **9.4** | 340 | 147 | 6660 | 1.15 | **FAF** | **47R17** | **DRS** | **71S4** | 29 | 456 |
| **11** | 300 | 130 | 7050 | 1.35 | **F** | **47R17** | **DRS** | **71S4** | 27 | 456 |
| | | | | | **FF** | **47R17** | **DRS** | **71S4** | 30 | 456 |
| **3.3** | 1050 | 270.68 | 28900 | 2.8 | **FA** | **87** | **DRS** | **71M6** | 99 | 428 |
| **3.5** | 990 | 255.37 | 29000 | 3.0 | **FAF** | **87** | **DRS** | **71M6** | 110 | 427 |
| **4.0** | 890 | 228.93 | 29200 | 3.4 | **F** | **87** | **DRS** | **71M6** | 105 | 426 |
| | | | | | **FF** | **87** | **DRS** | **71M6** | 120 | 427 |
| **4.0** | 880 | 225.79 | 18700 | 1.70 | **FA** | **77** | **DRS** | **71M6** | 60 | 422 |
| **4.6** | 770 | 198.31 | 19100 | 1.95 | **FAF** | **77** | **DRS** | **71M6** | 66 | 421 |
| **4.8** | 735 | 188.40 | 19200 | 2.0 | **F** | **77** | **DRS** | **71M6** | 64 | 420 |
| **5.4** | 645 | 166.47 | 19400 | 2.3 | **FF** | **77** | **DRS** | **71M6** | 74 | 421 |
| **6.4** | 555 | 142.27 | 19600 | 2.7 | | | | | | |
| **4.9** | 720 | 281.71 | 19200 | 2.1 | **FA** | **77** | **DRS** | **71S4** | 58 | 422 |
| **5.2** | 670 | 262.93 | 19300 | 2.2 | **FAF** | **77** | **DRS** | **71S4** | 65 | 421 |
| **6.1** | 575 | 225.79 | 19500 | 2.6 | **F** | **77** | **DRS** | **71S4** | 62 | 420 |
| **7.0** | 505 | 198.31 | 19700 | 3.0 | **FF** | **77** | **DRS** | **71S4** | 73 | 421 |
| **4.6** | 760 | 195.39 | 10800 | 1.05 | **FA** | **67** | **DRS** | **71M6** | 36 | 416 |
| **5.3** | 665 | 170.85 | 11500 | 1.25 | **FAF** | **67** | **DRS** | **71M6** | 42 | 415 |
| **5.6** | 630 | 162.31 | 11700 | 1.30 | **F** | **67** | **DRS** | **71M6** | 39 | 414 |
| **6.4** | 555 | 142.40 | 12100 | 1.45 | **FF** | **67** | **DRS** | **71M6** | 45 | 415 |
| **7.5** | 470 | 120.79 | 12500 | 1.75 | | | | | | |
| **6.0** | 585 | 228.99 | 12000 | 1.40 | | | | | | |
| **7.1** | 500 | 195.39 | 12400 | 1.65 | **FA** | **67** | **DRS** | **71S4** | 34 | 416 |
| **8.1** | 435 | 170.85 | 12700 | 1.85 | **FAF** | **67** | **DRS** | **71S4** | 41 | 415 |
| **8.5** | 415 | 162.31 | 12800 | 1.95 | **F** | **67** | **DRS** | **71S4** | 37 | 414 |
| **9.7** | 360 | 142.40 | 12900 | 2.2 | **FF** | **67** | **DRS** | **71S4** | 43 | 415 |
| **11** | 305 | 120.79 | 13000 | 2.6 | | | | | | |
| **5.8** | 610 | 157.09 | 9100 | 1.00 | **FA** | **57** | **DRS** | **71M6** | 32 | 410 |
| **6.6** | 530 | 136.16 | 9700 | 1.15 | **FAF** | **57** | **DRS** | **71M6** | 37 | 409 |
| **7.1** | 495 | 127.27 | 9940 | 1.20 | **F** | **57** | **DRS** | **71M6** | 32 | 408 |
| **8.2** | 425 | 110.01 | 10400 | 1.40 | **FF** | **57** | **DRS** | **71M6** | 38 | 409 |
| **6.9** | 510 | 199.70 | 9850 | 1.15 | | | | | | |
| **7.5** | 470 | 183.60 | 10100 | 1.30 | | | | | | |
| **8.8** | 400 | 157.09 | 10600 | 1.50 | **FA** | **57** | **DRS** | **71S4** | 31 | 410 |
| **10** | 345 | 136.16 | 10900 | 1.70 | **FAF** | **57** | **DRS** | **71S4** | 36 | 409 |
| **11** | 325 | 127.27 | 11000 | 1.85 | **F** | **57** | **DRS** | **71S4** | 31 | 408 |
| **13** | 280 | 110.01 | 11200 | 2.1 | **FF** | **57** | **DRS** | **71S4** | 37 | 409 |
| **15** | 235 | 93.47 | 11500 | 2.5 | | | | | | |
| **17** | 210 | 83.46 | 11500 | 2.8 | | | | | | |
| **9.2** | 380 | 150.06 | 6140 | 1.05 | | | | | | |
| **11** | 330 | 130.07 | 6740 | 1.20 | | | | | | |
| **13** | 265 | 105.09 | 7320 | 1.50 | **FA** | **47** | **DRS** | **71S4** | 24 | 404 |
| **15** | 225 | 89.29 | 7600 | 1.75 | **FAF** | **47** | **DRS** | **71S4** | 26 | 403 |
| **17** | 200 | 79.72 | 7750 | 1.95 | **F** | **47** | **DRS** | **71S4** | 24 | 402 |
| **20** | 174 | 68.09 | 7900 | 2.3 | **FF** | **47** | **DRS** | **71S4** | 27 | 403 |
| **21** | 167 | 65.36 | 7930 | 2.4 | | | | | | |



21933170/DE – 11/2015

## $P_m$ = 0.37 kW

| $n_a$ rpm | $M_a$ Nm | i | $F_{Ra}$ [1] N | SEW $f_B$ | | | | | m kg | |
|---|---|---|---|---|---|---|---|---|---|---|
| **16** | 220 | 86.53 | 3960 | 0.90 | | | | | | |
| **17** | 205 | 80.65 | 4200 | 0.95 | | | | | | |
| **20** | 180 | 70.50 | 4550 | 1.10 | | | | | | |
| **21** | 169 | 66.09 | 4680 | 1.20 | | | | | | |
| **24** | 149 | 58.32 | 4880 | 1.35 | | | | | | |
| **25** | 140 | 54.54 | 4970 | 1.45 | **FA** | **37** | **DRS** | **71S4** | 19 | 398 |
| **27** | 132 | 51.70 | 5030 | 1.50 | **FAF** | **37** | **DRS** | **71S4** | 20 | 397 |
| **29** | 120 | 47.02 | 5120 | 1.65 | **F** | **37** | **DRS** | **71S4** | 19 | 396 |
| **31** | 112 | 43.83 | 5180 | 1.80 | **FF** | **37** | **DRS** | **71S4** | 21 | 397 |
| **36** | 98 | 38.31 | 5270 | 2.0 | | | | | | |
| **38** | 92 | 35.91 | 5300 | 2.2 | | | | | | |
| **44** | 81 | 31.69 | 5300 | 2.5 | | | | | | |
| **49** | 72 | 28.09 | 5140 | 2.8 | | | | | | |
| **58** | 61 | 23.88 | 4930 | 3.3 | | | | | | |
| **24** | 145 | 56.62 | 4080 | 0.90 | | | | | | |
| **28** | 128 | 50.19 | 4010 | 1.00 | **FA** | **27** | **DRS** | **71S4** | 13 | 393 |
| **30** | 120 | 46.78 | 3970 | 1.10 | **FAF** | **27** | **DRS** | **71S4** | 13 | 392 |
| **34** | 105 | 40.89 | 3880 | 1.25 | **F** | **27** | **DRS** | **71S4** | 13 | 391 |
| **36** | 98 | 38.33 | 3840 | 1.35 | **FF** | **27** | **DRS** | **71S4** | 14 | 392 |
| **41** | 87 | 33.83 | 3750 | 1.50 | | | | | | |
| **47** | 76 | 29.56 | 3650 | 1.70 | | | | | | |
| **51** | 70 | 27.18 | 3580 | 1.85 | | | | | | |
| **59** | 60 | 23.25 | 3460 | 2.2 | | | | | | |
| **68** | 52 | 20.15 | 3340 | 2.5 | | | | | | |
| **73** | 48 | 18.84 | 3290 | 2.7 | | | | | | |
| **85** | 42 | 16.28 | 3170 | 3.1 | | | | | | |
| **100** | 35 | 13.84 | 3040 | 3.7 | | | | | | |
| **112** | 32 | 12.35 | 2950 | 4.1 | **FA** | **27** | **DRS** | **71S4** | 12 | 393 |
| **131** | 27 | 10.55 | 2820 | 4.8 | **FAF** | **27** | **DRS** | **71S4** | 13 | 392 |
| **140** | 25 | 9.88 | 2770 | 5.1 | **F** | **27** | **DRS** | **71S4** | 13 | 391 |
| **147** | 24 | 9.40 | 2710 | 5.4 | **FF** | **27** | **DRS** | **71S4** | 14 | 392 |
| **170** | 21 | 8.13 | 2600 | 5.9 | | | | | | |
| **200** | 18 | 6.91 | 2490 | 6.4 | | | | | | |
| **224** | 16 | 6.17 | 2410 | 6.9 | | | | | | |
| **262** | 14 | 5.27 | 2300 | 7.4 | | | | | | |
| **280** | 13 | 4.93 | 2250 | 7.6 | | | | | | |
| **332** | 11 | 4.16 | 2140 | 8.2 | | | | | | |
| **326** | 11 | 8.13 | 2150 | 11 | | | | | | |
| **384** | 9.2 | 6.91 | 2050 | 12 | **FA** | **27** | **DR** | **63L2** | 10 | 393 |
| **430** | 8.2 | 6.17 | 1980 | 13 | **FAF** | **27** | **DR** | **63L2** | 11 | 392 |
| **503** | 7.0 | 5.27 | 1890 | 14 | **F** | **27** | **DR** | **63L2** | 11 | 391 |
| **537** | 6.6 | 4.93 | 1850 | 15 | **FF** | **27** | **DR** | **63L2** | 12 | 392 |
| **638** | 5.5 | 4.16 | 1750 | 16 | | | | | | |

## $P_m$ = 0.55 kW

| $n_a$ rpm | $M_a$ Nm | i | $F_{Ra}$ [1] N | SEW $f_B$ | | | | | m kg | |
|---|---|---|---|---|---|---|---|---|---|---|
| **0.22** | 20500 | 6295 | 91800 | 0.90 | **FA** | **157R97** | **DRS** | **71M4** | 770 | 456 |
| **0.25** | 17100 | 5404 | 102700 | 1.05 | **FAF** | **157R97** | **DRS** | **71M4** | 830 | 456 |
| **0.49** | 8820 | 2780 | 118800 | 2.0 | **F** | **157R97** | **DRS** | **71M4** | 790 | 456 |
| | | | | | **FF** | **157R97** | **DRS** | **71M4** | 900 | 456 |
| **0.56** | 7790 | 2427 | 120000 | 2.3 | **FA** | **157R97** | **DRS** | **71M4** | 760 | 456 |
| **0.81** | 5530 | 1674 | 120000 | 3.2 | **FAF** | **157R97** | **DRS** | **71M4** | 820 | 456 |
| **1.0** | 4270 | 1308 | 120000 | 4.2 | **F** | **157R97** | **DRS** | **71M4** | 790 | 456 |
| **1.2** | 3750 | 1169 | 120000 | 4.8 | **FF** | **157R97** | **DRS** | **71M4** | 890 | 456 |
| **0.35** | 13400 | 3926 | 87700 | 0.90 | **FA** | **127R77** | **DRS** | **71M4** | 430 | 456 |
| **0.39** | 11700 | 3454 | 90000 | 1.00 | **FAF** | **127R77** | **DRS** | **71M4** | 465 | 456 |
| **0.45** | 10200 | 3031 | 90000 | 1.15 | **F** | **127R77** | **DRS** | **71M4** | 465 | 456 |
| | | | | | **FF** | **127R77** | **DRS** | **71M4** | 510 | 456 |

21933170/DE – 11/2015

## $P_m$ = 0.55 kW

| $n_a$ rpm | $M_a$ Nm | i | $F_{Ra}$ 1) N | SEW $f_B$ | | | | | m kg | |
|---|---|---|---|---|---|---|---|---|---|---|
| **0.57** | 8240 | 2369 | 48300 | 0.95 | | | | | | |
| **0.66** | 7200 | 2068 | 51100 | 1.05 | | | | | | |
| **0.74** | 6190 | 1826 | 53600 | 1.25 | | | | | | |
| **0.85** | 5530 | 1597 | 55100 | 1.40 | **FA** | **107R77** | **DRS** | **71M4** | 275 | 456 |
| **0.97** | 4820 | 1401 | 56700 | 1.60 | **FAF** | **107R77** | **DRS** | **71M4** | 300 | 456 |
| **1.1** | 4210 | 1243 | 58000 | 1.80 | **F** | **107R77** | **DRS** | **71M4** | 295 | 456 |
| **1.2** | 3760 | 1087 | 58900 | 2.0 | **FF** | **107R77** | **DRS** | **71M4** | 320 | 456 |
| **1.4** | 3220 | 950 | 60000 | 2.4 | | | | | | |
| **1.6** | 2800 | 834 | 60800 | 2.7 | | | | | | |
| **2.1** | 2180 | 640 | 61900 | 3.5 | | | | | | |
| **1.0** | 4620 | 1327 | 28900 | 0.95 | | | | | | |
| **1.2** | 4150 | 1171 | 30300 | 1.05 | | | | | | |
| **1.3** | 3620 | 1022 | 31800 | 1.20 | | | | | | |
| **1.5** | 3100 | 898 | 33100 | 1.40 | **FA** | **97R57** | **DRS** | **71M4** | 185 | 456 |
| **1.7** | 2740 | 784 | 33900 | 1.55 | **FAF** | **97R57** | **DRS** | **71M4** | 210 | 456 |
| **2.0** | 2380 | 690 | 34600 | 1.80 | **F** | **97R57** | **DRS** | **71M4** | 195 | 456 |
| **2.2** | 2100 | 605 | 35200 | 2.0 | **FF** | **97R57** | **DRS** | **71M4** | 225 | 456 |
| **2.6** | 1820 | 529 | 35700 | 2.4 | | | | | | |
| **2.9** | 1610 | 467 | 36100 | 2.7 | | | | | | |
| **3.4** | 1380 | 406 | 36500 | 3.1 | | | | | | |
| **3.7** | 1240 | 363 | 36700 | 3.5 | | | | | | |
| **1.5** | 3100 | 887 | 15200 | 0.95 | | | | | | |
| **1.7** | 2710 | 780 | 24000 | 1.10 | | | | | | |
| **2.0** | 2330 | 674 | 25400 | 1.30 | **FA** | **87R57** | **DRS** | **71M4** | 120 | 456 |
| **2.2** | 2120 | 609 | 26100 | 1.40 | **FAF** | **87R57** | **DRS** | **71M4** | 135 | 456 |
| **2.6** | 1790 | 515 | 27000 | 1.70 | **F** | **87R57** | **DRS** | **71M4** | 125 | 456 |
| **3.0** | 1570 | 452 | 27600 | 1.90 | **FF** | **87R57** | **DRS** | **71M4** | 140 | 456 |
| **3.9** | 1180 | 345 | 28600 | 2.5 | | | | | | |
| **2.8** | 1690 | 480 | 14300 | 0.90 | **FA** | **77R37** | **DRS** | **71M4** | 69 | 456 |
| **3.3** | 1440 | 413 | 16100 | 1.05 | **FAF** | **77R37** | **DRS** | **71M4** | 76 | 456 |
| **3.7** | 1290 | 367 | 17000 | 1.15 | **F** | **77R37** | **DRS** | **71M4** | 73 | 456 |
| **4.2** | 1140 | 323 | 17700 | 1.30 | **FF** | **77R37** | **DRS** | **71M4** | 83 | 456 |
| **5.3** | 900 | 257 | 9470 | 0.90 | **FA** | **67R37** | **DRS** | **71M4** | 47 | 456 |
| **5.9** | 800 | 231 | 10400 | 1.00 | **FAF** | **67R37** | **DRS** | **71M4** | 53 | 456 |
| **6.6** | 720 | 205 | 11100 | 1.15 | **F** | **67R37** | **DRS** | **71M4** | 50 | 456 |
| **7.8** | 610 | 175 | 11800 | 1.35 | **FF** | **67R37** | **DRS** | **71M4** | 56 | 456 |
| **3.4** | 1550 | 270.68 | 27700 | 1.95 | **FA** | **87** | **DRS** | **80S6** | 100 | 428 |
| **3.6** | 1460 | 255.37 | 27900 | 2.0 | **FAF** | **87** | **DRS** | **80S6** | 115 | 427 |
| **4.0** | 1310 | 228.93 | 28300 | 2.3 | **F** | **87** | **DRS** | **80S6** | 105 | 426 |
| **4.6** | 1130 | 197.20 | 28700 | 2.6 | **FF** | **87** | **DRS** | **80S6** | 120 | 427 |
| **5.1** | 1030 | 179.97 | 28900 | 2.9 | | | | | | |
| **4.0** | 1290 | 225.79 | 17000 | 1.15 | **FA** | **77** | **DRS** | **80S6** | 62 | 422 |
| **4.6** | 1130 | 198.31 | 17700 | 1.30 | **FAF** | **77** | **DRS** | **80S6** | 69 | 421 |
| **4.9** | 1080 | 188.40 | 18000 | 1.40 | **F** | **77** | **DRS** | **80S6** | 66 | 420 |
| | | | | | **FF** | **77** | **DRS** | **80S6** | 77 | 421 |
| **5.5** | 950 | 166.47 | 18500 | 1.55 | **FA** | **77** | **DRS** | **80S6** | 62 | 422 |
| **6.4** | 810 | 142.27 | 18900 | 1.85 | **FAF** | **77** | **DRS** | **80S6** | 69 | 421 |
| **7.0** | 745 | 130.42 | 19100 | 2.0 | **F** | **77** | **DRS** | **80S6** | 66 | 420 |
| | | | | | **FF** | **77** | **DRS** | **80S6** | 77 | 421 |
| **6.0** | 870 | 225.79 | 18800 | 1.70 | | | | | | |
| **6.9** | 765 | 198.31 | 19100 | 1.95 | | | | | | |
| **7.2** | 725 | 188.40 | 19200 | 2.1 | | | | | | |
| **8.2** | 640 | 166.47 | 19400 | 2.3 | **FA** | **77** | **DRS** | **71M4** | 60 | 422 |
| **9.6** | 545 | 142.27 | 19600 | 2.7 | **FAF** | **77** | **DRS** | **71M4** | 66 | 421 |
| **10** | 500 | 130.42 | 19700 | 3.0 | **F** | **77** | **DRS** | **71M4** | 64 | 420 |
| **12** | 440 | 114.45 | 19800 | 3.4 | **FF** | **77** | **DRS** | **71M4** | 74 | 421 |
| **13** | 415 | 108.46* | 19800 | 3.6 | | | | | | |
| **14** | 365 | 94.93 | 19900 | 4.1 | | | | | | |



21933170/DE – 11/2015

## $P_m$ = 0.55 kW

| $n_a$ rpm | $M_a$ Nm | i | $F_{Ra}$ 1) N | SEW $f_B$ | | | | | m kg | |
|---|---|---|---|---|---|---|---|---|---|---|
| **7.0** | 750 | 195.39 | 10900 | 1.10 | | | | | | |
| **8.0** | 655 | 170.85 | 11500 | 1.25 | | | | | | |
| **8.4** | 625 | 162.31 | 11700 | 1.30 | | | | | | |
| **9.6** | 545 | 142.40 | 12200 | 1.50 | **FA** | **67** | **DRS** | **71M4** | 36 | 416 |
| **11** | 465 | 120.79 | 12600 | 1.75 | **FAF** | **67** | **DRS** | **71M4** | 42 | 415 |
| **12** | 420 | 109.04 | 12700 | 1.95 | **F** | **67** | **DRS** | **71M4** | 39 | 414 |
| **14** | 370 | 95.94 | 12900 | 2.2 | **FF** | **67** | **DRS** | **71M4** | 45 | 415 |
| **15** | 345 | 90.59 | 13000 | 2.3 | | | | | | |
| **17** | 305 | 79.76 | 13000 | 2.7 | | | | | | |
| **8.7** | 605 | 157.09 | 9150 | 1.00 | | | | | | |
| **10.0** | 525 | 136.16 | 9740 | 1.15 | | | | | | |
| **11** | 490 | 127.27 | 9980 | 1.20 | | | | | | |
| **12** | 420 | 110.01 | 10400 | 1.40 | **FA** | **57** | **DRS** | **71M4** | 32 | 410 |
| **15** | 360 | 93.47 | 10800 | 1.65 | **FAF** | **57** | **DRS** | **71M4** | 37 | 409 |
| **16** | 320 | 83.46 | 11000 | 1.85 | **F** | **57** | **DRS** | **71M4** | 32 | 408 |
| **19** | 280 | 72.98 | 11200 | 2.1 | **FF** | **57** | **DRS** | **71M4** | 38 | 409 |
| **20** | 260 | 68.22 | 11300 | 2.3 | | | | | | |
| **23** | 225 | 58.97 | 11500 | 2.6 | | | | | | |
| **13** | 405 | 105.09 | 5840 | 1.00 | | | | | | |
| **15** | 340 | 89.29 | 6620 | 1.15 | | | | | | |
| **17** | 305 | 79.72 | 6990 | 1.30 | **FA** | **47** | **DRS** | **71M4** | 25 | 404 |
| **20** | 260 | 68.09 | 7360 | 1.50 | **FAF** | **47** | **DRS** | **71M4** | 27 | 403 |
| **21** | 250 | 65.36 | 7440 | 1.60 | **F** | **47** | **DRS** | **71M4** | 25 | 402 |
| **24** | 215 | 56.49 | 7670 | 1.85 | **FF** | **47** | **DRS** | **71M4** | 29 | 403 |
| **28** | 185 | 48.00* | 7850 | 2.2 | | | | | | |
| **32** | 166 | 42.86 | 7940 | 2.4 | | | | | | |
| **23** | 225 | 58.32 | 3890 | 0.90 | | | | | | |
| **25** | 210 | 54.54 | 4140 | 0.95 | | | | | | |
| **26** | 200 | 51.70 | 4300 | 1.00 | | | | | | |
| **29** | 182 | 47.02 | 4540 | 1.10 | **FA** | **37** | **DRS** | **71M4** | 20 | 398 |
| **31** | 169 | 43.83 | 4680 | 1.20 | **FAF** | **37** | **DRS** | **71M4** | 21 | 397 |
| **36** | 148 | 38.31 | 4900 | 1.35 | **F** | **37** | **DRS** | **71M4** | 20 | 396 |
| **38** | 139 | 35.91 | 4980 | 1.45 | **FF** | **37** | **DRS** | **71M4** | 22 | 397 |
| **43** | 122 | 31.69 | 4990 | 1.65 | | | | | | |
| **48** | 108 | 28.09 | 4870 | 1.85 | | | | | | |
| **57** | 92 | 23.88 | 4700 | 2.2 | | | | | | |
| **58** | 91 | 23.63 | 4690 | 2.2 | | | | | | |
| **66** | 79 | 20.57 | 4540 | 2.5 | **FA** | **37** | **DRS** | **71M4** | 20 | 398 |
| **71** | 74 | 19.27 | 4470 | 2.7 | **FAF** | **37** | **DRS** | **71M4** | 21 | 397 |
| **80** | 66 | 17.03 | 4340 | 3.0 | **F** | **37** | **DRS** | **71M4** | 20 | 396 |
| **95** | 55 | 14.33 | 4150 | 3.6 | **FF** | **37** | **DRS** | **71M4** | 22 | 397 |
| **36** | 144 | 77.21 | 3410 | 0.90 | | | | | | |
| **39** | 135 | 72.37 | 3390 | 0.95 | **FA** | **27** | **DRS** | **71M2** | 14 | 393 |
| **44** | 119 | 63.86 | 3350 | 1.10 | **FAF** | **27** | **DRS** | **71M2** | 14 | 392 |
| **50** | 106 | 56.62 | 3290 | 1.25 | **F** | **27** | **DRS** | **71M2** | 14 | 391 |
| **56** | 94 | 50.19 | 3230 | 1.40 | **FF** | **27** | **DRS** | **71M2** | 15 | 392 |
| **58** | 90 | 23.25 | 3210 | 1.45 | | | | | | |
| **67** | 78 | 20.15 | 3130 | 1.65 | | | | | | |
| **72** | 73 | 18.84 | 3090 | 1.80 | | | | | | |
| **84** | 63 | 16.28 | 3000 | 2.1 | | | | | | |
| **98** | 53 | 13.84 | 2900 | 2.4 | | | | | | |
| **110** | 48 | 12.35 | 2820 | 2.7 | | | | | | |
| **129** | 41 | 10.55 | 2720 | 3.2 | **FA** | **27** | **DRS** | **71M4** | 13 | 393 |
| **138** | 38 | 9.88 | 2670 | 3.4 | **FAF** | **27** | **DRS** | **71M4** | 14 | 392 |
| **145** | 36 | 9.40 | 2610 | 3.6 | **F** | **27** | **DRS** | **71M4** | 14 | 391 |
| **167** | 31 | 8.13 | 2510 | 3.9 | **FF** | **27** | **DRS** | **71M4** | 15 | 392 |
| **197** | 27 | 6.91 | 2410 | 4.3 | | | | | | |
| **221** | 24 | 6.17 | 2340 | 4.6 | | | | | | |
| **258** | 20 | 5.27 | 2240 | 4.9 | | | | | | |
| **276** | 19 | 4.93 | 2200 | 5.0 | | | | | | |
| **327** | 16 | 4.16 | 2100 | 5.4 | | | | | | |

21933170/DE – 11/2015

## $P_m$ = 0.55 kW

| $n_a$ rpm | $M_a$ Nm | i | $F_{Ra}$ 1) N | SEW $f_B$ | | | | | m kg | |
|---|---|---|---|---|---|---|---|---|---|---|
| **346** | 15 | 8.13 | 2070 | 8.1 | | | | | | |
| **407** | 13 | 6.91 | 1970 | 8.8 | **FA** | **27** | **DRS** | **71M2** | 13 | 393 |
| **456** | 12 | 6.17 | 1910 | 9.5 | **FAF** | **27** | **DRS** | **71M2** | 14 | 392 |
| **533** | 9.8 | 5.27 | 1820 | 10 | **F** | **27** | **DRS** | **71M2** | 14 | 391 |
| **570** | 9.2 | 4.93 | 1790 | 10 | **FF** | **27** | **DRS** | **71M2** | 15 | 392 |
| **676** | 7.8 | 4.16 | 1700 | 11 | | | | | | |

## $P_m$ = 0.75 kW

| $n_a$ rpm | $M_a$ Nm | i | $F_{Ra}$ 1) N | SEW $f_B$ | | | | | m kg | |
|---|---|---|---|---|---|---|---|---|---|---|
| **0.52** | 11600 | 2780 | 114700 | 1.55 | **FA** | **157R97** | **DRN** | **80M4** | 770 | 456 |
| | | | | | **FAF** | **157R97** | **DRN** | **80M4** | 830 | 456 |
| | | | | | **F** | **157R97** | **DRN** | **80M4** | 790 | 456 |
| | | | | | **FF** | **157R97** | **DRN** | **80M4** | 900 | 456 |
| **0.59** | 10300 | 2427 | 116800 | 1.75 | **FA** | **157R97** | **DRN** | **80M4** | 770 | 456 |
| **0.86** | 7280 | 1674 | 120000 | 2.5 | **FAF** | **157R97** | **DRN** | **80M4** | 830 | 456 |
| **1.1** | 5620 | 1308 | 120000 | 3.2 | **F** | **157R97** | **DRN** | **80M4** | 790 | 456 |
| **1.2** | 4960 | 1169 | 120000 | 3.6 | **FF** | **157R97** | **DRN** | **80M4** | 900 | 456 |
| **0.48** | 13400 | 3031 | 87700 | 0.90 | **FA** | **127R77** | **DRN** | **80M4** | 435 | 456 |
| | | | | | **FAF** | **127R77** | **DRN** | **80M4** | 470 | 456 |
| | | | | | **F** | **127R77** | **DRN** | **80M4** | 470 | 456 |
| | | | | | **FF** | **127R77** | **DRN** | **80M4** | 520 | 456 |
| **0.54** | 12000 | 2672 | 90000 | 1.00 | **FA** | **127R77** | **DRN** | **80M4** | 435 | 456 |
| **0.61** | 10500 | 2357 | 90000 | 1.15 | **FAF** | **127R77** | **DRN** | **80M4** | 470 | 456 |
| **0.71** | 9120 | 2038 | 90000 | 1.30 | **F** | **127R77** | **DRN** | **80M4** | 470 | 456 |
| **0.81** | 7940 | 1784 | 90000 | 1.50 | **FF** | **127R77** | **DRN** | **80M4** | 510 | 456 |
| **0.90** | 7120 | 1606 | 90000 | 1.70 | | | | | | |
| **0.79** | 8090 | 1826 | 48700 | 0.95 | | | | | | |
| **0.90** | 7200 | 1597 | 51100 | 1.05 | | | | | | |
| **1.0** | 6280 | 1401 | 53300 | 1.20 | **FA** | **107R77** | **DRN** | **80M4** | 280 | 456 |
| **1.2** | 5510 | 1243 | 55200 | 1.40 | **FAF** | **107R77** | **DRN** | **80M4** | 305 | 456 |
| **1.3** | 4900 | 1087 | 56500 | 1.55 | **F** | **107R77** | **DRN** | **80M4** | 300 | 456 |
| **1.5** | 4210 | 950 | 58000 | 1.80 | **FF** | **107R77** | **DRN** | **80M4** | 325 | 456 |
| **1.7** | 3670 | 834 | 59100 | 2.1 | | | | | | |
| **2.2** | 2850 | 640 | 60700 | 2.7 | | | | | | |
| **3.3** | 1940 | 436 | 62300 | 4.0 | | | | | | |
| **1.4** | 4690 | 1022 | 26900 | 0.90 | | | | | | |
| **1.6** | 4040 | 898 | 30600 | 1.05 | | | | | | |
| **1.8** | 3560 | 784 | 31900 | 1.20 | **FA** | **97R57** | **DRN** | **80M4** | 190 | 456 |
| **2.1** | 3100 | 690 | 33100 | 1.40 | **FAF** | **97R57** | **DRN** | **80M4** | 215 | 456 |
| **2.4** | 2730 | 605 | 33900 | 1.55 | **F** | **97R57** | **DRN** | **80M4** | 200 | 456 |
| **2.7** | 2370 | 529 | 34700 | 1.80 | **FF** | **97R57** | **DRN** | **80M4** | 230 | 456 |
| **3.1** | 2090 | 467 | 35200 | 2.0 | | | | | | |
| **3.6** | 1800 | 406 | 35700 | 2.4 | | | | | | |
| **4.0** | 1620 | 363 | 36100 | 2.6 | | | | | | |
| **2.1** | 3030 | 674 | 18400 | 1.00 | **FA** | **87R57** | **DRN** | **80M4** | 125 | 456 |
| **2.4** | 2750 | 609 | 23900 | 1.10 | **FAF** | **87R57** | **DRN** | **80M4** | 140 | 456 |
| **2.8** | 2320 | 515 | 25400 | 1.30 | **F** | **87R57** | **DRN** | **80M4** | 130 | 456 |
| **3.2** | 2040 | 452 | 26300 | 1.45 | **FF** | **87R57** | **DRN** | **80M4** | 145 | 456 |
| **4.2** | 1540 | 345 | 27700 | 1.95 | | | | | | |
| **3.9** | 1670 | 367 | 14400 | 0.90 | **FA** | **77R37** | **DRN** | **80M4** | 74 | 456 |
| **4.5** | 1480 | 323 | 15800 | 1.00 | **FAF** | **77R37** | **DRN** | **80M4** | 80 | 456 |
| **5.2** | 1270 | 280 | 17000 | 1.15 | **F** | **77R37** | **DRN** | **80M4** | 77 | 456 |
| | | | | | **FF** | **77R37** | **DRN** | **80M4** | 88 | 456 |
| **5.3** | 1340 | 270.68 | 28200 | 2.2 | **FA** | **87** | **DRN** | **80M4** | 105 | 428 |
| **5.6** | 1270 | 255.37 | 28400 | 2.4 | **FAF** | **87** | **DRN** | **80M4** | 115 | 427 |
| **6.3** | 1130 | 228.93 | 28700 | 2.6 | **F** | **87** | **DRN** | **80M4** | 110 | 426 |
| | | | | | **FF** | **87** | **DRN** | **80M4** | 125 | 427 |
| **6.4** | 1120 | 225.79 | 17800 | 1.35 | **FA** | **77** | **DRN** | **80M4** | 65 | 422 |
| **7.3** | 980 | 198.31 | 18400 | 1.50 | **FAF** | **77** | **DRN** | **80M4** | 71 | 421 |
| **7.6** | 930 | 188.40 | 18500 | 1.60 | **F** | **77** | **DRN** | **80M4** | 68 | 420 |
| | | | | | **FF** | **77** | **DRN** | **80M4** | 79 | 421 |

21933170/DE – 11/2015

## $P_m$ = 0.75 kW

| $n_a$ rpm | $M_a$ Nm | i | $F_{Ra}$ [1] N | SEW $f_B$ | | | | | m kg | |
|---|---|---|---|---|---|---|---|---|---|---|
| **8.6** | 820 | 166.47 | 18900 | 1.80 | | | | | | |
| **10** | 705 | 142.27 | 19200 | 2.1 | **FA** | **77** | **DRN** | **80M4** | 65 | 422 |
| **11** | 645 | 130.42 | 19400 | 2.3 | **FAF** | **77** | **DRN** | **80M4** | 71 | 421 |
| **13** | 565 | 114.45 | 19600 | 2.6 | **F** | **77** | **DRN** | **80M4** | 68 | 420 |
| **13** | 535 | 108.46* | 19600 | 2.8 | **FF** | **77** | **DRN** | **80M4** | 79 | 421 |
| **8.4** | 840 | 170.85 | 10000 | 0.95 | **FA** | **67** | **DRN** | **80M4** | 41 | 416 |
| **8.9** | 800 | 162.31 | 10400 | 1.00 | **FAF** | **67** | **DRN** | **80M4** | 47 | 415 |
| **10** | 705 | 142.40 | 11200 | 1.15 | **F** | **67** | **DRN** | **80M4** | 43 | 414 |
| **12** | 600 | 120.79 | 11900 | 1.35 | **FF** | **67** | **DRN** | **80M4** | 49 | 415 |
| **13** | 540 | 109.04 | 12200 | 1.50 | | | | | | |
| **15** | 475 | 95.94 | 12500 | 1.70 | **FA** | **67** | **DRN** | **80M4** | 41 | 416 |
| **16** | 450 | 90.59 | 12600 | 1.80 | **FAF** | **67** | **DRN** | **80M4** | 47 | 415 |
| **18** | 395 | 79.76 | 12800 | 2.1 | **F** | **67** | **DRN** | **80M4** | 43 | 414 |
| **21** | 335 | 67.65 | 13000 | 2.4 | **FF** | **67** | **DRN** | **80M4** | 49 | 415 |
| **24** | 300 | 61.07 | 13000 | 2.7 | | | | | | |
| **11** | 630 | 127.27 | 7950 | 0.95 | | | | | | |
| **13** | 545 | 110.01 | 9590 | 1.10 | | | | | | |
| **15** | 460 | 93.47 | 10200 | 1.30 | | | | | | |
| **17** | 415 | 83.46 | 10500 | 1.45 | **FA** | **57** | **DRN** | **80M4** | 37 | 410 |
| **20** | 360 | 72.98 | 10800 | 1.65 | **FAF** | **57** | **DRN** | **80M4** | 42 | 409 |
| **21** | 335 | 68.22 | 10900 | 1.75 | **F** | **57** | **DRN** | **80M4** | 37 | 408 |
| **24** | 290 | 58.97 | 11200 | 2.0 | **FF** | **57** | **DRN** | **80M4** | 43 | 409 |
| **29** | 245 | 50.10 | 11400 | 2.4 | | | | | | |
| **32** | 220 | 44.73 | 11300 | 2.7 | | | | | | |
| **18** | 395 | 79.72 | 5970 | 1.00 | **FA** | **47** | **DRN** | **80M4** | 29 | 404 |
| **21** | 335 | 68.09 | 6680 | 1.20 | **FAF** | **47** | **DRN** | **80M4** | 32 | 403 |
| **22** | 325 | 65.36 | 6820 | 1.25 | **F** | **47** | **DRN** | **80M4** | 30 | 402 |
| | | | | | **FF** | **47** | **DRN** | **80M4** | 33 | 403 |
| **25** | 280 | 56.49 | 7220 | 1.40 | | | | | | |
| **30** | 235 | 48.00* | 7540 | 1.70 | **FA** | **47** | **DRN** | **80M4** | 29 | 404 |
| **34** | 210 | 42.86 | 7700 | 1.90 | **FAF** | **47** | **DRN** | **80M4** | 32 | 403 |
| **39** | 182 | 36.61 | 7860 | 2.2 | **F** | **47** | **DRN** | **80M4** | 30 | 402 |
| **42** | 171 | 34.29 | 7770 | 2.4 | **FF** | **47** | **DRN** | **80M4** | 33 | 403 |
| **50** | 144 | 28.88 | 7460 | 2.8 | | | | | | |
| **31** | 230 | 47.02 | 3730 | 0.85 | | | | | | |
| **33** | 215 | 43.83 | 4020 | 0.90 | **FA** | **37** | **DRN** | **80M4** | 24 | 398 |
| **38** | 191 | 38.31 | 4420 | 1.05 | **FAF** | **37** | **DRN** | **80M4** | 26 | 397 |
| **40** | 179 | 35.91 | 4570 | 1.10 | **F** | **37** | **DRN** | **80M4** | 25 | 396 |
| **45** | 158 | 31.69 | 4590 | 1.25 | **FF** | **37** | **DRN** | **80M4** | 27 | 397 |
| **51** | 140 | 28.09 | 4500 | 1.45 | | | | | | |
| **61** | 118 | 23.63 | 4370 | 1.70 | | | | | | |
| **70** | 102 | 20.57 | 4250 | 1.95 | **FA** | **37** | **DRN** | **80M4** | 24 | 398 |
| **75** | 96 | 19.27 | 4200 | 2.1 | **FAF** | **37** | **DRN** | **80M4** | 26 | 397 |
| **85** | 85 | 17.03 | 4090 | 2.4 | **F** | **37** | **DRN** | **80M4** | 25 | 396 |
| **100** | 71 | 14.33 | 3930 | 2.8 | **FF** | **37** | **DRN** | **80M4** | 27 | 397 |
| **112** | 64 | 12.87 | 3830 | 3.1 | | | | | | |
| **62** | 116 | 23.25 | 2900 | 1.10 | | | | | | |
| **71** | 100 | 20.15 | 2860 | 1.30 | | | | | | |
| **76** | 94 | 18.84 | 2830 | 1.40 | | | | | | |
| **88** | 81 | 16.28 | 2770 | 1.60 | | | | | | |
| **104** | 69 | 13.84 | 2700 | 1.90 | | | | | | |
| **117** | 61 | 12.35 | 2640 | 2.1 | | | | | | |
| **136** | 52 | 10.55 | 2560 | 2.5 | **FA** | **27** | **DRN** | **80M4** | 18 | 393 |
| **146** | 49 | 9.88 | 2520 | 2.6 | **FAF** | **27** | **DRN** | **80M4** | 19 | 392 |
| **153** | 47 | 9.40 | 2450 | 2.8 | **F** | **27** | **DRN** | **80M4** | 19 | 391 |
| **177** | 40 | 8.13 | 2370 | 3.0 | **FF** | **27** | **DRN** | **80M4** | 19 | 392 |
| **208** | 34 | 6.91 | 2280 | 3.3 | | | | | | |
| **234** | 31 | 6.17 | 2220 | 3.6 | | | | | | |
| **273** | 26 | 5.27 | 2140 | 3.8 | | | | | | |
| **292** | 25 | 4.93 | 2100 | 3.9 | | | | | | |
| **346** | 21 | 4.16 | 2010 | 4.2 | | | | | | |

21933170/DE – 11/2015

## $P_m$ = 1.1 kW

| $n_a$ rpm | $M_a$ Nm | i | $F_{Ra}$ 1) N | SEW $f_B$ | | | | | m kg | |
|---|---|---|---|---|---|---|---|---|---|---|
| **0.52** | 17400 | 2780 | 101800 | 1.05 | **FA** | **157R97** | **DRN** | **90S4** | 780 | 456 |
| | | | | | **FAF** | **157R97** | **DRN** | **90S4** | 840 | 456 |
| | | | | | **F** | **157R97** | **DRN** | **90S4** | 800 | 456 |
| | | | | | **FF** | **157R97** | **DRN** | **90S4** | 900 | 456 |
| **0.60** | 15400 | 2427 | 107100 | 1.15 | | | | | | |
| **0.67** | 13700 | 2185 | 110800 | 1.30 | | | | | | |
| **0.75** | 12200 | 1944 | 113700 | 1.45 | | | | | | |
| **0.87** | 10800 | 1674 | 116000 | 1.65 | **FA** | **157R97** | **DRN** | **90S4** | 770 | 456 |
| **1.1** | 8380 | 1308 | 119300 | 2.2 | **FAF** | **157R97** | **DRN** | **90S4** | 830 | 456 |
| **1.2** | 7420 | 1169 | 120000 | 2.4 | **F** | **157R97** | **DRN** | **90S4** | 790 | 456 |
| **1.5** | 5930 | 953 | 120000 | 3.0 | **FF** | **157R97** | **DRN** | **90S4** | 900 | 456 |
| **1.7** | 5180 | 845 | 120000 | 3.5 | | | | | | |
| **3.3** | 2740 | 446 | 120000 | 6.6 | | | | | | |
| **4.8** | 1850 | 302 | 120000 | 9.7 | | | | | | |
| **0.71** | 13400 | 2038 | 87700 | 0.90 | | | | | | |
| **0.82** | 11700 | 1784 | 90000 | 1.00 | **FA** | **127R77** | **DRN** | **90S4** | 440 | 456 |
| **0.91** | 10500 | 1606 | 90000 | 1.15 | **FAF** | **127R77** | **DRN** | **90S4** | 475 | 456 |
| **1.0** | 9100 | 1390 | 90000 | 1.30 | **F** | **127R77** | **DRN** | **90S4** | 475 | 456 |
| **1.2** | 7950 | 1220 | 90000 | 1.50 | **FF** | **127R77** | **DRN** | **90S4** | 520 | 456 |
| **1.4** | 7070 | 1077 | 90000 | 1.70 | | | | | | |
| **1.2** | 8140 | 1243 | 48600 | 0.95 | | | | | | |
| **1.3** | 7200 | 1087 | 51100 | 1.05 | **FA** | **107R77** | **DRN** | **90S4** | 285 | 456 |
| **1.5** | 6220 | 950 | 53500 | 1.25 | **FAF** | **107R77** | **DRN** | **90S4** | 310 | 456 |
| **1.8** | 5430 | 834 | 55300 | 1.40 | **F** | **107R77** | **DRN** | **90S4** | 305 | 456 |
| **2.0** | 4770 | 736 | 56800 | 1.60 | **FF** | **107R77** | **DRN** | **90S4** | 330 | 456 |
| **2.3** | 4200 | 640 | 58000 | 1.85 | | | | | | |
| **2.1** | 4560 | 690 | 29100 | 0.95 | | | | | | |
| **2.4** | 4010 | 605 | 30700 | 1.05 | **FA** | **97R57** | **DRN** | **90S4** | 195 | 456 |
| **2.8** | 3490 | 529 | 32100 | 1.25 | **FAF** | **97R57** | **DRN** | **90S4** | 220 | 456 |
| **3.1** | 3080 | 467 | 33100 | 1.40 | **F** | **97R57** | **DRN** | **90S4** | 205 | 456 |
| **3.6** | 2660 | 406 | 34100 | 1.60 | **FF** | **97R57** | **DRN** | **90S4** | 240 | 456 |
| **4.0** | 2390 | 363 | 34600 | 1.80 | | | | | | |
| **3.2** | 3000 | 452 | 19600 | 1.00 | **FA** | **87R57** | **DRN** | **90S4** | 130 | 456 |
| **4.2** | 2270 | 345 | 25600 | 1.30 | **FAF** | **87R57** | **DRN** | **90S4** | 145 | 456 |
| **4.8** | 1960 | 300 | 26500 | 1.50 | **F** | **87R57** | **DRN** | **90S4** | 140 | 456 |
| **5.8** | 1630 | 249 | 27500 | 1.85 | **FF** | **87R57** | **DRN** | **90S4** | 155 | 456 |
| **5.3** | 1990 | 276.77 | 35400 | 2.2 | **FA** | **97** | **DRN** | **90S4** | 175 | 434 |
| **5.7** | 1820 | 253.41 | 35700 | 2.4 | **FAF** | **97** | **DRN** | **90S4** | 195 | 433 |
| **6.5** | 1610 | 223.88 | 36100 | 2.7 | **F** | **97** | **DRN** | **90S4** | 180 | 432 |
| | | | | | **FF** | **97** | **DRN** | **90S4** | 215 | 433 |
| **5.4** | 1950 | 270.68 | 26600 | 1.55 | **FA** | **87** | **DRN** | **90S4** | 110 | 428 |
| **5.7** | 1840 | 255.37 | 26900 | 1.65 | **FAF** | **87** | **DRN** | **90S4** | 120 | 427 |
| **6.4** | 1650 | 228.93 | 27400 | 1.80 | **F** | **87** | **DRN** | **90S4** | 115 | 426 |
| **7.4** | 1420 | 197.20 | 28000 | 2.1 | **FF** | **87** | **DRN** | **90S4** | 130 | 427 |
| **8.1** | 1290 | 179.97 | 28300 | 2.3 | **FA** | **87** | **DRN** | **90S4** | 110 | 428 |
| **9.1** | 1150 | 159.61 | 28600 | 2.6 | **FAF** | **87** | **DRN** | **90S4** | 120 | 427 |
| **11** | 960 | 134.16 | 29000 | 3.1 | **F** | **87** | **DRN** | **90S4** | 115 | 426 |
| **12** | 890 | 123.29 | 29200 | 3.4 | **FF** | **87** | **DRN** | **90S4** | 130 | 427 |
| **7.3** | 1430 | 198.31 | 16200 | 1.05 | **FA** | **77** | **DRN** | **90S4** | 69 | 422 |
| **7.7** | 1360 | 188.40 | 16600 | 1.10 | **FAF** | **77** | **DRN** | **90S4** | 76 | 421 |
| **8.7** | 1200 | 166.47 | 17400 | 1.25 | **F** | **77** | **DRN** | **90S4** | 73 | 420 |
| **10** | 1020 | 142.27 | 18200 | 1.45 | **FF** | **77** | **DRN** | **90S4** | 84 | 421 |
| **11** | 940 | 130.42 | 18500 | 1.60 | | | | | | |
| **13** | 820 | 114.45 | 18900 | 1.80 | **FA** | **77** | **DRN** | **90S4** | 69 | 422 |
| **13** | 780 | 108.46* | 19000 | 1.90 | **FAF** | **77** | **DRN** | **90S4** | 76 | 421 |
| **15** | 685 | 94.93 | 19300 | 2.2 | **F** | **77** | **DRN** | **90S4** | 73 | 420 |
| **17** | 615 | 85.52 | 19500 | 2.4 | **FF** | **77** | **DRN** | **90S4** | 84 | 421 |
| **19** | 540 | 75.02 | 19600 | 2.8 | | | | | | |
| **12** | 870 | 120.79 | 9820 | 0.95 | **FA** | **67** | **DRN** | **90S4** | 47 | 416 |
| | | | | | **FAF** | **67** | **DRN** | **90S4** | 53 | 415 |
| | | | | | **F** | **67** | **DRN** | **90S4** | 50 | 414 |
| | | | | | **FF** | **67** | **DRN** | **90S4** | 56 | 415 |

21933170/DE – 11/2015

## $P_m$ = 1.1 kW

| $n_a$ rpm | $M_a$ Nm | i | $F_{Ra}$ [1)] N | SEW $f_B$ | | | | | m kg | |
|---|---|---|---|---|---|---|---|---|---|---|
| **13** | 785 | 109.04 | 10600 | 1.05 | | | | | | |
| **15** | 690 | 95.94 | 11300 | 1.20 | | | | | | |
| **16** | 650 | 90.59 | 11600 | 1.25 | | | | | | |
| **18** | 575 | 79.76 | 12000 | 1.40 | | | | | | |
| **22** | 485 | 67.65 | 12500 | 1.70 | **FA** | **67** | **DRN** | **90S4** | 47 | 416 |
| **24** | 440 | 61.07 | 12700 | 1.85 | **FAF** | **67** | **DRN** | **90S4** | 53 | 415 |
| **27** | 385 | 53.73 | 12900 | 2.1 | **F** | **67** | **DRN** | **90S4** | 50 | 414 |
| **29** | 365 | 50.74 | 12900 | 2.2 | **FF** | **67** | **DRN** | **90S4** | 56 | 415 |
| **34** | 310 | 43.20 | 13000 | 2.6 | | | | | | |
| **37** | 280 | 39.26 | 13000 | 2.8 | | | | | | |
| **43** | 245 | 34.01 | 13000 | 3.0 | | | | | | |
| **17** | 600 | 83.46 | 9180 | 1.00 | | | | | | |
| **20** | 525 | 72.98 | 9740 | 1.15 | | | | | | |
| **21** | 490 | 68.22 | 9980 | 1.20 | | | | | | |
| **25** | 425 | 58.97 | 10400 | 1.40 | **FA** | **57** | **DRN** | **90S4** | 43 | 410 |
| **29** | 360 | 50.10 | 10800 | 1.65 | **FAF** | **57** | **DRN** | **90S4** | 48 | 409 |
| **33** | 320 | 44.73 | 10600 | 1.85 | **F** | **57** | **DRN** | **90S4** | 43 | 408 |
| **38** | 275 | 38.21 | 10300 | 2.2 | **FF** | **57** | **DRN** | **90S4** | 50 | 409 |
| **41** | 255 | 35.79 | 10100 | 2.3 | | | | | | |
| **48** | 215 | 30.15 | 9720 | 2.7 | | | | | | |
| | | | | | **FA** | **47** | **DRN** | **90S4** | 35 | 404 |
| **26** | 405 | 56.49 | 5680 | 1.00 | **FAF** | **47** | **DRN** | **90S4** | 38 | 403 |
| **30** | 345 | 48.00* | 6600 | 1.15 | **F** | **47** | **DRN** | **90S4** | 36 | 402 |
| | | | | | **FF** | **47** | **DRN** | **90S4** | 39 | 403 |
| **34** | 305 | 42.86 | 6970 | 1.30 | **FA** | **47** | **DRN** | **90S4** | 35 | 404 |
| **40** | 260 | 36.61 | 7300 | 1.50 | **FAF** | **47** | **DRN** | **90S4** | 38 | 403 |
| **42** | 245 | 34.29 | 7210 | 1.60 | **F** | **47** | **DRN** | **90S4** | 36 | 402 |
| **50** | 205 | 28.88 | 6990 | 1.90 | **FF** | **47** | **DRN** | **90S4** | 39 | 403 |
| **47** | 220 | 30.86 | 7080 | 1.80 | | | | | | |
| **50** | 210 | 29.32 | 7010 | 1.90 | **FA** | **47** | **DRN** | **90S4** | 34 | 404 |
| **57** | 186 | 25.72 | 6820 | 2.2 | **FAF** | **47** | **DRN** | **90S4** | 37 | 403 |
| **67** | 158 | 21.82 | 6580 | 2.5 | **F** | **47** | **DRN** | **90S4** | 35 | 402 |
| **74** | 142 | 19.70 | 6430 | 2.8 | **FF** | **47** | **DRN** | **90S4** | 38 | 403 |
| | | | | | **FA** | **37** | **DRN** | **90S4** | 30 | 398 |
| **46** | 225 | 31.69 | 3830 | 0.85 | **FAF** | **37** | **DRN** | **90S4** | 32 | 397 |
| **52** | 200 | 28.09 | 3960 | 1.00 | **F** | **37** | **DRN** | **90S4** | 31 | 396 |
| **61** | 172 | 23.88 | 3920 | 1.15 | **FF** | **37** | **DRN** | **90S4** | 33 | 397 |
| **71** | 149 | 20.57 | 3860 | 1.35 | | | | | | |
| **76** | 139 | 19.27 | 3820 | 1.45 | | | | | | |
| **85** | 123 | 17.03 | 3760 | 1.65 | **FA** | **37** | **DRN** | **90S4** | 30 | 398 |
| **102** | 103 | 14.33 | 3650 | 1.95 | **FAF** | **37** | **DRN** | **90S4** | 32 | 397 |
| **113** | 93 | 12.87 | 3580 | 2.2 | **F** | **37** | **DRN** | **90S4** | 31 | 396 |
| **131** | 80 | 11.08 | 3470 | 2.4 | **FF** | **37** | **DRN** | **90S4** | 32 | 397 |
| **140** | 75 | 10.42 | 3430 | 2.5 | | | | | | |
| **162** | 65 | 8.97 | 3320 | 2.7 | | | | | | |
| **72** | 146 | 20.15 | 2440 | 0.90 | | | | | | |
| **77** | 136 | 18.84 | 2440 | 0.95 | | | | | | |
| **89** | 118 | 16.28 | 2440 | 1.10 | | | | | | |
| **105** | 100 | 13.84 | 2410 | 1.30 | | | | | | |
| **118** | 89 | 12.35 | 2380 | 1.45 | | | | | | |
| **138** | 76 | 10.55 | 2330 | 1.70 | **FA** | **27** | **DRN** | **90S4** | 24 | 393 |
| **147** | 71 | 9.88 | 2310 | 1.80 | **FAF** | **27** | **DRN** | **90S4** | 25 | 392 |
| **155** | 68 | 9.40 | 2230 | 1.90 | **F** | **27** | **DRN** | **90S4** | 24 | 391 |
| **179** | 59 | 8.13 | 2180 | 2.1 | **FF** | **27** | **DRN** | **90S4** | 25 | 392 |
| **211** | 50 | 6.91 | 2120 | 2.3 | | | | | | |
| **236** | 45 | 6.17 | 2080 | 2.4 | | | | | | |
| **276** | 38 | 5.27 | 2010 | 2.6 | | | | | | |
| **295** | 36 | 4.93 | 1990 | 2.7 | | | | | | |
| **350** | 30 | 4.16 | 1910 | 2.9 | | | | | | |

21933170/DE – 11/2015

## $P_m$ = 1.5 kW

| $n_a$ rpm | $M_a$ Nm | i | $F_{Ra}$ [1)] N | SEW $f_B$ | | | | | m kg | |
|---|---|---|---|---|---|---|---|---|---|---|
| **0.60** | 21300 | 2427 | 88800 | 0.85 | | | | | | |
| **0.67** | 19000 | 2185 | 96900 | 0.95 | | | | | | |
| **0.75** | 16900 | 1944 | 103200 | 1.05 | | | | | | |
| **0.87** | 14800 | 1674 | 108300 | 1.20 | **FA** | **157R97** | **DRN** | **90L4** | 780 | 456 |
| **1.1** | 11500 | 1308 | 114900 | 1.55 | **FAF** | **157R97** | **DRN** | **90L4** | 840 | 456 |
| **1.2** | 10200 | 1169 | 116900 | 1.75 | **F** | **157R97** | **DRN** | **90L4** | 800 | 456 |
| **1.5** | 8250 | 953 | 119500 | 2.2 | **FF** | **157R97** | **DRN** | **90L4** | 900 | 456 |
| **1.7** | 7240 | 845 | 120000 | 2.5 | | | | | | |
| **3.3** | 3820 | 446 | 120000 | 4.7 | | | | | | |
| **4.8** | 2590 | 302 | 120000 | 7.0 | | | | | | |
| **0.91** | 14400 | 1606 | 85700 | 0.85 | | | | | | |
| **1.0** | 12400 | 1390 | 89500 | 0.95 | | | | | | |
| **1.2** | 10900 | 1220 | 90000 | 1.10 | **FA** | **127R77** | **DRN** | **90L4** | 440 | 456 |
| **1.4** | 9690 | 1077 | 90000 | 1.25 | **FAF** | **127R77** | **DRN** | **90L4** | 480 | 456 |
| **1.6** | 8320 | 930 | 90000 | 1.45 | **F** | **127R77** | **DRN** | **90L4** | 480 | 456 |
| **1.8** | 7310 | 820 | 90000 | 1.65 | **FF** | **127R77** | **DRN** | **90L4** | 520 | 456 |
| **2.0** | 6460 | 727 | 90000 | 1.85 | | | | | | |
| **2.2** | 5830 | 648 | 90000 | 2.1 | | | | | | |
| **1.5** | 8530 | 950 | 47500 | 0.90 | | | | | | |
| **1.8** | 7460 | 834 | 50400 | 1.05 | | | | | | |
| **2.0** | 6560 | 736 | 52700 | 1.15 | **FA** | **107R77** | **DRN** | **90L4** | 290 | 456 |
| **2.3** | 5760 | 640 | 54600 | 1.35 | **FAF** | **107R77** | **DRN** | **90L4** | 310 | 456 |
| **2.6** | 4980 | 560 | 56300 | 1.55 | **F** | **107R77** | **DRN** | **90L4** | 305 | 456 |
| **3.0** | 4350 | 489 | 57700 | 1.75 | **FF** | **107R77** | **DRN** | **90L4** | 335 | 456 |
| **3.4** | 3920 | 436 | 58600 | 1.95 | | | | | | |
| **4.0** | 3320 | 370 | 59800 | 2.3 | | | | | | |
| **2.8** | 4780 | 529 | 23800 | 0.90 | **FA** | **97R57** | **DRN** | **90L4** | 200 | 456 |
| **3.1** | 4220 | 467 | 30100 | 1.00 | **FAF** | **97R57** | **DRN** | **90L4** | 220 | 456 |
| **3.6** | 3650 | 406 | 31700 | 1.20 | **F** | **97R57** | **DRN** | **90L4** | 210 | 456 |
| **4.0** | 3270 | 363 | 32700 | 1.30 | **FF** | **97R57** | **DRN** | **90L4** | 240 | 456 |
| | | | | | **FA** | **87R57** | **DRN** | **90L4** | 135 | 456 |
| **4.9** | 2700 | 300 | 24100 | 1.10 | **FAF** | **87R57** | **DRN** | **90L4** | 150 | 456 |
| **5.9** | 2240 | 249 | 25700 | 1.35 | **F** | **87R57** | **DRN** | **90L4** | 140 | 456 |
| | | | | | **FF** | **87R57** | **DRN** | **90L4** | 155 | 456 |
| **5.3** | 2710 | 276.77 | 34000 | 1.60 | **FA** | **97** | **DRN** | **90L4** | 175 | 434 |
| **5.8** | 2480 | 253.41 | 34400 | 1.75 | **FAF** | **97** | **DRN** | **90L4** | 200 | 433 |
| **6.5** | 2190 | 223.88 | 35000 | 1.95 | **F** | **97** | **DRN** | **90L4** | 185 | 432 |
| **7.7** | 1860 | 189.92 | 35600 | 2.3 | **FF** | **97** | **DRN** | **90L4** | 215 | 433 |
| **8.4** | 1710 | 174.87 | 35900 | 2.5 | | | | | | |
| **5.4** | 2650 | 270.68 | 24300 | 1.15 | **FA** | **87** | **DRN** | **90L4** | 110 | 428 |
| **5.7** | 2500 | 255.37 | 24800 | 1.20 | **FAF** | **87** | **DRN** | **90L4** | 125 | 427 |
| **6.4** | 2240 | 228.93 | 25700 | 1.35 | **F** | **87** | **DRN** | **90L4** | 120 | 426 |
| **7.4** | 1930 | 197.20 | 26600 | 1.55 | **FF** | **87** | **DRN** | **90L4** | 135 | 427 |
| **8.1** | 1760 | 179.97 | 27100 | 1.70 | **FA** | **87** | **DRN** | **90L4** | 110 | 428 |
| **9.2** | 1560 | 159.61 | 27700 | 1.90 | **FAF** | **87** | **DRN** | **90L4** | 125 | 427 |
| **11** | 1310 | 134.16 | 28300 | 2.3 | **F** | **87** | **DRN** | **90L4** | 120 | 426 |
| **13** | 1070 | 109.49 | 28800 | 2.8 | **FF** | **87** | **DRN** | **90L4** | 135 | 427 |
| **15** | 950 | 97.89 | 29100 | 3.1 | | | | | | |
| **8.8** | 1630 | 166.47 | 14800 | 0.90 | **FA** | **77** | **DRN** | **90L4** | 73 | 422 |
| **10** | 1390 | 142.27 | 16400 | 1.10 | **FAF** | **77** | **DRN** | **90L4** | 79 | 421 |
| **11** | 1270 | 130.42 | 17000 | 1.15 | **F** | **77** | **DRN** | **90L4** | 76 | 420 |
| **13** | 1120 | 114.45 | 17800 | 1.35 | **FF** | **77** | **DRN** | **90L4** | 87 | 421 |
| **13** | 1060 | 108.46* | 18100 | 1.40 | | | | | | |
| **15** | 930 | 94.93 | 18600 | 1.60 | | | | | | |
| **17** | 830 | 85.52 | 18900 | 1.80 | | | | | | |
| **19** | 735 | 75.02 | 19200 | 2.0 | **FA** | **77** | **DRN** | **90L4** | 73 | 422 |
| **20** | 710 | 72.50 | 19200 | 2.1 | **FAF** | **77** | **DRN** | **90L4** | 79 | 421 |
| **22** | 650 | 66.46 | 19400 | 2.3 | **F** | **77** | **DRN** | **90L4** | 76 | 420 |
| **25** | 570 | 58.32 | 19600 | 2.6 | **FF** | **77** | **DRN** | **90L4** | 87 | 421 |
| **26** | 540 | 55.27 | 19600 | 2.8 | | | | | | |
| **30** | 470 | 48.37 | 19700 | 3.2 | | | | | | |
| **34** | 425 | 43.58 | 19800 | 3.5 | | | | | | |
| **38** | 370 | 38.23 | 19900 | 4.0 | | | | | | |

21933170/DE – 11/2015

## $P_m$ = 1.5 kW

| $n_a$ rpm | $M_a$ Nm | i | $F_{Ra}$ [1] N | SEW $f_B$ | | | | | m kg | |
|---|---|---|---|---|---|---|---|---|---|---|
| | | | | | FA | 77 | DRN | 90L4 | 71 | 422 |
| 40 | 355 | 36.58 | 19900 | 3.1 | FAF | 77 | DRN | 90L4 | 78 | 421 |
| 46 | 305 | 31.51 | 20000 | 4.5 | F | 77 | DRN | 90L4 | 75 | 420 |
| | | | | | FF | 77 | DRN | 90L4 | 86 | 421 |
| 16 | 880 | 90.59 | 9650 | 0.90 | | | | | | |
| 18 | 780 | 79.76 | 10600 | 1.05 | | | | | | |
| 22 | 660 | 67.65 | 11500 | 1.25 | FA | 67 | DRN | 90L4 | 50 | 416 |
| 24 | 595 | 61.07 | 11900 | 1.35 | FAF | 67 | DRN | 90L4 | 56 | 415 |
| 27 | 525 | 53.73 | 12300 | 1.55 | F | 67 | DRN | 90L4 | 53 | 414 |
| 29 | 495 | 50.74 | 12400 | 1.65 | FF | 67 | DRN | 90L4 | 59 | 415 |
| 34 | 420 | 43.20 | 12700 | 1.95 | | | | | | |
| 37 | 380 | 39.26 | 12900 | 2.0 | | | | | | |
| 40 | 355 | 36.30 | 13000 | 2.3 | FA | 67 | DRN | 90L4 | 49 | 416 |
| 46 | 310 | 32.08 | 13000 | 2.6 | FAF | 67 | DRN | 90L4 | 55 | 415 |
| 53 | 265 | 27.41 | 13000 | 3.0 | F | 67 | DRN | 90L4 | 52 | 414 |
| 58 | 245 | 25.13 | 13000 | 3.3 | FF | 67 | DRN | 90L4 | 58 | 415 |
| 25 | 575 | 58.97 | 9370 | 1.05 | | | | | | |
| 29 | 490 | 50.10 | 9980 | 1.20 | FA | 57 | DRN | 90L4 | 46 | 410 |
| 33 | 435 | 44.73 | 9940 | 1.35 | FAF | 57 | DRN | 90L4 | 52 | 409 |
| 38 | 370 | 38.21 | 9680 | 1.60 | F | 57 | DRN | 90L4 | 46 | 408 |
| 41 | 350 | 35.79 | 9560 | 1.70 | FF | 57 | DRN | 90L4 | 53 | 409 |
| 48 | 295 | 30.15 | 9240 | 2.0 | | | | | | |
| 40 | 355 | 36.61 | 6460 | 1.10 | FA | 47 | DRN | 90L4 | 38 | 404 |
| 43 | 335 | 34.29 | 6600 | 1.20 | FAF | 47 | DRN | 90L4 | 41 | 403 |
| 51 | 280 | 28.88 | 6460 | 1.40 | F | 47 | DRN | 90L4 | 39 | 402 |
| | | | | | FF | 47 | DRN | 90L4 | 42 | 403 |
| 47 | 300 | 30.86 | 6520 | 1.30 | | | | | | |
| 50 | 285 | 29.32 | 6480 | 1.40 | | | | | | |
| 57 | 250 | 25.72 | 6360 | 1.60 | FA | 47 | DRN | 90L4 | 38 | 404 |
| 67 | 210 | 21.82 | 6190 | 1.85 | FAF | 47 | DRN | 90L4 | 40 | 403 |
| 74 | 193 | 19.70 | 6070 | 2.1 | F | 47 | DRN | 90L4 | 38 | 402 |
| 84 | 170 | 17.33 | 5920 | 2.4 | FF | 47 | DRN | 90L4 | 42 | 403 |
| 89 | 160 | 16.36 | 5850 | 2.5 | | | | | | |
| 105 | 137 | 13.93 | 5650 | 2.9 | | | | | | |
| 71 | 200 | 20.57 | 3410 | 1.00 | | | | | | |
| 76 | 189 | 19.27 | 3410 | 1.05 | | | | | | |
| 86 | 167 | 17.03 | 3390 | 1.20 | | | | | | |
| 102 | 141 | 14.33 | 3340 | 1.40 | FA | 37 | DRN | 90L4 | 33 | 398 |
| 114 | 126 | 12.87 | 3300 | 1.60 | FAF | 37 | DRN | 90L4 | 35 | 397 |
| 132 | 109 | 11.08 | 3230 | 1.75 | F | 37 | DRN | 90L4 | 34 | 396 |
| 140 | 102 | 10.42 | 3200 | 1.80 | FF | 37 | DRN | 90L4 | 36 | 397 |
| 163 | 88 | 8.97 | 3120 | 2.00 | | | | | | |
| 182 | 79 | 8.01 | 3060 | 2.2 | | | | | | |
| 106 | 136 | 13.84 | 2090 | 0.95 | | | | | | |
| 118 | 121 | 12.35 | 2090 | 1.05 | | | | | | |
| 138 | 103 | 10.55 | 2090 | 1.25 | | | | | | |
| 148 | 97 | 9.88 | 2080 | 1.35 | | | | | | |
| 155 | 92 | 9.40 | 1990 | 1.40 | FA | 27 | DRN | 90L4 | 27 | 393 |
| 180 | 80 | 8.13 | 1970 | 1.55 | FAF | 27 | DRN | 90L4 | 28 | 392 |
| 212 | 68 | 6.91 | 1940 | 1.70 | F | 27 | DRN | 90L4 | 28 | 391 |
| 237 | 60 | 6.17 | 1920 | 1.80 | FF | 27 | DRN | 90L4 | 28 | 392 |
| 277 | 52 | 5.27 | 1880 | 1.95 | | | | | | |
| 296 | 48 | 4.93 | 1860 | 2.00 | | | | | | |
| 352 | 41 | 4.16 | 1800 | 2.1 | | | | | | |

## $P_m$ = 2.2 kW

| $n_a$ rpm | $M_a$ Nm | i | $F_{Ra}$ [1] N | SEW $f_B$ | | | | | m kg | |
|---|---|---|---|---|---|---|---|---|---|---|
| | | | | | FA | 157R97 | DRN | 100LS4 | 780 | 456 |
| 1.0 | 18100 | 1441 | 99800 | 1.00 | FAF | 157R97 | DRN | 100LS4 | 840 | 456 |
| | | | | | F | 157R97 | DRN | 100LS4 | 810 | 456 |
| | | | | | FF | 157R97 | DRN | 100LS4 | 910 | 456 |

21933170/DE – 11/2015

## $P_m$ = 2.2 kW

| $n_a$ rpm | $M_a$ Nm | i | $F_{Ra}$ [1)] N | SEW $f_B$ | | | | | m kg | |
|---|---|---|---|---|---|---|---|---|---|---|
| **1.1** | 17300 | 1308 | 102200 | 1.05 | | | | | | |
| **1.2** | 15400 | 1169 | 107100 | 1.15 | | | | | | |
| **1.5** | 12400 | 953 | 113300 | 1.45 | | | | | | |
| **1.7** | 10900 | 845 | 115800 | 1.65 | | | | | | |
| **1.9** | 9850 | 764 | 117500 | 1.85 | **FA** | **157R97** | **DRN** | **100LS4** | 780 | 456 |
| **2.1** | 8760 | 680 | 118900 | 2.0 | **FAF** | **157R97** | **DRN** | **100LS4** | 840 | 456 |
| **2.5** | 7350 | 576 | 120000 | 2.4 | **F** | **157R97** | **DRN** | **100LS4** | 800 | 456 |
| **3.2** | 5790 | 446 | 120000 | 3.1 | **FF** | **157R97** | **DRN** | **100LS4** | 910 | 456 |
| **4.8** | 3920 | 302 | 120000 | 4.6 | | | | | | |
| **5.3** | 3520 | 273 | 120000 | 5.1 | | | | | | |
| **6.3** | 2950 | 232 | 120000 | 6.1 | | | | | | |
| **7.4** | 2500 | 197 | 120000 | 7.2 | | | | | | |
| **1.4** | 14400 | 1077 | 85700 | 0.85 | | | | | | |
| **1.6** | 12400 | 930 | 89600 | 0.95 | | | | | | |
| **1.8** | 10900 | 820 | 90000 | 1.10 | **FA** | **127R77** | **DRN** | **100LS4** | 445 | 456 |
| **2.0** | 9670 | 727 | 90000 | 1.25 | **FAF** | **127R77** | **DRN** | **100LS4** | 485 | 456 |
| **2.2** | 8680 | 648 | 90000 | 1.40 | **F** | **127R77** | **DRN** | **100LS4** | 480 | 456 |
| **2.6** | 7360 | 549 | 90000 | 1.65 | **FF** | **127R77** | **DRN** | **100LS4** | 530 | 456 |
| **2.9** | 6620 | 495 | 90000 | 1.80 | | | | | | |
| **3.4** | 5730 | 428 | 90000 | 2.1 | | | | | | |
| **2.3** | 8580 | 640 | 47300 | 0.90 | | | | | | |
| **2.6** | 7450 | 560 | 50400 | 1.05 | **FA** | **107R77** | **DRN** | **100LS4** | 295 | 456 |
| **3.0** | 6500 | 489 | 52800 | 1.20 | **FAF** | **107R77** | **DRN** | **100LS4** | 315 | 456 |
| **3.3** | 5840 | 436 | 54400 | 1.30 | **F** | **107R77** | **DRN** | **100LS4** | 310 | 456 |
| **3.9** | 4950 | 370 | 56400 | 1.55 | **FF** | **107R77** | **DRN** | **100LS4** | 340 | 456 |
| **4.4** | 4460 | 333 | 57500 | 1.70 | | | | | | |
| | | | | | **FA** | **97R57** | **DRN** | **100LS4** | 205 | 456 |
| **5.1** | 3830 | 285 | 31200 | 1.10 | **FAF** | **97R57** | **DRN** | **100LS4** | 225 | 456 |
| **5.9** | 3290 | 245 | 32600 | 1.30 | **F** | **97R57** | **DRN** | **100LS4** | 210 | 456 |
| | | | | | **FF** | **97R57** | **DRN** | **100LS4** | 245 | 456 |
| **5.7** | 3680 | 254.40* | 59100 | 2.1 | **FA** | **107** | **DRN** | **100LS4** | 255 | 440 |
| **6.7** | 3120 | 215.37 | 60200 | 2.5 | **FAF** | **107** | **DRN** | **100LS4** | 275 | 439 |
| **7.3** | 2880 | 199.31 | 60600 | 2.7 | **F** | **107** | **DRN** | **100LS4** | 275 | 438 |
| **8.1** | 2580 | 178.64 | 61100 | 3.0 | **FF** | **107** | **DRN** | **100LS4** | 300 | 439 |
| **5.2** | 4010 | 276.77 | 30700 | 1.05 | | | | | | |
| **5.7** | 3670 | 253.41 | 31700 | 1.15 | | | | | | |
| **6.5** | 3240 | 223.88 | 32700 | 1.35 | **FA** | **97** | **DRN** | **100LS4** | 180 | 434 |
| **7.6** | 2750 | 189.92 | 33900 | 1.55 | **FAF** | **97** | **DRN** | **100LS4** | 200 | 433 |
| **8.3** | 2530 | 174.87 | 34300 | 1.70 | **F** | **97** | **DRN** | **100LS4** | 190 | 432 |
| **9.3** | 2260 | 156.30 | 34900 | 1.90 | **FF** | **97** | **DRN** | **100LS4** | 220 | 433 |
| **10** | 2030 | 140.71 | 35300 | 2.1 | | | | | | |
| **11** | 1840 | 127.42 | 35700 | 2.3 | | | | | | |
| **7.4** | 2850 | 197.20 | 23500 | 1.05 | **FA** | **87** | **DRN** | **100LS4** | 115 | 428 |
| **8.1** | 2600 | 179.97 | 24400 | 1.15 | **FAF** | **87** | **DRN** | **100LS4** | 130 | 427 |
| **9.1** | 2310 | 159.61 | 25500 | 1.30 | **F** | **87** | **DRN** | **100LS4** | 120 | 426 |
| **11** | 1940 | 134.16 | 26600 | 1.55 | **FF** | **87** | **DRN** | **100LS4** | 140 | 427 |
| **12** | 1780 | 123.29 | 27100 | 1.70 | | | | | | |
| **13** | 1580 | 109.49 | 27600 | 1.90 | | | | | | |
| **15** | 1410 | 97.89 | 28000 | 2.1 | | | | | | |
| **16** | 1270 | 88.01 | 28400 | 2.4 | **FA** | **87** | **DRN** | **100LS4** | 115 | 428 |
| **19** | 1100 | 76.39 | 27700 | 2.7 | **FAF** | **87** | **DRN** | **100LS4** | 130 | 427 |
| **21** | 990 | 68.40 | 27000 | 3.0 | **F** | **87** | **DRN** | **100LS4** | 120 | 426 |
| **26** | 820 | 56.75 | 25700 | 3.6 | **FF** | **87** | **DRN** | **100LS4** | 140 | 427 |
| **29** | 725 | 50.36 | 25000 | 4.0 | | | | | | |
| **32** | 655 | 45.28 | 24300 | 4.3 | | | | | | |
| **13** | 1650 | 114.45 | 14600 | 0.90 | **FA** | **77** | **DRN** | **100LS4** | 77 | 422 |
| **13** | 1570 | 108.46* | 15200 | 0.95 | **FAF** | **77** | **DRN** | **100LS4** | 83 | 421 |
| **15** | 1370 | 94.93 | 16500 | 1.10 | **F** | **77** | **DRN** | **100LS4** | 81 | 420 |
| **17** | 1230 | 85.52 | 17200 | 1.20 | **FF** | **77** | **DRN** | **100LS4** | 91 | 421 |
| **19** | 1080 | 75.02 | 18000 | 1.40 | | | | | | |
| **22** | 960 | 66.46 | 18400 | 1.55 | **FA** | **77** | **DRN** | **100LS4** | 77 | 422 |
| **25** | 840 | 58.32 | 18800 | 1.80 | **FAF** | **77** | **DRN** | **100LS4** | 83 | 421 |
| **26** | 800 | 55.27 | 19000 | 1.85 | **F** | **77** | **DRN** | **100LS4** | 81 | 420 |
| **30** | 700 | 48.37 | 19300 | 2.1 | **FF** | **77** | **DRN** | **100LS4** | 91 | 421 |
| **33** | 630 | 43.58 | 19400 | 2.4 | | | | | | |

21933170/DE – 11/2015

## $P_m$ = 2.2 kW

| $n_a$ rpm | $M_a$ Nm | i | $F_{Ra}$ [1] N | SEW $f_B$ | | | | | m kg | |
|---|---|---|---|---|---|---|---|---|---|---|
| **40** | 525 | 36.58 | 19600 | 2.1 | **FA** | **77** | **DRN** | **100LS4** | 75 | 422 |
| **46** | 455 | 31.51 | 19800 | 3.0 | **FAF** | **77** | **DRN** | **100LS4** | 82 | 421 |
| **50** | 415 | 28.75 | 19800 | 3.4 | **F** | **77** | **DRN** | **100LS4** | 79 | 420 |
| **57** | 365 | 25.50* | 19900 | 4.1 | **FF** | **77** | **DRN** | **100LS4** | 90 | 421 |
| **24** | 880 | 61.07 | 9680 | 0.95 | | | | | | |
| **27** | 775 | 53.73 | 10700 | 1.05 | **FA** | **67** | **DRN** | **100LS4** | 54 | 416 |
| **29** | 735 | 50.74 | 11000 | 1.10 | **FAF** | **67** | **DRN** | **100LS4** | 60 | 415 |
| **34** | 625 | 43.20 | 11700 | 1.30 | **F** | **67** | **DRN** | **100LS4** | 57 | 414 |
| **37** | 565 | 39.26 | 12100 | 1.35 | **FF** | **67** | **DRN** | **100LS4** | 63 | 415 |
| **43** | 490 | 34.01 | 12400 | 1.50 | | | | | | |
| **45** | 460 | 32.08 | 12600 | 1.75 | | | | | | |
| **53** | 395 | 27.41 | 12800 | 2.1 | **FA** | **67** | **DRN** | **100LS4** | 53 | 416 |
| **58** | 360 | 25.13 | 12900 | 2.2 | **FAF** | **67** | **DRN** | **100LS4** | 59 | 415 |
| **66** | 315 | 22.05 | 13000 | 2.6 | **F** | **67** | **DRN** | **100LS4** | 55 | 414 |
| **69** | 300 | 20.90* | 13000 | 2.7 | **FF** | **67** | **DRN** | **100LS4** | 62 | 415 |
| **79** | 265 | 18.29 | 13000 | 3.1 | | | | | | |
| **32** | 645 | 44.73 | 6640 | 0.95 | **FA** | **57** | **DRN** | **100LS4** | 50 | 410 |
| **38** | 550 | 38.21 | 8640 | 1.10 | **FAF** | **57** | **DRN** | **100LS4** | 55 | 409 |
| **41** | 515 | 35.79 | 8590 | 1.15 | **F** | **57** | **DRN** | **100LS4** | 50 | 408 |
| **48** | 435 | 30.15 | 8430 | 1.35 | **FF** | **57** | **DRN** | **100LS4** | 57 | 409 |
| **58** | 360 | 24.96 | 8200 | 1.60 | | | | | | |
| **68** | 305 | 21.17 | 7980 | 1.95 | **FA** | **57** | **DRN** | **100LS4** | 49 | 410 |
| **76** | 275 | 19.11 | 7820 | 2.2 | **FAF** | **57** | **DRN** | **100LS4** | 55 | 409 |
| **86** | 240 | 16.81 | 7630 | 2.5 | **F** | **57** | **DRN** | **100LS4** | 50 | 408 |
| **91** | 230 | 15.88 | 7540 | 2.6 | **FF** | **57** | **DRN** | **100LS4** | 56 | 409 |
| **56** | 370 | 25.72 | 5560 | 1.05 | | | | | | |
| **66** | 315 | 21.82 | 5510 | 1.25 | | | | | | |
| **74** | 285 | 19.70 | 5460 | 1.40 | | | | | | |
| **84** | 250 | 17.33 | 5390 | 1.60 | **FA** | **47** | **DRN** | **100LS4** | 42 | 404 |
| **89** | 235 | 16.36 | 5350 | 1.70 | **FAF** | **47** | **DRN** | **100LS4** | 44 | 403 |
| **104** | 200 | 13.93 | 5220 | 2.00 | **F** | **47** | **DRN** | **100LS4** | 42 | 402 |
| **115** | 183 | 12.66 | 5140 | 2.2 | **FF** | **47** | **DRN** | **100LS4** | 46 | 403 |
| **132** | 159 | 10.97 | 5010 | 2.5 | | | | | | |
| **162** | 130 | 8.96 | 4710 | 2.5 | | | | | | |
| **101** | 205 | 14.33 | 2800 | 0.95 | | | | | | |
| **113** | 186 | 12.87 | 2810 | 1.05 | | | | | | |
| **131** | 161 | 11.08 | 2820 | 1.20 | | | | | | |
| **139** | 151 | 10.42 | 2810 | 1.25 | | | | | | |
| **162** | 130 | 8.97 | 2790 | 1.35 | **FA** | **37** | **DRN** | **100LS4** | 37 | 398 |
| **181** | 116 | 8.01 | 2760 | 1.45 | **FAF** | **37** | **DRN** | **100LS4** | 39 | 397 |
| **215** | 98 | 6.74 | 2620 | 1.45 | **F** | **37** | **DRN** | **100LS4** | 38 | 396 |
| **240** | 88 | 6.05 | 2580 | 1.55 | **FF** | **37** | **DRN** | **100LS4** | 40 | 397 |
| **278** | 76 | 5.21 | 2530 | 1.65 | | | | | | |
| **296** | 71 | 4.90 | 2510 | 1.70 | | | | | | |
| **344** | 61 | 4.22 | 2440 | 1.80 | | | | | | |
| **385** | 55 | 3.77 | 2390 | 1.90 | | | | | | |

## $P_m$ = 3.0 kW

| $n_a$ rpm | $M_a$ Nm | i | $F_{Ra}$ [1] N | SEW $f_B$ | | | | | m kg | |
|---|---|---|---|---|---|---|---|---|---|---|
| **1.2** | 21100 | 1169 | 89600 | 0.85 | | | | | | |
| **1.5** | 17100 | 953 | 102800 | 1.05 | | | | | | |
| **1.7** | 15000 | 845 | 107900 | 1.20 | | | | | | |
| **1.9** | 13500 | 764 | 111100 | 1.30 | | | | | | |
| **2.1** | 12000 | 680 | 114000 | 1.50 | **FA** | **157R97** | **DRN** | **100L4** | 790 | 456 |
| **2.5** | 10100 | 576 | 117000 | 1.75 | **FAF** | **157R97** | **DRN** | **100L4** | 850 | 456 |
| **3.3** | 7970 | 446 | 119800 | 2.3 | **F** | **157R97** | **DRN** | **100L4** | 810 | 456 |
| **4.8** | 5390 | 302 | 120000 | 3.3 | **FF** | **157R97** | **DRN** | **100L4** | 920 | 456 |
| **5.3** | 4850 | 273 | 120000 | 3.7 | | | | | | |
| **6.3** | 4080 | 232 | 120000 | 4.4 | | | | | | |
| **7.4** | 3460 | 197 | 120000 | 5.2 | | | | | | |

21933170/DE – 11/2015

## $P_m$ = 3.0 kW

| $n_a$ rpm | $M_a$ Nm | i | $F_{Ra}$ 1) N | SEW $f_B$ | | | | | m kg | |
|---|---|---|---|---|---|---|---|---|---|---|
| **2.0** | 13200 | 727 | 88100 | 0.90 | **FA** | **127R77** | **DRN** | **100L4** | 455 | 456 |
| **2.2** | 11800 | 648 | 90000 | 1.00 | **FAF** | **127R77** | **DRN** | **100L4** | 490 | 456 |
| **2.6** | 10000 | 549 | 90000 | 1.20 | **F** | **127R77** | **DRN** | **100L4** | 490 | 456 |
| **2.9** | 9040 | 495 | 90000 | 1.35 | **FF** | **127R77** | **DRN** | **100L4** | 530 | 456 |
| **3.3** | 7970 | 436 | 49000 | 0.95 | **FA** | **107R77** | **DRN** | **100L4** | 300 | 456 |
| **3.9** | 6760 | 370 | 52200 | 1.15 | **FAF** | **107R77** | **DRN** | **100L4** | 325 | 456 |
| **4.4** | 6080 | 333 | 53800 | 1.25 | **F** | **107R77** | **DRN** | **100L4** | 320 | 456 |
| **5.0** | 5320 | 291 | 55600 | 1.45 | **FF** | **107R77** | **DRN** | **100L4** | 345 | 456 |
| **5.7** | 5000 | 254.40* | 56300 | 1.55 | | | | | | |
| **6.8** | 4230 | 215.37 | 57900 | 1.80 | **FA** | **107** | **DRN** | **100L4** | 265 | 440 |
| **7.3** | 3920 | 199.31 | 58600 | 1.95 | **FAF** | **107** | **DRN** | **100L4** | 285 | 439 |
| **8.2** | 3510 | 178.64 | 59400 | 2.2 | **F** | **107** | **DRN** | **100L4** | 280 | 438 |
| **9.0** | 3170 | 161.28* | 60100 | 2.4 | **FF** | **107** | **DRN** | **100L4** | 305 | 439 |
| | | | | | **FA** | **97** | **DRN** | **100L4** | 190 | 434 |
| **6.5** | 4400 | 223.88 | 29600 | 1.00 | **FAF** | **97** | **DRN** | **100L4** | 210 | 433 |
| **7.7** | 3730 | 189.92 | 31500 | 1.15 | **F** | **97** | **DRN** | **100L4** | 195 | 432 |
| **8.3** | 3440 | 174.87 | 32300 | 1.25 | **FF** | **97** | **DRN** | **100L4** | 230 | 433 |
| **9.3** | 3070 | 156.30 | 33100 | 1.40 | | | | | | |
| **10** | 2760 | 140.71 | 33800 | 1.55 | **FA** | **97** | **DRN** | **100L4** | 190 | 434 |
| **11** | 2500 | 127.42 | 34400 | 1.70 | **FAF** | **97** | **DRN** | **100L4** | 210 | 433 |
| **13** | 2220 | 112.99 | 35000 | 1.95 | **F** | **97** | **DRN** | **100L4** | 195 | 432 |
| **14** | 2010 | 102.16 | 35400 | 2.1 | **FF** | **97** | **DRN** | **100L4** | 230 | 433 |
| **16** | 1760 | 89.85 | 35800 | 2.4 | | | | | | |
| | | | | | **FA** | **87** | **DRN** | **100L4** | 125 | 428 |
| **11** | 2630 | 134.16 | 24300 | 1.15 | **FAF** | **87** | **DRN** | **100L4** | 135 | 427 |
| **12** | 2420 | 123.29 | 25100 | 1.25 | **F** | **87** | **DRN** | **100L4** | 130 | 426 |
| **13** | 2150 | 109.49 | 26000 | 1.40 | **FF** | **87** | **DRN** | **100L4** | 145 | 427 |
| **15** | 1920 | 97.89 | 26700 | 1.55 | | | | | | |
| **17** | 1730 | 88.01 | 26700 | 1.75 | **FA** | **87** | **DRN** | **100L4** | 125 | 428 |
| **19** | 1500 | 76.39 | 26100 | 2.0 | **FAF** | **87** | **DRN** | **100L4** | 135 | 427 |
| **21** | 1340 | 68.40 | 25500 | 2.2 | **F** | **87** | **DRN** | **100L4** | 130 | 426 |
| **26** | 1110 | 56.75 | 24600 | 2.7 | **FF** | **87** | **DRN** | **100L4** | 145 | 427 |
| **29** | 990 | 50.36 | 23900 | 3.0 | | | | | | |
| | | | | | **FA** | **77** | **DRN** | **100L4** | 84 | 422 |
| **17** | 1680 | 85.52 | 14400 | 0.90 | **FAF** | **77** | **DRN** | **100L4** | 91 | 421 |
| **19** | 1470 | 75.02 | 15900 | 1.00 | **F** | **77** | **DRN** | **100L4** | 88 | 420 |
| **22** | 1300 | 66.46 | 16900 | 1.15 | **FF** | **77** | **DRN** | **100L4** | 98 | 421 |
| **25** | 1140 | 58.32 | 17700 | 1.30 | | | | | | |
| **26** | 1080 | 55.27 | 18000 | 1.40 | **FA** | **77** | **DRN** | **100L4** | 84 | 422 |
| **30** | 950 | 48.37 | 18500 | 1.60 | **FAF** | **77** | **DRN** | **100L4** | 91 | 421 |
| **33** | 850 | 43.58 | 18800 | 1.75 | **F** | **77** | **DRN** | **100L4** | 88 | 420 |
| **38** | 750 | 38.23 | 19100 | 2.00 | **FF** | **77** | **DRN** | **100L4** | 98 | 421 |
| **40** | 715 | 36.58 | 19200 | 1.55 | | | | | | |
| **46** | 615 | 31.51 | 19500 | 2.2 | **FA** | **77** | **DRN** | **100L4** | 83 | 422 |
| **51** | 565 | 28.75 | 19600 | 2.5 | **FAF** | **77** | **DRN** | **100L4** | 89 | 421 |
| **57** | 500 | 25.50* | 19700 | 3.0 | **F** | **77** | **DRN** | **100L4** | 86 | 420 |
| **68** | 420 | 21.43 | 19800 | 3.6 | **FF** | **77** | **DRN** | **100L4** | 97 | 421 |
| | | | | | **FA** | **67** | **DRN** | **100L4** | 61 | 416 |
| **34** | 840 | 43.20 | 10000 | 0.95 | **FAF** | **67** | **DRN** | **100L4** | 67 | 415 |
| **37** | 770 | 39.26 | 10700 | 1.00 | **F** | **67** | **DRN** | **100L4** | 64 | 414 |
| **43** | 665 | 34.01 | 11500 | 1.10 | **FF** | **67** | **DRN** | **100L4** | 70 | 415 |
| **45** | 630 | 32.08 | 11700 | 1.30 | | | | | | |
| **53** | 535 | 27.41 | 12200 | 1.50 | | | | | | |
| **58** | 490 | 25.13 | 12400 | 1.65 | **FA** | **67** | **DRN** | **100L4** | 60 | 416 |
| **66** | 430 | 22.05 | 12700 | 1.90 | **FAF** | **67** | **DRN** | **100L4** | 66 | 415 |
| **70** | 410 | 20.90* | 12800 | 2.00 | **F** | **67** | **DRN** | **100L4** | 63 | 414 |
| **80** | 355 | 18.29 | 12900 | 2.3 | **FF** | **67** | **DRN** | **100L4** | 69 | 415 |
| **88** | 320 | 16.48 | 13000 | 2.5 | | | | | | |
| **101** | 280 | 14.46 | 13000 | 2.9 | | | | | | |



21933170/DE – 11/2015

## $P_m$ = 3.0 kW

| $n_a$ rpm | $M_a$ Nm | i | $F_{Ra}$ 1) N | SEW $f_B$ | | | | | m kg | |
|---|---|---|---|---|---|---|---|---|---|---|
| **58** | 490 | 24.96 | 7420 | 1.15 | | | | | | |
| **69** | 415 | 21.17 | 7310 | 1.45 | | | | | | |
| **76** | 375 | 19.11 | 7220 | 1.60 | **FA** | **57** | **DRN** | **100L4** | 56 | 410 |
| **87** | 330 | 16.81 | 7100 | 1.80 | **FAF** | **57** | **DRN** | **100L4** | 62 | 409 |
| **92** | 310 | 15.88 | 7040 | 1.90 | **F** | **57** | **DRN** | **100L4** | 57 | 408 |
| **108** | 265 | 13.52 | 6850 | 2.3 | **FF** | **57** | **DRN** | **100L4** | 63 | 409 |
| **119** | 240 | 12.29 | 6730 | 2.5 | | | | | | |
| **137** | 205 | 10.64 | 6540 | 2.9 | | | | | | |
| **74** | 385 | 19.70 | 4760 | 1.05 | | | | | | |
| **84** | 340 | 17.33 | 4760 | 1.15 | | | | | | |
| **89** | 320 | 16.36 | 4760 | 1.25 | **FA** | **47** | **DRN** | **100L4** | 49 | 404 |
| **104** | 270 | 13.93 | 4720 | 1.45 | **FAF** | **47** | **DRN** | **100L4** | 51 | 403 |
| **115** | 245 | 12.66 | 4690 | 1.60 | **F** | **47** | **DRN** | **100L4** | 50 | 402 |
| **133** | 215 | 10.97 | 4620 | 1.85 | **FF** | **47** | **DRN** | **100L4** | 53 | 403 |
| **163** | 176 | 8.96 | 4350 | 1.85 | | | | | | |
| **131** | 215 | 11.08 | 2340 | 0.85 | | | | | | |
| **140** | 205 | 10.42 | 2360 | 0.90 | | | | | | |
| **162** | 176 | 8.97 | 2400 | 1.00 | | | | | | |
| **182** | 158 | 8.01 | 2410 | 1.10 | **FA** | **37** | **DRN** | **100L4** | 44 | 398 |
| **216** | 133 | 6.74 | 2290 | 1.05 | **FAF** | **37** | **DRN** | **100L4** | 46 | 397 |
| **241** | 119 | 6.05 | 2290 | 1.15 | **F** | **37** | **DRN** | **100L4** | 45 | 396 |
| **279** | 103 | 5.21 | 2280 | 1.20 | **FF** | **37** | **DRN** | **100L4** | 47 | 397 |
| **297** | 96 | 4.90 | 2270 | 1.25 | | | | | | |
| **345** | 83 | 4.22 | 2240 | 1.35 | | | | | | |
| **386** | 74 | 3.77 | 2210 | 1.40 | | | | | | |

## $P_m$ = 4.0 kW

| $n_a$ rpm | $M_a$ Nm | i | $F_{Ra}$ 1) N | SEW $f_B$ | | | | | m kg | |
|---|---|---|---|---|---|---|---|---|---|---|
| **1.7** | 20100 | 845 | 93100 | 0.90 | | | | | | |
| **1.9** | 18100 | 764 | 99700 | 1.00 | | | | | | |
| **2.2** | 16100 | 680 | 105200 | 1.10 | | | | | | |
| **2.5** | 13600 | 576 | 111000 | 1.30 | **FA** | **157R97** | **DRN** | **112M4** | 800 | 456 |
| **3.3** | 10600 | 446 | 116300 | 1.70 | **FAF** | **157R97** | **DRN** | **112M4** | 860 | 456 |
| **4.8** | 7220 | 302 | 120000 | 2.5 | **F** | **157R97** | **DRN** | **112M4** | 820 | 456 |
| **5.4** | 6500 | 273 | 120000 | 2.8 | **FF** | **157R97** | **DRN** | **112M4** | 920 | 456 |
| **6.3** | 5480 | 232 | 120000 | 3.3 | | | | | | |
| **7.4** | 4650 | 197 | 120000 | 3.9 | | | | | | |
| **2.7** | 13300 | 549 | 87800 | 0.90 | **FA** | **127R77** | **DRN** | **112M4** | 460 | 456 |
| **3.0** | 12000 | 495 | 90000 | 1.00 | **FAF** | **127R77** | **DRN** | **112M4** | 500 | 456 |
| **3.4** | 10400 | 428 | 90000 | 1.15 | **F** | **127R77** | **DRN** | **112M4** | 500 | 456 |
| **3.9** | 9120 | 376 | 90000 | 1.30 | **FF** | **127R77** | **DRN** | **112M4** | 540 | 456 |
| | | | | | **FA** | **107R77** | **DRN** | **112M4** | 310 | 456 |
| **4.4** | 8090 | 333 | 48700 | 0.95 | **FAF** | **107R77** | **DRN** | **112M4** | 330 | 456 |
| **5.0** | 7070 | 291 | 51400 | 1.10 | **F** | **107R77** | **DRN** | **112M4** | 325 | 456 |
| **5.7** | 6200 | 255 | 53500 | 1.25 | **FF** | **107R77** | **DRN** | **112M4** | 355 | 456 |
| **5.8** | 6630 | 254.40* | 52500 | 1.15 | | | | | | |
| **6.8** | 5610 | 215.37 | 54900 | 1.35 | | | | | | |
| **7.4** | 5200 | 199.31 | 55900 | 1.50 | | | | | | |
| **8.2** | 4660 | 178.64 | 57000 | 1.65 | **FA** | **107** | **DRN** | **112M4** | 270 | 440 |
| **9.1** | 4200 | 161.28* | 58000 | 1.85 | **FAF** | **107** | **DRN** | **112M4** | 290 | 439 |
| **10.0** | 3820 | 146.49 | 58800 | 2.0 | **F** | **107** | **DRN** | **112M4** | 290 | 438 |
| **11** | 3390 | 129.97 | 59600 | 2.3 | **FF** | **107** | **DRN** | **112M4** | 315 | 439 |
| **12** | 3070 | 117.94 | 60200 | 2.5 | | | | | | |
| **14** | 2640 | 101.38* | 61000 | 2.9 | | | | | | |
| **8.4** | 4560 | 174.87 | 29100 | 0.95 | **FA** | **97** | **DRN** | **112M4** | 195 | 434 |
| **9.4** | 4070 | 156.30 | 30500 | 1.05 | **FAF** | **97** | **DRN** | **112M4** | 220 | 433 |
| **10** | 3670 | 140.71 | 31700 | 1.15 | **F** | **97** | **DRN** | **112M4** | 205 | 432 |
| **11** | 3320 | 127.42 | 32500 | 1.30 | **FF** | **97** | **DRN** | **112M4** | 235 | 433 |

21933170/DE – 11/2015

## $P_m$ = 4.0 kW

| $n_a$ rpm | $M_a$ Nm | i | $F_{Ra}$ 1) N | SEW $f_B$ | | | | | m kg | |
|---|---|---|---|---|---|---|---|---|---|---|
| **13** | 2940 | 112.99 | 33400 | 1.45 | | | | | | |
| **14** | 2660 | 102.16 | 34100 | 1.60 | | | | | | |
| **15** | 2540 | 97.58 | 34300 | 1.70 | **FA** | **97** | **DRN** | **112M4** | 195 | 434 |
| **16** | 2340 | 89.85 | 34700 | 1.85 | **FAF** | **97** | **DRN** | **112M4** | 220 | 433 |
| **18** | 2090 | 80.31 | 35200 | 2.0 | **F** | **97** | **DRN** | **112M4** | 205 | 432 |
| **20** | 1880 | 72.29 | 35600 | 2.3 | **FF** | **97** | **DRN** | **112M4** | 235 | 433 |
| **22** | 1700 | 65.47 | 35900 | 2.5 | | | | | | |
| **13** | 2850 | 109.49 | 23500 | 1.05 | **FA** | **87** | **DRN** | **112M4** | 135 | 428 |
| **15** | 2550 | 97.89 | 24600 | 1.15 | **FAF** | **87** | **DRN** | **112M4** | 145 | 427 |
| **17** | 2290 | 88.01 | 24500 | 1.30 | **F** | **87** | **DRN** | **112M4** | 140 | 426 |
| | | | | | **FF** | **87** | **DRN** | **112M4** | 155 | 427 |
| **19** | 1990 | 76.39 | 24100 | 1.50 | **FA** | **87** | **DRN** | **112M4** | 135 | 428 |
| **21** | 1780 | 68.40 | 23800 | 1.70 | **FAF** | **87** | **DRN** | **112M4** | 145 | 427 |
| **26** | 1480 | 56.75 | 23100 | 2.0 | **F** | **87** | **DRN** | **112M4** | 140 | 426 |
| **29** | 1310 | 50.36 | 22600 | 2.2 | **FF** | **87** | **DRN** | **112M4** | 155 | 427 |
| **32** | 1180 | 45.28 | 22200 | 2.4 | | | | | | |
| **22** | 1730 | 66.46 | 13900 | 0.85 | **FA** | **77** | **DRN** | **112M4** | 93 | 422 |
| **25** | 1520 | 58.32 | 15600 | 1.00 | **FAF** | **77** | **DRN** | **112M4** | 100 | 421 |
| **26** | 1440 | 55.27 | 16100 | 1.05 | **F** | **77** | **DRN** | **112M4** | 97 | 420 |
| **30** | 1260 | 48.37 | 17100 | 1.20 | **FF** | **77** | **DRN** | **112M4** | 110 | 421 |
| **34** | 1130 | 43.58 | 17700 | 1.30 | **FA** | **77** | **DRN** | **112M4** | 93 | 422 |
| **38** | 990 | 38.23 | 18300 | 1.50 | **FAF** | **77** | **DRN** | **112M4** | 100 | 421 |
| **43** | 880 | 33.74 | 18700 | 1.70 | **F** | **77** | **DRN** | **112M4** | 97 | 420 |
| **49** | 780 | 29.91 | 19000 | 1.90 | **FF** | **77** | **DRN** | **112M4** | 110 | 421 |
| **57** | 665 | 25.54 | 19300 | 2.2 | | | | | | |
| **46** | 820 | 31.51 | 18900 | 1.70 | **FA** | **77** | **DRN** | **112M4** | 92 | 422 |
| **51** | 750 | 28.75 | 19100 | 1.90 | **FAF** | **77** | **DRN** | **112M4** | 98 | 421 |
| **57** | 665 | 25.50* | 19300 | 2.2 | **F** | **77** | **DRN** | **112M4** | 96 | 420 |
| **68** | 555 | 21.43 | 19600 | 2.7 | **FF** | **77** | **DRN** | **112M4** | 105 | 421 |
| **74** | 510 | 19.70 | 19700 | 2.9 | | | | | | |
| **53** | 715 | 27.41 | 11200 | 1.15 | | | | | | |
| **58** | 655 | 25.13 | 11600 | 1.25 | | | | | | |
| **66** | 575 | 22.05 | 12000 | 1.45 | | | | | | |
| **70** | 545 | 20.90* | 12200 | 1.50 | | | | | | |
| **80** | 475 | 18.29 | 12500 | 1.70 | | | | | | |
| **89** | 425 | 16.48 | 12700 | 1.90 | | | | | | |
| **101** | 375 | 14.46 | 12900 | 2.2 | | | | | | |
| **115** | 330 | 12.76 | 13000 | 2.5 | **FA** | **67** | **DRN** | **112M4** | 69 | 416 |
| **129** | 295 | 11.31 | 13000 | 2.8 | **FAF** | **67** | **DRN** | **112M4** | 76 | 415 |
| **152** | 250 | 9.66 | 13000 | 3.2 | **F** | **67** | **DRN** | **112M4** | 72 | 414 |
| **161** | 235 | 9.08 | 12900 | 2.2 | **FF** | **67** | **DRN** | **112M4** | 78 | 415 |
| **170** | 220 | 8.60 | 12700 | 2.5 | | | | | | |
| **194** | 196 | 7.53 | 12300 | 3.1 | | | | | | |
| **216** | 177 | 6.78 | 12000 | 3.5 | | | | | | |
| **246** | 155 | 5.95 | 11600 | 3.9 | | | | | | |
| **279** | 137 | 5.25 | 11300 | 4.3 | | | | | | |
| **314** | 121 | 4.66 | 10900 | 4.6 | | | | | | |
| **368** | 104 | 3.97 | 10500 | 4.8 | | | | | | |
| **69** | 550 | 21.17 | 6490 | 1.10 | | | | | | |
| **77** | 495 | 19.11 | 6480 | 1.20 | | | | | | |
| **87** | 435 | 16.81 | 6440 | 1.35 | | | | | | |
| **92** | 410 | 15.88 | 6420 | 1.45 | | | | | | |
| **108** | 350 | 13.52 | 6320 | 1.70 | **FA** | **57** | **DRN** | **112M4** | 66 | 410 |
| **119** | 320 | 12.29 | 6240 | 1.85 | **FAF** | **57** | **DRN** | **112M4** | 71 | 409 |
| **138** | 275 | 10.64 | 6120 | 2.2 | **F** | **57** | **DRN** | **112M4** | 66 | 408 |
| **157** | 240 | 9.31 | 5820 | 1.75 | **FF** | **57** | **DRN** | **112M4** | 73 | 409 |
| **179** | 210 | 8.19 | 5700 | 1.95 | | | | | | |
| **189** | 200 | 7.73 | 5650 | 2.1 | | | | | | |
| **222** | 172 | 6.58 | 5480 | 2.4 | | | | | | |
| **245** | 156 | 5.98 | 5380 | 2.7 | | | | | | |
| **282** | 135 | 5.18 | 5220 | 3.1 | | | | | | |



21933170/DE – 11/2015

## $P_m$ = 5.5 kW

| $n_a$ rpm | $M_a$ Nm | i | $F_{Ra}$ 1) N | SEW $f_B$ | | | | | m kg | |
|---|---|---|---|---|---|---|---|---|---|---|
| **2.5** | 18900 | 576 | 97200 | 0.95 | | | | | | |
| **2.9** | 16500 | 503 | 104400 | 1.10 | | | | | | |
| **3.3** | 14800 | 446 | 108500 | 1.20 | | | | | | |
| **4.2** | 11500 | 353 | 114900 | 1.55 | **FA** | **157R97** | **DRN** | **132S4** | 810 | 456 |
| **4.8** | 10000 | 302 | 117200 | 1.80 | **FAF** | **157R97** | **DRN** | **132S4** | 870 | 456 |
| **5.4** | 9040 | 273 | 118500 | 2.00 | **F** | **157R97** | **DRN** | **132S4** | 830 | 456 |
| **6.3** | 7630 | 232 | 120000 | 2.4 | **FF** | **157R97** | **DRN** | **132S4** | 940 | 456 |
| **7.2** | 6630 | 202 | 120000 | 2.7 | | | | | | |
| **7.4** | 6470 | 197 | 120000 | 2.8 | | | | | | |
| **3.5** | 13900 | 418 | 86700 | 0.85 | | | | | | |
| **3.9** | 12400 | 374 | 89600 | 0.95 | **FA** | **127R87** | **DRN** | **132S4** | 495 | 456 |
| **4.7** | 10300 | 312 | 90000 | 1.15 | **FAF** | **127R87** | **DRN** | **132S4** | 530 | 456 |
| **5.0** | 9730 | 293 | 90000 | 1.25 | **F** | **127R87** | **DRN** | **132S4** | 530 | 456 |
| **5.6** | 8590 | 259 | 90000 | 1.40 | **FF** | **127R87** | **DRN** | **132S4** | 570 | 456 |
| **6.5** | 7410 | 223 | 90000 | 1.60 | | | | | | |
| | | | | | **FA** | **127R77** | **DRN** | **132S4** | 475 | 456 |
| **3.4** | 14300 | 428 | 85800 | 0.85 | **FAF** | **127R77** | **DRN** | **132S4** | 510 | 456 |
| **3.9** | 12600 | 376 | 89300 | 0.95 | **F** | **127R77** | **DRN** | **132S4** | 510 | 456 |
| | | | | | **FF** | **127R77** | **DRN** | **132S4** | 550 | 456 |
| **6.8** | 7740 | 215.37 | 49600 | 1.00 | **FA** | **107** | **DRN** | **132S4** | 285 | 440 |
| **7.3** | 7160 | 199.31 | 51200 | 1.05 | **FAF** | **107** | **DRN** | **132S4** | 305 | 439 |
| **8.2** | 6420 | 178.64 | 53000 | 1.20 | **F** | **107** | **DRN** | **132S4** | 300 | 438 |
| **9.1** | 5790 | 161.28* | 54500 | 1.30 | **FF** | **107** | **DRN** | **132S4** | 325 | 439 |
| **10.0** | 5260 | 146.49 | 55700 | 1.45 | | | | | | |
| **11** | 4670 | 129.97 | 57000 | 1.65 | | | | | | |
| **12** | 4230 | 117.94 | 57900 | 1.80 | **FA** | **107** | **DRN** | **132S4** | 285 | 440 |
| **14** | 3640 | 101.38* | 59100 | 2.1 | **FAF** | **107** | **DRN** | **132S4** | 305 | 439 |
| **16** | 3320 | 92.47* | 59800 | 2.3 | **F** | **107** | **DRN** | **132S4** | 300 | 438 |
| **17** | 3180 | 88.49 | 60000 | 2.4 | **FF** | **107** | **DRN** | **132S4** | 325 | 439 |
| **17** | 3010 | 83.99 | 60400 | 2.5 | | | | | | |
| | | | | | **FA** | **97** | **DRN** | **132S4** | 210 | 434 |
| **11** | 4580 | 127.42 | 29000 | 0.95 | **FAF** | **97** | **DRN** | **132S4** | 230 | 433 |
| **13** | 4060 | 112.99 | 30600 | 1.05 | **F** | **97** | **DRN** | **132S4** | 215 | 432 |
| **14** | 3670 | 102.16 | 31700 | 1.15 | **FF** | **97** | **DRN** | **132S4** | 250 | 433 |
| **15** | 3500 | 97.58 | 32100 | 1.25 | | | | | | |
| **16** | 3220 | 89.85 | 32800 | 1.35 | | | | | | |
| **17** | 3110 | 86.59 | 33100 | 1.40 | | | | | | |
| **18** | 2880 | 80.31 | 33600 | 1.50 | **FA** | **97** | **DRN** | **132S4** | 210 | 434 |
| **19** | 2710 | 75.63 | 33900 | 1.60 | **FAF** | **97** | **DRN** | **132S4** | 230 | 433 |
| **20** | 2590 | 72.29 | 34200 | 1.65 | **F** | **97** | **DRN** | **132S4** | 215 | 432 |
| **22** | 2350 | 65.47 | 34700 | 1.85 | **FF** | **97** | **DRN** | **132S4** | 250 | 433 |
| **25** | 2080 | 58.06 | 34400 | 2.1 | | | | | | |
| **28** | 1880 | 52.49 | 33700 | 2.3 | | | | | | |
| **17** | 3160 | 88.01 | 11900 | 0.95 | **FA** | **87** | **DRN** | **132S4** | 145 | 428 |
| **19** | 2740 | 76.39 | 21200 | 1.10 | **FAF** | **87** | **DRN** | **132S4** | 155 | 427 |
| **21** | 2450 | 68.40 | 21200 | 1.20 | **F** | **87** | **DRN** | **132S4** | 150 | 426 |
| **26** | 2040 | 56.75 | 21000 | 1.45 | **FF** | **87** | **DRN** | **132S4** | 165 | 427 |
| **29** | 1810 | 50.36 | 20700 | 1.60 | | | | | | |
| **32** | 1620 | 45.28 | 20500 | 1.75 | **FA** | **87** | **DRN** | **132S4** | 145 | 428 |
| **37** | 1410 | 39.30 | 20100 | 1.95 | **FAF** | **87** | **DRN** | **132S4** | 155 | 427 |
| **42** | 1260 | 35.19 | 19700 | 2.1 | **F** | **87** | **DRN** | **132S4** | 150 | 426 |
| **50** | 1040 | 29.20 | 19100 | 2.4 | **FF** | **87** | **DRN** | **132S4** | 165 | 427 |
| **43** | 1210 | 33.92 | 19600 | 2.1 | **FA** | **87** | **DRN** | **132S4** | 140 | 428 |
| **51** | 1030 | 28.78 | 19000 | 2.4 | **FAF** | **87** | **DRN** | **132S4** | 155 | 427 |
| **55** | 950 | 26.50 | 18700 | 3.2 | **F** | **87** | **DRN** | **132S4** | 145 | 426 |
| **62** | 850 | 23.68 | 18300 | 3.5 | **FF** | **87** | **DRN** | **132S4** | 160 | 427 |
| **30** | 1730 | 48.37 | 13900 | 0.85 | | | | | | |
| **34** | 1560 | 43.58 | 15300 | 0.95 | **FA** | **77** | **DRN** | **132S4** | 105 | 422 |
| **38** | 1370 | 38.23 | 16500 | 1.10 | **FAF** | **77** | **DRN** | **132S4** | 110 | 421 |
| **43** | 1210 | 33.74 | 17400 | 1.25 | **F** | **77** | **DRN** | **132S4** | 110 | 420 |
| **49** | 1070 | 29.91 | 18000 | 1.40 | **FF** | **77** | **DRN** | **132S4** | 120 | 421 |
| **57** | 910 | 25.54 | 18600 | 1.60 | | | | | | |

21933170/DE – 11/2015

## $P_m$ = 5.5 kW

| $n_a$ rpm | $M_a$ Nm | i | $F_{Ra}$ 1) N | SEW $f_B$ | | | | | m kg | |
|---|---|---|---|---|---|---|---|---|---|---|
| **57** | 910 | 25.50* | 18600 | 1.65 | | | | | | |
| **68** | 770 | 21.43 | 19100 | 1.95 | | | | | | |
| **74** | 705 | 19.70 | 19200 | 2.1 | **FA** | **77** | **DRN** | **132S4** | 105 | 422 |
| **84** | 625 | 17.49 | 19400 | 2.4 | **FAF** | **77** | **DRN** | **132S4** | 110 | 421 |
| **93** | 560 | 15.64* | 19600 | 2.7 | **F** | **77** | **DRN** | **132S4** | 105 | 420 |
| **104** | 505 | 14.06 | 19200 | 3.0 | **FF** | **77** | **DRN** | **132S4** | 120 | 421 |
| **120** | 435 | 12.20 | 18500 | 3.4 | | | | | | |
| **66** | 790 | 22.05 | 10500 | 1.05 | | | | | | |
| **70** | 750 | 20.90* | 10900 | 1.10 | | | | | | |
| **80** | 655 | 18.29 | 11600 | 1.25 | | | | | | |
| **89** | 590 | 16.48 | 11900 | 1.40 | | | | | | |
| **101** | 515 | 14.46 | 12300 | 1.60 | | | | | | |
| **115** | 455 | 12.76 | 12600 | 1.80 | | | | | | |
| **129** | 405 | 11.31 | 12800 | 2.0 | **FA** | **67** | **DRN** | **132S4** | 81 | 416 |
| **151** | 345 | 9.66 | 12900 | 2.4 | **FAF** | **67** | **DRN** | **132S4** | 87 | 415 |
| **161** | 325 | 9.08 | 12400 | 1.60 | **F** | **67** | **DRN** | **132S4** | 84 | 414 |
| **170** | 305 | 8.60 | 12200 | 1.85 | **FF** | **67** | **DRN** | **132S4** | 90 | 415 |
| **194** | 270 | 7.53 | 11900 | 2.2 | | | | | | |
| **215** | 240 | 6.78 | 11600 | 2.5 | | | | | | |
| **246** | 210 | 5.95 | 11300 | 2.8 | | | | | | |
| **278** | 189 | 5.25 | 11000 | 3.1 | | | | | | |
| **314** | 167 | 4.66 | 10700 | 3.4 | | | | | | |
| **368** | 143 | 3.97 | 10300 | 3.5 | | | | | | |
| **87** | 600 | 16.81 | 5460 | 1.00 | | | | | | |
| **92** | 570 | 15.88 | 5490 | 1.05 | | | | | | |
| **108** | 485 | 13.52 | 5530 | 1.25 | | | | | | |
| **119** | 440 | 12.29 | 5530 | 1.35 | **FA** | **57** | **DRN** | **132S4** | 77 | 410 |
| **137** | 380 | 10.64 | 5500 | 1.55 | **FAF** | **57** | **DRN** | **132S4** | 83 | 409 |
| **178** | 290 | 8.19 | 5180 | 1.45 | **F** | **57** | **DRN** | **132S4** | 78 | 408 |
| **189** | 275 | 7.73 | 5150 | 1.50 | **FF** | **57** | **DRN** | **132S4** | 84 | 409 |
| **222** | 235 | 6.58 | 5060 | 1.75 | | | | | | |
| **244** | 215 | 5.98 | 4990 | 1.95 | | | | | | |
| **282** | 186 | 5.18 | 4880 | 2.2 | | | | | | |

## $P_m$ = 7.5 kW

| $n_a$ rpm | $M_a$ Nm | i | $F_{Ra}$ 1) N | SEW $f_B$ | | | | | m kg | |
|---|---|---|---|---|---|---|---|---|---|---|
| **3.3** | 20200 | 446 | 93100 | 0.90 | | | | | | |
| **4.2** | 15800 | 353 | 106200 | 1.15 | | | | | | |
| **4.9** | 13600 | 302 | 111000 | 1.30 | **FA** | **157R97** | **DRN** | **132M4** | 830 | 456 |
| **5.4** | 12300 | 273 | 113500 | 1.45 | **FAF** | **157R97** | **DRN** | **132M4** | 890 | 456 |
| **6.3** | 10400 | 232 | 116600 | 1.75 | **F** | **157R97** | **DRN** | **132M4** | 850 | 456 |
| **7.3** | 9080 | 202 | 118500 | 2.00 | **FF** | **157R97** | **DRN** | **132M4** | 950 | 456 |
| **7.5** | 8840 | 197 | 118800 | 2.0 | | | | | | |
| **4.7** | 14100 | 312 | 86300 | 0.85 | | | | | | |
| **5.0** | 13200 | 293 | 88000 | 0.90 | **FA** | **127R87** | **DRN** | **132M4** | 510 | 456 |
| **5.7** | 11700 | 259 | 90000 | 1.00 | **FAF** | **127R87** | **DRN** | **132M4** | 550 | 456 |
| **6.6** | 10100 | 223 | 90000 | 1.20 | **F** | **127R87** | **DRN** | **132M4** | 550 | 456 |
| **7.4** | 8950 | 198 | 90000 | 1.35 | **FF** | **127R87** | **DRN** | **132M4** | 590 | 456 |
| | | | | | **FA** | **127** | **DRN** | **132M4** | 445 | 446 |
| **8.6** | 8330 | 170.83 | 90000 | 1.45 | **FAF** | **127** | **DRN** | **132M4** | 485 | 445 |
| **9.6** | 7490 | 153.67* | 90000 | 1.60 | **F** | **127** | **DRN** | **132M4** | 480 | 444 |
| **12** | 6110 | 125.37 | 90000 | 1.95 | **FF** | **127** | **DRN** | **132M4** | 530 | 445 |
| **8.2** | 8710 | 178.64 | 47000 | 0.90 | **FA** | **107** | **DRN** | **132M4** | 300 | 440 |
| **9.1** | 7860 | 161.28* | 49300 | 1.00 | **FAF** | **107** | **DRN** | **132M4** | 320 | 439 |
| **10** | 7140 | 146.49 | 51200 | 1.05 | **F** | **107** | **DRN** | **132M4** | 320 | 438 |
| **11** | 6340 | 129.97 | 53200 | 1.20 | **FF** | **107** | **DRN** | **132M4** | 345 | 439 |
| **12** | 5750 | 117.94 | 54600 | 1.35 | | | | | | |
| **14** | 4940 | 101.38* | 56400 | 1.55 | | | | | | |
| **16** | 4510 | 92.47* | 57400 | 1.70 | **FA** | **107** | **DRN** | **132M4** | 300 | 440 |
| **17** | 4310 | 88.49 | 57800 | 1.80 | **FAF** | **107** | **DRN** | **132M4** | 320 | 439 |
| **17** | 4090 | 83.99 | 58200 | 1.85 | **F** | **107** | **DRN** | **132M4** | 320 | 438 |
| **20** | 3630 | 74.52 | 59200 | 2.1 | **FF** | **107** | **DRN** | **132M4** | 345 | 439 |
| **22** | 3290 | 67.62 | 59800 | 2.3 | | | | | | |

21933170/DE – 11/2015

## $P_m$ = 7.5 kW

| $n_a$ rpm | $M_a$ Nm | i | $F_{Ra}$ 1) N | SEW $f_B$ | | | | | m kg | |
|---|---|---|---|---|---|---|---|---|---|---|
| **15** | 4760 | 97.58 | 24600 | 0.90 | | | | | | |
| **16** | 4380 | 89.85 | 29600 | 1.00 | **FA** | **97** | **DRN** | **132M4** | 225 | 434 |
| **17** | 4220 | 86.59 | 30100 | 1.00 | **FAF** | **97** | **DRN** | **132M4** | 245 | 433 |
| **18** | 3910 | 80.31 | 31000 | 1.10 | **F** | **97** | **DRN** | **132M4** | 235 | 432 |
| **19** | 3680 | 75.63 | 31600 | 1.15 | **FF** | **97** | **DRN** | **132M4** | 265 | 433 |
| **20** | 3520 | 72.29 | 32000 | 1.20 | | | | | | |
| **22** | 3190 | 65.47 | 32200 | 1.35 | | | | | | |
| **25** | 2830 | 58.06 | 31700 | 1.50 | **FA** | **97** | **DRN** | **132M4** | 225 | 434 |
| **28** | 2560 | 52.49 | 31300 | 1.70 | **FAF** | **97** | **DRN** | **132M4** | 245 | 433 |
| **33** | 2170 | 44.49 | 30500 | 2.00 | **F** | **97** | **DRN** | **132M4** | 235 | 432 |
| **38** | 1890 | 38.86 | 29800 | 2.3 | **FF** | **97** | **DRN** | **132M4** | 265 | 433 |
| **45** | 1580 | 32.50 | 28800 | 2.7 | | | | | | |
| **34** | 2110 | 43.28 | 30400 | 1.45 | **FA** | **97** | **DRN** | **132M4** | 220 | 434 |
| **40** | 1780 | 36.64 | 29500 | 1.70 | **FAF** | **97** | **DRN** | **132M4** | 240 | 433 |
| **43** | 1650 | 33.91 | 29000 | 2.6 | **F** | **97** | **DRN** | **132M4** | 225 | 432 |
| **48** | 1480 | 30.39 | 28400 | 2.9 | **FF** | **97** | **DRN** | **132M4** | 260 | 433 |
| **26** | 2760 | 56.75 | 18100 | 1.10 | | | | | | |
| **29** | 2450 | 50.36 | 18200 | 1.20 | **FA** | **87** | **DRN** | **132M4** | 160 | 428 |
| **32** | 2200 | 45.28 | 18200 | 1.30 | **FAF** | **87** | **DRN** | **132M4** | 175 | 427 |
| **37** | 1910 | 39.30 | 18100 | 1.40 | **F** | **87** | **DRN** | **132M4** | 165 | 426 |
| **42** | 1710 | 35.19 | 17900 | 1.50 | **FF** | **87** | **DRN** | **132M4** | 185 | 427 |
| **50** | 1420 | 29.20 | 17600 | 1.75 | | | | | | |
| **51** | 1400 | 28.78 | 17500 | 1.75 | | | | | | |
| **55** | 1290 | 26.50 | 17400 | 2.3 | | | | | | |
| **62** | 1150 | 23.68 | 17100 | 2.6 | **FA** | **87** | **DRN** | **132M4** | 160 | 428 |
| **69** | 1040 | 21.32* | 16800 | 2.9 | **FAF** | **87** | **DRN** | **132M4** | 170 | 427 |
| **76** | 940 | 19.31 | 16500 | 3.2 | **F** | **87** | **DRN** | **132M4** | 165 | 426 |
| **86** | 830 | 17.12 | 16100 | 3.6 | **FF** | **87** | **DRN** | **132M4** | 180 | 427 |
| **95** | 755 | 15.48 | 15800 | 4.0 | | | | | | |
| **44** | 1640 | 33.74 | 14700 | 0.90 | **FA** | **77** | **DRN** | **132M4** | 125 | 422 |
| **49** | 1450 | 29.91 | 16000 | 1.05 | **FAF** | **77** | **DRN** | **132M4** | 130 | 421 |
| **57** | 1240 | 25.54 | 17200 | 1.15 | **F** | **77** | **DRN** | **132M4** | 125 | 420 |
| | | | | | **FF** | **77** | **DRN** | **132M4** | 135 | 421 |
| **58** | 1240 | 25.50* | 17200 | 1.20 | | | | | | |
| **68** | 1040 | 21.43 | 18100 | 1.45 | | | | | | |
| **75** | 960 | 19.70 | 18500 | 1.55 | | | | | | |
| **84** | 850 | 17.49 | 18800 | 1.75 | | | | | | |
| **94** | 760 | 15.64* | 18900 | 1.95 | | | | | | |
| **104** | 685 | 14.06 | 18500 | 2.2 | | | | | | |
| **120** | 595 | 12.20 | 17900 | 2.5 | **FA** | **77** | **DRN** | **132M4** | 120 | 422 |
| **134** | 530 | 10.93 | 17500 | 2.8 | **FAF** | **77** | **DRN** | **132M4** | 130 | 421 |
| **158** | 450 | 9.30 | 16400 | 2.4 | **F** | **77** | **DRN** | **132M4** | 125 | 420 |
| **178** | 400 | 8.26 | 16000 | 2.7 | **FF** | **77** | **DRN** | **132M4** | 135 | 421 |
| **199** | 360 | 7.39 | 15600 | 3.0 | | | | | | |
| **221** | 320 | 6.64 | 15300 | 3.3 | | | | | | |
| **255** | 280 | 5.76 | 14800 | 3.8 | | | | | | |
| **284** | 250 | 5.16 | 14400 | 4.3 | | | | | | |
| **343** | 205 | 4.28 | 13700 | 4.8 | | | | | | |

## $P_m$ = 9.2 kW

| $n_a$ rpm | $M_a$ Nm | i | $F_{Ra}$ 1) N | SEW $f_B$ | | | | | m kg | |
|---|---|---|---|---|---|---|---|---|---|---|
| **4.2** | 19400 | 353 | 95600 | 0.90 | | | | | | |
| **4.9** | 16800 | 302 | 103600 | 1.05 | **FA** | **157R97** | **DRN** | **132L4** | 840 | 456 |
| **5.4** | 15100 | 273 | 107700 | 1.20 | **FAF** | **157R97** | **DRN** | **132L4** | 890 | 456 |
| **6.4** | 12800 | 232 | 112600 | 1.40 | **F** | **157R97** | **DRN** | **132L4** | 860 | 456 |
| **7.3** | 11100 | 202 | 115500 | 1.60 | **FF** | **157R97** | **DRN** | **132L4** | 960 | 456 |
| **7.5** | 10800 | 197 | 116000 | 1.65 | | | | | | |
| **5.7** | 14300 | 259 | 85800 | 0.85 | **FA** | **127R87** | **DRN** | **132L4** | 520 | 456 |
| **6.6** | 12400 | 223 | 89600 | 0.95 | **FAF** | **127R87** | **DRN** | **132L4** | 560 | 456 |
| **7.4** | 10900 | 198 | 90000 | 1.10 | **F** | **127R87** | **DRN** | **132L4** | 560 | 456 |
| | | | | | **FF** | **127R87** | **DRN** | **132L4** | 600 | 456 |

21933170/DE – 11/2015

## $P_m$ = 9.2 kW

| $n_a$ rpm | $M_a$ Nm | i | $F_{Ra}$ 1) N | SEW $f_B$ | | | | | m kg | |
|---|---|---|---|---|---|---|---|---|---|---|
| **8.6** | 10200 | 170.83 | 90000 | 1.20 | **FA** | **127** | **DRN** | **132L4** | 455 | 446 |
| **9.6** | 9180 | 153.67* | 90000 | 1.30 | **FAF** | **127** | **DRN** | **132L4** | 490 | 445 |
| **12** | 7490 | 125.37 | 90000 | 1.60 | **F** | **127** | **DRN** | **132L4** | 490 | 444 |
| **13** | 6830 | 114.34 | 90000 | 1.75 | **FF** | **127** | **DRN** | **132L4** | 540 | 445 |
| **15** | 5910 | 98.95 | 90000 | 2.0 | | | | | | |
| **10** | 8750 | 146.49 | 46800 | 0.90 | **FA** | **107** | **DRN** | **132L4** | 310 | 440 |
| **11** | 7760 | 129.97 | 49600 | 1.00 | **FAF** | **107** | **DRN** | **132L4** | 330 | 439 |
| **12** | 7040 | 117.94 | 51500 | 1.10 | **F** | **107** | **DRN** | **132L4** | 325 | 438 |
| **14** | 6050 | 101.38* | 53900 | 1.25 | **FF** | **107** | **DRN** | **132L4** | 355 | 439 |
| **16** | 5520 | 92.47* | 55100 | 1.40 | | | | | | |
| **18** | 5010 | 83.99 | 56300 | 1.55 | **FA** | **107** | **DRN** | **132L4** | 310 | 440 |
| **20** | 4450 | 74.52 | 57500 | 1.70 | **FAF** | **107** | **DRN** | **132L4** | 330 | 439 |
| **22** | 4040 | 67.62 | 58300 | 1.90 | **F** | **107** | **DRN** | **132L4** | 325 | 438 |
| **25** | 3470 | 58.12* | 58000 | 2.2 | **FF** | **107** | **DRN** | **132L4** | 355 | 439 |
| **29** | 3030 | 50.73 | 56500 | 2.5 | | | | | | |
| **18** | 4790 | 80.31 | 23100 | 0.90 | **FA** | **97** | **DRN** | **132L4** | 235 | 434 |
| **19** | 4520 | 75.63 | 29200 | 0.95 | **FAF** | **97** | **DRN** | **132L4** | 255 | 433 |
| **20** | 4320 | 72.29 | 29600 | 1.00 | **F** | **97** | **DRN** | **132L4** | 240 | 432 |
| **22** | 3910 | 65.47 | 29600 | 1.10 | **FF** | **97** | **DRN** | **132L4** | 275 | 433 |
| **25** | 3460 | 58.06 | 29500 | 1.25 | | | | | | |
| **28** | 3130 | 52.49 | 29300 | 1.35 | **FA** | **97** | **DRN** | **132L4** | 235 | 434 |
| **33** | 2650 | 44.49 | 28800 | 1.60 | **FAF** | **97** | **DRN** | **132L4** | 255 | 433 |
| **38** | 2320 | 38.86 | 28300 | 1.85 | **F** | **97** | **DRN** | **132L4** | 240 | 432 |
| **45** | 1940 | 32.50 | 27500 | 2.2 | **FF** | **97** | **DRN** | **132L4** | 275 | 433 |
| **43** | 2020 | 33.91 | 27700 | 2.1 | **FA** | **97** | **DRN** | **132L4** | 230 | 434 |
| **48** | 1810 | 30.39 | 27200 | 2.4 | **FAF** | **97** | **DRN** | **132L4** | 250 | 433 |
| **54** | 1630 | 27.44* | 26700 | 2.6 | **F** | **97** | **DRN** | **132L4** | 235 | 432 |
| **59** | 1480 | 24.92 | 26200 | 2.9 | **FF** | **97** | **DRN** | **132L4** | 270 | 433 |
| **29** | 3000 | 50.36 | 16000 | 1.00 | **FA** | **87** | **DRN** | **132L4** | 170 | 428 |
| **32** | 2700 | 45.28 | 16300 | 1.05 | **FAF** | **87** | **DRN** | **132L4** | 185 | 427 |
| **37** | 2340 | 39.30 | 16400 | 1.15 | **F** | **87** | **DRN** | **132L4** | 175 | 426 |
| **42** | 2100 | 35.19 | 16400 | 1.25 | **FF** | **87** | **DRN** | **132L4** | 190 | 427 |
| **50** | 1740 | 29.20 | 16300 | 1.45 | | | | | | |
| **55** | 1580 | 26.50 | 16200 | 1.90 | | | | | | |
| **62** | 1410 | 23.68 | 16000 | 2.1 | **FA** | **87** | **DRN** | **132L4** | 165 | 428 |
| **69** | 1270 | 21.32* | 15900 | 2.4 | **FAF** | **87** | **DRN** | **132L4** | 180 | 427 |
| **76** | 1150 | 19.31 | 15600 | 2.6 | **F** | **87** | **DRN** | **132L4** | 175 | 426 |
| **86** | 1020 | 17.12 | 15400 | 2.9 | **FF** | **87** | **DRN** | **132L4** | 190 | 427 |
| **95** | 920 | 15.48 | 15100 | 3.2 | | | | | | |
| **112** | 780 | 13.12* | 14600 | 3.8 | | | | | | |
| **75** | 1170 | 19.70 | 17600 | 1.25 | | | | | | |
| **84** | 1040 | 17.49 | 18100 | 1.45 | | | | | | |
| **94** | 930 | 15.64* | 18200 | 1.60 | | | | | | |
| **105** | 840 | 14.06 | 17900 | 1.80 | | | | | | |
| **120** | 725 | 12.20 | 17400 | 2.1 | **FA** | **77** | **DRN** | **132L4** | 130 | 422 |
| **135** | 650 | 10.93 | 17100 | 2.3 | **FAF** | **77** | **DRN** | **132L4** | 135 | 421 |
| **158** | 555 | 9.30 | 15900 | 1.95 | **F** | **77** | **DRN** | **132L4** | 135 | 420 |
| **178** | 490 | 8.26 | 15600 | 2.2 | **FF** | **77** | **DRN** | **132L4** | 145 | 421 |
| **199** | 440 | 7.39 | 15200 | 2.4 | | | | | | |
| **221** | 395 | 6.64 | 14900 | 2.7 | | | | | | |
| **255** | 340 | 5.76 | 14500 | 3.1 | | | | | | |
| **285** | 305 | 5.16 | 14100 | 3.5 | | | | | | |
| **343** | 255 | 4.28 | 13500 | 4.0 | | | | | | |

## $P_m$ = 11.0 kW

| $n_a$ rpm | $M_a$ Nm | i | $F_{Ra}$ 1) N | SEW $f_B$ | | | | | m kg | |
|---|---|---|---|---|---|---|---|---|---|---|
| **4.9** | 20000 | 302 | 93500 | 0.90 | **FA** | **157R97** | **DRN** | **160M4** | 870 | 456 |
| **5.4** | 18100 | 273 | 99800 | 1.00 | **FAF** | **157R97** | **DRN** | **160M4** | 930 | 456 |
| **6.4** | 15300 | 232 | 107300 | 1.15 | **F** | **157R97** | **DRN** | **160M4** | 890 | 456 |
| **7.3** | 13300 | 202 | 111600 | 1.35 | **FF** | **157R97** | **DRN** | **160M4** | 1000 | 456 |
| **7.5** | 13000 | 197 | 112300 | 1.40 | | | | | | |

21933170/DE – 11/2015

## $P_m$ = 11.0 kW

| $n_a$ rpm | $M_a$ Nm | i | $F_{Ra}$ [1)] N | SEW $f_B$ | | | | | m kg | |
|---|---|---|---|---|---|---|---|---|---|---|
| **6.6** | 14800 | 223 | 84800 | 0.80 | **FA** | **127R87** | **DRN** | **160M4** | 550 | 456 |
| **7.5** | 13100 | 198 | 88300 | 0.90 | **FAF** | **127R87** | **DRN** | **160M4** | 590 | 456 |
| **8.9** | 11000 | 166 | 90000 | 1.10 | **F** | **127R87** | **DRN** | **160M4** | 590 | 456 |
| | | | | | **FF** | **127R87** | **DRN** | **160M4** | 630 | 456 |
| **5.5** | 19000 | 267.43 | 96900 | 0.95 | | | | | | |
| **6.8** | 15500 | 217.62* | 106900 | 1.15 | | | | | | |
| **8.3** | 12700 | 178.20* | 112800 | 1.40 | | | | | | |
| **9.0** | 11600 | 162.96 | 114800 | 1.55 | | | | | | |
| **10** | 10100 | 141.80* | 117100 | 1.80 | **FA** | **157** | **DRN** | **160M4** | 740 | 452 |
| **12** | 8920 | 125.14 | 118700 | 2.0 | **FAF** | **157** | **DRN** | **160M4** | 800 | 451 |
| **14** | 7730 | 108.49 | 120000 | 2.3 | **F** | **157** | **DRN** | **160M4** | 760 | 450 |
| **15** | 6880 | 96.53* | 120000 | 2.6 | **FF** | **157** | **DRN** | **160M4** | 870 | 451 |
| **17** | 6110 | 85.80* | 117500 | 2.9 | | | | | | |
| **19** | 5590 | 78.46 | 115100 | 3.2 | | | | | | |
| **22** | 4860 | 68.28* | 111400 | 3.7 | | | | | | |
| **8.6** | 12100 | 170.83 | 90000 | 1.00 | | | | | | |
| **9.6** | 10900 | 153.67* | 90000 | 1.10 | | | | | | |
| **12** | 8940 | 125.37 | 90000 | 1.35 | **FA** | **127** | **DRN** | **160M4** | 485 | 446 |
| **13** | 8150 | 114.34 | 90000 | 1.45 | **FAF** | **127** | **DRN** | **160M4** | 520 | 445 |
| **15** | 7050 | 98.95 | 90000 | 1.70 | **F** | **127** | **DRN** | **160M4** | 520 | 444 |
| **17** | 6220 | 87.31* | 90000 | 1.95 | **FF** | **127** | **DRN** | **160M4** | 570 | 445 |
| **20** | 5370 | 75.41* | 88300 | 2.2 | | | | | | |
| **12** | 8410 | 117.94 | 47800 | 0.90 | **FA** | **107** | **DRN** | **160M4** | 340 | 440 |
| **15** | 7220 | 101.38* | 51000 | 1.05 | **FAF** | **107** | **DRN** | **160M4** | 365 | 439 |
| **16** | 6590 | 92.47* | 52600 | 1.15 | **F** | **107** | **DRN** | **160M4** | 360 | 438 |
| | | | | | **FF** | **107** | **DRN** | **160M4** | 385 | 439 |
| **18** | 5980 | 83.99 | 54100 | 1.30 | | | | | | |
| **20** | 5310 | 74.52 | 55600 | 1.45 | **FA** | **107** | **DRN** | **160M4** | 340 | 440 |
| **22** | 4820 | 67.62 | 56700 | 1.60 | **FAF** | **107** | **DRN** | **160M4** | 365 | 439 |
| **25** | 4140 | 58.12* | 56200 | 1.85 | **F** | **107** | **DRN** | **160M4** | 360 | 438 |
| **29** | 3610 | 50.73 | 54900 | 2.1 | **FF** | **107** | **DRN** | **160M4** | 385 | 439 |
| **34** | 3060 | 43.03 | 53300 | 2.5 | | | | | | |
| **44** | 2400 | 33.79* | 50700 | 3.1 | **FA** | **107** | **DRN** | **160M4** | 330 | 440 |
| **53** | 1960 | 27.57 | 48500 | 4.0 | **FAF** | **107** | **DRN** | **160M4** | 355 | 439 |
| **59** | 1790 | 25.14 | 47500 | 4.4 | **F** | **107** | **DRN** | **160M4** | 350 | 438 |
| | | | | | **FF** | **107** | **DRN** | **160M4** | 375 | 439 |
| **22** | 4660 | 65.47 | 26900 | 0.90 | **FA** | **97** | **DRN** | **160M4** | 265 | 434 |
| **25** | 4140 | 58.06 | 27100 | 1.05 | **FAF** | **97** | **DRN** | **160M4** | 290 | 433 |
| **28** | 3740 | 52.49 | 27100 | 1.15 | **F** | **97** | **DRN** | **160M4** | 275 | 432 |
| | | | | | **FF** | **97** | **DRN** | **160M4** | 305 | 433 |
| **33** | 3170 | 44.49 | 26900 | 1.35 | **FA** | **97** | **DRN** | **160M4** | 265 | 434 |
| **38** | 2770 | 38.86 | 26700 | 1.55 | **FAF** | **97** | **DRN** | **160M4** | 290 | 433 |
| **45** | 2310 | 32.50 | 26200 | 1.85 | **F** | **97** | **DRN** | **160M4** | 275 | 432 |
| | | | | | **FF** | **97** | **DRN** | **160M4** | 305 | 433 |
| **43** | 2410 | 33.91 | 26300 | 1.80 | **FA** | **97** | **DRN** | **160M4** | 260 | 434 |
| **48** | 2160 | 30.39 | 25900 | 2.00 | **FAF** | **97** | **DRN** | **160M4** | 285 | 433 |
| **54** | 1950 | 27.44* | 25500 | 2.2 | **F** | **97** | **DRN** | **160M4** | 270 | 432 |
| **59** | 1770 | 24.92 | 25200 | 2.4 | **FF** | **97** | **DRN** | **160M4** | 300 | 433 |
| **67** | 1570 | 22.11 | 24600 | 2.7 | | | | | | |
| **37** | 2800 | 39.30 | 14600 | 0.95 | **FA** | **87** | **DRN** | **160M4** | 200 | 428 |
| **42** | 2500 | 35.19 | 14800 | 1.05 | **FAF** | **87** | **DRN** | **160M4** | 215 | 427 |
| **50** | 2080 | 29.20 | 15000 | 1.20 | **F** | **87** | **DRN** | **160M4** | 210 | 426 |
| | | | | | **FF** | **87** | **DRN** | **160M4** | 225 | 427 |
| **56** | 1880 | 26.50 | 15000 | 1.60 | | | | | | |
| **62** | 1680 | 23.68 | 15000 | 1.80 | | | | | | |
| **69** | 1520 | 21.32* | 14900 | 1.95 | **FA** | **87** | **DRN** | **160M4** | 200 | 428 |
| **76** | 1370 | 19.31 | 14800 | 2.2 | **FAF** | **87** | **DRN** | **160M4** | 210 | 427 |
| **86** | 1220 | 17.12 | 14600 | 2.5 | **F** | **87** | **DRN** | **160M4** | 205 | 426 |
| **95** | 1100 | 15.48 | 14400 | 2.7 | **FF** | **87** | **DRN** | **160M4** | 220 | 427 |
| **112** | 930 | 13.12* | 14000 | 3.2 | | | | | | |

21933170/DE – 11/2015

## $P_m$ = 11.0 kW

| $n_a$ rpm | $M_a$ Nm | i | $F_{Ra}$ 1) N | SEW $f_B$ | | | | | m kg | |
|---|---|---|---|---|---|---|---|---|---|---|
| **75** | 1400 | 19.70 | 16300 | 1.05 | | | | | | |
| **84** | 1240 | 17.49 | 17200 | 1.20 | | | | | | |
| **94** | 1110 | 15.64* | 17600 | 1.35 | | | | | | |
| **105** | 1000 | 14.06 | 17300 | 1.50 | | | | | | |
| **121** | 870 | 12.20 | 16900 | 1.70 | | | | | | |
| **135** | 775 | 10.93 | 16600 | 1.90 | **FA** | **77** | **DRN** | **160M4** | 160 | 422 |
| **158** | 660 | 9.30 | 15400 | 1.65 | **FAF** | **77** | **DRN** | **160M4** | 170 | 421 |
| **178** | 585 | 8.26 | 15100 | 1.85 | **F** | **77** | **DRN** | **160M4** | 165 | 420 |
| **199** | 525 | 7.39 | 14800 | 2.0 | **FF** | **77** | **DRN** | **160M4** | 175 | 421 |
| **222** | 470 | 6.64 | 14500 | 2.3 | | | | | | |
| **256** | 410 | 5.76 | 14100 | 2.6 | | | | | | |
| **285** | 365 | 5.16 | 13800 | 2.9 | | | | | | |
| **344** | 305 | 4.28 | 13300 | 3.3 | | | | | | |

## $P_m$ = 15.0 kW

| $n_a$ rpm | $M_a$ Nm | i | $F_{Ra}$ 1) N | SEW $f_B$ | | | | | m kg | |
|---|---|---|---|---|---|---|---|---|---|---|
| **6.4** | 20900 | 232 | 90200 | 0.85 | **FA** | **157R97** | **DRN** | **160L4** | 880 | 456 |
| **7.3** | 18200 | 202 | 99400 | 1.00 | **FAF** | **157R97** | **DRN** | **160L4** | 940 | 456 |
| **7.5** | 17700 | 197 | 100900 | 1.00 | **F** | **157R97** | **DRN** | **160L4** | 900 | 456 |
| | | | | | **FF** | **157R97** | **DRN** | **160L4** | 1010 | 456 |
| **6.8** | 21100 | 217.62* | 89600 | 0.85 | | | | | | |
| **8.3** | 17300 | 178.20* | 102200 | 1.05 | | | | | | |
| **9.0** | 15800 | 162.96 | 106100 | 1.15 | | | | | | |
| **10** | 13700 | 141.80* | 110800 | 1.30 | | | | | | |
| **12** | 12100 | 125.14 | 113800 | 1.50 | **FA** | **157** | **DRN** | **160L4** | 760 | 452 |
| **14** | 10500 | 108.49 | 116500 | 1.70 | **FAF** | **157** | **DRN** | **160L4** | 810 | 451 |
| **15** | 9380 | 96.53* | 115600 | 1.90 | **F** | **157** | **DRN** | **160L4** | 780 | 450 |
| **17** | 8330 | 85.80* | 113000 | 2.2 | **FF** | **157** | **DRN** | **160L4** | 880 | 451 |
| **19** | 7620 | 78.46 | 111000 | 2.4 | | | | | | |
| **22** | 6630 | 68.28* | 107800 | 2.7 | | | | | | |
| **24** | 5850 | 60.25 | 104900 | 3.1 | | | | | | |
| **12** | 12100 | 125.37 | 88900 | 1.00 | | | | | | |
| **13** | 11100 | 114.34 | 88300 | 1.10 | **FA** | **127** | **DRN** | **160L4** | 500 | 446 |
| **15** | 9610 | 98.95 | 86900 | 1.25 | **FAF** | **127** | **DRN** | **160L4** | 540 | 445 |
| **17** | 8480 | 87.31* | 85500 | 1.40 | **F** | **127** | **DRN** | **160L4** | 540 | 444 |
| **20** | 7320 | 75.41* | 83700 | 1.65 | **FF** | **127** | **DRN** | **160L4** | 580 | 445 |
| **21** | 6800 | 70.07 | 82700 | 1.75 | | | | | | |
| **16** | 8980 | 92.47* | 46200 | 0.85 | | | | | | |
| **17** | 8590 | 88.49 | 47300 | 0.90 | **FA** | **107** | **DRN** | **160L4** | 360 | 440 |
| **18** | 8160 | 83.99 | 48500 | 0.95 | **FAF** | **107** | **DRN** | **160L4** | 380 | 439 |
| **20** | 7240 | 74.52 | 51000 | 1.05 | **F** | **107** | **DRN** | **160L4** | 375 | 438 |
| **22** | 6570 | 67.62 | 52700 | 1.15 | **FF** | **107** | **DRN** | **160L4** | 400 | 439 |
| **25** | 5640 | 58.12* | 52200 | 1.35 | | | | | | |
| **29** | 4930 | 50.73 | 51400 | 1.55 | **FA** | **107** | **DRN** | **160L4** | 360 | 440 |
| **34** | 4180 | 43.03 | 50300 | 1.85 | **FAF** | **107** | **DRN** | **160L4** | 380 | 439 |
| **39** | 3650 | 37.61 | 49300 | 2.1 | **F** | **107** | **DRN** | **160L4** | 375 | 438 |
| **46** | 3090 | 31.80 | 47900 | 2.5 | **FF** | **107** | **DRN** | **160L4** | 400 | 439 |
| **44** | 3280 | 33.79* | 48400 | 2.2 | **FA** | **107** | **DRN** | **160L4** | 350 | 440 |
| **53** | 2670 | 27.57 | 46600 | 2.9 | **FAF** | **107** | **DRN** | **160L4** | 370 | 439 |
| **59** | 2440 | 25.14 | 45800 | 3.2 | **F** | **107** | **DRN** | **160L4** | 365 | 438 |
| **68** | 2110 | 21.76* | 44400 | 3.7 | **FF** | **107** | **DRN** | **160L4** | 390 | 439 |
| **33** | 4320 | 44.49 | 22900 | 1.00 | **FA** | **97** | **DRN** | **160L4** | 285 | 434 |
| **38** | 3770 | 38.86 | 23100 | 1.15 | **FAF** | **97** | **DRN** | **160L4** | 305 | 433 |
| **45** | 3150 | 32.50 | 23200 | 1.35 | **F** | **97** | **DRN** | **160L4** | 290 | 432 |
| | | | | | **FF** | **97** | **DRN** | **160L4** | 325 | 433 |



21933170/DE – 11/2015

## $P_m$ = 15.0 kW

| $n_a$ rpm | $M_a$ Nm | i | $F_{Ra}$ 1) N | SEW $f_B$ | | | | | m kg | |
|---|---|---|---|---|---|---|---|---|---|---|
| **43** | 3290 | 33.91 | 23200 | 1.30 | | | | | | |
| **48** | 2950 | 30.39 | 23200 | 1.45 | | | | | | |
| **54** | 2660 | 27.44* | 23000 | 1.60 | | | | | | |
| **59** | 2420 | 24.92 | 22900 | 1.80 | **FA** | **97** | **DRN** | **160L4** | 275 | 434 |
| **67** | 2140 | 22.11 | 22600 | 2.0 | **FAF** | **97** | **DRN** | **160L4** | 300 | 433 |
| **73** | 1950 | 20.07 | 22400 | 2.2 | **F** | **97** | **DRN** | **160L4** | 285 | 432 |
| **85** | 1670 | 17.25* | 21900 | 2.6 | **FF** | **97** | **DRN** | **160L4** | 315 | 433 |
| **98** | 1460 | 15.06 | 21400 | 2.9 | | | | | | |
| **115** | 1240 | 12.77 | 20800 | 3.5 | | | | | | |
| **132** | 1080 | 11.16 | 20200 | 3.8 | | | | | | |
| **56** | 2570 | 26.50 | 12400 | 1.15 | | | | | | |
| **62** | 2300 | 23.68 | 12600 | 1.30 | | | | | | |
| **69** | 2070 | 21.32* | 12800 | 1.45 | | | | | | |
| **76** | 1870 | 19.31 | 12800 | 1.60 | | | | | | |
| **86** | 1660 | 17.12 | 12900 | 1.80 | | | | | | |
| **95** | 1500 | 15.48 | 12800 | 2.00 | | | | | | |
| **112** | 1270 | 13.12* | 12700 | 2.4 | **FA** | **87** | **DRN** | **160L4** | 215 | 428 |
| **129** | 1110 | 11.46 | 12600 | 2.7 | **FAF** | **87** | **DRN** | **160L4** | 230 | 427 |
| **154** | 930 | 9.58 | 12300 | 3.1 | **F** | **87** | **DRN** | **160L4** | 220 | 426 |
| **178** | 800 | 8.29 | 11700 | 1.90 | **FF** | **87** | **DRN** | **160L4** | 235 | 427 |
| **200** | 710 | 7.35 | 11500 | 2.1 | | | | | | |
| **222** | 645 | 6.65 | 11300 | 2.4 | | | | | | |
| **262** | 545 | 5.63 | 11000 | 2.8 | | | | | | |
| **300** | 475 | 4.92 | 10700 | 3.2 | | | | | | |
| **358** | 395 | 4.12 | 10300 | 3.6 | | | | | | |

## $P_m$ = 18.5 kW

| $n_a$ rpm | $M_a$ Nm | i | $F_{Ra}$ 1) N | SEW $f_B$ | | | | | m kg | |
|---|---|---|---|---|---|---|---|---|---|---|
| | | | | | **FA** | **157R97** | **DRN** | **180M4** | 910 | 456 |
| **7.3** | 22500 | 202 | 74900 | 0.80 | **FAF** | **157R97** | **DRN** | **180M4** | 960 | 456 |
| **7.5** | 21900 | 197 | 86400 | 0.80 | **F** | **157R97** | **DRN** | **180M4** | 930 | 456 |
| | | | | | **FF** | **157R97** | **DRN** | **180M4** | 1030 | 456 |
| **8.3** | 21200 | 178.20* | 89000 | 0.85 | | | | | | |
| **9.1** | 19400 | 162.96 | 95600 | 0.90 | | | | | | |
| **10** | 16900 | 141.80* | 103200 | 1.05 | | | | | | |
| **12** | 14900 | 125.14 | 108200 | 1.20 | | | | | | |
| **14** | 12900 | 108.49 | 112400 | 1.40 | **FA** | **157** | **DRN** | **180M4** | 780 | 452 |
| **15** | 11500 | 96.53* | 111200 | 1.55 | **FAF** | **157** | **DRN** | **180M4** | 840 | 451 |
| **17** | 10200 | 85.80* | 109100 | 1.75 | **F** | **157** | **DRN** | **180M4** | 800 | 450 |
| **19** | 9370 | 78.46 | 107400 | 1.90 | **FF** | **157** | **DRN** | **180M4** | 910 | 451 |
| **22** | 8160 | 68.28* | 104700 | 2.2 | | | | | | |
| **25** | 7200 | 60.25 | 102100 | 2.5 | | | | | | |
| **28** | 6240 | 52.24 | 99200 | 2.9 | | | | | | |
| **13** | 13600 | 114.34 | 82200 | 0.90 | | | | | | |
| **15** | 11800 | 98.95 | 81600 | 1.00 | | | | | | |
| **17** | 10400 | 87.31* | 80900 | 1.15 | **FA** | **127** | **DRN** | **180M4** | 520 | 446 |
| **20** | 9010 | 75.41* | 79700 | 1.35 | **FAF** | **127** | **DRN** | **180M4** | 560 | 445 |
| **21** | 8370 | 70.07 | 79000 | 1.45 | **F** | **127** | **DRN** | **180M4** | 560 | 444 |
| **23** | 7630 | 63.91 | 78000 | 1.55 | **FF** | **127** | **DRN** | **180M4** | 600 | 445 |
| **27** | 6610 | 55.31 | 76300 | 1.80 | | | | | | |
| **30** | 5830 | 48.80 | 74800 | 2.1 | | | | | | |
| **20** | 8900 | 74.52 | 46400 | 0.85 | **FA** | **107** | **DRN** | **180M4** | 380 | 440 |
| **22** | 8080 | 67.62 | 48700 | 0.95 | **FAF** | **107** | **DRN** | **180M4** | 400 | 439 |
| **25** | 6940 | 58.12* | 48700 | 1.10 | **F** | **107** | **DRN** | **180M4** | 395 | 438 |
| **29** | 6060 | 50.73 | 48400 | 1.25 | **FF** | **107** | **DRN** | **180M4** | 425 | 439 |
| | | | | | **FA** | **107** | **DRN** | **180M4** | 380 | 440 |
| **34** | 5140 | 43.03 | 47700 | 1.50 | **FAF** | **107** | **DRN** | **180M4** | 400 | 439 |
| **39** | 4490 | 37.61 | 47000 | 1.70 | **F** | **107** | **DRN** | **180M4** | 395 | 438 |
| **46** | 3800 | 31.80 | 45900 | 2.0 | **FF** | **107** | **DRN** | **180M4** | 425 | 439 |
| **44** | 4030 | 33.79* | 46300 | 1.85 | **FA** | **107** | **DRN** | **180M4** | 370 | 440 |
| **54** | 3290 | 27.57 | 44900 | 2.4 | **FAF** | **107** | **DRN** | **180M4** | 390 | 439 |
| **59** | 3000 | 25.14 | 44200 | 2.6 | **F** | **107** | **DRN** | **180M4** | 385 | 438 |
| **68** | 2600 | 21.76* | 43100 | 3.0 | **FF** | **107** | **DRN** | **180M4** | 415 | 439 |

21933170/DE – 11/2015

## $P_m$ = 18.5 kW

| $n_a$ rpm | $M_a$ Nm | i | $F_{Ra}$ 1) N | SEW $f_B$ | | | | | m kg | |
|---|---|---|---|---|---|---|---|---|---|---|
| | | | | | FA | 97 | DRN | 180M4 | 305 | 434 |
| 38 | 4640 | 38.86 | 20100 | 0.95 | FAF | 97 | DRN | 180M4 | 325 | 433 |
| 45 | 3880 | 32.50 | 20600 | 1.10 | F | 97 | DRN | 180M4 | 310 | 432 |
| | | | | | FF | 97 | DRN | 180M4 | 345 | 433 |
| 54 | 3270 | 27.44* | 20900 | 1.30 | | | | | | |
| 59 | 2970 | 24.92 | 20900 | 1.45 | | | | | | |
| 67 | 2640 | 22.11 | 20900 | 1.65 | FA | 97 | DRN | 180M4 | 300 | 434 |
| 74 | 2390 | 20.07 | 20800 | 1.80 | FAF | 97 | DRN | 180M4 | 320 | 433 |
| 86 | 2060 | 17.25* | 20500 | 2.1 | F | 97 | DRN | 180M4 | 305 | 432 |
| 98 | 1790 | 15.06 | 20200 | 2.4 | FF | 97 | DRN | 180M4 | 340 | 433 |
| 116 | 1520 | 12.77 | 19700 | 2.8 | | | | | | |
| 132 | 1330 | 11.16 | 19300 | 3.1 | | | | | | |
| 69 | 2540 | 21.32* | 10900 | 1.20 | | | | | | |
| 77 | 2300 | 19.31 | 11100 | 1.30 | | | | | | |
| 86 | 2040 | 17.12 | 11400 | 1.45 | | | | | | |
| 95 | 1850 | 15.48 | 11500 | 1.60 | | | | | | |
| 113 | 1560 | 13.12* | 11600 | 1.90 | | | | | | |
| 129 | 1360 | 11.46 | 11600 | 2.2 | FA | 87 | DRN | 180M4 | 235 | 428 |
| 154 | 1140 | 9.58 | 11500 | 2.5 | FAF | 87 | DRN | 180M4 | 250 | 427 |
| 178 | 990 | 8.29 | 10900 | 1.55 | F | 87 | DRN | 180M4 | 245 | 426 |
| 201 | 870 | 7.35 | 10800 | 1.75 | FF | 87 | DRN | 180M4 | 260 | 427 |
| 222 | 790 | 6.65 | 10700 | 1.95 | | | | | | |
| 262 | 670 | 5.63 | 10400 | 2.3 | | | | | | |
| 300 | 585 | 4.92 | 10200 | 2.6 | | | | | | |
| 359 | 490 | 4.12 | 9890 | 3.0 | | | | | | |

## $P_m$ = 22 kW

| $n_a$ rpm | $M_a$ Nm | i | $F_{Ra}$ 1) N | SEW $f_B$ | | | | | m kg | |
|---|---|---|---|---|---|---|---|---|---|---|
| 10 | 20100 | 141.80* | 93200 | 0.90 | | | | | | |
| 12 | 17700 | 125.14 | 100900 | 1.00 | | | | | | |
| 14 | 15400 | 108.49 | 107100 | 1.15 | | | | | | |
| 15 | 13700 | 96.53* | 106800 | 1.30 | | | | | | |
| 17 | 12200 | 85.80* | 105200 | 1.45 | FA | 157 | DRN | 180L4 | 790 | 452 |
| 19 | 11100 | 78.46 | 103900 | 1.60 | FAF | 157 | DRN | 180L4 | 850 | 451 |
| 22 | 9710 | 68.28* | 101600 | 1.85 | F | 157 | DRN | 180L4 | 820 | 450 |
| 25 | 8570 | 60.25 | 99400 | 2.1 | FF | 157 | DRN | 180L4 | 920 | 451 |
| 28 | 7420 | 52.24 | 96800 | 2.4 | | | | | | |
| 32 | 6610 | 46.48* | 94600 | 2.7 | | | | | | |
| 37 | 5690 | 40.06 | 91700 | 3.2 | | | | | | |
| 45 | 4620 | 32.55 | 87600 | 3.9 | | | | | | |
| 15 | 14000 | 98.95 | 76400 | 0.85 | | | | | | |
| 17 | 12400 | 87.31* | 76300 | 0.95 | | | | | | |
| 20 | 10700 | 75.41* | 75700 | 1.10 | FA | 127 | DRN | 180L4 | 540 | 446 |
| 21 | 9960 | 70.07 | 75300 | 1.20 | FAF | 127 | DRN | 180L4 | 580 | 445 |
| 23 | 9080 | 63.91 | 74600 | 1.30 | F | 127 | DRN | 180L4 | 580 | 444 |
| 27 | 7860 | 55.31 | 73400 | 1.55 | FF | 127 | DRN | 180L4 | 620 | 445 |
| 30 | 6940 | 48.80 | 72200 | 1.75 | | | | | | |
| 35 | 5990 | 42.15 | 70600 | 2.0 | | | | | | |
| | | | | | FA | 107 | DRN | 180L4 | 395 | 440 |
| 25 | 8260 | 58.12* | 45200 | 0.95 | FAF | 107 | DRN | 180L4 | 415 | 439 |
| 29 | 7210 | 50.73 | 45300 | 1.05 | F | 107 | DRN | 180L4 | 410 | 438 |
| 34 | 6120 | 43.03 | 45100 | 1.25 | FF | 107 | DRN | 180L4 | 440 | 439 |
| | | | | | FA | 107 | DRN | 180L4 | 395 | 440 |
| 39 | 5340 | 37.61 | 44700 | 1.45 | FAF | 107 | DRN | 180L4 | 415 | 439 |
| 46 | 4520 | 31.80 | 44000 | 1.70 | F | 107 | DRN | 180L4 | 410 | 438 |
| | | | | | FF | 107 | DRN | 180L4 | 440 | 439 |
| 44 | 4800 | 33.79* | 44300 | 1.55 | FA | 107 | DRN | 180L4 | 385 | 440 |
| 54 | 3920 | 27.57 | 43300 | 2.0 | FAF | 107 | DRN | 180L4 | 405 | 439 |
| 59 | 3570 | 25.14 | 42700 | 2.2 | F | 107 | DRN | 180L4 | 400 | 438 |
| 68 | 3090 | 21.76* | 41800 | 2.5 | FF | 107 | DRN | 180L4 | 430 | 439 |
| 77 | 2730 | 19.20* | 40900 | 2.9 | | | | | | |

21933170/DE – 11/2015

## $P_m$ = 22 kW

| $n_a$ rpm | $M_a$ Nm | i | $F_{Ra}$ 1) N | SEW $f_B$ | | | | | m kg | |
|---|---|---|---|---|---|---|---|---|---|---|
| **54** | 3900 | 27.44* | 18700 | 1.10 | | | | | | |
| **59** | 3540 | 24.92 | 18900 | 1.20 | | | | | | |
| **67** | 3140 | 22.11 | 19100 | 1.35 | **FA** | **97** | **DRN** | **180L4** | 315 | 434 |
| **74** | 2850 | 20.07 | 19200 | 1.50 | **FAF** | **97** | **DRN** | **180L4** | 335 | 433 |
| **86** | 2450 | 17.25* | 19100 | 1.75 | **F** | **97** | **DRN** | **180L4** | 320 | 432 |
| **98** | 2140 | 15.06 | 19000 | 2.0 | **FF** | **97** | **DRN** | **180L4** | 355 | 433 |
| **116** | 1810 | 12.77 | 18700 | 2.4 | | | | | | |
| **132** | 1580 | 11.16 | 18400 | 2.6 | | | | | | |
| **69** | 3030 | 21.32* | 9030 | 1.00 | | | | | | |
| **76** | 2740 | 19.31 | 9460 | 1.10 | | | | | | |
| **86** | 2430 | 17.12 | 9870 | 1.25 | | | | | | |
| **95** | 2200 | 15.48 | 10100 | 1.35 | | | | | | |
| **113** | 1860 | 13.12* | 10400 | 1.60 | | | | | | |
| **129** | 1620 | 11.46 | 10600 | 1.85 | **FA** | **87** | **DRN** | **180L4** | 255 | 428 |
| **154** | 1360 | 9.58 | 10600 | 2.1 | **FAF** | **87** | **DRN** | **180L4** | 265 | 427 |
| **178** | 1170 | 8.29 | 10100 | 1.30 | **F** | **87** | **DRN** | **180L4** | 260 | 426 |
| **201** | 1040 | 7.35 | 10100 | 1.45 | **FF** | **87** | **DRN** | **180L4** | 275 | 427 |
| **222** | 940 | 6.65 | 10000 | 1.60 | | | | | | |
| **262** | 800 | 5.63 | 9890 | 1.90 | | | | | | |
| **300** | 695 | 4.92 | 9740 | 2.2 | | | | | | |
| **359** | 585 | 4.12 | 9490 | 2.5 | | | | | | |

## $P_m$ = 30 kW

| $n_a$ rpm | $M_a$ Nm | i | $F_{Ra}$ 1) N | SEW $f_B$ | | | | | m kg | |
|---|---|---|---|---|---|---|---|---|---|---|
| **14** | 21000 | 108.49 | 90100 | 0.85 | | | | | | |
| **15** | 18600 | 96.53* | 96900 | 0.95 | | | | | | |
| **17** | 16600 | 85.80* | 96400 | 1.10 | | | | | | |
| **19** | 15100 | 78.46 | 95800 | 1.20 | **FA** | **157** | **DRN** | **200L4** | 900 | 452 |
| **22** | 13200 | 68.28* | 94500 | 1.35 | **FAF** | **157** | **DRN** | **200L4** | 960 | 451 |
| **25** | 11600 | 60.25 | 93200 | 1.55 | **F** | **157** | **DRN** | **200L4** | 920 | 450 |
| **28** | 10100 | 52.24 | 91400 | 1.80 | **FF** | **157** | **DRN** | **200L4** | 1030 | 451 |
| **32** | 8990 | 46.48* | 89800 | 2.0 | | | | | | |
| **37** | 7750 | 40.06 | 87600 | 2.3 | | | | | | |
| **20** | 14500 | 75.41* | 64600 | 0.80 | | | | | | |
| **21** | 13500 | 70.07 | 65700 | 0.90 | | | | | | |
| **23** | 12300 | 63.91 | 66800 | 0.95 | | | | | | |
| **27** | 10700 | 55.31 | 66700 | 1.10 | **FA** | **127** | **DRN** | **200L4** | 650 | 446 |
| **30** | 9440 | 48.80 | 66300 | 1.25 | **FAF** | **127** | **DRN** | **200L4** | 690 | 445 |
| **35** | 8150 | 42.15 | 65500 | 1.45 | **F** | **127** | **DRN** | **200L4** | 680 | 444 |
| **40** | 7210 | 37.28 | 64600 | 1.65 | **FF** | **127** | **DRN** | **200L4** | 730 | 445 |
| **47** | 6060 | 31.33 | 63200 | 2.00 | | | | | | |
| **58** | 4890 | 25.30 | 61100 | 2.4 | | | | | | |
| **55** | 5200 | 26.86 | 61700 | 1.65 | **FA** | **127** | **DRN** | **200L4** | 640 | 446 |
| **60** | 4750 | 24.57 | 60800 | 1.80 | **FAF** | **127** | **DRN** | **200L4** | 670 | 445 |
| **69** | 4130 | 21.38 | 59300 | 2.9 | **F** | **127** | **DRN** | **200L4** | 670 | 444 |
| **78** | 3650 | 18.87 | 57900 | 3.0 | **FF** | **127** | **DRN** | **200L4** | 720 | 445 |
| | | | | | **FA** | **107** | **DRN** | **200L4** | 500 | 440 |
| **34** | 8320 | 43.03 | 39200 | 0.90 | **FAF** | **107** | **DRN** | **200L4** | 530 | 439 |
| **39** | 7280 | 37.61 | 39600 | 1.05 | **F** | **107** | **DRN** | **200L4** | 520 | 438 |
| **47** | 6150 | 31.80 | 39700 | 1.25 | **FF** | **107** | **DRN** | **200L4** | 550 | 439 |
| **54** | 5330 | 27.57 | 39500 | 1.45 | | | | | | |
| **59** | 4860 | 25.14 | 39300 | 1.60 | | | | | | |
| **68** | 4210 | 21.76* | 38800 | 1.85 | **FA** | **107** | **DRN** | **200L4** | 495 | 440 |
| **77** | 3710 | 19.20* | 38300 | 2.1 | **FAF** | **107** | **DRN** | **200L4** | 520 | 439 |
| **89** | 3200 | 16.58 | 37500 | 2.4 | **F** | **107** | **DRN** | **200L4** | 510 | 438 |
| **101** | 2830 | 14.67 | 36900 | 2.7 | **FF** | **107** | **DRN** | **200L4** | 540 | 439 |
| **120** | 2380 | 12.33 | 35800 | 2.9 | | | | | | |
| **149** | 1920 | 9.96 | 34400 | 3.4 | | | | | | |

21933170/DE – 11/2015

## $P_m$ = 30 kW

| $n_a$ rpm | $M_a$ Nm | i | $F_{Ra}$ 1) N | SEW $f_B$ | | | | | m kg | |
|---|---|---|---|---|---|---|---|---|---|---|
| **67** | 4280 | 22.11 | 15100 | 1.00 | | | | | | |
| **74** | 3880 | 20.07 | 15500 | 1.10 | | | | | | |
| **86** | 3330 | 17.25* | 16000 | 1.30 | | | | | | |
| **98** | 2910 | 15.06 | 16300 | 1.50 | | | | | | |
| **116** | 2470 | 12.77 | 16400 | 1.75 | **FA** | **97** | **DRN** | **200L4** | 425 | 434 |
| **133** | 2160 | 11.16 | 16400 | 1.90 | **FAF** | **97** | **DRN** | **200L4** | 445 | 433 |
| **163** | 1750 | 9.06 | 15400 | 1.35 | **F** | **97** | **DRN** | **200L4** | 430 | 432 |
| **180** | 1590 | 8.22 | 15300 | 1.50 | **FF** | **97** | **DRN** | **200L4** | 465 | 433 |
| **209** | 1360 | 7.07 | 15100 | 1.70 | | | | | | |
| **240** | 1190 | 6.17 | 14900 | 1.90 | | | | | | |
| **283** | 1010 | 5.23 | 14600 | 2.1 | | | | | | |
| **324** | 880 | 4.57 | 14300 | 2.3 | | | | | | |

## $P_m$ = 37 kW

| $n_a$ rpm | $M_a$ Nm | i | $F_{Ra}$ 1) N | SEW $f_B$ | | | | | m kg | |
|---|---|---|---|---|---|---|---|---|---|---|
| **17** | 20400 | 85.80* | 88600 | 0.90 | | | | | | |
| **19** | 18700 | 78.46 | 88700 | 0.95 | | | | | | |
| **22** | 16200 | 68.28* | 88400 | 1.10 | | | | | | |
| **25** | 14300 | 60.25 | 87800 | 1.25 | **FA** | **157** | **DRN** | **225S4** | 930 | 452 |
| **28** | 12400 | 52.24 | 86700 | 1.45 | **FAF** | **157** | **DRN** | **225S4** | 990 | 451 |
| **32** | 11000 | 46.48* | 85600 | 1.60 | **F** | **157** | **DRN** | **225S4** | 950 | 450 |
| **37** | 9550 | 40.06 | 83900 | 1.90 | **FF** | **157** | **DRN** | **225S4** | 1060 | 451 |
| **46** | 7750 | 32.55 | 81300 | 2.3 | | | | | | |
| **54** | 6580 | 27.60 | 79000 | 2.7 | | | | | | |
| **27** | 13100 | 55.31 | 59200 | 0.90 | | | | | | |
| **30** | 11600 | 48.80 | 60800 | 1.05 | **FA** | **127** | **DRN** | **225S4** | 680 | 446 |
| **35** | 10000 | 42.15 | 61100 | 1.20 | **FAF** | **127** | **DRN** | **225S4** | 720 | 445 |
| **40** | 8880 | 37.28 | 60700 | 1.35 | **F** | **127** | **DRN** | **225S4** | 720 | 444 |
| **47** | 7460 | 31.33 | 59900 | 1.60 | **FF** | **127** | **DRN** | **225S4** | 760 | 445 |
| **59** | 6030 | 25.30 | 58400 | 2.00 | | | | | | |
| **55** | 6400 | 26.86 | 58900 | 1.35 | | | | | | |
| **60** | 5850 | 24.57 | 58200 | 1.45 | | | | | | |
| **69** | 5090 | 21.38 | 57000 | 2.4 | | | | | | |
| **79** | 4490 | 18.87 | 55900 | 2.4 | **FA** | **127** | **DRN** | **225S4** | 670 | 446 |
| **91** | 3890 | 16.36 | 54500 | 2.8 | **FAF** | **127** | **DRN** | **225S4** | 710 | 445 |
| **102** | 3460 | 14.55 | 53300 | 3.2 | **F** | **127** | **DRN** | **225S4** | 700 | 444 |
| **118** | 2990 | 12.54 | 51800 | 3.3 | **FF** | **127** | **DRN** | **225S4** | 750 | 445 |
| **145** | 2420 | 10.19 | 49500 | 3.9 | | | | | | |
| **167** | 2110 | 8.86 | 47700 | 3.3 | | | | | | |
| **188** | 1870 | 7.88 | 46400 | 3.2 | | | | | | |
| **54** | 6570 | 27.57 | 36200 | 1.20 | | | | | | |
| **59** | 5990 | 25.14 | 36300 | 1.30 | | | | | | |
| **68** | 5180 | 21.76* | 36200 | 1.50 | | | | | | |
| **77** | 4570 | 19.20* | 36000 | 1.70 | | | | | | |
| **89** | 3950 | 16.58 | 35600 | 2.00 | **FA** | **107** | **DRN** | **225S4** | 530 | 440 |
| **101** | 3490 | 14.67 | 35100 | 2.2 | **FAF** | **107** | **DRN** | **225S4** | 550 | 439 |
| **120** | 2930 | 12.33 | 34300 | 2.4 | **F** | **107** | **DRN** | **225S4** | 540 | 438 |
| **149** | 2370 | 9.96 | 33200 | 2.7 | **FF** | **107** | **DRN** | **225S4** | 570 | 439 |
| **153** | 2310 | 9.69 | 32400 | 2.1 | | | | | | |
| **177** | 1990 | 8.37 | 31600 | 2.4 | | | | | | |
| **200** | 1760 | 7.40 | 31000 | 2.6 | | | | | | |
| **238** | 1480 | 6.22 | 30000 | 3.1 | | | | | | |

21933170/DE – 11/2015

## $P_m$ = 45 kW

| $n_a$ rpm | $M_a$ Nm | i | $F_{Ra}$ [1] N | SEW $f_B$ | | | | | m kg | |
|---|---|---|---|---|---|---|---|---|---|---|
| **22** | 19700 | 68.28* | 81400 | 0.90 | | | | | | |
| **25** | 17400 | 60.25 | 81600 | 1.05 | | | | | | |
| **28** | 15100 | 52.24 | 81300 | 1.20 | **FA** | **157** | **DRN** | **225M4** | 930 | 452 |
| **32** | 13400 | 46.48* | 80800 | 1.35 | **FAF** | **157** | **DRN** | **225M4** | 990 | 451 |
| **37** | 11600 | 40.06 | 79800 | 1.55 | **F** | **157** | **DRN** | **225M4** | 950 | 450 |
| **46** | 9430 | 32.55 | 78000 | 1.90 | **FF** | **157** | **DRN** | **225M4** | 1060 | 451 |
| **54** | 8000 | 27.60 | 76100 | 2.2 | | | | | | |
| **30** | 14100 | 48.80 | 51600 | 0.85 | | | | | | |
| **35** | 12200 | 42.15 | 54300 | 1.00 | **FA** | **127** | **DRN** | **225M4** | 680 | 446 |
| **40** | 10800 | 37.28 | 55800 | 1.10 | **FAF** | **127** | **DRN** | **225M4** | 720 | 445 |
| **47** | 9080 | 31.33 | 56100 | 1.30 | **F** | **127** | **DRN** | **225M4** | 720 | 444 |
| **59** | 7330 | 25.30 | 55400 | 1.65 | **FF** | **127** | **DRN** | **225M4** | 760 | 445 |
| **55** | 7780 | 26.86 | 55600 | 1.10 | | | | | | |
| **60** | 7120 | 24.57 | 55200 | 1.20 | | | | | | |
| **69** | 6190 | 21.38 | 54500 | 1.95 | | | | | | |
| **79** | 5470 | 18.87 | 53600 | 2.0 | | | | | | |
| **91** | 4740 | 16.36 | 52500 | 2.3 | **FA** | **127** | **DRN** | **225M4** | 670 | 446 |
| **102** | 4210 | 14.55 | 51600 | 2.6 | **FAF** | **127** | **DRN** | **225M4** | 710 | 445 |
| **118** | 3630 | 12.54 | 50300 | 2.8 | **F** | **127** | **DRN** | **225M4** | 700 | 444 |
| **145** | 2950 | 10.19 | 48300 | 3.2 | **FF** | **127** | **DRN** | **225M4** | 750 | 445 |
| **167** | 2560 | 8.86 | 46500 | 2.7 | | | | | | |
| **188** | 2280 | 7.88 | 45400 | 2.6 | | | | | | |
| **218** | 1970 | 6.80 | 44000 | 3.6 | | | | | | |
| **268** | 1600 | 5.52 | 41900 | 3.8 | | | | | | |
| **54** | 7990 | 27.57 | 31500 | 1.00 | | | | | | |
| **59** | 7290 | 25.14 | 32600 | 1.10 | | | | | | |
| **68** | 6300 | 21.76* | 33200 | 1.25 | | | | | | |
| **77** | 5560 | 19.20* | 33300 | 1.40 | | | | | | |
| **89** | 4800 | 16.58 | 33300 | 1.65 | **FA** | **107** | **DRN** | **225M4** | 530 | 440 |
| **101** | 4250 | 14.67 | 33100 | 1.80 | **FAF** | **107** | **DRN** | **225M4** | 550 | 439 |
| **120** | 3570 | 12.33 | 32600 | 1.95 | **F** | **107** | **DRN** | **225M4** | 540 | 438 |
| **149** | 2880 | 9.96 | 31900 | 2.2 | **FF** | **107** | **DRN** | **225M4** | 570 | 439 |
| **153** | 2810 | 9.69 | 30900 | 1.75 | | | | | | |
| **177** | 2420 | 8.37 | 30400 | 2.00 | | | | | | |
| **200** | 2140 | 7.40 | 29800 | 2.1 | | | | | | |
| **238** | 1800 | 6.22 | 29000 | 2.6 | | | | | | |

## $P_m$ = 55 kW

| $n_a$ rpm | $M_a$ Nm | i | $F_{Ra}$ [1] N | SEW $f_B$ | | | | | m kg | |
|---|---|---|---|---|---|---|---|---|---|---|
| **25** | 21300 | 60.25 | 73800 | 0.85 | | | | | | |
| **28** | 18500 | 52.24 | 74600 | 0.95 | **FA** | **157** | **DRN** | **250M4** | 1080 | 452 |
| **32** | 16400 | 46.48* | 74800 | 1.10 | **FAF** | **157** | **DRN** | **250M4** | 1140 | 451 |
| **37** | 14100 | 40.06 | 74700 | 1.25 | **F** | **157** | **DRN** | **250M4** | 1110 | 450 |
| **46** | 11500 | 32.55 | 73800 | 1.55 | **FF** | **157** | **DRN** | **250M4** | 1210 | 451 |
| **54** | 9780 | 27.60 | 72600 | 1.85 | | | | | | |
| **52** | 10100 | 28.60* | 72900 | 1.70 | | | | | | |
| **58** | 9010 | 25.43 | 71900 | 1.65 | **FA** | **157** | **DRN** | **250M4** | 1080 | 452 |
| **67** | 7850 | 22.16 | 70600 | 2.3 | **FAF** | **157** | **DRN** | **250M4** | 1140 | 451 |
| **75** | 7000 | 19.77 | 69400 | 2.4 | **F** | **157** | **DRN** | **250M4** | 1100 | 450 |
| **88** | 5970 | 16.85 | 67500 | 3.0 | **FF** | **157** | **DRN** | **250M4** | 1210 | 451 |
| | | | | | **FA** | **127** | **DRN** | **250M4** | 830 | 446 |
| **40** | 13200 | 37.28 | 47000 | 0.90 | **FAF** | **127** | **DRN** | **250M4** | 870 | 445 |
| **47** | 11100 | 31.33 | 50000 | 1.10 | **F** | **127** | **DRN** | **250M4** | 870 | 444 |
| **59** | 8960 | 25.30 | 51600 | 1.35 | **FF** | **127** | **DRN** | **250M4** | 910 | 445 |

21933170/DE – 11/2015

## $P_m$ = 55 kW

| $n_a$ rpm | $M_a$ Nm | i | $F_{Ra}$ [1] N | SEW $f_B$ | | | | | m kg | |
|---|---|---|---|---|---|---|---|---|---|---|
| **69** | 7570 | 21.38 | 51300 | 1.60 | | | | | | |
| **79** | 6680 | 18.87 | 50800 | 1.65 | | | | | | |
| **91** | 5790 | 16.36 | 50100 | 1.90 | | | | | | |
| **102** | 5150 | 14.55 | 49400 | 2.1 | | | | | | |
| **118** | 4440 | 12.54 | 48400 | 2.2 | **FA** | **127** | **DRN** | **250M4** | 820 | 446 |
| **145** | 3610 | 10.19 | 46800 | 2.6 | **FAF** | **127** | **DRN** | **250M4** | 850 | 445 |
| **167** | 3140 | 8.86 | 45100 | 2.2 | **F** | **127** | **DRN** | **250M4** | 850 | 444 |
| **188** | 2790 | 7.88 | 44100 | 2.2 | **FF** | **127** | **DRN** | **250M4** | 900 | 445 |
| **218** | 2400 | 6.80 | 42900 | 2.9 | | | | | | |
| **268** | 1950 | 5.52 | 41000 | 3.1 | | | | | | |
| **317** | 1650 | 4.68 | 39600 | 3.6 | | | | | | |

## $P_m$ = 75 kW

| $n_a$ rpm | $M_a$ Nm | i | $F_{Ra}$ [1] N | SEW $f_B$ | | | | | m kg | |
|---|---|---|---|---|---|---|---|---|---|---|
| **32** | 22400 | 46.48* | 62900 | 0.80 | **FA** | **157** | **DRN** | **280S4** | 1130 | 452 |
| **37** | 19300 | 40.06 | 64400 | 0.95 | **FAF** | **157** | **DRN** | **280S4** | 1190 | 451 |
| **46** | 15700 | 32.55 | 65400 | 1.15 | **F** | **157** | **DRN** | **280S4** | 1150 | 450 |
| **54** | 13300 | 27.60 | 65500 | 1.35 | **FF** | **157** | **DRN** | **280S4** | 1260 | 451 |
| **52** | 13800 | 28.60* | 65500 | 1.25 | | | | | | |
| **58** | 12200 | 25.43 | 65400 | 1.20 | | | | | | |
| **67** | 10700 | 22.16 | 64900 | 1.70 | **FA** | **157** | **DRN** | **280S4** | 1130 | 452 |
| **75** | 9550 | 19.77 | 64300 | 1.80 | **FAF** | **157** | **DRN** | **280S4** | 1190 | 451 |
| **88** | 8140 | 16.85 | 63200 | 2.2 | **F** | **157** | **DRN** | **280S4** | 1150 | 450 |
| **106** | 6740 | 13.96 | 61600 | 2.5 | **FF** | **157** | **DRN** | **280S4** | 1260 | 451 |
| **124** | 5750 | 11.92 | 60100 | 2.8 | | | | | | |
| | | | | | **FA** | **127** | **DRN** | **280S4** | 880 | 446 |
| **59** | 12200 | 25.30 | 40000 | 1.00 | **FAF** | **127** | **DRN** | **280S4** | 920 | 445 |
| | | | | | **F** | **127** | **DRN** | **280S4** | 910 | 444 |
| | | | | | **FF** | **127** | **DRN** | **280S4** | 960 | 445 |
| **69** | 10300 | 21.38 | 43000 | 1.15 | | | | | | |
| **79** | 9110 | 18.87 | 44400 | 1.20 | | | | | | |
| **91** | 7900 | 16.36 | 45200 | 1.40 | | | | | | |
| **102** | 7030 | 14.55 | 45000 | 1.55 | | | | | | |
| **118** | 6060 | 12.54 | 44600 | 1.65 | **FA** | **127** | **DRN** | **280S4** | 870 | 446 |
| **145** | 4920 | 10.19 | 43700 | 1.95 | **FAF** | **127** | **DRN** | **280S4** | 900 | 445 |
| **167** | 4280 | 8.86 | 42200 | 1.65 | **F** | **127** | **DRN** | **280S4** | 900 | 444 |
| **188** | 3800 | 7.88 | 41600 | 1.55 | **FF** | **127** | **DRN** | **280S4** | 950 | 445 |
| **218** | 3280 | 6.80 | 40700 | 2.1 | | | | | | |
| **268** | 2660 | 5.52 | 39300 | 2.2 | | | | | | |
| **317** | 2260 | 4.68 | 38100 | 2.6 | | | | | | |

## $P_m$ = 90 kW

| $n_a$ rpm | $M_a$ Nm | i | $F_{Ra}$ [1] N | SEW $f_B$ | | | | | m kg | |
|---|---|---|---|---|---|---|---|---|---|---|
| | | | | | **FA** | **157** | **DRN** | **280M4** | 1250 | 452 |
| **46** | 18800 | 32.55 | 59100 | 0.95 | **FAF** | **157** | **DRN** | **280M4** | 1310 | 451 |
| **54** | 16000 | 27.60 | 60200 | 1.10 | **F** | **157** | **DRN** | **280M4** | 1270 | 450 |
| | | | | | **FF** | **157** | **DRN** | **280M4** | 1380 | 451 |
| **67** | 12800 | 22.16 | 60600 | 1.40 | | | | | | |
| **75** | 11400 | 19.77 | 60500 | 1.50 | **FA** | **157** | **DRN** | **280M4** | 1240 | 452 |
| **88** | 9770 | 16.85 | 59900 | 1.85 | **FAF** | **157** | **DRN** | **280M4** | 1300 | 451 |
| **106** | 8100 | 13.96 | 58900 | 2.1 | **F** | **157** | **DRN** | **280M4** | 1260 | 450 |
| **124** | 6910 | 11.92 | 57800 | 2.3 | **FF** | **157** | **DRN** | **280M4** | 1370 | 451 |
| | | | | | **FA** | **127** | **DRN** | **280M4** | 990 | 446 |
| **59** | 14600 | 25.30 | 29600 | 0.80 | **FAF** | **127** | **DRN** | **280M4** | 1030 | 445 |
| | | | | | **F** | **127** | **DRN** | **280M4** | 1030 | 444 |
| | | | | | **FF** | **127** | **DRN** | **280M4** | 1070 | 445 |

21933170/DE – 11/2015

## $P_m$ = 90 kW

| $n_a$ rpm | $M_a$ Nm | i | $F_{Ra}$ 1) N | SEW $f_B$ | | | | | m kg | |
|---|---|---|---|---|---|---|---|---|---|---|
| **91** | 9490 | 16.36 | 39900 | 1.15 | | | | | | |
| **102** | 8440 | 14.55 | 41100 | 1.30 | | | | | | |
| **118** | 7270 | 12.54 | 41800 | 1.35 | **FA** | **127** | **DRN** | **280M4** | 980 | 446 |
| **145** | 5910 | 10.19 | 41400 | 1.60 | **FAF** | **127** | **DRN** | **280M4** | 1020 | 445 |
| **167** | 5140 | 8.86 | 40100 | 1.35 | **F** | **127** | **DRN** | **280M4** | 1020 | 444 |
| **188** | 4570 | 7.88 | 39700 | 1.30 | **FF** | **127** | **DRN** | **280M4** | 1060 | 445 |
| **218** | 3940 | 6.80 | 39000 | 1.80 | | | | | | |
| **268** | 3200 | 5.52 | 37900 | 1.85 | | | | | | |
| **316** | 2710 | 4.68 | 36900 | 2.2 | | | | | | |

## $P_m$ = 110 kW

| $n_a$ rpm | $M_a$ Nm | i | $F_{Ra}$ 1) N | SEW $f_B$ | | | | | m kg | |
|---|---|---|---|---|---|---|---|---|---|---|
| | | | | | **FA** | **157** | **DRN** | **315S4** | 1490 | 452 |
| **54** | 19400 | 27.60 | 53100 | 0.90 | **FAF** | **157** | **DRN** | **315S4** | 1550 | 451 |
| | | | | | **F** | **157** | **DRN** | **315S4** | 1510 | 450 |
| | | | | | **FF** | **157** | **DRN** | **315S4** | 1620 | 451 |
| | | | | | **FA** | **157** | **DRN** | **315S4/ERF/NS** | 1490 | 452 |
| **67** | 15600 | 22.16 | 54900 | 1.15 | **FAF** | **157** | **DRN** | **315S4/ERF/NS** | 1550 | 451 |
| | | | | | **F** | **157** | **DRN** | **315S4/ERF/NS** | 1510 | 450 |
| | | | | | **FF** | **157** | **DRN** | **315S4/ERF/NS** | 1610 | 451 |
| **75** | 13900 | 19.77 | 55400 | 1.20 | **FA** | **157** | **DRN** | **315S4** | 1490 | 452 |
| **88** | 11800 | 16.85 | 55600 | 1.50 | **FAF** | **157** | **DRN** | **315S4** | 1550 | 451 |
| **107** | 9850 | 13.96 | 55300 | 1.70 | **F** | **157** | **DRN** | **315S4** | 1510 | 450 |
| **125** | 8410 | 11.92 | 54700 | 1.90 | **FF** | **157** | **DRN** | **315S4** | 1610 | 451 |

## $P_m$ = 132 kW

| $n_a$ rpm | $M_a$ Nm | i | $F_{Ra}$ 1) N | SEW $f_B$ | | | | | m kg | |
|---|---|---|---|---|---|---|---|---|---|---|
| | | | | | **FA** | **157** | **DRN** | **315M4/ERF/NS** | 1510 | 452 |
| **67** | 18700 | 22.16 | 48700 | 0.95 | **FAF** | **157** | **DRN** | **315M4/ERF/NS** | 1570 | 451 |
| **75** | 16700 | 19.77 | 49800 | 1.00 | **F** | **157** | **DRN** | **315M4/ERF/NS** | 1530 | 450 |
| | | | | | **FF** | **157** | **DRN** | **315M4/ERF/NS** | 1630 | 451 |
| | | | | | **FA** | **157** | **DRN** | **315M4** | 1510 | 452 |
| **88** | 14200 | 16.85 | 50900 | 1.25 | **FAF** | **157** | **DRN** | **315M4** | 1570 | 451 |
| **107** | 11800 | 13.96 | 51400 | 1.45 | **F** | **157** | **DRN** | **315M4** | 1530 | 450 |
| **125** | 10000 | 11.92 | 51400 | 1.60 | **FF** | **157** | **DRN** | **315M4** | 1630 | 451 |

## $P_m$ = 160 kW

| $n_a$ rpm | $M_a$ Nm | i | $F_{Ra}$ 1) N | SEW $f_B$ | | | | | m kg | |
|---|---|---|---|---|---|---|---|---|---|---|
| | | | | | **FA** | **157** | **DRN** | **315L4** | 1640 | 452 |
| **88** | 17300 | 16.85 | 44800 | 1.05 | **FAF** | **157** | **DRN** | **315L4** | 1700 | 451 |
| **106** | 14300 | 13.96 | 46400 | 1.20 | **F** | **157** | **DRN** | **315L4** | 1660 | 450 |
| **125** | 12200 | 11.92 | 47100 | 1.30 | **FF** | **157** | **DRN** | **315L4** | 1770 | 451 |

## $P_m$ = 200 kW

| $n_a$ rpm | $M_a$ Nm | i | $F_{Ra}$ 1) N | SEW $f_B$ | | | | | m kg | |
|---|---|---|---|---|---|---|---|---|---|---|
| | | | | | **FA** | **157** | **DRN** | **315H4/ERF/NS** | 1760 | 452 |
| **88** | 21600 | 16.85 | 36200 | 0.85 | **FAF** | **157** | **DRN** | **315H4/ERF/NS** | 1820 | 451 |
| | | | | | **F** | **157** | **DRN** | **315H4/ERF/NS** | 1780 | 450 |
| | | | | | **FF** | **157** | **DRN** | **315H4/ERF/NS** | 1880 | 451 |
| | | | | | **FA** | **157** | **DRN** | **315H4** | 1760 | 452 |
| **107** | 17900 | 13.96 | 39200 | 0.95 | **FAF** | **157** | **DRN** | **315H4** | 1820 | 451 |
| **125** | 15200 | 11.92 | 41000 | 1.05 | **F** | **157** | **DRN** | **315H4** | 1780 | 450 |
| | | | | | **FF** | **157** | **DRN** | **315H4** | 1880 | 451 |

21933170/DE – 11/2015

## 9.4 Auswahltabellen für niedrige Abtriebsdrehzahlen F..R..DRN.. in Nm

### $M_{a\,max}$ = 130 Nm

| $n_a$ rpm | i | $F_{Ra}$ [1] N | | | | | m kg | |
|---|---|---|---|---|---|---|---|---|
| **0.15** | 8972 | 4500 | | | | | | |
| **0.18** | 7736 | 4500 | | | | | | |
| **0.19** | 7211 | 4500 | | | | | | |
| **0.22** | 6303 | 4500 | | | | | | |
| **0.25** | 5435 | 4500 | **FA** | **27R17** | **DR** | **63S4** | 13 | 456 |
| **0.28** | 4855 | 4500 | **FAF** | **27R17** | **DR** | **63S4** | 14 | 456 |
| **0.33** | 4243 | 4500 | **F** | **27R17** | **DR** | **63S4** | 14 | 456 |
| **0.37** | 3715 | 4500 | **FF** | **27R17** | **DR** | **63S4** | 14 | 456 |
| **0.43** | 3247 | 4500 | | | | | | |
| **0.48** | 2878 | 4500 | | | | | | |
| **0.55** | 2515 | 4500 | | | | | | |
| **0.62** | 2217 | 4500 | | | | | | |
| **0.73** | 1898 | 4500 | | | | | | |
| **0.84** | 1645 | 4500 | | | | | | |
| **0.90** | 1525 | 4500 | | | | | | |
| **1.0** | 1322 | 4500 | **FA** | **27R17** | **DR** | **63S4** | 13 | 456 |
| **1.2** | 1146 | 4500 | **FAF** | **27R17** | **DR** | **63S4** | 14 | 456 |
| **1.4** | 1013 | 4500 | **F** | **27R17** | **DR** | **63S4** | 13 | 456 |
| **1.6** | 890 | 4500 | **FF** | **27R17** | **DR** | **63S4** | 14 | 456 |
| **1.8** | 778 | 4500 | | | | | | |
| **2.0** | 682 | 4500 | | | | | | |
| **2.3** | 602 | 4500 | | | | | | |
| **2.6** | 520 | 4500 | | | | | | |
| **3.0** | 458 | 4500 | | | | | | |
| **3.5** | 397 | 4500 | | | | | | |
| **4.0** | 342 | 4500 | **FA** | **27R17** | **DR** | **63S4** | 13 | 456 |
| **4.6** | 302 | 4500 | **FAF** | **27R17** | **DR** | **63S4** | 13 | 456 |
| **5.2** | 266 | 4500 | **F** | **27R17** | **DR** | **63S4** | 13 | 456 |
| **5.8** | 236 | 4500 | **FF** | **27R17** | **DR** | **63S4** | 14 | 456 |
| **6.5** | 211 | 4500 | | | | | | |
| **7.4** | 186 | 4500 | | | | | | |
| | | | **FA** | **27R17** | **DR** | **63M4** | 13 | 456 |
| **9.3** | 142 | 4500 | **FAF** | **27R17** | **DR** | **63M4** | 13 | 456 |
| **11** | 124 | 4500 | **F** | **27R17** | **DR** | **63M4** | 13 | 456 |
| | | | **FF** | **27R17** | **DR** | **63M4** | 14 | 456 |
| | | | **FA** | **27R17** | **DR** | **63L4** | 13 | 456 |
| **12** | 109 | 4500 | **FAF** | **27R17** | **DR** | **63L4** | 14 | 456 |
| **14** | 96 | 4500 | **F** | **27R17** | **DR** | **63L4** | 14 | 456 |
| | | | **FF** | **27R17** | **DR** | **63L4** | 15 | 456 |

### $M_{a\,max}$ = 200 Nm

| $n_a$ rpm | i | $F_{Ra}$ [1] N | | | | | m kg | |
|---|---|---|---|---|---|---|---|---|
| **0.17** | 8193 | 4290 | | | | | | |
| **0.20** | 7064 | 4290 | | | | | | |
| **0.21** | 6585 | 4290 | | | | | | |
| **0.24** | 5756 | 4290 | | | | | | |
| **0.28** | 4963 | 4290 | **FA** | **37R17** | **DR** | **63S4** | 19 | 456 |
| **0.31** | 4434 | 4290 | **FAF** | **37R17** | **DR** | **63S4** | 21 | 456 |
| **0.36** | 3875 | 4290 | **F** | **37R17** | **DR** | **63S4** | 20 | 456 |
| **0.41** | 3392 | 4290 | **FF** | **37R17** | **DR** | **63S4** | 22 | 456 |
| **0.47** | 2965 | 4290 | | | | | | |
| **0.53** | 2587 | 4290 | | | | | | |
| **0.60** | 2284 | 4290 | | | | | | |
| **0.69** | 1997 | 4290 | | | | | | |

21933170/DE – 11/2015

## $M_{a\,max}$ = 200 Nm

| $n_a$ rpm | i | $F_{Ra}$ [1] N | | | | | m kg | |
|---|---|---|---|---|---|---|---|---|
| **0.72** | 1929 | 4290 | | | | | | |
| **0.82** | 1679 | 4290 | | | | | | |
| **0.89** | 1550 | 4290 | | | | | | |
| **1.0** | 1356 | 4290 | | | | | | |
| **1.2** | 1180 | 4290 | | | | | | |
| **1.3** | 1044 | 4290 | **FA** | **37R17** | **DR** | **63S4** | 19 | 456 |
| **1.5** | 914 | 4290 | **FAF** | **37R17** | **DR** | **63S4** | 21 | 456 |
| **1.7** | 808 | 4290 | **F** | **37R17** | **DR** | **63S4** | 20 | 456 |
| **2.0** | 698 | 4290 | **FF** | **37R17** | **DR** | **63S4** | 21 | 456 |
| **2.2** | 616 | 4290 | | | | | | |
| **2.5** | 544 | 4290 | | | | | | |
| **3.0** | 466 | 4290 | | | | | | |
| **3.4** | 411 | 4290 | | | | | | |
| **3.8** | 364 | 4290 | | | | | | |
| | | | **FA** | **37R17** | **DR** | **63S4** | 19 | 456 |
| **4.2** | 326 | 4290 | **FAF** | **37R17** | **DR** | **63S4** | 20 | 456 |
| **4.8** | 285 | 4290 | **F** | **37R17** | **DR** | **63S4** | 19 | 456 |
| | | | **FF** | **37R17** | **DR** | **63S4** | 21 | 456 |
| | | | **FA** | **37R17** | **DR** | **63M4** | 19 | 456 |
| **5.3** | 250 | 4290 | **FAF** | **37R17** | **DR** | **63M4** | 20 | 456 |
| **6.0** | 219 | 4290 | **F** | **37R17** | **DR** | **63M4** | 19 | 456 |
| **7.1** | 186 | 4290 | **FF** | **37R17** | **DR** | **63M4** | 21 | 456 |
| | | | **FA** | **37R17** | **DR** | **63L4** | 20 | 456 |
| **7.8** | 167 | 4290 | **FAF** | **37R17** | **DR** | **63L4** | 21 | 456 |
| **8.9** | 145 | 4290 | **F** | **37R17** | **DR** | **63L4** | 20 | 456 |
| **10** | 129 | 4290 | **FF** | **37R17** | **DR** | **63L4** | 22 | 456 |

## $M_{a\,max}$ = 400 Nm

| $n_a$ rpm | i | $F_{Ra}$ [1] N | | | | | m kg | |
|---|---|---|---|---|---|---|---|---|
| **0.11** | 12251 | 5920 | | | | | | |
| **0.13** | 10619 | 5920 | | | | | | |
| **0.14** | 9846 | 5920 | | | | | | |
| **0.16** | 8534 | 5920 | | | | | | |
| **0.19** | 7460 | 5920 | | | | | | |
| **0.21** | 6536 | 5920 | **FA** | **47R17** | **DR** | **63S4** | 24 | 456 |
| **0.24** | 5746 | 5920 | **FAF** | **47R17** | **DR** | **63S4** | 27 | 456 |
| **0.27** | 5022 | 5920 | **F** | **47R17** | **DR** | **63S4** | 25 | 456 |
| **0.31** | 4401 | 5920 | **FF** | **47R17** | **DR** | **63S4** | 28 | 456 |
| **0.36** | 3883 | 5920 | | | | | | |
| **0.40** | 3443 | 5920 | | | | | | |
| **0.46** | 2976 | 5920 | | | | | | |
| **0.52** | 2629 | 5920 | | | | | | |
| **0.55** | 2519 | 5920 | | | | | | |
| **0.58** | 2394 | 5920 | | | | | | |
| **0.64** | 2172 | 5920 | | | | | | |
| **0.68** | 2025 | 5920 | | | | | | |
| **0.78** | 1770 | 5920 | | | | | | |
| **0.88** | 1576 | 5920 | **FA** | **47R17** | **DR** | **63S4** | 23 | 456 |
| **1.0** | 1363 | 5920 | **FAF** | **47R17** | **DR** | **63S4** | 26 | 456 |
| **1.2** | 1192 | 5920 | **F** | **47R17** | **DR** | **63S4** | 24 | 456 |
| **1.3** | 1061 | 5920 | **FF** | **47R17** | **DR** | **63S4** | 27 | 456 |
| **1.5** | 931 | 5920 | | | | | | |
| **1.7** | 822 | 5920 | | | | | | |
| **2.0** | 706 | 5920 | | | | | | |
| **2.2** | 619 | 5920 | | | | | | |
| **2.5** | 524 | 5920 | **FA** | **47R17** | **DR** | **63M4** | 23 | 456 |
| **2.7** | 489 | 5920 | **FAF** | **47R17** | **DR** | **63M4** | 26 | 456 |
| **3.1** | 427 | 5920 | **F** | **47R17** | **DR** | **63M4** | 24 | 456 |
| **3.5** | 381 | 5920 | **FF** | **47R17** | **DR** | **63M4** | 27 | 456 |
| | | | **FA** | **47R17** | **DR** | **63L4** | 24 | 456 |
| **3.9** | 334 | 5920 | **FAF** | **47R17** | **DR** | **63L4** | 26 | 456 |
| **4.4** | 295 | 5920 | **F** | **47R17** | **DR** | **63L4** | 25 | 456 |
| **5.1** | 253 | 5920 | **FF** | **47R17** | **DR** | **63L4** | 28 | 456 |

21933170/DE – 11/2015

## $M_{a\,max}$ = 400 Nm

| $n_a$ rpm | i | $F_{Ra}$ [1] N | | | | | m kg | |
|---|---|---|---|---|---|---|---|---|
| **6.4** | 217 | 5920 | **FA** | **47R17** | **DRS** | **71S4** | 26 | 456 |
| **7.3** | 190 | 5920 | **FAF** | **47R17** | **DRS** | **71S4** | 28 | 456 |
| **7.8** | 178 | 5920 | **F** | **47R17** | **DRS** | **71S4** | 26 | 456 |
| | | | **FF** | **47R17** | **DRS** | **71S4** | 30 | 456 |
| | | | **FA** | **47R17** | **DRS** | **71M4** | 27 | 456 |
| **9.1** | 149 | 5920 | **FAF** | **47R17** | **DRS** | **71M4** | 30 | 456 |
| **10** | 131 | 5920 | **F** | **47R17** | **DRS** | **71M4** | 28 | 456 |
| | | | **FF** | **47R17** | **DRS** | **71M4** | 31 | 456 |

## $M_{a\,max}$ = 600 Nm

| $n_a$ rpm | i | $F_{Ra}$ [1] N | | | | | m kg | |
|---|---|---|---|---|---|---|---|---|
| **0.09** | 14832 | 9200 | | | | | | |
| **0.10** | 13604 | 9200 | | | | | | |
| **0.11** | 12602 | 9200 | | | | | | |
| **0.12** | 11252 | 9200 | | | | | | |
| **0.14** | 9986 | 9200 | | | | | | |
| **0.16** | 8787 | 9200 | **FA** | **57R37** | **DR** | **63S4** | 39 | 456 |
| **0.17** | 7908 | 9200 | **FAF** | **57R37** | **DR** | **63S4** | 45 | 456 |
| **0.20** | 6913 | 9200 | **F** | **57R37** | **DR** | **63S4** | 39 | 456 |
| **0.23** | 6030 | 9200 | **FF** | **57R37** | **DR** | **63S4** | 46 | 456 |
| **0.26** | 5289 | 9200 | | | | | | |
| **0.30** | 4654 | 9200 | | | | | | |
| **0.34** | 4060 | 9200 | | | | | | |
| **0.39** | 3564 | 9200 | | | | | | |
| **0.44** | 3161 | 9200 | | | | | | |
| **0.48** | 2854 | 9200 | | | | | | |
| **0.54** | 2576 | 9200 | | | | | | |
| **0.61** | 2266 | 9200 | | | | | | |
| **0.69** | 2012 | 9200 | | | | | | |
| **0.77** | 1791 | 9200 | **FA** | **57R37** | **DR** | **63S4** | 39 | 456 |
| **0.85** | 1617 | 9200 | **FAF** | **57R37** | **DR** | **63S4** | 44 | 456 |
| **0.97** | 1422 | 9200 | **F** | **57R37** | **DR** | **63S4** | 39 | 456 |
| **1.1** | 1243 | 9200 | **FF** | **57R37** | **DR** | **63S4** | 45 | 456 |
| **1.3** | 1066 | 9200 | | | | | | |
| **1.4** | 949 | 9200 | | | | | | |
| **1.6** | 856 | 9200 | | | | | | |
| **1.8** | 749 | 9200 | **FA** | **57R37** | **DR** | **63M4** | 39 | 456 |
| **2.0** | 658 | 9200 | **FAF** | **57R37** | **DR** | **63M4** | 44 | 456 |
| **2.4** | 549 | 9200 | **F** | **57R37** | **DR** | **63M4** | 39 | 456 |
| | | | **FF** | **57R37** | **DR** | **63M4** | 45 | 456 |
| | | | **FA** | **57R37** | **DR** | **63L4** | 39 | 456 |
| **2.7** | 483 | 9200 | **FAF** | **57R37** | **DR** | **63L4** | 45 | 456 |
| | | | **F** | **57R37** | **DR** | **63L4** | 40 | 456 |
| | | | **FF** | **57R37** | **DR** | **63L4** | 46 | 456 |
| | | | **FA** | **57R37** | **DR** | **63L4** | 39 | 456 |
| **3.0** | 426 | 9200 | **FAF** | **57R37** | **DR** | **63L4** | 45 | 456 |
| **3.4** | 382 | 9200 | **F** | **57R37** | **DR** | **63L4** | 39 | 456 |
| | | | **FF** | **57R37** | **DR** | **63L4** | 46 | 456 |
| | | | **FA** | **57R37** | **DRS** | **71S4** | 41 | 456 |
| **4.2** | 330 | 9200 | **FAF** | **57R37** | **DRS** | **71S4** | 47 | 456 |
| **4.6** | 298 | 9200 | **F** | **57R37** | **DRS** | **71S4** | 41 | 456 |
| **5.3** | 262 | 9200 | **FF** | **57R37** | **DRS** | **71S4** | 48 | 456 |
| | | | **FA** | **57R37** | **DRS** | **71M4** | 42 | 456 |
| **6.0** | 226 | 9200 | **FAF** | **57R37** | **DRS** | **71M4** | 48 | 456 |
| **6.8** | 200 | 9200 | **F** | **57R37** | **DRS** | **71M4** | 42 | 456 |
| **8.0** | 170 | 9200 | **FF** | **57R37** | **DRS** | **71M4** | 49 | 456 |
| | | | **FA** | **57R37** | **DRN** | **80M4** | 47 | 456 |
| **9.4** | 152 | 9200 | **FAF** | **57R37** | **DRN** | **80M4** | 52 | 456 |
| **11** | 134 | 9200 | **F** | **57R37** | **DRN** | **80M4** | 47 | 456 |
| | | | **FF** | **57R37** | **DRN** | **80M4** | 54 | 456 |



21933170/DE – 11/2015

## $M_{a\ max}$ = 820 Nm

| $n_a$ rpm | i | $F_{Ra}$ [1] N | | | | | m kg | |
|---|---|---|---|---|---|---|---|---|
| **0.07** | 19199 | 10300 | | | | | | |
| **0.08** | 17610 | 10300 | | | | | | |
| **0.09** | 14992 | 10300 | | | | | | |
| **0.11** | 12926 | 10300 | | | | | | |
| **0.12** | 11480 | 10300 | | | | | | |
| **0.14** | 10220 | 10300 | | | | | | |
| **0.15** | 8933 | 10300 | **FA** | **67R37** | **DR** | **63S4** | 43 | 456 |
| **0.17** | 7940 | 10300 | **FAF** | **67R37** | **DR** | **63S4** | 49 | 456 |
| **0.19** | 7096 | 10300 | **F** | **67R37** | **DR** | **63S4** | 46 | 456 |
| **0.23** | 6080 | 10300 | **FF** | **67R37** | **DR** | **63S4** | 52 | 456 |
| **0.26** | 5341 | 10300 | | | | | | |
| **0.29** | 4690 | 10300 | | | | | | |
| **0.34** | 4091 | 10300 | | | | | | |
| **0.39** | 3574 | 10300 | | | | | | |
| **0.44** | 3133 | 10300 | | | | | | |
| **0.50** | 2756 | 10300 | | | | | | |
| **0.57** | 2439 | 10300 | | | | | | |
| **0.41** | 3377 | 10300 | | | | | | |
| **0.47** | 2912 | 10300 | | | | | | |
| **0.51** | 2714 | 10300 | **FA** | **67R37** | **DR** | **63S4** | 42 | 456 |
| **0.58** | 2372 | 10300 | **FAF** | **67R37** | **DR** | **63S4** | 48 | 456 |
| **0.65** | 2126 | 10300 | **F** | **67R37** | **DR** | **63S4** | 45 | 456 |
| **0.85** | 1631 | 10300 | **FF** | **67R37** | **DR** | **63S4** | 51 | 456 |
| **0.96** | 1437 | 10300 | | | | | | |
| **1.1** | 1256 | 10300 | | | | | | |
| **1.2** | 1126 | 10300 | **FA** | **67R37** | **DR** | **63M4** | 42 | 456 |
| **1.3** | 984 | 10300 | **FAF** | **67R37** | **DR** | **63M4** | 48 | 456 |
| **1.5** | 864 | 10300 | **F** | **67R37** | **DR** | **63M4** | 45 | 456 |
| | | | **FF** | **67R37** | **DR** | **63M4** | 51 | 456 |
| **1.8** | 722 | 10300 | **FA** | **67R37** | **DR** | **63L4** | 43 | 456 |
| **2.0** | 634 | 10300 | **FAF** | **67R37** | **DR** | **63L4** | 49 | 456 |
| **2.4** | 539 | 10300 | **F** | **67R37** | **DR** | **63L4** | 46 | 456 |
| | | | **FF** | **67R37** | **DR** | **63L4** | 52 | 456 |
| | | | **FA** | **67R37** | **DR** | **63S4** | 43 | 456 |
| **0.73** | 1884 | 10300 | **FAF** | **67R37** | **DR** | **63S4** | 49 | 456 |
| | | | **F** | **67R37** | **DR** | **63S4** | 46 | 456 |
| | | | **FF** | **67R37** | **DR** | **63S4** | 52 | 456 |
| | | | **FA** | **67R37** | **DR** | **63L4** | 42 | 456 |
| **2.6** | 500 | 10300 | **FAF** | **67R37** | **DR** | **63L4** | 49 | 456 |
| | | | **F** | **67R37** | **DR** | **63L4** | 45 | 456 |
| | | | **FF** | **67R37** | **DR** | **63L4** | 51 | 456 |
| | | | **FA** | **67R37** | **DRS** | **71S4** | 44 | 456 |
| **3.0** | 454 | 10300 | **FAF** | **67R37** | **DRS** | **71S4** | 51 | 456 |
| **3.5** | 392 | 10300 | **F** | **67R37** | **DRS** | **71S4** | 47 | 456 |
| | | | **FF** | **67R37** | **DRS** | **71S4** | 53 | 456 |
| **4.1** | 333 | 10300 | **FA** | **67R37** | **DRS** | **71M4** | 46 | 456 |
| **4.6** | 297 | 10300 | **FAF** | **67R37** | **DRS** | **71M4** | 52 | 456 |
| **5.2** | 261 | 10300 | **F** | **67R37** | **DRS** | **71M4** | 48 | 456 |
| **5.7** | 238 | 10300 | **FF** | **67R37** | **DRS** | **71M4** | 54 | 456 |
| | | | **FA** | **67R37** | **DRN** | **80M4** | 50 | 456 |
| **7.2** | 200 | 10300 | **FAF** | **67R37** | **DRN** | **80M4** | 57 | 456 |
| | | | **F** | **67R37** | **DRN** | **80M4** | 53 | 456 |
| | | | **FF** | **67R37** | **DRN** | **80M4** | 59 | 456 |

21933170/DE – 11/2015

## $M_{a\,max}$ = 1500 Nm

| $n_a$ rpm | i | $F_{Ra}$ [1] N | | | | | m kg | |
|---|---|---|---|---|---|---|---|---|
| **0.07** | 19180 | 15700 | | | | | | |
| **0.08** | 17593 | 15700 | | | | | | |
| **0.09** | 16128 | 15700 | | | | | | |
| **0.09** | 14978 | 15700 | | | | | | |
| **0.10** | 13731 | 15700 | | | | | | |
| **0.11** | 12049 | 15700 | | | | | | |
| **0.13** | 11035 | 15700 | | | | | | |
| **0.14** | 9683 | 15700 | **FA** | **77R37** | **DR** | **63S4** | 65 | 456 |
| **0.16** | 8464 | 15700 | **FAF** | **77R37** | **DR** | **63S4** | 72 | 456 |
| **0.18** | 7520 | 15700 | **F** | **77R37** | **DR** | **63S4** | 69 | 456 |
| **0.21** | 6580 | 15700 | **FF** | **77R37** | **DR** | **63S4** | 80 | 456 |
| **0.24** | 5808 | 15700 | | | | | | |
| **0.27** | 5026 | 15700 | | | | | | |
| **0.31** | 4435 | 15700 | | | | | | |
| **0.36** | 3832 | 15700 | | | | | | |
| **0.46** | 2978 | 15700 | | | | | | |
| **0.53** | 2613 | 15700 | | | | | | |
| **0.60** | 2284 | 15700 | | | | | | |
| **0.65** | 2029 | 15700 | **FA** | **77R37** | **DR** | **63M4** | 65 | 456 |
| | | | **FAF** | **77R37** | **DR** | **63M4** | 72 | 456 |
| | | | **F** | **77R37** | **DR** | **63M4** | 69 | 456 |
| | | | **FF** | **77R37** | **DR** | **63M4** | 80 | 456 |
| **0.76** | 1728 | 15700 | **FA** | **77R37** | **DR** | **63M4** | 65 | 456 |
| **0.86** | 1544 | 15700 | **FAF** | **77R37** | **DR** | **63M4** | 72 | 456 |
| **0.98** | 1354 | 15700 | **F** | **77R37** | **DR** | **63M4** | 69 | 456 |
| | | | **FF** | **77R37** | **DR** | **63M4** | 80 | 456 |
| **1.1** | 1200 | 15700 | **FA** | **77R37** | **DR** | **63L4** | 66 | 456 |
| **1.2** | 1053 | 15700 | **FAF** | **77R37** | **DR** | **63L4** | 72 | 456 |
| | | | **F** | **77R37** | **DR** | **63L4** | 70 | 456 |
| | | | **FF** | **77R37** | **DR** | **63L4** | 80 | 456 |
| **1.5** | 910 | 15700 | **FA** | **77R37** | **DRS** | **71S4** | 68 | 456 |
| **1.7** | 810 | 15700 | **FAF** | **77R37** | **DRS** | **71S4** | 74 | 456 |
| **1.9** | 710 | 15700 | **F** | **77R37** | **DRS** | **71S4** | 72 | 456 |
| | | | **FF** | **77R37** | **DRS** | **71S4** | 82 | 456 |
| **2.2** | 615 | 15700 | **FA** | **77R37** | **DRS** | **71M4** | 69 | 456 |
| **2.5** | 538 | 15700 | **FAF** | **77R37** | **DRS** | **71M4** | 76 | 456 |
| **2.8** | 480 | 15700 | **F** | **77R37** | **DRS** | **71M4** | 73 | 456 |
| | | | **FF** | **77R37** | **DRS** | **71M4** | 83 | 456 |
| **3.5** | 413 | 15700 | **FA** | **77R37** | **DRN** | **80M4** | 74 | 456 |
| **3.9** | 367 | 15700 | **FAF** | **77R37** | **DRN** | **80M4** | 80 | 456 |
| | | | **F** | **77R37** | **DRN** | **80M4** | 77 | 456 |
| | | | **FF** | **77R37** | **DRN** | **80M4** | 88 | 456 |
| **4.5** | 323 | 15700 | **FA** | **77R37** | **DRN** | **90S4** | 80 | 456 |
| | | | **FAF** | **77R37** | **DRN** | **90S4** | 86 | 456 |
| | | | **F** | **77R37** | **DRN** | **90S4** | 83 | 456 |
| | | | **FF** | **77R37** | **DRN** | **90S4** | 94 | 456 |

## $M_{a\,max}$ = 3000 Nm

| $n_a$ rpm | i | $F_{Ra}$ [1] N | | | | | m kg | |
|---|---|---|---|---|---|---|---|---|
| **0.06** | 23042 | 19800 | | | | | | |
| **0.07** | 20462 | 19800 | | | | | | |
| **0.08** | 18238 | 19800 | | | | | | |
| **0.09** | 15877 | 19800 | | | | | | |
| **0.10** | 14099 | 19800 | | | | | | |
| **0.11** | 12205 | 19800 | **FA** | **87R57** | **DR** | **63S4** | 120 | 456 |
| **0.13** | 10433 | 19800 | **FAF** | **87R57** | **DR** | **63S4** | 130 | 456 |
| **0.15** | 9381 | 19800 | **F** | **87R57** | **DR** | **63S4** | 125 | 456 |
| **0.17** | 8142 | 19800 | **FF** | **87R57** | **DR** | **63S4** | 140 | 456 |
| **0.19** | 7100 | 19800 | | | | | | |
| **0.22** | 6273 | 19800 | | | | | | |
| **0.25** | 5510 | 19800 | | | | | | |
| **0.28** | 4954 | 19800 | | | | | | |

21933170/DE – 11/2015

## $M_{a\,max}$ = 3000 Nm

| $n_a$ rpm | i | $F_{Ra}$ [1] N | | | | | m kg | |
|---|---|---|---|---|---|---|---|---|
| | | | **FA** | **87R57** | **DR** | **63M4** | 120 | 456 |
| **0.31** | 4245 | 19800 | **FAF** | **87R57** | **DR** | **63M4** | 130 | 456 |
| **0.35** | 3721 | 19800 | **F** | **87R57** | **DR** | **63M4** | 125 | 456 |
| | | | **FF** | **87R57** | **DR** | **63M4** | 140 | 456 |
| | | | **FA** | **87R57** | **DR** | **63M4** | 115 | 456 |
| **0.41** | 3244 | 19800 | **FAF** | **87R57** | **DR** | **63M4** | 130 | 456 |
| **0.46** | 2881 | 19800 | **F** | **87R57** | **DR** | **63M4** | 125 | 456 |
| | | | **FF** | **87R57** | **DR** | **63M4** | 140 | 456 |
| | | | **FA** | **87R57** | **DR** | **63L4** | 120 | 456 |
| **0.50** | 2576 | 19800 | **FAF** | **87R57** | **DR** | **63L4** | 130 | 456 |
| **0.59** | 2199 | 19800 | **F** | **87R57** | **DR** | **63L4** | 125 | 456 |
| **0.67** | 1930 | 19800 | **FF** | **87R57** | **DR** | **63L4** | 140 | 456 |
| | | | **FA** | **87R57** | **DRS** | **71S4** | 120 | 456 |
| **0.81** | 1709 | 19800 | **FAF** | **87R57** | **DRS** | **71S4** | 130 | 456 |
| **0.92** | 1493 | 19800 | **F** | **87R57** | **DRS** | **71S4** | 125 | 456 |
| | | | **FF** | **87R57** | **DRS** | **71S4** | 140 | 456 |
| **1.0** | 1300 | 19800 | **FA** | **87R57** | **DRS** | **71M4** | 120 | 456 |
| **1.2** | 1148 | 19800 | **FAF** | **87R57** | **DRS** | **71M4** | 135 | 456 |
| **1.4** | 1010 | 19800 | **F** | **87R57** | **DRS** | **71M4** | 125 | 456 |
| **1.5** | 887 | 19800 | **FF** | **87R57** | **DRS** | **71M4** | 140 | 456 |
| | | | **FA** | **87R57** | **DRN** | **80M4** | 125 | 456 |
| **1.8** | 780 | 19800 | **FAF** | **87R57** | **DRN** | **80M4** | 140 | 456 |
| **2.1** | 674 | 19800 | **F** | **87R57** | **DRN** | **80M4** | 130 | 456 |
| | | | **FF** | **87R57** | **DRN** | **80M4** | 145 | 456 |
| | | | **FA** | **87R57** | **DRN** | **90S4** | 130 | 456 |
| **2.4** | 609 | 19800 | **FAF** | **87R57** | **DRN** | **90S4** | 145 | 456 |
| **2.8** | 515 | 19800 | **F** | **87R57** | **DRN** | **90S4** | 140 | 456 |
| **3.2** | 452 | 19800 | **FF** | **87R57** | **DRN** | **90S4** | 155 | 456 |
| | | | **FA** | **87R57** | **DRN** | **90L4** | 135 | 456 |
| **4.2** | 345 | 19800 | **FAF** | **87R57** | **DRN** | **90L4** | 150 | 456 |
| | | | **F** | **87R57** | **DRN** | **90L4** | 140 | 456 |
| | | | **FF** | **87R57** | **DRN** | **90L4** | 155 | 456 |

## $M_{a\,max}$ = 4300 Nm

| $n_a$ rpm | i | $F_{Ra}$ [1] N | | | | | m kg | |
|---|---|---|---|---|---|---|---|---|
| **0.07** | 20813 | 29900 | | | | | | |
| **0.08** | 18119 | 29900 | | | | | | |
| **0.09** | 15472 | 29900 | | | | | | |
| **0.10** | 14022 | 29900 | **FA** | **97R57** | **DR** | **63S4** | 185 | 456 |
| **0.11** | 12324 | 29900 | **FAF** | **97R57** | **DR** | **63S4** | 205 | 456 |
| **0.13** | 10838 | 29900 | **F** | **97R57** | **DR** | **63S4** | 190 | 456 |
| **0.14** | 9576 | 29900 | **FF** | **97R57** | **DR** | **63S4** | 225 | 456 |
| **0.17** | 8318 | 29900 | | | | | | |
| **0.19** | 7328 | 29900 | | | | | | |
| **0.20** | 6469 | 29900 | **FA** | **97R57** | **DR** | **63M4** | 185 | 456 |
| **0.24** | 5615 | 29900 | **FAF** | **97R57** | **DR** | **63M4** | 205 | 456 |
| **0.27** | 4961 | 29900 | **F** | **97R57** | **DR** | **63M4** | 190 | 456 |
| **0.30** | 4333 | 29900 | **FF** | **97R57** | **DR** | **63M4** | 225 | 456 |
| | | | **FA** | **97R57** | **DR** | **63M4** | 185 | 456 |
| **0.34** | 3906 | 29900 | **FAF** | **97R57** | **DR** | **63M4** | 205 | 456 |
| | | | **F** | **97R57** | **DR** | **63M4** | 190 | 456 |
| | | | **FF** | **97R57** | **DR** | **63M4** | 225 | 456 |
| | | | **FA** | **97R57** | **DR** | **63L4** | 185 | 456 |
| **0.39** | 3352 | 29900 | **FAF** | **97R57** | **DR** | **63L4** | 205 | 456 |
| **0.45** | 2907 | 29900 | **F** | **97R57** | **DR** | **63L4** | 190 | 456 |
| | | | **FF** | **97R57** | **DR** | **63L4** | 225 | 456 |
| | | | **FA** | **97R57** | **DRS** | **71S4** | 185 | 456 |
| **0.54** | 2553 | 29900 | **FAF** | **97R57** | **DRS** | **71S4** | 205 | 456 |
| **0.61** | 2245 | 29900 | **F** | **97R57** | **DRS** | **71S4** | 190 | 456 |
| **0.70** | 1970 | 29900 | **FF** | **97R57** | **DRS** | **71S4** | 225 | 456 |

21933170/DE – 11/2015

## $M_{a\,max}$ = 4300 Nm

| $n_a$ rpm | i | $F_{Ra}$ [1] N | | | | | m kg | |
|---|---|---|---|---|---|---|---|---|
| **0.79** | 1722 | 29900 | **FA** | **97R57** | **DRS** | **71M4** | 185 | 456 |
| **0.89** | 1527 | 29900 | **FAF** | **97R57** | **DRS** | **71M4** | 210 | 456 |
| **1.0** | 1327 | 29900 | **F** | **97R57** | **DRS** | **71M4** | 195 | 456 |
| | | | **FF** | **97R57** | **DRS** | **71M4** | 225 | 456 |
| | | | **FA** | **97R57** | **DRN** | **80M4** | 190 | 456 |
| **1.2** | 1171 | 29900 | **FAF** | **97R57** | **DRN** | **80M4** | 215 | 456 |
| **1.4** | 1022 | 29900 | **F** | **97R57** | **DRN** | **80M4** | 200 | 456 |
| | | | **FF** | **97R57** | **DRN** | **80M4** | 230 | 456 |
| | | | **FA** | **97R57** | **DRN** | **90S4** | 195 | 456 |
| **1.6** | 898 | 29900 | **FAF** | **97R57** | **DRN** | **90S4** | 220 | 456 |
| **1.8** | 784 | 29900 | **F** | **97R57** | **DRN** | **90S4** | 205 | 456 |
| **2.1** | 690 | 29900 | **FF** | **97R57** | **DRN** | **90S4** | 240 | 456 |
| | | | **FA** | **97R57** | **DRN** | **90L4** | 200 | 456 |
| **2.4** | 605 | 29900 | **FAF** | **97R57** | **DRN** | **90L4** | 220 | 456 |
| **2.8** | 529 | 29900 | **F** | **97R57** | **DRN** | **90L4** | 210 | 456 |
| | | | **FF** | **97R57** | **DRN** | **90L4** | 240 | 456 |
| | | | **FA** | **97R57** | **DRN** | **100LS4** | 205 | 456 |
| **3.1** | 467 | 29900 | **FAF** | **97R57** | **DRN** | **100LS4** | 225 | 456 |
| **3.6** | 406 | 29900 | **F** | **97R57** | **DRN** | **100LS4** | 210 | 456 |
| **4.0** | 363 | 29900 | **FF** | **97R57** | **DRN** | **100LS4** | 245 | 456 |
| | | | **FA** | **97R57** | **DRN** | **100L4** | 210 | 456 |
| **5.1** | 285 | 29900 | **FAF** | **97R57** | **DRN** | **100L4** | 235 | 456 |
| **6.0** | 245 | 29900 | **F** | **97R57** | **DRN** | **100L4** | 220 | 456 |
| | | | **FF** | **97R57** | **DRN** | **100L4** | 250 | 456 |

## $M_{a\,max}$ = 7680 Nm

| $n_a$ rpm | i | $F_{Ra}$ [1] N | | | | | m kg | |
|---|---|---|---|---|---|---|---|---|
| **0.05** | 25375 | 49800 | | | | | | |
| **0.06** | 21652 | 49800 | **FA** | **107R77** | **DR** | **63S4** | 275 | 456 |
| **0.07** | 18933 | 49800 | **FAF** | **107R77** | **DR** | **63S4** | 295 | 456 |
| **0.08** | 16888 | 49800 | **F** | **107R77** | **DR** | **63S4** | 290 | 456 |
| **0.09** | 14767 | 49800 | **FF** | **107R77** | **DR** | **63S4** | 320 | 456 |
| **0.12** | 11348 | 49800 | **FA** | **107R77** | **DR** | **63M4** | 275 | 456 |
| **0.13** | 10039 | 49800 | **FAF** | **107R77** | **DR** | **63M4** | 295 | 456 |
| **0.15** | 8548 | 49800 | **F** | **107R77** | **DR** | **63M4** | 290 | 456 |
| **0.17** | 7674 | 49800 | **FF** | **107R77** | **DR** | **63M4** | 320 | 456 |
| | | | **FA** | **107R77** | **DR** | **63L4** | 275 | 456 |
| **0.19** | 6767 | 49800 | **FAF** | **107R77** | **DR** | **63L4** | 295 | 456 |
| **0.22** | 5954 | 49800 | **F** | **107R77** | **DR** | **63L4** | 290 | 456 |
| **0.25** | 5223 | 49800 | **FF** | **107R77** | **DR** | **63L4** | 320 | 456 |
| | | | **FA** | **107R77** | **DRS** | **71S4** | 275 | 456 |
| **0.30** | 4567 | 49800 | **FAF** | **107R77** | **DRS** | **71S4** | 300 | 456 |
| **0.39** | 3521 | 49800 | **F** | **107R77** | **DRS** | **71S4** | 295 | 456 |
| | | | **FF** | **107R77** | **DRS** | **71S4** | 320 | 456 |
| | | | **FA** | **107R77** | **DRS** | **71M4** | 275 | 456 |
| **0.45** | 3037 | 49800 | **FAF** | **107R77** | **DRS** | **71M4** | 300 | 456 |
| **0.49** | 2756 | 49800 | **F** | **107R77** | **DRS** | **71M4** | 295 | 456 |
| **0.57** | 2369 | 49800 | **FF** | **107R77** | **DRS** | **71M4** | 320 | 456 |
| | | | **FA** | **107R77** | **DRN** | **80M4** | 280 | 456 |
| **0.70** | 2068 | 49800 | **FAF** | **107R77** | **DRN** | **80M4** | 305 | 456 |
| **0.79** | 1826 | 49800 | **F** | **107R77** | **DRN** | **80M4** | 300 | 456 |
| | | | **FF** | **107R77** | **DRN** | **80M4** | 325 | 456 |
| | | | **FA** | **107R77** | **DRN** | **90S4** | 285 | 456 |
| **0.91** | 1597 | 49800 | **FAF** | **107R77** | **DRN** | **90S4** | 310 | 456 |
| **1.0** | 1401 | 49800 | **F** | **107R77** | **DRN** | **90S4** | 305 | 456 |
| **1.2** | 1243 | 49800 | **FF** | **107R77** | **DRN** | **90S4** | 330 | 456 |
| | | | **FA** | **107R77** | **DRN** | **90L4** | 290 | 456 |
| **1.3** | 1087 | 49800 | **FAF** | **107R77** | **DRN** | **90L4** | 310 | 456 |
| **1.5** | 950 | 49800 | **F** | **107R77** | **DRN** | **90L4** | 305 | 456 |
| | | | **FF** | **107R77** | **DRN** | **90L4** | 335 | 456 |

21933170/DE – 11/2015

## $M_{a\,max}$ = 7680 Nm

| $n_a$ rpm | i | $F_{Ra}$ [1] N | | | | | m kg | |
|---|---|---|---|---|---|---|---|---|
| 1.7 | 834 | 49800 | FA | 107R77 | DRN | 100LS4 | 295 | 456 |
| 2.0 | 736 | 49800 | FAF | 107R77 | DRN | 100LS4 | 315 | 456 |
| 2.3 | 640 | 49800 | F | 107R77 | DRN | 100LS4 | 310 | 456 |
| | | | FF | 107R77 | DRN | 100LS4 | 340 | 456 |
| 2.6 | 560 | 49800 | FA | 107R77 | DRN | 100L4 | 300 | 456 |
| 3.0 | 489 | 49800 | FAF | 107R77 | DRN | 100L4 | 325 | 456 |
| 3.3 | 436 | 49800 | F | 107R77 | DRN | 100L4 | 320 | 456 |
| | | | FF | 107R77 | DRN | 100L4 | 345 | 456 |
| | | | FA | 107R77 | DRN | 112M4 | 310 | 456 |
| 4.0 | 370 | 49800 | FAF | 107R77 | DRN | 112M4 | 330 | 456 |
| 4.4 | 333 | 49800 | F | 107R77 | DRN | 112M4 | 325 | 456 |
| | | | FF | 107R77 | DRN | 112M4 | 355 | 456 |

## $M_{a\,max}$ = 12000 Nm

| $n_a$ rpm | i | $F_{Ra}$ [1] N | | | | | m kg | |
|---|---|---|---|---|---|---|---|---|
| | | | FA | 127R77 | DR | 63S4 | 425 | 456 |
| 0.06 | 24478 | 90000 | FAF | 127R77 | DR | 63S4 | 465 | 456 |
| 0.06 | 22323 | 90000 | F | 127R77 | DR | 63S4 | 460 | 456 |
| | | | FF | 127R77 | DR | 63S4 | 510 | 456 |
| 0.07 | 19048 | 90000 | | | | | | |
| 0.08 | 16656 | 90000 | FA | 127R77 | DR | 63M4 | 425 | 456 |
| 0.09 | 14722 | 90000 | FAF | 127R77 | DR | 63M4 | 465 | 456 |
| 0.10 | 12912 | 90000 | F | 127R77 | DR | 63M4 | 460 | 456 |
| 0.11 | 11656 | 90000 | FF | 127R77 | DR | 63M4 | 510 | 456 |
| | | | FA | 127R77 | DR | 63L4 | 425 | 456 |
| 0.13 | 10191 | 90000 | FAF | 127R77 | DR | 63L4 | 465 | 456 |
| 0.15 | 8831 | 90000 | F | 127R77 | DR | 63L4 | 465 | 456 |
| | | | FF | 127R77 | DR | 63L4 | 510 | 456 |
| 0.18 | 7643 | 90000 | FA | 127R77 | DRS | 71S4 | 430 | 456 |
| 0.21 | 6715 | 90000 | FAF | 127R77 | DRS | 71S4 | 465 | 456 |
| 0.23 | 5925 | 90000 | F | 127R77 | DRS | 71S4 | 465 | 456 |
| | | | FF | 127R77 | DRS | 71S4 | 510 | 456 |
| 0.26 | 5153 | 90000 | FA | 127R77 | DRS | 71M4 | 430 | 456 |
| 0.30 | 4533 | 90000 | FAF | 127R77 | DRS | 71M4 | 465 | 456 |
| 0.35 | 3926 | 90000 | F | 127R77 | DRS | 71M4 | 465 | 456 |
| | | | FF | 127R77 | DRS | 71M4 | 510 | 456 |
| | | | FA | 127R77 | DRN | 80M4 | 435 | 456 |
| 0.42 | 3454 | 90000 | FAF | 127R77 | DRN | 80M4 | 470 | 456 |
| 0.48 | 3031 | 90000 | F | 127R77 | DRN | 80M4 | 470 | 456 |
| | | | FF | 127R77 | DRN | 80M4 | 520 | 456 |
| | | | FA | 127R77 | DRN | 80M4 | 435 | 456 |
| 0.54 | 2672 | 90000 | FAF | 127R77 | DRN | 80M4 | 470 | 456 |
| | | | F | 127R77 | DRN | 80M4 | 470 | 456 |
| | | | FF | 127R77 | DRN | 80M4 | 510 | 456 |
| | | | FA | 127R77 | DRN | 90S4 | 440 | 456 |
| 0.62 | 2357 | 90000 | FAF | 127R77 | DRN | 90S4 | 475 | 456 |
| 0.71 | 2038 | 90000 | F | 127R77 | DRN | 90S4 | 475 | 456 |
| | | | FF | 127R77 | DRN | 90S4 | 520 | 456 |
| 0.82 | 1784 | 90000 | FA | 127R77 | DRN | 90L4 | 440 | 456 |
| 0.91 | 1606 | 90000 | FAF | 127R77 | DRN | 90L4 | 480 | 456 |
| 1.0 | 1390 | 90000 | F | 127R77 | DRN | 90L4 | 480 | 456 |
| | | | FF | 127R77 | DRN | 90L4 | 520 | 456 |
| 1.2 | 1220 | 90000 | FA | 127R77 | DRN | 100LS4 | 445 | 456 |
| 1.4 | 1077 | 90000 | FAF | 127R77 | DRN | 100LS4 | 485 | 456 |
| 1.6 | 930 | 90000 | F | 127R77 | DRN | 100LS4 | 480 | 456 |
| | | | FF | 127R77 | DRN | 100LS4 | 530 | 456 |
| | | | FA | 127R77 | DRN | 100L4 | 455 | 456 |
| 1.8 | 820 | 90000 | FAF | 127R77 | DRN | 100L4 | 490 | 456 |
| 2.0 | 727 | 90000 | F | 127R77 | DRN | 100L4 | 490 | 456 |
| | | | FF | 127R77 | DRN | 100L4 | 530 | 456 |

21933170/DE – 11/2015

## $M_{a\,max}$ = 12000 Nm

| $n_a$ rpm | i | $F_{Ra}$ [1] N | | | | | m kg | |
|---|---|---|---|---|---|---|---|---|
| **2.3** | 648 | 90000 | **FA** | **127R77** | **DRN** | **112M4** | 460 | 456 |
| **2.7** | 549 | 90000 | **FAF** | **127R77** | **DRN** | **112M4** | 500 | 456 |
| **3.0** | 495 | 90000 | **F** | **127R77** | **DRN** | **112M4** | 500 | 456 |
| | | | **FF** | **127R77** | **DRN** | **112M4** | 540 | 456 |
| | | | **FA** | **127R77** | **DRN** | **132S4** | 475 | 456 |
| **3.4** | 428 | 90000 | **FAF** | **127R77** | **DRN** | **132S4** | 510 | 456 |
| **3.9** | 376 | 90000 | **F** | **127R77** | **DRN** | **132S4** | 510 | 456 |
| | | | **FF** | **127R77** | **DRN** | **132S4** | 550 | 456 |
| | | | **FA** | **127R87** | **DRN** | **132S4** | 495 | 456 |
| **3.0** | 483 | 90000 | **FAF** | **127R87** | **DRN** | **132S4** | 530 | 456 |
| **3.5** | 418 | 90000 | **F** | **127R87** | **DRN** | **132S4** | 530 | 456 |
| **3.9** | 374 | 90000 | **FF** | **127R87** | **DRN** | **132S4** | 570 | 456 |
| | | | **FA** | **127R87** | **DRN** | **132M4** | 510 | 456 |
| **4.7** | 312 | 90000 | **FAF** | **127R87** | **DRN** | **132M4** | 550 | 456 |
| **5.0** | 293 | 90000 | **F** | **127R87** | **DRN** | **132M4** | 550 | 456 |
| | | | **FF** | **127R87** | **DRN** | **132M4** | 590 | 456 |
| | | | **FA** | **127R87** | **DRN** | **132L4** | 520 | 456 |
| **5.7** | 259 | 90000 | **FAF** | **127R87** | **DRN** | **132L4** | 560 | 456 |
| **6.6** | 223 | 90000 | **F** | **127R87** | **DRN** | **132L4** | 560 | 456 |
| | | | **FF** | **127R87** | **DRN** | **132L4** | 600 | 456 |
| | | | **FA** | **127R87** | **DRN** | **160M4** | 550 | 456 |
| **7.5** | 198 | 90000 | **FAF** | **127R87** | **DRN** | **160M4** | 590 | 456 |
| | | | **F** | **127R87** | **DRN** | **160M4** | 590 | 456 |
| | | | **FF** | **127R87** | **DRN** | **160M4** | 630 | 456 |

## $M_{a\,max}$ = 18000 Nm

| $n_a$ rpm | i | $F_{Ra}$ [1] N | | | | | m kg | |
|---|---|---|---|---|---|---|---|---|
| **0.04** | 31434 | 100300 | | | | | | |
| **0.05** | 26173 | 100300 | | | | | | |
| **0.06** | 23464 | 100300 | **FA** | **157R97** | **DRS** | **71M4** | 770 | 456 |
| **0.07** | 20212 | 100300 | **FAF** | **157R97** | **DRS** | **71M4** | 830 | 456 |
| **0.08** | 17984 | 100300 | **F** | **157R97** | **DRS** | **71M4** | 790 | 456 |
| **0.08** | 16358 | 100300 | **FF** | **157R97** | **DRS** | **71M4** | 900 | 456 |
| **0.10** | 13751 | 100300 | | | | | | |
| **0.11** | 12235 | 100300 | | | | | | |
| | | | **FA** | **157R97** | **DRN** | **80M4** | 770 | 456 |
| **0.14** | 10033 | 100300 | **FAF** | **157R97** | **DRN** | **80M4** | 830 | 456 |
| **0.16** | 9021 | 100300 | **F** | **157R97** | **DRN** | **80M4** | 790 | 456 |
| **0.18** | 8026 | 100300 | **FF** | **157R97** | **DRN** | **80M4** | 900 | 456 |
| | | | **FA** | **157R97** | **DRS** | **71M4** | 770 | 456 |
| **0.19** | 7075 | 100300 | **FAF** | **157R97** | **DRS** | **71M4** | 830 | 456 |
| **0.22** | 6295 | 100300 | **F** | **157R97** | **DRS** | **71M4** | 790 | 456 |
| | | | **FF** | **157R97** | **DRS** | **71M4** | 900 | 456 |
| | | | **FA** | **157R97** | **DRN** | **80M4** | 770 | 456 |
| **0.27** | 5404 | 100300 | **FAF** | **157R97** | **DRN** | **80M4** | 830 | 456 |
| **0.30** | 4831 | 100300 | **F** | **157R97** | **DRN** | **80M4** | 790 | 456 |
| | | | **FF** | **157R97** | **DRN** | **80M4** | 900 | 456 |
| | | | **FA** | **157R97** | **DRN** | **90S4** | 780 | 456 |
| **0.35** | 4130 | 100300 | **FAF** | **157R97** | **DRN** | **90S4** | 840 | 456 |
| | | | **F** | **157R97** | **DRN** | **90S4** | 800 | 456 |
| | | | **FF** | **157R97** | **DRN** | **90S4** | 900 | 456 |
| | | | **FA** | **157R97** | **DRN** | **100LS4** | 780 | 456 |
| **0.40** | 3607 | 100300 | **FAF** | **157R97** | **DRN** | **100LS4** | 840 | 456 |
| **0.45** | 3210 | 100300 | **F** | **157R97** | **DRN** | **100LS4** | 810 | 456 |
| | | | **FF** | **157R97** | **DRN** | **100LS4** | 910 | 456 |
| | | | **FA** | **157R97** | **DRN** | **90L4** | 780 | 456 |
| **0.53** | 2780 | 100300 | **FAF** | **157R97** | **DRN** | **90L4** | 840 | 456 |
| | | | **F** | **157R97** | **DRN** | **90L4** | 800 | 456 |
| | | | **FF** | **157R97** | **DRN** | **90L4** | 910 | 456 |

21933170/DE – 11/2015

## $M_{a\ max}$ = 18000 Nm

| $n_a$ rpm | i | $F_{Ra}$ [1] N | | | | | m kg | |
|---|---|---|---|---|---|---|---|---|
| **1.0** | 1441 | 100300 | **FA** | **157R97** | **DRN** | **100LS4** | 780 | 456 |
| | | | **FAF** | **157R97** | **DRN** | **100LS4** | 840 | 456 |
| | | | **F** | **157R97** | **DRN** | **100LS4** | 810 | 456 |
| | | | **FF** | **157R97** | **DRN** | **100LS4** | 910 | 456 |
| **0.60** | 2427 | 100300 | **FA** | **157R97** | **DRN** | **90L4** | 780 | 456 |
| **0.67** | 2185 | 100300 | **FAF** | **157R97** | **DRN** | **90L4** | 840 | 456 |
| | | | **F** | **157R97** | **DRN** | **90L4** | 800 | 456 |
| | | | **FF** | **157R97** | **DRN** | **90L4** | 900 | 456 |
| **0.75** | 1944 | 100300 | **FA** | **157R97** | **DRN** | **100LS4** | 780 | 456 |
| **0.87** | 1674 | 100300 | **FAF** | **157R97** | **DRN** | **100LS4** | 840 | 456 |
| | | | **F** | **157R97** | **DRN** | **100LS4** | 800 | 456 |
| | | | **FF** | **157R97** | **DRN** | **100LS4** | 910 | 456 |
| **1.1** | 1308 | 100300 | **FA** | **157R97** | **DRN** | **100L4** | 790 | 456 |
| **1.2** | 1169 | 100300 | **FAF** | **157R97** | **DRN** | **100L4** | 850 | 456 |
| | | | **F** | **157R97** | **DRN** | **100L4** | 810 | 456 |
| | | | **FF** | **157R97** | **DRN** | **100L4** | 920 | 456 |
| **1.5** | 953 | 100300 | **FA** | **157R97** | **DRN** | **112M4** | 800 | 456 |
| **1.7** | 845 | 100300 | **FAF** | **157R97** | **DRN** | **112M4** | 860 | 456 |
| **1.9** | 764 | 100300 | **F** | **157R97** | **DRN** | **112M4** | 820 | 456 |
| | | | **FF** | **157R97** | **DRN** | **112M4** | 920 | 456 |
| **2.2** | 680 | 100300 | **FA** | **157R97** | **DRN** | **132S4** | 810 | 456 |
| **2.5** | 576 | 100300 | **FAF** | **157R97** | **DRN** | **132S4** | 870 | 456 |
| | | | **F** | **157R97** | **DRN** | **132S4** | 830 | 456 |
| | | | **FF** | **157R97** | **DRN** | **132S4** | 940 | 456 |
| **2.9** | 503 | 100300 | **FA** | **157R97** | **DRN** | **132M4** | 830 | 456 |
| **3.3** | 446 | 100300 | **FAF** | **157R97** | **DRN** | **132M4** | 890 | 456 |
| | | | **F** | **157R97** | **DRN** | **132M4** | 850 | 456 |
| | | | **FF** | **157R97** | **DRN** | **132M4** | 950 | 456 |
| **4.2** | 353 | 100300 | **FA** | **157R97** | **DRN** | **132L4** | 840 | 456 |
| | | | **FAF** | **157R97** | **DRN** | **132L4** | 890 | 456 |
| | | | **F** | **157R97** | **DRN** | **132L4** | 860 | 456 |
| | | | **FF** | **157R97** | **DRN** | **132L4** | 960 | 456 |
| **4.9** | 302 | 100300 | **FA** | **157R97** | **DRN** | **160M4** | 870 | 456 |
| **5.4** | 273 | 100300 | **FAF** | **157R97** | **DRN** | **160M4** | 930 | 456 |
| | | | **F** | **157R97** | **DRN** | **160M4** | 890 | 456 |
| | | | **FF** | **157R97** | **DRN** | **160M4** | 1000 | 456 |
| **6.4** | 232 | 100300 | **FA** | **157R97** | **DRN** | **160L4** | 880 | 456 |
| **7.3** | 202 | 100300 | **FAF** | **157R97** | **DRN** | **160L4** | 940 | 456 |
| | | | **F** | **157R97** | **DRN** | **160L4** | 900 | 456 |
| | | | **FF** | **157R97** | **DRN** | **160L4** | 1010 | 456 |
| **7.5** | 197 | 100300 | **FA** | **157R97** | **DRN** | **180M4** | 910 | 456 |
| | | | **FAF** | **157R97** | **DRN** | **180M4** | 960 | 456 |
| | | | **F** | **157R97** | **DRN** | **180M4** | 930 | 456 |
| | | | **FF** | **157R97** | **DRN** | **180M4** | 1030 | 456 |

21933170/DE – 11/2015

## 9.5 Maßblätter F..DRN.. in mm

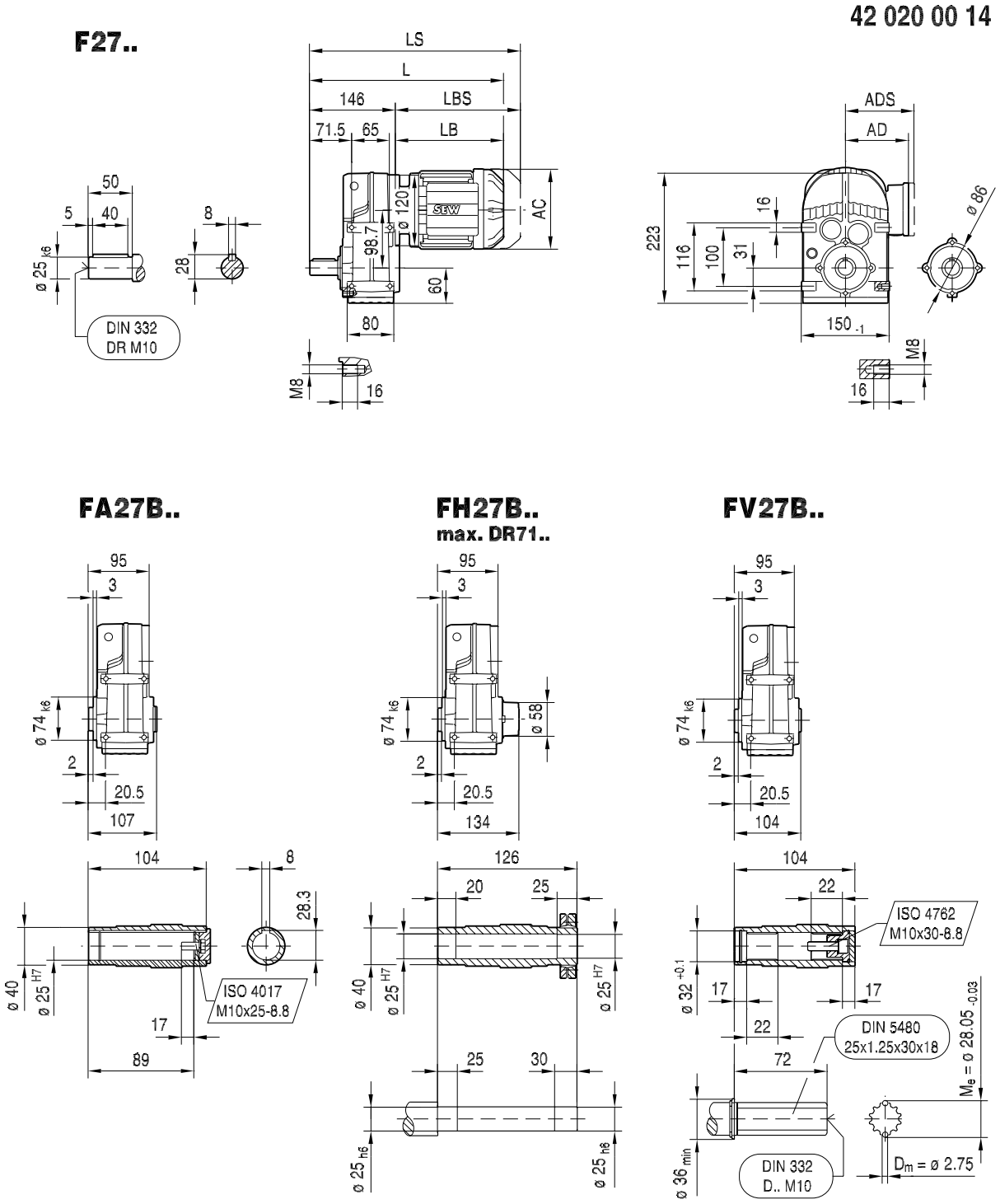


| (→ 155) | DR63.. | DR71S | DR71M | DRN80M | DRN90S | DRN90L | | |
|---|---|---|---|---|---|---|---|---|
| **AC** | 132 | 139 | 139 | 156 | 179 | 179 | | |
| **AD** | 105 | 119 | 119 | 128 | 140 | 140 | | |
| **ADS** | 105 | 129 | 129 | 139 | 150 | 150 | | |
| **L** | 337 | 348 | 373 | 428 | 429 | 461 | | |
| **LS** | 392 | 416 | 441 | 509 | 523 | 555 | | |
| **LB** | 191 | 202 | 227 | 282 | 283 | 315 | | |
| **LBS** | 246 | 270 | 295 | 363 | 377 | 409 | | |

21933170/DE – 11/2015

42 021 00 14

## FF27..

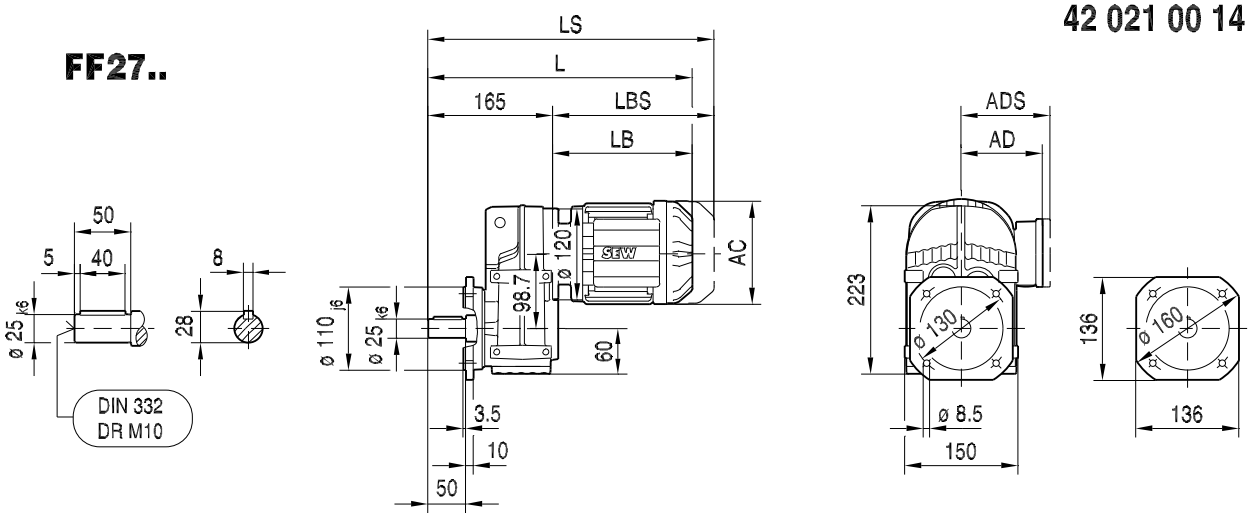


## FAF27..

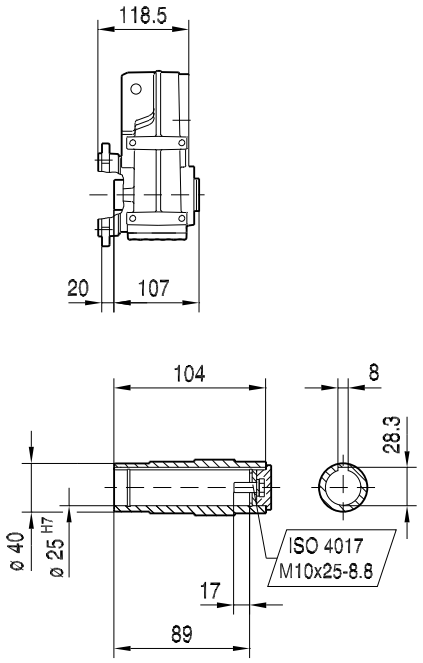


## FHF27..

**max. DR71..**

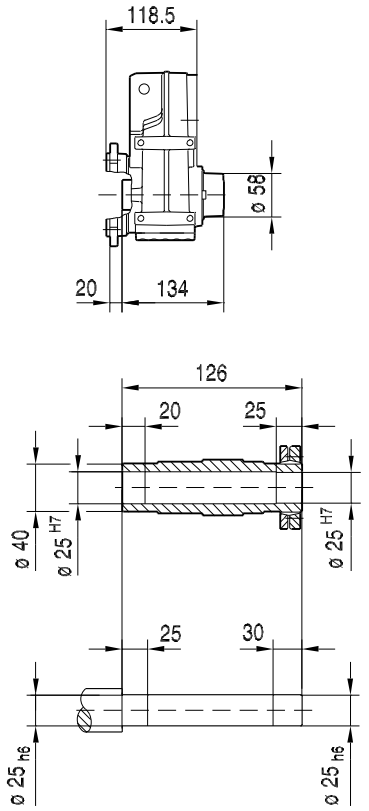


## FVF27..

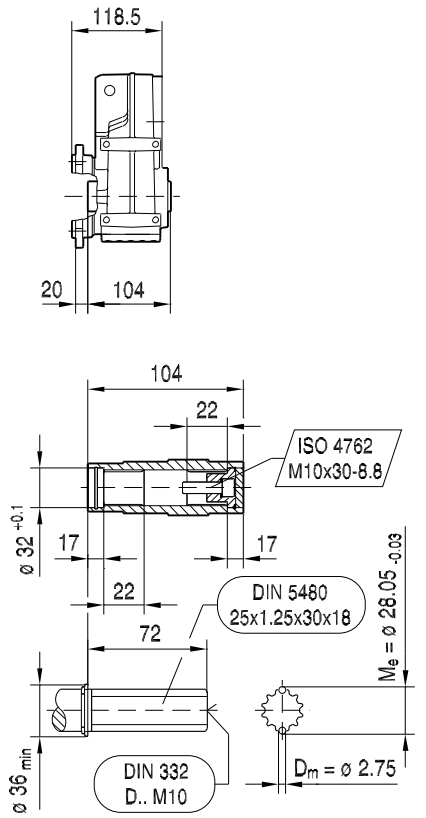


| (→ 🗎 155) | DR63.. | DR71S | DR71M | DRN80M | DRN90S | DRN90L | | |
|---|---|---|---|---|---|---|---|---|
| **AC** | 132 | 139 | 139 | 156 | 179 | 179 | | |
| **AD** | 105 | 119 | 119 | 128 | 140 | 140 | | |
| **ADS** | 105 | 129 | 129 | 139 | 150 | 150 | | |
| **L** | 356 | 367 | 392 | 447 | 448 | 480 | | |
| **LS** | 411 | 435 | 460 | 528 | 542 | 574 | | |
| **LB** | 191 | 202 | 227 | 282 | 283 | 315 | | |
| **LBS** | 246 | 270 | 295 | 363 | 377 | 409 | | |

21933170/DE – 11/2015

## FA27..

42 022 00 14

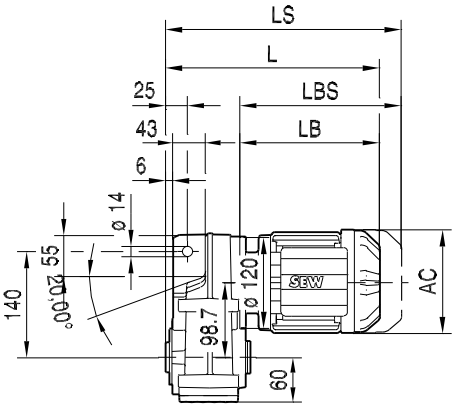


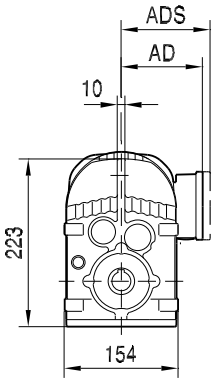


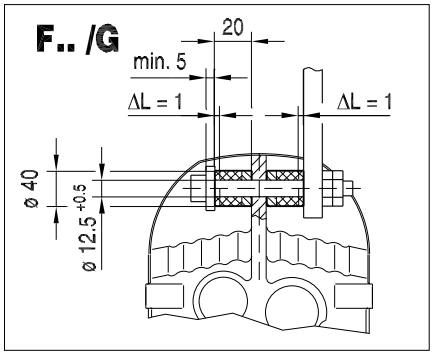


## FA27..

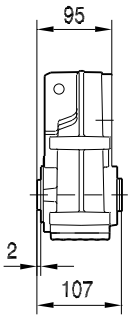


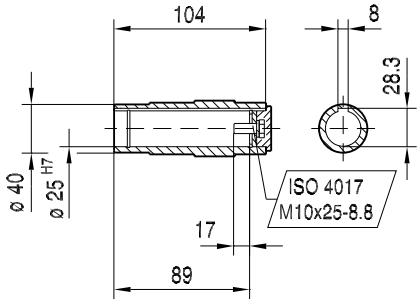


## FH27..

**max. DR71..**

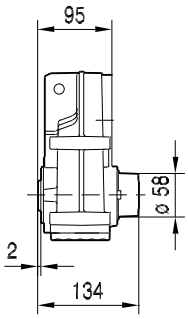


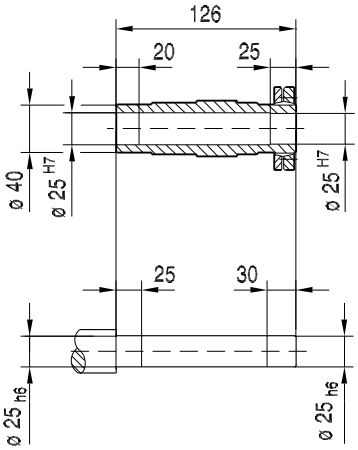


## FV27..

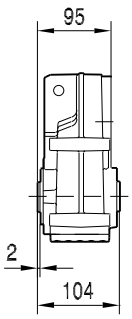


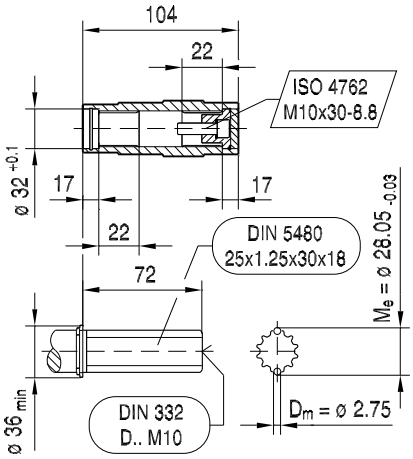


| (→ 🗎 155) | DR63.. | DR71S | DR71M | DRN80M | DRN90S | DRN90L | | |
|---|---|---|---|---|---|---|---|---|
| **AC** | 132 | 139 | 139 | 156 | 179 | 179 | | |
| **AD** | 105 | 119 | 119 | 128 | 140 | 140 | | |
| **ADS** | 105 | 129 | 129 | 139 | 150 | 150 | | |
| **L** | 286 | 297 | 322 | 377 | 378 | 410 | | |
| **LS** | 341 | 365 | 390 | 458 | 472 | 504 | | |
| **LB** | 191 | 202 | 227 | 282 | 283 | 315 | | |
| **LBS** | 246 | 270 | 295 | 363 | 377 | 409 | | |

21933170/DE – 11/2015

## FAZ27..

42 023 00 14

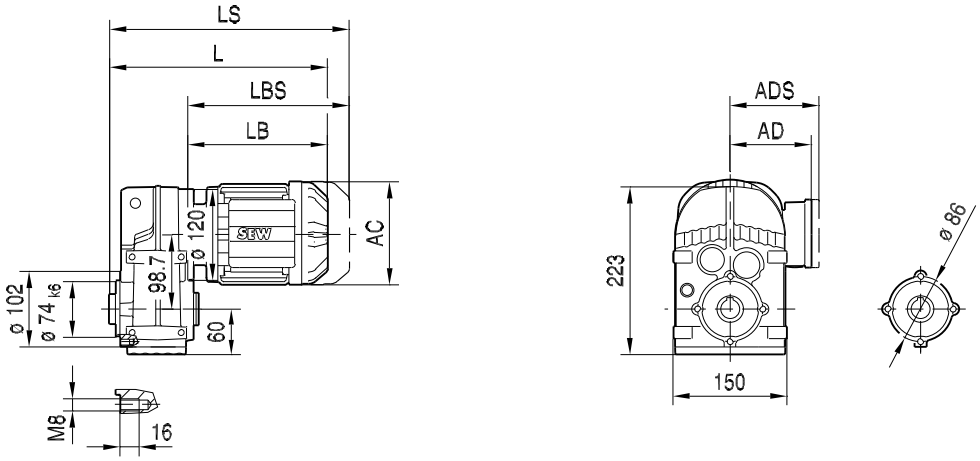


## FAZ27..

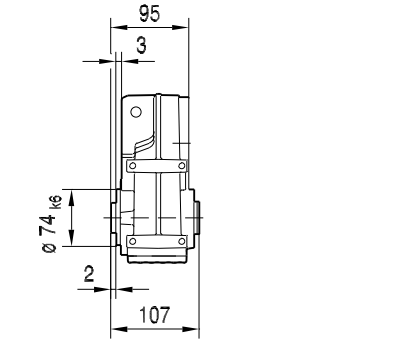


## FHZ27..

max. DR71..

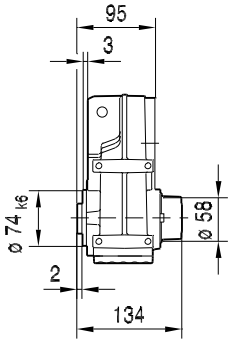


## FVZ27..

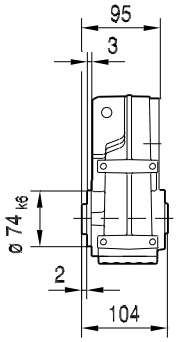


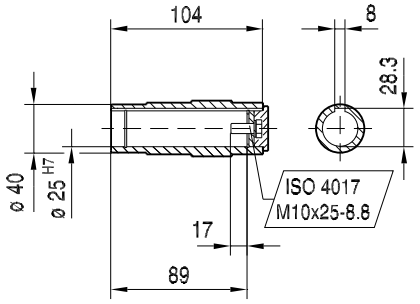


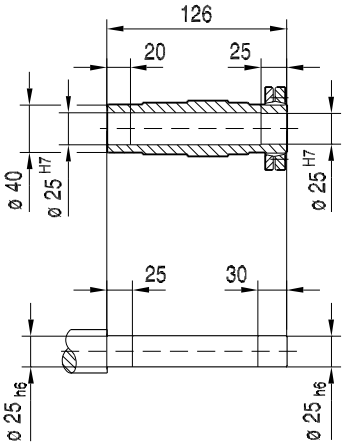


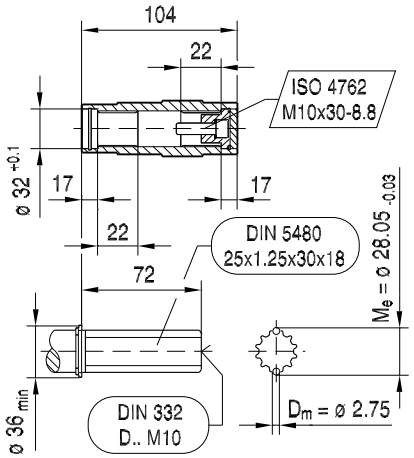


| (→ 🗎 155) | DR63.. | DR71S | DR71M | DRN80M | DRN90S | DRN90L | | |
|---|---|---|---|---|---|---|---|---|
| **AC** | 132 | 139 | 139 | 156 | 179 | 179 | | |
| **AD** | 105 | 119 | 119 | 128 | 140 | 140 | | |
| **ADS** | 105 | 129 | 129 | 139 | 150 | 150 | | |
| **L** | 286 | 297 | 322 | 377 | 378 | 410 | | |
| **LS** | 341 | 365 | 390 | 458 | 472 | 504 | | |
| **LB** | 191 | 202 | 227 | 282 | 283 | 315 | | |
| **LBS** | 246 | 270 | 295 | 363 | 377 | 409 | | |

21933170/DE – 11/2015

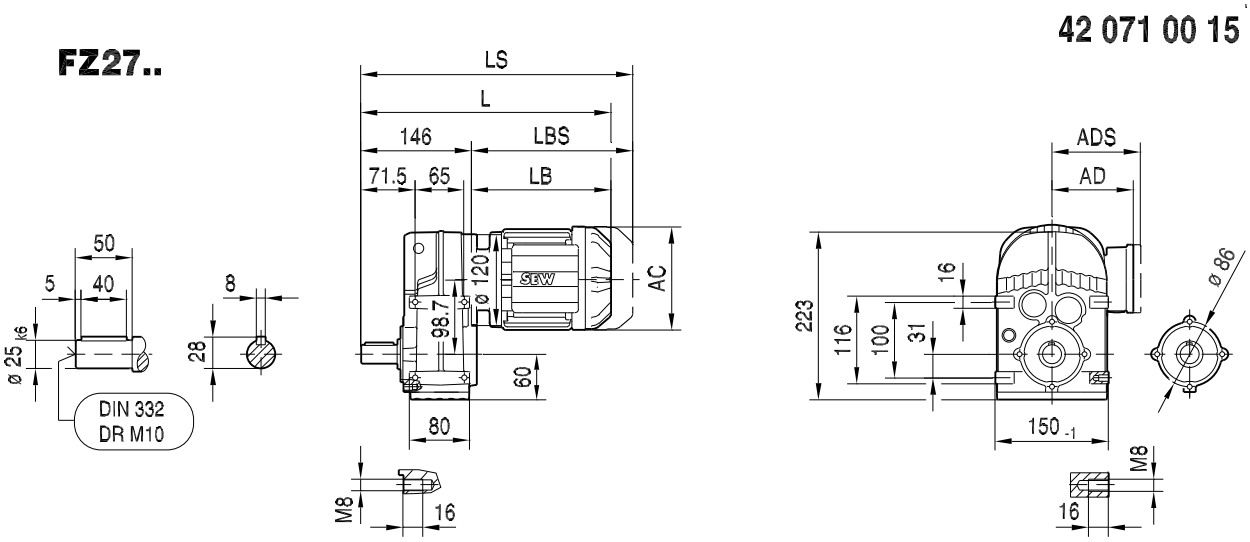


| (→ 🗎 155) | DR63.. | DR71S | DR71M | DRN80M | DRN90S | DRN90L | | |
|---|---|---|---|---|---|---|---|---|
| **AC** | 132 | 139 | 139 | 156 | 179 | 179 | | |
| **AD** | 105 | 119 | 119 | 128 | 140 | 140 | | |
| **ADS** | 105 | 129 | 129 | 139 | 150 | 150 | | |
| **L** | 207 | 218 | 243 | 298 | 299 | 331 | | |
| **LS** | 262 | 286 | 311 | 379 | 393 | 425 | | |
| **LB** | 191 | 202 | 227 | 282 | 283 | 315 | | |
| **LBS** | 246 | 270 | 295 | 363 | 377 | 409 | | |

21933170/DE – 11/2015

## F37..

42 024 00 14

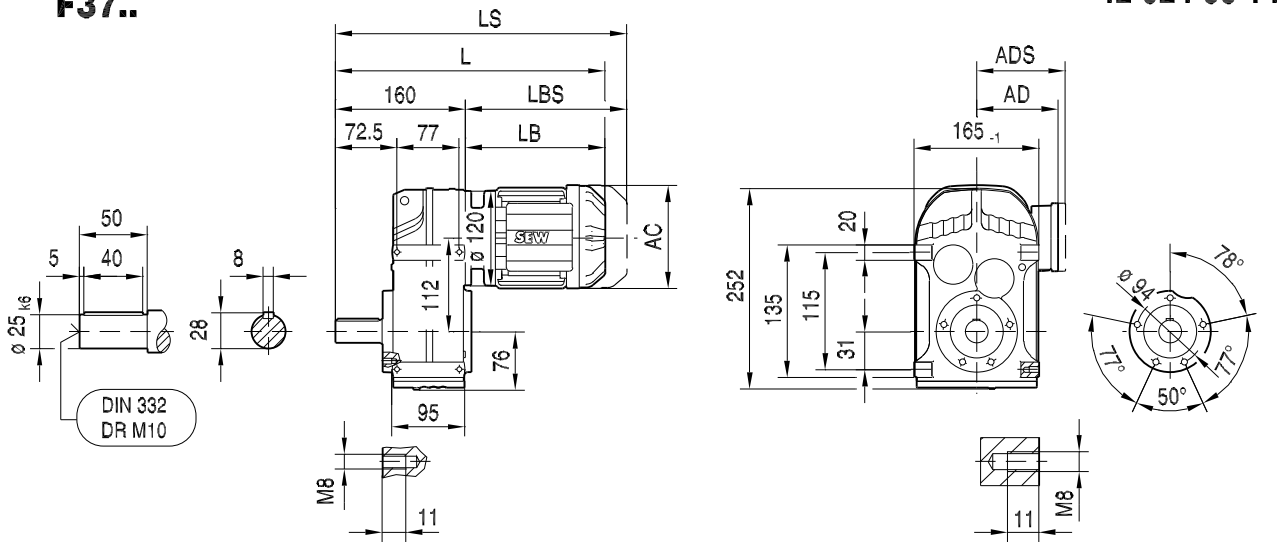


## FA37B..

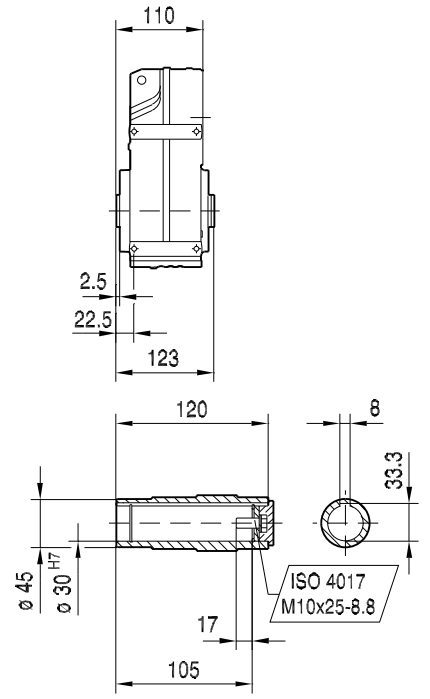


## FH37B..

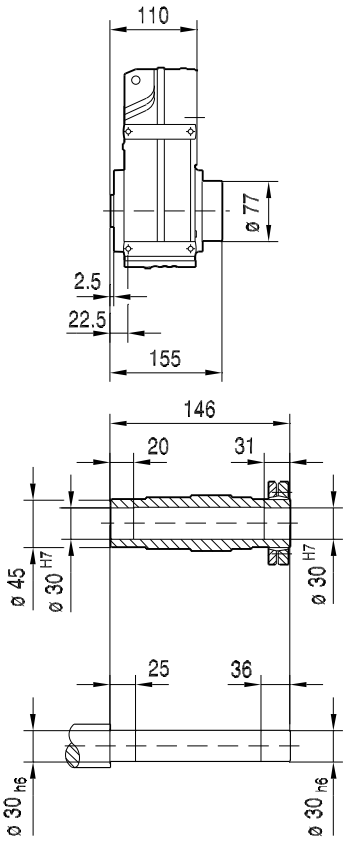


## FV37B..

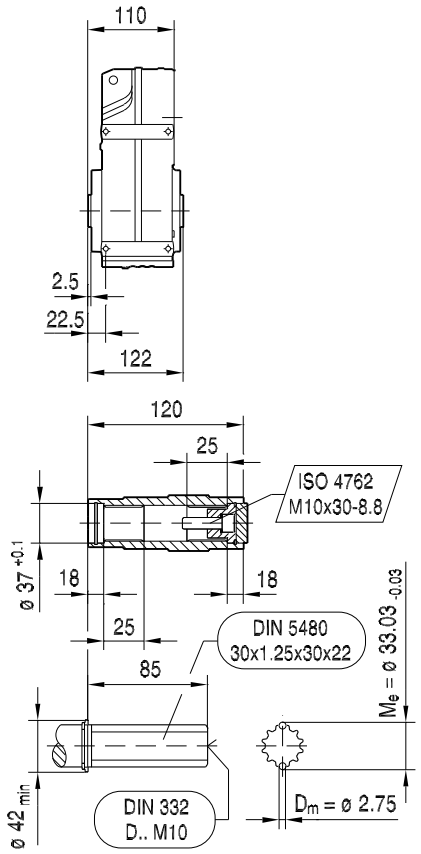


| (→ 🗎 155) | DR63.. | DR71S | DR71M | DRN80M | DRN90S | DRN90L | DRN100LS | DRN100L |
|---|---|---|---|---|---|---|---|---|
| **AC** | 132 | 139 | 139 | 156 | 179 | 179 | 197 | 197 |
| **AD** | 105 | 119 | 119 | 128 | 140 | 140 | 157 | 157 |
| **ADS** | 105 | 129 | 129 | 139 | 150 | 150 | 158 | 158 |
| **L** | 351 | 362 | 387 | 442 | 443 | 475 | 474 | 524 |
| **LS** | 406 | 430 | 455 | 523 | 537 | 569 | 568 | 618 |
| **LB** | 191 | 202 | 227 | 282 | 283 | 315 | 314 | 364 |
| **LBS** | 246 | 270 | 295 | 363 | 377 | 409 | 408 | 458 |

21933170/DE – 11/2015

## FF37..

42 025 00 14

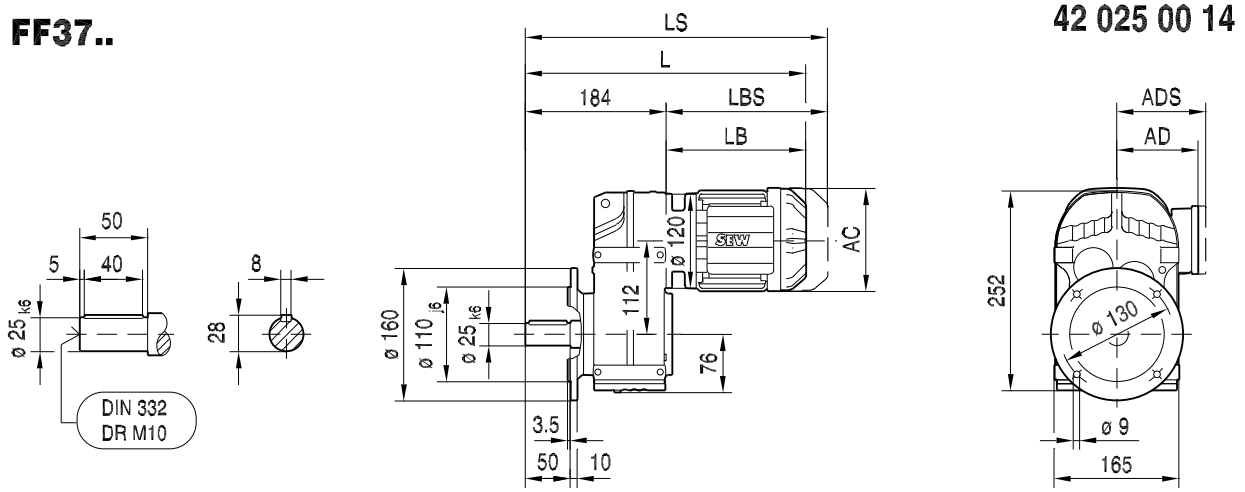


## FAF37..

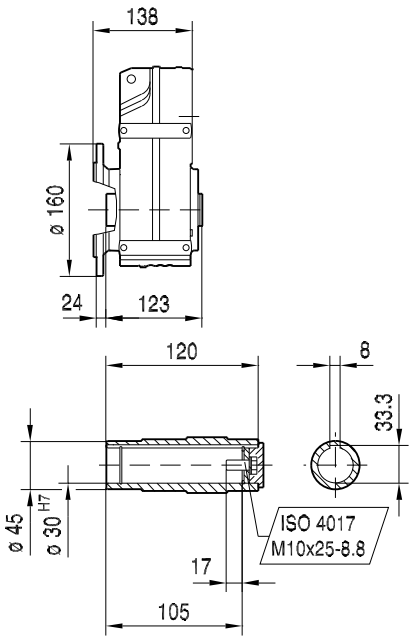


## FHF37..

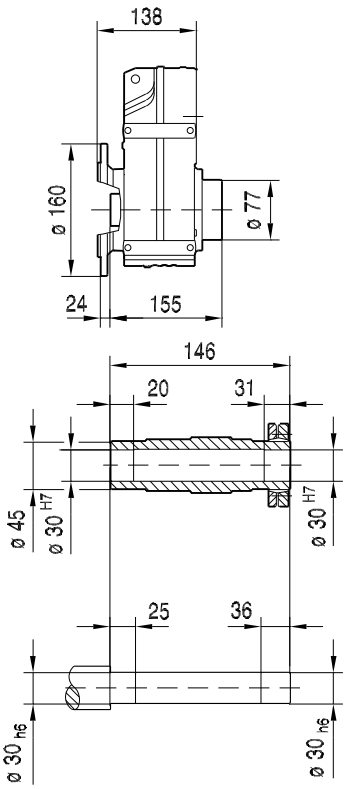


## FVF37..

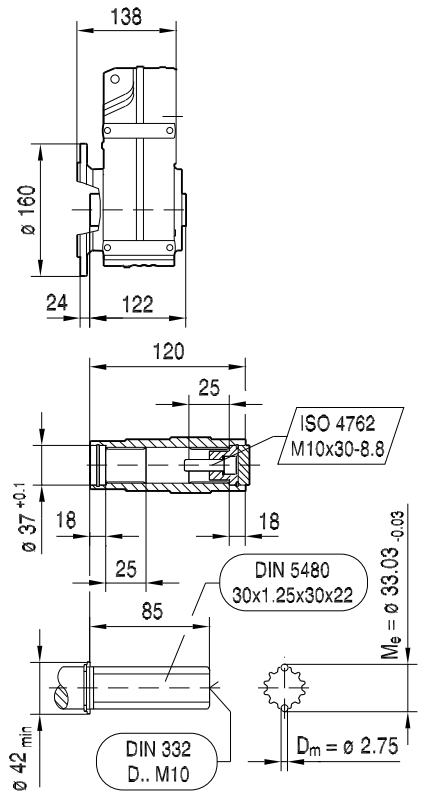


| (→ 🗎 155) | DR63.. | DR71S | DR71M | DRN80M | DRN90S | DRN90L | DRN100LS | DRN100L |
|---|---|---|---|---|---|---|---|---|
| **AC** | 132 | 139 | 139 | 156 | 179 | 179 | 197 | 197 |
| **AD** | 105 | 119 | 119 | 128 | 140 | 140 | 157 | 157 |
| **ADS** | 105 | 129 | 129 | 139 | 150 | 150 | 158 | 158 |
| **L** | 375 | 386 | 411 | 466 | 467 | 499 | 498 | 548 |
| **LS** | 430 | 454 | 479 | 547 | 561 | 593 | 592 | 642 |
| **LB** | 191 | 202 | 227 | 282 | 283 | 315 | 314 | 364 |
| **LBS** | 246 | 270 | 295 | 363 | 377 | 409 | 408 | 458 |

21933170/DE – 11/2015

## FA37..

42 026 00 14

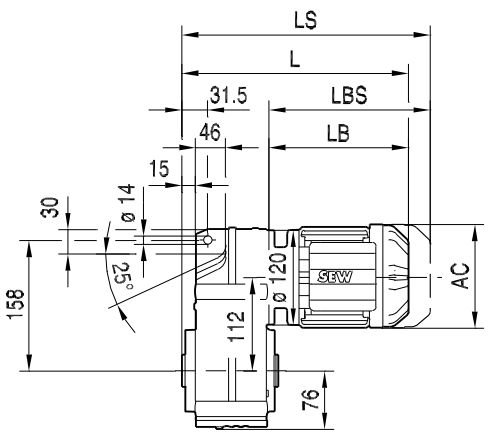


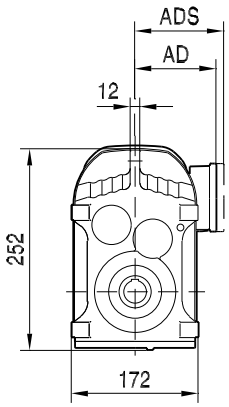


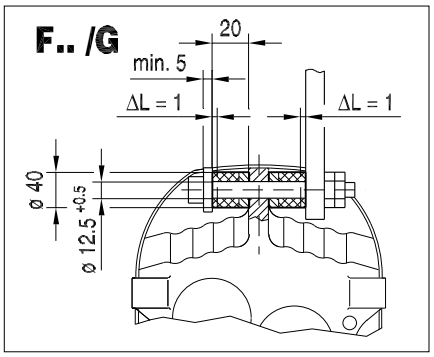


## FA37..

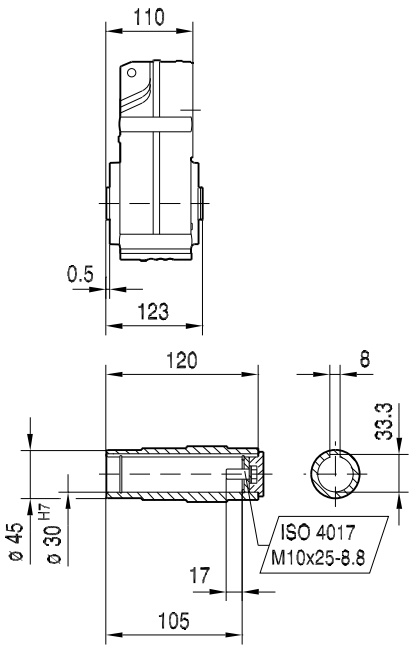


## FH37..

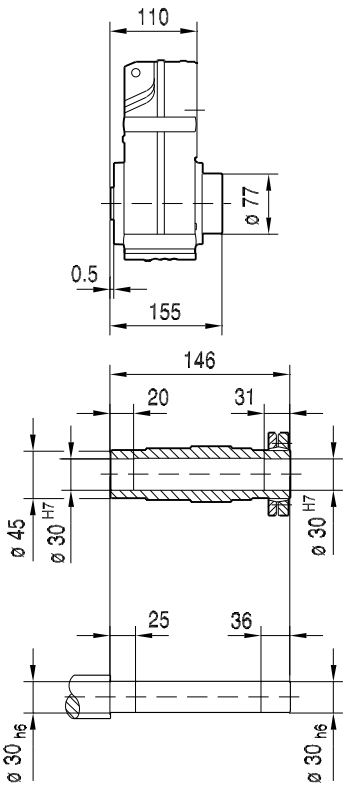


## FV37..

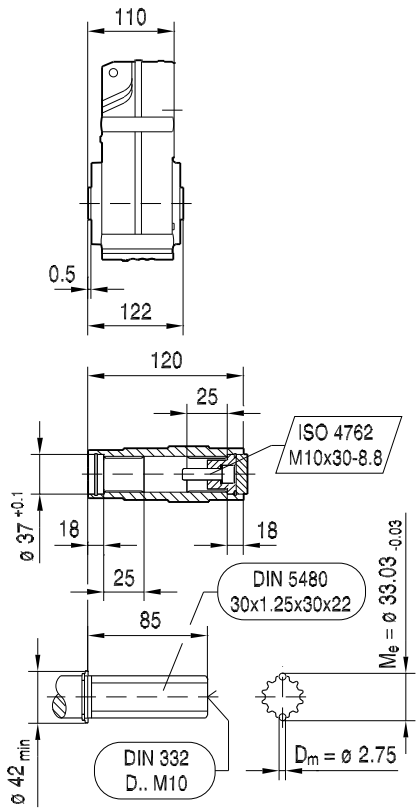


| (→ 🗎 155) | DR63.. | DR71S | DR71M | DRN80M | DRN90S | DRN90L | DRN100LS | DRN100L |
|---|---|---|---|---|---|---|---|---|
| **AC** | 132 | 139 | 139 | 156 | 179 | 179 | 197 | 197 |
| **AD** | 105 | 119 | 119 | 128 | 140 | 140 | 157 | 157 |
| **ADS** | 105 | 129 | 129 | 139 | 150 | 150 | 158 | 158 |
| **L** | 301 | 312 | 337 | 392 | 393 | 425 | 424 | 474 |
| **LS** | 356 | 380 | 405 | 473 | 487 | 519 | 518 | 568 |
| **LB** | 191 | 202 | 227 | 282 | 283 | 315 | 314 | 364 |
| **LBS** | 246 | 270 | 295 | 363 | 377 | 409 | 408 | 458 |

21933170/DE – 11/2015

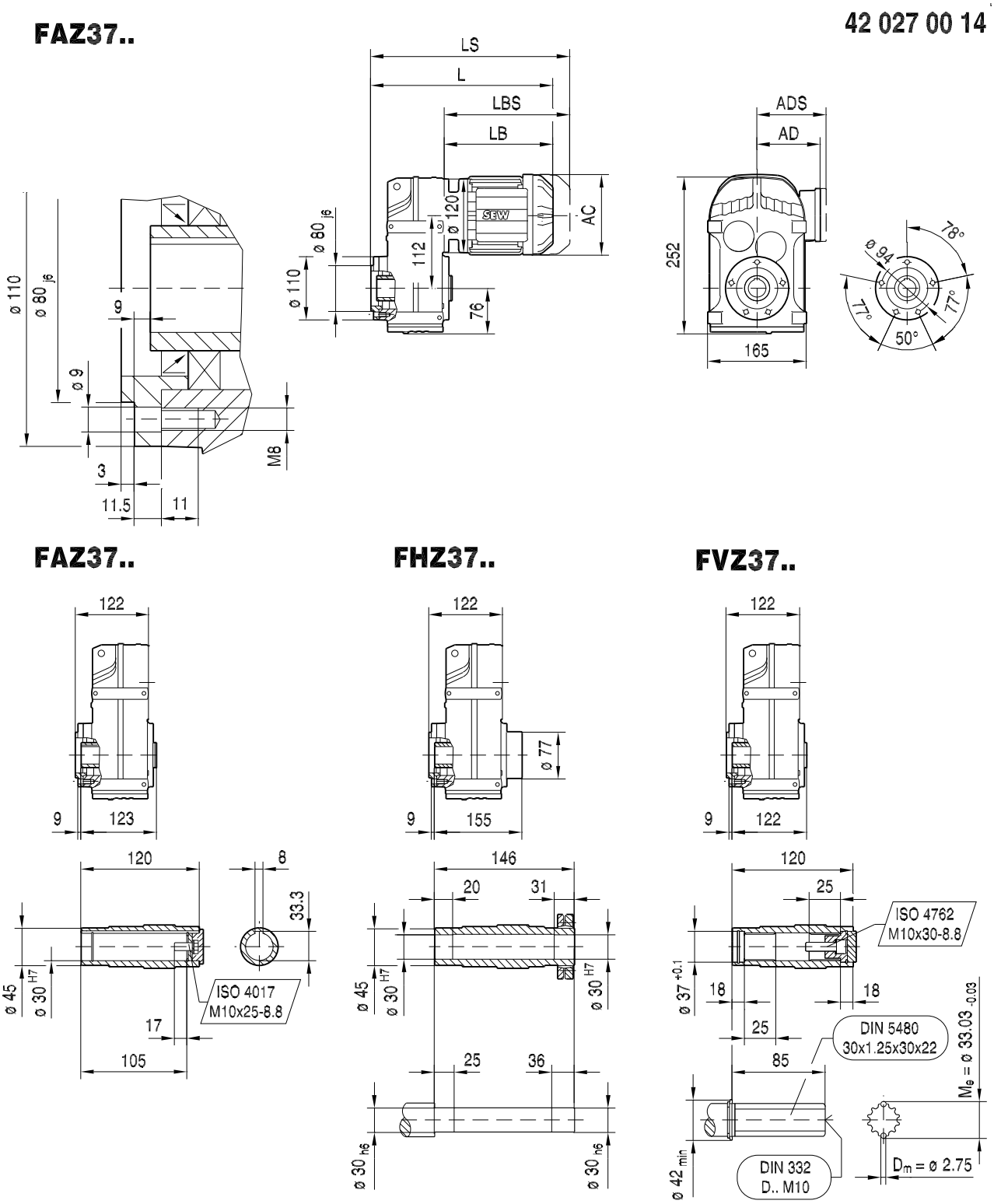


| (→ 🗎 155) | DR63.. | DR71S | DR71M | DRN80M | DRN90S | DRN90L | DRN100LS | DRN100L |
|---|---|---|---|---|---|---|---|---|
| **AC** | 132 | 139 | 139 | 156 | 179 | 179 | 197 | 197 |
| **AD** | 105 | 119 | 119 | 128 | 140 | 140 | 157 | 157 |
| **ADS** | 105 | 129 | 129 | 139 | 150 | 150 | 158 | 158 |
| **L** | 313 | 324 | 349 | 404 | 405 | 437 | 436 | 486 |
| **LS** | 368 | 392 | 417 | 485 | 499 | 531 | 530 | 580 |
| **LB** | 191 | 202 | 227 | 282 | 283 | 315 | 314 | 364 |
| **LBS** | 246 | 270 | 295 | 363 | 377 | 409 | 408 | 458 |

21933170/DE – 11/2015

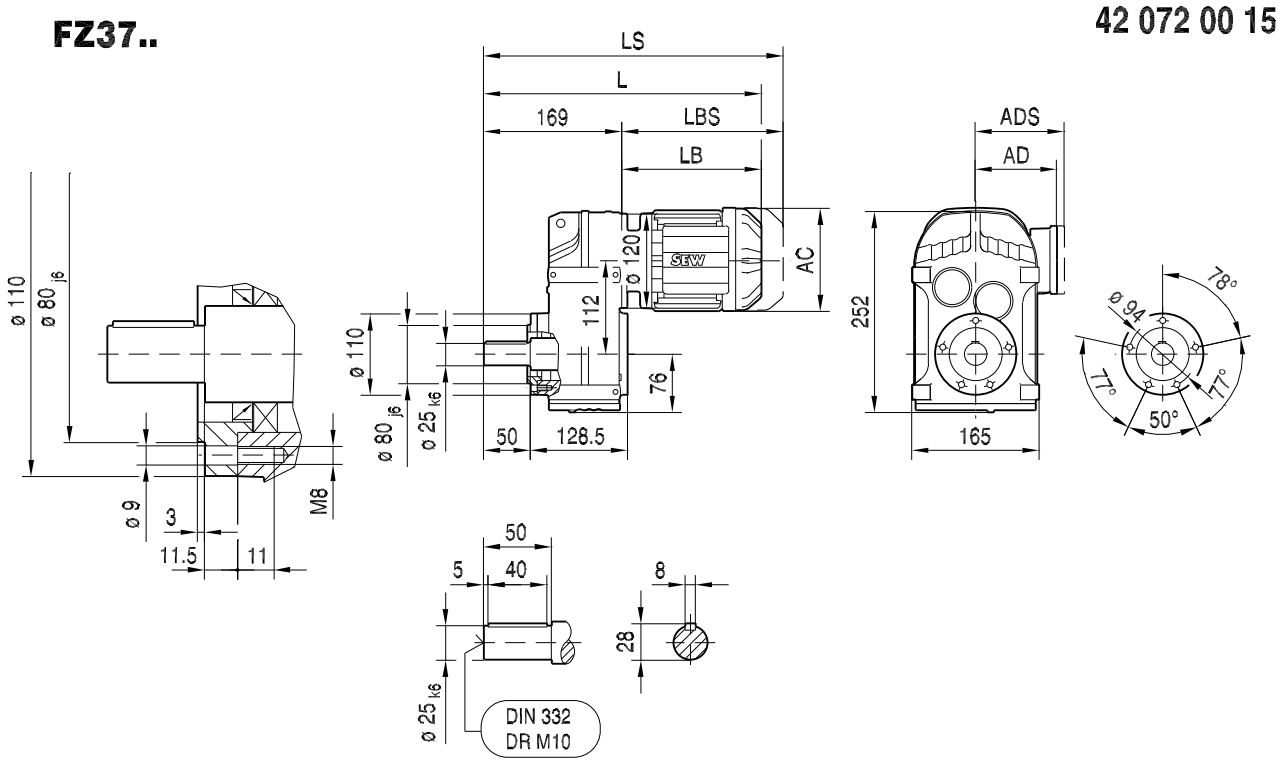


| (→ 🗎 155) | DR63.. | DR71S | DR71M | DRN80M | DRN90S | DRN90L | DRN100LS | DRN100L |
|---|---|---|---|---|---|---|---|---|
| **AC** | 132 | 139 | 139 | 156 | 179 | 179 | 197 | 197 |
| **AD** | 105 | 119 | 119 | 128 | 140 | 140 | 157 | 157 |
| **ADS** | 105 | 129 | 129 | 139 | 150 | 150 | 158 | 158 |
| **L** | 360 | 371 | 396 | 451 | 452 | 484 | 483 | 533 |
| **LS** | 415 | 439 | 464 | 532 | 546 | 578 | 577 | 627 |
| **LB** | 191 | 202 | 227 | 282 | 283 | 315 | 314 | 364 |
| **LBS** | 246 | 270 | 295 | 363 | 377 | 409 | 408 | 458 |

21933170/DE – 11/2015

**FT37..**

**42 028 00 14**

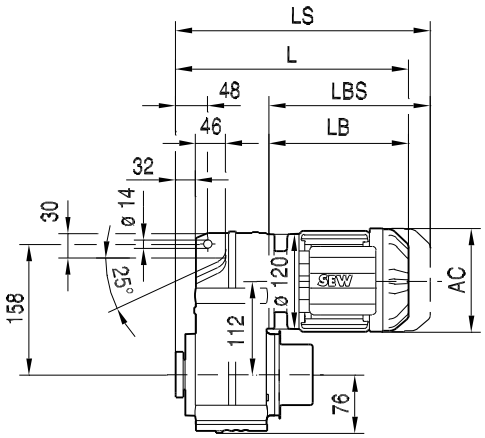


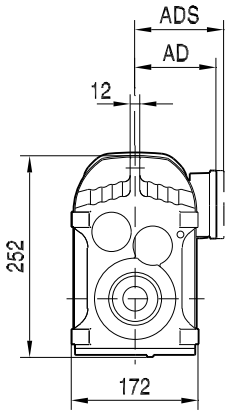


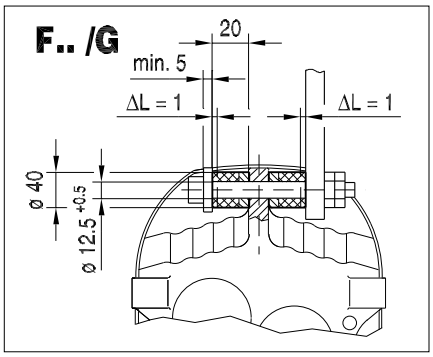


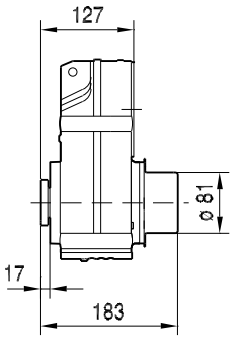


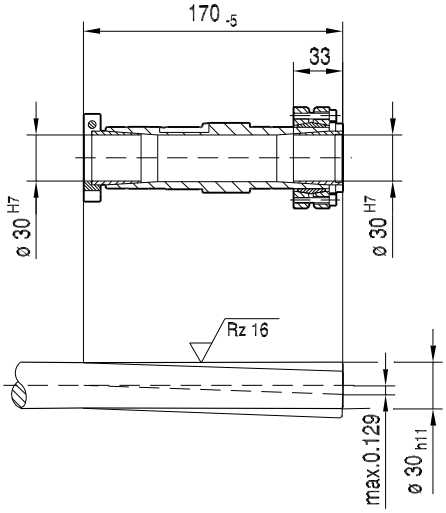


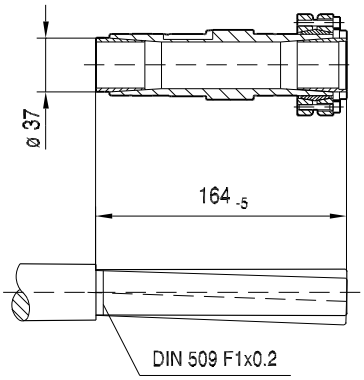


| (→ 🗎 155) | DR63.. | DR71S | DR71M | | | | | |
|---|---|---|---|---|---|---|---|---|
| **AC** | 132 | 139 | 139 | | | | | |
| **AD** | 105 | 119 | 119 | | | | | |
| **ADS** | 105 | 129 | 129 | | | | | |
| **L** | 318 | 329 | 354 | | | | | |
| **LS** | 373 | 397 | 422 | | | | | |
| **LB** | 191 | 202 | 227 | | | | | |
| **LBS** | 246 | 270 | 295 | | | | | |

21933170/DE – 11/2015

## F47..

42 029 00 14

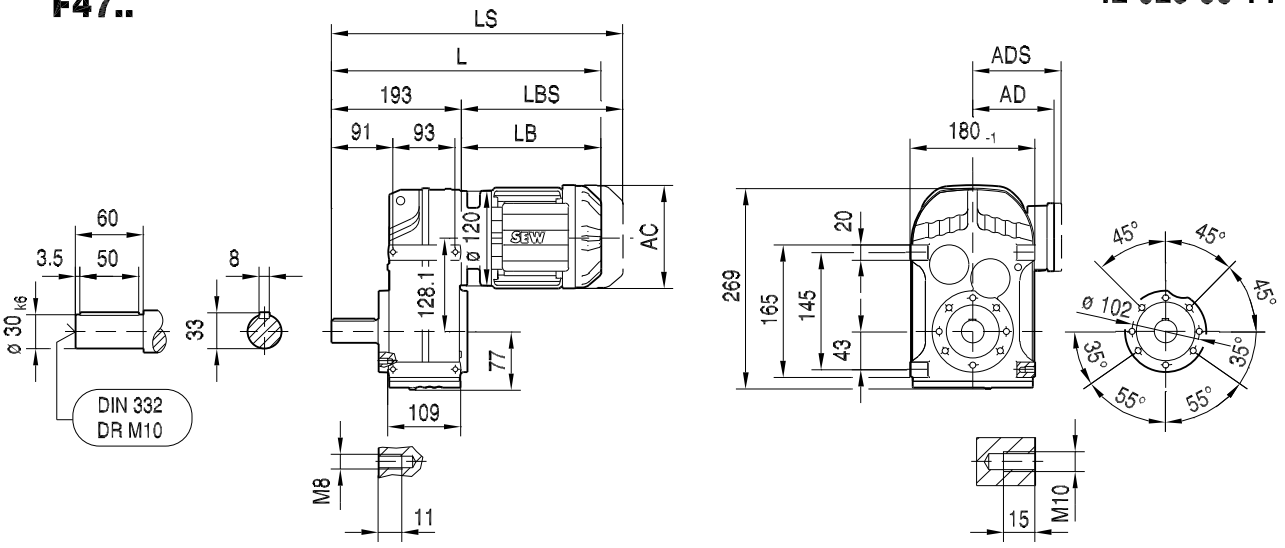


## FA47B..

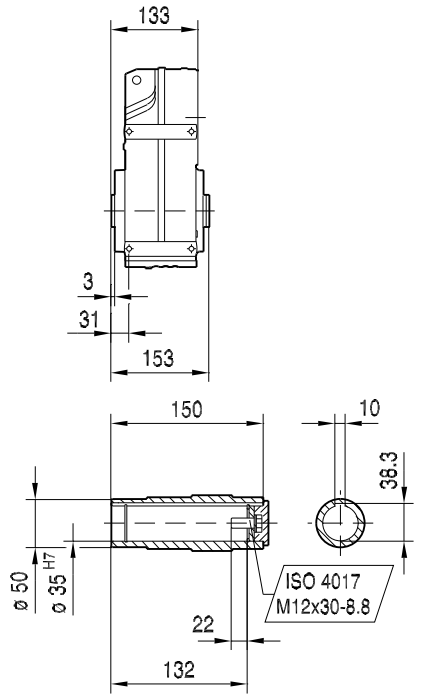


## FH47B..

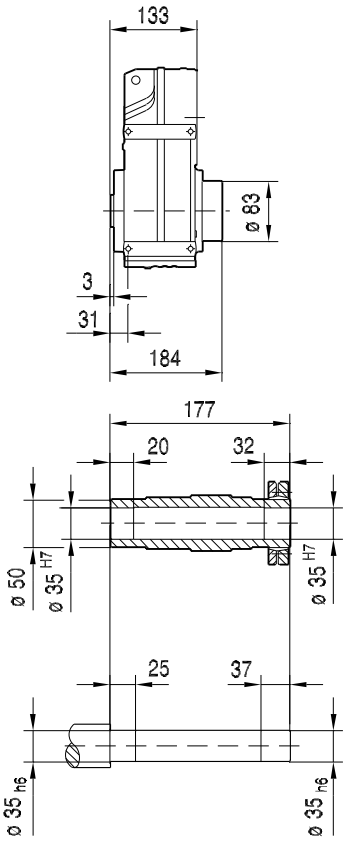


## FV47B..

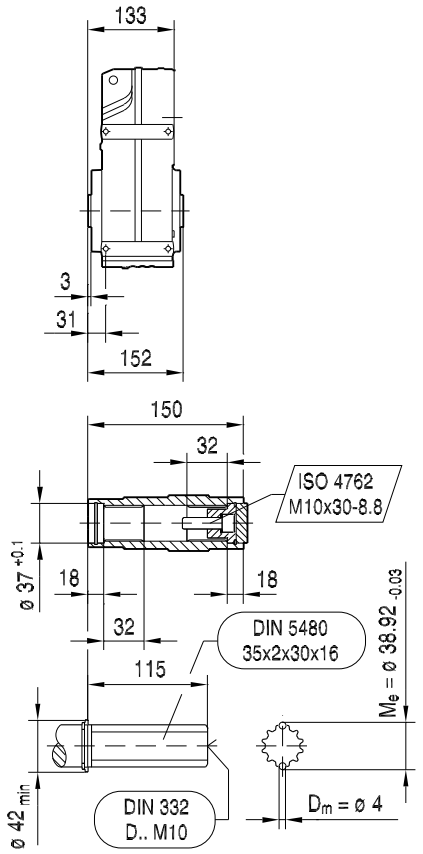


| (→ 🗎 155) | DR63.. | DR71S | DR71M | DRN80M | DRN90S | DRN90L | DRN100LS | DRN100L |
|---|---|---|---|---|---|---|---|---|
| **AC** | 132 | 139 | 139 | 156 | 179 | 179 | 197 | 197 |
| **AD** | 105 | 119 | 119 | 128 | 140 | 140 | 157 | 157 |
| **ADS** | 105 | 129 | 129 | 139 | 150 | 150 | 158 | 158 |
| **L** | 384 | 395 | 420 | 475 | 476 | 508 | 507 | 557 |
| **LS** | 439 | 463 | 488 | 556 | 570 | 602 | 601 | 651 |
| **LB** | 191 | 202 | 227 | 282 | 283 | 315 | 314 | 364 |
| **LBS** | 246 | 270 | 295 | 363 | 377 | 409 | 408 | 458 |

21933170/DE – 11/2015

## FF47..

42 030 00 14

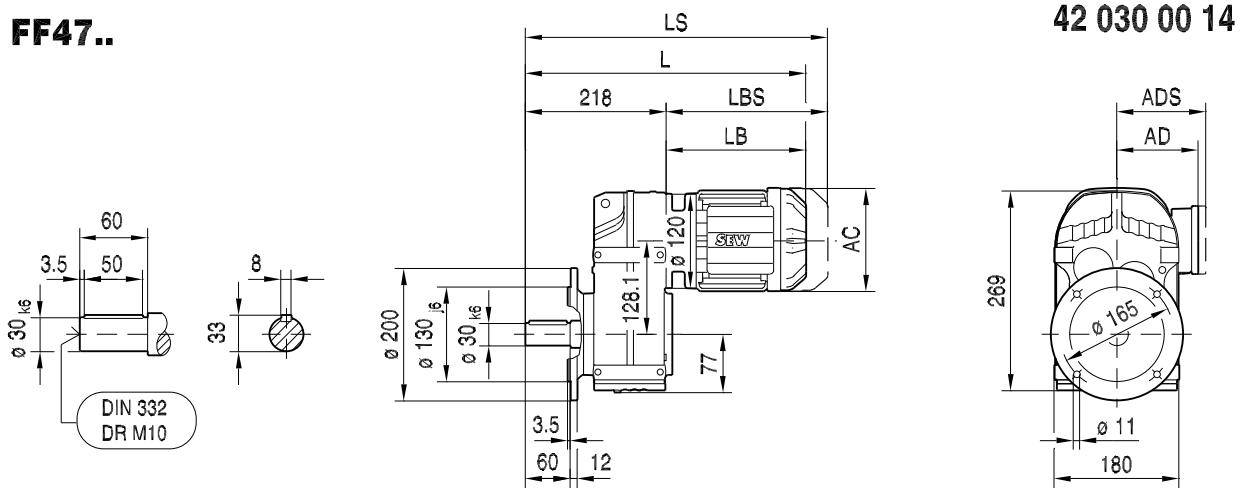


## FAF47..

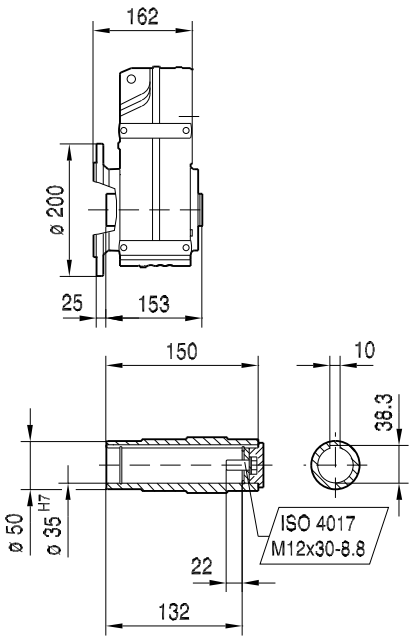


## FHF47..

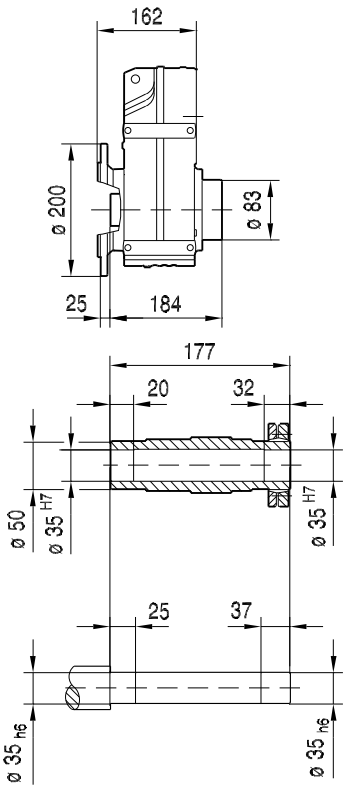


## FVF47..

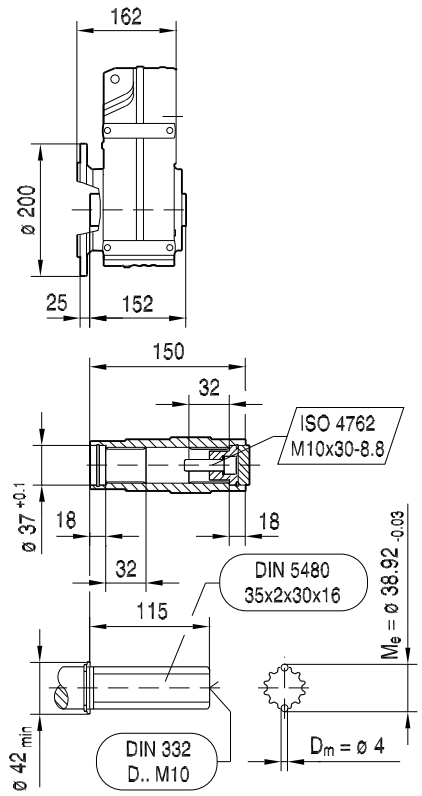


| (→ 🗎 155) | DR63.. | DR71S | DR71M | DRN80M | DRN90S | DRN90L | DRN100LS | DRN100L |
|---|---|---|---|---|---|---|---|---|
| **AC** | 132 | 139 | 139 | 156 | 179 | 179 | 197 | 197 |
| **AD** | 105 | 119 | 119 | 128 | 140 | 140 | 157 | 157 |
| **ADS** | 105 | 129 | 129 | 139 | 150 | 150 | 158 | 158 |
| **L** | 409 | 420 | 445 | 500 | 501 | 533 | 532 | 582 |
| **LS** | 464 | 488 | 513 | 581 | 595 | 627 | 626 | 676 |
| **LB** | 191 | 202 | 227 | 282 | 283 | 315 | 314 | 364 |
| **LBS** | 246 | 270 | 295 | 363 | 377 | 409 | 408 | 458 |

21933170/DE – 11/2015

## FA47..

42 031 00 14

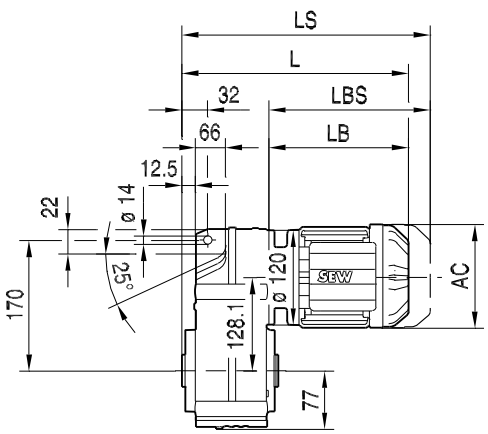


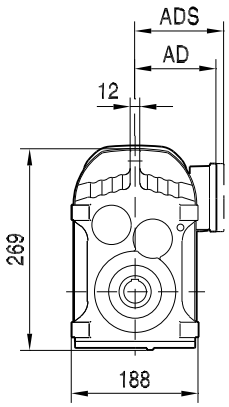


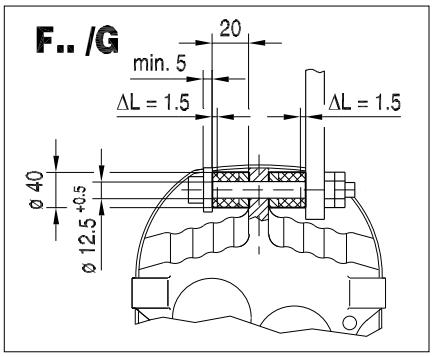


## FA47..

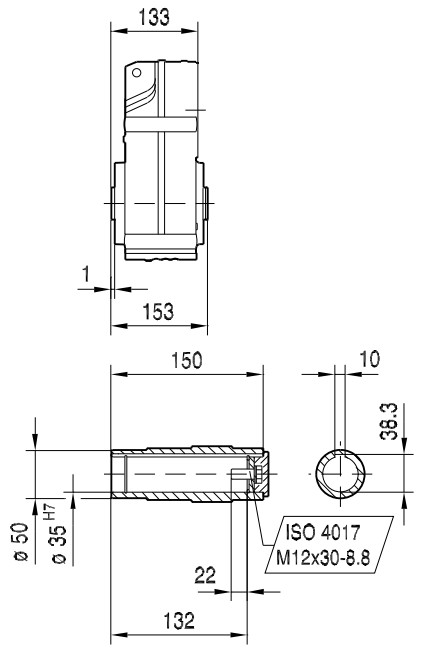


## FH47..

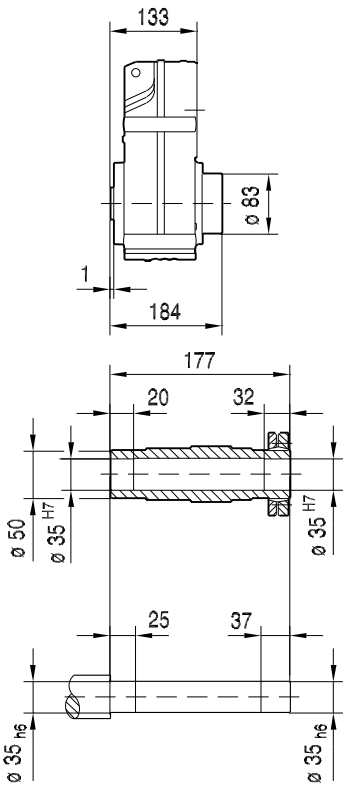


## FV47..

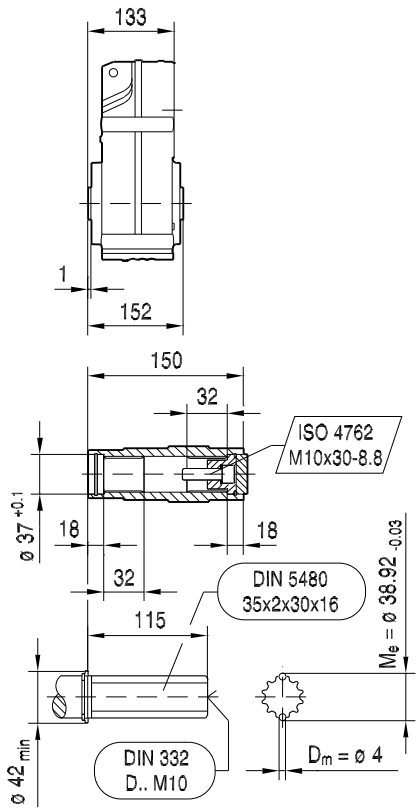


| (→ 🗎 155) | DR63.. | DR71S | DR71M | DRN80M | DRN90S | DRN90L | DRN100LS | DRN100L |
|---|---|---|---|---|---|---|---|---|
| **AC** | 132 | 139 | 139 | 156 | 179 | 179 | 197 | 197 |
| **AD** | 105 | 119 | 119 | 128 | 140 | 140 | 157 | 157 |
| **ADS** | 105 | 129 | 129 | 139 | 150 | 150 | 158 | 158 |
| **L** | 324 | 335 | 360 | 415 | 416 | 448 | 447 | 497 |
| **LS** | 379 | 403 | 428 | 496 | 510 | 542 | 541 | 591 |
| **LB** | 191 | 202 | 227 | 282 | 283 | 315 | 314 | 364 |
| **LBS** | 246 | 270 | 295 | 363 | 377 | 409 | 408 | 458 |

21933170/DE – 11/2015

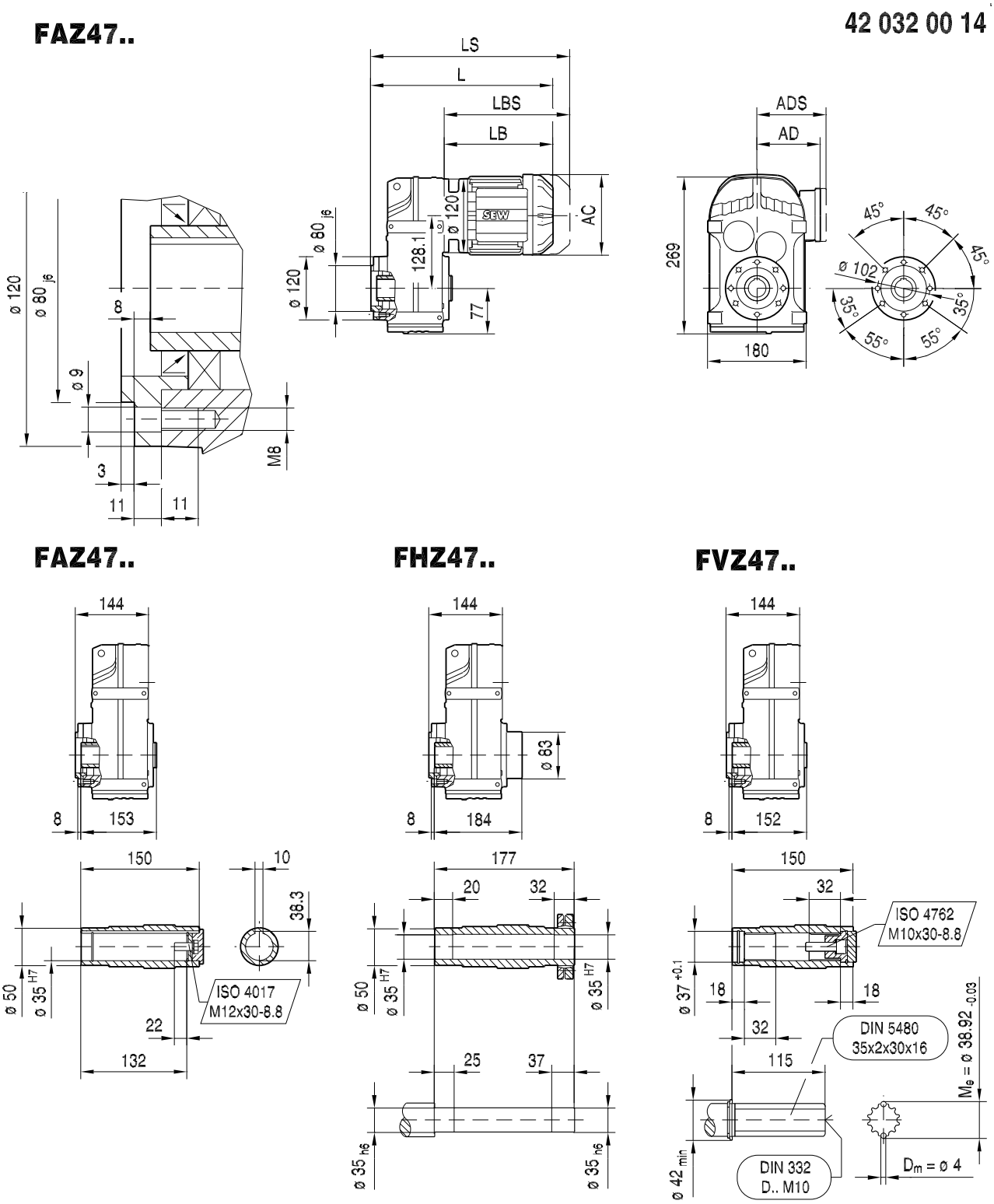


| (→ 🗎 155) | DR63.. | DR71S | DR71M | DRN80M | DRN90S | DRN90L | DRN100LS | DRN100L |
|---|---|---|---|---|---|---|---|---|
| **AC** | 132 | 139 | 139 | 156 | 179 | 179 | 197 | 197 |
| **AD** | 105 | 119 | 119 | 128 | 140 | 140 | 157 | 157 |
| **ADS** | 105 | 129 | 129 | 139 | 150 | 150 | 158 | 158 |
| **L** | 335 | 346 | 371 | 426 | 427 | 459 | 458 | 508 |
| **LS** | 390 | 414 | 439 | 507 | 521 | 553 | 552 | 602 |
| **LB** | 191 | 202 | 227 | 282 | 283 | 315 | 314 | 364 |
| **LBS** | 246 | 270 | 295 | 363 | 377 | 409 | 408 | 458 |

21933170/DE – 11/2015

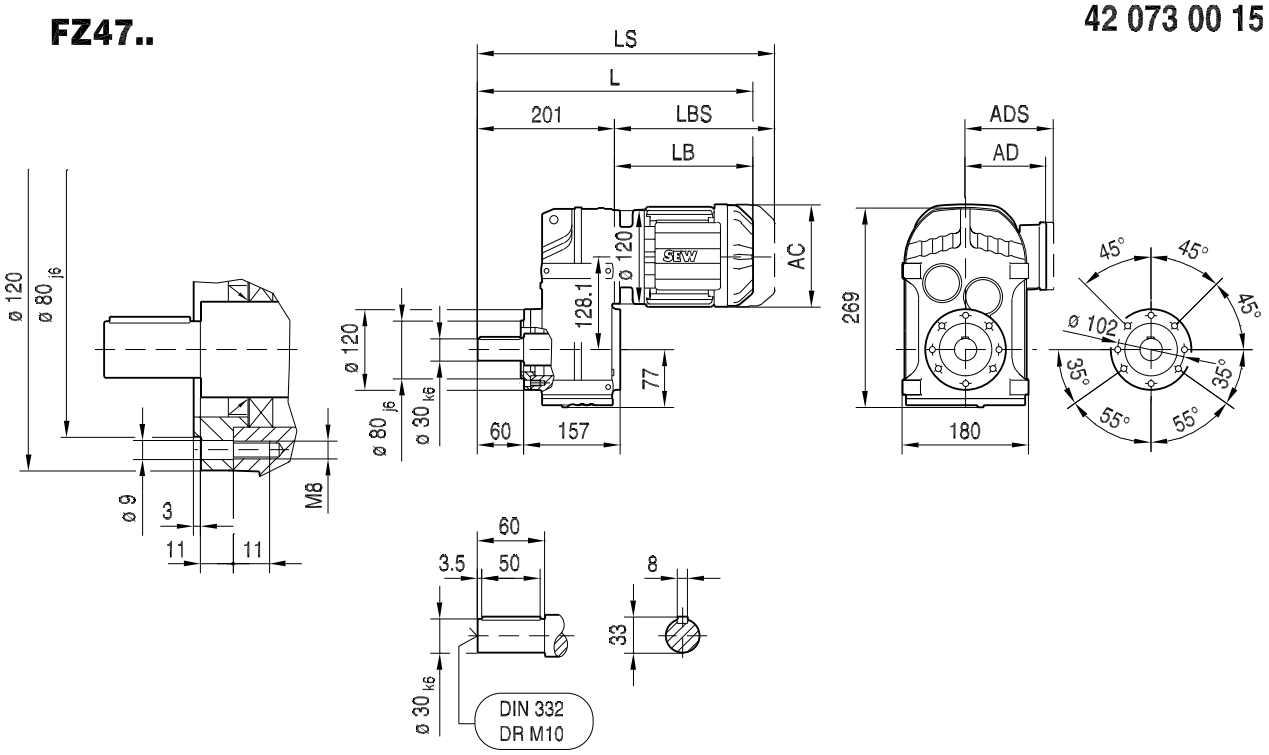


| (→ 🗎 155) | DR63.. | DR71S | DR71M | DRN80M | DRN90S | DRN90L | DRN100LS | DRN100L |
|---|---|---|---|---|---|---|---|---|
| **AC** | 132 | 139 | 139 | 156 | 179 | 179 | 197 | 197 |
| **AD** | 105 | 119 | 119 | 128 | 140 | 140 | 157 | 157 |
| **ADS** | 105 | 129 | 129 | 139 | 150 | 150 | 158 | 158 |
| **L** | 392 | 403 | 428 | 483 | 484 | 516 | 515 | 565 |
| **LS** | 447 | 471 | 496 | 564 | 578 | 610 | 609 | 659 |
| **LB** | 191 | 202 | 227 | 282 | 283 | 315 | 314 | 364 |
| **LBS** | 246 | 270 | 295 | 363 | 377 | 409 | 408 | 458 |

21933170/DE – 11/2015

**FT47..**

**42 033 00 14**

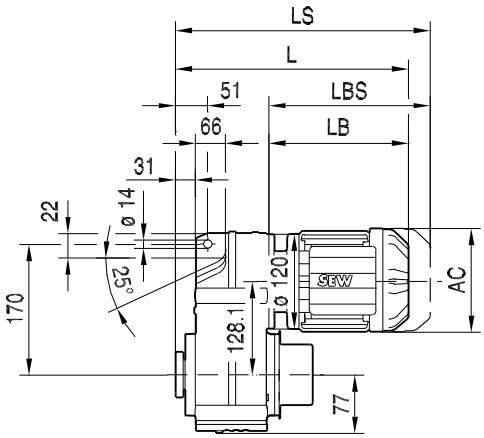


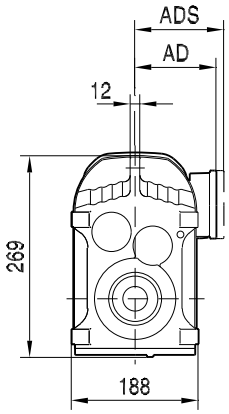


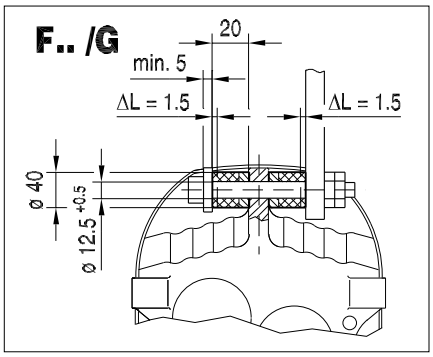


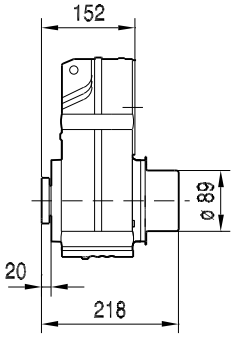


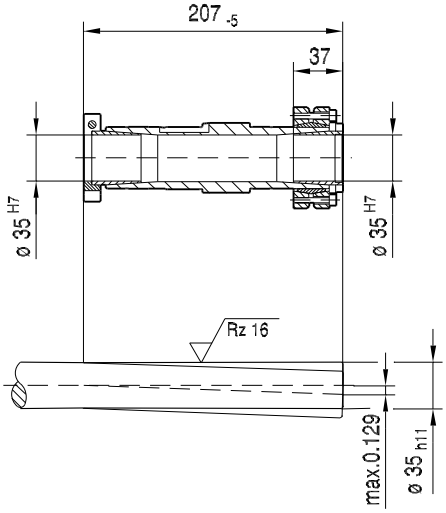


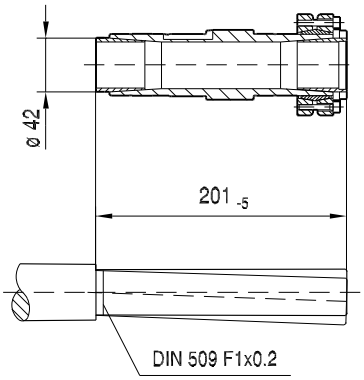


| (→ 🗎 155) | DR63.. | DR71S | DR71M | | | | | |
|---|---|---|---|---|---|---|---|---|
| **AC** | 132 | 139 | 139 | | | | | |
| **AD** | 105 | 119 | 119 | | | | | |
| **ADS** | 105 | 129 | 129 | | | | | |
| **L** | 343 | 354 | 379 | | | | | |
| **LS** | 398 | 422 | 447 | | | | | |
| **LB** | 191 | 202 | 227 | | | | | |
| **LBS** | 246 | 270 | 295 | | | | | |

21933170/DE – 11/2015

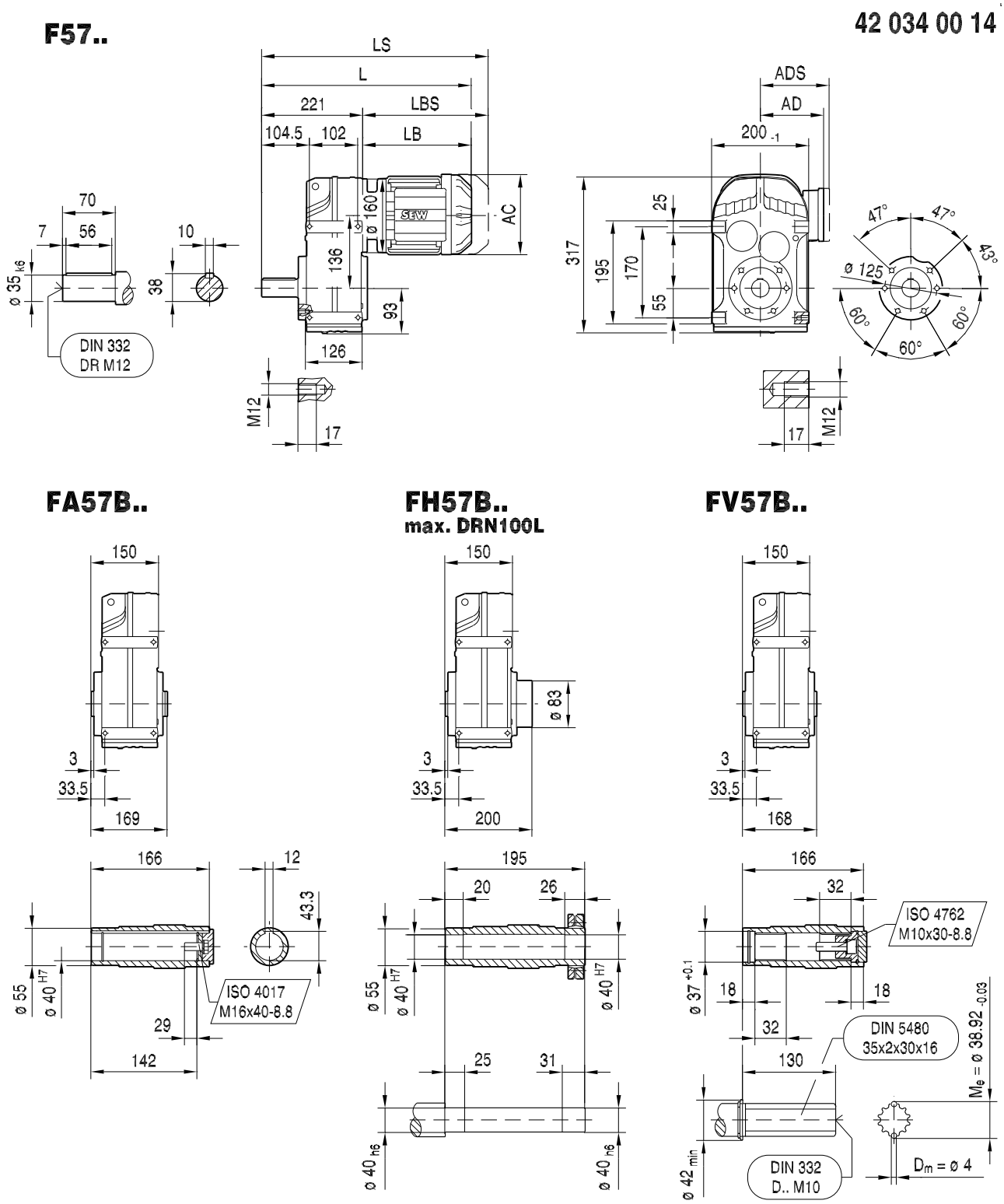


| (→ 🗎 155) | DR63.. | DR71S | DR71M | DRN80M | DRN90S | DRN90L | DRN100LS | DRN100L | DRN112M | DRN132S |
|---|---|---|---|---|---|---|---|---|---|---|
| **AC** | 132 | 139 | 139 | 156 | 179 | 179 | 197 | 197 | 221 | 221 |
| **AD** | 105 | 119 | 119 | 128 | 140 | 140 | 157 | 157 | 170 | 170 |
| **ADS** | 105 | 129 | 129 | 139 | 150 | 150 | 158 | 158 | 172 | 172 |
| **L** | 406 | 417 | 442 | 496 | 498 | 530 | 526 | 576 | 607 | 661 |
| **LS** | 461 | 485 | 510 | 577 | 591 | 623 | 620 | 670 | 719 | 773 |
| **LB** | 185 | 196 | 221 | 275 | 277 | 309 | 305 | 355 | 386 | 440 |
| **LBS** | 240 | 264 | 289 | 356 | 370 | 402 | 399 | 449 | 498 | 552 |

21933170/DE – 11/2015

## FF57..

42 035 00 14

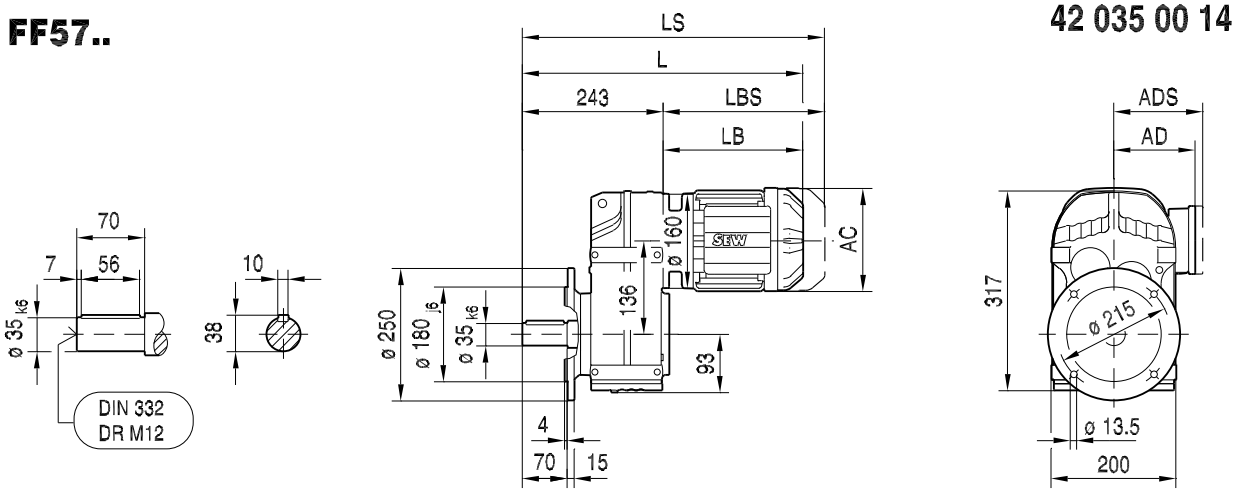


## FAF57..

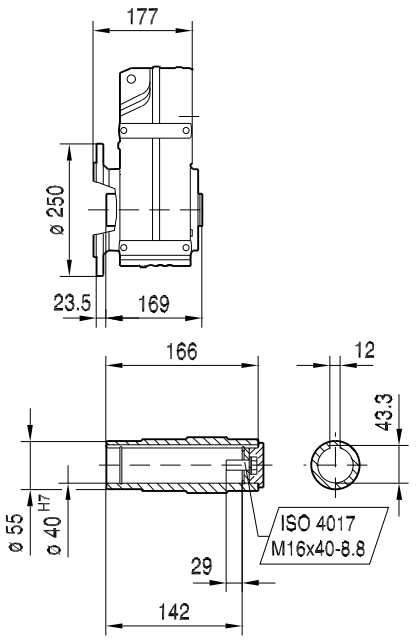


## FHF57..
max. DRN100L

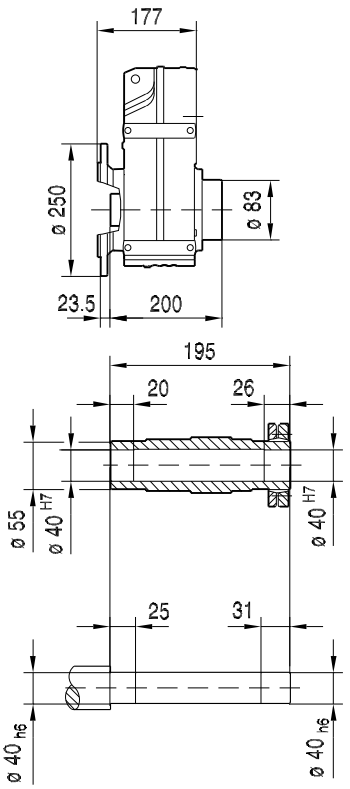


## FVF57..

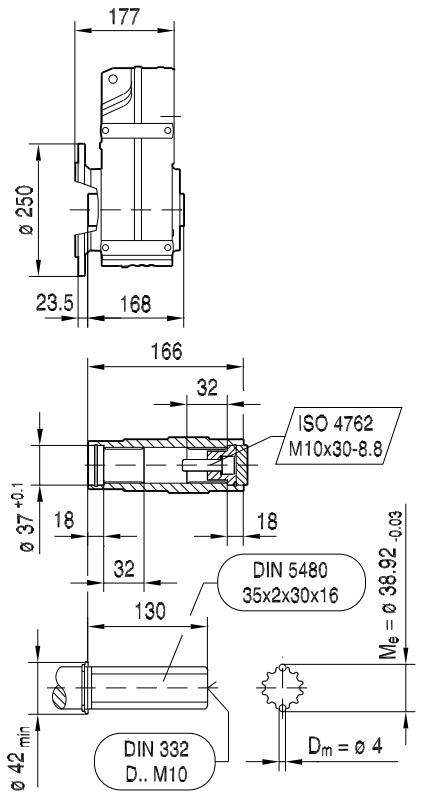


| (→ 🗎 155) | DR63.. | DR71S | DR71M | DRN80M | DRN90S | DRN90L | DRN100LS | DRN100L | DRN112M | DRN132S |
|---|---|---|---|---|---|---|---|---|---|---|
| **AC** | 132 | 139 | 139 | 156 | 179 | 179 | 197 | 197 | 221 | 221 |
| **AD** | 105 | 119 | 119 | 128 | 140 | 140 | 157 | 157 | 170 | 170 |
| **ADS** | 105 | 129 | 129 | 139 | 150 | 150 | 158 | 158 | 172 | 172 |
| **L** | 428 | 439 | 464 | 518 | 520 | 552 | 548 | 598 | 629 | 683 |
| **LS** | 483 | 507 | 532 | 599 | 613 | 645 | 642 | 692 | 741 | 795 |
| **LB** | 185 | 196 | 221 | 275 | 277 | 309 | 305 | 355 | 386 | 440 |
| **LBS** | 240 | 264 | 289 | 356 | 370 | 402 | 399 | 449 | 498 | 552 |

21933170/DE – 11/2015

## FA57..

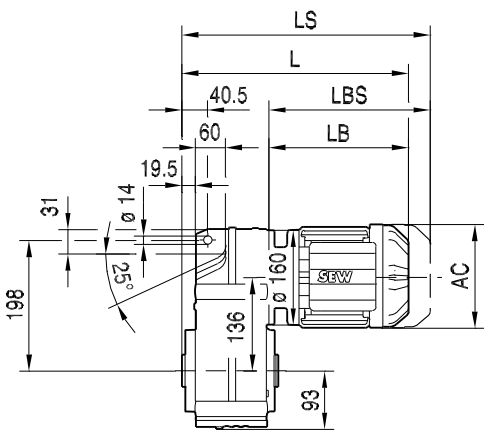


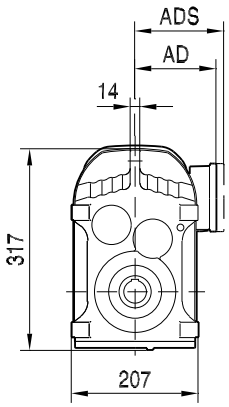


42 036 00 14

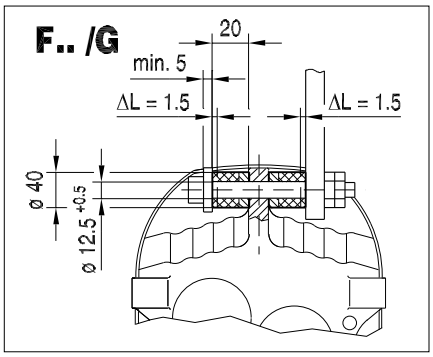


## FA57..

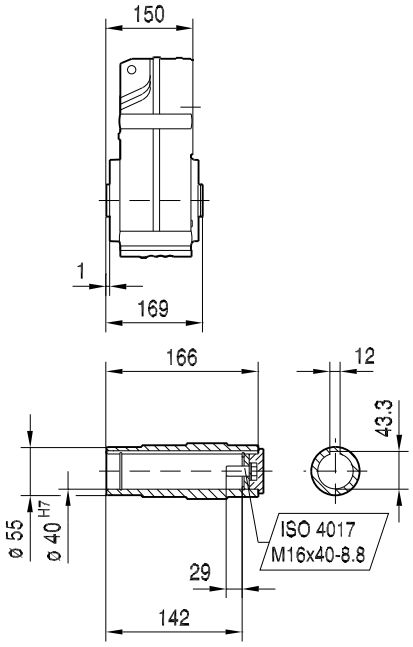


## FH57..
**max. DRN100L**

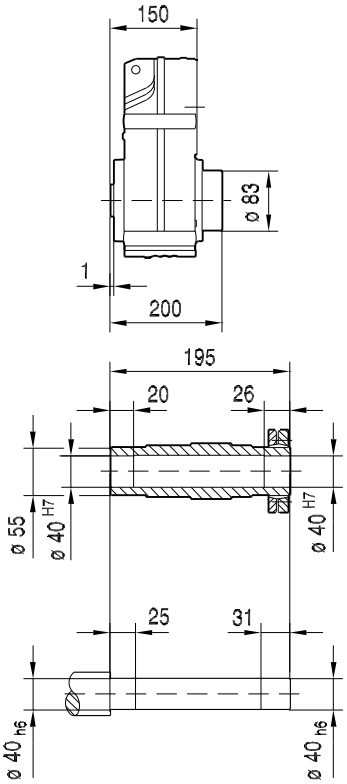


## FV57..

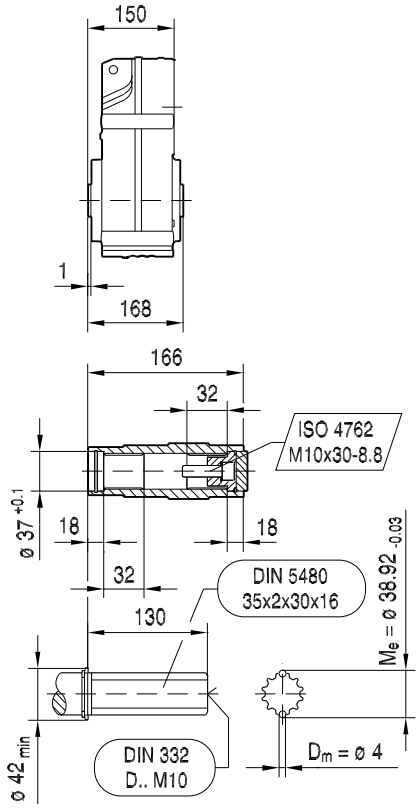


| (→ 🗎 155) | DR63.. | DR71S | DR71M | DRN80M | DRN90S | DRN90L | DRN100LS | DRN100L | DRN112M | DRN132S |
|---|---|---|---|---|---|---|---|---|---|---|
| **AC** | 132 | 139 | 139 | 156 | 179 | 179 | 197 | 197 | 221 | 221 |
| **AD** | 105 | 119 | 119 | 128 | 140 | 140 | 157 | 157 | 170 | 170 |
| **ADS** | 105 | 129 | 129 | 139 | 150 | 150 | 158 | 158 | 172 | 172 |
| **L** | 335 | 346 | 371 | 425 | 427 | 459 | 455 | 505 | 536 | 590 |
| **LS** | 390 | 414 | 439 | 506 | 520 | 552 | 549 | 599 | 648 | 702 |
| **LB** | 185 | 196 | 221 | 275 | 277 | 309 | 305 | 355 | 386 | 440 |
| **LBS** | 240 | 264 | 289 | 356 | 370 | 402 | 399 | 449 | 498 | 552 |

21933170/DE – 11/2015

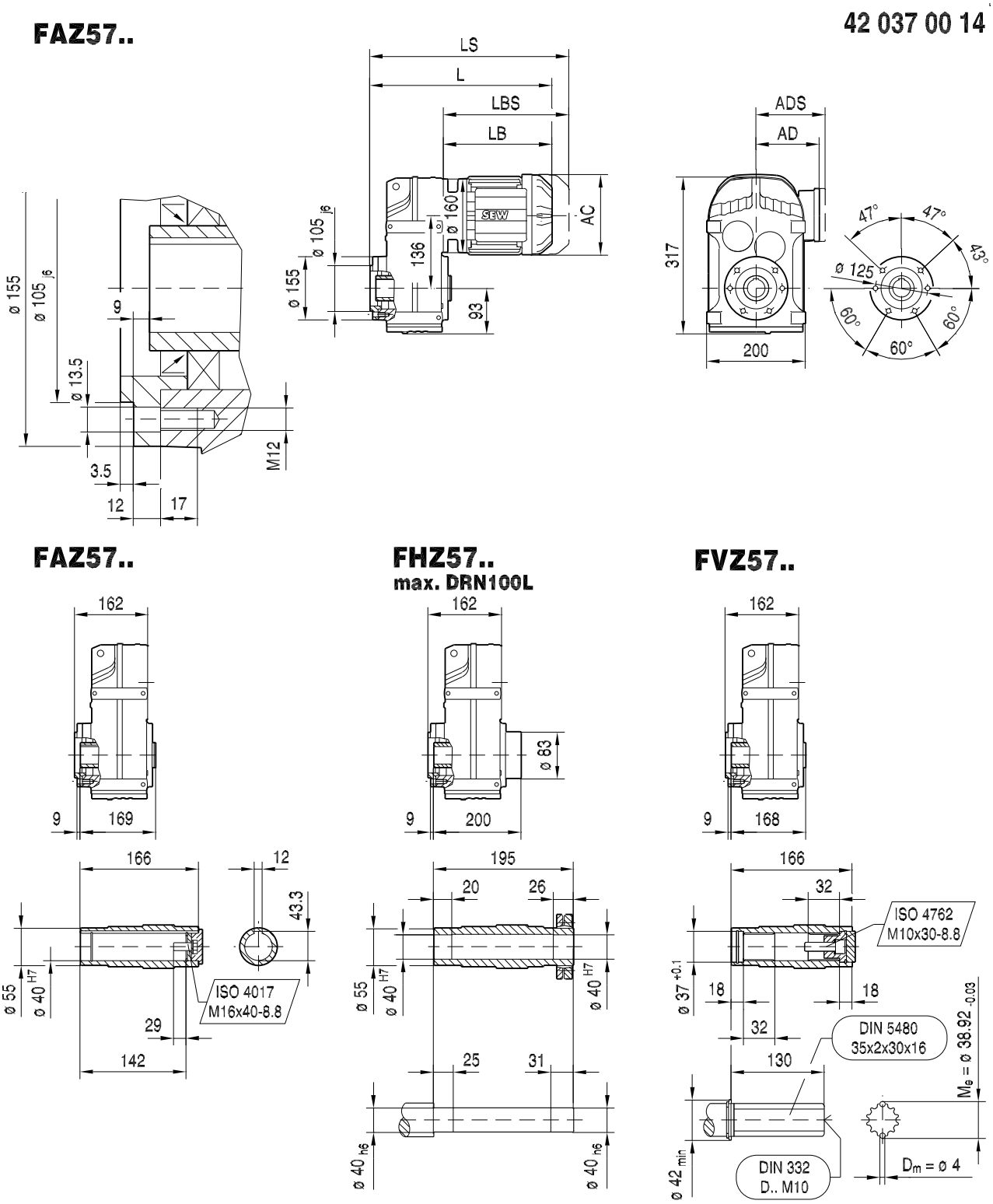


| (→ 🗎 155) | DR63.. | DR71S | DR71M | DRN80M | DRN90S | DRN90L | DRN100LS | DRN100L | DRN112M | DRN132S |
|---|---|---|---|---|---|---|---|---|---|---|
| **AC** | 132 | 139 | 139 | 156 | 179 | 179 | 197 | 197 | 221 | 221 |
| **AD** | 105 | 119 | 119 | 128 | 140 | 140 | 157 | 157 | 170 | 170 |
| **ADS** | 105 | 129 | 129 | 139 | 150 | 150 | 158 | 158 | 172 | 172 |
| **L** | 347 | 358 | 383 | 437 | 439 | 471 | 467 | 517 | 548 | 602 |
| **LS** | 402 | 426 | 451 | 518 | 532 | 564 | 561 | 611 | 660 | 714 |
| **LB** | 185 | 196 | 221 | 275 | 277 | 309 | 305 | 355 | 386 | 440 |
| **LBS** | 240 | 264 | 289 | 356 | 370 | 402 | 399 | 449 | 498 | 552 |

21933170/DE – 11/2015

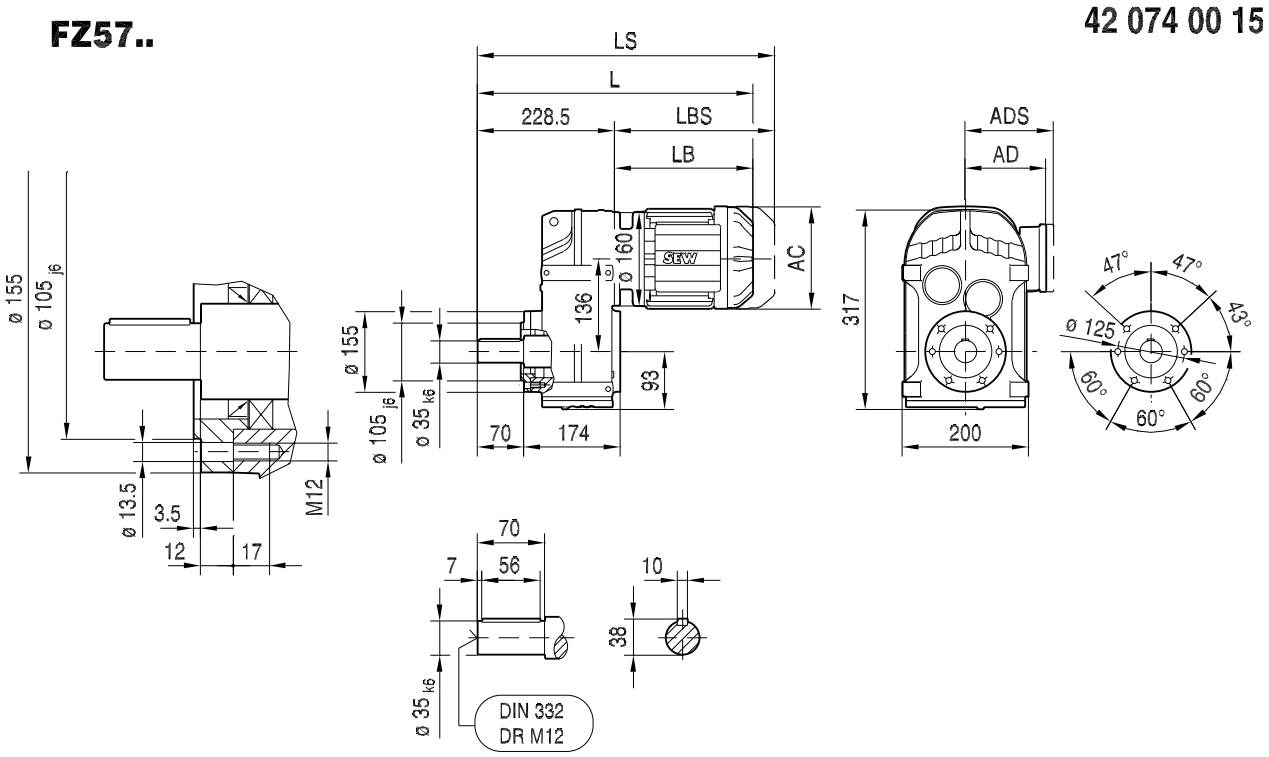


| (→ 🗎 155) | DR63.. | DR71S | DR71M | DRN80M | DRN90S | DRN90L | DRN100LS | DRN100L | DRN112M | DRN132S |
|---|---|---|---|---|---|---|---|---|---|---|
| **AC** | 132 | 139 | 139 | 156 | 179 | 179 | 197 | 197 | 221 | 221 |
| **AD** | 105 | 119 | 119 | 128 | 140 | 140 | 157 | 157 | 170 | 170 |
| **ADS** | 105 | 129 | 129 | 139 | 150 | 150 | 158 | 158 | 172 | 172 |
| **L** | 413 | 424 | 449 | 504 | 505 | 537 | 534 | 584 | 615 | 669 |
| **LS** | 468 | 492 | 517 | 585 | 599 | 631 | 627 | 677 | 727 | 781 |
| **LB** | 185 | 196 | 221 | 275 | 277 | 309 | 305 | 355 | 386 | 440 |
| **LBS** | 240 | 264 | 289 | 356 | 370 | 402 | 399 | 449 | 498 | 552 |

21933170/DE – 11/2015

**FT57..**

**42 038 00 14**

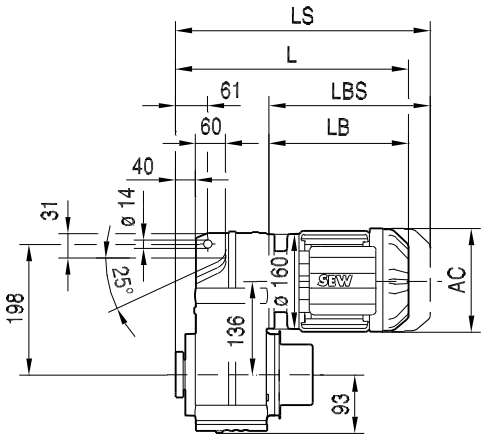


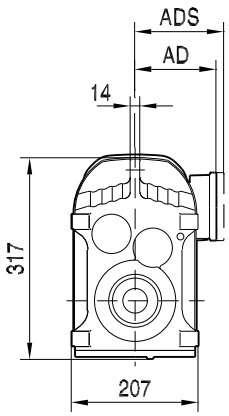


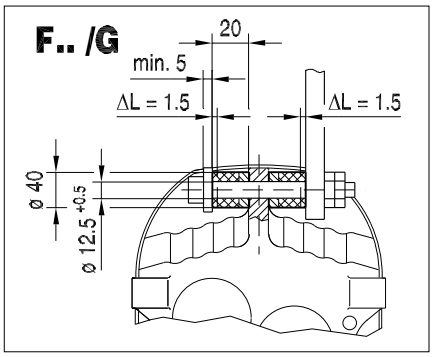


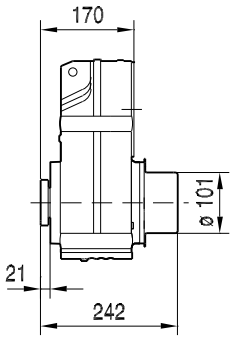


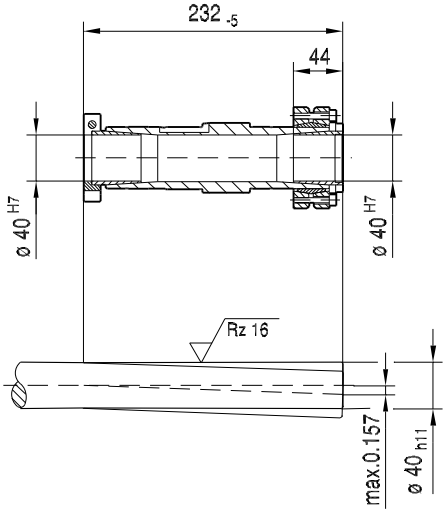


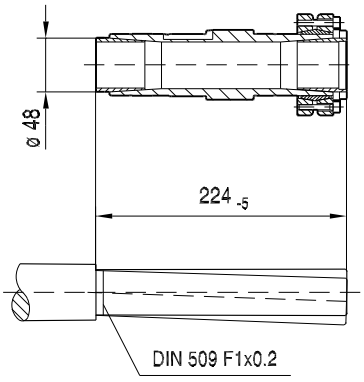


| (→ 🗎 155) | DR63.. | DR71S | DR71M | DRN80M | DRN90S | | | |
|---|---|---|---|---|---|---|---|---|
| **AC** | 132 | 139 | 139 | 156 | 179 | | | |
| **AD** | 105 | 119 | 119 | 128 | 140 | | | |
| **ADS** | 105 | 129 | 129 | 139 | 150 | | | |
| **L** | 355 | 366 | 391 | 445 | 447 | | | |
| **LS** | 410 | 434 | 459 | 526 | 540 | | | |
| **LB** | 185 | 196 | 221 | 275 | 277 | | | |
| **LBS** | 240 | 264 | 289 | 356 | 370 | | | |

21933170/DE – 11/2015

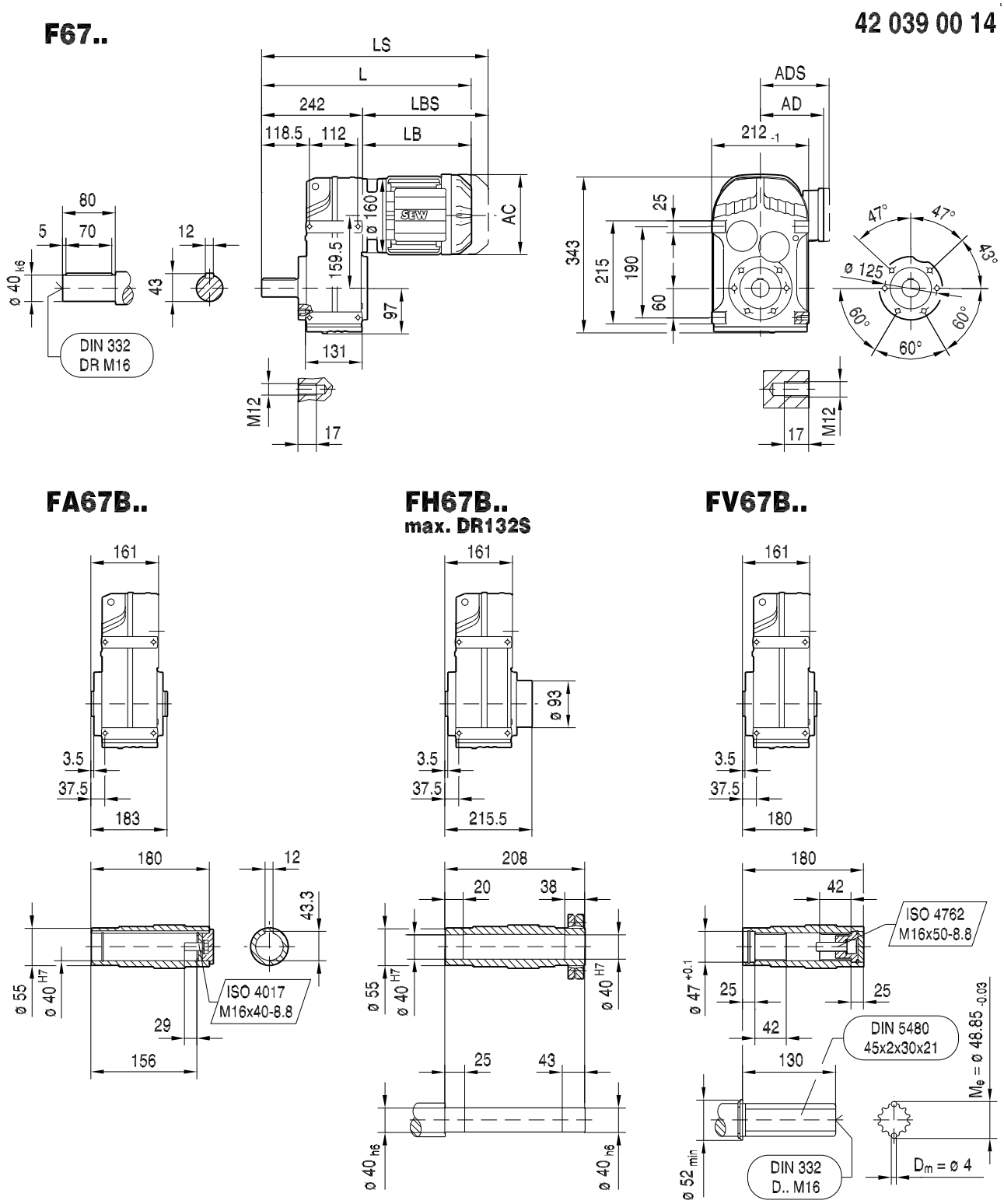


| (→ 🗎 155) | DR63.. | DR71S | DR71M | DRN80M | DRN90S | DRN90L | DRN100LS | DRN100L | DRN112M | DRN132S |
|---|---|---|---|---|---|---|---|---|---|---|
| **AC** | 132 | 139 | 139 | 156 | 179 | 179 | 197 | 197 | 221 | 221 |
| **AD** | 105 | 119 | 119 | 128 | 140 | 140 | 157 | 157 | 170 | 170 |
| **ADS** | 105 | 129 | 129 | 139 | 150 | 150 | 158 | 158 | 172 | 172 |
| **L** | 427 | 438 | 463 | 517 | 519 | 551 | 547 | 597 | 628 | 682 |
| **LS** | 482 | 506 | 531 | 598 | 612 | 644 | 641 | 691 | 740 | 794 |
| **LB** | 185 | 196 | 221 | 275 | 277 | 309 | 305 | 355 | 386 | 440 |
| **LBS** | 240 | 264 | 289 | 356 | 370 | 402 | 399 | 449 | 498 | 552 |

21933170/DE – 11/2015

## FF67..

42 040 00 14

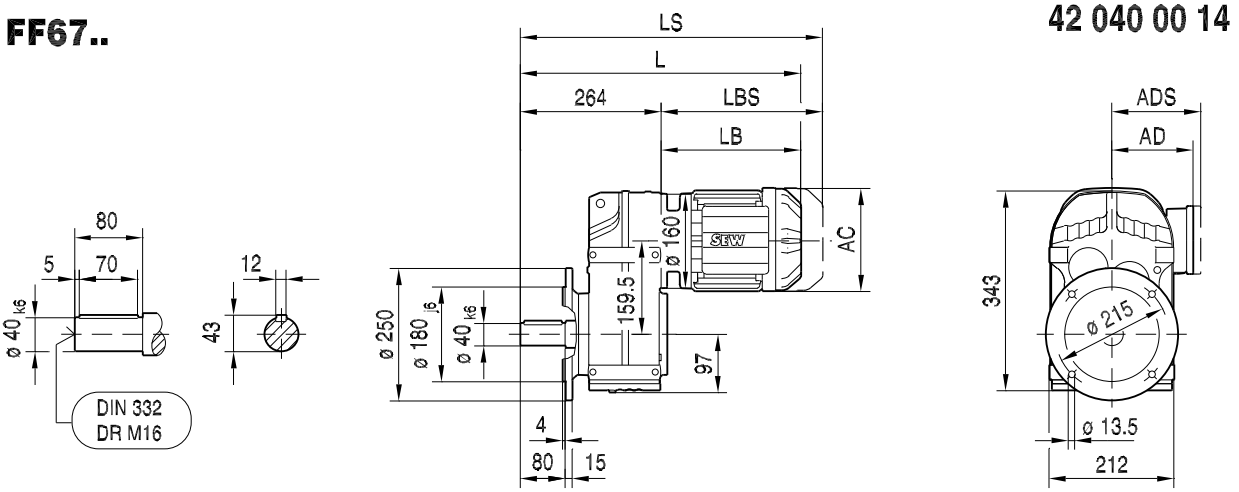


## FAF67..

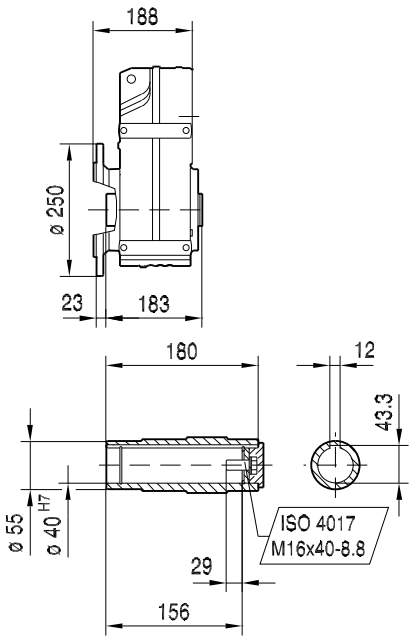


## FHF67..
max. DR132S

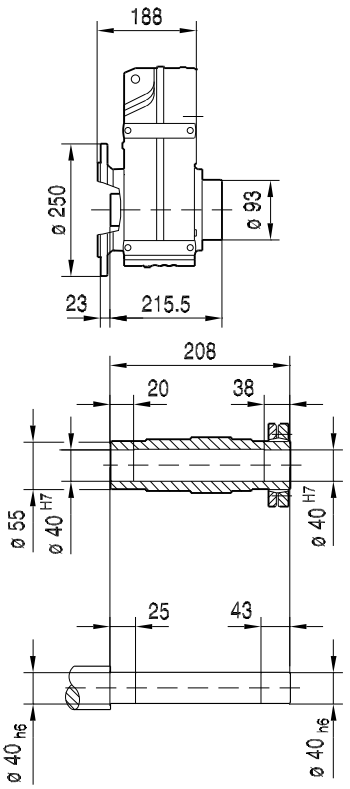


## FVF67..

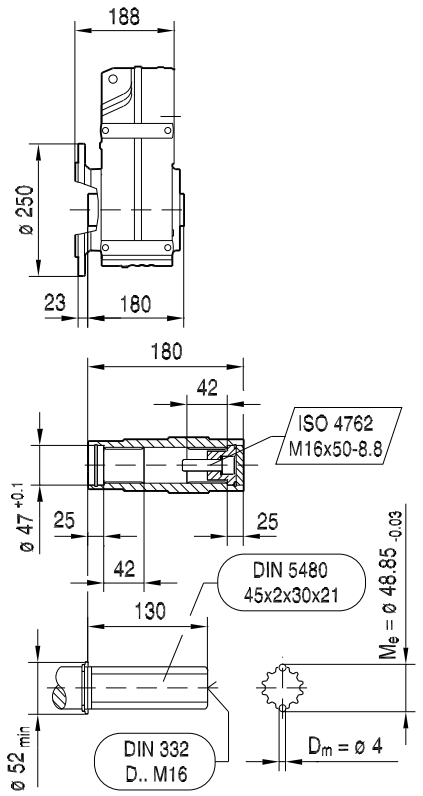


| (→ 🗎 155) | DR63.. | DR71S | DR71M | DRN80M | DRN90S | DRN90L | DRN100LS | DRN100L | DRN112M | DRN132S |
|---|---|---|---|---|---|---|---|---|---|---|
| **AC** | 132 | 139 | 139 | 156 | 179 | 179 | 197 | 197 | 221 | 221 |
| **AD** | 105 | 119 | 119 | 128 | 140 | 140 | 157 | 157 | 170 | 170 |
| **ADS** | 105 | 129 | 129 | 139 | 150 | 150 | 158 | 158 | 172 | 172 |
| **L** | 449 | 460 | 485 | 539 | 541 | 573 | 569 | 619 | 650 | 704 |
| **LS** | 504 | 528 | 553 | 620 | 634 | 666 | 663 | 713 | 762 | 816 |
| **LB** | 185 | 196 | 221 | 275 | 277 | 309 | 305 | 355 | 386 | 440 |
| **LBS** | 240 | 264 | 289 | 356 | 370 | 402 | 399 | 449 | 498 | 552 |

21933170/DE – 11/2015

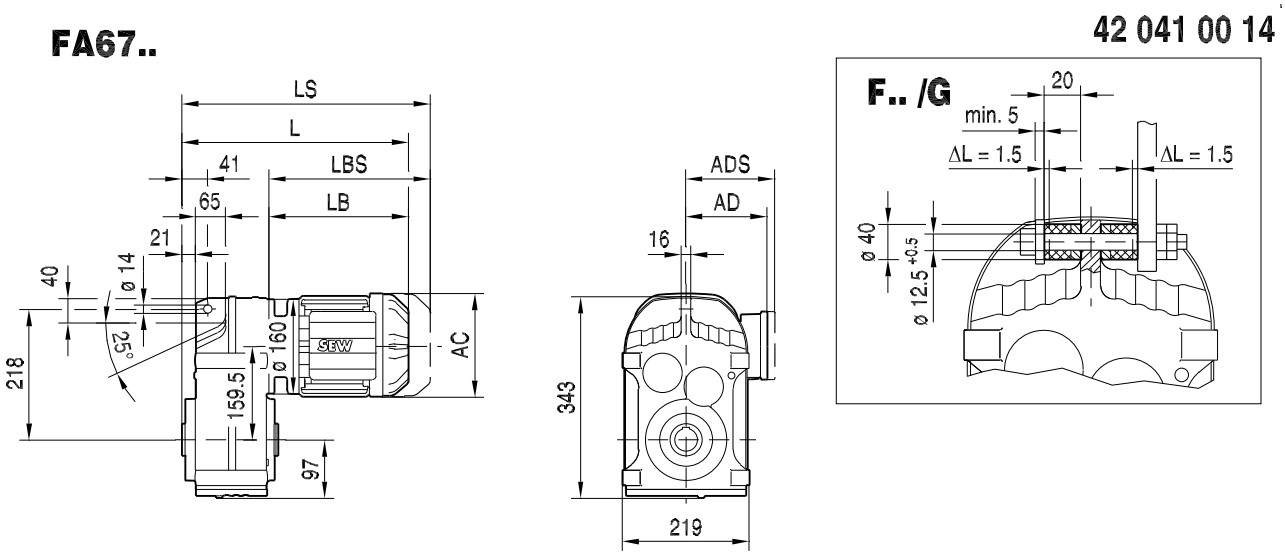


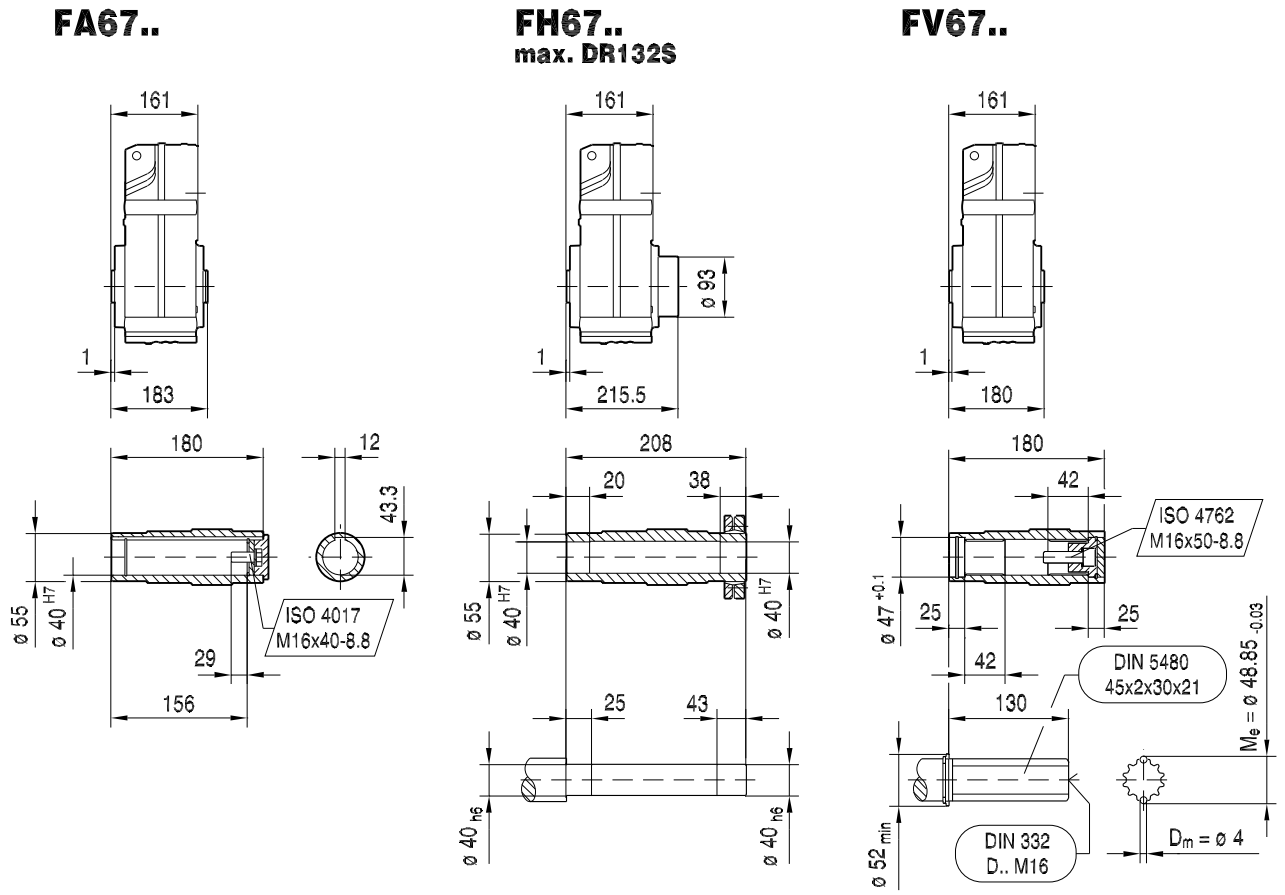


| (→ 🗎 155) | DR63.. | DR71S | DR71M | DRN80M | DRN90S | DRN90L | DRN100LS | DRN100L | DRN112M | DRN132S |
|---|---|---|---|---|---|---|---|---|---|---|
| **AC** | 132 | 139 | 139 | 156 | 179 | 179 | 197 | 197 | 221 | 221 |
| **AD** | 105 | 119 | 119 | 128 | 140 | 140 | 157 | 157 | 170 | 170 |
| **ADS** | 105 | 129 | 129 | 139 | 150 | 150 | 158 | 158 | 172 | 172 |
| **L** | 346 | 357 | 382 | 436 | 438 | 470 | 466 | 516 | 547 | 601 |
| **LS** | 401 | 425 | 450 | 517 | 531 | 563 | 560 | 610 | 659 | 713 |
| **LB** | 185 | 196 | 221 | 275 | 277 | 309 | 305 | 355 | 386 | 440 |
| **LBS** | 240 | 264 | 289 | 356 | 370 | 402 | 399 | 449 | 498 | 552 |

21933170/DE – 11/2015

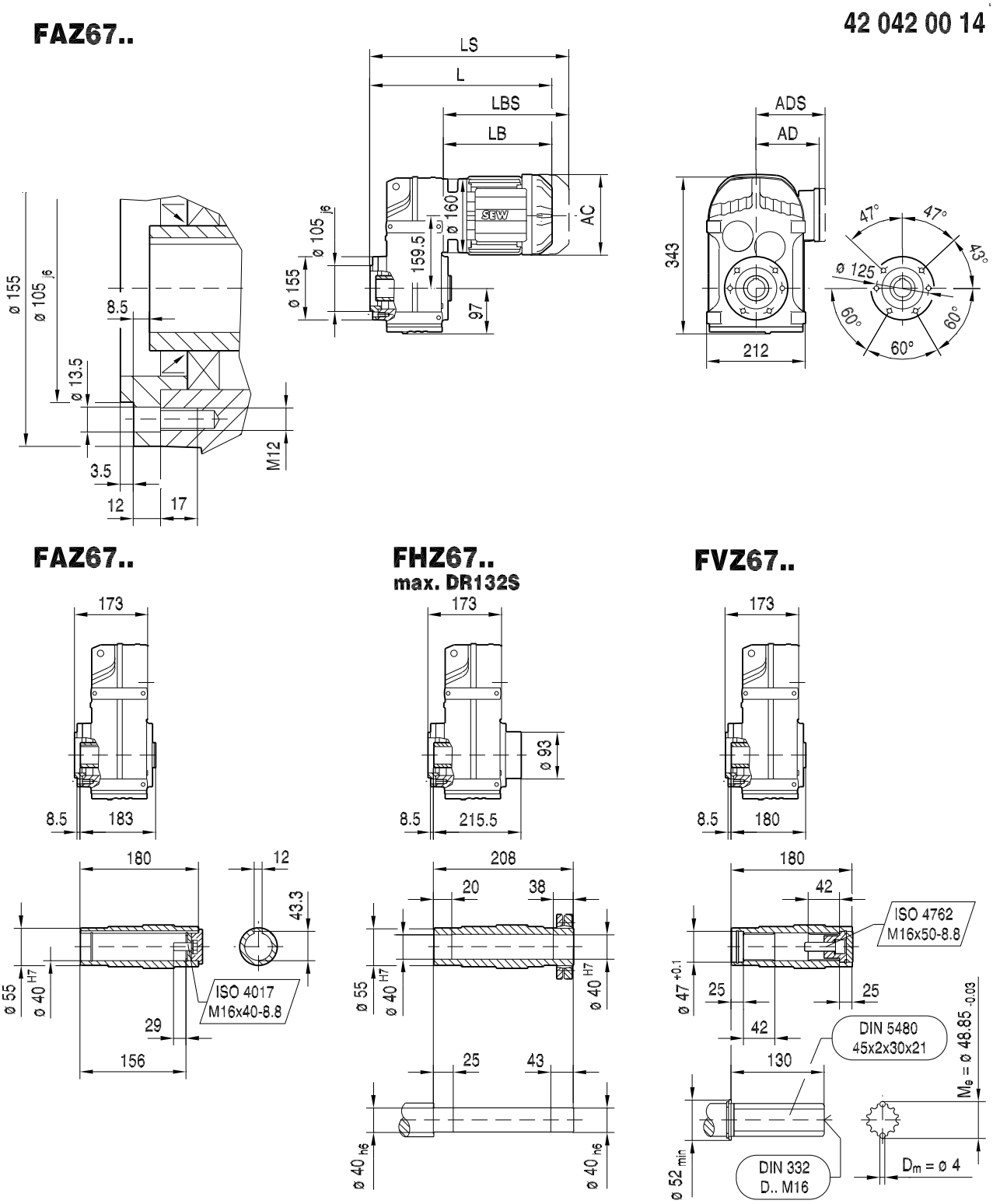


| (→ 🗎 155) | DR63.. | DR71S | DR71M | DRN80M | DRN90S | DRN90L | DRN100LS | DRN100L | DRN112M | DRN132S |
|---|---|---|---|---|---|---|---|---|---|---|
| **AC** | 132 | 139 | 139 | 156 | 179 | 179 | 197 | 197 | 221 | 221 |
| **AD** | 105 | 119 | 119 | 128 | 140 | 140 | 157 | 157 | 170 | 170 |
| **ADS** | 105 | 129 | 129 | 139 | 150 | 150 | 158 | 158 | 172 | 172 |
| **L** | 358 | 369 | 394 | 448 | 450 | 482 | 478 | 528 | 559 | 613 |
| **LS** | 413 | 437 | 462 | 529 | 543 | 575 | 572 | 622 | 671 | 725 |
| **LB** | 185 | 196 | 221 | 275 | 277 | 309 | 305 | 355 | 386 | 440 |
| **LBS** | 240 | 264 | 289 | 356 | 370 | 402 | 399 | 449 | 498 | 552 |

21933170/DE – 11/2015

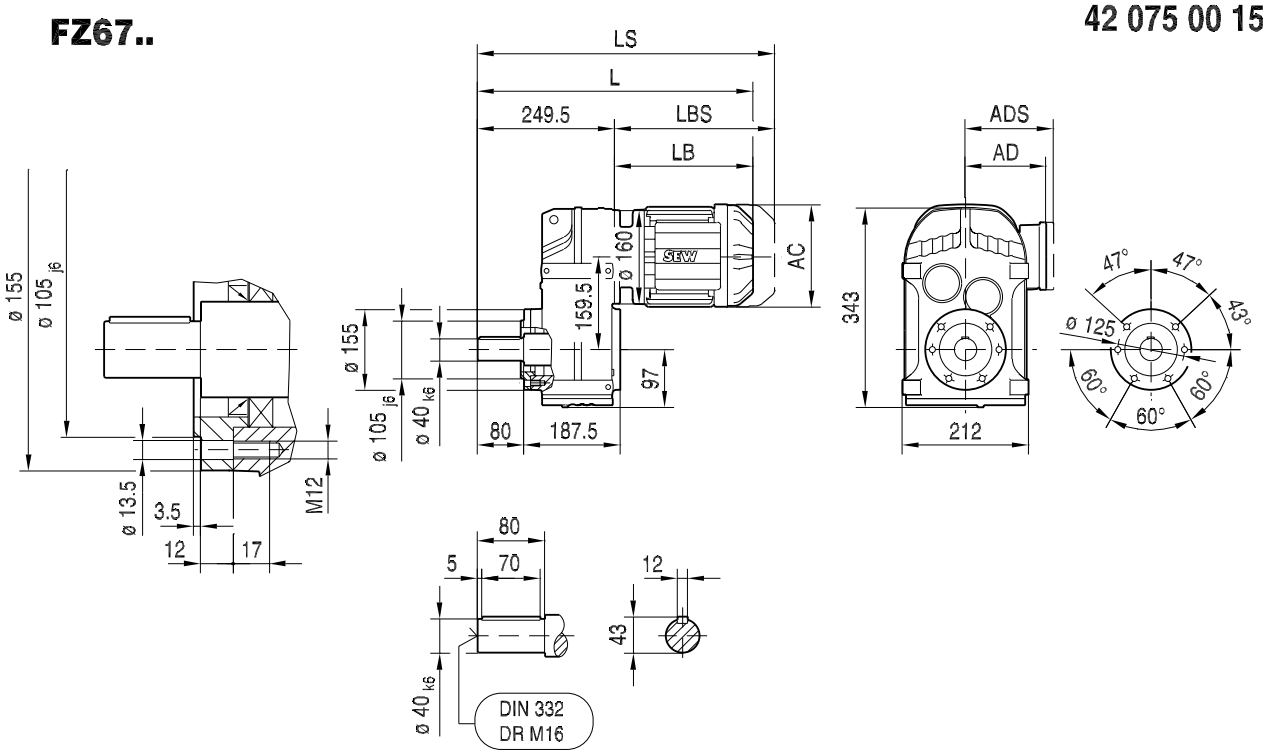


| (→ 🗎 155) | DR63.. | DR71S | DR71M | DRN80M | DRN90S | DRN90L | DRN100LS | DRN100L | DRN112M | DRN132S |
|---|---|---|---|---|---|---|---|---|---|---|
| **AC** | 132 | 139 | 139 | 156 | 179 | 179 | 197 | 197 | 221 | 221 |
| **AD** | 105 | 119 | 119 | 128 | 140 | 140 | 157 | 157 | 170 | 170 |
| **ADS** | 105 | 129 | 129 | 139 | 150 | 150 | 158 | 158 | 172 | 172 |
| **L** | 434 | 445 | 470 | 525 | 526 | 558 | 555 | 605 | 636 | 690 |
| **LS** | 489 | 513 | 538 | 606 | 620 | 652 | 648 | 698 | 748 | 802 |
| **LB** | 185 | 196 | 221 | 275 | 277 | 309 | 305 | 355 | 386 | 440 |
| **LBS** | 240 | 264 | 289 | 356 | 370 | 402 | 399 | 449 | 498 | 552 |

21933170/DE – 11/2015

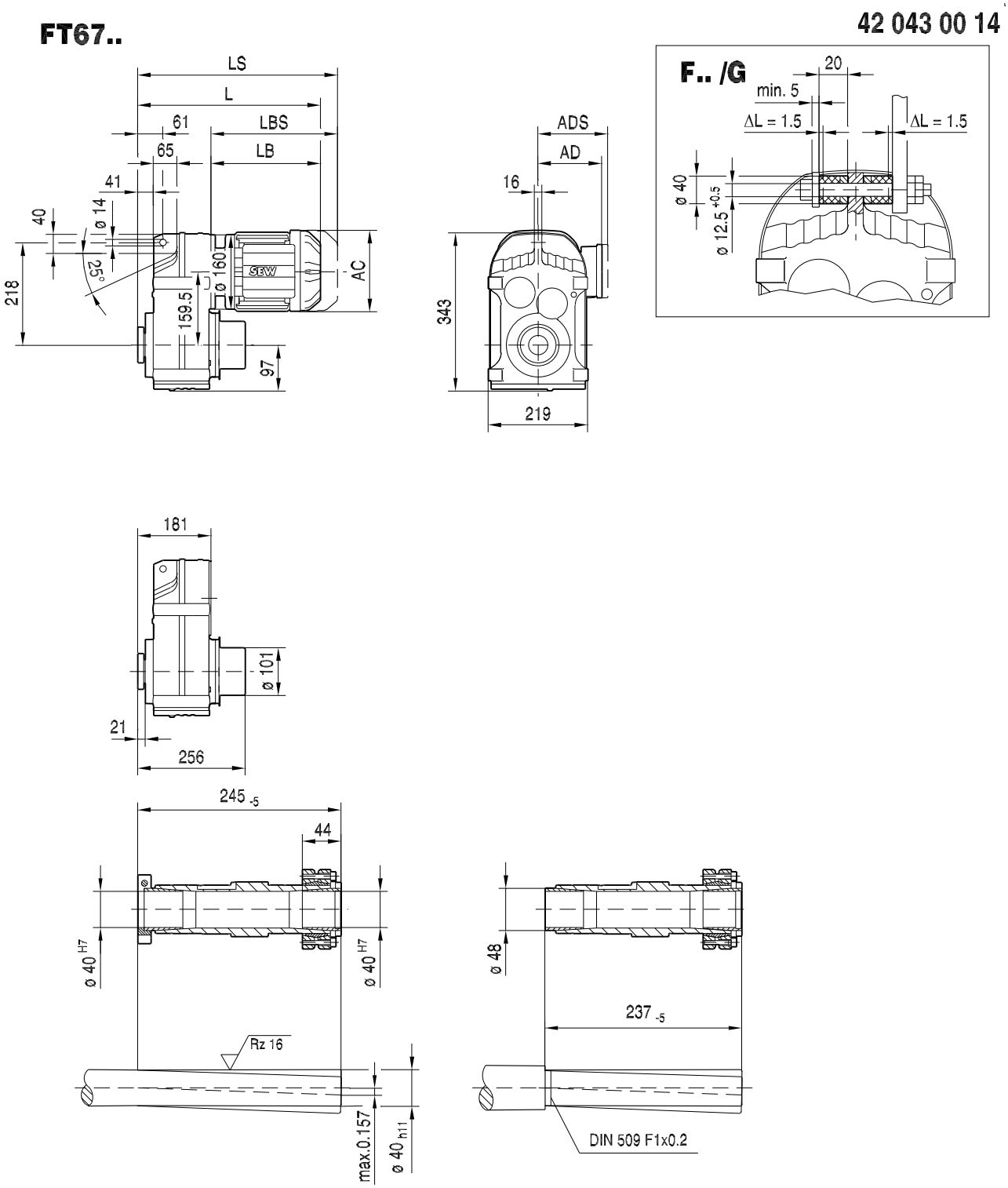


| (→ 🗎 155) | DR63.. | DR71S | DR71M | DRN80M | DRN90S | DRN90L | DRN100LS | DRN100L |
|---|---|---|---|---|---|---|---|---|
| **AC** | 132 | 139 | 139 | 156 | 179 | 179 | 197 | 197 |
| **AD** | 105 | 119 | 119 | 128 | 140 | 140 | 157 | 157 |
| **ADS** | 105 | 129 | 129 | 139 | 150 | 150 | 158 | 158 |
| **L** | 366 | 377 | 402 | 456 | 458 | 490 | 486 | 536 |
| **LS** | 421 | 445 | 470 | 537 | 551 | 583 | 580 | 630 |
| **LB** | 185 | 196 | 221 | 275 | 277 | 309 | 305 | 355 |
| **LBS** | 240 | 264 | 289 | 356 | 370 | 402 | 399 | 449 |

21933170/DE – 11/2015

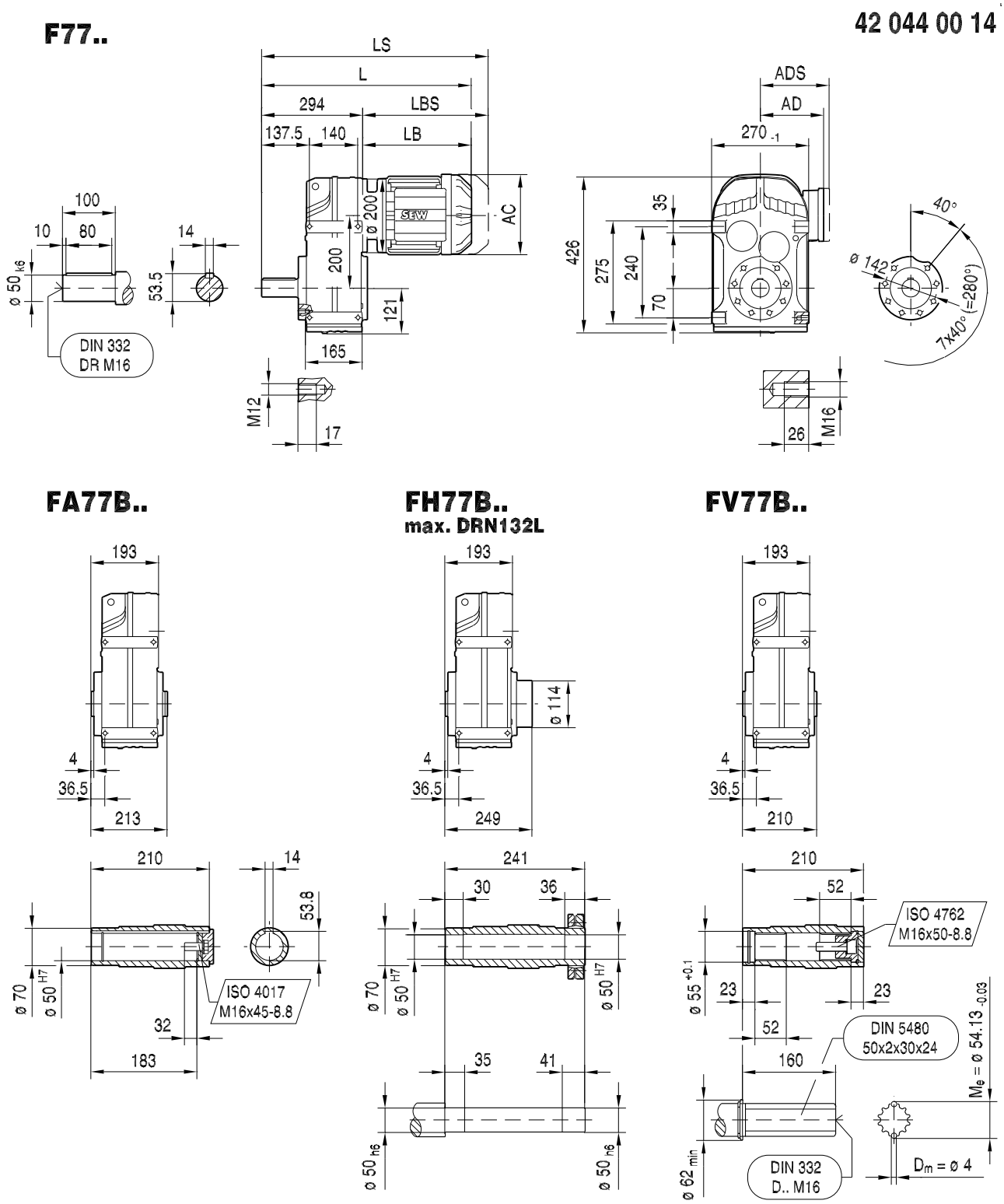


| (→ 🗎 155) | DRN80M | DRN90S | DRN90L | DRN100LS | DRN100L | DRN112M | DRN132S | DRN132M | DRN132L | DRN160M |
|---|---|---|---|---|---|---|---|---|---|---|
| **AC** | 156 | 179 | 179 | 197 | 197 | 221 | 221 | 261 | 261 | 314 |
| **AD** | 128 | 140 | 140 | 157 | 157 | 170 | 170 | 228 | 228 | 253 |
| **ADS** | 139 | 150 | 150 | 158 | 158 | 172 | 172 | 228 | 228 | 253 |
| **L** | 562 | 564 | 596 | 592 | 642 | 673 | 723 | 741 | 767 | 833 |
| **LS** | 643 | 657 | 689 | 686 | 736 | 785 | 835 | 879 | 904 | 1022 |
| **LB** | 268 | 270 | 302 | 298 | 348 | 379 | 429 | 447 | 473 | 539 |
| **LBS** | 349 | 363 | 395 | 392 | 442 | 491 | 541 | 585 | 610 | 728 |

21933170/DE – 11/2015

## FF77..

42 045 00 14

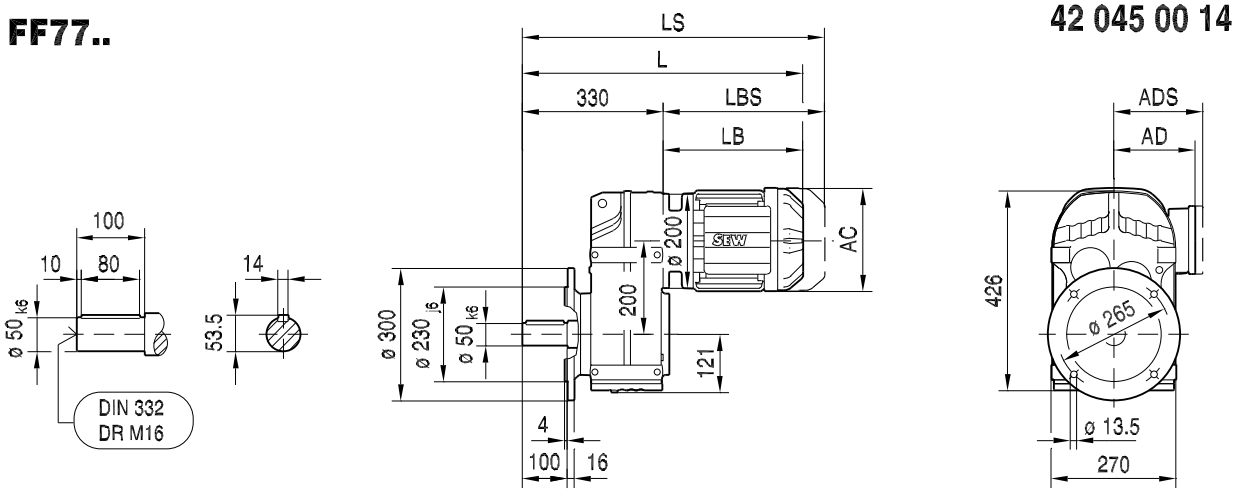


## FAF77..

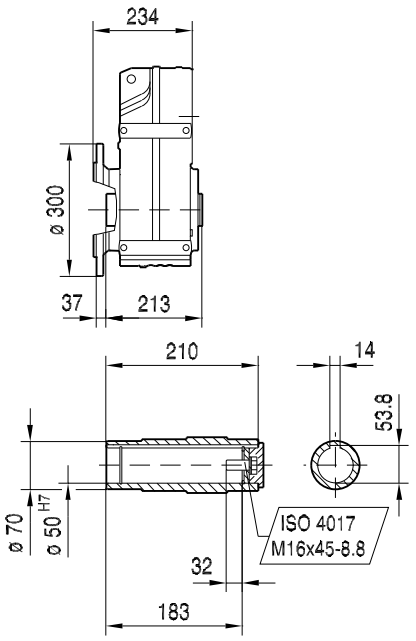


## FHF77..
max. DRN132L

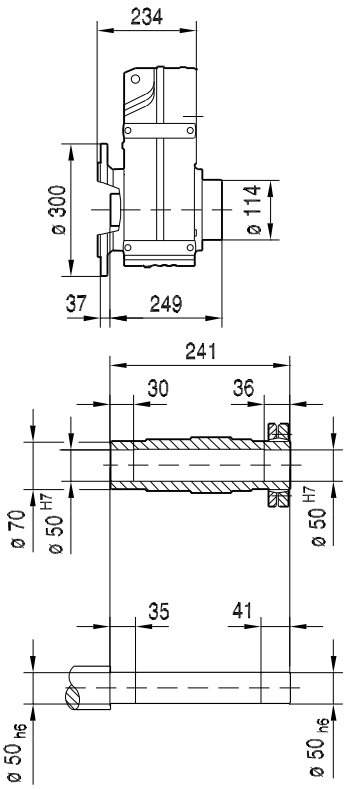


## FVF77..

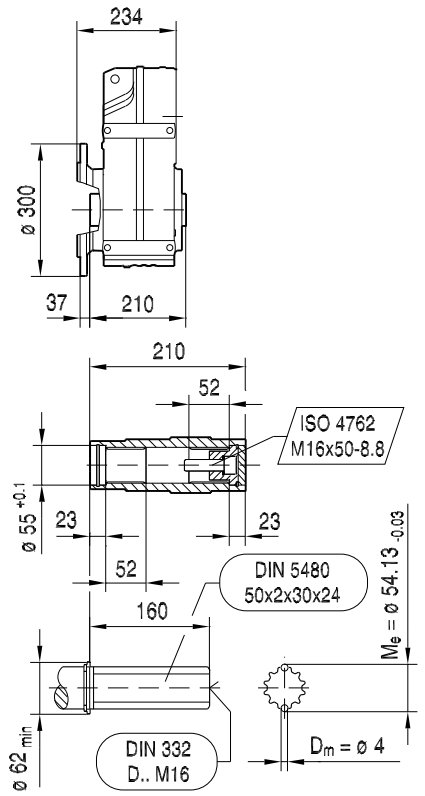


| (→ 🗎 155) | DRN80M | DRN90S | DRN90L | DRN100LS | DRN100L | DRN112M | DRN132S | DRN132M | DRN132L | DRN160M |
|---|---|---|---|---|---|---|---|---|---|---|
| **AC** | 156 | 179 | 179 | 197 | 197 | 221 | 221 | 261 | 261 | 314 |
| **AD** | 128 | 140 | 140 | 157 | 157 | 170 | 170 | 228 | 228 | 253 |
| **ADS** | 139 | 150 | 150 | 158 | 158 | 172 | 172 | 228 | 228 | 253 |
| **L** | 598 | 600 | 632 | 628 | 678 | 709 | 759 | 777 | 803 | 869 |
| **LS** | 679 | 693 | 725 | 722 | 772 | 821 | 871 | 915 | 940 | 1058 |
| **LB** | 268 | 270 | 302 | 298 | 348 | 379 | 429 | 447 | 473 | 539 |
| **LBS** | 349 | 363 | 395 | 392 | 442 | 491 | 541 | 585 | 610 | 728 |

21933170/DE – 11/2015

## FA77..

42 046 00 14

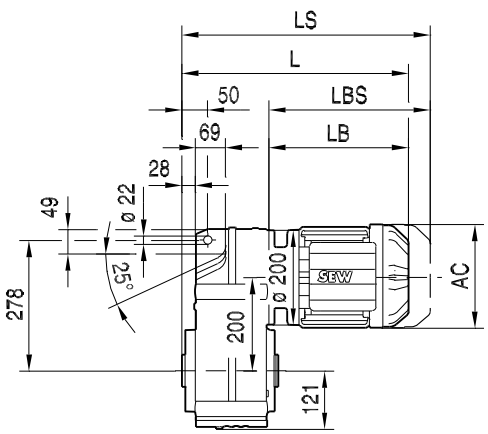


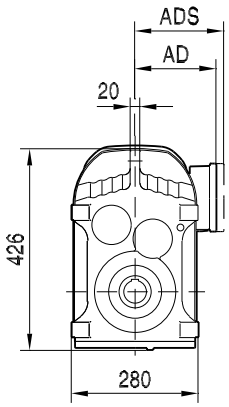


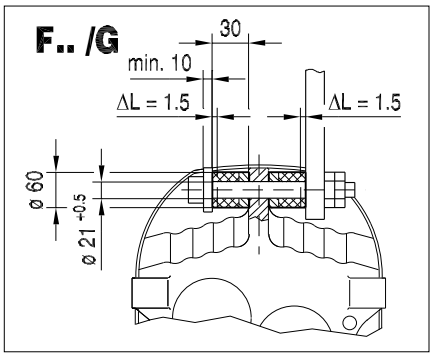


## FA77..

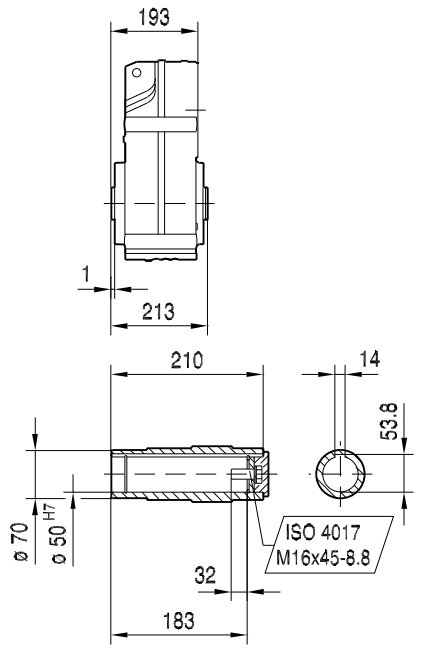


## FH77..
**max. DRN132L**

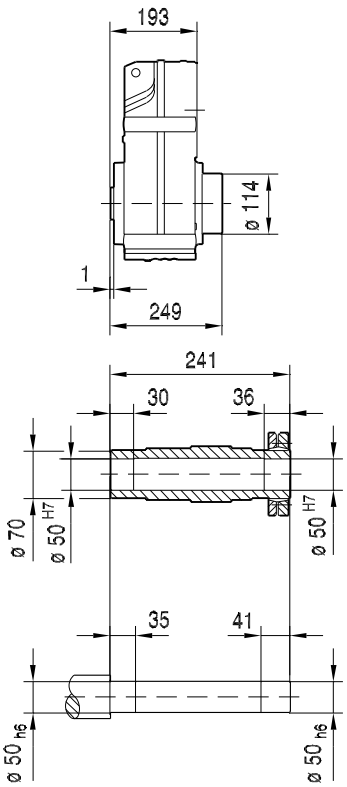


## FV77..

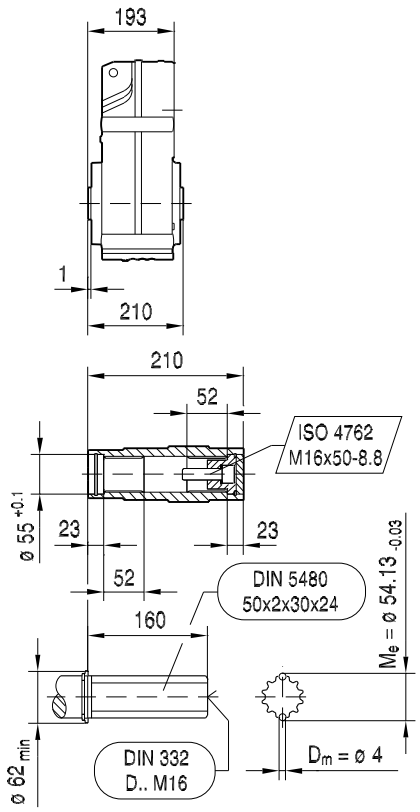


| (→ 🗎 155) | DRN80M | DRN90S | DRN90L | DRN100LS | DRN100L | DRN112M | DRN132S | DRN132M | DRN132L | DRN160M |
|---|---|---|---|---|---|---|---|---|---|---|
| **AC** | 156 | 179 | 179 | 197 | 197 | 221 | 221 | 261 | 261 | 314 |
| **AD** | 128 | 140 | 140 | 157 | 157 | 170 | 170 | 228 | 228 | 253 |
| **ADS** | 139 | 150 | 150 | 158 | 158 | 172 | 172 | 228 | 228 | 253 |
| **L** | 461 | 463 | 495 | 491 | 541 | 572 | 622 | 640 | 666 | 732 |
| **LS** | 542 | 556 | 588 | 585 | 635 | 684 | 734 | 778 | 803 | 921 |
| **LB** | 268 | 270 | 302 | 298 | 348 | 379 | 429 | 447 | 473 | 539 |
| **LBS** | 349 | 363 | 395 | 392 | 442 | 491 | 541 | 585 | 610 | 728 |

21933170/DE – 11/2015

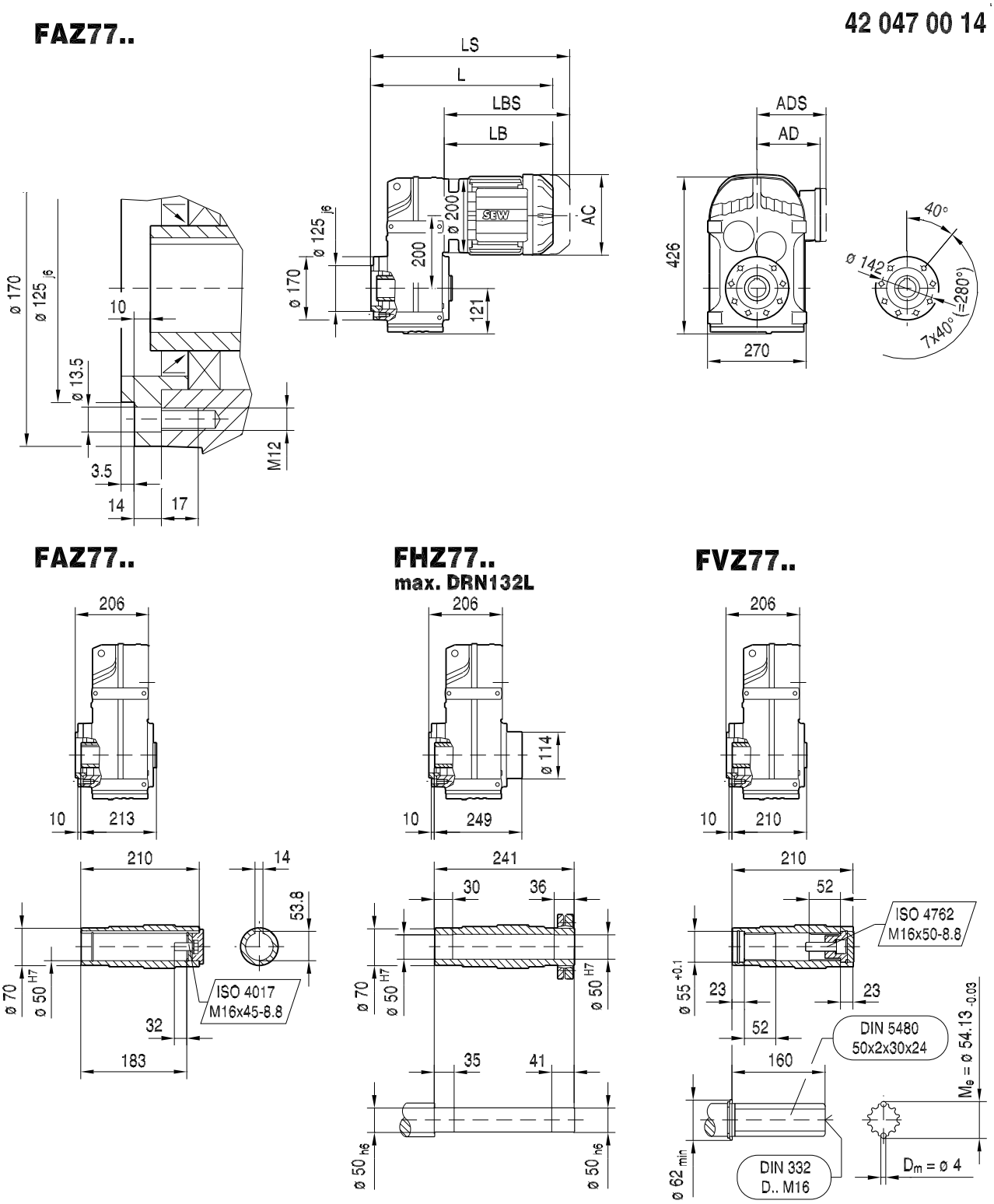


| (→ 🗎 155) | DRN80M | DRN90S | DRN90L | DRN100LS | DRN100L | DRN112M | DRN132S | DRN132M | DRN132L | DRN160M |
|---|---|---|---|---|---|---|---|---|---|---|
| **AC** | 156 | 179 | 179 | 197 | 197 | 221 | 221 | 261 | 261 | 314 |
| **AD** | 128 | 140 | 140 | 157 | 157 | 170 | 170 | 228 | 228 | 253 |
| **ADS** | 139 | 150 | 150 | 158 | 158 | 172 | 172 | 228 | 228 | 253 |
| **L** | 474 | 476 | 508 | 504 | 554 | 585 | 635 | 653 | 679 | 745 |
| **LS** | 555 | 569 | 601 | 598 | 648 | 697 | 747 | 791 | 816 | 934 |
| **LB** | 268 | 270 | 302 | 298 | 348 | 379 | 429 | 447 | 473 | 539 |
| **LBS** | 349 | 363 | 395 | 392 | 442 | 491 | 541 | 585 | 610 | 728 |

21933170/DE – 11/2015

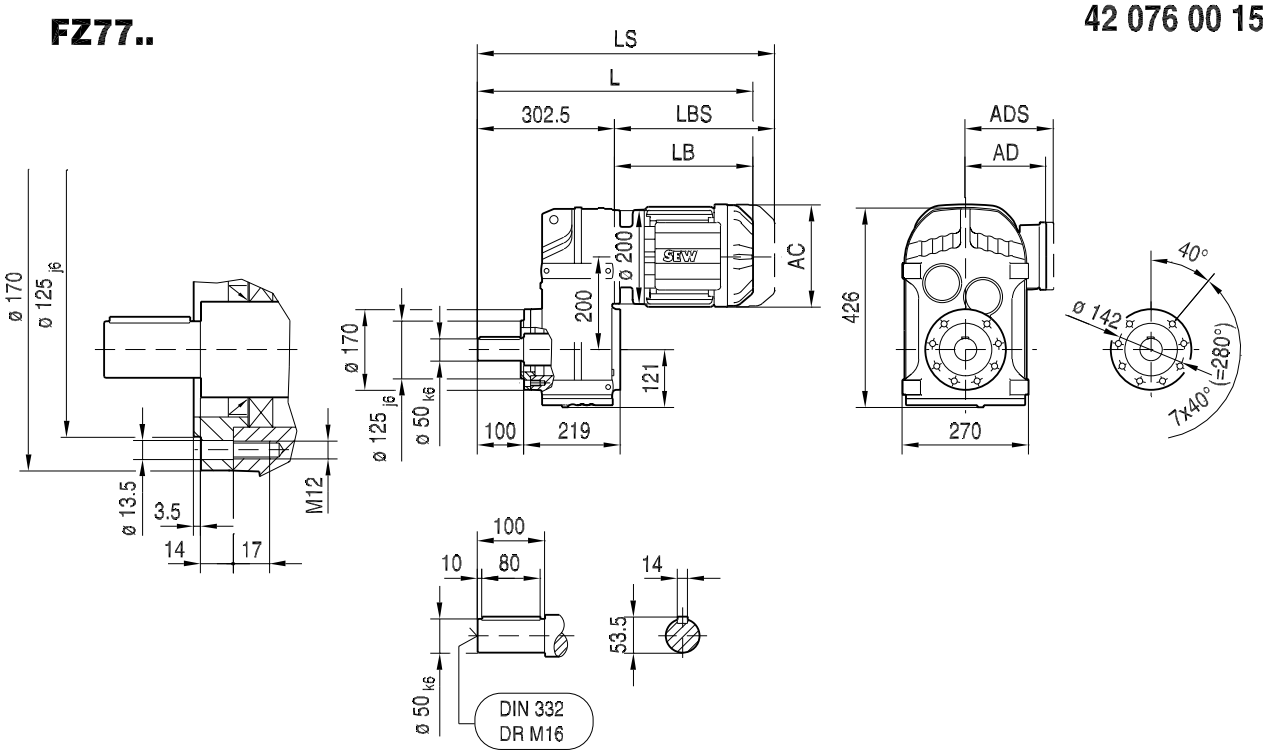


| (→ 🗎 155) | DRN80M | DRN90S | DRN90L | DRN100LS | DRN100L | DRN112M | DRN132S | DRN132M | DRN132L | DRN160M |
|---|---|---|---|---|---|---|---|---|---|---|
| **AC** | 156 | 179 | 179 | 197 | 197 | 221 | 221 | 261 | 261 | 314 |
| **AD** | 128 | 140 | 140 | 157 | 157 | 170 | 170 | 228 | 228 | 253 |
| **ADS** | 139 | 150 | 150 | 158 | 158 | 172 | 172 | 228 | 228 | 253 |
| **L** | 571 | 572 | 604 | 601 | 651 | 682 | 732 | 750 | 775 | 842 |
| **LS** | 652 | 666 | 698 | 694 | 744 | 794 | 844 | 887 | 912 | 1031 |
| **LB** | 268 | 270 | 302 | 298 | 348 | 379 | 429 | 447 | 473 | 539 |
| **LBS** | 349 | 363 | 395 | 392 | 442 | 491 | 541 | 585 | 610 | 728 |

21933170/DE – 11/2015

**FT77..**

**42 048 00 14**

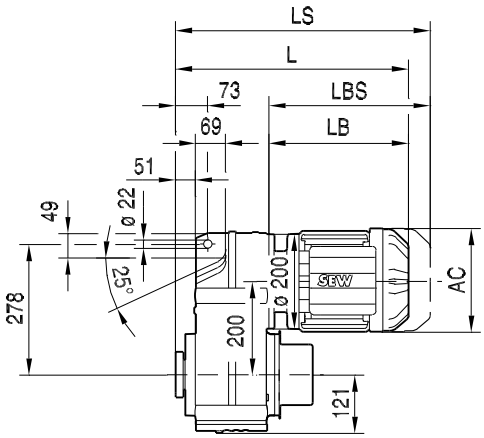


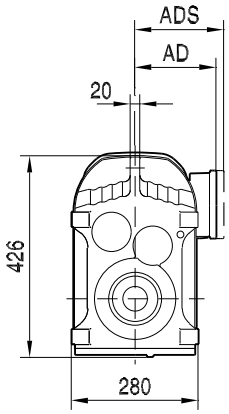


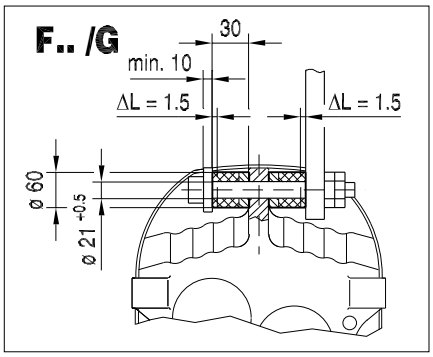


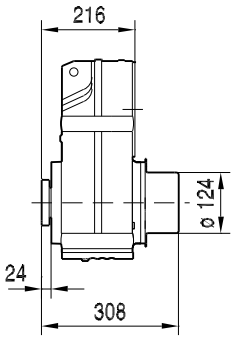


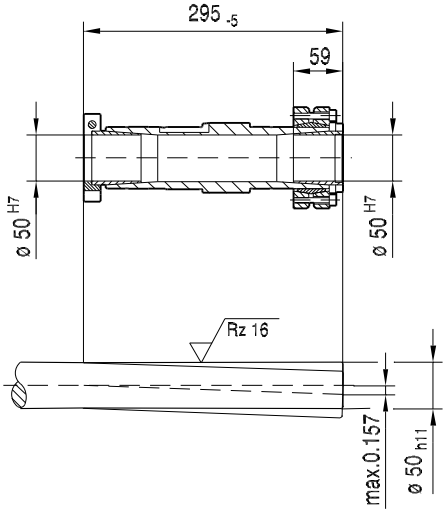


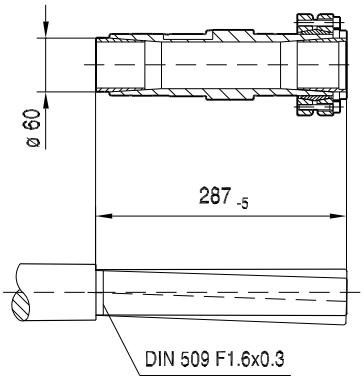


| (→ 🗎 155) | DR71S | DR71M | DRN80M | DRN90S | DRN90L | DRN100LS | DRN100L | DRN112M | DRN132S | DRN132M | DRN132L |
|---|---|---|---|---|---|---|---|---|---|---|---|
| **AC** | 139 | 139 | 156 | 179 | 179 | 197 | 197 | 221 | 221 | 261 | 261 |
| **AD** | 119 | 119 | 128 | 140 | 140 | 157 | 157 | 170 | 170 | 228 | 228 |
| **ADS** | 129 | 129 | 139 | 150 | 150 | 158 | 158 | 172 | 172 | 228 | 228 |
| **L** | 405 | 430 | 484 | 486 | 518 | 514 | 564 | 595 | 645 | 663 | 689 |
| **LS** | 473 | 498 | 565 | 579 | 611 | 608 | 658 | 707 | 757 | 801 | 826 |
| **LB** | 189 | 214 | 268 | 270 | 302 | 298 | 348 | 379 | 429 | 447 | 473 |
| **LBS** | 257 | 282 | 349 | 363 | 395 | 392 | 442 | 491 | 541 | 585 | 610 |

21933170/DE – 11/2015

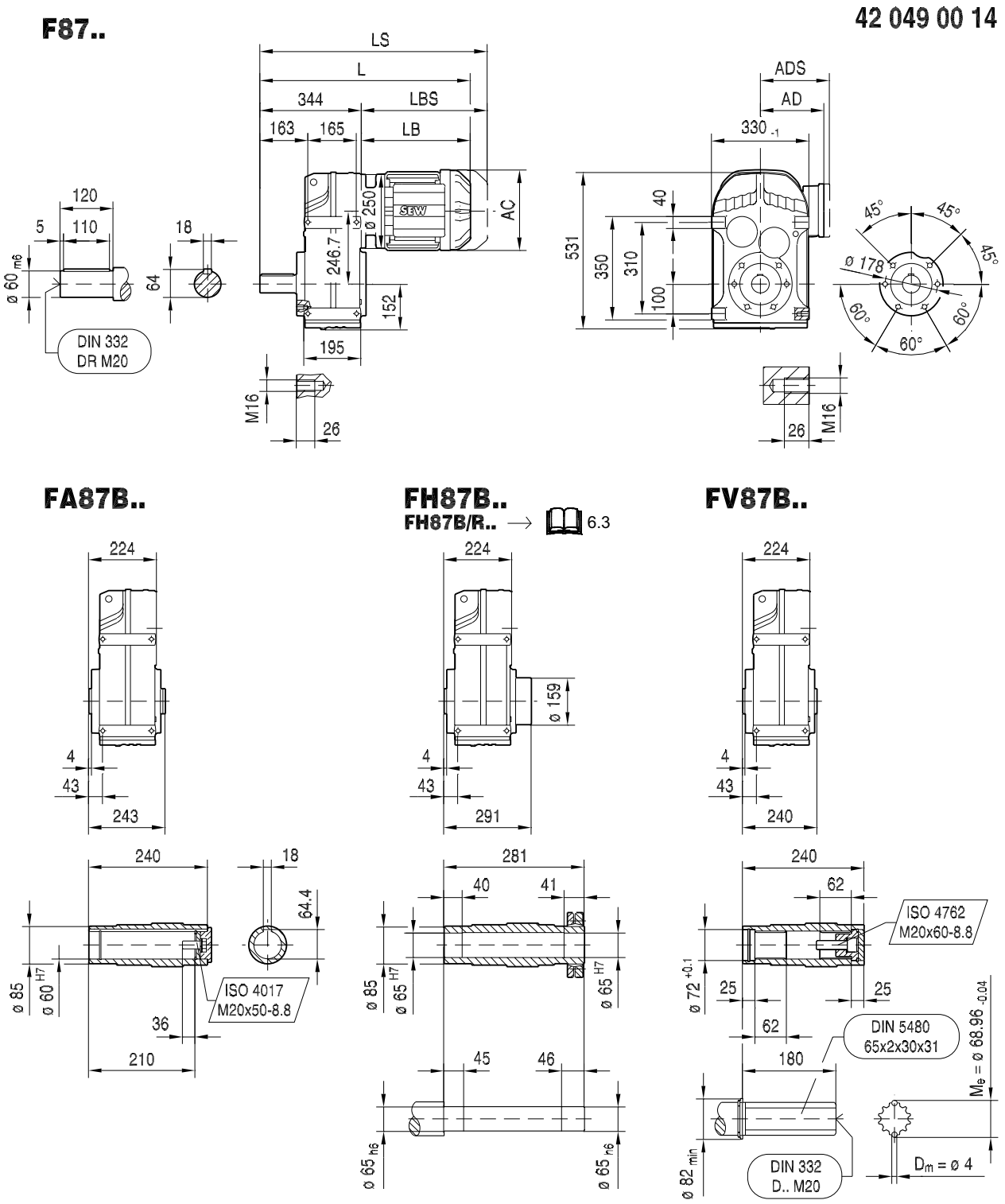


| (→ 🗎 155) | DRN90L | DRN100LS | DRN100L | DRN112M | DRN132S | DRN132M | DRN132L | DRN160M | DRN160L | DRN180.. |
|---|---|---|---|---|---|---|---|---|---|---|
| **AC** | 179 | 197 | 197 | 221 | 221 | 261 | 261 | 314 | 314 | 357 |
| **AD** | 140 | 157 | 157 | 170 | 170 | 228 | 228 | 253 | 253 | 268 |
| **ADS** | 150 | 158 | 158 | 172 | 172 | 228 | 228 | 253 | 253 | 268 |
| **L** | 641 | 637 | 687 | 718 | 768 | 786 | 812 | 878 | 878 | 901 |
| **LS** | 734 | 731 | 781 | 830 | 880 | 924 | 949 | 1067 | 1067 | 1090 |
| **LB** | 297 | 293 | 343 | 374 | 424 | 442 | 468 | 534 | 534 | 557 |
| **LBS** | 390 | 387 | 437 | 486 | 536 | 580 | 605 | 723 | 723 | 746 |

21933170/DE – 11/2015

## FF87..

42 050 00 14

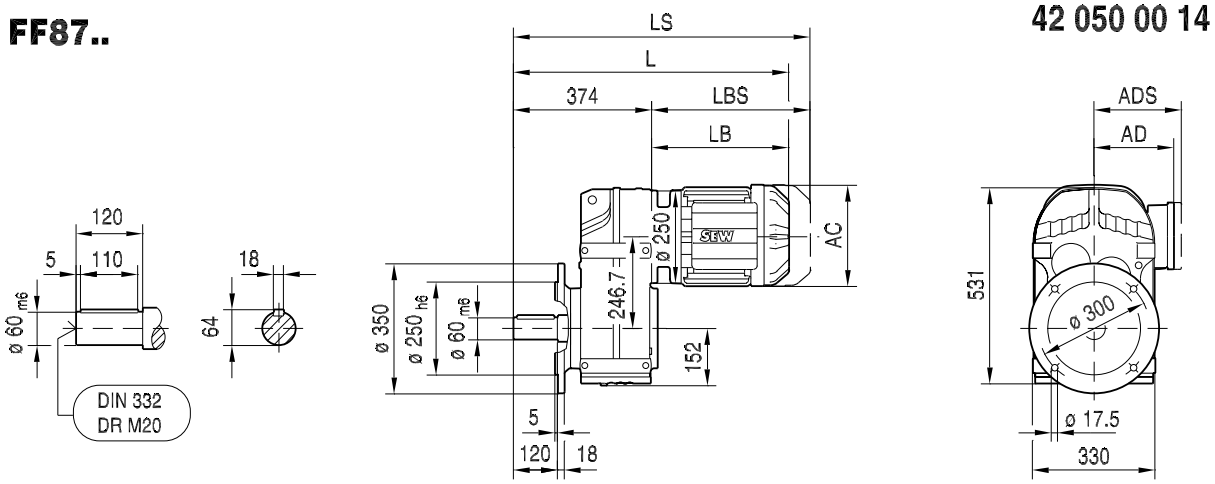


## FAF87..

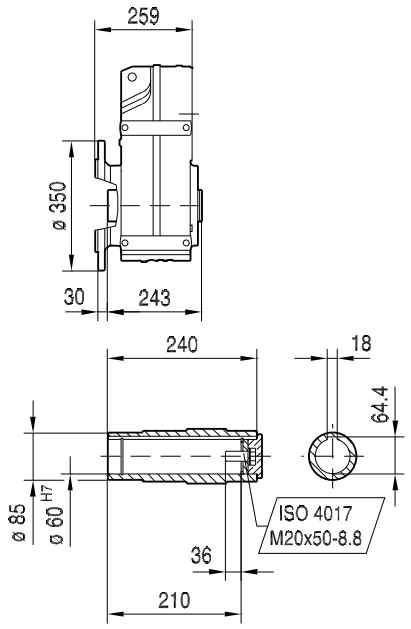


## FHF87..

FHF87/R.. → 6.3

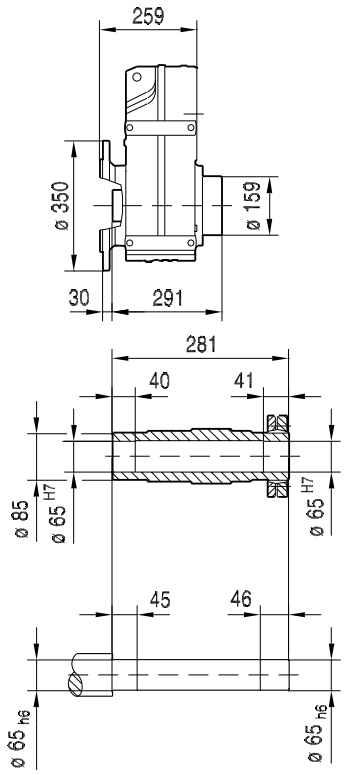


## FVF87..

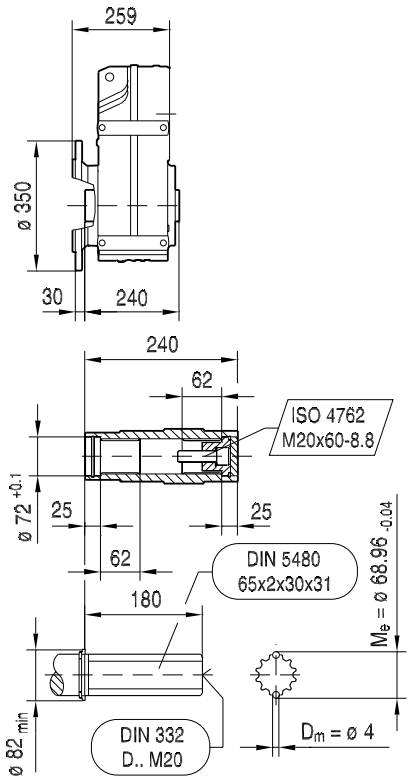


| (→ 🗎 155) | DRN90L | DRN100LS | DRN100L | DRN112M | DRN132S | DRN132M | DRN132L | DRN160M | DRN160L | DRN180.. |
|---|---|---|---|---|---|---|---|---|---|---|
| **AC** | 179 | 197 | 197 | 221 | 221 | 261 | 261 | 314 | 314 | 357 |
| **AD** | 140 | 157 | 157 | 170 | 170 | 228 | 228 | 253 | 253 | 268 |
| **ADS** | 150 | 158 | 158 | 172 | 172 | 228 | 228 | 253 | 253 | 268 |
| **L** | 671 | 667 | 717 | 748 | 798 | 816 | 842 | 908 | 908 | 931 |
| **LS** | 764 | 761 | 811 | 860 | 910 | 954 | 979 | 1097 | 1097 | 1120 |
| **LB** | 297 | 293 | 343 | 374 | 424 | 442 | 468 | 534 | 534 | 557 |
| **LBS** | 390 | 387 | 437 | 486 | 536 | 580 | 605 | 723 | 723 | 746 |

21933170/DE – 11/2015

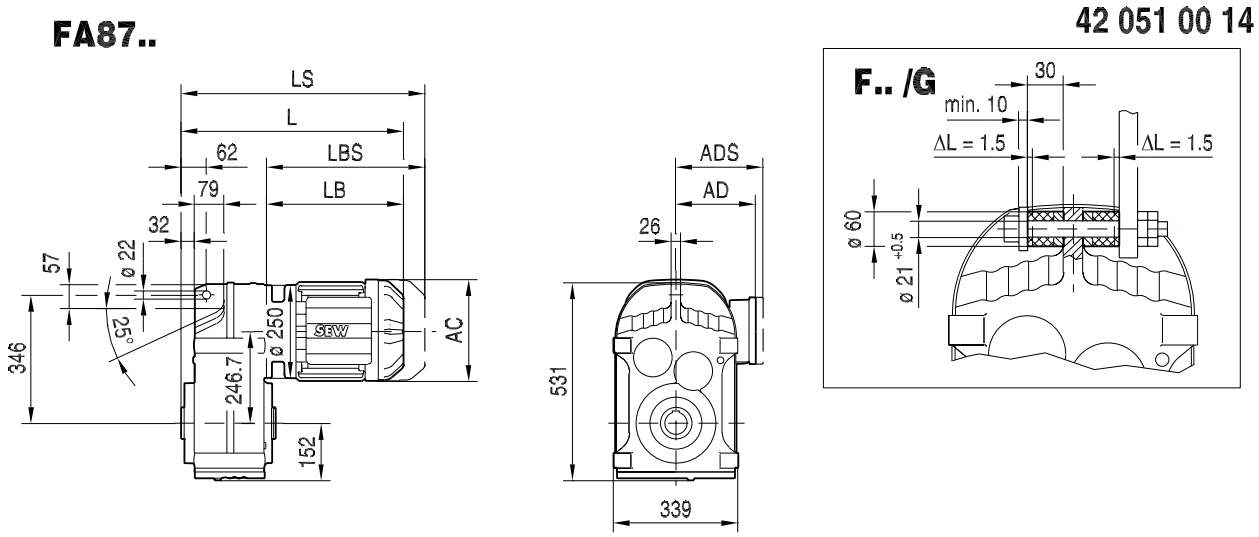


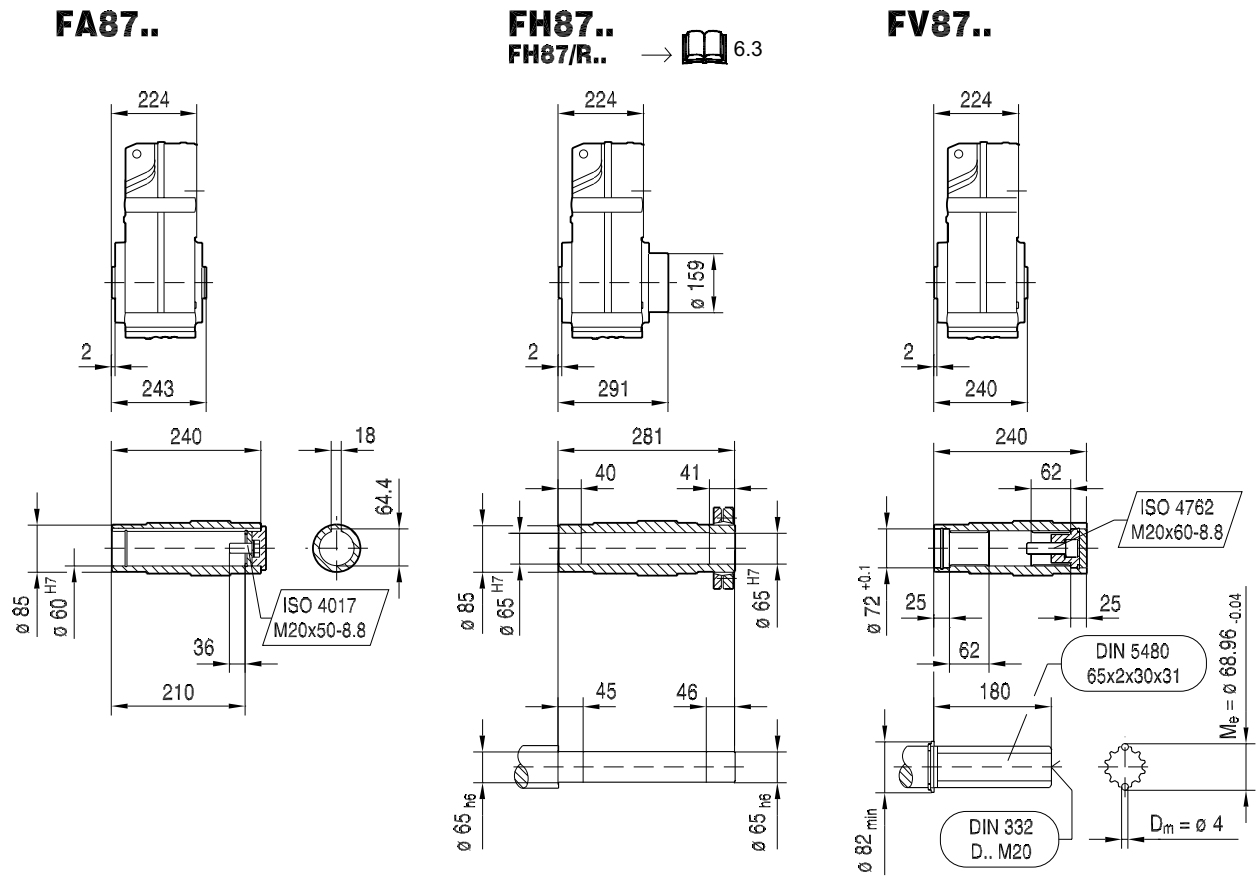


| (→ 155) | DRN90L | DRN100LS | DRN100L | DRN112M | DRN132S | DRN132M | DRN132L | DRN160M | DRN160L | DRN180.. |
|---|---|---|---|---|---|---|---|---|---|---|
| **AC** | 179 | 197 | 197 | 221 | 221 | 261 | 261 | 314 | 314 | 357 |
| **AD** | 140 | 157 | 157 | 170 | 170 | 228 | 228 | 253 | 253 | 268 |
| **ADS** | 150 | 158 | 158 | 172 | 172 | 228 | 228 | 253 | 253 | 268 |
| **L** | 521 | 517 | 567 | 598 | 648 | 666 | 692 | 758 | 758 | 781 |
| **LS** | 614 | 611 | 661 | 710 | 760 | 804 | 829 | 947 | 947 | 970 |
| **LB** | 297 | 293 | 343 | 374 | 424 | 442 | 468 | 534 | 534 | 557 |
| **LBS** | 390 | 387 | 437 | 486 | 536 | 580 | 605 | 723 | 723 | 746 |

21933170/DE – 11/2015

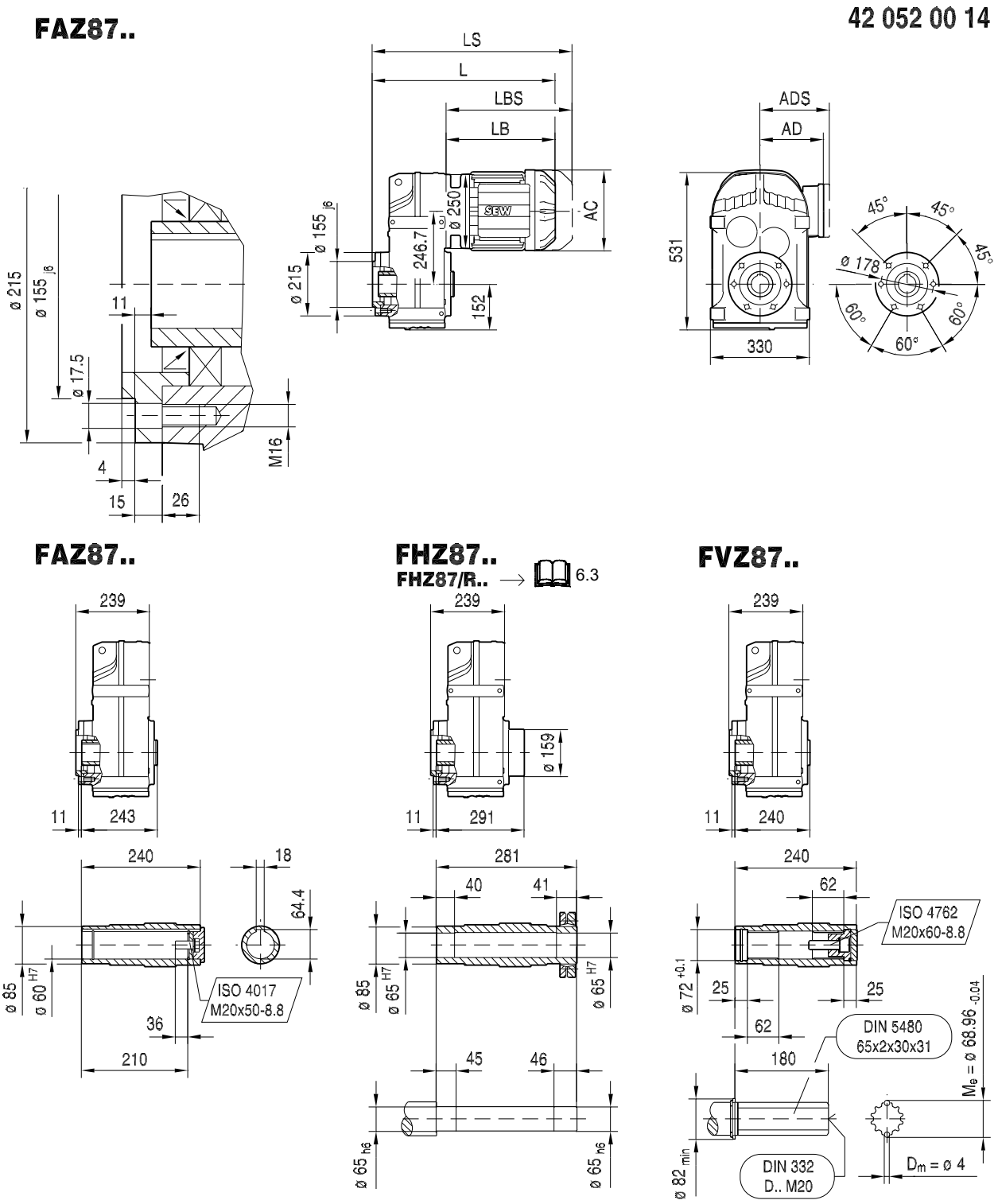


| (→ 🗎 155) | DRN90L | DRN100LS | DRN100L | DRN112M | DRN132S | DRN132M | DRN132L | DRN160M | DRN160L | DRN180.. |
|---|---|---|---|---|---|---|---|---|---|---|
| **AC** | 179 | 197 | 197 | 221 | 221 | 261 | 261 | 314 | 314 | 357 |
| **AD** | 140 | 157 | 157 | 170 | 170 | 228 | 228 | 253 | 253 | 268 |
| **ADS** | 150 | 158 | 158 | 172 | 172 | 228 | 228 | 253 | 253 | 268 |
| **L** | 536 | 532 | 582 | 613 | 663 | 681 | 707 | 773 | 773 | 796 |
| **LS** | 629 | 626 | 676 | 725 | 775 | 819 | 844 | 962 | 962 | 985 |
| **LB** | 297 | 293 | 343 | 374 | 424 | 442 | 468 | 534 | 534 | 557 |
| **LBS** | 390 | 387 | 437 | 486 | 536 | 580 | 605 | 723 | 723 | 746 |

21933170/DE – 11/2015

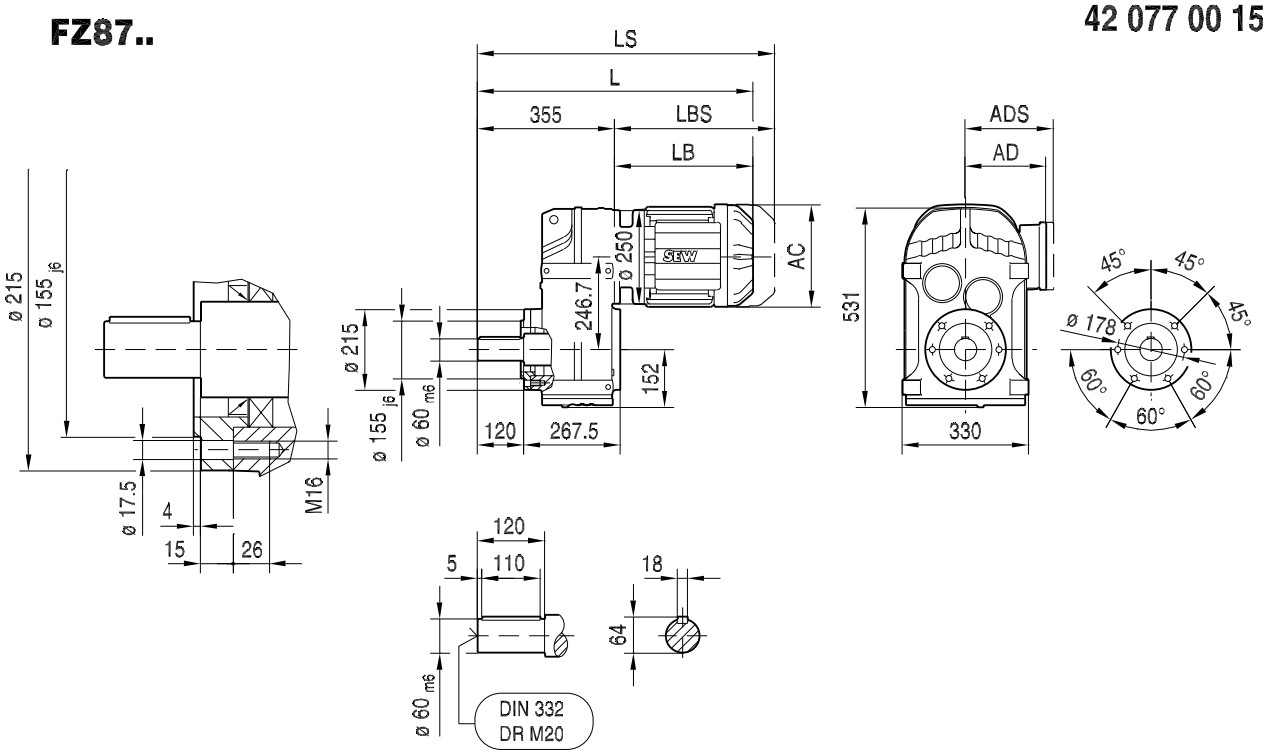


| (→ 🗎 155) | DRN90L | DRN100LS | DRN100L | DRN112M | DRN132S | DRN132M | DRN132L | DRN160M | DRN160L | DRN180.. |
|---|---|---|---|---|---|---|---|---|---|---|
| **AC** | 179 | 197 | 197 | 221 | 221 | 261 | 261 | 314 | 314 | 357 |
| **AD** | 140 | 157 | 157 | 170 | 170 | 228 | 228 | 253 | 253 | 268 |
| **ADS** | 150 | 158 | 158 | 172 | 172 | 228 | 228 | 253 | 253 | 268 |
| **L** | 652 | 648 | 698 | 729 | 779 | 797 | 823 | 889 | 889 | 912 |
| **LS** | 745 | 742 | 792 | 841 | 891 | 935 | 960 | 1078 | 1078 | 1101 |
| **LB** | 297 | 293 | 343 | 374 | 424 | 442 | 468 | 534 | 534 | 557 |
| **LBS** | 390 | 387 | 437 | 486 | 536 | 580 | 605 | 723 | 723 | 746 |

21933170/DE – 11/2015

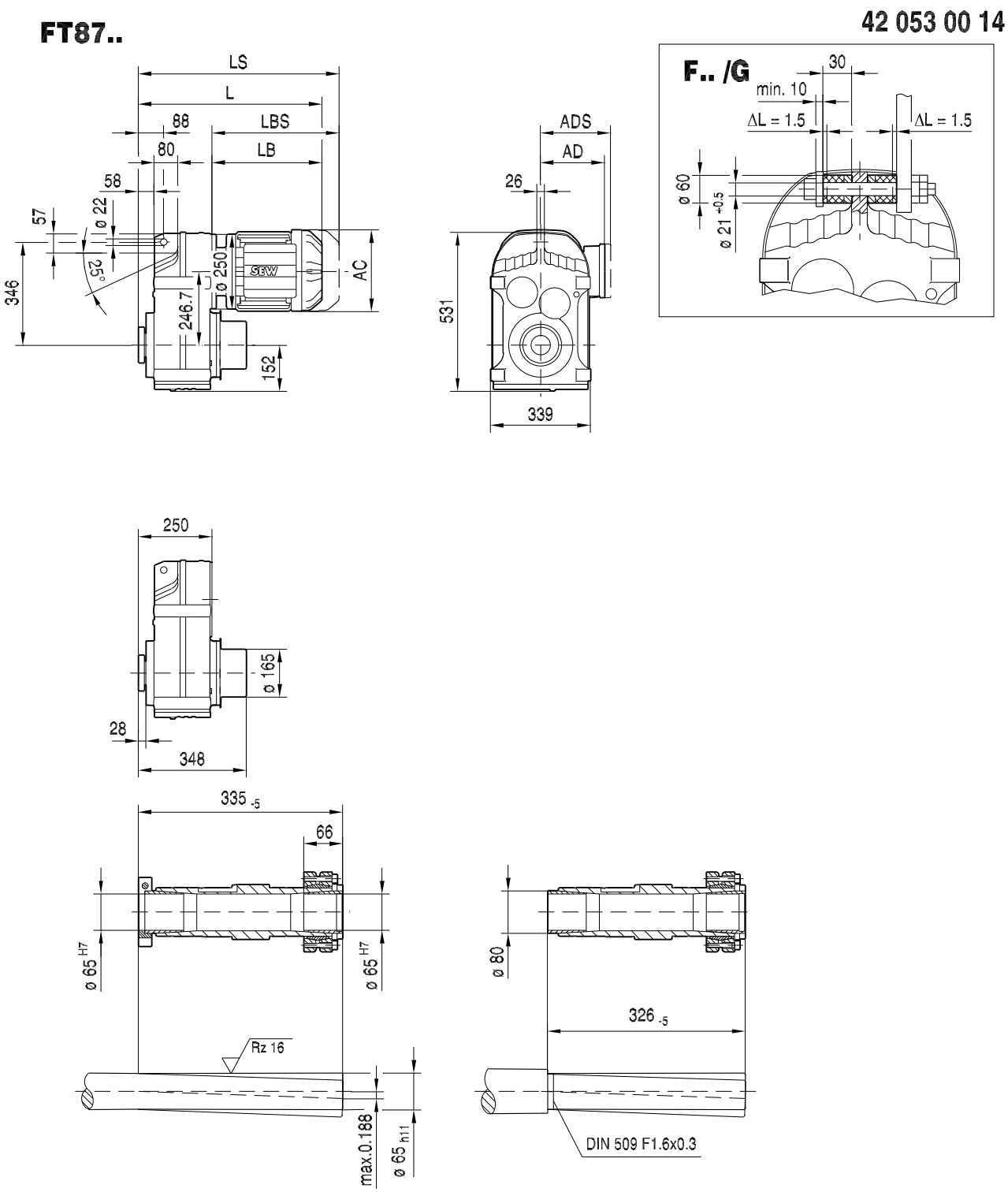


| (→ 🗎 155) | DRN90L | DRN100LS | DRN100L | DRN112M | DRN132S | DRN132M | DRN132L | DRN160M | DRN160L | DRN180.. |
|---|---|---|---|---|---|---|---|---|---|---|
| **AC** | 179 | 197 | 197 | 221 | 221 | 261 | 261 | 314 | 314 | 357 |
| **AD** | 140 | 157 | 157 | 170 | 170 | 228 | 228 | 253 | 253 | 268 |
| **ADS** | 150 | 158 | 158 | 172 | 172 | 228 | 228 | 253 | 253 | 268 |
| **L** | 547 | 543 | 593 | 624 | 674 | 692 | 718 | 784 | 784 | 807 |
| **LS** | 640 | 637 | 687 | 736 | 786 | 830 | 855 | 973 | 973 | 996 |
| **LB** | 297 | 293 | 343 | 374 | 424 | 442 | 468 | 534 | 534 | 557 |
| **LBS** | 390 | 387 | 437 | 486 | 536 | 580 | 605 | 723 | 723 | 746 |

21933170/DE – 11/2015

## F97..

42 054 00 14

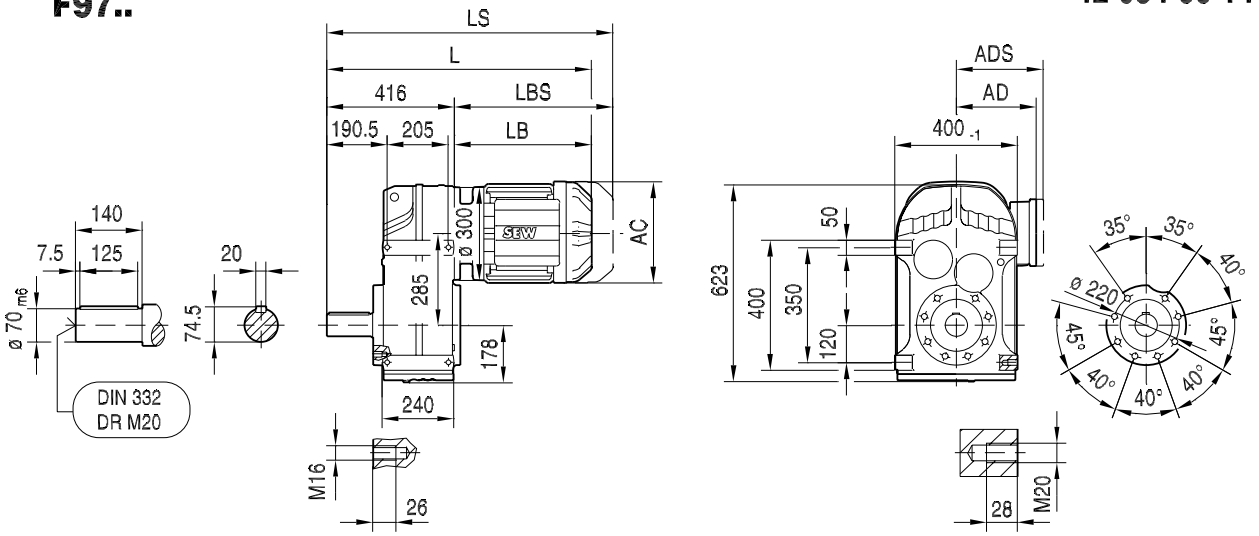


## FA97B..

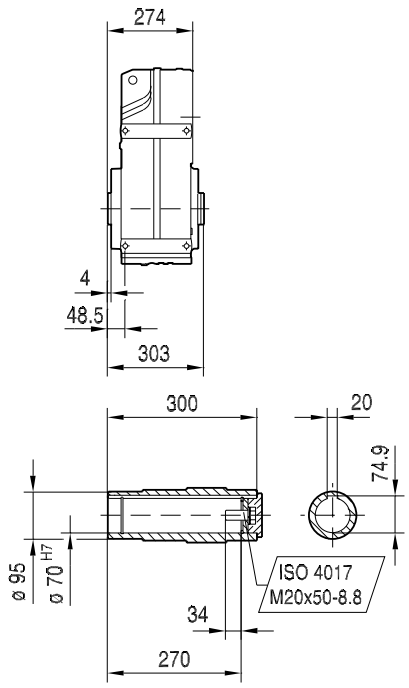


## FH97B..

FH97B/R.. → 6.3

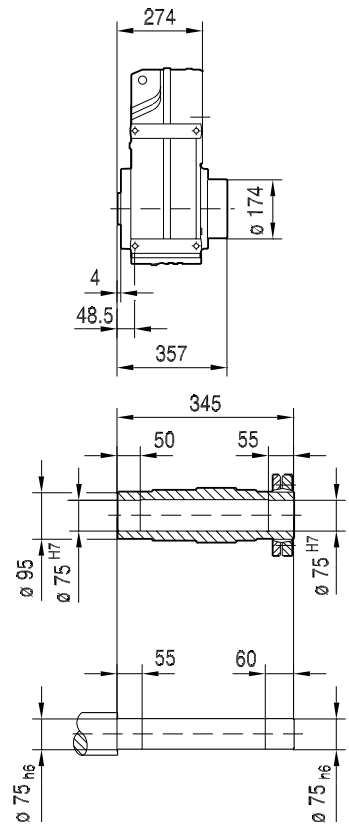


## FV97B..

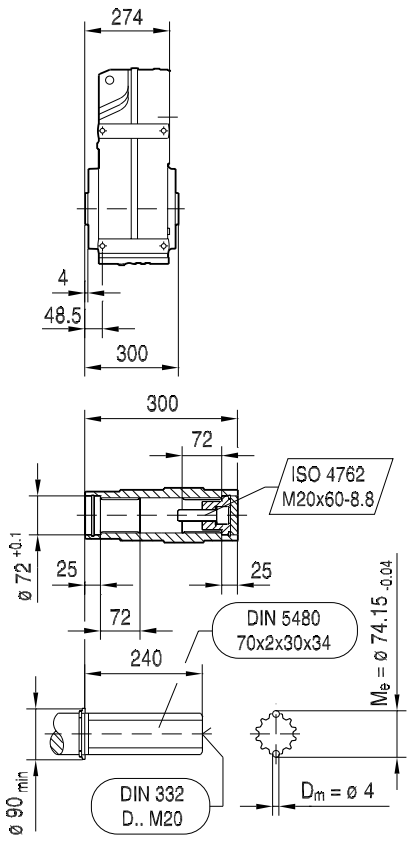


| (→ 155) | DRN100LS | DRN100L | DRN112M | DRN132S | DRN132M | DRN132L | DRN160M | DRN160L | DRN180.. | DRN200L |
|---|---|---|---|---|---|---|---|---|---|---|
| **AC** | 197 | 197 | 221 | 221 | 261 | 261 | 314 | 314 | 357 | 394 |
| **AD** | 157 | 157 | 170 | 170 | 228 | 228 | 253 | 253 | 268 | 283 |
| **ADS** | 158 | 158 | 172 | 172 | 228 | 228 | 253 | 253 | 268 | 283 |
| **L** | 704 | 754 | 785 | 835 | 853 | 879 | 945 | 945 | 968 | 1078 |
| **LS** | 798 | 848 | 897 | 947 | 991 | 1016 | 1134 | 1134 | 1157 | 1283 |
| **LB** | 288 | 338 | 369 | 419 | 437 | 463 | 529 | 529 | 552 | 662 |
| **LBS** | 382 | 432 | 481 | 531 | 575 | 600 | 718 | 718 | 741 | 867 |

21933170/DE – 11/2015

## FF97..

42 055 00 14

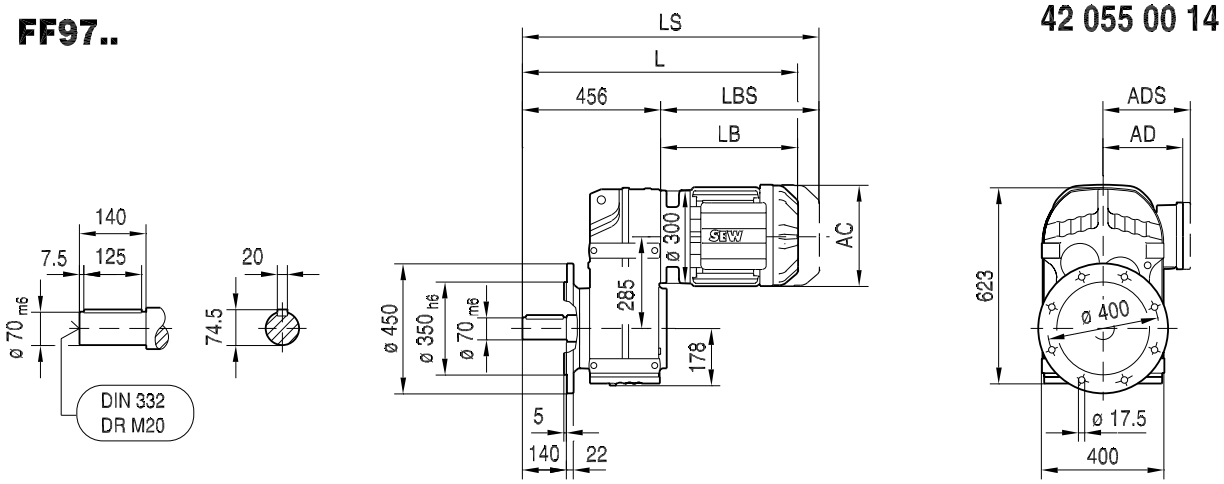


## FAF97..

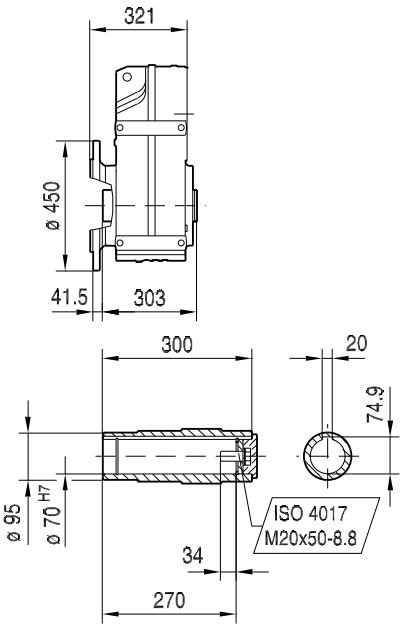


## FHF97..

FHF97/R.. → 6.3

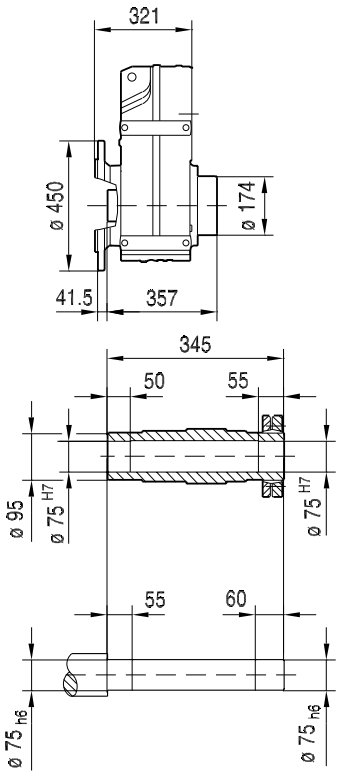


## FVF97..

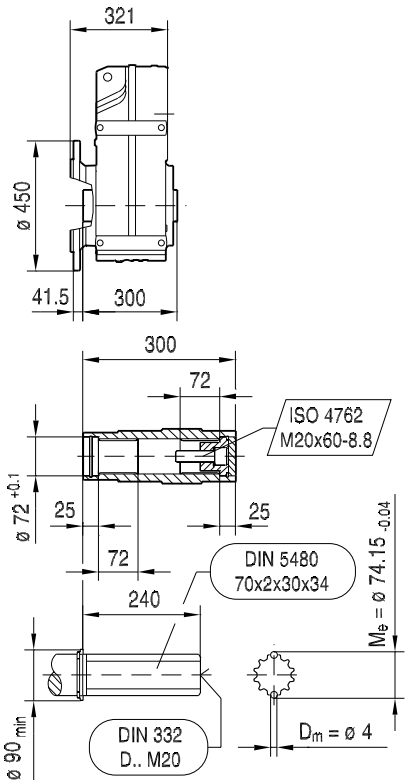


| (→ 155) | DRN100LS | DRN100L | DRN112M | DRN132S | DRN132M | DRN132L | DRN160M | DRN160L | DRN180.. | DRN200L |
|---|---|---|---|---|---|---|---|---|---|---|
| **AC** | 197 | 197 | 221 | 221 | 261 | 261 | 314 | 314 | 357 | 394 |
| **AD** | 157 | 157 | 170 | 170 | 228 | 228 | 253 | 253 | 268 | 283 |
| **ADS** | 158 | 158 | 172 | 172 | 228 | 228 | 253 | 253 | 268 | 283 |
| **L** | 744 | 794 | 825 | 875 | 893 | 919 | 985 | 985 | 1008 | 1118 |
| **LS** | 838 | 888 | 937 | 987 | 1031 | 1056 | 1174 | 1174 | 1197 | 1323 |
| **LB** | 288 | 338 | 369 | 419 | 437 | 463 | 529 | 529 | 552 | 662 |
| **LBS** | 382 | 432 | 481 | 531 | 575 | 600 | 718 | 718 | 741 | 867 |

21933170/DE – 11/2015

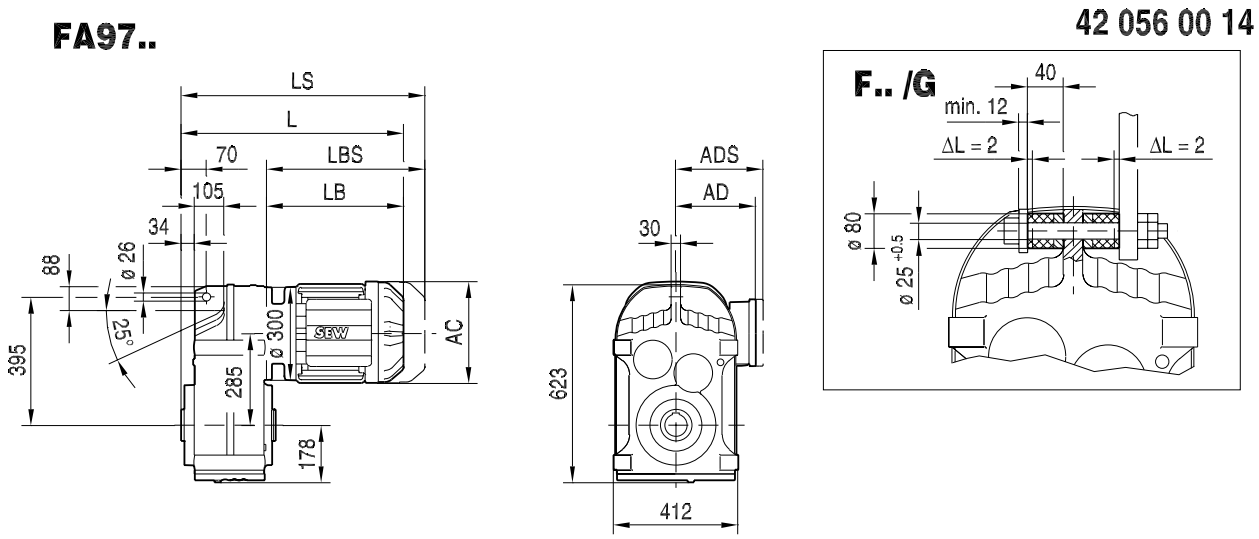


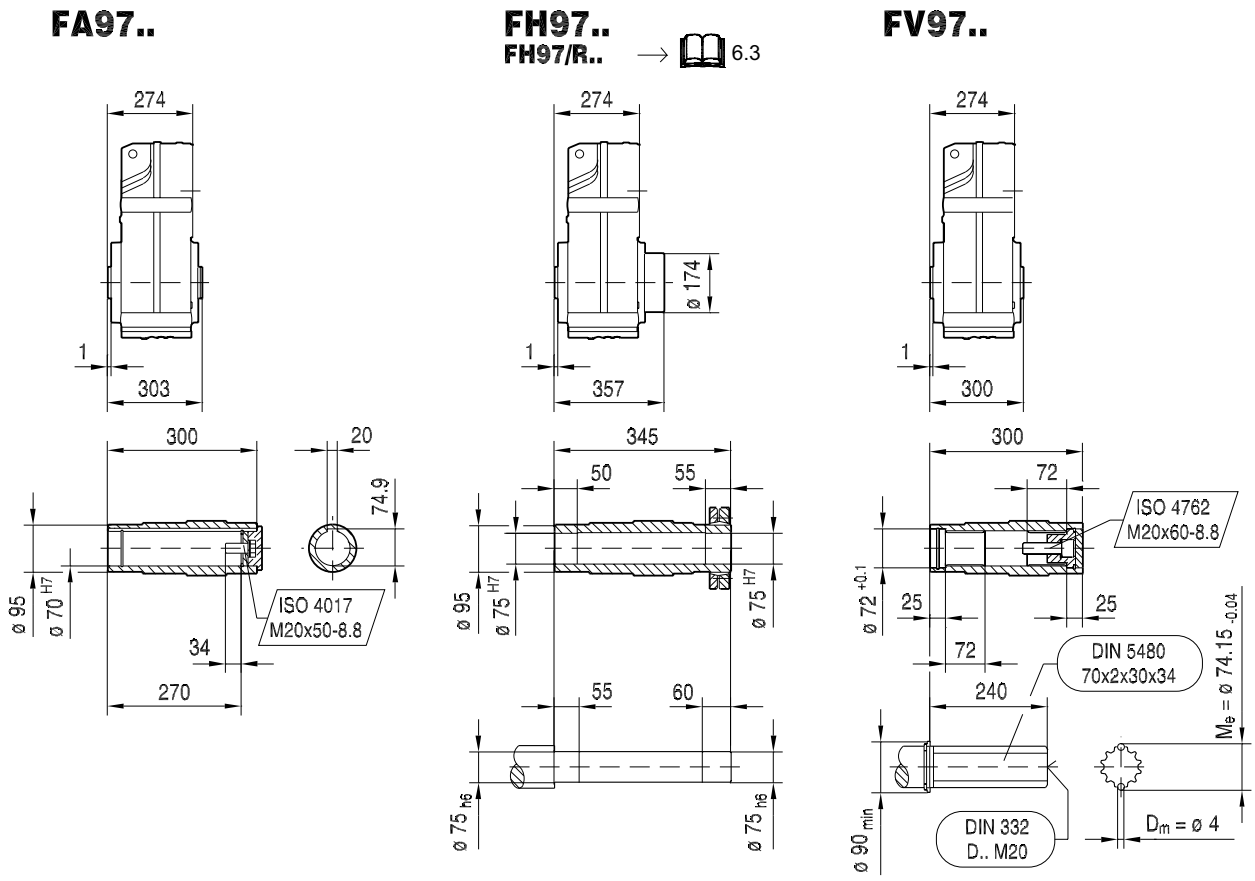


| (→ 155) | DRN100LS | DRN100L | DRN112M | DRN132S | DRN132M | DRN132L | DRN160M | DRN160L | DRN180.. | DRN200L |
|---|---|---|---|---|---|---|---|---|---|---|
| **AC** | 197 | 197 | 221 | 221 | 261 | 261 | 314 | 314 | 357 | 394 |
| **AD** | 157 | 157 | 170 | 170 | 228 | 228 | 253 | 253 | 268 | 283 |
| **ADS** | 158 | 158 | 172 | 172 | 228 | 228 | 253 | 253 | 268 | 283 |
| **L** | 562 | 612 | 643 | 693 | 711 | 737 | 803 | 803 | 826 | 936 |
| **LS** | 656 | 706 | 755 | 805 | 849 | 874 | 992 | 992 | 1015 | 1141 |
| **LB** | 288 | 338 | 369 | 419 | 437 | 463 | 529 | 529 | 552 | 662 |
| **LBS** | 382 | 432 | 481 | 531 | 575 | 600 | 718 | 718 | 741 | 867 |

21933170/DE – 11/2015

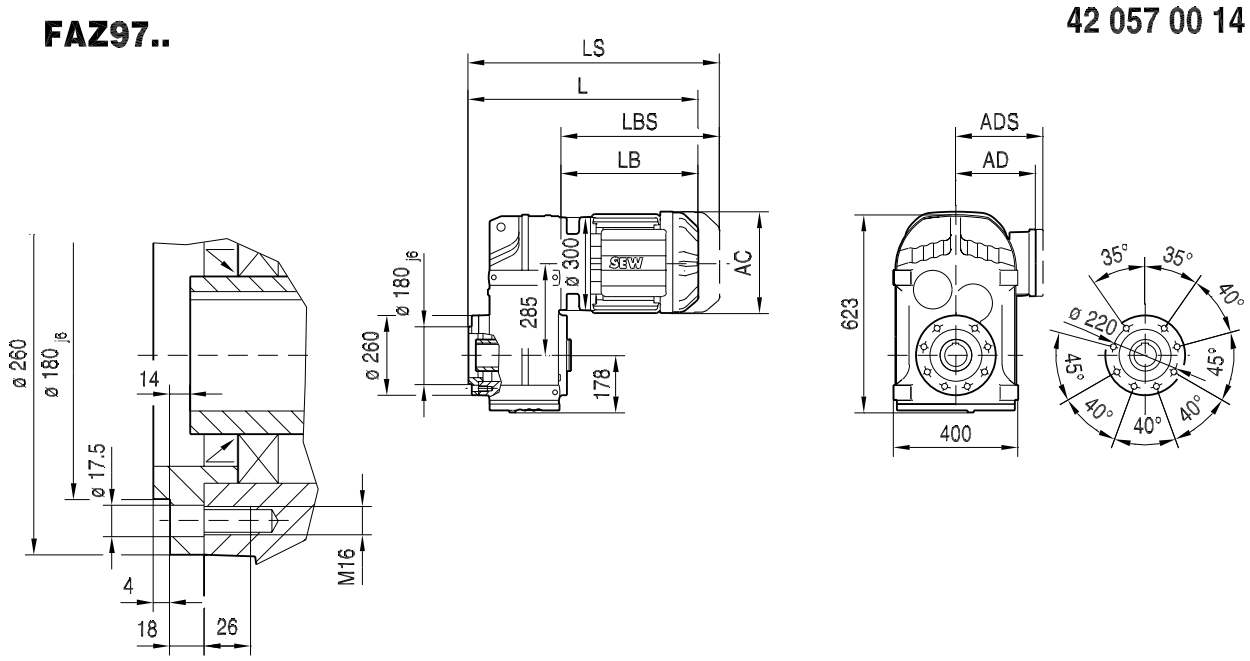


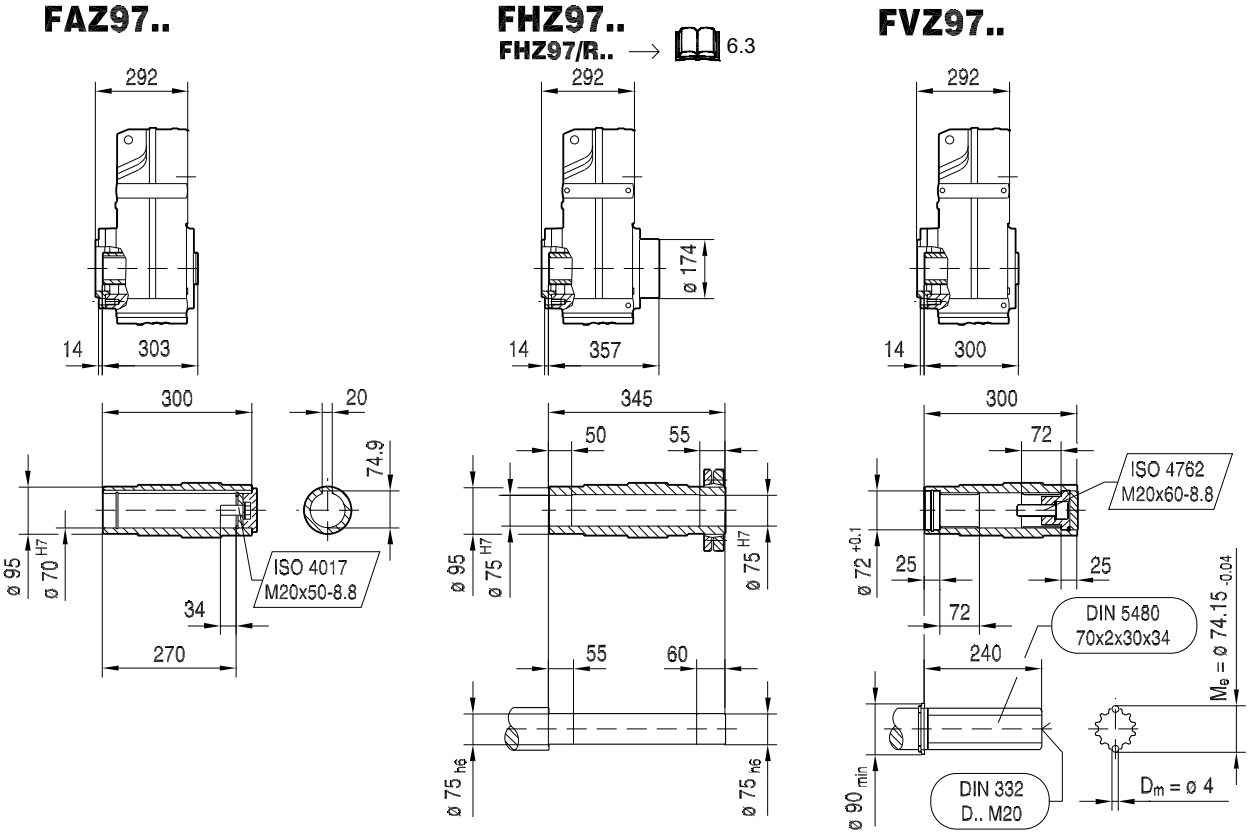


| (→ 🗎 155) | DRN100LS | DRN100L | DRN112M | DRN132S | DRN132M | DRN132L | DRN160M | DRN160L | DRN180.. | DRN200L |
|---|---|---|---|---|---|---|---|---|---|---|
| **AC** | 197 | 197 | 221 | 221 | 261 | 261 | 314 | 314 | 357 | 394 |
| **AD** | 157 | 157 | 170 | 170 | 228 | 228 | 253 | 253 | 268 | 283 |
| **ADS** | 158 | 158 | 172 | 172 | 228 | 228 | 253 | 253 | 268 | 283 |
| **L** | 580 | 630 | 661 | 711 | 729 | 755 | 821 | 821 | 844 | 954 |
| **LS** | 674 | 724 | 773 | 823 | 867 | 892 | 1010 | 1010 | 1033 | 1159 |
| **LB** | 288 | 338 | 369 | 419 | 437 | 463 | 529 | 529 | 552 | 662 |
| **LBS** | 382 | 432 | 481 | 531 | 575 | 600 | 718 | 718 | 741 | 867 |

21933170/DE – 11/2015

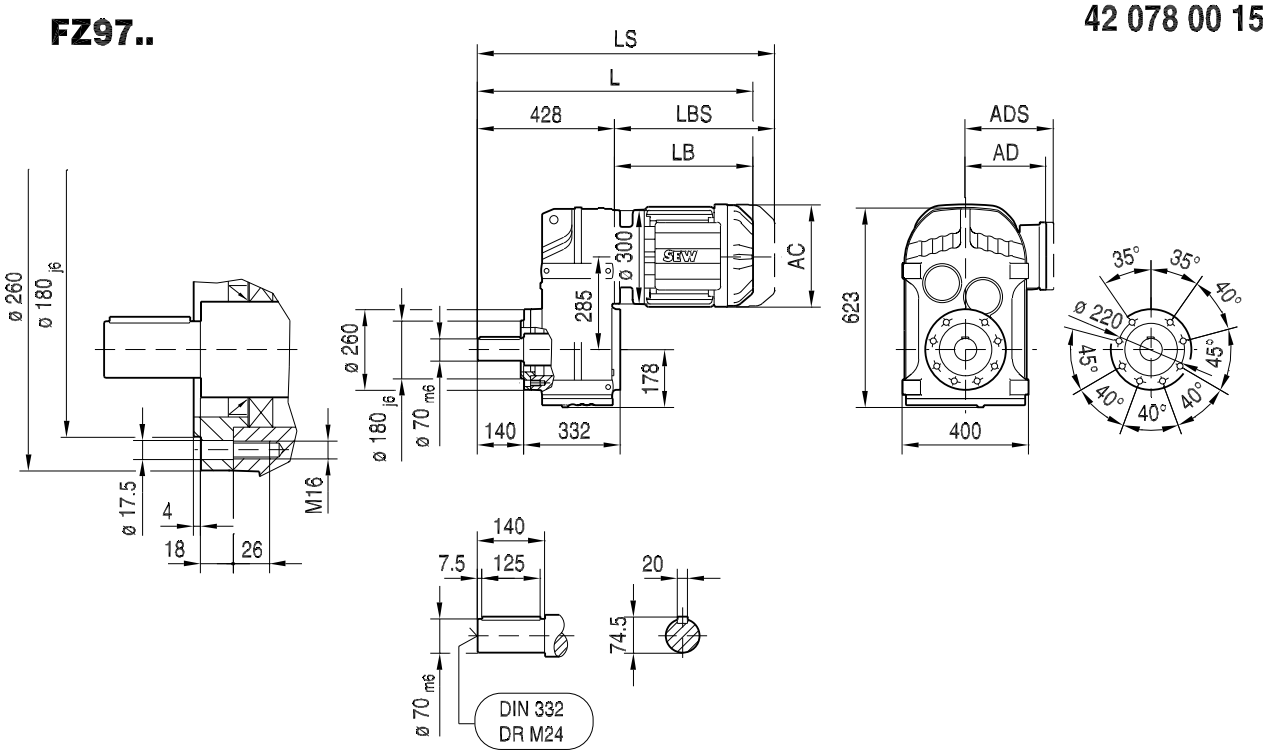


| (→ 🗎 155) | DRN100LS | DRN100L | DRN112M | DRN132S | DRN132M | DRN132L | DRN160M | DRN160L | DRN180.. | DRN200L |
|---|---|---|---|---|---|---|---|---|---|---|
| **AC** | 197 | 197 | 221 | 221 | 261 | 261 | 314 | 314 | 357 | 394 |
| **AD** | 157 | 157 | 170 | 170 | 228 | 228 | 253 | 253 | 268 | 283 |
| **ADS** | 158 | 158 | 172 | 172 | 228 | 228 | 253 | 253 | 268 | 283 |
| **L** | 716 | 766 | 797 | 847 | 865 | 891 | 957 | 957 | 980 | 1090 |
| **LS** | 810 | 860 | 909 | 959 | 1003 | 1028 | 1146 | 1146 | 1169 | 1295 |
| **LB** | 288 | 338 | 369 | 419 | 437 | 463 | 529 | 529 | 552 | 662 |
| **LBS** | 382 | 432 | 481 | 531 | 575 | 600 | 718 | 718 | 741 | 867 |

21933170/DE – 11/2015

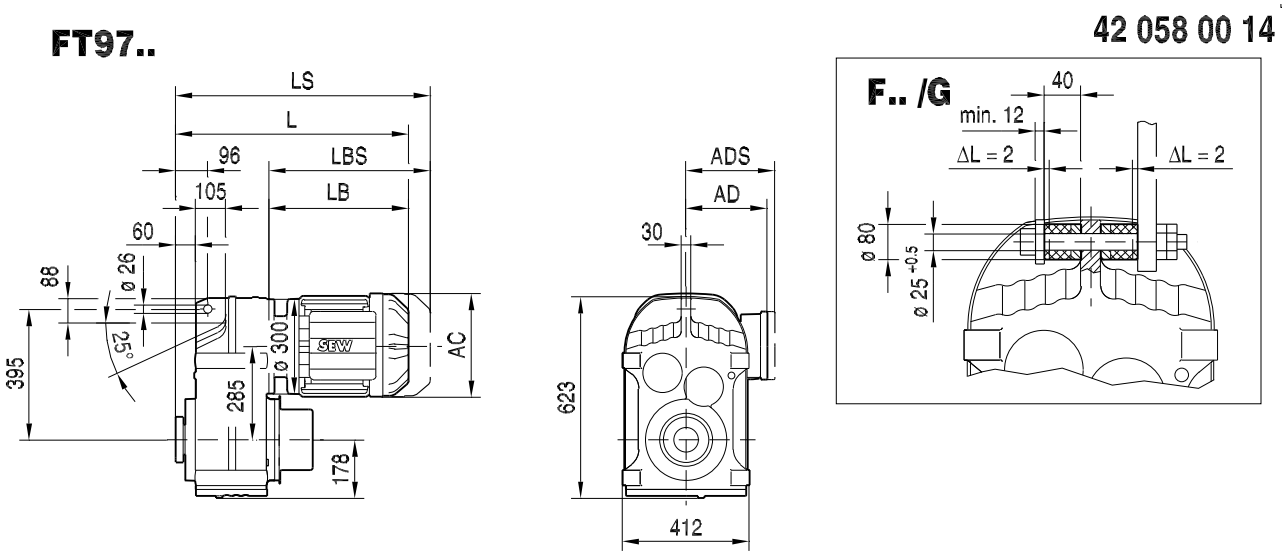


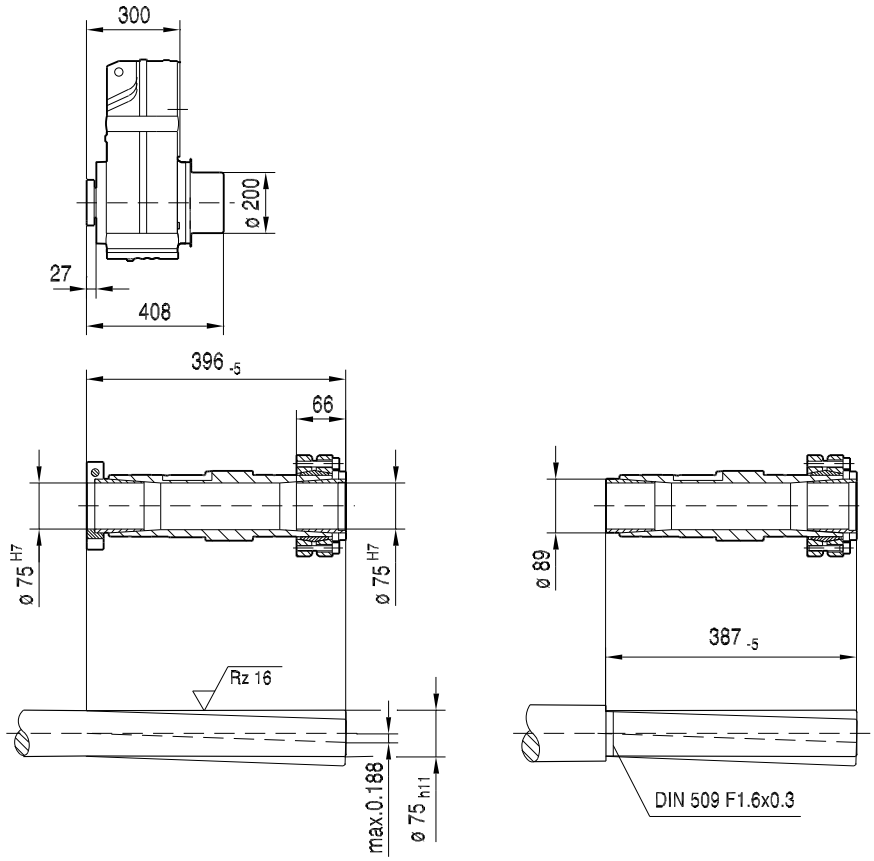


| (→ 🗎 155) | DRN90L | DRN100LS | DRN100L | DRN112M | DRN132S | DRN132M | DRN132L | DRN160M | DRN160L | DRN180.. |
|---|---|---|---|---|---|---|---|---|---|---|
| **AC** | 179 | 197 | 197 | 221 | 221 | 261 | 261 | 314 | 314 | 357 |
| **AD** | 140 | 157 | 157 | 170 | 170 | 228 | 228 | 253 | 253 | 268 |
| **ADS** | 150 | 158 | 158 | 172 | 172 | 228 | 228 | 253 | 253 | 268 |
| **L** | 592 | 588 | 638 | 669 | 719 | 737 | 763 | 829 | 829 | 852 |
| **LS** | 685 | 682 | 732 | 781 | 831 | 875 | 900 | 1018 | 1018 | 1041 |
| **LB** | 292 | 288 | 338 | 369 | 419 | 437 | 463 | 529 | 529 | 552 |
| **LBS** | 385 | 382 | 432 | 481 | 531 | 575 | 600 | 718 | 718 | 741 |

21933170/DE – 11/2015

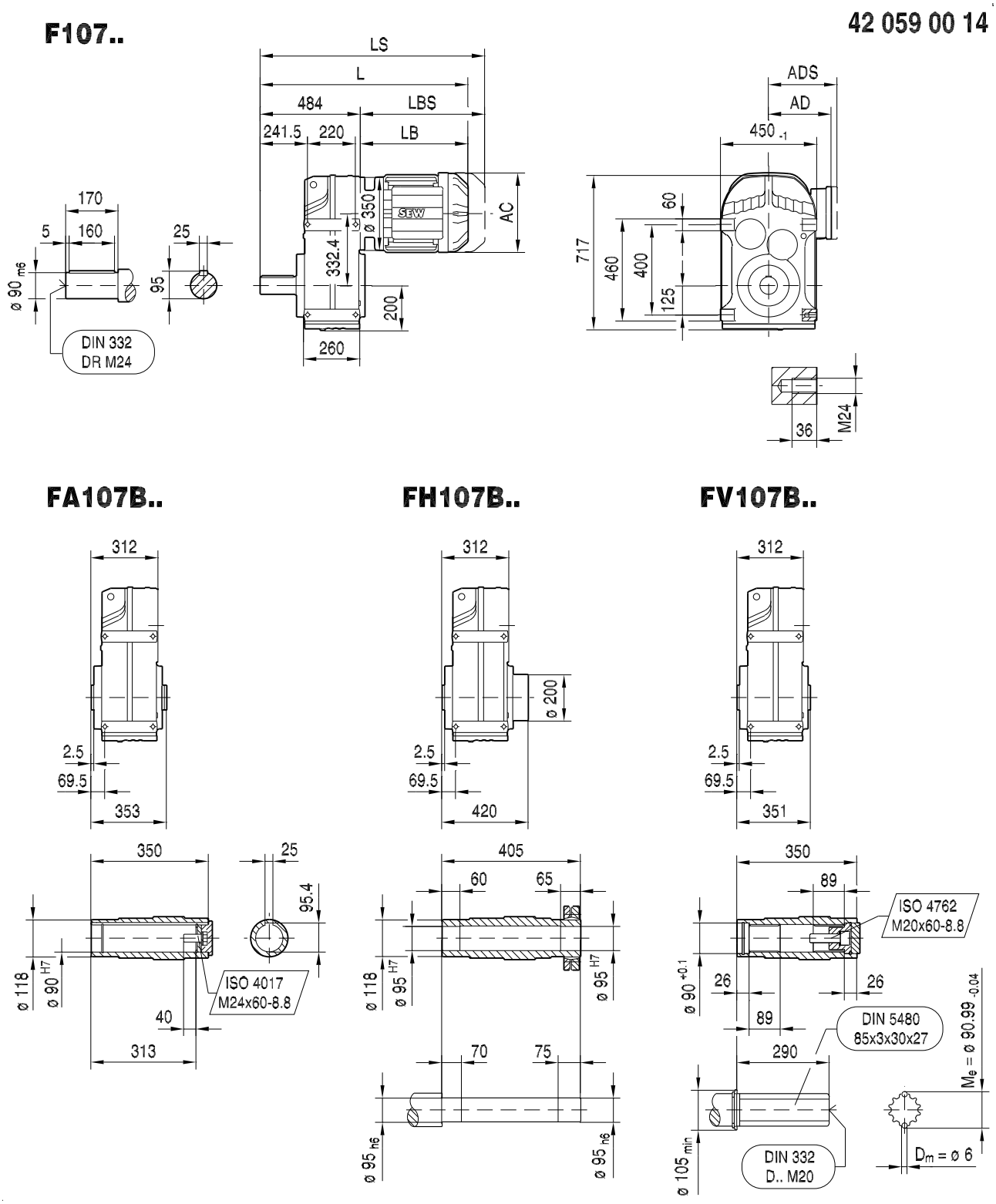


| (→ 🗎 155) | DRN100L | DRN112M | DRN132S | DRN132M | DRN132L | DRN160M | DRN160L | DRN180.. | DRN200L | DRN225.. |
|---|---|---|---|---|---|---|---|---|---|---|
| **AC** | 197 | 221 | 221 | 261 | 261 | 314 | 314 | 357 | 394 | 434 |
| **AD** | 157 | 170 | 170 | 228 | 228 | 253 | 253 | 268 | 283 | 305 |
| **ADS** | 158 | 172 | 172 | 228 | 228 | 253 | 253 | 268 | 283 | 305 |
| **L** | 816 | 847 | 897 | 915 | 941 | 1007 | 1007 | 1030 | 1140 | 1114 |
| **LS** | 910 | 959 | 1009 | 1053 | 1078 | 1196 | 1196 | 1219 | 1345 | 1319 |
| **LB** | 332 | 363 | 413 | 431 | 457 | 523 | 523 | 546 | 656 | 630 |
| **LBS** | 426 | 475 | 525 | 569 | 594 | 712 | 712 | 735 | 861 | 835 |

21933170/DE – 11/2015

## FF107..

42 060 00 14

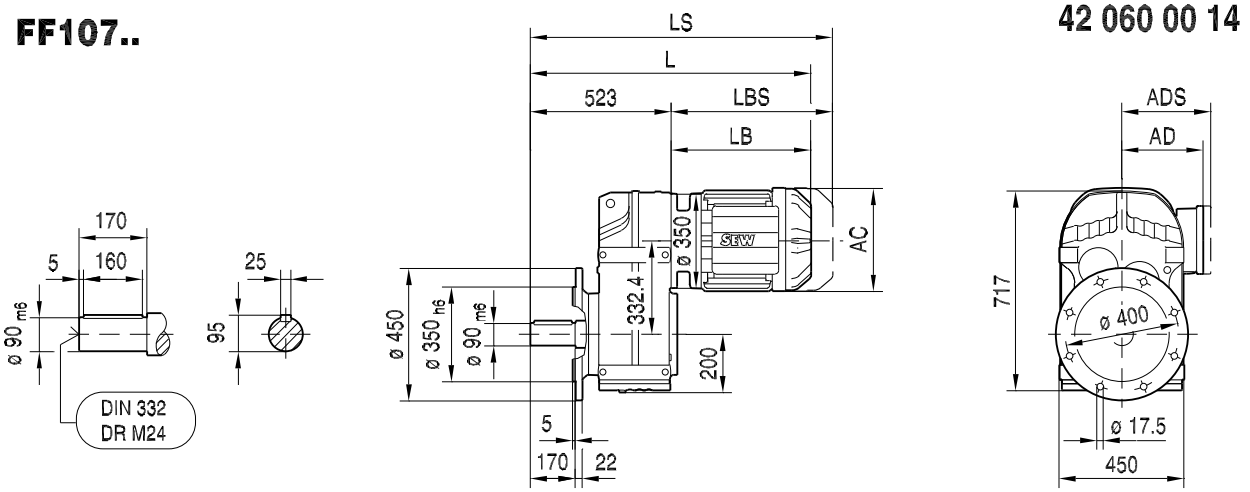


## FAF107..

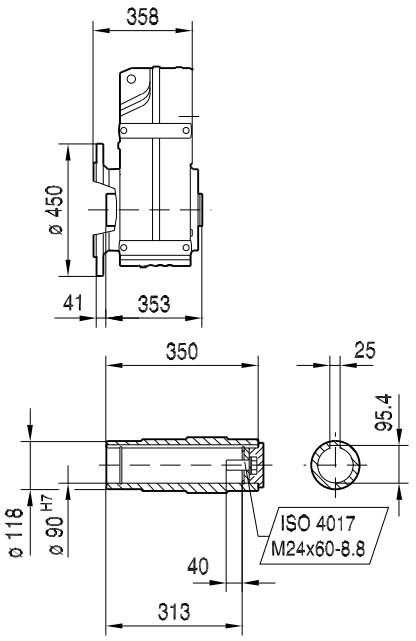


## FHF107..

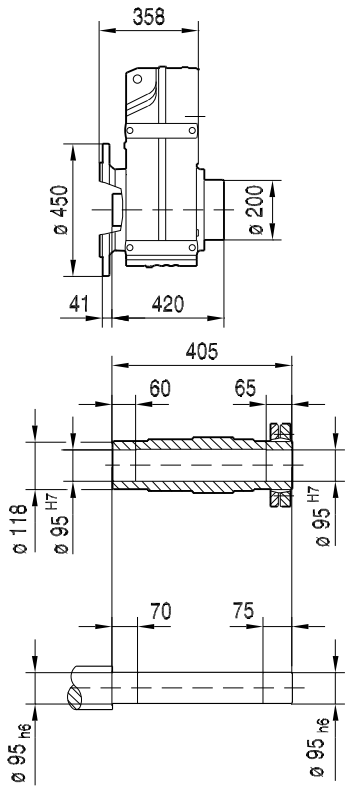


## FVF107..

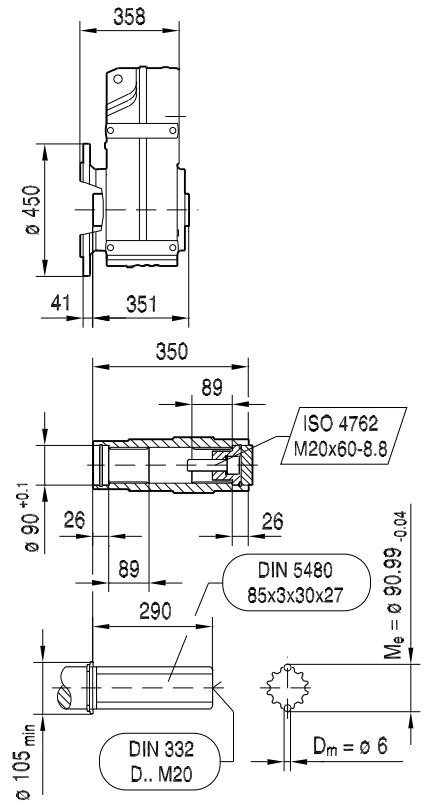


| (→ 🗎 155) | DRN100L | DRN112M | DRN132S | DRN132M | DRN132L | DRN160M | DRN160L | DRN180.. | DRN200L | DRN225.. |
|---|---|---|---|---|---|---|---|---|---|---|
| **AC** | 197 | 221 | 221 | 261 | 261 | 314 | 314 | 357 | 394 | 434 |
| **AD** | 157 | 170 | 170 | 228 | 228 | 253 | 253 | 268 | 283 | 305 |
| **ADS** | 158 | 172 | 172 | 228 | 228 | 253 | 253 | 268 | 283 | 305 |
| **L** | 855 | 886 | 936 | 954 | 980 | 1046 | 1046 | 1069 | 1179 | 1153 |
| **LS** | 949 | 998 | 1048 | 1092 | 1117 | 1235 | 1235 | 1258 | 1384 | 1358 |
| **LB** | 332 | 363 | 413 | 431 | 457 | 523 | 523 | 546 | 656 | 630 |
| **LBS** | 426 | 475 | 525 | 569 | 594 | 712 | 712 | 735 | 861 | 835 |

21933170/DE – 11/2015

## FA107..

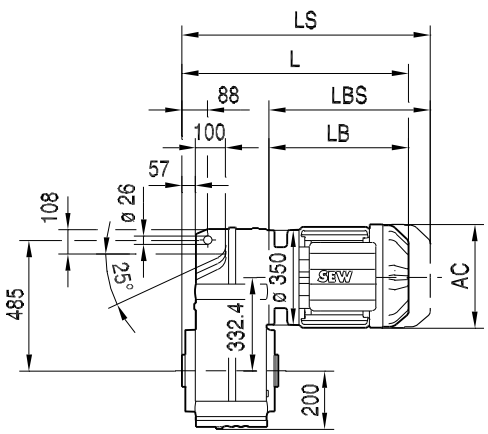


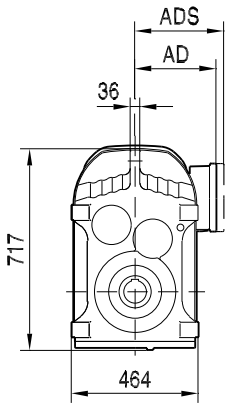


42 061 00 14

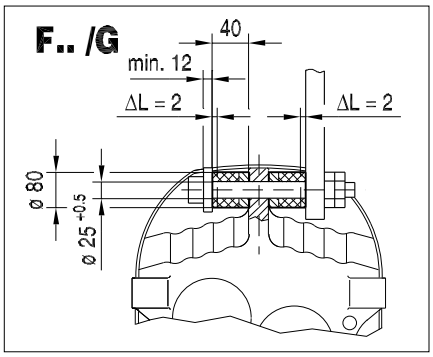


## FA107..

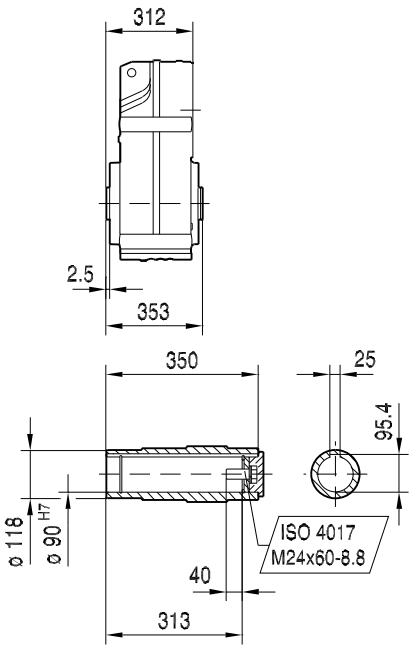


## FH107..

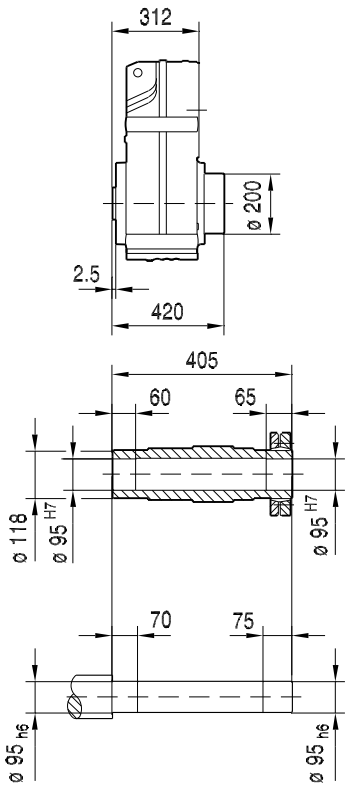


## FV107..

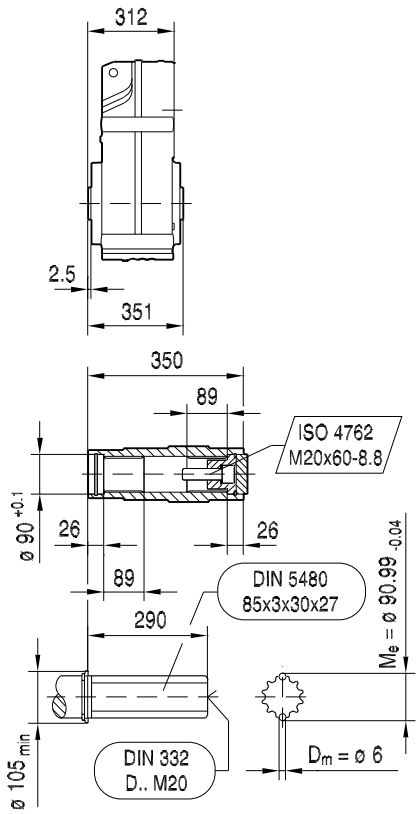


| (→ 🗎 155) | DRN100L | DRN112M | DRN132S | DRN132M | DRN132L | DRN160M | DRN160L | DRN180.. | DRN200L | DRN225.. |
|---|---|---|---|---|---|---|---|---|---|---|
| **AC** | 197 | 221 | 221 | 261 | 261 | 314 | 314 | 357 | 394 | 434 |
| **AD** | 157 | 170 | 170 | 228 | 228 | 253 | 253 | 268 | 283 | 305 |
| **ADS** | 158 | 172 | 172 | 228 | 228 | 253 | 253 | 268 | 283 | 305 |
| **L** | 644 | 675 | 725 | 743 | 769 | 835 | 835 | 858 | 968 | 942 |
| **LS** | 738 | 787 | 837 | 881 | 906 | 1024 | 1024 | 1047 | 1173 | 1147 |
| **LB** | 332 | 363 | 413 | 431 | 457 | 523 | 523 | 546 | 656 | 630 |
| **LBS** | 426 | 475 | 525 | 569 | 594 | 712 | 712 | 735 | 861 | 835 |

21933170/DE – 11/2015

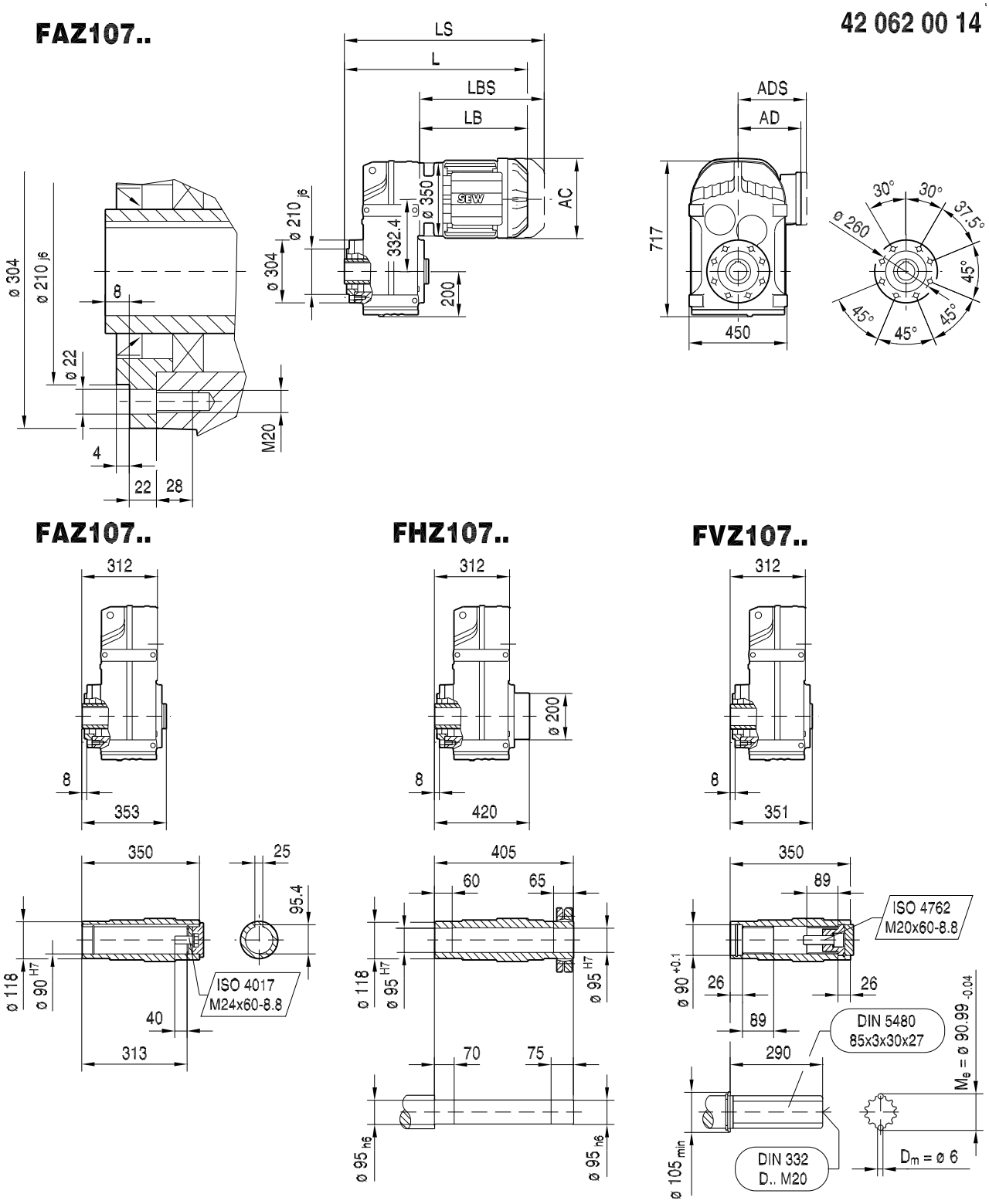


| (→ 🗎 155) | DRN100L | DRN112M | DRN132S | DRN132M | DRN132L | DRN160M | DRN160L | DRN180.. | DRN200L | DRN225.. |
|---|---|---|---|---|---|---|---|---|---|---|
| **AC** | 197 | 221 | 221 | 261 | 261 | 314 | 314 | 357 | 394 | 434 |
| **AD** | 157 | 170 | 170 | 228 | 228 | 253 | 253 | 268 | 283 | 305 |
| **ADS** | 158 | 172 | 172 | 228 | 228 | 253 | 253 | 268 | 283 | 305 |
| **L** | 644 | 675 | 725 | 743 | 769 | 835 | 835 | 858 | 968 | 942 |
| **LS** | 738 | 787 | 837 | 881 | 906 | 1024 | 1024 | 1047 | 1173 | 1147 |
| **LB** | 332 | 363 | 413 | 431 | 457 | 523 | 523 | 546 | 656 | 630 |
| **LBS** | 426 | 475 | 525 | 569 | 594 | 712 | 712 | 735 | 861 | 835 |

21933170/DE – 11/2015

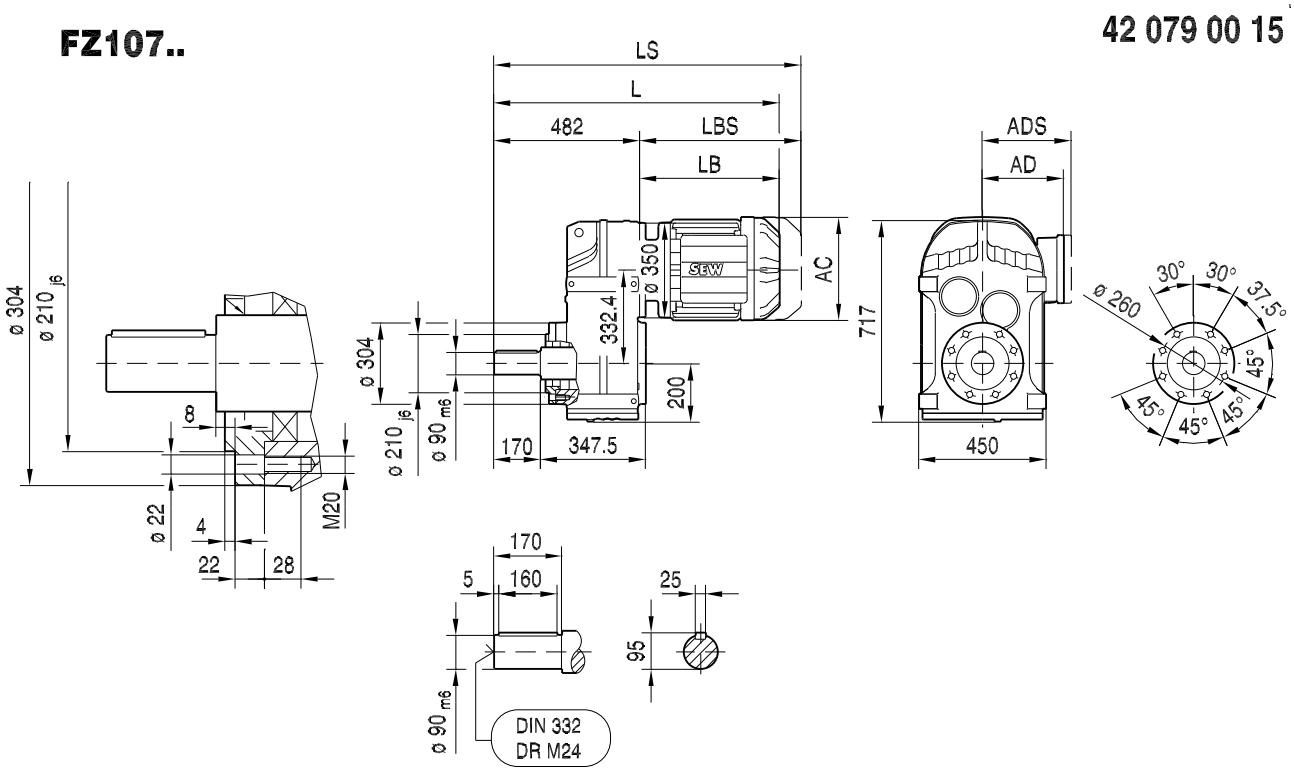


| (→ 🗎 155) | DRN100L | DRN112M | DRN132S | DRN132M | DRN132L | DRN160M | DRN160L | DRN180.. | DRN200L | DRN225.. |
|---|---|---|---|---|---|---|---|---|---|---|
| **AC** | 197 | 221 | 221 | 261 | 261 | 314 | 314 | 357 | 394 | 434 |
| **AD** | 157 | 170 | 170 | 228 | 228 | 253 | 253 | 268 | 283 | 305 |
| **ADS** | 158 | 172 | 172 | 228 | 228 | 253 | 253 | 268 | 283 | 305 |
| **L** | 814 | 845 | 895 | 913 | 939 | 1005 | 1005 | 1028 | 1138 | 1112 |
| **LS** | 908 | 957 | 1007 | 1051 | 1076 | 1194 | 1194 | 1217 | 1343 | 1317 |
| **LB** | 332 | 363 | 413 | 431 | 457 | 523 | 523 | 546 | 656 | 630 |
| **LBS** | 426 | 475 | 525 | 569 | 594 | 712 | 712 | 735 | 861 | 835 |

21933170/DE – 11/2015

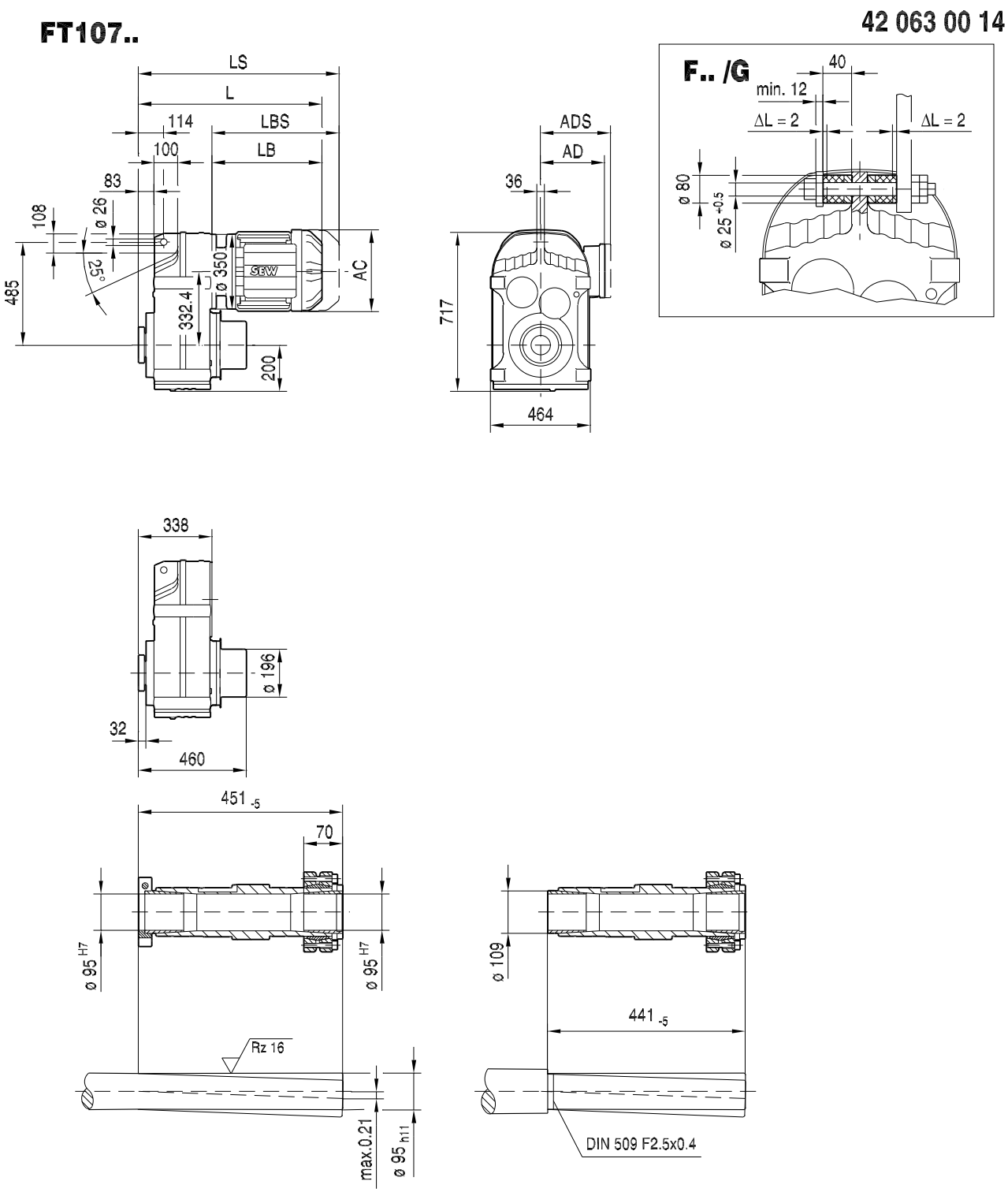


| (→ 🗎 155) | DRN100L | DRN112M | DRN132S | DRN132M | DRN132L | DRN160M | DRN160L | DRN180.. | DRN200L | DRN225.. |
|---|---|---|---|---|---|---|---|---|---|---|
| **AC** | 197 | 221 | 221 | 261 | 261 | 314 | 314 | 357 | 394 | 434 |
| **AD** | 157 | 170 | 170 | 228 | 228 | 253 | 253 | 268 | 283 | 305 |
| **ADS** | 158 | 172 | 172 | 228 | 228 | 253 | 253 | 268 | 283 | 305 |
| **L** | 670 | 701 | 751 | 769 | 795 | 861 | 861 | 884 | 994 | 968 |
| **LS** | 764 | 813 | 863 | 907 | 932 | 1050 | 1050 | 1073 | 1199 | 1173 |
| **LB** | 332 | 363 | 413 | 431 | 457 | 523 | 523 | 546 | 656 | 630 |
| **LBS** | 426 | 475 | 525 | 569 | 594 | 712 | 712 | 735 | 861 | 835 |

21933170/DE – 11/2015

## F127..

42 064 00 14

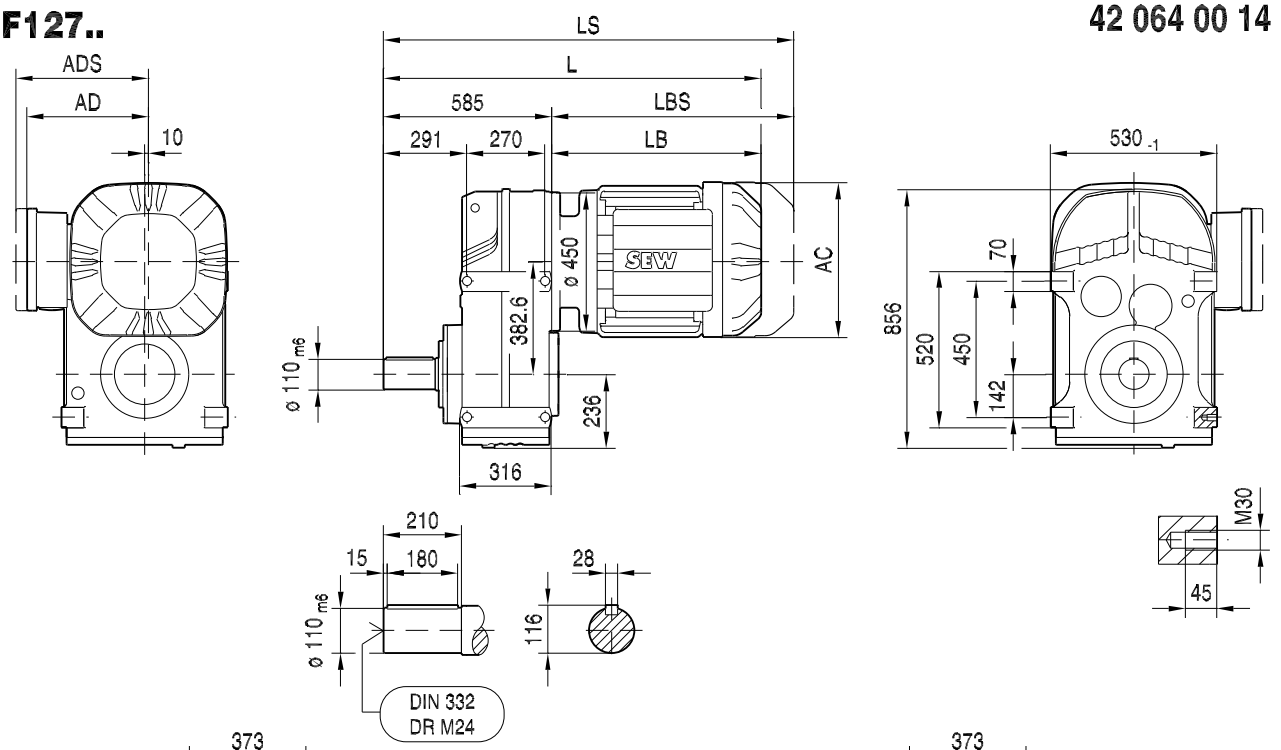


## FA127B..

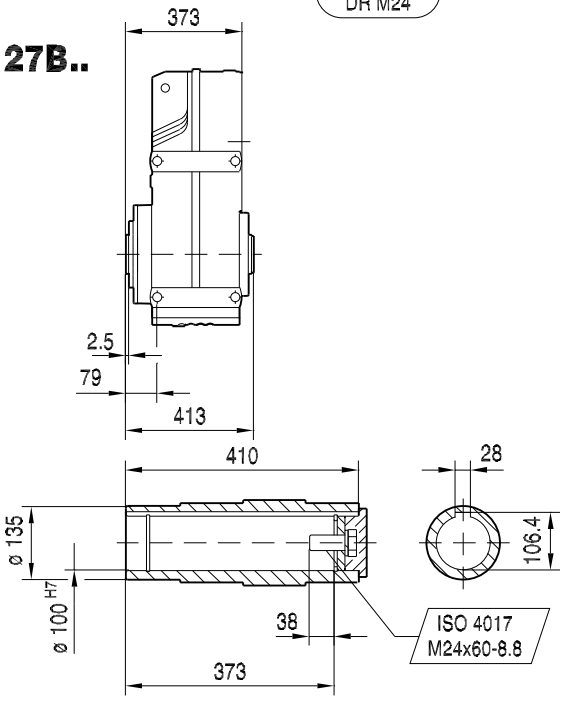


## FH127B..

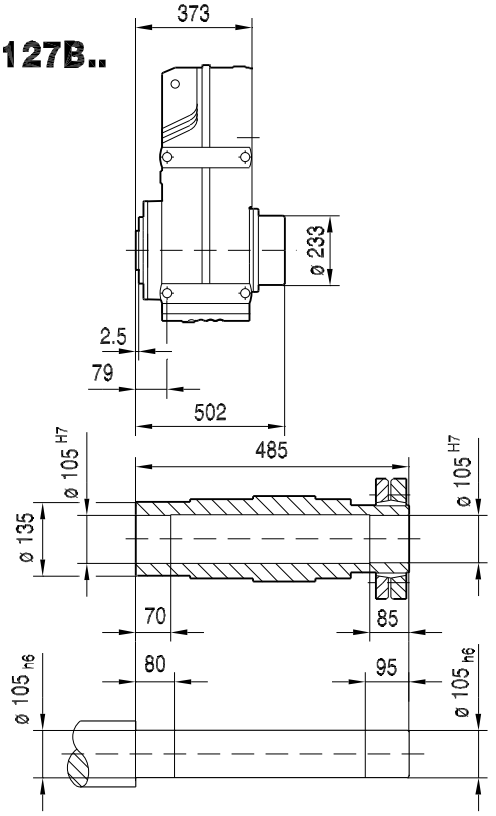


| (→ 🗎 155) | DRN132M | DRN132L | DRN160M | DRN160L | DRN180.. | DRN200L | DRN225.. | DRN250M | DRN280S | DRN280M |
|---|---|---|---|---|---|---|---|---|---|---|
| **AC** | 261 | 261 | 314 | 314 | 357 | 394 | 434 | 495 | 495 | 495 |
| **AD** | 228 | 228 | 253 | 253 | 268 | 283 | 305 | 394 | 394 | 394 |
| **ADS** | 228 | 228 | 253 | 253 | 268 | 283 | 305 | 394 | 394 | 394 |
| **L** | 1001 | 1027 | 1093 | 1093 | 1116 | 1226 | 1200 | 1337 | 1337 | 1432 |
| **LS** | 1139 | 1164 | 1282 | 1282 | 1305 | 1431 | 1405 | 1577 | 1577 | 1672 |
| **LB** | 416 | 442 | 508 | 508 | 531 | 641 | 615 | 752 | 752 | 847 |
| **LBS** | 554 | 579 | 697 | 697 | 720 | 846 | 820 | 992 | 992 | 1087 |

21933170/DE – 11/2015

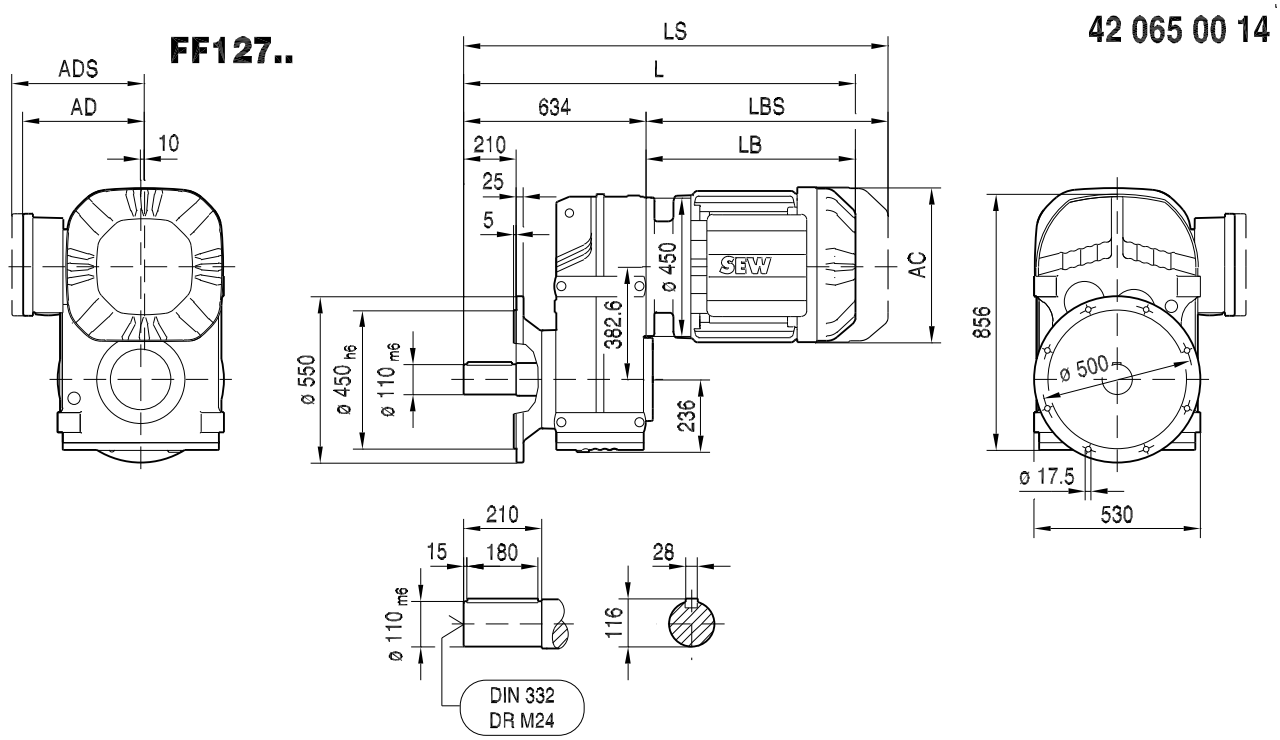


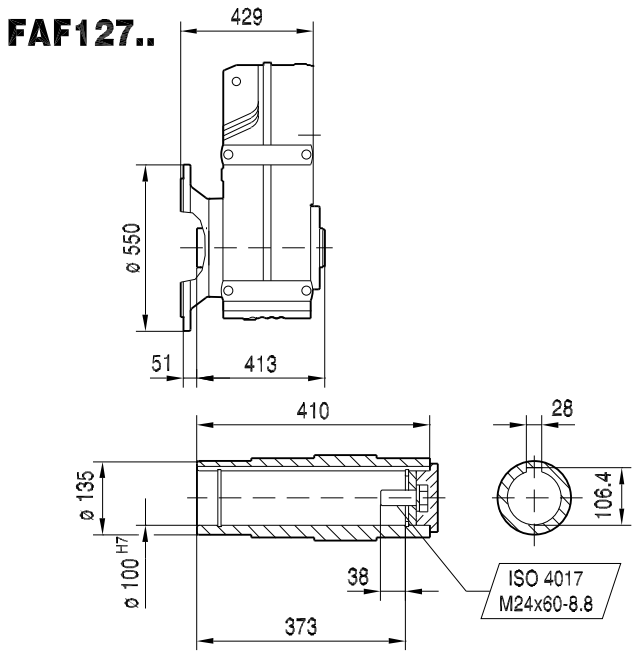


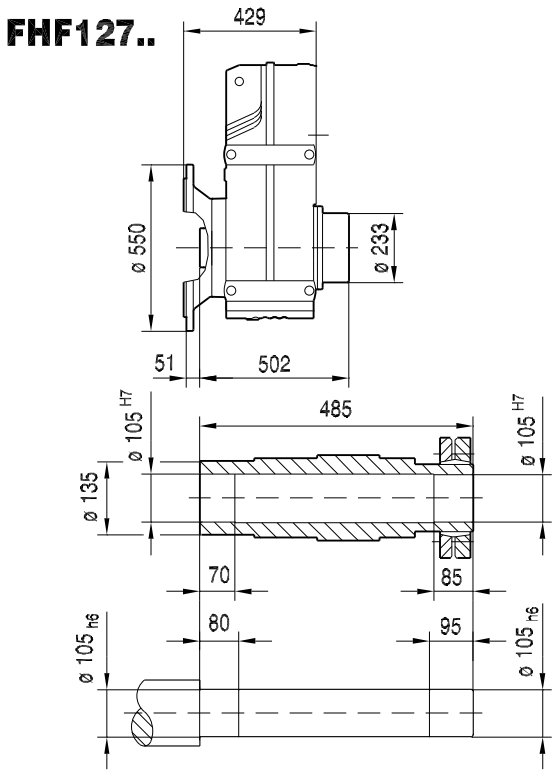


| (→ 🗎 155) | DRN132M | DRN132L | DRN160M | DRN160L | DRN180.. | DRN200L | DRN225.. | DRN250M | DRN280S | DRN280M |
|---|---|---|---|---|---|---|---|---|---|---|
| **AC** | 261 | 261 | 314 | 314 | 357 | 394 | 434 | 495 | 495 | 495 |
| **AD** | 228 | 228 | 253 | 253 | 268 | 283 | 305 | 394 | 394 | 394 |
| **ADS** | 228 | 228 | 253 | 253 | 268 | 283 | 305 | 394 | 394 | 394 |
| **L** | 1050 | 1076 | 1142 | 1142 | 1165 | 1275 | 1249 | 1386 | 1386 | 1481 |
| **LS** | 1188 | 1213 | 1331 | 1331 | 1354 | 1480 | 1454 | 1626 | 1626 | 1721 |
| **LB** | 416 | 442 | 508 | 508 | 531 | 641 | 615 | 752 | 752 | 847 |
| **LBS** | 554 | 579 | 697 | 697 | 720 | 846 | 820 | 992 | 992 | 1087 |

21933170/DE – 11/2015

## FA127..

42 066 00 14

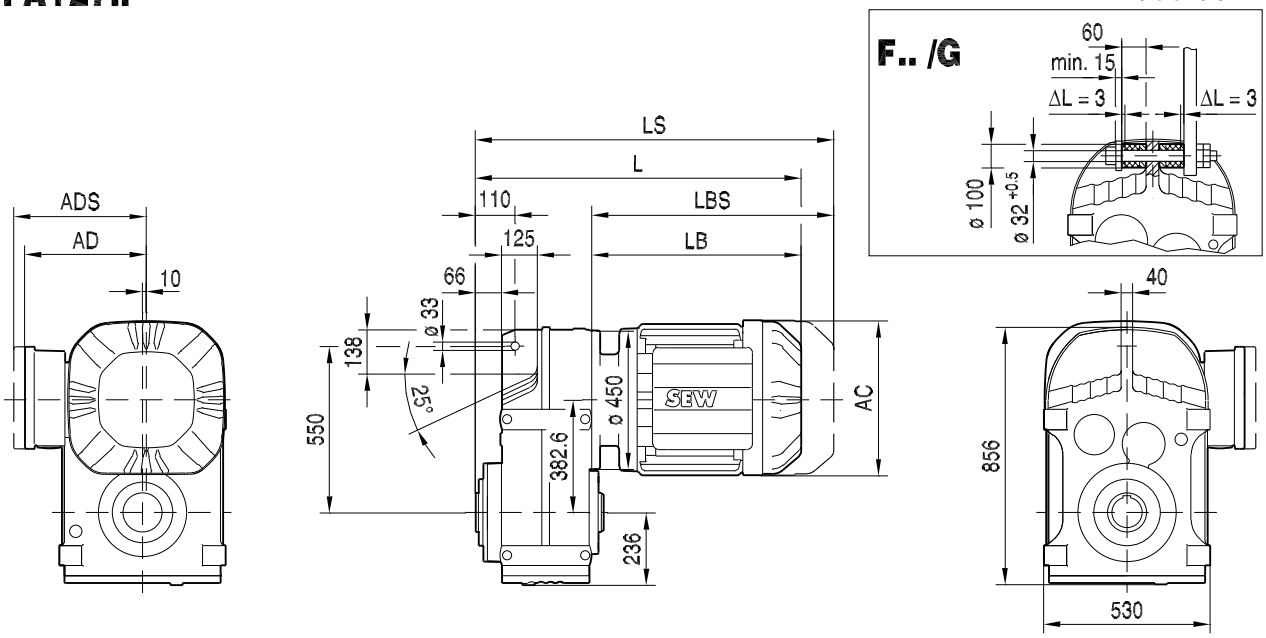


## FA127..

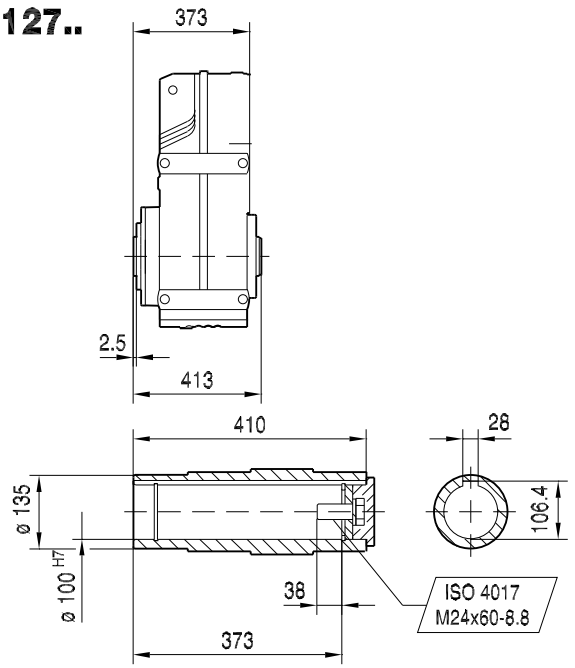


## FH127..

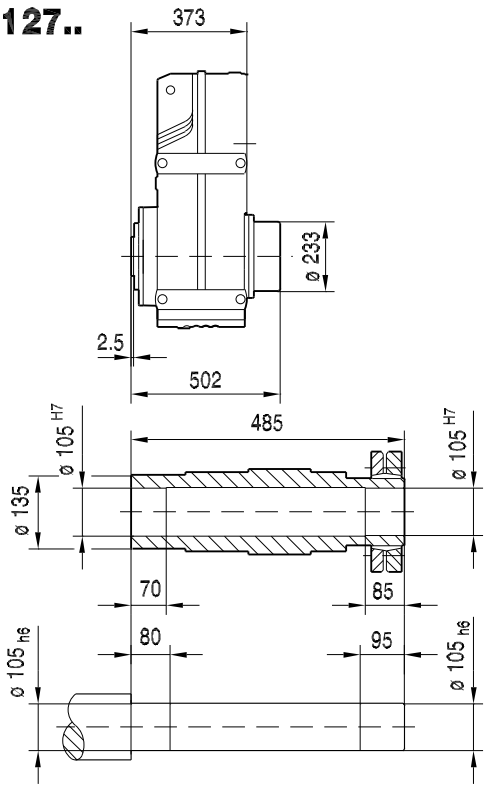


| (→ 🗎 155) | DRN132M | DRN132L | DRN160M | DRN160L | DRN180.. | DRN200L | DRN225.. | DRN250M | DRN280S | DRN280M |
|---|---|---|---|---|---|---|---|---|---|---|
| **AC** | 261 | 261 | 314 | 314 | 357 | 394 | 434 | 495 | 495 | 495 |
| **AD** | 228 | 228 | 253 | 253 | 268 | 283 | 305 | 394 | 394 | 394 |
| **ADS** | 228 | 228 | 253 | 253 | 268 | 283 | 305 | 394 | 394 | 394 |
| **L** | 789 | 815 | 881 | 881 | 904 | 1014 | 988 | 1125 | 1125 | 1220 |
| **LS** | 927 | 952 | 1070 | 1070 | 1093 | 1219 | 1193 | 1365 | 1365 | 1460 |
| **LB** | 416 | 442 | 508 | 508 | 531 | 641 | 615 | 752 | 752 | 847 |
| **LBS** | 554 | 579 | 697 | 697 | 720 | 846 | 820 | 992 | 992 | 1087 |

21933170/DE – 11/2015

## FAZ127..

42 067 00 14

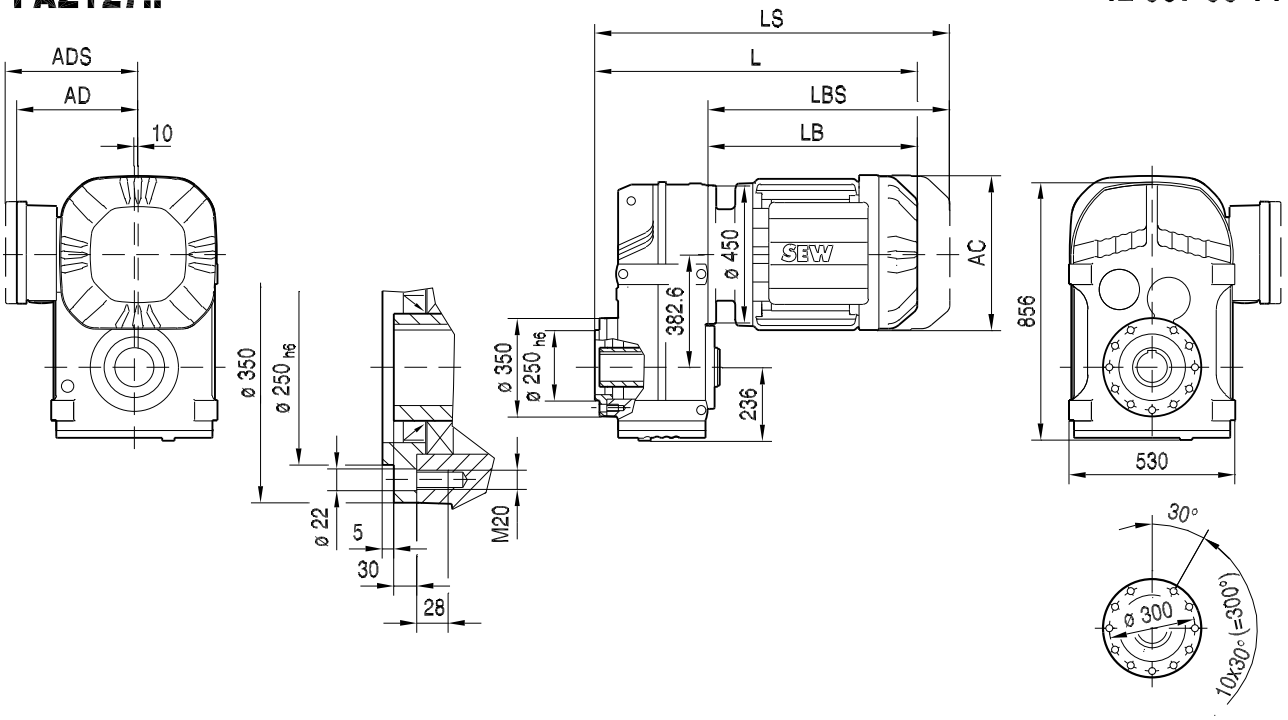


## FAZ127..

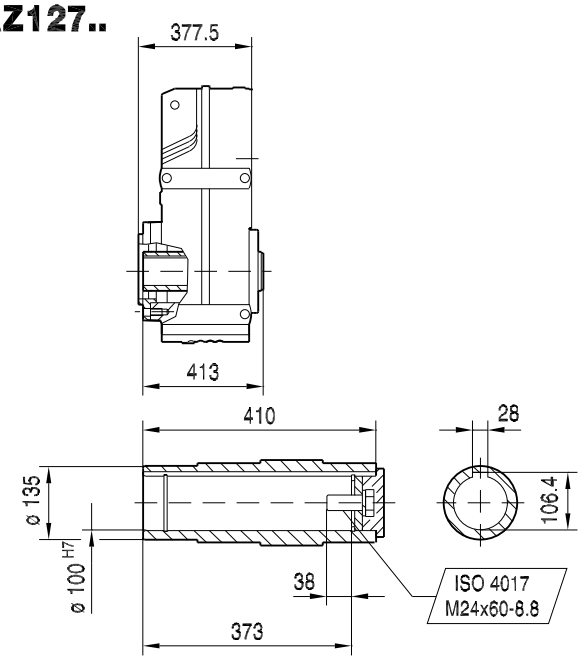


## FHZ127..

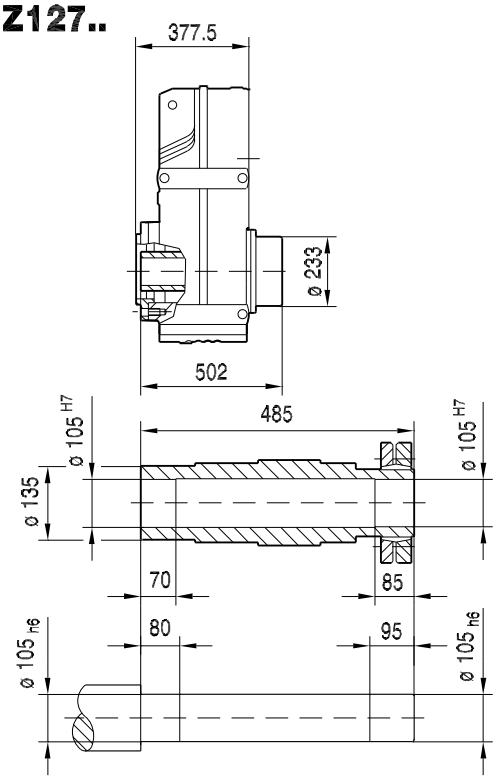


| (→ 🗎 155) | DRN132M | DRN132L | DRN160M | DRN160L | DRN180.. | DRN200L | DRN225.. | DRN250M | DRN280S | DRN280M |
|---|---|---|---|---|---|---|---|---|---|---|
| **AC** | 261 | 261 | 314 | 314 | 357 | 394 | 434 | 495 | 495 | 495 |
| **AD** | 228 | 228 | 253 | 253 | 268 | 283 | 305 | 394 | 394 | 394 |
| **ADS** | 228 | 228 | 253 | 253 | 268 | 283 | 305 | 394 | 394 | 394 |
| **L** | 794 | 819 | 886 | 886 | 909 | 1018 | 993 | 1130 | 1130 | 1225 |
| **LS** | 931 | 956 | 1075 | 1075 | 1098 | 1223 | 1198 | 1370 | 1370 | 1465 |
| **LB** | 416 | 442 | 508 | 508 | 531 | 641 | 615 | 752 | 752 | 847 |
| **LBS** | 554 | 579 | 697 | 697 | 720 | 846 | 820 | 992 | 992 | 1087 |

21933170/DE – 11/2015

**FZ127..**

**42 080 00 15**

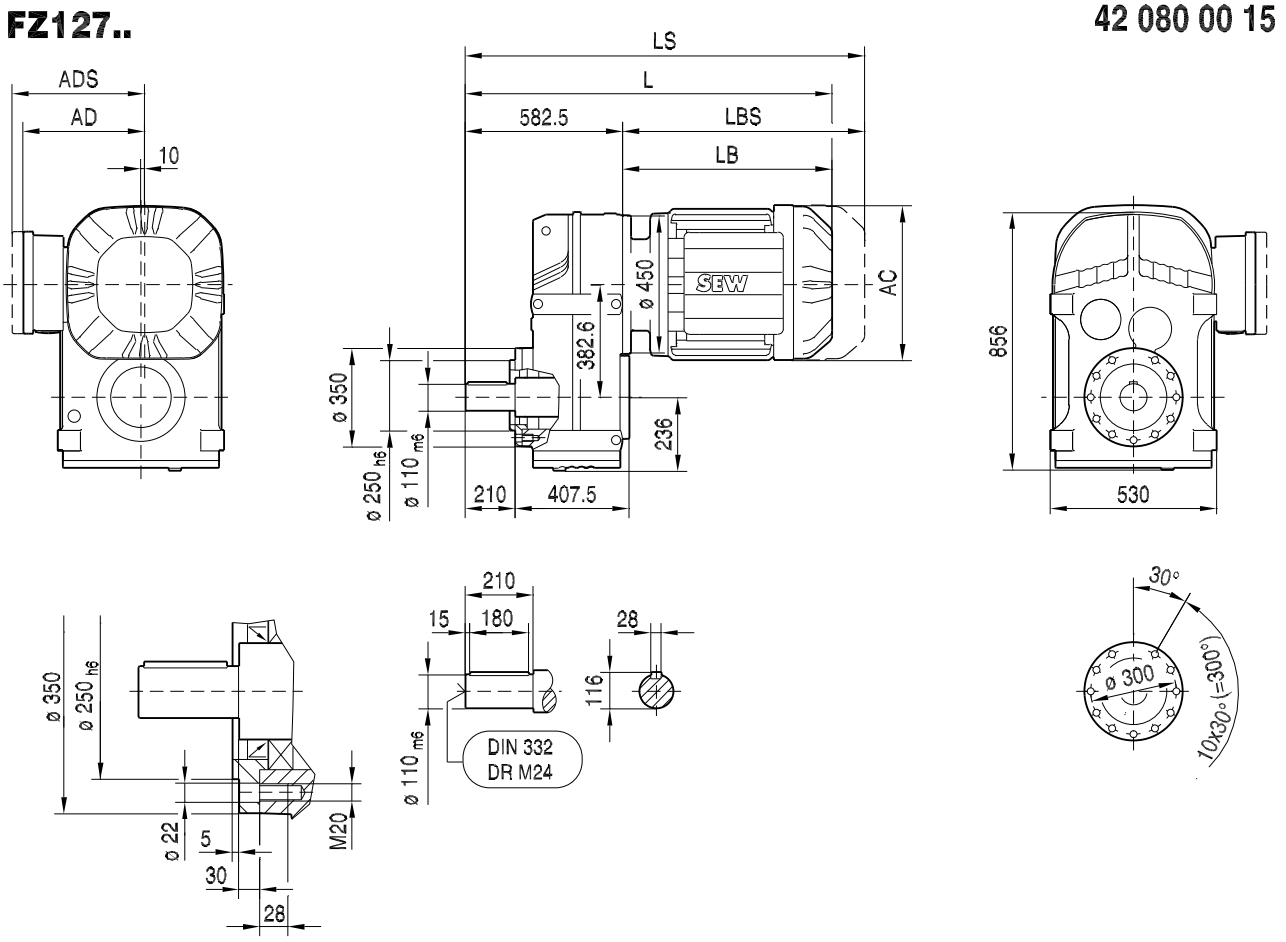


| (→ 🗎 155) | DRN132M | DRN132L | DRN160M | DRN160L | DRN180.. | DRN200L | DRN225.. | DRN250M | DRN280S | DRN280M |
|---|---|---|---|---|---|---|---|---|---|---|
| **AC** | 261 | 261 | 314 | 314 | 357 | 394 | 434 | 495 | 495 | 495 |
| **AD** | 228 | 228 | 253 | 253 | 268 | 283 | 305 | 394 | 394 | 394 |
| **ADS** | 228 | 228 | 253 | 253 | 268 | 283 | 305 | 394 | 394 | 394 |
| **L** | 999 | 1024 | 1091 | 1091 | 1114 | 1223 | 1198 | 1335 | 1335 | 1430 |
| **LS** | 1136 | 1161 | 1280 | 1280 | 1303 | 1428 | 1403 | 1575 | 1575 | 1670 |
| **LB** | 416 | 442 | 508 | 508 | 531 | 641 | 615 | 752 | 752 | 847 |
| **LBS** | 554 | 579 | 697 | 697 | 720 | 846 | 820 | 992 | 992 | 1087 |

21933170/DE – 11/2015

## FT127..

42 068 00 14

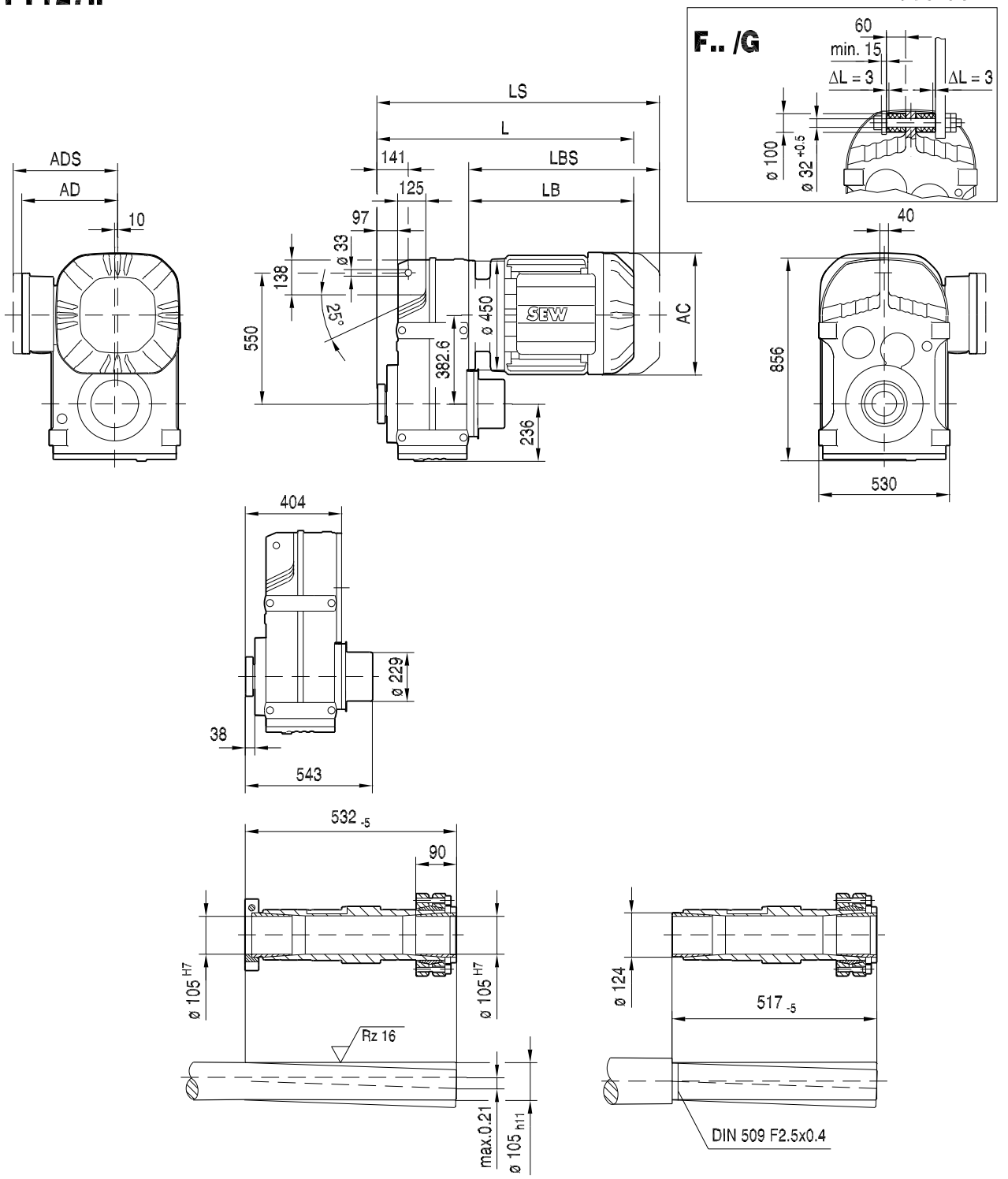


| (→ 🗎 155) | DRN132M | DRN132L | DRN160M | DRN160L | DRN180.. | DRN200L | DRN225.. | DRN250M | DRN280S | DRN280M |
|---|---|---|---|---|---|---|---|---|---|---|
| **AC** | 261 | 261 | 314 | 314 | 357 | 394 | 434 | 495 | 495 | 495 |
| **AD** | 228 | 228 | 253 | 253 | 268 | 283 | 305 | 394 | 394 | 394 |
| **ADS** | 228 | 228 | 253 | 253 | 268 | 283 | 305 | 394 | 394 | 394 |
| **L** | 820 | 846 | 912 | 912 | 935 | 1045 | 1019 | 1156 | 1156 | 1251 |
| **LS** | 958 | 983 | 1101 | 1101 | 1124 | 1250 | 1224 | 1396 | 1396 | 1491 |
| **LB** | 416 | 442 | 508 | 508 | 531 | 641 | 615 | 752 | 752 | 847 |
| **LBS** | 554 | 579 | 697 | 697 | 720 | 846 | 820 | 992 | 992 | 1087 |

21933170/DE – 11/2015

## F157..

42 069 00 14

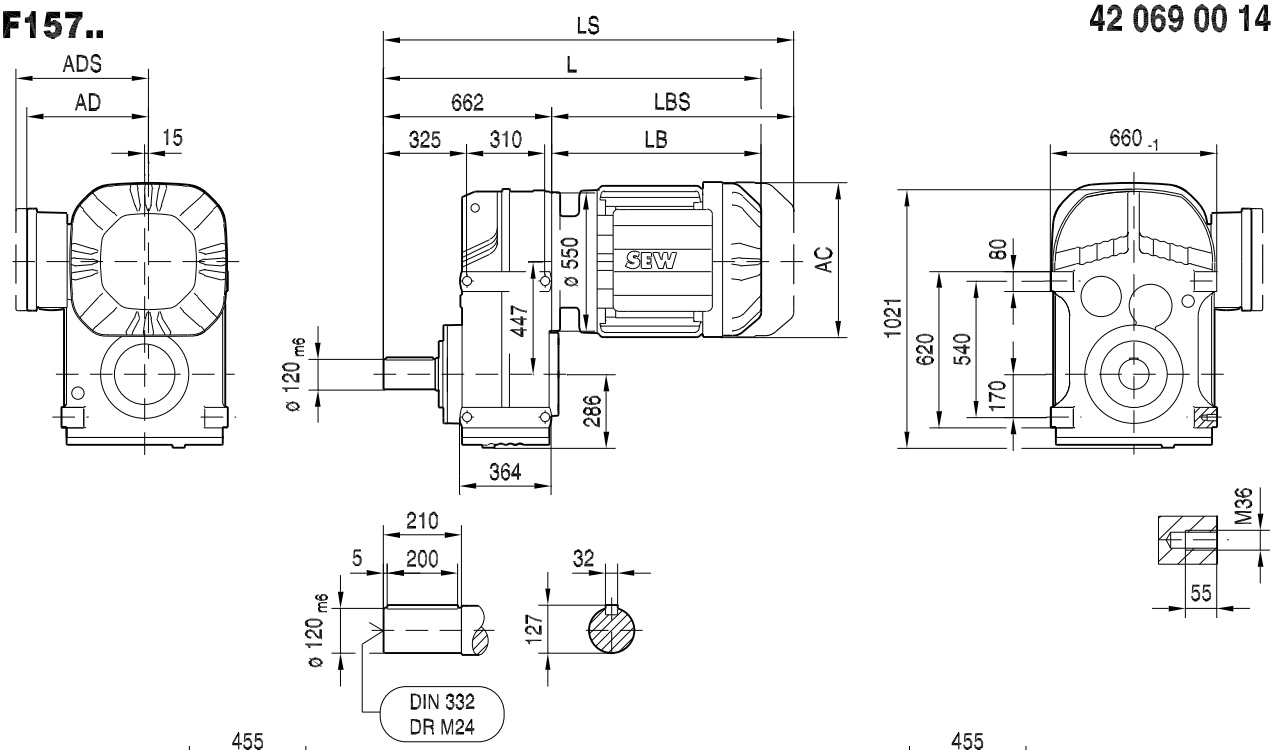


## FA157B..

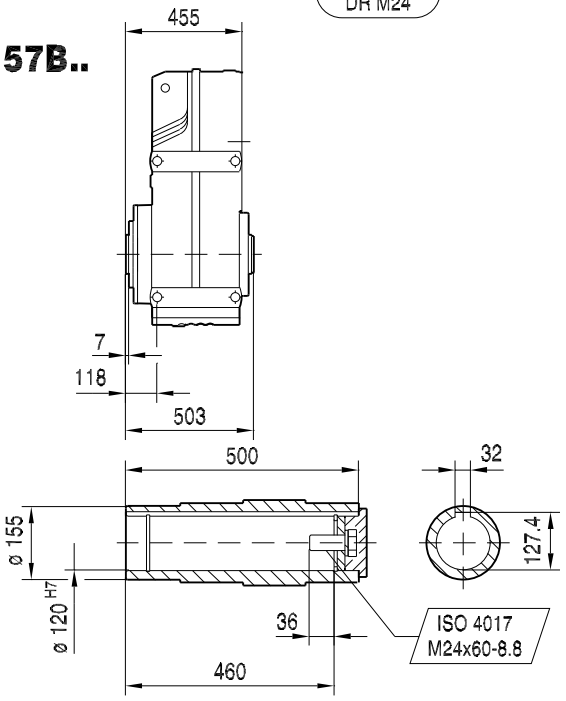


## FH157B..

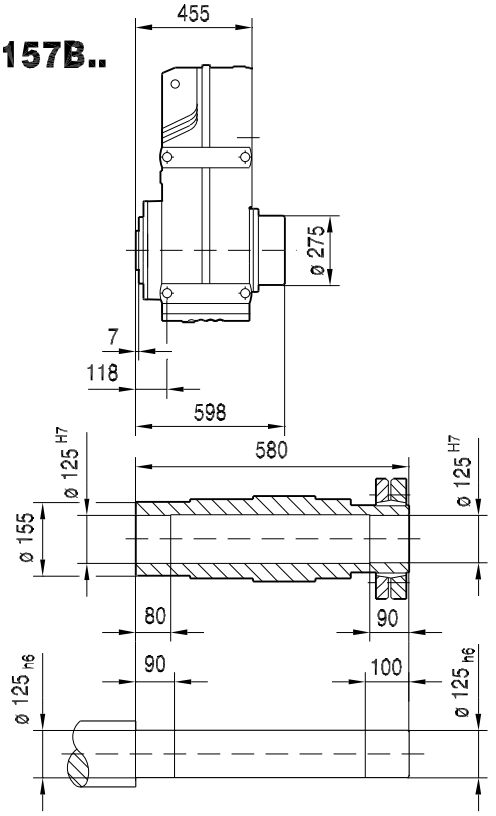


| (→ 🗎 155) | DRN160L | DRN180.. | DRN200L | DRN225.. | DRN250M | DRN280S | DRN280M | DRN315S-M | DRN315ME-H |
|---|---|---|---|---|---|---|---|---|---|
| **AC** | 314 | 357 | 394 | 434 | 495 | 495 | 495 | 624 | 624 |
| **AD** | 253 | 268 | 283 | 305 | 394 | 394 | 394 | 506 | 506 |
| **ADS** | 253 | 268 | 283 | 305 | 394 | 394 | 394 | 506 | 506 |
| **L** | 1162 | 1185 | 1295 | 1269 | 1406 | 1406 | 1501 | 1603 | 1733 |
| **LS** | 1351 | 1374 | 1500 | 1474 | 1646 | 1646 | 1741 | 1854 | 1984 |
| **LB** | 500 | 523 | 633 | 607 | 744 | 744 | 839 | 941 | 1071 |
| **LBS** | 689 | 712 | 838 | 812 | 984 | 984 | 1079 | 1192 | 1322 |

21933170/DE – 11/2015

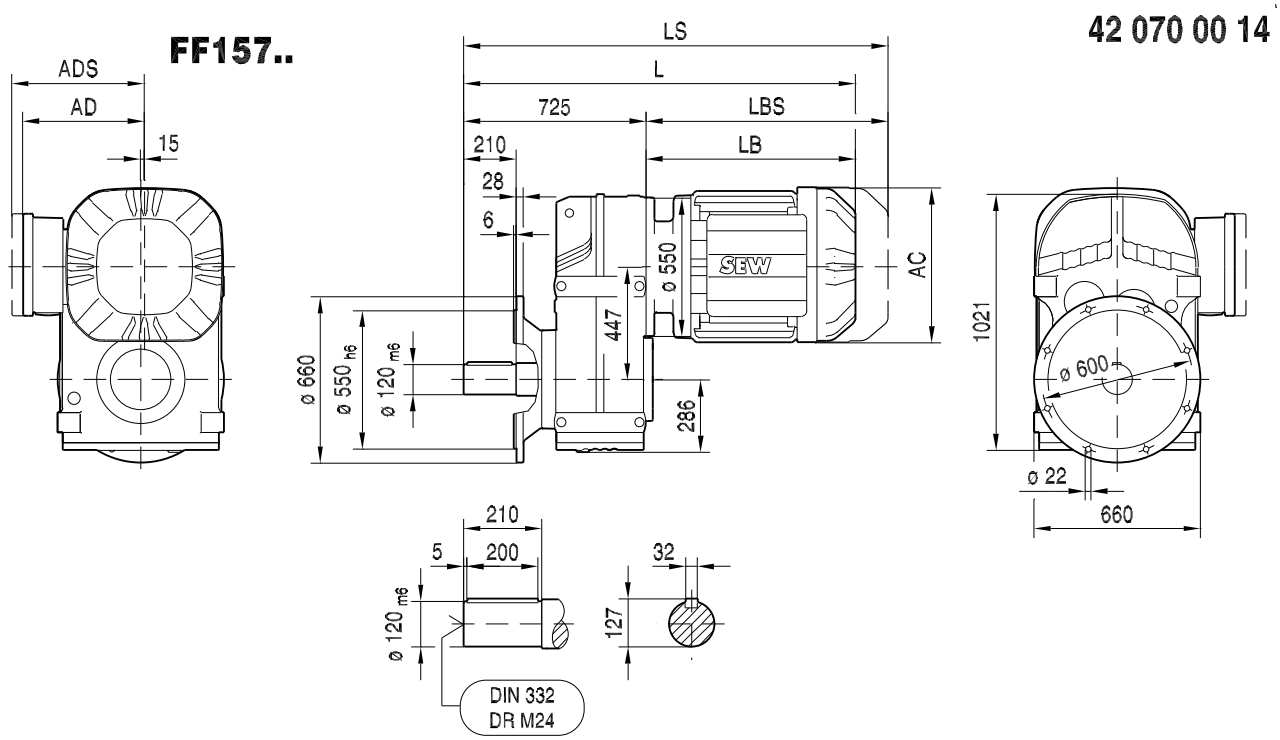


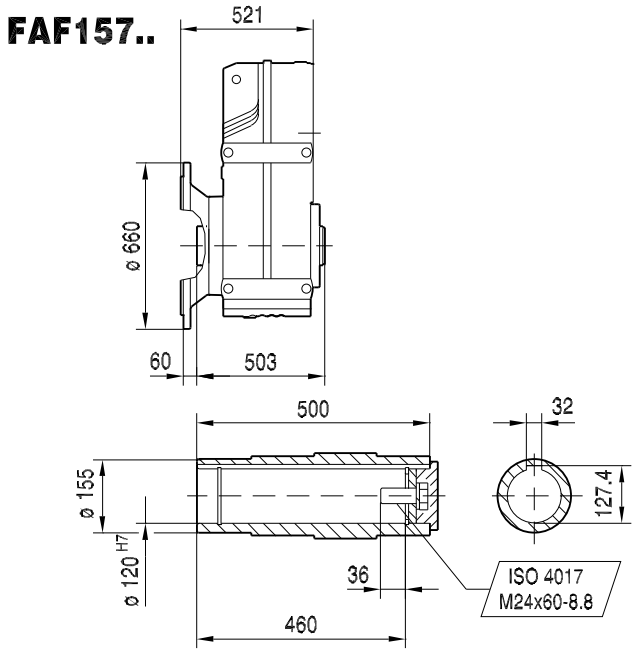


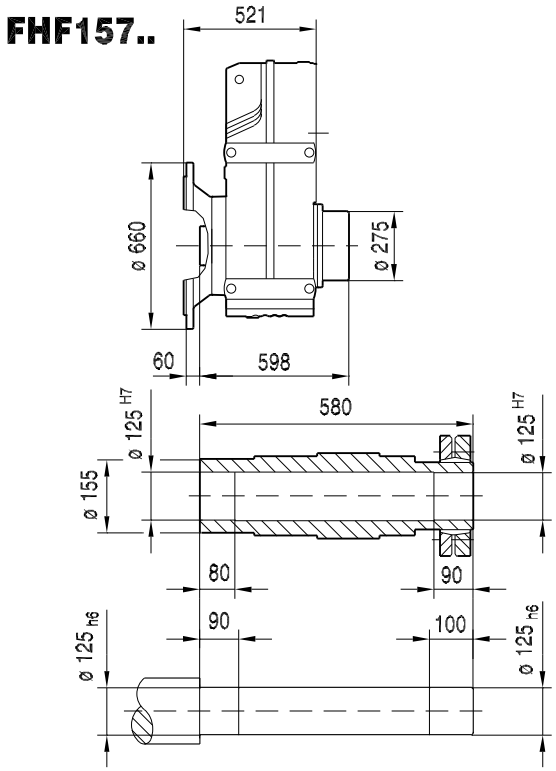


| (→ 155) | DRN160L | DRN180.. | DRN200L | DRN225.. | DRN250M | DRN280S | DRN280M | DRN315S-M | DRN315ME-H |
|---|---|---|---|---|---|---|---|---|---|
| **AC** | 314 | 357 | 394 | 434 | 495 | 495 | 495 | 624 | 624 |
| **AD** | 253 | 268 | 283 | 305 | 394 | 394 | 394 | 506 | 506 |
| **ADS** | 253 | 268 | 283 | 305 | 394 | 394 | 394 | 506 | 506 |
| **L** | 1225 | 1248 | 1358 | 1332 | 1469 | 1469 | 1564 | 1666 | 1796 |
| **LS** | 1414 | 1437 | 1563 | 1537 | 1709 | 1709 | 1804 | 1917 | 2047 |
| **LB** | 500 | 523 | 633 | 607 | 744 | 744 | 839 | 941 | 1071 |
| **LBS** | 689 | 712 | 838 | 812 | 984 | 984 | 1079 | 1192 | 1322 |

21933170/DE – 11/2015

## FA157..

42 071 00 14

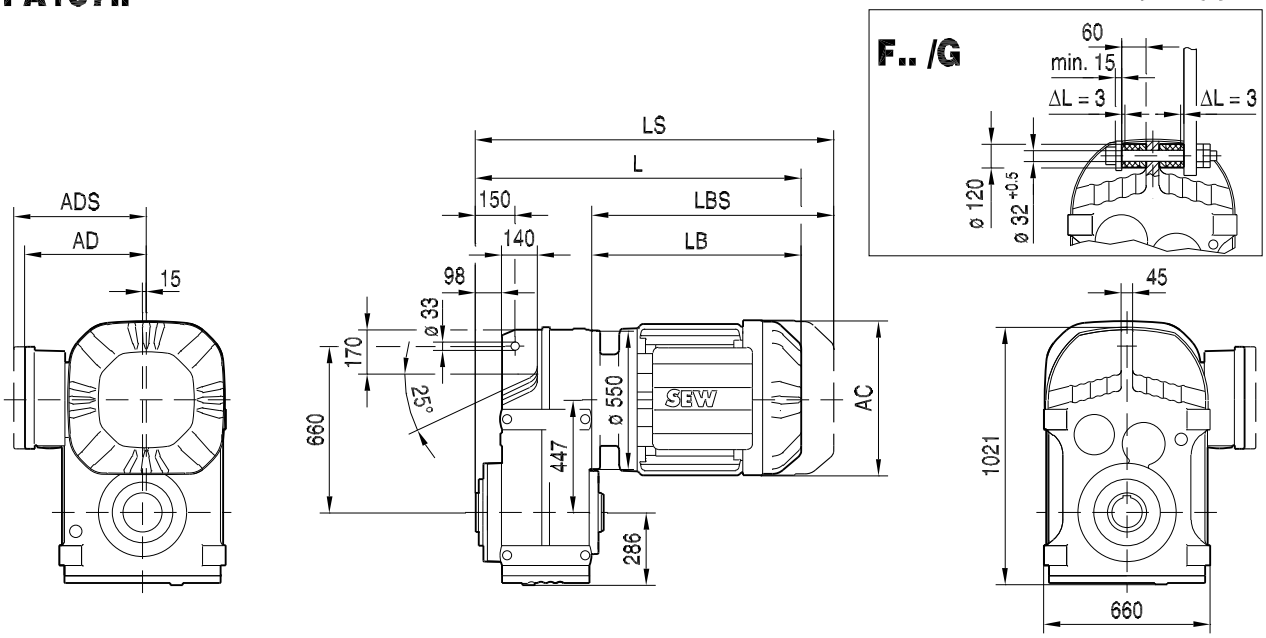


## FA157..

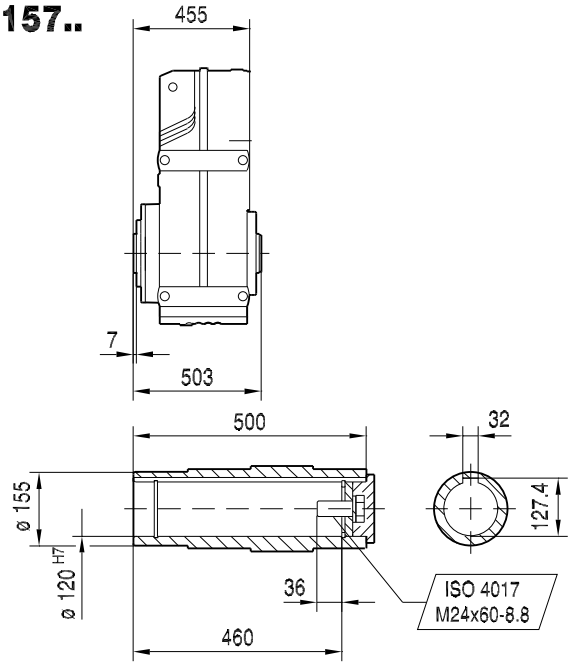


## FH157..

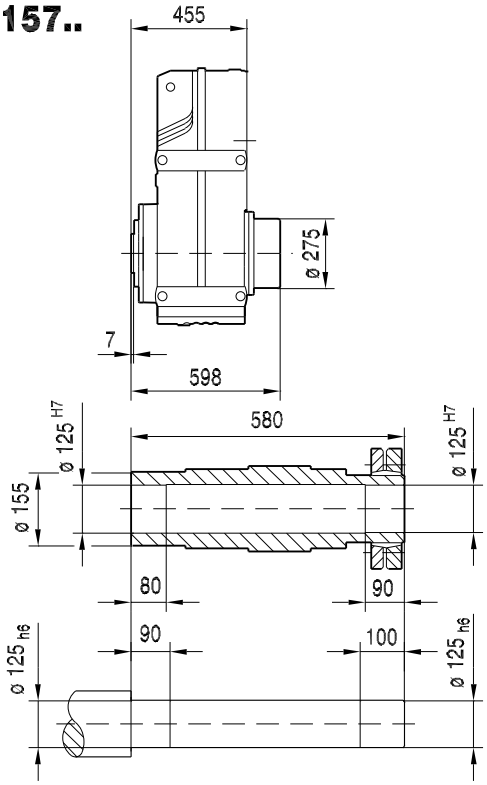


| (→ 🗎 155) | DRN160L | DRN180.. | DRN200L | DRN225.. | DRN250M | DRN280S | DRN280M | DRN315S-M | DRN315ME-H |
|---|---|---|---|---|---|---|---|---|---|
| **AC** | 314 | 357 | 394 | 434 | 495 | 495 | 495 | 624 | 624 |
| **AD** | 253 | 268 | 283 | 305 | 394 | 394 | 394 | 506 | 506 |
| **ADS** | 253 | 268 | 283 | 305 | 394 | 394 | 394 | 506 | 506 |
| **L** | 955 | 978 | 1088 | 1062 | 1199 | 1199 | 1294 | 1396 | 1526 |
| **LS** | 1144 | 1167 | 1293 | 1267 | 1439 | 1439 | 1534 | 1647 | 1777 |
| **LB** | 500 | 523 | 633 | 607 | 744 | 744 | 839 | 941 | 1071 |
| **LBS** | 689 | 712 | 838 | 812 | 984 | 984 | 1079 | 1192 | 1322 |

21933170/DE – 11/2015

## FAZ157..

42 072 00 14

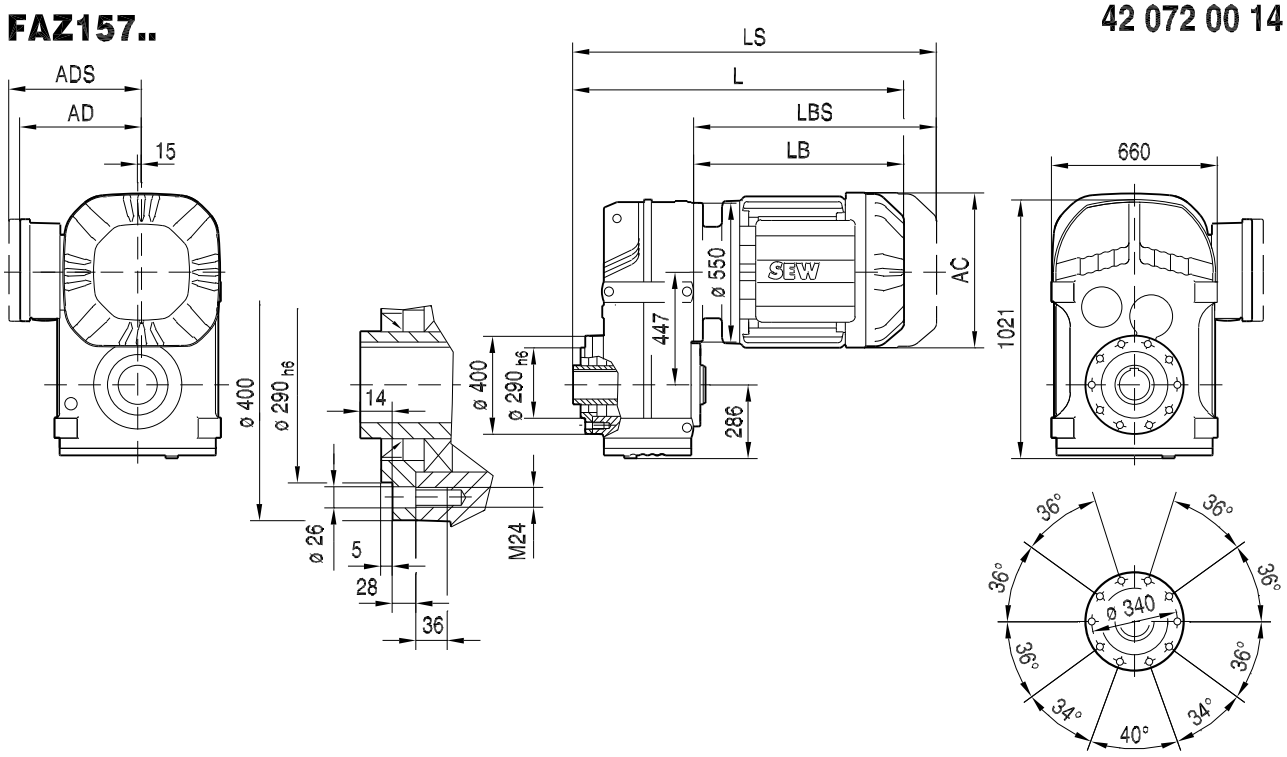


## FAZ157..

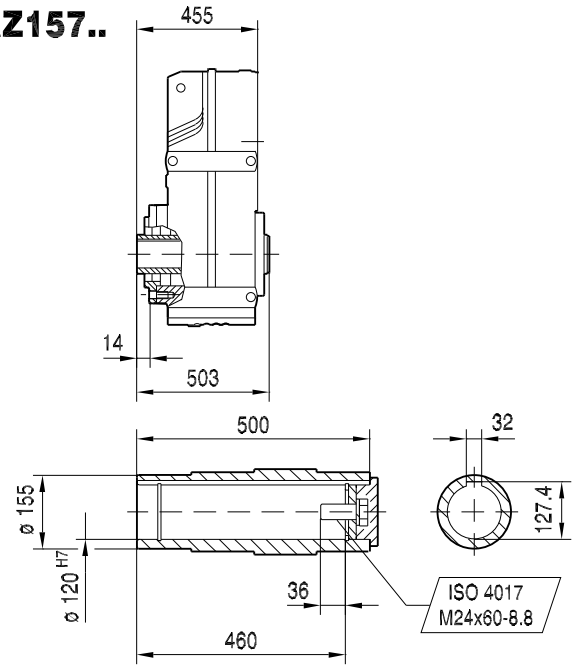


## FHZ157..

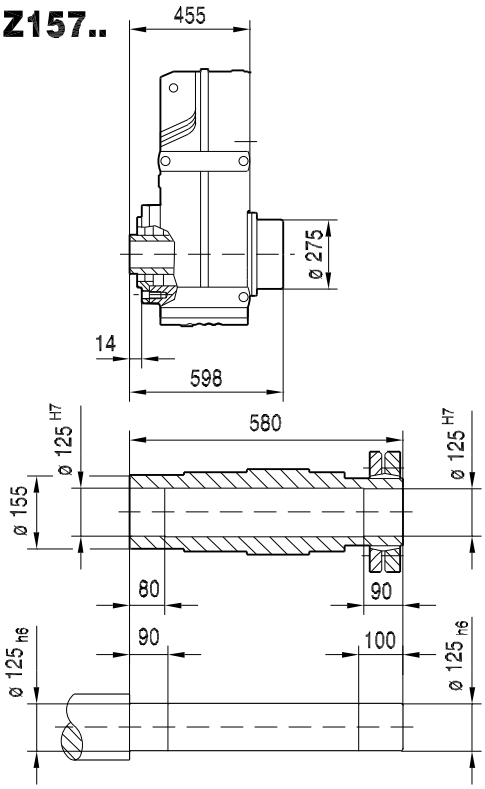


| (→ 🗎 155) | DRN160L | DRN180.. | DRN200L | DRN225.. | DRN250M | DRN280S | DRN280M | DRN315S-M | DRN315ME-H |
|---|---|---|---|---|---|---|---|---|---|
| **AC** | 314 | 357 | 394 | 434 | 495 | 495 | 495 | 624 | 624 |
| **AD** | 253 | 268 | 283 | 305 | 394 | 394 | 394 | 506 | 506 |
| **ADS** | 253 | 268 | 283 | 305 | 394 | 394 | 394 | 506 | 506 |
| **L** | 955 | 978 | 1088 | 1062 | 1199 | 1199 | 1294 | 1396 | 1526 |
| **LS** | 1144 | 1167 | 1293 | 1267 | 1439 | 1439 | 1534 | 1647 | 1777 |
| **LB** | 500 | 523 | 633 | 607 | 744 | 744 | 839 | 941 | 1071 |
| **LBS** | 689 | 712 | 838 | 812 | 984 | 984 | 1079 | 1192 | 1322 |

21933170/DE – 11/2015

**FZ157..**

**42 081 00 15**

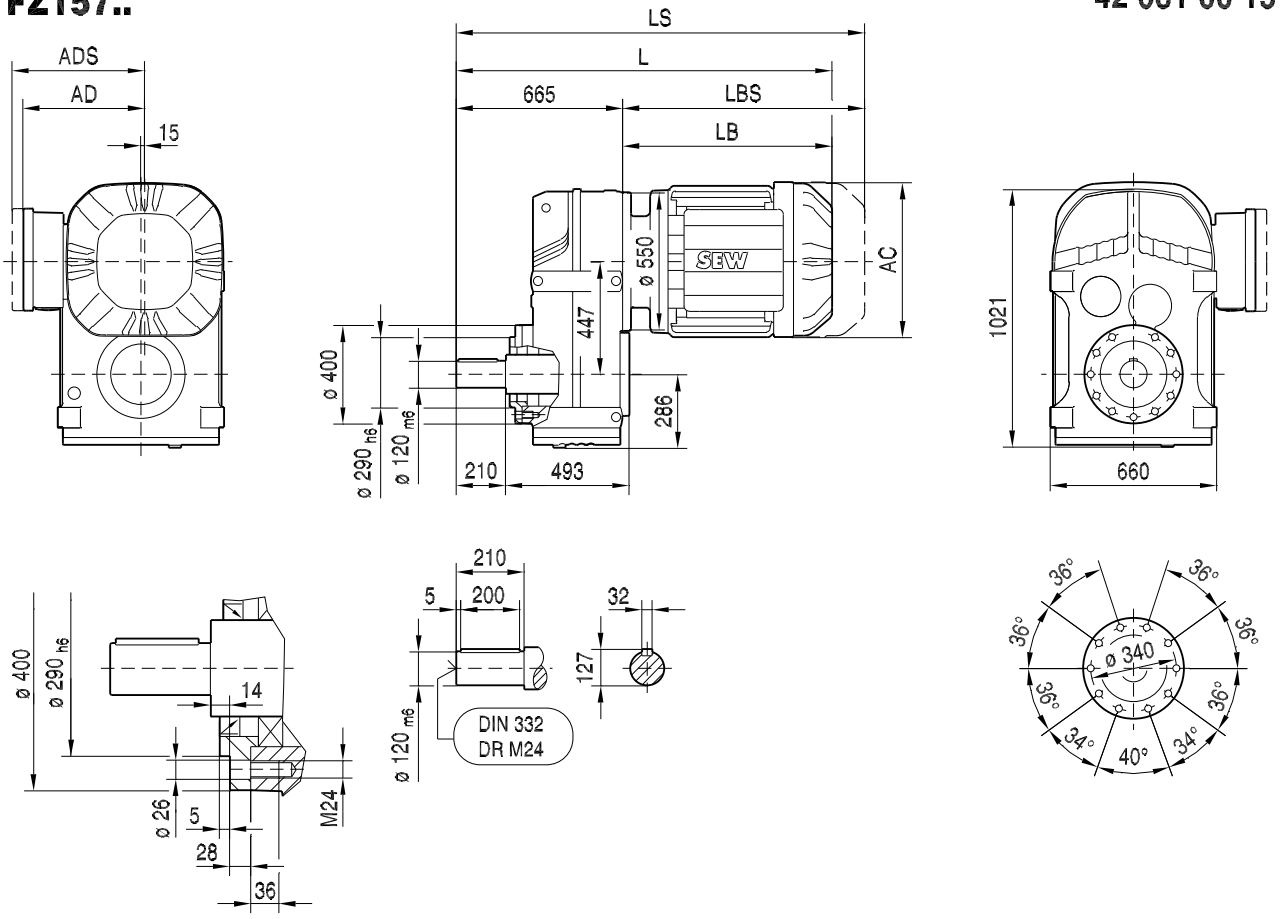


| (→ 🗎 155) | DRN160L | DRN180.. | DRN200L | DRN225.. | DRN250M | DRN280S | DRN280M | DRN315S-M | DRN315ME-H |
|---|---|---|---|---|---|---|---|---|---|
| **AC** | 314 | 357 | 394 | 434 | 495 | 495 | 495 | 624 | 624 |
| **AD** | 253 | 268 | 283 | 305 | 394 | 394 | 394 | 506 | 506 |
| **ADS** | 253 | 268 | 283 | 305 | 394 | 394 | 394 | 506 | 506 |
| **L** | 1165 | 1188 | 1298 | 1272 | 1409 | 1409 | 1504 | 1606 | 1736 |
| **LS** | 1354 | 1377 | 1503 | 1477 | 1649 | 1649 | 1744 | 1857 | 1987 |
| **LB** | 500 | 523 | 633 | 607 | 744 | 744 | 839 | 941 | 1071 |
| **LBS** | 689 | 712 | 838 | 812 | 984 | 984 | 1079 | 1192 | 1322 |

21933170/DE – 11/2015

## FT157..

42 073 00 14

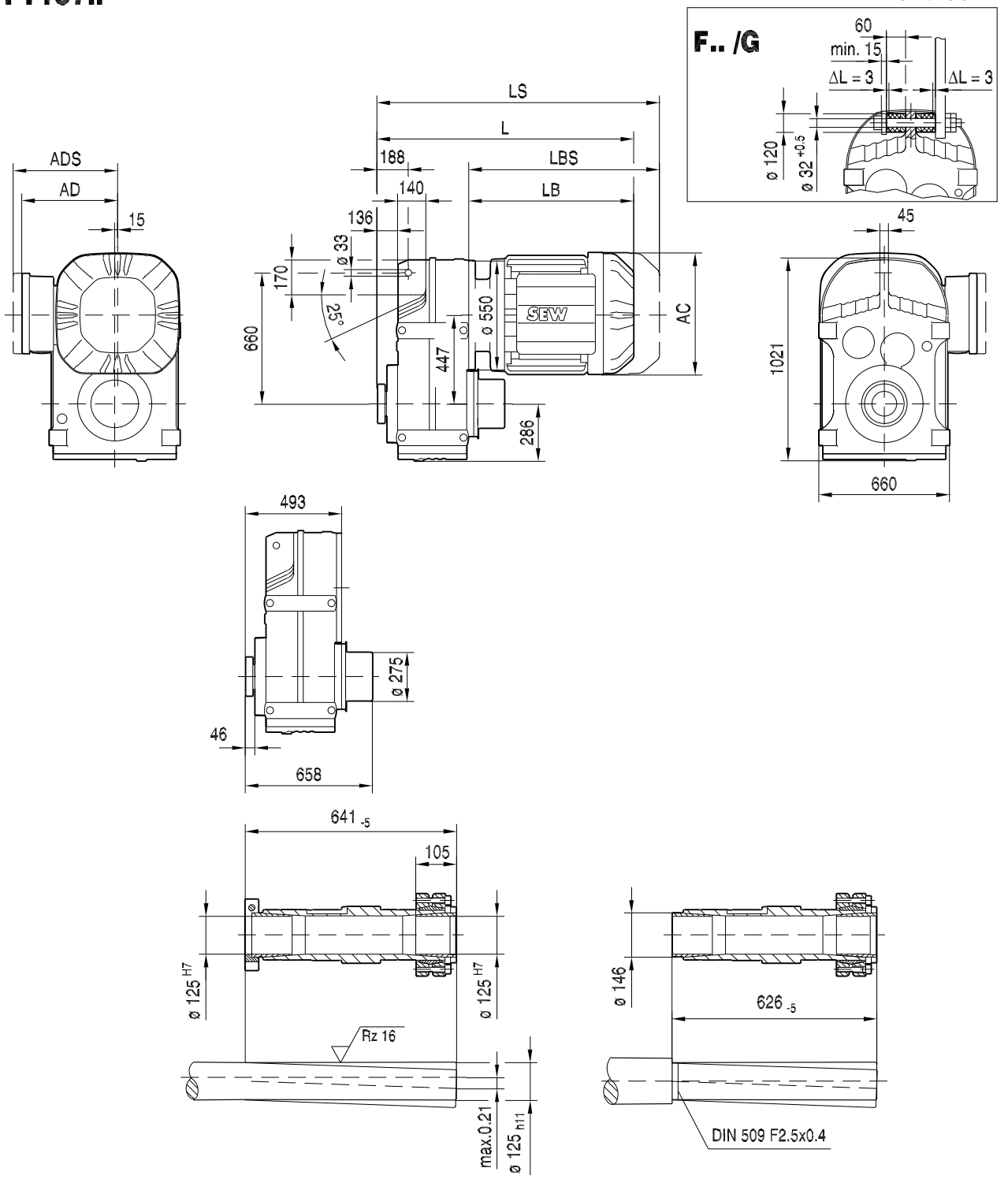


| (→ 🗎 155) | DRN160L | DRN180.. | DRN200L | DRN225.. | DRN250M | DRN280S | DRN280M | DRN315S-M | DRN315ME-H |
|---|---|---|---|---|---|---|---|---|---|
| **AC** | 314 | 357 | 394 | 434 | 495 | 495 | 495 | 624 | 624 |
| **AD** | 253 | 268 | 283 | 305 | 394 | 394 | 394 | 506 | 506 |
| **ADS** | 253 | 268 | 283 | 305 | 394 | 394 | 394 | 506 | 506 |
| **L** | 993 | 1016 | 1126 | 1100 | 1237 | 1237 | 1332 | 1434 | 1564 |
| **LS** | 1182 | 1205 | 1331 | 1305 | 1477 | 1477 | 1572 | 1685 | 1815 |
| **LB** | 500 | 523 | 633 | 607 | 744 | 744 | 839 | 941 | 1071 |
| **LBS** | 689 | 712 | 838 | 812 | 984 | 984 | 1079 | 1192 | 1322 |

21933170/DE – 11/2015

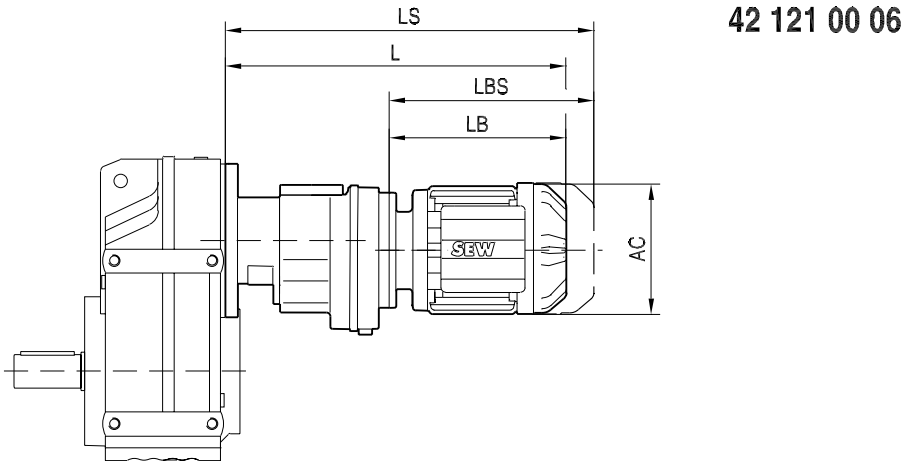


| (→ 155) | | AC | L | LS | LB | LBS |
|---|---|---|---|---|---|---|
| **F..27R17** | **DR63..** | 132 | 324 | 379 | 149 | 204 |
| **F..37R17** | **DR63..** | 132 | 324 | 379 | 149 | 204 |
| | **DR71S** | 139 | 335 | 403 | 160 | 228 |
| **F..47R17** | **DR63..** | 132 | 324 | 379 | 149 | 204 |
| | **DR71S** | 139 | 335 | 403 | 160 | 228 |
| | **DR71M** | 139 | 360 | 428 | 185 | 253 |
| **F..57R37** | **DR63..** | 132 | 356 | 411 | 191 | 246 |
| | **DR71S** | 139 | 367 | 434 | 202 | 269 |
| | **DR71M** | 139 | 392 | 459 | 227 | 294 |
| | **DRN80M** | 156 | 446 | 527 | 281 | 362 |
| **F..67R37** | **DR63..** | 132 | 356 | 411 | 191 | 246 |
| | **DR71S** | 139 | 367 | 434 | 202 | 269 |
| | **DR71M** | 139 | 392 | 459 | 227 | 294 |
| | **DRN80M** | 156 | 446 | 527 | 281 | 362 |
| | **DRN90S** | 179 | 448 | 541 | 283 | 376 |
| **F..77R37** | **DR63..** | 132 | 348 | 403 | 191 | 246 |
| | **DR71S** | 139 | 359 | 426 | 202 | 269 |
| | **DR71M** | 139 | 384 | 451 | 227 | 294 |
| | **DRN80M** | 156 | 438 | 519 | 281 | 362 |
| | **DRN90S** | 179 | 440 | 533 | 283 | 376 |
| | **DRN90L** | 179 | 472 | 565 | 315 | 408 |
| **F..87R57** | **DR63..** | 132 | 412 | 467 | 185 | 240 |
| | **DR71S** | 139 | 423 | 491 | 196 | 264 |
| | **DR71M** | 139 | 448 | 516 | 221 | 289 |
| | **DRN80M** | 156 | 502 | 583 | 275 | 356 |
| | **DRN90S** | 179 | 504 | 597 | 277 | 370 |
| | **DRN90L** | 179 | 536 | 629 | 309 | 402 |
| | **DRN100LS** | 197 | 533 | 626 | 305 | 398 |
| | **DRN100L** | 197 | 583 | 676 | 355 | 448 |
| **F..97R57** | **DR63..** | 132 | 407 | 462 | 185 | 240 |
| | **DR71S** | 139 | 418 | 486 | 196 | 264 |
| | **DR71M** | 139 | 443 | 511 | 221 | 289 |
| | **DRN80M** | 156 | 497 | 578 | 275 | 356 |
| | **DRN90S** | 179 | 499 | 592 | 277 | 370 |
| | **DRN90L** | 179 | 531 | 624 | 309 | 402 |
| | **DRN100LS** | 197 | 528 | 621 | 305 | 398 |
| | **DRN100L** | 197 | 578 | 671 | 355 | 448 |
| | **DRN112M** | 221 | 608 | 720 | 386 | 498 |

| (→ 155) | | AC | L | LS | LB | LBS |
|---|---|---|---|---|---|---|
| **F..107R77** | **DR63..** | 132 | 425 | 480 | 178 | 233 |
| | **DR71S** | 139 | 436 | 504 | 189 | 257 |
| | **DR71M** | 139 | 461 | 529 | 214 | 282 |
| | **DRN80M** | 156 | 515 | 596 | 268 | 349 |
| | **DRN90S** | 179 | 517 | 610 | 270 | 363 |
| | **DRN90L** | 179 | 549 | 642 | 302 | 395 |
| | **DRN100LS** | 197 | 545 | 638 | 298 | 391 |
| | **DRN100L** | 197 | 595 | 688 | 348 | 441 |
| | **DRN112M** | 221 | 626 | 738 | 379 | 491 |
| | **DRN132S** | 221 | 676 | 788 | 429 | 541 |
| | **DRN132M** | 261 | 692 | 831 | 445 | 584 |
| **F..127R77** | **DR63..** | 132 | 410 | 465 | 178 | 233 |
| | **DR71S** | 139 | 421 | 489 | 189 | 257 |
| | **DR71M** | 139 | 446 | 514 | 214 | 282 |
| | **DRN80M** | 156 | 500 | 581 | 268 | 349 |
| | **DRN90S** | 179 | 502 | 595 | 270 | 363 |
| | **DRN90L** | 179 | 534 | 627 | 302 | 395 |
| | **DRN100LS** | 197 | 530 | 623 | 298 | 391 |
| | **DRN100L** | 197 | 580 | 673 | 348 | 441 |
| | **DRN112M** | 221 | 611 | 723 | 379 | 491 |
| | **DRN132S** | 221 | 661 | 773 | 429 | 541 |
| **F..127R87** | **DRN132S** | 221 | 704 | 816 | 424 | 536 |
| | **DRN132M** | 261 | 720 | 859 | 440 | 579 |
| | **DRN132L** | 261 | 745 | 884 | 465 | 604 |
| | **DRN160M** | 314 | 814 | 1003 | 534 | 723 |
| | **DRN160L** | 314 | 814 | 1003 | 534 | 723 |
| **F..157R97** | **DR71M** | 139 | 529 | 597 | 204 | 272 |
| | **DRN80M** | 156 | 583 | 664 | 258 | 339 |
| | **DRN90S** | 179 | 585 | 678 | 260 | 353 |
| | **DRN90L** | 179 | 617 | 710 | 292 | 385 |
| | **DRN100LS** | 197 | 613 | 706 | 288 | 381 |
| | **DRN100L** | 197 | 663 | 756 | 338 | 431 |
| | **DRN112M** | 221 | 694 | 806 | 369 | 481 |
| | **DRN132S** | 221 | 744 | 856 | 419 | 531 |
| | **DRN132M** | 261 | 760 | 899 | 435 | 574 |
| | **DRN132L** | 261 | 785 | 924 | 460 | 599 |
| | **DRN160M** | 314 | 854 | 1043 | 529 | 718 |
| | **DRN160L** | 314 | 854 | 1043 | 529 | 718 |
| | **DRN180M** | 357 | 879 | 1068 | 554 | 743 |

21933170/DE – 11/2015