SEW EURODRIVE

Addendum to the Catalog

AC Motors

DR..71.J – DR..100.J

with LSPM Technology

Edition 02/2015

21343799/EN

Table of contents

1 General information ... 5

2 Product description ... 6
2.1 AC motor with LSPM technology ... 6
2.2 Properties ... 6
2.2.1 Energy efficiency ... 6
2.2.2 Synchronous operation ... 6
2.2.3 Speed classes ... 7
2.2.4 Operation with frequency inverter ... 7

3 Overview of types and type designation ... 8
3.1 Versions and options for the motor series DR.. ... 8
3.1.1 Designation of motors ... 8
3.1.2 Output options ... 8
3.1.3 Mechanical attachments ... 9
3.1.4 Temperature sensor / temperature detection ... 9
3.1.5 Connection alternatives ... 9
3.1.6 Fan options ... 10
3.1.7 Additional options ... 10
3.2 Nameplates ... 10
3.2.1 Nameplate for 50 Hz frequency inverter operation ... 11
3.2.2 Nameplate for 87 Hz frequency inverter operation ... 12
3.2.3 Nameplate for line-powered motor ... 13
3.3 Serial number ... 13

4 Project planning for drives ... 14
4.1 General information on project planning ... 14
4.1.1 Starting frequency ... 14
4.1.2 Overhung and axial loads ... 14
4.1.3 Braking torques ... 16
4.1.4 Center of gravity of DR.. motors ... 17
4.1.5 Options and designs ... 17
4.1.6 Drive selection data ... 18
4.2 Project planning for frequency inverter operation ... 19
4.2.1 Electrical characteristics ... 19
4.2.2 Thermal characteristics ... 20
4.2.3 Mechanical characteristics ... 27
4.2.4 Project planning procedure for DR..J motors, controlled ... 29
4.3 Project planning for line operation ... 31
4.3.1 Electrical characteristics ... 31
4.3.2 Thermal characteristics ... 31
4.3.3 Permitted starting frequency of DR..J motors ... 32
4.3.4 Starting torque for line operation ... 32
4.3.5 Project planning procedure for DR..J motors, uncontrolled (50 Hz grid) ... 33
4.4 Project planning with the SEW Workbench ... 34

5 Technical data ... 35

21343799/EN – 02/2015

5.1 Key to the data of the global motor / energy-efficient motor 35
5.2 DRE..J motors 36
5.2.1 Frequency inverter operation with 400 V / 50 Hz 36
5.2.2 Frequency inverter operation with 400 V / 87 Hz 37
5.2.3 Line operation with 400 V / 50 Hz 38
5.3 DRP..J motors 39
5.3.1 Frequency inverter operation with 400 V / 50 Hz 39
5.3.2 Frequency inverter operation with 400 V / 87 Hz 40
5.3.3 Line operation with 400 V / 50 Hz 41
5.4 DRU..J motors 42
5.4.1 Frequency inverter operation with 400 V / 50 Hz 42
5.4.2 Frequency inverter operation with 400 V / 87 Hz 43
5.4.3 Line operation with 400 V / 50 Hz 44

6 Dimension sheets for DR..J motors/brakemotors 45
6.1 Notes on the dimension sheets 45
6.2 Dimension sheets 46

21343799/EN – 02/2015

1 General information

INFORMATION

This addendum to the catalog "AC Motors DR.71 − 315, DT56, DR63" adds the DR.. 71.J − 100.J AC motors of the DRE..J, DRP..J and DRU..J series.

Other applicable documentation:

- Addendum to operating instructions: "AC Motors DR.71.J – DR.100.J with LSPM Technology"
- Catalog: "AC Motors DR.71 – 315, DT56, DR63"

21343799/EN – 02/2015

2 Product description

2.1 AC motor with LSPM technology

The DR..J line start permanent magnet (LSPM) motor is an AC motor with squirrel-cage motor with permanent magnets in the rotor. After an asynchronous start, the motor synchronizes with the operating frequency and runs in synchronous mode.

With their compact and sturdy design, the DR..J motors with LSPM technology offer additional, interesting synergies. Due to their operating principle, there are no rotor losses. The result is a very high efficiency in a very compact design.

DR..J motors combine the advantages of the durable and rugged asynchronous motor with those of the low-loss, compact synchronous motor. They are designed for operation on simple frequency inverters with V/f control. In addition, direct operation on the grid is possible in low-inertia applications.

The series is characterized by the following features:

- Three efficiency classes
  - DRU.. (IE4 Super Premium Efficiency)
  - DRP.. (IE3 Premium Efficiency)
  - DRE.. (IE2 High Efficiency)
- Nine sizes (71S to 100L)
- Power ratings of 0.18 to 5.5 kW
- Synchronous operation with operating frequency
- Part of modular AC motor concept with all familiar options
- Can be combined with standard SEW-EURODRIVE gear units

2.2 Properties

2.2.1 Energy efficiency

The synchronous motors do not suffer any rotor losses during operation. They thus offer high levels of efficiency in a compact design. The DRU.. design achieves the energy efficiency class IE4 with efficiency levels of up to 91%.

In the same efficiency class, a DR..J motor is two frame sizes smaller than a standard motor of the same power rating.

2.2.2 Synchronous operation

DR..J motors run synchronously with the operating frequency. This allows applications with high speed consistency to be operated with variable torques.

DR..J motors offer the following advantages:

- Slip-free speed control without encoder feedback, which means lower installation and purchase costs.
- Group drive of several motors with the same power rating on a frequency inverter with the same speed.

21343799/EN – 02/2015

2.2.3 Speed classes

To achieve optimum adaptation of the motor speed to the required control limits of the applications, SEW-EURODRIVE offers the DR..J motors with the following rated speeds:

- 1500 rpm (for line and frequency inverter operation)
- 2610 rpm (only for frequency inverter operation)

2.2.4 Operation with frequency inverter

The Line Start Permanent Magnet (LSPM) motors in the DRE..J, DRP..J and DRU..J series can be used with the following SEW-EURODRIVE frequency inverters in the form of single or multi-motor drives of the same size:

- MOVITRAC® MC07B
- MOVITRAC® LTP-B
- MOVIMOT®
- MOVIFIT®

The DR..J motors are designed for frequency inverters with the "scalar V/f" operating mode.

The operation of DR..J motors with frequency inverters from other manufacturers is permitted. The typical features of LSPM motors must be taken into account.

Note the addendum to the operating instructions "AC Motors DR.71.J – DR.100.J with LSPM Technology".

21343799/EN – 02/2015

3 Overview of types and type designation

3.1 Versions and options for the motor series DR..

The type designations of the motor series DR.. and the versions and options are listed in the following tables.

3.1.1 Designation of motors

Designation	
DRE..	Energy-efficient motor, High Efficiency IE2
DRP..	Energy-efficient motor, Premium Efficiency IE3
DRU..	Energy-efficient motor, Super Premium Efficiency IE4
DR..J	Line start permanent magnet motor
71 – 100	Sizes: 71 / 80 / 90 / 100
S – L	Lengths: S = short / M = medium / L = long
4	Number of poles

3.1.2 Output options

Option	Designation
/FI	IEC foot-mounted motor with specification of shaft height
/FF	IEC flange-mounted motor with bore
/FT	IEC flange-mounted motor with threads
/FE	IEC flange-mounted motor with bore holes and IEC feet, with specification of shaft height
/FY	IEC flange-mounted motor with thread and IEC feet, with specification of shaft height if required
/FL	General flange-mounted motor (other than IEC)
/FK	General flange-mounted motor (other than IEC) with feet, with specification of shaft height if required
/FG	7-series integral motor, as stand-alone motor
/FM	7-series integral gearmotor with IEC feet, with specification of shaft height if required
/FC	C-face flange-mounted motor, dimensions in inches

Additional descriptions of the output options can be found in the "AC Motors DR.71 – 315, DT56, DR63" catalog.

21343799/EN – 02/2015

3.1.3 Mechanical attachments

Design	Description
BE..	Spring-loaded brake with specification of size
HR	Manual brake release, automatic disengaging function
HF	Manual brake release, lockable

Option	Description
/MSW	MOVI-SWITCH®
/MI	Motor identification module for MOVIMOT®
/MM03 – MM40	MOVIMOT®
/MO	MOVIMOT® option(s)

3.1.4 Temperature sensor / temperature detection

Option	Description
/TF	Temperature sensor (positive coefficient thermistor or PTC resistor)
/TH	Thermal switch (bimetallic switch)
/KY	One sensor for temperature detection KTY84 – 130
/PT	One/three sensor(s) for temperature detection PT100

3.1.5 Connection alternatives

Option	Designation
/IS	Integrated plug connector
/ASE.	HAN 10ES plug connector on terminal box with single locking latch (cage clamp contacts on the motor side)
/ASB.	HAN 10ES plug connector on terminal box with double locking latch (cage clamp contacts on the motor side)
/ACE.	HAN 10E plug connector on terminal box with single locking latch (crimp contacts on the motor side)
/ACB.	HAN 10E plug connector on terminal box with double locking latch (crimp contacts on the motor side)
/AME. /ABE. /ADE. /AKE.	HAN Modular 10B plug connector on terminal box with single locking latch (crimp contacts on the motor side)
/AMB. /ABB. /ADB. /AKB.	HAN Modular 10B plug connector on terminal box with double locking latch (crimp contacts on the motor side)
/KCC	6-pole terminal strip with cage clamp contacts (for DR..71 – DR..100)
/KC1	C1-profile-compliant connection of the electrified monorail drive (VDI guideline 3643) (for DR71, 80)
/IV	Other industrial plug connectors according to customer specifications

21343799/EN – 02/2015

3.1.6 Fan options

Option	Description
/V	Forced cooling fan
/VH	Radial fan on fan guard
/Z	Additional inertia (flywheel fan)
/AL	Metal fan
/U	Non-ventilated (without fan)
/OL	Non-ventilated (closed B end)
/C	Protection canopy for fan guard
/LF	Air filter
/LN	Low-noise fan guard (for DR..71 – 100)

3.1.7 Additional options

Option	Description
/DH	Condensation drain hole
/RI	Reinforced winding insulation

3.2 Nameplates

NOTICE

Failure to use the voltage and connection type specified on the nameplate can result in damage to the motor.

Damage to the motor.

Only operate the motor with the specified connection type.

Information provided on the nameplate:

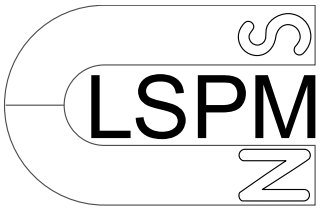

6529361163

The icon on the nameplate indicates those motors with LSPM technology and informs the user of the installed permanent magnets.

LSPM technology enables load-independent, synchronous speeds up to the synchronous breakdown torque M_{Ksyn}.

M_{Ksyn}/M_N Maximum permitted overload factor

- M_{Ksyn} = synchronous breakdown torque, max. permitted torque
- M_N = nominal torque

21343799/EN – 02/2015

3.2.1 Nameplate for 50 Hz frequency inverter operation

The following figure shows an example nameplate for a motor that is exclusively operated on a frequency inverter.

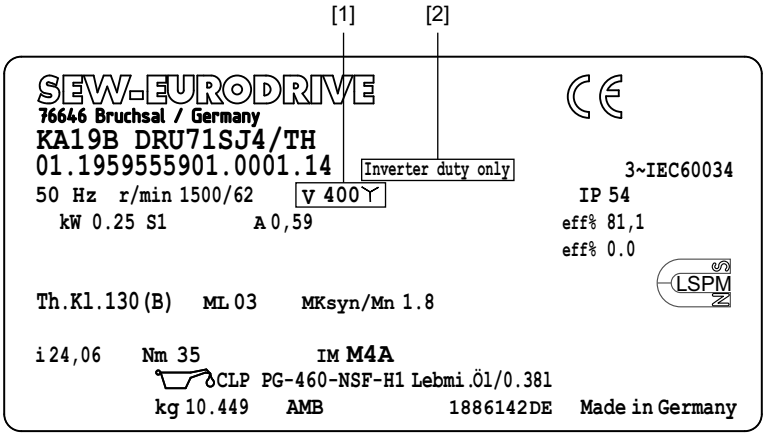

12842757259

[1] Nominal voltage 400 V ≙ 230/400 V motor in 50 Hz, only in star connection

[2] Inverter operation only

Additional nameplate for 50 Hz frequency inverter operation

If no frequency inverter is installed on the motor, an additional nameplate is attached to the motor terminal box.

The following figure shows an example of an additional nameplate:

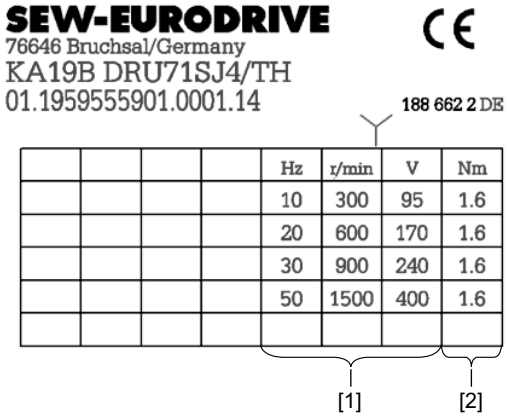

12842761867

[1] V/f characteristic

[2] Constant torque in the setting range from 1 to 5

21343799/EN – 02/2015

3.2.2 Nameplate for 87 Hz frequency inverter operation

In the 87 Hz variant, the power rating is one step higher than for the 50 Hz variant of the same frame size.

The following figure shows an example nameplate for a motor that is exclusively operated on a frequency inverter.

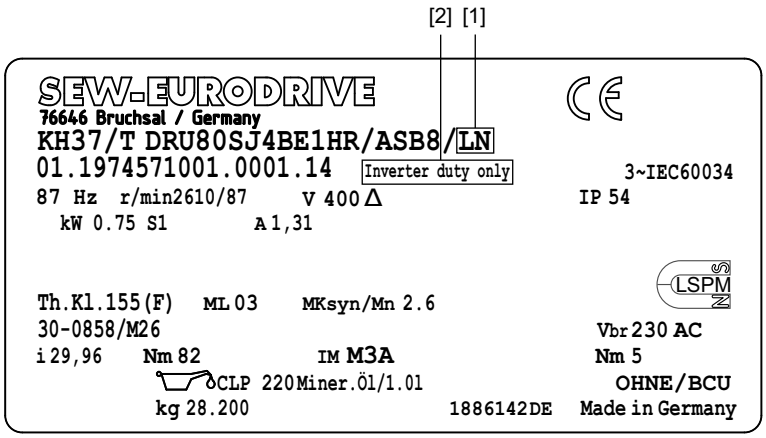

12842764939

[1] Low-noise fan guard (LN), for 87 Hz standard variant

[2] Nominal voltage 400 V ≙ 230/400 V motor in 87 Hz, only in delta connection

Additional nameplate for 87 Hz frequency inverter operation

If no frequency inverter is installed on the motor, an additional nameplate is attached to the motor terminal box.

The following figure shows an example of an additional nameplate:

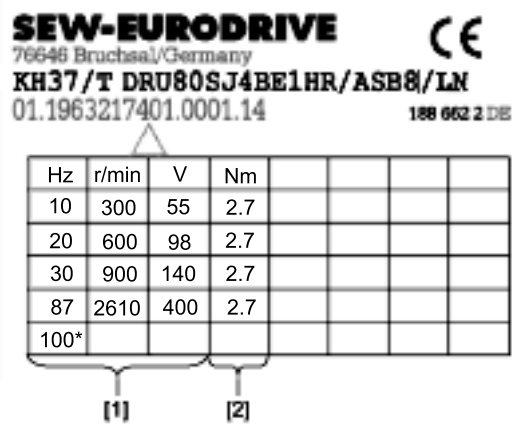

Hz	r/min	V	Nm				
10	300	55	2.7				
20	600	98	2.7				
30	900	140	2.7				
87	2610	400	2.7				
100*							

9007212098148875

[1] V/f characteristic

[2] Constant torque in the setting range from 1 to 8.7

*Only for some motor sizes in 100 Hz. For input speeds exceeding 2610 rpm, please contact SEW-EURODRIVE.

21343799/EN – 02/2015

3.2.3 Nameplate for line-powered motor

The following figure shows a nameplate example for a line-powered motor.

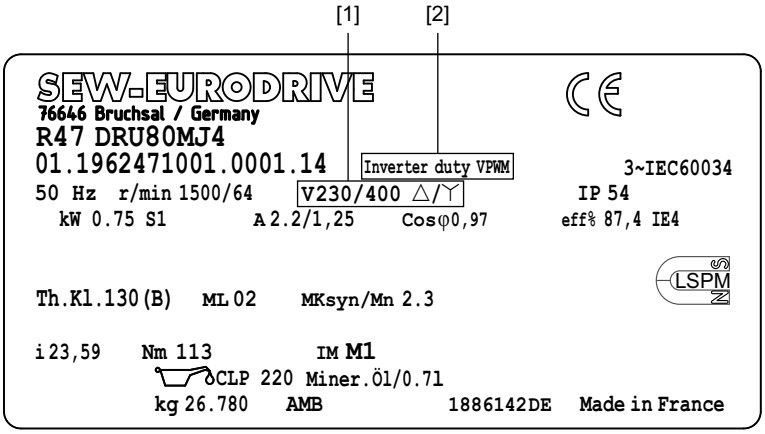

12843412107

[1] Nominal voltage

[2] Line and inverter operation are permitted

3.3 Serial number

01.	12212343	01.	0001.	13
Sales organization:	Order number (8-digit)	Order item (2-digit)	Quantities (4-digit)	Final digits of the year of manufacture (2-digit)

This results in:

01.1234567801.01.0001.13

If the design has customer adaptations, an "x" is found between the 16th and 17th digit in place of a point:

01.1234567801.01.0001x13

4 Project planning for drives

4.1 General information on project planning

INFORMATION

The project planning specifications apply to vertical and horizontal applications (hoists) the gradient of which does not exceed 10°. Please contact SEW-EURODRIVE if the motors are to be used for higher gradients.

DR..J motors must not be used for the following applications.

- Phase-synchronous operation
- Positioning tasks
- Rigidly connected multi-motor drives
- Group drive of different sizes

4.1.1 Starting frequency

Permitted starting frequency of DR..J motor

When considering starting frequencies, a general distinction must be made between line and frequency inverter operation. In this context, please observe the specifications in the relevant project planning section.

Permitted starting frequency of brake

When using a brakemotor, you must also check whether the brake is approved for use with the required starting frequency "Z." Refer to the information in the chapter "Permitted work done by the BE brake" in the "AC Motors" catalog.

4.1.2 Overhung and axial loads

Determining the overhung load

When determining the overhung load, the transmission element factor f_Z must be considered. The transmission element factor depends on the used transmission element, e.g. gears, chains, V-belts, flat belts or toothed belts. When belt pulleys are used, the initial belt tension must be considered as well. The overhung loads F_R calculated with the transmission element factor must not exceed the permitted overhung load of the motor.

INFORMATION

The permitted overhung loads specified for DR.. motors in the "AC Motors" catalog must be reduced by 20% for DR..J motors.

Transmission element	Transmission element factor f_Z	Comments
Direct drive	1.0	–
Gears	1.0	≥ 17 teeth
Gears	1.15	< 17 teeth
Sprockets	1.0	≥ 20 teeth

21343799/EN – 02/2015

Transmission element	Transmission element factor f_Z	Comments
Sprockets	1.25	< 20 teeth
Narrow V-belt	1.75	Influence of the pre-tensioning force
Flat belt	2.50	Influence of the pre-tensioning force
Toothed belt	1.50	Influence of the pre-tensioning force
Gear rack	1.15	< 17 teeth (pinion)

The following equation is used to calculate the overhung load with the transmission element factor f_Z: $F_R = 0.8 \times f_z \times F_{Rx}$

Overhung load diagrams for 4-pole DR..J motors

The overhung load diagrams for the motors correspond to those for the DR.. motor series. These can be found in the chapter "Overhung loads" in the "AC Motors" catalog.

Permitted axial load for DR.. motors

You can then determine the permitted axial load F_A on the basis of the previously determined overhung load F_{Rx}:

DR.. motors: $F_A = 0.2 \times F_{Rx}$

The customer's motor shaft and bearings were designed for the overhung and axial loads specified in the diagrams in this chapter. The specifications are based on the nominal speed n_N and the superimposed nominal torque M_N in S1 operation of the motor.

The second shaft end of the motor, shown as curve /2W in the diagrams, can transfer a maximum of the motor's nominal torque M_N in S1 operation.

INFORMATION

Loads with deviating conditions

If conditions occur which are not considered in the descriptions or diagrams in this chapter, consult SEW-EURODRIVE.

Used ball bearing types (standard)

The following table shows the permitted ball bearing types:

Motor type	A-side bearing		B-side bearing	
	IEC motor	Gearmotor	AC motor	Brakemotor
DR..71.J4	6204-2Z-J-C3	6303-2Z-J-C3	6203-2Z-J-C3	6203-2RS-J-C3
DR..80.J4	6205-2Z-J-C3	6304-2Z-J-C3	6304-2Z-J-C3	6304-2RS-J-C3
DR..90.J4 – DR..100.J4	6306-2Z-J-C3		6205-2Z-J-C3	6205-2RS-J-C3

21343799/EN – 02/2015

4.1.3 Braking torques

Different brake sizes

Depending on the demands placed on the brake, different brake sizes are available for mounting on the motors.

Brake assignment

The following table shows the possible motor and BE brake assignments and possible braking torques:

Motor	Construction	Brake	Braking torque gradation in Nm										
			1.8	2.5	3.5	5.0	7.0	10	14	20	28	40	55
DR..71.J4	Integrated	BE05	x	x	x	x							
		BE1				x	x	x					
DR..80.J4		BE05	x	x	x	x							
		BE1				x	x	x					
		BE2				x	x	x	x	x			
DR..90.J4	Modular	BE1				x	x	x					
		BE2				x	x	x	x	x			
		BE5							x	x	x	x	x
DR..100.J4		BE2					x	x	x	x			
		BE5							x	x	x	x	x

21343799/EN – 02/2015

4.1.4 Center of gravity of DR.. motors

The center of gravity of a motor is a theoretical variable that assumes that the entire mass of the motor is concentrated in one point and acts on this point with the weight F_q. The mass of the motor can be found in the chapter Technical data.

Please take this into account when combining the IEC motors with gear units that are mounted with the aid of adapters.

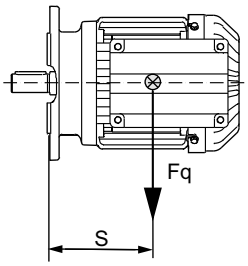

3980543755

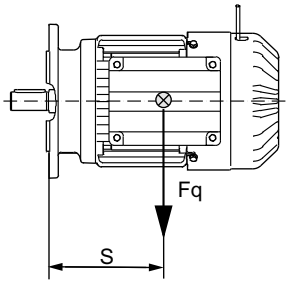

3980546443

Motor type	Center of gravity S in mm	Brakemotor type	Brake	Center of gravity S in mm
DR..71SJ4	86	DR..71SJ4	BE05	108
DR..71MJ4	92	DR..71MJ4	BE1	112
DR..80SJ4	106	DR..80SJ4	BE1	148
DR..80MJ4	119	DR..80MJ4	BE2	150
DR..90MJ4	118	DR..90MJ4	BE2	142
DR..90LJ4	124	DR..90LJ4	BE5	151
DR..100MJ4	137	DR..100MJ4	BE5	165
DR..100LJ4	153	DR..100LJ4	BE5	180

4.1.5 Options and designs

As part of the modular DR.. motor system, the DR..J motor with LSPM technology also benefits from the available options.

With very few exceptions, all designs from the existing modular motor system can be used in the relevant size.

The following designs are **not** available for DR..J motors with LSPM technology:

- Backstop /RS
- Second shaft end /2W
- Add-on encoder

21343799/EN – 02/2015

4.1.6 Drive selection data

The following data is required to enable accurate specification of the components for your drive:

Drive selection data			Your entry
n_{amin}	Minimum output speed	[rpm]	
n_{amax}	Maximum output speed	[rpm]	
P_a at n_{amin}	Output power at minimum output speed	[kW]	
P_a at n_{amax}	Output power at maximum output speed	[kW]	
M_a at n_{amin}	Output torque at minimum output speed	[Nm]	
M_a at n_{amax}	Output torque at maximum output speed	[Nm]	
F_R	The overhung load on the output shaft. Force application at the center of the shaft end is assumed. If not, please specify the exact application point giving the application angle and direction of rotation of the shaft for recalculation.	[N]	
F_A	Axial load (tension and compression) on the input shaft	[N]	
J_{load}	Mass moment of inertia to be driven	[10^{-4}kgm²]	
R, F, K, W, HK, HW M1-M6	Gear unit type and mounting position	–	
IP..	Required degree of protection	–	
ϑ_{Amb}	Ambient temperature	[°C]	
H	Installation altitude	[m above sea level]	
S.., ..% cdf	Operating mode and cyclic duration factor cdf; alternatively, exact load cycle can be specified.	–	
Z	Starting frequency; alternatively, exact load cycle can be specified.	[1/h]	
f_{line}	Line frequency	[Hz]	
V_{mot} U_{brake}	Operating voltage of motor and brake	[V]	
M_B	Required braking torque	[Nm]	
For frequency inverter drive operation: Control type and setting range			

Correct configuration of the drive first requires the data for the machine to be driven (mass, speed, setting range, etc.).

These data help determine the required power, torque and speed. Refer to the "Drive Engineering – Practical Implementation, Project Planning" publication or the "SEW Workbench" project planning software for assistance.

The suitable drive can be selected on the basis of the calculated power and speed of the drive along with other mechanical requirements.

21343799/EN – 02/2015

4.2 Project planning for frequency inverter operation

4.2.1 Electrical characteristics

The DR..J AC motors from SEW-EURODRIVE are designed for operation on frequency inverters.

NOTICE

Operating the motor above or below the specified speeds can result in motor damage.

Possible damage to property.

- Limit the maximum speed at the inverter. For information on the procedure, refer to the documentation of the inverter.
- Limit the maximum current at the inverter.
- No continuous duty below 300 rpm.
- During the acceleration or deceleration phase, travel through the speed range below 300 rpm within one second.
- Do not exceed the specified maximum limit torque (M_{Ksyn}) or the maximum current (I_{max}), even during acceleration.

DR..J motors are available in two speed classes:

- Setting range 1:5, 300 – 1500 rpm, ⅄ connection
- Setting range 1:8.7, 300 – 2610 rpm, △ connection

DR..J motors are designed for use with the following frequency inverters:

- Central control cabinet technology: MOVITRAC® MC07B, MOVITRAC® LTP-B
- Decentralized technology: MOVIFIT® FC, MOVIMOT® D, mounted installation or installed close to motor.

Operation of the motor in excess of the specified frequencies is not permitted.

INFORMATION

DR..J motors of the 2610 rpm speed class are equipped with a noise reducing fan guard as standard. The noise reduction is achieved by means of a special fan guard sheet.

As a result, noise is reduced by 5 – 8 dB(A).

Motor voltage

The 4-pole DR..J motors are available for nominal voltages of AC 220 to 720 V in the following designs.

Frequency-controlled motor (operation on frequency inverter):

- Nominal voltage 400 V ⅄ , 50 Hz, 400 V ≙ 230/400 V motor
- Nominal voltage 400 V △, 87 Hz, 400 V ≙ 230/400 V motor

If not specified in the order, the motors are designed for the 50 Hz voltage range in the aforementioned voltages.

21343799/EN – 02/2015

For 50 Hz

Energy efficiency class	Motor sizes up to 4 kW	Nominal voltage
		⅄
High (IE2)	DRE71SJ4 – 100MJ4	400 V, 50 Hz
Premium (IE3)	DRP71SJ4 – 100LJ4	
	Motor sizes up to 3 kW	
Super Premium (IE4)	DRU71SJ4 – 100LJ4	

For 87 Hz

Energy efficiency class	Motor sizes up to 5.5 kW	Nominal voltage
		△
High (IE2)	DRE71SJ4 – 100MJ4	400 V, 87 Hz
Premium (IE3)	DRP71SJ4 – 100LJ4	
	Motor sizes up to 4 kW	
Super Premium (IE4)	DRU71SJ4 – 100LJ4	

4.2.2 Thermal characteristics

Thermal classes according to IEC 60034-1 (EN 60034-1)

DR..J AC motors intended for operation with frequency inverters must possess thermal class 155 (F).

Thermally permitted torque

When synchronous DR..J motors are operated with frequency inverters, the thermally permitted torque must be considered during project planning. The following factors determine the thermally permitted torque:

- Operating mode
- Base frequency f_{base} = 50 Hz (400 V ⅄) or f_{base} = 87 Hz (400 V △).

You can determine the thermally permitted torque on the basis of torque limit curves. The effective torque calculated during project planning must be below the limit curve with regard to the mean speed. The limit curves for the 4-pole synchronous DR..J motors with f_{base} = 50 Hz and f_{base} = 87 Hz are shown below. The following conditions apply to the shown limit curves:

- Operating mode S1
- Supply voltage of the frequency inverter V_{line} = 3 × AC 400 V
- Motor in thermal class 155 (F)

21343799/EN – 02/2015

f_{base} = 50 Hz (400 V ⅄)

The following diagrams show the limit curves for operation at base frequency f_{base} = 50 Hz.

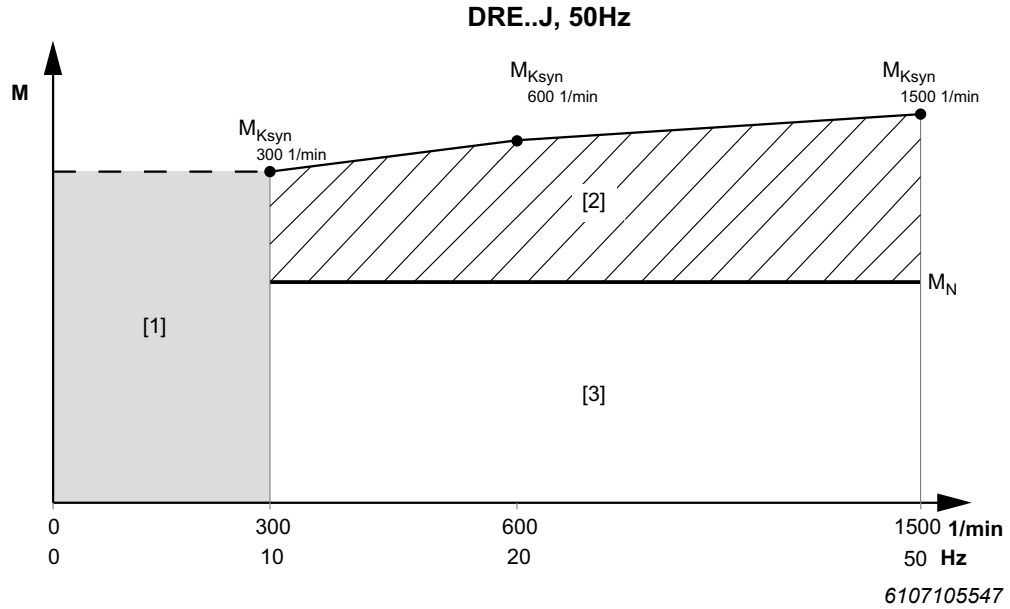

[1] Short-term acceleration/deceleration
[2] Short-term overload
[3] Continuous duty

Values for the nominal torque M_N and the synchronous breakdown torque M_{Ksyn}/M_N are provided in the following table:

Motor type	Motor power P_N	Nominal torque M_N	Synchronous breakdown torque M_{Ksyn}/M_N		
			300 rpm	600 rpm	1500 rpm
	kW	Nm	10 Hz	20 Hz	50 Hz
DRE71SJ4	0.37	2.4	1.1	1.2	1.3
DRE71MJ4	0.55	3.5	1.3	1.5	1.6
DRE71MJ4	0.75	4.8	1.1	1.2	1.3
DRE80SJ4	1.1	7	1.1	1.2	1.3
DRE80MJ4	1.5	9.5	1.3	1.5	1.6
DRE90MJ4	2.2	14	1.3	1.5	1.6
DRE90LJ4	3	19	1.5	1.7	1.8
DRE100MJ4	4	25	1.5	1.7	1.8

21343799/EN – 02/2015

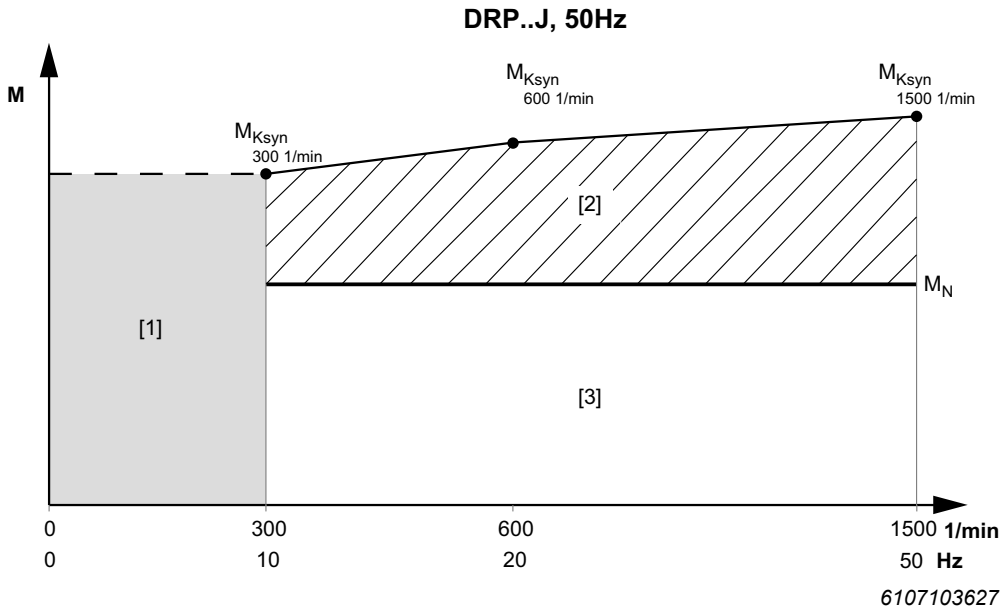

[1] Short-term acceleration/deceleration
[2] Short-term overload
[3] Continuous duty

Values for the nominal torque M_N and the synchronous breakdown torque M_{Ksyn}/M_N are provided in the following table:

Motor type	Motor power P_N	Nominal torque M_N	Synchronous breakdown torque M_{Ksyn}/M_N		
			300 rpm	600 rpm	1500 rpm
	kW	Nm	10 Hz	20 Hz	50 Hz
DRP71SJ4	0.37	2.4	1.1	1.2	1.3
DRP71MJ4	0.55	3.5	1.3	1.5	1.6
DRP80SJ4	0.75	4.8	1.4	1.6	1.7
DRP80MJ4	1.1	7	1.5	1.7	1.8
DRP90MJ4	1.5	9.5	1.8	2.0	2.1
DRP90LJ4	2.2	14	1.9	2.1	2.2
DRP100MJ4	3	19	1.8	2.0	2.1
DRP100LJ4	4	25	1.9	2.1	2.2

21343799/EN – 02/2015

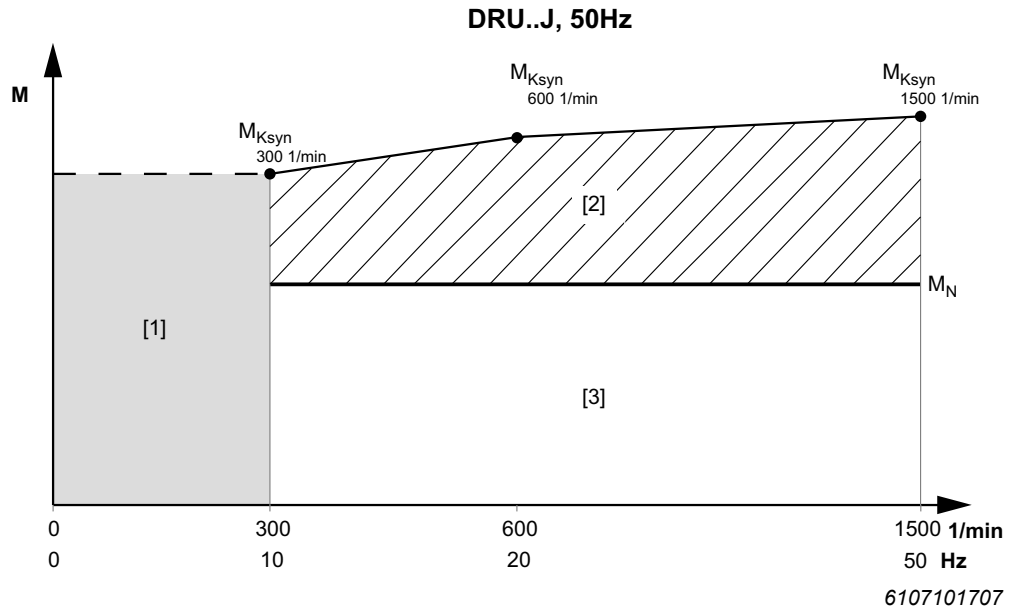

[1] Short-term acceleration/deceleration
[2] Short-term overload
[3] Continuous duty

Values for the nominal torque M_N and the synchronous breakdown torque M_{Ksyn}/M_N are provided in the following table:

Motor type	Motor power P_N	Nominal torque M_N	Synchronous breakdown torque M_{Ksyn}/M_N		
			300 rpm	600 rpm	1500 rpm
	kW	Nm	10 Hz	20 Hz	50 Hz
DRU71SJ4	0.18	1.1	1.9	2.1	2.2
DRU71SJ4	0.25	1.6	1.5	1.7	1.8
DRU71MJ4	0.37	2.4	1.8	2.0	2.1
DRU80SJ4	0.55	3.5	1.7	1.9	2.0
DRU80MJ4	0.75	4.8	1.8	2.0	2.1
DRU90MJ4	1.1	7	2.0	2.3	2.4
DRU90LJ4	1.5	9.5	2.1	2.4	2.5
DRU100MJ4	2.2	14	2.1	2.4	2.5
DRU100LJ4	3	19	2.1	2.4	2.5

21343799/EN – 02/2015

f_{base} = 87 Hz (400 V △)

The following diagrams show the limit curves for operation at base frequency f_{base} = 87 Hz. The curves are different for those motors with self-cooling and those with forced cooling (= optional forced cooling fan).

DRE..J, 87Hz

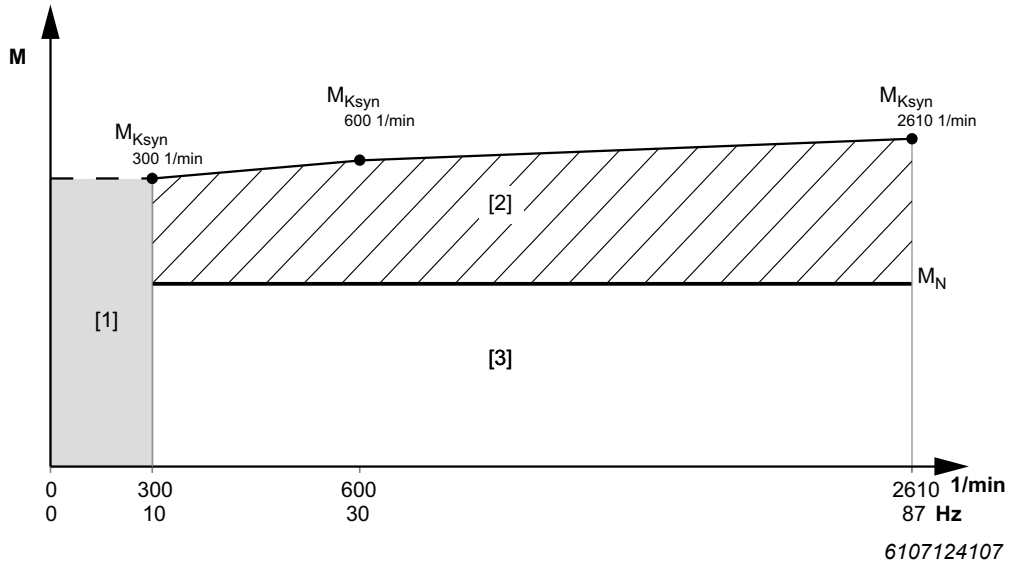

[1] Short-term acceleration/deceleration
[2] Short-term overload
[3] Continuous duty

Values for the nominal torque M_N and the synchronous breakdown torque M_{Ksyn}/M_N are provided in the following table:

Motor type	Motor power P_N	Nominal torque M_N	Synchronous breakdown torque M_{Ksyn}/M_N		
			300 rpm	600 rpm	2610 rpm
	kW	Nm	10 Hz	20 Hz	50 Hz
DRE71SJ4	0.55	2	1.3	1.4	1.5
DRE71MJ4	0.75	2.7	1.7	1.9	2.0
DRE71MJ4	1.1	4	1.3	1.5	1.5
DRE80SJ4	1.5	5.5	1.4	1.6	1.7
DRE80MJ4	2.2	8	1.6	1.8	1.9
DRE90MJ4	3	11	1.7	1.9	2.0
DRE90LJ4	4	15	1.9	2.2	2.3
DRE100MJ4	5.5	20	1.9	2.1	2.2

21343799/EN – 02/2015

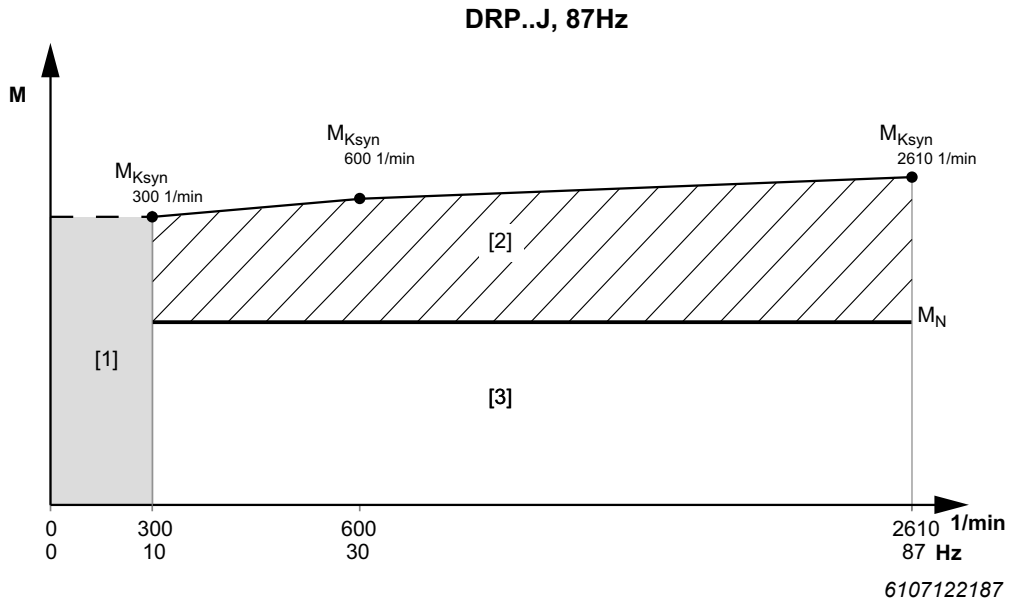

[1] Short-term acceleration/deceleration
[2] Short-term overload
[3] Continuous duty

Values for the nominal torque M_N and the synchronous breakdown torque M_{Ksyn}/M_N are provided in the following table:

Motor type	Motor power P_N	Nominal torque M_N	Synchronous breakdown torque M_{Ksyn}/M_N		
			300 rpm	600 rpm	2610 rpm
	kW	Nm	10 Hz	20 Hz	50 Hz
DRP71SJ4	0.55	2	1.3	1.4	1.5
DRP71MJ4	0.75	2.7	1.7	1.9	2.0
DRP80SJ4	1.1	4	1.7	1.9	2.0
DRP80MJ4	1.5	5.5	1.9	2.1	2.2
DRP90MJ4	2.2	8	2.1	2.4	2.5
DRP90LJ4	3	11	2.4	2.7	2.8
DRP100MJ4	4	15	2.4	2.6	2.8
DRP100LJ4	5.5	20	2.0	2.7	2.8

21343799/EN – 02/2015

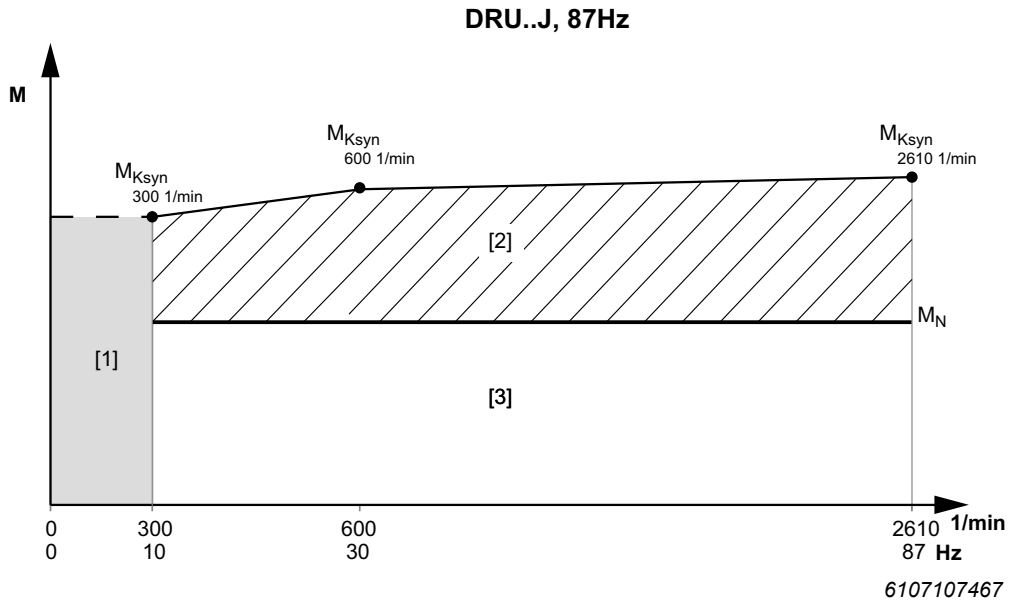

[1] Short-term acceleration/deceleration
[2] Short-term overload
[3] Continuous duty

Values for the nominal torque M_N and the synchronous breakdown torque M_{Ksyn}/M_N are provided in the following table:

Motor type	Motor power P_N	Nominal torque M_N	Synchronous breakdown torque M_{Ksyn}/M_N		
			300 rpm	600 rpm	2610 rpm
	kW	Nm	10 Hz	20 Hz	87 Hz
DRU71SJ4	0.25	0.9	2.4	2.6	2.7
DRU71SJ4	0.37	1.4	1.8	2.0	2.1
DRU71MJ4	0.55	2	2.1	2.4	2.5
DRU80SJ4	0.75	2.7	2.2	2.5	2.6
DRU80MJ4	1.1	4	2.1	2.4	2.5
DRU90MJ4	1.5	5.5	2.6	2.9	3.1
DRU90LJ4	2.2	8	2.5	2.8	3.0
DRU100MJ4	3	11	2.7	3.0	3.2
DRU100LJ4	4	15	2.4	3.1	3.3

21343799/EN – 02/2015

4.2.3 Mechanical characteristics

Mechanical limit

In the case of electrical machines on frequency inverters, the maximum torque and the maximum speed must be regarded as mechanical limits.

The maximum torque is derived from the mechanical limitation of the diagrams.

Additional loads arising at the customer site, such as overhung or axial loads resulting from belt drives, must be taken into account for all motors.

Additional motor options will influence these speeds. Please contact SEW-EURODRIVE in such cases. For brakemotors, the applicable project planning guidelines for the braking work must also be observed.

Reinforced insulation for frequency inverter operation > AC 500 V

Operating an AC asynchronous motor on a frequency inverter greatly increases the stress on the winding.

The voltage DC link converters commonly used today pulse the DC voltage of the DC link (U_z) along the motor incoming cables in the form of blocks. This pulsed voltage supply takes place in the kHz range, which results in several thousand ON and OFF switchings per second – at SEW-EURODRIVE usually with 4, 8 or 16 kHz.

The standard windings of DR..J motors are constructed with copper wires and insulating materials that can easily withstand voltage peaks up to U_{LL} 1560 V. Operation on a frequency inverter up to 500 V, including the tolerance of +10% on the power supply input side, is therefore approved for the normal winding.

If a DR..J motor is operated with a frequency inverter supplied with 600 V or 690 V, or with an active front end that raises the DC link voltage to over DC 742.5 V, the double voltage pulse can exceed the maximum permissible value of the standard winding of 1560 V.

Therefore, design measures have to be taken to protect the motor from these extremely high voltages and prevent damage.

Reinforced insulation /RI

Even for the standard winding, SEW-EURODRIVE uses high-quality copper wires with a two-layer coating. An increased electric strength of the winding insulation is achieved by reinforcing the coat thickness of the inner layer for the copper wires. The standard insulation materials used for insulating phase-to-phase and phase-to-ground are sufficient. This insulating system option for DR.. motors carries the type and catalog designation /RI.

DR.. AC motors with non-SEW inverters

In the case of inverter-supplied motors, you must adhere to the wiring instructions issued by the inverter manufacturer. It is essential to observe the operating instructions for the frequency inverter.

21343799/EN – 02/2015

Operation on non-SEW frequency inverters is permitted if the pulse voltages at the motor terminals indicated in the following figure are not exceeded.

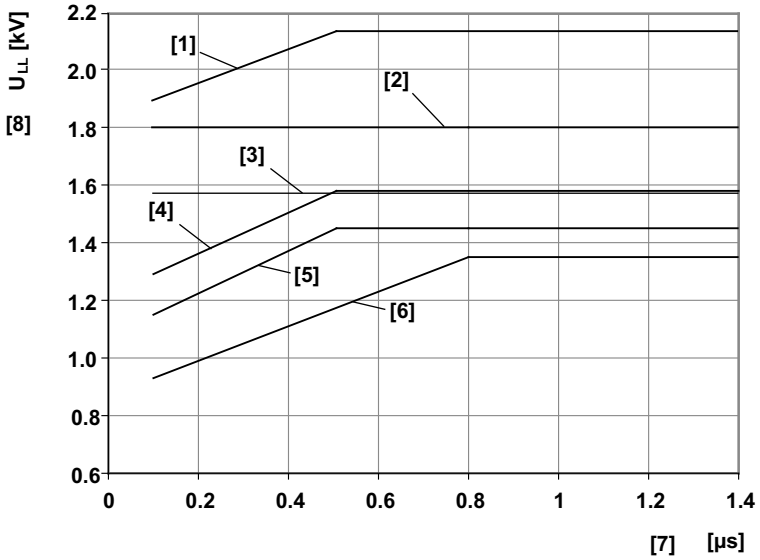

9007203235332235

[1] Permitted pulse voltage for DR.. motors with reinforced insulation and increased resistance against partial discharge (/RI2).
[2] Permitted pulse voltage for DR.. motors with reinforced insulation (/RI), 1800 V > 3.1 x 575 V.
[3] Permitted pulse voltage according to NEMA MG1 part 31, V_N ≤ 500 V, 1500 V > 3.1 x 480 V.
[4] Permitted pulse voltage according to IEC 60034-25, limit value curve A for nominal voltage V_N ≤ 500 V, star connection.
[5] Permitted pulse voltage according to IEC 60034-25, limit value curve A for nominal voltage V_N ≤ 500 V, delta connection.
[6] Permitted pulse voltage according to IEC 60034-17
[7] Voltage rise time
[8] Permitted pulse voltage

INFORMATION

During startup of the drive on a non-SEW inverter, the specifications for the voltage, frequency and speed on the additional nameplate must be taken into account when setting the V/f characteristic curve on the frequency inverter.

INFORMATION

Compliance with the following limit values must be verified and taken into account:

- The supply voltage level at the non-SEW inverter.
- The threshold of the brake chopper voltage.
- The operating mode of the motor (motoring/regenerative operation).

If the permitted pulse voltage is exceeded, limiting measures, such as filters, chokes or special motor cables must be used. Contact the manufacturer of the frequency inverter for more information.

21343799/EN – 02/2015

4.2.4 Project planning procedure for DR..J motors, controlled

The following flow diagram shows the procedure for project planning of a gearmotor powered by an inverter.

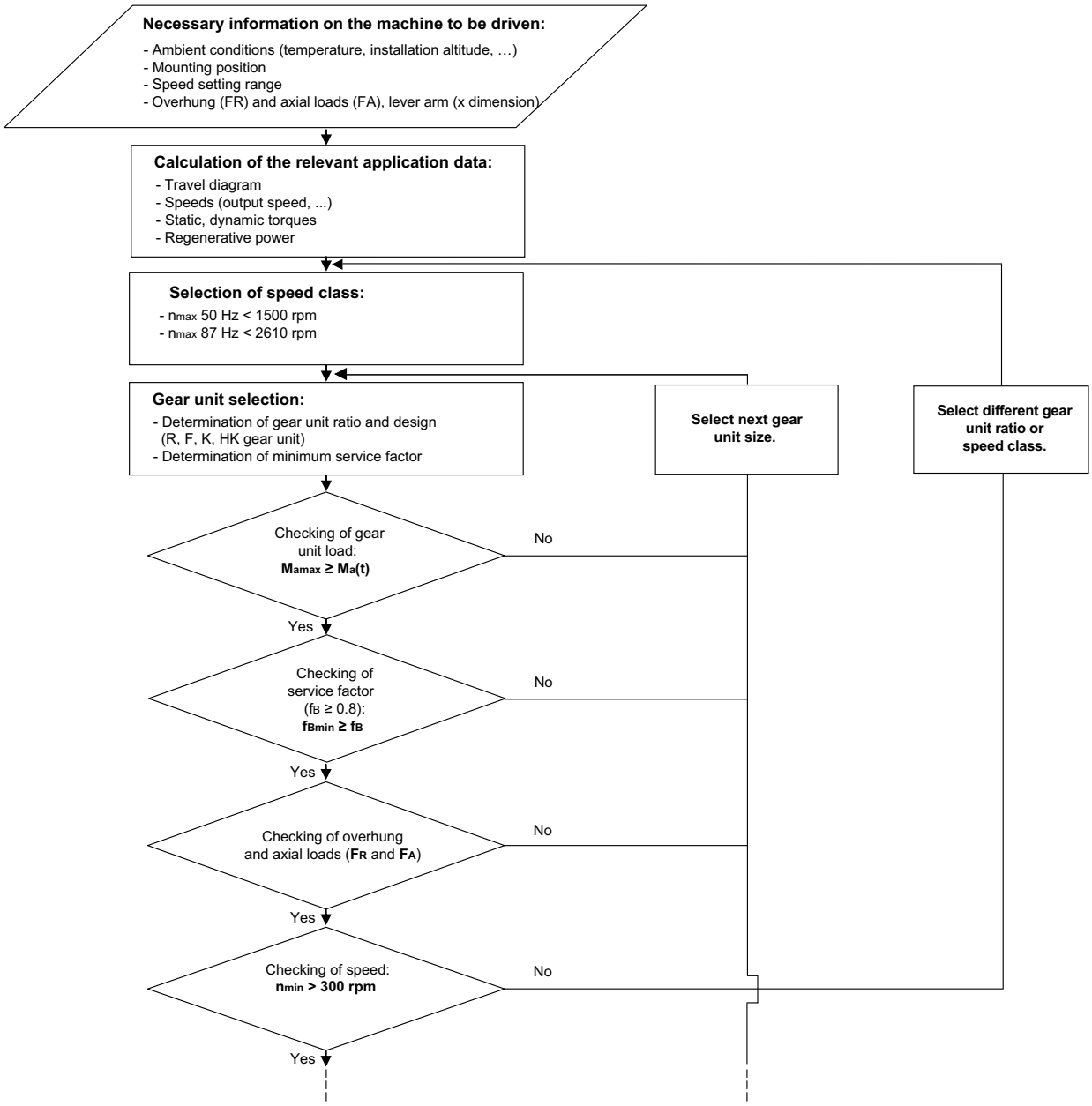

5841663499

21343799/EN – 02/2015

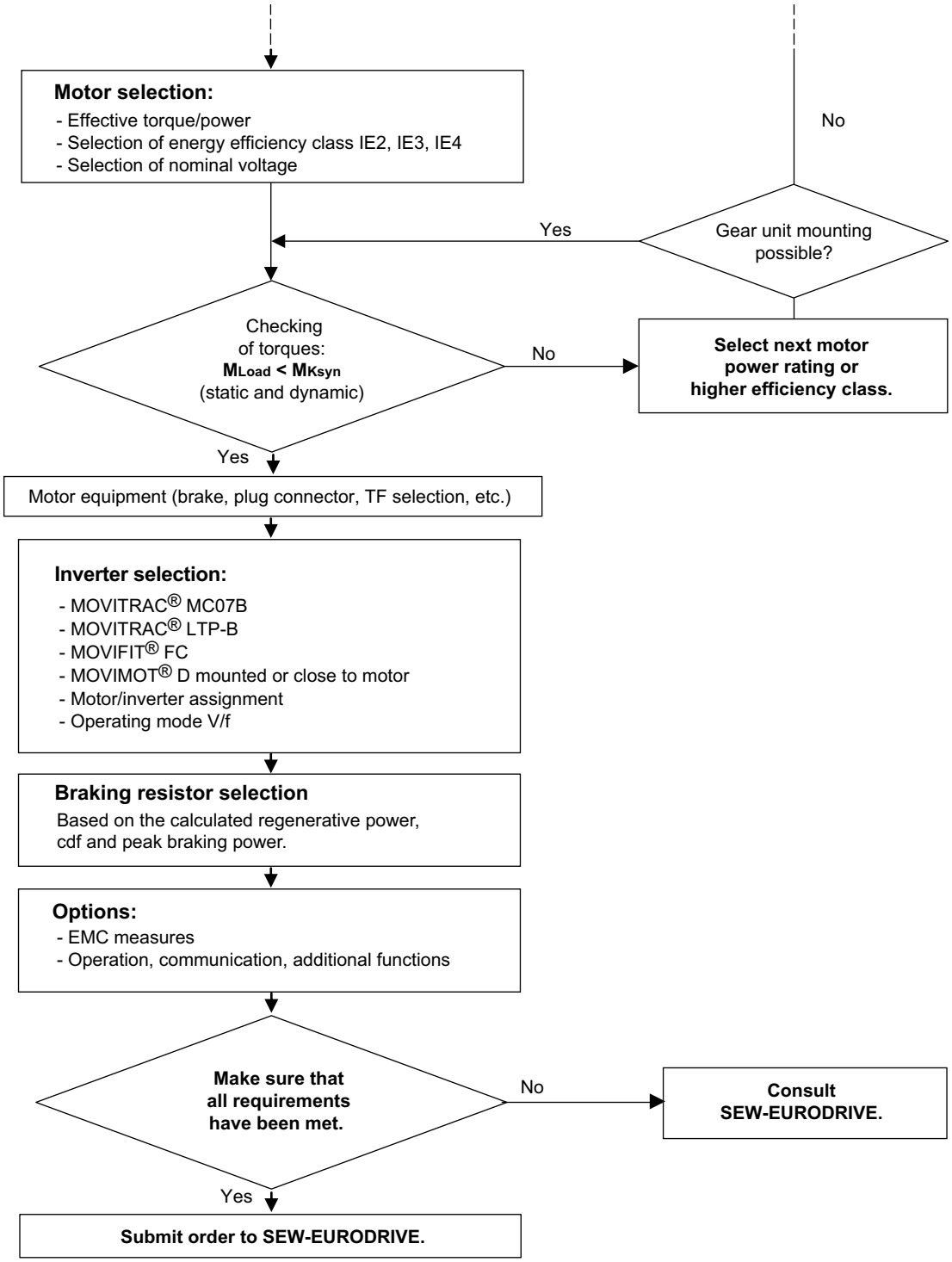

5841665419

21343799/EN – 02/2015

4.3 Project planning for line operation

4.3.1 Electrical characteristics

Frequency

The DR..J motors from SEW-EURODRIVE are configured for a line frequency of 50 Hz.

Motor voltage

The 4-pole DR..J motors are generally available for nominal voltages of AC 220 to 720 V in the following designs:

Energy efficiency class	Motor sizes up to 4 kW	Fixed voltage (mains motor)	Voltage range	
		△ /⅄	△	⅄
High (IE2)	DRE71SJ4 – 100MJ4	230/400 V, 50 Hz	220 – 242 V, 50 Hz	380 – 420 V, 50 Hz
Premium (IE3)	DRP71SJ4 – 100LJ4			
	Motor sizes up to 3 kW			
Super Premium (IE4)	DRU71SJ4 – 100LJ4			

The table of brake voltages is provided in the chapter "Brake voltage" in the "AC Motors" catalog.

Motors and brakes for AC 230/400 V and motors for AC 400/690 V can also be operated on supply systems with a nominal voltage of AC 220/380 V or AC 660 V respectively. The voltage-dependent data will only change slightly.

Standard connections for 50 Hz motors

Number of poles	Synchronous speed n_{syn} at 50 Hz in rpm	Connection
4-pole	1500	△ /⅄

4.3.2 Thermal characteristics

Thermal classes according to IEC 60034-1 (EN 60034-1)

The assignment of thermal classes to the DR..J motors is as follows:

- DRE.., DRP.., DRU.. = 130 (B)

Motors with thermal class 155 (F) are also available on request.

The table below lists the overtemperatures according to IEC 62114 and IEC 60034-1 (EN 60034-1).

Thermal class		Limit overtemperature in K
New	Old	
130	B	80 K
155	F	105 K

21343799/EN – 02/2015

4.3.3 Permitted starting frequency of DR..J motors

When operating the motor directly on the grid, the permitted starting frequency Z of the DR..J motor is a maximum of 5 cycles/hour [1/h].

4.3.4 Starting torque for line operation

The following diagram shows the curve for the pull-in torque (M_I) based on different mass inertia ratios, whereby a distinction is made between the efficiency classes DRE.., DRP.. and DRU..

Ratios above these curves are not permitted since motor startup can no longer be guaranteed. If the load on the drive exceeds the permitted M_{Ksyn} value, the motor reverts to its asynchronous torque curve and automatically returns to synchronous mode when the load drops below this value.

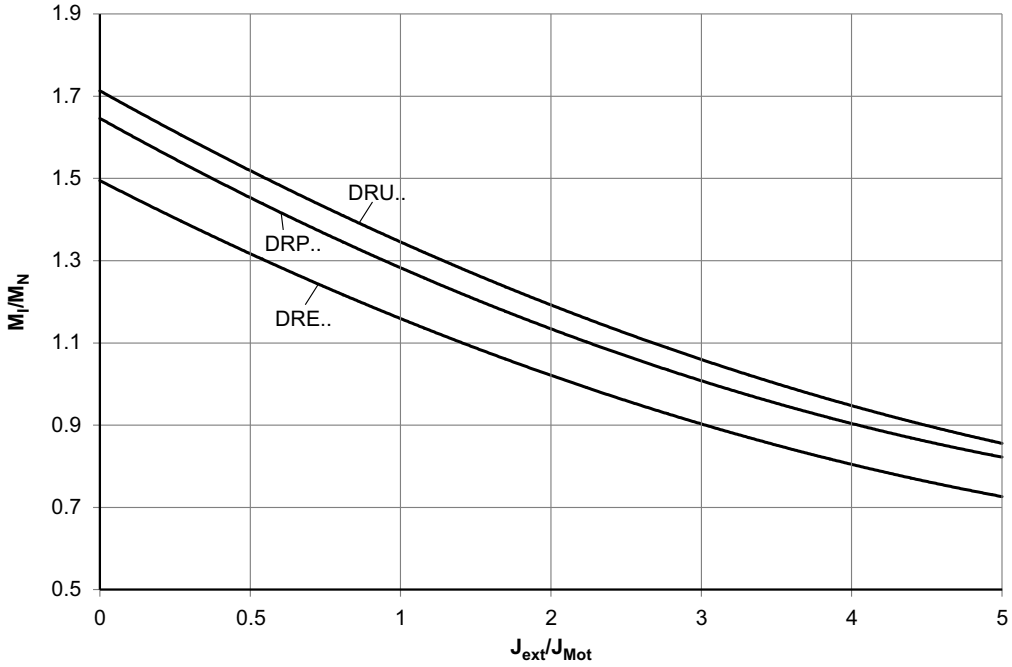

6107099019

An optional Z fan increases the external inertia (J_{ext}) or the inertia factor, which has a negative effect on the pull-in behavior.

In line operation, activate the drive under no-load operation or with a minimal load. Raise the load up to the nominal load after startup and pull-in.

21343799/EN – 02/2015

4.3.5 Project planning procedure for DR..J motors, uncontrolled (50 Hz grid)

The following flow diagram illustrates the project planning procedure for a gearmotor on the grid.

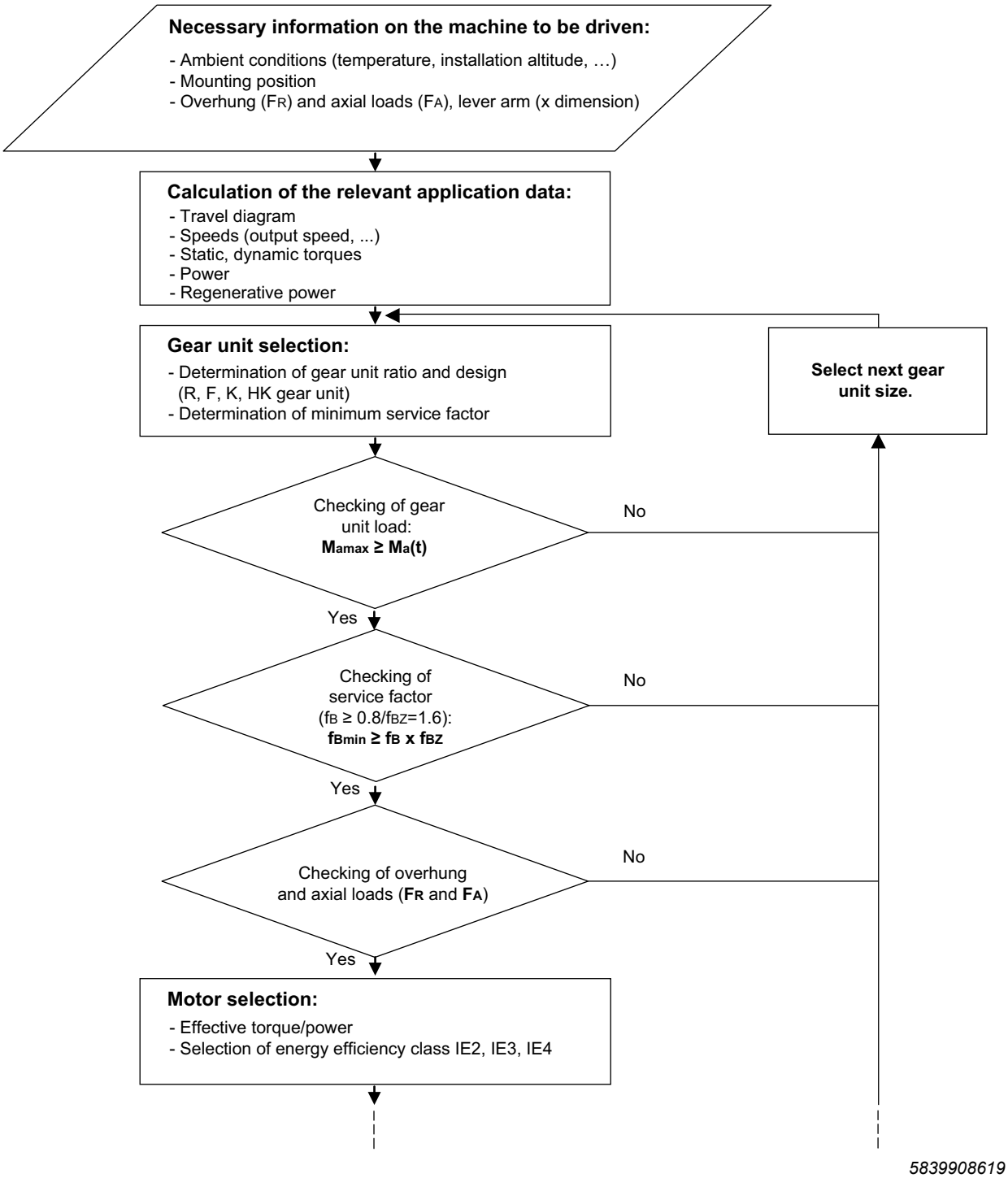

21343799/EN – 02/2015

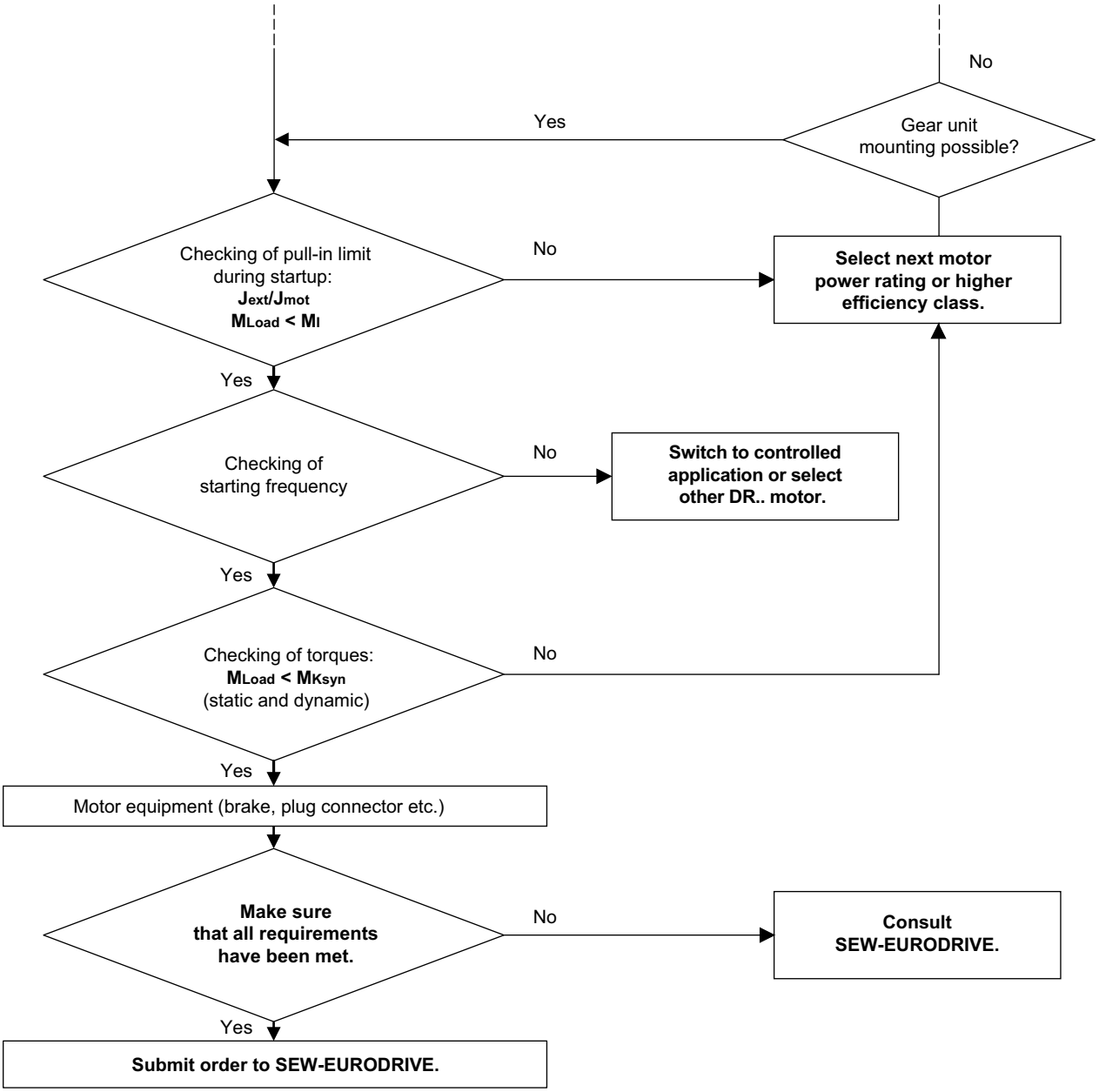

5841076363

4.4 Project planning with the SEW Workbench

Please use the SEW Workbench to perform the project planning for DR..J motors.

It can be found on the SEW-EURODRIVE homepage: → **www.sew-eurodrive.com**.

The SEW Workbench is a tool that enables selection of SEW-EURODRIVE products and the corresponding system configuration.

If you have any questions relating the project planning of DR..J motors, contact your SEW-EURODRIVE sales representative.

21343799/EN – 02/2015

5 Technical data

5.1 Key to the data of the global motor / energy-efficient motor

The following table lists the short symbols used in the "Technical data" tables.

P_N	Rated power
M_N	Rated torque
n_N	Rated speed
I_N	Rated current
cosφ	Power factor
$\eta_{50\%}$	Efficiency at 50% of the rated power
$\eta_{75\%}$	Efficiency at 75% of the rated power
$\eta_{100\%}$	Efficiency at 100% of the rated power
I_A/I_N	Starting current ratio
M_A/M_N	Starting torque ratio
M_I/M_N	Pull-in torque ratio
M_{Ksyn}/M_N	Breakdown torque ratio
m	Mass of the motor
J_{Mot}	Mass moment of inertia of the motor
BE..	Brake used
Z_0 BG	Starting frequency for operation with BG brake controller
Z_0 BGE	Starting frequency for operation with BGE brake controller
M_B	Braking torque
m_B	Mass of the brake motor
J_{MOT_BE}	Mass moment of inertia of the brake motor

21343799/EN – 02/2015

5.2 DRE..J motors

5.2.1 Frequency inverter operation with 400 V / 50 Hz

Motor type DRE..J	P_N kW	M_N Nm	n_N rpm	I_N A	IE class	η_{100} %	M_{Ksyn}/M_N at 10 Hz 20 Hz 50 Hz	J_{Mot} 10^{-4} kgm^2	J_{Mot_BE} 10^{-4} kgm^2	m_{Mot} kg	m_{Mot_BE} kg	Std. br. type	Std. br. torque Nm	U_{p0} V
DRE71SJ4	0.37	2.35	1500	0.87	-	77.1	1.1 1.2 1.3	5.14	6.44	7.8	10.2	BE05	5	150
DRE71MJ4	0.55	3.5	1500	1.32	-	79.1	1.3 1.5 1.6	7.28	8.58	9.1	11.7	BE1	7	163
DRE71MJ4	0.75	4.75	1500	1.76	IE2	80.1	1.1 1.2 1.3	7.28	8.58	9.1	11.7	BE1	10	156
DRE80SJ4	1.1	7	1500	2.1	IE2	82.3	1.1 1.2 1.3	15.41	19.91	11.5	15.2	BE2	14	270
DRE80MJ4	1.5	9.5	1500	2.8	IE2	83.9	1.3 1.5 1.6	22.08	26.58	14.3	18	BE2	20	270
DRE90MJ4	2.2	14	1500	4.2	IE2	85.5	1.3 1.5 1.6	35.49	41.49	18.6	24.5	BE5	28	248
DRE90LJ4	3	19.1	1500	5.8	IE2	86.5	1.5 1.7 1.8	43.73	49.73	21.4	27.3	BE5	40	262
DRE100MJ4	4	25.5	1500	7.8	IE2	87.3	1.5 1.7 1.8	56.05	62.05	26	31.9	BE5	55	248

21343799/EN – 02/2015

5.2.2 Frequency inverter operation with 400 V / 87 Hz

Motor type DRE..J	P_N kW	M_N Nm	n_N rpm	I_N A	M_{Ksyn}/M_N at 10 Hz 20 Hz 87 Hz	J_{Mot} 10^{-4} kgm²	J_{Mot_BE} 10^{-4} kgm²	m_{Mot} kg	m_{Mot_BE} kg	Std. br. type	Std. br. torque Nm	U_{p0} V
DRE71SJ4	0.55	2	2610	1.29	1.3 1.4 1.5	5.14	6.44	7.8	10.2	BE05	5	151
DRE71MJ4	0.75	2.75	2610	1.79	1.7 1.9 2.0	7.28	8.58	9.1	11.7	BE1	7	164
DRE71MJ4	1.1	4	2610	2.55	1.3 1.5 1.5	7.28	8.58	9.1	11.7	BE1	10	157
DRE80SJ4	1.5	5.5	2610	2.9	1.4 1.6 1.7	15.41	19.91	11.5	15.2	BE2	14	271
DRE80MJ4	2.2	8	2610	4.1	1.6 1.8 1.9	22.08	26.58	14.3	18	BE2	20	271
DRE90MJ4	3	11	2610	5.7	1.7 1.9 2.0	35.49	41.49	18.6	24.5	BE5	28	249
DRE90LJ4	4	14.6	2610	7.6	1.9 2.2 2.3	43.73	49.73	21.4	27.3	BE5	28	264
DRE100MJ4	5.5	20	2610	10.7	1.9 2.1 2.2	56.05	62.05	26	31.9	BE5	40	249

21343799/EN – 02/2015

5.2.3 Line operation with 400 V / 50 Hz

Motor type DRE..J	P_N kW	M_N Nm	n_N rpm	I_N A	cos φ	IE class	$\eta_{50\%}$ $\eta_{75\%}$ $\eta_{100\%}$ %	I_A/I_N	M_A/M_N M_{Ksyn}/M_N
DRE71SJ4	0.37	2.35	1500	0.87	0.78	-	73.0 76.8 77.1	3.6	1.8 1.4
DRE71MJ4	0.55	3.5	1500	1.32	0.74	-	72.8 77.8 79.1	4.3	2.4 1.7
DRE71MJ4	0.75	4.75	1500	1.76	0.77	IE2	76.4 80.0 80.1	3.6	2.1 1.4
DRE80SJ4	1.1	7	1500	2.1	0.90	IE2	81.2 83.4 82.3	4.2	1.8 1.4
DRE80MJ4	1.5	9.5	1500	2.8	0.90	IE2	82.8 84.6 83.9	5.2	2.5 1.7
DRE90MJ4	2.2	14	1500	4.2	0.87	IE2	85.2 86.4 85.5	5.0	2.5 1.7
DRE90LJ4	3	19.1	1500	5.8	0.86	IE2	85.7 87.2 86.5	5.3	2.6 1.9
DRE100MJ4	4	25.5	1500	7.8	0.84	IE2	86.0 87.5 87.3	5.6	2.3 1.9

Additional data

Motor type DRE..J	P_N kW	M_N Nm	n_N rpm	M_l/M_N at $J_{ext}=½×J_{Mot}$ $J_{ext}=J_{Mot}$ $J_{ext}=5×J_{Mot}$	J_{Mot} 10^{-4} kgm^2	J_{Mot_BE} 10^{-4} kgm^2	m_{Mot} kg	m_{Mot_BE} kg	Std. br. type	Std. br. torque Nm	U_{p0} V
DRE71SJ4	0.37	2.35	1500	1.1 1.0 0.6	5.14	6.44	7.8	10.2	BE05	5	150
DRE71MJ4	0.55	3.5	1500	1.1 1.0 0.6	7.28	8.58	9.1	11.7	BE1	7	163
DRE71MJ4	0.75	4.75	1500	1.0 0.9 0.5	7.28	8.58	9.1	11.7	BE1	10	156
DRE80SJ4	1.1	7	1500	1.2 1.0 0.6	15.41	19.91	11.5	15.2	BE2	14	270
DRE80MJ4	1.5	9.5	1500	1.6 1.4 0.9	22.08	26.58	14.3	18	BE2	20	270
DRE90MJ4	2.2	14	1500	1.4 1.2 0.8	35.49	41.49	18.6	24.5	BE5	28	248
DRE90LJ4	3	19.1	1500	1.6 1.4 0.9	43.73	49.73	21.4	27.3	BE5	40	262
DRE100MJ4	4	25.5	1500	1.5 1.4 1.0	56.05	62.05	26	31.9	BE5	55	248

21343799/EN – 02/2015

5.3 DRP..J motors

5.3.1 Frequency inverter operation with 400 V / 50 Hz

Motor type DRP..J	P_N kW	M_N Nm	n_N rpm	I_N A	IE class	$\eta_{100\%}$ %	M_{Ksyn}/M_N at 10 Hz 20 Hz 50 Hz	J_{Mot} 10^{-4} kgm^2	J_{Mot_BE} 10^{-4} kgm^2	m_{Mot} kg	m_{Mot_BE} kg	Std. br. type	Std. br. torque Nm	U_{p0} V
DRP71SJ4	0.37	2.35	1500	0.87	-	79.3	1.1 1.2 1.3	5.14	6.44	7.8	10.2	BE05	5	150
DRP71MJ4	0.55	3.5	1500	1.32	-	81.8	1.3 1.5 1.6	7.28	8.58	9.1	11.7	BE1	7	163
DRP80SJ4	0.75	4.75	1500	1.35	IE3	84.1	1.4 1.6 1.7	15.41	16.91	11.5	14.5	BE1	10	300
DRP80MJ4	1.1	7	1500	2.05	IE3	85.6	1.5 1.7 1.8	22.08	26.58	14.3	18	BE2	14	285
DRP90MJ4	1.5	9.5	1500	2.85	IE3	87.2	1.8 2.0 2.1	35.49	40.19	18.4	23	BE2	20	262
DRP90LJ4	2.2	14	1500	4.05	IE3	88.3	1.9 2.1 2.2	43.73	49.73	21.4	27.3	BE5	28	270
DRP100MJ4	3	19.1	1500	5.3	IE3	89.1	1.8 2.0 2.1	56.05	62.05	26	31.9	BE5	40	277
DRP100LJ4	4	25.5	1500	7.3	IE3	90.4	1.9 2.1 2.2	63.24	69.24	29	34.9	BE5	55	270

21343799/EN – 02/2015

5.3.2 Frequency inverter operation with 400 V / 87 Hz

Motor type DRP..J	P_N kW	M_N Nm	n_N rpm	I_N A	M_{Ksyn}/M_N at 10 Hz 20 Hz 87 Hz	J_{Mot} 10^{-4} kgm²	J_{Mot_BE} 10^{-4} kgm²	m_{Mot} kg	m_{Mot_BE} kg	Std. br. type	Std. br. torque Nm	U_{p0} V
DRP71SJ4	0.55	2	2610	1.29	1.3 1.4 1.5	5.14	6.44	7.8	10.2	BE05	5	151
DRP71MJ4	0.75	2.75	2610	1.79	1.7 1.9 2.0	7.28	8.58	9.1	11.7	BE1	7	164
DRP80SJ4	1.1	4	2610	1.97	1.7 1.9 2.0	15.41	16.91	11.5	14.5	BE1	10	301
DRP80MJ4	1.5	5.5	2610	2.8	1.9 2.1 2.2	22.08	26.58	14.3	18	BE2	14	286
DRP90MJ4	2.2	8	2610	4.2	2.1 2.4 2.5	35.49	40.19	18.4	23	BE2	20	264
DRP90LJ4	3	11	2610	5.5	2.4 2.7 2.8	43.73	49.73	21.4	27.3	BE5	28	271
DRP100MJ4	4	14.6	2610	7	2.4 2.6 2.8	56.05	62.05	26	31.9	BE5	28	279
DRP100LJ4	5.5	20	2610	10	2.0 2.7 2.8	63.24	69.24	29	34.9	BE5	40	271

21343799/EN – 02/2015

5.3.3 Line operation with 400 V / 50 Hz

Motor type DRP..J	P_N kW	M_N Nm	n_N rpm	I_N A	cos φ	IE class	$\eta_{50\%}$ $\eta_{75\%}$ $\eta_{100\%}$ %	I_A/I_N	M_A/M_N M_{Ksyn}/M_N
DRP71SJ4	0.37	2.35	1500	0.87	0.78	-	74.5 78.4 79.3	3.6	1.8 1.4
DRP71MJ4	0.55	3.5	1500	1.32	0.73	-	76.4 80.7 81.8	4.3	2.4 1.7
DRP80SJ4	0.75	4.75	1500	1.35	0.94	IE3	82.0 84.3 84.1	5.6	2.8 1.8
DRP80MJ4	1.1	7	1500	2.05	0.89	IE3	82.4 85.3 85.6	6.3	2.8 1.9
DRP90MJ4	1.5	9.5	1500	2.85	0.85	IE3	84.3 86.8 87.2	6.8	3.4 2.3
DRP90LJ4	2.2	14	1500	4.05	0.87	IE3	86.1 88.1 88.3	6.2	2.7 2.4
DRP100MJ4	3	19.1	1500	5.3	0.90	IE3	88.2 89.3 89.1	6.7	2.6 2.3
DRP100LJ4	4	25.5	1500	7.3	0.87	IE3	89.2 90.5 90.4	6.7	3.3 2.4

Additional data

Motor type DRP..J	P_N kW	M_N Nm	n_N rpm	M_l/M_N at $J_{ext}=½×J_{Mot}$ $J_{ext}=J_{Mot}$ $J_{ext}=5×J_{Mot}$	J_{Mot} 10^{-4} kgm^2	J_{Mot_BE} 10^{-4} kgm^2	m_{Mot} kg	m_{Mot_BE} kg	Std. br. type	Std. br. torque Nm	U_{p0} V
DRP71SJ4	0.37	2.35	1500	1.1 1.0 0.6	5.14	6.44	7.8	10.2	BE05	5	150
DRP71MJ4	0.55	3.5	1500	1.1 1.0 0.6	7.28	8.58	9.1	11.7	BE1	7	163
DRP80SJ4	0.75	4.75	1500	1.3 1.1 0.6	15.41	16.91	11.5	14.5	BE1	10	300
DRP80MJ4	1.1	7	1500	1.8 1.5 1.0	22.08	26.58	14.3	18	BE2	14	285
DRP90MJ4	1.5	9.5	1500	1.7 1.4 0.9	35.49	40.19	18.4	23	BE2	20	262
DRP90LJ4	2.2	14	1500	1.7 1.5 1.0	43.73	49.73	21.4	27.3	BE5	28	270
DRP100MJ4	3	19.1	1500	1.6 1.4 1.0	56.05	62.05	26	31.9	BE5	40	277
DRP100LJ4	4	25.5	1500	1.6 1.4 1.0	63.24	69.24	29	34.9	BE5	55	270

21343799/EN – 02/2015

5.4 DRU..J motors

5.4.1 Frequency inverter operation with 400 V / 50 Hz

Motor type DRU..J	P_N kW	M_N Nm	n_N rpm	I_N A	IE class	η_{100} %	M_{Ksyn}/M_N at 10 Hz 20 Hz 50 Hz	J_{Mot} 10^{-4} kgm^2	J_{Mot_BE} 10^{-4} kgm^2	m_{Mot} kg	m_{Mot_BE} kg	Std. br. type	Std. br. torque Nm	U_{p0} V
DRU71SJ4	0.18	1.15	1500	0.43	IE4	80.8	1.9 2.1 2.2	5.14	6.44	7.8	10.2	BE05	2.5	180
DRU71SJ4	0.25	1.59	1500	0.59	IE4	81.1	1.5 1.7 1.8	5.14	6.44	7.8	10.2	BE05	3.5	165
DRU71MJ4	0.37	2.35	1500	0.78	IE4	84.2	1.8 2.0 2.1	7.28	8.58	7.8	10.2	BE05	5	195
DRU80SJ4	0.55	3.5	1500	0.97	IE4	86.0	1.7 1.9 2.0	15.41	16.91	11.5	14.5	BE1	7	315
DRU80MJ4	0.75	4.75	1500	1.26	IE4	87.4	1.8 2.0 2.1	22.08	23.58	14.3	17.3	BE1	10	322
DRU90MJ4	1.1	7	1500	1.96	IE4	89.2	2.0 2.3 2.4	35.49	40.19	18.4	23	BE2	14	285
DRU90LJ4	1.5	9.5	1500	2.75	IE4	90.1	2.1 2.4 2.5	43.73	48.43	21.4	26	BE2	20	285
DRU100MJ4	2.2	14	1500	4.1	IE4	91.2	2.1 2.4 2.5	56.05	62.05	26	31.9	BE5	28	285
DRU100LJ4	3	19.1	1500	5.4	IE4	91.8	2.1 2.4 2.5	63.24	69.24	29	34.9	BE5	40	277

21343799/EN – 02/2015

5.4.2 Frequency inverter operation with 400 V / 87 Hz

Motor type DRU..J	P_N kW	M_N Nm	n_N rpm	I_N A	M_{Ksyn}/M_N at 10 Hz 20 Hz 87 Hz	J_{Mot} 10^{-4} kgm²	J_{Mot_BE} 10^{-4} kgm²	m_{Mot} kg	m_{Mot_BE} kg	Std. br. type	Std. br. torque Nm	U_{p0} V
DRU71SJ4	0.25	0.91	2610	0.6	2.4 2.6 2.7	5.14	6.44	7.8	10.2	BE05	1.8	181
DRU71SJ4	0.37	1.35	2610	0.87	1.8 2.0 2.1	5.14	6.44	7.8	10.2	BE05	3.5	166
DRU71MJ4	0.55	2	2610	1.15	2.1 2.4 2.5	7.28	8.58	7.8	10.2	BE05	5	196
DRU80SJ4	0.75	2.75	2610	1.31	2.2 2.5 2.6	15.41	16.91	11.5	14.5	BE1	7	316
DRU80SJ4	0.95	3.5	2610	1.67	1.8 2.0 2.0	15.41	16.91	11.5	14.5	BE1	7	316
DRU80MJ4	1.1	4	2610	1.83	2.1 2.4 2.5	22.08	23.58	14.3	17.3	BE1	10	324
DRU90MJ4	1.5	5.5	2610	2.65	2.6 2.9 3.1	35.49	40.19	18.4	23	BE2	14	286
DRU90LJ4	2.2	8	2610	4.05	2.5 2.8 3.0	43.73	48.43	21.4	26	BE2	20	286
DRU100MJ4	3	11	2610	5.6	2.7 3.0 3.2	56.05	62.05	26	31.9	BE5	28	286
DRU100LJ4	4	14.6	2610	7.1	2.4 3.1 3.3	63.24	69.24	29	34.9	BE5	28	279

21343799/EN – 02/2015

5.4.3 Line operation with 400 V / 50 Hz

Motor type DRU..J	P_N kW	M_N Nm	n_N rpm	I_N A	cos φ	IE class	$\eta_{50\%}$ $\eta_{75\%}$ $\eta_{100\%}$ %	I_A/I_N	M_A/M_N M_{Ksyn}/M_N
DRU71SJ4	0.18	1.15	1500	0.43	0.75	IE4	74.1 78.8 80.8	5.2	2.5 2.4
DRU71SJ4	0.25	1.59	1500	0.59	0.75	IE4	74.5 79.5 81.1	4.5	2.3 1.9
DRU71MJ4	0.37	2.35	1500	0.78	0.82	IE4	80.1 83.5 84.2	4.8	2.2 2.3
DRU80SJ4	0.55	3.5	1500	0.97	0.94	IE4	81.9 85.2 86.0	6.6	2.9 2.2
DRU80MJ4	0.75	4.75	1500	1.26	0.97	IE4	84.6 87.1 87.4	7.8	3.1 2.3
DRU90MJ4	1.1	7	1500	1.96	0.90	IE4	86.0 88.5 89.2	8.1	3.8 2.5
DRU90LJ4	1.5	9.5	1500	2.75	0.86	IE4	86.5 89.2 90.1	8.9	3.8 2.5
DRU100MJ4	2.2	14	1500	4.1	0.85	IE4	88.0 90.5 91.2	8.6	3.6 2.5
DRU100LJ4	3	19.1	1500	5.4	0.88	IE4	89.4 91.4 91.8	9.2	4.6 2.5

Additional data

Motor type DRU..J	P_N kW	M_N Nm	n_N rpm	M_l/M_N at $J_{ext}=½×J_{Mot}$ $J_{ext}=J_{Mot}$ $J_{ext}=5×J_{Mot}$	J_{Mot} 10^{-4} kgm²	J_{Mot_BE} 10^{-4} kgm²	m_{Mot} kg	m_{Mot_BE} kg	Std. br. type	Std. br. torque Nm	U_{p0} V
DRU71SJ4	0.18	1.15	1500	1.2 1.1 0.7	5.14	6.44	7.8	10.2	BE05	2.5	180
DRU71SJ4	0.25	1.59	1500	1.1 1.0 0.6	5.14	6.44	7.8	10.2	BE05	3.5	165
DRU71MJ4	0.37	2.35	1500	1.3 1.2 0.7	7.28	8.58	7.8	10.2	BE05	5	195
DRU80SJ4	0.55	3.5	1500	1.4 1.2 0.7	15.41	16.91	11.5	14.5	BE1	7	315
DRU80MJ4	0.75	4.75	1500	1.8 1.6 1.0	22.08	23.58	14.3	17.3	BE1	10	322
DRU90MJ4	1.1	7	1500	1.7 1.4 0.9	35.49	40.19	18.4	23	BE2	14	285
DRU90LJ4	1.5	9.5	1500	1.8 1.6 1.0	43.73	48.43	21.4	26	BE2	20	285
DRU100MJ4	2.2	14	1500	1.7 1.5 1.1	56.05	62.05	26	31.9	BE5	28	285
DRU100LJ4	3	19.1	1500	1.7 1.5 1.1	63.24	69.24	29	34.9	BE5	40	277

21343799/EN – 02/2015

6 Dimension sheets for DR..J motors/brakemotors

The dimensions of the DR..J motors match those of the DR.. standard motors.

The following additional features are **not** available for DR..J motors with LSPM technology:

- Backstop /RS
- Second shaft end /2W
- Add-on encoder

6.1 Notes on the dimension sheets

Observe the following notes regarding the dimension sheets for 4-pole AC (brake)motors:

- The collective term IV (= industrial plug connectors) in the dimension sheets includes the plug connectors AC.., AS.., AM.., AB.., AD.., and AK... All other plug connectors have different dimensions, which are available on request.
- Leave a clearance of at least half the fan guard diameter to provide unhindered air access.
- For brakemotors, do not forget to include the space required for removing the fan guard (= fan guard diameter).
- Different positions are possible for the manual brake release, as shown in the following figure. As a rule, the four positions 33°, 123°, 213°, or 303° are possible.
- By default, the manual brake release is positioned at an angle of 303° to the terminal box – for example terminal box position 90° → position of manual brake release = 33°. If the position of the manual brake release is not specified, it rotates along with the terminal box. The manual brake release can be turned by 4 × 90°.

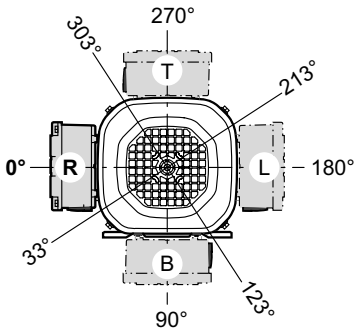

3984929931

6.2 Dimension sheets

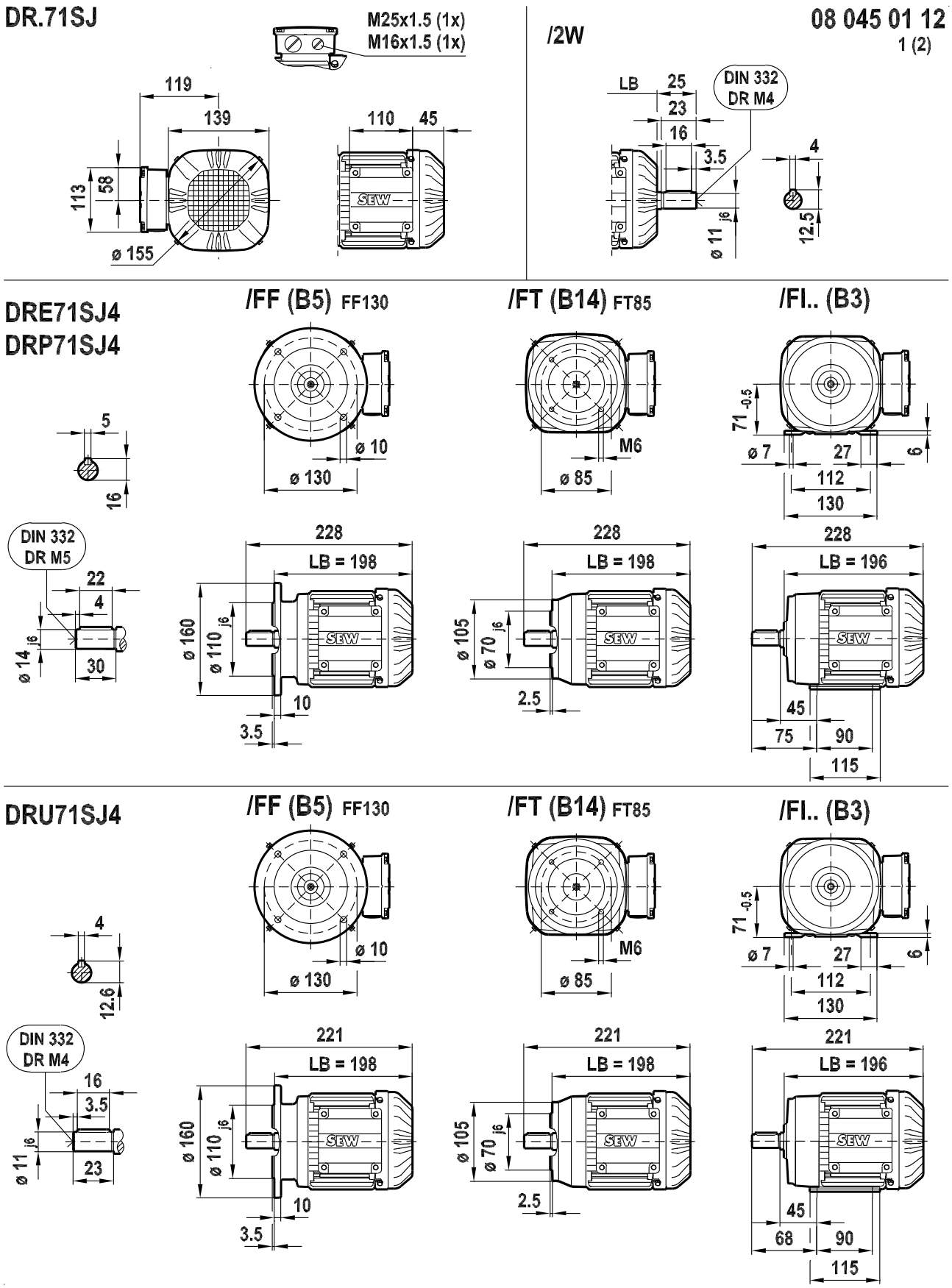

21343799/EN – 02/2015

DR.71SJ

08 045 01 12
2 (2)

/IV

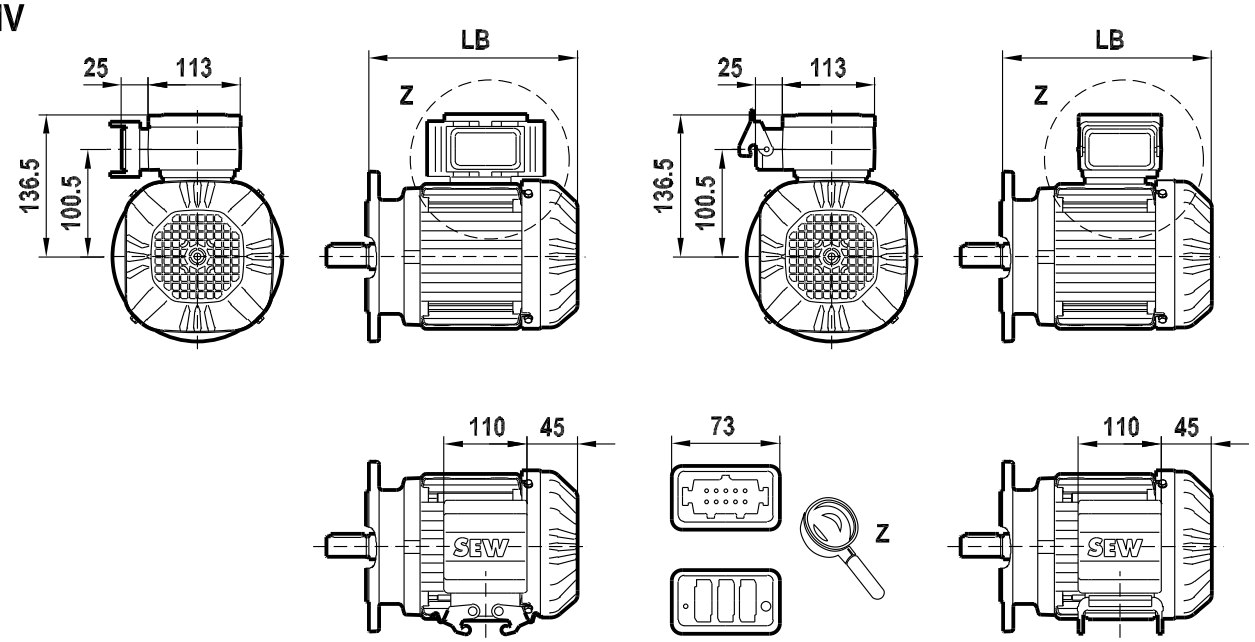

/IS

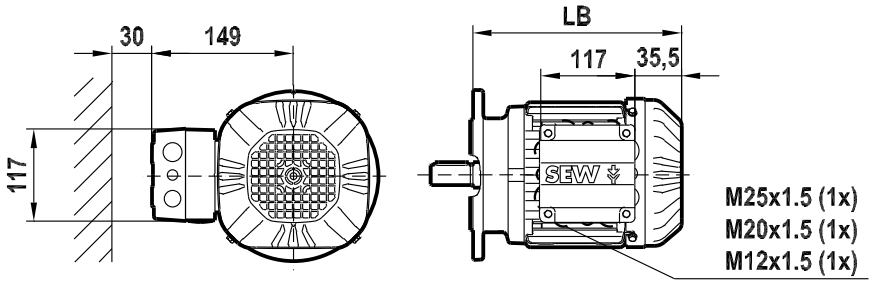

/C

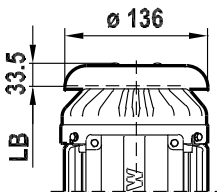

/V

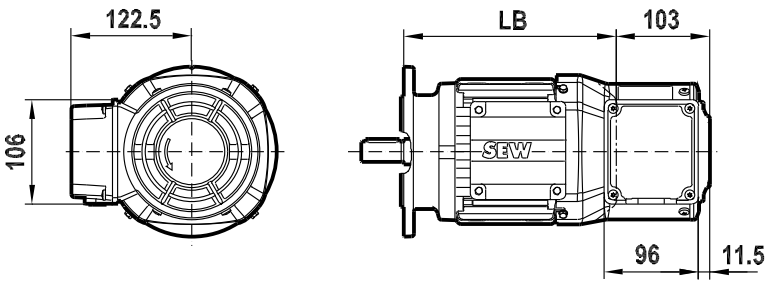

21343799/EN – 02/2015

DR.71MJ

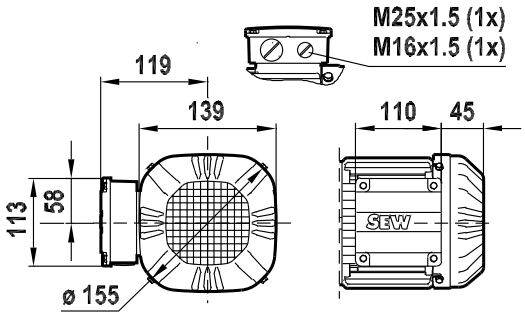

/2W

08 046 01 12
1 (2)

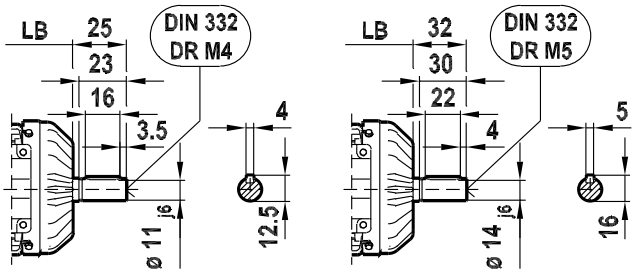

DRE71MJ4
DRP71MJ4

/FF (B5) FF165

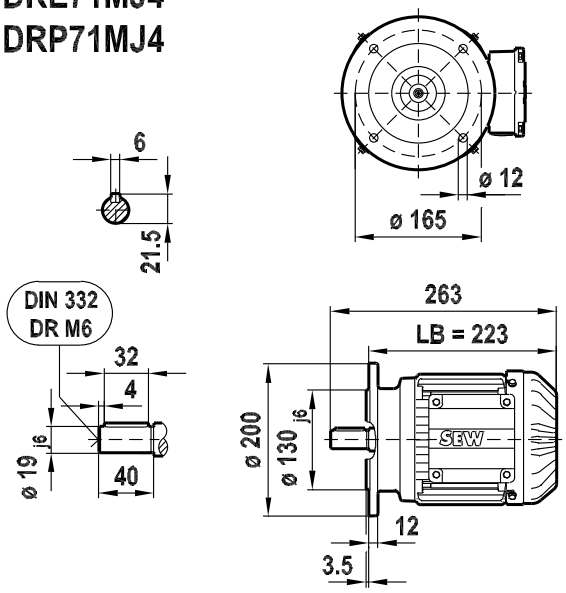

/FT (B14) FT100

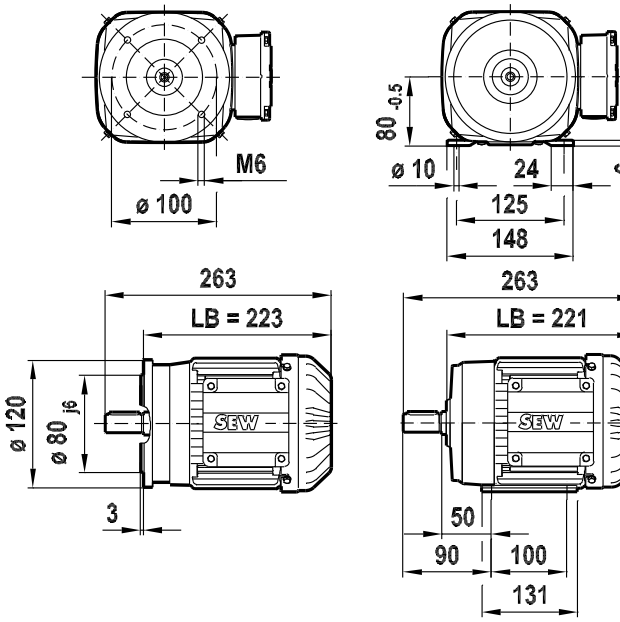

/FI.. (B3)

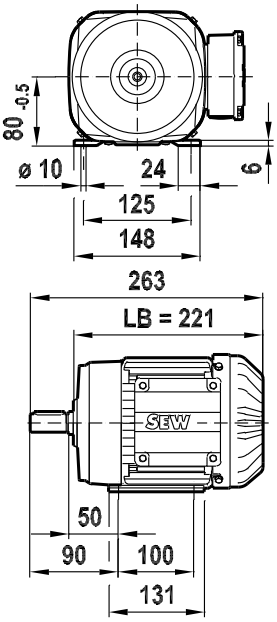

DRU71MJ4

/FF (B5) FF130

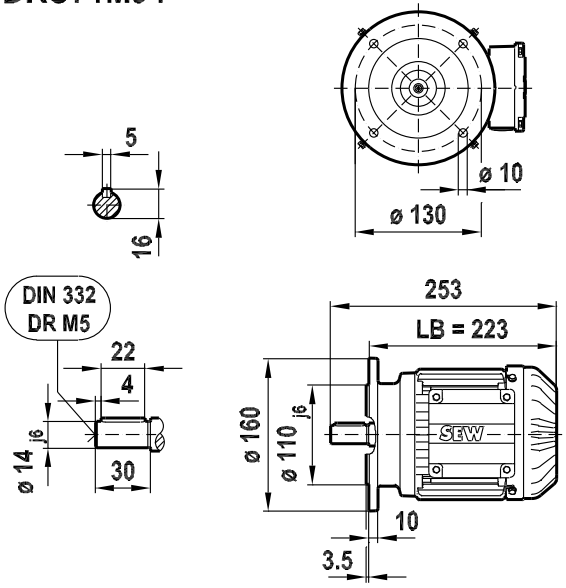

/FT (B14) FT85

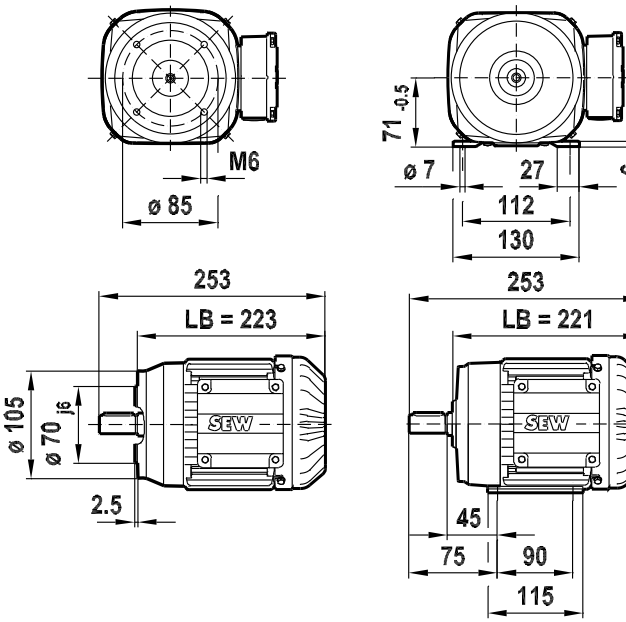

/FI.. (B3)

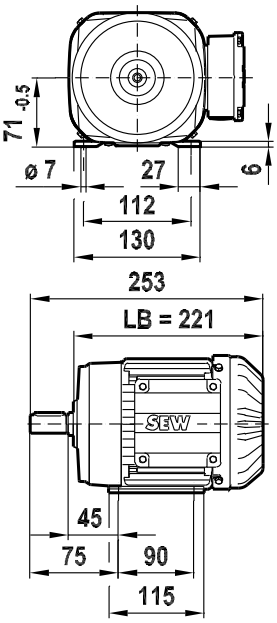

21343799/EN – 02/2015

DR.71MJ

08 046 01 12
2 (2)

/IV

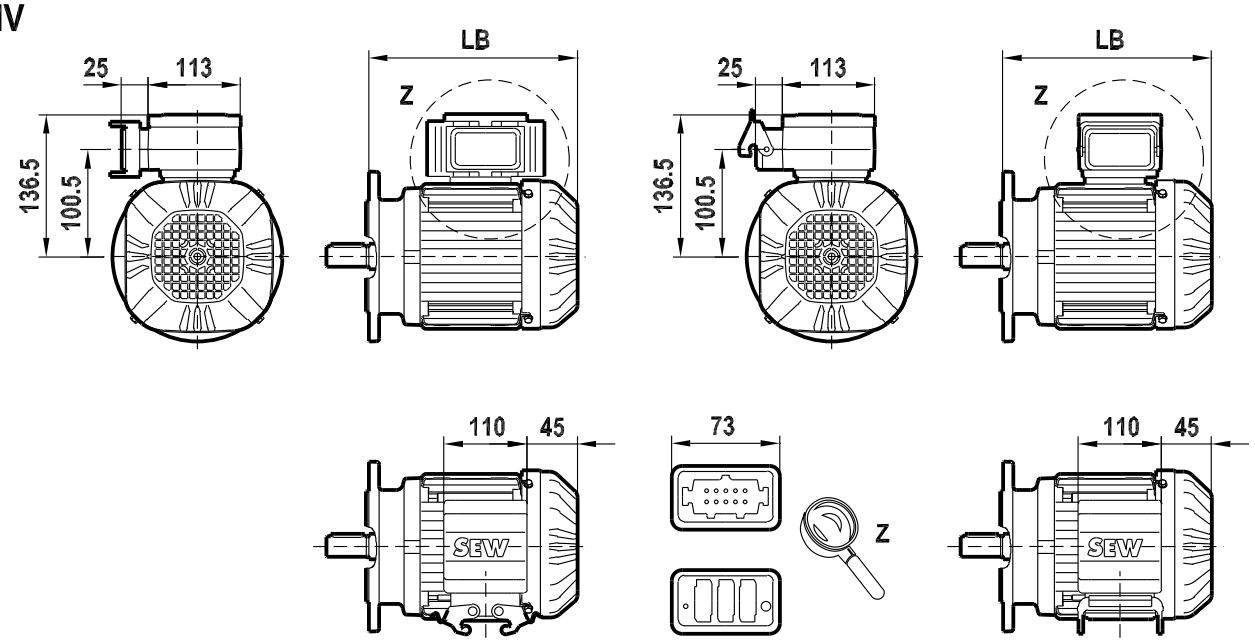

/IS

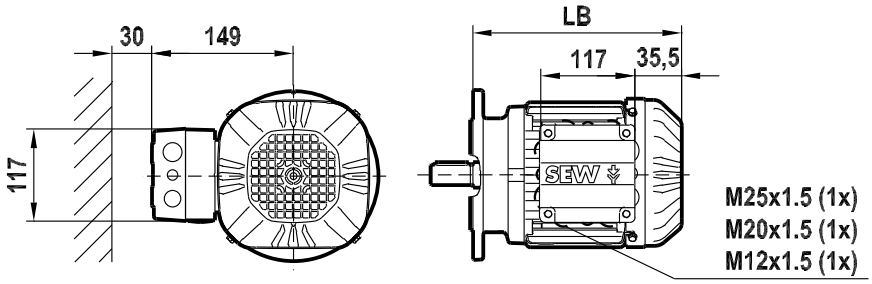

/C

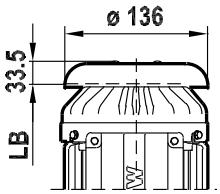

/V

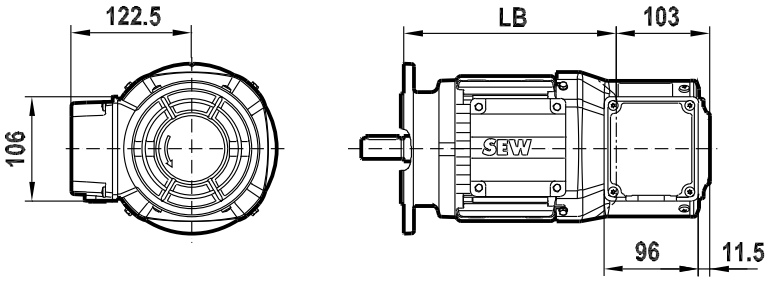

21343799/EN – 02/2015

DR.80SJ

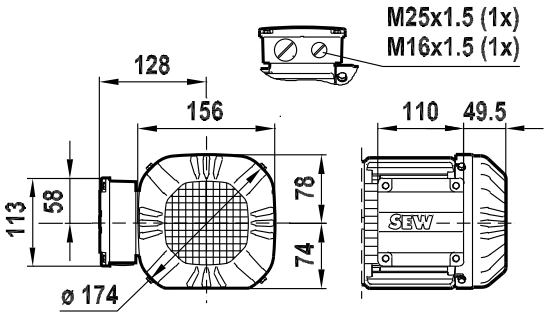

/2W

08 047 01 12
1 (2)

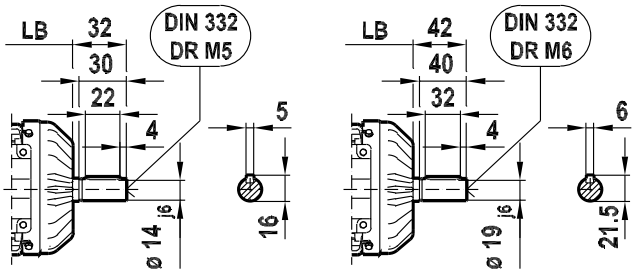

DRE80SJ4

/FF (B5) FF165 | /FT (B14) FT115 | /FI.. (B3)

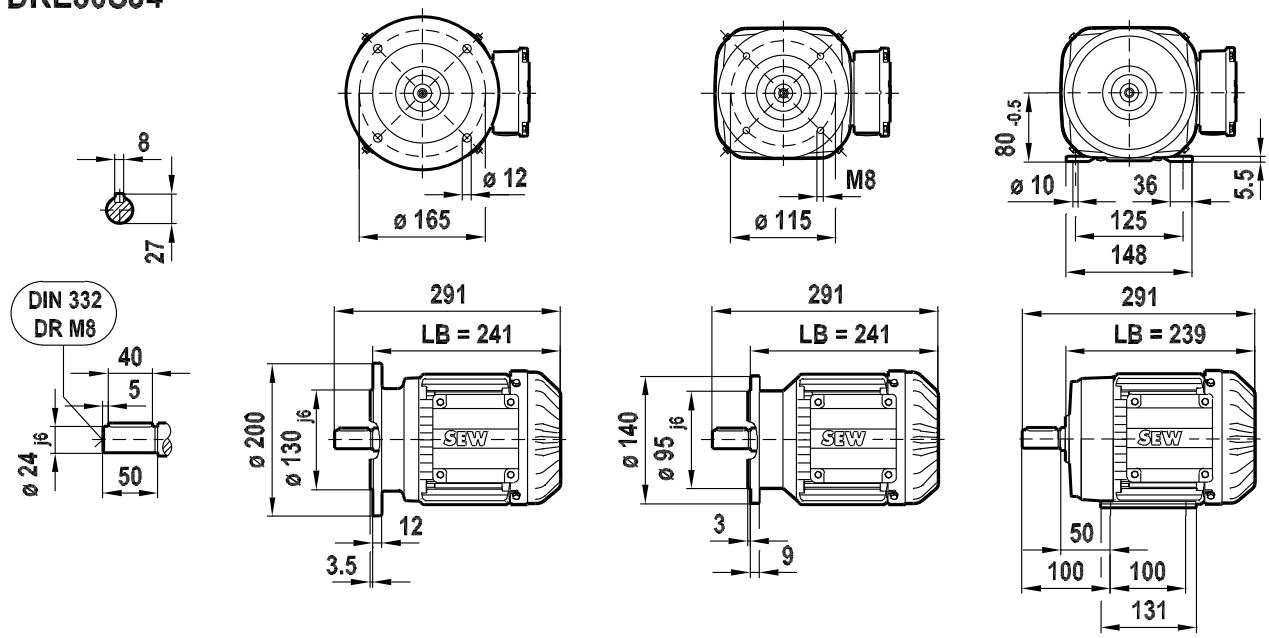

DRP80SJ4
DRU80SJ4

/FF (B5) FF165 | /FT (B14) FT100 | /FI.. (B3)

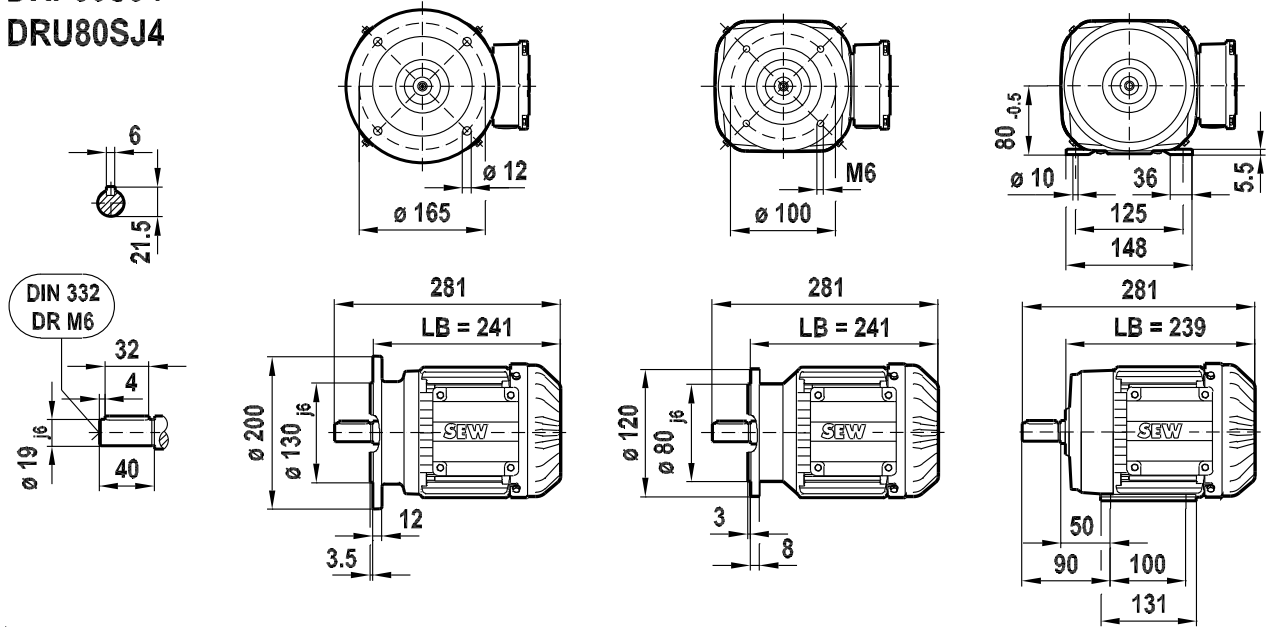

21343799/EN – 02/2015

DR.80SJ

08 047 01 12
2 (2)

/IV

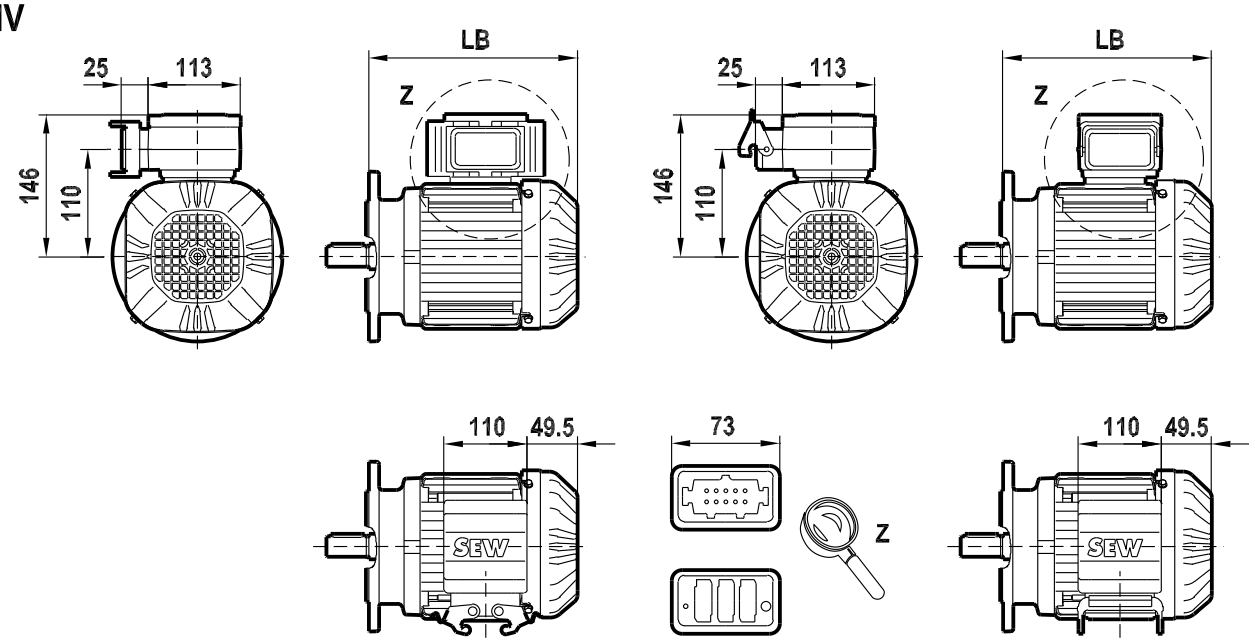

/IS

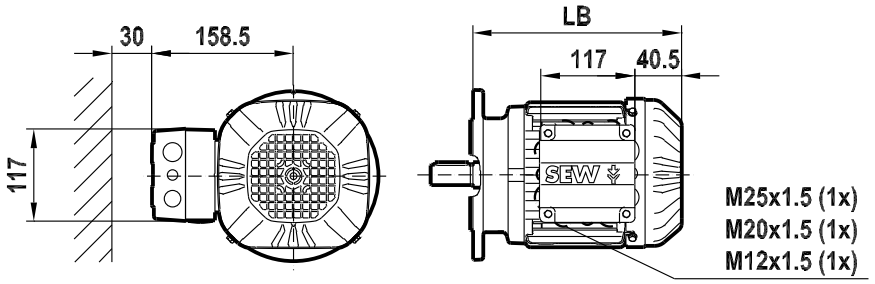

/C

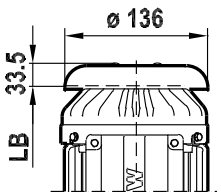

/V

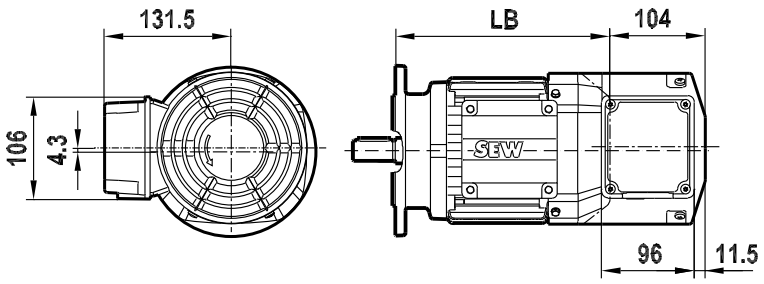

21343799/EN – 02/2015

DR.80MJ

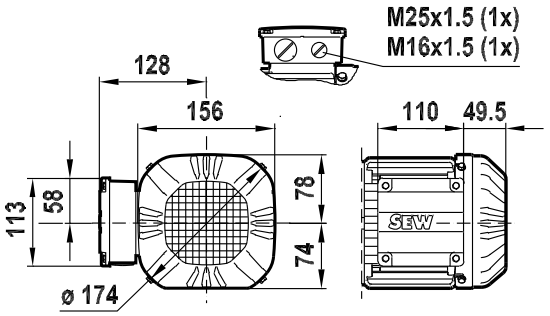

/2W

08 048 01 12
1 (2)

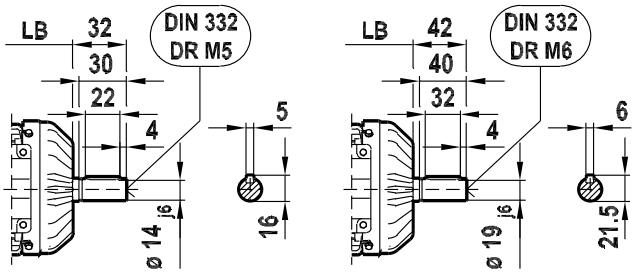

DRE80MJ4
DRP80MJ4

/FF (B5) FF165

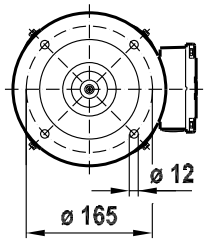

/FT (B14) FT115

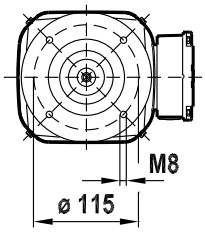

/FI.. (B3)

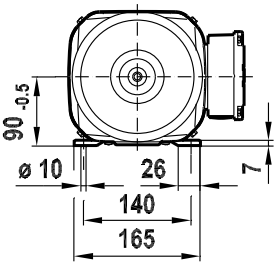

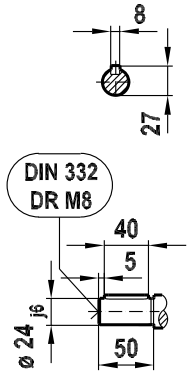

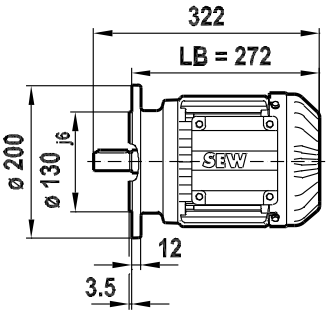

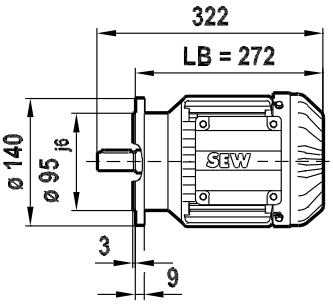

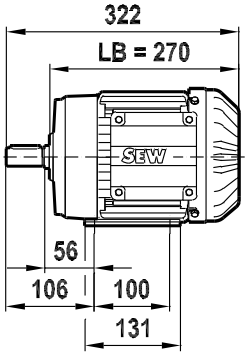

DRU80MJ4

/FF (B5) FF165

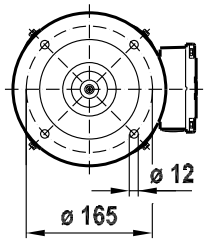

/FT (B14) FT100

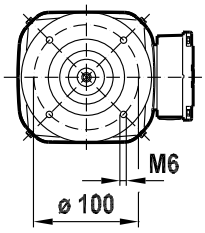

/FI.. (B3)

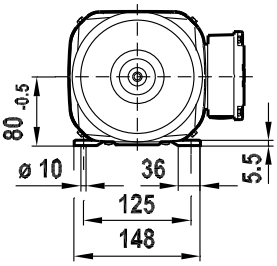

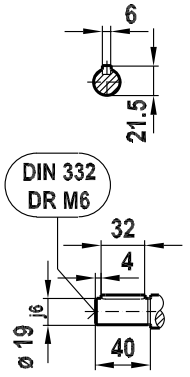

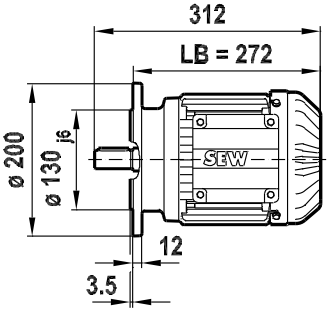

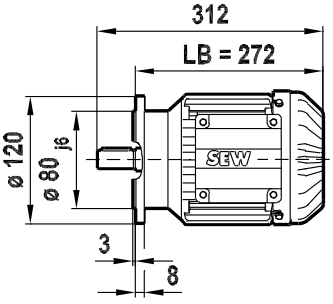

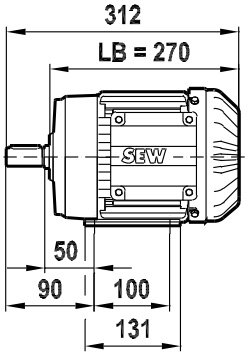

21343799/EN – 02/2015

DR.80MJ

08 048 01 12
2 (2)

/IV

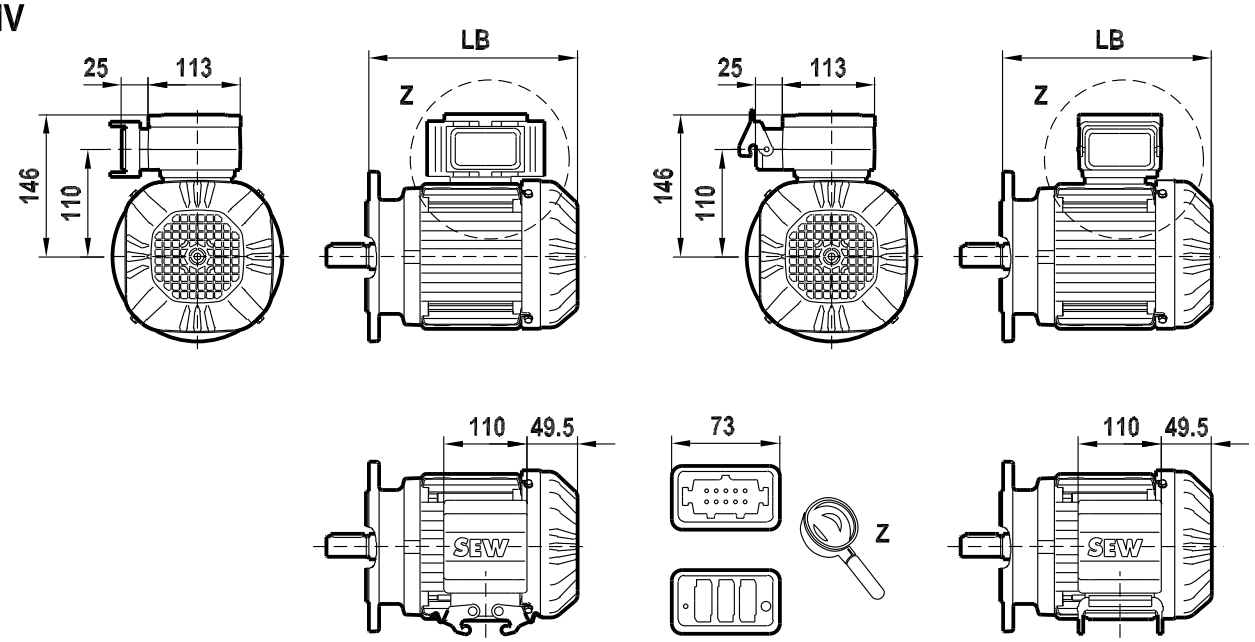

/IS

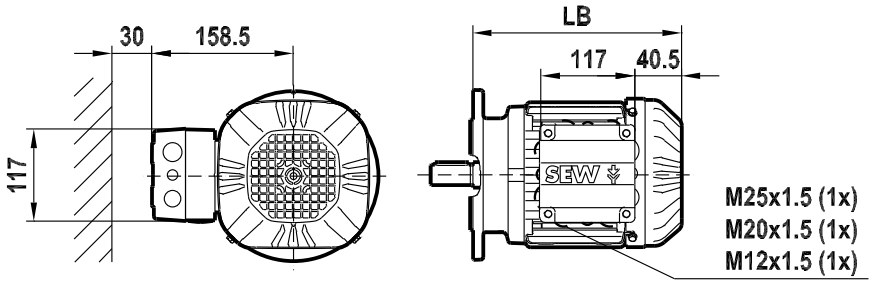

/C

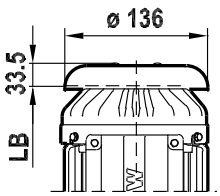

/V

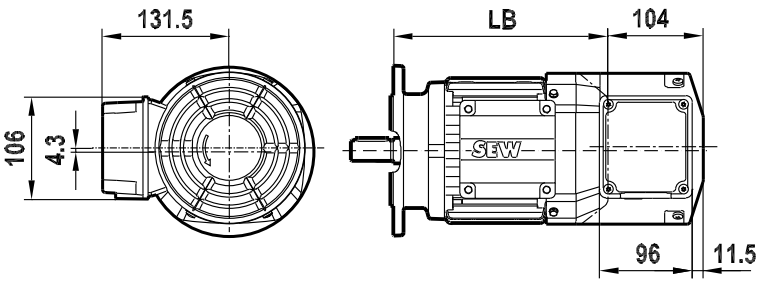

21343799/EN – 02/2015

DR.90MJ

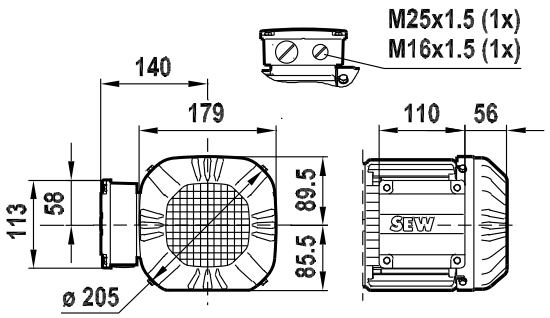

/2W

08 049 01 12
1 (2)

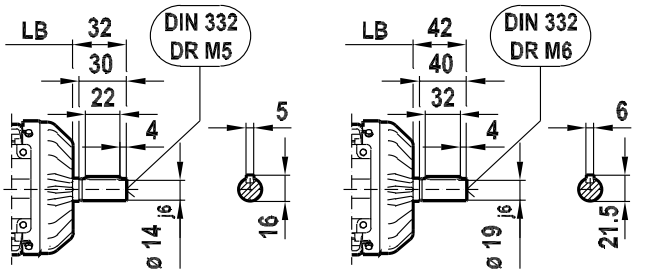

DRE90MJ4

/FF (B5) FF215 /FT (B14) FT130 /FI.. (B3)

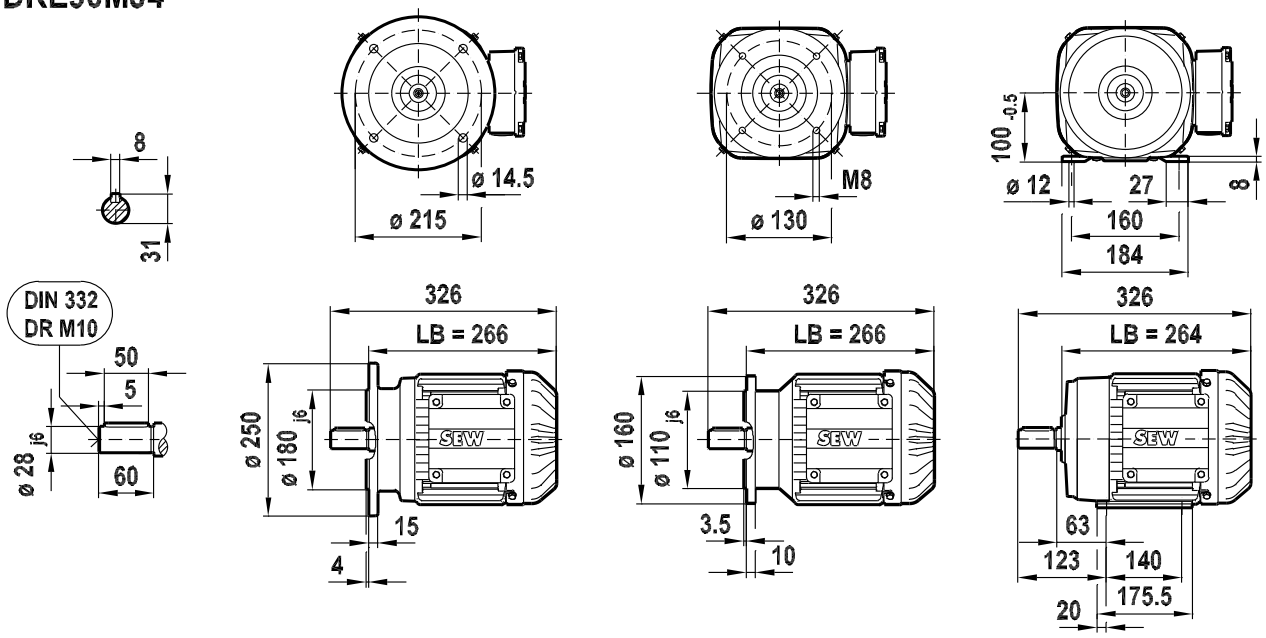

DRP90MJ4
DRU90MJ4

/FF (B5) FF165 /FT (B14) FT115 /FI.. (B3)

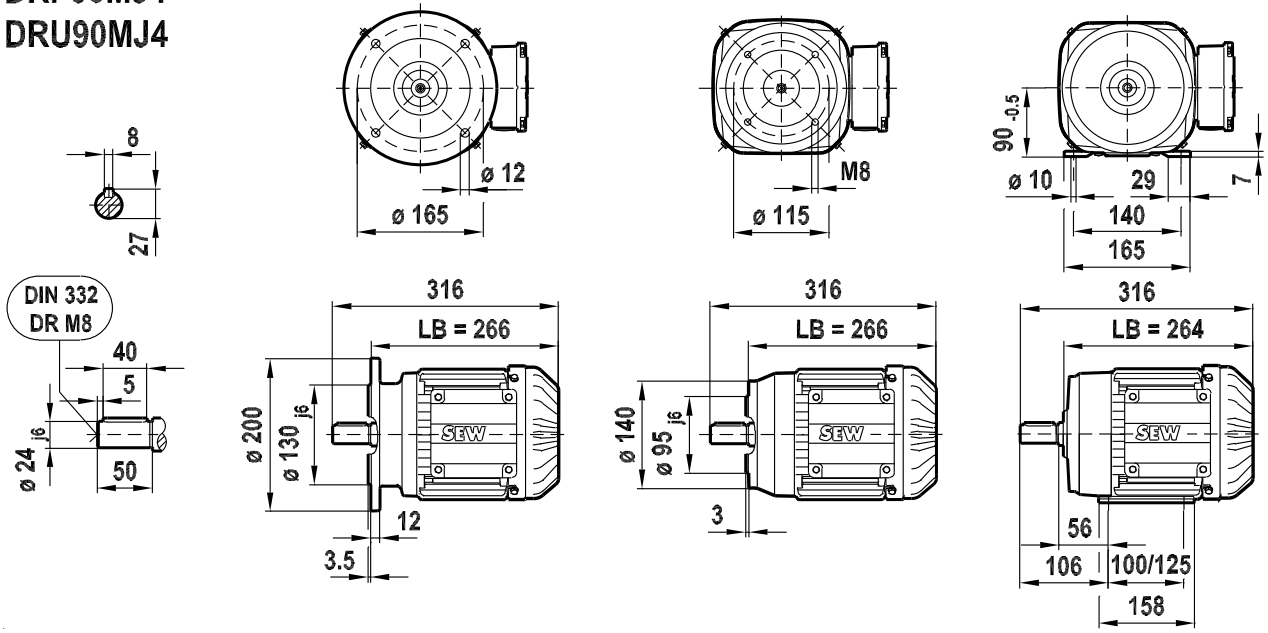

21343799/EN – 02/2015

DR.90MJ

08 049 01 12
2 (2)

/IV

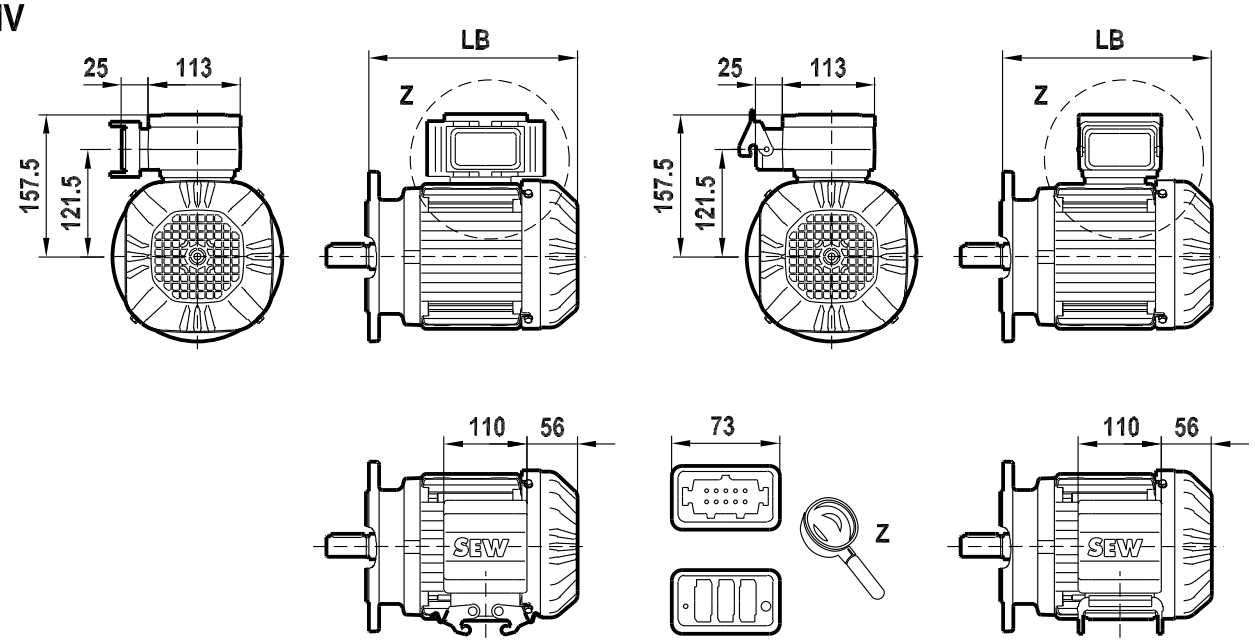

/IS

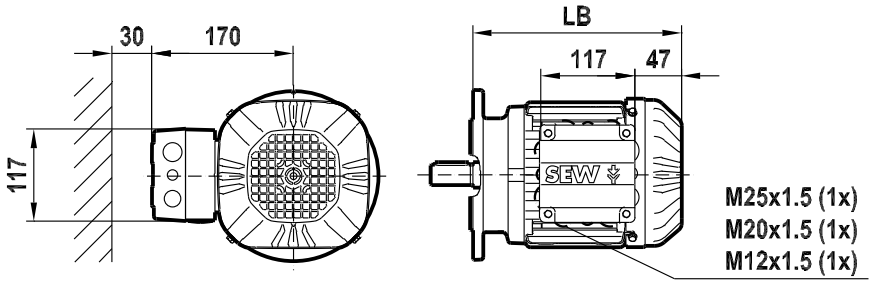

/C

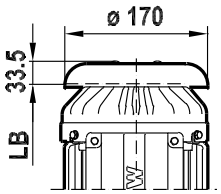

/V

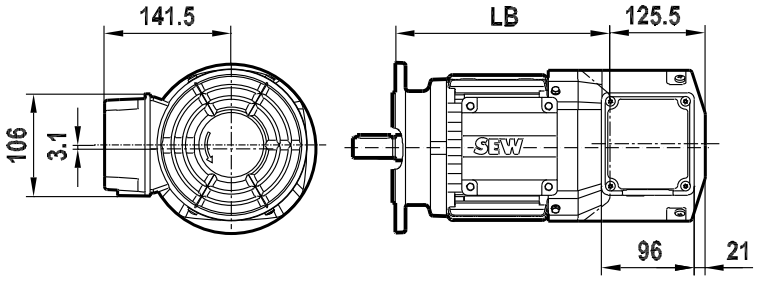

21343799/EN – 02/2015

DR.90LJ

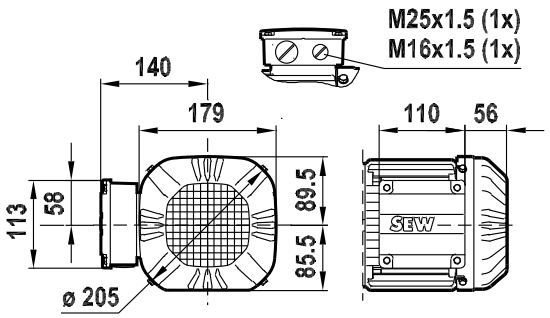

/2W

08 050 01 12
1 (2)

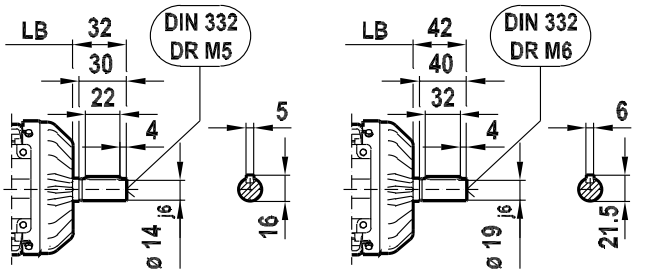

DRE90LJ4
DRP90LJ4

/FF (B5) FF215 | /FT (B14) FT130 | /FI.. (B3)

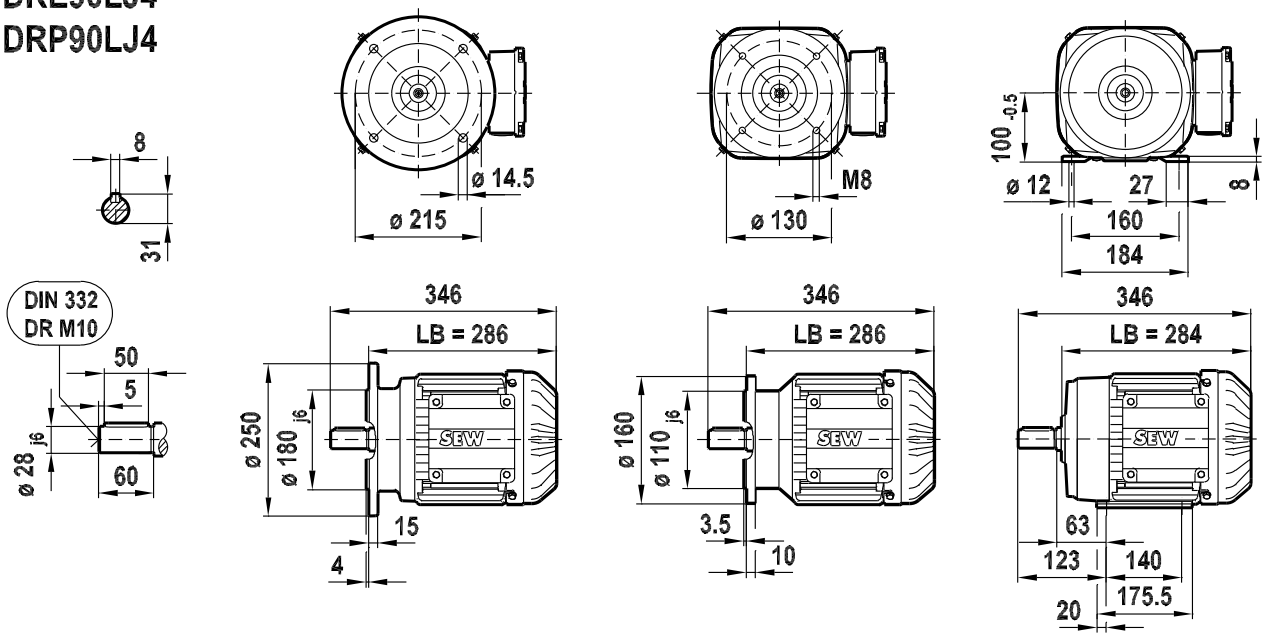

DRU90LJ4

/FF (B5) FF165 | /FT (B14) FT115 | /FI.. (B3)

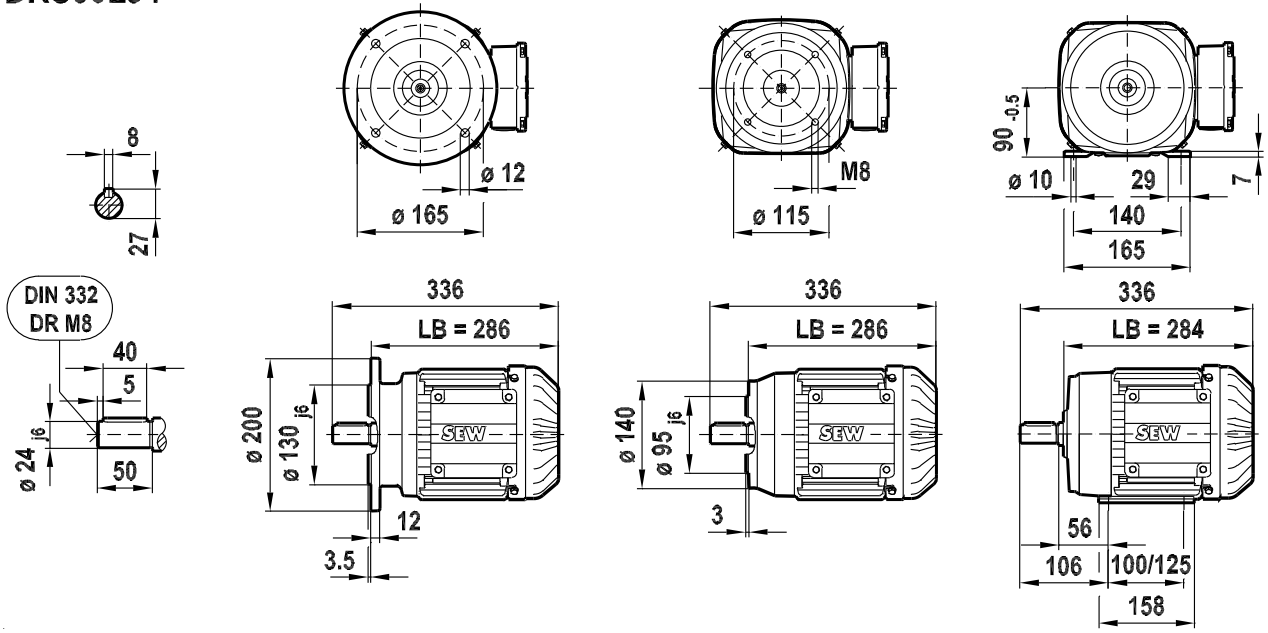

21343799/EN – 02/2015

DR.90LJ

08 050 01 12
2 (2)

/IV

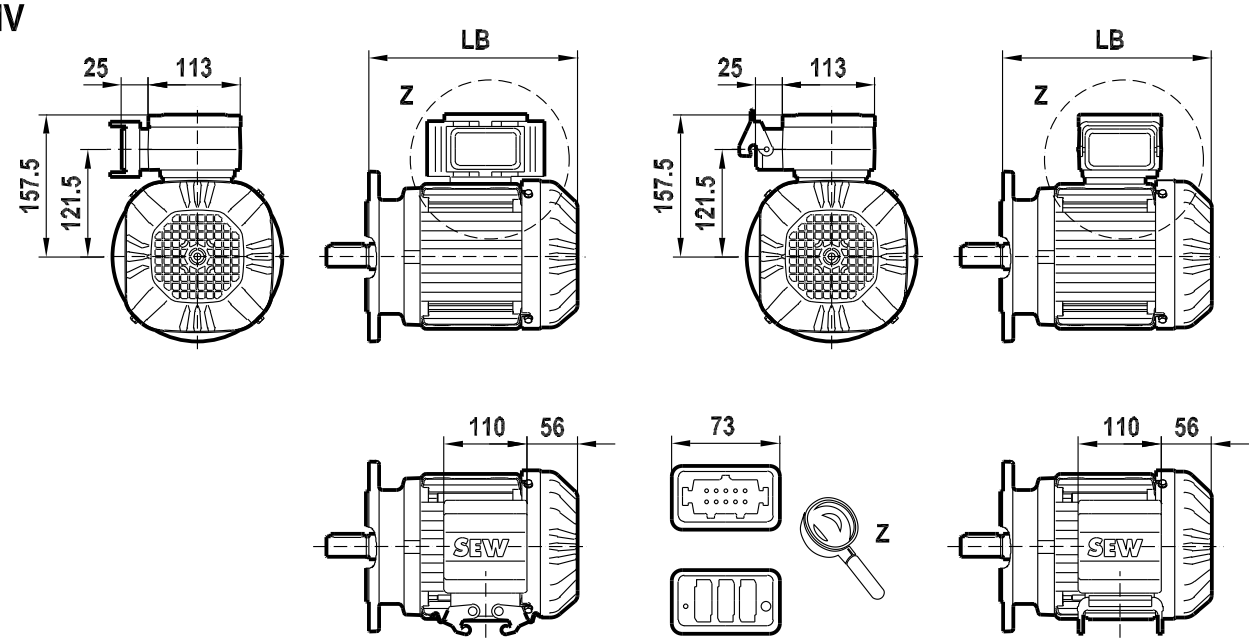

/IS

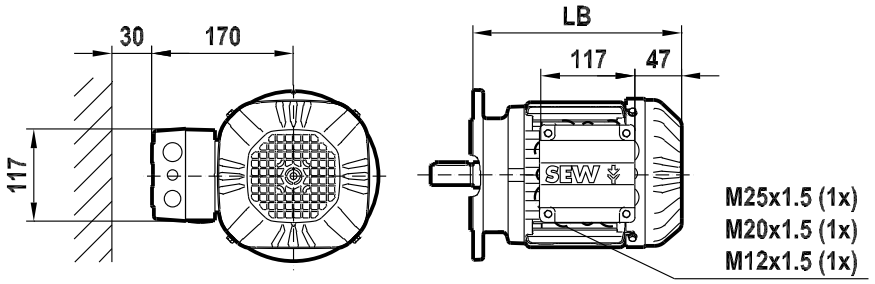

/C

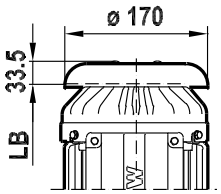

/V

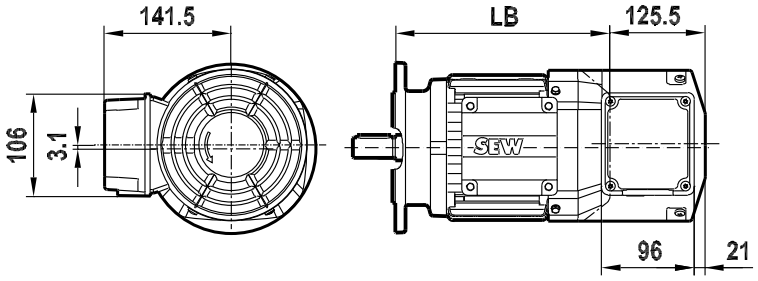

21343799/EN – 02/2015

DR.100MJ

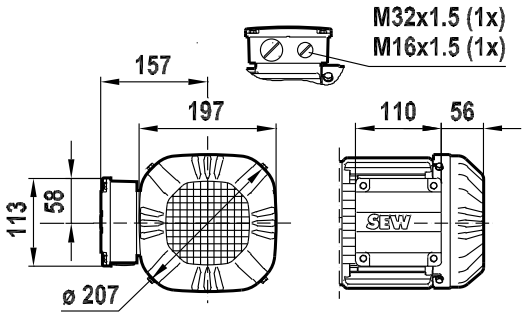

/2W

08 051 01 12
1 (2)

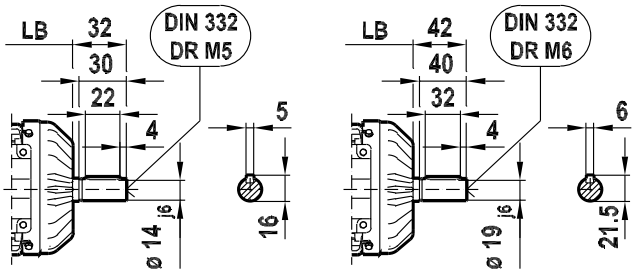

DRE100MJ4

/FF (B5) FF215 | /FT (B14) FT130 | /FI.. (B3)

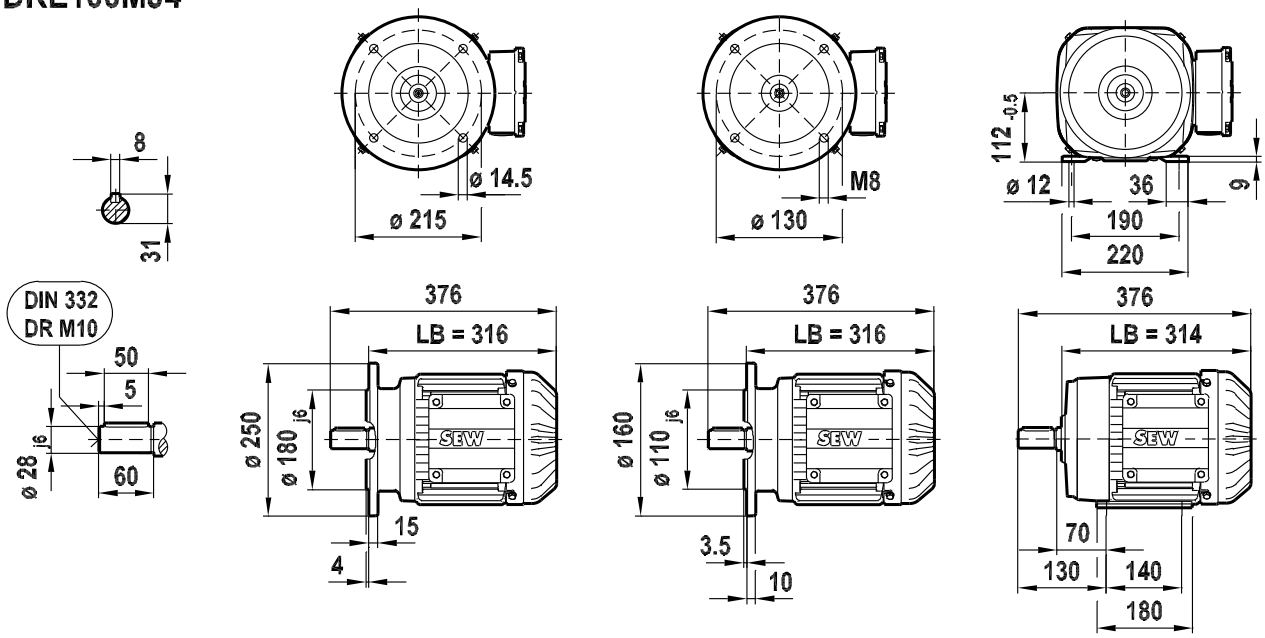

DRP100MJ4
DRU100MJ4

/FF (B5) FF215 | /FT (B14) FT130 | /FI.. (B3)

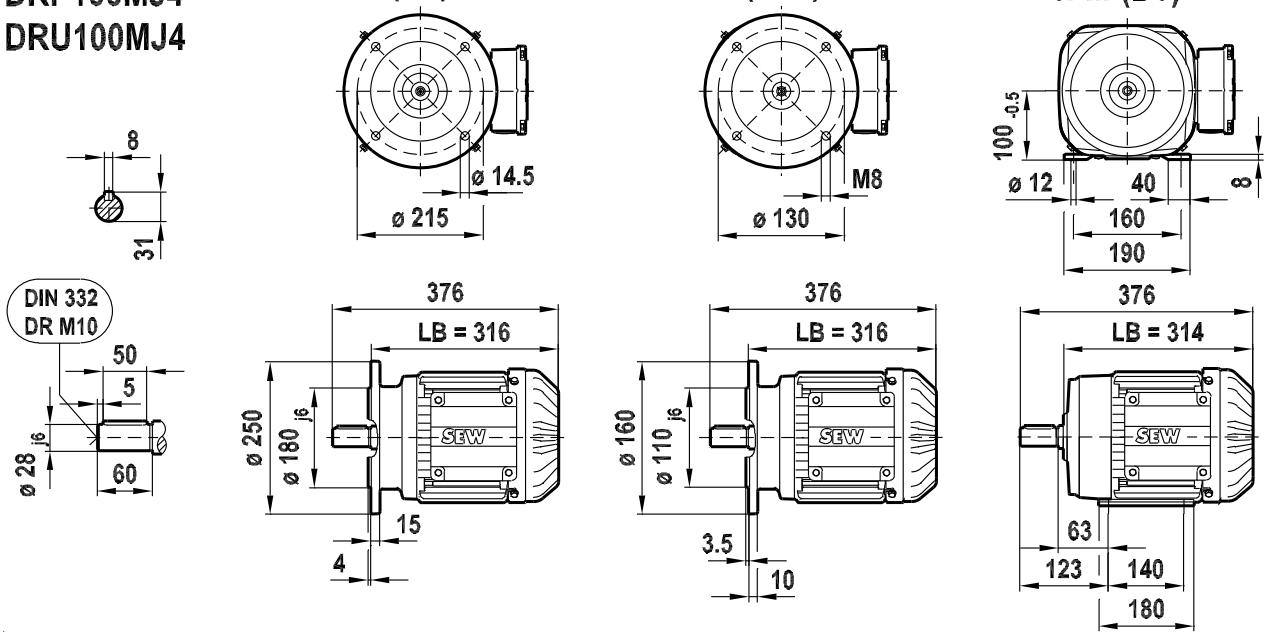

21343799/EN – 02/2015

DR.100MJ

08 051 01 12
2 (2)

/IV

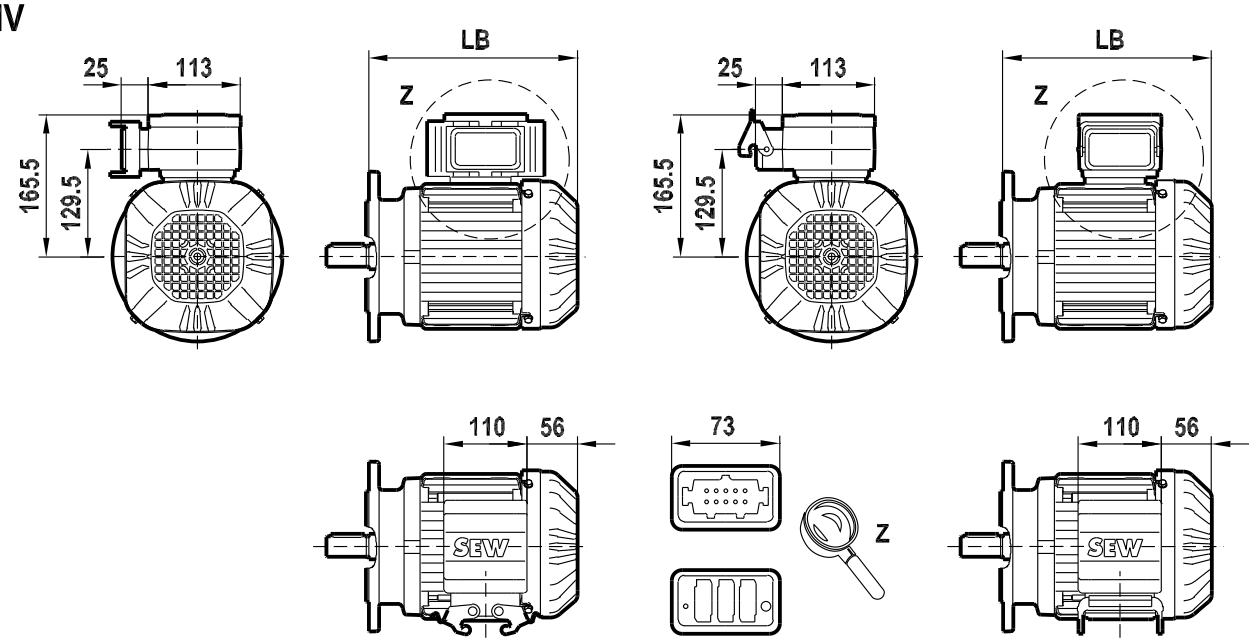

/IS

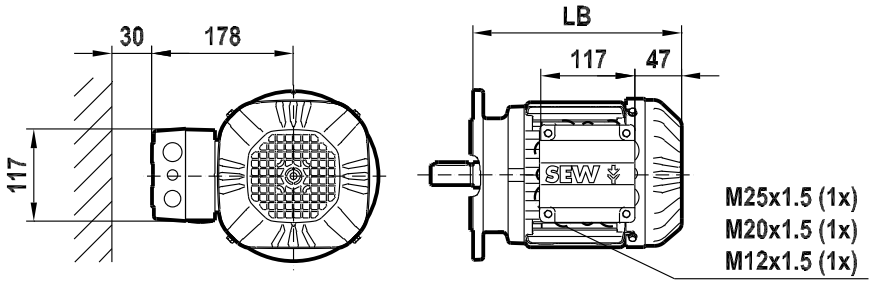

/C

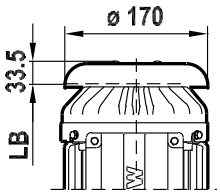

/V

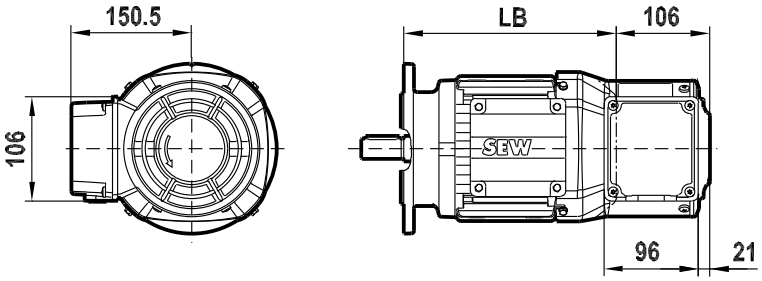

21343799/EN – 02/2015

DR.100LJ

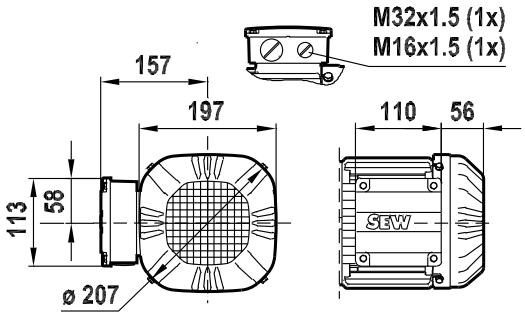

/2W

08 052 01 12
1 (2)

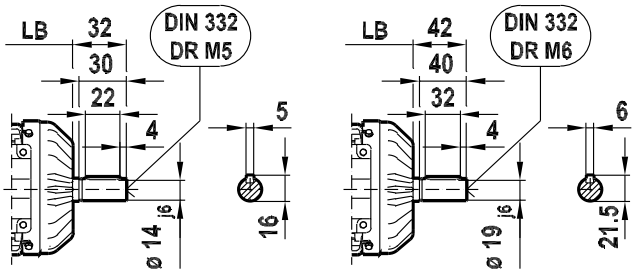

DRP100LJ4

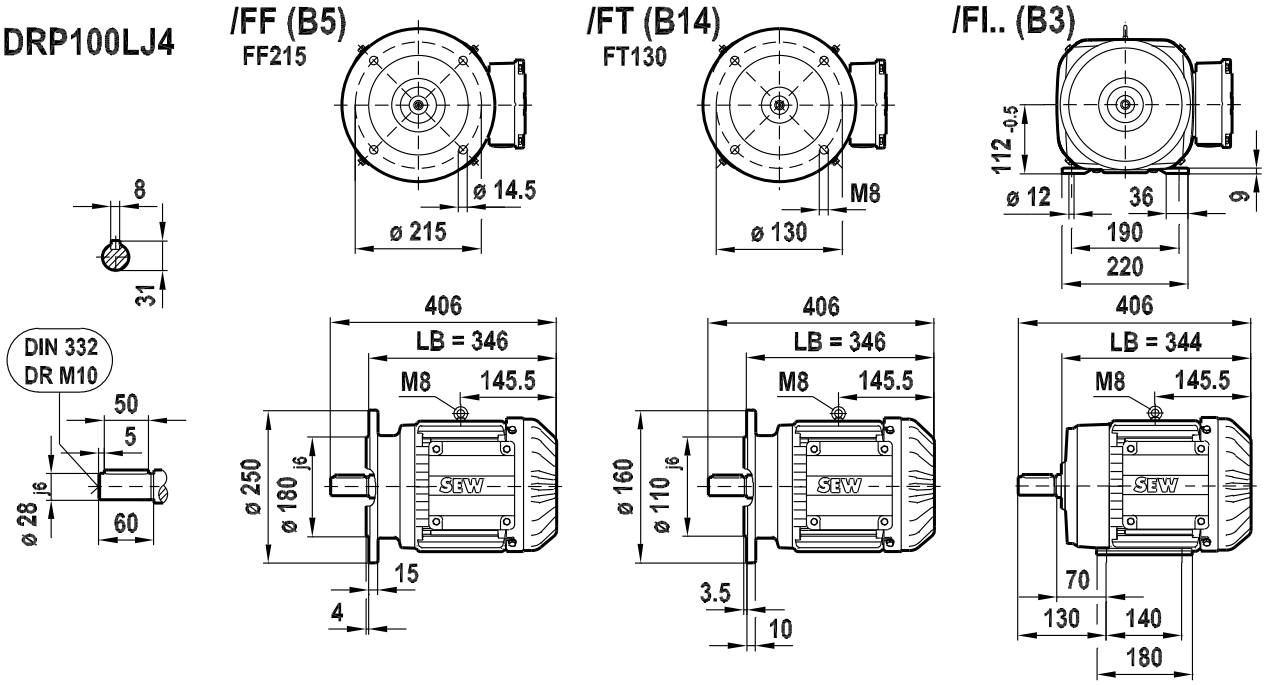

DRU100LJ4

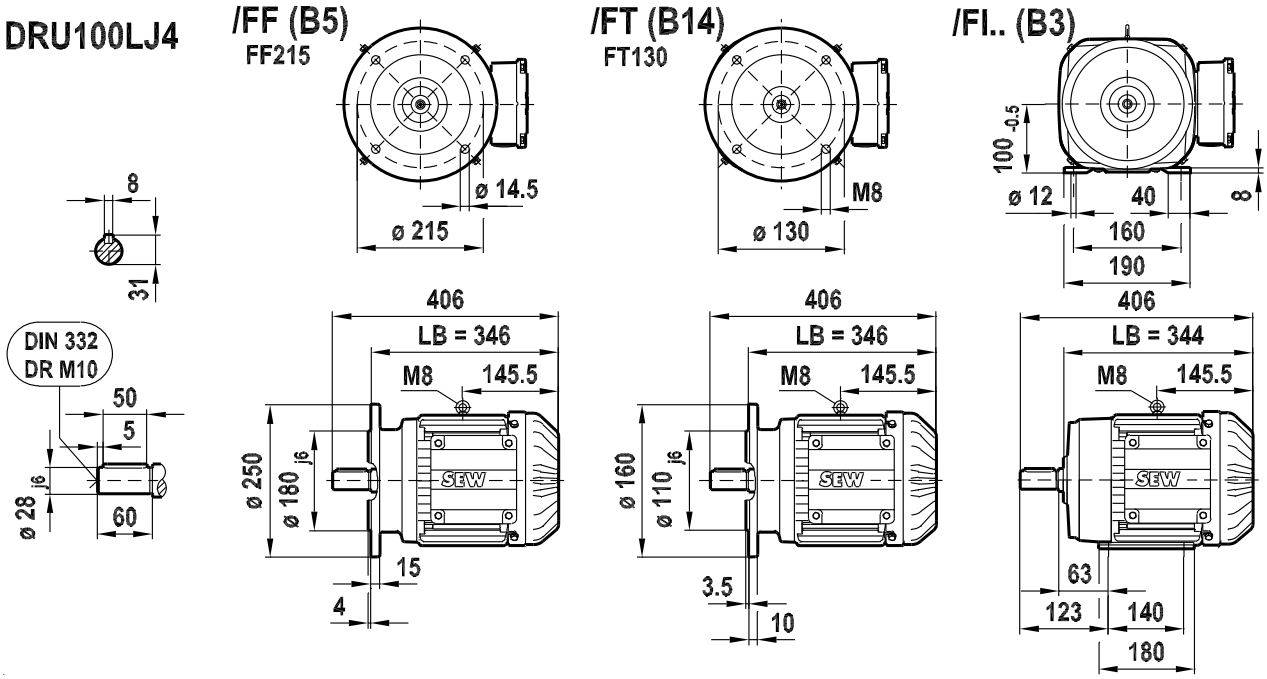

21343799/EN – 02/2015

DR.100LJ

08 052 01 12
2 (2)

/IV

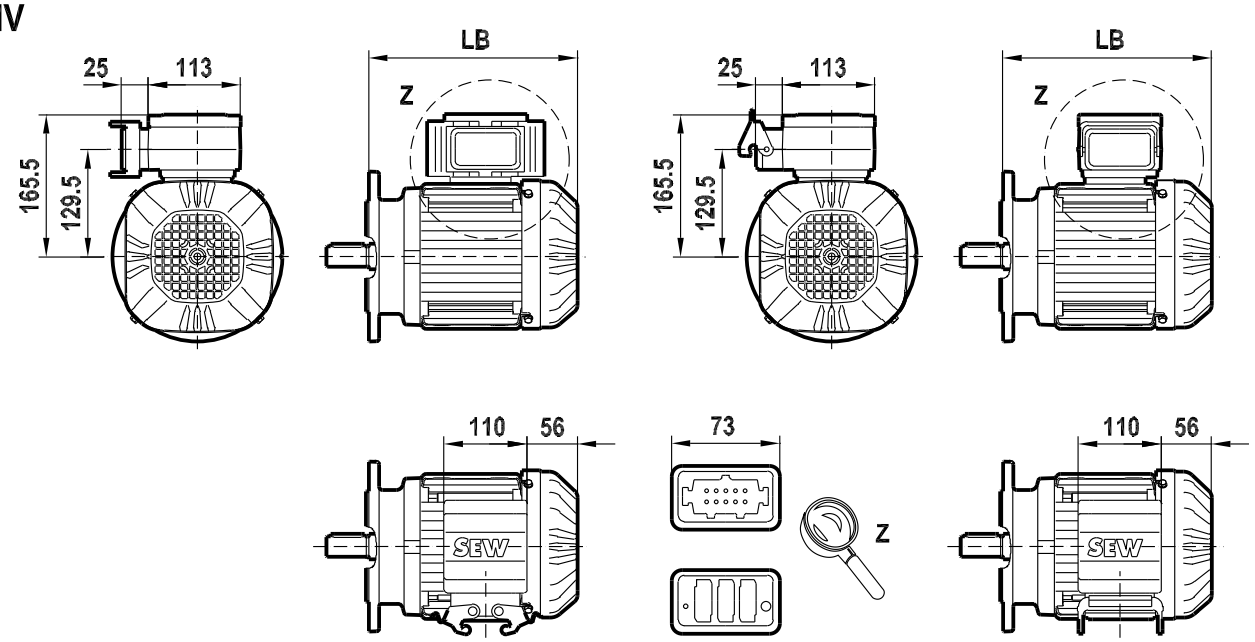

/IS

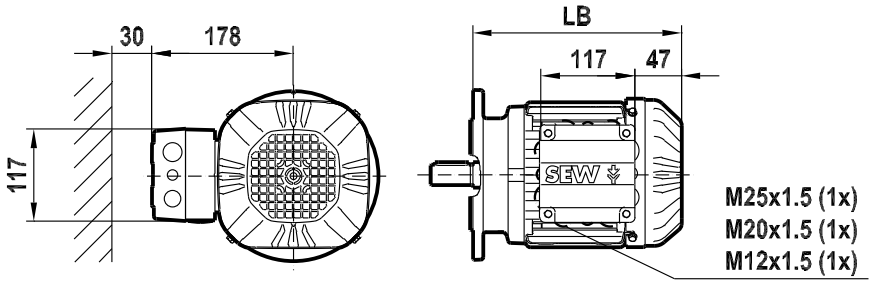

/C

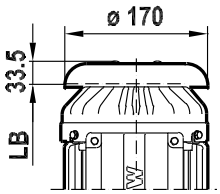

/V

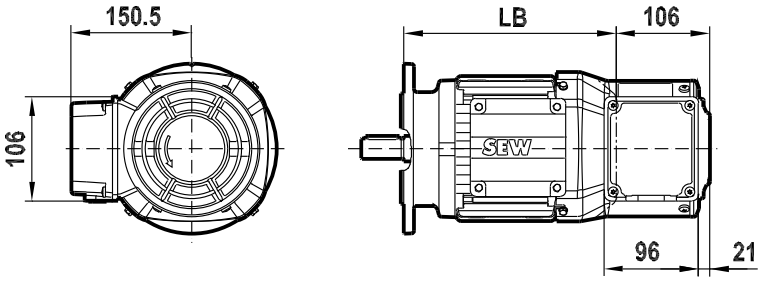

21343799/EN – 02/2015

DR.71SJ BE

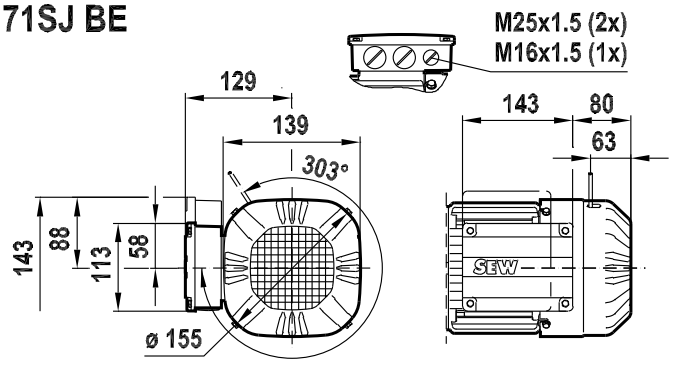

09 737 01 12
1 (2)

/2W

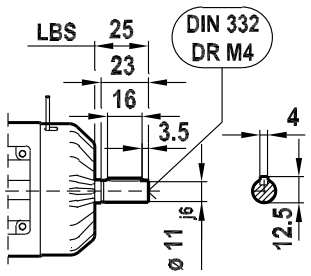

DRE71SJ4 BE
DRP71SJ4 BE

/FF (B5) FF130

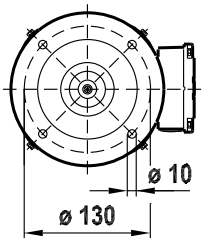

/FT (B14) FT85

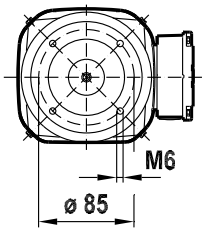

/FI.. (B3)

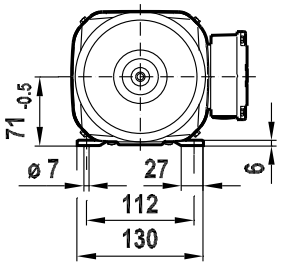

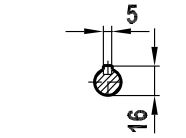

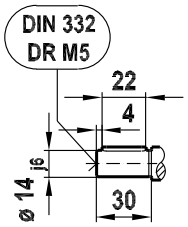

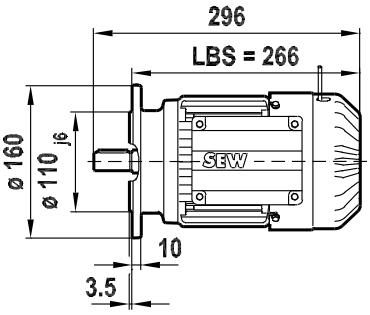

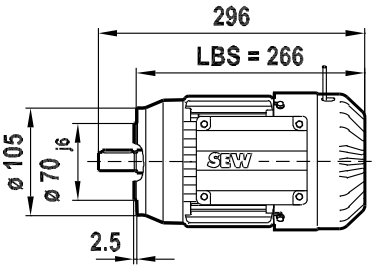

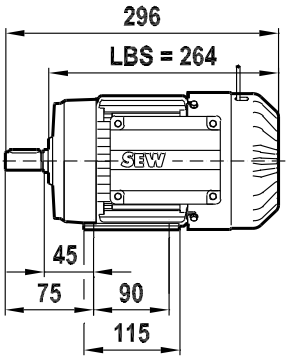

DRU71SJ4 BE

/FF (B5) FF130

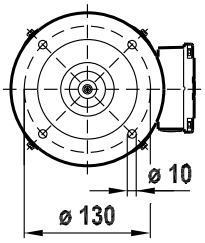

/FT (B14) FT85

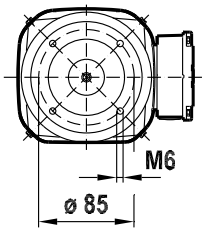

/FI.. (B3)

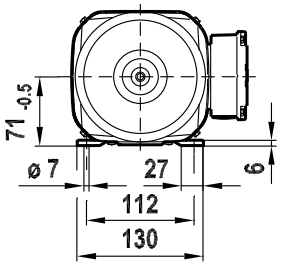

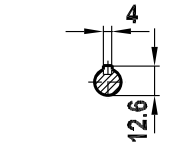

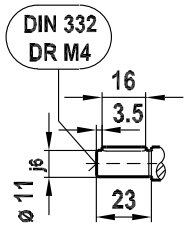

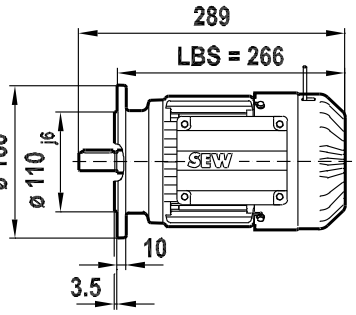

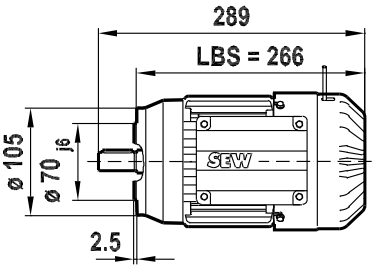

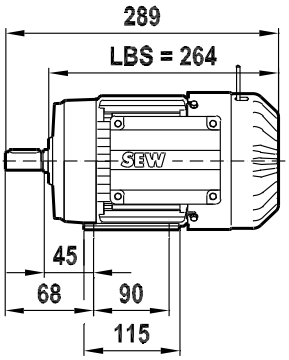

21343799/EN – 02/2015

DR.71SJ BE

09 737 01 12
2 (2)

/IV

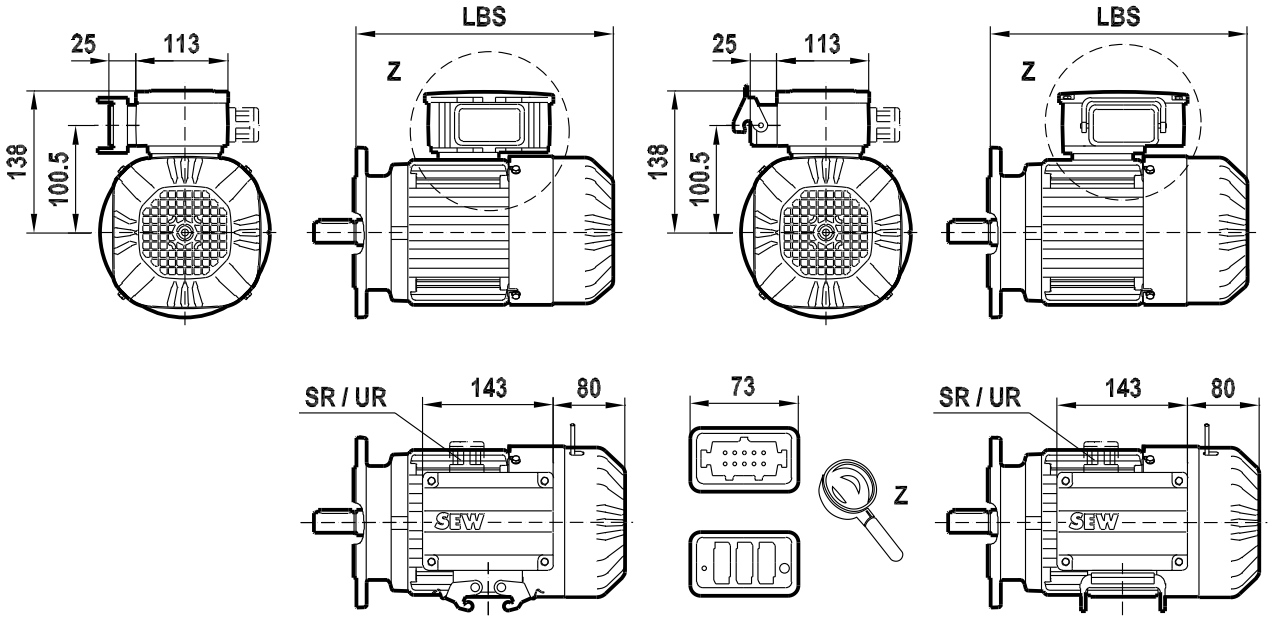

/IS

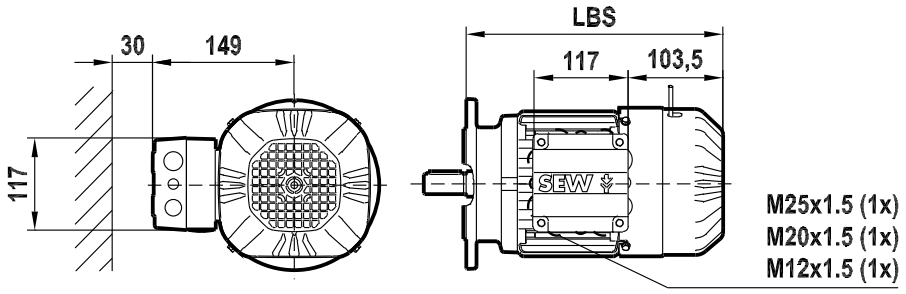

/C

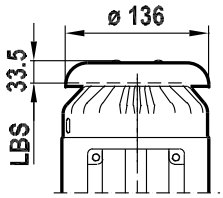

/V

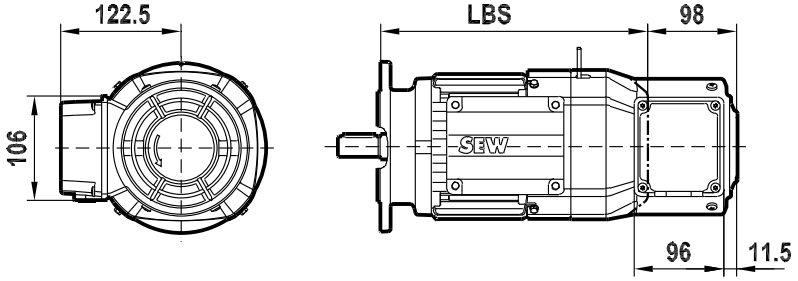

21343799/EN – 02/2015

DR.71MJ BE

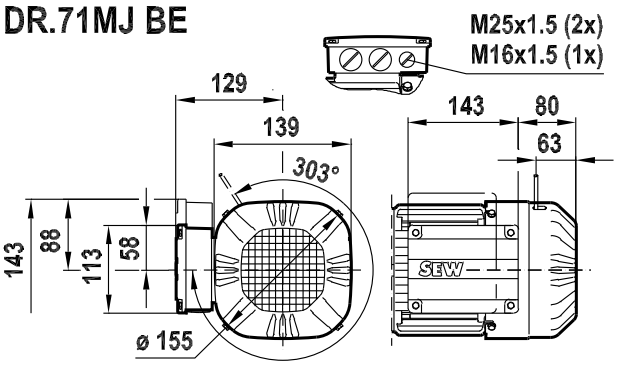

/2W

09 738 01 12
1 (2)

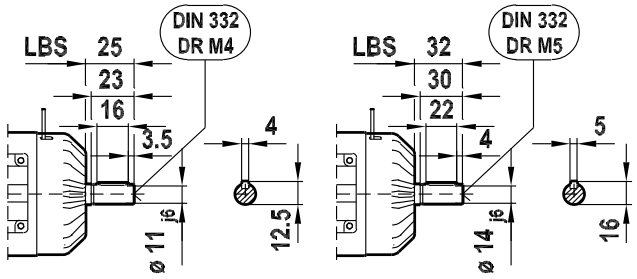

DRE71MJ4 BE
DRP71MJ4 BE

/FF (B5) FF165 /FT (B14) FT100 /FI.. (B3)

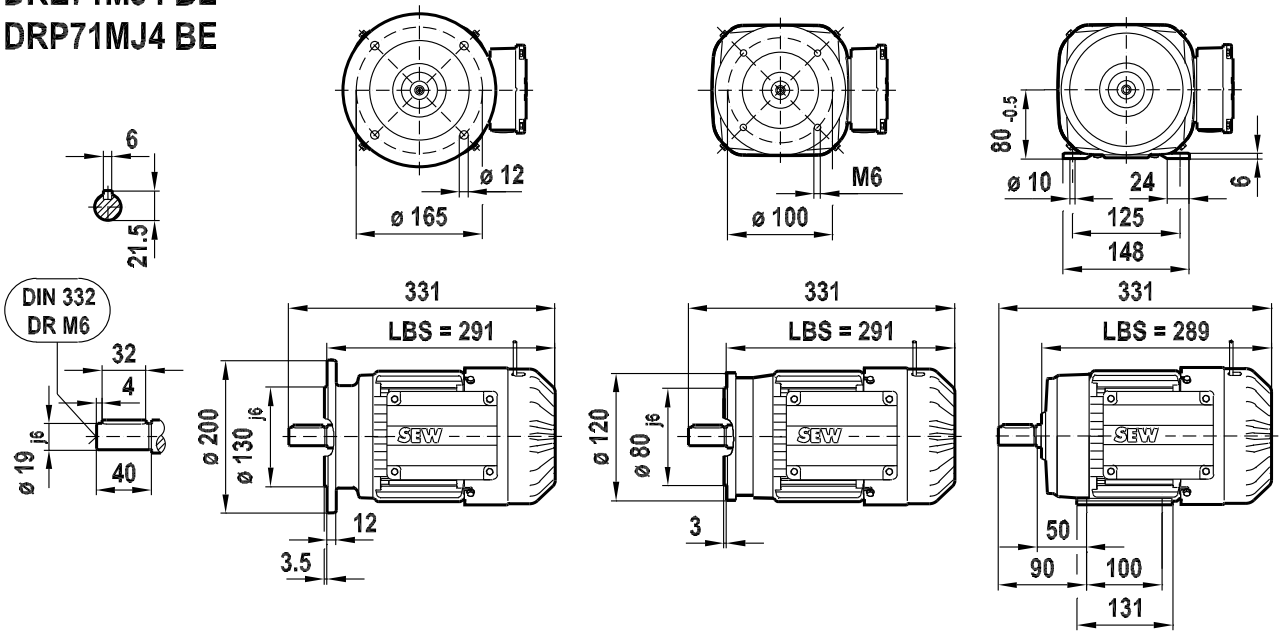

DRU71MJ4 BE

/FF (B5) FF130 /FT (B14) FT85 /FI.. (B3)

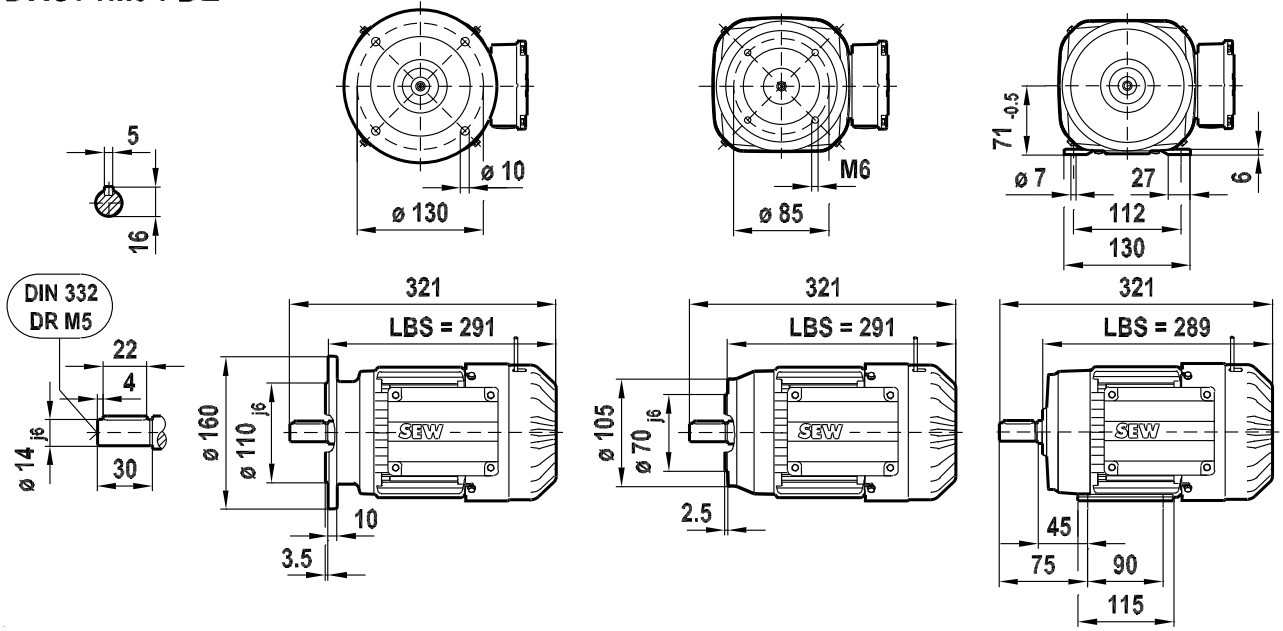

21343799/EN – 02/2015

DR.71MJ BE

09 738 01 12
2 (2)

/IV

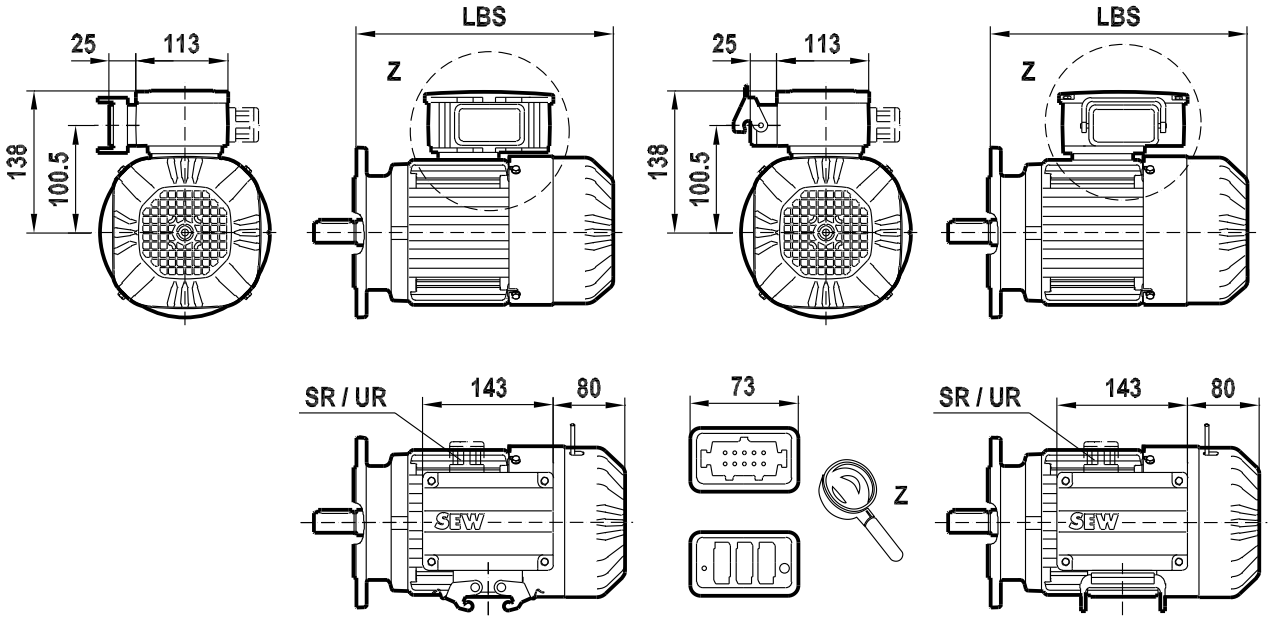

/IS

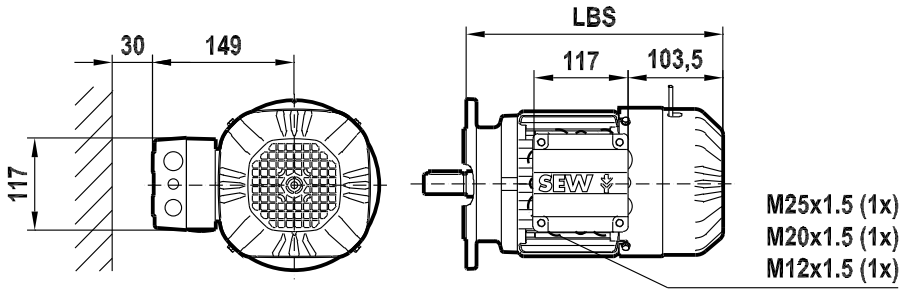

/C

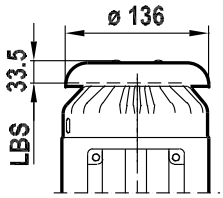

/V

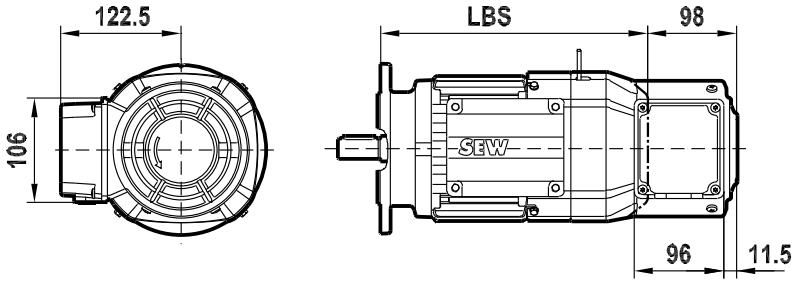

21343799/EN – 02/2015

DR.80SJ BE

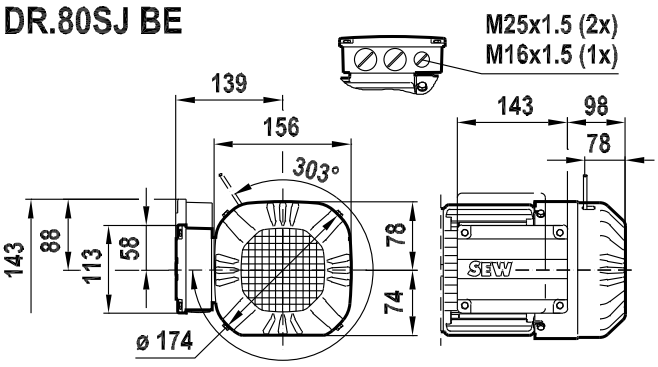

/2W

09 739 01 12
1 (2)

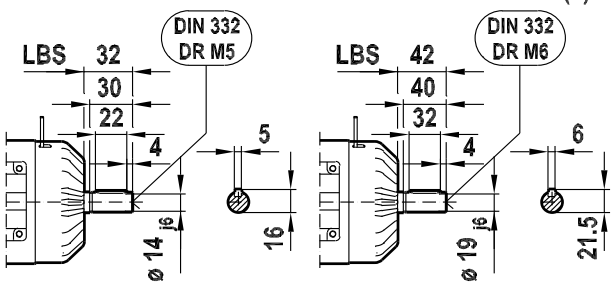

DRE80SJ4 BE

/FF (B5) FF165 /FT (B14) FT115 /FI.. (B3)

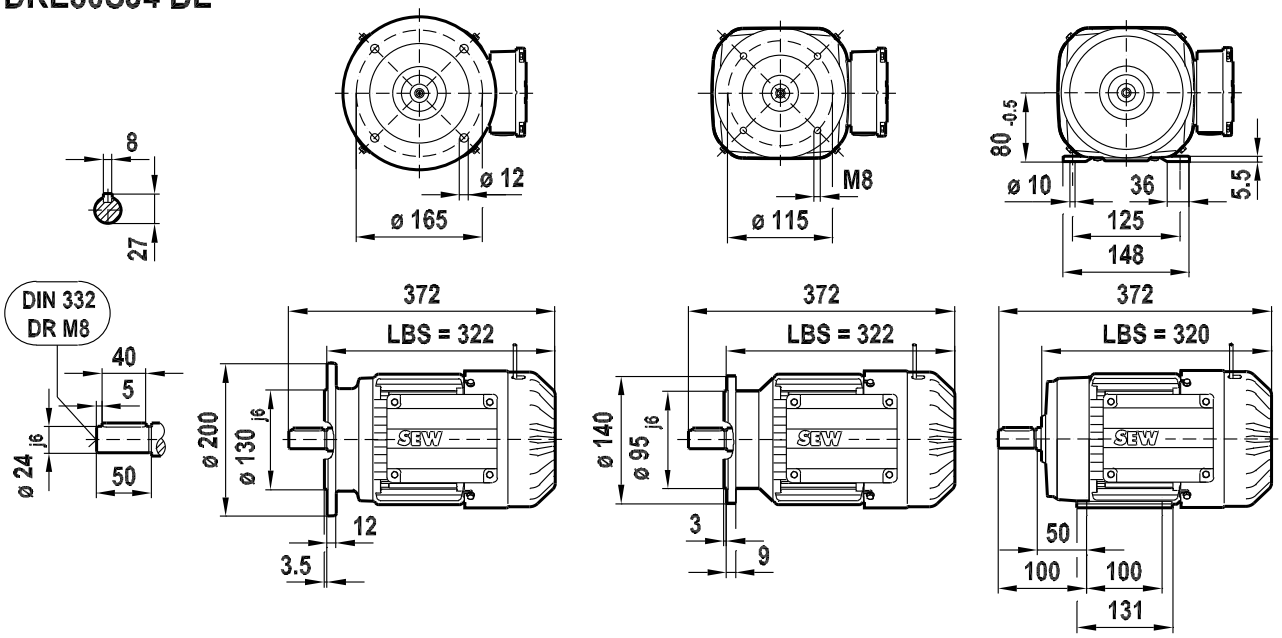

DRP80SJ4 BE
DRU80SJ4 BE

/FF (B5) FF165 /FT (B14) FT100 /FI.. (B3)

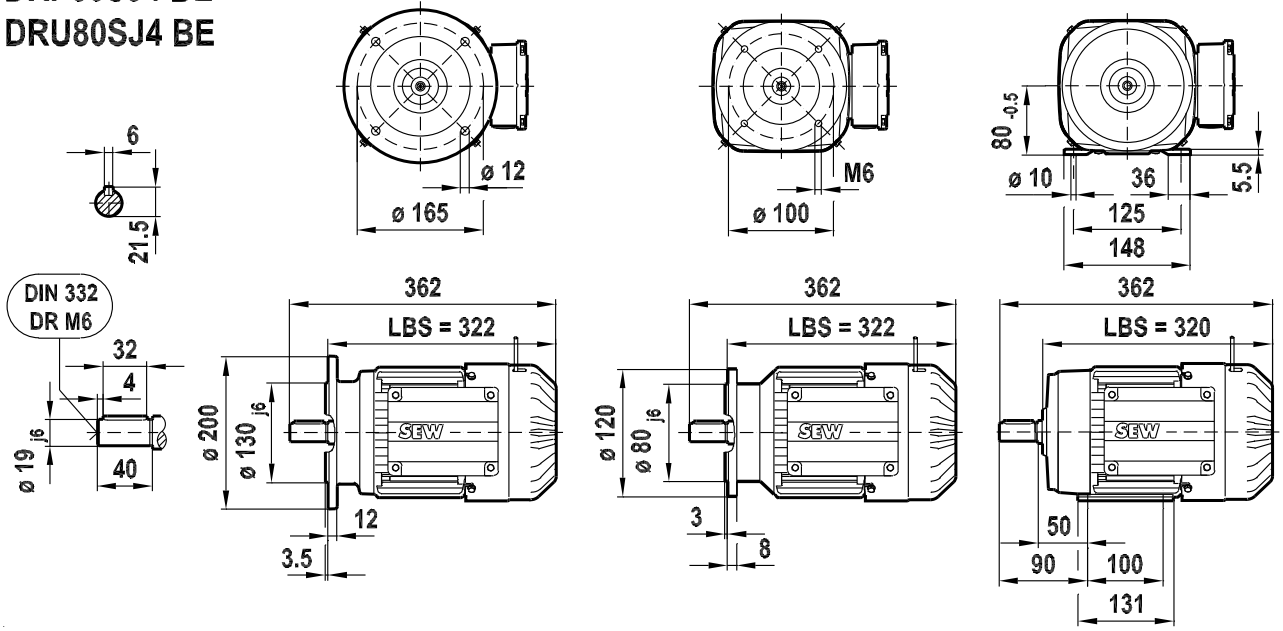

21343799/EN – 02/2015

DR.80SJ BE

09 739 01 12
2 (2)

/IV

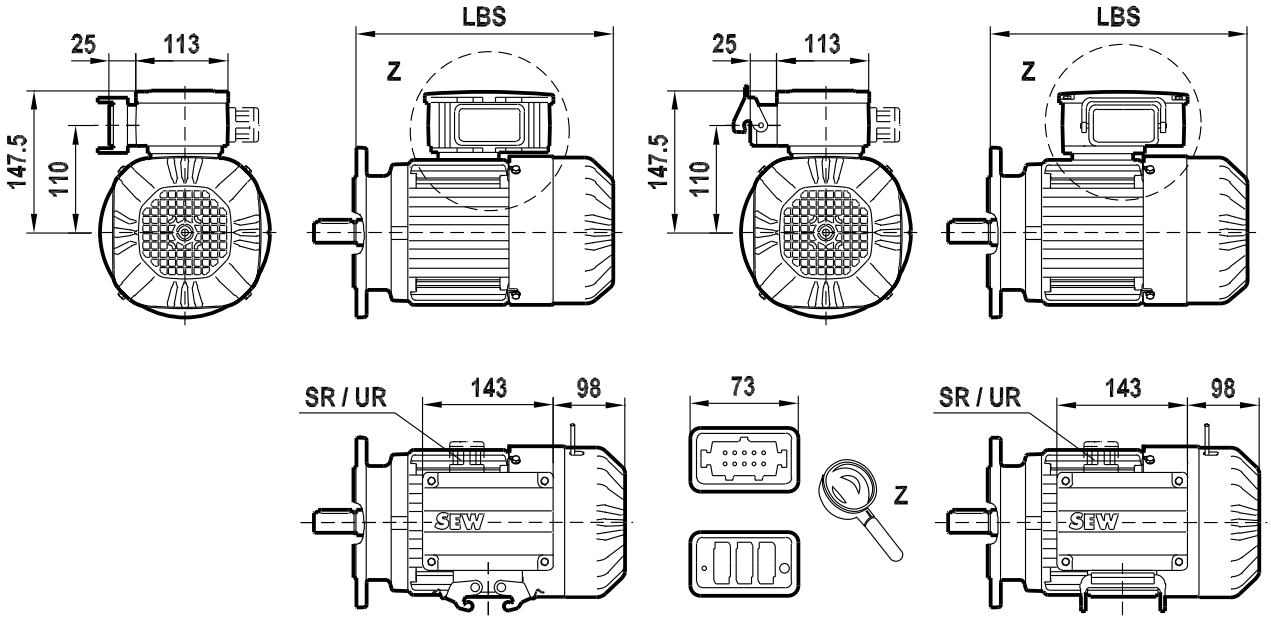

/IS

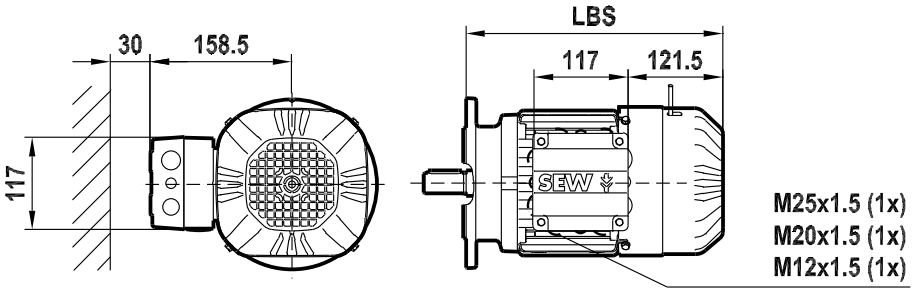

/C

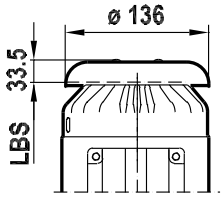

/V

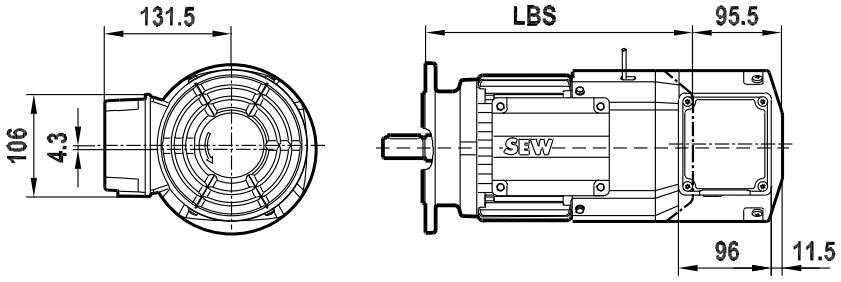

21343799/EN – 02/2015

DR.80MJ BE

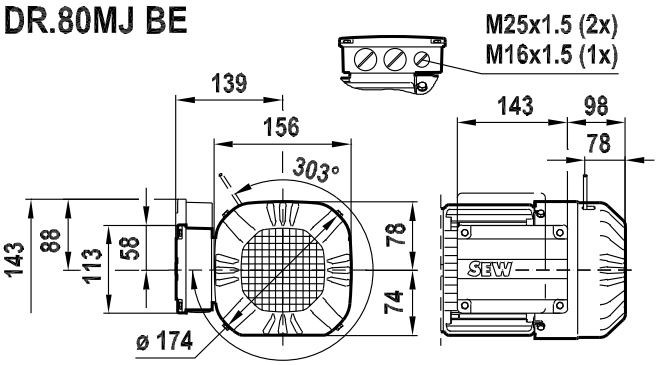

/2W

09 740 01 12
1 (2)

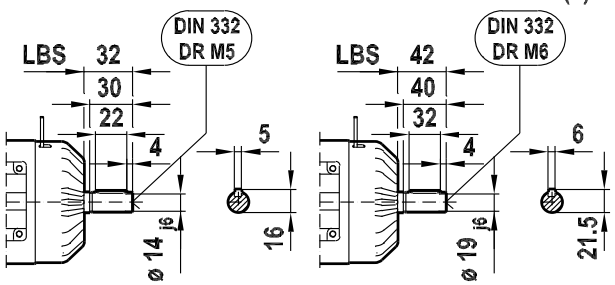

DRE80MJ4 BE
DRP80MJ4 BE

/FF (B5) FF165

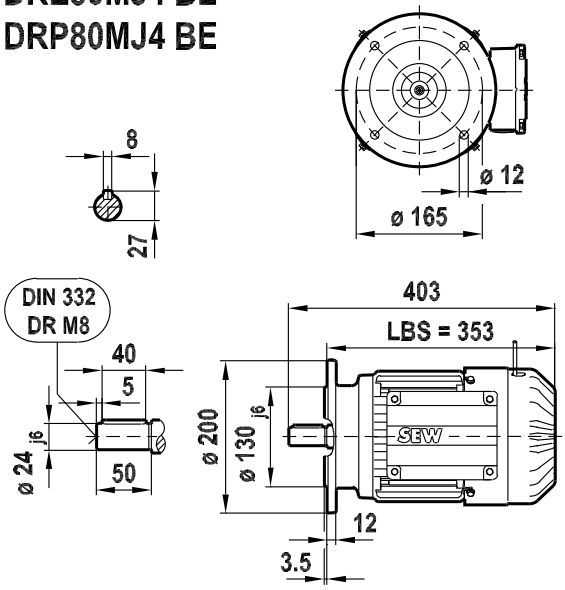

/FT (B14) FT115

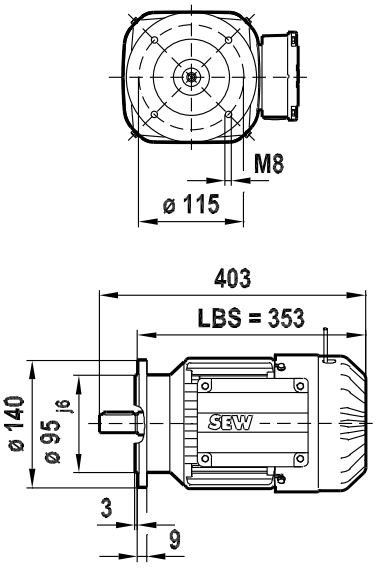

/FI.. (B3)

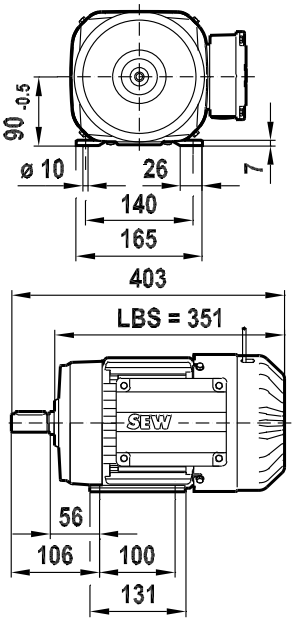

DRU80MJ4 BE

/FF (B5) FF165

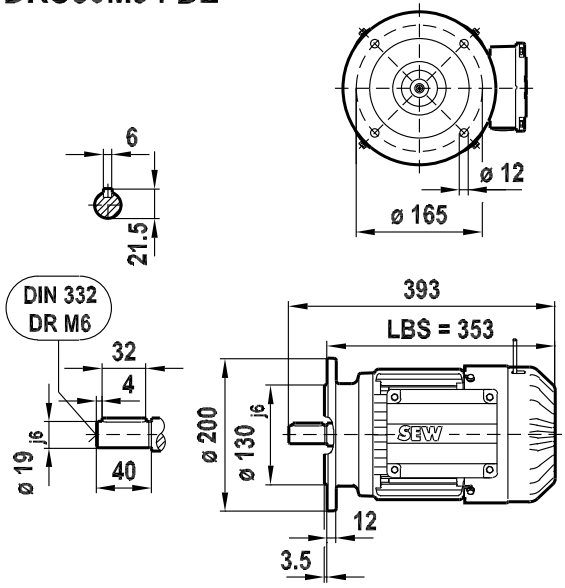

/FT (B14) FT100

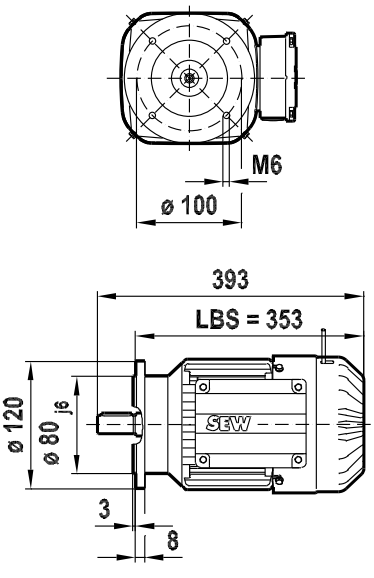

/FI.. (B3)

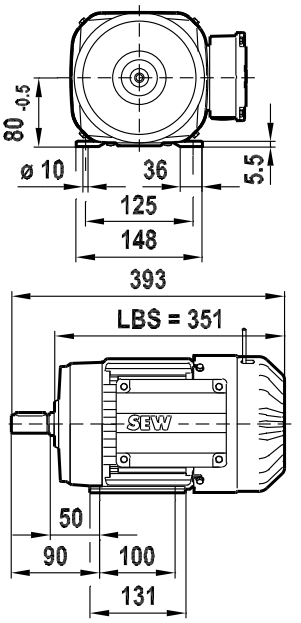

21343799/EN – 02/2015

DR.80MJ BE

09 740 01 12
2 (2)

/IV

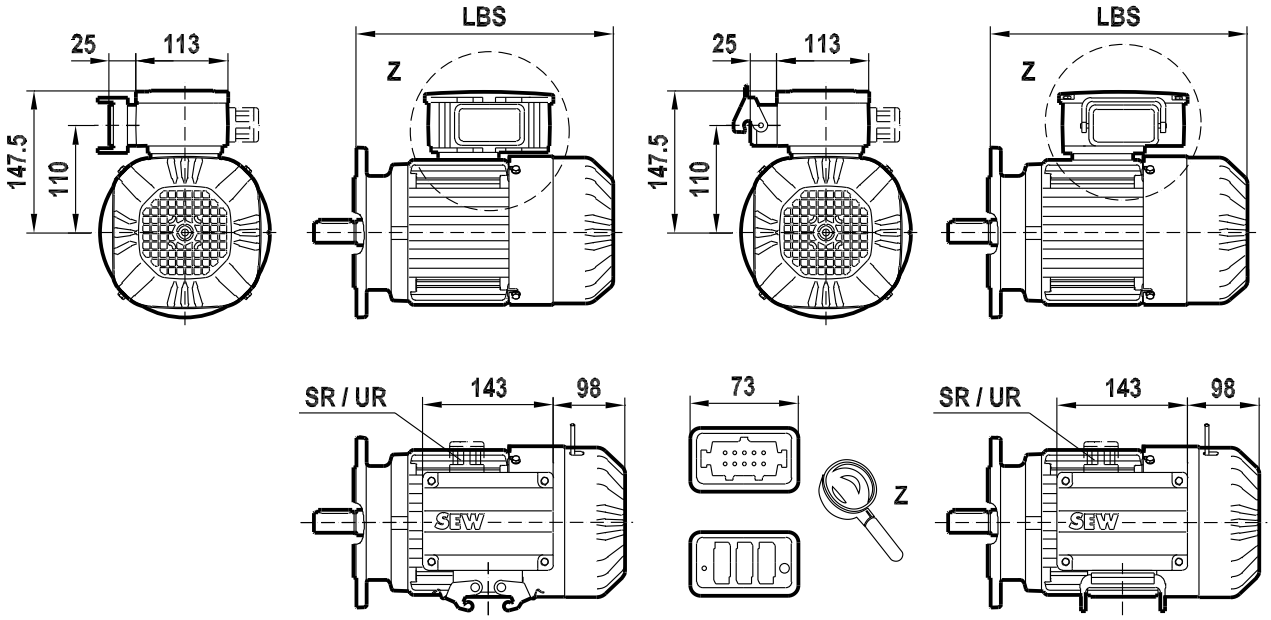

/IS

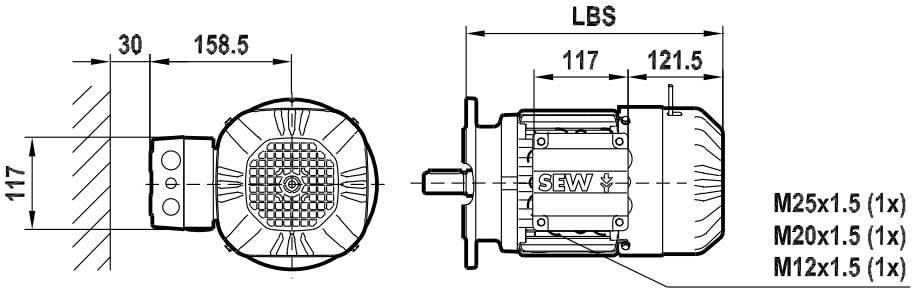

/C

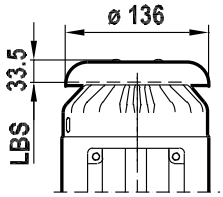

/V

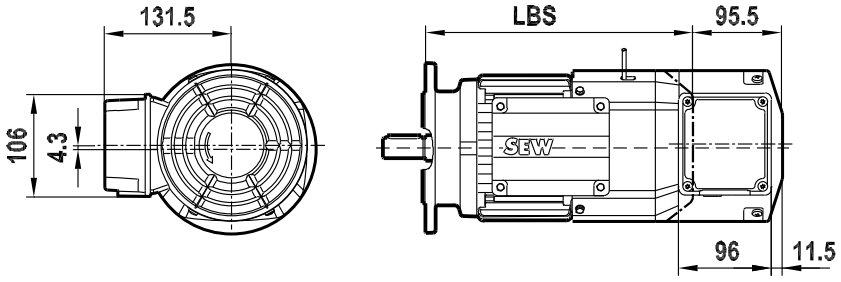

21343799/EN – 02/2015

DR.90MJ BE

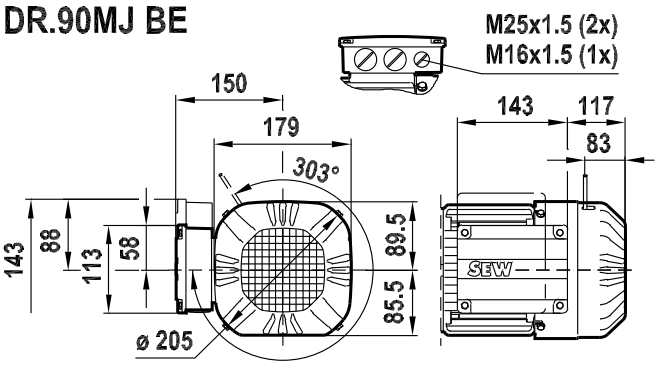

/2W

09 741 01 12
1 (2)

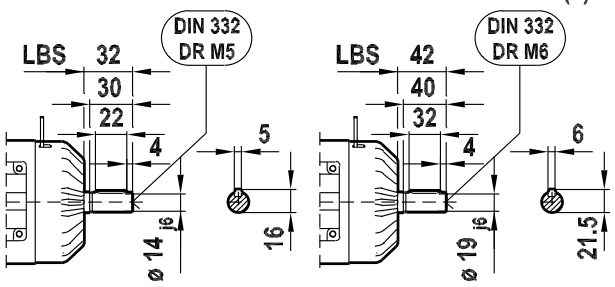

DRE90MJ4 BE

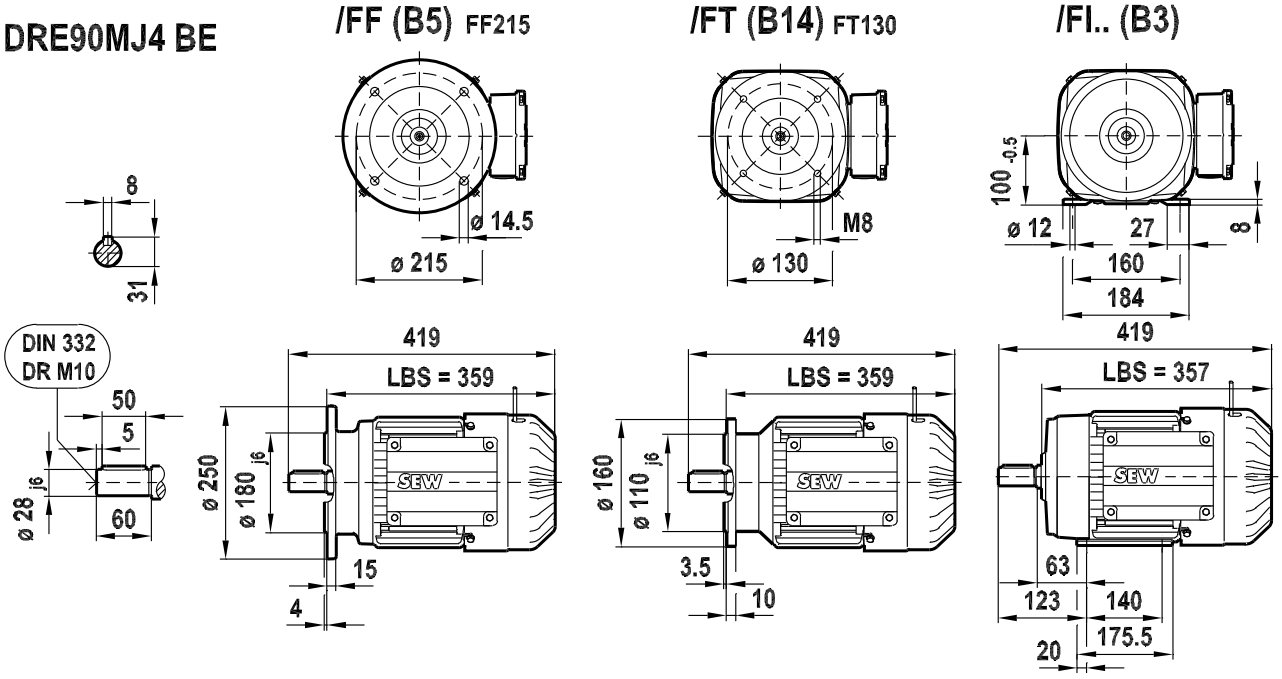

DRP90MJ4 BE
DRU90MJ4 BE

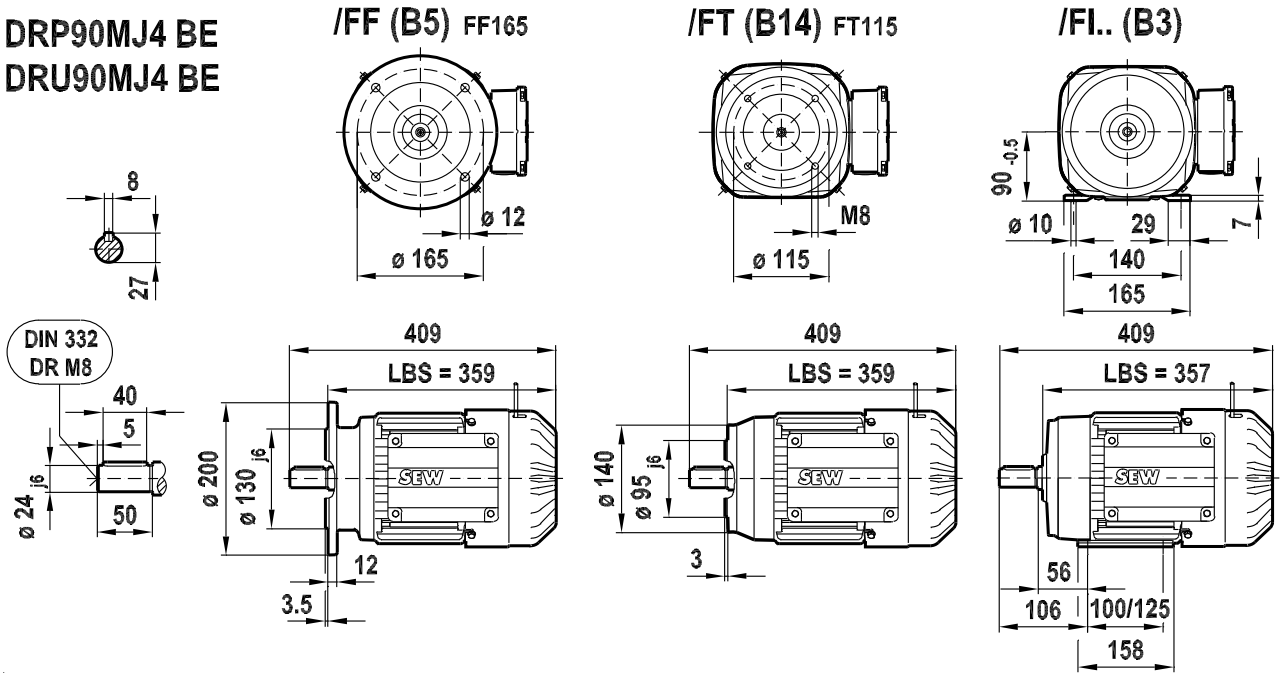

21343799/EN – 02/2015

DR.90MJ BE

09 741 01 12
2 (2)

/IV

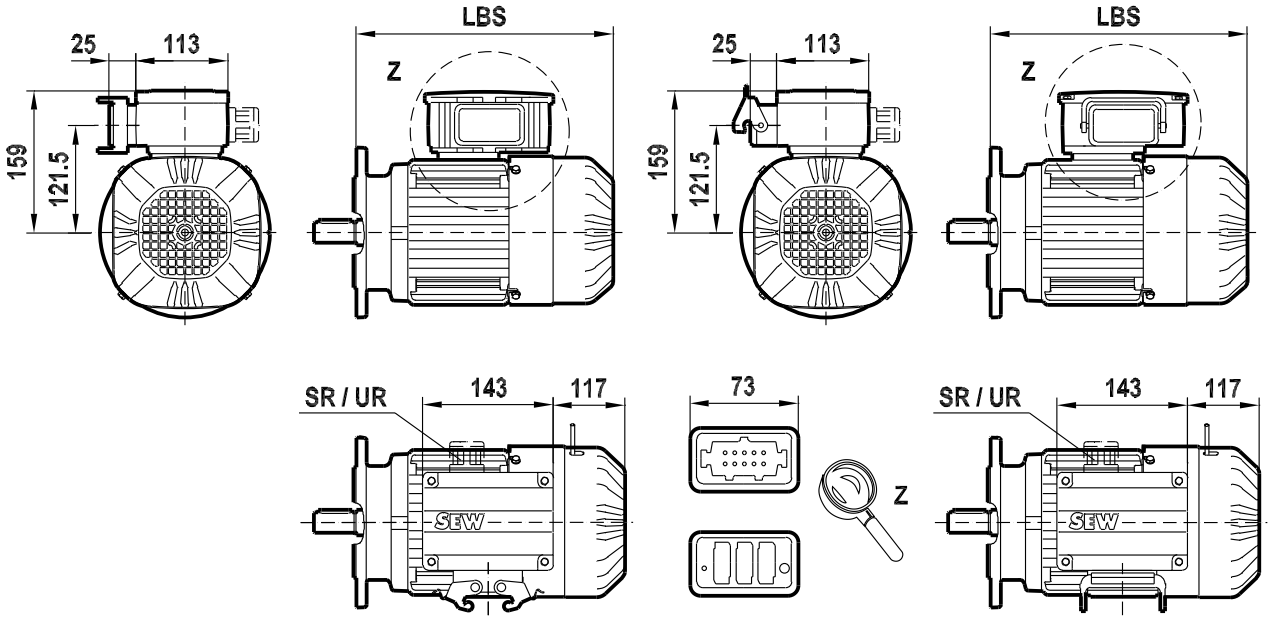

/IS

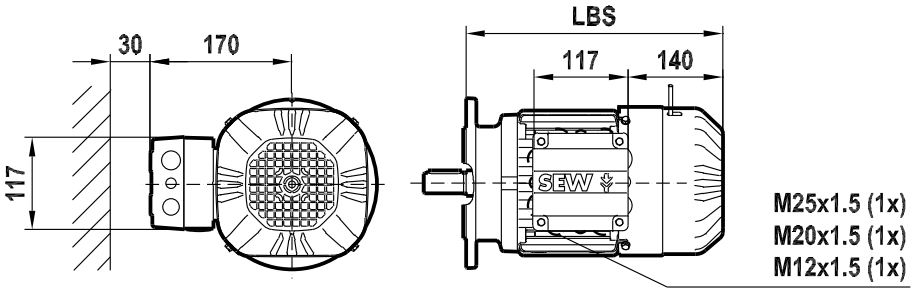

/C

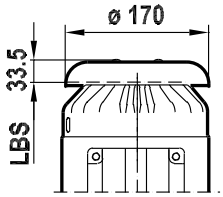

/V

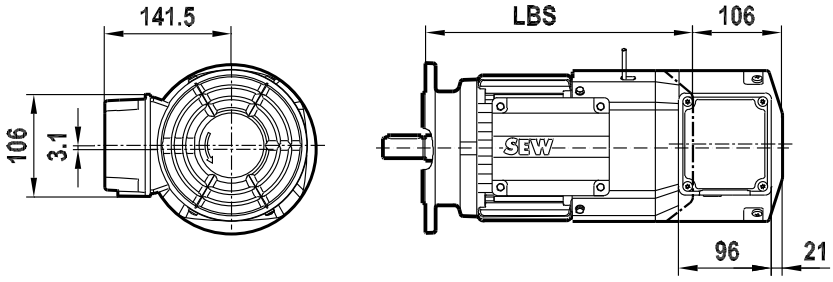

21343799/EN – 02/2015

DR.90LJ BE

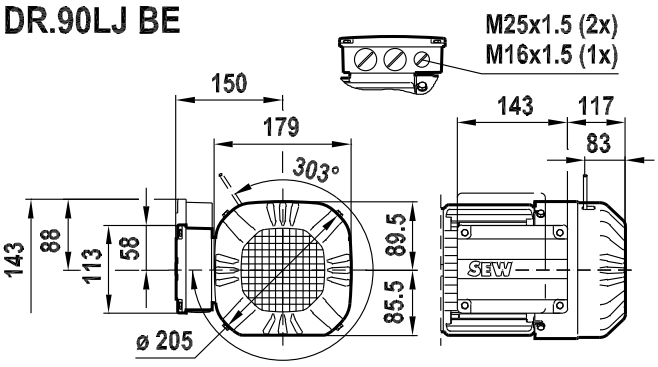

/2W

09 742 01 12
1 (2)

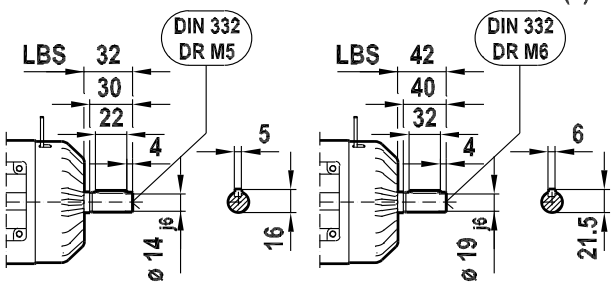

DRE90LJ4 BE
DRP90LJ4 BE

/FF (B5) FF215

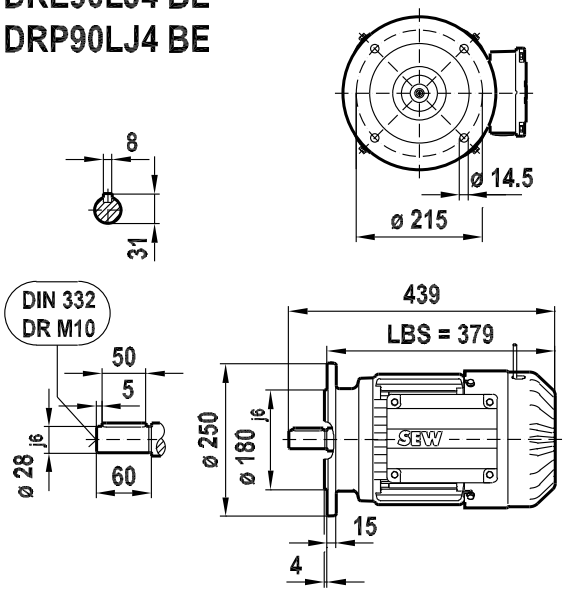

/FT (B14) FT130

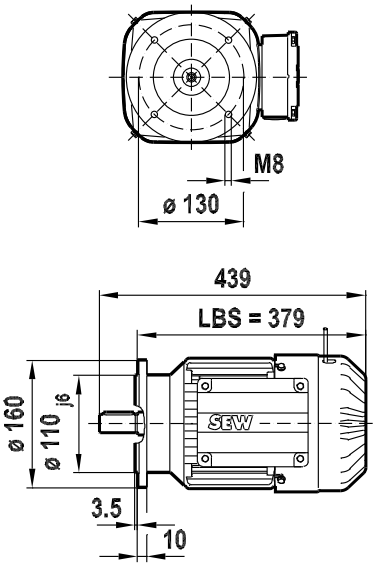

/FI.. (B3)

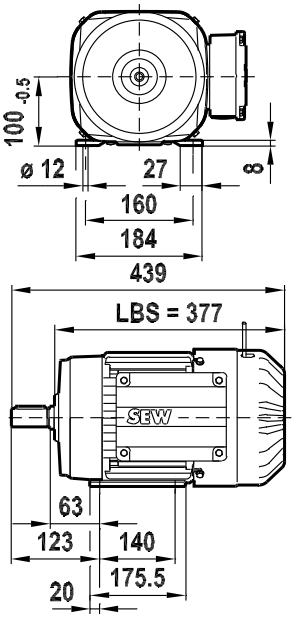

DRU90LJ4 BE

/FF (B5) FF165

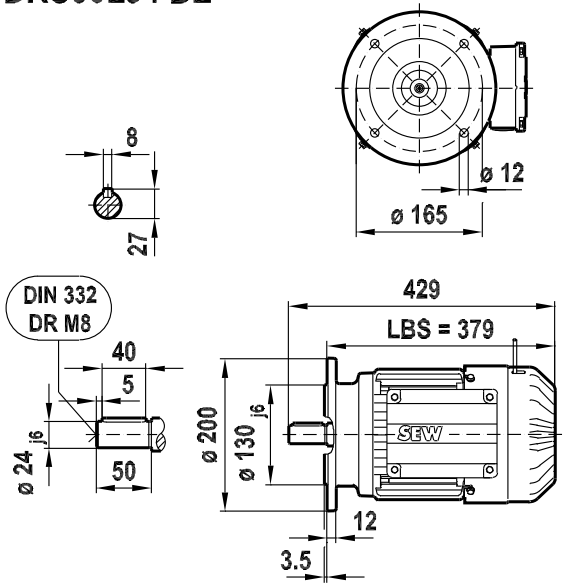

/FT (B14) FT115

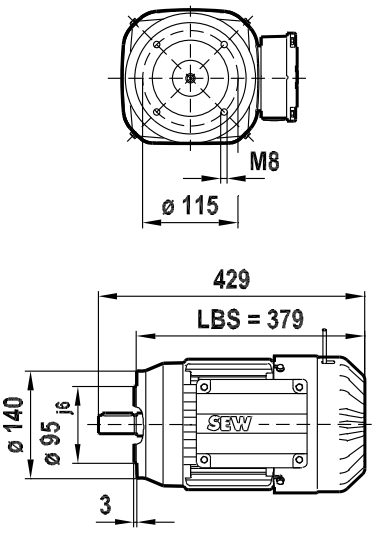

/FI.. (B3)

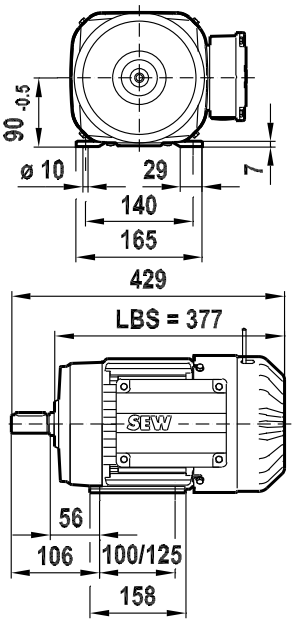

21343799/EN – 02/2015

DR.90LJ BE

09 742 01 12
2 (2)

/IV

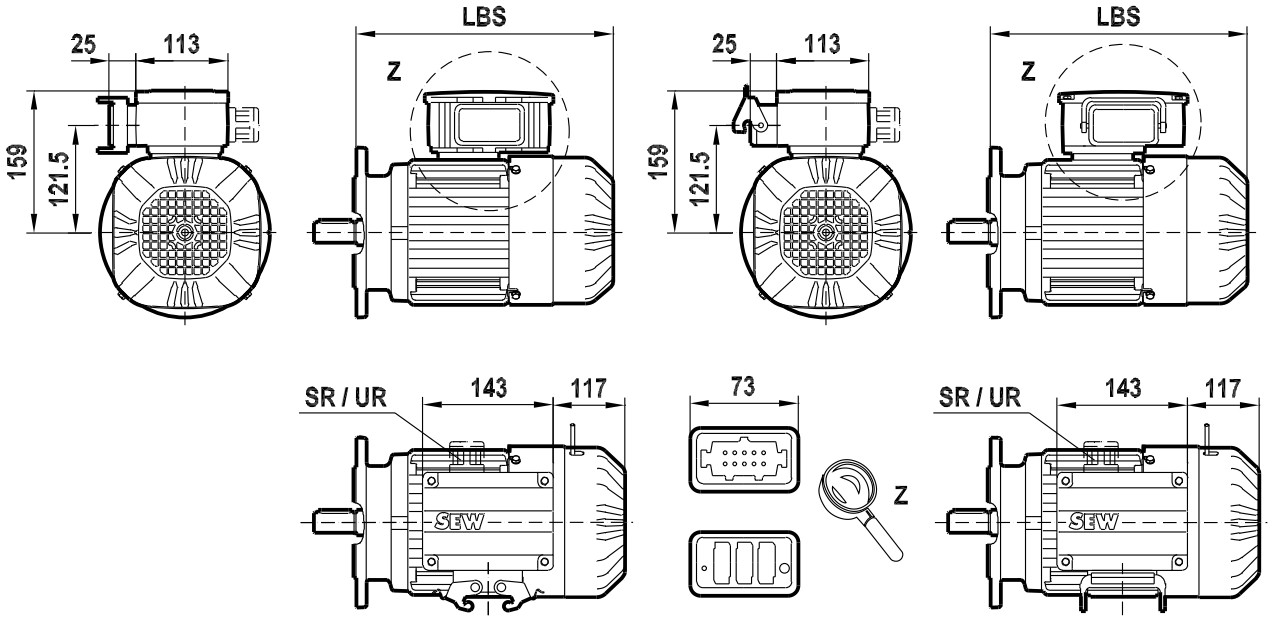

/IS

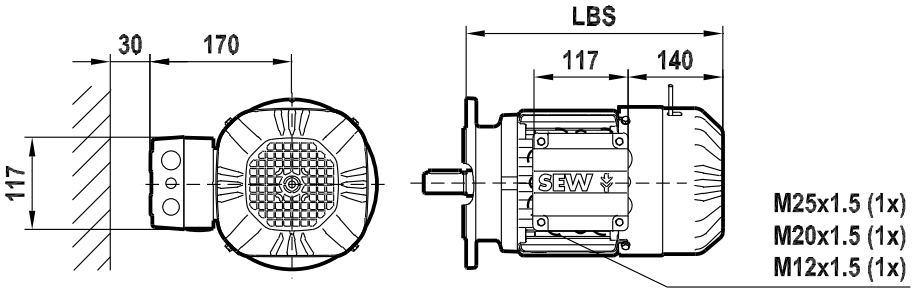

/C

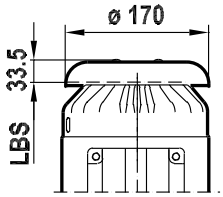

/V

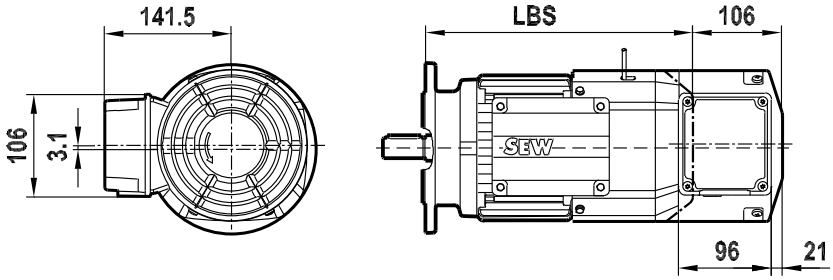

21343799/EN – 02/2015

DR.100MJ BE

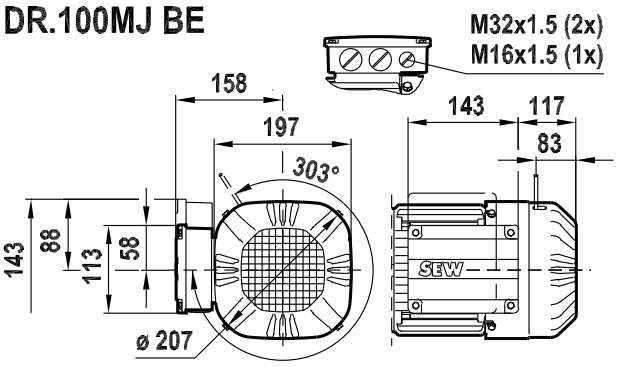

/2W

09 743 01 12
1 (2)

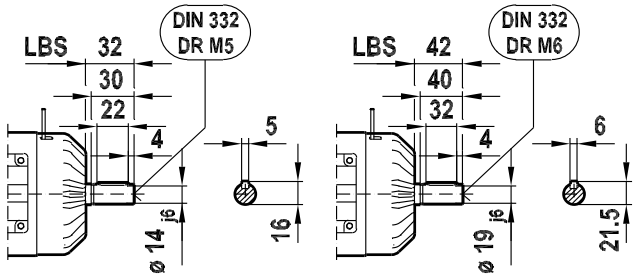

DRE100MJ4 BE

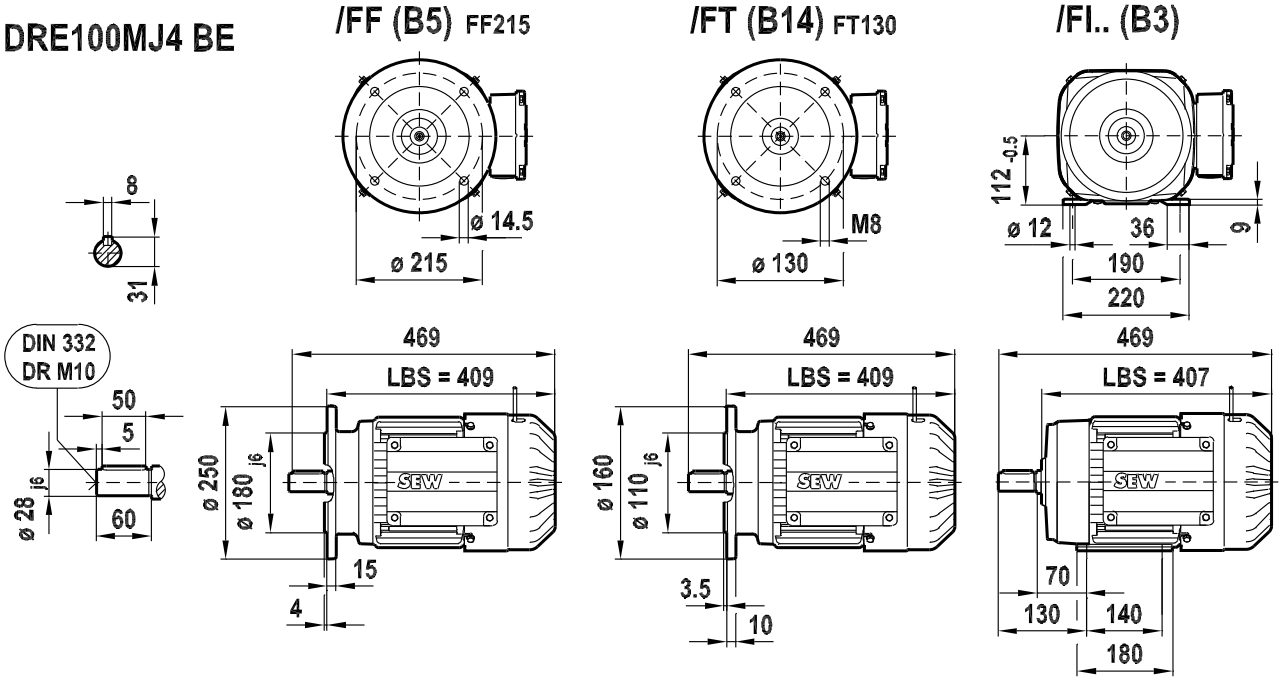

DRP100MJ4 BE
DRU100MJ4 BE

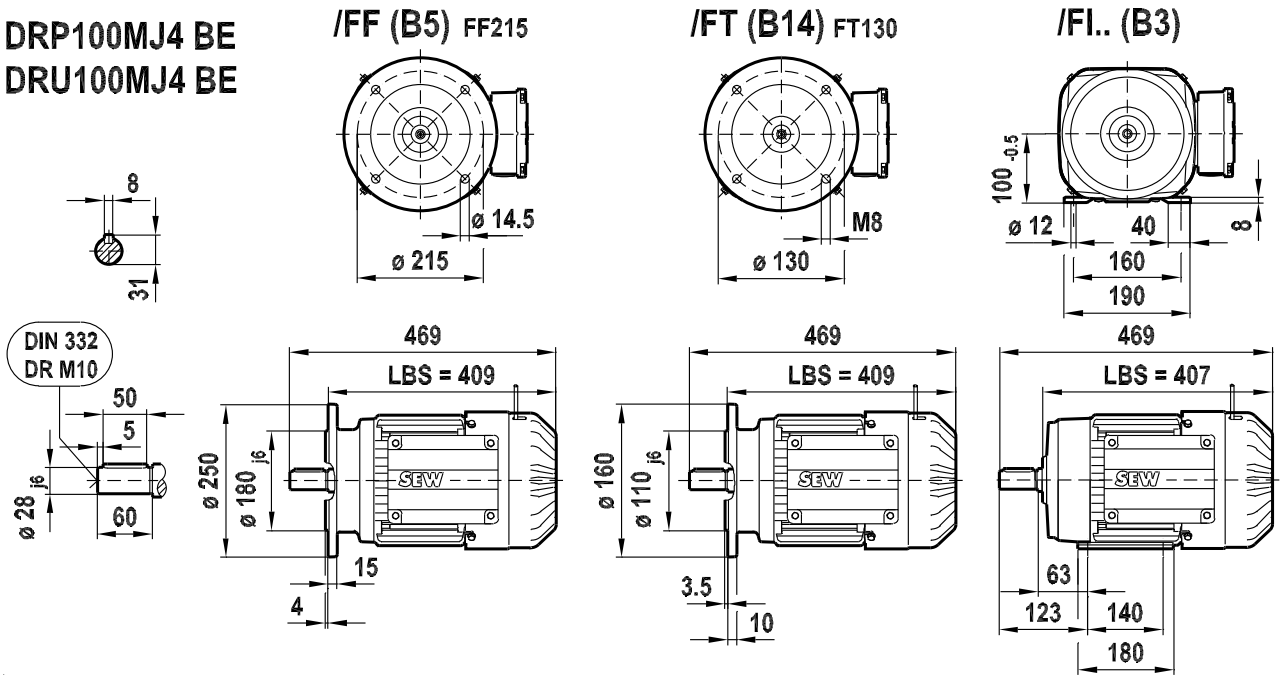

21343799/EN – 02/2015

DR.100MJ BE

09 743 01 12
2 (2)

/IV

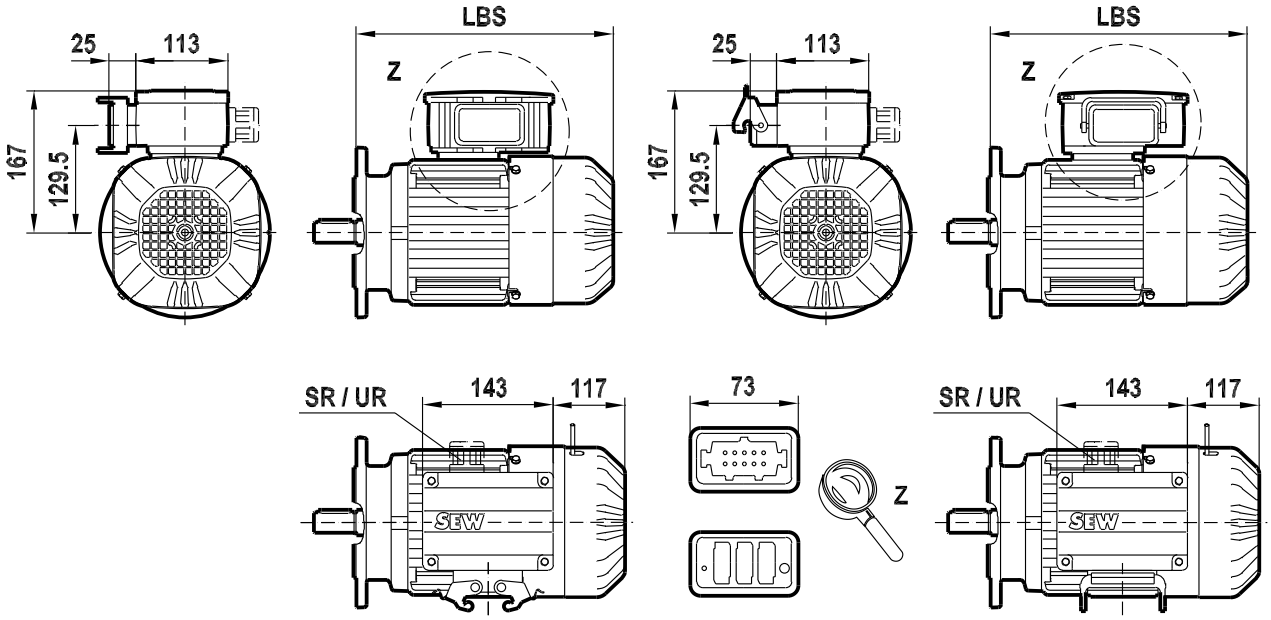

/IS

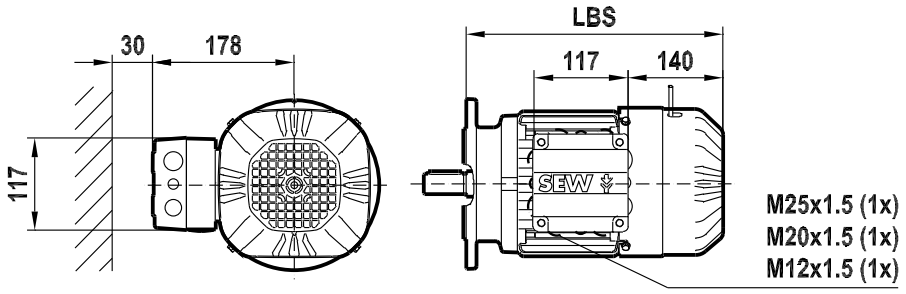

/C

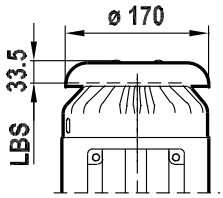

/V

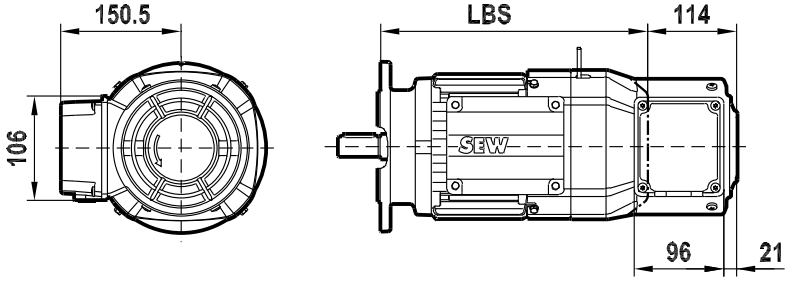

21343799/EN – 02/2015

DR.100LJ BE

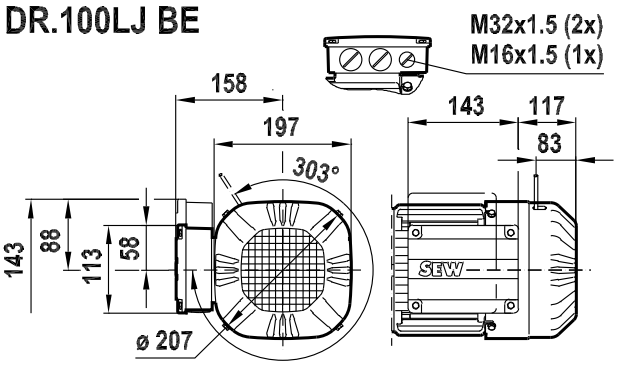

/2W

09 744 01 12
1 (2)

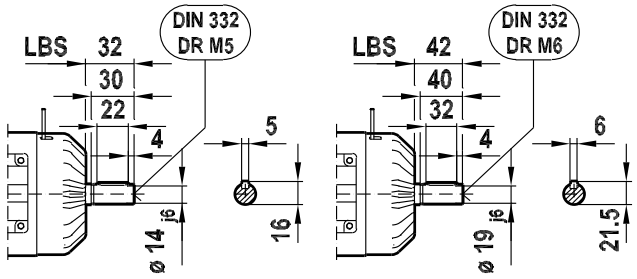

DRP100LJ4 BE

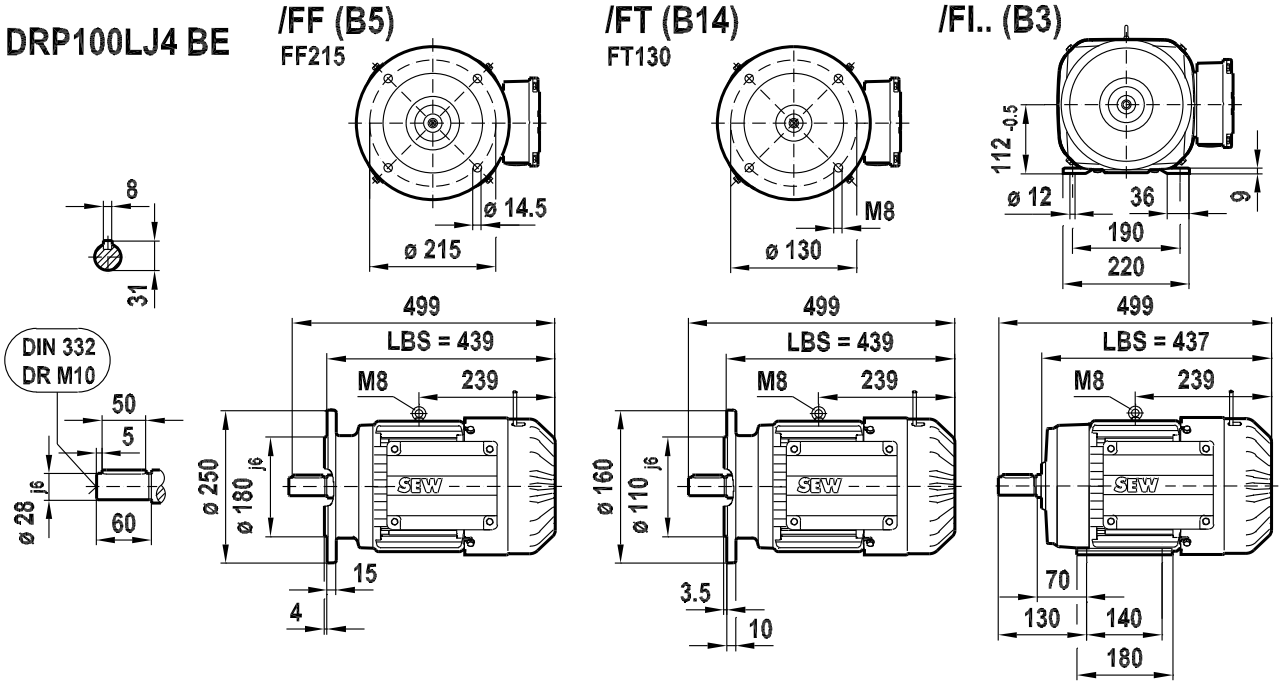

DRU100LJ4 BE

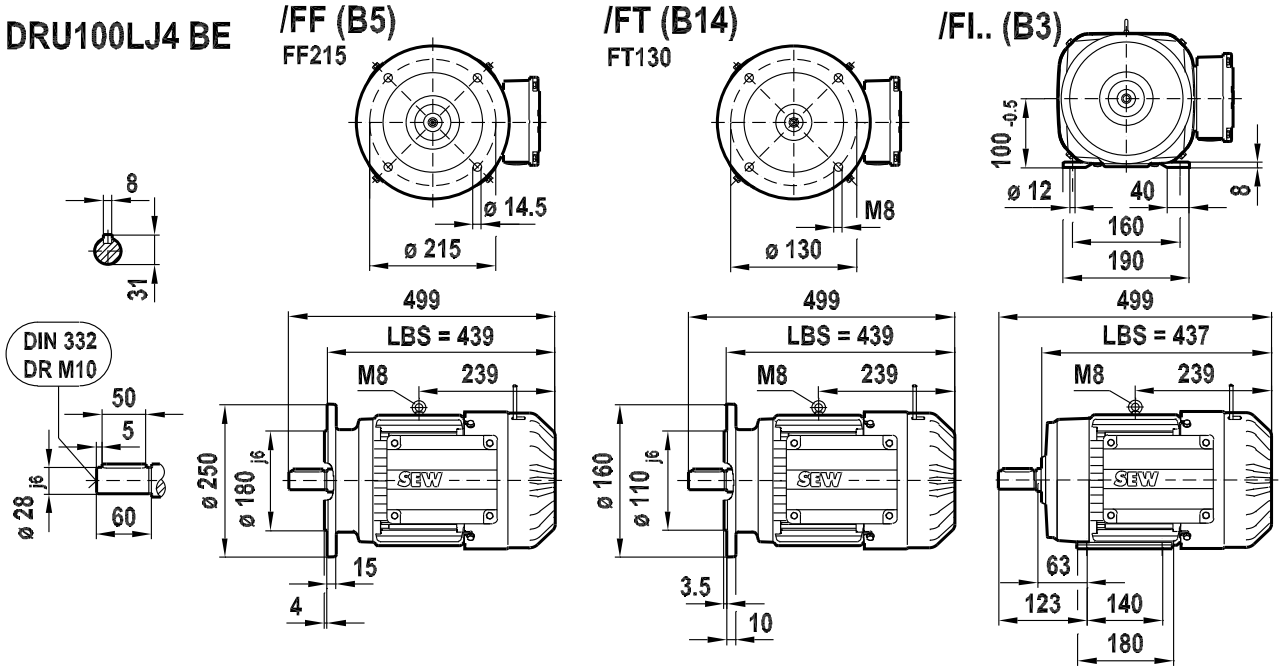

21343799/EN – 02/2015

DR.100LJ BE

09 744 01 12
2 (2)

/IV

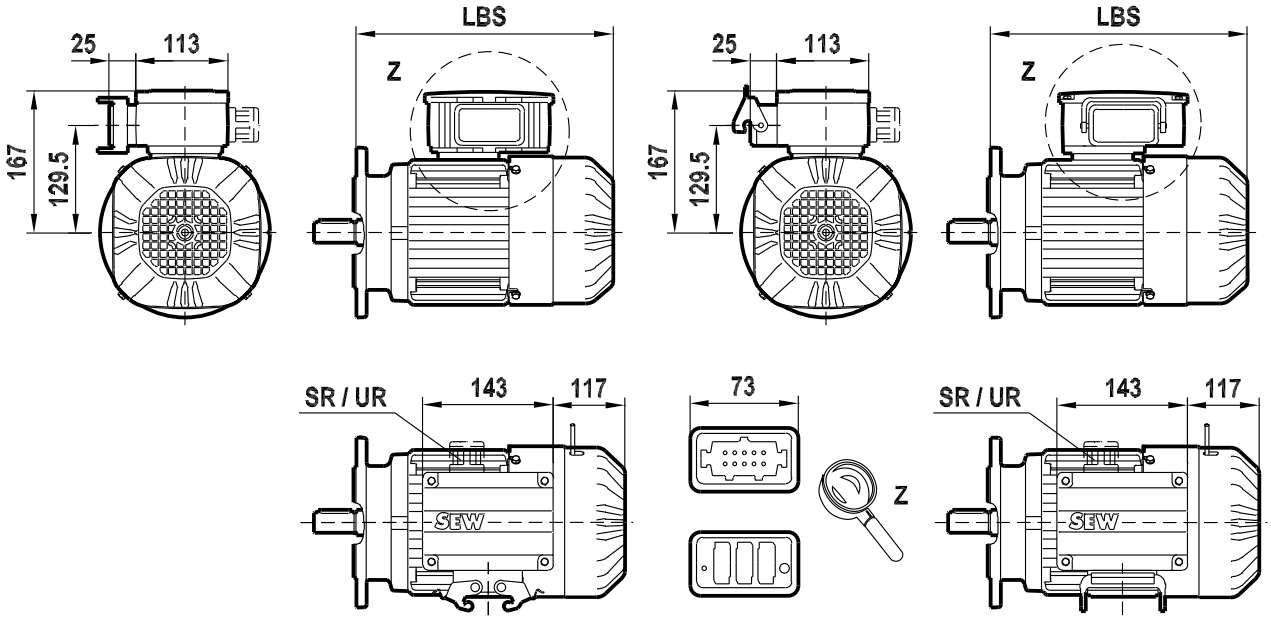

/IS

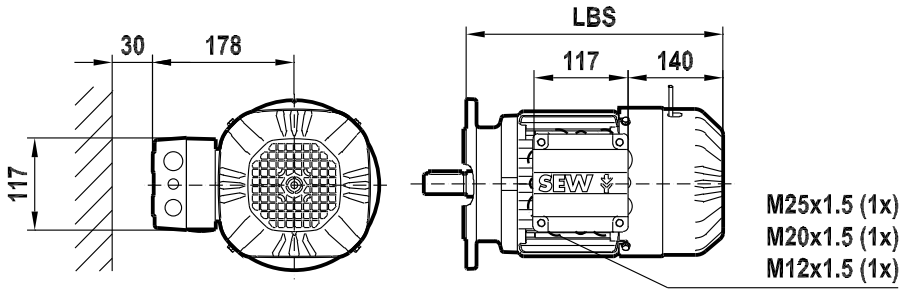

/C

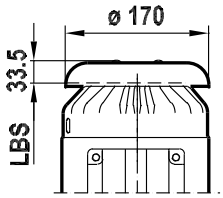

/V

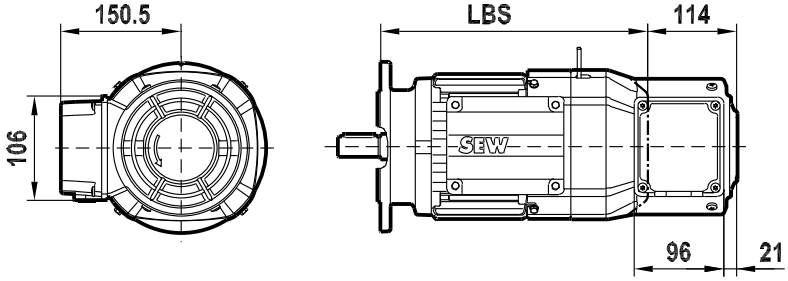

21343799/EN – 02/2015

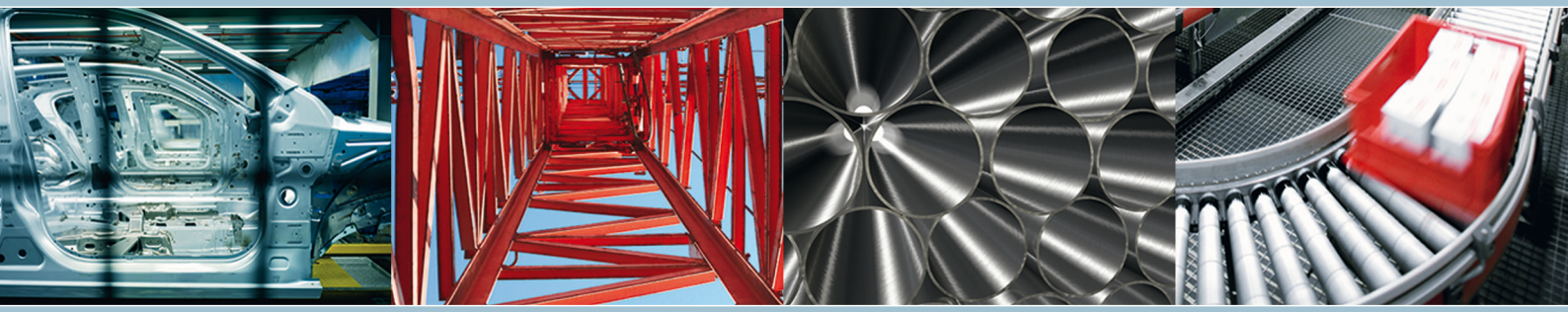

SEW-EURODRIVE
Driving the world

SEW-EURODRIVE GmbH & Co KG
P.O. Box 3023
76642 BRUCHSAL
GERMANY
Phone +49 7251 75-0
Fax +49 7251-1970
sew@sew-eurodrive.com
→ www.sew-eurodrive.com