SEW EURODRIVE

Addendum to the Assembly and Operating Instructions

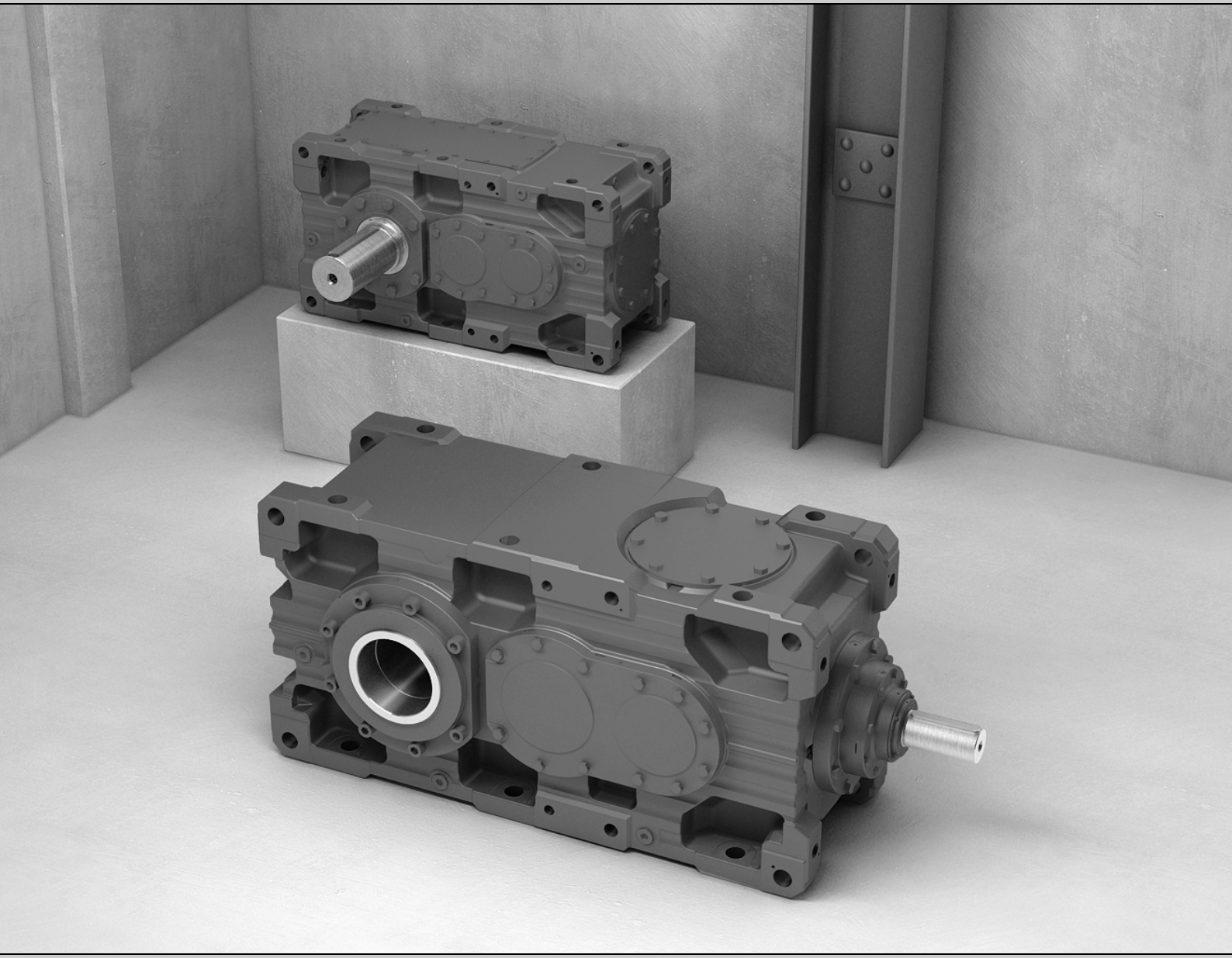

Industrial Gear Units

Helical and Bevel-Helical Gear Units X.. Series

Oil/Water Cooler for Pressure Lubrication /OWP

(Sizes 10 - 70)

Edition 07/2012

20020147 / EM

Contents

1 Important Information ... 3

2 Oil-Water Cooler for Pressure Lubrication /OWP ... 4

2.1 Structure/function ... 4
2.1.1 Structure ... 4
2.1.2 General Information ... 7
2.1.3 Function ... 8
2.1.4 Interlocking specifications ... 9
2.1.5 Sizes, cooling capacity and selection ... 9
2.2 Wiring diagram (schematic illustration) ... 10
2.3 Installation / Assembly ... 11
2.3.1 Mechanical connection ... 11
2.3.2 Electrical connection ... 11
2.3.3 Technical data of electrical/optical contamination indicator ... 12
2.3.4 Cooling media ... 13
2.3.5 Installation and connection information for separate installation 14
2.4 Notes on checking the oil level ... 14
2.5 Startup ... 15
2.5.1 Notes ... 15
2.5.2 Venting the pump ... 15
2.6 Inspection / maintenance ... 16
2.6.1 Inspection and maintenance intervals ... 16
2.6.2 Check hose pipes ... 16
2.6.3 Optical/electrical contamination indicator ... 17
2.6.4 Changing the filter ... 17
2.7 Malfunctions ... 18

1 Important Information

INFORMATION

This addendum describes amendments to the "Industrial Gear Units, Helical and Bevel Gear Units" operating instructions. Please use the data specified in this document.

This document does not replace the detailed operating instructions.

2 Oil-Water Cooler for Pressure Lubrication /OWP

2.1 Structure/function

2.1.1 Structure

An oil-water cooling system can be used if the thermal rating of the naturally cooled gear unit or cooling using a fan on the input shaft is not sufficient. The prerequisite for using an oil-water cooling system is that appropriate cooling water is available on site.

INFORMATION

- Consult SEW-EURODRIVE if you use chemically aggressive cooling media, such as brackish water or salt water.
- The cooling system with motor pump cools the gear unit oil and the pressure lubrication of the gear unit.
- Also refer to the operating instructions of the cooling system manufacturer.

SEW-EURODRIVE uses two different types of heat exchangers:

- For gear unit sizes X140 – X170, a plate heat exchanger is used for OWP 005/015/025 oil supply systems.

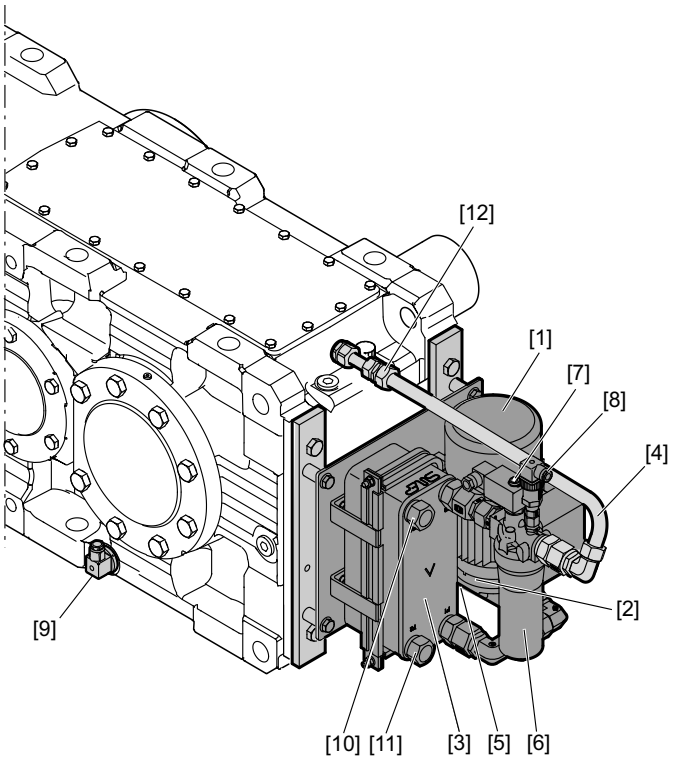

9007202910935691

[1] Motor
[2] Pump
[3] Oil-water heat exchanger
[4] Pressure pipe
[5] Suction pipe (not visible in this view)
[6] Oil filter
[7] Contamination indicator
[8] Pressure switch
[9] Temperature switch, optional (NTB)
[10] Cooling water supply
[11] Cooling water return
[12] Check valve

- For gear unit sizes X180 – X320, a shell and tube heat exchanger is used for OWP 10/20/30/40/50/60/70 oil supply systems.

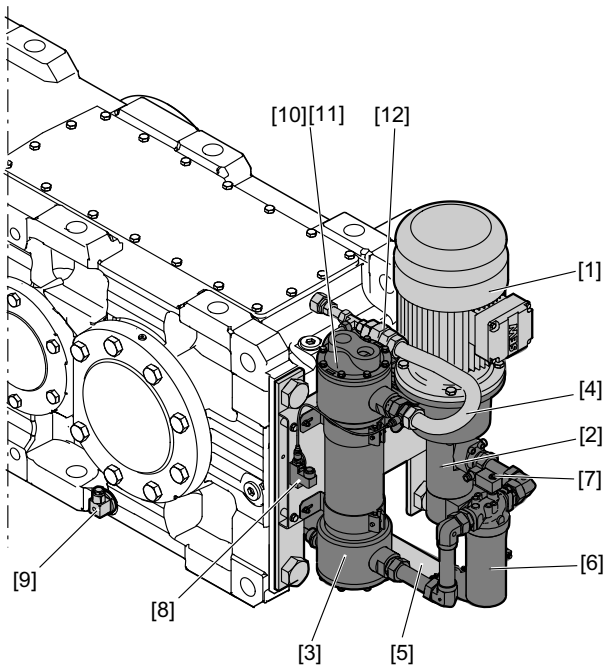

9007202905728267

[1] Motor
[2] Pump
[3] Oil-water heat exchanger
[4] Pressure pipe
[5] Suction pipe
[6] Oil filter
[7] Contamination indicator
[8] Pressure switch
[9] Temperature switch, optional (NTB)
[10] Cooling water supply
[11] Cooling water return
[12] Check valve

The following figure shows an example of the unit design.

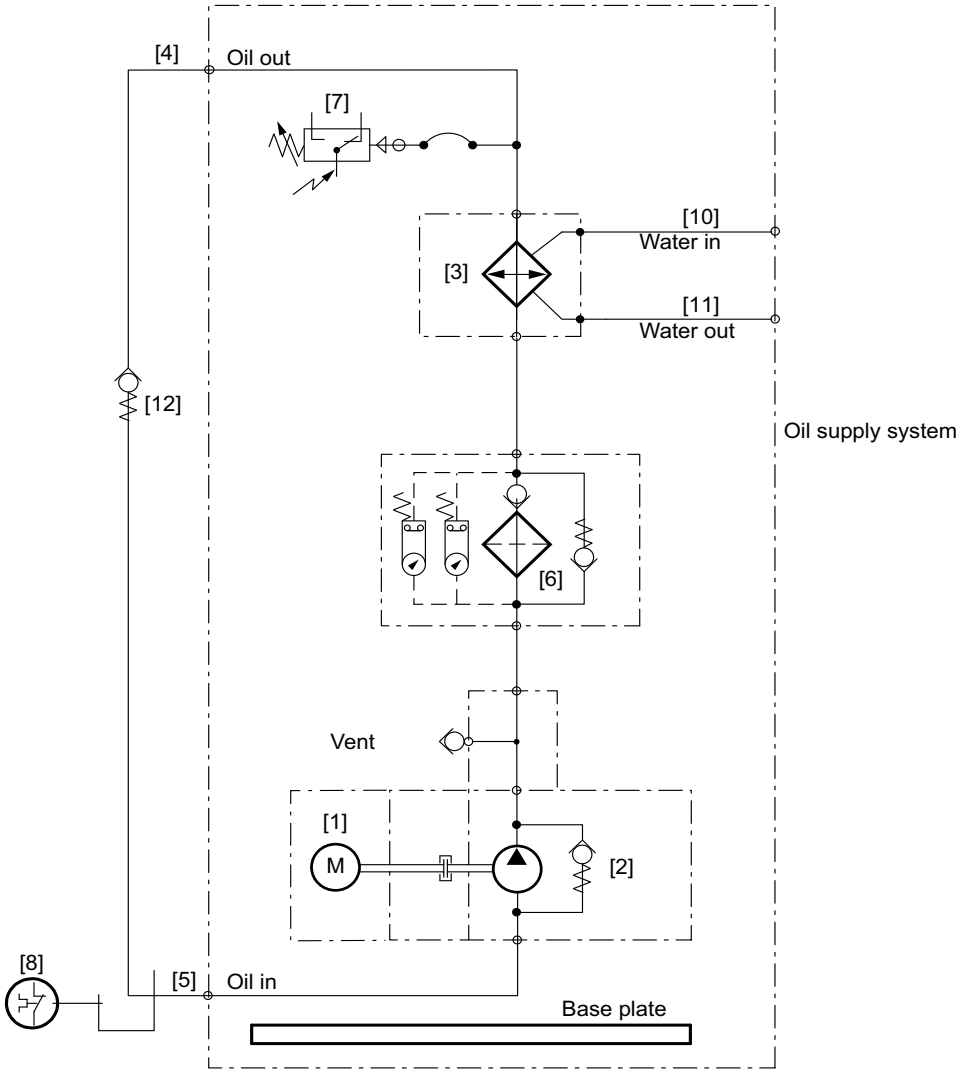

9007202848120587

[1] Motor
[2] Pump
[3] Oil-water heat exchanger
[4] Pressure pipe
[5] Suction pipe
[6] Oil filter
[7] Pressure switch
[8] Temperature switch (NTB), optional
[10] Cooling water supply
[11] Cooling water return
[12] Check valve

2.1.2 General Information

The cooling system is delivered as a complete unit but without electrical connections.

The standard design of the basic cooling system comprises:

- Pump with directly connected asynchronous motor (pump always running)
- Oil-water heat exchanger
- Oil filter with filter element and electrical/optical contamination indicator
- Pressure switch that monitors the pump pressure. Warning or switch-off signal when the oil pressure reaches < 0.5 bar
- Option: Temperature switch with trip point for monitoring the cooling group, i.e. warning or gear unit shutdown when the oil temperature exceeds 90 °C

The following cooling system types are available:

- Directly mounted on the gear unit, including cooling circuit piping, or
- On the mounting frame, for separate installation, but without piping to the gear unit

The customer has to perform the following electrical wiring:

- Pressure switch to the customer's evaluation unit
- Electrical contamination indicator of the oil filter
- Pump motor
- Option: Between temperature switch and pump motor

2.1.3 Function

Observe the following control information for the individual components.

Pump

When the pump is operated, an internal pressure control valve limits the plant pressure to 5 bar.

STOP	**STOP** Do not change the default setting of the valve.

Oil-water cooling system

The gear unit is cooled by an oil-water cooling system, which is always started up together with the gear unit → max. starting viscosity 2000 cST.

Temperature switch /NTB (optional)

The plant's temperature is monitored with a temperature sensor connected to a display and monitoring unit.

- At T > 90 °C → **GEAR UNIT STOP / WARNING**

Filter

The filter is monitored visually with a pressure deviation indicator, and electrically with a pressure deviation monitoring device.

At △ p > 2.2 bar → **WARNING** (clean filter)

Bypass with filter

The maximum permitted pressure in the filter is limited to 3.5 bar. If the pressure in the system exceeds this limit value, the bypass provides for a direct connection to the oil-water heat exchanger.

General information

The pressure sensor requires a delay of 20 s.

Check valve

The check valve opens at a pressure of 1 bar.

2.1.4 Interlocking specifications

Gear unit enable

The gear unit is enabled if the following condition is met:

- Oil temperature T < 90 °C (optional)
- Oil pressure p > 0.5 bar (startup delay of 20 s)

Gear unit stop / warning

Gear unit stop / warning if one of the following conditions is met:

- Oil temperature T > 90 °C (optional)
- Oil pressure p < 0.5 bar

2.1.5 Sizes, cooling capacity and selection

The power data of the standardized cooling systems is summarized in the following tables.

The cooling capacity values given in the table apply to a cooling water temperature of 30 °C, an oil temperature of 70 °C, equivalent volume flow of oil and cooling water, and 50 Hz line frequency.

Size Cooling system	Cooling capacity Cooling system [kW]	Flow rate Cooling system [l/min]	Connection power Pump motor [kW]
OWP 005[1)]	4	8	0.75
OWP 010	5	9.6	0.75
OWP 015[1)]	8	16	1.1
OWP 020	8.5	21	1.1
OWP 025[1)]	12	28	1.5
OWP 030	14	28.3	1.5
OWP 040	22	53	3.0
OWP 050	30	77	4.0
OWP 060	45	91	5.5
OWP 070	70	144	7.5

1) Cooling system with plate heat exchanger

INFORMATION

The values differ slightly for operation with a line frequency of 60 Hz. Please consult SEW-EURODRIVE.

2.2 Wiring diagram (schematic illustration)

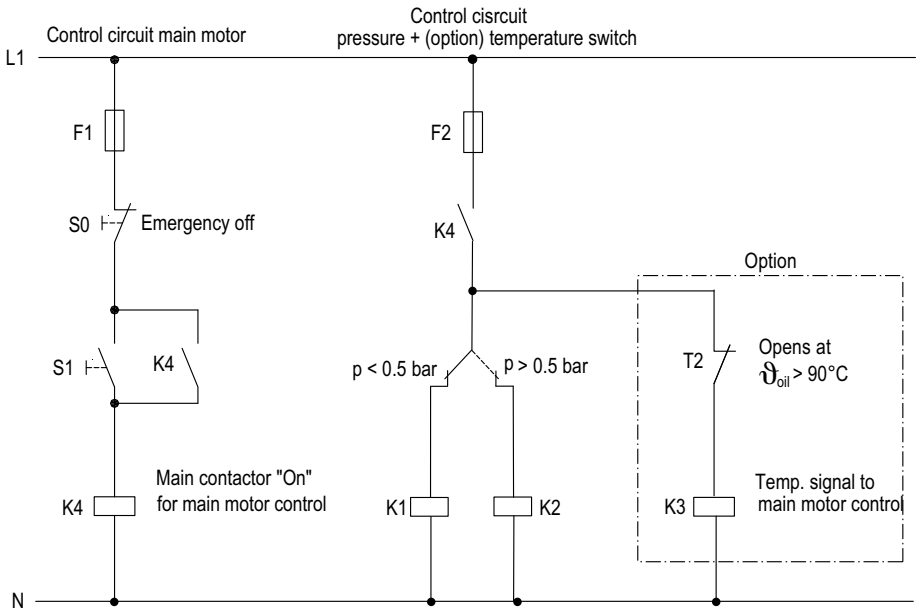

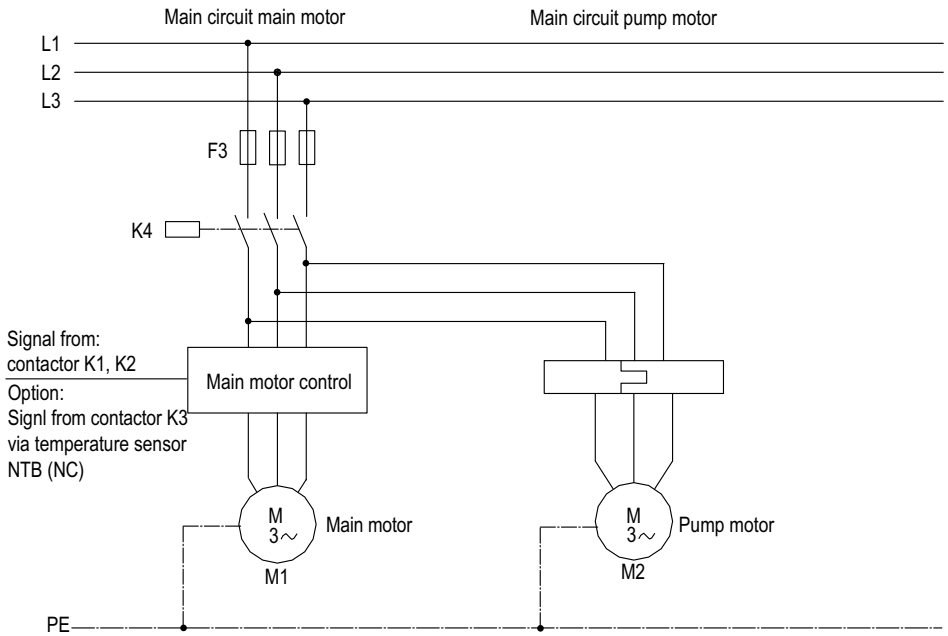

3650983307

2.3 Installation / Assembly

2.3.1 Mechanical connection

Connect the heat exchanger to the cooling circuit according to the identifying markings observing local regulations.

In this respect, observe the following:

- Do not reduce the indicated cable cross section.
- It is important that you choose the correct wall thickness and material when selecting pipes, hoses and screw fittings.

2.3.2 Electrical connection

Make the electrical connections for the motor, temperature switch (optional), pressure switch, and contamination indicator of the filter according to local regulations.

- Ensure that the pump rotates in the correct direction when making the connection.
- The contamination indicator of the filter indicates when the filter element needs to be replaced.
- The pressure switch issues a warning signal when the pressure falls below 0.5 bar.
- The temperature switch (optional) should be integrated into the circuit in such a manner that:
  - Either a warning signal is activated or the main drive is switched off at the switching point (at 90 °C oil temperature).

2.3.3 Technical data of electrical/optical contamination indicator

The following figure shows the wiring diagram:

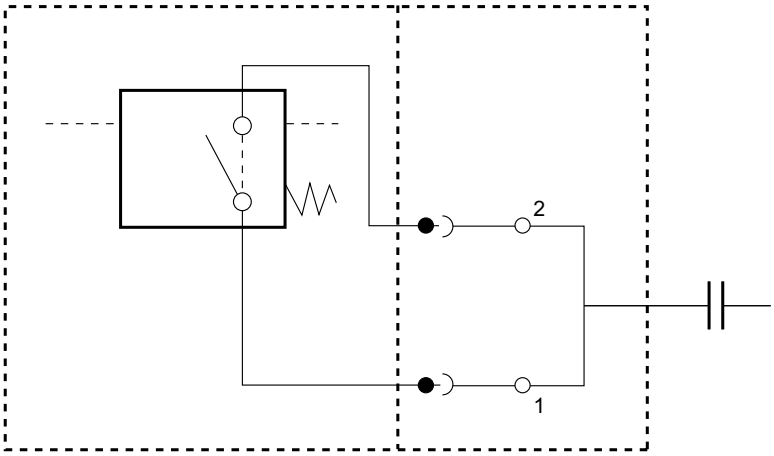

5900838539

The following table shows the technical data:

Max. voltage	AC 250 V / DC 200 V
Max. switching current	1 A
Max. switching capacity	70 W
Degree of protection	IP 65 in plugged and secured condition
Contact type	NC contact / NO contact

2.3.4 Cooling media

INFORMATION

- Note that the service life, the efficiency, and the maintenance intervals of the heat exchanger depend to a great degree on the quality and substances of the cooling medium.
- Special procedures are required when sea water or brackish water is used. Consult SEW-EURODRIVE.

Permitted cooling media

- Water, water/glycol cooling liquids, HFC refrigerants
- Cooling water temperature and volume flow of oil and cooling water according to order documents.

Dirt

The quantity of suspended solids (ball-shaped, particle size < 0.6 mm) should be less than 10 mg/l. Threadlike contaminants increase the risk of pressure loss.

Corrosion

Limit values: free chlorine < 0.5 ppm, chlorine ions < 200 ppm, sulfate < 100 ppm, ammonia < 10 ppm, free CO < 10 ppm, pH 7-10.

The following ions do not have a corrosive effect under normal conditions: phosphate, nitrate, nitrite, iron, manganese, sodium, potassium.

INFORMATION

Observe the additional manufacturer's documentation.

2.3.5 Installation and connection information for separate installation

The cooling system is mounted directly on the gear unit as standard.

Optionally, the cooling system can be delivered as a complete unit on a mounting frame but without electrical connections and piping. Provide for a low-vibration installation location max. 1 meter from the gear unit. Install the cooling system at the same level as the gear unit or lower. If this is not possible, contact SEW-EURODRIVE.

Adhere to the following basic conditions when connecting the cooling system:

- Do not reduce the indicated cable cross section.
- It is important that you choose the correct wall thickness and material when selecting pipes, hoses and screw fittings. Preferably, use composite material seals.

SEW-EURODRIVE recommends the following cable cross sections for connecting the cooling system to the gear unit and the cooling circuit.

Size of cooling system	Pump suction connection	Suction pipe[1)]	Cooler pressure connection	Pressure line [2)]	Cooling water connection of cooler	Inner Ø of cooling water line
OWP 005	GE22-LR 3/4"	DN20 / Ø22	GE18-LR 1/2"	DN16 / Ø18	G3/4"	Ø25
OWP 010	GE22-LR 1/2”	DN20 / Ø22	GE18-LR 1/2"	DN16 / Ø18	G1/2“	Ø13
OWP 015	GE28-LR 1"	DN25 / Ø28	GE22-LR 3/4"	DN20 / Ø22	G3/4"	Ø25
OWP 020	GE35-LR 1 1/4"	DN32 / Ø35	GE28-LR 1"	DN25 / Ø28	G1/2“	Ø19
OWP 025	GE35-LR 1 1/4"	DN32 / Ø35	GE28-LR 1"	DN25 / Ø28	G3/4"	Ø25
OWP 030	GE35-LR 1 1/4"	DN32 / Ø35	GE28-LR 1"	DN25 / Ø28	G1"	Ø25
OWP 040	GE42-LR 1 1/2"	DN40 / Ø42	GE35-LR 1 1/2"	DN32 / Ø35	G3/4"	Ø25
OWP 050	GE42-LR 1 1/2"	DN40 / Ø42	GE35-LR 1 1/2"	DN32 / Ø35	G1 1/4"	Ø32
OWP 060	SAE 2" SFL	DN50 / Ø2"	GE42-LR 1 1/2"	DN40 / Ø42	G1 1/2"	Ø38
OWP 070	SAE 2 1/2" SFL	DN50 / Ø2"	GE42-LR 1 1/2"	DN40 / Ø42	G1"	Ø38

1) max. length 1.5 m
2) max. length 2.5 m

INFORMATION

For dimensions of the oil-water cooler, refer to the catalog. More detailed technical data of the various cooling systems are available from SEW-EURODRIVE on request.

2.4 Notes on checking the oil level

The oil supply system might influence the oil level. The fill quantities specified on the nameplate are guide values. The proper oil level is indicated by the mark on the oil sight glass, oil level glass or oil dipstick.

Observe the chapter "Checking the oil level" in the operating instructions for X.. series industrial gear units.

2.5 Startup

2.5.1 Notes

NOTICE

Improper startup of gear units with pressure lubrication may damage the gear unit.

Possible damage to property.

- Note the following:

- Do not start up the gear unit if the pressure switch is not connected.
- An oil heater is mandatory when operating the gear unit with oil-water cooler at low temperatures.
- Before taking the gear unit into operation for the first time, run the oil-water cooler at least 15 minutes to ensure that all oil chambers are filled with oil. After 15 minutes, shutdown the oil-water cooler and check the oil level. If necessary, adjust the oil level.
- If there is a risk of frost and the oil-water cooler is not operated for an extended time, drain the cooling water.
- The operator/person placing the order must provide for the necessary water connections.

2.5.2 Venting the pump

WARNING

Danger due to leaking and squirting gear unit oil.

Serious injury.

- You must wear safety goggles.
- Be very careful when you vent the pump.

If the pump does not supply oil when the oil supply system starts, do the following:

- Fill the pump with oil.
- Vent the oil supply system on the outlet end during start, if possible at the highest point.

2.6 *Inspection / maintenance*

INFORMATION

First read the operating instructions of the respective cooling system manufacturer.

2.6.1 Inspection and maintenance intervals

Adhere to the following inspection and maintenance intervals.

Time interval	What to do?
• **Depending on the operating conditions, at least every 12 months**	• Check the condition of the oil-water cooler /OWP. If necessary, replace the filter element.
• **Varying (depending on external factors)**	• Check all screw fittings for any leaks

2.6.2 Check hose pipes

NOTICE

Hoses and hose pipes are subject to natural aging even if they are properly stored and used. This is why the period of use is limited.

Possible damage to property.

- Observe the following notes.

- The period of use of hose pipes should not exceed 6 years from the date of manufacture printed on them.
- The operator of the plant is responsible for making sure that hose pipes are replaced at adequate intervals even if they do not show any signs of safety-related defects.
- Have hose pipes checked by a specialist at least once a year to ensure operational safety.

2.6.3 Optical/electrical contamination indicator

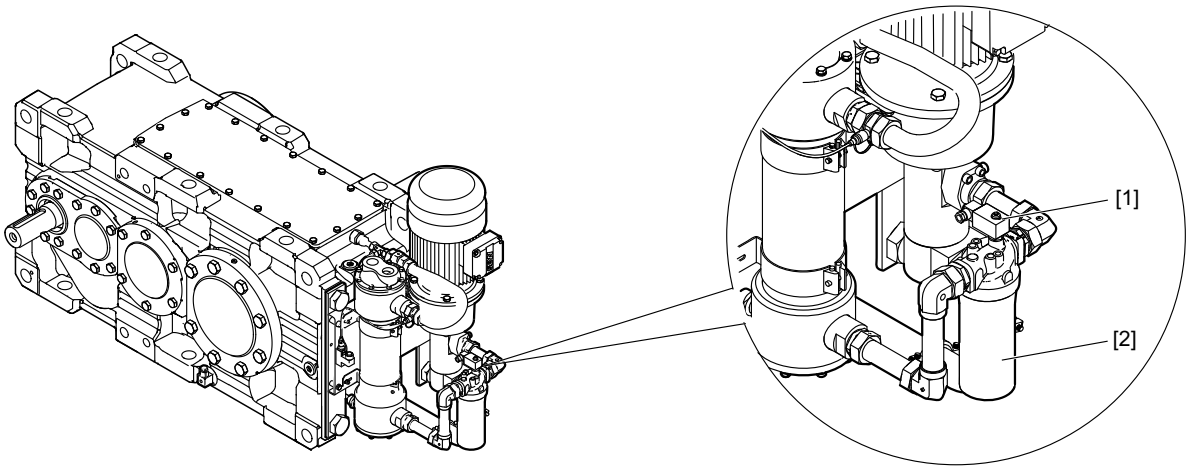

2699494283

When starting up the gear unit in cold condition, the red button of the indicator [1] might come out.

Before pressing the red button [1] back in, wait until the gear unit has reached operating temperature. If it comes out again immediately, you have to change the filter element [2] as described in the next chapter.

2.6.4 Changing the filter

⚠ WARNING

A customer machine that is not appropriately secured can fall during gear unit installation or removal.

Severe or fatal injuries.

- Safeguard the customer machine against unintentional movement when installing or removing the gear unit.

⚠ WARNING

Danger of burns due to hot gear unit and hot gear unit oil.

Serious injury.

- Let the gear unit cool down before you start working on it.
- Carefully remove the oil level plug and oil drain plug.

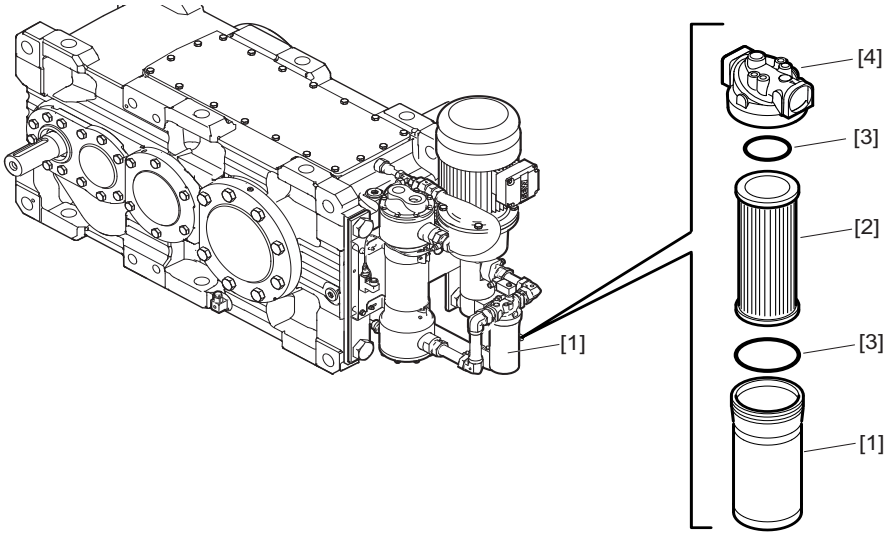

2703480587

1. Place a container underneath the oil filter housing [1].
2. Unscrew the filter housing [1] counterclockwise.
3. Clean the filter housing [1].
4. Remove the filter element [2] by turning it slightly to the left and right in downward direction.
5. Check the O-rings [3] and the filter head [4] for damage.
6. Push the new filter element with O-ring onto the filter head [4].
7. Screw the filter housing [1] with O-rings [3] onto the filter head [4].

2.7 Malfunctions

Malfunction	Possible cause	Remedy
No oil pump suction	• Air in the pipes • Motor not running • Incorrect direction of motor rotation • Not enough oil in the gear unit • Wrong oil grade	• Fill suction pipe and oil pump with oil • Vent pressure line when starting • Check electrical connections • Check oil level in gear unit • Check oil grade (in particular when temperatures are low)
Insufficient delivery rate of oil pump	• Wrong motor speed • Oil circulation clogged • Negative pressure at pump suction side too high • Wrong oil grade	• Check pump motor speed • Open the valves • Increase cross section of suction line • Decrease suction lift • Check oil grade (in particular when temperatures are low)
Pump excessively loud	• Negative pressure at pump suction side too high	• Increase cross section of suction line • Decrease suction lift • Avoid distortion of the suction line • Avoid reductions in the suction line
Pump delivers foam	• Leaky suction line • Not enough oil in the gear unit	• Check screw fittings for leaks • Check oil level in gear unit
Pressure switch not switching	• Air in the lines • Pressure switch connected incorrectly • Pressure switch defective	• Fill suction pipe and oil pump with oil • Vent pressure line when starting • Check connection • Replace pressure switch
Cooling power not sufficient	• Cooling water supply is closed • Cooler is dirty	• Check the pipes • Clean the cooler

SEW-EURODRIVE
Driving the world

SEW-EURODRIVE GmbH & Co KG
P.O. Box 3023
D-76642 Bruchsal/Germany
Phone +49 7251 75-0
Fax +49 7251 75-1970
sew@sew-eurodrive.com

→ **www.sew-eurodrive.com**

UNIVERSAL HYDRAULIK

Screw Pump

For industrial use

NEW

Series SSP

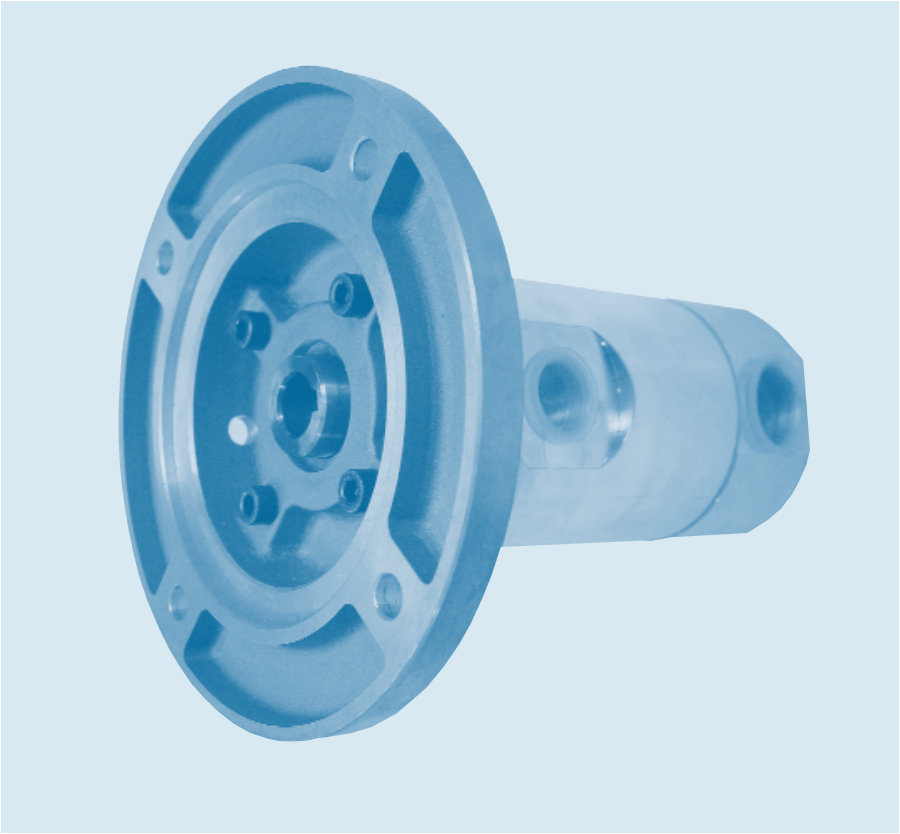

- Extremely low running noises
- Long working life
- Large viscosity range
- Fine flow adjustment
- Low costs
- The suction housing and suction pipe can be offset by 90°
- Extremely high performance
- Different materials available
- Compact design - low pump weight

TÜV CERT
DIN EN ISO 9001
Reg.-Nr. 73 100 1298

Design/Function

Three-spindle, self-acting screw pump with flange fitting and hardened and ground drive and running spindles.

Use

For use with lubricating fluids containing no abrasive components or those that chemically attack the pump materials. For example, in hydraulic systems of all types and for use with the following fluids:

- Mineral oils HLP and HLVP
- Ecological fluids HETG, HEPG and HEE
- Synthetic hydraulic fluids such as:
- HFA Oil/water emulsion (oil minimum 5%)
- HFB Water/oil emulsion 40%
- HFC Water/glycol (water maximum 35-55%
- HFDR Phosphate ester
- High-viscosity lubricating oils
- Special synthetic fluids MIL-H and SKYDROL.

Further fluids on request.

Shaft seal

Maintenance-free radial shaft seal in various materials

Technical data

Capacity	3,1	up to	443	ccm
Pump pressure		up to	40	bar
Supply pressure	-0,7	up to	3	bar
Fluid temperature	-20	up to	180	°C
Fluid viscosity	4	up to	2000	cSt
Noise level	52	up to	68	dbA*
Gaskets	NBR, VITON, FPM, EPDM			
Required filter fineness	β 25 ≥ 75			

*depending on viscosity and revolutions

Dimensions Pump for mounting on tanks SSP

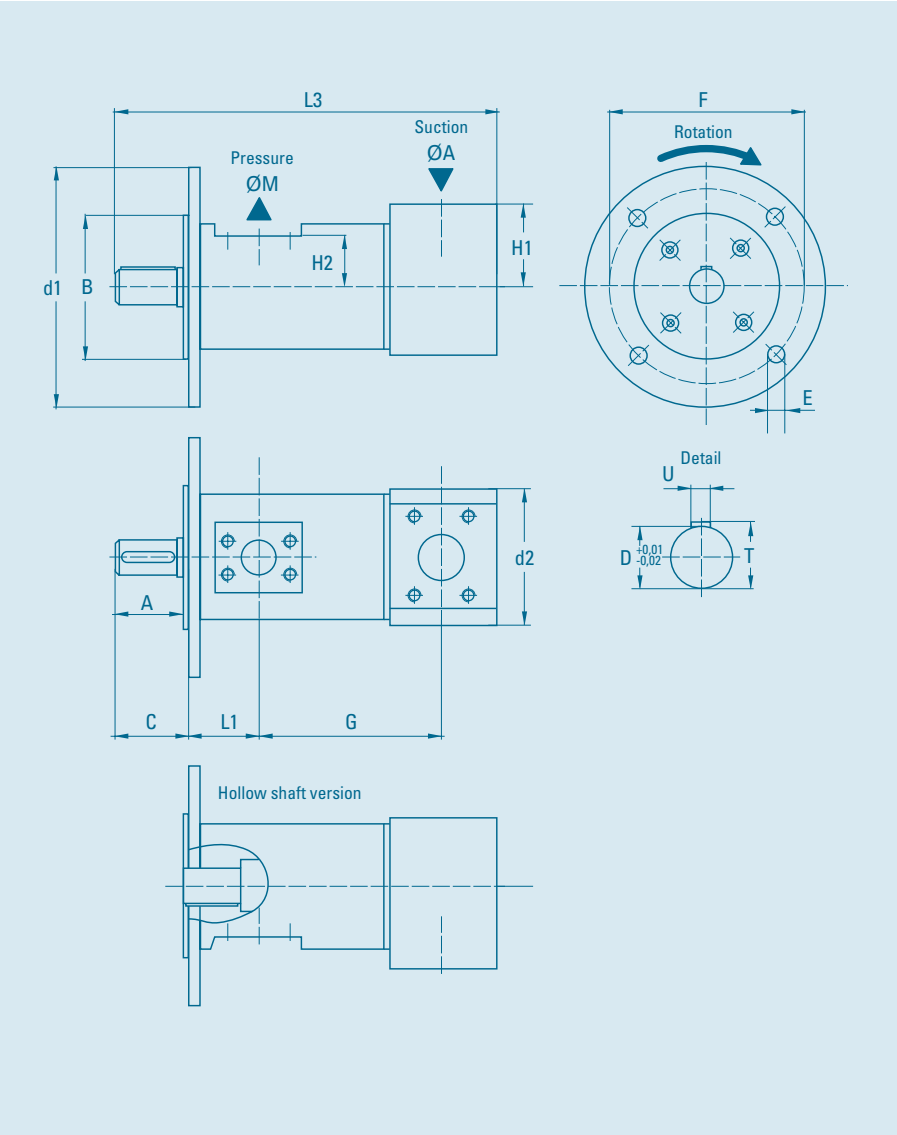

Unit size/capacity*

SSP...1/	**3,1**	=	3,1 ccm
	4,6	=	4,6 ccm
	5,9	=	5,9 ccm
	7,3	=	7,3 ccm
SSP...2/	**9**	=	9 ccm
	11	=	11 ccm
SSP...3/	**13**	=	13 ccm
	16,5	=	16,5 ccm
	19	=	19 ccm
	26,6	=	26,6 ccm
SSP...4/	**36**	=	36 ccm
	45	=	45 ccm
	53	=	53 ccm
SSP...5/	**64**	=	64 ccm
	75	=	75 ccm
SSP...6/	**91**	=	91 ccm
	104	=	104 ccm
	118	=	118 ccm
	136	=	136 ccm
SSP...7/	**160**	=	160 ccm
	183	=	183 ccm
SSP...8/	**222**	=	222 ccm
	241	=	241 ccm
	241	=	241 ccm
	292	=	292 ccm
SSP...9/	**364**	=	364 ccm
	443	=	443 ccm

* depending on pressure and viscosity

Unit dimensions

	Flange				Shaft				Connections				Pump					
Typ	**B**	**E**	**F**	**d1**	**A**	**D**	**T**	**U**	**ØA**	**H1**	**ØM**	**H2**	**C**	**d2**	**L3**	**L1**	**G**	**Gewicht**
SSP...1*	80	11	103	125	31	14	16	5	1/2"	25	3/8"	25	37	59	187	55,5	76	1,5 kg
SSP...2**	70	6,5	85	105	-	14	16,2	5,2	3/4"	26,7	1/2"	27,3	-	65	174	70	86	2,7 kg
SSP...3*	100	11	125	150	36	19	21,5	6	1 1/4"	54,5	1"	41	41	95,5	259	62	122,5	4,4 kg
SSP...4*	125	14	160	188	36	19	21,5	6	1 1/2"	65	1 1/4"	46,5	46	112	304	69	150	7 kg
SSP...5*	125	14	160	188	55	32	35	10	2"	83,5	1 1/2"	51,5	64,5	126,5	375	75	190	11 kg
SSP...6*	160	18	200	235	55	32	35	10	2 1/2"	94	2"	54	64,5	148,5	398,5	83,5	202	15,5 kg
SSP...7	160	18	200	235	55	32	35	10	3"	105	2 1/2"	63,5	66	160	440	83,5	228	25 kg
SSP...8	200	22	250	300	55	32	35	10	3 1/2"	110	3"	83	67	181	506	93,5	277	30 kg
SSP...9	200	22	250	300	60	38	41	10	4"	125	3"	83	76	212	594,5	150	295	47,5 kg

* *Hollow shaft type available*
** *only Hollow shaft*

Dimensions pump for mounting in tanks SSP

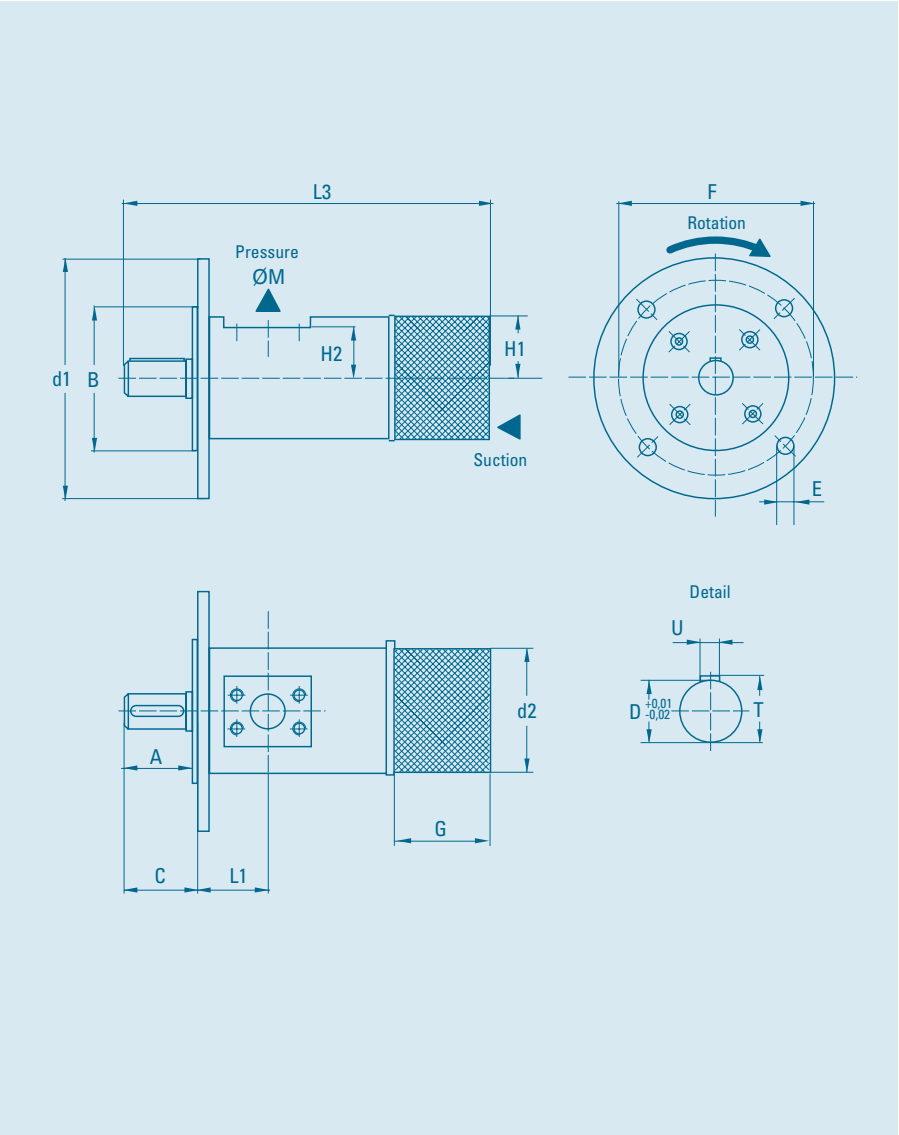

Unit size/capacity*

SSP...1/	**3,1**	=	3,1 ccm
	4,6	=	4,6 ccm
	5,9	=	5,9 ccm
	7,3	=	7,3 ccm
SSP...2/	**9**	=	9 ccm
	11	=	11 ccm
SSP...3/	**13**	=	13 ccm
	16,5	=	16,5 ccm
	19	=	19 ccm
	26,6	=	26,6 ccm
SSP...4/	**36**	=	36 ccm
	45	=	45 ccm
	53	=	53 ccm
SSP...5/	**64**	=	64 ccm
	75	=	75 ccm
SSP...6/	**91**	=	91 ccm
	104	=	104 ccm
	118	=	118 ccm
	136	=	136 ccm
SSP...7/	**160**	=	160 ccm
	183	=	183 ccm
SSP...8/	**222**	=	222 ccm
	241	=	241 ccm
	241	=	241 ccm
	292	=	292 ccm
SSP...9/	**364**	=	364 ccm
	443	=	443 ccm

* depending on pressure and viscosity

Unit dimensions

Measures/mm	Flange				Shaft				Connections		Pump					
Type	**B**	**E**	**F**	**d1**	**A**	**D**	**T**	**U**	**ØM**	**H2**	**C**	**G**	**d2**	**L1**	**L3**	**Weight**
SSP...1*	80	11	103	125	31	14	16	5	3/8"	25	37	40	60	55,5	197	1,3 kg
SSP...2**	70	6,5	85	105	-	14	16,2	5,2	1/2"	27,3	-	65	174	70	86	2,7 kg
SSP...3*	100	11	125	150	36	19	21,5	6	1"	41	41	70	96	62	265	4 kg
SSP...4*	125	14	160	188	36	19	21,5	6	1 1/4"	46,5	46	70	110	69	295	6,4 kg
SSP...5*	125	14	160	188	55	32	35	10	1 1/2"	51,5	64,5	70	124	75	355	10 kg
SSP...6*	160	18	200	235	55	32	35	10	2"	54	64,5	100	145	83,5	400	15 kg
SSP...7	160	18	200	235	55	32	35	10	2 1/2"	63,5	66	100	155	83,5	415	22 kg
SSP...8	200	22	250	300	55	32	35	10	3"	83	67	100	182	93,5	461	26 kg
SSP...9	220	22	250	300	60	38	41	10	3"	83	76	100	202	150	543	45 kg

* *Hollow shaft type available*
** *only Hollow shaft*

Ordering code

SSPA - 2/11 - A - N - DB1 - R - V3 - AC24/B5 - S - 01

Version
For mounting on tanks = **A**
On tanks/hollow shaft = **H**
For mounting in tanks = **I**

Unit size/performance
see pages 2 and 3

Material
Aluminium = **A**
Cast iron = **GG**
Steel = **GS**

Gaskets
Viton = **V**
EPDM = **E**
FPM = **F**
NBR = **N**

Security valve
5 bar security = **DB 1**
10 bar security = **DB 2**
15 bar security = **DB 3**
variable* = **DB 4**
* Only for unit size 3, 4, 6

Rotation
R = Right rotation

Viscosity
V0 = up to 100 cSt
V1 = 100-250 cSt
V2 = 250-500 cSt
V3 = 500-800 cSt

Motor shaft/form (only for version H)
AC 9/
AC 14/
AC 19/
AC 24/
AC 28/
B5
B14
B14 big

S = Special version

Serie 01

Hollow shaft type

		Motor-unit size								
	Motor type	56	63	71	80	90	100	112	132	160
SSP... 1	B14	■		■	■					
	B5				■					
	B5 reduced									
SSP... 2	B14			■	■					
	B5									
	B5 reduced									
SSP... 3	B14									
	B5				■	■				
	B5 reduced						■			
SSP... 4	B14						■	■	■	
	B5				■	■	■	■		
	B5 reduced						■		■	
SSP... 5	B14									
	B5						■	■		
	B5 reduced								■	
SSP... 6	B14									
	B5						■	■		
	B5 reduced								■	
SSP... 7	B14									
	B5									
	B5 reduced								■	
SSP... 8	B14									
	B5									
	B5 reduced								■	
SSP... 9	B14									
	B5									
	B5 reduced									

Sales department

Universal Hydraulik GmbH
Siemensstr. 33 · D-61267 Neu-Anspach
Tel: 0 60 81 / 94 18 - 0 · Fax 0 60 81 / 96 02 20
eMail info@universalhydraulik.com
www.universalhydraulik.com

Vertretungen in Australien, USA, Hong Kong, Schweden, Finnland, Norwegen, Großbritannien, Niederlande, Frankreich, Spanien, Italien, Israel, Schweiz, Österreich.
Distributions in Australia, USA, Hong Kong, Sweden, Finnland, Norway, Great Britain, Netherlands, France, Spain, Italy, Israel, Switzerland, Austria.
Distribution en Australie, Étas Unis, Hong Kong, Suède, Finlande, Norwège, Angleterre, Pays bas, France, Éspagne, Italie, Israel, Suisse, Autriche.

UH-K000.045/0404

ROTEX® is a torsionally flexible jaw coupling. It is able to compensate for shaft displacement caused by, as an example, inaccuracies in production, heat expansion, etc.

Table of Contents

1 Technical Data

2 Hints

2.1 General Hints
2.2 Safety and Advice Hints
2.3 General Hints to Danger
2.4 Proper Use

3 Storage

4 Assembly

4.1 Components of the Couplings
4.2 Hint regarding the finish bore
4.3 Taper Lock Clamping Sleeve
4.4 Assembly of the Hubs
4.5 Displacements - Alignment of the Couplings

5 Enclosure A

Hints and instructions regarding the use in Ex hazardous areas

5.1 Control intervals for couplings in Ex hazardous areas
5.2 Approximate values of wear
5.3 Permissible coupling materials in the Ex hazardous area
5.4 Ex Marking of coupling for the hazardous area
5.5 Starting
5.6 Breakdowns, causes and elimination
5.7 Certificate of Conformity according to the EG Standards 94/9/EG dated 23 March 1994

1 Technical Data

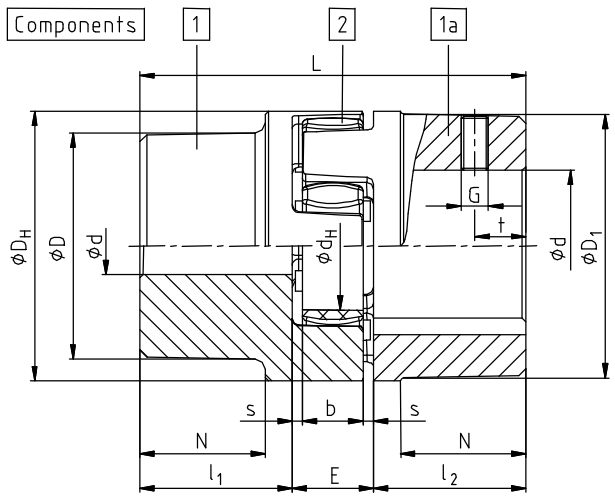

picture 1: ROTEX® (material: Al-D)

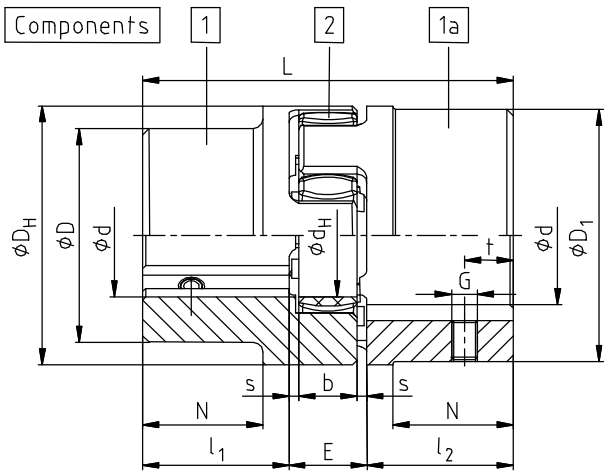

picture 2: ROTEX® (material: GG 25 / GGG 40)

Table 1: material Al-D

ROTEX® size	compo-nent	spider (part 2) [1] nominal torque [Nm]			dimension [mm]											
					finish bore d (min-max)	general									set screws [2]	
		92 Sh A	98 Sh A	64 Sh D		L	l_1; l_2	E	b	s	D_H	d_H	D;D_1	N	G [3]	t
14	1a	7,5	12,5	-	6 - 16	35	11	13	10	1,5	30	10	30	-	M4	5
19	1	10	17	-	6 - 19	66	25	16	12	2	41	18	32	20	M5	10
	1a				19 - 24								41			
24	1	35	60	-	9 - 24	78	30	18	14	2	56	27	40	24	M5	10
	1a				22 - 28								56			
28	1	95	160	-	10 - 28	90	35	20	15	2,5	67	30	48	28	M8	15
	1a				28 - 38								67			

Table 2: material GG 25 / GGG 40

ROTEX® size	compo-nent	spider (part 2) [1] nominal torque [Nm]			dimension [mm]											
					finish bore d (min-max)	general									set screws [2]	
		92 Sh A	98 Sh A	64 Sh D		L	l_1; l_2	E	b	s	D_H	d_H	D;D_1	N	G [3]	t
38	1	190	325	405	12 - 38	114	45	24	18	3	80	38	66	37	M8	15
	1a				38 - 45								78			
	1b					164	70							62		
42	1	265	450	560	14 - 42	126	50	26	20	3	95	46	75	40	M8	20
	1a				42 - 55								94			
	1b					176	75							65		
48	1	310	525	655	15 - 48	140	56	28	21	3,5	105	51	85	45	M8	20
	1a				48 - 60								104			
	1b					188	80							69		
55	1	410	685	825	20 - 55	160	65	30	22	4	120	60	98	52	M10	20
	1b				55 - 70								118			
65	1	625	940	1175	22 - 65	185	75	35	26	4,5	135	68	115	61	M10	20
75	1	1280	1920	2400	30 - 75	210	85	40	30	5	160	80	135	69	M10	25
90	1	2400	3600	4500	40 - 90	245	100	45	34	5,5	200	100	160	81	M12	30
100	1	3300	4950	6185	50 - 115	270	110	50	38	6	225	113	180	89	M12	30
110	1	4800	7200	9000	60 - 125	295	120	55	42	6,5	255	127	200	96	M16	35
125	1	6650	10000	12500	60 - 145	340	140	60	46	7	290	147	230	112	M16	40
140	1	8550	12800	16000	60 - 160	375	155	65	50	7,5	320	165	255	124	M20	45
160	1	12800	19200	24000	80 - 185	425	175	75	57	9	370	190	290	140	M20	50
180	1	18650	28000	35000	85 - 200	475	185	85	64	10,5	420	220	325	156	M20	50

1) Maximum torque of the coupling $T_{Kmax.}$ = nominal torque of the coupling $T_{K\ Nenn.}$ x 2.
2) Threads for set screws are opposite the keyway in case of material Al-D and on the keyway in case of material GG 25 / GGG 40.
3) From size 125 thread for set screws on request.

1 Technical Data

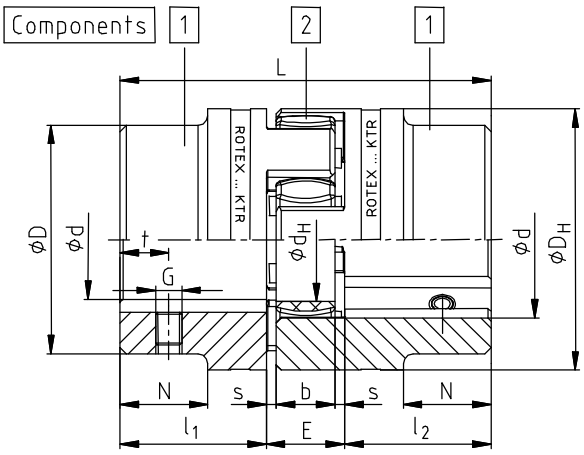

picture 3: ROTEX® (material: steel)

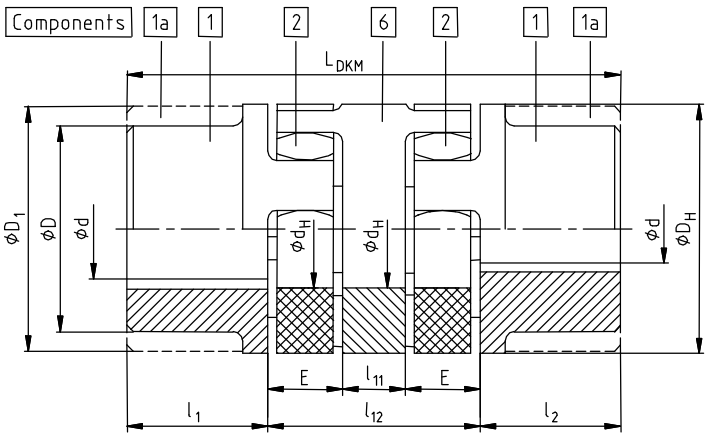

picture 4: ROTEX® design DKM

Table 3: material steel

ROTEX® size	component	spider (part 2) [1] nominal torque [Nm]			dimension [mm]											
					finish bore d (min-max)	general									set screws [2]	
		92 Sh A	98 Sh A	64 Sh D		L	l_1; l_2	E	b	s	D_H	d_H	D	N	G	t
19	1a	10	17	21	0 - 25	66	25	16	12	2	40	18	40	-	M5	10
	1b					90	37									
24	1a	35	60	75	0 - 35	78	30	18	14	2	55	27	55	-	M5	10
	1b					118	50									
28	1a	95	160	200	0 - 40	90	35	20	15	2,5	65	30	65	-	M8	15
	1b					140	60									
38	1	190	325	405	0 - 48	114	45	24	18	3	80	38	70	27	M8	15
	1b					164	70						80	-		
42	1	265	450	560	0 - 55	126	50	26	20	3	95	46	85	28	M8	20
	1b					176	75						95	-		
48	1	310	525	655	0 - 62	140	56	28	21	3,5	105	51	95	32	M8	20
	1b					188	80						105	-		
55	1	410	685	825	0 - 74	160	65	30	22	4	120	60	110	37	M10	20
	1b					210	90						120	-		
65	1	625	940	1175	0 - 80	185	75	35	26	4,5	135	68	115	47	M10	20
	1b					235	100						135	-		
75	1	1280	1920	2400	0 - 95	210	85	40	30	5	160	80	135	53	M10	25
	1b					260	110						160	-		
90	1	2400	3600	4500	0 - 110	245	100	45	34	5,5	200	100	160	62	M12	30
	1b					295	125						200	-		

Table 4: design DKM

ROTEX® size	spider (part 2) [1] nominal torque [Nm]			dimension [mm]											
				measure d, D, D_1	general									set screws [2]	
	92 Sh A	98 Sh A	64 Sh D		L_{DKM}	l_1; l_2	E	b	s	D_H	d_H	l_{11}	l_{12}	G	t
19	10	17	-	see table 1 to 3	92	25	16	12	2	40	18	10	42	M5	10
24	35	60	-		112	30	18	14	2	55	27	16	52	M5	10
28	95	160	-		128	35	20	15	2,5	65	30	18	58	M8	15
38	190	325	-		158	45	24	18	3	80	38	20	68	M8	15
42	265	450	-		174	50	26	20	3	95	46	22	74	M8	20
48	310	525	-		192	56	28	21	3,5	105	51	24	80	M8	20
55	410	685	-		218	65	30	22	4	120	60	28	88	M10	20
65	625	940	-		252	75	35	26	4,5	135	68	32	102	M10	20
75	1280	1920	-		286	85	40	30	5	160	80	36	116	M10	25
90	2400	3600	-		330	100	45	34	5,5	200	100	40	130	M12	30

1) Maximum torque of the coupling $T_{Kmax.}$ = nominal torque of the coupling $T_{K\ Nenn.}$ x 2

1 Technical Data

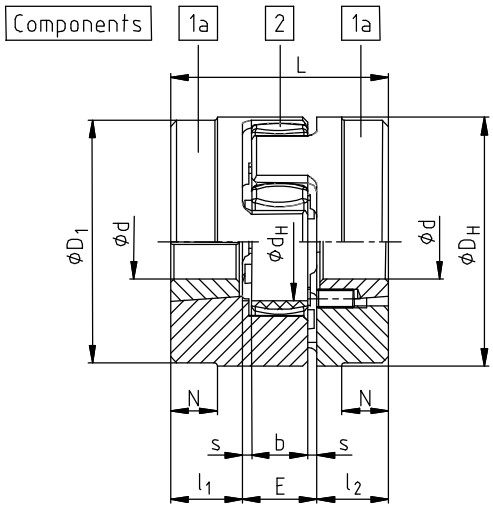

picture 5: ROTEX® design Taper-Lock

Table 5: design Taper-Lock

ROTEX® size	compo-nent	spider (part 2) [1] nominal torque [Nm]			dimension [mm]										Taper-Lock-sleeve
					finish bore d (min-max)	general									
		92 Sh A	98 Sh A	64 Sh D		L	l_1; l_2	E	b	s	D_H	d_H	D_1	N	
24	1a	35	60	-	10 - 22	64	23	18	14	2	55	27	-	-	1008
28	1a	95	160	-	10 - 25	66	23	20	15	2,5	65	30	-	-	1108
38	1a	190	325	-	10 - 25	70	23	24	18	3	80	38	78	15	1108
42	1a	265	450	-	14 - 40	78	26	26	20	3	95	46	94	16	1610
48	1a	310	525	-	14 - 40	106	39	28	21	3,5	105	51	104	28	1615
55	1a	410	685	-	14 - 50	96	33	30	22	4	120	60	118	20	2012
65	1	625	940	-	14 - 50	101	33	35	26	4,5	135	68	115	5	2012
75	1	1280	1920	-	16 - 60	130	52	40	30	5	160	80	158	36	2517
90	1	2400	3600	-	25 - 75	149	52	45	34	5,5	200	100	160	14	3020

1) Maximum torque of the coupling $T_{Kmax.}$ = nominal torque of the coupling $T_{K\ Nenn.}$ x 2

C A U T I O N !
For a continuous and troublefree operation of the coupling it must be designed according to the selection instructions (according to DIN 740 part 2) for the particular application (see ROTEX® catalogue).
If the operating conditions (performance, speed, changes at engine and machine) change, the coupling selection must be checked again.

2 Hints

2.1 General Hints

Please read through these mounting instructions carefully before you set the coupling into operation. Please pay special attention to the safety instructions!

The ROTEX® coupling is approved for the use in hazardous areas.
When using the coupling in hazardous areas please observe the special hints and instructions regarding safety in enclosure A.

The mounting instructions are part of your product. Please keep them carefully and close to the coupling.
The copyright for these mounting instructions remains with **KTR** Kupplungstechnik GmbH.

2 Hints

2.2 Safety and Advice Hints

STOP	**D A N G E R !**	**Danger of injury to persons.**
!	**C A U T I O N !**	**Damages on the machine possible.**
☞	**A T T E N T I O N !**	**Pointing to important items.**
Ex	**P R E C A U T I O N !**	**Hints concerning explosion protection.**

2.3 General Hints of Danger

STOP

D A N G E R !
With assembly, operation and maintenance of the coupling it has to be made sure that the entire drive train is protected against unintentional engagement. You can be seriously hurt by rotating parts. Please make absolutely sure to read through and observe the following safety instructions.

- All operations on and with the coupling have to be performed taking into account "safety first".
- Please make sure to disengage the power pack before you perform your work.
- Protect the power pack against unintentional engagement, e. g. by providing hints at the place of engagement or removing the fuse for current supply.
- Do not touch the operation area of the coupling as long as it is in operation.
- Please protect the coupling against unintentional touch. Please provide for the necessary protection devices and caps.

2.4 Proper Use

You may only assemble, operate and maintain the coupling if you

- carefully read through the mounting instructions and understood them
- had technical training
- are authorized to do so by your company

The coupling may only be used in accordance with the technical data (see table 1 to 5 in chapter 1).
Unauthorized modifications on the coupling design are not admissible. We do not take any warranty for resulting damages. To further develop the product we reserve the right for technical modifications.
The **ROTEX®** described in here corresponds to the technical status at the time of printing of these mounting instructions.

3 Storage

The coupling hubs are supplied in preserved condition and can be stored at a dry and roofed place for 6 - 9 months.
The features of the coupling spiders (elastomers) remain unchanged for up to 5 years in case of favourable stock conditions.

C A U T I O N !
The storage rooms may not include any ozone-generating devices, like e. g. fluorescent light sources, mercury-vapour lamps or electrical high-voltage appliances.
Humid storage rooms are not suitable.
Please make sure that there is no condensation. The best relative air humidity is under 65%.

4 Assembly

Basically the coupling is supplied in individual parts. Before assembly the coupling has to be controlled for completeness.

4.1 Components of the Couplings

Components of ROTEX®, shaft coupling design No. 001

Compo-nent	Quantity	Designation
1	2	hub
2	1	spider
3	2	setscrew

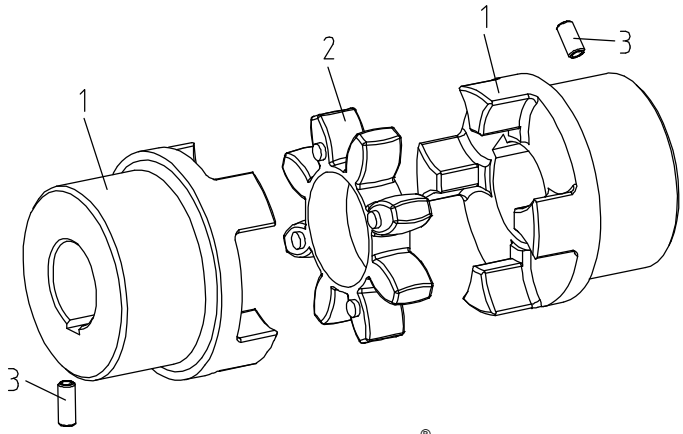

picture 6: ROTEX®

Components of ROTEX®, DKM design No. 018

Compo-nent	Quantity	Designation
1	2	hub
2	2	spider
3	1	DKM - spacer
4	2	setscrew

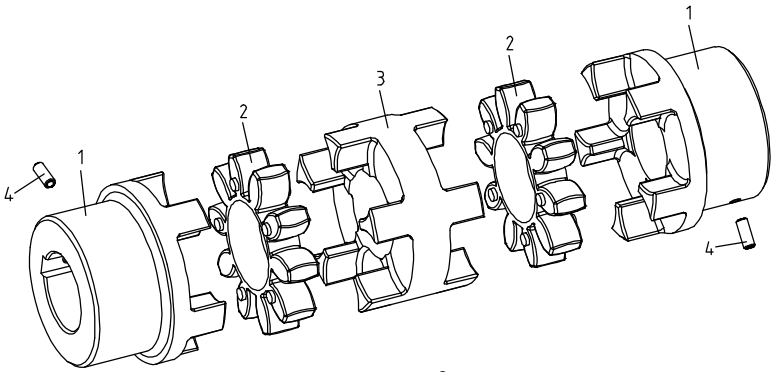

picture 7: ROTEX® DKM

4 Assembly

4.1 Components of the Couplings

Components of ROTEX®, Taper Lock Clamping Sleeve

Compo-nent	Quantity	Designation
1	2	hub for taper clamping sleeve
2	2	taper lock clamping sleeve
3	1	spider
4	4	setscrew

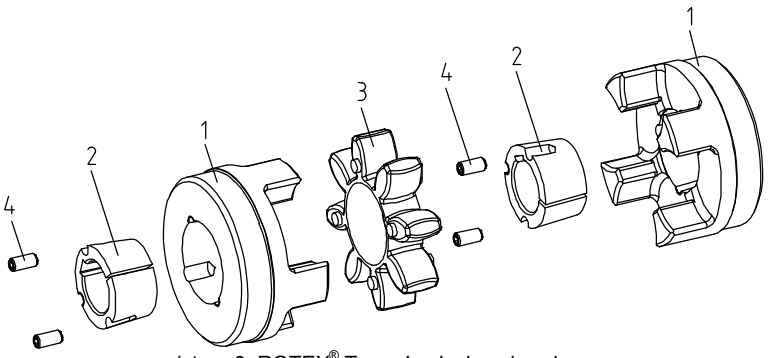

picture 8: ROTEX® Taper-Lock-clamping sleeve

Features of the standard spiders

spider hardness (Shore)	marking (colour)
92 Sh A	yellow
95/98 Sh A	red
64 Sh D-F	natural white with green marking of teeth

4.2 Hint regarding the finish bore

STOP

D A N G E R !
Valid for all materials !
The maximum permissible bore diameters d (see table 1 to 5 in chapter 1 - Technical Data) must not be exceeded. If these figures are disregarded, the coupling may tear. Rotating particles may cause serious danger.

- Hub bores machined by the customer have to observe concentric running or axial running, respectively (see picture 9).
- Please make absolutely sure to observe the figures for d_{max}.
- Carefully align the hubs when the finish bores are brought in.
- Please provide for a setscrew or an end plate for the axial fastening of the hubs.

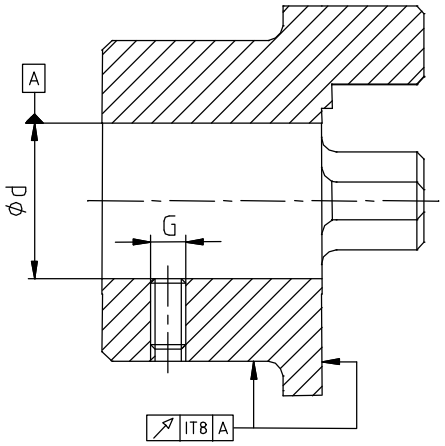

picture 9: concentric running and axial running

Table 6: Setscrews

ROTEX® size	14	19	24	28	38	42	48	55	65
dimension G	M4	M5	M5	M6	M8	M8	M8	M10	M10
tightening torque T_A [Nm]	1,5	2	2	4,8	10	10	10	17	17

ROTEX® size	75	90	100	110	125	140	160	180	
dimension G	M10	M12	M12	M16	M16	M20	M20	M20	
tightening torque T_A [Nm]	17	40	40	80	80	140	140	140	

4 Assembly

4.3 Taper Lock Clamping Sleeve

Assembly of the taper lock-clamping sleeve:

The taper lock clamping sleeve has cylindrical and even pocket holes parallel to the axis. Only half to these holes are in the material of the sleeve. The other half located at the hub has convolutions.
Push the coupling hub and the taper lock clamping sleeve into each other, make holes onto the cover and tighten the grub screws slightly.

Disassembly of the taper lock clamping sleeve:

By removing the grub screws you can detach the taper lock clamping sleeve. Afterwards, one of the grub screws is screwed into the thread of the sleeve as forcing screw and tightened.
The detached coupling hub can be manually taken off the shaft with the taper lock clamping sleeve.

Table 7:

taper lock clamping sleeve	screw dimension				quantity	spanner
	G [inch]	L [inch]	SW [mm]	T_A [Nm]		
1008	1/4	1/2	3	5,7	2	SW 3
1108	1/4	1/2	3	5,7	2	SW 3
1610	3/8	5/8	5	20	2	SW 5
1615	3/8	5/8	5	20	2	SW 5
2012	7/16	7/8	6	31	2	SW 6
2517	1/2	7/8	6	49	2	SW 6
3020	5/8	1 1/4	8	92	2	SW 8

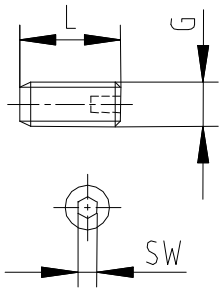

picture 10: withworth grub screw (BSW)

4.4 Assembly of the Hubs

A T T E N T I O N !
We recommend to check bores, shaft, keyway and feather key for dimensional accuracy before assembly.

Heating the hubs slightly (approx. 80 °C) allows for an easier installation onto the shaft.

P R E C A U T I O N !
Please pay attention to the danger of ignition in hazardous areas.

D A N G E R !
Touching the heated hubs causes burns.
We would recommend to wear safety gloves.

C A U T I O N !
For the assembly please make sure that the distance dimension E (see table 1 to 5) is kept to ensure that the spider can be moved axially.
Disregarding this hint may cause damage on the coupling.

- Assemble the hubs onto the shaft of driving and driven side.
- Move the power packs in axial direction until the dimension E is achieved.
- If the power packs are already firmly assembled, axial movement of the hubs on the shafts allows for adjusting the dimension E.
- Fasten the hubs by tightening the setscrews DIN 916 with cup point.

4 Assembly

4.4 Assembly of the Hubs

A T T E N T I O N !
If the shaft diameters with inserted feather key are smaller than the dimension d_H (see table 1 to 5) of the spider, one or two shaft ends may protude into the spider.

4.5 Displacements - Alignment of the Couplings

The displacement figures shown in tables 8 and 9 offer sufficient safety to compensate for environmental influences like, for example, heat expansion or lowering of foundation.

C A U T I O N !
In order to ensure a long lifetime of the coupling and to avoid dangers regarding the use in hazardous areas, the shaft ends must be accurately aligned.
Please absolutely observe the displacement figures indicated (see tables 8 and 9). If the figures are exceeded, the coupling is damaged.
In case of a use in hazardous areas for the explosion group IIC (marking II 2G c IIC T4), only the half displacement figures (see tables 8 and 9) are permissible.

Please note:

- The displacement figures mentioned in tables 8 and 9 are maximum figures which must not arise in parallel. If radial and angular displacement arises at the same time, the permissible displacement values may only be used in part (see picture 12).
- Please check with a dial gauge, ruler or feeler whether the permissible displacement figures of tables 8 and 9 can be observed.

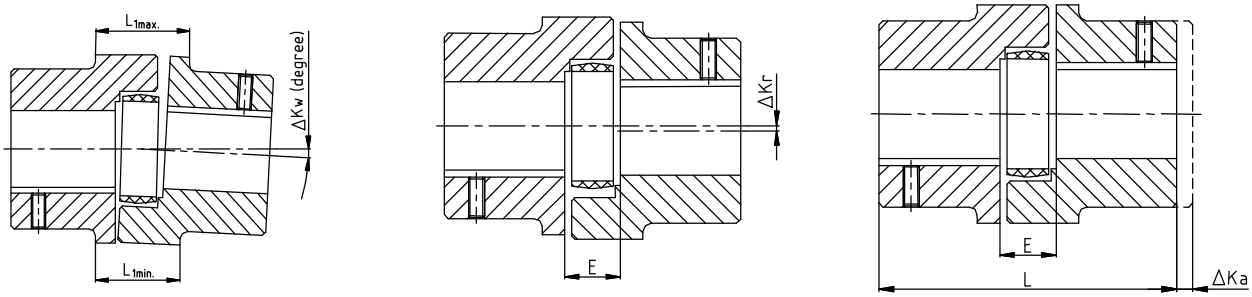

angular displacements | radial displacements | axial displacements

$K_W = L_{1max.} - L_{1min.}$ [mm]

$L_{max} = L + K_A$ [mm]

picture 11: displacements

4 Assembly

4.5 Displacements - Alignment of the Couplings

Example for the misalignment combinations given in picture 12:

Example 1:
K_R = 30%
K_W = 70%

Example 2:
K_R = 60%
K_W = 40%

$K_{total} = K_R + K_W \quad 100\ \%$

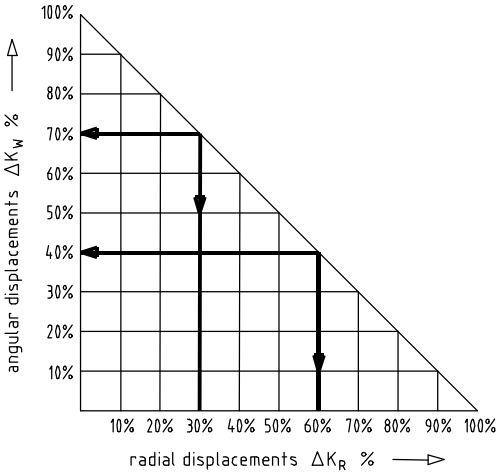

picture 12: combinations of displacement

Table 8: Displacement figures for type 001 (standard coupling)

ROTEX® size	14	19	24	28	38	42	48	55	65	75	90	100	110	125	140	160	180
max. axial displacement Ka [mm]	1,0	1,2	1,4	1,5	1,8	2,0	2,1	2,2	2,6	3,0	3,4	3,8	4,2	4,6	5,0	5,7	6,4
max. radial displacement with n=1500 1/min Kr [mm]	0,17	0,20	0,22	0,25	0,28	0,32	0,36	0,38	0,42	0,48	0,50	0,52	0,55	0,60	0,62	0,64	0,68
max. radial displacment with n=3000 1/min Kr [mm]	0,11	0,13	0,15	0,17	0,19	0,21	0,25	0,26	0,28	0,32	0,34	0,36	0,38	-	-	-	-
Kw [degree] max. angular displacement with n=1500 1/min	1,2	1,2	0,9	0,9	1,0	1,0	1,1	1,1	1,2	1,2	1,2	1,2	1,3	1,3	1,2	1,2	1,2
Kw [mm]	0,67	0,82	0,85	1,05	1,35	1,70	2,00	2,30	2,70	3,30	4,30	4,80	5,60	6,50	6,60	7,60	9,00
Kw [degree] max. angular displacement with n=3000 1/min	1,1	1,1	0,8	0,8	0,8	0,8	0,9	1,0	1,0	1,0	1,1	1,1	1,1	-	-	-	-
Kw [mm]	0,62	0,70	0,75	0,84	1,10	1,40	1,60	2,00	2,30	2,90	3,80	4,20	5,00	-	-	-	-

Table 9: Displacement figures for type 018

ROTEX® size	14	19	24	28	38	42	48	55	65	75	90	100	110	125	140	160	180
max. axial displacement Ka [mm]	-	1,2	1,4	1,5	1,8	2,0	2,1	2,2	2,6	3,0	3,4	-	-	-	-	-	-
max. radial displacement with n=1500 1/min Kr [mm]	-	0,54	0,53	0,60	0,77	0,84	1,00	1,11	1,40	1,59	1,78	-	-	-	-	-	-
max. radial displacment with n=3000 1/min Kr [mm]	-	0,50	0,47	0,53	0,61	0,67	0,82	1,01	1,17	1,33	1,63	-	-	-	-	-	-
Kw [degree] max. angular displacement with n=1500 1/min	-	1,20	0,90	0,90	1,00	1,00	1,10	1,10	1,20	1,20	1,20	-	-	-	-	-	-
Kw [degree] max. angular displacement with n=3000 1/min	-	1,10	0,80	0,80	0,80	0,80	0,90	1,00	1,00	1,00	1,10	-	-	-	-	-	-

5 Enclosure A

Hints and instructions regarding the use in Ex hazardous areas

design 001: hub / spider / hub
design 018: hub / spider / DKM spacer / spider / hub

ROTEX® DKM and ROTEX® ZS-DKM only with spacer made from steel.

5.1 Control intervals for couplings in Ex hazardous areas

explosion group	control intervals
II 2G c IIB T4	A checking of the circumferential backlash and a visual check of the flexible spider must be effected after 3,000 operating hours for the first time, after 6 months at the latest. If you note an unconsiderable or no wear at the spider after this first inspection, the further inspections can be effected, in case of the same operating parameters, respectively after 6,000 operating hours or after 18 months at the latest. If you note a considerable wear during the first inspection, so that a change of the spider would be recommended, please find out the cause according to the table „Breakdowns“, as far as possible. The maintenance intervals must be adjusted according to the changed operating parameters.
II 2G c IIC T4	A checking of the circumferential backlash and a visual check of the flexible spider must be effected after 2,000 operating hours for the first time, after 3 months at the latest. If you note an unconsiderable or no wear at the spider after this first inspection, the further inspections can be effected, in case of the same operating parameters, respectively after 4,000 operating hours or after 12 months at the latest. If you note a considerable wear during the first inspection, so that a change of the spider would be recommended, please find out the cause according to the table „Breakdowns“, as far as possible. The maintenance intervals must be adjusted according to the changed operating parameters.

ROTEX® Coupling

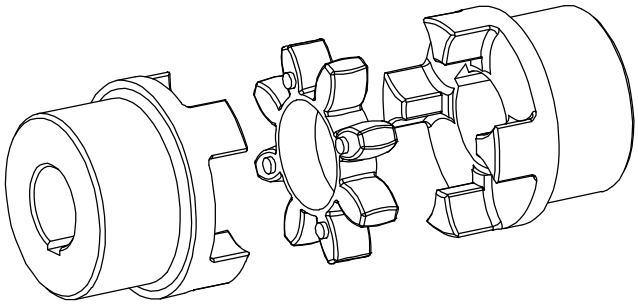

picture 13: ROTEX® coupling

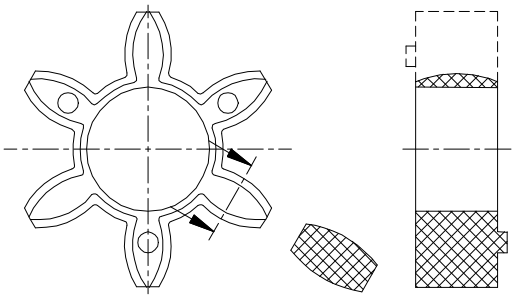

picture 14: ROTEX® spider

Here the backlash between coupling cams and the flexible spider must be checked by a feeler gauge.
When reaching the limit of wear of max. friction, the spider must be exchanged immediately, independent of the inspection intervals.

5 Enclosure A

Hints and instructions regarding the use in Ex hazardous areas

5.2 Approximate values of wear

In case of a backlash of more than x mm, the flexible spider must be exchanged.

The reaching of the exchange values depends on the operating conditions and the existing operating parameters.

CAUTION !
In order to ensure a long lifetime of the coupling and to avoid dangers regarding the use in hazardous areas, the shaft ends must be accurately aligned.
Please absolutely observe the displacement figures indicated (see tables 8 and 9). If the figures are exceeded, the coupling is damaged.

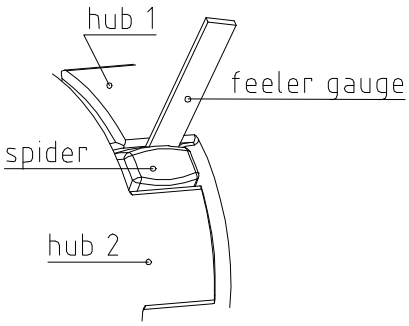

picture 15: checking of the limit of wear

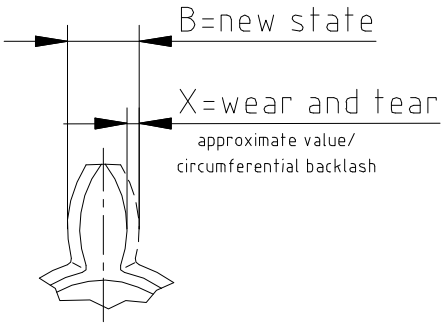

picture 16: wear of spider

Table 10:

ROTEX® size	limits of wear (friction) $X_{max.}$ [mm]	ROTEX® size	limits of wear (friction) $X_{max.}$ [mm]
9	2	65	5
14	2	75	6
19	3	90	8
24	3	100	9
28	3	110	9
38	3	125	10
42	4	140	12
48	4	160	14
55	5	180	14

5.3 Permissible coupling materials in the Ex hazardous area

In the explosion groups **IIB** and **IIC** only the following material combinations may be used:

GG 25	-	GG 25
GGG 40	-	GGG 40
steel	-	steel
stainless steel	-	stainless steel

Aluminium as coupling material is generally excluded for the explosion area.

5 Enclosure A

Hints and instructions regarding the use in Ex hazardous areas

5.4 Ex Marking of coupling for the hazardous area

Couplings for the use in hazardous areas are marked for the respectively permissible conditions of use.
Explosion group IIC: e. g. II 2G c IIC T4
In the marking II 2G c IIC T4 the explosion group IIB is included.

5.5 Starting

Before putting the coupling into operation, check the tightness of the setscrews in the hubs, the alignment and the distance dimension E and correct, if necessary, and also check all screw connections regarding the stipulated tightening torques dependent on the type of coupling.

Ex If used in hazardous areas, the setscrews must be additionally secured against self-loosening to fix the hub, e. g. with Loctite (medium strength).

Last but not least, the coupling protection against unintended contact must be fixed.

Ex <u>Coupling protection in the hazardous area.</u>
Covering of the coupling
The couplings must be provided with firm coverings (*if possible, made from stainless steel*) protecting the couplings against falling objects. There can be regular openings in the coverings which may not exceed the following dimensions:

	circular openings diameter in mm	rectangular openings side length in mm
top surface of the covering	4	4
side parts of the covering	8	8

The distance between the cover and the rotating parts must be at least 5 mm.
The cover must be electrically conductive and be included in the equipotential bonding. Bellhousings made from aluminium and damping rings (NBR) can be used as connecting element between pump and electro motor if the magnesium part is below 7,5 %. The cover may only be taken off after having stopped the unit.

During operation, please pay attention to
- strange running noises
- occurring vibrations.

⚠ **C A U T I O N !**
If you note any irregularities at the coupling during operation, the drive unit must be turned off immediately. The cause of the breakdown must be found out with the table „Breakdowns“ and, if possible, be eliminated according to the proposals. The possible breakdowns mentioned can be hints only. To find out the cause all operating factors and machine components must be considered.

5 Enclosure A

Hints and instructions regarding the use in Ex hazardous areas

5.6 Breakdowns, Causes and Elimination

breakdowns	causes	danger hints for hazardous areas	elimination
change of the running noises and / or occurring vibrations	misalignment	increased temperature the the spider surface; danger of ignition by hot surfaces	1) put the unit out of operation 2) eliminate the reason for the misalignment (e. g. loose foundation bolts, break of the engine fixing, heat expansion of unit components, change of the assembly dimension E of the coupling) 3) checking of wear see under point Control
	wear of spider, short-term torque transmission due to metal contact	danger of ignition due to sparking	1) put the unit out of operation 2) disassemble the coupling and remove rests of the spider 3) check coupling parts and exchange damaged coupling parts 4) insert spider, assemble coupling parts 5) check alignment, correct if necessary
	loose screws for axial securement of hubs	danger of ignition due to hot surfaces and sparking	1) put the unit out of operation 2) check alignment of coupling 3) tighten the screws to secure the hubs and secure against self-loosening 4) checking of wear see under point Control
break of cam	wear of spider, torque transmission due to metal contact	danger of ignition due to sparking	1) put the unit out of operation 2) change complete coupling 3) check alignment
	break of the cams due to high shock energy / overload	danger of ignition due to sparking	1) put the unit out of operation 2) change complete coupling 3) check alignment 4) find out the reason of overload
	operating parameters do not correspond to the performance of the coupling	danger of ignition due to sparking	1) put the unit out of operation 2) check the operating parameters and select a larger coupling (consider installation space) 3) assemble new coupling size 4) check alignment
	mistake in service of the unit	danger of ignition due to sparking	1) put the unit out of operation 2) change complete coupling 3) check alignment 4) instruct and train the service staff
premature wear of spider	misalignment	increased temperature the the spider surface; danger of ignition by hot surfaces	1) put the unit out of operation 2) eliminate the reason for the misalignment (e. g. loose foundation bolts, break of the engine fixing, heat expansion of unit components, change of the assembly dimension E of the coupling) 3) checking of wear see under point Control

5 Enclosure A

Hints and instructions regarding the use in Ex hazardous areas

5.6 Breakdowns, Causes and Elimination

breakdowns	causes	danger hints for hazardous areas	elimination
premature wear of spider	e. g. contact with aggressive liquids / oils, ozone-influence, too high ambient temperatures etc. effecting a physical change of the spider	danger of ignition due to sparking in case of metallic contact of the cams	1) put the unit out of operation 2) disassemble the coupling and remove rests of the spider 3) check coupling parts and exchange damaged coupling parts 4) insert spider, assemble coupling parts 5) check alignment, correct if necessary 6) make sure that further physical changes of the spider are excluded
	ambient / contact temperatures which are too high for the spider, max. permissible -20 °C / +80 °C	danger of ignition due to sparking in case of metallic contact of the cams	1) put the unit out of operation 2) disassemble the coupling and remove rests of the spider 3) check coupling parts and exchange damaged coupling parts 4) insert spider, assemble coupling parts 5) check alignment, correct if necessary 6) check and regulate ambient / contact temperature (eventually even elimination by using other spider materials)
premature wear of spider (liquefaction of material inside the spider cam)	drive vibrations	danger of ignition due to sparking in case of metallic contact of the cams	1) put the unit out of operation 2) disassemble the coupling and remove rests of the spider 3) check coupling parts and exchange damaged coupling parts 4) insert spider, assemble coupling parts 5) check alignment, correct if necessary 6) find out the reason for the vibrations (eventually elimination by spider with lower or higher shore hardness)

☞ **A T T E N T I O N !**
KTR does not assume any liabilities or guarantees regarding the use of spare parts and accessories which are not provided by KTR and for the damages resulting herefrom.

5 Enclosure A

Hints and instructions regarding the use in Ex hazardous areas

5.7 Certificate of Conformity

Certificate of Conformity

corresponding to EG Standard 94/9/EG dated 23 March 1994
and to the legal regulations

The manufacturer - KTR Kupplungstechnik GmbH, D-48432 Rheine - states that the

flexible ROTEX® couplings

described in these mounting instructions and explosion-proof designed correspond to Article 1 (3) b) of Standard 94/9/EG and comply with the general Safety and Health Requirements according to enclosure II of Standard 94/9/EG.

The couplings are certified according to Type Examination Certificate IBExU02ATEXB001 X.

According to article 8 (1) of Standard 94/9/EG the technical documentation is deposited with the:

IBExU
Institut für Sicherheitstechnik GmbH
Fuchsmühlenweg 7

09599 Freiberg

Rheine, 06.06.02
Date

ppa.
Dr. Norbert Partmann
Engineering Manager

i. V.
Bernd Tenfelde
Product Manager

Ihr Partner für
Kühler und Systeme

UNIVERSAL HYDRAULIK®

ÖI/Wasser-Wärmetauscher
Oil/water heat exchangers
Echangeur thermique huile/eau

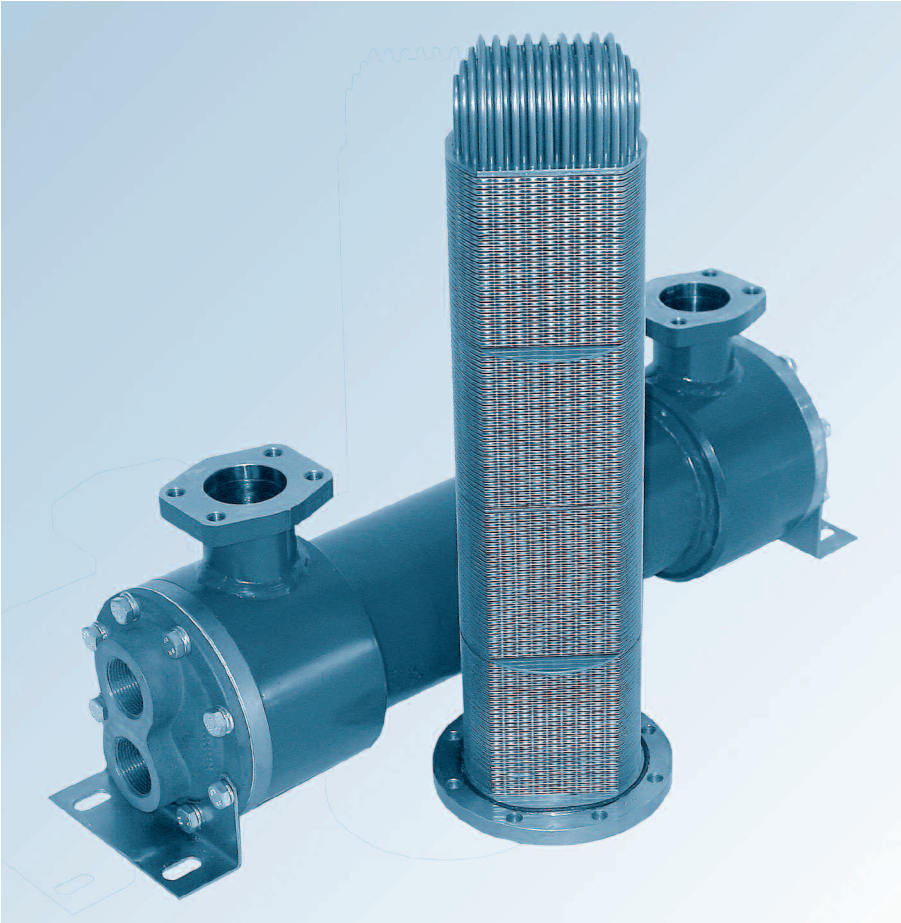

Serie
UKM

Für den industriellen Einsatz

For industriel use

A usage industriel

Anwendungen:
vorwiegend hydraulische Anwendungen.
Mobil / Getriebe / Kompressor

Applications:
mainly hydraulic applications.
Mobile / gears / compressor

Usage:
surtout l´usage hydraulique.
Mobile / transmission / compresseur

GL Certified

TÜV CERT
DIN EN ISO 9001
Reg.-Nr. 73 100 1298

- **Kompakte Bauweise**
- **Äusserst Leistungsfähig**
- **Geringe Kosten**
- **Compact design**
- **High performance**
- **Low costs**
- **Construction compacte**
- **Extrêmement performant**
- **Coûts réduits**

Produktbeschreibung / Product description / Discription du produit

Produktbeschreibung

Die UKM-Serie ist eine konsequente Weiterentwicklung eines Rohrbündel-Wärmetauschers für weite Anwendungsgebiete in der Industrie. Durch die zusätzliche Kühlfläche ist diese Baureihe äußerst effektiv. Dies wird durch Aluminiumlamellen, die über das Rohrbündel geschoben werden und metallisch verbunden sind, realisiert. Die UKM-Wärmetauscher haben eine Kühlfläche von 0,73 m² bis 29 m².
Die Serie UKM setzt sich aus über 30 Grundeinheiten zusammen, die jeweils in eine Zweifach- und Vierfach-Ausführung unterteilt sind.

Product description

The UKM series is a logical further development of a tube-bank heat exchanger for a wide range of industrial applications.
This range is particularly effective due to the additional cooling area.This is produced by aluminium fins, which are pushed over the bank of tubes with metal-to-metal contact. The UKM range of heat exchangers has a cooling surface of from 0.73 m² to 29 m².
The UKM series is constructed of more than 30 basic units, and is available as double and four pass versions.

Description du produit

La série UKM est la poursuite logique du développement d'un échangeur thermique à faisceau tubulaire pour des domaines d'application multiples dans l'industrie. Grâce à une surface de refroidissement supplémentaire, cette série est extrêmement efficace. Ceci peut être réalisé par l'intermédiaire de lamelles d'aluminium glissées sur le faisceau tubulaire et reliées de manière métallique. Les échangeurs thermiques UKM ont une surface de refroidissement de 0,73 m² à 29 m². La série UKM se compose de plus de 30 unités de base, subdivisées, respectivement, en version double et 4 voies.

Produktmerkmale

- Aluminiumrippen und Kupfer- oder Kupfernickelrohre sorgen für maximalen Wärmeaustausch
- Große Ölanschlüsse für minimalen Strömungswiderstand
- Öl-Durchflußmengen bis zu 650 l/min
- Abnehmbare Endkappe
- Flansche ermöglichen Drehung des Wärmetauschers um 90°
- Wahlweise mit internem Umgehungsrückschlagventil (Patentiert)
- Hochwertige Materialien
- Max. Druck: Öl 35 bar / Wasser 16 bar
- Vollständiges Zubehörprogramm lieferbar
- Lieferung ab Lager

Option

- Seewasserfähige Ausführung

Product features

- Aluminium fins and copper or copper-nickel tubes ensure maximum levels of heat exchange
- Large-bore oil connections for minimum flow resistance
- Oil flow rates of up to 650 l/min
- Removable end cap
- Flanges allow the heat exchanger to be turned through 90°
- Optionally available with internal bypass check valve (patented)
- High-quality materials
- Max. pressure: oil 35 bar / water 16 bar
- Full range of accessories available
- Delivery ex-stock

Option

- Sea water version

Caractéristiques du produit

- Les nervures aluminium et le tube de cuivre ou cuivre-nickel assurent un échange thermique maximal
- Raccordements huile de grande dimension, pour une résistance minimale au courant
- Débit d'huile jusqu'à 650 l/min
- Caches d'extrémité amovibles
- Des brides permettent une rotation à 90° de l'échangeur thermique
- Au choix avec clapet antiretour de dérivation (breveté)
- Matériaux haute qualité
- Pression max: huile 35 bar / eau 16 bar
- Programme d'accessoires complet disponible
- Livraison à partir du magasin de stocks

Option

- Version de l'eau de mer

Materialien / Materials / Matériaux

	Standard	**Seewasser / Sea water / eau de mer**
Mantel / Shell / Manteau, Befestigungswinkel / Mounting bracket / Coude de fixation, Umlenksegmente / Baffels / Chicanes:	Stahl / Steel / Acier	
Endplatten / End plates / Plaques finales:	Messing / Brass / Laiton	Sondermessing / Special brass / Laiton spéciale
Kühlrippen / Cooling fins / Nervures de refroidissment, Typenschild / Type destignation plate / Plaque signalétique:	Aluminium	
Rohre / Tubes / Tuyeaux:	Kupfer / Copper / Cuivre	Kupfer/Nickel / Copper/Nickel / Cuivre/Nickel
Endkappen / End caps / Caches:	Grauguß / Cast iron / Fonte grise	*Grauguß / *Cast iron / *Fonte grise
Dichtungen / Gaskets / Garnitures d'étanchéité	Nitrilkautschuk, Zellulosefasern / Nitril rubber, cellulose fibre / Caoutchouc nitré, fibres de cellulose	
Zusätzlich einbauen / Additional installation / installer additional		Zink-Anode / zinc anode / Anode de zink

** Mit einem speziellen chem. Nickel-Beschichtungsverfahren / Nickel coating treatment / Traité avec un procédure de nickel*

Berechnungsbeispiel / Example calculation / Example de calcul

Bei abweichenden Ölaus-, bzw. Wassereintrittstemperaturen und Viskositäten, ist nach den folgenden Berechnungsbeispielen zu verfahren:

Gegeben:

Abzuführende Wärme (AW)	=	17kW
Ölstrom (V)	=	80 l/min
Ölaustrittstemp. ($t_{Öl\ aus}$)	=	45°C
Wassereintrittstemp. ($t_{Wasser\ ein}$)	=	25°C
Ölsorte	=	ISO 68
Abzuführende Wärme eff.	=	kW eff.

1. Der Viskositätskorrekturfaktor errechnet sich wie folgt:
Temperaturdifferenz ΔT *(°C)* =

$$\frac{AW\ (kW) \times 34{,}1}{Q\ (l/mn)} = \mathbf{7{,}2}$$

daraus folgt: mittl. Öltemp. *(°C)* =

$$\frac{t_{Öl\ aus} + \Delta t + t_{Öl\ aus}}{2} = \mathbf{49°C}$$

2. Aus Öl-Herstellerdiagramm ISO 68:
Viskosität bei 49°C = 38 cSt

3. Aus Viskositätskorrekturtabelle „A“:
38 cSt = 1,11

$AW_{eff.}$ =

$$\frac{AW\ (kW) \times 25 \times \text{Viskosität}\ (cSt)\ \text{Tab. A}}{t_{Öl\ aus}\ (°C) - t_{wasser\ ein}\ (°C)}$$

$$= \frac{17 \times 25 \times 1{,}11}{20} = \mathbf{23{,}6\ kW}$$

Aus Leistungsdiagramm Öl/Wasser 2:1 bei einem Ölstrom von 80 l/min und 23,6 kW ergibt sich:

Kühler Nr. 31 = UKM-718-T

For different oil outlet temperatures, water inlet temperatures and viscosities, the following calculation must be made:

Where:

Heat to be dissipated (AW)	=	17kW
Oil flow (V)	=	80 l/mn.
Oil outlet temp. ($t_{oil\ out}$)	=	45°C
Water inlet temp. ($t_{water\ in}$)	=	25°C
Oil type	=	ISO 68
Effective heat to be dissipated	=	kW eff.

1. The viscosity correction factor is calculated as follows:
Temperature difference ΔT (°C) =

$$\frac{AW\ (kW) \times 34{,}1}{Q\ (l/mn)} = \mathbf{7{,}2}$$

Average oil temp. therefore (°C) =

$$\frac{t_{oil\ out} + \Delta t + t_{oil\ out}}{2} = \mathbf{49°C}$$

2. From oil manufacturer's data for ISO 68:
Viscosity at 49°C = 38 cSt

3. From viscosity correction table „A“:
38 cSt = 1,11

AW_{eff} =

$$\frac{AW\ (kW) \times 25 \times \text{viskosity}\ (cSt)\ \text{Tab. A}}{t_{oil\ out}\ (°C) - t_{water\ in}\ (°C)}$$

$$= \frac{17 \times 25 \times 1{,}11}{20} = \mathbf{23.6\ kW}$$

From oil/water 2:1 performance diagram at an oil flow of 80 l/min and 23.6 kW, we thus arrive at:

Cooler n° 31 = UKM-718-T

En cas de divergence au niveau de la température de sortie de l'huile ou de la température d'entrée de l'eau et de divergence au niveau de la viscosité, procéder comme le montrent les exemples de calcul suivants:

Donné:

Chaleur à dissiper (AW)	=	17kW
Débit d'huile (V)	=	80 l/mn.
Temp. de sortie de l'huile (t huile sor.)	=	45°C
Temp. d'entrée de l'eau (t eau ent.)	=	25°C
Type d'huile	=	ISO 68
Chaleur à dissiper eff.	=	kW eff.

1. Le facteur de viscosité est calculé comme suit:
Différence de température ΔT (°C) =

$$\frac{AW\ (kW) \times 34{,}1}{Q\ (l/mn)} = \mathbf{7{,}2}$$

Il en résulte: temp. moy. huile =

$$\frac{t_{huile\ sor.} + \Delta t + t_{huile\ sor.}}{2} = \mathbf{49°C}$$

2. D'après le diagramme du fabricant de l'huile ISO 68: Viscosité à 49°C = 38 cSt

3. D'après le tableau de correction de la viscosité „A“: 38 cSt = 1,11

AW_{eff} =

$$\frac{AW\ (kW) \times 25 \times \text{Viskosité}\ (cSt)\ \text{Tab. A}}{t_{huile\ sor.}\ (°C) - t_{eau\ ent.}\ (°C)}$$

$$= \frac{17 \times 25 \times 1{,}11}{20} = \mathbf{23{,}6\ kW}$$

Il résulte du diagramme de performance huile/eau 2:1, à un débit d'huile de 80 l/mn et 23,6 kW:

Refroidisseur n° 31 = UKM-718-T

Kühlerauswahl / Choice of cooler / Choix du refroidisseur

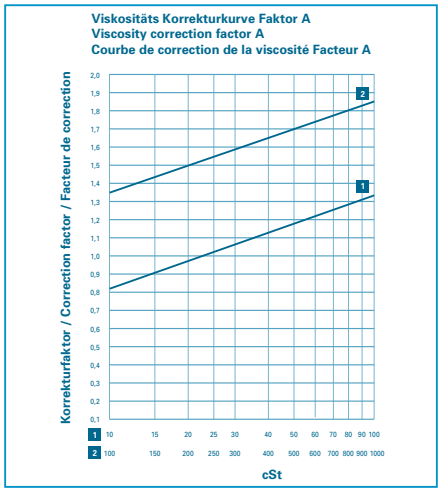

Die dargestellten Leistungskurven basieren auf einer Wassereintrittstemperatur von 25°C und einer Ölaustrittstemperatur von 50°C, sowie einer Ölviskosität von 20,6 cSt.
Für abweichende Viskositäten kann aus nebenstehender Kurve der Korrekturfaktor „A“ abgelesen werden.

The performance data shown is based on a water inlet temperature of 25°C and an oil outlet temperature of 50°C, together with an oil viscosity of 20.6 cSt.
For different viscosities, the correction factor „A“ can be read off from the performance curve beside.

Les courbes de performance représentées sont basées sur une température d'entrée de l'eau de 25°C et sur une température de sortie de l'huile de 50°C, ainsi que sur une viscosité de l'huile de 20,6 cSt.
En cas de viscosité divergente, le facteu de correction „A“ peut être déterminé à l'aide de la courbe ci-dessous.

Kennlinien / Performance Data / Courbes caractéristiques

2 Weg / 2 passes / 2 voies

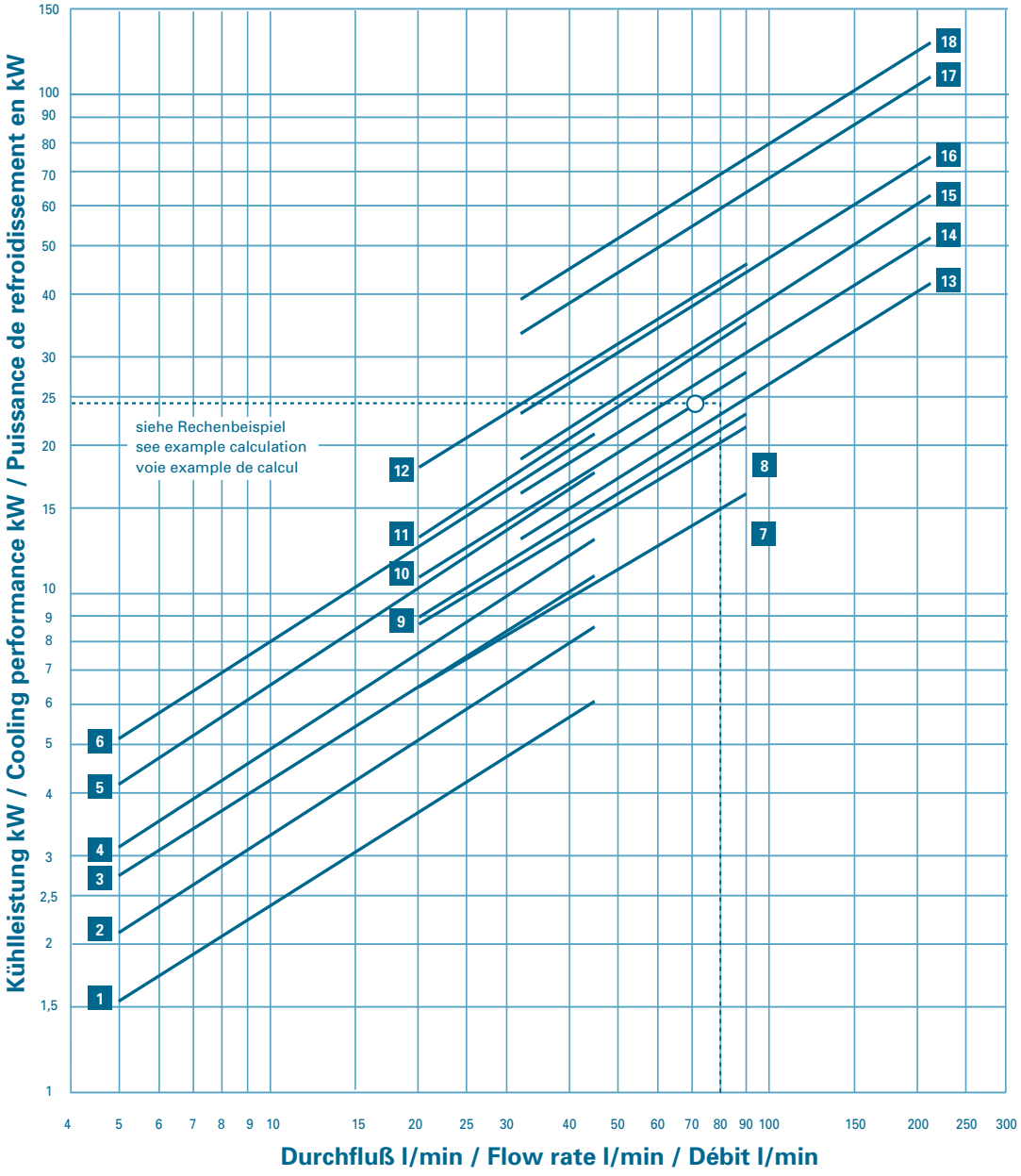

Modell / model / modèle

1	UKM-508-T	10	UKM-718-T
2	UKM-512-T	11	UKM-724-T
3	UKM-514-T	12	UKM-736-T
4	UKM-518-T	13	UKM-1012-T
5	UKM-524-T	14	UKM-1014-T
6	UKM-536-T	15	UKM-1018-T
7	UKM-708-T	16	UKM-1024-T
8	UKM-712-T	17	UKM-1036-T
9	UKM-714-T	18	UKM-1048-T

Die Kennlinien in diesem Diagramm sind vom Durchfluß begrenzt und können in Abstimmung mit dem Hersteller überschritten werden.

The performance Data shown in the diagram are limited by the flow rate, and may be exceeded after consultation with the manufacturer.

Les courbes caractéristiques de ce diagramme sont limitées par le débit et peuvent être dépassées après accord avec le fabricant.

Kennlinien / Performance Data / Courbes caractéristiques

4 Wege / 4 pass / 4 voies

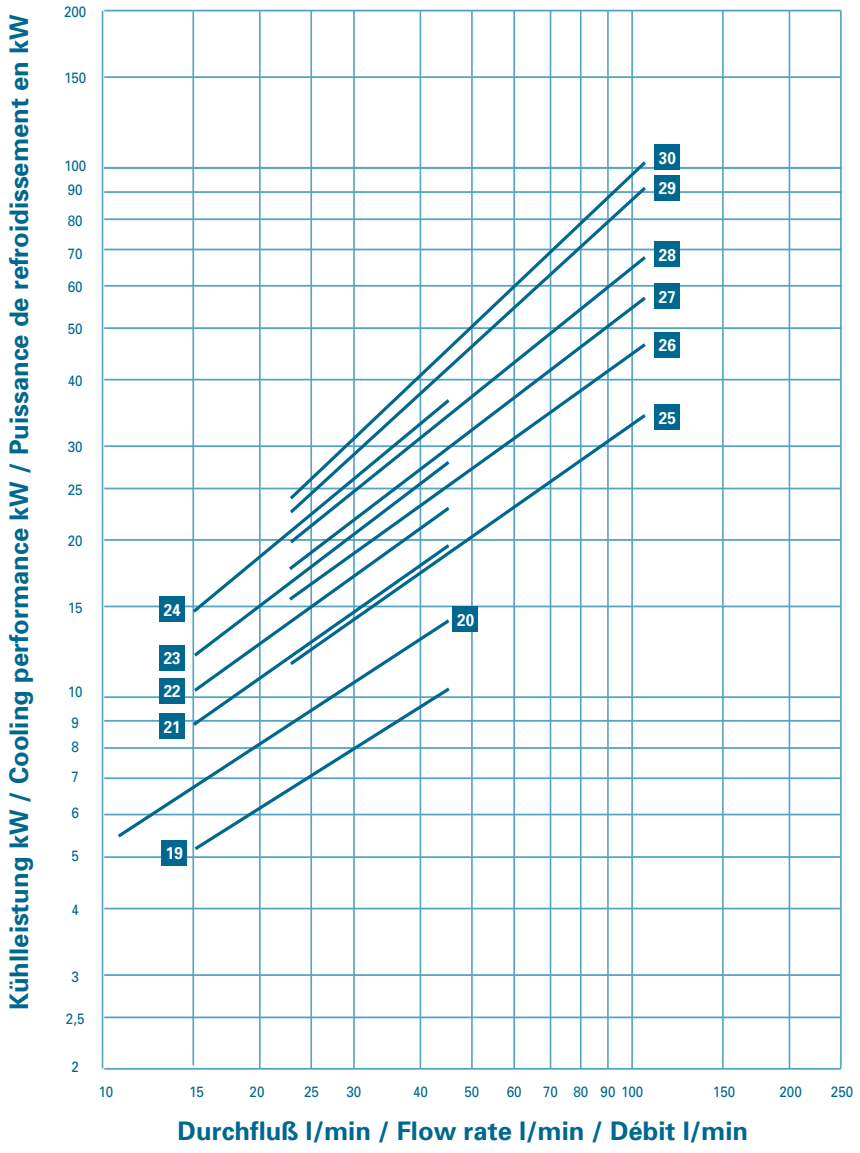

Modell / model / modèle

19	UKM-708-F	25	UKM-1012-F
20	UKM-712-F	26	UKM-1014-F
21	UKM-714-F	27	UKM-1018-F
22	UKM-718-F	28	UKM-1024-F
23	UKM-724-F	29	UKM-1036-F
24	UKM-736-F	30	UKM-1048-F

Die Kennlinien in diesem Diagramm sind vom Durchfluß begrenzt und können in Abstimmung mit dem Hersteller überschritten werden.

The performance Data shown in the diagram are limited by the flow rate, and may be exceeded after consultation with the manufacturer.

Les courbes caractéristiques de ce diagramme sont limitées par le débit et peuvent être dépassées après accord avec le fabricant.

Abmessungen UKM / Dimensions UKM / Dimensions UKM

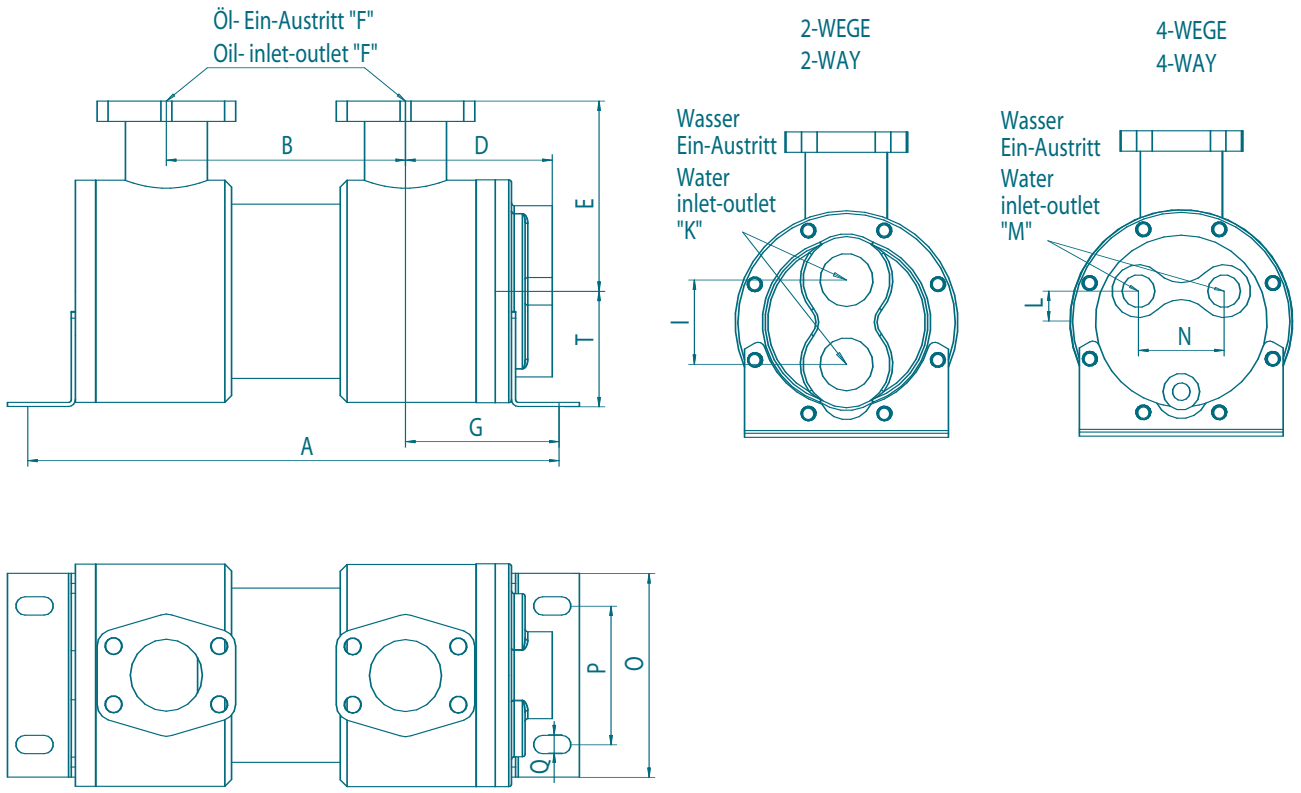

Abmessungen Flansch / Dimensions flange / Dimensions bride

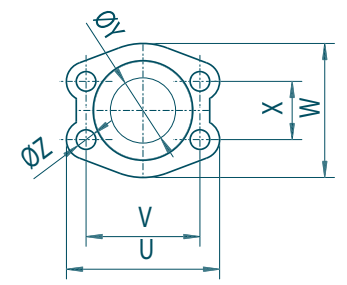

	U	V	W	X	Z
SAE 1“	70	52,4	55	26,2	M10
SAE 1 1/4“	79	58,7	68	30,2	M10
SAE 1 1/2“	93	69,9	78	35,7	M12
SAE 2“	102	77,8	90	42,9	M12
SAE 2 1/2“	114	88,9	105	50,8	M12

Geräteabmessungen / Unit Dimensions / Dimensions des appareils

	Abmessungen / dimensions / dimensions							2-Wege/ways/voies			4-Wege/ways/voies			Fuß/foot/pied		
in mm / BSPP	A	B	D	E	G	F	T	I	K	L	M	N	0	P	Q (Ø)	m²
UKM-508	309	177,5	66	75	71	G 1“	55	35	G 1/2“	-	-	-	95	63	8,5x16	0,73
UKM-512	410	278,5	66	75	71	G 1“	55	35	G 1/2“	-	-	-	95	63	8,5x16	1,13
UKM-514	461	329,5	66	75	71	G 1“	55	35	G 1/2“	-	-	-	95	63	8,5x16	1,43
UKM-518	563	431,5	66	75	71	G 1“	55	35	G 1/2“	-	-	-	95	63	8,5x16	1,74
UKM-524	715	583,5	66	75	71	G 1“	55	35	G 1/2“	-	-	-	95	63	8,5x16	2,35
UKM-536	1020	888,5	66	75	71	G 1“	55	35	G 1/2“	-	-	-	95	63	8,5x16	3,57
UKM-708	324	155	85	90	89	G 11/2“	66	47	G 1“	18	G 1/2“	48	120	76	11x25	1,38
UKM-712	425	256	85	90	89	G 11/2“	66	47	G 1“	18	G 1/2“	48	120	76	11x25	2,18
UKM-714	476	307	85	90	89	G 11/2“	66	47	G 1“	18	G 1/2“	48	120	76	11x25	2,53
UKM-718	578	409	85	90	89	G 11/2“	66	47	G 1“	18	G 1/2“	48	120	76	11x25	3,29
UKM-724	730	561	85	90	89	G 11/2“	66	47	G 1“	18	G 1/2“	48	120	76	11x25	4,44
UKM-736	1035	866	85	90	89	G 11/2“	66	47	G 1“	18	G 1/2“	48	120	76	11x25	6,73
UKM-1012	464	261	105	140	108	SAE 2“	85	62	G 11/4“	22	G 3/4“	63	150	102	13x28	4,38
UKM-1014	515	312	105	140	108	SAE 2“	85	62	G 11/4“	22	G 3/4“	63	150	102	13x28	5,17
UKM-1018	617	414	105	140	108	SAE 2“	85	62	G 11/4“	22	G 3/4“	63	150	102	13x28	6,73
UKM-1024	769	566	105	140	108	SAE 2“	85	62	G 11/4“	22	G 3/4“	63	150	102	13x28	9,06
UKM-1036	1074	871	105	140	108	SAE 2“	85	62	G 11/4“	22	G 3/4“	63	150	102	13x28	13,74
UKM-1048	1379	1176	105	140	108	SAE 2“	85	62	G 11/4“	22	G 3/4“	63	150	102	13x28	18,41
UKM-1060	1684	1481	105	140	108	SAE 2“	85	62	G 11/4“	22	G 3/4“	63	150	102	13x28	23,1
UKM-1218	618	390	131	145	116	SAE 2 1/2“	120	87	G 2“	25	G 1“	70	190	142	13x28	6,00
UKM-1224	770	542	131	145	116	SAE 2 1/2“	120	87	G 2“	25	G 1“	70	190	142	13x28	8,06
UKM-1230	923	695	131	145	116	SAE 2 1/2“	120	87	G 2“	25	G 1“	70	190	142	13x28	10,19
UKM-1236	1075	847	131	145	116	SAE 2 1/2“	120	87	G 2“	25	G 1“	70	190	142	13x28	12,25
UKM-1242	1228	1000	131	145	116	SAE 2 1/2“	120	87	G 2“	25	G 1“	70	190	142	13x28	14,38
UKM-1248	1380	1152	131	145	116	SAE 2 1/2“	120	87	G 2“	25	G 1“	70	190	142	13x28	16,35
UKM-1254	1532	1304	131	145	116	SAE 2 1/2“	120	87	G 2“	25	G 1“	70	190	142	13x28	18,48
UKM-1260	1685	1457	131	145	116	SAE 2 1/2“	120	87	G 2“	25	G 1“	70	190	142	13x28	20,52
UKM-1266	1837	1609	131	145	116	SAE 2 1/2“	120	87	G 2“	25	G 1“	70	190	142	13x28	22,63
UKM-1272	1990	1762	131	145	116	SAE 2 1/2“	120	87	G 2“	25	G 1“	70	190	142	13x28	24,74
UKM-1278	2143	1915	131	145	116	SAE 2 1/2“	120	87	G 2“	25	G 1“	70	190	142	13x28	26,88
UKM-1284	2295	2067	131	145	116	SAE 2 1/2“	120	87	G 2“	25	G 1“	70	190	142	13x28	28,99

** Option: Baugrößen / Unit size / Taille 500 + 700: SAE 1 1/2“; Baugröße / Unit size / Taille 1000: Innengewinde / Thread / Filet*
** Option: Baugröße / Unit size / Taille 1200: K - R 1“, R 1 1/4“, R 1 1/2“*

Ihr Partner für Kühler und Systeme

UNIVERSAL HYDRAULIK®

Bestellschlüssel / Ordering code / Code de commande

UKM - 1014 - 2 - T - R - CN - W - SW - 01 -GL - S

Anschlußtyp
Connection type
Type de raccordement
NPT = **-**
SAE = **S**
BSPF = **M**
SAE Flansch / SAE flange = **FM**

Baugröße / Unit size / Taille

Umlenksegmentabstand / Guide segment setting / Ecart des segmentsdéflecteurs

Kühlwasserführung / Cooling water connection system
Raccordement eau de refroidissement
2-Weg / 2-pass / 2-voies = **T**
4-Weg, ohne Serie 500 / 4-pass, without series 500 / 4-voies, sans serié 500 = **F**

Bypass-Ventil / Bypass valve / Soupape by-pass = **R**

CU = Rohre Kupfer / Tubes Copper/ / Tuyeaux Cuivre
CN = Rohre Kupfer/Nickel / Tubes Copper/nickel / Tuyeaux Cuivre/nickel

W = Endplatten Kupfer/Nickel / End plates Copper/Nickle / Plaques finales Cuivre/nickel

SW = Seewasser / Sea water / Eau de mer

Serie 01

GL =German Lloyd

S = Sonderausführung
Special version
Version spéciale

Technische Daten / Technical data / Données techniques

Maximaler Betriebsdruck / Maximum operating Pressure / Pression maximale de service:

Mantel / Shell / Manteau	=	35 bar
Rohre / Tubes / Tuyeaux	=	16 bar

Maximale Betriebstemperatur / Maximum operating temperature / Température maximale de service:

= 95 °C

Maximaler Durchfluß / Maximum flow rate / Débit maximal:

l/min	**Öl / Oil / huile**	**Wasser / Water / eau**		**Wasser / Water / eau**		**Seewasser / Sea water / Eau de mer**	
	Mantel / Shell / Manteau	Rohre CU / Tubes CU / Tuyeaux CU		Rohre CN / Tubes CN / Tuyeaux CN		Rohre CN / Tubes CN / Tuyeaux CN	
Typ / Version / Version		**T**	**F**	**T**	**F**	**T**	**F**
UKM - 500	75	17	-	26	-	22	-
UKM - 700	225	34	16	52	24	43	21
UKM - 1000	400	82	40	122	58	102	51
UKM - 1200	650	182	91	272	136	227	114

Die technischen Angaben in diesem Datenblatt beziehen sich auf die beschriebenen Betriebsbedingungen und Einsatzfälle. Bei abweichenden Betriebsbedingungen und Einsatzfällen wenden Sie sich bitte an Universal Hydraulik.

Technische Änderungen vorbehalten. Bitte beachten Sie auch unsere Wartungs- und Bedienungsanleitung.

The technical data of this sheet is depending on the described operational conditions and individual cases. At different operational conditions and differing individual cases contact UniversalHydraulik.

Technical modifications reserved. Please also pay attention to our operation manuals and maintenance documentations.

Vertrieb / Sales department / Distribution

Universal Hydraulik GmbH
Siemensstr. 33 · D-61267 Neu-Anspach
Tel: 0 60 81 / 94 18 - 0 · Fax 0 60 81 / 96 02 20
eMail info@universalhydraulik.com
www.universalhydraulik.com

UH-K000.044/0409

UNIVERSAL HYDRAULIK

Operating Instructions

Shell-and-Tube Heat Exchanger

Series UKM, UKTM

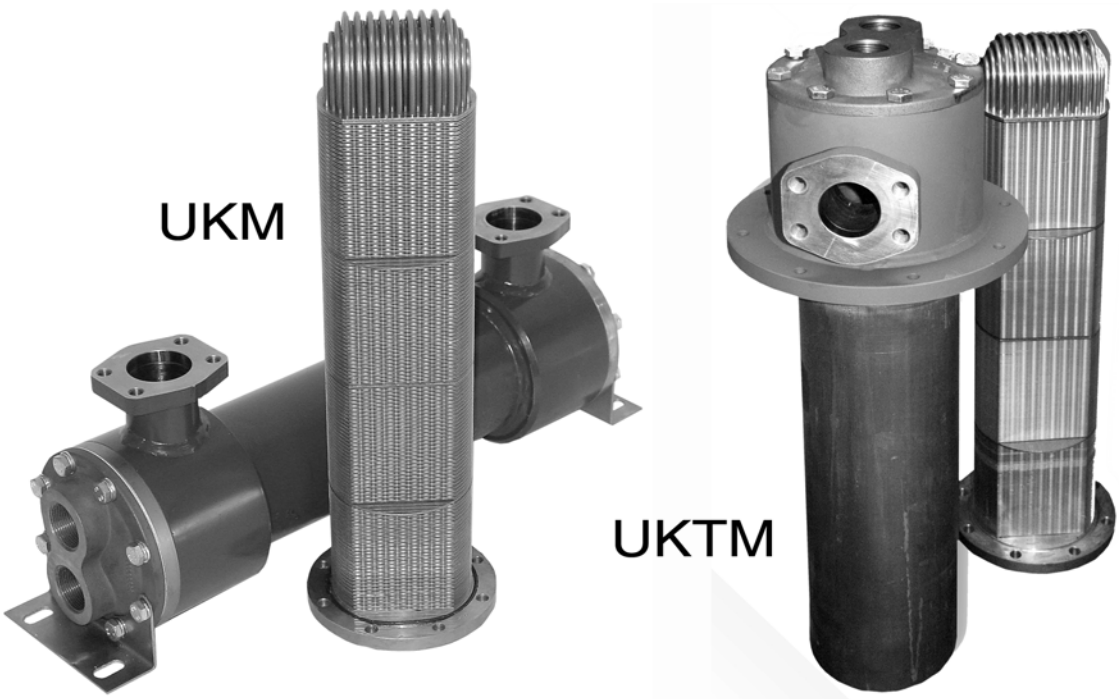

Universal Hydraulik GmbH
Siemensstraße 33
D-61267 Neu-Anspach

Phone: +49 (0) 60 81 94 18-0
Fax: +49 (0) 60 81 96 02 20
E-Mail: info@universalhydraulik.com
Internet: www.universalhydraulik.de

Status: Edition 01/2006 (Copy Deadline 02.03.06)

© 2005 Universal Hydraulik GmbH

These operating instructions are not subject of the updating service. Passing on as well as reproduction of these operating instructions and all associated documents, use and disclosure of their content is prohibited, unless expressly permitted by Universalhydraulik GmbH in writing. Violations obligate to compensation.

In case of registered patents, utility models or designs all rights remain reserved.

Table of contents

1 Introduction 3

1.1 About these operating instructions 3
1.2 Notes on use 3
1.3 Intended use 4
1.4 Warranty and liability 5

2 Notes on safety 7

2.1 Standards and regulations 7
2.2 General safety measures 7
2.3 Technical condition 8
2.4 Safety requirements concerning assembly and installation 8
2.5 Notes on safety for operation 9
2.6 Requirements concerning personnel 9
2.7 Handling ancillary materials and service fluids 10
2.8 Warning decals and type plate 11

3 Technical data 13

3.1 Oil/water heat exchangers series UKM and UKTM 13
3.2 Requirements concerning the water quality 13
3.2.1 Water hardness 13
3.2.2 pH-value 14
3.2.3 Assessment of cooling water based on constituents 14
3.2.4 Types of cooling waters/peculiarities 16
Industrial water 16
Fresh water 16
Sea water 16
Brackish water 16

4 Technical description 17

4.1 Design 17
4.1.1 UKM 17
4.1.2 UKTM 18
4.2 Description of function 19
4.3 Connections 20
4.3.1 UKM 20
4.3.2 UKTM 21

5 Transport and storage 23

6 Assembly/disassembly 25

6.1 Assembly conditions 25
6.2 Installing and connecting the heat exchanger 26
6.3 Disassembling the heat exchanger 28

7 Operation 29

8 Maintenance, repair and cleaning 31

8.1 Maintenance 31
8.1.1 Maintenance intervals 31
8.1.2 Replacing tube bundles 32
8.1.3 Replacing the zinc anode 32
8.2 Cleaning 33
8.2.1 Notes on safety for cleaning 33
8.2.2 Cleaning tube bundles 34
8.2.3 Cleaning the shell compartment 35
8.2.4 Reinstallation after cleaning 36

9 Waste disposal 37

1 Introduction

1.1 About these operating instructions

These operating instructions will help you to become familiar with the use of shell-and-tube heat exchangers of series UKM and UKTM from Universal Hydraulik GmbH. These instructions enable a quick lead-in and contain all information required for safe and professional use of the heat exchangers.

This manual describes the functionality and handling or heat exchangers of series UKM and UKTM. Further information can be found in the associated data sheets. Information on other models is available on request from Universal Hydraulik GmbH or under www.universalhydraulik.com.

Knowing these instructions is mandatory for using shell-and-tube heat exchangers of series UKM and UKTM from Universal Hydraulik GmbH. You should therefore make yourself familiar with the contents and follow the notes on safety for handling heat exchangers in particular. You will thereby ensure full utilization of the product's capacity. The right for product modifications within the scope of further technical development remains reserved.

1.2 Notes on use

These operating instructions are divided into 9 chapters. The chapter title appears on each page at the right or left in the header. The footer contains information about the status of the operating instructions in form of a release date and the page number. For easier navigation these operating instructions contain cross-references, which help you to find your way through the document.

If you work with the electronic document a click with the left mouse button will bring you directly to the referenced point in the document. In the same way you can jump to the desired point from the table of contents and from the list of illustrations.

These operating instructions use the following symbols for warnings and notes as well as signal words:

DANGER
Warning of possible dangers for health and life

DANGER
Warning of possible dangers for health and life caused by poison

ATTENTION
Warning of possible damage to property and equipment

NOTE
Hints for use and useful information

NOTE
Note on environmental protection

1.3 Intended use

Shell-and-tube heat exchangers from Universal Hydraulik GmbH have been designed for use with certain fluids, pressures, temperatures, operating characteristics, etc. The exact specification must be determined on basis of the prevailing operational requirements and conditions at the operating company before putting the heat exchanger into use. The technical conditions for use of each heat exchanger can be taken from the type plate.

The shell-and-tube heat exchanger must only be operated by instructed expert personnel in compliance with the notes on safety specified in these operating instructions. Safe and trouble free operation is only assured if the unit is used for the purpose it is intended for and in accordance with these instructions.

Any use beyond these limits is considered unintended. The manufacturer will not assume liability for any damage to persons or property resulting from unintended use, as this is the sole responsibility of the operating company.

1.4 Warranty and liability

The general terms of sales and delivery which were handed over to the user of the shell-and-tube heat exchanger by Universal Hydraulik GmbH are generally valid. If these are not available, they must be requested from the manufacturer.

Warranty and liability claims for damage to persons and property are excluded, if they result from one or several of the following causes:

- Unintended use of the heat exchanger
- Inappropriate commissioning, installation, operation and maintenance or repair of the heat exchanger
- Structural changes to the heat exchanger
- Operation of the heat exchanger with incorrectly installed connections to the plant systems and defective or incorrectly assembled safety features
- Negligence of the safety regulations and notes in these operating instructions
- Use of spare parts and wear items as well as operating materials and cleansing agents other than those recommended by the manufacturer

Universal Hydraulik GmbH solely assumes warranty and liability for material and manufacturing faults.

2 Notes on safety

2.1 Standards and regulations

The shell-and-tube heat exchanger has been built in accordance with the currently valid technical rules and regulations and is safe to operate. The design of the heat exchanger is based on the general health and safety requirements of the applicable laws, standards and directives. The safety of the heat exchanger will be confirmed by the CE-sign and the declaration of conformity, if this should be necessary.

All notes on safety in these operating instructions refer to the currently valid national laws and the directives of the European Union. In other countries the applicable laws and country specific regulations must be adhered to.

Beside the safety regulations in these operating instructions you must also observe and follow the generally valid regulations for prevention of accidents and protection of the environment. All information in these operating instructions must be fully complied with at all times. Apart from this you must also follow the notes on safety in the "data sheet for warnings and notes on safety for hydraulic systems".

2.2 General safety measures

The following general safety measures must be adhered to at all times:

- ❑ The shell-and-tube heat exchanger must only be used for the purpose it is intended for.
- ❑ The heat exchanger must only be installed, operated and serviced by trained and specially instructed skilled personnel. These persons must have read and understood the operating instructions. This includes specific knowledge of how to avoid risks of injury for the operator and third parties.
- ❑ All safety regulations in these operating instructions and in the applicable documents must be observed and complied with.
- ❑ Unauthorized persons should not be able to access the heat exchanger.
- ❑ Loss of use and environmental impacts caused by incorrect handling must be ruled out.
- ❑ Transport, assembly and disassembly, operation as well as care and maintenance must be performed in strict compliance with the applicable regulations concerning industrial safety and protection of the environment.
- ❑ All work on the heat exchanger must be carried out with care and under due consideration of the "Safety" aspect.

- When installing the heat exchanger into a system, the manufacturer of this system is obliged to include the regulations, notes and descriptions contained in this manual into the operating instructions issued by him.
- Spare parts must generally be purchased from Universal Hydraulik GmbH. Universal Hydraulik GmbH will not assume liability for damage resulting from the use of spare parts from other manufacturers.

2.3 Technical condition

The following must be observed:

- In order to rule out potential dangers and assure an optimal performance, no changes or modifications should be made to the heat exchanger.
- The operator is obliged to operate the heat exchanger only in proper and safe condition. The technical state must always comply with the legal requirements and regulations.
- Before every start-up of the system in which the heat exchanger is integrated, the heat exchanger must be inspected for damage and proper condition.
- Any changes to the heat exchanger, which may affect the safety, must be immediately reported to the user by the personnel.
- The heat exchanger must only be connected to supply lines provided and designed for this purpose.

2.4 Safety requirements concerning assembly and installation

The following safety requirements must be strictly fulfilled when assembling and installing the shell-and-tube heat exchanger:

- The heat exchanger must solely be assembled by trained and instructed personnel.
- Unauthorized assembly and installation work is not permitted.
- All heat exchanger components must be secured according to the instructions for the transport aid used during transportation.
- Only sufficiently dimensioned lifting gear and tackle may be used for transportation.

2.5 Notes on safety for operation

The following notes on safety must be followed in operation of the shell-and-tube heat exchanger:

- Depending on the application related requirements the user must provide safety facilities like safety valves, heat insulation covers, temperature sensors, etc. The heat exchanger must only be operated if all safety features are in place and functional. The proper state of the safety features must be checked regularly, possibly occurring faults must be rectified immediately.
- The heat exchanger must be provided with a mechanical protection against unauthorized access and contact.
- The heat exchanger must not be exposed to excessive temperature and overpressure.
- Safe operation of the heat exchanger must be assured at all times.
- Throughout the entire operation the prevailing conditions must suit the operation of the heat exchanger.
- The system must be immediately shut down if changes on the heat exchanger, such as e.g. an increased operating temperature, are detected during operation.
- Work on the heat exchanger must only be carried out with the system shut down.
- A label stating that work on the heat exchanger is in progress should be attached near the on/off switch of the system.
- Welding work on the heat exchanger is not allowed.

2.6 Requirements concerning personnel

All personnel must be made familiar with dangers that may arise when handling shell-and-tube heat exchangers before starting any work. Dangers of injury may arise from the heat exchanger if it is used by untrained personnel.

Any person entrusted with starting, operating or servicing the heat exchanger must have read and understood the complete operating instructions. This is also valid if the corresponding personnel has already worked with the heat exchanger or has been trained accordingly.

The operating instructions must always be within the reach of the personnel. It is recommended to obtain a written confirmation from the personnel for receiving the instructions and understanding their contents. Knowing the contents of the operating instructions is a major prerequisite for protecting people against dangers, avoiding mistakes and the safe and trouble free operation of the heat exchanger.

In the end the responsibility for accident-free operation lies with the operator or the authorized persons who have to deal with heat exchangers as part of their duties.

In order to ensure safe handling of the shell-and-tube heat exchanger the personnel is obliged to the following:

- ❑ Smoking, eating and drinking is not permitted in the vicinity of the heat exchanger.
- ❑ Work on the heat exchanger is not permitted if you are overtired, under the influence of alcohol and/or medication.
- ❑ The personnel must not be physically handicapped to such an extent that the attentiveness and the judgement is temporarily or permanently restricted.
- ❑ The personnel must wear protective clothing, gloves and, if necessary, goggles and breather mask, according to the occurring work.
- ❑ All notes on safety in these operating instructions and in the accompanying documents must be taken notice of and adhered to.
- ❑ When noticing dangers that could cause personal injuries the system with integrated heat exchanger must be shut down immediately.
- ❑ The personnel must have profound knowledge of the following operation sequences, instructions, modes of conduct and components:
  - Operation sequences in the interplay between heat exchanger and system
  - Safety features of the heat exchanger and their correct function
  - Borders, safety devices and identification of the danger zone around the heat exchanger
  - Behaviour and action in case of danger
- ❑ Maintenance and repair work on the heat exchanger must only be carried out by trained skilled personnel.

2.7 Handling ancillary materials and service fluids

For all lubricants and service fluids as well as cleansing agents used in connection with operation and maintenance of the heat exchanger the regulations and EC safety data sheets concerning storage, handling, use and waste disposal, issued by the corresponding manufacturer, must be observed.

The following must be observed when handling ancillary materials and service fluids:

- ❑ Do not use substances with unknown properties. If necessary, consult the manufacturer.
- ❑ Fuels and lubricants, cleansing agents and the respective containers must not be disposed of together with normal domestic refuse or seep into the sewer or the ground. For waste disposal you should strictly follow the corresponding regulations.

- Please observe the instructions on the safety data sheets for handling the permitted cleansing agents. The following measures must be applied, among others:
  - After contact with the skin clean off with water and soap
  - After eye contact rinse the eyes for at least 10 minutes under flowing water, if necessary consult a medical specialist
  - After inhaling ensure an adequate supply of fresh air or oxygen, if necessary consult a medical specialist

2.8 Warning decals and type plate

The following decals can be found on the shell-and-tube heat exchanger (see Fig. 1):

- Type plate
- Warning decal "Warning: hot surface"

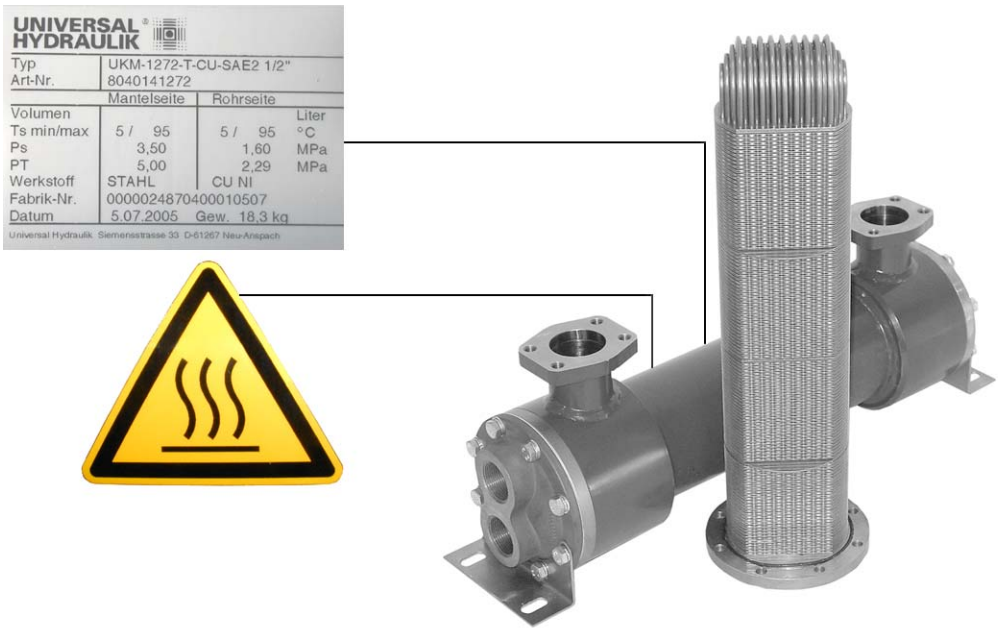

Fig. 1: Decals on heat exchanger

3 Technical data

3.1 Oil/water heat exchangers series UKM and UKTM

Designation	Value
Operating pressure shell max	35 bar
Operating pressure tubes max	10 bar
Operating temperature min/max	5 °C/95 °C

Tab. 1: Technical data series UKM, UKTM

NOTE
Specifications on technical data, such as e.g. dimensions, performance data and calculation examples for all heat exchangers of series UKM and UKTM can be found in the associated data sheets.

3.2 Requirements concerning the water quality

NOTE
Any specifications concerning the water quality are recommendations. In exceptional cases unexpected reactions may occur due to certain concentrations of constituents.

For the assessment of the available cooling water for use in shell-and-tube heat exchangers both the water quality and the constituents are of significance.

The water quality is determined by:

- ❑ Water hardness
- ❑ ph-value of the water

3.2.1 Water hardness

The water hardness specifies the content of hardness constituents (carbonates and bicarbonates).

Especially with higher temperatures these hardness constituents deposit on the tube surfaces and cause a reduction of heat exchanger performance. The critical temperature is 63 °C. With extremely hard water these deposits must be taken into consideration when designing the heat exchanger.

Degree of hardness	Water quality
0 – 5 °dH	very soft water
5 – 10 °dH	soft water
10 – 20 °dH	medium hard water
20 – 30 °dH	hard water
> 30 °dH	very hard water

Tab. 2: Classification of the water quality acc. to German hardness °dH

The following applies as a rule of thumb for converting to German hardness:

- 10 mg/l hardness constituent correspond with 1 °dH

3.2.2 pH-value

The following applies for shell-and-tube heat exchangers with copper and copper-nickel tubes:

- pH-value not < 6. Lower values may cause corrosion problems.

The following applies with alkaline water:

- Water hardness not < 6°dH. With lower values corrosion caused by free carbonic acid may occur.

pH-value	Water quality
4,5	highly acidic
4,5 – 6,0	acidic
6,0 – 6,8	weak acidic
7,0	neutral
7,2 – 7,7	weak alkaline
7,7 – 8,2	alkaline
8,2	highly alkaline

Tab. 3: Classification of water quality acc. to pH-value

3.2.3 Assessment of cooling water based on constituents

The following table gives an overview over the compatibility of copper tubes against water constituents in non-drinking waters.

Assessment criterion	Approx. concentration range in mg/l	Assessment
pH-value	< 6	0
	6 to 9	+
	> 9	0
Chloride	to 1000	+
	> 1000	0
Sulphate	to 70	+
	70 to 300	0
	> 300	–
Nitrate	to 100	+
	> 100	0
free (aggressive) carbonic acid	to 20	+
	20 to 50	0
	> 50	–
Oxygen	to 2*)	+
	> 2	0
Ammonium	to 2	+
	2 to 20	0
	> 20	–
Iron (dissolved)	to 10	+
	> 10	0
Manganese (dissolved)	to 1	+
	> 1	0
free chlorine	to 5	+
	> 5	0
Sulphide		–
Ammonia		–

Tab. 4: Assessment of cooling water quality by constituents

Explanation on table column "Assessment":

+: normally good compatibility

0: Corrosion problems can arise, especially if several factors are evaluated 0

–: use is not recommended

*): SF-copper has proven best in total absence of oxygen and sulphides dissolved in the water

NOTE
For copper-nickel tubes normally higher values apply than those specified in Tab. 4.

3.2.4 Types of cooling waters/peculiarities

Industrial water

The following peculiarities must be taken into account:

- Normally untreated water (no drinking water)
- Very often extremely contaminated
- For the assessment a water analysis is required
- Copper, brass and steel show good resistance against industrial water

Fresh water

- It is recommended to use copper-nickel tubes
- Cast iron parts must be protected against corrosion by a suitable coating
- Normally untreated water (no drinking water)
- Very often extremely contaminated
- For the assessment a water analysis is required

Sea water

- Higher NaCl-content, therefore good electrolyte
- Pairing different materials causes the risk of electrolytic corrosion
- Materials required, which are not too far apart in the electrochemical series, or use a zinc anode
- Brass and copper-nickel alloys show good resistance against seawater

Brackish water

- Mixture of sea and fresh water
- Mostly high content of ammonia and chloride, therefore do not use brass
- Higher NaCl-content, therefore good electrolyte
- Pairing different materials causes the risk of electrolytic corrosion
- Materials required, which are not too far apart in the electrochemical series, or use a zinc anode

4 Technical description

The shell-and-tube heat exchangers mainly consist of the following components:

- ❑ Housing with inlet and outlet socket (see chapter 4.3)
- ❑ Exchangeable tube bundle with aluminium fins
- ❑ Removable lids with inlet and outlet socket (see chapter 4.3)
- ❑ Angle bracket for installation (UKM)
- ❑ Mounting flange for tank installation (UKTM)

NOTE
Specifications on technical data, such as e.g. dimensions, performance data and calculation examples for all heat exchangers of series UKM and UKTM can be found in the associated data sheets.

4.1 Design

4.1.1 UKM

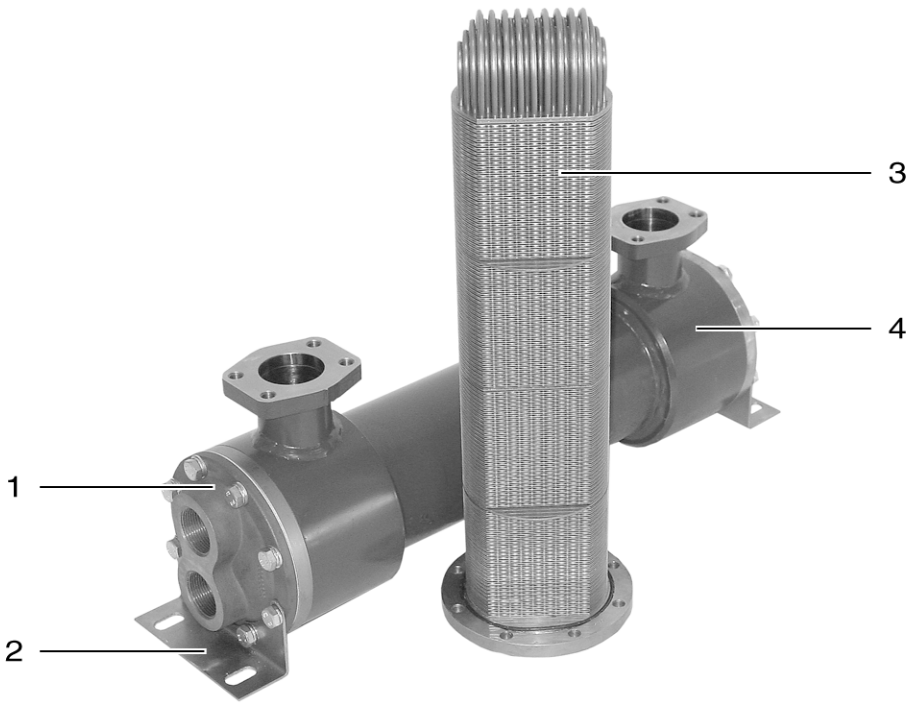

Fig. 2: Components of shell-and-tube heat exchangers (series UKM)

1 Lid with inlet and outlet socket
2 Angle bracket for installation
3 Tube bundle with aluminium fins
4 Shell with inlet and outlet socket

On heat exchangers of series UKM the tube bundle inside the shell can be replaced. Sealing between shell and tube bundle is achieved by a loop ring. The two lids on inlet and outlet side are tightly bolted to the shell with their flanges. Sealing is achieved via gaskets between shell and lids. The aluminium fins provide additional cooling area. These are pushed over the tube bundles and metallically connected with the copper or copper-nickel tubes.
Through one drain port each the fluids can be drained from the pressure relieved heat exchanger (e.g. for the purpose of maintenance or disassembly).

4.1.2 UKTM

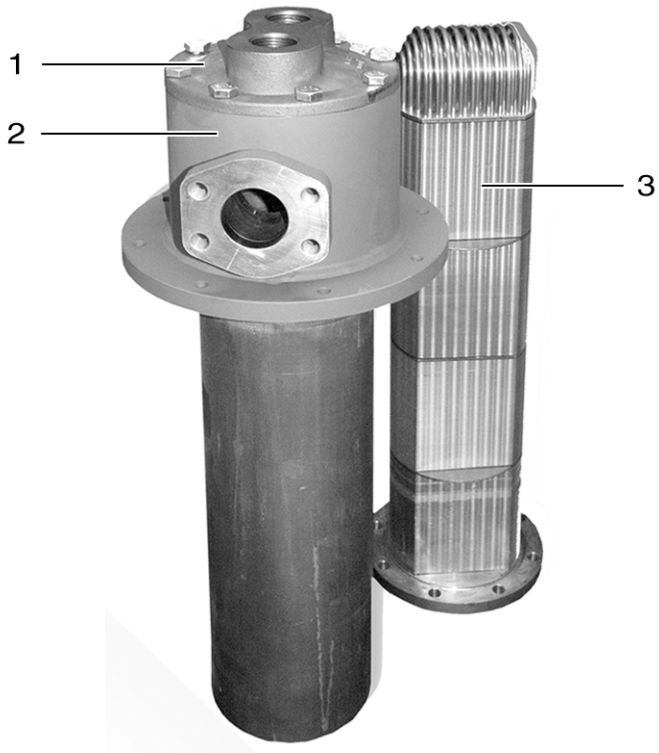

Fig. 3: Components of shell-and-tube heat exchangers (series UKTM)

1 Lid with inlet and outlet socket as well as mounting flange
2 Shell with inlet and outlet socket
3 Tube bundle with aluminium fins

Heat exchangers of series UKTM are specially designed for installation in tanks. The shell is equipped with a tank mounting flange to suit this purpose. The tube bundle can be exchanged. Sealing between shell and tube bundle is achieved by a loop ring. The two lids on inlet and outlet side are tightly bolted to the shell with their flanges. Sealing between shell and lid is achieved by a gasket. The shell is open on the tank side.

Aluminium fins provide an additional heat exchange area. These are pushed over the tube bundles and metallically connected with the copper or copper-nickel tubes.
Through one drain port each the fluids can be drained from the pressure relieved heat exchanger (e.g. for the purpose of maintenance or disassembly).

NOTE
Heat exchangers of series UKTM 500 are not equipped with a drain port. For correct draining or medium, e.g. in case of a repair, a drain plug must be installed into the outlet pipe.

NOTE
Depending on the design of the heat exchanger the inlet and outlet ports are either provided with female threads or with flanges.

4.2 Description of function

Due to the different material combinations shell-and-tube heat exchangers of series UKM and UKTM enable the exchange of heat between vast varieties of media.

On heat exchangers of series UKM medium 2 (e.g. hydraulic oil) is fed in through an inlet port on the shell, guided through reversing segments and discharged through an outlet port.

On heat exchangers of series UKTM medium 2 is fed in through an inlet port on the shell and directly discharged through reversing segments into the tank.

Medium 1 (e.g. water) flows through the inlet and outlet ports in the lids and circulates twice or several times through the tube bundle. The heat from medium 2 is thereby transferred to medium 1 via the surfaces the aluminium fins and the tube bundle, and dissipated to the outside with the fluid flow of medium 1.

4.3 Connections

4.3.1 UKM

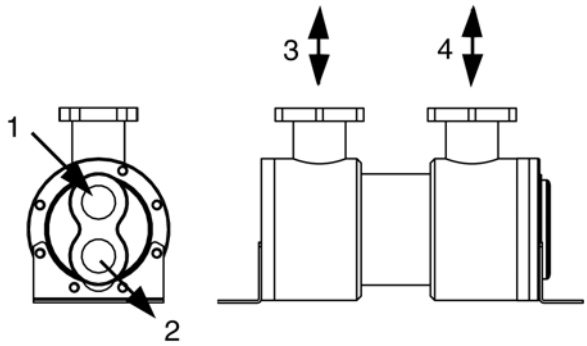

Fig. 4: Connections on heat exchanger 2-way type "T"

1 Inlet medium 1
2 Outlet medium 1
3 Inlet/outlet medium 2
4 Inlet/outlet medium 2

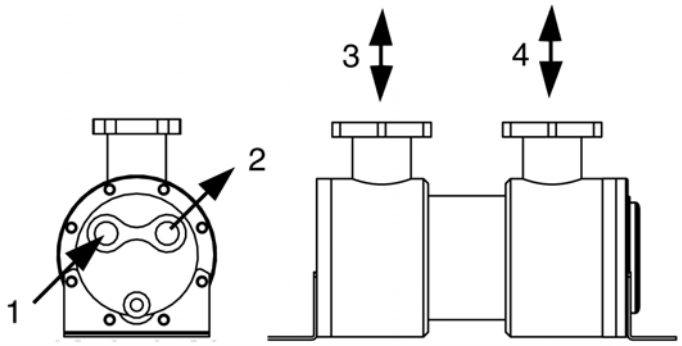

Fig. 5: Connections on heat exchanger 4-way type "F"

1 Inlet medium 1
2 Outlet medium 1
3 Inlet/outlet medium 2
4 Inlet/outlet medium 2

4.3.2 UKTM

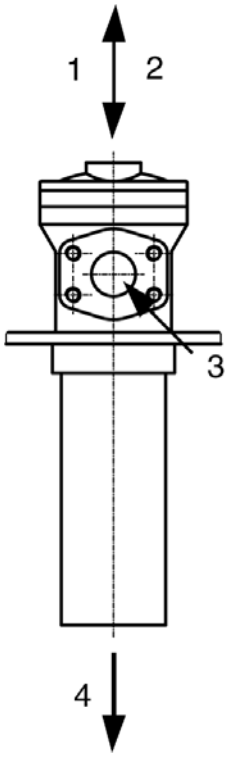

Fig. 6: Ports on heat exchanger UKTM 2-way type "T" and 4-way type "F"

1 Inlet/outlet medium 1
2 Inlet/outlet medium 1
3 Inlet medium 2
4 Outlet medium 2

5 Transport and storage

DANGER
Danger of injury by improper transport.
The total mass of heat exchangers of series UKM and UKTM can be up to 150 kg. For this reason only sufficiently dimensioned lifting gear and lifting tackle acc. to DIN 15003 "Lifting gear; load suspension devices, loads, forces, terminology" and BGV D8 must be used for transport purposes.

ATTENTION
Warning of possible damage to sealing surfaces.
During transportation take care not to scratch the sealing surfaces on the connecting flanges.

ATTENTION
Warning of possible damage to the tube bundles.
Take care not to damage or bend fins or tubes when transporting or storing tube bundles.

NOTE
Danger of contamination caused by conserving agents.
When using conserving agents make sure that these do not seep into the ground or the sewer system. These must be disposed of in compliance with the applicable regulations for protection of the environment. This applies also for de-conservation.

Depending on their weight, heat exchangers are either transported in cardboard boxes or on wooden pallets. All openings on the heat exchanger are closed with plugs.

Before storage of the heat exchanger you must make sure that all fluid ports are closed with plugs. The heat exchanger must be treated with a conserving agent (e.g. anti-corrosion oil) as protection against corrosion. The storage period for the heat exchanger must not exceed 2 years. All conserving agents must be completely removed before reinstallation.

In order to avoid frost damages under temperatures below zero, all medium must be drained off the heat exchanger, if water has been used as cooling medium. Most of the standard models are provided with drainage ports to serve this purpose. For models without drainage port such a port must be installed in the outlet pipe for medium 1.

6 Assembly/disassembly

DANGER
Danger of injury.
Before assembling or disassembling the heat exchanger the system must be shut down and secured against switching back on.

DANGER
Danger of escaping fluids with the risk of contamination.
If the heat exchanger is installed in a system with tank, you should check whether the tank filling level is above the installation position before assembling or disassembling the heat exchanger. In this case the tank must be emptied beforehand.

DANGER
Danger of injury by improper transport.
The total mass of heat exchangers of series UKM and UKTM can be up to 150 kg. For assembly and disassembly work be sure to use sufficiently dimensioned lifting gear and lifting tackle acc. to DIN 15003 "Lifting gear; load suspension devices, loads, forces, terminology" and BGV D8.

6.1 Assembly conditions

The full utilization of the heat exchanger performance depends on certain measures, which must be observed during assembly and installation.

- ❑ Use only pipes and fittings of identical or matching material (type specification) when connecting the heat exchanger.
- ❑ Check the heat exchanger for contamination and foreign bodies in the connecting ports, to ensure free flow of the fluids.
- ❑ Connect the heat exchanger so that the fluid drain ports are on the underside of the heat exchanger.
- ❑ Keep the connecting ports free of strain when connecting the pipeline system. If necessary support the pipelines properly.
- ❑ When using an automatic throttle valve it should be installed at the inlet of the heat exchanger.
- ❑ Route the outlet pipe for medium 1 in a way that the heat exchanger remains continuously filled with medium 1.

- When installing heat exchangers of series UKTM make sure that the mating flange on the tank fits exactly and has a level surface. The tank mounting flange must be tightly connected with the tank.
- When installing heat exchangers of series UKTM care must also be taken that the heat exchanger is not subjected to excessive forces and vibrations. Vibrations can be dampened by installing an appropriate suspension for the heat exchanger.

6.2 Installing and connecting the heat exchanger

The heat exchanger must be tightly installed in its intended place and all pipe connections are to be correctly assembled.

ATTENTION
Danger of damage to the system.
Do not mix up inlet and outlet pipes by mistake. Follow the piping diagrams.

ATTENTION
Danger of cracking.
Using sealing tape on the pipe threads increases the resistance between the connecting components and thus the risk of cracks appearing in the castings of the heat exchanger. The threads should not be overtightened.

ATTENTION
Danger of damage to heat exchanger components.
Heat exchangers with sea and brackish water coolant circuit (medium 1) must be fitted with a zinc anode in order to prevent electrolytic corrosion.

ATTENTION
Warning of performance reduction.
Heat exchangers of series UKM should preferably be mounted horizontally and with the drain port pointing downwards. With an upright or slanted installation position a drop in performance can be expected. In this position the drain port must in any case be arranged at the bottom, as otherwise the heat exchanger cannot be drained.
When mounting heat exchangers of series UKTM in a horizontal position the heat exchanger must be turned so that the drain port points downwards.

Proceed as follows to assemble the heat exchanger:

ATTENTION
Danger of cracking caused by inappropriate tightening of the fastening screws on the connecting flanges. The screws must be evenly tightened crosswise.

NOTE
Heat exchangers of series UKTM 500 are not equipped with a drain port for medium 1. For correct draining, e.g. in case of a repair, a drain plug must be installed into the outlet pipe for medium 1.

- ❑ Empty the tank if necessary
- ❑ Fasten the heat exchanger:
  - – If necessary, fasten the heat exchanger of series UKM on a solid foundation or another fixed base, using the angle brackets provided for this purpose.
  - – Fasten heat exchangers of series UKTM with the tank connection flange and the corresponding seal to the tank
- ❑ Connect the inlet and outlet pipes for medium 1 to the corresponding connecting ports on the lid (see chapter 4.3)
- ❑ Connect inlet and outlet pipes for medium 2 with the corresponding seals to the connecting ports on the shell side (see Fig. 4.3), tighten the fastening screws on lids and flanges of the supply pipes evenly crosswise.

The following measures can be applied to ensure correct functioning of the heat exchanger in different systems:

- ❑ Install the safety valve into the inlet pipe for medium 1 or 2 as a measure to protect against extreme flow or pressure fluctuations
- ❑ Install a filter into the inlet pipe for medium 1 or 2, in order to protect the heat exchanger against contamination and soiling , e.g. if the cooling water is not taken from the municipal water supply.
- ❑ When using sea or brackish water as medium 1 (coolant) install a zinc anode into the lid or the inlet pipe (see chapter 8.1.3), to prevent electrolytic corrosion on heat exchanger components
- ❑ Install the automatic throttle valve into the corresponding inlet pipe, in order to compensate overpressure

NOTE
For information on the selection and installation of safety and throttle valves as well as filters, please contact Universal Hydraulik GmbH.

6.3 Disassembling the heat exchanger

DANGER
Danger of injury caused by fluids under pressure.
Always relieve all systems from pressure and secure the systems according to the valid accident prevention instructions before starting disassembly work on the heat exchanger.

DANGER
Danger of burning on hot parts.
Touching heated up components (e.g. supply pipes) on the heat exchanger can cause burns. Allow all components to cool down before disassembling heat exchanger and supply pipes.

DANGER
Risk of contamination caused by drained off fluids.
When draining off fluids do not let these seep into the ground or the sewer system. Such fluids must be collected in safe containers and disposed of in compliance with the valid regulations for the protection of the environment.

ATTENTION
Danger of injury by the heat exchanger dropping down.
Use sufficiently dimensioned lifting gear and lifting tackle to secure the heat exchanger against falling down, before starting to disassemble.

Proceed as follows to disassemble the heat exchanger:

1. Shut down the system and secure it reliably against being switched on again
2. Relieve the heat exchanger and the connected system pipes from pressure and shut these off by the corresponding valves
3. Drain off all fluids through the drain plugs or drain ports provided for this purpose, if necessary empty the tank
4. Disconnect the inlet and outlet pipes for medium 2 from the connections on the shell side
5. Disconnect the inlet and outlet pipes for medium 1 from the connections on the lids
6. Disassembling the heat exchanger:
   - On series UKM unscrew the fastening screws from the angle bracket, lift off the heat exchanger with sufficiently dimensioned lifting gear and place it safely to the side.
   - On series UKTM unscrew the fastening screws from the tank mounting flange, lift off the heat exchanger with sufficiently dimensioned lifting gear and place it safely to the side.

7 Operation

After installation in the system the heat exchanger can be started up and operated without any further preparations. After start-up you should check the correct function of the heat exchanger.

The following inspections are required:

- ❑ Check connections for leaks
- ❑ If necessary, check valves, fittings and filters for unrestricted flow and proper function
- ❑ Check the correct function of the heat exchanger

ATTENTION
Danger of system damage caused by drops in performance.
Drops in performance can be caused by deposits of oil slurry on the shell side or by lime deposits on the tube side.
In this context read chapter 8.2.

NOTE
For a better determination of service intervals for newly installed heat exchangers it is recommended to record all parameters which permit conclusions on the performance of the heat exchanger.

NOTE
If faults occur during operation of the heat exchanger which cannot be rectified immediately, you should contact Universal Hydraulik GmbH.

Peculiarities of heat exchangers with sea or brackish water cooling circuit:

ATTENTION
Danger of material damage to components caused by aggressive cooling fluids, like sea or brackish water.
Sea or brackish water and other caustic fluids must not be used in the standard models. The use of these aggressive cooling fluids requires special materials.

When using heat exchangers to cool the medium 2 with sea or brackish water, special materials are required. Applications of this nature should strictly be discussed with Universal Hydraulik GmbH.

Heat exchangers with sea or brackish water cooling must be equipped with a zinc anode at the inlet side.

8 Maintenance, repair and cleaning

DANGER
Danger of escaping fluids with the risk of contamination.
If the heat exchanger is installed in a system with tank, you should check whether the tank filling level is above the installation position before starting repair or cleaning work on the heat exchanger. In this case the tank must be emptied beforehand.

NOTE
Repairs on the tube bundles of the heat exchanger are only permitted in emergency situations. In this case Universal Hydraulik GmbH must generally be contacted. Disturbed functions must be analyzed and reported to the manufacturer.

NOTE
Contact the manufacturer to order spare parts and wear items.
Universal Hydraulik GmbH
Siemensstr. 33
D-61267 Neu-Anspach

8.1 Maintenance

8.1.1 Maintenance intervals

DANGER
Danger of drop in performance.
The maintenance intervals for the heat exchanger must be determined in such a way, that operation of the heat exchanger is not endangered by a drop in performance.

The service life of a heat exchanger depends to a high degree on the quality of the water and its constituents. The operator is solely responsible for the determination of maintenance intervals. The performance parameters and performance specifications detected during operation must be used for this purpose.

The following information must be observed:

- ❑ When using a zinc anode this should be checked for wear two weeks after initial start-up
- ❑ With the visual inspection of the anode determine the inspection intervals, the corrosion thickness detected on the zinc metal can be used as basis for this determination
- ❑ Replace the zinc anode after 70 % of the zinc quantity have been lost

8.1.2 Replacing tube bundles

ATTENTION
Danger of damaging the tube bundle.
Do not skew the tube bundle during disassembly or assembly since this would damage the tube bundle or the fins.

NOTE
For disassembly the tube bundle is provided with 2 tapped bores for forcing screws.

1. Shut down the system and secure it against being switched on again
2. Shut off all fluids pipes and relieve the pressure from the heat exchanger
3. Drain off all fluids, if necessary empty the tank
4. Disconnect all pipes from the lid
5. Unscrew the fastening screws from the lid and pull the tube bundle out of the shell
6. Clean the shell compartment of the heat exchanger (see chapter 8.2.3)
7. Fit the tube bundle with a new loop ring and slide it carefully into the shell
8. Assemble the lid with a new gasket (changing seals see chapter 8.2.4), tighten the fastening screws evenly crosswise
9. Reassemble and bleed all fluid pipes

8.1.3 Replacing the zinc anode

The zinc anode is replaced as follows:

1. Shut down the system and secure it against being switched on again
2. Shut off the inlet and outlet pipes for medium 1
3. Relief the pressure from the heat exchanger and drain off medium 1
4. Unscrew the zinc anode, estimate the wear and replace it if necessary
5. Vent the pipes before switching the system back on

8.2 Cleaning

The tube bundle of the heat exchanger can be cleaned from inside and outside. The performance parameters and performance specifications detected during operation must be used to establish the cleaning intervals. The intervals must be determined in such a way, that operation of the system is not endangered by a drop in heat exchanger performance.

8.2.1 Notes on safety for cleaning

DANGER
Danger of injury by caustic burns or poisoning.
When cleaning the tube bundle (e.g. with hydrochloric acid) and the shell compartment (e.g. with trichloroetylene) caustic burns to parts of the body and damage to eyes may occur if the applicable industrial safety regulations are not strictly adhered to.
You should therefore always strictly comply with the applicable industrial safety regulations when handling the above mentioned or other cleansing agents.
Always wear protective clothing, gloves and, if necessary, goggles and a breather mask when working with aggressive cleansing agents.

ATTENTION
Danger of contaminating the medium.
By experience, the cleansing agent cannot be completely removed. For this reason it is important to make sure that the cleansing agent is compatible with the medium.

ATTENTION
Danger of damage to heat exchanger components.
Before using other comparable aggressive cleansing agents you should generally contact Universal Hydraulik GmbH, in order to prevent important components from being damages by incorrect treatment.

ATTENTION
Danger of damage to heat exchanger components.
Properly vent the heat exchanger and the connected system before taking it back into service.

NOTE
Danger of contamination by cleansing agents.
When using cleansing agents, such as e.g. hydrochloric acid, make sure that it is properly disposed of.
For waste disposal you must strictly follow the national regulations for protection of the environment.

8.2.2 Cleaning tube bundles

DANGER
Danger of injury.
For cleaning the tube bundles you must strictly comply with the notes on safety listed in chapter 8.2.1.

ATTENTION
Danger of corrosion.
The aluminium fins of the tube bundle must not come into contact with hydrochloric acid when cleaning.

ATTENTION
Danger of corrosion caused by scratches.
Scratches on the inside surfaces of the tube bundles can lead to severe corrosion. For this reason use a brush with soft bristles for internal cleaning.

NOTE
For the use of cleansing agents you should contact
Universal Hydraulik GmbH.

The tube bundle must be removed from the heat exchanger before it can be cleaned. For this purpose please proceed as described in chapter 8.1.2.

The following cleaning measures are recommended:

- ❑ Inside the tube you may use a mixture of 50 % hydrochloric acid with inhibitors and 50 % water to remove lime deposits.
- ❑ Tube bundles with a tube-Ø of <5 mm can be cleaned with hydrochloric acid or by submerging in a ultrasonic bath
- ❑ Contamination caused by other fluids can be removed by using a corresponding cleansing agent (contact Universal Hydraulik GmbH for advice).
- ❑ With tube Ø >5 mm the tube bundle can be internally cleaned with a brush. Make sure that a brush with soft bristles is used, to avoid scratching of the tube walls.

- ❑ The tube bundle can be externally cleaned by submerging the tube bundle in a ultrasonic bath or by rinsing with trichloroethylene.
- ❑ After completion of cleaning work and before taking the heat exchanger back into service make sure that all cleansing agent residues are removed from the tubes, as far as this is possible.

The following steps are required for cleaning:

1. Shut down the system and secure it against being switched on again
2. Shut off the inlet and outlet pipes for medium 1
3. Relief the pressure from the heat exchanger and drain off medium 1
4. Remove the tube bundle (see chapter 8.1.2)
5. Clean the tube bundle
6. Reassemble the tube bundle (see chapter 8.1.2)
7. Vent the pipes before switching the system back on

8.2.3 Cleaning the shell compartment

DANGER
Danger of injury.
For cleaning the shell compartment you must strictly comply with the notes on safety listed in chapter 8.2.1.

Slurries may deposit in the shell compartment of the heat exchanger, so that cleaning is required. This requires disassembly of the heat exchanger (see chapter 6.3) and removal of the tube bundle (see chapter 8.1.2).

The following cleaning measures are recommended:

- ❑ Depending on the extent of soiling clean the shell compartment once or several times with a commercially available solvent, e.g. trichloroethylene.
- ❑ After completion of cleaning work and before taking the heat exchanger back into service make sure that all cleansing agent residues are removed from the tubes, as far as this is possible.

8.2.4 Reinstallation after cleaning

DANGER
Danger of fluids escaping under pressure.
Before fitting new seals the sealing surfaces must be thoroughly cleaned of any sealing residuals. Dirty sealing surfaces can lead to injury, e.g. to the eyes, if fluids escape under pressure upon restarting.

ATTENTION
Danger of damage to sealing surfaces.
Do not clean sealing surfaces with sharp objects. Scores in sealing surfaces may cause leaks.

Before reassembly after cleaning work the following activities are necessary:

- ❑ Remove old gaskets
- ❑ Clean the sealing surfaces from gasket residuals, take care not to damage the sealing surfaces.
- ❑ Install new gaskets, ensure correct fit
- ❑ O-rings must be generally replaced

9 Waste disposal

NOTE
Fuels and lubricants, cleansing agents and the respective containers must not be disposed of together with normal domestic refuse or seep into the sewer or the ground. Dispose of these materials and the heat exchanger in strict compliance with the applicable national regulations for the protection of the environment.

The heat exchanger must be disposed of as special refuse.

MAHLE

Low Pressure Filter
Pi 200

Operating pressure 25 (63) bar, Nominal size up to 450

1. Features

Efficient filters for modern hydraulic systems

- Modular design
- Minimal pressure loss
- Compact design
- Visual / electrical / electronical differential pressure indication
- Threaded ports

Quality filters, easy to service

- Highly efficient Sm-x filter elements
- ß-rated elements per ISO 4572
- Large dirt holding capacity and high differential pressure stability providing optimal element service life
- 100% bubble-point tested elements

World-wide sales

MAHLE Filtersysteme GmbH · **Bereich Industriefilter** · Postfach 13 09 · 74603 Öhringen · Telefon (0 79 41) 67-0 · Telefax (0 79 41) 67-429

2. Flow rate / pressure drop curve compl. filter

190 mm²/s (25° E)
33 mm²/s (4,5° E)

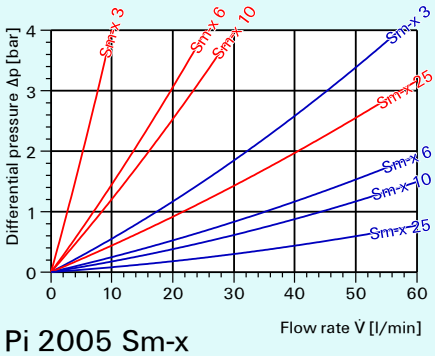

Pi 2005 Sm-x

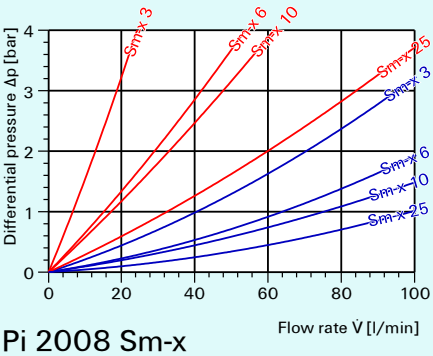

Pi 2008 Sm-x

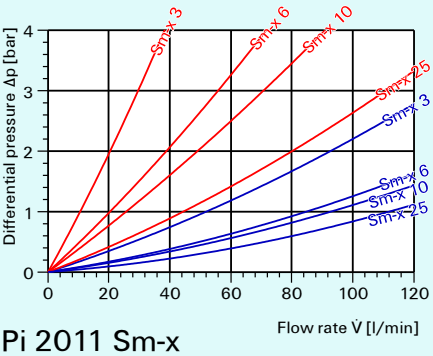

Pi 2011 Sm-x

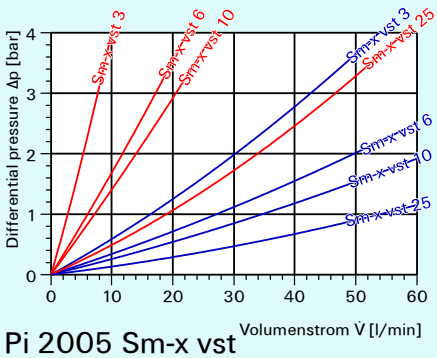

Pi 2005 Sm-x vst

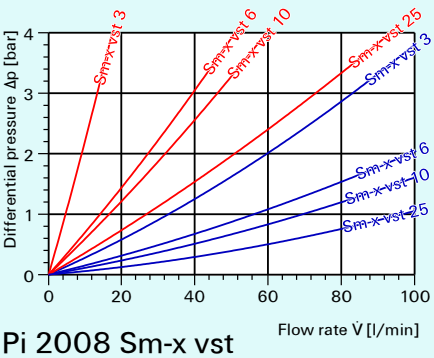

Pi 2008 Sm-x vst

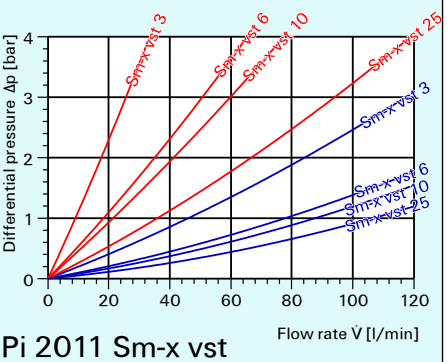

Pi 2011 Sm-x vst

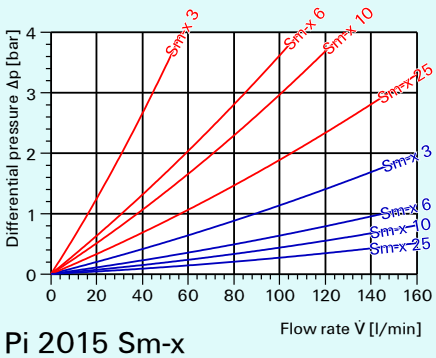

Pi 2015 Sm-x

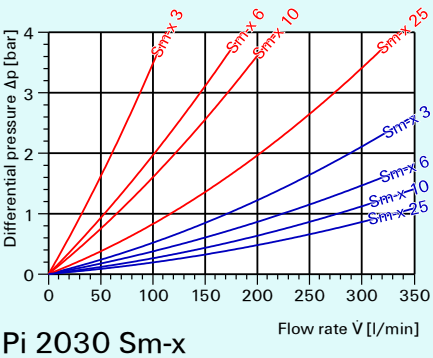

Pi 2030 Sm-x

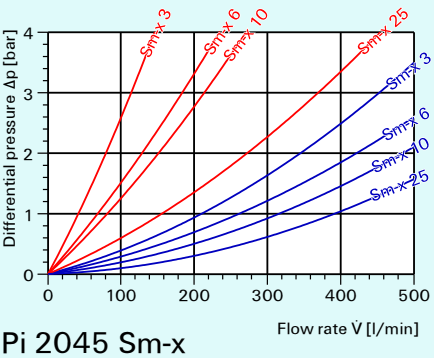

Pi 2045 Sm-x

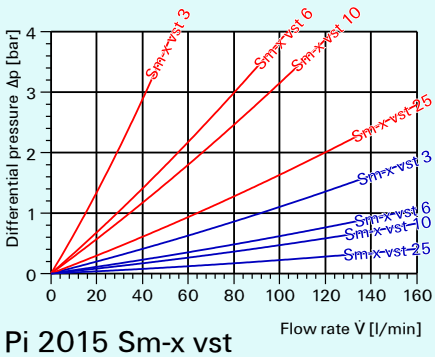

Pi 2015 Sm-x vst

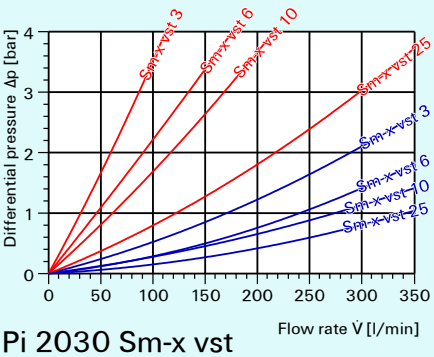

Pi 2030 Sm-x vst

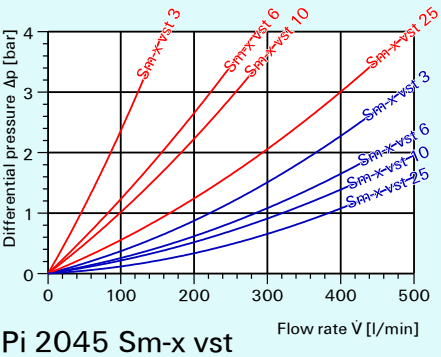

Pi 2045 Sm-x vst

3. Separation characteristics

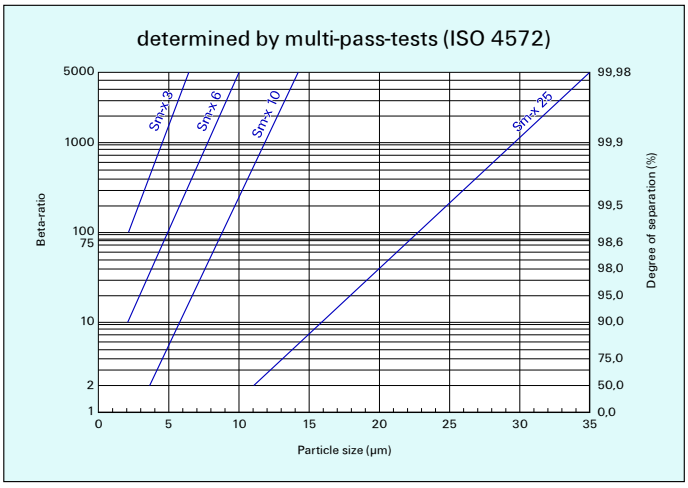

4. Filter performance data

tested according to ISO 4572 (multi-pass-test)

Sm-x elements with Δp 20 bar		Sm-x vst elements with Δp 210 bar	
Sm-x 3	$\beta_3 \geqq 75$	Sm-x vst 3	$\beta_3 \geqq 75$
Sm-x 6	$\beta_6 \geqq 75$	Sm-x vst 6	$\beta_6 \geqq 75$
Sm-x 10	$\beta_{10} \geqq 75$	Sm-x vst 10	$\beta_{10} \geqq 75$
Sm-x 25	$\beta_{25} \geqq 75$	Sm-x vst 25	$\beta_{25} \geqq 75$
at 7 bar differential pressure		at 16 bar differential pressure	

Example for ordering filters:

1. Housing design $\dot{V}$ = 80 l/min, electrical indication
   Type-no. **Pi 2208-69** Order-no. **766.528.4**

\+ 2. Filter element Sm-x vst 3
   Type-no. **Pi 2208** Order-no. **768.020.0**

7. Order numbers

7.1 Housing design

Part number	Type number	Nominal size (NG)	① With indicator cavity	② With bypass valve and indicator cavity	③ With bypass valve and visual indicator	④ With bypass valve and electrical indicator	⑤ With visual indicator	⑥ With electrical indicator
766.514.4	Pi 2005-60	50	■					
766.511.0	Pi 2005-56			■				
766.512.8	Pi 2005-57				■			
766.513.6	Pi 2005-58					■		
766.516.9	Pi 2005-68						■	
766.517.7	Pi 2005-69							■
766.523.5	Pi 2008-60	80	■					
766.520.1	Pi 2008-56			■				
766.521.9	Pi 2008-57				■			
766.522.7	Pi 2008-58					■		
766.527.6	Pi 2008-68						■	
766.528.4	Pi 2008-69							■
820.511.4	Pi 2011-60	110	■					
820.512.2	Pi 2011-56			■				
820.513.0	Pi 2011-57				■			
820.514.8	Pi 2011-58					■		
820.515.5	Pi 2011-68						■	
820.516.3	Pi 2011-69							■
766.533.4	Pi 2015-60	150	■					
766.530.0	Pi 2015-56			■				
766.531.8	Pi 2015-57				■			
766.532.6	Pi 2015-58					■		
766.539.1	Pi 2015-68						■	
766.540.9	Pi 2015-69							■
766.547.4	Pi 2030-60	300	■					
766.544.1	Pi 2030-56			■				
766.545.8	Pi 2030-57				■			
766.546.6	Pi 2030-58					■		
766.551.6	Pi 2030-68						■	
766.553.2	Pi 2030-69							■
766.488.1	Pi 2045-60	450	■					
766.487.3	Pi 2045-56			■				
766.486.5	Pi 2045-57				■			
766.485.7	Pi 2045-58					■		
766.492.3	Pi 2045-68						■	
766.493.1	Pi 2045-69							■

When filter with non bypass configuration is selected the collapse pressure of the element may not be exceeded.

5. Test regulations

MAHLE filter elements are manufactured respectively, tested in accordance with the following international standards:

No.	Designation	
ISO 2941	Hydraulic-filter elements:	Verification of burst resistance
ISO 2942	Hydraulic-filter elements:	Determination of fabrication integrity
ISO 2943	Hydraulic-filter elements:	Verification of material compatibility with hydraulic fluids
ISO 3723	Hydraulic-filter elements:	Method for testing end-cap load
ISO 3724	Hydraulic-filter elements:	Verification of flow fatigue characteristics
ISO 3968.2	Hydraulic-filters:	Evaluation of pressure drop versus flow
ISO 4572	Hydraulic-filter elements:	Testing of filter performance (multi-pass-test)

6. Symbols

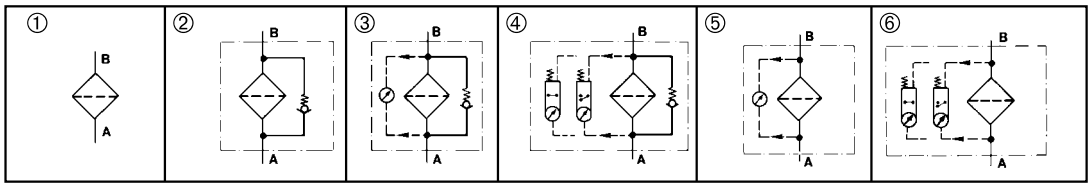

7.2 Filter elements* ( ) = Filter sureface area [ ] = Type number

Sm-x 3 Δp 20 bar	Sm-x 6 Δp 20 bar	Sm-x 10 Δp 20 bar	Sm-x 25 Δp 20 bar	Sm-x vst 3 Δp 210 bar	Sm-x vst 6 Δp 210 bar	Sm-x vst 10 Δp 210 bar	Sm-x vst 25 Δp 210 bar
(590 cm²)	(590 cm²)	(590 cm²)	(590 cm²)	(470 cm²)	(470 cm²)	(470 cm²)	(470 cm²)
				768.019.2	794.353.3	768.038.2	768.050.7
768.013.5	794.350.9	768.032.5	768.044.0				
768.013.5	794.350.9	768.032.5	768.044.0	[Pi 2205]	[Pi 5205]	[Pi 3205]	[Pi 4205]
768.013.5	794.350.9	768.032.5	768.044.0				
[Pi 2105]	[Pi 5105]	[Pi 3105]	[Pi 4105]	768.019.2	794.353.3	768.038.2	768.050.7
				768.019.2	794.353.3	768.038.2	768.050.7
(1150 cm²)	(1150 cm²)	(1150 cm²)	(1150 cm²)	(900 cm²)	(900 cm²)	(900 cm²)	(900 cm²)
				768.020.0	794.354.1	768.119.0	768.051.5
768.014.3	794.351.7	768.034.1	768.045.7				
768.014.3	794.351.7	768.034.1	768.045.7	[Pi 2208]	[Pi 5208]	[Pi 3208]	[Pi 4208]
768.014.3	794.351.7	768.034.1	768.045.7				
[Pi 2108]	[Pi 5108]	[Pi 3108]	[Pi 4108]	768.020.0	794.354.1	768.119.0	768.051.5
				768.020.0	794.354.1	768.119.0	768.051.5
(1700 cm²)	(1700 cm²)	(1700 cm²)	(1700 cm²)	(1315 cm²)	(1315 cm²)	(1315 cm²)	(1315 cm²
				768.021.8	794.355.8	768.039.0	768.052.3
768.015.0	794.352.5	768.033.3	768.046.5				
768.015.0	794.352.5	768.033.3	768.046.5	[Pi 2211]	[Pi 5211]	[Pi 3211]	[Pi 4211]
768.015.0	794.352.5	768.033.3	768.046.5				
[Pi 2111]	[Pi 5111]	[Pi 3111]	[Pi 4111]	768.021.8	794.355.8	768.039.0	768.052.3
				768.021.8	794.355.8	768.039.0	768.052.3
(2350 cm²)	(2350 cm²)	(2350 cm²)	(2350 cm²)	(2010 cm²)	(2010 cm²)	(2010 cm²)	(2010 cm²)
				768.022.6	795.512.3	768.040.8	768.053.1
768.016.8	795.509.9	768.035.8	768.047.3				
768.016.8	795.509.9	768.035.8	768.047.3	[Pi 2215]	[Pi 5215]	[Pi 3215]	[Pi 4215]
768.016.8	795.509.9	768.035.8	768.047.3				
[Pi 2115]	[Pi 5115]	[Pi 3115]	[Pi 4115]	768.022.6	795.512.3	768.040.8	768.053.1
				768.022.6	795.512.3	768.040.8	768.053.1
(4420 cm²)	(4420 cm²)	(4420 cm²)	(4420 cm²)	(3800 cm²)	(3800 cm²)	(3800 cm²)	(3800 cm²)
				768.023.4	795.513.1	768.041.6	768.054.9
768.017.6	795.510.7	768.036.6	768.048.1				
768.017.6	795.510.7	768.036.6	768.048.1	[Pi 2230]	[Pi 5230]	[Pi 3230]	[Pi 4230]
768.017.6	795.510.7	768.036.6	768.048.1				
[Pi 2130]	[Pi 5130]	[Pi 3130]	[Pi 4130]	768.023.4	795.513.1	768.041.6	768.054.9
				768.023.4	795.513.1	768.041.6	768.054.9
(6540 cm²)	(6540 cm²)	(6540 cm²)	(6540 cm²)	(5600 cm²)	(5600 cm²)	(5600 cm²)	(5600 cm²)
				768.024.2	795.514.9	768.042.4	768.055.6
768.018.4	795.511.5	768.037.4	768.049.9				
768.018.4	795.511.5	768.037.4	768.049.9	[Pi 2245]	[Pi 5245]	[Pi 3245]	[Pi 4245]
768.018.4	795.511.5	768.037.4	768.049.9				
[Pi 2145]	[Pi 5145]	[Pi 3145]	[Pi 4145]	768.024.2	795.514.9	768.042.4	768.055.6
				768.024.2	795.514.9	768.042.4	768.055.6

*Further elements available upon request.

8. Specifications

Design:	line mounting filter
Operating pressure:	25 bar*
Test pressure:	33 bar
Temperature range:	-10 ˚C to +120 ˚C (other temperature ranges on request)
Bypass opening pressure:	Δp 3,5 bar ±10 %
Filter head material:	GDAL
Filter bowl material:	AL / St
Material of seals:	NBR / AL
Activating pressure of visual / electrical differential pressure indicator:	Δp 2,2 bar ±0,3 bar
Electrical data of contamination indicator:	
Maximum voltage:	230 V ∿/=
Maximum current on contact:	2,5 A
Maximum contact load:	60 VA / 40 W
Inrush current:	70 VA
Type of protection:	IP 65 when inserted and secured
Contact:	bistable
Cable connection:	PG 11 Ø 6–10

The electrical indicator function can be changed from the Normally Open position to the Normally Closed position or visa versa by inverting the electrical section.

With the inrush current of 70 VA the indicator can trigger small contactors or contactor relays.

Inductivity in the direct current may require the use of a signal eraser.

For further information and executions please see our leaflet Contamination indicators.

Filters compatible with standard mineral oils.

Please contact us in case of using other media.

***Types Pi 2005.. – Pi 2011.. have an operating pressure of 63 bar, test pressure 82 bar.**

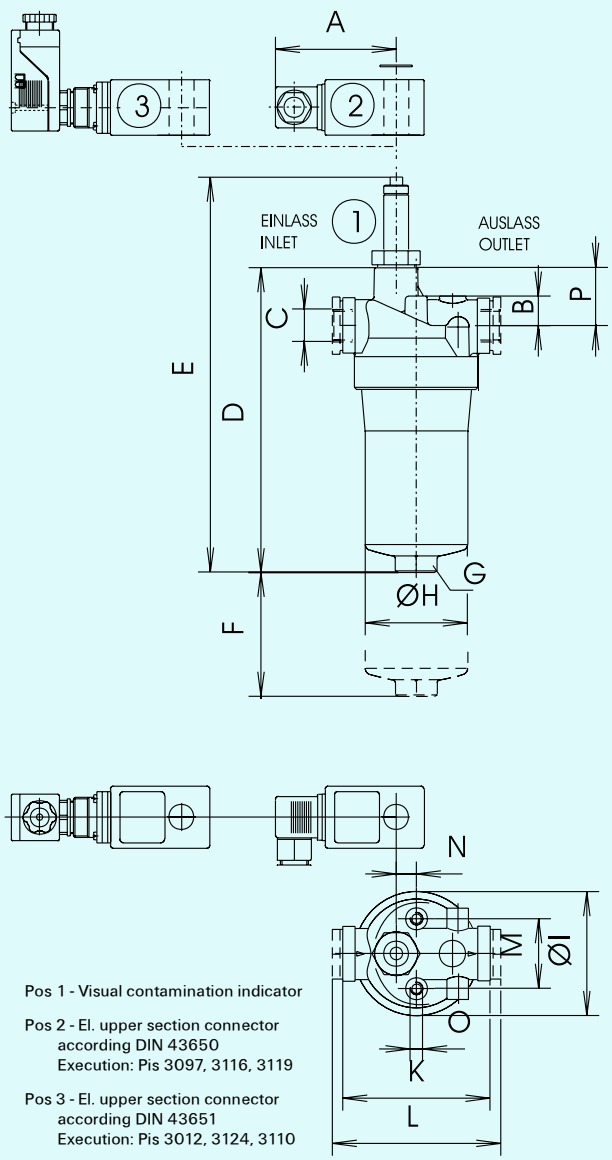

9. Dimensions

All dimensions (except "C") in mm

Dimension / Type	A	B	C	D	E	F	G SW	H	I	K	L	M	N	O	P	Weight
Pi 2005	78	19	G ½	177	235	80	27	66	80	–	109	45	13	M 8 x 10	37,5	0,9 kg
Pi 2008	78	19	G ¾	253	311	80	27	66	80	95	–	45	13	M 8 x 10	37,5	1 kg
Pi 2011	78	19	G ¾	335	393	80	27	66	80	95	–	45	13	M 8 x 10	37,5	1,1 kg
Pi 2015	78	30	G 1¼	246	304	110	32	109	128	150	–	60	24,5	M 12 x 15	43,5	2,1 kg
Pi 2030	78	30	G 1¼	363	421	110	32	109	128	150	–	60	24,5	M 12 x 15	43,5	2,4 kg
Pi 2045	78	30	G 1¼	478	536	110	24	109	128	150	–	60	24,5	M 12 x 15	43,5	6,5 kg

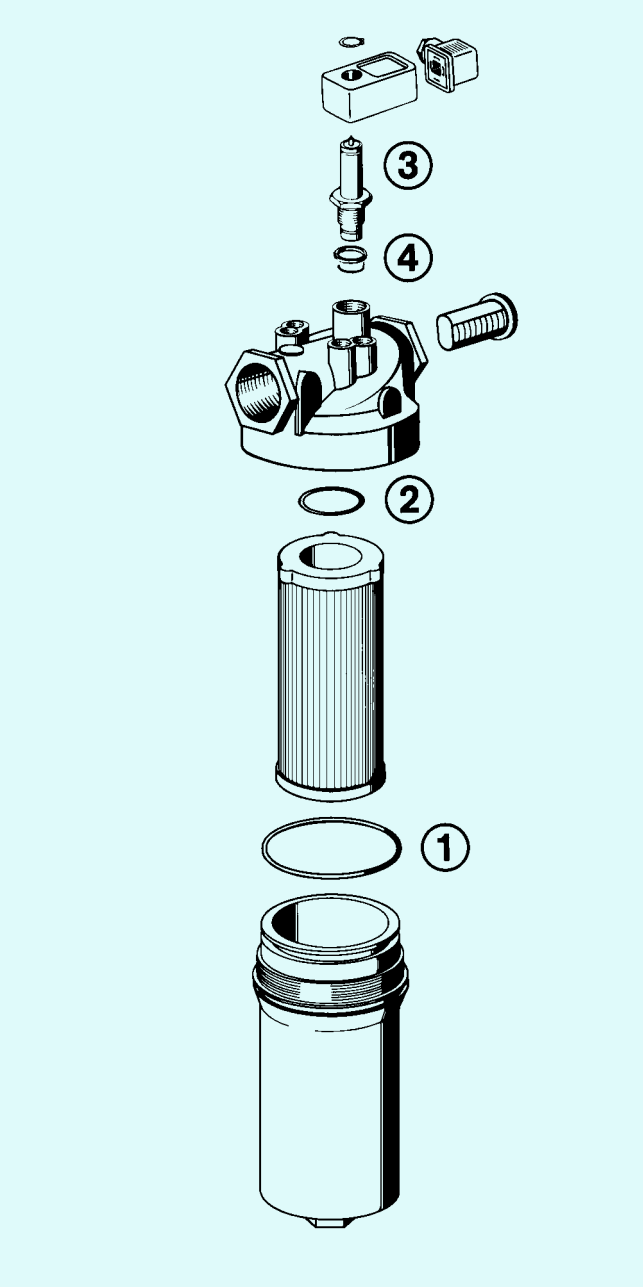

11. Spare parts list

Pos.	Type number / housing	
	Pi 2005–Pi 2011	**Pi 2015–Pi 2045**
① to ②	Seal kit for filter housing NBR 755.021.3 FPM 784.579.5 EPDM 784.580.3	Seal kit for filter housing NBR 755.022.1 FPM 784.581.1 EPDM 784.582.9
③	Contamination indicator visual 766.997.1 Pis 3098/2,2 bar electrical 766.994.8 Pis 3097/2,2 bar electrical upper section only 753.655.0	
④	Seal kit for contamination indicator NBR 776.030.9 FPM 776.031.7 EPDM 776.032.5	

10. Installation, operating and maintenance instructions

10.1 Filter installation

When installing the filter make sure that sufficient space is available to remove filter element and filter bowl.
Preferable the filter should be installed with the filter bowl pointing downwards.
The contamination indicator must be visible.

10.2 Connecting the electrical contamination indicator

The electrical indicator is connected via a 2-pole appliance plug according to DIN 43 650 with poles marked 1 and 2.
The electrical section can be inverted to change from Normally Open position to Normally Closed position or visa versa.

10.3 When must the filter element be replaced?

1. Filters equipped with visual and electrical contamination indicator:
   During cold starts, the indicator may give a warning signal. Depress the red button of the visual indicator once again only after operating temperature has been reached. If the red button immediately pops out again and/or the electrical signal has not switched off after reaching operating temperature, the filter element must be replaced after the end of the shift.
2. Filters without contamination indicator:
   The filter element should be replaced after the trial run or flushing of the system. Afterwards follow instructions of the manufacturer.
3. Please always ensure that you have original MAHLE-replacement elements in stock: disposable elements (Sm-x) cannot be cleaned.

10.4 Element replacement

1. Stop system and relieve filter from pressure.
2. Unscrew the filter bowl by turning counter-clockwise. Clean the bowl using a suitable cleaning solvent.
3. Remove filter element with a side-to-side motion.
4. Check O-ring on the filter bowl and spigot for damage. Replace, if necessary.
5. Make sure that the part number an the spare element corresponds with the part number of the filter label. Open the plastic bag and push element over the spigot in the filter head.
   Now remove plastic bag.
6. Complete installation by screwing on the bowl, turning clockwise until it comes to a full stop. Back off the bowl ⅛ to ½ turn.

Subject to technical alteration without prior notice.

MAHLE Filtersysteme GmbH
Bereich Industriefilter · Schleifbachweg 45 · D-74613 Öhringen · Postfach 13 09 · D-74603 Öhringen
Telefon (0 79 41) 67-0 · Telefax (0 79 41) 67-429 · Internet: http://www.mahle.com · E-mail: ub2.industrie@mahle.com

Printed in Germany/Imprimé en Allemagne 10/01 Ba 3000 835.644.6

MAHLE

Industrial Filtration

Contamination Indicator

1. Features

Filter elements are economically used only if their dirt holding capacity is fully exploited. This is achieved by using filter housings with a contamination indicator.
MAHLE manufactures contamination indicators of the following designs:

- Differential pressure indicators
- Pressure indicators/Pressure switches
- Vacuum switches/manometers

With any filter element the collection of dirt particles continously reduces the number of open pores or, in other words: The open cross section for allowing the liquid to flow continously reduced.Thus the pressure on the upstream side of the element (dirt side) increases continously.

With pressure filters, the pressure is measured upstream and downstream of the filter element (differential pressure). With return line filters the pressure is measured only on the upstream side because, depending on the tank design, atmospheric pressure exits on the downstream side of the filter element is measured analog.

A piston with attached magnet is moved against the force of a spring, with which the indicating point is determined by the pistion surface.
A homopolar poled magnet is fitted in the outer part in the indicating button.
The closer the pole-springs move towards each other, the stronger is the force with the magnet mutually repel, until finally the red button on the indicator pops out.

This red button remains visible until it is pushed in during daily check which is to be performed while the plant is at operating temperature. If the red button pops out immediately after being pushed in, the filter element must be replaced after the end of the shift.
This optical function may also be used for generating contactless electrical signals. For this purpose an electrical upper part incorporates all electrical switching elements.

- Optical and electrical indicator with standard check function
- Normally open/normally closed combination - standard feature
- Electrical function, easy to install at a later time
- Two-step indication, at 75 % and 100 % optional
- Signal lock out up to approx. 30 °C optional
- Pressure resistance, up to 10 bar (pressure/differential pressure), up to 160 bar (differential pressure), up to 450 bar (differential pressure)
- Rugged, non-bypass design
- Optimal element exploitation

Worldwide distribution

2. Differential pressure indicator

Differential pressure indicator									
Operating pressure	**Tempera-ture resistance**	**Type**	**Order number**	**Indicator setting [bar]**	**Indication**	**Contact type***	**Fig.**	**Material lower section**	**Material upper section**
10	- 10 to + 120 ° C	PiS 3087	77738990	**1.2**	opt.	-	1	Al	PA 6
		PiS 3086	77737513		opt./electr.	1	1 + 1a		
		PiS 3104	78236994		opt./electr.	4	1 + 3a		
160	- 10 to + 120 °C	PiS 3098	77669971	**2.2**	opt.	-	2 + 2a	Al	PA 6
		PiS 3097	77669948		opt./electr.	1	2 + 2a		
		PiS 3116	78308074		opt./electr.	3	2 + 2a		
		PiS 3119	78309122	**1.7/2.2**	opt./electr.	2	2 + 2a		
		PiS 3012	78308454		opt./electr.	4	3 + 3a		
		PiS 3124	78383655		opt./electr.	5	3 + 3a		
		PiS 3098	77938582	**3.5**	opt.	-	2		
		PiS 3097	78236648		opt./electr.	1	2 + 2a		
		PiS 3098	77669989	**5.0**	opt.	-	2 + 2a		
		PiS 3097	77669955		opt./electr.	1	2 + 2a		
		PiS 3116	78308082		opt./electr.	3	2 + 2a		
		PiS 3119	78309130	**3.7/5.0**	opt./electr.	2	2 + 2a		
		PiS 3012	78308447		opt./electr.	4	2 + 2a		
		PiS 3124	78383663		opt./electr.	5	2 + 2a		
400	- 10 to + 120 °C	PiS 3093	77669898	**2.2**	opt.	-	2 +2a	CuZn	PA 6
		PiS 3092	77669856		opt./electr.	1	3 + 3a		
		PiS 3115	78308041		opt./electr.	3	3 + 3a		
		PiS 3105	77970387	**1.7/2.2**	opt./electr.	2	3 + 3a		
		PiS 3102	77942139		opt./electr.	4	3 + 3a		
		PiS 3122	78383630		opt./electr.	5	3 + 3a		
		PiS 3093	77669914	**5.0**	opt.	-	2		
		PiS 3092	77669864		opt./electr.	1	2 + 2a		
		PiS 3115	78308058		opt./electr.	3	2 + 2a		
		PiS 3105	77970395	**3.7/5.0**	opt./electr.	2	2 + 2a		
		PiS 3102	77942147		opt./electr.	4	3 + 3a		
		PiS 3122	78383648		opt./electr.	5	3 + 3a		
		PiS 3093	77669880	**8.0**	opt.	-	2		
		PiS 3092	77669872		opt./electr.	1	2 + 2a		
		PiS 3115	78308066		opt./electr.	3	2 + 2a		
450	- 10 to + 120 °C	PiS 3193	77844061	**2.2**	opt.	-	2	1.4301	PA 6
		PiS 3192	78308488		opt./electr.	1	2 + 2a		
		PiS 3193	78308538	**5.0**	opt.	-	2		
		PiS 3192	78308546		opt./electr.	1	2 + 2a		

* Contact type:
1) Normally open/normally closed, wiring box DIN EN 175301-803, max. 250 V AC/200 V DC, max. 1 A
2) Normally closed, 2 setting points (75 %/100 %); wiring box DIN EN 175301-803, max. 150 V, max. 1 A
3) Change over contact; wiring box DIN EN 175301-803, max. 150 V, max. 1 A
4) Change over contact; 2 setting points; LED; Mercedes-Benz-Norm DBL 9666 EA; wiring box DIN EN 175201-804, max. 150 V, max. 1 A
5) Normally closed; 2 setting points, signal surpression; wiring box DIN EN 175201-804, max. 10-30 V, max. 1 A

2. Differential pressure indicator

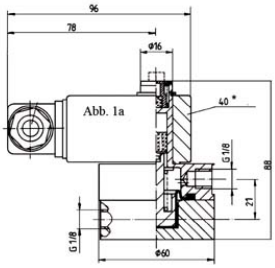

Abb. 1

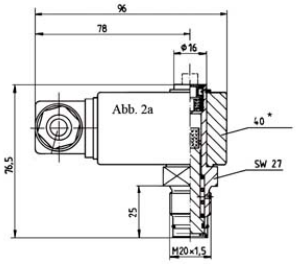

Abb. 2

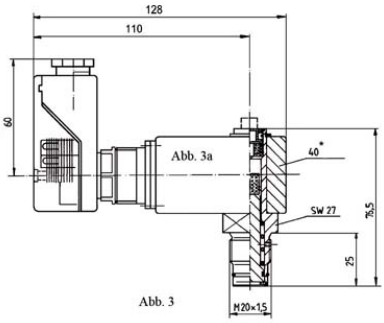

Abb. 3

*wide

3. Pressure indicator/pressure switch

Pressure indicator/pressure switch									
Operating pressure	**Tempera-ture resistance**	**Type**	**Order number**	**Indicator setting [bar]**	**Indication**	**Contact type***	**Fig.**	**Material Lower section**	**Material upper section**
10	- 10 to + 80 °C	PiS 3084	77669781	**1.2**	opt.	-	4	PA 66	PA 6
		PiS 3085	77669807		opt./electr.	1	4 + 4a		
		PiS 3125	78308033		opt./electr.	3	4 + 4a		
		PiS 3106	78309155	**0.9/1.2**	opt./electr.	2	4 + 4a		
		PiS 3103	77942170		opt./electr.	4	4 + 3a		
		PiS 3123	78383671		opt./electr.	5	4 + 3a		
		PiS 3084	77737802	**2.2**	opt.	-	4		
		PiS 3085	77738032		opt./electr.	1	4 + 4a		
		PiS 3125	78308108		opt./electr.	3	4 + 4a		
		PiS 3106	78308850	**1.7/2.2**	opt./electr.	2	4 + 4a		
		PiS 3103	77970429		opt./electr.	4	4 + 3a		
		PiS 3123	78383689		opt./electr.	5	4 + 3a		
10	- 25 to + 85 °C	DSS/1.2	77863814	**1.2**	electr.	normally open	5	galvanized steel	delivered with protection cap
		DSO/1.2	77870587		electr.	normally closed	5		
		DSS/2.2	77845845	**2.2**	electr.	normally open	5		
		DSO/2.2	77870595		electr.	normally closed	5		
		DSS/5	77863822	**5.0**	electr.	normally open	5		
		DSO/5	77870603		electr.	normally closed	5		

*Contact type:
1) normally open/normally closed, wiring box DIN 43650, max. 230 V, max. 2.5 A
2) normally closed, 2 setting points (75 %/100 %); wiring box DIN 43650, max. 150 V, max. 1 A
3) change over contact; wiring box DIN 43650, max. 150 V, max. 1 A
4) change over contact; 2 setting points (75 %/100 %); 3 LED; wiring box DIN 43651, 10–30 V, max. 1 A
5) normally closed, 2 setting points (75 %/100 %), signal suppression; wiring box DIN 43651, 10–30 V, max. 1 A

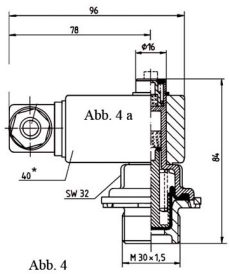

Abb. 4

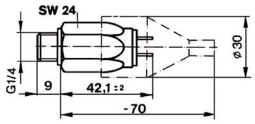

Abb. 5

4. Vacuum meter/manometer

Vacuum meter/manometer							
Nominal size (NG) [mm]	**Specifi-cation**	**Indicating range [bar]**	**Fig.**	**Connection size**	**Order-number**	**Class**	**Dial face**
40	Vacuum meter	- 1 to + 1.5	6	R 1/8 (conical)	76388714	min 2.5	white
		- 1 to + 0.6		G 1/8	77545908		Red/Green area, sep. line 0.25 bar
50	Manometer	0 to - 1	7	R 1/4 (conical)	77617558		white
		0 to 6	8		78381998		Red/Green area, sep. line 0.25 bar

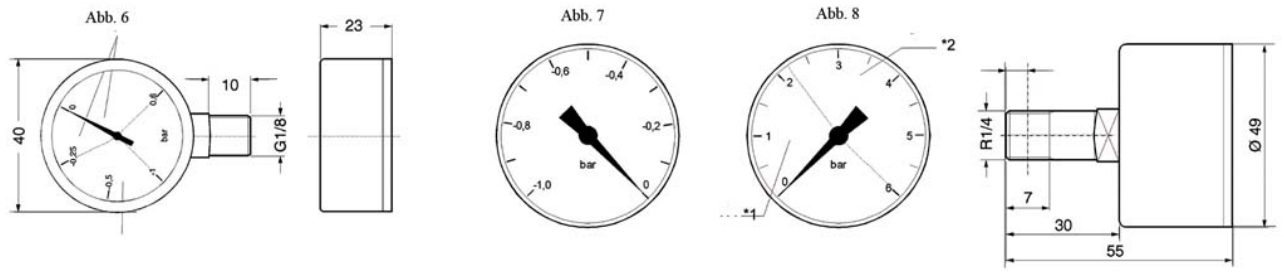

5. Vacuum switch

Vacuum switch									
Permissible over-pressure max.	**Tempera-ture resistance**	**Indicator setting**	**Contact type**	**Fig.**	**Connection size**	**Type**	**Order Number**	**Material lower section**	**Material upper section**
0.5 bar	- 10 to + 70 °C	- 10 to - 80 mbar	single pole double-throw cut-out switch	9	G 1/4	PiS 3070	77669690	GD-Al	PA 6
1 bar		- 50 to - 600 mbar			G 1/8		77669724	GD-Al	PA 6
0.1 bar	- 20 to + 80 °C, 120 °C	- 200 mbar ± 10	normally open	10	G 1/8 (outside)	HES 2200 BP	78308892	GD-ZnAl	Polycarbo-nat
		- 200 mbar ± 10	normally closed			HEO 2200 BP	78308900	GD-ZnAl	Polycarbo-nat
		- 50 mbar ± 4	normally open		M 10 x 1 (inside)	LES 250 I	78308918	GD-ZnAl	Polycarbo-nat
		- 50 mbar ± 4	normally closed			LEO 250 I	78308926	GD-ZnAl	Polycarbo-nat

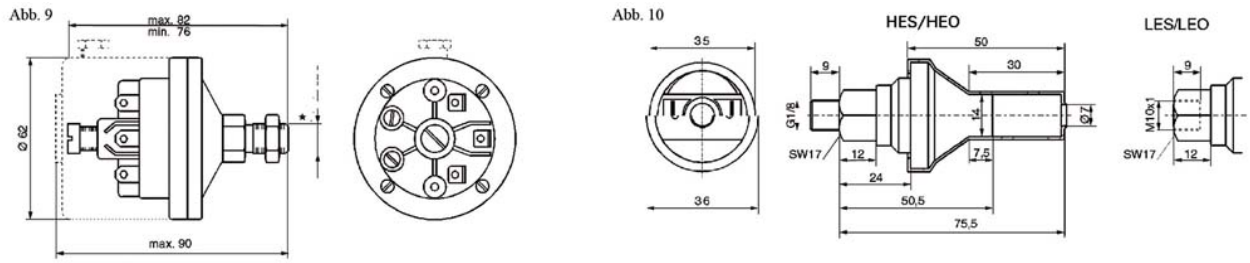

* connection G

Types HES/HEO for hydraulic application, Types LES/LEO for air application

6. Vacuum indicator/air filter

Vacuum inidcator/air filter						
Indicator setting ± 10 %	**Temperature resistance**	**Fig.**	**Execution**	**Type**	**Order-number**	**Indication**
- 50 mbar	- 40 to + 110 °C		1	TB 745	78309056	optical indication - self locking -
		11	2	TB 745/1	78309064	
- 65 mbar				TB 746/1	78309049	

Abb. 11

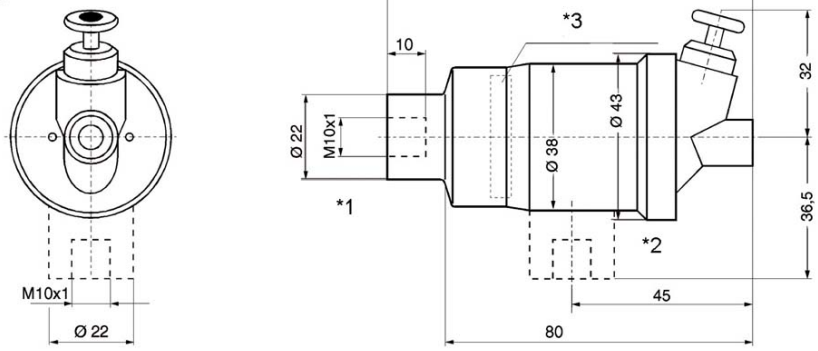

*1 Execution 2
*2 Execution 1
*3 Indication: Position of display at nominal value in mbar
Standard sealing material: NBR
Sealing material types LES/LEO: Silicone rubber

7. Accessories

7.1 Seal kits			
Type	**Order number NBR**	**Order number FPM**	**Order number EPDM**
PiS 3092, 3093, 3102, 3105, 3115, 3122, 3192, 3193	77760275	77760283	77760291
PiS 3012, 3019, 3024, 3097, 3098, 3116	77760309	77760317	77760325
PiS 3084, 3085, 3103, 3106, 3123, 3125	78383382	78383390	78383408
PiS 3086, 3087, 3104	77760242	77760259	

7.2 Electrical upper sections	
Specification	**Order number**
Electrical upper section normally open/ normally closed for PiS 3084, 3087, 3093, 3098, 3193 (Contact type 1)	7536550
Wiring box with lamp insert 12 - 230 V for electrical upper section normally open (according to DIN EN 175301-803)	8307548
Electrical upper section Change over contact for PiS 3084, 3087, 3093, 3098, 3193 (Contact type 3)	8308017
Wiring box with 2 LEDs 10 - 30 V for electrical upper section Change over contact (according to DIN EN 175301-803)	8308025
Electrical upper section normally closed with signal suppression PiS 3003	7765357

7. Accessories

7.3 Mounting block for differential pressure indicators (M 20 x 1,5)	
Specification	**Order number**
Mounting block (Material St)	77809098
Mounting block (Material 1.4301), 450 bar	77698517

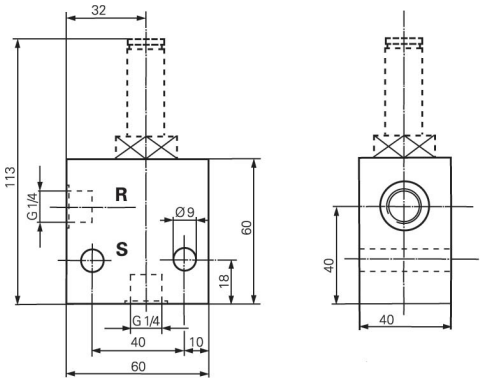

R = clean side
S = dirt side

7.4 Protection cap	
Specification	**Order number**
Protection cap for all optical differential pressure and pressure indicators: **Resistant to:** gasoil, purifying agent, insolation, dust, salt, water, concret **Temperature range:** - 20 °C to + 80 °C	78285330

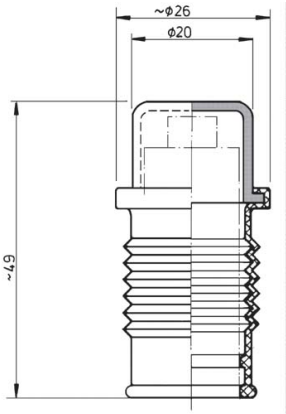

8. Function

The magnetic field as previously described, contactless operates reed contacts in the electrical upper part. The desired contact type is selected by inverting upper part. Another option keeping the electrical signal electronically suppressed up to 30 °C operating temperature is also available. This eliminates false electrical signal during the cold start phase.

For efficient servicing it is desirable to have a pre-warning device (so that the filter element can be replaced, e.g. with the next tool change). For this purpose electrical upper parts with two indicating points, i.e. at 75 % and at 100 % of the indicator setting are available. Pressure/vacuum manometers give an analog reading of the existing state of contamination of the filter elements. They require continous control to ensure that the service time and reserve capacity are not unduly exceeded. If the contamination signal is disregarded, the filter element may collapse or, if a bypass valve is installed, part of the contamination fluid may reach the hydraulic components via the bypass valve and cause failure of the hydraulics.

Pressure/vacuum switches are provided with snap action switches, which ascertains that signal are issued only when the limit values have been fully reached.

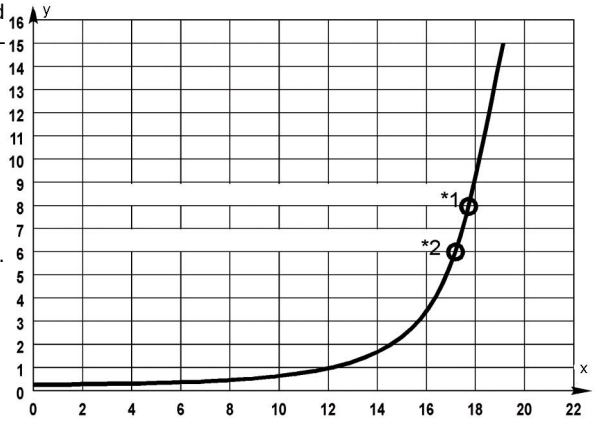

Dirt holding capacity -Δ p curve
x = dirt holding capacity [g]
y = differential pressure Δp
*1 signal step contamination indicator 100 %
*2 signal step contaminatin indicator 75 %

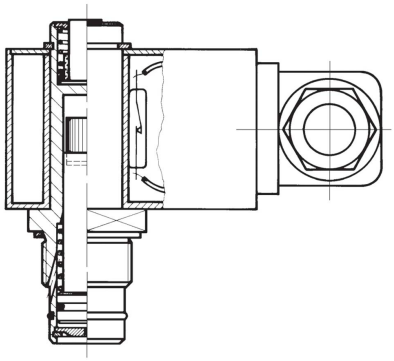

9. Specifications

9.1 Contact type normally open/ normally closed

Types PiS 3085, 3086, 3092, 3097, 3192

Maximum voltage:	250 V AC/200 V DC
Maximum current on contact:	1 A
Maximum contact load:	70 W
Protection type:	IP 65 when inserted and secured
Contact type:	normally open/ normally closed
Cable connection:	M 20 x 1,5

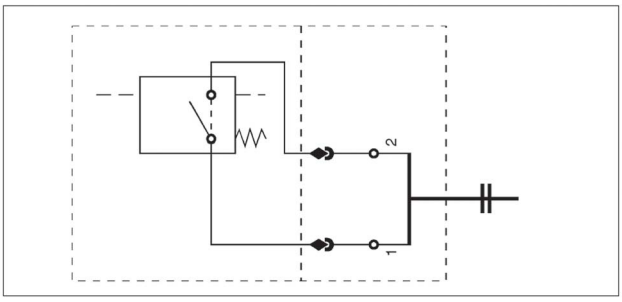

The switching function can be changed by turning the electric upper part by 180° (normally open contact or normally closed contact). The state on delivery is a normally closed contact. The use of quenching circuits must be checked in case of inductivity in the DC current circuit. Electrical parts are isolated (plastic casing).

9.2 Contact type normally closed/signal lock-out

Type PiS 3003

Signal lock-out by thermorelay,
Signal is released at + 30 °C,
for further technical detail see 9.1

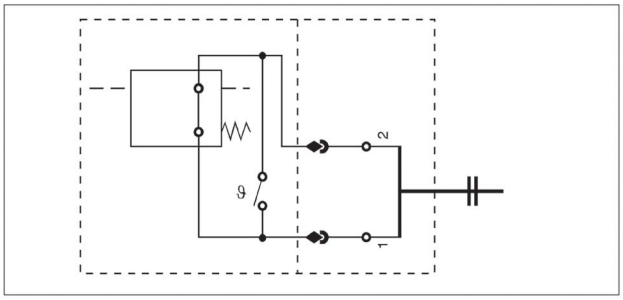

9.3. Contact type normally closed 2 step

Types PiS 3105, 3106, 3199
1. Indicating at 75 %
2. Indicating at 100 % of the indicating pressure

Maximum voltage:	150 V AC/DC
Maximum current on contact:	1 A
Maximum contact load:	20 VA/20 W

for further technical details see 9.1

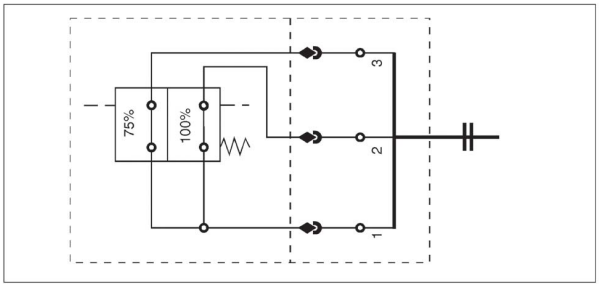

9.4 Contact type normally closed 2 step/signal lock-out

Types PiS 3122, 3123, 3124

Maximum voltage:	10 - 30 V AC/DC
Maximum current on contact:	1 A
Maximum contact load:	20 W

Signal lock-out by thermorelay
Signal is released at + 30 °C
Reset at + 20 °C
1. Indicating at 75 %
2. Indicating at 100 % of the indicating pressure

for further details see 9.1

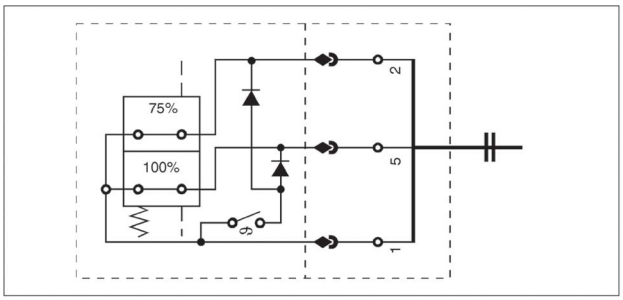

9.5 Contact type change-over contact
Types PiS 3115, 3116, 3125

Maximum voltage:	150 V AC/DC
Maximum current on contact:	1 A
Maximum contact load:	20 VA/20 W
for further details see 9.1	

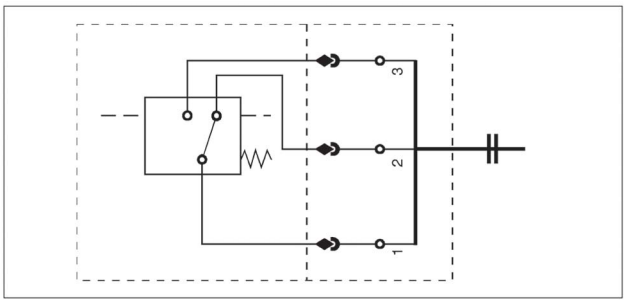

9.6 Contact type change-over contact/2step LED
Types PiS 3012, 3102, 3103

Maximum voltage:	10 - 30 V DC
Maximum current on contact:	1 A
Maximum contact load:	20 VA/20 W
1. Indicating at 75 %	
2. Indicating at 100 % of the indicating pressure	
for further details see 9.1	

*1 switch over *2 connector
*3 indicator setting 100 % LED red
*4 indicator setting 75 % LED red
*5 stand-by indication LED green

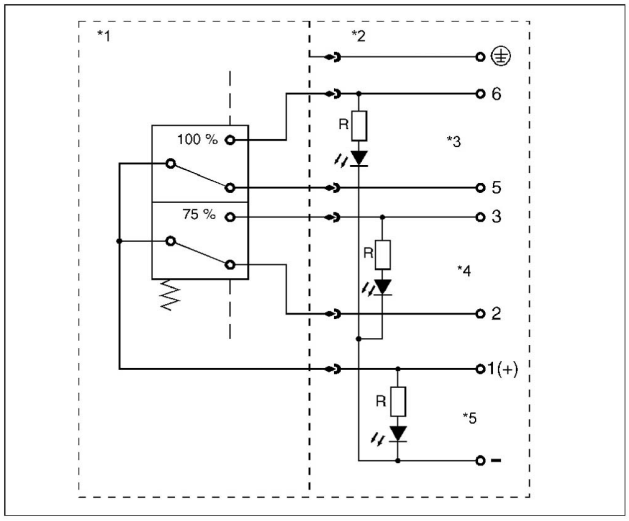

9.7 Wiring box with lamp insert
Will be supplied instead of standard connection.

Voltage:	12 - 230 V AC/DC

Not to combine with indicators with 2 setting points

*1 switch cover
*2 connector

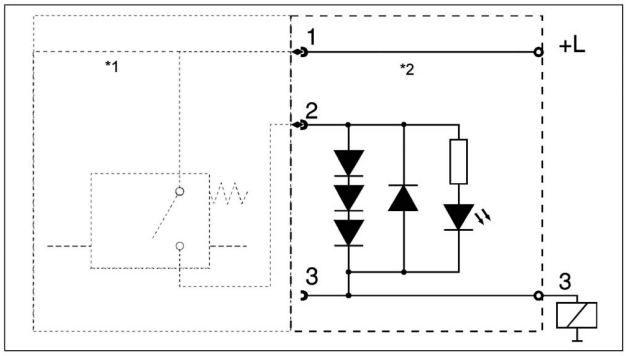

9.8 Wiring box with lamp insert
Will be supplied instead of standard connection plug.

Voltage:	10 - 30 V DC

To combine with PiS 3115, 3116, 3125

*1 switch cover
*2 connector
*3 green
*4 yellow
*5 screw clamp

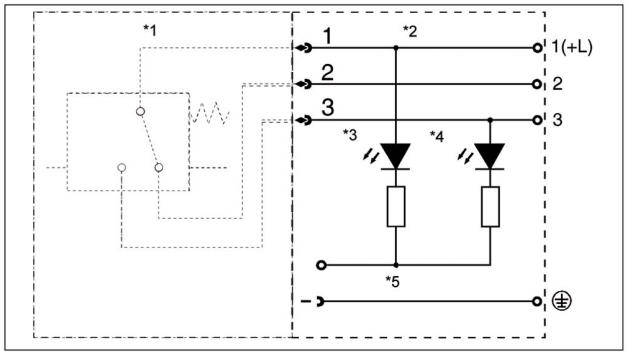

9.9 Vacuum switch HES/LES

Contact type:	normally open
Contact load:	HES: 42 V/6W at resistive load
Maximum contact load:	LES: 24 V/6W at resistive load
Type of protection:	IP 54 - with protecting cap
Electrical connection:	AMP 6.3 DIN 46248, DIN 46247

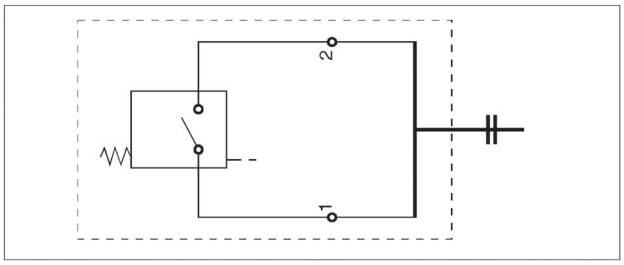

9.10 Vacuum switch HEO/LEO

Contact type:	normally closed
Contact load:	HEO: 42 V/6W at resistive load LEO: 24 V/6W at resistive load

for further technical detail see 9.9

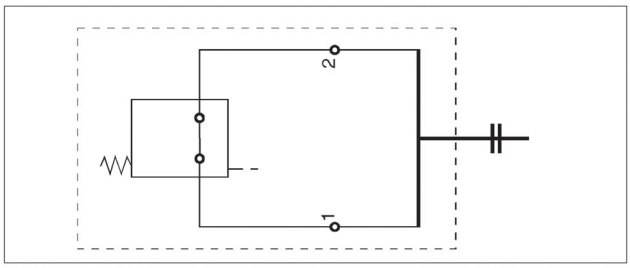

9.11 Vacuum switch PiS 3070

Maximum voltage:	230 V AC/DC
Maximum current on contact.:	6A
Contact type:	single pole changeover switch
Electrical connection:	AMP 6,3 DIN 46248, DIN 46247
Position of installation:	individual (with adjusted setting point, position of installation needs to adviced)
Type of protection:	IP 00 - without cover IP 54 - with cover

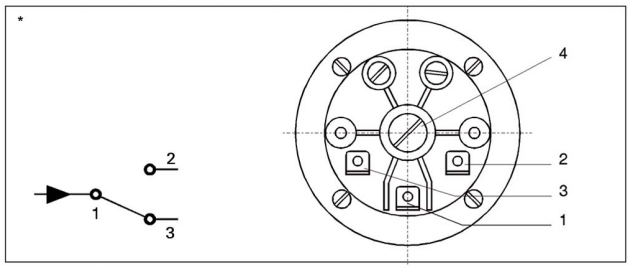

* **Connection scheme:**

1. Supply line
2. Operating contact
3. Normally closed contact
4. Adjusting screw

9.12 Pressure switch DSS

Contact type:	normally open
Maximum voltage:	42 V
Maximum current on contact:	2 A
Contact load:	100 VA
Duty classification:	200 / min
Type of protection:	IP 65 - with protecting cap
Electrical connections:	AMP 6,3 DIN 46248 for attachable sleeve according to DIN 46247, (switching mode bi-pole)

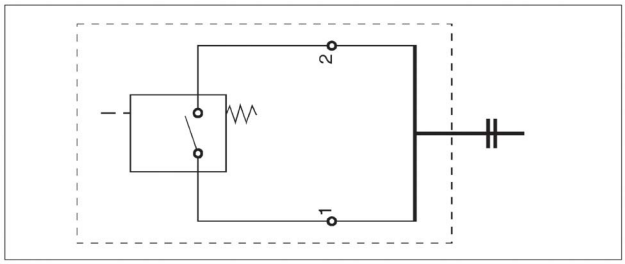

9. 13 Pressure switch DSO

Contact type: normally closed

for further information see 9.12

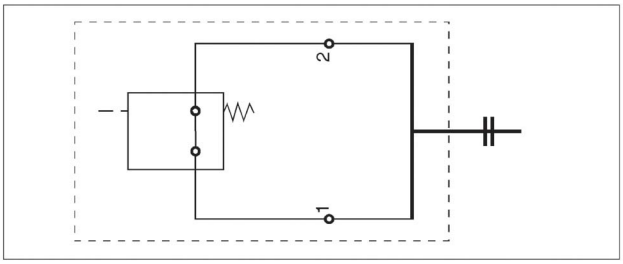

Contamination indicators PiS 3084, 3087, 3093, 3098, 3193 can be mounted in 45°.

We draw attention to the fact that all values indicated are average values which do not always occur in specific cases of application: Our products are continually being further developed. Values, dimensions and weights can change as a result of this. Our specialized departement will be pleased to offer you advice.

When using our filters in areas which are to be classified according to EU directive 94/9 EG (ATEX), we recommend prior discussion with us. The standard version can be used for liquids based on mineral oil /corresponding to the fluids in Group 2 of Directive 97/23 EG Articlel 9). Please consult with us if using other media.

Subject to technical alterations without prior notice.

MAHLE Filtersysteme GmbH
Industriefiltration
Schleifbachweg 45
D-74613 Öhringen
Phone +49 (0) 7941/67-0
Fax +49 (0) 7941/67-23429
industriefiltration@mahle.com
www.mahle-industriafiltration.com
78357428.11/2006

NORGREN HERION

THIS LEAFLET SHOULD BE KEPT IN A SAFE PLACE FOR REFERENCE
DIESES MERKBLATT SOLLTE AN EINER SICHEREN STELLE AUFBEWAHRT WERDEN
CE DOCUMENT DOIT ETRE CONSERVE POUR ETRE UTILISE ULTERIEUREMENT LORS DES ENTRIENS
ESTE FOLLETO DEBE GUARDARSE EN LUGAR SEGURO PARA SER UTILIZADO DURANTE EL SERVICO
QUESTE ISTRUZIONE DEVONO ESSERE CONSERVATE IN UN LUEGO SECURO PER RIFERIMENTO FUTURO

Operating manual pressure switch 18D
Bedienungsanleitung Druckschalter 18D
Mode d'emploi Pressostat 18D
Instrucciones para el servicio presostato 18D
Istruzioni d'uso pressostato 18D

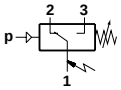

Connector	**DIN 43650**
Steckverbindung	DIN 43650
Raccordement	DIN 43650
Conector	DIN 43650
Connettore	DIN 43650

Switching function:
Microswitch SPDT
Terminals 1 - 3: Contacts close on rising pressure
Terminals 1 - 2: Contacts open on rising pressure

Schaltfunktion:
Ein einpoliger Mikroschalter (Umschalter)
Klemmen 1 - 3: bei steigendem Regelwert Kontakt schließend,
Klemmen 1 - 2: bei steigendem Regelwert Kontakt öffnend

Schéma de branchement du micro-contact (inverseur unipolaire)
Bornes 1 - 3: le contact ferme lorsque la pression monte
Bornes 1 - 2: le contact ouvre lorsque la pression monte

Funciones de conmutación:
Un microrruptor unipolar
(2 contactosconmutadores)
Función 1 - 3: si sube el valor, regulador cierra
Función 1 - 2: si sube el valor, regulador abre

Funzione di commutazione:
Microinterruttore SPDT
Terminali 1 - 3: Chiusura dei contatti all'aumento della pressione
Terminali 1 - 2: Apertura dei contatti all'aumento della pressione

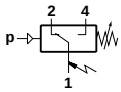

Connector	**M 12 x 1**
Steckverbindung	M 12 x 1
Raccordement	M 12 x 1
Conector	M 12 x 1
Connettore	M 12 x 1

Switching function*:
Microswitch SPDT
Terminals 1 - 4: Contacts close on rising pressure
Terminals 1 - 2: Contacts open on rising pressure
*0880149 Switching function reversed

Schaltfunktion*:
Ein einpoliger Mikroschalter (Umschalter)
Klemmen 1 - 4: bei steigendem Regelwert Kontakt schließend,
Klemmen 1 - 2: bei steigendem Regelwert Kontakt öffnend
*0880149 Schaltfunktion umgekehrt

Schéma de branchement du micro-contact (inverseur unipolaire)*
Bornes 1 - 4: le contact ferme lorsque la pression monte
Bornes 1 - 2: le contact ouvre lorsque la pression monte
*0880149 Fonction de conmutacion inversée

Funciones de conmutación*:
Un microrruptor unipolar
(2 contactos conmutadores)
Función 1 - 4: si sube el valor, regulador cierra
Función 1 - 2: si sube el valor, regulador abre
*0880149 Funciones de conmutación invertido

Funzione di commutazione*:
Microinterruttore SPDT
Terminali 1 - 4: Chiusura dei contatti all'aumento della pressione
Terminali 1 - 2: Apertura dei contatti all'aumento della pressione
*0880149 Funzione de commutazione invertita

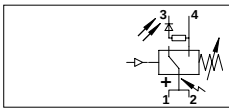

Connector	**M 12 x 1**	
Steckverbindung	M 12 x 1	
Raccordement	M 12 x 1	**DESINA**
Conector	M 12 x 1	
Connettore	M 12 x 1	

M 12 x1

U_{max} = 30 V

DIN 43650

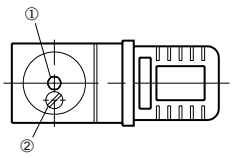

① Adustment of switching
② Detend
① Schaltpunkteinstellung
② Arretierungsschraube
① Reglage de la plage
② Blockage
① Adjuste del punto de commutacion
② Tornillo de retencion
① Regolazione dei punti di commutazione
② Vite di arresto

For detailed information please see the corresponding data sheet 5.11.021 + 5.11.020.
Weitere Details entnehmen Sie bitte der Schrift 75.11.021 + 5.11.020.
Pour obtenir plus d'information s.v.p. consulter documentation 5.11.021 + 5.11.020.
Para más información por favor consulte la hoja técnica 5.11.021 + 5.11.020.
Per informazioni più dettagliate consultare il catalogo specifico 5.11.021 + 5.11.020.

SWITCH SELECTION

The switching points should normally be in about the middle of the adjustable range.
Do not exceed electrical ratings.
Torque: connector screw 0.7 Nm; screws for CETOP flange 5 Nm.
Electrical connection in accordance with local regulations. For outdoor installation sufficient protection has to be provided for. Critical conditions are: Aggressive atmosphere, drastic changes in temperature, solar radiation, salt bearing atmosphere.
In case of sudden pressure changes and/or pressure peaks with liquid fluids, install surge damper, Cat. No. 0574773.
With flanged design (peak-to-valley height of flanged surface Rt ≤ 12 mm), O-ring 5 x 1.5, Cat. No. 0664098, is enclosed in the delivery. Load-bearing length of thread is min. 7.5 mm. Max. diameter of pressure port is 3 mm.

SETTING OF SWITCHING POINTS

Adjust either upper or the lower switching point. The opposite one is then determined by the fixed switching pressuredifference. Use pressure gauge for adjustment.
The switching points may be set even during operation. Proceed as follows:

1. Loosen stop screw.
2. Adjust switching points by means of a 5 mm hexagon spanner.
   Depending on the sense of rotation the switching points move upwards (clockwise rotation) or downwards (counter-clockwise rotation).
3. Retighten stop screw.

AUSWAHL UND EINBAUHINWEISE

Bereichsauswahl: optimal, wenn die Schaltpunkte in der Mitte des Schaltdruckbereiches liegen.
Elektrischer Anschluß: Verdrahtung gemäß VDE Vorschriften.
Anzugsdrehmoment: Steckdose 0,7 Nm; Schrauben CETOP Flansch 5 Nm.
Montage im Freien nur bei ausreichendem Schutz gegen kritische Umgebungsbedingungen (z.B. aggressive Atmosphäre, salzhaltige Atmosphäre, starke Temperaturschwankungen).
Beim Auftreten schlagartiger Druckänderungen und Druckspitzen bei flüssigen Fluiden ist eine Dämpfungsvorkammer vorzubauen. Best.-Nr. 0574773.
Bei seitlichem Flansch (Rauhtiefe der Flanschfläche Rt ≤ 12 mm) gehört der O-Ring 5 x 1,5, Bestell-Nr. 0664098 zum Lieferumfang.
Tragende Gewindelänge min. 7,5 mm. Max. Durchmesser der Druckanschlußbohrung 3 mm.

EINSTELLUNG DER SCHALTPUNKTE

Eingestellt wird entweder der obere Schaltpunkt p_{vo} oder der untere Schaltpunkt p_{vu}. Der andere ergibt sich jeweils aus der festliegenden Schaltdruckdifferenz. Zum Einstellen der Schaltpunkte ist ein Manometer zu Hilfe zu nehmen.

Die Schaltpunkte können auch während des Betriebes wie folgt eingestellt oder verändert werden:

1. Arretierungsschraube lösen (wenn vorhanden).
2. Schaltpunkteinstellung mit einem 5 mm, bzw. 6 mm - Sechskantschraubendreher vornehmen.
   Erhöhung oder Reduzierung der Schaltpunkte erfolgt durch Rechts- bzw. Linksdrehen des Gewindestückes.
3. Arretierungsschraube festdrehen (wenn vorhanden).

CHOIX ET INSTRUCTIONS DE MONTAGE

Les points de fonctionnement doivent normalement se situer aux environs du milieu de la plage de réglage.
Le raccordement électrique doit être conforme aux normes en vigueur.
Couple de serrage: Connecteur 0,7 Nm; Vises de flasque CETOP 5 Nm.
En cas de montage à l'extérieur, il faut prévoir une protec-tion suffisante contre d'éventuelles mauvaises conditions ambiantes (par exemple : atmosphères agressives, salines, avec de fortes variations de températures etc...).
Dans le cas de liquides avec des pointes de pression ou en cas de variations très rapides de la pression, il faut monter une vis d'amortissement 0574773.
Dans le cas d'exécution flasquable (aspérité du plan de pose bride Rt ≤ 12 mm), le joint O-Ring 5 x 1,5, 0664098, est inclus dans la livraison.

RÉGLAGE DES POINTS DE FONCTIONNEMENT

Il convient de régler le point de fonctionnement supérieur p_{vo} ou inférieur p_{vu}. Le second point est alors déterminé par la fourchette de retour fixe.
L'utilisation d'un manomètre est recommandée pour un réglage précis.Il est possible de régler ou de modifier le réglage pendant le fonctionnement de l'appareil.

1. Dévisser le bouton moleté.
2. Régler le point de fonctionnement avec une clé 6-pans de 5 mm. Le déplacement vers le haut ou le bas du point de fonctionnement est obtenu en tournant le bouton de réglage vers la droite ou vers la gauche.
3. Revisser le bouton moleté.

SELECCION DE LOS VALORES DE FUNCIONAMIENTO

Se recomienda ajustar los valores de funcionamiento alredor de la mitad del campo de ajuste.
Las conexiones eléctricas se han de efectuar según normas VDE.
Par de apriete: Conector 0,7 Nm; Tornillos de brida CETOP 5 Nm.
Si se montan al aire libre, los aparatos deben protegerse suficientemente contra las condiciones ambientales (atmósfera agresiva, temperaturas extremas o variaciones fuertes de estas, etc.)
En caso de liquidos con puntas de presión hay que anteponer al presostato la cámara de amortiguación no. 0574773.
En la versión con brida (profundidad de rugosidad de la brida Rt ≤ 12 mm) el O-ring 5 x 1,5, no. 0664098, es parte del envio. Longitud de la rosca soportante min. 5mm. Diametro de perforación de la conexión de presión 3mm.

AJUSTE DE LOS VALORES DE FUNCIONAMIENTO

Se ha de ajustar o el punto de conmutación superior pvo o el punto de conmutación inferior. El otro será dado por el propio diferencial fijo. Para un ajuste preciso se recomienda el uso de un manómetro. Los puntos de conmutación también se pueden ajustar durante el funccionamiento:

1 Soltar el tornillo de retención.
2. Ajustar los puntos de conmutación con un macho hexagonal de 5mm.
3. Fijar el ajuste con el tornillo de retención.

SCELTA DEL PRESSOSTATO

I punti di commutazione dovrebbero venire a trovarsi normalmente al centro del campo di regolazione. Non superare mai i limiti elettrici.
Coppia di serraggio: Connettore 0,7 Nm; Vites di flangia CETOP 5 Nm.
Eseguire i collegamenti elettrici nel rispetto delle norme. Provvedere adeguata protezione in caso di impiego all'esterno. Condizioni critiche sono: Ambiente aggressivo forti variazioni di temperatura, esposizione al sole, atmosfera salina.
In caso di variazioni repentine o picchi di pressione con fluidi liquidi, installare un soppressore di picchi, Codice 0574773.Per le versioni a flangia (finitura superficiale R ≤ 12 mm) è compreso nella fornitura un OR x 1,5, codice 0664098. La lunghezza di filettatura utile deve essere minimo 7,5 mm. Il diametro masssimo della connessione della pressione è 3 mm.

IMPOSTATIONE DEI PUNTI DI COMMUTAZIONE

Impostare il punto superiore o quello inferiore. L'altro punto viene determinato automaticamente dallo scarto differenziale fisso. Usare un manometro per fare la regolazione. I punti di commutazione possono essere impostati anche in servizio.

Procedere come segue:

1. Allentare la vite di arresto.
2. Impostare i punti di commutazione usando una chiave esagonale da 5 mm. A seconda del senso di rotazione i punti si muovono in su (rotazione in senso orario) o in giù (rotazione in senso antiorario).
3. Serrare nuovamente la vite di arresto.
4. Istruzioni per l'uso del Pressostato tipo 18 D.

NORGREN HERION

IMI Norgren-Herion Fluidtronic GmbH & Co. KG
Stuttgarter Straße 120, D-70736 Fellbach
Telefon:+49 (0)7 11 - 52 09-0, / Fax: +49 (0)07 11 - 52 09-6 14

Distributed by:

UNIVERSAL HYDRAULIK®

General operating instructions for hydraulic units, cooling filter aggregates and hydraulic module assemblies

Universal Hydraulik GmbH
Siemensstraße 33 • D-61267 • New-Anspach
Telephone 0 60 81 / 94 18-0 • Fax 0 60 81 / 96 02 20

e-mail: info@universalhydraulik.com

Internet: http://www.universalhydraulik.com

© Copyright of the issuing party:

These operating instructions may be translated, duplicated or made accessible to third parties only with explicit approval from the issuing party.
All rights reserved for the case of patent, utility-model patent or design patent registration.

Table of contents

Table of contents 3
1 Basic data 4
1.1 Type designation plate 4
2 Basic information 5
2.1 Notes on the operating instructions 5
2.2 Utilization according to specification 5
2.3 Guarantee and liability 6
3 Notes on safety 7
3.1 Standards and directives 7
3.2 Employed symbols and signal words 8
3.3 Basic safety measures 9
3.4 Technical status 9
3.5 Transport safety instructions 10
3.6 Safety requirements on the installation 10
3.7 Notes on safety for operation 10
3.8 Notes on safety of maintenance and repair 11
3.9 Requirements on the personnel 11
3.10 Handling of resources and operating materials 13
3.11 Waste disposal 14
4 Storage and transport 15
4.1 Incoming goods control 16
4.2 Selection and preparation of the installation location 17
5 Operational startup 18
5.1 General 18
5.2 Installation of the system 19
5.3 Operational startup 21
5.4 Dismantling of the system 23
6 Operation 26
7 Maintenance, cleaning and repair maintenance 27
7.1 General notes 27
7.2 Inspection and maintenance 28
7.3 Maintenance plan 31
7.4 Reason for malfunction 32
7.5 Repair 34
7.6 Hydraulic fluids 34
7.7 Viscosity characteristics 37
7.8 Pump viscosity ranges 38
7.9 Filter 39

1 Basic data

Manufacturer: Universal Hydraulik GmbH

Siemensstr. 33

D-61267 Neu-Anspach

Telephone: 0 6081/ 9418-0

Fax: 0 60 81/ 9418-60

NOTE

Further information on technical parameters are included in the respective data sheets and operating instructions of the supplier module assemblies. They are a component part of the overall documentation.

1.1 Type designation plate

In case of the system, the rating plate is attached to the hydraulic oil container near the revision flap. The most important data relating to the system are entered on the rating plate.

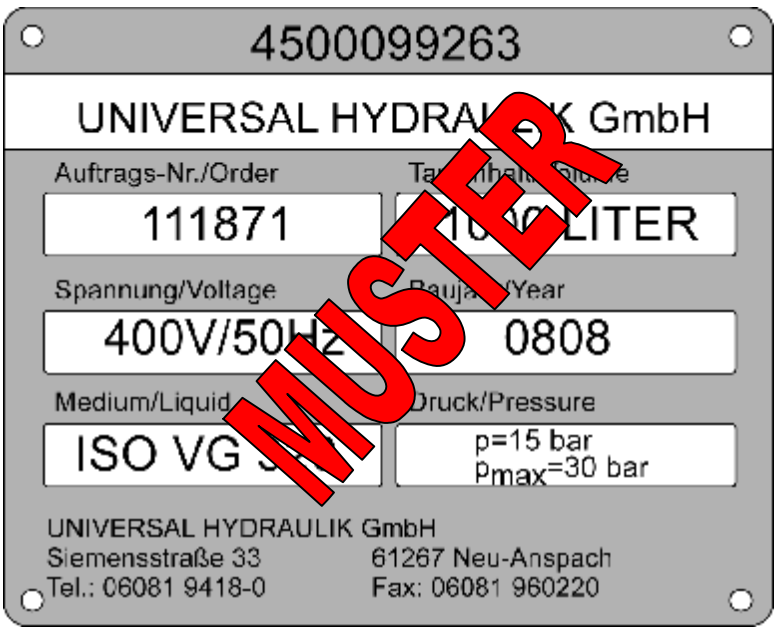

2 Basic information

2.1 Notes on the operating instructions

These operating instructions inform about the employment of the system. The system was developed and built by the company Universal Hydraulik GmbH, New-Anspach. Before the actual use of the system, the operating instructions are to be read through carefully. This document must always be available near the system. The directions enable rapid understanding of the technical details and include all necessary information on safe and professional operation of the system. Dimensional and weight specifications are those values valid on the day of printing of these operating instructions. They can deviate in detail from the respective design implementation of the system, without basically changing the objective information and losing validity. Deviations from textual and display statements are dependent on equipment, accessories and area of application of the system, so that possible claims cannot be validated on this basis. The system is determined only for the operational purposes as listed in the operating instructions. The manufacturer cannot recognize any claims which arise due to inappropriate operation and inadequate maintenance.

2.2 Utilization according to specification

The operational safety of the system is guaranteed only in case of appropriate utilization, which is in accordance with the specifications in the operating instructions.
Every utilization exceeding that is considered as operation not in accordance with the specifications! Included in appropriate utilization in accordance with the specifications is compliance with the assembly, operational startup, operation and maintenance specifications prescribed by the company Universal Hydraulik GmbH and the manufacturers of the component parts or module assemblies.

Hydraulics units, cooling filter systems and motor pump units are incomplete machines, as specified by the Machinery Directive 2006/42/EG, and are therefore determined for installation in other machines or in other incomplete machines or equipment only, or to be combined with these, in order to form a machine as specified by the directive.
Hydraulic module assemblies are not incomplete machines, and are therefore determined for installation in other machines or in other incomplete machines or equipment only, or to be combined with these in order to form a machine as specified by the directive.
The incomplete machine may be put into operation only when it has been determined that the machine, in which the incomplete machine should be installed, corresponds to the determinations of the Machinery Directive 2006/42/EG.

Additional, necessary information is to be obtained from the company Universal Hydraulik GmbH.
Only the operator is liable for any resulting damages in case of non-observance of these specifications and information.

2.3 Guarantee and liability

Basically the "General sales and supply conditions" of the manufacturer apply. Guarantee and liability claims in case of personal injury and material damage are excluded if they can be attributed to one or more of the following causes.

- Inappropriate operational startup, operation and maintenance of the system
- Changes to the system without prior discussion with the manufacturer
- Operation of the system with defective safety systems, and/or with security and protection equipment not attached properly
- Non-observance of the references in these operating instructions with regard to installation, operational startup, operation and maintenance
- Deficient monitoring of the system parts which are subject to wear
- Inappropriate repairs

3 Notes on safety

3.1 Standards and directives

The system is built according to the currently valid regulations of the technology and the recognized safety-technical requirements.
The following European directives and standards were considered during the development, construction and production of the system by the company Universal Hydraulik and the supplier:

- Machinery Directive 2006/42/EG
- Directive 2006/95/EG (low-voltage guideline)
- DIN EN 982 - Safety of Machines - technical safety requirements on fluid-technical systems and their hydraulic component parts

All specifications regarding safety refer to the currently valid ordinances of the European Union. In other countries, the valid laws and state ordinances must be adhered to. As well as the notes on safety in these operating instructions, the generally-applicable specifications regarding accident prevention and environmental protection must be considered and adhered to.
All specifications of the operating instructions are to be followed without restriction.

3.2 Employed symbols and signal words

DANGER

Type and source of the danger
Dangers which lead to severe physical injuries or to death.
Measures for the prevention of the danger.

CAUTION

Type and source of the danger
Dangers which lead to physical injuries or to property damage.
Measures for the prevention of the danger.

CAUTION

Warning of electric current
Dangers which lead to severe physical injuries or to property damage.
Measures for the prevention of the danger

NOTE

User tips and useful information

NOTE

Environmental pollution

DANGER

Type and source of the danger
Results of the danger for the environment.
Measures for the prevention of the danger

3.3 Basic safety measures

The following basic safety measures are to be adhered to:

- The system may be employed only as specified.
- The system may be assembled, operated and maintained only by trained and instructed specialist personnel.
- The personnel must have read and understood the operating instructions.
- All notes on safety in these operating instructions, and in all further documents in the overall documentation, are to be considered and adhered to.
- Unauthorized persons must not have any access to the system.
- Loss of use and environmental infringements through incorrect handling are to be excluded.
- In case of the transport, installation and dismantling, including operation as well as care and maintenance, the specifications regarding industrial safety and environmental protection are to be considered.
- With the integration of the system into another system, the manufacturer is obliged to include the specifications contained in these operating instructions, references and descriptions, into his own operating instructions.
- Spare parts from the company Universal Hydraulik GmbH are basically referred to. The company Universal Hydraulik GmbH does not assume any liability for damages which result from the utilization of spare parts from other manufacturers.

3.4 Technical status

The following are to be considered:

- To avoid dangers and to assure optimal performance, no changes and/or conversions may be carried out on the system.
- The user is obliged to operate the system in a trouble-free, operationally-safe status. The technical status must correspond to the legal requirements and specifications.
- The system is to be checked for damage and proper condition before every operational startup.
- Changes occurring in the system which influence safety must be reported by the personnel immediately to the operator.
- The system may be connected only to the supply lines planned and designed for this.

3.5 Transport safety instructions

The following are to be considered:

- During transport, the system is to be secured according to the specifications of the transport aid resource employed. The system may be transported only at the anchor points provided for this.
- Arbitrary transport works are not permissible. Considerable dangers and material damages can arise from this.
- Basically, transport works may be implemented only by personnel who are trained and instructed.

3.6 Safety requirements on the installation

- Basically, the system may be installed only by specialist personnel who are trained and instructed.
- Arbitrary assembly or installation work is not permissible.

3.7 Notes on safety for operation

The following notes on safety are to be considered in operation:

- The system is to be provided with mechanical protection against unauthorized access and against physical contact.
- Oil tanks, pipes, component parts flowed-through with oil, and in particular electromagnets, can heat up strongly during operation. In case of direct bodily contact the danger of burn injuries exists. Personnel have to be protected with corresponding protective clothing and heat-resistant gloves.
- The system may not be exposed to excess temperature and/or overpressure.
- During the entire operation, it is to be ensured that the operational factors correspond to the employment of the system.
- The system is to be checked regularly for contamination and dust precipitation. Existing contamination and dust precipitation are to be eliminated immediately.
- The system is to be taken out of operation immediately if changes in the system are determined during operation, such as for example increased operating temperature or operating pressure.
- Work on the system may be carried out only with standstill of the system. The system is to be switched de-energized and pressure-free.
- A warning sign is to be attached to the system when it is being worked on.
- Welding work must not be carried out on the system.

3.8 Notes on safety of maintenance and repair

Operational failures, which are caused by inadequate or inappropriate maintenance, can result in very high repair costs and long downtimes of the system.
The manufacturer does not assume any liability for damages which arise from inappropriate care and maintenance!
The maintenance intervals are to be taken from the general operational and preventive maintenance instructions of the company Universal Hydraulik GmbH, and from the maintenance directions of the module assembly suppliers.

The following are to be considered:

- The system may be maintained and repaired only by the service personnel of the manufacturer or specialist personnel trained and instructed especially for this.
- All maintenance and repair works on the system are basically to be carried out in the switched-off and pressure-free status only.
- An unintentional restart of the system is to be prevented (e.g. switch off main power switch, attach warning signs to the main power switch).
- In case of maintenance and repair work, safety devices are taken out of operation in part. These are to be properly reinstated immediately on completion of the maintenance and repair work, and checked for their functional capability.

3.9 Requirements on the personnel

- Prior to commencement of work on the system, the personnel are to be instructed about the dangers involved in the handling of the system.
- The system may be operated, maintained and repaired only by trained and instructed personnel.
- Every person who is instructed to set the system into operation, to maintain it or to repair it, must have read and understood the operating instructions in complete form. This also applies if the personnel concerned have previously worked with the system or have been trained in its use.
- The operating instructions must be accessible to the personnel at all times. It is recommended to determine the acknowledgment of the content of the operating instructions in writing.
- The operator, or those personnel authorized by the operator, are responsible for accident-free operation.

In order to guarantee safe handling of the system, the personnel are obliged to the following:

- Smoking, eating and drinking in the area of the system are not permitted.
- Working on the system is not allowed in case of persons who are over-fatigued, or who are under the influence of alcohol and/or medication.
- Personnel may not have any physical or mental handicaps which limit attention and discernment, either temporarily or in the long run.
- Personnel must wear work-safety clothing, protective gloves and, where appropriate, protective goggles and respiratory protection, according to the work to be carried out.
- All notes on safety in these operating instructions and in all other documents must be considered and complied with at all times, without any restrictions.
- In case of the identification of dangers which are capable of resulting in injuries to persons, the complete system must be switched off immediately.
- Personnel must have well-founded knowledge of the following operational sequences, specifications and codes of conduct:
  - Operational sequences of the system,
  - Fencing-off, protections and identification signs of the danger zone,
  - Conduct and actions to be taken in case of danger.

3.10 Handling of resources and operating materials

CAUTION

For all resources and operating materials, as well as cleaning agents employed, the specifications and EC Safety Data Sheets of the respective manufacturer concerning storage, handling, employment and waste disposal are to be considered.

The following are to be considered in the handling of resources and operating materials, as well as cleaning agents:

- No materials may be employed whose properties are unknown. Where appropriate, return discussions are to be held with the manufacturer of these materials.
- Resources and operating materials, including cleaning agents as well as their container, must not be disposed of as domestic waste or be allowed to reach the sewage system or the soil. For their waste disposal, the specifications valid in each case are to be considered exactly.
- The determinations in the safety data sheets regarding the handling of authorized cleaning agents are to be considered.
  The following measures are to be introduced in case of non-observance:
  - Clean with soap and water those parts of the body which have come in contact
  - Flush eyes under running water for at least 10 minutes, and consult a specialist where necessary.
  - After inhalation of vapors, fresh air or oxygen is to be breathed in, and a specialist is to be consulted where necessary.

3.11 Waste disposal

DANGER

The hydraulic oil is to be bled off over the oil drain-plug of the system into a suitable container. The system is to be placed on a secure support in this case. No hydraulic oil may reach the sewage system or the soil.

DANGER

For cleaning agents, the specifications and EC Safety Data Sheets of the respective manufacturer concerning storage, handling, employment and waste disposal are to be considered.

DANGER

Electrical scrap and electronic component assemblies are subject to special waste treatment, and may be disposed of by authorized specialist companies only.

The following are to be considered:

- Provided that no take-back or waste-disposal agreement has been reached, the itemized component parts are to be provided for recycling following proper dismantling.
  - Scrap metallic material residue
  - Provide plastic component parts for plastic recycling
  - Sort and dispose of component parts according to material constitution
- Lubrication and operating materials, including cleaning agents as well as their containers, must not be disposed of as domestic waste or be allowed to reach the sewage system and/or the soil. For waste disposal, the specifications valid in each case are to be considered exactly.

4 Storage and transport

For transport to the installation location, VDI 2700 - Procedural Instructions regarding Freight Protection in Road Traffic - is to be considered. The appropriation of a vehicle with a closed canvas cover is necessary. Furthermore, at least 4 tightening straps are to be provided. The loader, as well as the driver of the vehicle, are responsible for proper loading and secure transport of the machine on a vehicle. Further transport of the system is implemented with a forklift or a hoist truck.

DANGER

Danger of injury through inappropriate transport!
The transport must be carried out with sufficiently dimensioned lifting cranes and anchoring means, in accordance with DIN 15003 "Lifting crane, load-bearing equipment, loads, forces, terms" and BGV D8. The maximum load-bearing capacity of the lifting crane must not be exceeded.

DANGER

Danger or risk of injury exists from toppling over, falling down or uncontrolled movements of hydraulics units, cooling filter aggregates or other parts not secured properly.

CAUTION

Warning of possible damage to sealing surfaces!
During transport, it is to be ensured that the sealing surfaces of the connection flanges are not damaged.

4.1 Incoming goods control

The system is to be unpacked and checked directly after transport.

The following are to be checked:

- ❑ Any damages incurred during transit
- ❑ Proper scope of delivery
- ❑ Loose screwed connections
- ❑ Other defects

The preparation of a delivery protocol with signature of the transport resources manager is necessary. The manufacturer and/or supplier are to be informed of complaints immediately within 24 hours.

If the system is not assembled immediately after delivery to the customer, it must be stored at a protected location.

- ❑ Do not keep in the open air.
- ❑ Store in dry and dust-free conditions.
- ❑ Do not expose to aggressive media.
- ❑ Protect against solar radiation, storage temperature 15°C to 25°C, air relative humidity level max. 60%.
- ❑ Avoid mechanical vibrations.

In case of longer storage (>3 months), the general condition of the system and the packaging is to be checked regularly. On requirement, the system is to be professionally preserved.

DANGER

Contamination danger through preservatives.
Preservatives must not reach the soil or the sewage system.
They must be disposed of according to the applicable environmental protection regulations.

4.2 Selection and preparation of the installation location

The selection and preparation of the installation location is to be carried out according to the following criteria:

- The location of the system must be in a closed, draft-free room. The system may not be exposed to direct solar radiation or local thermal action (e.g. radiators or radiant heaters).
- The ambient temperature in the installation area of the system must be in the range +5°C to max. +40°C.
- The relative humidity at the installation locations must on average 40%, up to maximum 60%, with an ambient temperature of +20°C.
- The dust content of the air at the installation location should be less than 1 mg/m³.
- All necessary operating materials, such as lubricating oils, greases etc., must be available in sufficient quantity and quality before the installation and operational startup, according to the specifications included in the operating instructions.
- The main electrical connection for the system is to be prepared considering the references in the operating instructions. A constant power supply is to be ensured. The rating and fuse protection of the supply line is to be implemented according to the valid specifications, and may be carried out by trained specialist personnel only.

5 Operational startup

5.1 General

The trouble-free operation of every machine or system presupposes compliance with the operational and maintenance directions of the manufacturer. Hydraulic systems can be implemented in very different designs, and, as a component part of machines, can be subject to the most varied operating instructions.

A general operational and maintenance direction for hydraulic systems can provide valuable references for operational startup, however, it is to be extended by special instructions on an individual basis.

Notes for work on hydraulic systems

For reasons of safety, no line screwed connections, connections and devices may be loosened as long as the system is under pressure. Before this, loads are to be lowered, pumps switched off and pressure accumulators depressurized.

Do not work with oily hands.

With all work, the highest levels of cleanliness are to be ensured, because the enemy of hydraulics is dirt. Before the loosening of screwed connections, the external surroundings are to be cleaned. All openings are to be closed off with protective caps so that no dirt can penetrate into the system. During the cleaning of oil tanks, no cotton waste is to be employed as far as possible. Filling of the system with oil should be carried out only via filter.

In case of spraying and brushing on paint, in particular nitro-based, elastic seals and the bearings of moving parts are to be covered. Only lacquers and paints are to be employed which are suitable for the hydraulic fluids used.

Caution: Damaged pipes and hose lines are to be replaced immediately.

Line installation

With the selection of pipes, hoses and screwed connections / flanges, the correct operating pressure (wall-thickness) is to be ensured. Only seamless precision steel pipe is to be employed.

The pipes are to be cleaned of dirt, scale, sand, chip cuttings etc. before installation. In particular, welded pipes must be pickled or flushed. The pipes are to be laid free of stress. The pipe connections and the screw thread depths of the components and bridge plates are suitable for all traditional screwed connections. The housing recesses are designed so that screwed connections are capable of being be used with both sealing edge and soft sealing (not suitable for screwed connections with O-ring seal).

The screw thread may not rest on the base of the borehole. Sealing materials, such as hemp and cement, are not permissible because they can lead to contamination, and with that to functional disturbances.

Installation of devices

With the installation of devices, the correct installation location and compliance with the permissible ambient temperature and so forth are to be ensured. In order to avoid jamming of piston valves, the control and regulation elements are to be mounted free of stress. For this, the bearing surfaces must be perfectly plane. The fixing screws are to be tightened uniformly with the prescribed torque.

Pressure accumulator

Pressure accumulators are pressure vessels and are subject to the safety regulations valid at the installation locations.

Work on systems with storage vessels (repairs, connecting of pressure gauges and sim.) may be implemented only after bleeding of the liquid under pressure.

Neither welding nor soldering work, as well as no mechanical processing, may be carried out on the storage container. Inappropriate repairs can lead to serious accidents. Repairs on the hydraulic storage accumulator may therefore be implemented by specialist personnel only. It is absolutely necessary that the pressure accumulator operating instructions be read.

5.2 Installation of the system

DANGER

The installation, assembly and operational startup of the system may be carried out by trained specialist personnel only, who basically observe the safety regulations.

The full utilization of the performance capability of the system is dependent on certain measures, which are to be considered in case of the installation and assembly.

- Before beginning assembly work, sufficient space is to be created for freedom of assembly.
- Maintain order and cleanliness at the location.
  Remove any component parts and tools lying around.
- Implementation of a proper installation.
  Inappropriately secured component parts can fall down or topple over.
- The system is to be cleaned thoroughly. Individual system parts are possibly to be protected with corrosion protection agent, and must be cleaned with a solvent.

- Only those connecting elements (screwed connections, hoses, pipes and valves) which are commercially available from manufacturers of repute, and which are suitable for the maximum admissible operating pressure and for the liquids, are to be employed for the connection of the system. The system is to be checked for contamination and foreign bodies in the connection nozzles. Free transition flow of the medium must be guaranteed.
- In case of the connection to the pipe system, stresses at the connecting points are to be avoided.
- An electrical connection with the stipulated interface conditions must be provided in proximity to the system.

In case of work on and with the system, the following work-safety clothing is to be worn:

- Protection equipment
  Close fitting working clothing (low level of tear resistance, no wide sleeves, no rings or other jewelry etc.)
- Protective gloves for protection against friction burns, grazing, pricking and deeper lesion injuries of the hands.
- Protective goggles for protection of the eyes against possible injury through sprayed lubricating oil.

Procedure during installation:

1. Place the system on a fixed, non-vibrating substrate and align horizontally.
2. Attach the system to the substrate with suitable fastening elements, to guarantee stability.
3. Connect hose lines and pipes for hydraulic fluid and refrigerant to the system as required.

CAUTION

With the connection of the lines, check that the connecting points are sealed.

4. Fill system with hydraulic fluid. Existing oil-drainage plugs or drain cocks must screwed in and be sealed and closed.
5. Connection of the electrical operating resources and monitoring devices, as well as the electric motors.
6. Switch on main power switch.
7. Switch on electric motor of the pumping set for a short time. Check correct rotation direction of the electric motor (red rotation direction arrow on the electrical motor). If the motor runs in the opposite direction, two phases must be interchanged on the motor connection.

CAUTION

Accident hazard through electric current!
The electrical connection is implemented directly in the electric control panel of the system. The installation of the electrical connection may be carried out by trained specialist personnel only.

CAUTION

Accident hazard through electric current!
The ground wire is terminated on a fixed screwed connection.
In case of every site location change of the system, the connection is to be established again, since otherwise the protective measure is no longer effective.

CAUTION

A correct selection of the connection cables and the fuse protection is to be provided by an electrical specialist.

8. Setting-adjustment and functional check of the individual module assemblies.

5.3 Operational startup

Preassembled modules and aggregates are frequently supplied for stationary systems. An operational startup is implemented in part with the machine manufacturer, however, it is frequently only possible for the first time at the final location.

In detail, the following points are to be considered with an operational startup:

- Visual check for damages and contamination incurred during transit

- Installation and fixing of aggregates and module assemblies

- Connection of the hydraulic consumers in the machine. Flush out longer lines in case of pipe and hose installation.

- Electrics installation for drive and control, following prior check of the connected loads. Connect possible cooling water. Check the rotation direction of the pumps before switching on.

- Fill the oil tank with the prescribed or suitable hydraulic fluid; in particular its viscosity and purity are decisive factors for the trouble-free operation of the system.

A high level of cleanliness is to be ensured. Clean screwed fittings for filling and close-offs on transport and storage containers before opening. Check oil tanks for dirt accumulation and clean as necessary.

Check hydraulic fluids for any penetrated water.

Do not under any circumstances remove the filter screen from built-in filters at the filling nozzle or filter insert while filling. The dirt content of the filled hydraulic fluid must not exceed ISO 19/16. Experience has indicated that even new liquids are often above this value. In such cases, filling equipment with special filters is to be employed. Considering maximum liquid level.

- Opening of shut-off cocks or shut-off valves in suction lines

- Start drive motor slowly

Switch on electric motor for a short time in inching operation, and check rotation direction.

- Ventilation

Ventilation of the system, as far as possible at the highest point on the service pipes. Activate directional valves and drive consumers up and down repeatedly. Increase loading slowly. Increase setting values of pressure valves and pressure-control devices. The ventilation is complete when no oil foam occurs in the container, no abrupt movements of the consumers take place and no anomalous noises can be heard.

- Check liquid level

and top up as necessary after ventilation has been completed.

- Final valve setting-adjustment and run-in of the machine

according to specification of the manufacturer. A general statement concerning this is not possible. Adjustments are carried out on pressure valves, pressure-activated switches, flow-control valves, pump controls, response time adjustments.

- Valve setting-adjustments

Pressure valves, flow-control valves and pressure-control devices of variable displacement pumps, first of all at the lowest possible setting values. Directional-control valves in rest position.

- Accumulator

Fill to prescribed gas pre-stressing pressure.

- Variable displacement pumps

with pressure-control devices are mostly protected by an additional pressure-control valve. In case of setting-adjustment, it is to be ensured that the response pressure of the safety valve is considerably higher than that of the pressure control device (P1 = P2 + approx. 30 bar)

- Monitoring the final operating temperature

when the machine has been fully in operation for several hours.

- Elimination of leakage

mostly through simple retightening of screwed connections after a few operating hours.

- Clean filters and change filter elements.

From experience, the greatest dirt deposition is to be expected in the first few operating hours.

5.4 Dismantling of the system

CAUTION

The hydraulic fluid contained in the system is to be pumped out into containers suitable for that (drums). The remaining quantity of hydraulic fluid can be bled off, as appropriate, through lifting the system with hoisting gear above the level of the oil-drainage plugs.

DANGER

Environmental damage!
While bleeding off the liquids, it is to be ensured that no oil or other endangering materials reach the soil or the sewage system. These must be absorbed and disposed of in secure containers, in accordance with the applicable environmental protection regulations.

CAUTION

Danger of injury through electric current!
Before disassembly work on the system, the electrical system is to be switched without energy, the voltage-free status verified and the switch secured against unintentional switching on again.
Attach warning signs.

DANGER

Danger of injury!
The oil circulation system is to be interrupted through closing the shut-off valves. No further pressure may build up.

Procedure with the dismantling:

1. Depressurize the oil circulation system.
2. Bleed off hydraulic fluid over the oil drain-plugs.

3. Ensure the voltage-free status of the electrical system through:
   - Isolation switching
   - Securing against restart
   - Verifying freedom from voltage
   - Grounding and shorting
   - Isolating adjacent elements under voltage
4. Screw off hose lines from the flanged connections and close off openings.
5. Loosen ground fastening elements of the system.

6 Operation

CAUTION

Before operational startup, the following control-checks are to be carried out:

- The entire system must be free of foreign bodies
- Proper connection of all media
- Proper connection of the protective earth conductor
- All component parts must be functional

After the installation and implemented control-checks, the system can be taken into operation without any further preliminary measures.

CAUTION

If faults occur during operation which cannot be eliminated immediately, the company Universal Hydraulik GmbH is to be contacted.

NOTE

A system ready for operation is prerequisite for a proper operational sequence.

7 Maintenance, cleaning and repair maintenance

7.1 General notes

The durability of the system depends on the quality (e.g. degree of pollution of the medium and condition of the alloyed component parts). The operator is responsible for the stipulation of maintenance intervals. The function parameters determined in on-going operation are decisive factors for this.

CAUTION

The operator and owner are responsible for the maintenance and testing of the system function.

CAUTION

Maintenance and testing of the system function may be implemented only by qualified personnel. The personnel must have read the operating instructions.

CAUTION

Daily control-checks are to be carried out for leakage and sealing breaks.
Note the development of any unusual noises in the system.

CAUTION

If irregularities occur in the system, it is to be taken out of operation immediately.
The fault is to be corrected.
If this is not possible, the manufacturer is to be informed.

CAUTION

The maintenance intervals must be stipulated so that a degradation of the system does not influence operation.

CAUTION

Damage to the electrical system!
The electrical system is to be protected against splashed water. Do not wash down electrical parts and electronic components with a high-pressure cleaner (steam jet)!
During cleaning work, the electrical control panel is to be closed!

NOTE

Cleaning agents must not damage seals and component parts of the system.
Do not employ any aggressive cleaning agents. Use lint-free cloths.
Work only with dry, filtered compressed air to max. 2 bar. Carry out a visual check and functional test of the system after the cleaning work.

7.2 Inspection and maintenance

Hydraulics components have the constructive prerequisites for long and trouble-free operation. They require only a low level of maintenance outlay. However this maintenance is indispensable for trouble-free operation, since experience has shown that up to 80% of occurring faults and damage can be attributed to dirt, lack of maintenance and incorrect selection of the hydraulic fluid.

The extent of the time intervals for inspections and maintenance is generally stipulated by machine manufacturers in a corresponding plan.

- Level of the hydraulic fluids

Continuous checking is required, since a drop of the liquid volume below the marked minimum level can result in a rise in the operating temperature, the accumulation of undissolved air and failure of pumps through cavitation.

- Temperature of the hydraulic fluid

The operating temperature depends on many factors, such as e.g. operating mode, machine cycle, switching circuit etc. In practice, average temperatures of 40° - 90° are usual.

A max. temperature of 60° for mineral oil is recommended, since an accelerated oil ageing occurs with advancing operating time and shortens the service life duration of seals and hoses.

The oil temperature in the container must be checked continuously. Gradual temperature gradients indicate possible contamination or jamming and/or metal or seal wear and should be reason for verification of all the component parts involved. Sudden and significant temperature increases are an alarm signal, and require an instant shutdown and checking of the system.

- Condition of the hydraulic fluid

The ageing of the hydraulic fluid depends on a diverse variety of operating conditions, such as e.g. temperature, ambient dirt, operating pressure, humidity etc.

The degree of ageing, and therefore the utilization capability, can mostly be assessed through a simple visual inspection.

- Filter control-check / filter element change

The filter elements are to be changed for the first time immediately after the first operational startup. Further filter element changes are to be carried out at intervals extending from every month to every six months, according to operating conditions.

- Filters with dirt accumulation indication

These are to be checked continuously. The control-check is implemented daily after the operating temperature has been reached. During hot running, an incorrect reading can perhaps be given, since the flow throughput resistance can be increased.

- Ventilation filter

This enables a filtered air compensation in the oil tank in case of fluctuating oil level. The functional capability is to be checked according to environmental pollution and, where appropriate, the ventilation filter or its element are to be exchanged.

- Changing the hydraulic fluid

A first oil change is implemented immediately after the operational startup. Further oil changes for oil fillings which are not monitored in the laboratory are necessary after approx. 1000 - 4000 operating hours, or at an interval of 6 to 24 months. However, this presupposes compliance with a max. operating temperature of 70°, as well as regular filter element changes. As a result of a corresponding oil maintenance and regular verification, the change intervals can be increased considerably.

- Accumulator

As well as the legally prescribed tests, the gas pre-stressing pressure is to be monitored. In particular in the run-in phase, a frequent measurement is recommended.

The measurement of the gas pre-stressing pressure is implemented with special checking and filling equipment.

A simple test is also possible with an oil pressure gauge.

Caution: Employ only **nitrogen** as gas.

- Set-adjusted values

Pressure valves, as well as flow-control valves and pump controls, however, also signal sections such as pressure-activated switch, limit switch, temperature controller etc., are set-adjusted during the first operational startup. These values are to be monitored on-going in the initial phase. Later control-checks are carried out in the medium term.

- Oil/Air heat exchanger

Oil/Air heat exchangers are to be cleaned regularly, according to ambient dirt occurrence.

- Oil/Water heat exchanger

The cleaning intervals are dependent on the water quality, the temperature and the water addition. Cleaning is with nylon brushes or chemically.

- Other control-checks

Particularly in the run-in phase, but also in long-term operation, faults can be identified in time by applying a certain level of attention. The following are to be considered in particular:

- External leakage

- Dirt accumulation

- Damage, in particular of hose and pipe lines

- Noises from pumps, motors, couplings and hanger suspensions

- Function of measuring devices

Findings in the hydraulic fluid	**Contamination**	**Possible cause**
Dark coloring	Oxidation products	Overheating, neglected oil change (where appropriate, external oil entry)
Milky turbidity	Water or foam	Water ingress, air entry
Water deposition	Water	Water ingress e.g. refrigerant
Air bubbles	Air	Air entry e.g. due to lack of oil or leaky suction line
Suspended or deposited contamination	Solid foreign matter	Dirt, ageing process
Odor of burned oil	Ageing process	Overheating

7.3 Maintenance plan

The following module assemblies are to be correspondingly maintained and cleaned, according to the following maintenance plan:

Module assembly	Measure	Maintenance interval
Hydraulics systems	Removal of Corrosive damages	Continuously
	Verification of all module assemblies	Continuously
	Removal of dirt and dust precipitation	Continuously
	Continuously check for leakage	Continuously
Hydraulic fluids	Check according to table Page 29	1000 h or every 3 months
Electrical motor	Noise and visual check	Continuously
	Dismantle motor, clean, change ball bearings, grease	Bearing replacement time according to stipulations in the manufacturer documentation
	Remove dirt sucked in by the fan impeller	At adequate intervals
	Control-check for secure seating of the electrical connections in the terminal box	2000 h or every 3 months
	Check tension relief of the connection cable	Continuously
Nitrogen	Check nitrogen	Continuously
Accumulator	Verification of accumulator	According to legal specifications (500 operating hours)
Setting values of valves, pump controls etc.	Check	500 h
Ventilation filter	Exchange filter elements	At adequate intervals
Filter	Exchange filter elements	According to dirt accumulation indication, or at adequate intervals

Module assembly	Measure	Maintenance interval
Ball valves	Check function	Continuously
Pipe connections and hose connections	Check flanged connections for leakage	At adequate intervals
Hose lines	Visual check for cracks in the outer layer and/or rust	Continuously
	Check of the utilization duration including duration of storage, according to DIN 20066, the utilization duration should not exceed six years.	Annually
Electrical connection and protective ground terminal	Control-check for secure seating of the connections, check function	At adequate intervals

NOTE

Defective module assemblies or a complete defective system must not be disposed of as domestic waste. For the waste disposal, the national environmental protection regulations valid in each case are to be considered in exact form.

7.4 Reason for malfunction

- Excessive noise in the system

Excessive noise in the new system can in most cases be attributed to foaming of the liquid. The causes for this are the following:

- The liquid level in the container is too low

- Due to bad ventilation, air pockets can have formed

- Leaky suction lines

This is especially critical if an intake filter is provided. First check the pipe screwed connections. For an initial test, ductile lubricating grease is brushed onto suspicious locations. This causes a temporary sealing.

- During the start-up, the initially existing air inclusion leads to noise generation. After a short runtime, the air entrained in the oil reaches the container through the system, where it can separate out. A maximum long routing of the oil between return flow and suction line by means of smoothing baffles improves the air separation from the oil.

- Cavitation in the pump or failure of the feed can also cause noises. The most frequent reasons for this are:

1. The liquid has too high a level of viscosity. The reason for this can be either that a liquid has been selected with unsuitable viscosity, or that the liquid is too cold for the start-up.

2. In case of oil and water emulsions, the viscosity can be influenced disadvantageously if the quantity ratio between oil and water is unsuitable. Local constrictions in the suction line, e.g. partly shut valves, springs in the check valve which are too strong, damaged pipe or defective hose.

3. Soiled suction filter.

4. Also displaced or non-stress-free screwed connections can cause noises. Loose brackets sometimes generate a clattering noise, whose cause can be determined with difficulty only.

5. Incorrectly set-adjusted pressure-control valves are unnecessary sources of noise.

- Inadequate or too small pressure build-up

1. Check the rotation direction of the pumps

2. Check whether the correct procedure is used during the start-up of the pumps and that the value set-adjusted on the pressure-control valve is min. 10 bar higher than the pump pressure.

3. Pumps can generate pressure only when there is resistance to the flow. Many systems are equipped with valves with open center-setting, so that the liquid flows with very low pressure only, despite the value set-adjusted on the pressure-control valve and the pump pressure.

4. Make sure that you read off the pressure at the correct locations of the system.

- Too high liquid temperature

Caution! Danger of burn injuries.

1. If an oil/water heat exchanger is installed, the water flow-through is to be checked. The water drain-off pipe must feel hotter than the supply pipe. The oil drain-off pipe must be cooler than the oil supply flow pipe.

2. If the system is equipped with an oil-air heat exchanger, you must check whether the rotation direction of the fan is right, the air ducts are not blocked or whether the fan is soiled.

3. The oil pressure can be unnecessarily high. Check whether the setting-adjustments of all pressure valves correspond to the values specified in the hydraulics schematic.

4. Check whether possibly existing discharge circuits work trouble-free.

5. Check whether the viscosity of the oil corresponds to the specifications.

7.5 Repair

CAUTION

Repairs to the system may be carried out only following return discussion with the manufacturer. Only original parts may be employed.

7.6 Hydraulic fluids

- General

The pressure medium in an hydraulic system must have a whole series of properties in order to guarantee operational safety in the long term. It is recommended to make the selection in joint cooperation with well-known oil manufacturers.

The service life duration of the hydraulics system and the hydraulic fluid is basically determined from the following factors.

1. The pressure medium must be alloyed with additives, which provide for a high level of wear protection for all movable parts in the system.

2. The viscosity must be selected correctly, to guarantee adequate sealing and lubrication at the operating temperature which is reached.

3. The hydraulic fluids should contain additives to increase ageing resistance and for the prevention of corrosion.

- Viscosity

The viscosity is a significant characteristic parameter of the hydraulic fluids. Its selection depends on the requirements of the corresponding oil circulation system, and on the special demands which are made through the employment of critical devices. Therefore compliance with the maximum minimum operating values and the permissible operating range is urgently recommended. Too high a level of viscosity on start-up can lead to cavitation damage. Continuous operation with too high a level of viscosity can reduce the air release in the oil tank to such an extent that pump and valve damage cannot be avoided. Too low a level of viscosity results in unfavorable efficiency and decreased lubrication.

Furthermore, too high a level of viscosity can also lead to very unfavorable efficiency in case of low operating pressures. Therefore the viscosity is to be selected carefully for every system, such that the lowest temperature during the start, the normal operating temperature and also the high temperatures possibly occurring, are considered. An undershooting of the minimum viscosity should be avoided absolutely.

- Temperature

It is recommended to maintain an operating temperature of approx. 45 degrees (average temperature of the hydraulic fluid in the tank) and not to exceed a maximum temperature of 60° as far as possible, in order to achieve optimum maintenance intervals of the liquid. Where appropriate, the operating temperature is to be maintained at the required limits through the employment of heat exchangers.

- Cleanliness / Filtering

The greatest care must be taken that the entire system is freed of residual paint, metal cuttings, weld scale, sealing compound, cleaning cloth residue and so forth before the first operational startup, and is subsequently flushed through with finely filtered oil (min. 25 µm filter gauge). Non-observance of this important point can lead to extensive damage. In addition, it is urgently recommended to filter the hydraulic fluid during normal operation to max. 25 µm particle size. According to design implementation and environmental conditions, work must be carried out with intake filter, full-flow pressure filter, return-flow filter or even with a combination of these. Here the basic principle applies: The better the filtering, the higher the service life duration of the components in the system. The necessary filtering in operation in case of utilization of different hydraulic devices depends on the necessary oil purity of the most sensitive device in the oil circulation system. Specifications about the necessary purity are to be taken from the corresponding product information.

- Type designations of hydraulic oils

Corresponding to DIN 51524 and 51525 and CETOP Proposals, key identification letters are stipulated for hydraulic oils on mineral-oil base. However, a final designation on ISO level is not complete.

In detail, the following applies:

H = Ageing-resistant mineral oil without effective additives (low importance)

L = Active substance for the increase of the corrosion protection and/or ageing

P = Active substance for the reduction of wear and increase of the load-carrying capacity

V = Active substance according to I + P (according to CETOP)

M = Active substances M and high-polymer additives for the improvement of the viscosity-temperature characteristic, also expressed by the VI (= Viscosity Index) DIN 51564 (according to CETOP). D = Active substances with deuterizing and dispersing properties (cleaning and ageing, as well as foreign materials, held in suspense)

The most frequent combinations are:

HL = For simple requirements with operating pressures >200 bar

HLP = For systems with reciprocating pumps with operating pressures > 200 bar

7.7 Viscosity characteristics

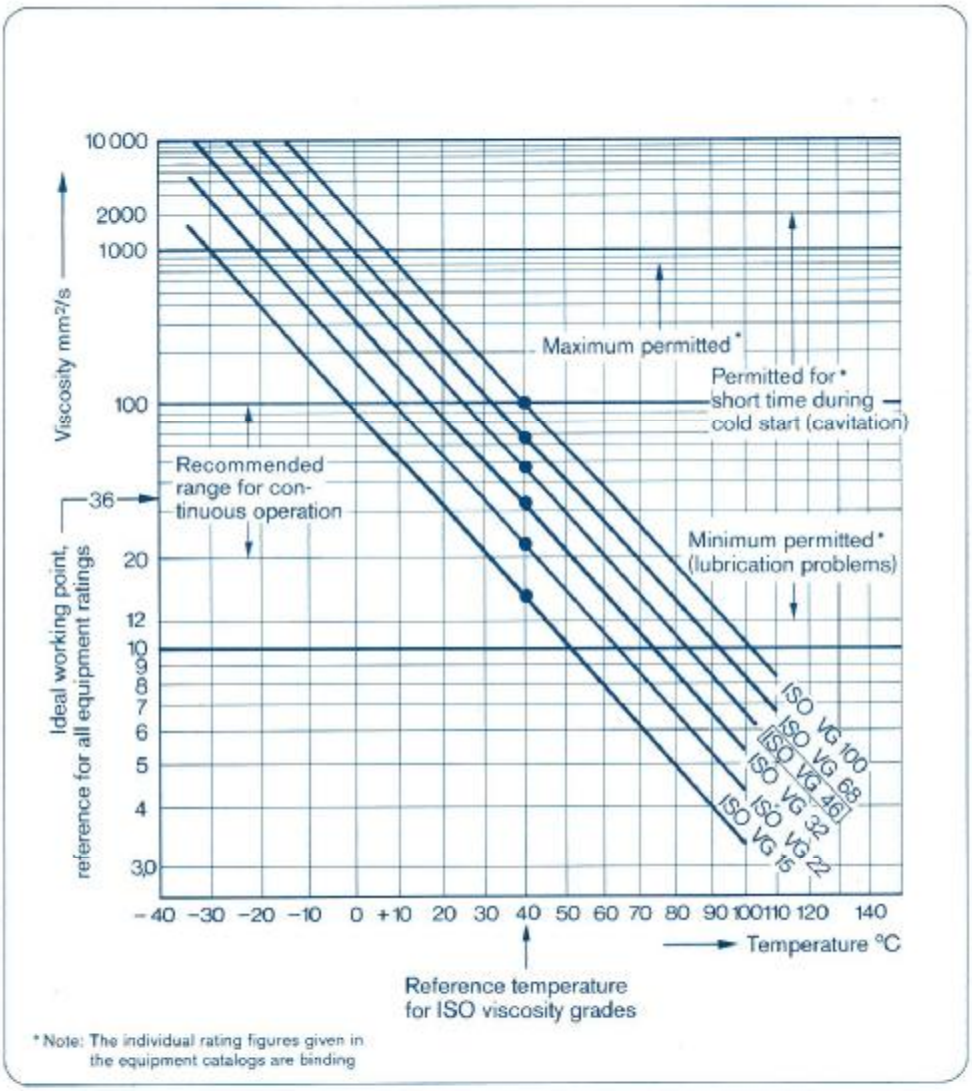

7.8 Pump viscosity ranges

Type of device	Viscosity range	Type of the hydraulic fluid
Axial piston pumps	Nominal value: 32 - 68 mm²/s at 40°C Minimum operating value: max. permissible 220 mm²/s max. permissible operating range 13 - 54 mm²/s	Alloyed mineral oil which corresponds to the HLP Group, in accordance with DIN 51525 and in accordance with DIN 51524 Part 2 E, or API classification SC, SD, SE. The significant feature is an adequate content of wear-decreasing additives
Adjustable vane and gear units	Nominal value: 32 - 68 mm²/s at 40°C Startup value: max. permissible 860 mm²/s max. permissible operating range 13 - 54 mm²/s	
Adjustable vane pumps	Nominal value: 32 - 68 mm²/s at 40° Startup value: In case of full capacity: 800 mm²/s With zero shift: 200 mm²/s max. permissible operating range 16 - 160 mm²/s	
Slowly-speed radial piston pumps	Nominal value: 32-68 mm²/s at 40°C Startup value: max. permissible operating range: 25 - 54 mm²/s	

7.9 Filter

- Task

The majority of premature failures occurring in oil hydraulic systems can be attributed to dirty hydraulic fluids. The task of the hydraulic filter is to reduce this dirt content to a permissible level concerning size and concentration of the dirt particles, in order to protect against excessive wear.

- Filter gauge

Previous definitions of filter pore widths, such as e.g. absolute, nominal or medium pore width, have been proved in practice to be inadequate. Scarcely any filtering material can guarantee a retention rate of 100% completely, with reference to the particle size. This fact is considered with the S-value.

- The S-value

This value is based on the Multi Pass Test, according to ISO 4572. Here, the retention rate is determined for a filter which is flowed through with oil with a defined level of dirt.

Explanation of the specification:

S-10 (level of the dirt accumulation) = 75 (retention rate 75:1)

The retention rate of 75:1 is employed with most definitions, however, other values are also conceivable. The percentage retention rate is calculated according to the formula:

% = 100 - 100 ÷ S

e.g. 100 - 100 ÷ 75 = 98.66%

Such a retention rate corresponds completely to the expression used to date "Filter gauge absolute".

CAUTION

The filter gauge of the elements may not be changed by the customer (without return discussion with the supplier).

Every filter has been designed system-specific for the hydraulics system.

2 Safety

These operating instructions contain basic safety instructions for installation, operation and maintenance. It is therefore essential that they are read by fitters and all specialist staff and customer personnel prior to installation and start–up. They must always be kept at hand at the place of installation.

The special safety instructions contained in the other chapters must be observed in addition to the general safety instructions in this chapter.

2.1 Marking of instructions in the operating instructions

The safety instructions contained in these operating instructions which represent a danger to personnel if not complied with are specially marked by the general danger symbol:

Warning symbol
as per DIN 4844–W9

Warning of danger from electric voltage is given as follows:

Warning symbol
as per DIN 4844–W8.

Instructions which are essential to avoid endangering the machine and its functioning are marked by the word

ATTENTION

Instructions affixed directly to the machine such as

- Directional markers
- Signs for fluid connections

must always be observed and maintained in fully legible condition at all times.

2.2 Personnel qualification and training

The operating, maintenance, inspection and mounting personnel must be appropriately qualified for the duties assigned to them. The scope of their responsibilities, competency and supervisory duties must be closely controlled by the customer. If the personnel do not have the required knowledge, they must be trained and instructed. If required, this may be provided by the manufacturer/supplier on behalf of the customer. The customer must additionally ensure that personnel fully understand the content of the operating instructions.

2.3 Dangers in the event of non–compliance with safety instructions

Failure to comply with the safety instructions may result in danger to persons, and place the environment and the machine at risk. Non–compliance with the safety instructions may lead to the loss of any claims for damages.
Non–compliance may relate to the following dangers:

- Failure of important functions of the plant
- Failure of specified methods for maintenance and servicing
- Danger to persons resulting from electrical, mechanical and chemical effects
- Danger to the environment resulting from leakage of hazardous substances

2.4 Responsible working practices

The safety instructions contained in these operating instructions, current national accident prevention regulations, as well as internal working, operating and safety rules of the customer, must be observed.

2.5 Safety instructions for the user/operator

- Hot or cold parts representing a danger must be protected against accidental contact on site.
- Protection against accidental contact for moving parts (such as the coupling) must not be removed while the machine is in operation.
- When operating pump aggregates in a dust–laden environment (e.g. milling, chipboard manufacture, bakeries), the surfaces of the pumps and motors must be cleaned at regular intervals, depending on local conditions, in order to maintain the cooling effect and eliminate the possibility of spontaneous combustion. Refer also to explosion protection regulations (ZH 1/10).
- Leakage (e.g. from the shaft seal) of hazardous substances being handled, such as explosive, toxic or hot materials, must be discharged such that no danger to persons or the environment is created. Legal regulations must be observed.
- Dangers from electrical energy must be eliminated. For details in this regard, refer to VDE and local power company regulations.

2.6 Safety instructions for maintenance, inspection and mounting work

The operator company shall ensure that all maintenance, inspection and mounting work is performed by authorized and qualified specialist personnel who have thoroughly studied the operating instructions.

Work on the machine is only to be carried out when the machine is at a standstill. The means of shutdown of the machine described in the operating instructions must always be followed.

Pumps or aggregates handling fluids which are detrimental to health must be decontaminated. All safety and protective devices must immediately be refitted and made operational on completion of the work.

The instructions under Section 6.1, "Preparation for start–up", must be observed before restarting.

2.7 Unauthorized conversion and production of replacement parts

Conversion or modification of the machines is only permissible after consultation with the manufacturer. Original replacement parts and accessories approved by the manufacturer serve safety purposes. If other parts are used the manufacturer cannot be held liable for the consequences.

5 Installation/Mounting

5.1 Installation

The pumps can be horizontally or vertically mounted.

For safety reasons the "downward–facing motor" arrangement is not permitted.

5.2 Mode of fastening

The mode of fastening is dependent on the design type and size of the pump and the coupled motor, as well as local installation conditions.

Horizontal foot pumps are normally mounted with the drive motor on a common **base plate**.
Flange pumps can be fastened by means of a **wall/foot lantern**, either horizontally or vertically, at the place of installation.
Vertical plinth pumps have a small installation area due to their design, and can also be fastened on a **concrete foundation** or **foundation frame**.
In the case of flange and insertion pumps which are installed in immersion bodies, tanks, cylinder housings etc., the **fixing flange** of the pump, together with the **flange contact surface**, provides a fastening option in the various executions.

Precise details on form and dimensions are given in the installation drawing.

5.3 Foundation

5.3.1 General

The foundation may be a floor/concrete base or a load–bearing steel foundation frame.
Note: The foundation must be designed so it can take the weight of the pump aggregate across its entire area.

5.3.2 Characteristiques of a steel foundation frame

A steel foundation frame must be designed so that the base plate makes contact across its entire area, and can be bolted or welded down.

ATTENTION If the base plate is only supported at four points the pump aggregate will hang down in the middle. This will affect the alignment of the coupling and may also lead to severe noise being generated.

5.3.3 Characteristiques of a floor/concrete foundation

The foundation must be horizontal, flat and clean, and be capable of bearing the full load upon it.
Note: Concrete foundations must be executed with standard concrete of strength class B 25 as a minimum.

5.3.4 Alignment of the pump aggregate

The pump aggregate must be aligned to its pre–set height and system dimensions. This is done using suitable steel shims, arranged directly adjacent to each fixing bolt.
The total height of the steel shims is determined by the pre–set system dimensions of the plant. The steel shims and the base plate must sit flush.

If the fixing holes are more than 750 mm apart, we recommend fitting additional steel shims in the middle of the base plate.

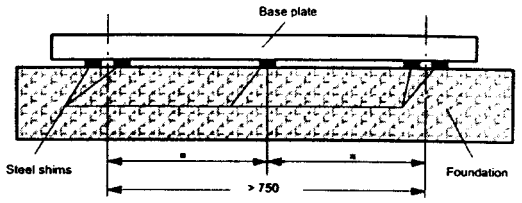

Fig. 2: Alignment with steel shims

Horizontal alignment of the aggregate is produced by way of flat–machined surfaces on the pump using a machine spirit level. Measurements are taken in longitudinal and transverse directions of the pump aggregate.
Permissible deviation: max. 1 mm per 1 m length.

5.3.5 Fixing the pump aggregate

When the aggregate has been aligned on the foundation the fixing bolts should be tightened evenly, alternating side to side.
Recommendation: As far as possible, the base plate should be cast–on over its entire length with a non–shrinking mortar casting compound.
Note: When casting–on and packing with the mortar casting compound, it must be ensured that the base plate makes contact with the foundation over its entire area, and that there are no cavities.

5.4 Checking the coupling alignment

5.4.1 Checking the coupling alignment in case of horizontal setup on base plate (if used)

A complete delivered pump aggregate has been carefully assembled at the factory. After proper installation, and prior to start–up of the pump aggregate, the alignment of the coupling must be checked.
The check can be made with a straight–edge and a feeler gauge, or with other suitable equipment (such as a laser alignment device).

The measurements are taken in two planes, each offset by 90°, on the circumference of the coupling.

If a height, lateral or angle offset is detected between the two coupling halves, the drive motor should be re–aligned such that the coupling halves are flush with each other (level out with flat packing shims as necessary).

The gap between the two coupling halves must be the same all round the circumference of the coupling. The specified gap is shown in the installation diagram.

The spacing between the straight–edge laid over both coupling halves and the respective shaft must be the same all round the circumference.

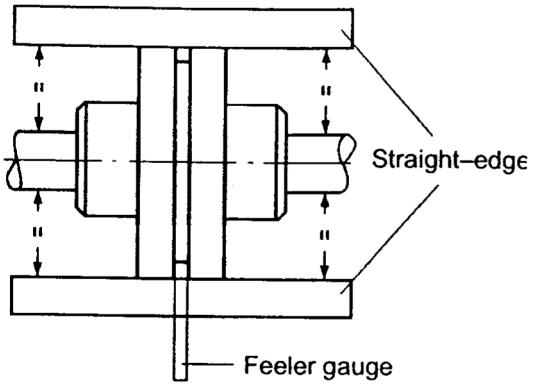

Fig. 3: Alignment of the coupling with straight–edge and feeler gauge

For couplings with a distance piece (removable couplings) the alignment of the coupling can be checked with dial gauges.

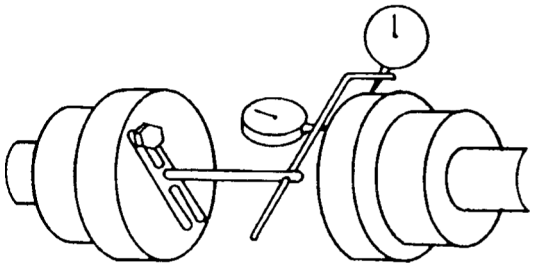

Fig. 4: Alignment of the coupling with dial gauges

Note: The permissible axial and radial deviation, measured on the front face of the coupling and the coupling circumference respectively, may be max. 0.1 mm, but as far as possible should be kept below 0.05 mm.
Whe the fixing bolts have been aligned and tightened the pump/drive motor unit must be able to be spun by hand without pressure points.

ATTENTION Out–of–flush errors on the coupling may lead to heavier wear of the coupling, the anti–friction bearing and the shaft seal, and even cause the shaft end to be torn off.

5.4.2 Coupling alignment in case of flanged aggregates (if used)

In the case of pumps with flanged drive motor, the pump and motor are precisely centered in the lantern. Alignment or re–alignment of the coupling is not requi–red.
Note: Improper handling, e.g. during transportation, may impair the alignment between the pump and the motor. In this case the pump and the motor must be returned to the factory for checking.

5.4.3 Coupling alignment of special designed couplings (if used)

Refer to the operating instructions of the coupling manufacturer.

5.5 Assembly of pump and motor

If the aggregate is only assembled at the place of use, the coupling is assembled as follows:

1. Coat the pump and motor shaft ends with a fine film of molybdenum disulfide (e.g. Molykote) and insert keys.

2. Push on the coupling halves on the pump and motor side with the aid of a pusher device until the shaft end is flush to the coupling hub.
   If no puller is available, heating the coupling halves to approx. 100°C (without rubber buffer) facilitates pushing.
   ATTENTION Impacts to the components of the pump or motor must be avoided.

3. Tighten the grub screw on both coupling hubs.

4. When assembling the pump and motor, make sure the specified gap between the coupling halves is maintained (see our installation drawings).

5. In the case of horizontally mounted pump aggregates fixed on a base plate or directly on the foundation, the coupling must be aligned as described in Section 5.4.
   In the case of pump aggregates with flanged motor, the coupling does not need to be re–aligned.

6. Mount the contact protection.
   According to accident prevention regulations, the pump must only be operated with a protection against accidental contact.

5.6 Space required for maintenance and repair

ATTENTION The pump must be accessible from all sides in order to be able to carry out necessary visual inspections.
Adequate space must be provided for maintenance and repair work. It must also be ensured that all pipelines can be attached and removed without hindrance.

5.7 Laying the pipelines

5.7.1 Nominal widths

If possible, the nominal widths of the suction and pressure pipelines should be rated so that the rate of flow does not exceed a maximum of 1 m/s in the suction pipeline and 3 m/s in the pressure pipeline. If possible, suction pipelines laid "uphill" are to be avoided.

5.7.2 Change of cross–sections and directions

Sudden changes of cross–sections and directions, as well as hairpin bends, are to be avoided.

5.7.3 Supports and flange connections

The pipelines must be connected to the pump, stress–free. They must be supported close to the pump and must allow easy screwing–on to avoid twisting. When the connections are loosened the pipeline must neither be slanted nor springing, nor must it be under pressure.

Any thermal stresses occurring on the pipelines must be kept away from the pump by suitable means, e.g. installing compensators.

5.7.4 Cleaning pipelines prior to attachment

Prior to assembly, all pipeline parts and valves must be thoroughly cleaned; especially in the case of welded pipelines, burrs and welding beads must be removed. Flange gaskets must not protrude inwards. Blanking flanges, plugs, protective film and/or protective paint on flanges and seals must be removed completely.

Water residues, still in the pipeline network from pressing–out or steeping for example, must be removed.

Delivery of water destroys the pump. The pump relies on the fluid being conveyed for its lubrication.

5.7.4.1 Inlet/suction conditions (NPSH)

To ensure fault–free continuous operation, the inlet and suction conditions of the plant must be appropriately adjusted to the pump demand (NPSHreq.)

The service condition is fulfilled when the plant NPSH value (NPSHavail.) is above the pump NPSH (NPSHreq.). The NPSHreq. is given in the characteristic sheets of the respective pumps

ATTENTION When pumping air–laden or volatile liquids, particular attention must be paid to the NPSH requirements of the plant.

5.7.5 Stop valves

Stop valves are to be installed in the suction and pressure pipelines close to the pump.

5.7.6 Pressure–relief valve

See Section 4.1 ...

5.7.7 Check valve

It is recommended to install a check valve between the pressure connection of the pump and the stop valve in order to prevent the pump from running dry when it is at a standstill and the pressure stop valve is open.

5.7.8 Vent valve

A vent valve must be provided at the highest point in the pressure pipeline.

5.7.9 Filtering

To protect the pump against coarse dirt contamination, we recommend as a matter of principle installing a filter in the suction pipeline, mesh width 0.6 mm.

Note: The service life of the pump is decisively influenced by the degree of dirt contamination of the fluid being conveyed, that is, by the number, size and hardness of the abrasive components.

5.7.10 Auxiliary pipelines (if present)

All auxiliary pipelines must be connected in accordance with the installation drawing, stress–free and sealed.

5.8 Safety and control devices

5.8.1 Manometers

Suitable pressure gauges are to be installed in the inlet and pressure pipelines, and in the pressurized auxiliary pipelines.

5.8.2 Safety device in the pressure pipeline

ATTENTION For pumps delivered without a pressure–relief valve, an overload protection must be provided in the control, or a pressure–relief valve (return valve) in the pressure pipeline (see separate Operating Instructions).

5.9 Electrical connections

The power supply cables of the coupled drive motor must be connected by a trained electrician, according to the motor manufacturer's circuit diagram. The applicable VDE regulations and local power company rules must be observed.

Danger from electrical energy must be eliminated.

6 Start–up/Shutdown

6.1 Preparation for start–up

6.1.1 Filling the pump with fluid

ATTENTION Prior to initial operation, the screw pump must be filled with fluid and bled. This at the same time provides the spindles with the sealing required for suction.

The pump must not run dry.

ATTENTION Before filling, the operator must ensure careful and thorough rinsing of the pump if the fluid to be conveyed is not chemically compatible with the test medium (see performance test report).

The fluid is filled through a bore hole in the pump casing or via the pressure pipeline. The pump must be filled with fluid until the fluid emerges free from air.

In the case of immersion pump aggregates the filling level must ensure adequate covering of the inlet rim before and during operation.

⚠ During bleeding of the pump and the plant, hazardous or environmentally harmful fluid and gas emerging must be safely collected and discharged.

6.1.2 Control of drive motor direction of rotation

The direction of rotation of the motor must match the direction of rotation arrow on the pump. The motor can be briefly switched on with the suction and pressure valves open to check the direction of rotation. If the direction of rotation is wrong there is no pump suction. This damages the pump. The direction of rotation of the three–phase motor can be reversed by swapping any two phases.

ATTENTION If the direction of rotation is to be checked before the pump is filled with fluid, the drive motor must be disconnected from the pump. The pump must not run dry.

6.1.3 Switching on any auxiliary devices

Before switching on the pump, any additional devices (e.g. heating, cooling, quench system, pressure relief system) must be set in operation and must have reached the necessary flow/temperature and pressure values.

Note: Ensure that flow/temperature and pressure values are in accordance with the order data sheet or manufacturer's operating instructions!

6.2 Start–up

6.2.1 Starting

1. Prior to starting, the stop valves in the suction and pressure pipelines must be completely opened.

2. Where the pump is fitted with a pressure–relief valve, it is set on our test panel to respond 10% above the operating pressure. The opening pressure can be altered within narrow limits by means of an adjusting screw. The installation of a pressure–relief valve is always required when an impermissible pressure rise is possible, due to a stop device or throttle point in the pressure pipeline for example.
   If the pressure–relief valve has a hand–wheel regulation, the pump can be started at zero pressure. For this, the pressure–relief valve must be completely opened using the hand–wheel. The starting torque of the motor is thereby reduced.
   ATTENTION When starting and stopping the pump under pressure, make sure that the speed– and viscosity–dependent pressure load is not exceeded.
   If this is not ensured, the pump must be started and stopped at zero pressure. This also applies to pumps with speed–controlled drive motors.

3. During starting, a vent valve installed on the outlet side of the plant must be opened until the air has escaped from the suction side of the pump. As soon as fluid emerges the vent valve can be closed. The pump is self–priming and is automatically vented without counter–pressure.

4. The fluid level in the tank must be checked. It must be ensured that, when the plant is running, the fluid level in the tank does not fall below the minimum limit. Top up fluid as necessary.

6.2.2 Drive

Switch on the motor.

Pay attention to product–specific characteristics. Refer to the operating instructions of the drive motor manufacturer.

6.2.3 Checking the delivery values

When the motor has reached its operating speed, the inlet pressure and outlet pressure of the pump must be checked using manometers.

For pumps fitted with a hand–regulated pressure–relief valve, the hand–wheel must be closed slowly beforehand, until the pump outlet pressure is reached.

The motor must not be overloaded. The current consumption can be checked with an ammeter. In this connection, the temperature and viscosity of the fluid must also be checked. The readings must be checked against the layout or acceptance test report.

ATTENTION If there should be an inadmissible increase in pressure, mounted pressure–relief valves may shift the media from the discharge to the intake side (recirculation).

Recirculation leads to heating up of the medium. An inadmissible pressure and temperature increase can be indicated by a pressure gauge and a thermometer. Determine the cause immediately and eliminate it in order to avoid damage to the pump as the result of excessive heating up and the related drop in viscosity.

6.3 Shutdown

6.3.1 Stopping and interrupting operation

1. Switch off the motor. Make sure the pump runs down smoothly and evenly.

2. If a check valve is installed in the pressure pipeline, the stop valve can remain open. If no check valve is fitted, the stop valve must be closed.

3. Stop any additional devices that are present (e.g. heating, cooling, quench system, etc.).

6.3.2 Measures in case of prolonged interruption

If a prolonged interruption is intended, the pump must be drained thoroughly via the connections on the pump casing. We recommend removing cartridge–unit pumps and immersion pumps from the tank or the plant.

⚠ Safe draining and environmentally compatible disposal of the fluid must be ensured.

7 Maintenance/Repair

7.1 Maintenance

- The instructions in Section *2, Safety,* must be observed in maintenance and repair work.
- Regular monitoring and maintenance of the pump and drive motor increases their service life.

The following instructions are generally applicable.

7.1.1 General monitoring

1. The pump must not run dry.
2. The drive motor must not be overloaded.
3. The suction and pressure pipelines must be checked for leaks. Air must be prevented from entering the delivery system.
4. Built–in stuffing boxes must drip slightly in operation. Mechanical seals must have no inadmissible leakage.
5. Pressure and temperature monitors must be observed.
6. Any additional devices on the pump/shaft seal must be operated and monitored in accordance with regulations.

7.1.2 Maintenance of components

7.1.2.1 Bearing

The bearing of the driving spindle is maintenance–free. The groove ball bearing is designed for a service life of approx. 24,000 hours under normal operating conditions.
The actual service life may be reduced due to intermittent operation, high temperature, low viscosity, poorly lubricating fluids and the like. We therefore recommend checking the running noises and temperature in the bearing area at regular intervals.
If scraping or rattling noises are heard compared to the normal humming, or if excessive temperature rises are detected, this indicates impending bearing damage, and the ball bearing should be replaced as soon as possible.

7.1.2.2 Shaft seal

The shaft is either sealed by the stuffing box, shaft seal rings or mechanical seal.

- **Stuffing box (Design U2)**
  Increased leakages, if any, at the stuffing box during the first operating hours normally disappear automatically during the running–in time. If necessary, slightly tighten hexagon nuts (39) at the gland (9).
  See to it that the stuffing box must be slightly dripping. Thus, the frictional heat generated at the sealing surface is dissipated.
  If leakage losses increase excessively and if even repeated slight tightening of the hexagon nuts (39) does not result in any leakage reduction, the packing rings have lost their elasticity of shape and must be replaced.

- **Shaft seal rings (Design U3 and U4)**
  Two or three shaft seal rings may be installed. The shaft seal rings must be checked for a potential leakage. Leaky shaft seal rings must be replaced.
  Note: If new shaft seal rings are installed, the sealing lips must be coated with rolling bearing grease and the space between the shaft seal rings filled with rolling bearing grease.

- **Mechanical seal (Design U...)**
  An uncooled, maintenance–free mechanical seal will be installed which, in its mode of operation, corresponds to the requested operating conditions. Minimal dripping of non–volatile media resulting from the functioning of the components is to be expected. In the event of heavy leakage due to wear, the mechanical seal should be replaced.
  ATTENTION Since the mechanical seal must not be allowed to run dry, the pump must only be started up when charged and bled.

7.1.2.3 Pressure–relief valve

Pressure–relief valves must be checked from time to time, in particular after prolonged downtimes, for passage and functioning. Leaking pressure–relief valves may cause damage to the pump. Damaged parts should be replaced or repaired as necessary.
Note: Operating instructions for pressure–relief valves should be ordered separately.

7.1.2.4 Coupling

The alignment of the coupling and the condition of the flexible elements in the coupling should be checked after initial start–up and at regular intervals.
Note: Worn flexible elements must be replaced.

7.1.2.5 Drive

Refer to the operating instructions of the motor manufacturer.

7.2 Repair (Dismounting and Mounting Instructions)

General

Trained Service fitters are available on request to carry out mounting and repair work.

Where repairs are carried out by the operator's own personnel or by specialist fitters, it must be ensured that the pump is fully drained and cleaned.

This particularly applies to pumps which are sent for repair to our factory or one of our service workshops.

We must refuse acceptance of repair work on pumps filled with fluid, for the protection of our staff and for environmental reasons. Otherwise we must invoice the customer/operator for the costs of environmentally compatible disposal.

Where repairs are to be carried out on pumps which have been operated with hazardous substances ① and/or environmentally harmful media, the customer/operator must inform its own personnel on site, or our personnel where repairs are returned to our factory or a service workshop, without being specifically requested to do so.

In such cases a verification of delivery material, for example in the form of a DIN safety data sheet, must be submitted to us together with the request for a Service fitter.

① Hazardous substances are:

- Toxic substances
- Health–endangering substances
- Corrosive substances
- Irritants
- Explosive substances
- Fire–inducing substances
- Highly flammable, easily flammable and normally flammable substances
- Carcinogenic substances
- Substances impairing fertility
- Genetically distorting substances
- Substances in other ways hazardous to humans

For all work on site, the operator's own personnel and/or our fitters must be advised of the possible dangers involved in the repair work.

The most important dismounting and mounting operations are described in these instructions. The mounting steps described in the individual sections must be consistently observed.

7.2.1 Dismounting the screw pump

Before dismounting, the following work must be carried out:

- The power supply cable must be disconnected from the motor by an authorized electrician. Electrical danger must be eliminated! The motor must be secured against being switched on.
- Close all stop devices in the inlet and delivery pipeline, and in the auxiliary pipelines.
- Drain the fluid in flowable condition from the pump. **Note:** Use a collecting tank.
- Hazardous substances and/or environmentally harmful media must be drained off and collected such that no danger to life and limb is created. Environmentally compatible disposal must be ensured.
- The pump and any auxiliary systems must be depressurized and drained.
- Allow the pump and motor to cool to ambient temperature.
- Remove the manometer cables, manometers and retaining brackets.
- Remove the contact protection.
- Remove the motor from the base plate or pump bracket where appropriate. **Note:** Use suitable lifting gear.
- Remove immersion pump aggregates from the tank.
- Remove supply/suction and pressure pipelines as appropriate.
- Dismount auxiliary pipelines, if any.
- Loosen the fastening and remove the pump from the base plate or pump bracket. **Note:** Use suitable lifting gear.

Water quality and material contents

1.1 Water quality

In the evaluation of the suitability of the existing water for the employment in heat exchangers, the water quality and the material contents are important.

The water quality is determined by the water hardness and the pH-value of the water. The water hardness indicates the content of the so-called hardness formers. Carbonates and bicarbonates are meant by this. The hardness formers are precipitated out with higher temperatures and form a covering layer, which leads to a decrease of the cooling capacity of the heat exchanger. A critical temperature of 63°C applies in this case. This covering layer must be considered in case of very hard water in the design of heat exchangers.

Table 1: Sub-division according to German hardness values

Degree of hardness	Water quality
0 - 5°dH	Very soft water
5 - 10°dH	Soft water
10 - 20°dH	Medium-hard water
20- 30°dH	Hard water
> 30°dH	Very hard water

As rule-of-thumb for the conversion of the German hardness, 10 mg/l of hardness formers corresponds to 1°dH.

A further criterion for the evaluation of the water quality is the pH-value.

Table 2: Sub-division of the pH-value

pH-Value	Water quality
4.5	Strongly acidic
4.5 - 6.0	Acidic
6.0 - 6.8	Weakly acidic
7.0	Neutral
7.2 - 7.7	Weakly alkaline
7.7 - 8.2	Alkaline
8.2	Strongly alkaline

In the case of heat exchangers with copper and copper-nickel pipes, the pH-value should not be lower than 6, since, with lower pH-values, corrosion problems can result. In case of alkaline waters, the water hardness should not be lower than 6°dH, since corrosion can then result due to free carbonic acid.

1.2 Material contents

As well as the water quality, further material contents play an important role in the evaluation of cooling water. Both chemical substances and solid material contents are included here. The following recommendations apply for copper pipes:

Table 3 Material contents:

Evaluation feature	Rough concentration range in mg/l	Evaluation
pH-value	<6	0
	6 to 9	+
	> 9	0
Chloride	Up to 1000	+
	> 1000	0
Sulfate	Up to 70	+
	70 to 300	0
	>300	-
Nitrate	Up to 100	+
	> 100	0
Free (aggressive) carbonic acid	Up to 20	+
	20 to 50	0
	> 50	-
Oxygen	Up to 2*)	+
	> 2	0
Ammonium	Up to 2	+
	2 to 20	0
	> 20	-
Iron (dissolved)	Up to 10	+
	> 10	0
Manganese (dissolved)	Up to 1	+
	> 1	0
Sulfide		-
Free chlorine	Up to 5	+
	> 5	0
Ammonia		-

+ : Usually good resistance
0 : Corrosion problems can arise, in particular if several factors are weighted with 0
- : Utilization is inadvisable

*) What has proved best is SF copper, with absolute absence of oxygen and sulfides dissolved in the water.

As a rule, higher values apply for copper-nickel pipes.

1.3 Typical cooling water

1.3.1 Industrial water

In the case of industrial water, untreated water is generally involved, which is not suitable as drinking water. Since this water, under certain circumstances, contains severe chemical contamination, a water analysis is necessary for precise evaluation.

As a rule, copper, brass and steel indicate good resistance against such water.

1.3.2 Stream and river water

Due to the strong dirt accumulation, the same applies here as with industrial water. The employment of copper-nickel pipes is recommended. Parts made of cast iron should be protected against corrosion by a suitable coating.

1.3.3 Sea water

Because of its high NaCl content, sea water is a very good electrolyte. With the union of different materials, electrochemical corrosion can result. Materials should thus be employed which are not far from each other in the electrochemical series or a reactive anode should be attached. Brass and copper-nickel alloys have proved themselves as suitable materials for this application.

1.3.4 Brackish water

By brackish water is meant a mixture of lake and river water. Due to the mostly very high ammonia and chloride content, no brass should be employed here. Otherwise, the same recommendations apply as in the case of sea water.

MAHLE

Duplex Filter
Pi 210

Operating pressure 25 (63) bar, Nominal size up to 450

1. Features

Efficient filters for modern hydraulic systems

- Modular design
- Minimal pressure loss
- Compact design
- Visual / electrical / electronic differential pressure indication
- Threaded or SAE 4 bolt flange ports
- Switching valve on upstream side
- Ergonomic switch-over handle with safety lock and pressure compensation
- User-optimized one-hand-operation

Quality filters, easy to service

- Highly efficient Sm-x filter elements
- ß-rated elements per ISO 4572
- Large dirt holding capacity and high differential pressure stability providing optimal element service life

World-wide sales

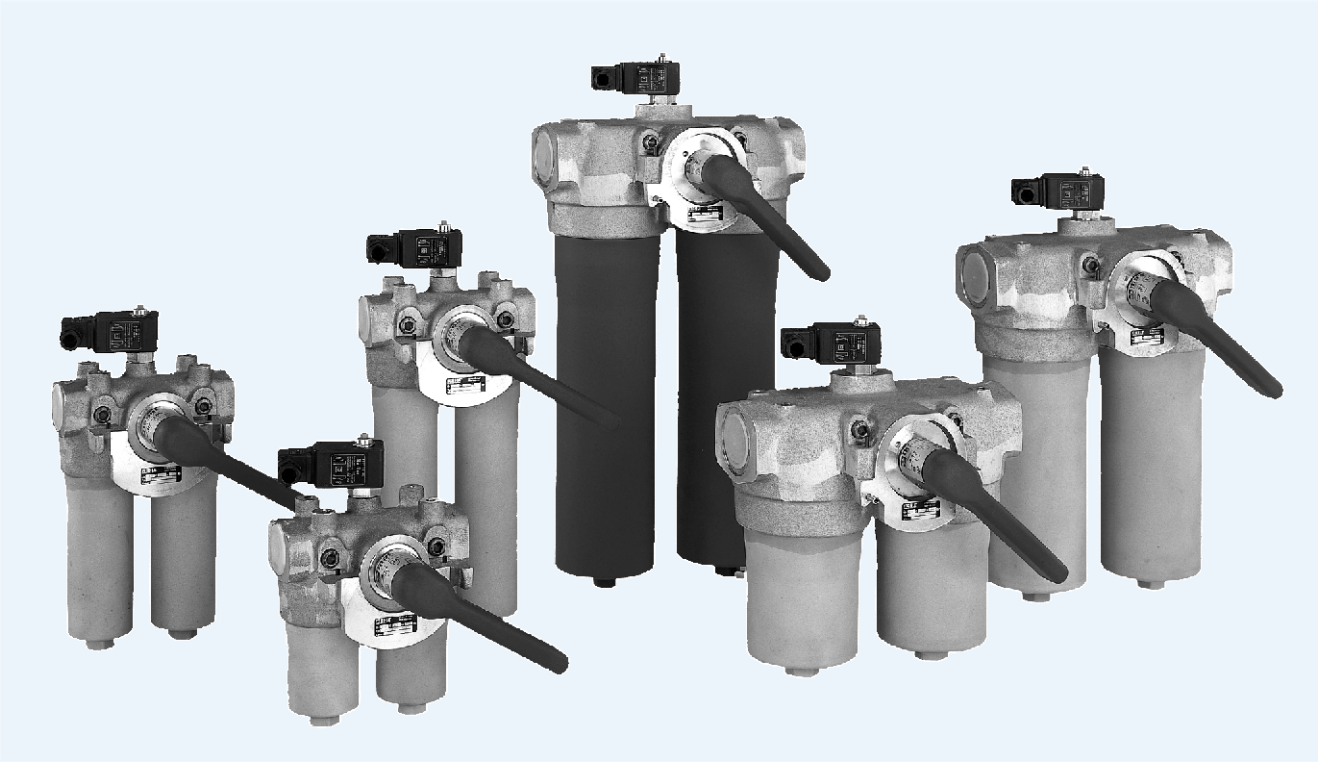

MAHLE Filtersysteme GmbH · **Bereich Industriefilter** · Postfach 13 09 · 74603 Öhringen · Telefon (0 79 41) 67-0 · Telefax (0 79 41) 67-429

2. Flow rate / pressure drop curve compl. filter

190 mm²/s (25 ° E)
33 mm²/s (4,5 ° E)

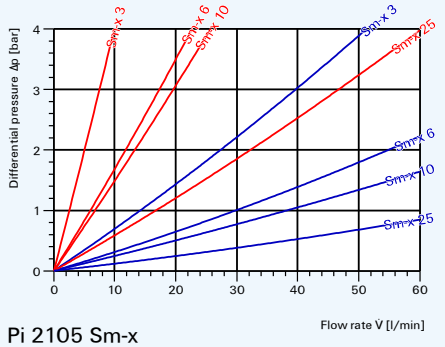

Pi 2105 Sm-x

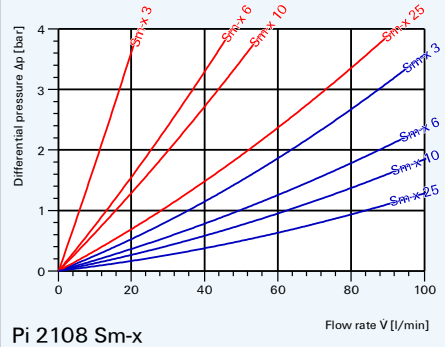

Pi 2108 Sm-x

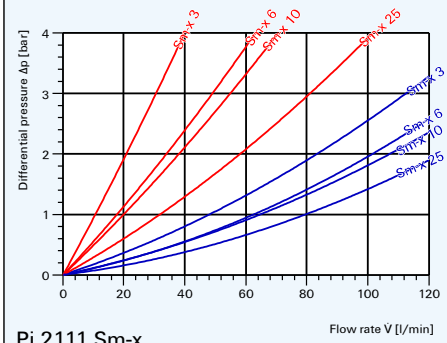

Pi 2111 Sm-x

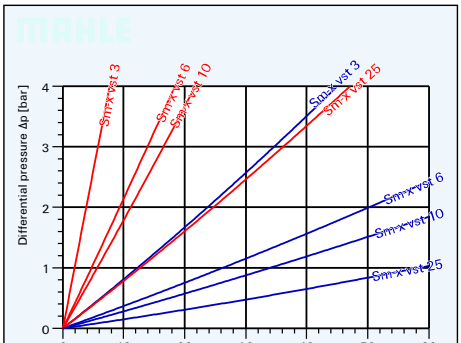

Pi 2105 Sm-x vst

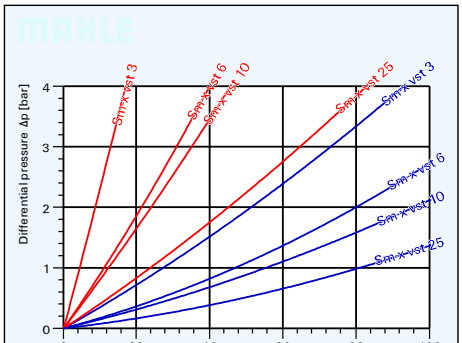

Pi 2108 Sm-x vst

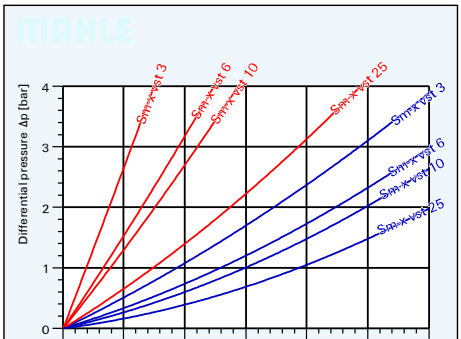

Pi 2111 Sm-x vst

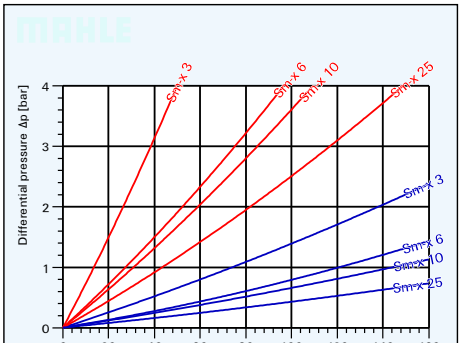

Pi 2115 Sm-x

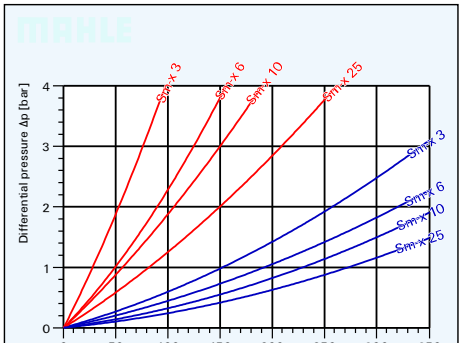

Pi 2130 Sm-x

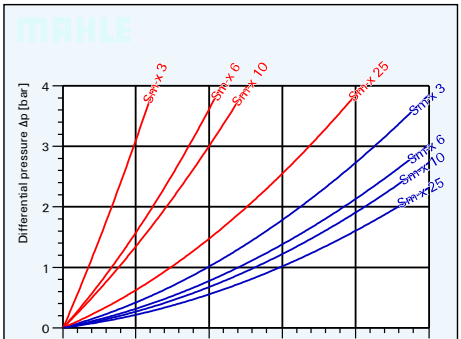

Pi 2145 Sm-x

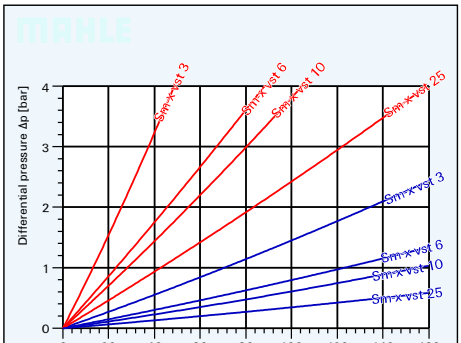

Pi 2115 Sm-x vst

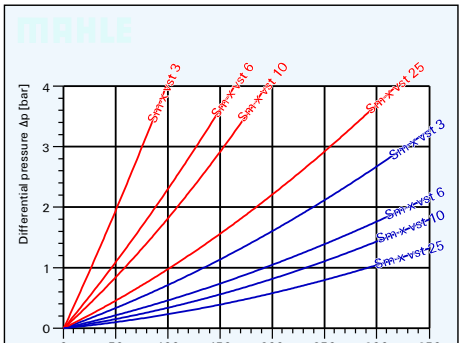

Pi 2130 Sm-x vst

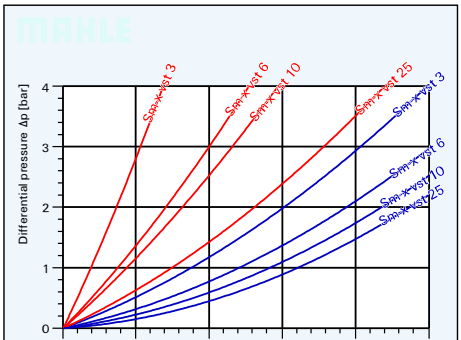

Pi 2145 Sm-x vst

3. Separation characteristics

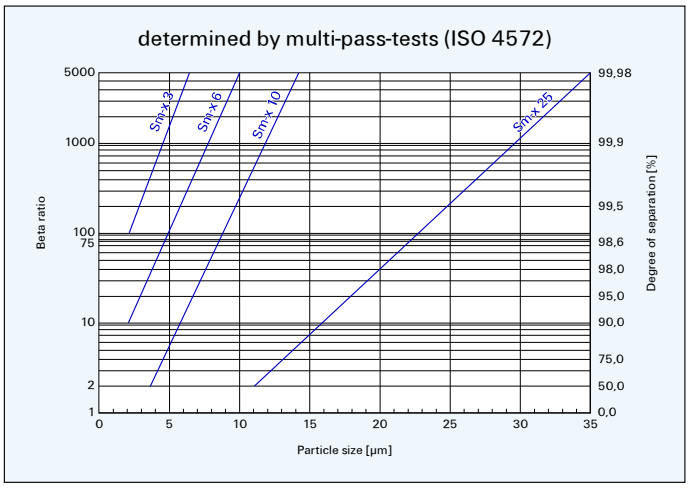

4. Filter performance data

tested according to ISO 4572 (multi-pass-test)

Sm-x-elements with Δp 20 bar			Sm-x-vst-elements with Δp 210 bar		
Sm-x	3	$\beta_3 \geqq 75$	Sm-x vst	3	$\beta_3 \geqq 75$
Sm-x	6	$\beta_6 \geqq 75$	Sm-x vst	6	$\beta_6 \geqq 75$
Sm-x	10	$\beta_{10} \geqq 75$	Sm-x vst	10	$\beta_{10} \geqq 75$
Sm-x	25	$\beta_{25} \geqq 75$	Sm-x vst	25	$\beta_{25} \geqq 75$
at 7 bar differential pressure			at 16 bar differential pressure		

Example for ordering filters:	Housing design with $\dot{V}$ = 80 l/min, electrical indicator type no. **Pi 2108-069**	order-no. **781.028.6**
	+ Filter element Sm-x vst 3 type no. **Pi 2208**	order-no. **768.020.0**

7. Order numbers

7.1 Housing design

Order number	Type number	Nominal size NG [l/min]	① with bypass valve and visual indicator	② with bypass valve and visual/ electrical indicator	③ with visual indicator	④ with visual/electrical indicator
781.021.1	Pi 2105–057	50	■			
781.022.9	Pi 2105–058			■		
781.023.7	Pi 2105–068				■	
781.024.5	Pi 2105–069					■
781.025.2	Pi 2108–057	80	■			
781.026.0	Pi 2108–058			■		
781.027.8	Pi 2108–068				■	
781.028.6	Pi 2108–069					■
820.408.3	Pi 2111–057	110	■			
820.409.1	Pi 2111–058			■		
820.410.9	Pi 2111–068				■	
820.411.7	Pi 2111–069					■
777.457.3	Pi 2115–057	150	■			
777.456.5	Pi 2115–058			■		
777.455.7	Pi 2115–068				■	
777.454.0	Pi 2115–069					■
777.453.2	Pi 2130–057	300	■			
777.452.4	Pi 2130–058			■		
777.451.6	Pi 2130–068				■	
777.450.8	Pi 2130–069					■
777.449.0	Pi 2145–057	450	■			
777.448.2	Pi 2145–058			■		
777.447.4	Pi 2145–068				■	
777.446.6	Pi 2145–069					■

When filter with non bypass configuration is selected, the collapse pressure of the element may not be exceeded

5. Test regulations

MAHLE filter elements are manufactured respectively, tested in accordance with the following international standards:

No.	Designation	
ISO 2941	Hydraulic-filter elements:	Verification of burst resistance
ISO 2942	Hydraulic-filter elements:	Determination of fabrication integrity
ISO 2943	Hydraulic-filter elements:	Verification of material compatibility with hydraulic fluids
ISO 3723	Hydraulic-filter elements:	Method for testing end-cap load
ISO 3724	Hydraulic-filter elements:	Verification of flow fatigue characteristics
ISO 39682	Hydraulic-filters:	Evaluation of pressure drop versus flow
ISO 4572	Hydraulic-filter elements:	Testing of filter performance (multi-pass-test)

6. Symbols

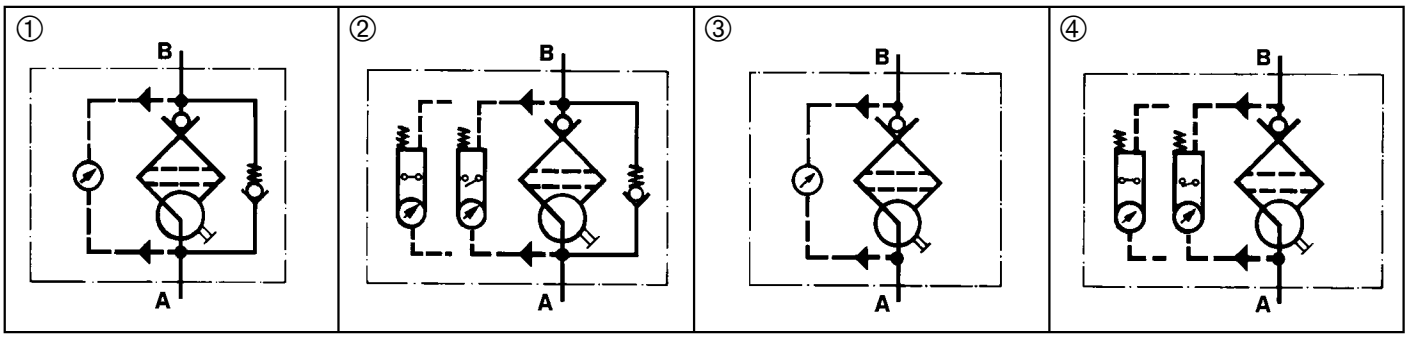

7.2 Filter elements*

( ) = filter surface area [ ] = type number

Sm-x 3 Δp 20 bar	Sm-x 6 Δp 20 bar	Sm-x 10 Δp 20 bar	Sm-x 25 Δp 20 bar	Sm-x vst 3 Δp 210 bar	Sm-x vst 6 Δp 210 bar	Sm-x vst 10 Δp 210 bar	Sm-x vst 25 Δp 210 bar
(590 cm²)	(590 cm²)	(590 cm²)	(590 cm²)	(470 cm²)	(470 cm²)	(470 cm²)	(470 cm²)
768.013.5	794.350.9	768.032.5	768.044.0				
768.013.5	794.350.9	768.032.5	768.044.0	[Pi 2205]	[Pi 5205]	[Pi 3205]	[Pi 4205]
[Pi 2105]	[Pi 5105]	[Pi 3105]	[Pi 4105]	768.019.2	794.353.3	768.038.2	768.050.7
				768.019.2	794.353.3	768.038.2	768.050.7
(1150 cm²)	(1150 cm²)	(1150 cm²)	(1150 cm²)	(900 cm²)	(900 cm²)	(900 cm²)	(900 cm²)
768.014.3	794.351.7	768.034.1	768.045.7				
768.014.3	794.351.7	768.034.1	768.045.7	[Pi 2208]	[Pi 5208]	[Pi 3208]	[Pi 4208]
[Pi 2108]	[Pi 5108]	[Pi 3108]	[Pi 4108]	768.020.0	794.354.1	768.119.0	768.051.5
				768.020.0	794.354.1	768.119.0	768.051.5
(1700 cm²)	(1700 cm²)	(1700 cm²)	(1700 cm²)	(1315 cm²)	(1315 cm²)	(1315 cm²)	(1315 cm²)
768.015.0	794.352.5	768.033.3	768.046.5				
768.015.0	794.352.5	768.033.3	768.046.5	[Pi 2211]	[Pi 5211]	[Pi 3211]	[Pi 4211]
[Pi 2111]	[Pi 5111]	[Pi 3111]	[Pi 4111]	768.021.8	794.355.8	768.039.0	768.052.3
				768.021.8	794.355.8	768.039.0	768.052.3
(2350 cm²)	(2350 cm²)	(2350 cm²)	(2350 cm²)	(2010 cm²)	(2010 cm²)	(2010 cm²)	(2010 cm²)
768.016.8	795.509.9	768.035.8	768.047.3				
768.016.8	795.509.9	768.035.8	768.047.3	[Pi 2215]	[Pi 5215]	[Pi 3215]	[Pi 4215]
[Pi 2115]	[Pi 5115]	[Pi 3115]	[Pi 4115]	768.022.6	795.512.3	768.040.8	768.053.1
				768.022.6	795.512.3	768.040.8	768.053.1
(4420 cm²)	(4420 cm²)	(4420 cm²)	(4420 cm²)	(3800 cm²)	(3800 cm²)	(3800 cm²)	(3800 cm²)
768.017.6	795.510.7	768.036.6	768.048.1				
768.017.6	795.510.7	768.036.6	768.048.1	[Pi 2230]	[Pi 5230]	[Pi 3230]	[Pi 4230]
[Pi 2130]	[Pi 5130]	[Pi 3130]	[Pi 4130]	768.023.4	795.513.1	768.041.6	768.054.9
				768.023.4	795.513.1	768.041.6	768.054.9
(6540 cm²)	(6540 cm²)	(6540 cm²)	(6540 cm²)	(5600 cm²)	(5600 cm²)	(5600 cm²)	(5600 cm²)
768.018.4	795.511.5	768.037.4	768.049.9				
768.018.4	795.511.5	768.037.4	768.049.9	[Pi 2245]	[Pi 5245]	[Pi 3245]	[Pi 4245]
[Pi 2145]	[Pi 5145]	[Pi 3145]	[Pi 4145]	768.024.2	795.514.9	768.042.4	768.055.6
				768.024.2	795.514.9	768.042.4	768.055.6

*further elements upon request

8. Specifications

Design:	line mounting filter
Nominal pressure:	25 bar*
Test pressure:	33 bar
Temperature range:	−10˚C to +120˚C (other temperature ranges on request)
Bypass opening pressure:	Δp 3,5 bar ±10 %
Filter head material:	GAL
Filter bowl material:	AL / St
Material of seals:	NBR / AL
Activating pressure of visual/electrical differential pressure indicator:	Δp 2,2 bar ± 0,3 bar
Electrical data of contamination indicator:	
Maximum voltage:	230 V ∿/=
Maximum current on contact:	2,5 A
Maximum contact load:	60 VA / 40 W
Inrush current:	70 VA
Type of protection:	IP 65 when inserted and secured
Contact:	bistable
Cable connection:	PG 11 Ø 6–10

The electrical indicator function can be changed from the Normally Open position to the Normally Closed position or visa versa by inverting the electrical section.

With the inrush current of 70 VA the indicator can trigger small contactors or contactor relays.

Inductivity in the direct current may require the use of a signal eraser.

For further information and executions please see our leaflet: “Contamination indicators“.

Filters compatible with standard mineral oils.

Please contact us in case of using other media.

***The housings Pi 2105, Pi 2108 and Pi 2111 are approved for 63 bar operating pressure (test pressure 82 bar).**

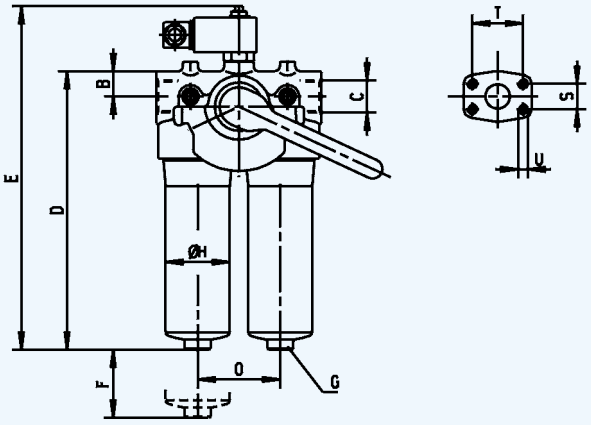

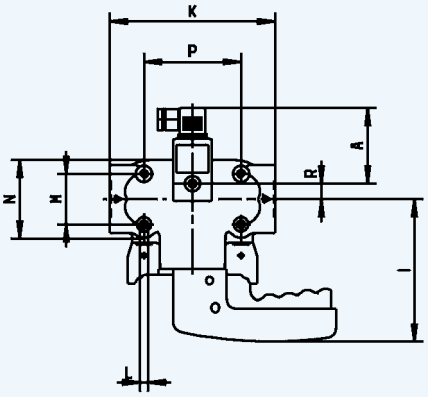

9. Dimensions

All dimensions (except “C“) in mm

Dimension / Type	A	B	C	D	E	F	G	H	I	K	L	M	N	O	P	R	Weight [kg]
Pi 2105	78	38	G 1*	200	258	80	SW 27	66	139	168	M 8 x 16	52	81	85	100	16	2,6
Pi 2108	78	38	G 1*	276	334	80	SW 27	66	139	168	M 8 x 16	52	81	85	100	16	2,9
Pi 2111	78	38	G 1*	358	416	80	SW 27	66	139	168	M 8 x 16	52	81	85	100	16	3,3
Pi 2115	78	40	G 1½*	269	327	110	SW 32	109	165	280	M 10 x 20	62	140	140	210	19	7,1
Pi 2130	78	40	G 1½*	386	444	110	SW 32	109	165	280	M 10 x 20	62	140	140	210	19	8,0
Pi 2145	78	40	G 1½*	501	559	110	SW 24	109	165	280	M 10 x 20	62	140	140	210	19	16,0

*SAE flange connections (3000 PSI) on request

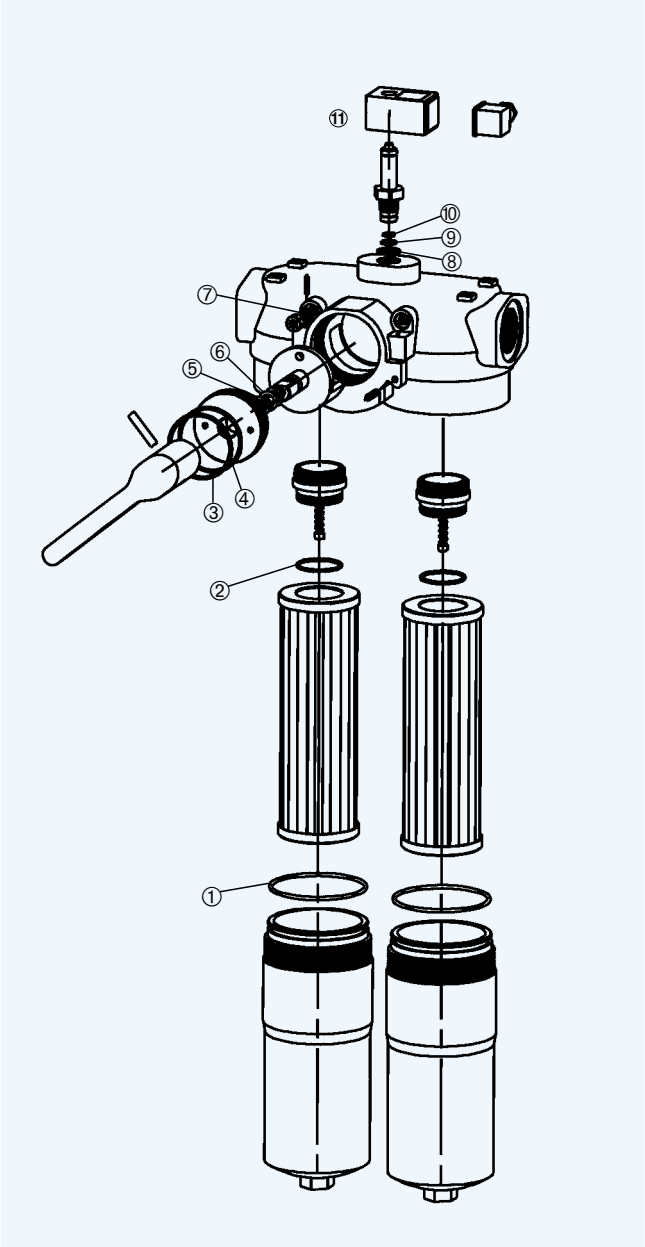

11. Spare parts list

Pos.	Type number/housing	
	Pi 2105–Pi 2111	**Pi 2115–Pi 2145**
① to ⑦	Seal kit NBR 976.127.1 FPM 976.128.9 EPDM 976.129.7	Seal kit NBR 976.123.0 FPM 976.124.8 EPDM 976.125.5
⑧ to ⑩	Seal kit for contamination indicator NBR 776.030.9 FPM 776.031.7 EPDM 776.032.5	
⑪	Contamination indicator visual 766.997.1 Pis 3098 / 2,2 electrical 766.994.8 Pis 3097 / 2,2 electrical upper part only 753.655.0	

Please return filter for sealing replacemant of switch-over unit!

10. Installation, Operating and Servicing Instructions

10.1 Filter installation

Install filter in accordance with the identified flow direction. The filter head is provided with threaded holes for mounting the filter. Ascertain that the required removal height is provided so that the filter element and the filter bowl can be removed.
Preferably the filter should be installed with the filter bowl pointing down.
The contamination indicator must be well visible.

10.2 Connecting the electrical contamination indicator

The electrical indicator is connected via a 2-pole appliance plug according to DIN 43650 with poles marked 1 and 2.
The electrical section can be inverted to change from Normally Open position to Normally Closed position or visa versa.

10.3 When must the filter element be replaced?

1. During cold starts, the indicator may give a warning signal. Depress the red button of the visual indicator once again only after operating temperature has been reached. If the red button immediately pops out again and/or the electrical signal has not switched off after reaching operating temperature, the filter element must be replaced after the end of the shift.
2. Please always ensure that you have original MAHLE replacement elements in stock: disposable elements (Sm-x) cannot be cleaned.

10.4 Element replacement

Note: The contamination indicator monitors the filter side in operation, which is identified by the position of the switching lever catch. The flow transfer valve must be switched prior to filter servicing. Now the signal of the contamination indicator is cancelled and the red button can be depressed again.

1. Operate and hold pressure equalizing lever located in the switching lever. Swivel switching lever. Engage the catch. Place trough or drip pan underneath to collect leaking oil.
2. Loosen vent screw of the filter side not in use by 2–3 turns; maximum back out against safety stop.
3. Unscrew filter bowl by rotating same counterclockwise and clean with a suitable medium.
4. Remove filter element with a side-to-side motion.
5. Check O-ring on the filter bowl and the spigot for damage. Replace, if necessary.
6. Make sure that the part number on the spare element corresponds with the part number on the filter label. Open the plastic bag and push element over the spigot in the filter head. Now remove plastic bag.
7. Complete installation by screwing on the bowl, turning clockwise until it comes to a full stop. Back off the bowl ⅛ to ½ turn.
8. To refill the filter chamber, operate only the pressure equalizing lever long enough for the medium to emerge bubble-free from the vent bore.
9. Tighten vent screw. Check filter for leaks by operating the pressure equalizing lever once again.

Subject to technical alteration.

MAHLE Filtersysteme GmbH
Bereich Industriefilter · Schleifbachweg 45 · D-74613 Öhringen · Postfach 13 09 · D-74603 Öhringen
Telefon (0 79 41) 67-0 · Telefax (0 79 41) 67-429 · Internet: http://www.mahle.com · E-mail: ub2_industrie@mahle.com

Printed in Germany/Imprimé en Allemagne 02/01 Ba 3000 835.655.2

GENERAL CHARACTERISTICS

Mechanical Flow Switch for liquids or gaseous media, with contactless triggering of an adjustable reed switch. Rugged design in brass / bronze combination.

- good repeatability
- dirt-resistant
- exact setting of switch via scale

Female thread G1/4 to G3 bronze

VD-008GR010

TECHNICAL DATA

	G	Type	PN bar	max. recom. l/min H_2O		adjustable range l/min H_2O		H mm	L mm	AF mm	mm	weight kg
bronze	G 1/4	VD-008GR010	25	15		1 - 10		150	65	29	12	1.0
	G 3/8	VD-010GR010	25	15		1 - 10		150	65	29	12	1.0
	G 1/2	VD-015GR...	25	20	30	1 - 10	4 - 20	150	65	29	14	1.0
	G 3/4	VD-020GR...	25	40	60	4 - 20	10 - 40	150	80	32	16	1.1
	G 1	VD-025GR...	25	60	85	10 - 40	20 - 60	150	80	41	18	1.3
	G 1 1/4	VD-032GR...	16	100	145	20 - 60	30 - 100	156	98	52	13	2.1
	G 1 1/2	VD-040GR...	16	150	220	30 - 100	50 - 150	156	113	59	14	2.8
	G 2	VD-050GR...	16	250	290	50 - 150	100 - 200	156	137	72	17	4.0
	G 2 1/2	VD-065GR...	16	400	475	100 - 200	180 - 330	156	160	85	26	4.0
	G 3	VD-080GR...	16	600	720	180 - 330	300 - 600	156	148	100	23	7.0

Adjustable range is indicated for horizontally decreasing flow.

tolerance	±5% of full scale
media temperature	max. 120°C
average pressure loss	0.5 bar at Qmax.
hysteresis	depending on switch value minimum 0.3 l/min.

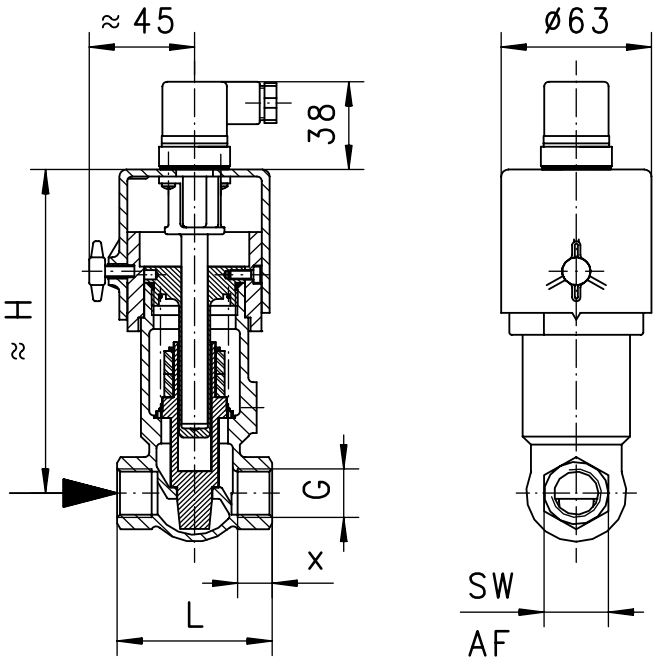

MATERIALS

housing	bronze Rg5/Rg6 nickel plated
piston	DN 8-25 POM glass-fibre enforced DN 32-80 POM
spring	stainless steel 1.4310
piston guide	brass Ms58
seal	NBR
magnet	bariumferrite
cap	ABS

ELECTRICAL DATA

reed switch - wiring 0.213 change over
250 V AC 1.5 A 50 VA
plug DIN 43650-A
protection class IP 44

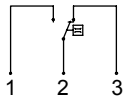

MOUNTING POSITION

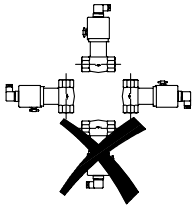

Installation position may influence switch value.

METERING SUBSTANCES

water

gas/air

oil

NOMENCLATURE

For combination see table "technical data"

VD-	008	G	R	010			basic type / specification
	008				●	nominal diameter	DN 8 - G1/4
	010				●		DN 10 - G3/8
	015				●		DN 15 - G1/2
	020				●		DN 20 - G3/4
	025				●		DN 25 - G1
	032				●		DN 32 - G1 1/4
	040				●		DN 40 - G1 1/2
	050				●		DN 50 - G2
	065				●		DN 65 - G2 1/2
	080				●		DN 80 - G3
		G			●		female thread
			R		●		bronze
				010	●	adjustable range H_2O horizontal	1 - 10 l/min
				020	●		4 - 20 l/min
				040	●		10 - 40 l/min
				060	●		20 - 60 l/min
				100	●		30 - 100 l/min
				150	●		50 - 150 l/min
				200	●		100 - 200 l/min
				330	●		180 - 330 l/min
				600	●		300 - 600 l/min
Programme option BASIC					❍		signal lamp temperature indicator 0-120°C protection class IP 65 material certification
Special option VARIO					❑		setting / adjustable ranges for oil or gas selected hysteresis rhodium contact temperature control 30-95°C wetted parts in brass or stainless steel temperature up to +150°C damping for gas control approval: Germanischer Lloyd LOBA (sch)i

IMPORTANT FOR OUR ORDER

- Please indicate flow direction, metering substance and adjustable range with your order.
- With viscous liquids please indicate viscosity, temperature and metering substance (adjustable range on request)
- With gaseous media indicate pressure (relative or absolute), temperature and metering substance (adjustable range on request)

All technical changes reserved

●BASIC Standard ❍BASIC Programme option ❑VARIO Special option ⊕ PLUS Accessories ✕ not recommendable

1. GENERAL

1.1. General remarks on the operating instructions

These operating instructions show how the device can be installed and operated safely in the prescribed manner. If, in this respect, difficulties arise which cannot be remedied with the aid of the operating instructions and product information, then further information should be requested from the supplier/manufacturer. The manufacturer reserves all rights for making technical changes or improvements at any time. The use of these operating instructions requires the user to be suitably qualified. The operating personnel must be instructed according to the operating instructions.

1.2. General fundamental principles

Honsberg monitoring and measurement devices mainly operate on an electromechanical basis. For this reason the general installation and operating instructions as well as the product information refer to the mechanical and electrical operating data of the individual devices or device groups.

2. HAZARD INFORMATION

2.1. Terms relevant to safety

The indicating terms DANGER, WARNING, CAUTION and NOTE are used in these operating instructions for information about particular hazards or for extraordinary information needing special labelling.
DANGER indicates that by non-observance there is a danger to life and / or substantial property damage may occur.
WARNING indicates that by non-observance there is a risk of severe injury and / or property damage may occur.
CAUTION indicates that by non-observance there is a risk of injury and / or property damage may occur.
NOTE indicates that particular attention should be paid to technical aspects. The observance of information, not specially highlighted, on transport, assembly, field and servicing information as well as technical data (in the operating instructions, product information and on the device itself) is however just as essential in preventing problems which can on your part directly or indirectly cause personal injury and property damage.

2.2. Qualified personnel

These are persons who are familiar with the siting, installation, commissioning and operation of the product and who have qualifications suitable to their activities and functions, such as for example: Instruction and responsibility for maintaining all application conditions, regional and in-house regulations and requirements. Training or instruction according to the standards of safety engineering in the care and use of appropriate safety and worker protection equipment.

3. USAGE

3.1. Storage

- Storage temperature -20°C to 65°C, dry and free of contamination.
- In damp areas drying agents or heating is required against the formation of condensed water.

3.2. Transport

- Transport temperature -20°C to 65°C, dry and free of contamination.
- Protect from external effects such as shock, impact and vibration.

3.3. Handling prior to fitting

- With versions with a protective cap, remove the cap immediately before installation.
- Protect against the effects of weather, e.g. wet conditions.
- Proper treatment provides protection against damage.

4. FIELD OF APPLICATION

Data can be taken from the product information.

5. METHOD OF OPERATION

Data can be taken from the product information.

6. TECHNICAL DATA

Data can be taken from the product information.

7. INSTALLATION GUIDELINES

Apart from the general installation guidelines, attention should be paid to the following points:

7.1. General

- **NOTE!** Flush the pipe system before fitting.
- **NOTE!** Carry out sealing when fitting.
- **NOTE!** Note direction of flow; if fitting orientation is defined, then carry out fitting appropriately.
- **DANGER!** Note operating pressure, pressure level and temperature range.
- **NOTE!** Ensure no stress is produced when fitting.
- **CAUTION!** Only use the device for the medium specified.
- Bleed the system before putting into operation.
- **WARNING!** Thermal expansion of the pipework must be taken up by compensators.
- **NOTE!** The device must not be used as the fixed point when compensating with compensators.
- **NOTE!** Do not exceed max. flow rate. The functional value of the switching range is always related to the reducing flow (protection against defects).
- **NOTE!** The system pressure must lie above the value of the arising pressure loss.
- **NOTE!** Inverted installation orientation only with clean media.
- **CAUTION!** Avoid pressure shocks and excess deflections on the measurement systems.
- **NOTE!** 5 x diam. as smoothing section on inlet and outlet.
- **NOTE!** Use dirt trap with heavily contaminated media.
- **CAUTION!** In the case of measurement substances loaded with ferritic material, we recommend the installation of the Honsberg Magnetic Filter Volumat ZV.

7.2. For devices with a flange

- **NOTE!** Centre the seal between the flanges.
- **CAUTION!** Joining flanges must match up.

7.3. For devices with electronic

- **CAUTION!** Use the circuit diagram as a basis for wiring.
- **CAUTION!** Check the control circuit, avoid overloading the contacts.
- **NOTE!** With alternating current use a large distance between the contact and the component to be switched.

7.4. Contact protection measures for devices with reed switches

With a capacitive load or when switching filament lamps, current voltage spikes can affect the contact life. To achieve the maximum service life and to prevent damage to the contacts, a suppression circuit must be used in these cases.
Contact protection for an inductive load. When switching off an inductive load a very high self-induced e.m.f. can occur under some circumstances. The size of this voltage depends on the stored energy and on the speed of the switch-off.

- With direct voltage. A diode in parallel to the load or reed contact. The voltage spikes are equal to the voltage drop in the conducting direction of the diode.
- With alternating or direct voltage. An RC network in parallel to the load or reed contact.

- With alternating or direct voltage. Protection by Zener diodes, voltage spikes occur up to a maximum of the Zener voltage.

Contact protection for a capacitive load. When switching a capacitor or also longer lengths of line, higher switch-on currents occur whose intensity depends on the capacitance and the line length. The current spikes can be reduced by a series-connected resistor. Dimensioning of the suppression resistor depends on the corresponding circuit, but the resistance should be as high as possible to limit the discharge current to a permissible level.
Contact protection for a lamp load. The resistance of a cold filament is about ten times that in the glowing condition. During switch-on this leads to a !0-times larger switch-on current, even if only briefly. This current pulse can be limited by a series-connected resistor. This type of protection is however associated with dissipation. Another possibility would be to preheat the filament via a resistance in parallel to the reed contact.

8. INFORMATION ON HAZARDS DURING INSTALLATION, OPERATION AND MAINTENANCE

DANGER! Safe operation of the device is only ensured if it is properly installed, put into operation and serviced by qualified personnel taking into account the warning information in these operating instructions. In addition conformance to the general installation and safety regulations for pipework and plant construction as well as the proper use of tools and protective equipment must be ensured. For all work on the device please observe the operating instructions and the product information pertaining to the device. Non-compliance may result in injury or property damage.

9. PUTTING INTO OPERATION

- **DANGER!** Before putting the device into operation, the details about material, pressure, temperature and direction of flow should be checked.
- **NOTE!** The TRB 700 must be observed.
- **CAUTION!** Deposits in the pipework and fittings (dirt, welding droplets, etc.) are bound to lead to leaky points and faulty functioning.

DANGER! Before putting a new system into operation or putting a system into operation again after repairs or modifications, it must be ensured that:

- All fitting and installation work has been properly concluded.
- The device is put onto operation by qualified personnel.
- The correct functional setting on the device is used.
- Protective devices are fitted or existing ones repaired.

10. ADJUSTMENT

The switching value on our mechanical monitoring devices can be adjusted. This is sometimes provided externally, sometimes underneath a protective cover.

HD1 / HD

Slightly loosen the cap nut and adjust the device with knurling. Retighten the cap nut.

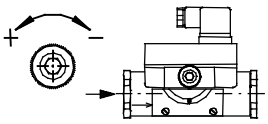

HR / MR / MR1 / RVM / FW1

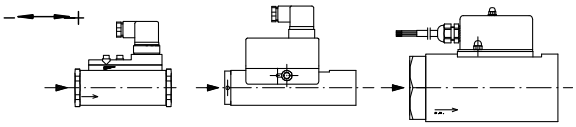

Slightly loosen screw(s) and move switch head to desired position, then retighten screw(s).

VD / VR

Slightly loosen screw and turn (VD) or move (VR) switch head to desired position, then retighten screw.

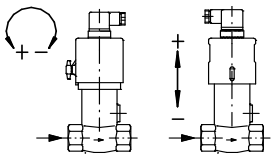

TZ1 / UZ

The flow meter has a limit pointer on the scale. With this the switching value on the scale itself can be set using a special spanner (**NOTE!** Supplied attached to the device - please keep with operating instructions.) The switching value is tripped by the actual-value pointer passing the limit pointer.

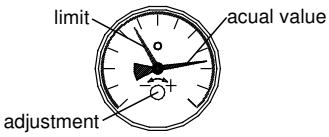

UR3 / UM3 / NW3 / MW3

Open the slide. Adjustment via an adjustment screw (**IMPORTANT!** Max. 50 Nmm). Reclose the slide. The adjustment screw is designed for 7 turns to cover the adjustment range. Example: Adjustment range 13-16.5 l/min corresponds to 3.5 l/min adjustment span over 7 turns. The adjustment is therefore 0.5 l/min per turn. **NOTE!** Please use a Size 1 screwdriver.

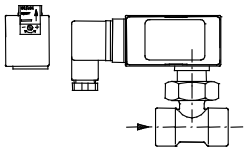

UR1 / UR2

Loosen the stud bolt and move contact tube to desired position. Retighten stud bolt. (**IMPORTANT!** Max. UR1 0.3Nm, UR2 0.1Nm)

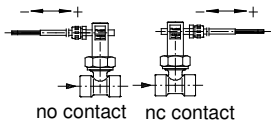

CRE / CRG / CWE / CWG

Loosen screws and remove cover, set desired switching value with adjusting screw, refit cover.

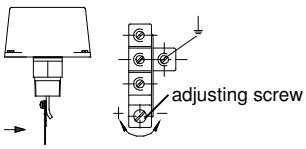

PM / PH

Loosen the cover and set desired switching value with adjusting screw. Refit cover to device.

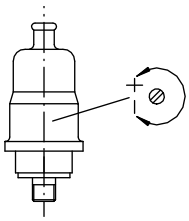

Data sheet

Solenoid valves 2/2-way servo-operated Type EV220A 6-50

Features

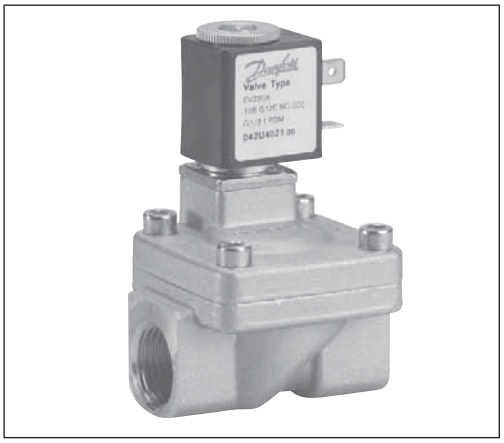

EV220A

- Compact solenoid valve for robust industrial applications
- Liquid hammer damped
- Low power consumption
- NO version, standard for ¼" to 1" valve sizes
- NC version, standard for ¼" to 2" valve sizes
- For water, oil, compressed air and similar neutral media
- Differential pressure: Up to 16 bar
- Viscosity: Up to 50 cSt
- Ambient temperatures: Up to +50°C
- Enclosure: Up to IP 65

Technical data

Type	EV220A 6B	EV220A 10B	EV220A 12B	EV220A 14B	EV220A 18B	EV220A 22B	EV220A 32B	EV220A 40B	EV220A 50B
Capacity, k_v (m^3/h)	1	1.6	2.5	4	7	7	15	18	32
Differential pressure range	0.2 - 16 bar		0.3 - 16 bar						
Max.test pressure	50 bar		25 bar						
Opening times[1] ms	40	50	60	100	200	200	2500	4000	5000
Closing times[1] ms	250	300	300	400	500	500	4000	6000	10000
Ambient temperature	Max. +50°C								
Media temperature	NBR: -10 → +90°C / EPDM: -30 → +100°C FKM: 0 → +100°C / FKM for water max. +60°C								
Media viscosity	+50cSt								
Materials	Valve body: Brass,.....W. no. 2.0401 Armature: Stainless steel, W. no. 1.4105 / AISI 430FR Armature stop: Stainless steel, W. no. 1.4105 / AISI 430FR Armature tube: Stainless steel, W. no. 1.4303 / AISI 305 Spring: Stainless steel, W. no. 14310 / AISI 301 O-ring: NBR, EPDM or FKM Valve plate NBR, EPDM or FKM For NO: NBR Diaphragm: NBR, EPDM or FKM								

1) Times are indicative and apply to water. Exact times will depend on pressure conditions.

Data sheet **2/2-way servo-operated solenoid valves Type EV220A**

Function

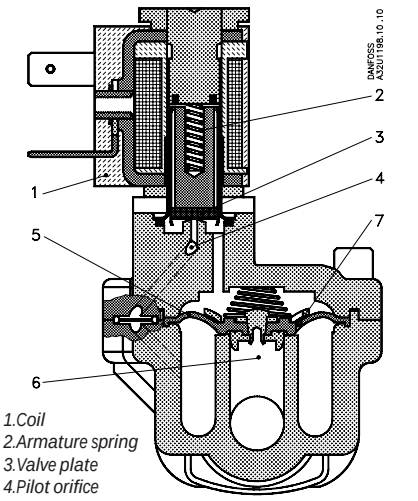

1.Coil
2.Armature spring
3.Valve plate
4.Pilot orifice
5.Diaphragm
6.Main orifice
7.Equalising orifice

De-energized closed version
Coil voltage disconnected
When voltage is disconnected, the armature spring (2) presses the armature block (3) down against the pilot orifice (4). Pressure builds up over the diaphragm (5) via the equalising orifice (7). The diaphragm closes the main orifice (6) as soon as the pressure over the diaphragm equals the inlet pressure. The valve stays closed for as long as voltage remains disconnected.

Coil voltage connected (open)
When voltage is applied to the coil (1), the pilot orifice (4) is opened. Since the pilot orifice is larger than the equalising orifice (7), pressure over the diaphragm (5) falls and the diaphragm is lifted clear of the main orifice (6). The valve stays open for as long as the required least differential pressure is present and voltage is applied to the coil.

De-energized open version
In principle the function involves valve positions opposite to the above for applied and disconnected voltage respectively.

Ordering NC

Valve body

Connection ISO 228/1	Seal material	k_v-Value [m³/h]	Media temp. Min. [°C]	Media temp. Max. [°C]	Type designation: Main type	Type designation: Specification	Permissible differential pressure (bar)/Coil type: Min	Max.[3] AB 4.5 W ac	Max.[3] AB 5.0 W dc	Max.[3] AM 7.5 W ac	Max.[3] AM 9.5 W dc	Max.[3] AK 3.0 W dc	Code no. without coil
G ¼	EPDM[1]	1	-30	+100	EV220A 6B	G 14E NC000		10	10	16	16	10	**042U4001**
G ¼	NBR	1	-10	+90	EV220A 6B	G 14N NC000	0.2	10	10	16	16	10	**042U4003**
G ¼	FKM[2]	1	0	+100	EV220A 6B	G 14F NC000		10	10	16	16	10	**042U4005**
G ⅜	EPDM[1]	1	-30	+100	EV220A 6B	G 38E NC000		10	10	16	16	10	**042U4002**
G ⅜	NBR	1	-10	+90	EV220A 6B	G 38N NC000	0.2	10	10	16	16	10	**042U4004**
G ⅜	FKM[2]	1	0	+100	EV220A 6B	G 38F NC000		10	10	16	16	10	**042U4006**
G ⅜	EPDM[1]	1.6	-30	+100	EV220A 10B	G 38E NC000		10	10	16	16	10	**042U4011**
G ⅜	NBR	1.6	-10	+90	EV220A 10B	G 38N NC000	0.2	10	10	16	16	10	**042U4013**
G ⅜	FKM[2]	1.6	0	+100	EV220A 10B	G 38F NC000		10	10	16	16	10	**042U4015**
G ½	EPDM[1]	1.6	-30	+100	EV220A 10B	G 12E NC000		10	10	16	16	10	**042U4012**
G ½	NBR	1.6	-10	+90	EV220A 10B	G 12N NC000	0.2	10	10	16	16	10	**042U4014**
G ½	FKM[2]	1.6	0	+100	EV220A 10B	G 12F NC000		10	10	16	16	10	**042U4016**
G ½	EPDM[1]	2.5	-30	+100	EV220A 12B	G 12E NC000		10	10	16	16	10	**042U4021**
G ½	NBR	2.5	-10	+90	EV220A 12B	G 12N NC000	0.3	10	10	16	16	10	**042U4023**
G ½	FKM[2]	2.5	0	+100	EV220A 12B	G 12F NC000		10	10	10	10	10	**042U4025**
G ½	EPDM[1]	4	-30	+100	EV220A 14B	G 12E NC000		10	10	16	16	10	**042U4022**
G ½	NBR	4	-10	+90	EV220A 14B	G 12N NC000	0.3	10	10	16	16	10	**042U4024**
G ½	FKM[2]	4	0	+100	EV220A 14B	G 12F NC000		10	10	10	10	10	**042U4026**
G ¾	EPDM[1]	7	-30	+100	EV220A 18B	G 34E NC000		10	10	16	16	10	**042U4031**
G ¾	NBR	7	-10	+90	EV220A 18B	G 34N NC000	0.3	10	10	16	16	10	**042U4032**
G ¾	FKM[2]	7	0	+100	EV220A 18B	G 34F NC000		10	10	10	10	10	**042U4033**
G 1	EPDM[1]	7	-30	+100	EV220A 22B	G 1E NC000		10	10	16	16	10	**042U4041**
G 1	NBR	7	-10	+90	EV220A 22B	G 1N NC000	0.3	10	10	16	16	10	**042U4042**
G 1	FKM[2]	7	0	+100	EV220A 22B	G 1F NC000		10	10	10	10	10	**042U4043**
G 1 ¼	EPDM	15	-30	+100	EV220A 32B	G114E NC000		10	10	16	16	10	**042U4085**
G 1 ¼	NBR	15	-10	+90	EV220A 32B	G114N NC000	0.3	10	10	16	16	10	**042U4084**
G 1 ¼	FKM[2]	15	0	+100	EV220A 32B	G114F NC000		10	10	10	10	10	**042U4095**
G 1 ½	EPDM	18	-30	+100	EV220A 40B	G112E NC000		10	10	16	16	10	**042U4087**
G 1 ½	NBR	18	-10	+90	EV220A 40B	G112N NC000	0.3	10	10	16	16	10	**042U4086**
G 1 ½	FKM[2]	18	0	+100	EV220A 40B	G112F NC000		10	10	10	10	10	**042U4096**
G 2	EPDM	32	-30	+100	EV220A 50B	G 2E NC000		10	10	16	16	10	**042U4089**
G 2	NBR	32	-10	+90	EV220A 50B	G 2N NC000	0.3	10	10	16	16	10	**042U4088**
G 2	FKM[2]	32	0	+100	EV220A 50B	G 2F NC000		10	10	10	10	10	**042U4097**

1) Suitable only for water. - WRAS approved.
2) Suitable for oil and air, water max. +60°C
3) For higher differential pressure than stated, please contact Danfoss.

Ordering NO

Valve body

Connection ISO 228/1	Seal material	k_v-Value [m3/h]	Media temp. Min. [°C]	Media temp. Max. [°C]	Type designation: Main type	Type designation: Specification	Permissible differential pressure (bar)/Coil type: Min.	Max.[2] AB 4.5 W ac	Max.[2] AB 5.0 W dc	Max.[2] AM 7.5 W ac	Max.[2] AM 9.5 W ac	Max.[2] AK 3.0 W dc	Code no. without coil
G ¼	NBR[1]	1	-10	+90	EV220A 6B	G 14N NO000	0.2	-	-	16	16	-	**042U4053**
G ½	NBR[1]	1.6	-10	+90	EV220A 10B	G 12N NO000	0.2	-	-	16	16	-	**042U4064**
G ½	NBR[1]	2.5	-10	+90	EV220A 12B	G 12N NO000	0.3	-	-	16	16	-	**042U4073**
G ½	NBR[1]	4	-10	+90	EV220A 14B	G 12N NO000	0.3	-	-	16	16	-	**042U4074**
G ¾	NBR[1]	7	-10	+90	EV220A 18B	G 34N NO000	0.3	-	-	16	16	-	**042U4082**
G 1	NBR[1]	7	-10	+90	EV220A 22B	G 1N NO000	0.3	-	-	16	16	-	**042U4092**

1) NBR is suitable for oil,water and air.
2) For higher differential pressure than stated, please contact Danfoss.

Coil options

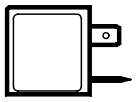

Type AB:
4.5 W ac / 5.0W dc
IP00

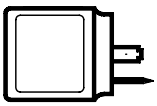

Type AM: 7.5 W ac / 9.5 W dc
Type AK: 3.0 W dc
IP00

Ordering Coils

See separate data sheet for coils IC.PD.600.A

Dimensions and weight

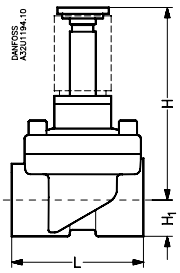

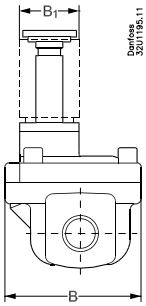

Type	L [mm]	B [mm]	B_1 [mm] Coil type AB	B_1 [mm] Coil type AM/AK/AR	H [mm] NC	H [mm] NO	H_1 [mm]	Weight without coil [kg]
EV220A 6B	51	50	22	33	76	80	13	0.46
EV220A 10B	51	50	22	33	76	80	13	0.44
EV220A 12B	58	58	22	33	77	81	13	0.52
EV220A 14B	58	58	22	33	77	81	13	0.50
EV220A 18B	90	58	22	33	78	82	18	0.72
EV220A 22B	90	58	22	33	83	87	22	1
EV220A 32B	120	82	22	33	95		27	2
EV220A 40B	130	95	22	33	105		32	3.2
EV220A 50B	162	113	22	33	111		37	4.3

Spare parts kit for NC version

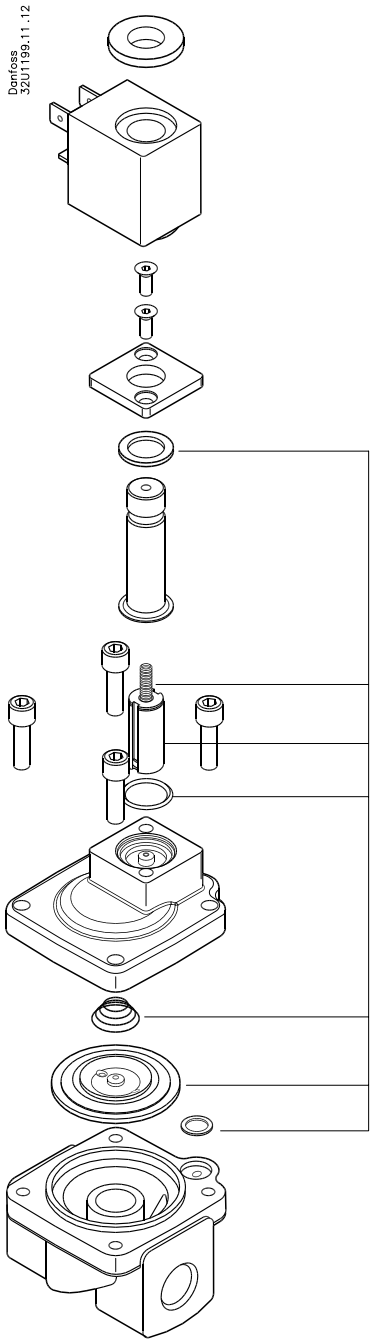

Spare parts kit comprising armature assembly, diaphragm assembly, armature spring, diaphragm spring and two O-rings.

Type	Seal material	**Code no.**
EV220A 6 - 10B	EPDM[1)]	**042U1000**
EV220A 6 - 10B	NBR[2)]	**042U1001**
EV220A 6 - 10B	FKM[3)]	**042U1002**
EV220A 12 - 14B	EPDM[1)]	**042U1003**
EV220A 12 - 14B	NBR[2)]	**042U1004**
EV220A 12 - 14B	FKM[3)]	**042U1005**
EV220A 18 - 22B	EPDM[1)]	**042U1006**
EV220A 18 - 22B	NBR[2)]	**042U1007**
EV220A 18 - 22B	FKM[3)]	**042U1008**
EV220A 32B	EPDM[1)]	**042U1037**
EV220A 32B	NBR[2)]	**042U1038**
EV220A 32B	FKM[3)]	**042U1046**
EV220A 40B	EPDM[1)]	**042U1039**
EV220A 40B	NBR[2)]	**042U1040**
EV220A 40B	FKM[3)]	**042U1047**
EV220A 50B	EPDM[1)]	**042U1041**
EV220A 50B	NBR[2)]	**042U1042**
EV220A 50B	FKM[3)]	**042U1048**

1) Suitable for water.
2) Suitable for water, oil and air.
3) Suitable for oil and air. Water max. +60°C

Media resistance Please contact Danfoss

Danfoss can accept no responsibility for possible errors in catalogues, brochures and other printed material. Danfoss reserves the right to alter its products without notice. This also applies to products already on order provided that such alterations can be made without subsequential changes being necessary in specifications already agreed.
All trademarks in this material are property of the respective companies. Danfoss and the Danfoss logotype are trademarks of Danfoss A/S. All rights reserved.

DK-6000 Kolding
Denmark

© Danfoss A/S 08 2006 AC-DSL/frz

MAKING MODERN LIVING POSSIBLE

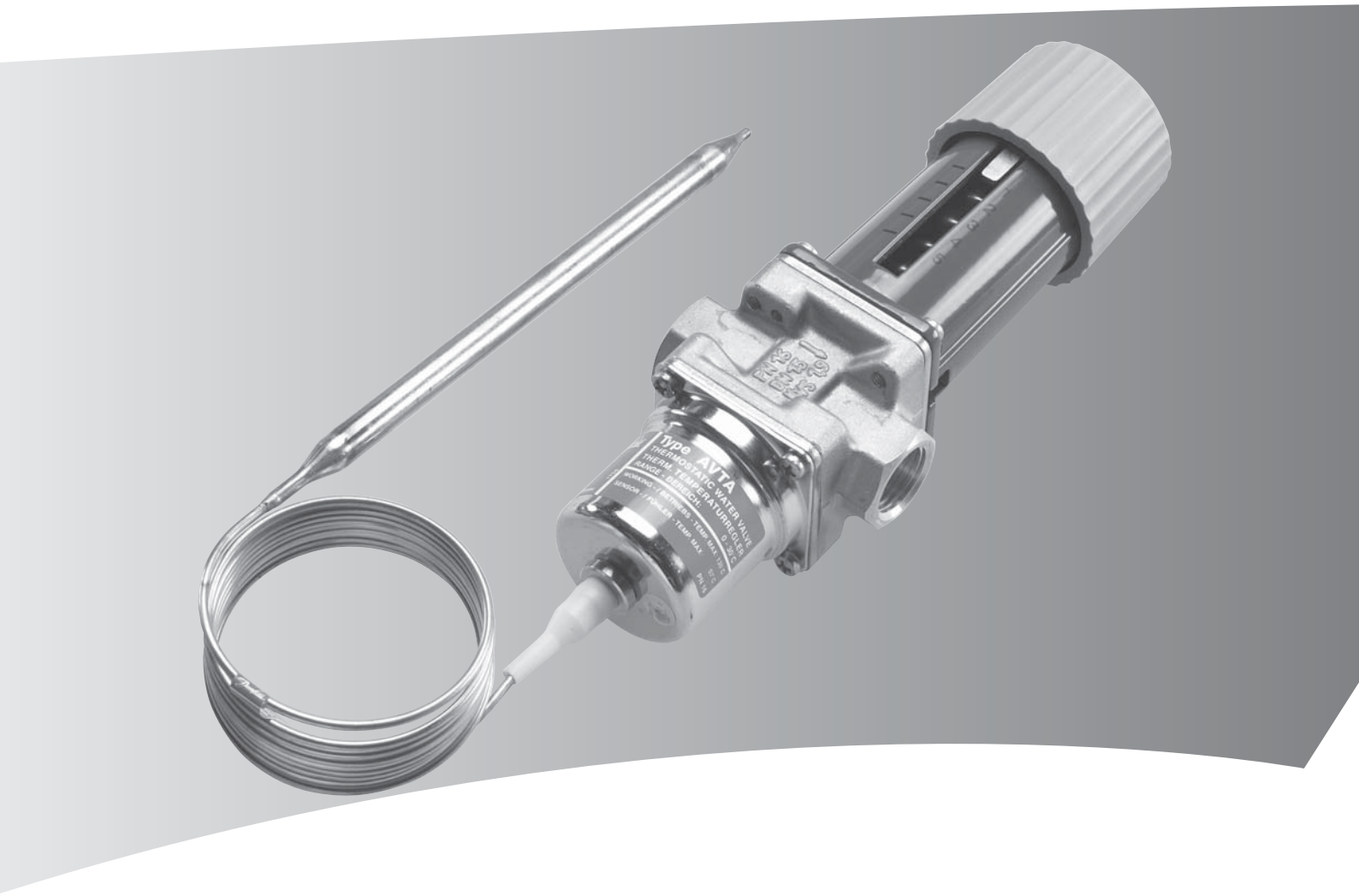

Thermostatic valve

AVTA

Technical brochure

® Danfoss A/S 07-2009/ RA-MC/mr

Contents **Page**

Features....4
Introduction AVTA....4
How it works....4-5
AVTA application....5
Materials....6
Charges....6
Ordering AVTA with adsorption charge....6
Ordering AVTA with universal charge....7
Ordering AVTA with mass charge....7
Dimension and weights....8

AVTA SS for aggressive media....9
Features....9
Application....9
Materials....9
Ordering AVTA in stainless steel with adsorption charge....9
Dimensions....10
Installation....10
Sensor installation....11
Accessories....11
Spare parts....12
Sizing....12-14
Options....15

Features

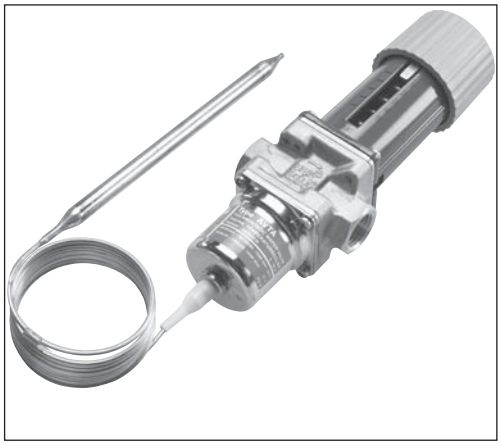

AVTA

- Insensitive to dirt
- Insensitive to water pressure
- Needs no power supply - self acting
- Opens on rising sensor temperature
- Differential pressure: 0 to 10 bar
- Max. working pressure: 16 bar
- Max. test pressure: 25 bar
- Max.pressure on sensor: 25 bar
- Stainless Steel version available
- The valves are pressure-relieved, i.e. the degree of opening is not affected by differential pressure Δp (pressure drop).
- The regulation range is defined for the point at which the valve begins to open.

Introduction

Thermostatic valves are used for the infinite, proportional regulation of flow quantity, depending on the setting and the sensor temperature.
The Danfoss range of thermostatic valves includes a series of industrial products for both refrigeration and heating regulation. The valves are self-acting, i.e. they operate without the supply of auxiliary energy such as electricity or compressed air.

Because the valves constantly match flow quantity to demand, they are especially suitable for temperature regulation.
The required temperature is maintained constant with no overconsumption of:
- cooling water in cooling systems,
- hot water or steam in heating systems.
The operating economy and efficiency is maximized.

How it works

Thermostatic valves consist of three main elements:

- Setting section with knob, reference spring and setting scale.

- Valve body with orifice, closing cone and sealing elements.

- Hermetically sealed thermostatic element with sensor, bellows and charge.

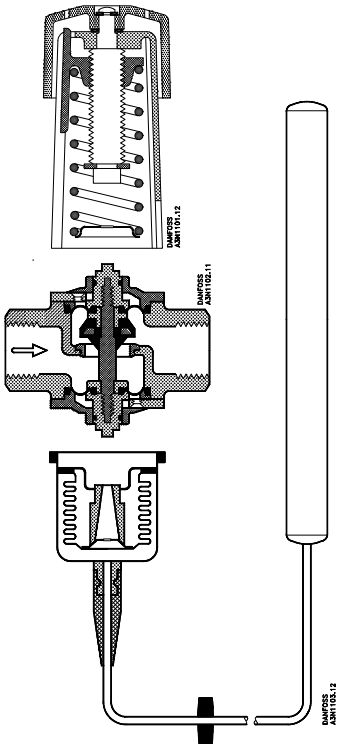

When the three elements are built together, the valve is installed and the sensor is located at the point where the temperature is to be regulated, the function sequence is as follows:

1. A temperature-dependent pressure - charge vapour pressure - builds up in the sensor.
2. This pressure is transferred to the valve via the capillary tube and bellows and acts as an opening or closing force.

® Danfoss A/S 07-2009/ RA-MC/mr

How it works (continued)

3. The knob on the setting section and the spring exert a force that acts counter to the bellows.
4. When balance is created between the two opposing forces, the valve spindle remains in its position.

5. If the sensor temperature - or the settings - is changed, the point of balance becomes displaced and the valve spindle moves until balance is re-established, or the valve is fully open or closed.
6. On sensor temperature change, the flow quantity change is approximately proportional.

The illustrations show an AVTA cooling water valve, but the function principle applies to all types of thermostatic valves.

AVTA application

AVTA thermostatic valves are widely used for temperature regulation in many different machines and installations where cooling is required. AVTA always opens to admit flow on rising sensor temperature. The valve can be installed either in the cooling water flow line or return line.
Standard version of thermostatic valve AVTA can be used with fresh water or neutral brine.

- Typical application areas
- Injection moulding machines
- Compressors
- Vacuum pumps
- Dry cleaning machines
- Destillation plants
- Printing machines
- Hydraulic systems
- Rolles/ mills
- Biomass boilers
- Industrial lasers
- Steam sterilizers
- Medical equipment
- Food processing

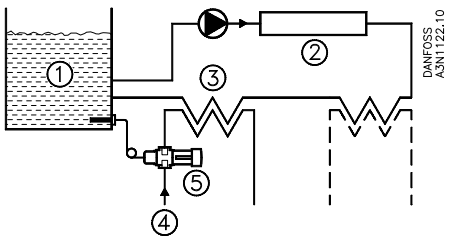

1. Oil tank
2. Hydraulic machinery
3. Heat exchangers
4. Cooling water supply
5. Thermostatic valve AVTA

Materials

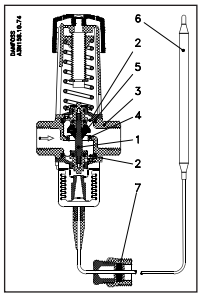

No.	Description	Material
1	Spindle	Brass W.no. 2.0401
2	Diaphragms	Rubber - ethylene - propylene (EPDM).
3	Valve body and other metal parts	Forged brass W.no. 2.0402
4	Valve cone	Nitrile rubber (NBR)
5	Valve seat	Stainless steel W.no. 1.4305/AISI 303
6	Sensor	Copper W.no. 2.0090
7	Capillary tube gland	Nitrile rubber (NBR) Brass W.no. 2.0321 / 2.0401

Charges

Thermostatic valve AVTA with different types of charge

Universal charge Mass charge Adsorption charge

Ordering
AVTA with adsorption charge

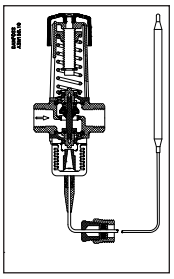

- Wide regulating range
- Can be installed in any position as far as orientation and - temperature are concerned
- Withstands up to +130°C sensor temperature
- Small sensor dimensions - Ø 9,5 x 150 mm
- Max. pressure on sensor 25 bar.

The charge consists of active carbon and CO_2 which is adsorbed on falling sensor temperature and thereby produce pressure changes in the element.

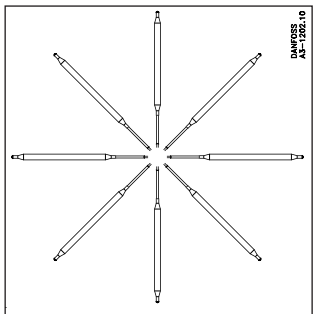

Sensor installation

Connection ISO 228	Regulating range [°C]	Max. temp. sensor [°C]	k_v value (m^3/h at $\Delta p = 1$ bar)	Capillary tube length [m]	Type	**Code no. 1)**
G 3/8	+10 → +80	130	1.4	2.3	AVTA 10	**003N1144**
G 1/2			1.9	2.3	AVTA 15	**003N0107**
G 1/2			1.9	2.3 armoured	AVTA 15	**003N2114**
G 3/4			3.4	2.3	AVTA 20	**003N0108**
G 1			5.5	2.3	AVTA 25	**003N0109**

1) Code no. covers complete valve incl. cappillary tube gland.

Immersion pockets, see "Spare parts and accessories", page 11-12.

® Danfoss A/S 07-2009/ RA-MC/mr

Ordering
AVTA with universal charge

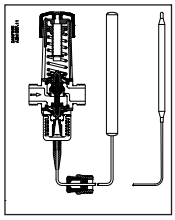

- Sensor dimensions Ø 18 x 210 mm
- Sensor can be installed colder or warmer than the valve
- Sensors must be orientated as shown in sketch below
- Max. pressure on sensor 25 bar.

The charge is a mix of liquid and gas where the liquid surface (regulating point) is always inside the sensor. Wich charge medium is used depends on the regulation range.

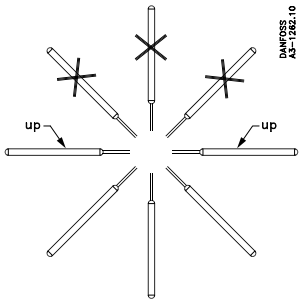

Sensor installation

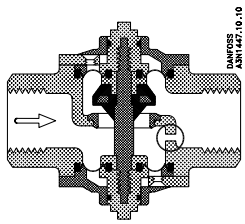

Valve body with bypass

Connection ISO 228	Regulating range [°C]	Max.temp. sensor [°C]	k_V value (m^3/h at Δ p = 1 bar)	Capillary tube length [m]	Type	**Code no.** [1]
G 3/8	+0 → +30	57	1.4	2.0	AVTA 10	**003N1132**
G 1/2			1.9		AVTA 15	**003N2132**
G 3/4			3.4		AVTA 20	**003N3132**
G 1			5.5		AVTA 25	**003N4132**
G1			5.5	2.0 armoured	AVTA 25	**003N4133**
G 3/8	+25 → +65	90	1.4	2.0	AVTA 10	**003N1162**
G 1/2			1.9	2.0	AVTA 15	**003N2162**
G 1/2			1.9	2.0 (armoured)	AVTA 15	**003N0041**
G 3/4			3.4	2.0	AVTA 20	**003N3162**
G 3/4			3.4	5.0	AVTA 20	**003N3165**
G 3/4			3.4	2.0 (armoured)	AVTA 20	**003N0031**
G 1			5.5	2.0	AVTA 25	**003N4162**
G 1			5.5	2.0 (armoured)	AVTA 25	**003N0032**
G 1			5.5	5.0	AVTA 25	**003N4165**
G 3/8	+50 → +90	125	1.4	2.0	AVTA 10	**003N1182**
G1/2			1.9	2.0	AVTA 15	**003N2182**
G 3/4			3.4	2.0	AVTA 20	**003N3182**
G 1			5.5	2.0	AVTA 25	**003N4182**
G 1			5.5	3.0	AVTA 25	**003N4183** [2]

1) Code no. covers complete valve incl. cappillary tube gland.
2) A Ø 2 mm bypass is drilled in the valve body.

Immersion pockets, see "Spare parts and accessories", page 11-12.

Ordering
AVTA with mass charge

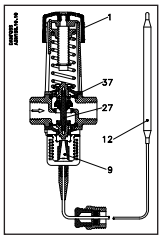

- Small sensor dimensions - Ø 9,5 x 180 mm
- Short time constant
- Sensor must always be installed warmer than the valve
- Max. pressure on sensor 25 bar

The Charge is a mix of liquid and gas. Due to the volumetric conditions the sensor must be installed warmer than the valve, since the liquid Surface (regulation point) must be in the Sensor.

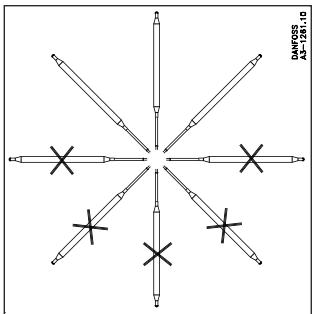

Sensor installation

Connection ISO 228	Regulating range [°C]	Max.temp. sensor [°C]	k_V value (m^3/h atΔ p = 1 bar)	Capillary tube length [m]	Type	**Code no.** [1]
G 1/2	+0 → +30	57	1.9	2.0	AVTA 15	**003N0042**
G 3/4			3.4		AVTA 20	**003N0043**
G 1/2	+25 → +65	90	1.9	2.0	AVTA15	**003N0045**
G 1/2			1.9	2.0 (armoured)	AVTA 15	**003N0299**
G 1/2			1.9	5.0	AVTA 15	**003N0034**
G 3/4			3.4	2.0	AVTA 20	**003N0046**
G 1			5.5	2.0	AVTA 25	**003N0047**

1) Code no. covers complete valve incl. cappillary tube gland.

® Danfoss A/S 07-2009/ RA-MC/mr

Dimensions and weights

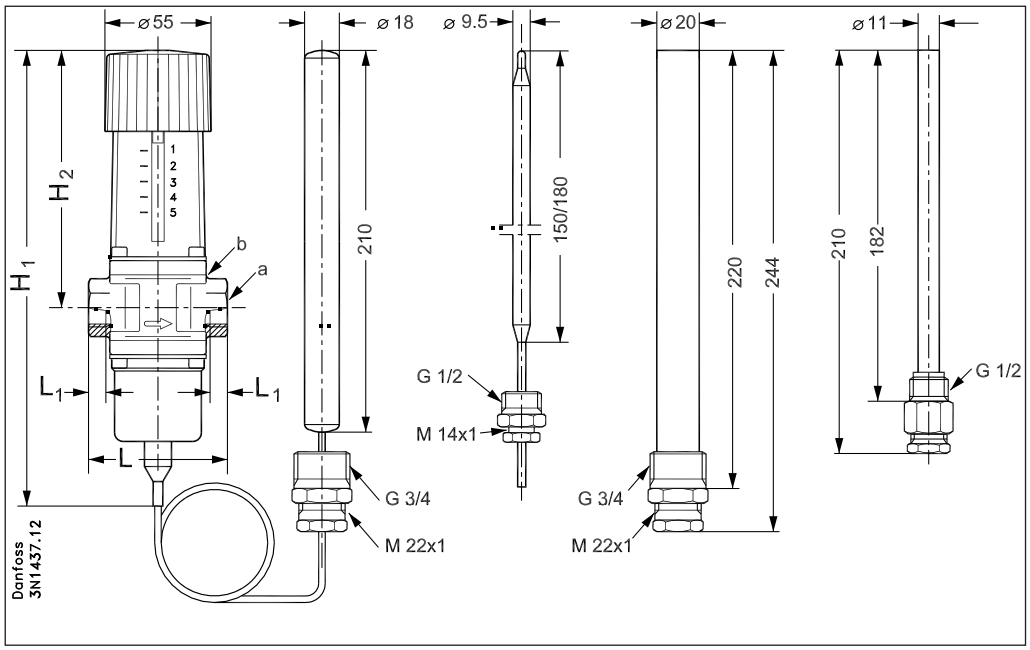

Type	H_1 [mm]	H_2 [mm]	L [mm]	L_1 [mm]	a	b [mm]	Weight [kg]
AVTA 10	240	133	72	14	G 3/8	⬡ 27	1.45
AVTA 15	240	133	72	14	G 1/2	⬡ 27	1.45
AVTA 20	240	133	90	16	G 3/4	⬡ 32	1.50
AVTA 25	240	138	95	19	G 1	⬡ 41	1.65

Features

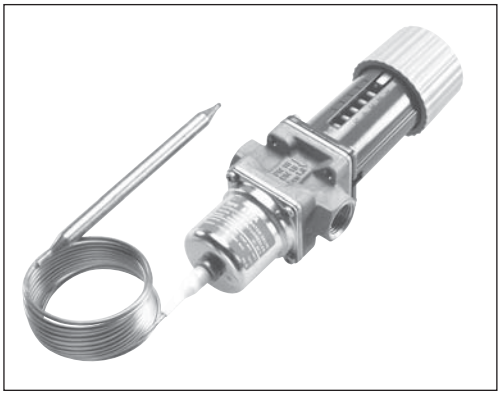

AVTA SS for aggressive media.

- Insensitive to dirt
- Insensitive to water pressure
- Needs no power supply - self acting
- Opens on rising sensor temperature
- Differential pressure: 0 to 10 bar
- Max. working pressure: 16 bar
- Max. test pressure: 25 bar
- Max. pressure on sensor: 25 bar
- The valves are pressure-relieved, i.e. the degree of opening is not affected by differential pressure Δ p (pressure drop).
- The regulation range is defined for the point at which the valve begins to open.

Application

AVTA SS for aggressive media.
A valve body in stainless steel means that the valve can be used for aggressive media in such applications as the marine sector and the chemical industry.

AVTA SS valves have an adsorption charge as standard.
For special request we have also AVTA SS with mass and universal charges available.

Materials

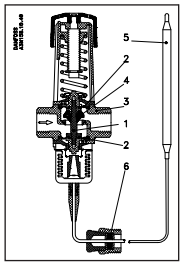

No.	Description	Material
1	Spindle	Stainless steel W.no. 1.4539
2	Diaphragms	Rubber - ethylene - propylene (EPDM).
3	Valve body	Stainless steel W.no. 1.4581
4	Valve cone	Nitrile rubber (NBR)
5	Sensor	Copper W.no. 2.0090
6	Capillary tube gland	Nitrile rubber (NBR), Brass W.no. 2.0321 / 2.0401

Ordering
AVTA in stainless steel with adsorption charge

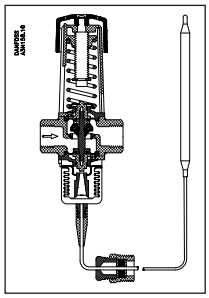

- Wide regulating range
- Can be installed in any position as far as orientation and temperature are concerned
- Withstands up to +130°C sensor temperature
- Small sensor dimensions - Ø 9,5 x 150 mm
- Max. pressure on sensor 25 bar.

The charge consists of active carbon and CO_2 which is adsorbed on falling sensor temperature and thereby produce pressure changes in the element.

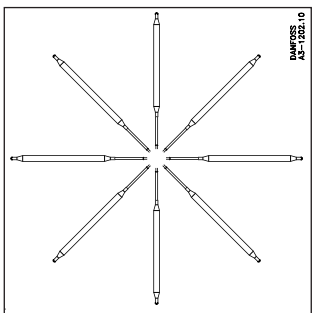

Sensor installation

Connection ISO 228	Regulating range [°C]	Max.temp. sensor [°C]	k_v value (m^3/h at Δp = 1 bar)	Capillary tube length [m]	Type	**Code no.** [1]
G 1/2	+10 to +80	130	1.9	2.3	AVTA 15	**003N2150**
G 3/4			3.4		AVTA 20	**003N3150**
G 1			5.5		AVTA 25	**003N4150**

1) Code no. covers complete valve incl. cappillary tube gland.

Immersion pockets, see "Spare parts and accessories", page 11-12.

® Danfoss A/S 07-2009/ RA-MC/mr

Dimensions

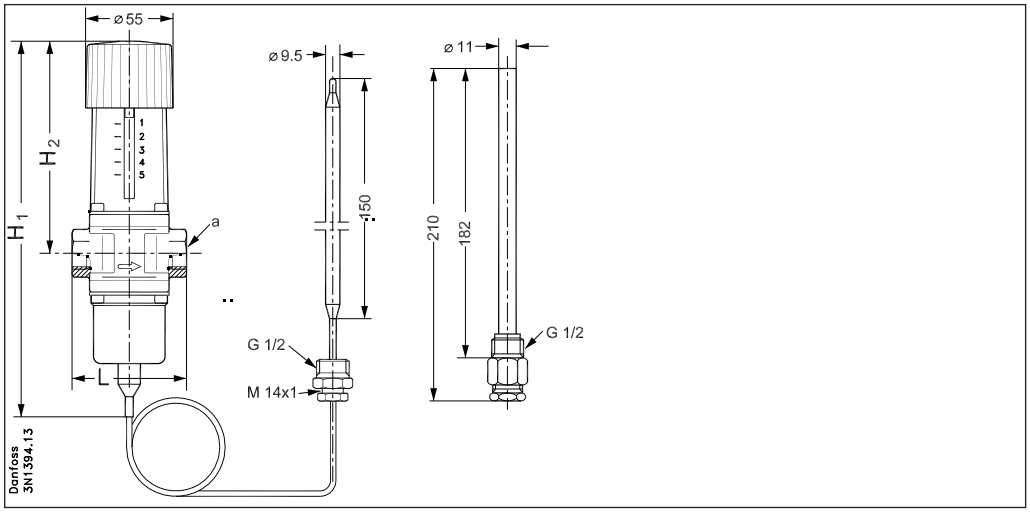

Type	H_1 [mm]	H_2 [mm]	L [mm]	a ISO 228/1
AVTA 15	240	133	72	G 1/2
AVTA 20	240	133	90	G 3/4
AVTA 25	240	138	95	G 1

Installation

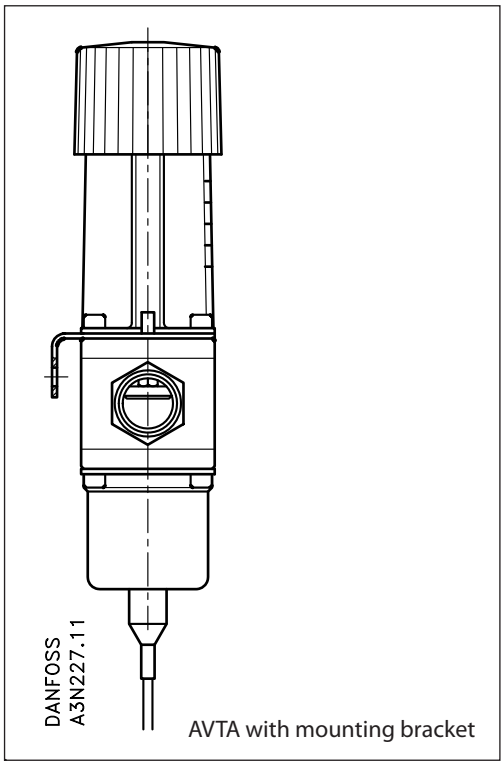

AVTA with mounting bracket

The valves can be installed in any position.
An arrow on the valve body indicates the direction of flow.
AVTA valves are also marked so that the letters RA can be read straightforwardly when the valve is held as shown.
The installation of an FV filter ahead of the valve is recommended.

Capillary tube
Install the capillary tube without sharp bends (no "kinks"). Relieve the capillary tube at the ends. Relief is important where vibration might occur.

Note:
Where AVTA is used, the sensor must be able to react to variations in cooling water temperature on system start. Therefore a bypass line with a shut-off valve might be necessary to ensure fl ow at the sensor during start-up.
If a mounting bracket is used - see "Spare parts and accessories" page 11-12 - it must always be between valve body and setting section (see illustration).

Sensor installation

If an immersion pocket is installed, the use of heat-conductive compound is recommended. This will reduce reaction time. See "Spare parts and accessories", page 11-12.

AVTA with mass charge (sensor Ø9.5 x 180 mm) must always have valve housing fitted in the inlet, where the regulated liquid is coldest ("sensor warmer").

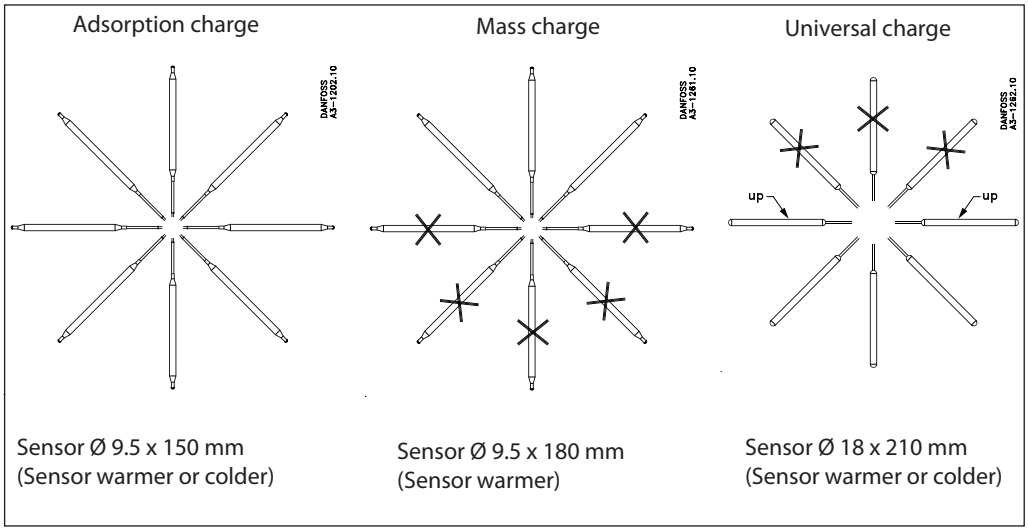

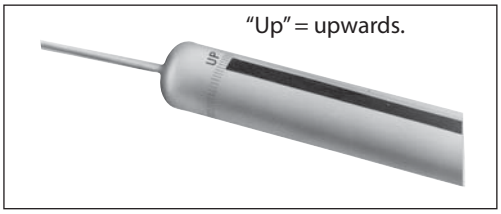

Accessories

	Designation	Description	Code no.
	Immersion sensor max. pressure 50 bar L = 220 mm	Brass for Ø 18 sensor R 3/4	**003N0050**
		Brass for Ø18 mm sensor 3/4 - 14 NPT	**003N0051**
		18/8 steel [1] for Ø 18, 3/4 - 14 NPT	**003N0053**
		18/8 steel[1] for Ø18 sensor R 3/4	**003N0192**
	Immersion sensor max. pressure 50 bar L = 182 mm	Brass for Ø 9.5 sensor G 1/2	**017-436766**
		18/8 steel[1] for Ø 9.5 sensor R 1/2	**003N0196**
	Mounting bracket	For AVTA	**003N0388**
	Heat-conductive compound	5 gram tube	**041E0110**
		0.8 kg	**041E0111**
	1 set of nitrile (NBR) diaphragm for mineral oil	For AVTA 10/15	**003N0445**
		For AVTA 20	**003N0446**
		For AVTA 25	**003N0447**
	Capillary tube gland	G 1/2 G 3/4 1/2 - 14 NPT 3/4 - 14 NPT	**017-422066** **003N0155** **003N0157** **003N0056**
	Plastic hand knob	For AVTA	**003N0520**

1) W. no. 1.4301

® Danfoss A/S 07-2009/ RA-MC/mr

Spare parts

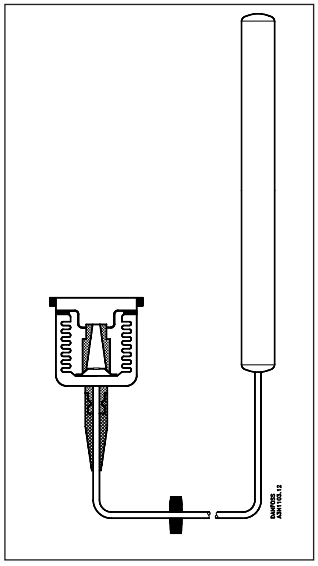

Service elements for AVTA

	Temperature range [°C]	Capillary tube length [m]	**Code no.**
Adsorption charge - sensor Ø 9.5 x 160 mm	+10 → +80	2.3	**003N0278**
Universal charge - sensor Ø 18 x 210 mm	0 → +30	2	**003N0075**
		5	**003N0077**
	+25 → +65	2	**003N0078**
		5	**003N0080**
		2 (armoured)	**003N0063**
		3	**003N0079**
	+50 → +90	2	**003N0062**
		3	**003N0089**
Mass charge - sensor Ø9.5 x 190 mm	0 → +30	2	**003N0066**
	+25 → +65	2	**003N0091**
		5	**003N0068**

Sizing

When sizing and selecting thermostatic valves, it is most important to ensure that the valve is able to give the necessary quantity of cooling water at any time, irrespective of the load. Therefore, to select a suitable size of valve it is necessary to know the precise amount of cooling required. On the other hand, to avoid the risk of unstable regulation (hunting), the valve should not be oversized.
The type of charge must be selected on the basis of the temperature to be maintained, and on an assessment of the characteristics of each type, as described in the foregoing.

In general the aim should be to select the smallest valve capable of giving the required flow.

It is also recommended that the temperature range be chosen so that the required sensor temperature lies in the middle of the regulation range.

To help fine-setting the valve, a thermometer should be installed near the sensor.

Valve size
The following data are used when selcting valve size:
- Required cooling water flow, Q [m^3/h]
- Temperature rise in cooling water, [Δt] (°C)
- Differential pressure across valve, [Δp] (bar).

With fully open valve the differential pressure should be around 50% of the total pressure drop across the cooling system.
The diagrams on page 10 are intended to make valve sizing easier.

Fig. 1 - Relation between heat quantity [kW] and cooling water quantity
Fig. 2 - Graphs of k_v values
Fig. 3 - Valve operating range
Fig. 4 - Flow quantities as a function of pressure drop [Δp]

Example
A cooling water valve must be selected for the temperature regulation of a vacuum pump.

Since direct regulation of the oil temperature is required, an AVTA valve is suitable. The sensor position is horizontal - and small dimensions are desired.

Given data:
- Necessary cooling at full load 10 kW.
- Oil temperature to be maintained constant at +45°C
- Cooling water p_1 = 3 bar
- Outlet p_3 = 0 bar

- $p_2 = \frac{p_1+p_3}{2}$ (guess)

- Cooling water temperature t_1 = +20°C
- Outlet temperature t_2 = +30°C

1. The graphs in fig. 1 can be used to find the necessary cooling water quantity at
Δt = 10°C (+30°C - +20°C) to 0.85 m^3/h.

The graphs in fig. 2 show the necessary k_v value for 0.85 m^3/h with

$\Delta p = p_1 - p_2$ = 3 - 1.5 = 1.5 bar for 0.7 m^3/h.

The columns in fig. 3 show that all four AVTA valves can be used, but in practice an AVTA 10 or 15 shall be selected, so the necessary water flow is in the middle of the regulating range.

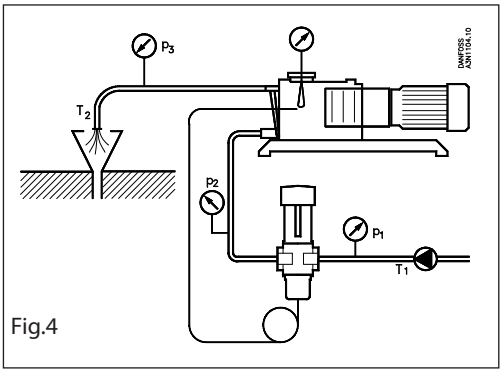

Fig.4

The above considerations apply to both AVTA and FJVA types.

Operating conditions and other product requirements in this example mean that a valve with adsorption charge is the correct choice.
The temperature range +10 → +80°C is in order.

The table at the top of page 3 shows AVTA 10, code no. 003N1144, or AVTA 15, code no. 003N0107. Both fulfil the requirements named.

In many applications, installation conditions make the use of sensor pockets advisable.

"Accessories" on page 11 gives the code nos. for sensor pockets for Ø 9.5 mm sensors in brass and stainless steel: 017-436766 and 003N0196, respectively.

® Danfoss A/S 07-2009/ RA-MC/mr

Sizing

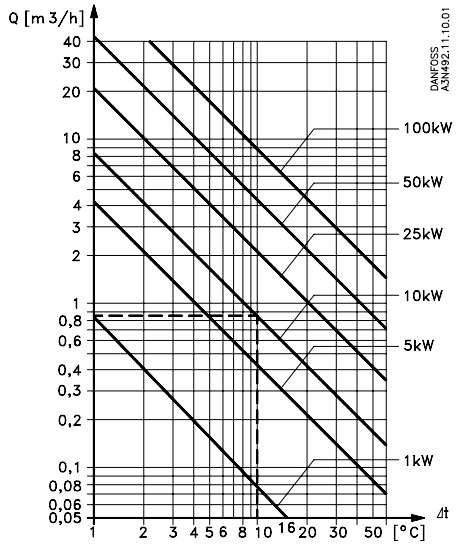

Fig. 1
Heating or cooling with water.
Example: Necessary cooling output 10 kW with Δ t = 10ºC
Required flow 0.85 m³/h.

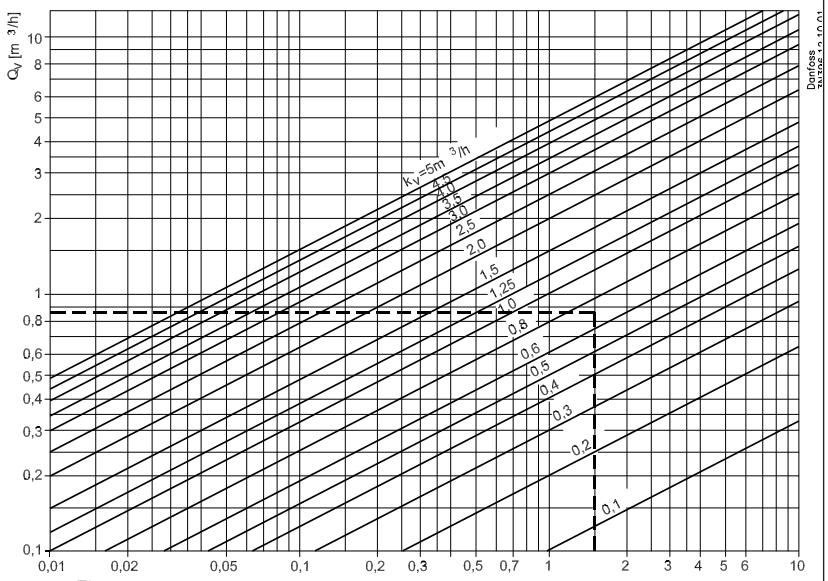

Fig. 2
Relation between water quantity and pressure drop across valve.
Example: Flow 0.85 m³/h with a pressure drop of 1.5 bar.
The k_v value becomes 0.7 m³/h.

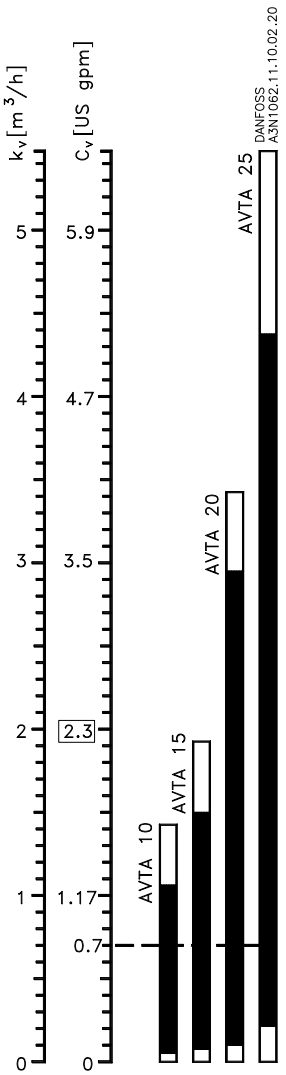

Fig. 3
Nomogram showing the valve k_v range. k_v values are always given for water flow in m³/h with a pressure drop Δ p of 1 bar. The valve should be selected so that the necessary k_v value lies in the middle of the regulation range.
Example: AVTA 10 and 15 are the most suitable for a k_v value of 0.7

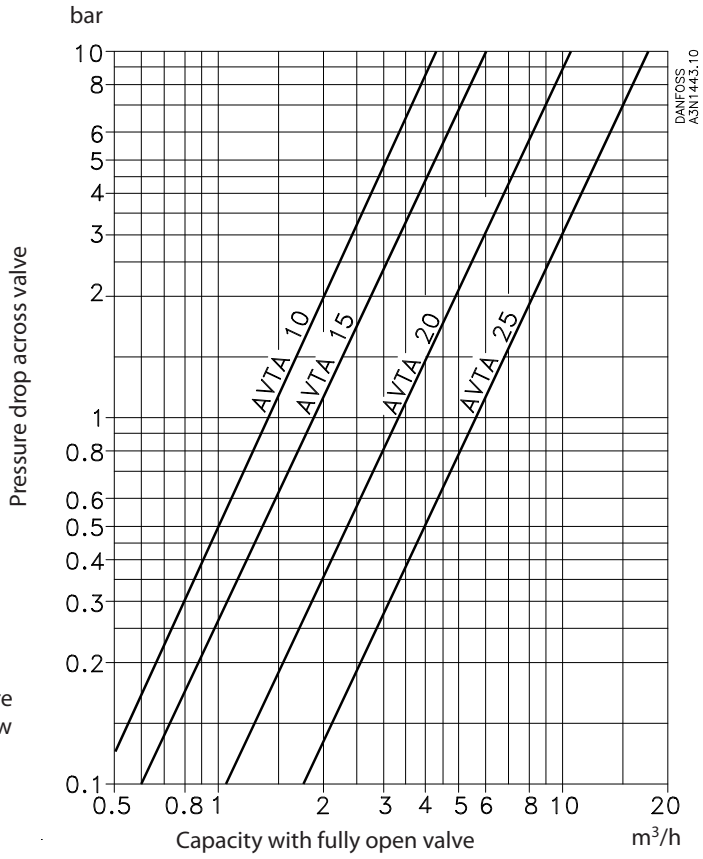

Fig. 4
Valve flow quantity in fully open position, as a function of pressure drop Δp.

Options

- DZR brass
- Outer thread connecting
- Other lenghts of capillary tubes
- Armouring of capillary tubes
- Other combinations of sizes, materials and ranges
- NPT - connection, see separate datasheet for USA / Canada

® Danfoss A/S 07-2009/ RA-MC/mr

Danfoss can accept no responsibility for possible errors in catalogues, brochures and other printed material. Danfoss reserves the right to alter its products without notice. This also applies to products already on order provided that such alterations can be made without subsequential changes being necessary in specifications already agreed.
All trademarks in this material are property of the respective companies. Danfoss and the Danfoss logotype are trademarks of Danfoss A/S. All rights reserved.

® Danfoss A/S 07-2009/ RA-MC/mr

Pressure gauges with glycerine filling

with stainless steel case
according to EN 837-1 / S2

Accuracy class 1.6

Nominal size ND 63

License:

Description

The time proven system technology of the glycerine pressure gauges has been integrated in a new stainless steel case with modern design. This instrument fulfills the safety requirements of EN 837-1 / S2.

The glycerine filling of the case protects the measuring system against wear by pulsating pressures and mechanical vibration; at the same time it provides lubrification of the moving parts.

The glycerine pressure gauges are suitable for gaseous and liquid media that do not corrode copper alloys.

The pressure gauges are equipped with a pressure compensating diaphragm.

This diaphragm avoids a pressure rise in the case that is due to temperature bound volume expansion of the liquid filling, thus avoiding indicated errors.

The mounting bracket offers a possibility of quick modification for panel mounting with series 1453.

Features

- High dynamic load
- Rugged construction
- Fulfills EN 837-1 / S2 standard
- Protection IP 65 (EN 60 529 / IEC 529)
- Low wear
- Versatile applications
- Custom modification to panel mounting with bracket (model 1453)
- Reducing of stocking costs
- Low weight

Ranges

0 . . . 1 bar to 0 . . . 1000 bar

Applications

Food industry,
General machine construction, hydraulics,
compressors, pumps,
high pressure cleaning devices,
Chemical industry; Mining,
shipyards, wast water technology

Model: 1453, 1454

tecsis GmbH
An der Sandelmühle 13
D-60439 Frankfurt / Main
T. +49 (0) 69 / 58 06-0
Sales Inland
F. +49 (0) 69 / 58 06-1 70
Export Sales
F. +49 (0) 69 / 58 06-1 77
E.info@tecsis.de
I. www.tecsis.de

Technical data

Models	1454	1453		Options
Nominal size	63			
Symbol		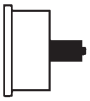	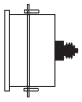	
Accuracy class	1.6 to EN 837-1			
Ranges	0 . . . 1 bar to 0 . . . 1000 bar negative or positive or negative and positive gauge pressure			
Application	Constant load: 3 / 4 x full scale value Alternating load: 2 / 3 x full scale value			
Overpressure protection	full scale value			
Case	Stainless steel 1.4301 bright	Stainless steel 1.4301		polished
Bezel	Stainless steel 1.4301 bright	Stainless steel 1.4301 polished		
Mounting	none		with bracket	Front flange, stainless steel polished, triangular bezel, polished stainless steel
Window	Plexiglass			Trogamid T
Dial	Aluminium, white, scale and imprint black			Dual scale
Pointer	Aluminium, black			red max. pointer
Movement	CuZn-alloy			
Measuring element	Copper alloy up to 40 bar Bourdon tube; above 60 bar: helical tube; stainless steel 1.4571 ≥ 400 bar helical tube			
Thread - position - thread	CuZn-alloy above G 1/4 B	back, central		Other threads on request 1/4 NPT; G 1/8 B, M 12 x 1.5
Liquid filling	Glycerine < 2.5 bar 86.5%, ≥ 2.5 bar 99.5%			
Temperatures - Medium - Ambient	 Tmin. -25 °C, Tmax. 80 °C Tmin. -25 °C, Tmax. 60 °C			
Temperature drift	0,3% / 10 K if deviation from normal temperature 20 °C			
Protection	IP 65 to EN 60 529/IEC 529			
Orifice				Ø 0.3; Ø 0.4; Ø 0.8 Brass
Weight approx.	0.21 kg	0.26 kg		

Dimensions

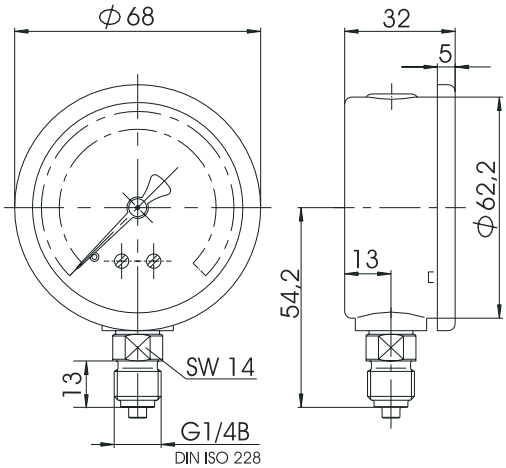

Model: 1454

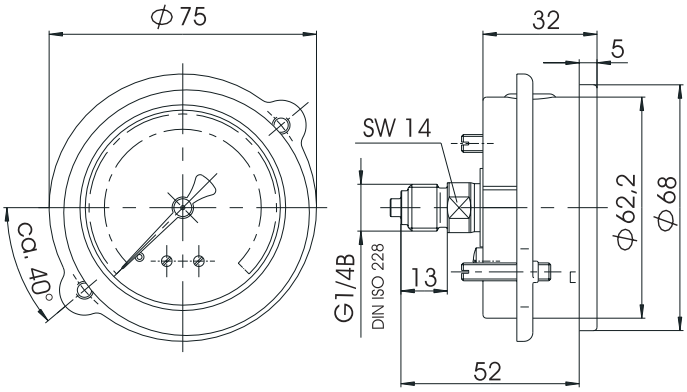

Model: 1453

Modifications reserved

Bimetal thermometer Heavy Duty

Accuracy class 1

Description

The measuring element of the bimetal thermometer is a quick reacting bimetal coil. It is manufactured from two cold-welded metal strips with different thermal expansion coefficients and rotates in proportion to temperature. The rotary movement is conveyed to the pointer with low friction.

A comprehensive range of standard versions enables a wide range of applications and uses. Special versions are also manufactured to customer specifications.

Features

- Short response time
- Wide selection of standard versions
- Special versions to customer specifications

Ranges

-30 . . . +50 °C to 0 . . . 500 °C

Applications

Heating and ventilation,
Air conditioning
container and pipe construction,
building services and
a wide range of applications in industry

Model: T206, T207, T208, T209, T218, T219, T252, T253, T254, T255, T256, T257, T258, T259, T268, T269, T276, T277, T278, T279

tecsis GmbH
An der Sandelmühle 13
D-60439 Frankfurt / Main
T. +49 (0) 69 / 58 06-0

Sales Inland
F. +49 (0) 69 / 58 06-1 70

Export Sales
F. +49 (0) 69 / 58 06-1 77

E.info@tecsis.de
I. www.tecsis.de

PDF wurde mit FinePrint pdfFactory Pro-Prüfversion erstellt. www.context-gmbh.de

Technical data: thermometers for thermowells with locking screw

Models	T206	T207	T208	T209	T218	T219	Options
Symbol	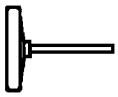						
Nominal size	63	80	100	160	100	160	
Accuracy	Class 1 (DIN 16 203)						
Ranges and Resolutions	-30 . . . 50 °C -20 . . . 60 °C 0 . . . 60 °C 0.5 °C 0 . . . 80 °C						Scale °F Dual scale °C / °F
	0 . . . 100 °C 0 . . . 120 °C 1 °C 0 . . . 160 °C						
	0 . . . 200 °C 0 . . . 250 °C 2 °C						
Overtemperature limits	Constant load: Measuring range (DIN 16 203) short-time (≤ 1h): 1.1 of measuring range (DIN 16 203)						
Measuring element	Bimetal coil						
Case / Bezel	Material SS 1.4301						
Connection	back				bottom		
	Plain stem, stem Ø 8 mm, with collar for thermowell						
Window	Glass lens						
Dial	Aluminium, matted, with fine grading, scale and lettering black						
Pointer	Aluminium black, adjustable pointer						
Protection	IP 43 (EN 60 529 / IEC 529)						
Weight (kg)	0.10	0.12	0.15	0.30	0.38	0.75	

Technical data: thermowells locking screw

Models	T968	T988	T998	T969	T999	Options
Connection	Thermowell with fixed thread G 1/2 A			Weld-in thermowell		
Length	l_1: 45, 63, 100, 160, 200 mm max. 500 mm			l_2: 43, 80, 140, 180 mm max. 480 mm		
Material	St 35	Brass	SS 1.4571	St 35	SS 1.4571	
Max. pressure	25 bars	6 bars	25 bars	25 bars	25 bars	

Dimensions (mm)

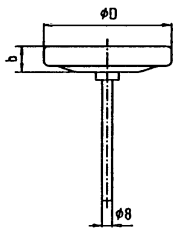

Model: T206, T207, T208, T209

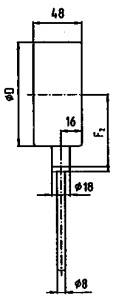

Model: T218, T219

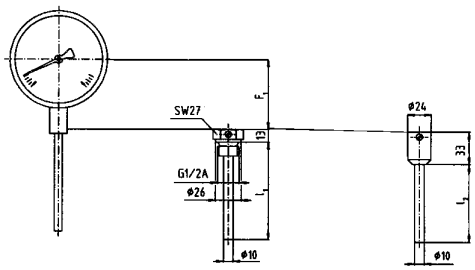

Model: T968, T988, T998 Model: T969, T999

Model	Dimensions (mm)	
	D (ND)	b
T206	63	16
T207	80	17
T208	100	21
T209	160	25

Model	Dimensions (mm)		
	D (ND)	F_1	F_2
T218	100	70	78
T219	160	100	108

Dimension l_1, l_2 see above table: „Technical data: thermowells“

Order details

1. Model
2. Range
3. Thermowell type
4. Thermowell material
5. Thermowell length l_1, l_2
6. Options

PDF wurde mit FinePrint pdfFactory Pro-Prüfversion erstellt. www.context-gmbh.de

Technical data: thermometers with fixed thread connection

Models	T252	T253	T254	T255	Options
Symbol	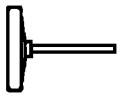				
Nominal size	25	33	40	50	
Accuracy	Class 2 (DIN 16 203)				
Ranges and Resolutions	-30 . . . 50 °C -20 . . . 60 °C 0 . . . 60 °C 1 °C 0 . . . 80 °C				Scale °F Dual scale °C / °F, only for T254 and T255
	0 . . . 100 °C 0 . . . 120 °C 2 °C 0 . . . 160 °C				
	0 . . . 200 °C 0 . . . 250 °C 5 °C				
Overtemperature limits	Constant load: Measuring range (DIN 16 203) short-time (≤ 1h): 1.1 measuring range (DIN 16 203)				
Max. pressure	max. 6 bar (at stem)				
Measuring element	bimetal coil				
Case / Bezel	Material SS 1.4301				
Connection	Back, with fixed thread				
	M8		G 1/8 A	G 1/4 A	1/4 NPT
Plain stem length	l_1: 45, 63, 100, 160, 200, 250 mm				
Stem material	SS 1.4571				
Window	Glass lens	Acrylic glass	Glass lens		
Dial	Aluminium, matted, with fine grading, scale and imprint black				
Pointer	Aluminium black				
Protection	IP 54 (EN 60 529 / IEC 529)				
Weight (kg)	0.04	0.04	0.05	0.06	

Dimensions (mm)

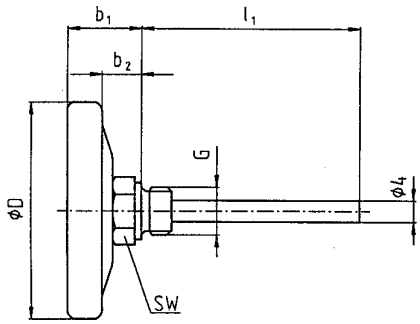

Model	Dimensions (mm)				
	D (ND)	b_1	b_2	G	SW
T252	25	15	6	M 8	12
T253	33	15	6	M 8	12
T254	40	21	9.5	G 1/8 A	17
T255	50	21	9.5	G 1/4 A	17

For dimension l_1 see „technical data“ table

Order details

1. Model
2. Range
3. Stem length l_1
4. Options

PDF wurde mit FinePrint pdfFactory Pro-Prüfversion erstellt. www.context-gmbh.de

Technical data: thermometers with fixed thread connection for thermowells to DIN 16 179

Models	T256	T257	T258	T259	T276	T277	T278	T279	T268	T269	Options
Symbol	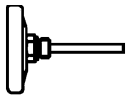				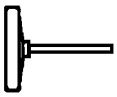						
Nominal size	63	80	100	160	63	80	100	160	100	160	
Accuracy	Class 1 (DIN 16 203)										
Ranges and Resolutions	-30 . . . 50 °C -20 . . . 60 °C 0 . . . 60 °C 0 . . . 80 °C 0 . . . 100 °C 0 . . . 120 °C 0 . . . 160 °C 0 . . . 200 °C 0 . . . 250 °C			0.5 °C 1 °C 2 °C	-30 . . . 50 °C -20 . . . 60 °C 0 . . . 60 °C 0 . . . 80 °C 0 . . . 100 °C 0 . . . 120 °C 0 . . . 160 °C 0 . . . 200 °C 0 . . . 250 °C 0 . . . 300 °C 0 . . . 400 °C 0 . . . 500 °C			0.5 °C 1 °C 2 °C 5 °C			Scale °F Dual scale °C / °F other Ranges
Overtemperature limits	Constant load: Measuring range (DIN 16 203) short-time (≤ 1h): 1.1 measuring range (DIN 16 203)										
Max. pressure	max. 25 bar (at stem)										
Measuring element	bimetal coil										
Case / Bezel	Material SS 1.4301										
Connection	back				back with 30 mm extension				bottom		Union nut G 1/2, G 3/4
	Stem, Ø 8 mm, with fixed thread G 1/2 A										
Stem length	l_1: 45, 63, 100, 160, 200, 250 mm **Attention!** l_1: = 45 mm only for back versions For suitable thermowells acc to DIN 16 179, see DD 10 60										l_1: 89, 126, 226, 276 mm
Stem material	SS 1.4571										
Window	Glass lens										
Dial	Aluminium matted, with fine grading, scale and imprint black										
Pointer	Aluminium black, adjustable pointer										Marker pointer; drag pointer
Protection	IP 43 (EN 60 529 / IEC 529)										
Weight (kg)	0.10	0.12	0.15	0.30	0.30	0.38			0.75		

Dimensions (mm)

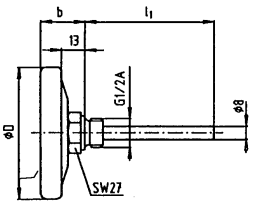

Models: T256, T257, T258, T259

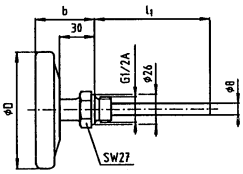

Models: T276, T277, T278, T279

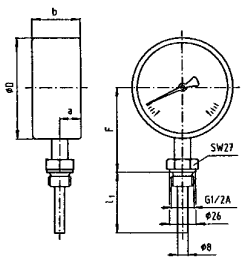

Models: T268, T269

Models	Dimensions (mm)	
	D (ND)	b
T256	63	29
T257	80	30
T258	100	35
T259	160	39

Models	Dimensions (mm)	
	D (ND)	b
T276	63	46
T277	80	47
T278	100	52
T279	160	57

Models	Dimensions (mm)			
	D (ND)	a	b	F
T268	100	17	44	83
T269	160	19	46	113

For dimension l_1 see „technical data" table

Order details

1. Model
2. Range
3. Stem length l_1
4. Options

Modifications reserved

tecsis GmbH
An der Sandelmühle 13
D-60439 Frankfurt / Main
T. +49 (0) 69 / 58 06-0
Sales Inland
F. +49 (0) 69 / 58 06-1 70
Export Sales
F. +49 (0) 69 / 58 06-1 77
E.info@tecsis.de
I. www.tecsis.de

PDF wurde mit FinePrint pdfFactory Pro-Prüfversion erstellt. www.context-gmbh.de

SEW-EURODRIVE
Driving the world

SEW-EURODRIVE GmbH & Co KG
P.O. Box 3023
D-76642 Bruchsal/Germany
Phone +49 7251 75-0
Fax +49 7251 75-1970
sew@sew-eurodrive.com

→ **www.sew-eurodrive.com**