SEW EURODRIVE

Catalog

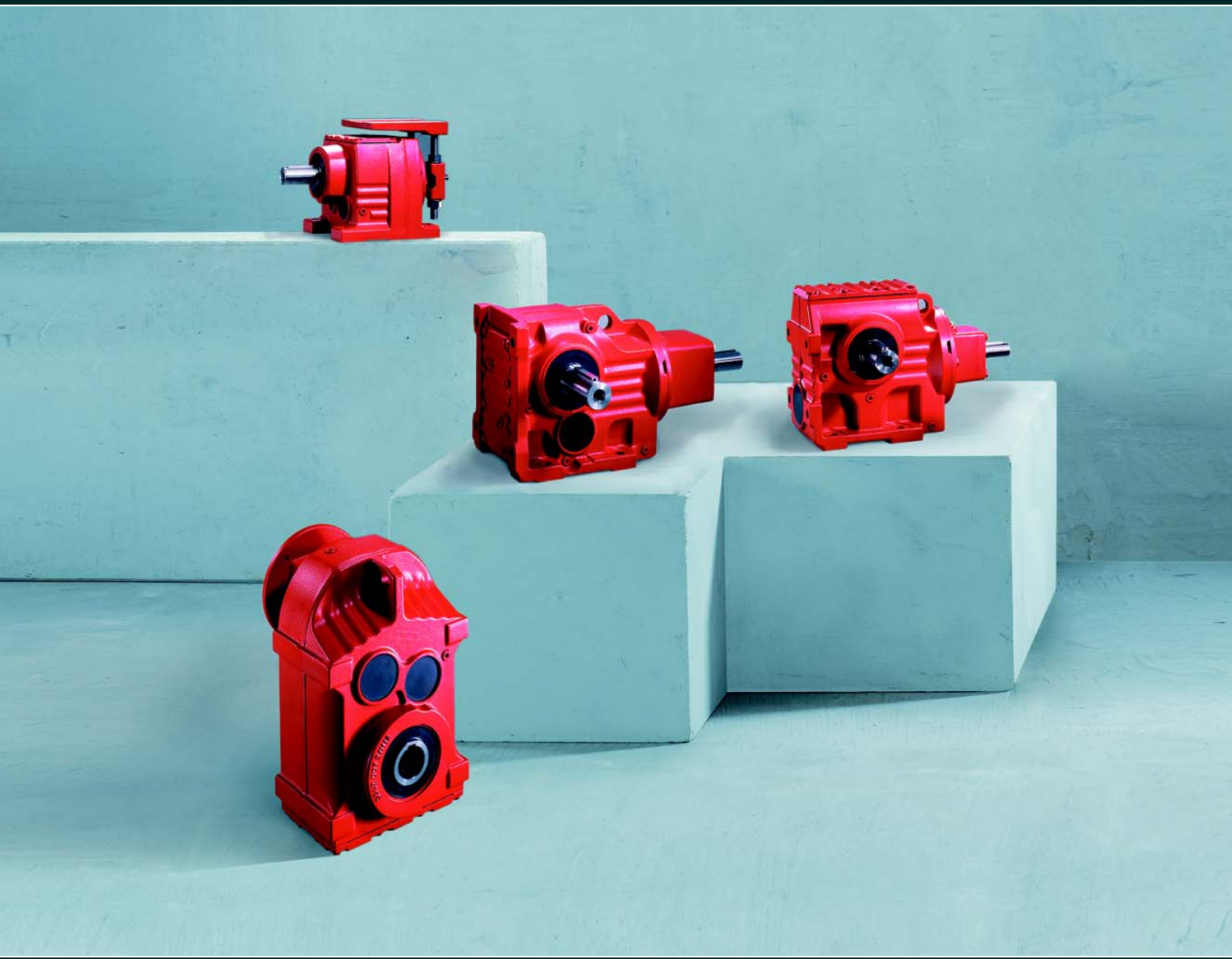

Gear Units

Edition 06/2010

16997611 / EN








KKFU 144794 3
42G1

Contents



1 Introduction 7



2 Product Description of the Gear Units 12



3 Overview of Types and Type Designation 25



4 Project Planning Information 42



5 Mounting Position of Gear Units 71



6 Design and Operating Notes 98



7 Important Notes on Selection Tables and Dimension Sheets 125

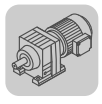

8 Helical Gear Units 133



9 Parallel Shaft Helical Gear Units 224

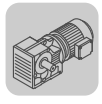

10 Helical-Bevel Gear Units 322



11 Helical-Worm Gear Units 420

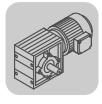

12 SPIROPLAN® Gear Units 513



13 Abbreviation Key 532



14 Address Directory 533

1 Introduction 7
1.1 The SEW-EURODRIVE Group of Companies 7
1.2 Products and systems from SEW-EURODRIVE 8
1.3 Additional documentation 10
1.4 Copyright 11

2 Product Description of the Gear Units 12
2.1 General information 12
2.2 Surface protection 14
2.3 Extended storage 16
2.4 Explosion protection according to ATEX 18
2.5 Components on the input side 19

3 Overview of Types and Type Designation 25
3.1 Product variants and options 25
3.2 Type designation 39
3.3 Gear unit nameplate 40
3.4 Overview of gear units 41

4 Project Planning Information 42
4.1 Drive and gear unit selection data 42
4.2 Project planning procedure 44
4.3 Project planning information 45
4.4 Project planning for components on the input side 54
4.5 RM gear units 67
4.6 Additional documentation 70

5 Mounting Positions 71
5.1 General information on the mounting positions 71
5.2 Order information for gear units 72
5.3 Key to the mounting position sheets 74
5.4 Mounting positions of helical gear units 76
5.5 Mounting positions of parallel shaft helical gear units 81
5.6 Mounting positions of helical-bevel gearmotors 84
5.7 Mounting positions of helical-worm gear units 89
5.8 Mounting positions of SPIROPLAN® gear units" 95

6 Design and Operating Notes 98
6.1 Lubricants and fill quantities 98
6.2 Reduced backlash gear unit types 106
6.3 Installation/removal of gear units with hollow shaft and key 107
6.4 Gear units with hollow shaft 112
6.5 TorqLOC® hollow shaft mounting system for gear units with hollow shaft. 113
6.6 Fastening the gear unit 115
6.7 Torque arms 115
6.8 Flange contours of RF.. and R..F gear units 116
6.9 Flange contours of FF.., KF.., SF.. and WF.. gear units 117
6.10 Flange contours of FAF.., KAF.., SAF.. and WAF.. gear units 118
6.11 Fixed covers 119
6.12 Condition monitoring: Oil aging and vibration sensor 121

7 Important Information on Selection Tables and Dimension Sheets 125
7.1 Information on selection tables 125
7.2 Notes on the dimension sheets 127
7.3 Gear unit (gearmotor) dimensions 130

8 Helical Gear Units R.. 133
8.1 Selection tables for adapters for mounting IEC/NEMA motors (AM) 133
8.2 Selection tables for adapters with hydraulic centrifugal coupling (AT) 149
8.3 Selection tables for input shaft assembly (AD) 158
8.4 Dimension sheets for adapters for mounting IEC motors (AM) 167
8.5 Dimension sheets for adapters for mounting NEMA motors (AM) 210
8.6 Dimension sheets for adapters with torque limiting coupling (AR) 212
8.7 Dimension sheets for adapters with hydraulic centrifugal coupling (AT) 214
8.8 Dimension sheets for adapters with hyraulic centrifugal coupling and disk brake (AT../BMG) 217
8.9 Dimension sheets for input shaft assembly (AD) 220
8.10 Dimension sheets for input shaft assembly with motor mounting platform 221

9 Parallel Shaft Helical Gear Units F 224
9.1 Selection tables for adapters for mounting IEC/NEMA motors (AM) 224
9.2 Selection tables for adapters with hydraulic centrifugal coupling (AT) 237
9.3 Selection tables for input shaft assembly (AD) 246
9.4 Dimension sheets for adapters for mounting IEC motors (AM) 255
9.5 Dimension sheets for adapters for mounting NEMA motors (AM) 309
9.6 Dimension sheets for adapters with torque limiting coupling (AR) 310
9.7 Dimension sheets for adapters with hydraulic centrifugal coupling (AT) 312
9.8 Dimension sheets for adapters with hyraulic centrifugal coupling and disk brake (AT../BMG) 315
9.9 Dimension sheets for input shaft assembly (AD) 318
9.10 Dimension sheets for input shaft assembly with motor mounting platform 319

10 Helical-Bevel Gear Units K.. 322
10.1 Selection tables for adapters for mounting IEC/NEMA motors (AM) 322
10.2 Selection tables for adapters with hydraulic centrifugal coupling (AT) 336
10.3 Selection tables for input shaft assembly (AD) 345
10.4 Dimension sheets for adapters for mounting IEC motors (AM) 353
10.5 Dimension sheets for adapters for mounting NEMA motors (AM) 407
10.6 Dimension sheets for adapters with torque limiting coupling (AR) 409
10.7 Dimension sheets for adapters with hydraulic centrifugal coupling (AT) 411
10.8 Dimension sheets for adapters with hyraulic centrifugal coupling and disk brake (AT../BMG) 414
10.9 Dimension sheets for input shaft assembly (AD) 417
10.10 Dimension sheets for input shaft assembly with motor mounting platform 418

11 Helical-Worm Gear Units S.. 420
11.1 Selection tables for adapters for mounting IEC/NEMA motors (AM) 420
11.2 Selection tables for adapters with hydraulic centrifugal coupling (AT) 429
11.3 Selection tables for input shaft assembly (AD) 436
11.4 Dimension sheets for adapters for mounting IEC motors (AM) 443
11.5 Dimension sheets for adapters for mounting NEMA motors (AM) 477
11.6 Dimension sheets for adapters with torque limiting coupling (AR) 478
11.7 Dimension sheets for adapters with hydraulic centrifugal coupling (AT) 479
11.8 Dimension sheets for adapters with hyraulic centrifugal coupling and disk brake (AT../BMG) 481

11.9 Dimension sheets for input shaft assembly (AD) 483
11.10 Dimension sheets for input shaft assembly with motor mounting platform 484
11.11 Technical data for S, SF, SA, SAF 37 485
11.12 Technical data for S, SF, SA, SAF 47 489
11.13 Technical data for S, SF, SA, SAF 57 493
11.14 Technical data for S, SF, SA, SAF 67 497
11.15 Technical data for S, SF, SA, SAF 77 501
11.16 Technical data for S, SF, SA, SAF 87 505
11.17 Technical data for S, SF, SA, SAF 97 509

12 SPRIOPLAN® W Gear Units 513
12.1 Selection tables for adapters for mounting IEC/NEMA motors (AM) 513
12.2 Selection tables for input shaft assembly (AD)] 517
12.3 Dimension sheets for adapters for mounting IEC motors (AM) 520
12.4 Dimension sheets for adapters for mounting NEMA motors (AM) 529
12.5 Dimension sheets for adapters with torque limiting coupling (AR) 530
12.6 Dimension sheets for input shaft assembly (AD) 531

13 Abbreviation Key 532

14 Address Directory 533

15 Index 553

1 Introduction

1.1 The SEW-EURODRIVE Group of Companies

Global presence

Driving the world with innovative drive solutions for all branches and every application. Products and systems from SEW-EURODRIVE are used in a multitude of applications worldwide. Be it in the automotive, building materials, food and beverage or metal-processing industry the decision to use drive technology "made by SEW-EURODRIVE" stands for reliability for both functionality and investment.

We are represented in the most important branches of industry all over the world: with 13 manufacturing plants, 67 assembly plants in 47 countries and our comprehensive range of services, which we consider an integrative service that continues our commitment to outstanding quality.

Always the right drive

The SEW-EURODRIVE modular concept offers millions of combinations. This wide selection enables you to choose the correct drive for all applications, each based on the required speed and torque range, space available and the ambient conditions. Gear units and gearmotors offering a unique and finely tuned performance range and the best economic prerequisites to face your drive challenges.

The gearmotors are powered by MOVITRAC® frequency inverters, MOVIDRIVE® inverters and MOVIAXIS® multi-axis servo inverters, a combination that blends perfectly with the existing SEW-EURODRIVE program. As in the case for mechanical systems, the development, production and assembly is also carried out completely by SEW-EURODRIVE. In combination with our drive electronics, these drives provide the utmost in flexibility.

Products of the servo drive system, such as low backlash servo gear units, compact servomotors or MOVIAXIS® multi-axis servo inverters provide precision and dynamics. From single-axis or multi-axis applications all the way to synchronized process sequences, servo drive systems by SEW-EURODRIVE offer a flexible and customized implementation of your application.

For economical, decentralized installations, SEW-EURODRIVE offers components from its decentralized drive system, such as MOVIMOT®, the gearmotor with integrated frequency inverter or MOVI-SWITCH®, the gearmotor with integrated switching and protection function. SEW-EURODRIVE hybrid cables have been designed specifically to ensure cost-effective solutions, independent of the philosophy behind or the size of the system. The latest developments from SEW-EURODRIVE: MOVITRANS® – system components for contactless energy transfer, MOVIPRO® – the decentralized drive control and MOVIFIT® – the new decentralized intelligence.

Power, quality and sturdy design combined in one standard product: With high torque levels, industrial gear units from SEW-EURODRIVE realize major movements. The modular concept will once again provide optimum adaptation of industrial gear units to meet a wide range of different applications.

Your ideal partner

Its global presence, extensive product range and broad spectrum of services make SEW-EURODRIVE the ideal partner for the machinery and plant construction industry when it comes to providing drive systems for demanding applications in all branches of industries and applications.

1.2 Products and systems from SEW-EURODRIVE

The products and systems from SEW-EURODRIVE are divided into the following 4 product groups:

1. Gearmotors and frequency inverters
2. Servo drive systems
3. Decentralized drive systems
4. Industrial gear units

Products and systems used in several group applications are listed in a separate group "Products and systems covering several product groups". Consult the following tables to locate the products and systems included in the respective product group:

1. Gearmotors and frequency inverters		
Gear units/gearmotors	**Motors**	**Frequency inverters**
• Helical gear units/helical gearmotors • Parallel-shaft helical gear units/parallel-shaft helical gearmotors • Helical-bevel gear units/helical-bevel gear-motors • Helical-worm gear units/helical-worm gear-motors • SPIROPLAN® right-angle gearmotors • EMS drives • Geared torque motors • Pole-changing gearmotors • Variable speed gear units/variable speed gear-motors • Aseptic gearmotors • Gear units/gearmotors to ATEX standard • Variable speed gear units/variable speed gear-motors to ATEX standard	• Asynchronous AC motors/ AC brakemotors • Pole-changing AC motors/ AC brakemotors • Energy-efficient motors • Explosion-proof AC motors/AC brakemotors • Torque motors • Single-phase motors/single-phase brakemotors • Asynchronous linear motors	• MOVITRAC® frequency inverters • MOVIDRIVE® inverters • Control, technology and communication options for inverters

2. Servo drive systems		
Servo gear units/servo gear-motors	**Servomotors**	**Servo drive inverters/servo inverters**
• Low backlash planetary servo gear units/planetary gear-motors • Low backlash helical-bevel servo gear units/helical-bevel gearmotors • R, F, K, S, W gear units/gear-motors • Explosion-proof servo gear units/servo gearmotors	• Asynchronous servo-motors/servo brakemotors • Synchronous servo-motors/servo brakemotors • Explosion-proof servo-motors/servo brakemotors • Synchronous linear motors	• MOVIDRIVE® servo inverters • MOVIAXIS® multi-axis servo inverters • Control, technology and communication options for servo drive inverters and servo inverters

3. Decentralized drive systems		
Decentralized drives	**Communication and installation**	**Contactless energy transfer**
• MOVIMOT® gearmotors with integrated frequency inverter • MOVIMOT® motors/brake-motors with integrated frequency inverter • MOVI-SWITCH® gearmotors with integrated switching and protection function • MOVI-SWITCH® motors/brakemotors with integrated switching and protection function • Explosion-proof MOVIMOT® and MOVI-SWITCH® gear-motors	• Fieldbus interfaces • Field distributors for decentralized installation • MOVIFIT® product range – MOVIFIT® MC for controlling MOVIMOT® drives – MOVIFIT® SC with integrated electronic motor switch – MOVIFIT® FC with integrated frequency inverter	• MOVITRANS® system – Stationary components for energy supply – Mobile components for energy consumption – Line cables and installation material

4. Industrial gear units
• Helical gear units • Bevel-helical gear units • Planetary gear units

Products and systems covering several product groups
• Operator terminals • MOVI-PLC® drive-based control system

In addition to products and systems, SEW-EURODRIVE offers a comprehensive range of services. These include:

- Technical consulting
- Application software
- Seminars and training
- Extensive technical documentation
- International customer service

Visit our homepage at

→ **www.sew-eurodrive.com**

The website provides comprehensive information and services.

1.3 Additional documentation

Content of this publication

This "Gear Units" catalog provides a detailed description of the following product groups from SEW-EURODRIVE:

- R.., F.., K.., S.., and SPIROPLAN® W gear units in combination with
  - AM adapter
  - AT adapter
  - AD input shaft assembly
  - AR Torque limiting coupling

The descriptions include:

- Product descriptions
- Overview of types
- Project planning information
- Description of mounting positions
- Explanation on the order information
- Combination overviews and technical data
- Dimension sheets

For information on options for the motors, refer to the catalogs/price catalogs "DT/DV Gearmotors" and "AC Motors".

For information on R.., F.., K.., S.. and SPIROPLAN® W gear units in combination with the AQ adapter for servomotors, refer to the "Servo Gear Units" catalog/price catalog.

Additional documentation

The following price catalogs and catalogs are available from SEW-EURODRIVE in addition to this "Gear Units" catalog:

- Servo gear units
- Synchronous servo gearmotors
- Asynchronous servo gearmotors
- DR gearmotors
- AC motors

These price catalogs and catalogs offer the following information:

- Product descriptions
- Technical data and inverter assignments
- Important information about tables and dimension sheets
- Description of the different types
- Selection tables
- Dimension sheets
- Technical data
- Notes on adapter mounting

1.4 Copyright

© 2010 - SEW-EURODRIVE. All rights reserved.

Copyright law prohibits the unauthorized duplication, modification, distribution, and use of this document, in whole or in part.

2 Product Description of the Gear Units

2.1 General information

Ambient temperature

Gear units and gearmotors from SEW-EURODRIVE can be operated in a wide ambient temperature range. The following standard temperature ranges are permitted for filling the gear units according to the lubricant table:

Gear unit	Filled with	Permitted standard temperature range
R, F, and K	CLP(CC) VG220	-10 °C ... +40 °C
S	CLP(CC) VG680	0 °C ... +40 °C
W	CLP(SEW-PG) VG460	-10 °C ... +40 °C

The rated data of the gear units and gearmotors specified in the catalog/price catalog refer to an ambient temperature of +25 °C.

Gear units and gearmotors from SEW-EURODRIVE can be operated outside the standard temperature range if project planning is adapted to ambient temperatures from as low as up to -40 °C in the intensive cooling range until up to +60 °C. Project planning must take special operating conditions into account and adapt the drive to the ambient conditions by selecting suitable lubricants and seals. This kind of project planning is generally recommended for increased ambient temperatures as of size 97 and for helical-worm gear units with small gear ratios. SEW-EURODRIVE will gladly perform this project planning for you.

If the drive is to be operated on a frequency inverter, you must also consider the project planning notes for the inverter and take into account the thermal effects of inverter operation.

Installation altitude

Due to the low air density at high installation altitudes, heat dissipation on the surface of motors and gear units decreases. The rated data listed in the catalog/price catalog applies to an installation altitude of maximum 1000 m above sea level. Installation altitudes of more than 1000 m asl must be taken into account for project planning of gear units and gearmotors.

Power and torque

The power and torque ratings listed in the catalogs refer to mounting position M1 and similar mounting positions in which the input stage is not completely submerged in oil. In addition, the gearmotors are assumed to be standard versions with standard lubrication and under normal ambient conditions.

Noise

The noise levels of all SEW-EURODRIVE gear units, motors and gearmotors are well within the maximum permitted noise levels set forth in the VDI guideline 2159 for gear units and IEC/EN 60034 for motors.

Paint

Gear units from SEW-EURODRIVE are painted as follows:

Gear unit	Paint according to standard 1843
R, F, K, S, W gear units	blue/gray RAL 7031

Special paints are available on request.

Air admission and accessibility

The gearmotors/brakemotors must be mounted on the driven machine in such a way that both axially and radially there is enough space left for unimpeded air admission, for maintenance work on the brake and, if required, for the MOVIMOT® inverter. Please also refer to the notes in the motor dimension sheets.

Multi-stage gearmotors

You can achieve particularly low output speeds by using multi-stage gear units or multi-stage gearmotors. Such a setup requires a helical gear unit or gearmotor on the input end as a second gear unit.

It may be necessary to limit the motor power to match the maximum permitted output torque of the gear unit.

Reduced backlash design

Helical, parallel shaft helical and helical-bevel gear units with reduced backlash are available from gear unit size 37. The circumferential backlash of these gear units is considerably less than that of the standard versions so that positioning tasks can be solved with great precision. The circumferential backlash is specified in angular minutes ['] in the technical data. The circumferential backlash for the output shaft is specified without load (max. 1% of the rated output torque); the gear unit input end is blocked. For further information, refer to chapter "Reduced backlash gear units" on page 106.

RM gear units, RM gearmotors

RM gear units and RM gearmotors are a special type of helical gear units with an extended output bearing hub. They were designed especially for agitating applications and allow for high overhung and axial loads and bending moments. The other data are the same as for standard helical gear units and standard helical gearmotors. You can find special project planning notes for RM gearmotors in the "Project Planning/RM gear units" chapter.

SPIROPLAN® right-angle gear units

SPIROPLAN® right-angle gearmotors are robust, single- and two-stage right-angle gearmotors with SPIROPLAN® gearing. The difference to the helical-worm gear units is the material combination of the steel-on-steel gearing, the special tooth meshing relationships, and the aluminum housing. These features make SPIROPLAN® right-angle gearmotors very quiet, wear-free and lightweight.

The particularly short design and the aluminum housing make for very compact and lightweight drive solutions.

The wear-free gearing and the life-long lubrication allow for long periods of maintenance-free operation. The identical hole spacing in the foot and face as well as the same axle height to both makes for a number of mounting options.

Two different flange diameters are available. On request, SPIROPLAN® right-angle gearmotors can be equipped with a torque arm.

Components on the input side

The following components on the input side are available for the gear units from SEW-EURODRIVE:

- **Input covers with input shaft extension, optionally with**
  - Centering shoulder
  - Backstop
  - Motor mounting platform
- **Adapter**
  - For mounting IEC or NEMA motors with the option of a backstop
  - For mounting servomotors with a square flange
  - With torque limiting safety couplings and speed or slip monitor
  - With hydraulic centrifugal coupling, also with disk brake or backstop

Weights

Please note that all weights shown in the catalogs exclude the oil fill for the gear units and gearmotors. The weights vary according to gear unit type and gear unit size. The lubricant fill depends on the mounting position which means no universally applicable information can be given. Please refer to "Lubricants" in the "Design and Operating Notes" chapter for recommended lubricant fill quantities depending on the mounting position. For the exact weight, refer to the order confirmation.

2.2 Surface protection

General information

SEW-EURODRIVE offers the following optional protective measure for operating gear units under special environmental conditions.

- Surface protection OS for motors and gear units

Special optional protective measures for the output shafts are also available.

OS surface protection

Instead of the standard surface protection, the motors and gear units are available with surface protection OS1 to OS4 as an option. The special procedure "Z" is also available. Special procedure "Z" means that large surface recesses are sprayed with a rubber filling prior to painting.

Surface protection[1)]		Ambient conditions	Sample applications
Standard		Suitable for machines and systems in buildings and rooms indoors with neutral atmospheres. According to corrosivity category [2)]: • C1 (negligible)	• Machines and systems in the automobile industry • Transport systems in logistics • Conveyor belts at airports
OS1		Suited for environments prone to condensation and atmospheres with low humidity or contamination, such as applications outdoors under roof or with protection. According to corrosivity category [2)]: • C2 (low)	• Systems in saw mills • Hall gates • Agitators and mixers
OS2		Suitable for environments with high humidity or mean atmospheric contamination, such as applications outdoors subject to direct weathering. According to corrosivity category [2)]: • C3 (moderate)	• Applications in amusement parks • Funiculars and chair-lifts • Applications in gravel plants • Systems in nuclear power plants
OS3		Suited for environments with high humidity and occasionally severe atmospheric and chemical contamination. Occasionally acidic or caustic wet cleaning. Also for applications in coastal areas with moderate salt load. According to corrosivity category [2)]: • C4 (high)	• Sewage treatment plants • Port cranes • Mining applications
OS4	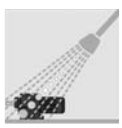	Suitable for environments with permanent humidity or severe atmospheric or chemical contamination. Regular acidic and caustic wet cleaning also with chemical cleaning agents. According to corrosivity category [2)]: • C5-1 (very high)	• Drives in malting plants • Wet areas in the beverage industry • Conveyor belts in the food industry

1) Motors/brakemotors in degree of protection IP56 or IP66 are only available with OS2, OS3, or OS4 surface protection

2) To DIN EN ISO 12944-2 classification of ambient conditions

Special protective measures

Gearmotor output shafts can be treated with special optional protective measures for operation subject to severe environmental pollution or in particularly demanding applications.

Measure	Protection principle	Suitable for
FKM oil seal (Viton)	High quality material	Drives subject to chemical contamination
Coating on output shaft end	Surface coating of the contact surface of the oil seal	Severe environmental impact and in conjunction with FKM oil seal (Viton)
Stainless steel output shaft	Surface protection with high-quality material	Particularly demanding applications in terms of surface protection

NOCO® fluid

As standard, SEW-EURODRIVE supplies NOCO® fluid corrosion protection and lubricant with every hollow shaft gear unit. Use NOCO® fluid when installing hollow shaft gear units. Using this fluid can help prevent contact corrosion and makes it easier to disassemble the drive at a later time. NOCO® fluid is also suitable for protecting machined metal surfaces that do not have corrosion protection, such as parts of shaft ends or flanges. You can order larger quantities of NOCO® fluid from SEW-EURODRIVE.

NOCO® fluid is a food grade substance according to NSF-H1. You can tell that NOCO® fluid is a food grade oil by the NSF-H1 identification label on its packaging.

2.3 Extended storage

Type

You can also order gear units prepared for "extended storage." SEW-EURODRIVE recommends the "extended storage" type for storage periods longer than 9 months.

In this case, a VCI corrosion inhibitor (**v**olatile **c**orrosion **i**nhibitor) is added to the lubricant in these gear units. Please note that this VCI corrosion inhibitor is only effective in a temperature range between -25 °C and +50 °C. The flange contact surfaces and shaft ends are also treated with an anti-corrosion agent. If not specified otherwise in your order, the gear unit with "extended storage" option will be supplied with OS1 surface protection. You can order OS2, OS3 or OS4 instead of OS1.

Surface protection	Suitable for
OS1	Low environmental impact
OS2	Medium environmental impact
OS3	High environmental impact
OS4	Very high environmental impact

INFORMATION

The gear units must remain tightly sealed until taken into operation to prevent the VCI corrosion protection agent from evaporating.

At the factory, the gear units are filled with oil to the appropriate level depending on the specified mounting position (M1 to M6). Check the oil level before you start operating the gear unit for the first time.

Storage conditions

Observe the storage conditions specified in the following table for extended storage:

Climate zone	Packaging[1)]	Storage location[2)]	Storage duration
Temperate (Europe, USA, Canada, China and Russia, excluding tropical zones)	Packed in containers, with desiccant and moisture indicator sealed in the plastic wrap.	Under roof, protected against rain and snow, no shock loads.	Up to 3 years with regular checks of the packaging and moisture indicator (rel. humidity < 50%).
	Open	With roof, enclosed at constant temperature and atmospheric humidity (5 °C < ϑ < 60 °C, 50% relative atmospheric humidity). No sudden temperature fluctuations. Controlled ventilation with filter (free from dust and dirt). Protected against aggressive vapors and shocks.	2 years or more with regular inspections. Check for cleanliness and mechanical damage during inspection. Check corrosion protection.
Tropical (Asia, Africa, Central and South America, Australia, New Zealand excluding temperate zones)	Packed in containers, with desiccant and moisture indicator sealed in the plastic wrap. Protected against insect damage and mildew by chemical treatment.	With roof, protected against rain and shocks.	Up to 3 years with regular checks of the packaging and moisture indicator (rel. humidity < 50%).
	Open	With roof, enclosed at constant temperature and atmospheric humidity (5 °C < ϑ < 50 °C, 50% relative atmospheric humidity). No sudden temperature fluctuations. Controlled ventilation with filter (free from dust and dirt). Protected against aggressive vapors and shocks. Protected against insect damage.	2 years or more with regular inspections. Check for cleanliness and mechanical damage during inspection. Check corrosion protection.

1) Packaging must be carried out by an experienced company using the packaging materials that have been explicitly specified for the particular application.

2) SEW-EURODRIVE recommends to store the gear units according to the mounting position.

2.4 Explosion protection according to ATEX

Validity

EU directive 94/9/EC or ATEX lays down new regulations for explosion protection in all types of devices for the European market. This directive applies to gearmotors and motors as well. Since July 1, 2003, EU directive 94/9/EC has been applicable without restrictions to the use of gearmotors and motors within the European Union. Other European countries, such as Switzerland, have fallen in with this regulation since.

Extent

SEW-EURODRIVE now only supplies explosion-proof gear units in accordance with the corresponding ATEX directive. This also applies to options and accessories in explosion-proof design.

Depending on their features and dimensions, explosion-proof gear units are suitable for:

- Potentially explosive gas atmosphere, zone 1 or 2.
- Potentially explosive dust atmosphere, zone 21 or 22.

SEW-EURODRIVE supplies gearmotors and motors in the following categories for use in zones 1, 21, 2, and 22:

- II2G
- II2D
- II3GD
- II3D

Stand-alone gear units with components on the input side are available in the following categories:

- Gear units with AM adapter and input shaft assembly for use in zones 1, 21, 2 and 22
  - II2GD
- Gear units with AR adapter for use in zones 2 and 22
  - II3GD

AT adapters and drives on a motor swing are not available according to ATEX regulation.

Other documentation

The "Explosion-Proof Drives to EU Directive 94/9/EC" system description and the volume of the same name in the "Drive Engineering - Practical Implementation" series provide you with basic information about this topic.

Please refer to the "Explosion-Proof Drives" catalog and the "Variable Speed Gearmotors" catalog for detailed information on explosion-proof products of SEW-EURODRIVE.

2.5 Components on the input side

2.5.1 Gear units with IEC or NEMA adapter AM

The following figure shows a helical gear unit with AM adapter:



04588AXX

AM adapters are used for mounting motors according to IEC standard or NEMA (type C or TC) to SEW helical gear units, parallel shaft helical gear units, helical-bevel, helical-worm, and SPIROPLAN® gear units.

Adapters are available for sizes 63 to 280 for IEC motors. Adapters are available for sizes 56 to 365 for NEMA motors.

The designation of the adapter size corresponds to the respective IEC or NEMA motor size.

Torque is transmitted between the motor and the gear unit via a positive and impact resistant dog clutch. Vibrations and shocks occurring during operation are effectively attenuated by an inserted polyurethane ring gear.

For more information, refer to chapter "Project planning for components on the input side" / "Gear units with IEC or NEMA adapter AM", page 54.

2.5.2 AR adapter with torque limiting coupling

The following figure shows a helical-bevel gear unit with AR adapter:



04604AXX

The torque is transmitted non-positive via friction linings. The slip torque of the coupling can be adjusted with a setting nut and cup springs. Different slip torques are possible depending on the thickness and arrangement of the cup springs. In the event of an overload, the coupling slips and interrupts the power flow between motor and gear unit. This prevents damages to the system and drive.

For more information, refer to chapter "Project planning for components on the input side" / "AR adapter with torque limiting coupling", page 56.

2.5.3 AT adapter with hydraulic centrifugal coupling

The following figure shows a parallel shaft gear unit with AT adapter:



04607AXX

Helical, parallel shaft helical, helical-bevel, helical-worm, and SPIROPLAN® gear units can be combined with adapters and hydraulic centrifugal couplings for machines with high inertia starting (e.g. mixers, agitators, etc.). The hydraulic centrifugal coupling protects the motor and the driven machine against overload during the startup phase and ensures that the machine starts up smoothly. The coupling is installed in a housing to prevent anyone touching it. Cooling of the coupling is ensured by ventilation openings in the housing. It is possible to mount SEW motor sizes 71 to 180 (0.37 to 22 kW)[1)].

Preferred speeds are 1400 rpm and 2800 rpm, i.e. 4 or 2-pole attached motors. Note that the noise level increases when using the 2-pole drive combination.

For more information, refer to chapter "Project planning for components on the input side" / "AT adapter with hydraulic centrifugal coupling", page 60.

1) Helical-bevel gear units with a hydraulic centrifugal coupling on a swing base are available for motors of size 200 to 280 (30 to 90 kW).

Disk brake AT../BM(G) option

The following figure shows a parallel shaft gear unit with AT adapter and disk brake BM(G):



04611AXX

The adapter with hydraulic centrifugal coupling can be configured with an SEW disk brake if the machine is to be braked in a defined manner. The brake is an electromagnetic disk brake with a DC coil which is released electrically and braked using spring force. As a result, the brake satisfies the safety requirement of braking in the event of a power failure. The braking torque can be varied by means of the type and number of brake springs used. The brake can be supplied with DC or AC voltage connection; the equipment needed for controlling the brake and the connection terminals are accommodated in a terminal box attached to the adapter. The brake can additionally be equipped with manual brake release on request.

For more information, refer to chapter "Project planning for components on the input side" / "AT adapter with hydraulic centrifugal coupling", page 60.

2.5.4 Adapter with hydraulic centrifugal coupling on a swing base

SEW-EURODRIVE provides helical-bevel gear units with hydraulic centrifugal coupling (and brake if requested) on a swing base for motors from size 200. The relevant dimension sheets are available on request.

The following figure shows a helical-bevel gear unit on a swing base:

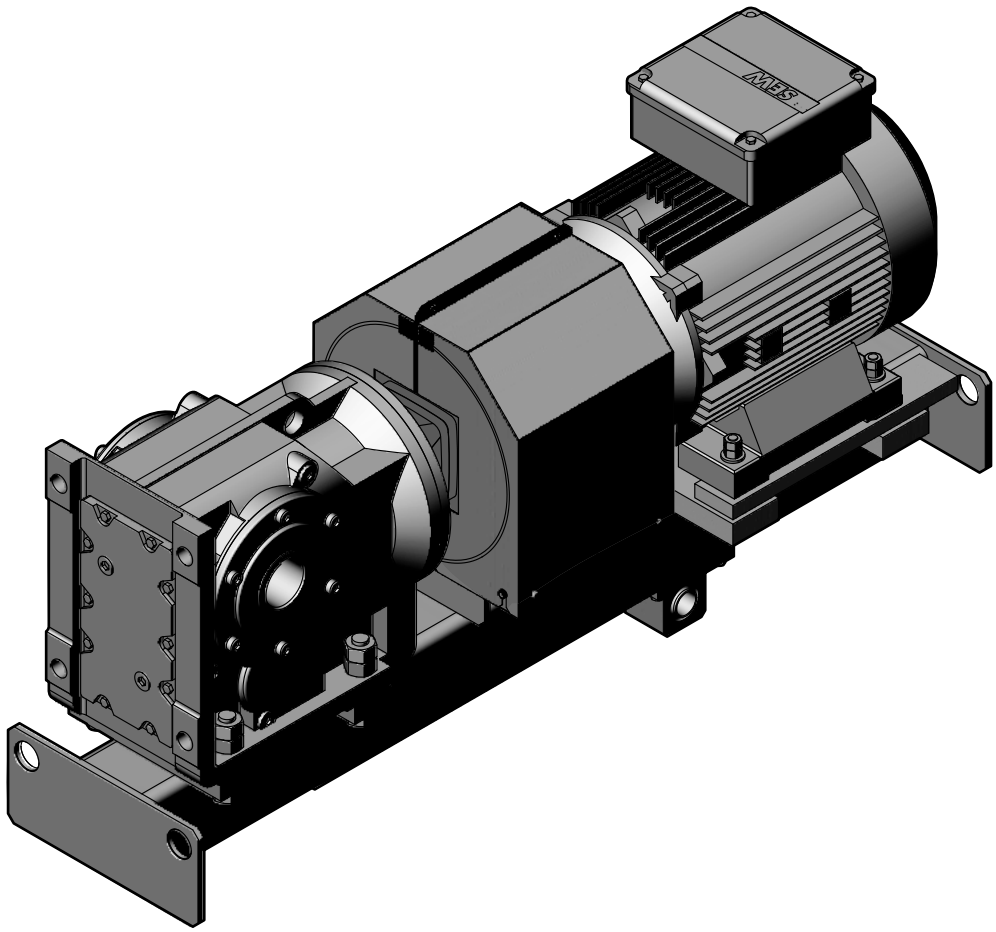

68152axx

2.5.5 AD input shaft assembly

The following figure shows a helical gear unit with AD input shaft assembly:



04583AXX

Helical, parallel shaft helical, helical-bevel, helical-worm, and SPIROPLAN® gear units are equipped with an input shaft assembly for drive via an exposed shaft extension. The dimensions of the drive shafts are given in metric units according to IEC standard (dimensions in inch on request). The end of the input shaft has a center bore to standard 332 for mounting and attaching drive components.

The bearings of the input shaft are grease-lubricated. NBR oil seals and gap rings are used for sealing the cover. The solid output shaft bearings allows for high overhung loads.

For more information, refer to chapter "Project planning for components on the input side" / "AD input shaft assembly", page 63.

Motor mounting platform AD.. /P

Belt drives are available with adjustable motor mounting platform for space-saving installation. The motor mounting platform is arranged parallel to the drive shaft and has tapped holes for IEC standard motors (also available without tapped holes on request). The distance from the input shaft can be adjusted using threaded columns. The following figure depicts a helical gear unit with input shaft assembly and motor mounting platform AD../P:



53585AXX

3 Overview of Types and Type Designation

3.1 Product variants and options

Below an overview of type designations for R, F, K, S, and W gear units and their options.

Helical gear units

Designation	
RX..	Single-stage foot-mounted type
RXF..	Single-stage B5 flange-mounted type
R..	Foot-mounted
R..F	Foot and B5-flange mounted type
RF..	B5 flange-mounted
RZ..	B14 flange-mounted
RM..	B5 flange-mounted type with extended bearing hub

Parallel shaft helical gear units

Designation	
F..	Foot-mounted
FA..B	Foot-mounted, hollow shaft
FH..B	Foot-mounted, hollow shaft with shrink disk
FV..B	Foot-mounted, hollow shaft with splined hollow shaft to standard 5480
FF..	B5 flange-mounted
FAF..	B5 flange-mounted type and hollow shaft
FHF..	B5 flange-mounted type and hollow shaft with shrink disk
FVF..	B5 flange-mounted type and hollow shaft with splined hollow shaft to standard 5480
FA..	Hollow shaft
FH..	Hollow shaft with shrink disk
FT..	Hollow shaft with TorqLOC® hollow shaft mounting system
FV..	Hollow shaft with splining to standard 5480
FAZ..	B14 flange-mounted type and hollow shaft
FHZ..	B14 flange-mounted type and hollow shaft with shrink disk
FVZ..	B14 flange-mounted type and hollow shaft with splined hollow shaft to standard 5480

Helical-bevel gear units

Designation	
K..	Foot-mounted
KA..B	Foot-mounted, hollow shaft
KH..B	Foot-mounted, hollow shaft with shrink disk
KV..B	Foot-mounted, hollow shaft with splined hollow shaft to standard 5480
KF..	B5 flange-mounted
KAF..	B5 flange-mounted type and hollow shaft
KHF..	B5 flange-mounted type and hollow shaft with shrink disk
KVF..	B5 flange-mounted type and hollow shaft with splined hollow shaft to standard 5480
KA..	Hollow shaft
KH..	Hollow shaft with shrink disk
KT..	Hollow shaft with TorqLOC® hollow shaft mounting system
KV..	Hollow shaft with splining to standard 5480
KAZ..	B14 flange-mounted type and hollow shaft
KHZ..	B14 flange-mounted type and hollow shaft with shrink disk
KVZ..	B14 flange-mounted type and hollow shaft with splined hollow shaft to standard 5480

Helical-worm gear units

Designation	
S..	Foot-mounted
SF..	B5 flange-mounted
SAF..	B5 flange-mounted type and hollow shaft
SHF..	B5 flange-mounted type and hollow shaft with shrink disk
SA..	Hollow shaft
SH..	Hollow shaft with shrink disk
ST..	Hollow shaft with TorqLOC® hollow shaft mounting system
SAZ..	B14 flange-mounted type and hollow shaft
SHZ..	B14 flange-mounted type and hollow shaft with shrink disk

SPIROPLAN® gear units

Designation	
W..	Foot-mounted
WF..	Flange-mounted type
WAF..	Flange-mounted type and hollow shaft
WA..	Hollow shaft
WA..B	Foot-mounted, hollow shaft
WH..B	Foot-mounted, hollow shaft with shrink disk
WHF..	Flange-mounted, hollow shaft with shrink disk
WH..	Hollow shaft with shrink disk
WT..	Hollow shaft with TorqLOC® hollow shaft mounting system

Gear unit options

R, F and K gear units:

Designation	
/R	Reduced backlash

K, S and W gear units:

Designation	
/T	With torque arm

F gear units:

Designation	
/G	With rubber buffer

Condition monitoring

Designation	Option
/DUO	Diagnostic Unit Oil = Oil aging sensor
/DUV	Diagnostic Unit Vibration = Vibration sensor

Adapters

Designation	Option
AM..	Adapter for mounting IEC/NEMA motors
AR..	Adapter with torque limiting coupling
AT..	Adapter with hydraulic centrifugal coupling

Adapter options

Designation	Option
AM../RS	Adapters for mounting IEC/NEMA motors with backstop
AR../W	Adapter with torque limiting coupling and speed monitoring
AR../WS	Adapter with torque limiting coupling and slip monitoring
AT../RS	Adapter with hydraulic centrifugal coupling and backstop
AT../BM(G)	Adapter with hydraulic centrifugal coupling and disk brake
AT../BM(G)/HF	Adapter with hydraulic centrifugal coupling and disk brake with lock-type manual brake release
AT../BM(G)/HR	Adapter with hydraulic centrifugal coupling and disk brake with self-reengaging manual brake release

Input shaft assembly

Designation	Option
AD..	Input shaft assembly

Options for input shaft assembly

Designation	Option
AD../P	Input shaft assembly with motor mounting platform
AD../RS	Input shaft assembly with backstop
AD../ZR	Input shaft assembly with centering shoulder

Components on the input side

The following figure shows an overview of the components on the input side:

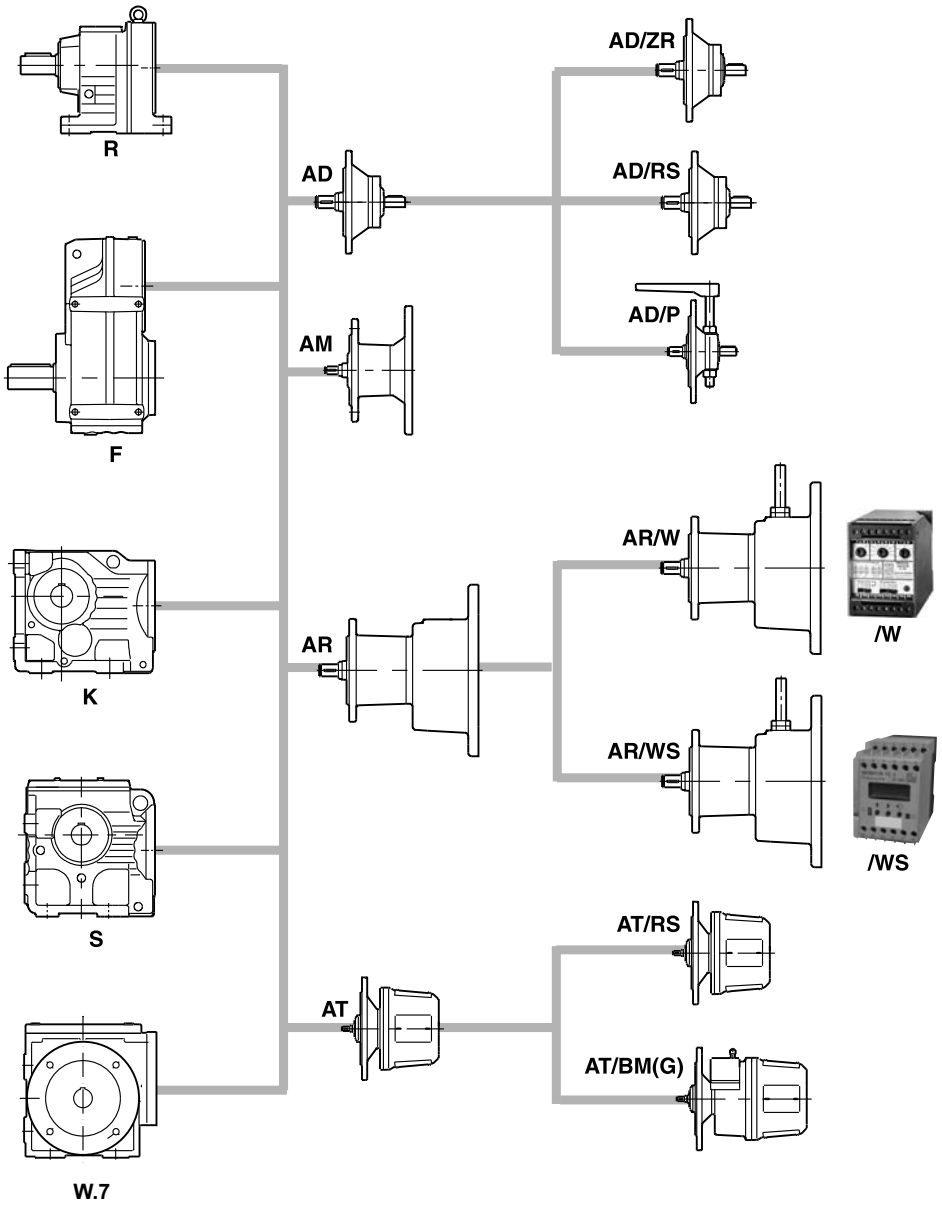

AD	Input shaft assembly	AR/WS[1)]	Adapter with torque limiting coupling and slip monitoring
AD/ZR	Input shaft assembly with centering shoulder	/W	Speed monitor
AD/RS	Input shaft assembly with backstop	/WS	Slip monitor
AD/P	Input shaft assembly with motor mounting platform	AT	Adapter with hydraulic centrifugal coupling
AM	Adapter for mounting IEC/NEMA motors	AT/RS	Adapter with hydraulic centrifugal coupling and backstop
AR	Adapter with torque limiting coupling	AT/BM(G)	Adapter with hydraulic centrifugal coupling and disk brake
AR/W	Adapter with torque limiting coupling and speed monitoring		

1) Only in connection with VARIBLOC® variable speed gear units

Helical gear units

The following types of helical gear units are available:

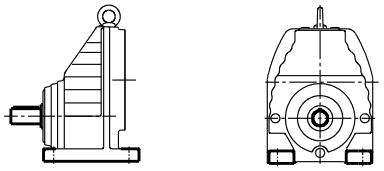

RX..
Foot-mounted single stage helical gear unit

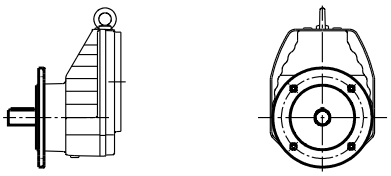

RXF..
B5 flange-mounted single-stage helical gear unit

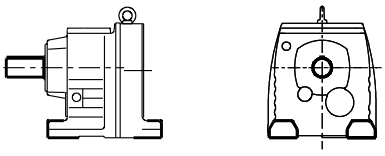

R..
Foot-mounted helical gear unit

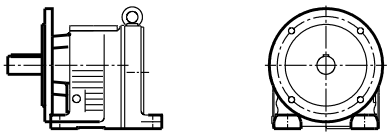

R..F
Foot and B5-flange mounted helical gear unit

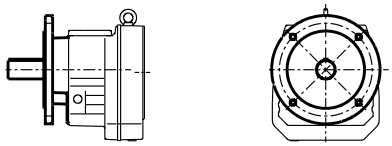

RF..
B5 flange-mounted helical gear unit

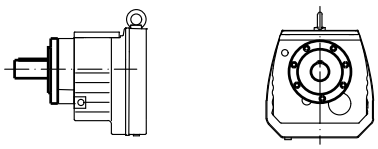

RZ..
B14 flange-mounted helical gear unit

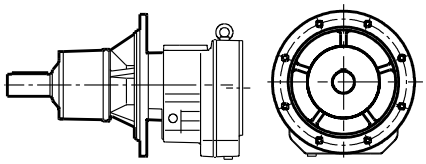

RM..
B5 flange-mounted type with extended bearing hub

63665axx

Parallel shaft helical gear units

The following types of parallel shaft helical gear units are available:

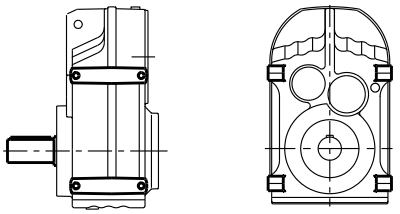

F..
Foot-mounted parallel shaft helical gear unit

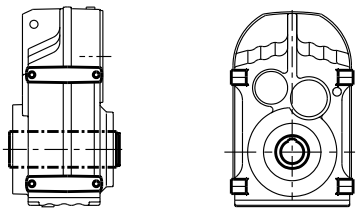

FA..B
Foot-mounted parallel shaft helical gear unit with hollow shaft

FV..B
Foot-mounted parallel shaft gear unit with hollow shaft and splining according to standard 5480

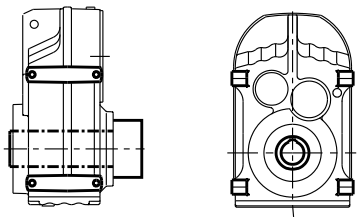

FH..B
Foot-mounted parallel shaft helical gear unit with hollow shaft and shrink disk

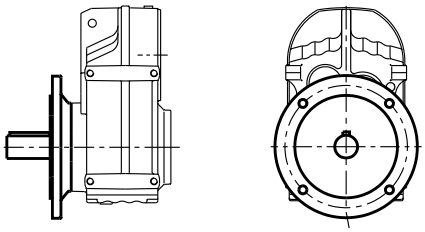

FF..
B5 flange-mounted parallel shaft helical gear unit

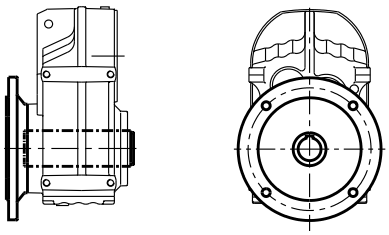

FAF..
B5 flange-mounted parallel shaft helical gear unit with hollow shaft

FVF..
B5 flange-mounted parallel shaft gear unit with hollow shaft and splining according to standard 5480

52182axx

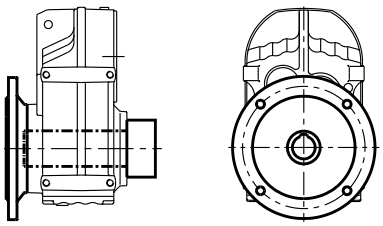

FHF..
B5 flange-mounted parallel shaft helical gear unit with hollow shaft and shrink disk

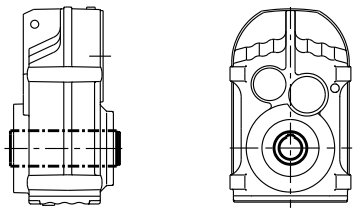

FA..
Parallel shaft helical gear unit with hollow shaft

FV..
Parallel shaft helical gear unit with hollow shaft and splining according to standard 5480

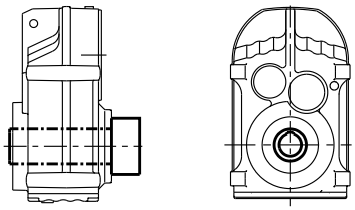

FH..
Parallel shaft helical gear unit with hollow shaft and shrink disk

FT..
Parallel shaft helical gear unit with hollow shaft and TorqLOC® hollow shaft mounting system

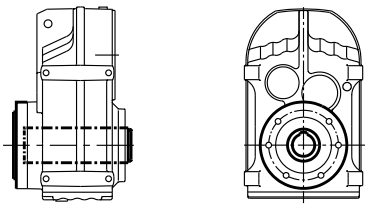

FAZ..
B14 flange-mounted parallel shaft helical gear unit with hollow shaft

FVZ..
B14 flange-mounted parallel shaft gear unit with hollow shaft and splining according to standard 5480

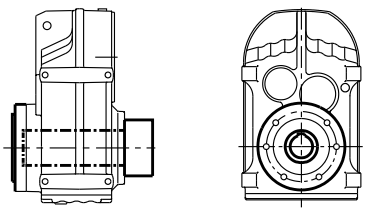

FHZ..
B14 flange-mounted parallel shaft helical gear unit with hollow shaft and shrink disk

52184axx

Helical-bevel gear units

The following types of helical-bevel gear units are available:

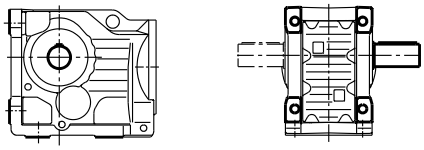

K..
Foot-mounted helical-bevel gear unit

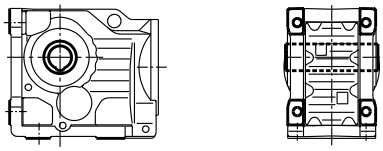

KA..B
Foot-mounted helical-bevel gear unit with hollow shaft

KV..B
Foot-mounted helical-bevel gear unit with hollow shaft and splining according to standard 5480

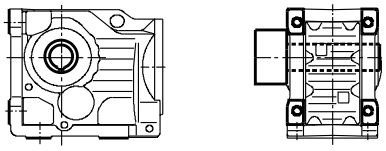

KH..B
Foot-mounted helical-bevel gear unit with hollow shaft and shrink disk

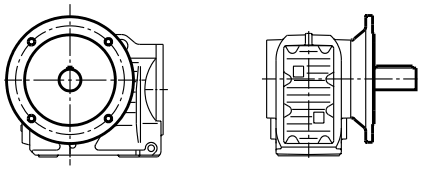

KF..
B5 flange-mounted helical-bevel gear unit

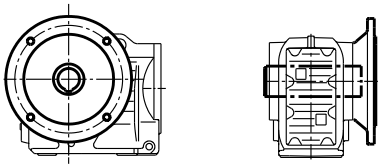

KAF..
B5 flange-mounted helical-bevel gear unit with hollow shaft

KVF..
B5 flange-mounted helical-bevel gear unit with hollow shaft and splining according to standard 5480

52186axx

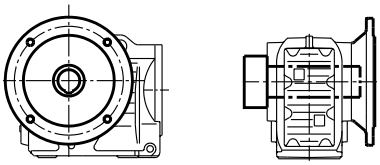

KHF..
B5 flange-mounted helical-bevel gear unit with hollow shaft and shrink disk

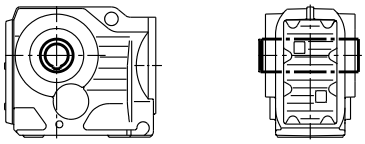

KA..
Helical-bevel gear unit with hollow shaft

KV..
Helical-bevel gear unit with hollow shaft and splining according to standard 5480

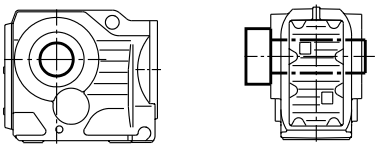

KH..
Helical-bevel gear unit with hollow shaft and shrink disk

KT..
Helical-bevel gearmotor with hollow shaft and TorqLOC® hollow shaft mounting system

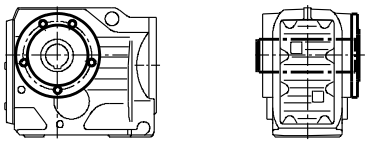

KAZ..
B14 flange-mounted helical-bevel gear unit with hollow shaft

KVZ..
B14 flange-mounted helical-bevel gear unit with hollow shaft and splining according to standard 5480

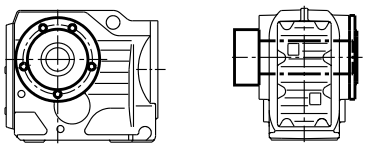

KHZ..
B14 flange-mounted helical-bevel gear unit with hollow shaft and shrink disk

52187axx

Helical-worm gear units

The following types of helical-worm gear units are available:

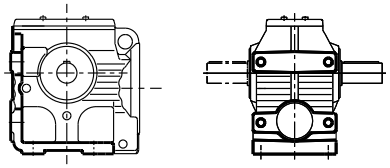

S..
Foot-mounted helical-worm gear unit

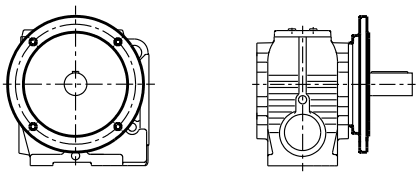

SF..
B5 flange-mounted helical-worm gear unit

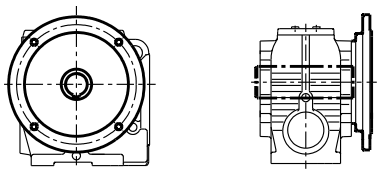

SAF..
B5 flange-mounted helical-worm gear unit with hollow shaft

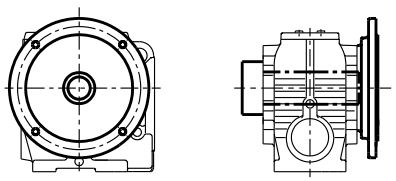

SHF..
B5 flange-mounted helical-worm gear unit with hollow shaft and shrink disk

52188axx

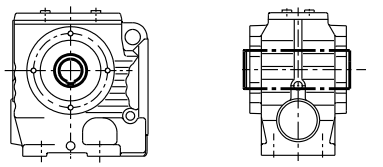

SA..
Helical-worm gear unit with hollow shaft

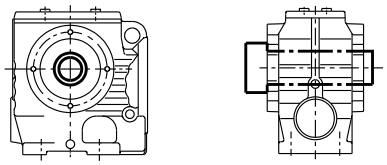

SH..
Helical-worm gear unit with hollow shaft and shrink disk

ST..
Helical-worm gear unit with hollow shaft and TorqLOC® hollow shaft mounting system

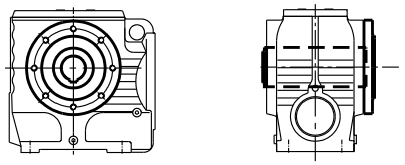

SAZ..
B14 flange-mounted helical-worm gear unit with hollow shaft

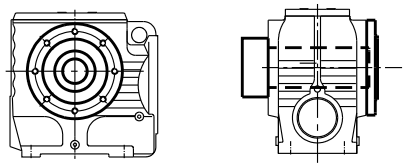

SHZ..
B14 flange-mounted helical-worm gear unit with hollow shaft and shrink disk

52189axx

SPIROPLAN® gear units

The following types of SPIROPLAN® gear units are available:

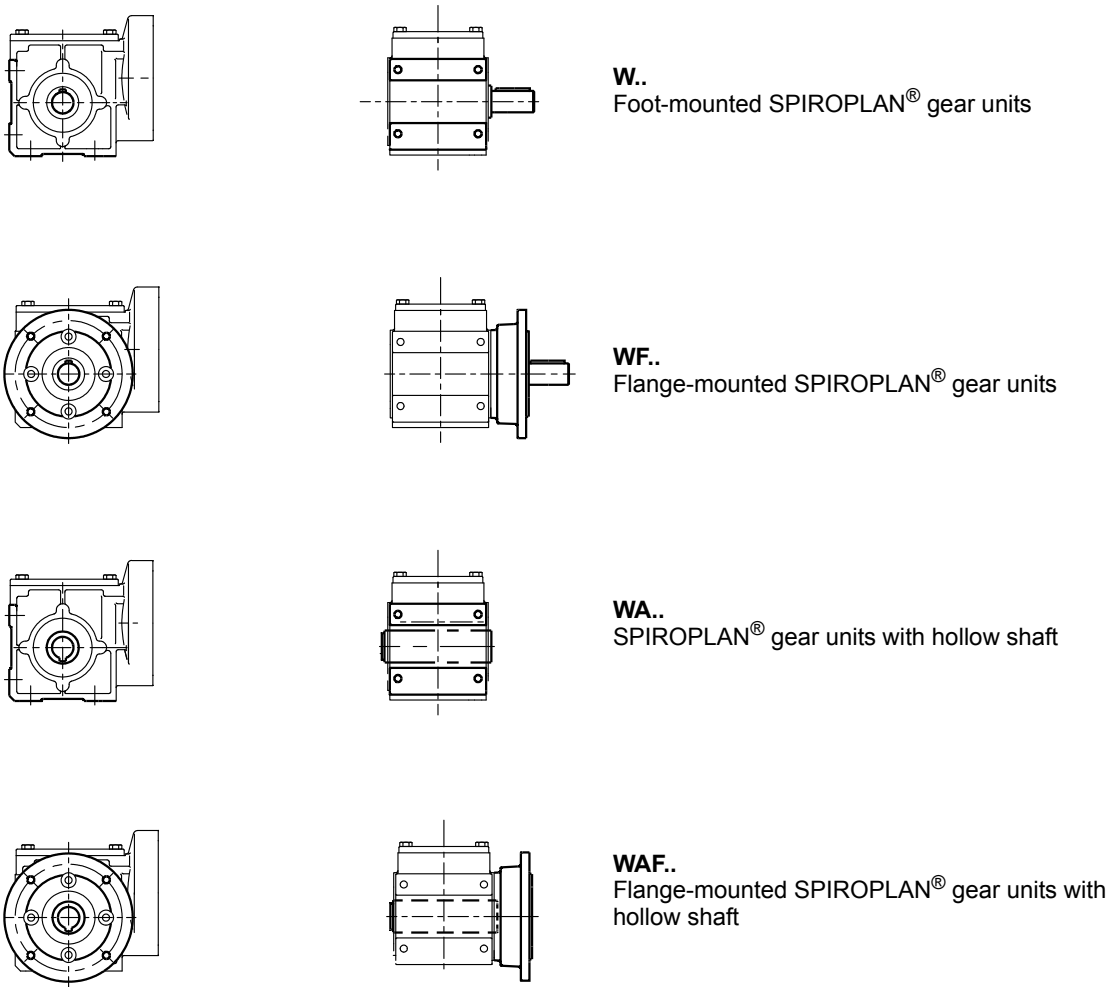

W..
Foot-mounted SPIROPLAN® gear units

WF..
Flange-mounted SPIROPLAN® gear units

WA..
SPIROPLAN® gear units with hollow shaft

WAF..
Flange-mounted SPIROPLAN® gear units with hollow shaft

63666axx

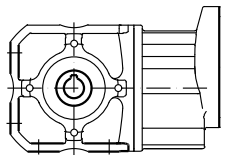

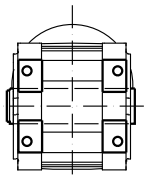

WA..B
Foot-mounted SPIROPLAN® gear units with hollow shaft

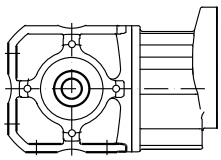

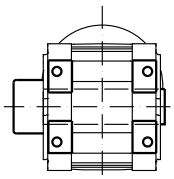

WH..B
Foot-mounted SPIROPLAN® gear units with hollow shaft and shrink disk

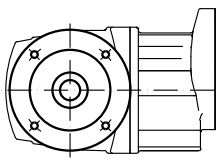

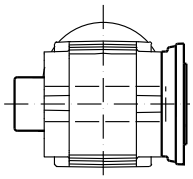

WHF..
Flange-mounted SPIROPLAN® gear units with hollow shaft and shrink disk

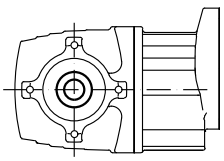

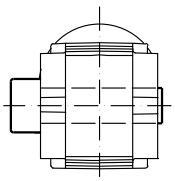

WH..
SPIROPLAN® gear units with hollow shaft and shrink disk

WT..
SPIROPLAN® gear unit with hollow shaft and TorqLOC®

63667axx

3.2 Type designation

Examples:

The type designation of the gear unit starts from the component on the output end. For example, a helical-bevel multi-stage gear unit with hydraulic centrifugal coupling has the following type designation:

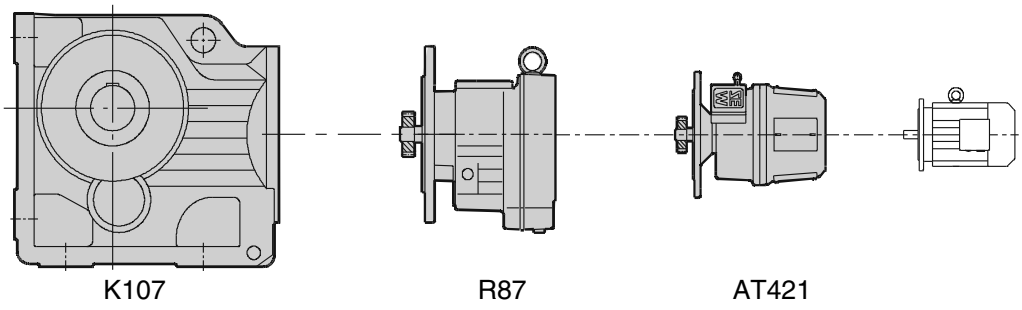

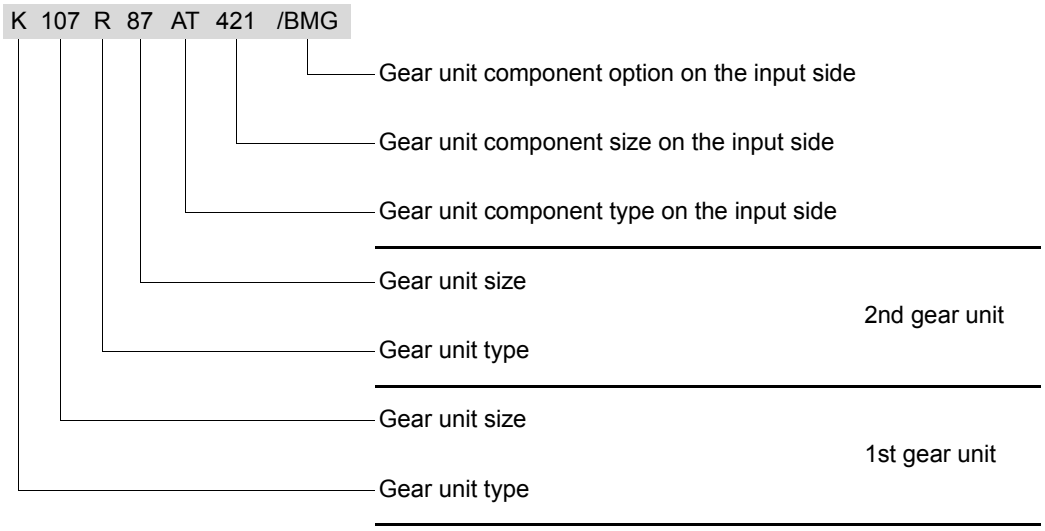

3.3 Gear unit nameplate

Example: Nameplate for helical gear units

The following figure shows an example of a nameplate for a helical gear unit with AR.. adapter:

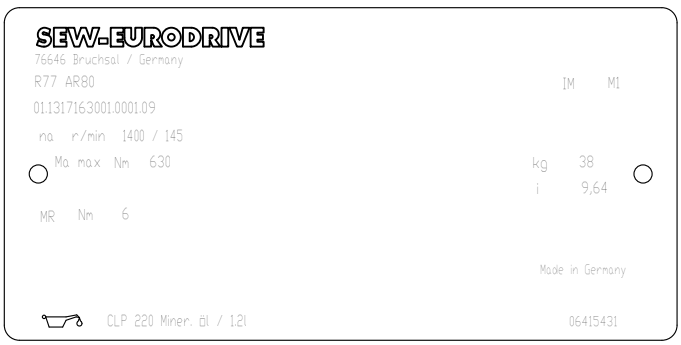

n_a	[r/min]	Maximum permitted output speed
M_{amax}	[Nm]	Maximum permitted output torque
M_R	[Nm]	Slip torque (applies only to AR.. adapters)
IM		Mounting position
i		Gear unit reduction ratio

3.4 Overview of gear units

Axially parallel gear units

Gear unit type For details, refer to		RX.. page 133	R.. page 137	F.. page 224
Technical data				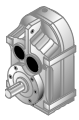
Max. continuous torque	M_{amax} [Nm]	36-830	31-4300	87-7840
Gear ratio range	i	1.3-8.23	3.21-216.28	3.77-276.77
Option with reduced backlash	/R	x	x	x
Mechanical data				
Hollow shaft		-	-	x
Flange-mounting		x	x	x
Foot-mounting		x	x	-
B5 flange		x	x	x
B14 flange		-	x	x

Right-angle gear units

Gear unit type For details, refer to		K.. page 322	S.. page 420	W.7 page 513
Technical data				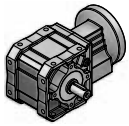
Max. continuous torque	M_{amax} [Nm]	125-8000	43-480	70-180
Gear ratio range	i	3.98-176.05	6.8-75.06	3.2- 74.98
Option with reduced backlash	/R	x	-	-
Mechanical data				
Hollow shaft		x	x	x
Flange-mounting		x	x	x
Foot-mounting		x	x	x
B5 flange		x	x	x
B14 flange		x	x	-

For information on all available options and variants, refer to page 25 and subsequent pages.

4 Project Planning Information

Project planning has to be carried out for all gear units. The data specified in this catalog only applies if project planning was carried out correctly. Project planning is particularly important for gear units with increased ambient temperatures as of size 97 and for helical-worm gear units with small gear ratios.

SEW-EURODRIVE will gladly perform this project planning for you.

4.1 Drive and gear unit selection data

Certain data of the application have to be provided to being able to precisely define the components for your drive. The abbreviations used for project planning are summarized in the following table:

Designation	Meaning	Unit
n_{amin}	Minimum output speed	[rpm]
n_{amax}	Maximum output speed	[rpm]
P_a at n_{amin}	Output power at minimum output speed	[kW]
P_a at n_{amax}	Output power at maximum output speed	[kW]
M_a at n_{amin}	Output torque at minimum output speed	[Nm]
M_a at n_{amax}	Output torque at maximum output speed	[Nm]
F_{RA}	Overhung load on gear unit output	[N]
F_{Aa}	Axial load on gear unit output	[N]
n_e	Input speed	[rpm]
P_m at n_e	Input power = motor power	[Nm]
M_e at n_e	Input torque	[Nm]
$M_{e\ max}$	Maximum input torque	[Nm]
F_{Re}	Overhung load on gear unit input	[N]
F_{Ae}	Axial load on gear unit input	[N]
J_{Last}	Mass moment of inertia to be driven	[10^{-4} kgm^2]
R, F, K, S, W M1 - M6	Required gear unit type and mounting position (see chapter Mounting positions, churning losses)	-
IP..	Required degree of protection	-
ϑ_{Umg}	Ambient temperature	[°C]
H	Installation altitude	[m above sea level]
S.., ..% cdf	Duty type and cyclic duration factor (cdf) or exact load cycle can be entered.	-
Z	Starting frequency; alternatively, exact load cycle can be specified	[1/h]
U_{Bremse}	Operating voltage of the brake (AT with brake)	[V]
M_B	Required braking torque (AT with brake)	[Nm]
M_R	Slip torque (AR)	[Nm]
Type of the motors	... Electric motor ... Internal combustion engine ... Hydraulic motor	-

Determining the application data

It is necessary to have data on the machine to be driven (mass, speed, setting range, etc.) to project the drive correctly.

These data help determine the required power, torque and speed. Refer to the SEW publication "Drive Engineering Practical Implementation / Drive Planning" or the SEW project planning tool SEW Workbench for assistance.

Selecting the correct drive

The appropriate drive can be selected once the power and speed of the drive have been calculated and with regard to mechanical requirements.

Required motor data

As the dimensions of servomotors are not standardized, the following motor data must be known to select the appropriate adapter:

- Shaft diameter and length
- Flange dimensions (edge length, diameter, centering shoulder and hole circle)
- Maximum torque

SEW-EURODRIVE will gladly assist you in selection and project planning.

4.2 Project planning procedure

The following flowchart presents a schematic view of the procedure for planning a project incorporating a gear unit with a component on the input side.

Necessary information regarding the machine to be driven
- Technical data and environmental conditions
- Positioning accuracy
- Travel cycle calculation

↓

Calculation of the relevant application data
- Static, dynamic, and regenerative power
- Speeds
- Torques
- Travel diagram

↓

Gear unit selection
- Define gear unit size, gear unit reduction ratio and gear unit type
- Check the positioning accuracy
- Check the gear unit utilization ($M_{o\,max} \geq M_{o\,(t)}$)

↓

Selecting components on the input side
- Specify component type and version
- Define component size
- Check the component load

↓

Options
- Monitoring functions (devices, equipment)
- Brake for AT
- Backstop
- Centering shoulder
- Motor mounting platform

↓

Make sure that all requirements have been met.

For thermal project planning of R, F, K, S, W gear units, please contact SEW-EURODRIVE.

4.3 Project planning information

4.3.1 Efficiency of gear units

General information

The efficiency of gear units is mainly determined by the gearing and bearing friction. Keep in mind that the starting efficiency of a gear unit is always less than its efficiency at operating speed. This factor is particularly true for helical-worm and SPIROPLAN® right-angle gear units.

R, F, K gear units

The efficiency of helical, parallel shaft and helical-bevel gear units varies with the number of gear stages, between 96% (3-stage), 97% (2-stage) and 98% (1-stage).

S and W gear units

The gearing in helical-worm and SPIROPLAN® gear units produces a high proportion of sliding friction. As a result, these gear units have higher gearing losses than R, F or K gear units and therefore lower efficiency.

The efficiency depends on the following factors:

- Gear ratio of the helical-worm or SPIROPLAN® stage
- Input speed
- Gear unit temperature

Helical-worm gear units from SEW-EURODRIVE are helical gear/worm combinations that are significantly more efficient than plain worm gear units.

The efficiency may reach $\eta < 0.5$ if the helical-worm gear stage has a very high gear ratio.

The SPIROPLAN® gear unit W37/W47 from SEW-EURODRIVE has an efficiency of more than 90%, which drops only slightly even for large gear unit ratios.

Self-locking

Retrodriving torques on helical-worm or SPRIOPLAN® gear units produce an efficiency of $\eta' = 2 - 1/\eta$, which is significantly less favorable than the forward efficiency η. The helical-worm or SPIROPLAN® gear unit is self-locking if the forward efficiency is $\eta \leq 0.5$. Some SPIROPLAN® gear units are dynamically self-locking. Contact SEW-EURODRIVE if you wish to make technical use of the braking effect of self-locking characteristics.

	INFORMATION
	Note that the self-locking effect of helical-worm and SPIROPLAN® gear units is not permitted as the sole safety function for hoists.

Run-in phase

The tooth flanks of new helical-worm and SPIROPLAN® gear units are not yet completely smooth. This fact results in a greater friction angle and less efficiency than during later operation. This effect intensifies with increasing gear unit ratio. Subtract the following values from the listed efficiency during the running-in phase:

	Worm	
	i range	**η reduction**
1-start	approx. 50 ... 280	approx. 12 %
2-start	approx. 20 ... 75	approx. 6 %
3-start	approx. 20 ... 90	approx. 3 %
5-start	approx. 6 ... 25	approx. 3 %
6-start	approx. 7 ... 25	approx. 2 %

i range	**SPIROPLAN® W.. η reduction**
approx. 30 ... 75	approx. 8 %
approx. 10 ... 30	approx. 5 %
approx. 3 ... 10	approx. 3 %

The run-in phase usually lasts 48 hours. Helical-worm and SPIROPLAN® gear units achieve their listed rated efficiency values when the following conditions have been met:

- The gear unit has been completely run-in
- The gear unit has reached nominal operating temperature
- The recommended lubricant has been filled in
- The gear unit is operating in the rated load range

Churning losses

In certain gear unit mounting positions (see chapter "Gear Unit Mounting Positions"), the first gearing stage is completely immersed in the lubricant. When the circumferential velocity of the input stage is high, considerable churning losses occur in larger gear units that must be taken into account. Contact SEW-EURODRIVE if you wish to use gear units of this type.

To reduce churning losses to a minimum, use gear units in M1 mounting position.

4.3.2 Service factor

Determining the service factor

The effect of the driven machine on the gear unit is taken into account to a sufficient level of accuracy using the service factor f_B. The service factor is determined according to the daily operating time and the starting frequency Z. Three load classifications are taken into account depending on the mass acceleration factor. You can read the service factor applicable to your application from figure 3. The service factor determined from this diagram must be smaller than or equal to the service factor according to the selection tables.

$$M_a \bullet f_b \leq M_{a\,max}$$

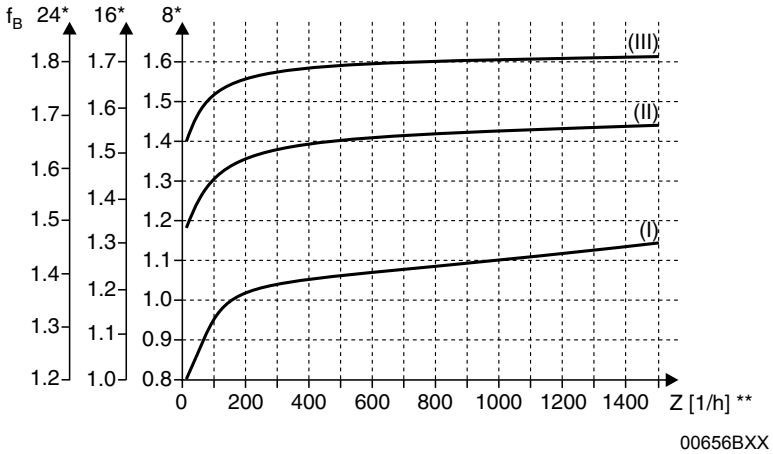

Figure 1: Service factor f_B

* Daily operating time in hours/day
** Starting frequency Z: The cycles include all starting and braking procedures as well as changeovers from low to high speed and vice versa.

Load classification

There are three load classifications:

(I) Uniform, permitted mass acceleration factor ≤ 0.2

(II) Non-uniform, permitted mass acceleration factor ≤ 3

(III) Non-uniform, permitted mass acceleration factor ≤ 10

Mass acceleration factor

The mass acceleration factor is calculated as follows:

$$\textbf{Mass acceleration factor} = \frac{\textbf{All external mass moments of inertia}}{\textbf{Mass moment of inertia on the motor end}}$$

"All external mass moments of inertia" are the mass moments of inertia of the driven machine and the gear unit, scaled down to the motor speed. The calculation for scaling down to motor speed is performed using the following formula:

$$J_X = J \bullet \left(\frac{n}{n_M}\right)^2$$

J_X = Mass moment of inertia scaled down to the motor shaft
J = Mass moment of inertia with reference to the output speed of the gear unit
n = Output speed of the gear unit
n_M = Motor speed

"Mass moment of inertia at the motor end" is the mass moment of inertia of the motor and, if installed, the brake and the flywheel fan (Z fan).

Service factors $f_B > 1.8$ can occur with large mass acceleration factors (> 10), high levels of backlash in the transmission elements or large overhung loads. Contact SEW-EURODRIVE in such cases.

Service factor: SEW f_B

The method for determining the maximum permitted continuous torque M_{amax} and using this value to derive the service factor $f_B = M_{amax} / M_a$ is not defined in a standard and varies greatly from manufacturer to manufacturer. Even at a SEW service factor of $f_B = 1$, the gear units afford an extremely high level of safety and reliability in the fatigue strength range (exception: Wearing of the worm wheel of the helical-worm gear unit). The service factor may differ from specifications of other gear unit manufacturers. If you are in doubt, contact SEW-EURODRIVE for more detailed information on your specific drive.

Example

Mass acceleration factor 2.5 (load classification II), 14 hours of daily operation (read at 16 h/d) and 300 cycle times/hour result in the service factor $f_B = 1.51$. According to the selection tables, the selected gearmotor must then have an SEW f_B value = 1.51 or greater.

Helical-worm gear units

Two further service factors have to be taken into account with helical-worm gear units in addition to the service factor f_B shown the above figure. These are:

- f_{B1} = Service factor from ambient temperature
- f_{B2} = Service factor from cyclic duration factor

The additional service factors f_{B1} and f_{B2} can be determined by referring to the diagram below. For f_{B1}, the load classification is taken into account in the same way as for f_B.

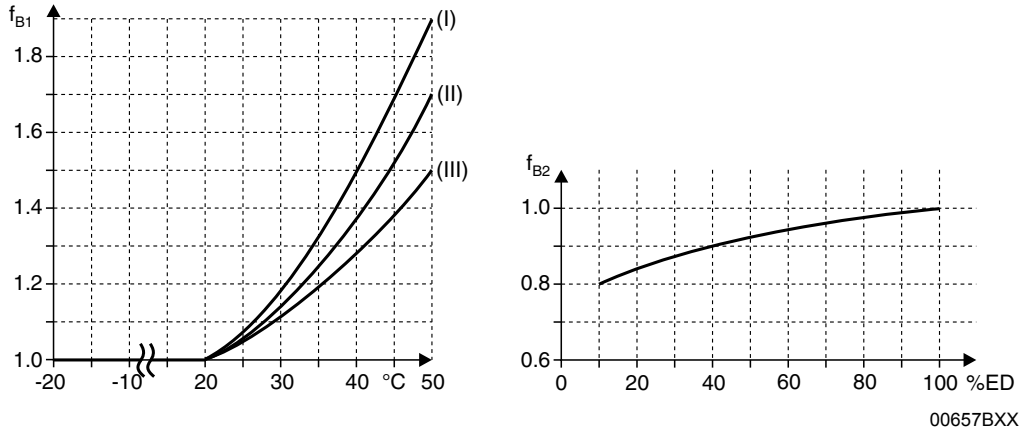

Figure 2: Additional service factors f_{B1} and f_{B2}

$$\textbf{cdf (\%)} = \frac{\textbf{Time under load in min/h}}{\textbf{60}} \bullet \textbf{100}$$

Contact SEW-EURODRIVE in case of temperatures below -20°C ($\rightarrow f_{B1}$).

The total service factor for helical-worm gear units is calculated as follows:

$$\mathbf{f_{Btotal} = f_B \bullet f_{B1} \bullet f_{B2}}$$

Example

The gearmotor with the service factor f_B = 1.51 in the previous example is to be a helical-worm gearmotor.

Ambient temperature ϑ = 40 °C $\rightarrow f_{B1}$ = 1.38 (read off at load classification II)

Time under load = 40 min/h $\rightarrow$cdf = 66.67 % $\rightarrow f_{B2}$ = 0.95

The total service factor is $f_{Btotal} = 1.51 \times 1.38 \times 0.95 = 1.98$

According to the selection tables, the selected helical-worm gearmotor must have an SEW f_B service factor of 1.98 or greater.

4.3.3 Overhung and axial loads

Determining overhung loads

An important factor for determining the resulting overhung load is the type of transmission element mounted to the shaft end. The following transmission element factors f_Z have to be considered for various transmission elements.

Transmission element	Transmission element factor f_Z	Comments
Gears	1.15	< 17 teeth
Chain sprockets	1.40	< 13 teeth
Chain sprockets	1.25	< 20 teeth
Narrow V-belt pulleys	1.75	Influence of the pre-tensioning
Flat belt pulleys	2.50	Influence of the pre-tensioning
Toothed belt pulleys	2.00 - 2.50	Influence of the pre-tensioning
Gear rack pinion, pre-tensioned	2.00	Influence of the pre-tensioning

The overhung load exerted on the motor or gear shaft is calculated as follows:

$$F_R = \frac{M_d \times 2000}{d_0} \times f_Z$$

F_R = Overhung load in N

M_d = Torque in Nm

d_0 = Mean diameter of the installed transmission element in mm

f_Z = Transmission element factor

Permitted overhung load

The basis for determining the permitted overhung loads is the calculation of the rated bearing service life L_{10h} of the rolling bearings (according to ISO 281).

For special operating conditions, the permitted overhung loads can be determined with regard to the modified service life on request.

INFORMATION

The values refer to force applied to the center of the shaft end (in right-angle gear units as viewed onto drive end). The values for the force application angle α and direction of rotation are based on the most unfavorable conditions.

INFORMATION

Reduction of overhung loads

- Only 50% of the F_{Ra} value specified in the selection tables is permitted in mounting position M1 with wall attachment on the front face for K and S gear units. Helical-bevel gearmotors K167 and K187 in mounting positions M1 to M4: A maximum of 50% of the overhung load F_{Ra} specified in the selection tables in the case of gear unit mounting other than as shown in the mounting position sheets. Foot and flange-mounted helical gearmotors (R..F): A maximum of 50% of the overhung load F_{Ra} specified in the selection tables in the case of torque transmission via the flange mounting.

Higher permitted overhung loads

Exactly considering the force application angle α and the direction of rotation makes it possible to achieve a higher overhung load. Higher output shaft loads are permitted if heavy duty bearings are installed, especially with R, F and K gear units. Contact SEW-EURODRIVE in such cases.

Definition of force application

The force application is defined according to the following figure:

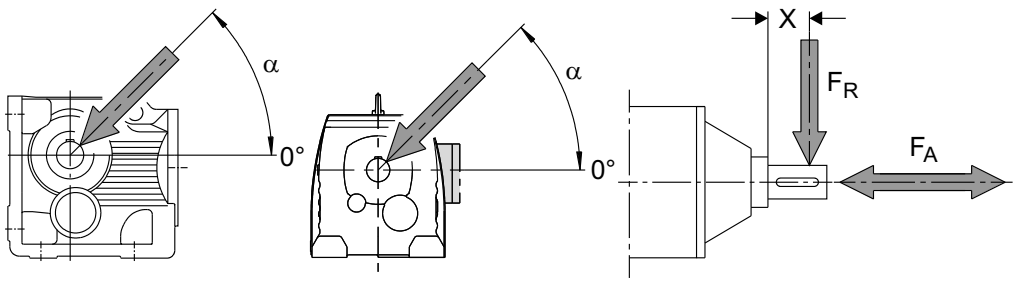

63214axx

F_X = Permitted overhung load at point x [N]

F_A = Permitted axial load [N]

Permitted axial forces

If there is no overhung load, then an axial force FA (tension or compression) amounting to 50% of the overhung load given in the selection tables is permitted. This condition applies to the following gearmotors:

- Helical gearmotors except for R..137... to R..167...
- Parallel shaft and helical-bevel gearmotors with solid shaft except for F97...
- Helical-worm gearmotors with solid shaft

	INFORMATION
	Contact SEW-EURODRIVE for all other types of gear units and in the event of significantly greater axial loads or combinations of overhung load and axial load.

Overhung load conversion for off-center force application

Important: only applies to gear units with input shaft assembly:

Please contact SEW-EURODRIVE for off-center force application on the drive end.

On the output side: Overhung load conversion for off-center force application

The permitted overhung loads must be calculated according the selection tables using the following formulae in the event that force is not applied at the center of the shaft end. The smaller of the two values F_{xL} (according to bearing life) and F_{xW} (according to shaft strength) is the permitted value for the overhung load at point x. Note that the calculations apply to $M_{a\ max}$.

F_{xL} based on bearing life:

$$F_{xL} = F_{Ramax} \bullet \frac{a}{b + x}\ [N]$$

F_{xW} from the shaft strength:

$$\mathbf{F_{xW} = \frac{c}{f + x}\ [N]}$$

F_{Ra}	= Permitted overhung load (x = l/2) for foot-mounted gear units according to the selection tables in [N]
x	= Distance from the shaft shoulder to the force application point in [mm]
a, b, f	= Gear unit constant for overhung load conversion [mm]
c	= Gear unit constant for overhung load conversion [Nmm]

The following figure shows the overhung load F_R with increased distance x to the gear unit:

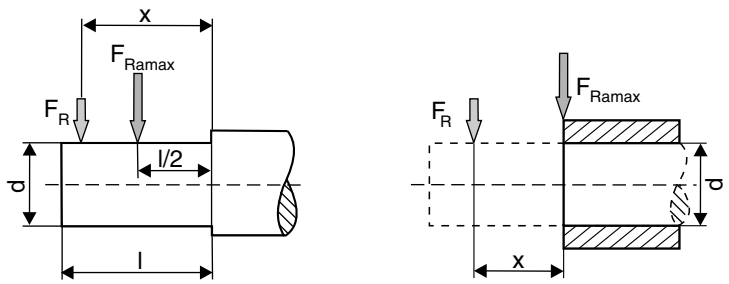

63215axx

Gear unit constants for overhung load conversion

Gear unit type	a [mm]	b [mm]	c [Nmm]	f [mm]	d [mm]	l [mm]
RX57	43.5	23.5	$1.51 \bullet 10^5$	34.2	20	40
RX67	52.5	27.5	$2.42 \bullet 10^5$	39.7	25	50
RX77	60.5	30.5	$1.95 \bullet 10^5$	0	30	60
RX87	73.5	33.5	$7.69 \bullet 10^5$	48.9	40	80
RX97	86.5	36.5	$1.43 \bullet 10^6$	53.9	50	100
RX107	102.5	42.5	$2.47 \bullet 10^6$	62.3	60	120
R07	72.0	52.0	$4.67 \bullet 10^4$	11	20	40
R17	88.5	68.5	$6.527 \bullet 10^4$	17	20	40
R27	106.5	81.5	$1.56 \bullet 10^5$	11.8	25	50
R37	118	93	$1.24 \bullet 10^5$	0	25	50
R47	137	107	$2.44 \bullet 10^5$	15	30	60
R57	147.5	112.5	$3.77 \bullet 10^5$	18	35	70
R67	168.5	133.5	$2.65 \bullet 10^5$	0	35	70
R77	173.7	133.7	$3.97 \bullet 10^5$	0	40	80
R87	216.7	166.7	$8.47 \bullet 10^5$	0	50	100
R97	255.5	195.5	$1.06 \bullet 10^6$	0	60	120
R107	285.5	215.5	$2.06 \bullet 10^6$	0	70	140
R137	343.5	258.5	$4.58 \bullet 10^6$	0	90	170
R147	402	297	$8.65 \bullet 10^6$	33	110	210
R167	450	345	$1.26 \bullet 10^7$	0	120	210
F27	109.5	84.5	$1.13 \bullet 10^5$	0	25	50
F37	123.5	98.5	$1.07 \bullet 10^5$	0	25	50
F47	153.5	123.5	$1.40 \bullet 10^5$	0	30	60
F57	170.7	135.7	$2.70 \bullet 10^5$	0	35	70
F67	181.3	141.3	$4.12 \bullet 10^5$	0	40	80
F77	215.8	165.8	$7.87 \bullet 10^5$	0	50	100
F87	263	203	$1.06 \bullet 10^6$	0	60	120
F97	350	280	$2.09 \bullet 10^6$	0	70	140
F107	373.5	288.5	$4.23 \bullet 10^6$	0	90	170
F127	442.5	337.5	$9.45 \bullet 10^6$	0	110	210
F157	512	407	$1.05 \bullet 10^7$	0	120	210
K37	123.5	98.5	$1.30 \bullet 10^5$	0	25	50
K47	153.5	123.5	$1.40 \bullet 10^5$	0	30	60
K57	169.7	134.7	$2.70 \bullet 10^5$	0	35	70
K67	181.3	141.3	$4.12 \bullet 10^5$	0	40	80
K77	215.8	165.8	$7.69 \bullet 10^5$	0	50	100
K87	252	192	$1.64 \bullet 10^6$	0	60	120
K97	319	249	$2.8 \bullet 10^6$	0	70	140
K107	373.5	288.5	$5.53 \bullet 10^6$	0	90	170
K127	443.5	338.5	$8.31 \bullet 10^6$	0	110	210
K157	509	404	$1.18 \bullet 10^7$	0	120	210
K167	621.5	496.5	$1.88 \bullet 10^7$	0	160	250
K187	720.5	560.5	$3.04 \bullet 10^7$	0	190	320
W10	84.8	64.8	$3.6 \bullet 10^4$	0	16	40
W20	98.5	78.5	$4.4 \bullet 10^4$	0	20	40
W30	109.5	89.5	$6.0 \bullet 10^4$	0	20	40
W37	121.1	101.1	$6.95 \bullet 10^4$	0	20	40
W47	145.5	115.5	$4.26 \bullet 10^5$	35.6	30	60
S37	118.5	98.5	$6.0 \bullet 10^4$	0	20	40
S47	130	105	$1.33 \bullet 10^5$	0	25	50
S57	150	120	$2.14 \bullet 10^5$	0	30	60
S67	184	149	$3.04 \bullet 10^5$	0	35	70
S77	224	179	$5.26 \bullet 10^5$	0	45	90
S87	281.5	221.5	$1.68 \bullet 10^6$	0	60	120
S97	326.3	256.3	$2.54 \bullet 10^6$	0	70	140

Values for types not listed are available on request.

4.4 Project planning for components on the input side

4.4.1 Gear units with IEC or NEMA adapter AM

Power values, mass moments of inertia

Type (IEC)	Type (NEMA)	P_m [1] [kW]	$J_{Adapter}$ [kgm²]
AM63	-	0.25	0.44×10^{-4}
AM71	AM56	0.37	0.44×10^{-4}
AM80	AM143	0.75	1.9×10^{-4}
AM90	AM145	1.5	1.9×10^{-4}
AM100	AM182	3	5.2×10^{-4}
AM112	AM184	4	5.2×10^{-4}
AM132S/M	AM213/215	7.5	19×10^{-4}
AM132ML	-	9.2	19×10^{-4}
AM160	AM254/256	15	91×10^{-4}
AM180	AM284/286	22	90×10^{-4}
AM200	AM324/326	30	174×10^{-4}
AM225	AM364/365	45	174×10^{-4}
AM250	-	55	173×10^{-4}
AM280	-	90	685×10^{-4}

1) Maximum rated power of the mounted standard electric motor at 1400 rpm

Selecting the gear unit

Determine the gear unit type

↓

Determine the gear unit size based on
- the maximum output torque (M_{amax})
- gear ratio (i)

in the gear unit selection tables with adapter AM

↓

Check the maximum permitted overhung load value on the output (F_{Ra})

↓

Check the maximum permitted input power at the adapter (P_m)
(see "Power ratings, mass moments of intertia" on page 54)

↓

Is the required adapter size available?

↓

Is the required combination feasible?

Check the input power at the gear unit (P_n)

The values in the selection tables refer to an input speed of n_e = 1400 rpm. The input power at the gear unit corresponds to a maximum torque at the input side. Convert the input power using the maximum torque for different speeds.

Backstop AM../RS

If the application requires only one direction of rotation, the AM adapter can be configured with a backstop. Backstops with centrifugal lift-off sprags are used. The advantage of this design is that the sprags move around inside the backstop without making contact above a certain speed (lift-off speed). This means the backstops operate wear-free, without losses, maintenance-free and are suited for high speeds.

Dimensions:

The backstop is completely integrated in the adapter. This means the dimensions are the same as with adapter without backstop (see dimension sheets in the Adapter AM chapter).

Locking torques:

Type	Maximum locking torque of the backstop [Nm]	Minimum lift-off speed [rpm]
AM80/90/RS, AM143/145/RS	65	820
AM100/112/RS, AM182/184/RS	425	620
AM132/RS, AM213/215/RS	850	530
AM160/180/RS, AM254/286/RS	1450	480
AM200/225/RS, AM324-365/RS	1950	450
AM250/280/RS	**1950**	**450**

4.4.2 AR adapter with torque limiting coupling

Multi-stage gear unit with adapter and torque limiting coupling

In combination with multi-stage gear units, the adapter with torque limiting coupling is preferably installed between the two gear units. Please contact SEW-EURODRIVE if required.

Selecting the gear unit

The type sizes of the AR adapter with torque limiting coupling correspond to those of the AM adapter for IEC motors.

This means you can select the gear unit using the selection tables for AM adapters. In this case, substitute the unit designation AM with AR and determine the required slip torque.

Determining the slip torque

The slip torque should be about 1.5 times the rated torque of the drive. When determining the slip torque, bear in mind the maximum permitted output torque of the gear unit as well as the variations in the slip torque of the coupling (+/-20%) which are a feature of the design.

When you order a gear unit with adapter and torque limiting coupling, you have to specify the required slip torque of the coupling.

If you do not specify the slip torque, it will be set according to the maximum permitted output torque of the gear unit.

Torques, slip torques

Type	P_m 1) [kW]	M_R 2) [Nm]	M_R 2) [Nm]	M_R 2) [Nm]
AR71	0.37	1 - 6	6.1 - 16	-
AR80	0.75	1 - 6	6.1 - 16	-
AR90	1.5	1 - 6	6.1 - 16	17 - 32
AR100	3.0	5 - 13	14 - 80	-
AR112	4.0	5 - 13	14 - 80	-
AR132S/M	7.5	15 - 130	-	-
AR132ML	9.2	15 - 130	-	-
AR160	15	30 - 85	86 - 200	-
AR180	22	30 - 85	86 - 300	-

1) Maximum rated power of the mounted standard electric motor at 1400 rpm

2) Adjustable slip torque according to cup springs

Speed monitor option /W

We recommend monitoring the speed of the coupling using a speed monitor to avoid uncontrolled slippage of the coupling and the associated wear to the friction ring pads.



The speed of the output end coupling half of the torque limiting coupling is detected in a proximity-type method using a trigger cam and an inductive encoder. The speed monitor compares the pulses with a defined reference speed. The output relay (NC or NO contact) trips when the speed drops below the specified speed (overload). The monitor is equipped with a start bypass to suppress error messages during the startup phase. The start bypass can be set within a time window of 0.5 to 15 seconds.

Reference speed, start bypass and switching hysterisis can be set on the speed monitor.

The following figure shows the adapter with torque limiting coupling and speed monitor /W:

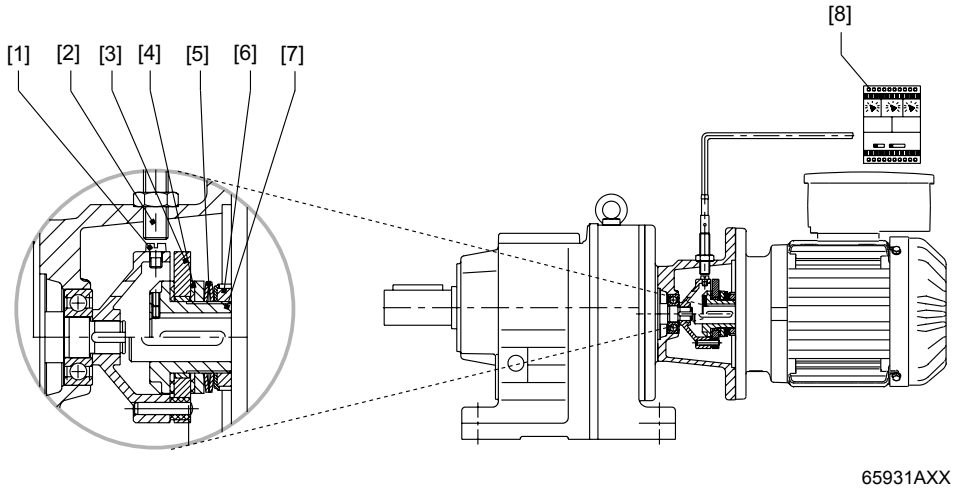

65931AXX

[1] Trigger cam
[2] Encoder (adapter)
[3] Driving disk
[4] Friction ring pads
[5] Cup spring
[6] Slotted nut
[7] Friction hub
[8] Speed monitor

Slip monitor option /WS



In conjunction with VARIBLOC® variable speed gear units (see "Variable Speed Gear Units" catalog), the speed monitor is replaced by a slip monitor for monitoring the speed difference between the input and output halves of the coupling.

The signal pick-up depends on the size of the variable speed gear unit and consists of two encoders or one encoder and an AC tachogenerator.

The following figure shows the adapter with torque limiting coupling and slip monitor /W:

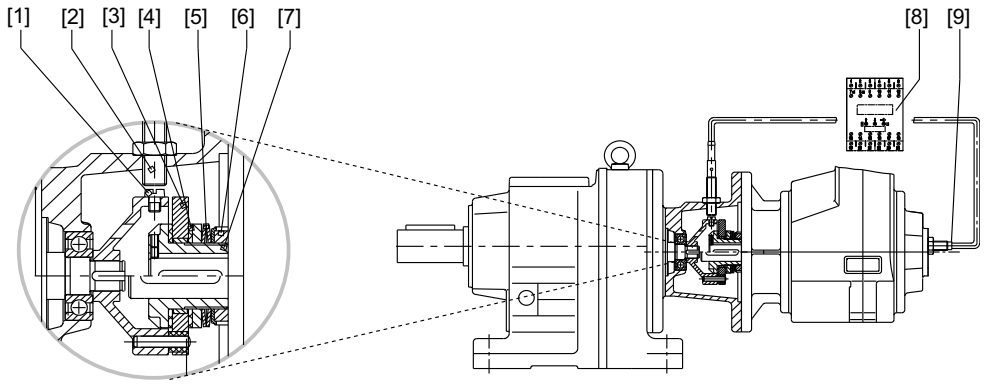

52262AXX

[1] Trigger cam
[2] Encoder (adapter)
[3] Driving disk
[4] Friction lining
[5] Spring washer
[6] Slotted nut
[7] Slip hub
[8] Slip monitor /WS
[9] Encoder IG

Connection

The encoder is connected to the slip monitor using a two or three-core cable (depending on the encoder type).

- Maximum cable length: 500 m with a line cross section of 1.5 mm^2
- Standard supply cable: 3-core / 2 m
- Route the signal lines separately (not in multicore cables) and shield them, if necessary.
- Degree of protection: IP40 (terminals IP20)
- Operating voltage: AC 220 V or DC 24 V
- Maximum switching capability of the output relay: 6 A (AC 250 V)

Terminal assignment W

The following figure shows the terminal assignment for /W:

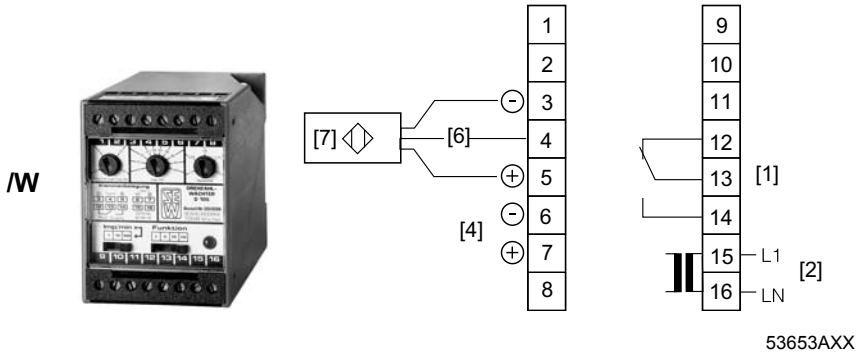

[1]	Relay output	[6]	Signal
[2]	Connection voltage AC 230 V (47 to 63 Hz)	[7]	Encoder
[3]	External slip reset	[/W]	Speed monitor
[4]	DC 24 V supply voltage		
[5]	Jumper for synchronous operation monitoring		

Terminal assignment WS

The following figure shows the terminal assignment for /WS:

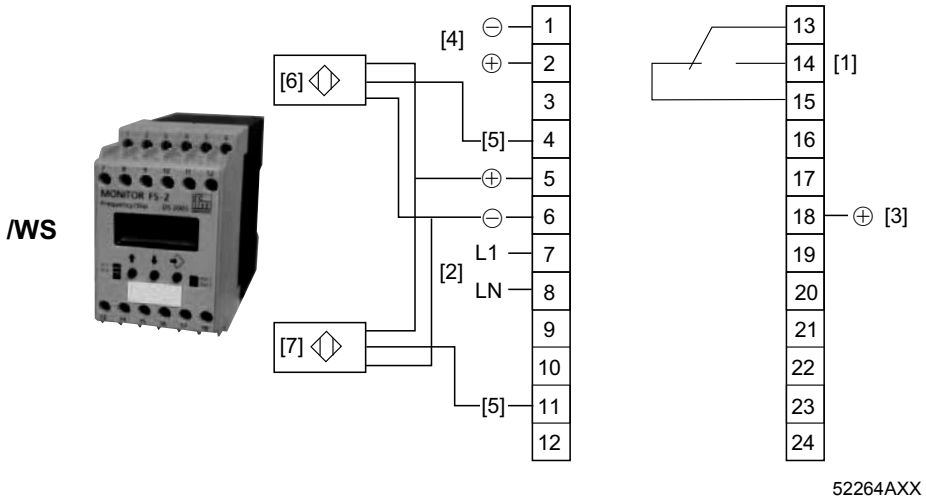

52264AXX

[1]	Relay output	[5]	Signal
[2]	Connection voltage AC 230 V (47 to 63 Hz)	[6]	Encoder 1
[3]	External slip reset	[7]	Encoder 2
[4]	DC 24 V supply voltage	[/W]	Slip monitor

Dimensions

The following figure shows the dimensions for /W:

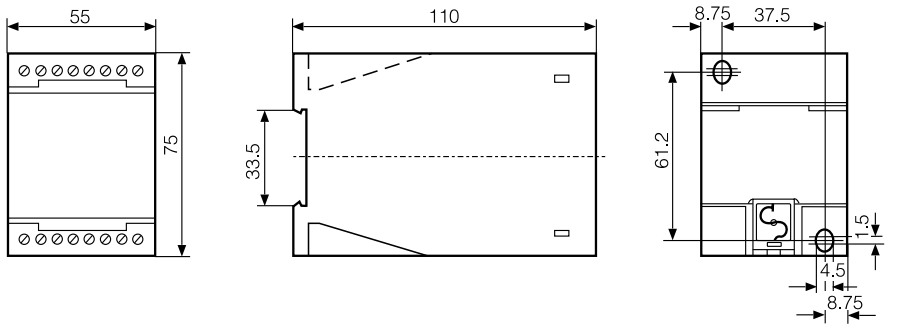

52250AXX

WS dimensions

The following figure shows the dimensions for /WS:

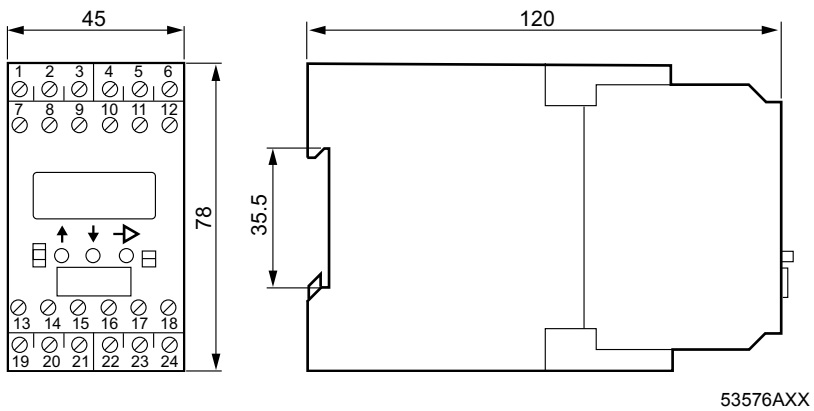

53576AXX

4.4.3 AT adapter with hydraulic centrifugal coupling

Centrifugal coupling

The centrifugal coupling used is a hydrodynamic coupling that operates according to the Föttinger principle. The coupling is filled with oil and consists of a pump wheel (motor side) and a turbine wheel (gear unit side). The pump wheel converts the input mechanical energy into fluid energy and the turbine wheel converts this energy back into mechanical energy.

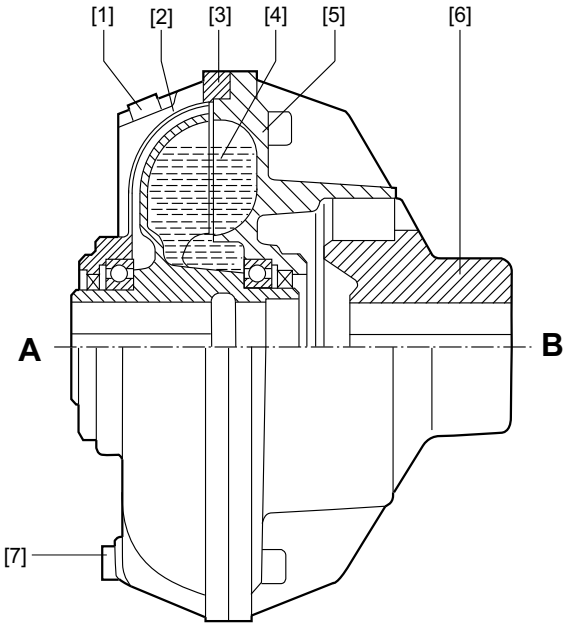

52251AXX

[1]	Filler screw	[6]	Flexible connecting coupling
[2]	Turbine wheel	[7]	Fusible safety plug
[3]	Coupling half	[A]	Gear unit side
[4]	Operating fluid (hydraulic oil)	[B]	Motor end
[5]	Pump wheel		

The power which the coupling can transmit significantly depends on the speed. A distinction is made between startup phase and stationary operation. During the startup phase, the motor starts without load until the coupling transmits torque. The machine is accelerated slowly and smoothly during this phase. One the stationary operating condition is reached, an operating slip occurs between motor and gear unit due to the operating principle of the coupling. The coupling attenuates load peaks so that only the load torque of the system is required from the motor.

The hydraulic centrifugal coupling is equipped with fusible safety plugs that allow the operating fluid to be evacuated in the event of excessive temperature (severe overload, blockage). In this way the coupling and system are protected from damage.

Characteristic curves

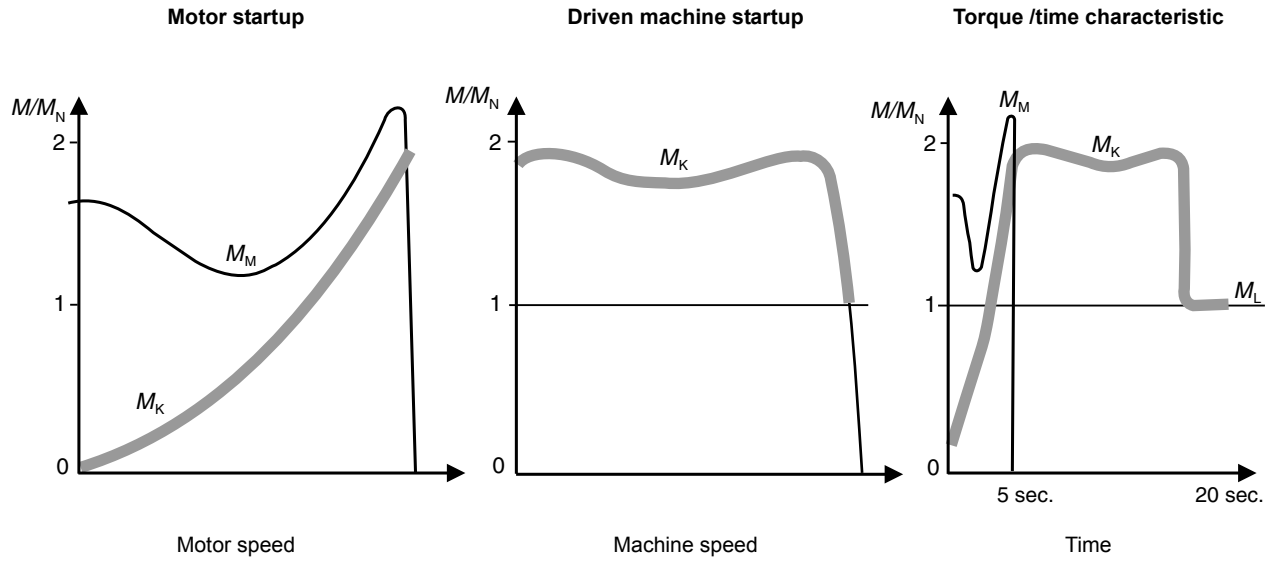

M_N	Motor torque	M_K	Coupling torque
M_L	Load torque	M_N	Fusible safety plug

Selecting the gear unit

Determine the gear unit type

↓

Determine the gear unit size based on the
- maximum output torque ($M_{a\ max}$)
- gear ratio (i)

in the gear unit selection tables with **adapter AM**

↓

Determine the adapter type by means of the
- motor speed (n_M)
- gear unit size
- rated power of the driving motor (P_m)

in the selection tables for **adapter AT**

Backstop AT../RS option

If the application requires only one permitted direction of rotation, the hydraulic centrifugal coupling can be configured with a backstop. Backstops with centrifugal lift-off sprags are used. The advantage of this design is that the sprags move around in the backstop without making contact above a certain speed. This means the backstops operate wear-free, without losses, maintenance-free and are suited for high speeds.

Dimensions

The dimensions of the hydraulic centrifugal coupling with backstop AT../RS are identical to those of the hydraulic centrifugal coupling AT.. (see dimension drawings in chapter "Hydraulic centrifugal coupling AT..").

Locking torques

Type	Maximum locking torque of the backstop [Nm]	Lift-off speed [rpm]
AT311/RS - AT322/RS	425	620
AT421/RS - AT422/RS	850	530
AT522/RS - AT542/RS	1450	480

Disk brake
AT../BM(G) option

Braking torques

Type	d_{rz} [1] [mm]	M_{Bmax} [2] [Nm]	Reduced braking torques (guide values) [Nm]					
AT311/BMG - AT322/BMG	10	9.5						
	12	12.6	9.5					
	16	30	19	12.6	9.5			
	22	55	45	37	30	19	12.6	9.5
AT421/BMG - AT422/BMG	16	30	19	12.6	9.5			
	22	55	45	37	30	19	12.6	9.5
	28	55	45	37	30	19	12.6	9.5
AT522/BM - AT542/BM	22	75	50					
	28	150	125	100	75	50		
	32	250	200	150	125	100	75	50

1) The pinion spigot diameter depends on the gear ratio, please contact SEW-EURODRIVE.

2) Maximum braking torque

Order information

Specify the required braking torque and brake voltage when ordering a gear unit with adapter, centrifugal coupling and brake. If this is not specified in the order, the maximum permitted braking torque will be set.

4.4.4 AD input shaft assembly

Selecting the gear unit

Determine the gear unit type

↓

Determine the gear unit size based on the
- maximum output torque ($M_{a\ max}$)
- gear ratio (i)

in the gear unit selection tables with input shaft assembly AD
When selecting AD/P, please observe the selection note on page 64 .

↓

Check the maximum permitted overhung load value on the output (F_{Ra}).

↓

Check the maximum permitted input power at the gear unit (P_e) by taking account of the thermal limit rating (see page 66).

↓

Check the overhung load at the input (F_{Re}).

↓

If the case of higher requirements (e.g. larger overhung load on the input end) please contact SEW-EURODRIVE.

Centering shoulder AD../ZR

The input shaft assembly can be configured with a centering shoulder as an option. In this way, a customer's application can be attached to the cover centrally in relation to the input shaft side.

Backstop AD../RS

The input shaft assembly can be supplied with a backstop if the application only requires one permitted direction of rotation. Backstops with centrifugal lift-off sprags are used. The advantage of this design is that the sprags move around inside the backstop without making contact above a certain speed (lift-off speed). This means the backstops operate wear-free, without losses, maintenance-free and are suited for high speeds.

Dimensions:

The backstop is completely integrated in the cover. This means there is no difference in dimensions between an input shaft assembly with or without backstop (see dimension sheets in the "Input shaft assembly AD" chapter).

Locking torques:

Type	Maximum locking torque of the backstop [Nm]	Minimum lift-off speed [rpm]
AD2/RS	65	820
AD3/RS	425	620
AD4/RS	850	530
AD5/RS	1450	480
AD6/RS	1950	450
AD7/RS	1950	450
AD8/RS	1950	450

Motor mounting platform AD.. /P

Selection note (available combinations)

See the following table for motors available for the various motor mounting platforms.

	Motor mounting platform					
Motor type DRS	**AD2/P**	**AD3/P**	**AD4/P**	**AD5/P**	**AD6/P**	**AD7/P**
DRS71S	5.5					
DRS71M	5.5					
DRS80S	5.5					
DRS80M	5.5	11				
DRS90M	5.5	11				
DRS90L		11				
DRS100M		11				
DRS100L		11				
DRS100LC		11				
DRS112M		11				
DRS132S			23			
DRS132M			23			
DRS132MC			23			
DRS160S			23	41		
DRS160M				41		
DRS160MC				41		
DRS180S				41		
DRS180M				41		
DRS180L				41		
DRS180LC				41		
DRS200L					62	
DRS225S					62	
DRS225M					62	
DRS225MC					62	
DV250						103
DV280						103

	Motor mounting platform					
Motor type DRE	**AD2/P**	**AD3/P**	**AD4/P**	**AD5/P**	**AD6/P**	**AD7/P**
DRE80S	5.5					
DRE80M	5.5					
DRE90M	5.5	11				
DRE90L	5.5	11				
DRE100M		11				
DRE100L		11				
DRE100LC		11				
DRE112M		11				
DRE132S		11				
DRE132M			23			
DRE132MC			23			
DRE160S			23	41		
DRE160M				41		
DRE160MC				41		
DRE180S				41		
DRE180M				41		
DRE180L				41		
DRE180LC				41		
DRE200L					62	
DRE225S					62	
DRE225M					62	
DVE250						103
DVE280						103

	Motor mounting platform					
Motor type DRP	**AD2/P**	**AD3/P**	**AD4/P**	**AD5/P**	**AD6/P**	**AD7/P**
DRP80M	5.5					
DRP90M	5.5	11				
DRP90L	5.5	11				
DRP100M		11				
DRP100L		11				
DRP100LC		11				
DRP112M		11				
DRP132M			23			
DRP132MC			23			
DRP160S			23	41		
DRP160M			23	41		
DRP160MC				41		
DRP180S				41		
DRP180M				41		
DRP180L				41		
DRP180LC				41		
DRP200L					62	
DRP225S					62	
DRP225M					62	
DRP225MC					62	

Combination is available / additional weight in kg

If the selected inspection cover (motor mounting platform) cannot be combined with the required motors, please contact SEW-EURODRIVE.

The available gear unit/motor combinations for input shaft assemblies with motor mounting platforms can be found in the corresponding dimension sheets L_N.

- R gear units from page 222
- F gear units from page 320
- K gear units from page 326
- S gear units from page 424
- W gear units from page 535

Thermal limit power for gear units with input shaft assembly

The power values given in the selection tables for gear units with input shaft assemblies are mechanical limit powers. Depending on the mounting position, however, gear units may become thermally overloaded before they reach the mechanical power limit. For mineral oils, such cases are indicated in the selection tables by the mounting position specification (see the column marked in the figure).

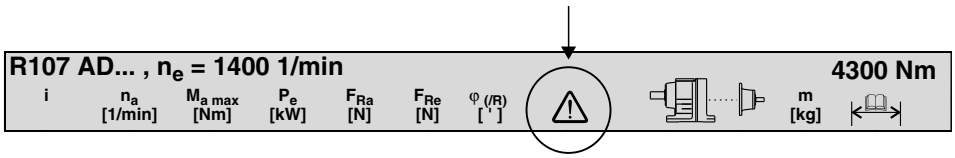

50494AXX

Please contact SEW-EURODRIVE if the mounting position you require is the same as one of those indicated. By considering the actual operating conditions, it will then be possible to recalculate the thermal limit rating based on the specific application. Alternatively, suitable measures can be taken (e.g. using a synthetic lubricant with higher thermal stability) to increase the thermal limit rating of the gear unit. The following data are required for recalculation:

Gear unit type			
Output speed [na]	..... rpm	**Gear ratio i**	.....
Ambient temperature	..... °C	**Cyclic duration factor CDF**	.....%
Power drawn [P]	..... kW		
Installation site:			
...in small, enclosed rooms			
...in large rooms, halls			
...outdoors			
Installation:.....			
e.g. base made of steel or concrete			

4.5 RM gear units

Project Planning You must take account of the higher overhung and axial loads when planning projects with RM helical gear units with extended bearing hub. Observe the following project planning procedure:

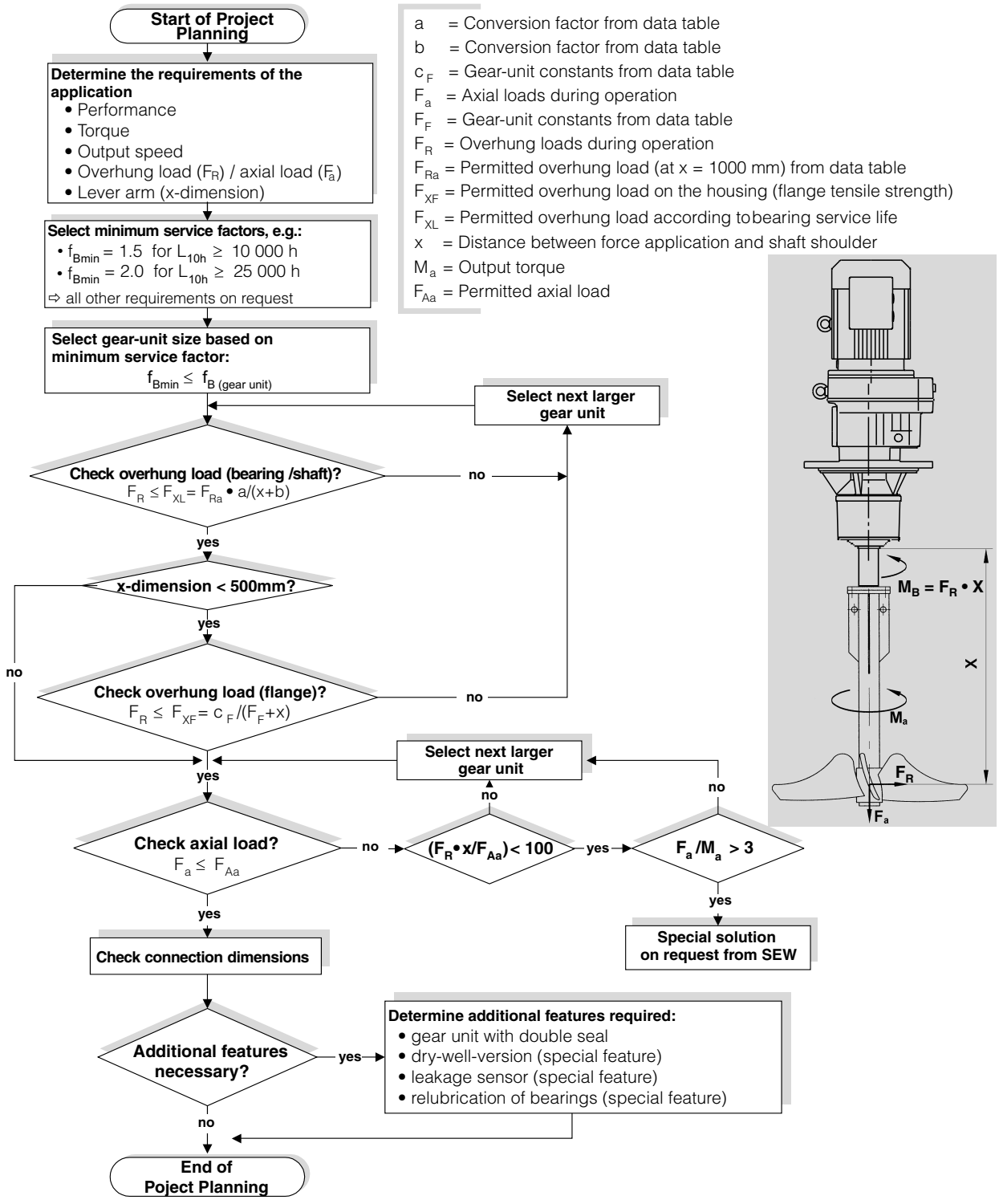

02457BEN

Permitted overhung loads and axial forces

The permitted overhung loads F_{Ra} and axial forces F_{Aa} are specified for various service factors f_B and nominal bearing service life L_{10h}.

f_{Bmin} = 1.5; L_{10h} = 10 000 h

		Output speed n_a [1/min]							
		< 16	16-25	26-40	41-60	61-100	101-160	161-250	251-400
RM57	F_{Ra} [N]	400	400	400	400	400	405	410	415
	F_{Aa} [N]	18800	15000	11500	9700	7100	5650	4450	3800
RM67	F_{Ra} [N]	575	575	575	580	575	585	590	600
	F_{Aa} [N]	19000	18900	15300	11900	9210	7470	5870	5050
RM77	F_{Ra} [N]	1200	1200	1200	1200	1200	1210	1210	1220
	F_{Aa} [N]	22000	22000	19400	15100	11400	9220	7200	6710
RM87	F_{Ra} [N]	1970	1970	1970	1970	1980	1990	2000	2010
	F_{Aa} [N]	30000	30000	23600	18000	14300	11000	8940	8030
RM97	F_{Ra} [N]	2980	2980	2980	2990	3010	3050	3060	3080
	F_{Aa} [N]	40000	36100	27300	20300	15900	12600	9640	7810
RM107	F_{Ra} [N]	4230	4230	4230	4230	4230	4230	3580	3830
	F_{Aa} [N]	48000	41000	30300	23000	18000	13100	9550	9030
RM137	F_{Ra} [N]	8710	8710	8710	8710	7220	5060	3980	6750
	F_{Aa} [N]	70000	70000	70000	57600	46900	44000	35600	32400
RM147	F_{Ra} [N]	11100	11100	11100	11100	11100	10600	8640	10800
	F_{Aa} [N]	70000	70000	69700	58400	45600	38000	32800	30800
RM167	F_{Ra} [N]	14600	14600	14600	14600	14600	14700	-	-
	F_{Aa} [N]	70000	70000	70000	60300	45300	36900	-	-

f_{Bmin} = 2.0; L_{10h} = 25 000 h

		Output speed n_a [1/min]							
		< 16	16-25	26-40	41-60	61-100	101-160	161-250	251-400
RM57	F_{Ra} [N]	410	410	410	410	410	415	415	420
	F_{Aa} [N]	12100	9600	7350	6050	4300	3350	2600	2200
RM67	F_{Ra} [N]	590	590	590	595	590	595	600	605
	F_{Aa} [N]	15800	12000	9580	7330	5580	4460	3460	2930
RM77	F_{Ra} [N]	1210	1210	1210	1210	1210	1220	1220	1220
	F_{Aa} [N]	20000	15400	11900	9070	6670	5280	4010	3700
RM87	F_{Ra} [N]	2000	2000	2000	2000	2000	1720	1690	1710
	F_{Aa} [N]	24600	19200	14300	10600	8190	6100	5490	4860
RM97	F_{Ra} [N]	3040	3040	3040	3050	3070	3080	2540	2430
	F_{Aa} [N]	28400	22000	16200	11600	8850	6840	5830	4760
RM107	F_{Ra} [N]	4330	4330	4330	4330	4330	3350	2810	2990
	F_{Aa} [N]	32300	24800	17800	13000	9780	8170	5950	5620
RM137	F_{Ra} [N]	8850	8850	8850	8830	5660	4020	3200	5240
	F_{Aa} [N]	70000	59900	48000	37900	33800	31700	25600	23300
RM147	F_{Ra} [N]	11400	11400	11400	11400	11400	8320	6850	8440
	F_{Aa} [N]	70000	60600	45900	39900	33500	27900	24100	22600
RM167	F_{Ra} [N]	15100	15100	15100	15100	15100	13100	-	-
	F_{Aa} [N]	70000	63500	51600	37800	26800	23600	-	-

Conversion factors and gear unit constants

The following conversion factors and gear unit constants apply to calculating the permitted overhung load F_{xL} at point x ≠ 1000 mm for RM gearmotors:

Gear unit type	a	b	c_F (f_B = 1.5)	c_F (f_B = 2.0)	F_F
RM57	1047	47	1220600	1260400	277
RM67	1047	47	2047600	2100000	297.5
RM77	1050	50	2512800	2574700	340.5
RM87	1056.5	56.5	4917800	5029000	414
RM97	1061	61	10911600	11124100	481
RM107	1069	69	15367000	15652000	554.5
RM137	1088	88	25291700	25993600	650
RM147	1091	91	30038700	31173900	756
RM167	1089.5	89.5	42096100	43654300	869

Additional weight of RM gear units

Type	Additional weight compared to RF with reference to the smallest RF flange Δm [kg]
RM57	12.0
RM67	15.8
RM77	25.0
RM87	29.7
RM97	51.3
RM107	88.0
RM137	111.1
RM147	167.4
RM167	195.4

4.6 Additional documentation

In addition to the information in this manual, SEW-EURODRIVE offers extensive documentation covering the entire topic of electrical drive engineering. These are mainly the publications of the "Drive Engineering - Practical Implementation" series as well as the manuals and catalogs for gear units and electronically controlled drives.

You will find additional links to a wide selection of our documentation in many languages for download on the SEW-EURODRIVE homepage (http://www.sew-eurodrive.com). The list below includes other documents that are of interest in terms of project planning. You can order these publications from SEW-EURODRIVE.

Technical data for motors and gear units

The following price catalogs and catalogs are available from SEW-EURODRIVE in addition to this "Gear Units" catalog:

- AC motors
- DR gearmotors
- Synchronous servo gearmotors
- Servo gear units

Drive Engineering Practical Implementation

- Project Planning for Drives
- Servo Technology
- Explosion-Proof Drives to EU Directive 94/9/EC

5 Mounting Positions

5.1 General information on the mounting positions

SEW-EURODRIVE distinguishes between the six gear unit mounting positions M1 to M6. The following figure shows the position of the gear unit in mounting positions M1 to M6:

65873axx

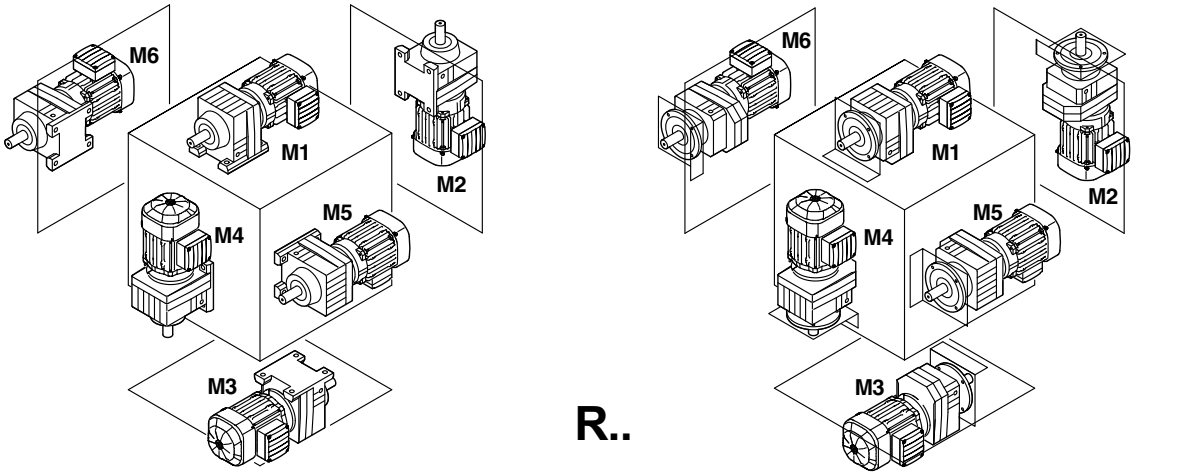

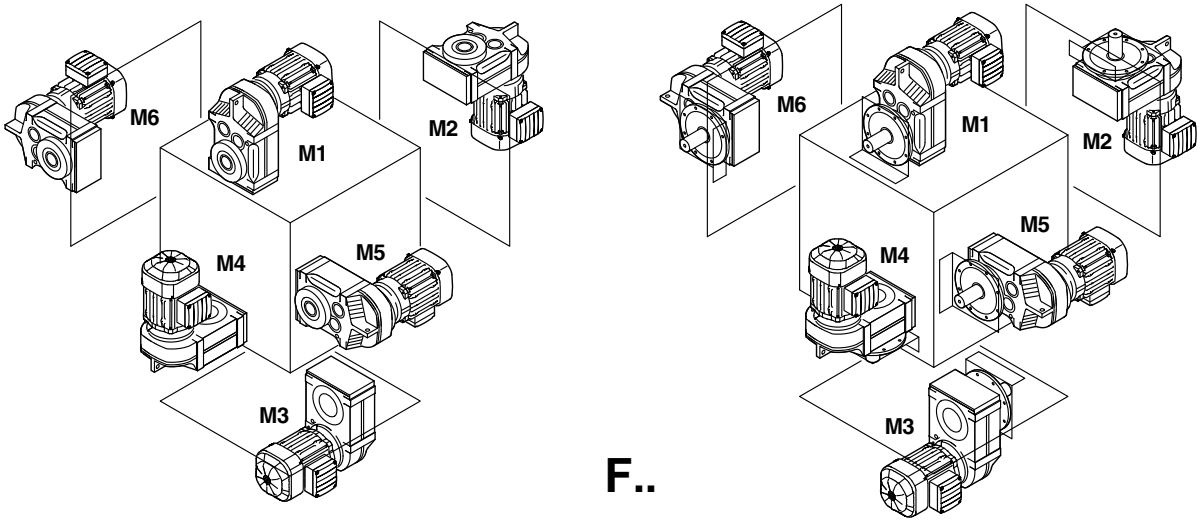

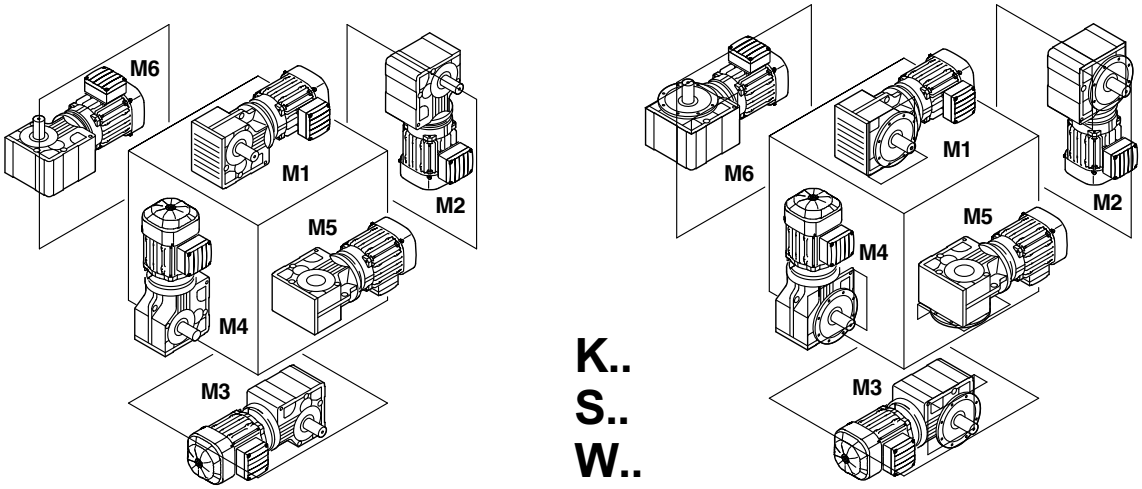

5.2 Order information for gear units

	INFORMATION
	The following order information is required in addition to the mounting position for R, F, K, S and W gear units to enable the configuration of the drive to be defined exactly.

Direction of rotation of the output shaft

When ordering a gear unit with adapter and optional backstop and/or input shaft assembly, it is necessary to indicate the direction of rotation of the output shaft/output side. The direction of rotation is given looking onto the output shaft/output end of the gear unit. For drives with shaft ends at sides A and B, the direction of rotation must be specified as looking onto side A.

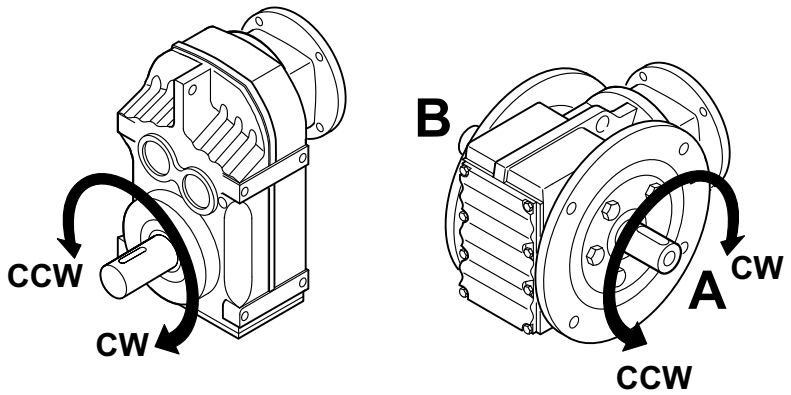

50290AXX

As viewed at the output shaft: Clockwise (CW) = Rotating clockwise
Counterclockwise (CCW) = Rotating counterclockwise

Position of the output shaft and output flange

In right-angle gear units, you also have to indicate the position of the output shaft and the output flange:

- A or B or AB

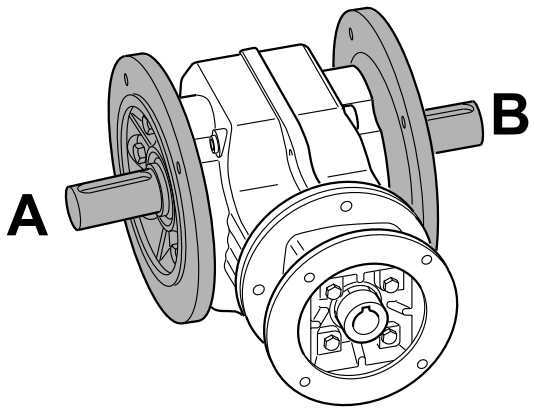

50296AXX

Position of output end in right-angle gear units

In shaft mounted right-angle gear units with a shrink disk, you also have to indicate whether the A or B end is the output end. In the figure below, the A end is the output end. The shrink disk is located opposite the output end, here on the B side.

In shaft mounted right-angle gear units, the output end is equivalent to the shaft position of right-angle gear units with solid shaft.

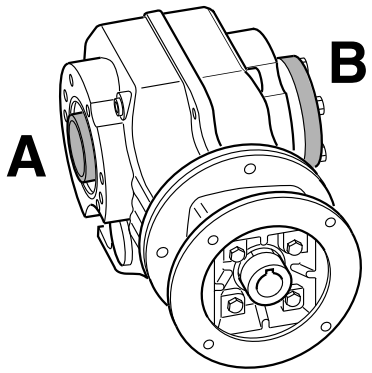

50297axx

	INFORMATION
	You find the permitted mounting surfaces (= hatched areas) in the mounting position sheets (page 76 and subsequent pages). **Example:** Only the mounting surface at the bottom is possible with helical-bevel gear units K167/K187 in mounting positions M5 and M6.

Sample order

Type (Examples)	Mounting position	Shaft position	Flange position	Output end	Shrink disk position	Direction of rotation of output
K47../RS	M2	A	-	-	-	CW
SF77	M6	AB	AB	-	-	-
KA97	M4	-	-	B	-	-
KH107	M1	-	-	A	B	-

5.3 Key to the mounting position sheets

Symbols used

The following table shows the symbols used in the mounting position sheets and their meaning:

Symbol	Meaning
	Breather valve
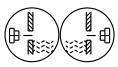	Oil level plug[1)]
	Oil drain plug
③	Cable entry position "3"

1) Does not apply to the first gear unit (larger gear unit) of multi-stage gear units

INFORMATION

Notes on the shafts illustrated on the mounting position sheets.

Observe the following information regarding the illustrations on the mounting position sheets:

- **For gear units with solid shaft:** The displayed shaft is always on the A end.
- **For shaft-mounted gear units:** The shaft with dashed lines represents the customer shaft. The output end (= shaft position) is always shown on the A end.

INFORMATION

SPRIOPLAN® gear units are not dependant on the mounting position, except for W..37 and W47 in mounting position M4. However, mounting positions M1 to M6 are also shown for SPIROPLAN® gear units to assist you in working with this documentation.

Important! Please note:

SPIROPLAN® gear units W..10 to W..30 cannot be equipped with breather valves, neither with oil level plugs or drain plugs.

SPIROPLAN® gear units W..37 and W..47 can be equipped with breather valves in mounting position M4 and with oil drain plugs in mounting position M2.

INFORMATION

Some gear units can be supplied in mounting position M0. In this case, the gear unit will be delivered in a universal mounting position. The customer can then adjust it to the specific mounting position. Please contact SEW-EURODRIVE if you have any questions.

	INFORMATION
	Notes on the depicted motors. Motors are only represented symbolically on the mounting position sheets.

Churning losses

* → page XX

Churning losses may occur in some mounting positions. Contact SEW-EURODRIVE in case of the following combinations:

Mounting position	Gear unit type	Gear unit size	Input speed [rpm]
M2, M4	R	97 ... 107	> 2500
		> 107	>1500
M2, M3, M4, M5, M6	F	97 ... 107	> 2500
		> 107	> 1500
	K	77 ... 107	> 2500
		> 107	> 1500
	S	77 ... 97	> 2500

5.4 Mounting positions of helical gear units

RX57-RX107

01 001 00 10

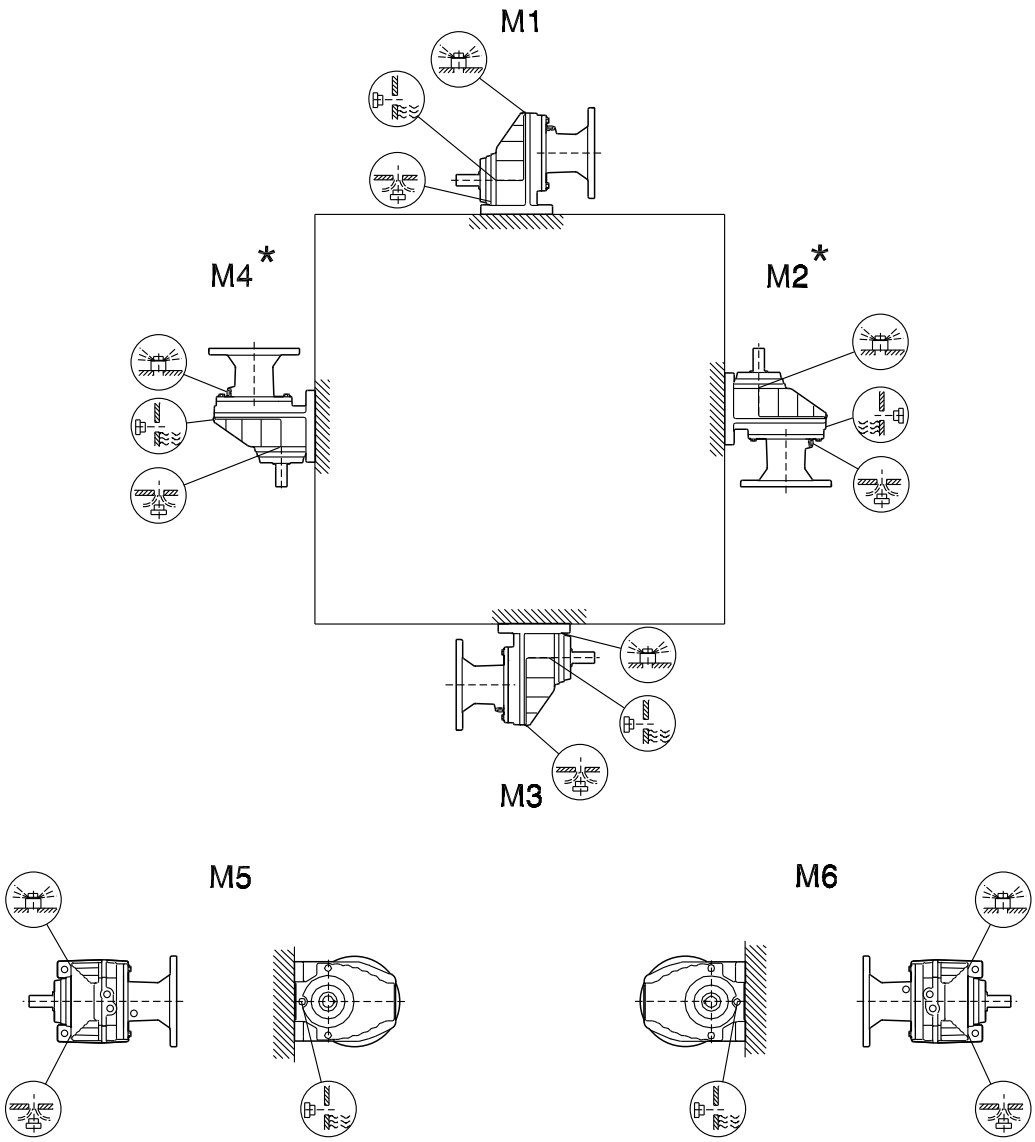

* → page 75

RXF57-RXF107

01 002 00 10

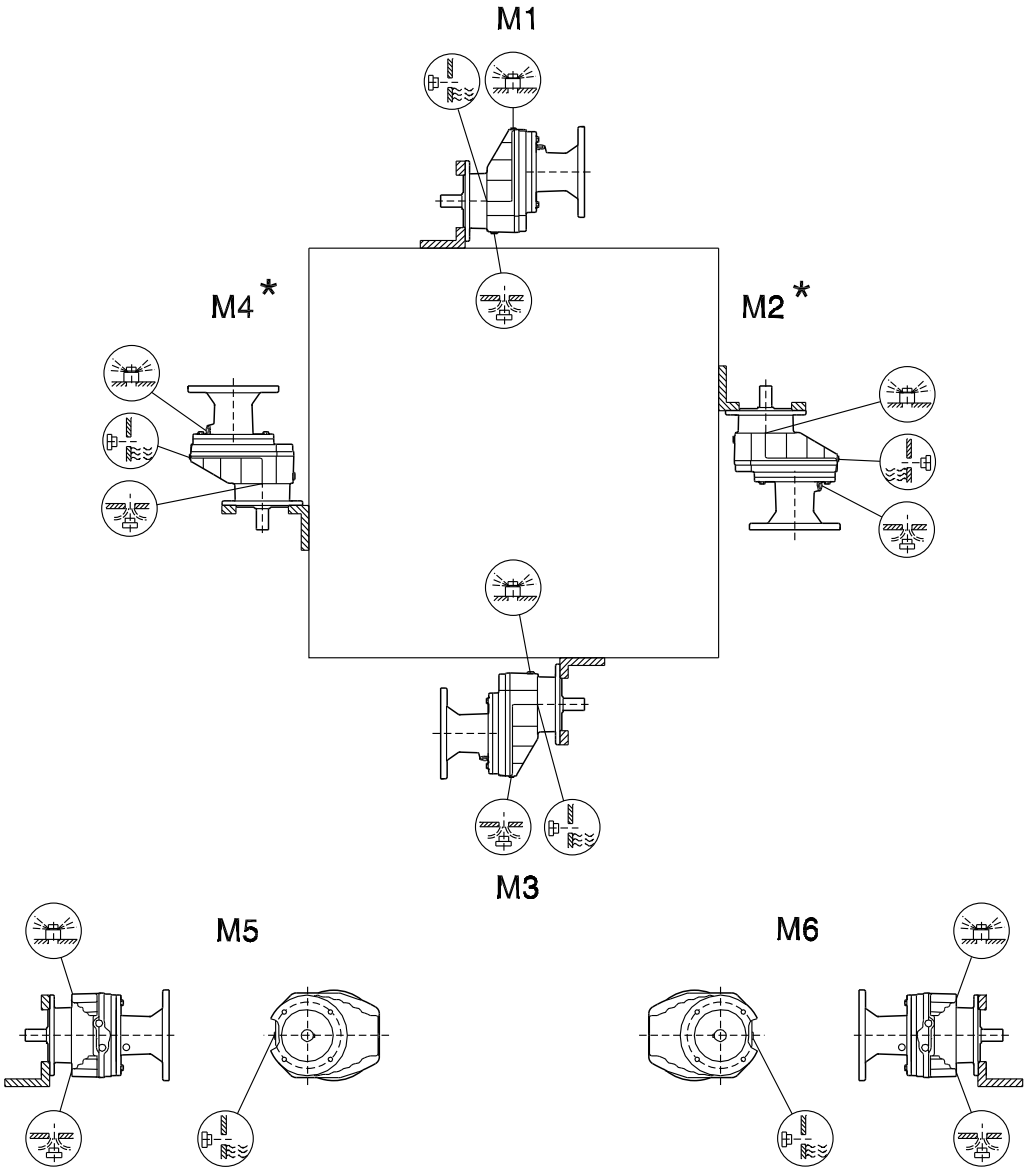

* → page 75

R27-R167

01 003 00 10

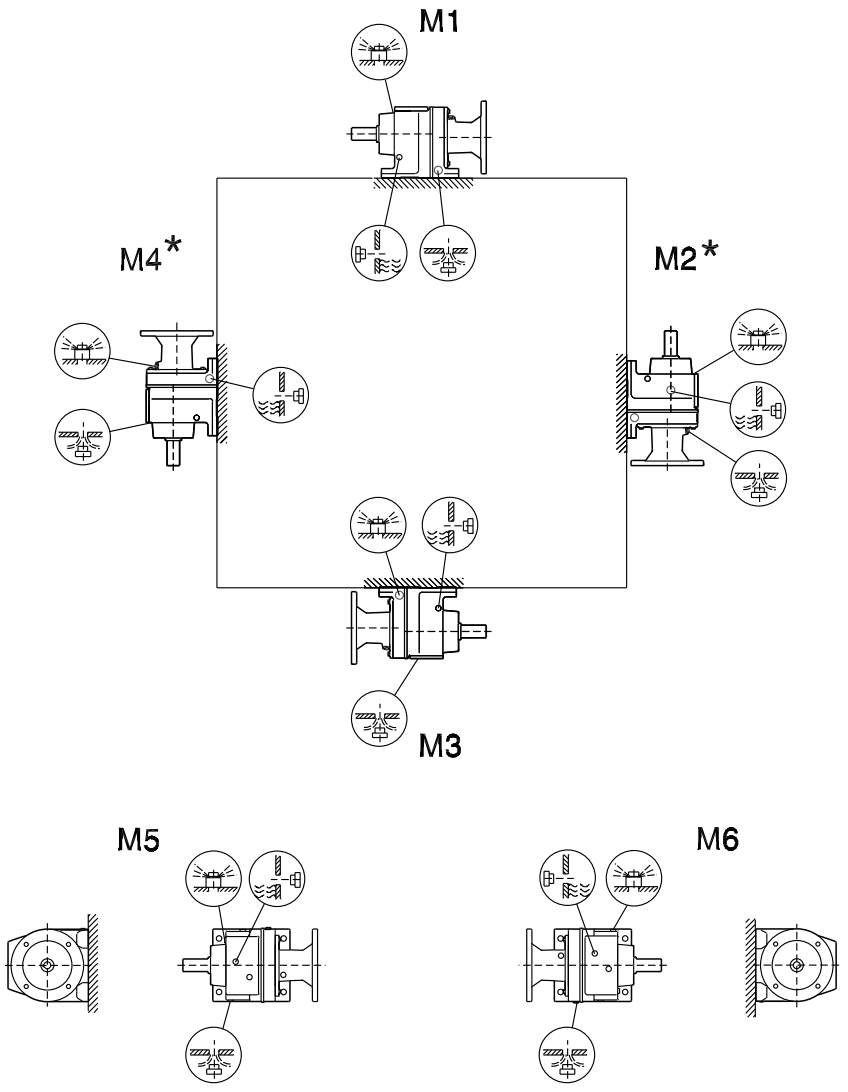

R27		M1, M3 , M5 , M6
R27		
R47, R57		M5

* → page 75

RF27-RF167, RZ27-87

01 004 00 10

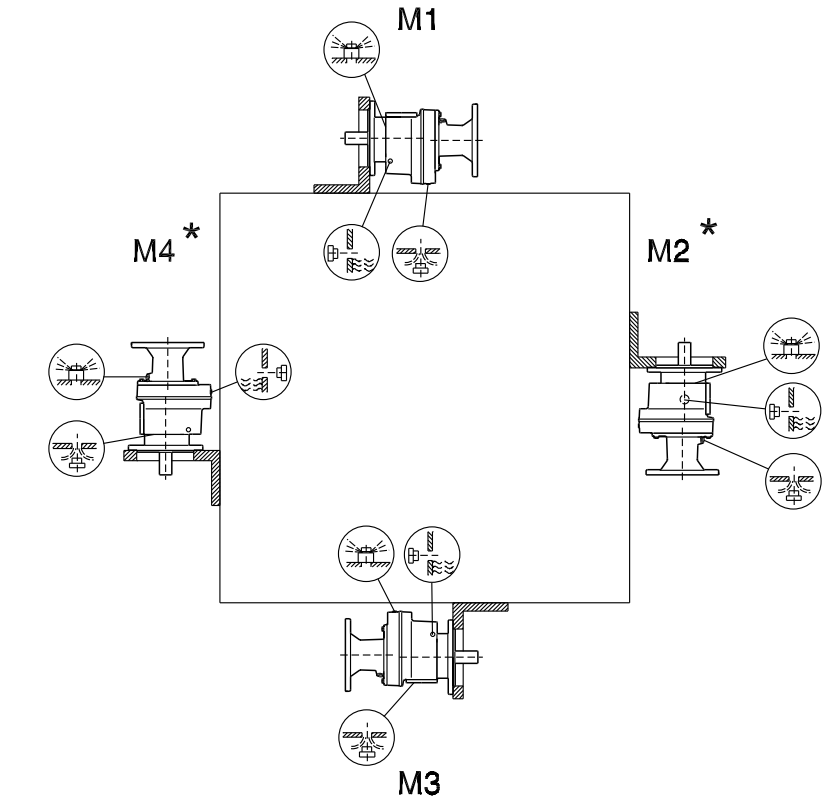

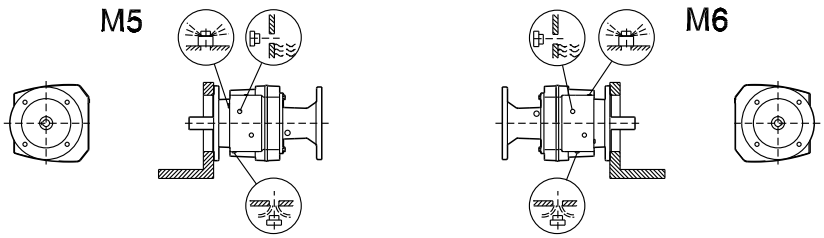

RF/RZ27 M1, M3 , M5 , M6

RF/RZ27

RF/RZ47, 57 M5

* → page 75

R27F-R87F

01 005 00 10

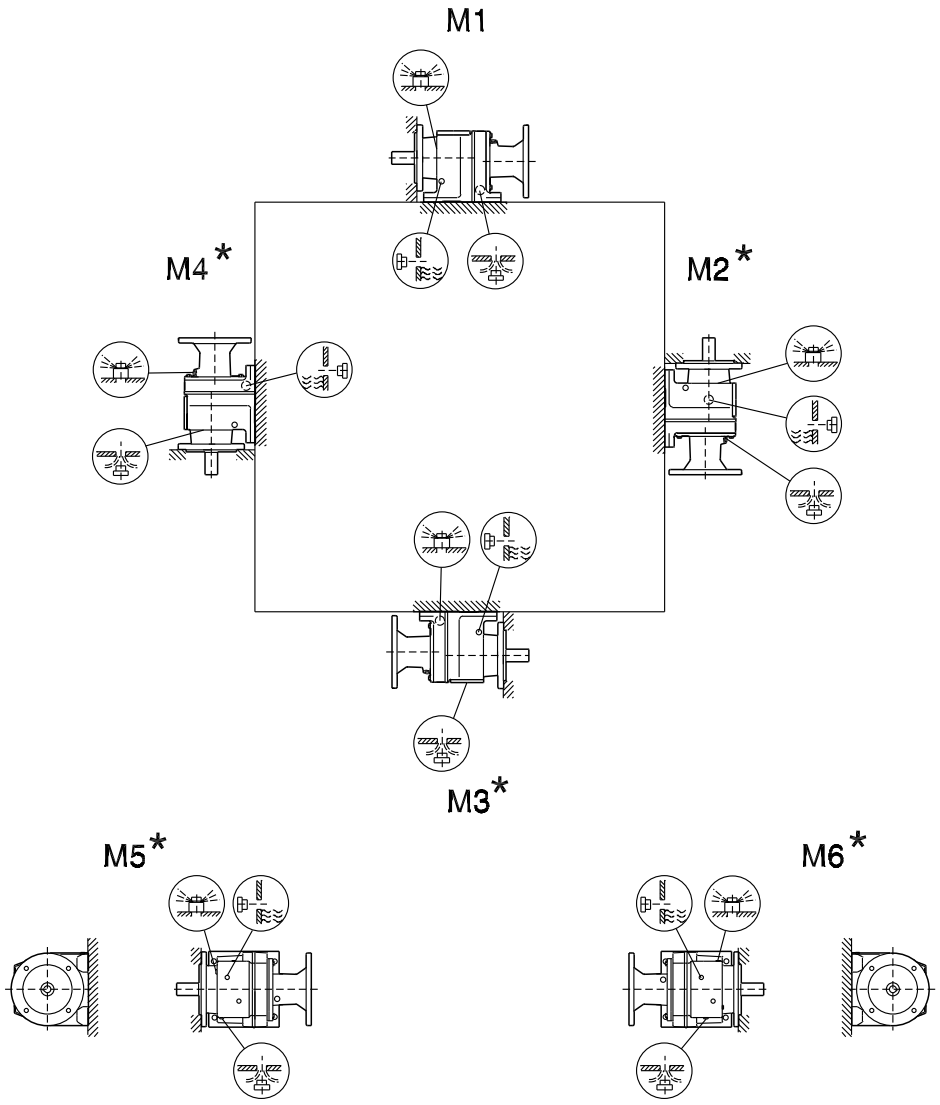

R27F		M1, M3 , M5 , M6
R27F		
R47F, R57F		M5

* → page 75

Important: See the (i) information in the "Gearmotors" catalog, chapter. "Project Planning for Gear Units/Overhung and axial loads" (page 34).

5.5 Mounting positions of parallel shaft helical gear units

F/FA..B/FH27B-157B, FV27B-107B

42 002 00 10

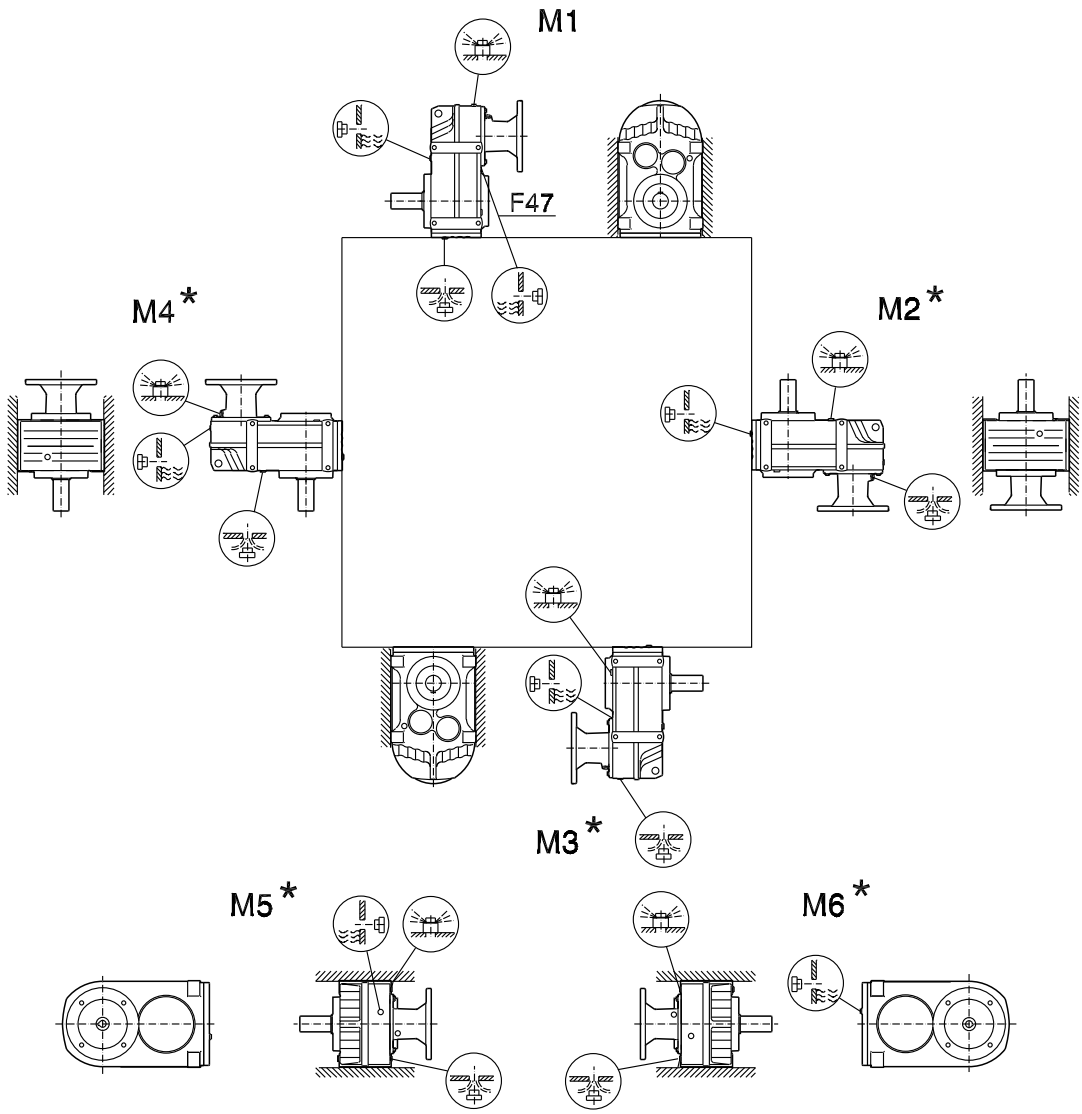

F..27 M1, M3, M5, M6

F..27 M1 - M6

F..27 M1, M3, M5, M6

* → page 75

FF/FAF/FHF/FAZ/FHZ27-157, FVF/FVZ27-107

42 003 00 10

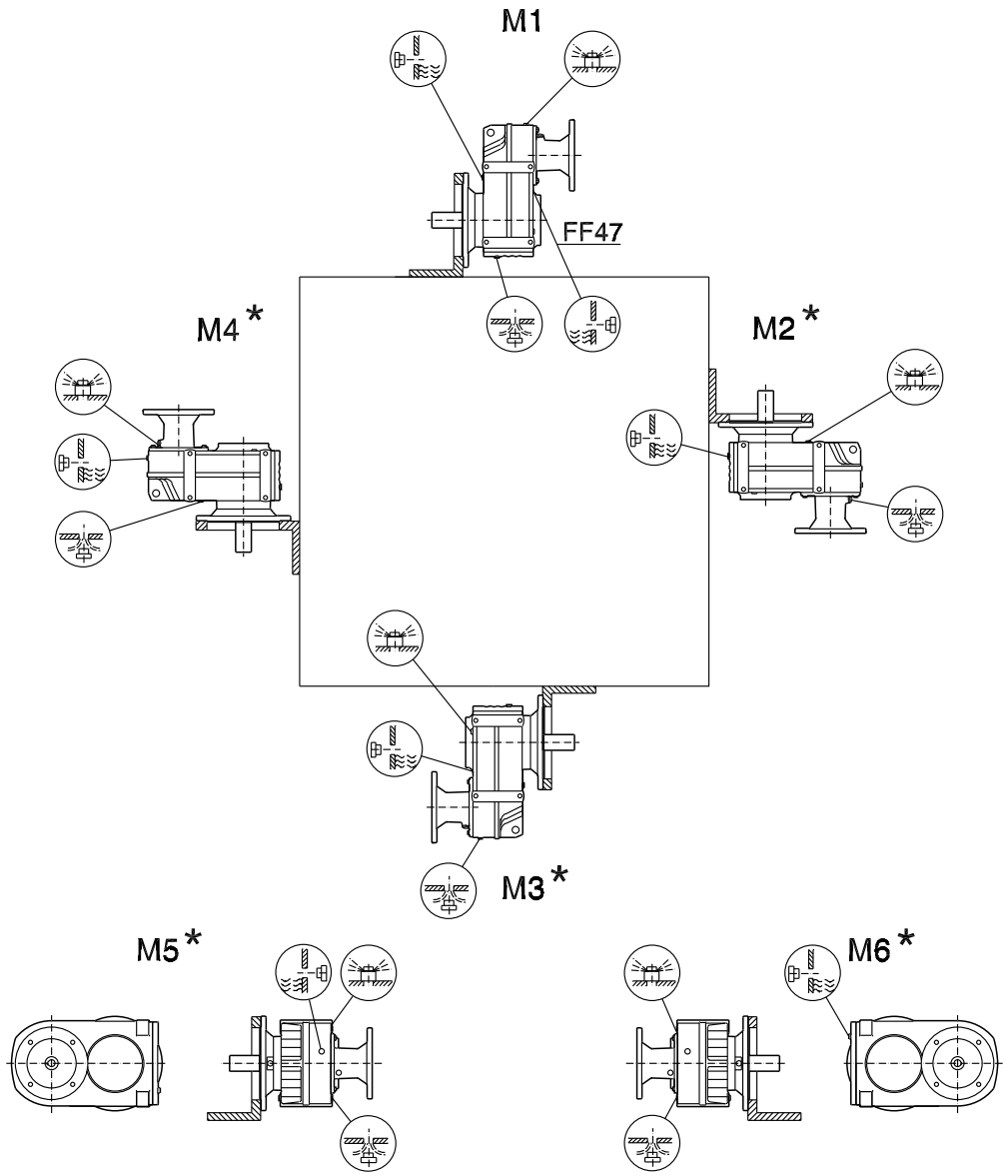

F..27 M1, M3, M5, M6

F..27 M1 - M6

F..27 M1, M3, M5, M6

* → page 75

FA/FH27-157, FV27-107, FT37-97

42 004 00 10

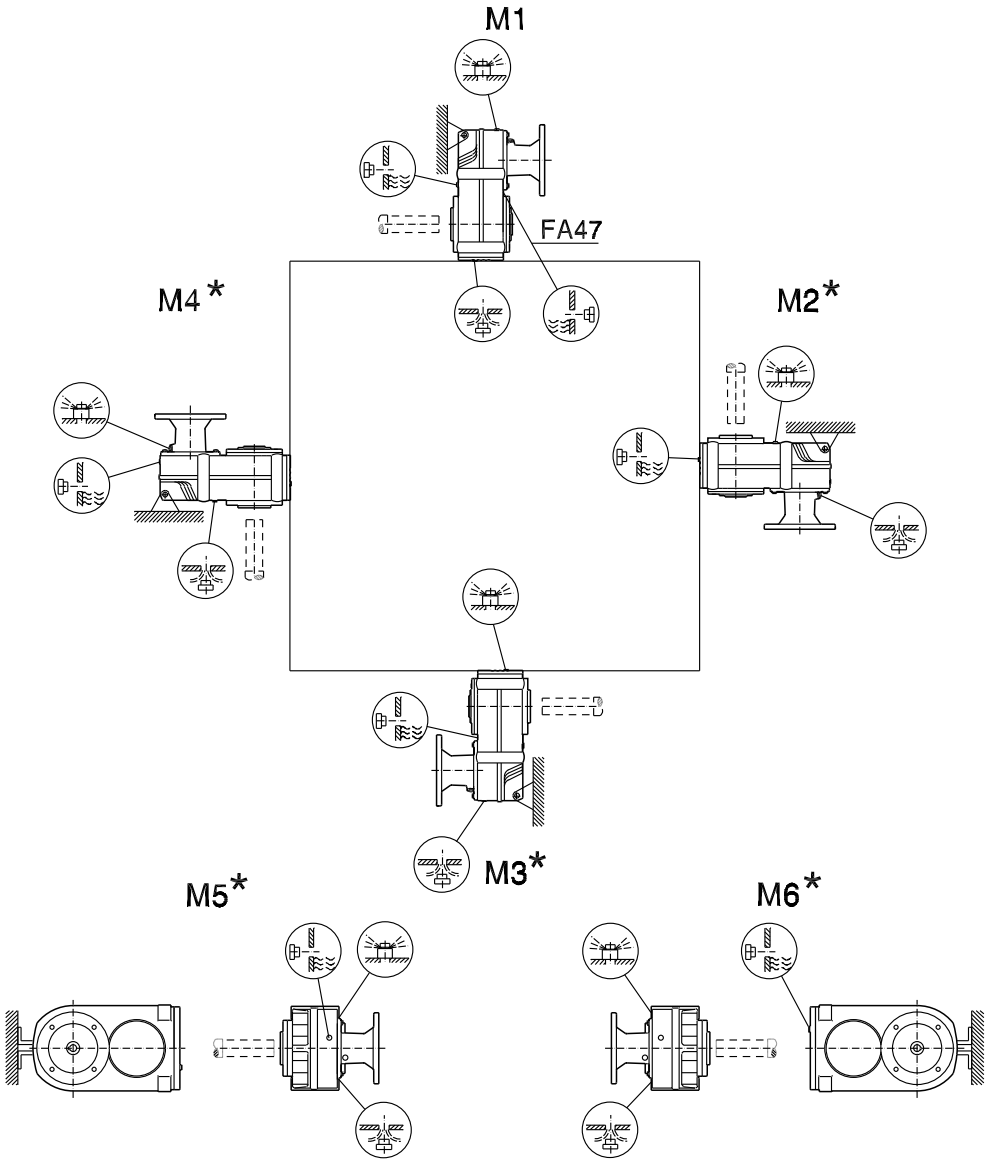

F..27 M1, M3, M5, M6

F..27 M1 - M6

F..27 M1, M3, M5, M6

* → page 75

5.6 Mounting positions of helical-bevel gearmotors

K/KA..B/KH37B-157B, KV37B-107B

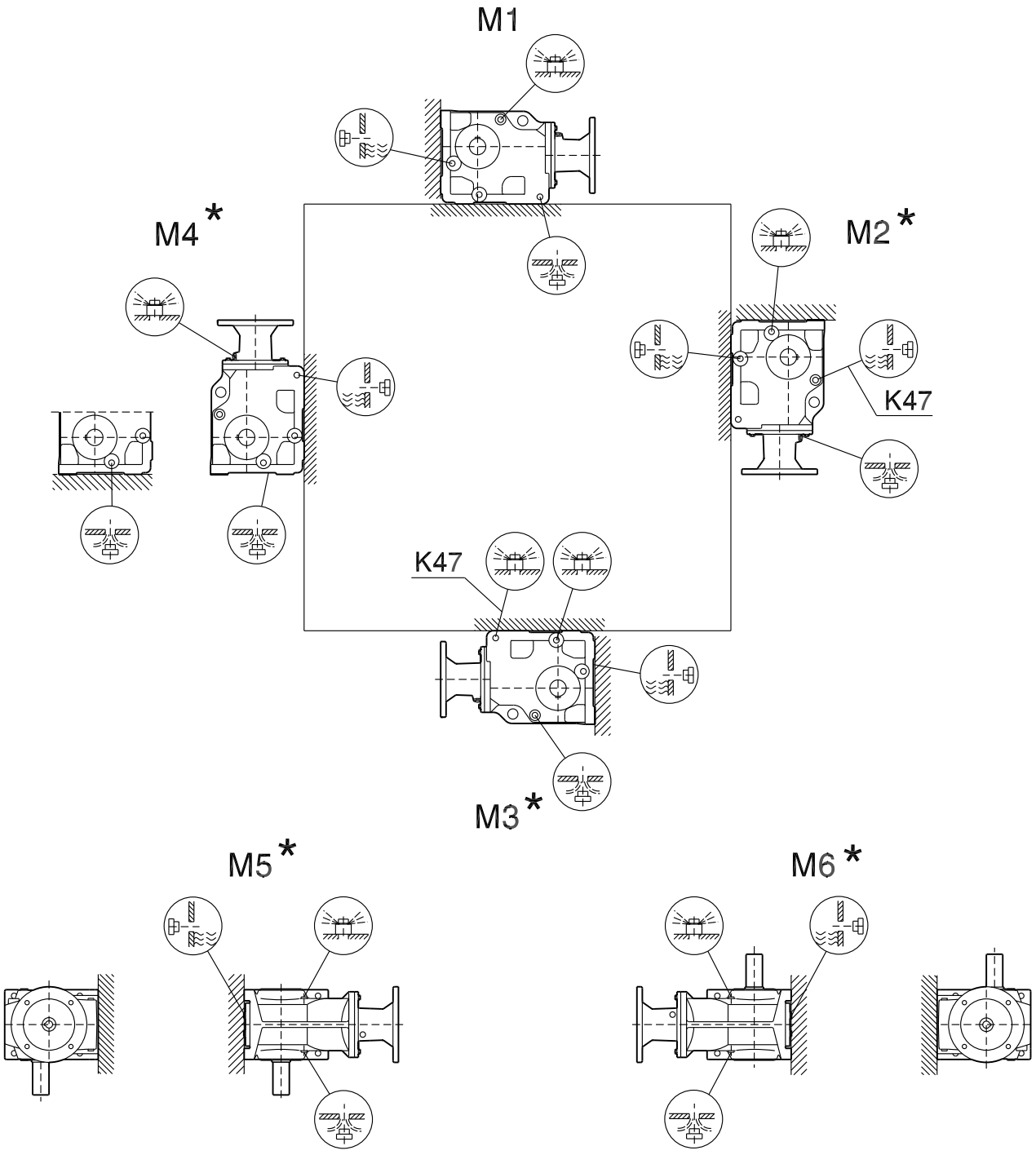

* → page 75

Important: See the (i) information in the "Gearmotors" catalog, chapter. "Project Planning for Gear Units/Overhung and axial loads" (page 34).

K/KH167B-187B

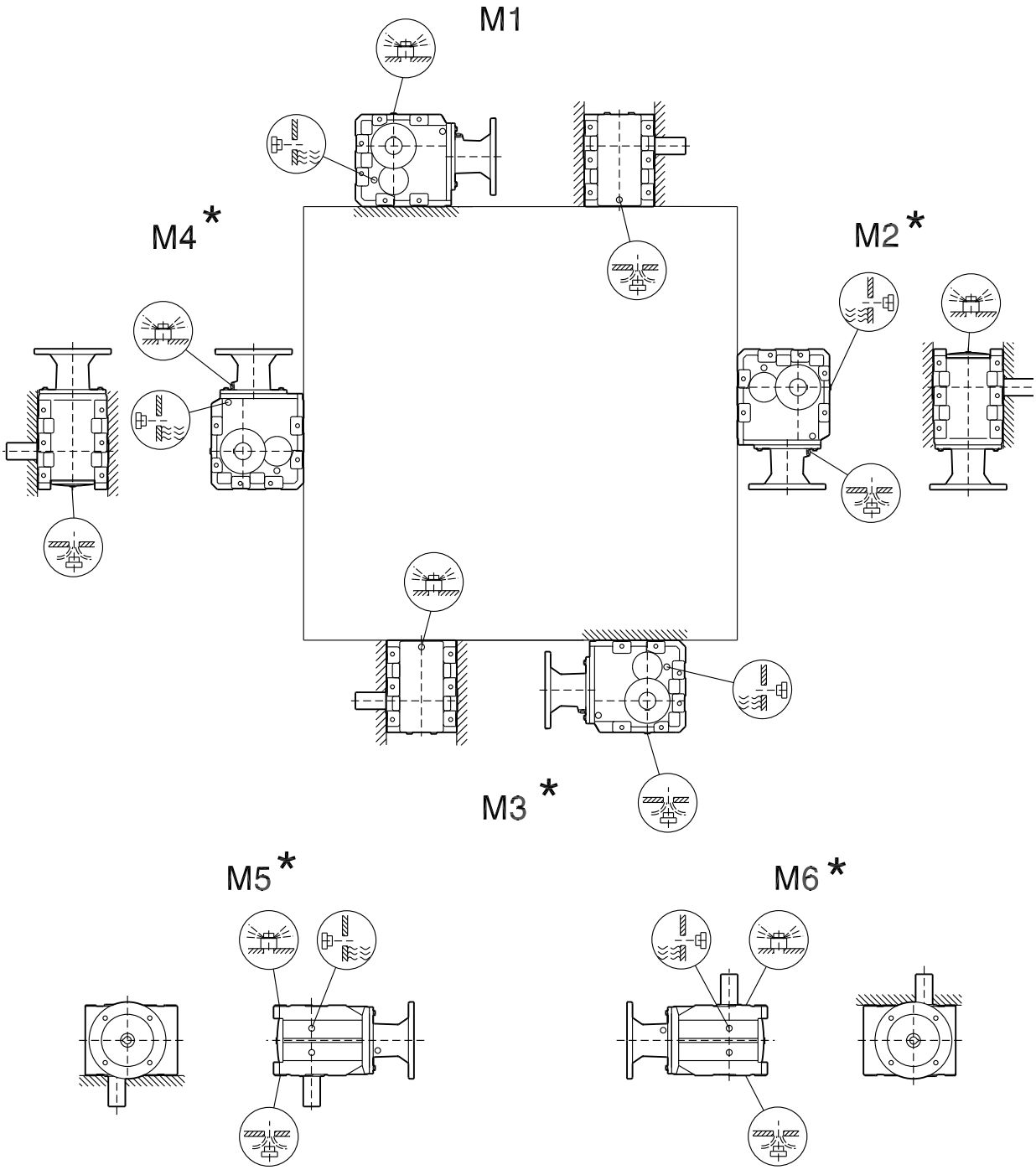

* → page 75

KF/KAF/KHF/KAZ/KHZ37-157, KVF/KVZ37-107

33 003 00 10

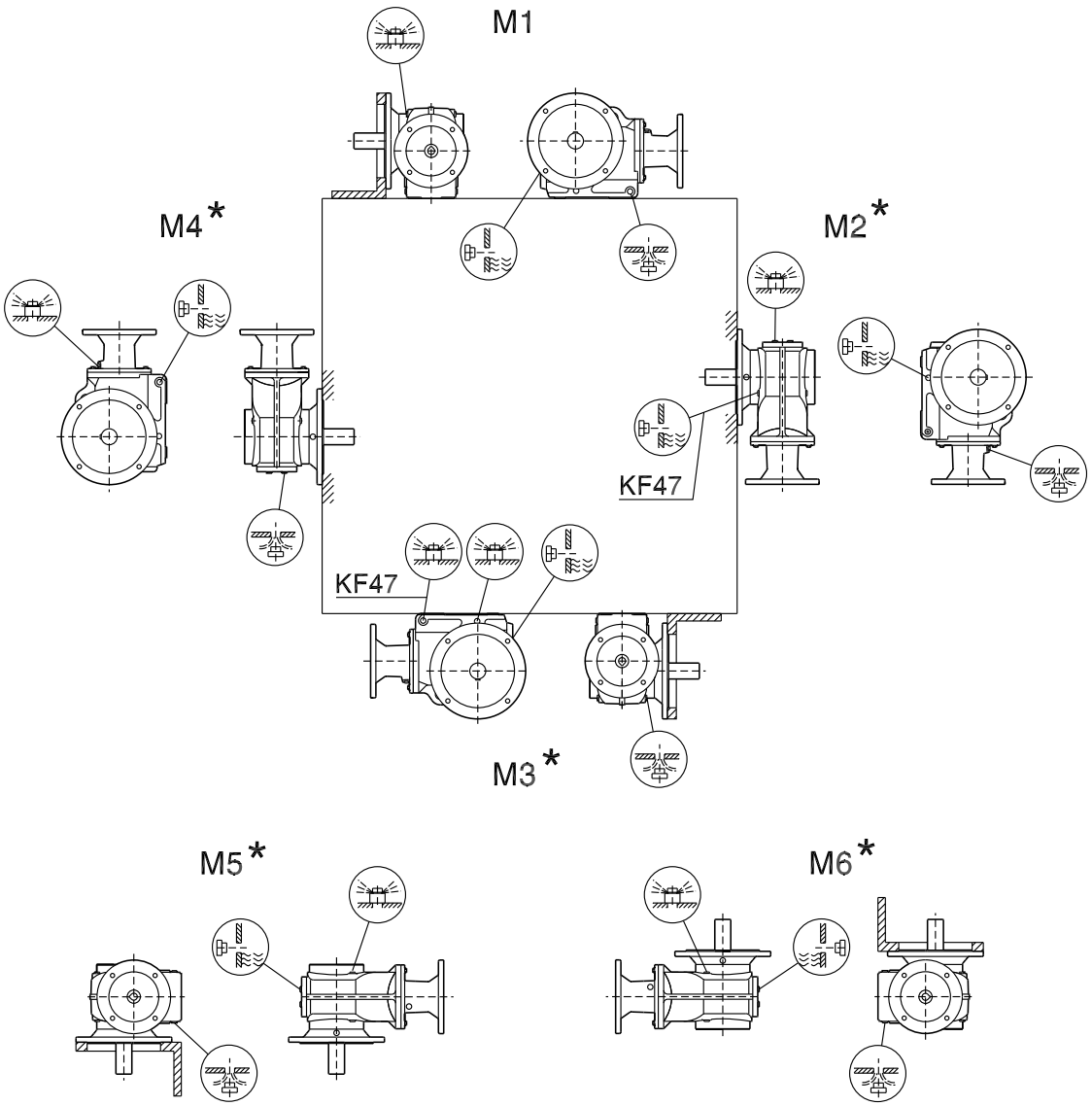

* → page 75

KA/KH37-157, KV37-107, KT37-97

33 004 00 10

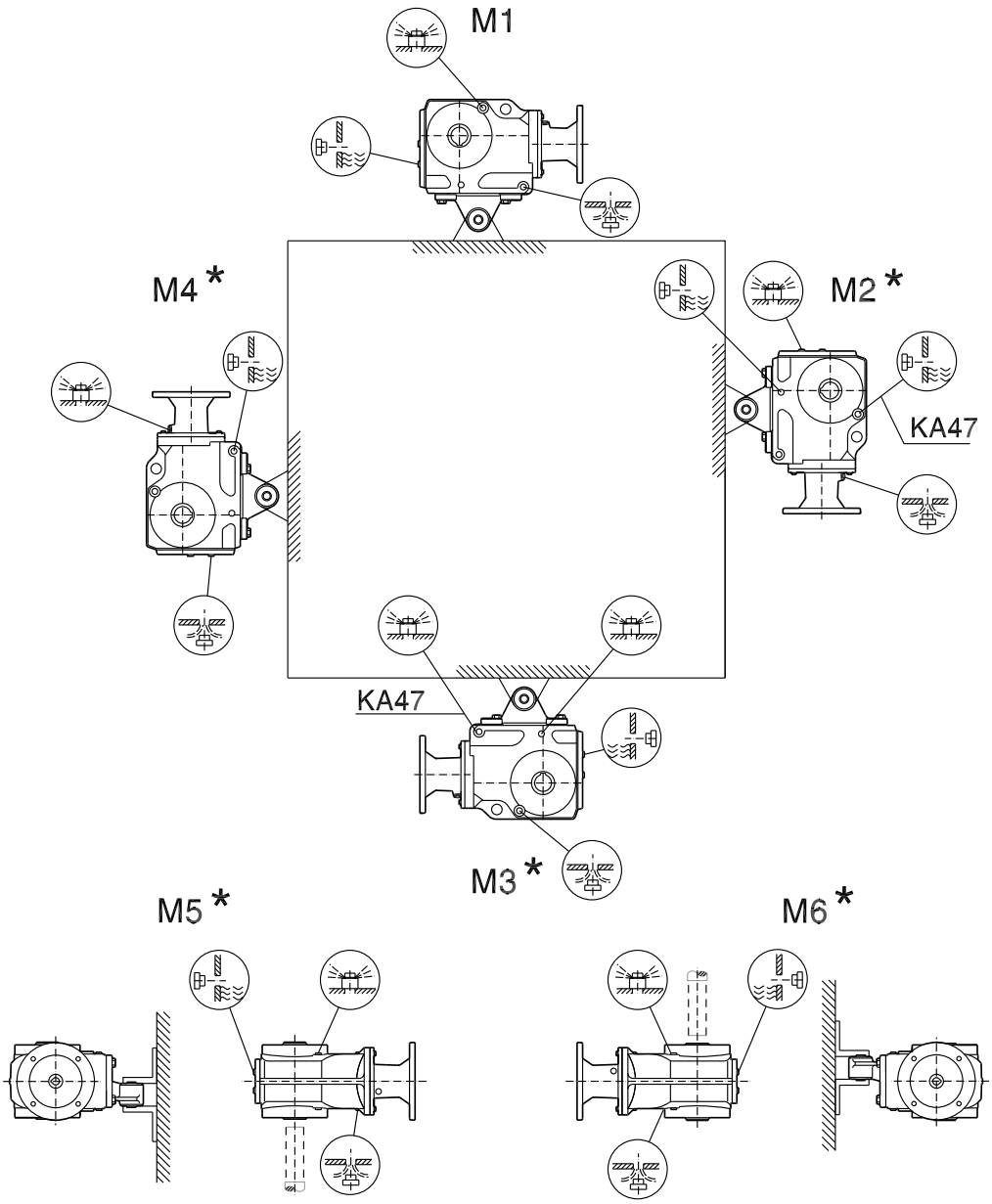

* → page 75

KH167-187

33 005 00 10

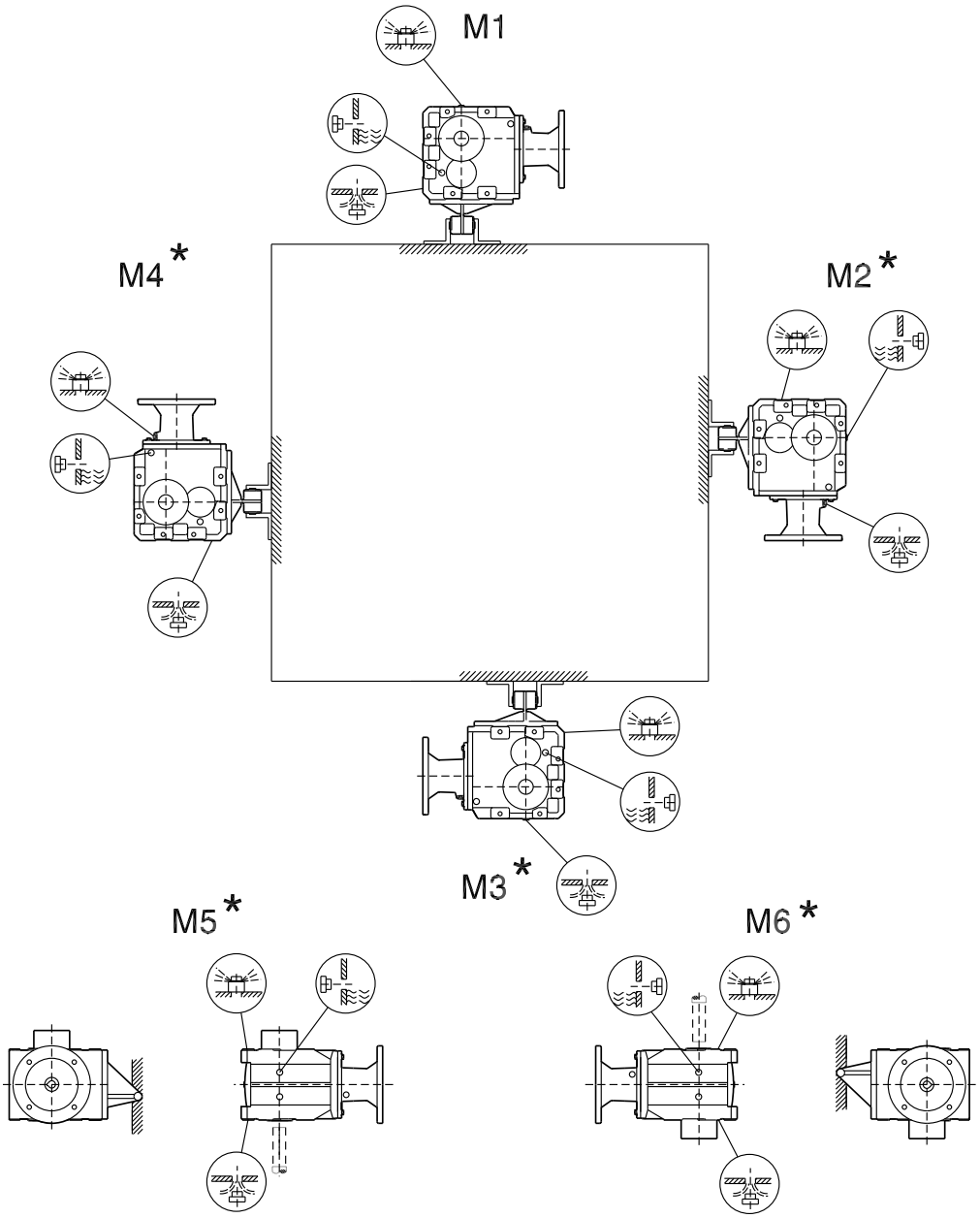

* → page 75

5.7 Mounting positions of helical-worm gear units

S37

02 001 00 10

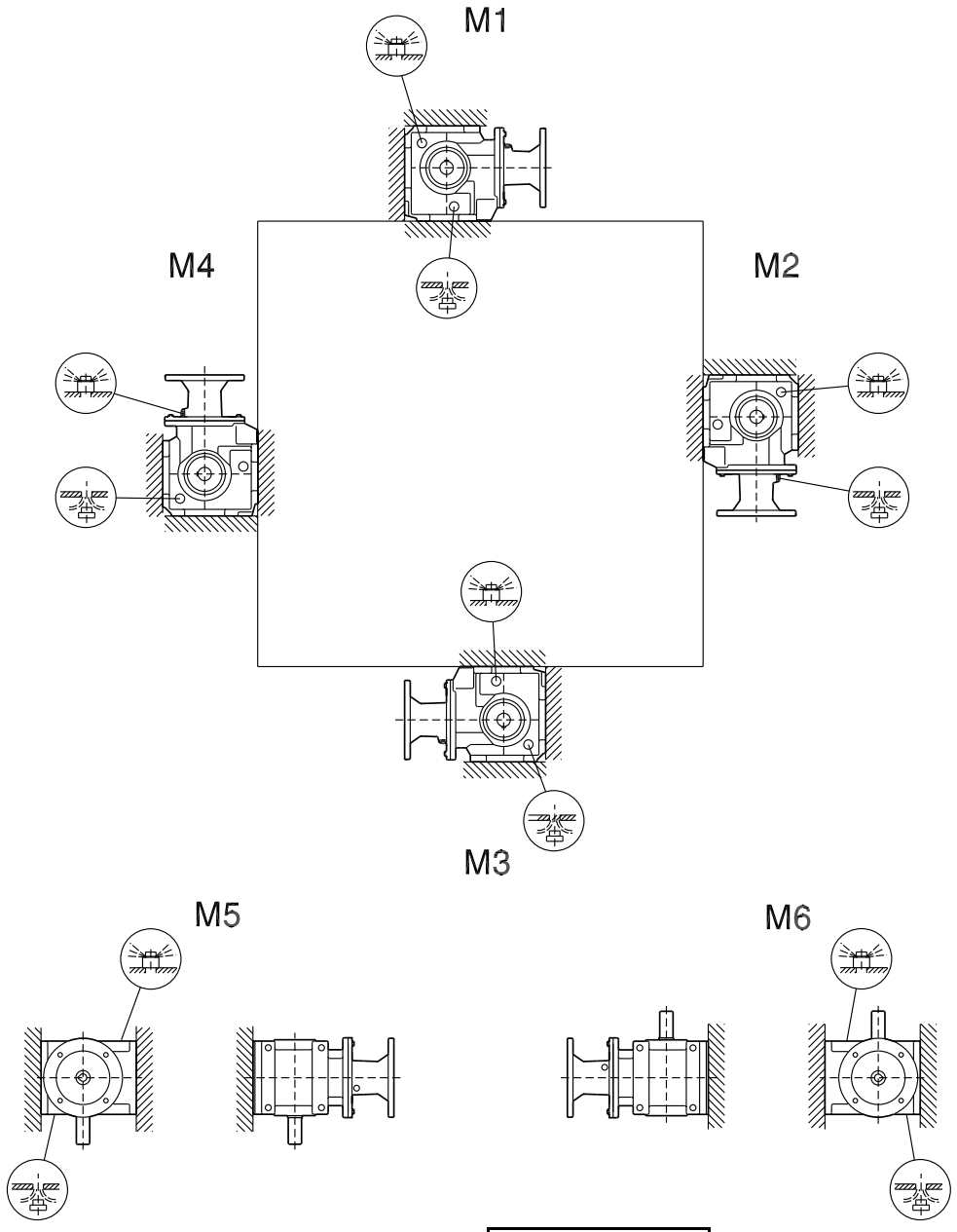

* → page 75

Important: See the (i) information in the "Gearmotors" catalog, chapter. "Project Planning for Gear Units/Overhung and axial loads" (page 34).

S47-S97

02 002 00 10

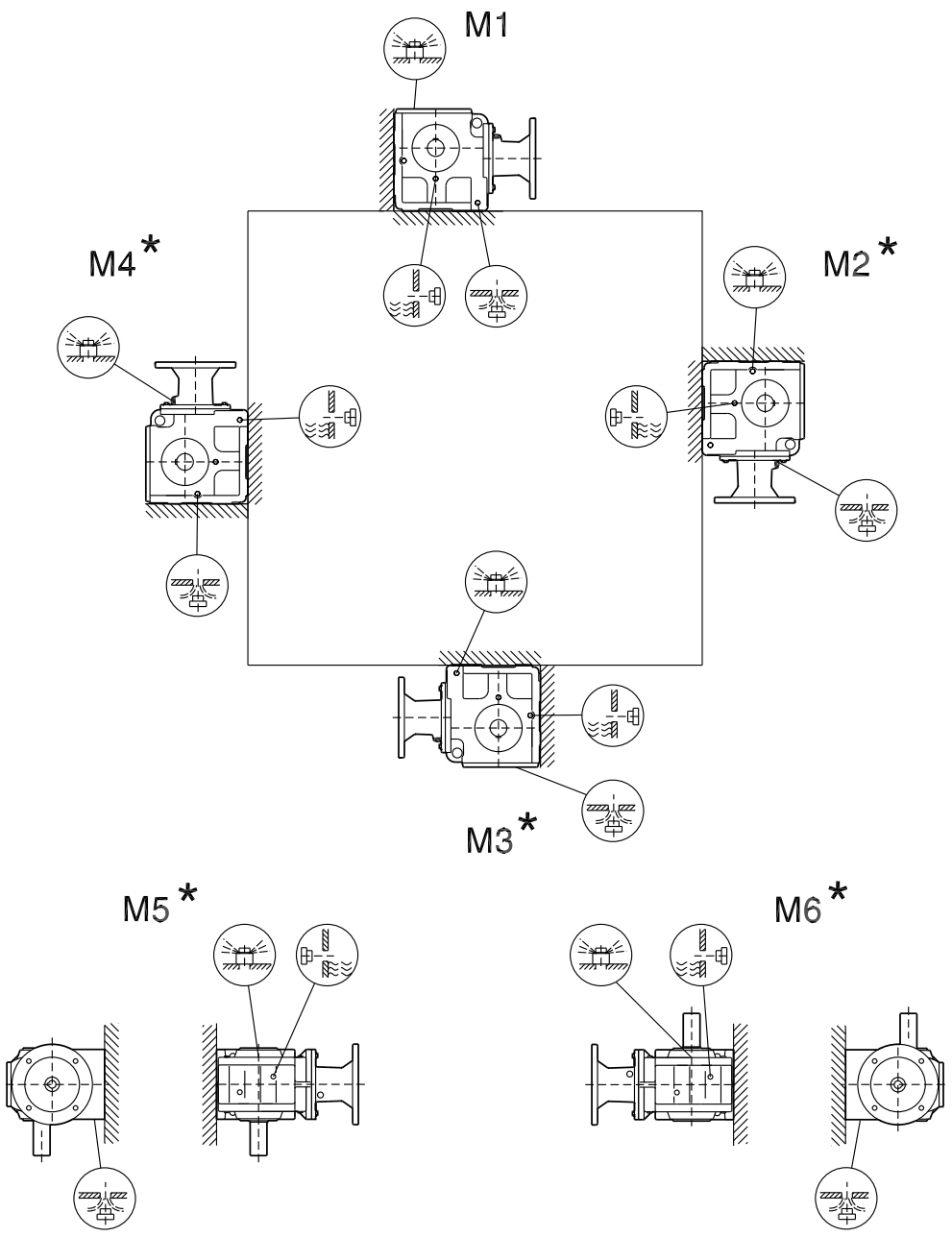

* → page 75

Important: See the (i) information in the "Geared Motors" catalog, Sec. "Project Planning for Gear Units/Overhung and axial loads" (page 34).

SF/SAF/SHF37

02 003 00 10

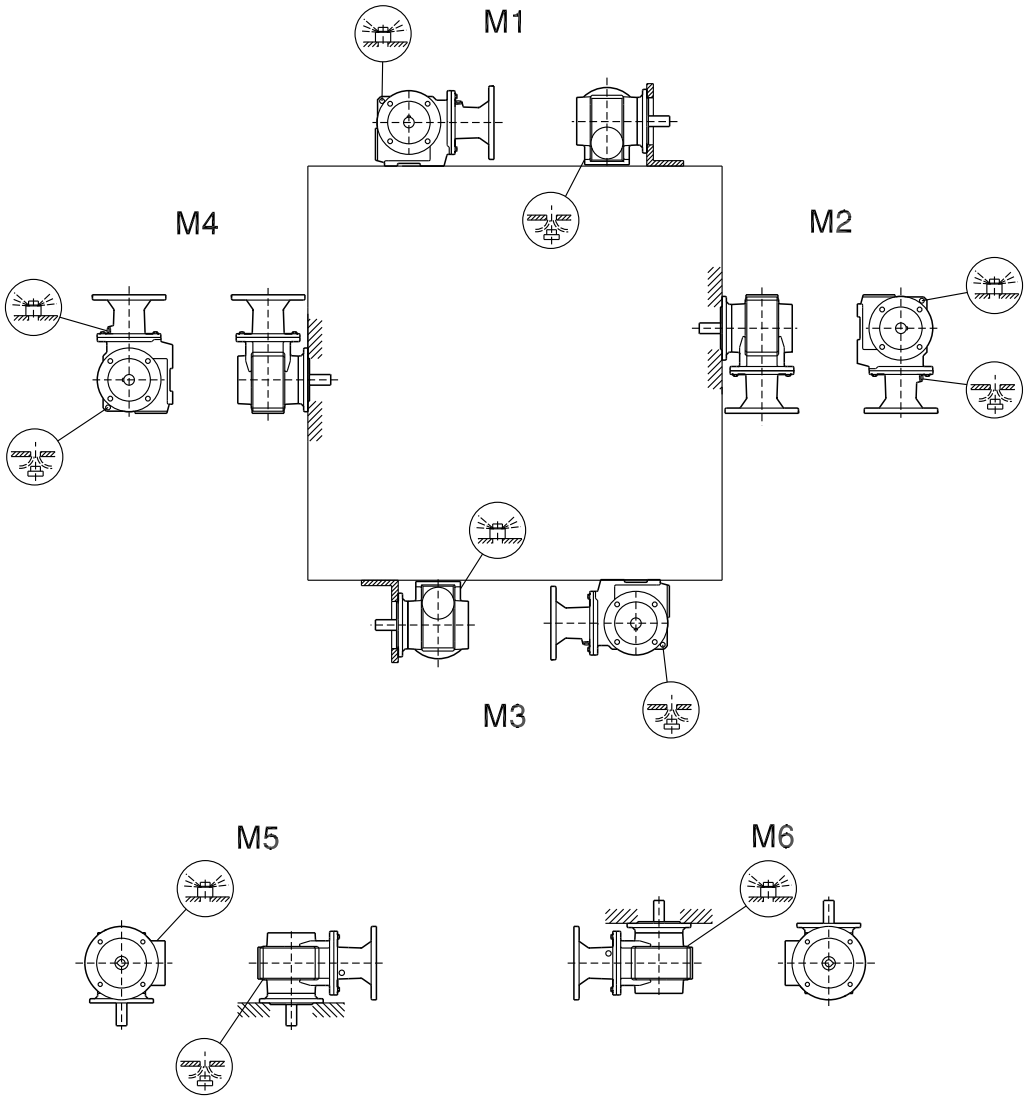

* → page 75

SF/SAF/SHF/SAZ/SHZ47-97

02 004 00 10

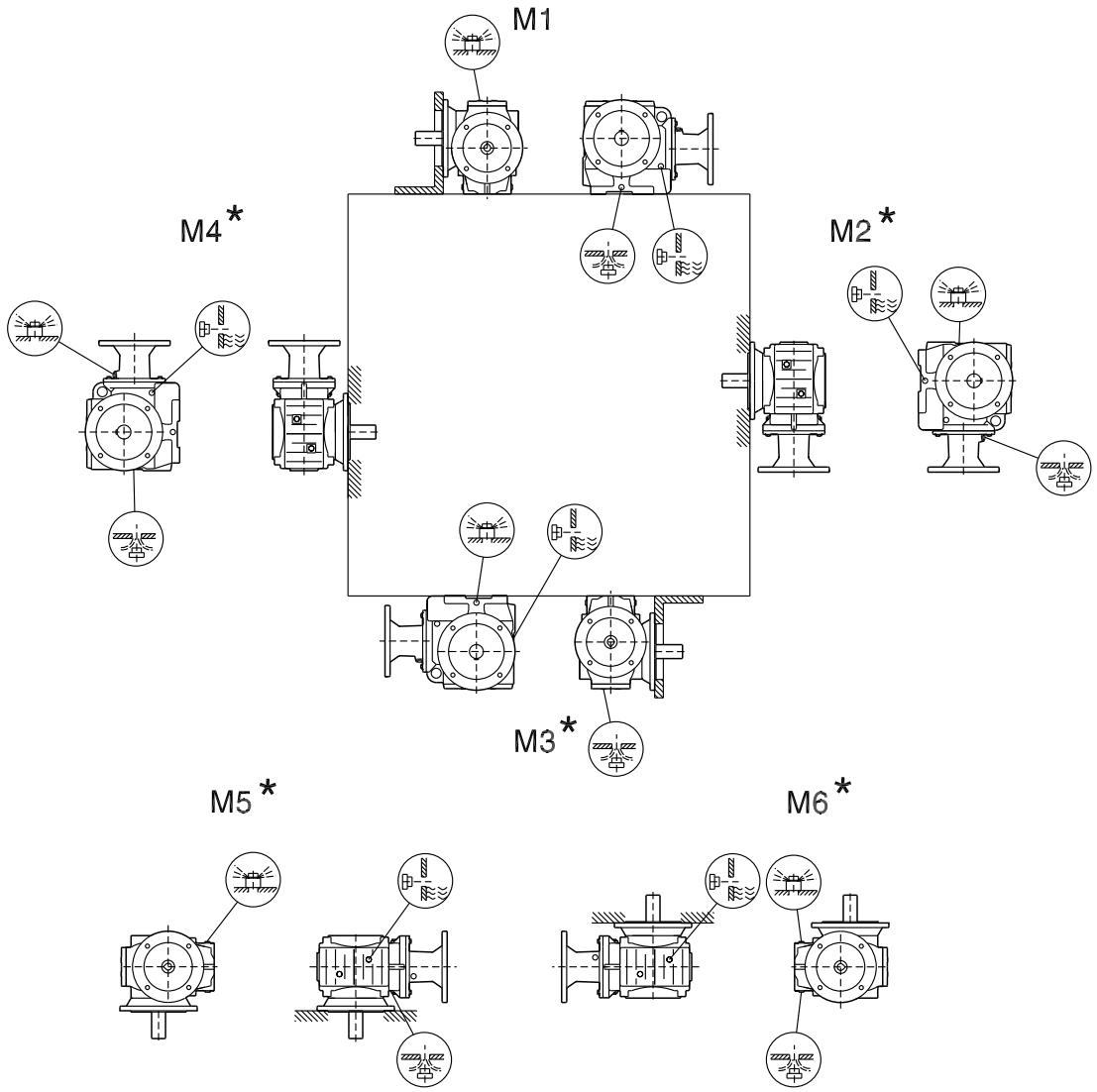

* → page 75

SA/SH/ST37

02 005 00 10

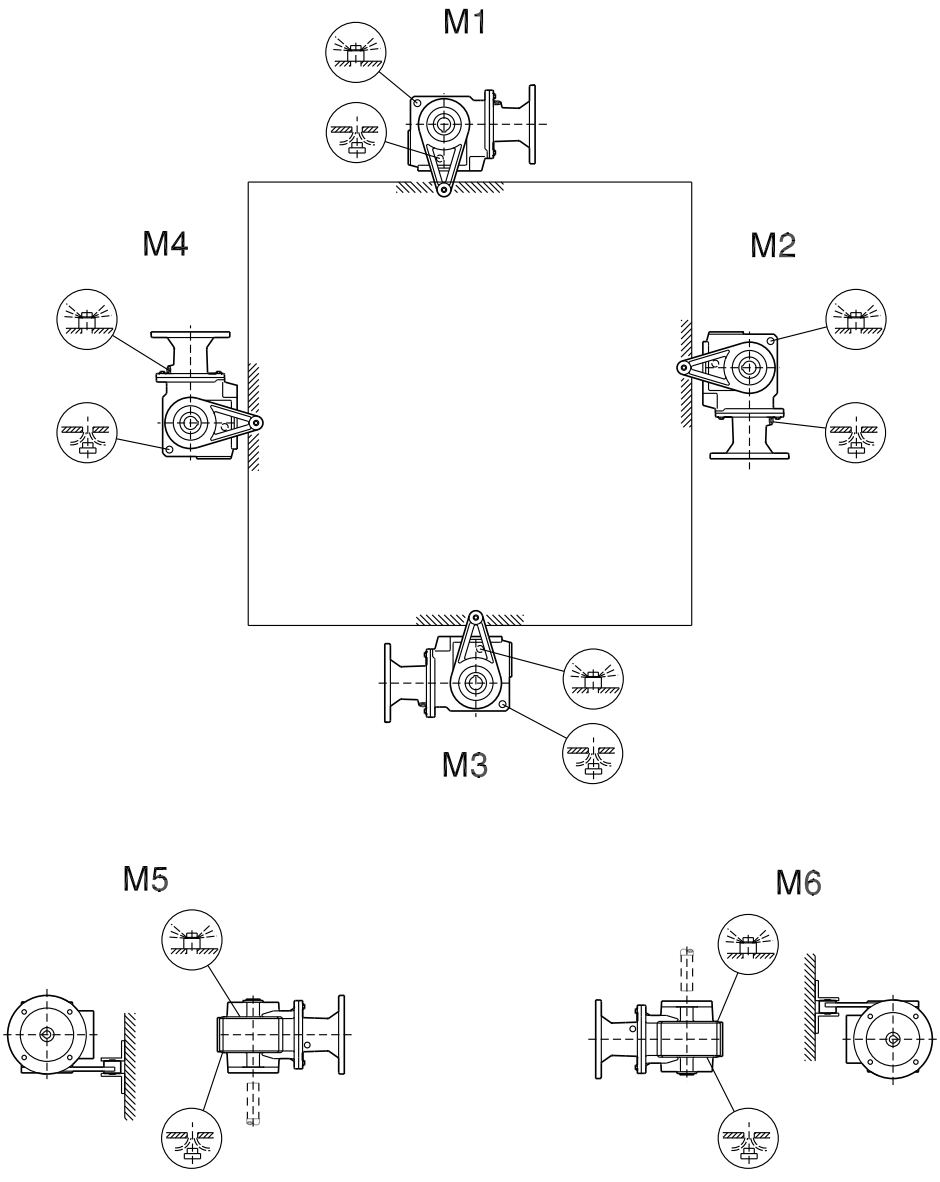

* → page 75

SA/SH/ST47-97

02 006 00 10

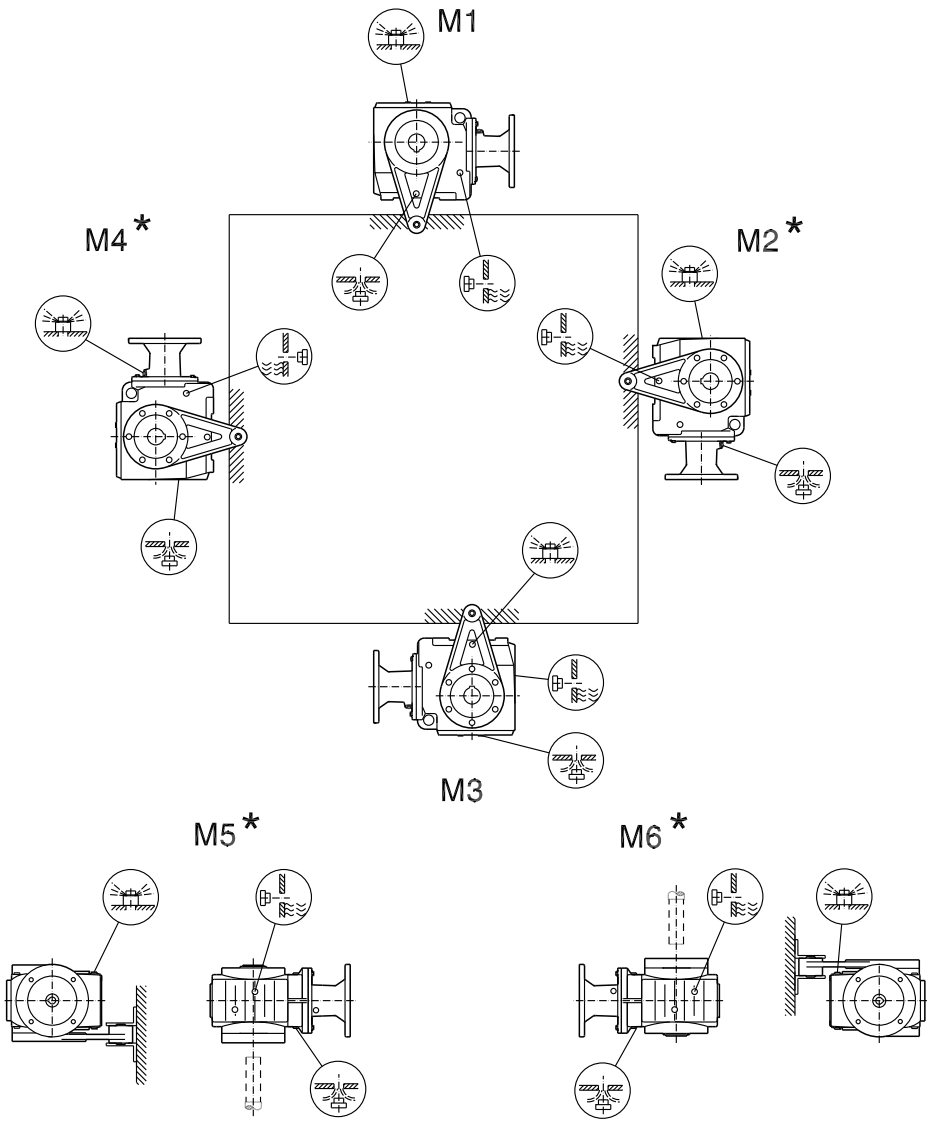

* → page 75

5.8 Mounting positions of SPIROPLAN® gear units" W/WA..B/WH37B-47B

20 002 00 10

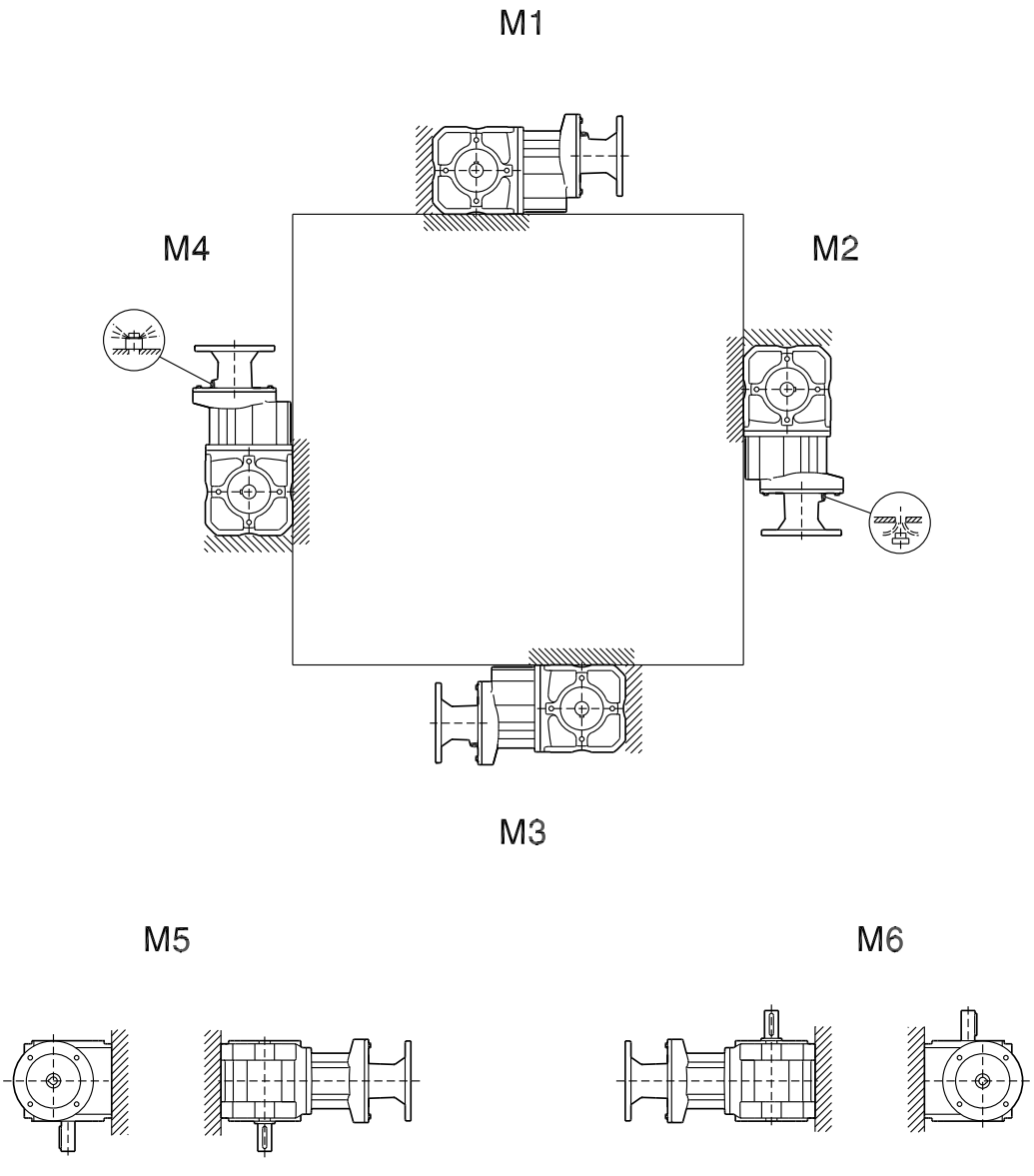

* → page 75

WF/WAF/WHF37-47

02 003 00 10

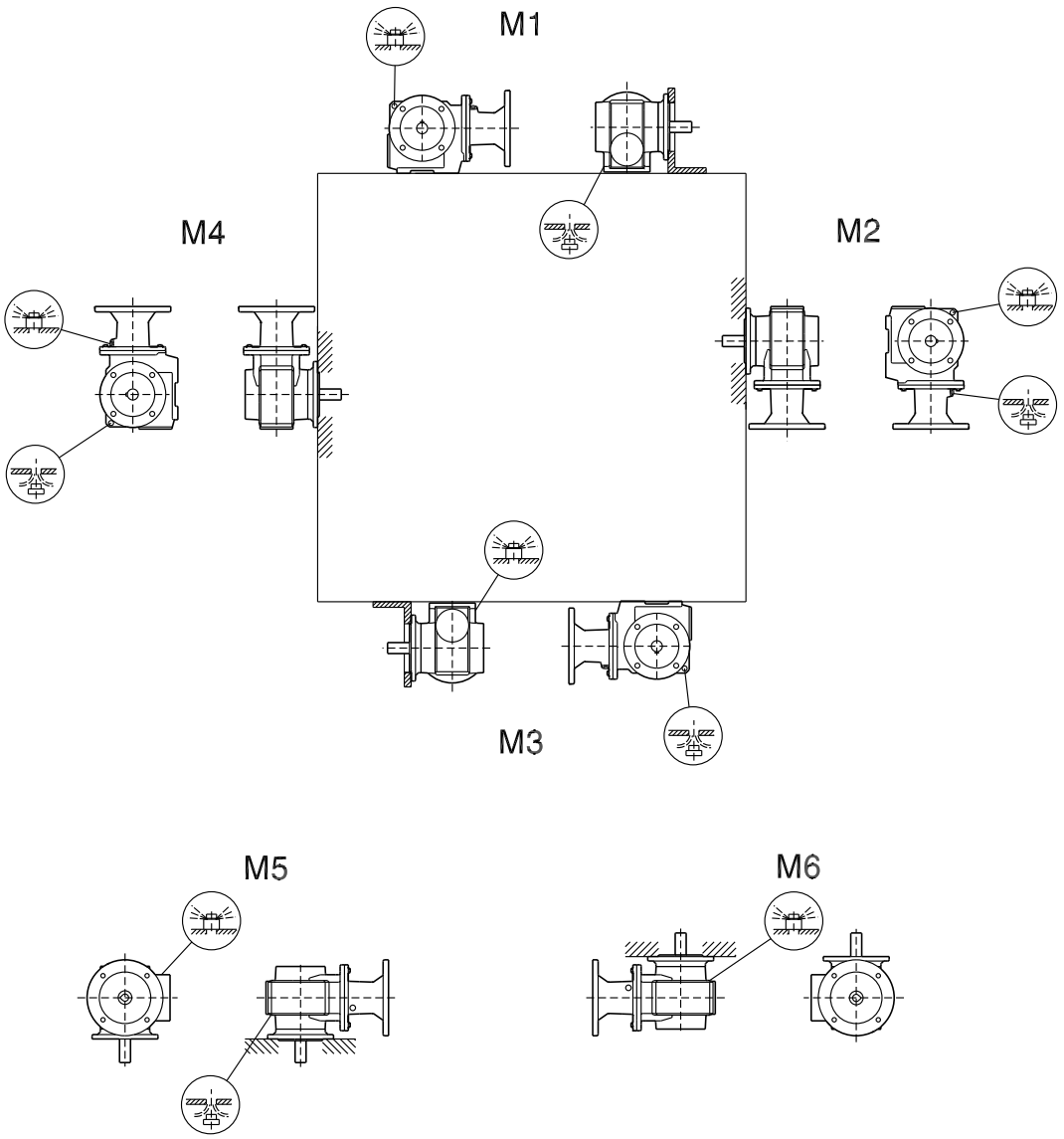

* → page 75

WA/WH/WT37-47

20 004 00 10

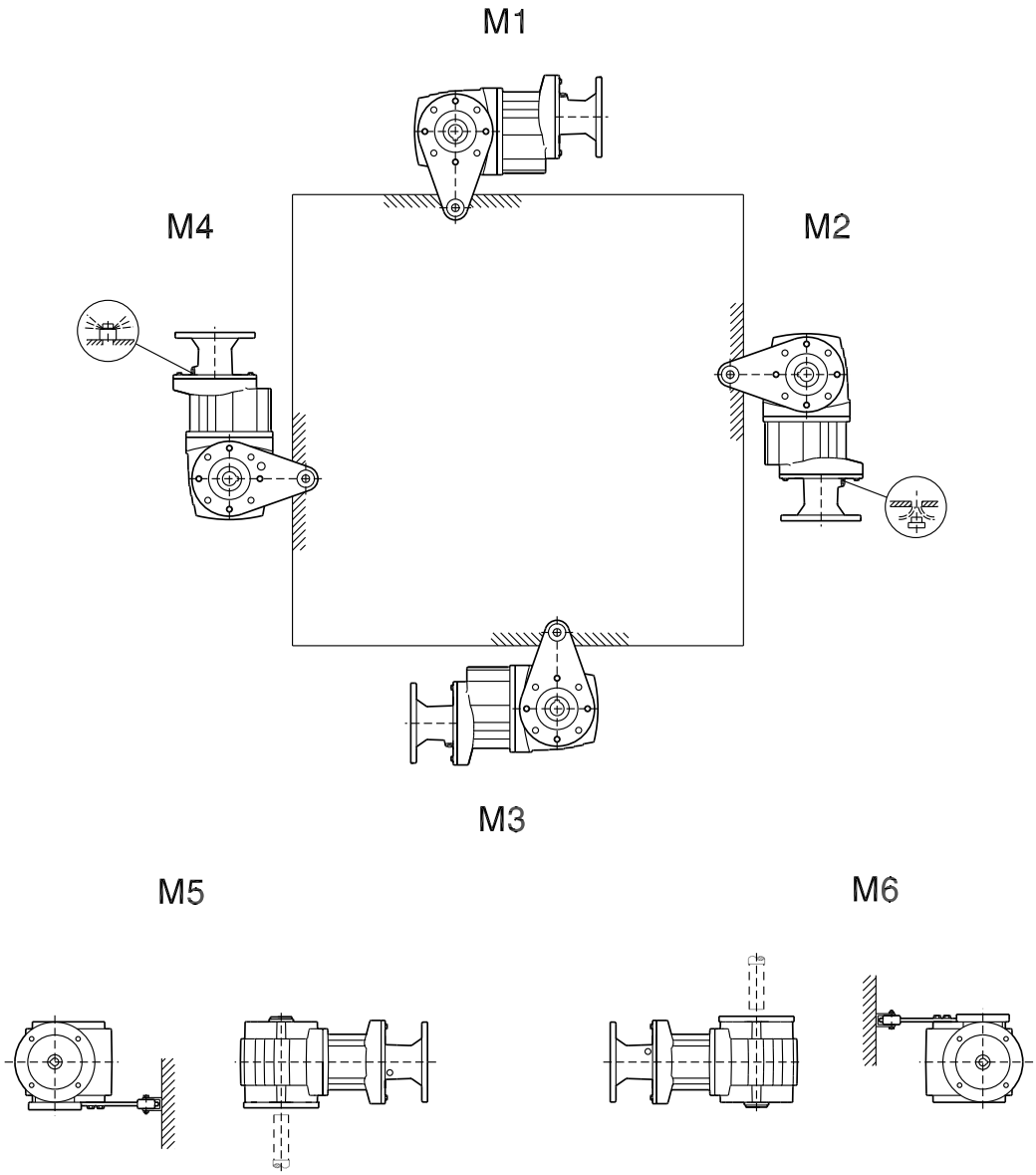

* → page 75

6 Design and Operating Notes

6.1 Lubricants and fill quantities

General information

Unless a special arrangement is made, SEW-EURODRIVE supplies the drives with a lubricant fill adapted for the specific gear unit and mounting position. The decisive factor is the mounting position (M1 - M6, see chapter "Gear Unit Mounting Positions") specified when ordering the drive. You must adapt the lubricant fill in case of any subsequent changes made to the mounting position (→ Lubricant fill quantities).

	INFORMATION
	SEW-EURODRIVE fills the gear units with the amount of oil specified for the specific mounting positions. If the mounting position is changed, the amount of oil must be adapted as required. Consequently, a **mounting position may only be changed** after consultation with SEW-EURODRIVE, otherwise your right to claim under warranty **no longer applies**.

Lubricant table

The lubricant table on the following page shows the permitted lubricants for SEW-EURODRIVE gear units. Observe the following key to the lubricant table.

Key to the lubricant table

Abbreviations, meaning of shading and notes:

CLP	= Mineral oil
CLP PG	= Polyglycol (W gear units, conforms to USDA-H1)
CLP HC	= Synthetic hydrocarbons
E	= Ester oil (water hazard classification 1)
HCE	= Synthetic hydrocarbons + ester oil (USDA - H1 certification)
HLP	= Hydraulic oil
	= Synthetic lubricant (= synthetic-based roller bearing grease)
	= Mineral lubricant (= mineral-based rolling bearing grease)
1)	Helical-worm gear units with PG oil: consult SEW-EURODRIVE.
2)	Special lubricant for SPIROPLAN® gear units only
3)	SEW-$f_B \geq 1.2$ required
4)	Observe the critical starting behavior at low temperatures.
5)	Low-viscosity grease
6)	Ambient temperature
7)	Grease
	Lubricant for the food industry (food grade oil)
	Biodegradable oil (lubricant for agriculture, forestry, and water management)

Rolling bearing greases

The rolling bearings in gear units and motors are given a factory-fill with the greases listed below. SEW-EURODRIVE recommends regreasing rolling bearings with a grease fill at the same time as changing the oil and replacing the rolling bearings.

	Ambient temperature	Manufacturer	Type
Gear unit rolling bearings	-40 °C ... +80 °C	Fuchs	Renolit CX-TOM15[1)]
	-40 °C ... +80 °C	Klüber	Petamo GHY 133 N
Special greases for gear unit rolling bearings:			
	-30 °C ... +40 °C	Aral	Aral Eural Grease EP 2
	-20 °C ... +40 °C	Fuchs	Plantogel 2S

1) Rolling bearing grease based on semi-synthetic base oil.



INFORMATION

The following grease quantities are required:

- For fast-running bearings (gear unit input end): Fill the cavities between the rolling elements one-third full with grease.
- For slow-running bearings (in gear units and at gear unit output end): Fill the cavities between the rolling elements two-thirds full with grease.

Operating fluid for hydraulic centrifugal couplings

Hydraulic centrifugal couplings are filled with hydraulic oil Shell Tellus T32 at the factory. A list with alternative oil types is available on request.

Lubricant table

The following table shows the assignment of lubricants to gear units:

01 751 05 04

	6) °C -50 0 +50 +100	DIN (ISO)	ISO,NLGI	Mobil®	Shell		ARAL	bp	TEXACO	Castrol Tribol	Castrol Optimol	FUCHS	TOTAL
R...	Standard -15 +40	CLP(CC)	VG 220	Mobilgear 600 XP 220	Shell Omala 220	Klüberoil GEM 1-220 N	Aral Degol BG 220	BP Energol GR-XP 220	Meropa 220	Tribol 1100/220	Optigear BM 220	Renolin CLP 220	Carter EP 220
	-20 +80	CLP PG	VG 220	Mobil Glygoyle 220	Shell Tivela S 220	Klübersynth GH 6-220	Aral Degol GS 220	BP Enersyn SG-XP 220	Synlube CLP 220	Tribol 800/220	Optiflex A 220	Renolin PG 220	Carter SY 220
K...(HK...)	4) -20 +60	CLP HC	VG 220	Mobil SHC 630	Shell Omala HD 220	Klübersynth GEM 4-220 N	Aral Degol PAS 220		Pinnacle EP 220	Tribol 1510/220	Optigear Synthetic X 220	Renolin Unisyn CLP 220	
	4) -40 +40	CLP HC	VG 150	Mobil SHC 629	Shell Omala HD 150	Klübersynth GEM 4-150 N			Pinnacle EP 150		Optigear Synthetic X 150	Renolin Unisyn CLP 150	Carter SH 150
	-20 +25	CLP (CC)	VG 150 VG 100	Mobilgear 600 XP 100	Shell Omala 100	Klüberoil GEM 1-150 N	Aral Degol BG 100	BP Energol GR-XP 100	Meropa 150	Tribol 1100/100	Optigear BM 100	Renolin CLP 150	Carter EP 100
	-30 +10	HLP (HM)	VG 68-46 VG 32	Mobil DTE 10 Excel 32	Shell Tellus T 32	Klüberoil GEM 1-68 N	Aral Degol BG 46		Rando EP Ashless 46	Tribol 1100/68	Optigear 32	Renolin B 46 HVI	Equivis ZS 46
F...	4) -40 +20	CLP HC	VG 68	Mobil SHC 626	Shell Omala HD 68							Renolin Unisyn CLP 68	
	4) -40 + 0	CLP HC	VG 32	Mobil SHC 624		Klüber-Summit HySyn FG-32			Cetus PAO 46		Optilleb HY 32	Renolin Unisyn OL 32	Dacnis SH 32
	4) -40 -20	HLP (HM)	VG 22 VG 15	Mobil DTE 10 Excel 15	Shell Tellus T 15	Isoflex MT 30 ROT		BP Energol HLP-HM 15	Rando HDZ 15		Hyspin AWS 22	Renolin MR 310	Equivis ZS 15
	Standard 0 +40	CLP (CC)	VG 680	Mobilgear 600 XP 680	Shell Omala 680	Klüberoil GEM 1-680 N	Aral Degol BG 680	BP Energol GR-XP 680	Meropa 680	Tribol 1100/680	Optigear BM 680	Renolin SEW 680	Carter EP 680
	-20 +80	CLP PG	VG 680 1)	Mobil Glygoyle 680	Shell Tivela S 680	Klübersynth GH 6-680		BP Enersyn SG-XP 680	Synlube CLP 680	Tribol 800/680	Optiflex A 680	Renolin PG 680	
S...(HS...)	4) -20 +60	CLP HC	VG 460	Mobil SHC 634	Shell Omala HD 460	Klübersynth GEM 4-460 N			Pinnacle EP 460		Optigear Synthetic X 460	Renolin Unisyn CLP 460	
	4) -40 +30	CLP HC	VG 150	Mobil SHC 629	Shell Omala HD 150	Klübersynth GEM 4-150 N			Pinnacle EP 150		Optigear Synthetic X 150	Renolin Unisyn CLP 150	Carter SH 150
	-20 +10	CLP (CC)	VG 150 VG 100	Mobilgear 600 XP 100	Shell Omala 100	Klüberoil GEM 1-150 N	Aral Degol BG 100	BP Energol GR-XP 100	Meropa 150	Tribol 1100/100	Optigear BM 100	Renolin CLP 150	Carter EP 100
	-20 +40	CLP PG	VG 220 1)	Mobil Glygoyle 220	Shell Tivela S 220	Klübersynth GH 6-220	Aral Degol GS 220	BP Enersyn SG-XP 220	Synlube CLP 220	Tribol 800/220	Optiflex A 220	Renolin PG 220	Carter SY 220
	4) -40 +20	CLP HC	VG 68	Mobil SHC 626	Shell Omala HD 68							Renolin Unisyn CLP 68	
	4) -40 0	CLP HC	VG 32	Mobil SHC 624		Klüber-Summit HySyn FG-32			Cetus PAO 46		Alphasyn T32	Renolin Unisyn OL 32	Dacnis SH 32
	4) -10 +40	CLPHC NSF H1	VG 460		Shell Cassida Fluid GL 460	Klüberoil 4UH1-460 N					Optileb GT 460	Geralyn SF 460	
R...K...(HK...), F...S...(HS...)	-20 +30		VG 220		Shell Cassida Fluid GL 220	Klüberoil 4UH1-220 N					Optileb GT 220		
	-40 0		VG 68		Shell Cassida Fluid HF 68	Klüberoil 4UH1-68 N					Optileb HY 68		
		E	VG 460			Klüberbio CA2-460				Tribol Bio Top 1418/460		Plantogear 460 S	
	Standard -20 +40	CLP PG 460 -SEW	VG 460 2)			Klüber SEW HT-460-5							
W...(HW...)	4) -40 +10	API GL5	SAE 75W90 (~VG 100)	Mobil Synthetic Gear Oil 75 W90									
		H1 PG	VG 460 2) 3)			Klübersynth UH1 6-460							
	Standard -20 +40	CLP PG	VG 220			Klübersynth GH 6-220							
PS.F..	-20 +60	H1 PG	VG 460 2) 3)			Klübersynth UH1 6-460							
	-40 0	CLP HC	VG 32	Mobil SHC 624									
	Standard	CLP (CC)	VG 220	Mobilgear 600 XP 220									
PS.C..	-20 +40	DIN 51 818	00 5)	Mobilux EP 004									
	-20 +40		1 7)			Klübersynth UH1 14-151							
	-40 0	CLP HC	VG 32	Mobil SHC 624									
	Standard -40 +40	API GL5	SAE 75W90 (~VG 100)	Mobil Synth Gear Oil 75 W90									
BS.F..	-20 +60	H1 PG	VG 460 2) 3)			Klübersynth UH1 6-460							

Lubricant fill quantities

The specified fill quantities are **recommended values**. The precise values vary depending on the number of stages and gear ratio. When filling, it is essential to check the **oil level plug since it indicates the precise oil volume**.

The following tables show guide values for lubricant fill quantities in relation to the mounting position M1 - M6.

Helical (R) gear units

RX..

Gear unit	Fill quantity in liters					
	M1	M2	M3	M4	M5	M6
RX57	0.60	0.80	1.30	1.30	0.90	0.90
RX67	0.80	0.80	1.70	1.90	1.10	1.10
RX77	1.10	1.50	2.60	2.70	1.60	1.60
RX87	1.70	2.50	4.80	4.80	2.90	2.90
RX97	2.10	3.40	7.4	7.0	4.80	4.80
RX107	3.90	5.6	11.6	11.9	7.7	7.7

RXF..

Gear unit	Fill quantity in liters					
	M1	M2	M3	M4	M5	M6
RXF57	0.50	0.80	1.10	1.10	0.70	0.70
RXF67	0.70	0.80	1.50	1.40	1.00	1.00
RXF77	0.90	1.30	2.40	2.00	1.60	1.60
RXF87	1.60	1.95	4.90	3.95	2.90	2.90
RXF97	2.10	3.70	7.1	6.3	4.80	4.80
RXF107	3.10	5.7	11.2	9.3	7.2	7.2

R.., R..F

Gear unit	Fill quantity in liters					
	M1[1)]	M2[1)]	M3	M4	M5	M6
R07	0.12	0.20	0.20	0.20	0.20	0.20
R17	0.25	0.55	0.35	0.55	0.35	0.40
R27	0.25/0.40	0.70	0.50	0.70	0.50	0.50
R37	0.30/0.95	0.85	0.95	1.05	0.75	0.95
R47	0.70/1.50	1.60	1.50	1.65	1.50	1.50
R57	0.80/1.70	1.90	1.70	2.10	1.70	1.70
R67	1.10/2.30	2.40/3.20	2.80	2.90	1.80	2.00
R77	1.20/3.00	3.30/4.20	3.60	3.80	2.50	3.40
R87	2.30/6.0	6.4/8.1	7.2	7.2	6.3	6.5
R97	4.60/9.8	11.7/14.0	11.7	13.4	11.3	11.7
R107	6.0/13.7	16.3	16.9	19.2	13.2	15.9
R137	10.0/25.0	28.0	29.5	31.5	25.0	25.0
R147	15.4/40.0	46.5	48.0	52.0	39.5	41.0
R167	27.0/70.0	82.0	78.0	88.0	66.0	69.0

1) The larger gear unit of multi-stage gear units must be filled with the larger oil volume.

RF..

Gear unit	Fill quantity in liters					
	M1[1)]	M2[1)]	M3	M4	M5	M6
RF07	0.12	0.20	0.20	0.20	0.20	0.20
RF17	0.25	0.55	0.35	0.55	0.35	0.40
RF27	0.25/0.40	0.70	0.50	0.70	0.50	0.50
RF37	0.35/0.95	0.90	0.95	1.05	0.75	0.95
RF47	0.65/1.50	1.60	1.50	1.65	1.50	1.50
RF57	0.80/1.70	1.80	1.70	2.00	1.70	1.70
RF67	1.20/2.50	2.50/3.20	2.70	2.80	1.90	2.10
RF77	1.20/2.60	3.10/4.10	3.30	3.60	2.40	3.00
RF87	2.40/6.0	6.4/8.2	7.1	7.2	6.3	6.4
RF97	5.1/10.2	11.9/14.0	11.2	14.0	11.2	11.8
RF107	6.3/14.9	15.9	17.0	19.2	13.1	15.9
RF137	9.5/25.0	27.0	29.0	32.5	25.0	25.0
RF147	16.4/42.0	47.0	48.0	52.0	42.0	42.0
RF167	26.0/70.0	82.0	78.0	88.0	65.0	71.0

1) The larger gear unit of multi-stage gear units must be filled with the larger oil volume.

Parallel shaft helical (F) gear units

F.., FA..B, FH..B, FV..B

Gear unit	Fill quantity in liters					
	M1	M2	M3	M4	M5	M6
F..27	0.60	0.80	0.65	0.70	0.60	0.60
F..37	0.95	1.25	0.70	1.25	1.00	1.10
F..47	1.50	1.80	1.10	1.90	1.50	1.70
F..57	2.60	3.50	2.10	3.50	2.80	2.90
F..67	2.70	3.80	1.90	3.80	2.90	3.20
F..77	5.9	7.3	4.30	8.0	6.0	6.3
F..87	10.8	13.0	7.7	13.8	10.8	11.0
F..97	18.5	22.5	12.6	25.2	18.5	20.0
F..107	24.5	32.0	19.5	37.5	27.0	27.0
F..127	40.5	54.5	34.0	61.0	46.3	47.0
F..157	69.0	104.0	63.0	105.0	86.0	78.0

FF..

Gear unit	Fill quantity in liters					
	M1	M2	M3	M4	M5	M6
FF27	0.60	0.80	0.65	0.70	0.60	0.60
FF37	1.00	1.25	0.70	1.30	1.00	1.10
FF47	1.60	1.85	1.10	1.90	1.50	1.70
FF57	2.80	3.50	2.10	3.70	2.90	3.00
FF67	2.70	3.80	1.90	3.80	2.90	3.20
FF77	5.9	7.3	4.30	8.1	6.0	6.3
FF87	10.8	13.2	7.8	14.1	11.0	11.2
FF97	19.0	22.5	12.6	25.6	18.9	20.5
FF107	25.5	32.0	19.5	38.5	27.5	28.0
FF127	41.5	55.5	34.0	63.0	46.3	49.0
FF157	72.0	105.0	64.0	106.0	87.0	79.0

FA.., FH.., FV.., FAF.., FAZ.., FHF.., FHZ.., FVF.., FVZ.., FT..

Gear unit	Fill quantity in liters					
	M1	M2	M3	M4	M5	M6
F..27	0.60	0.80	0.65	0.70	0.60	0.60
F..37	0.95	1.25	0.70	1.25	1.00	1.10
F..47	1.50	1.80	1.10	1.90	1.50	1.70
F..57	2.70	3.50	2.10	3.40	2.90	3.00
F..67	2.70	3.80	1.90	3.80	2.90	3.20
F..77	5.9	7.3	4.30	8.0	6.0	6.3
F..87	10.8	13.0	7.7	13.8	10.8	11.0
F..97	18.5	22.5	12.6	25.2	18.5	20.0
F..107	24.5	32.0	19.5	37.5	27.0	27.0
F..127	39.0	54.5	34.0	61.0	45.0	46.5
F..157	68.0	103.0	62.0	104.0	85.0	79.5

Helical-bevel (K) gear units

K.., KA..B, KH..B, KV..B

Gear unit	Fill quantity in liters					
	M1	M2	M3	M4	M5	M6
K..37	0.50	1.00	1.00	1.25	0.95	0.95
K..47	0.80	1.30	1.50	2.00	1.60	1.60
K..57	1.10	2.20	2.20	2.80	2.30	2.10
K..67	1.10	2.40	2.60	3.45	2.60	2.60
K..77	2.20	4.10	4.40	5.8	4.20	4.40
K..87	3.70	8.0	8.7	10.9	8.0	8.0
K..97	7.0	14.0	15.7	20.0	15.7	15.5
K..107	10.0	21.0	25.5	33.5	24.0	24.0
K..127	21.0	41.5	44.0	54.0	40.0	41.0
K..157	31.0	62.0	65.0	90.0	58.0	62.0
K..167	33.0	95.0	105.0	123.0	85.0	84.0
K..187	53.0	152.0	167.0	200	143.0	143.0

KF..

Gear unit	Fill quantity in liters					
	M1	M2	M3	M4	M5	M6
KF37	0.50	1.10	1.10	1.50	1.00	1.00
KF47	0.80	1.30	1.70	2.20	1.60	1.60
KF57	1.20	2.20	2.40	3.15	2.50	2.30
KF67	1.10	2.40	2.80	3.70	2.70	2.70
KF77	2.10	4.10	4.40	5.9	4.50	4.50
KF87	3.70	8.2	9.0	11.9	8.4	8.4
KF97	7.0	14.7	17.3	21.5	15.7	16.5
KF107	10.0	21.8	25.8	35.1	25.2	25.2
KF127	21.0	41.5	46.0	55.0	41.0	41.0
KF157	31.0	66.0	69.0	92.0	62.0	62.0

KA.., KH.., KV.., KAF.., KHF.., KVF.., KAZ.., KHZ.., KVZ.., KT..

Gear unit	Fill quantity in liters					
	M1	M2	M3	M4	M5	M6
K..37	0.50	1.00	1.00	1.40	1.00	1.00
K..47	0.80	1.30	1.60	2.15	1.60	1.60
K..57	1.20	2.20	2.40	3.15	2.70	2.40
K..67	1.10	2.40	2.70	3.70	2.60	2.60
K..77	2.10	4.10	4.60	5.9	4.40	4.40
K..87	3.70	8.2	8.8	11.1	8.0	8.0
K..97	7.0	14.7	15.7	20.0	15.7	15.7
K..107	10.0	20.5	24.0	32.4	24.0	24.0
K..127	21.0	41.5	43.0	52.0	40.0	40.0
K..157	31.0	66.0	67.0	87.0	62.0	62.0

Helical-worm (S) gear units

S

Gear unit	Fill quantity in liters					
	M1	M2	M3[1)]	M4	M5	M6
S..37	0.25	0.40	0.50	0.55	0.40	0.40
S..47	0.35	0.80	0.70/0.90	1.00	0.80	0.80
S..57	0.50	1.20	1.00/1.20	1.45	1.30	1.30
S..67	1.00	2.00	2.20/3.10	3.10	2.60	2.60
S..77	1.90	4.20	3.70/5.4	5.9	4.40	4.40
S..87	3.30	8.1	6.9/10.4	11.3	8.4	8.4
S..97	6.8	15.0	13.4/18.0	21.8	17.0	17.0

1) The larger gear unit of multi-stage gear units must be filled with the larger oil volume.

SF..

Gear unit	Fill quantity in liters					
	M1	M2	M3[1)]	M4	M5	M6
SF37	0.25	0.40	0.50	0.55	0.40	0.40
SF47	0.40	0.90	0.90/1.05	1.05	1.00	1.00
SF57	0.50	1.20	1.00/1.50	1.55	1.40	1.40
SF67	1.00	2.20	2.30/3.00	3.20	2.70	2.70
SF77	1.90	4.10	3.90/5.8	6.5	4.90	4.90
SF87	3.80	8.0	7.1/10.1	12.0	9.1	9.1
SF97	7.4	15.0	13.8/18.8	22.6	18.0	18.0

1) The larger gear unit of multi-stage gear units must be filled with the larger oil volume.

SA.., SH.., SAF.., SHZ.., SAZ.., SHF.., ST..

Gear unit	Fill quantity in liters					
	M1	M2	M3[1)]	M4	M5	M6
S..37	0.25	0.40	0.50	0.50	0.40	0.40
S..47	0.40	0.80	0.70/0.90	1.00	0.80	0.80
S..57	0.50	1.10	1.00/1.50	1.50	1.20	1.20
S..67	1.00	2.00	1.80/2.60	2.90	2.50	2.50
S..77	1.80	3.90	3.60/5.0	5.8	4.50	4.50
S..87	3.80	7.4	6.0/8.7	10.8	8.0	8.0
S..97	7.0	14.0	11.4/16.0	20.5	15.7	15.7

1) The larger gear unit of multi-stage gear units must be filled with the larger oil volume.

SPIROPLAN® (W) gear units

W.., WF.., WA..B, WH..B

Gear unit	Fill quantity in liters					
	M1	M2	M3	M4	M5	M6
W..10	0.16					
W..20	0.24					
W..30	0.40					
W..37	0.50			0.70	0.50	
W..47	0.90			1.40	0.90	

WA.., WAF.., WT.., WH.., WHF..

Gear unit	Fill quantity in liters					
	M1	M2	M3	M4	M5	M6
W..10	0.16					
W..20	0.24					
W..30	0.40					
W..37	0.50			0.70	0.50	
W..47	0.80			1.25	0.80	

6.2 Reduced backlash gear unit types

Helical, parallel shaft helical and helical-bevel gear units with reduced backlash are available from gear unit size 37. The circumferential backlash of these gear units is considerably less than that of the standard versions so that positioning tasks can be solved with great precision. The circumferential backlash is specified in angular minutes ['] in the technical data. The circumferential backlash for the output shaft is specified without load (max. 1% of the rated output torque); the gear unit input end is blocked. The reduced backlash variant is available for the following gear units:

- Helical gear units (R), sizes 37 to 167
- Parallel-shaft gear units (F), sizes 37 to 157
- Helical-bevel gear units (K), sizes 37 to 187

Multi-stage gear units are not available in reduced backlash variants.

The dimensions of the reduced backlash variants correspond to the dimensions of the standard designs, except for parallel-shaft gear units FH.87 and FH.97 with reduced backlash.

The following figure shows the dimensions of the FH.87 and FH.97 gear units with reduced backlash:

42 020 00 09

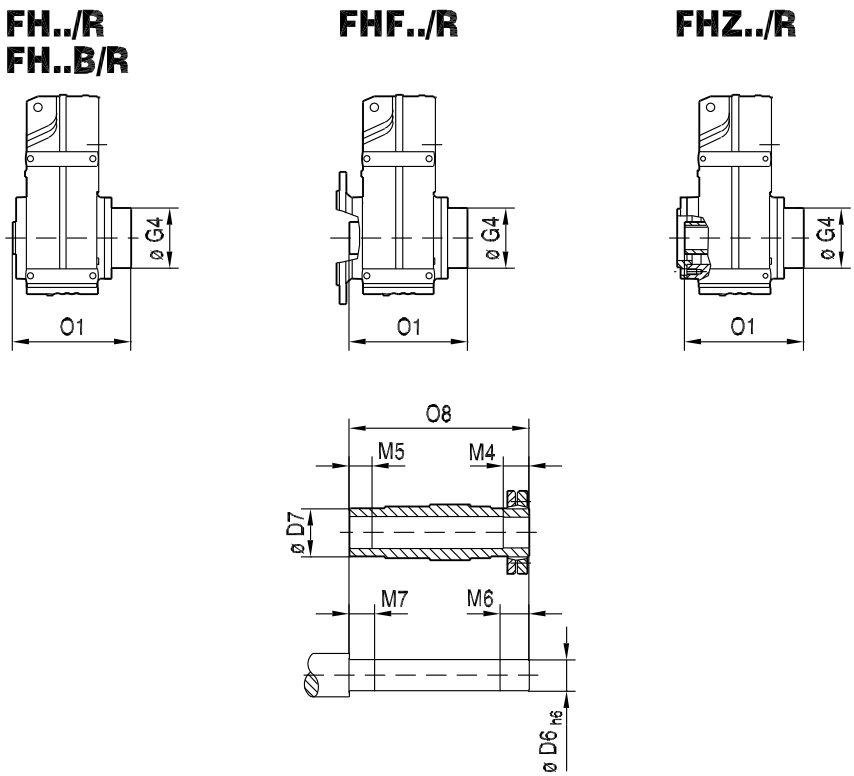

Type	D6	D7	G4	M4	M5	M6	M7	O1	O8
FH.87/R	Ø 65 $_{h6}$	Ø 85	Ø 163	41	40	46	45	312.5	299.5
FH.97/R	Ø 75 $_{h6}$	Ø 95	Ø 184	55	50	60	55	382.5	367

6.3 Installation/removal of gear units with hollow shaft and key

	INFORMATION
	• Always use the supplied NOCO® fluid for assembly. The fluid prevents contact corrosion and facilitates subsequent disassembly. • The key dimension X is specified by the customers, but X > DK must apply, see Figure 3.

Assembly

SEW-EURODRIVE recommends 2 variants for installing gear units with hollow shaft and key onto the input shaft of the driven machine (= customer shaft):

1. Use the provided fastening parts for installation.
2. Use the optional installation/removal kit for installation.

1) Supplied fastening parts

The following fastening parts are supplied as standard:

- Retaining screw with washer (2)
- Retaining ring (3)

Note the following points concerning the customer shaft:

- The installation length of the customer shaft with contact shoulder (A) must be L8 - 1 mm.
- The installation length of the customer shaft without contact shoulder (B) must equal L8.

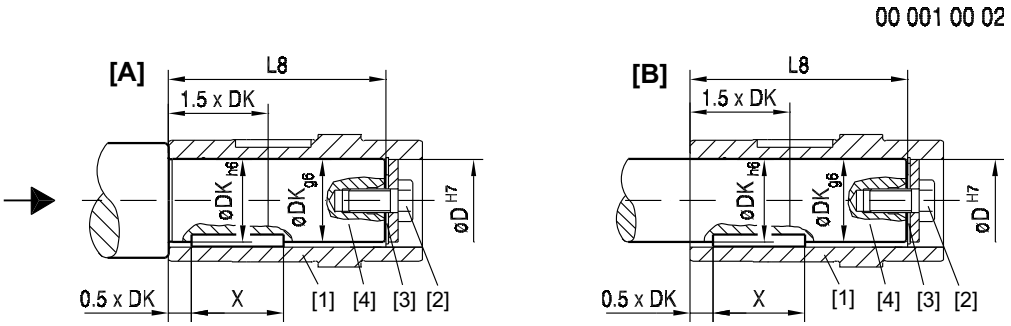

Figure 3: Customer shaft with contact shoulder (A) and without contact shoulder

[1]	Hollow shaft	[3]	Retaining ring
[2]	Retaining screw with washer	[4]	Customer shaft

Dimensions and tightening torques:

The retaining screw (2) must be tightened to the tightening torque MS given in the following table:

Gear unit type	D^{H7} [mm]	DK [mm]	L8 [mm]	MS [Nm]
WA..10	16	16	69	8
WA..20	18	18	8484	
WA..20	20	20		
FA..27	25	25	88	20
WA..30, WA..37	20	20	105	8
SA..37			104	
FA..37, KA..37, SA..47	30	30	105	20
SA..47, WA..37	25	25	105	
SAF402	30	30	138	
FA..47, KA..47, SA..57	35	35	132	
WA..47	30	30	122	
SA..57			132	
FA..57, KA..57	40	40	142	40
FA..67, KA..67			156	
SA..67			144	
SA..67	45	45	144	
FA..77, KA..77, SA..77	50	50	183	40
SA..77	60	60	180	80
FA..87, KA..87			210	
SA..87			220	
SA..87	70	70	220	
FA..97, KA..97	70	70	270	
SA..97			260	
SA..97	90	90	255	200
FA..107			313	
KA..107			313	
FA..127, KA..127	100	100	373	
FA..157, KA..157	120	120	460	

2. Installation/removal set

You can use the optional installation/removal kit for installation. You can order the kit for the specific gear unit type(s) by quoting the part numbers in the table below. The delivery includes:

- Spacer tube for assembly without contact shoulder [5]
- Retaining screw for installation [2]
- Forcing washer for removal [7]
- Locked nut for removal [8]

The short retaining screw delivered as standard is not required.

Note the following points concerning the customer shaft:

- The installation length of the customer shaft must be LK2. Do not use the spacer if the customer shaft **has a contact shoulder (A)**.
- The installation length of the customer shaft must be LK2. Use the spacer if the customer shaft **has a contact shoulder (B)**.

00 002 00 02

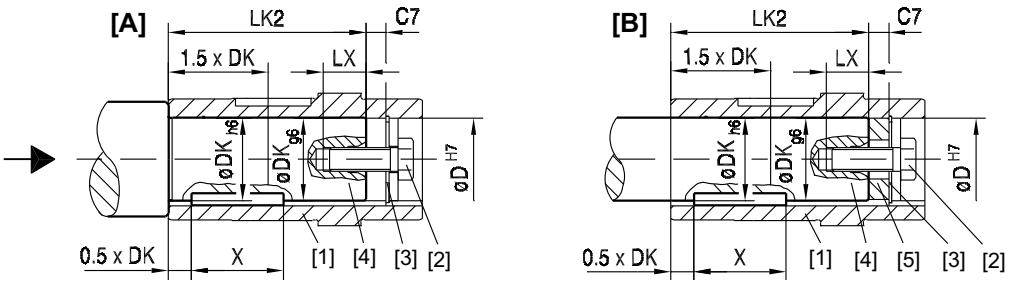

Figure 4: Customer shaft with contact shoulder (A) and without contact shoulder (B)

[1]	Hollow shaft	[4]	Customer shaft
[2]	Retaining screw with washer	[5]	Spacer tube
[3]	Retaining ring		

Dimensions, tightening torques and part numbers:

The retaining screw (2) must be tightened to the tightening torque MS given in the following table:

Type	D^{H7} [mm]	DK [mm]	LK2 [mm]	LX^{+2} [mm]	C7 [mm]	MS [Nm]	Part number of the installation/removal kit
WA..10	16	16	57	12.5	11	8	643 712 5
WA..20	18	18	72	16	12		643 682 X
WA..20	20	20	72				643 683 8
WA..30, WA..37	20	20	93				643 683 8
SA..37	20	20	92				643 683 8
FA..27	25	25	72	22	16	20	643 684 6
SA..47			89				
WA..47	30	30	106				643 685 4
FA..37, KA..37			89				
SA..47			89				
SA..57			116				
FA..47, KA..47, SA..57	35	35	114	28	18		643 686 2
FA..57, KA..57	40	40	124	36		40	643 687 0
FA..67			138				
KA..67			138				
SA..67			126				
SA..67	45	45	126				643 688 9
FA..77, KA..77, SA..77	50	50	165				643 689 7
FA..87, KA..87	60	60	188	42	22	80	643 690 0
SA..77			158				
SA..87			198				
FA..97, KA..97	70	70	248				643 691 9
SA..87			198				
SA..97			238				
FA..107, KA..107	90	90	287	50	26	200	643 692 7
SA..97			229				
FA..127, KA..127	100	100	347				643 693 5
FA..157, KA..157	120	120	434				643 694 3

Removal

Applies only if the installation/removal kit was previously used for installation (see Figure 4).

Proceed as follows to remove the gear unit:

1. Loosen the retaining screw [6].
2. Remove the circlip [3] and, if used, the spacer tube [5].
3. According to Figure 5, place the forcing washer [7] and the locked nut [8] between the customer shaft [4] and circlip]8[.
4. Re-install the circlip [3].
5. Re-install the retaining screw [6]. Now you can force the gear unit off the shaft.

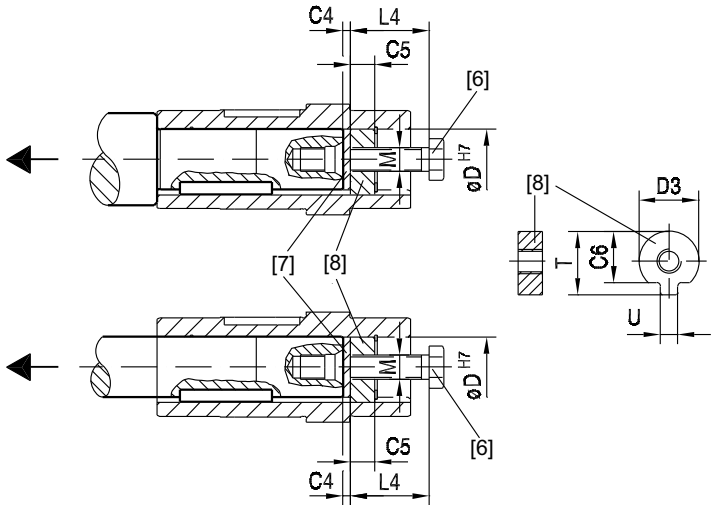

Figure 5: Removal

[6]	Retaining screw	[8]	Locked nut for removal
[7]	Forcing washer		

Dimensions and part numbers:

Type	D^{H7} [mm]	M	C4 [mm]	C5 [mm]	C6 [mm]	$U^{-0.5}$ [mm]	$T^{-0.5}$ [mm]	$D3^{-0.5}$ [mm]	L4 [mm]	Part number of installation/removal kit
WA..10	16	M5	5	5	12	4.5	18	15.7	50	643 712 5
WA..20	18	M6		6	13.5	5.5	20.5	17.7	25	643 682 X
WA..20, WA..30, WA..37, SA..37	20				15.5	5.5	22.5	19.7		643 683 8
FA27.., SA..47	25	M10		10	20	7.5	28	24.7	35	643 684 6
FA..37, KA..37, SA..47, SA..57, WA..47	30				25	7.5	33	29.7		643 685 4
FA..47, KA..47, SA..57	35	M12		12	29	9.5	38	34.7	45	643 686 2
FA..57, KA..57, FA..67, KA..67, SA..67	40	M16			34	11.5	41.9	39.7	50	643 687 0
SA..67	45				38.5	13.5	48.5	44.7		643 688 9
FA..77, KA..77, SA..77	50				43.5	13.5	53.5	49.7		643 689 7
FA..87, KA..87, SA..77, SA..87	60	M20		16	56	17.5	64	59.7	60	643 690 0
FA..97, KA..97, SA..87, SA..97	70				65.5	19.5	74.5	69.7		643 691 9
FA..107, KA..107, SA..97	90	M24		20	80	24.5	95	89.7	70	643 692 7
FA..127, KA..127	100				89	27.5	106	99.7		643 693 5
FA..157, KA..157	120				107	31	127	119.7		643 694 3

6.4 Gear units with hollow shaft

Chamfers on hollow shafts

The following illustration shows the chamfers on parallel shaft helical, helical-bevel, helical-worm and SPIROPLAN® gear units with hollow shaft:

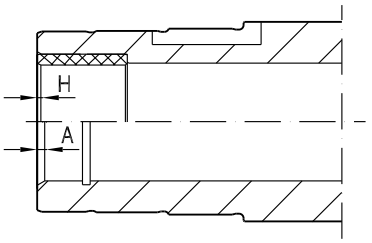

59845AXX

Gear unit	Type	
	with hollow shaft (A)	with hollow shaft and shrink disk (H)
W..10 - W..30	2 × 30°	-
F..27	2 × 30°	0.5 × 45°
F../K../S../W..37	2 × 30°	0.5 × 45°
F../K../S../ W..47	2 × 30°	0.5 × 45°
S..57	2 × 30°	0.5 × 45°
F../K..57	2 × 30°	3 × 2°
F../K../S..67	2 × 30°	3 × 2°
F../K../S..77	2 × 30°	3 × 2°
F../K../S..87	3 × 30°	3 × 2°
F../K../S..97	3 × 30°	3 × 2°
F../K..107	3 × 30°	3 × 2°
F../K..127	5 × 30°	1.5 × 30°
F../K..157	5 × 30°	1.5 × 30°
KH167	-	1.5 × 30°
KH187	-	1.5 × 30°

Special motor/gear unit combinations

Please note for parallel shaft helical gearmotors with hollow shaft (FA..B, FV..B, FH..B, FAF, FVF, FHF, FA, FV, FH, FT, FAZ, FVZ, FHZ):

- If you use a customer shaft pushed through on the motor end, there might be a collision when a "small gear unit" is used in combination with a "large motor."
- Check the motor dimension AC to decide whether there will be a collision with a pushed-through customer shaft.

6.5 TorqLOC® hollow shaft mounting system for gear units with hollow shaft

Description of TorqLOC®

The TorqLOC® hollow shaft mounting system is used for achieving a non-positive connection between customer shaft and the hollow shaft in the gear unit. The TorqLOC® hollow shaft mounting system is an alternative to the hollow shaft with shrink disk, the hollow shaft with key and the splined hollow shaft.

The TorqLOC® hollow shaft mounting system consists of the following components:

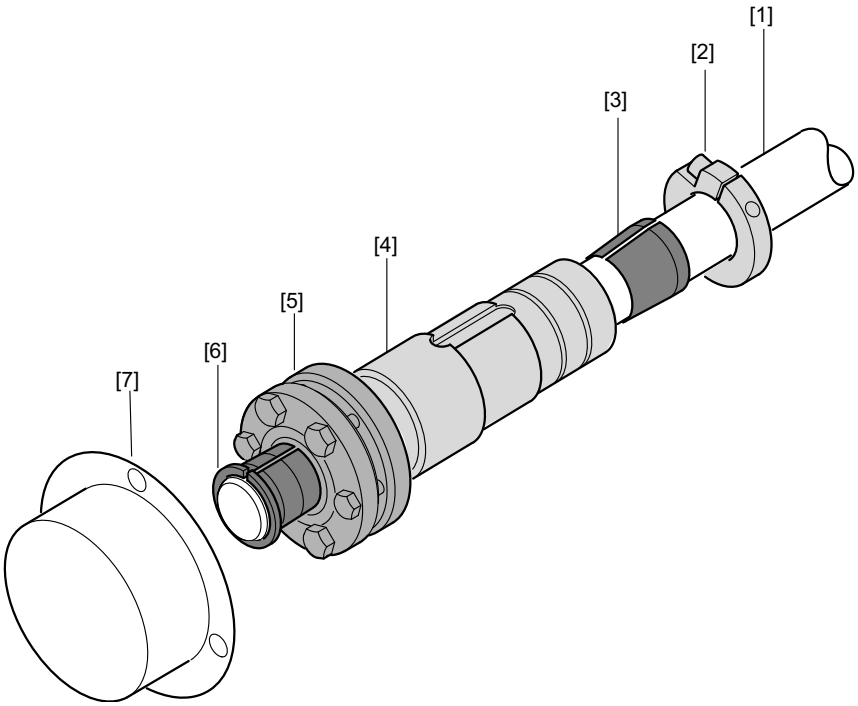

[1]	Customer shaft	[5]	Shrink disk
[2]	Clamping ring	[6]	Conical steel bushing
[3]	Conical bronze bushing	[7]	Fixed cover
[4]	Hollow shaft in gear unit		

Advantages of TorqLOC®

The TorqLOC® hollow shaft mounting system offers the following advantages:

- Cost saving as the customer shaft can be made from drawn material up to quality h11.
- Cost saving as different customer shaft diameters can be realized with one hollow shaft diameter and different bushings.
- Simple installation as there is no need to accommodate any shaft connections.
- Simple disassembly even after many hours of operation since the formation of contact corrosion has been reduced and the conical connections can easily be released.

Technical data

The TorqLOC® hollow shaft mounting system is approved for input torques of 92 Nm to 18000 Nm.

The following gear units are available with TorqLOC® hollow shaft mounting system:

- Parallel shaft helical gear units in gear unit sizes 37 to 157 (FT37 ... FT157)
- Helical-bevel gear unit sizes 37 to 157 (KT37 ... KT157)
- Helical-worm gear unit sizes 37 to 97 (ST37 ... ST97)
- SPIROPLAN® gear unit sizes 37 and 47 (WT.7)

Available options

The following options are available for gear units with a TorqLOC® hollow shaft mounting system:

- Helical-bevel, helical-worm and SPIROPLAN® gear units with TorqLOC® (KT.., ST.., WT.7..): the "torque arm" (../T) option is available.
- Parallel shaft helical gear units with TorqLOC® (FT..): the "rubber buffer" (../G) option is available.

6.6 Fastening the gear unit

Use bolts of quality 8.8 to fasten gear units.

Exception

Use bolts of quality 10.9 to fasten the customer flange to transmit the rated torques for the following flange-mounted helical gearmotors (RF ..RZ..) and foot/flange-mounted versions (R..F):

- RF37, R37F with flange ∅ 120 mm
- RF47, R47F with flange ∅ 140 mm
- RF57, R57F with flange ∅ 160 mm
- RZ37 - RZ87

6.7 Torque arms

Torque arms

Gear unit	Size					
	27	37	47	57	67	77
KA, KH, KV, KT	-	643 425 8	643 428 2	643 431 2	643 431 2	643 434 7
SA, SH, ST	-	126 994 1	644 237 4	644 240 4	644 243 9	644 246 3
FA, FH, FV, FT Rubber buffer (2 pieces)	013 348 5	013 348 5	013 348 5	013 348 5	013 348 5	013 349 3

Gear unit	Size				
	87	97	107	127	157
KA, KH, KV, KT	643 437 1	643 440 1	643 443 6	643 294 8	-
SA, SH, ST	644 249 8	644 252 8	-	-	-
FA, FH, FV, FT Rubber buffer (2 pieces)	013 349 3	013 350 7	013 350 7	013 351 5	013 347 7

Gear unit	Size				
	10	20	30	37	47
WA	1 061 021 9	1 68 073 0	1 68 011 0	1 061 129 0	1 061 187 8

Torque arms for KH167.., KH187..

As standard, torque arms are not available for gear unit sizes KH167.. and KH187... Consult SEW-EURODRIVE for design proposals if you require torque arms for these gear units.

6.8 Flange contours of RF.. and R..F gear units

04355AXX

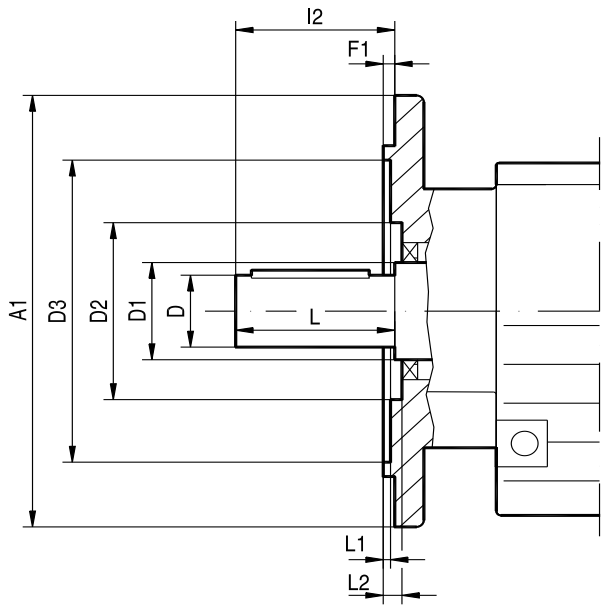

Check dimensions L1 and L2 for selection and installation of output elements.

Type	Dimensions in mm											
	A1	D	D1	D2		D3	F1	l2	L	L1		L2
				RF	R..F					RF	R..F	
RF07, R07F	120	20	22	38	38	72	3	40	40	2	2	6
	140[1)]				-	85	3			2	-	6
	160[1)]				-	100	3.5			2.5	-	6.5
RF17, R17F	120	20	25	46	46	65	3	40	40	1	1	5
	140				-	78	3			1	-	5
	160[1)]				-	95	3.5			1	-	6
RF27, R27F	120	25	30	54	54	66	3	50	50	1	1	6
	140				-	79	3			3	-	7
	160				-	92	3.5			3	-	7
RF37, R37F	120	25	35	60	63	70	3	50	50	5	4	7
	160				-	96	3.5			1	-	7.5
	200[1)]				-	119	3.5			1	-	7.5
RF47, R47F	140	30	35	72	64	82	3	60	60	4	1	6
	160				-	96	3.5			0.5	-	6.5
	200				-	116	3.5			0.5	-	6.5
RF57, R57F	160	35	40	76	75	96	3.5	70	70	4	2.5	5
	200				-	116	3.5			0	-	5
	250[1)]				-	160	4			0.5	-	5.5
RF67, R67F	200	35	50	90	90	118	3.5	70	70	2	4	7
	250				-	160	4			1	-	7.5
RF77, R77F	250	40	52	112	100	160	4	80	80	0.5	2.5	7
	300[1)]				-	210	4			0.5	-	7
RF87, R87F	300	50	62	123	122	210	4	100	100	0	1.5	8
	350				-	226	5			1	-	9
RF97	350	60	72	136		236	5	120	120	0		9
	450					320						
RF107	350	70	82	157		232	5	140	140	0		11
	450			186		316						
RF137	450	90	108	180		316	5	170	170	0		10
	550					416						
RF147	450	110	125	210		316	5	210	210	0		10
	550					416						
RF167	550	120	145	290		416	5	210	210	1		10
	660					517	6			2		11

1) The flange contour protrudes from under the base surface.

6.9 Flange contours of FF.., KF.., SF.. and WF.. gear units

64353AXX

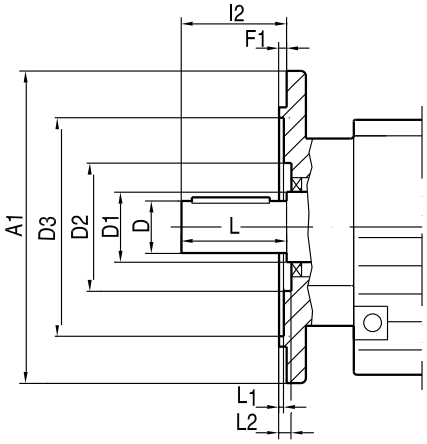

Check dimensions L1 and L2 for selection and installation of output elements.

Type	Dimensions in mm									
	A1	D	D1	D2	D3	F1	I2	L	L1	L2
FF27	160	25	40	66	96	3.5	50	50	3	18.5
FF37	160	25	30	70	94	3.5	50	50	2	6
FF47	200	30	40	72	115	3.5	60	60	3.5	7.5
FF57	250	35	40	84	155	4	70	70	4	9
FF67	250	40	50	84	155	4	80	80	4	9
FF77	300	50	55	82	205	4	100	100	5	9
FF87	350	60	65	115	220	5	120	120	5	9
FF97	450	70	75	112	320	5	140	140	8	10
FF107	450	90	100	159	318	5	170	170	16	9
FF127	550	110	118	-	420	5	210	210	10	-
FF157	660	120	135	190	520	6	210	210	8	14
KF37	160	25	30	70	94	3.5	50	50	2	6
KF47	200	30	40	72	115	3.5	60	60	3.5	7.5
KF57	250	35	40	84	155	4	70	70	4	9
KF67	250	40	50	84	155	4	80	80	4	9
KF77	300	50	55	82	205	4	100	100	5	9
KF87	350	60	65	115	220	5	120	120	5	9
KF97	450	70	75	112	320	5	140	140	8	10
KF107	450	90	100	159	318	5	170	170	16	9
KF127	550	110	118	-	420	5	210	210	10	-
KF157	660	120	135	190	520	6	210	210	8	14
SF37	120	20	25	-	68	3	40	40	6	-
SF37	160	20	25	-	96	3.5	40	40	5.5	-
SF47	160	25	30	70	94	3.5	50	50	2	6
SF57	200	30	40	72	115	3.5	60	60	3.5	7.5
SF67	200	35	45	-	115	3.5	70	70	8.5	-
SF77	250	45	55	108	160	4	90	90	8	9
SF87	350	60	65	130	220	5	120	120	6	10
SF97	450	70	75	150	320	5	140	140	8.5	10
WF10	80	16	25	-	39	2.5	40	40	30	-
WF10	120	16	25	39	74	3	40	40	5	30
WF20	110	20	30	44	53	-4	40	40	27	35
WF20	120	20	30	-	45	2.5	40	40	37.5	-
WF30	120	20	30	48	63	2.5	40	40	18	27
WF30	160	20	30	48	63	2.5	40	40	33	42
WF37	120	20	30	-	70	2.5	40	40	-	10.5
WF37	160	20	30	-	70	2.5	40	40	-	25.5
WF47	160	30	35	-	92	3.5	10	60	6	-

6.10 Flange contours of FAF.., KAF.., SAF.. and WAF.. gear units

64355AXX

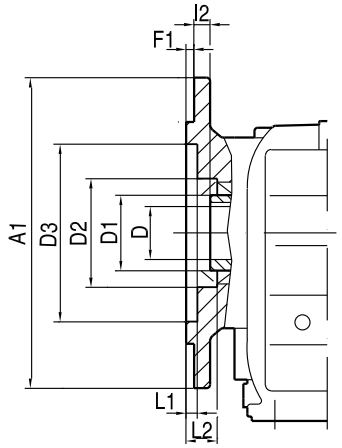

Check dimensions L1 and L2 for selection and installation of output elements.

Type	Dimensions in mm								
	A1	D	D1	D2	D3	F1	I2	L1	L2
FAF27	160	40	25	66	96	3.5	20	3	18.5
FAF37	160	45	30	62	94	3.5	24	2	30
FAF47	200	50	35	70	115	3.5	25	3.5	31.5
FAF57	250	55	40	76	155	4	23.5	4	31
FAF67	250	55	40	76	155	4	23	4	31
FAF77	300	70	50	95	205	4	37	5	45
FAF87	350	85	60	120	220	5	30	5	39
FAF97	450	95	70	135	320	5	41.5	5.5	51
FAF107	450	118	90	224	320	5	41	16	52
FAF127	550	135	100	185	420	5	51	6	63
FAF157	660	155	120	200	520	6	60	10	74
KAF37	160	45	30	62	94	3.5	24	2	30
KAF47	200	50	35	70	115	3.5	25	3.5	8.5
KAF57	250	55	40	76	155	4	23.5	4	31
KAF67	250	55	40	76	155	4	23	4	31
KAF77	300	70	50	95	205	4	37	5	45
KAF87	350	85	60	120	220	5	30	5	39
KAF97	450	95	70	135	320	5	41.5	5.5	51
KAF107	450	118	90	224	320	5	41	16	52
KAF127	550	135	100	185	420	5	51	6	63
KAF157	660	155	120	200	520	6	60	10	74
SAF37	120	35	20	-	68	3	15	6	-
SAF37	160	35	20	-	96	3.5	15	5.5	-
SAF47	160	45	30 / 25	62	94	3.5	24	2	30
SAF57	200	50	35 / 30	70	115	3.5	25	3.5	31.5
SAF67	200	65	45 / 40	91	115	3.5	42.5	4	48.5
SAF77	250	80	60 / 50	112	164	4	45.5	5	53.5
SAF87	350	95	70 / 60	131	220	5	52.5	6	62.5
SAF97	450	120	90 / 70	160	320	5	60	6.5	69
WAF10	80	25	16	-	39	2.5	23	30	-
WAF10	120	25	16	39	74	3	23	5	30
WAF20	110	30	18 / 20	44	53	-4	30	27	35
WAF20	120	30	18 / 20	-	45	2.5	30	37.5	-
WAF30	120	30	20	48	63	2.5	19.5	18	27
WAF30	160	30	20	48	63	2.5	34.5	33	42
WAF37	120	35	20 / 25	54	70	2.5	19.5	10.5	27
WAF37	160	35	20 / 25	54	70	2.5	34.5	25.5	42
WAF47	160	45	25 / 30	72	92	3.5	10	6	45

6.11 Fixed covers

Parallel shaft helical gear units, helical-bevel gear units, helical-worm and SPIROPLAN® gear units with hollow shafts and shrink disks of size 37 up to size 97 come equipped with a rotating cover as standard. If, for safety reasons, fixed covers are required for these gear units, you can order them for the respective gear unit types by quoting the part numbers in the following tables. As standard, size 107 parallel shaft helical gear units and helical-bevel gear units with hollow shafts and shrink disks and size 27 parallel shaft helical gear units come equipped with a fixed cover.

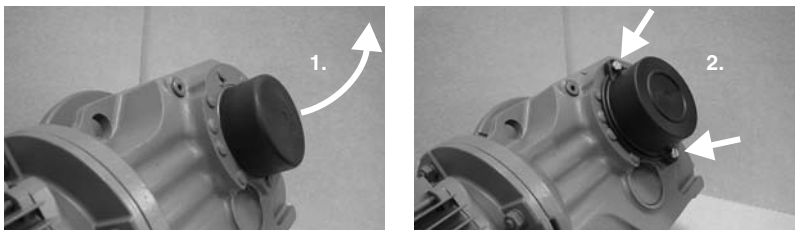

03190AXX

Figure 6: Replacing a rotating cover with a fixed cover

[1] Pull off the rotating cover

[2] Install and fasten fixed cover

Part numbers and dimensions

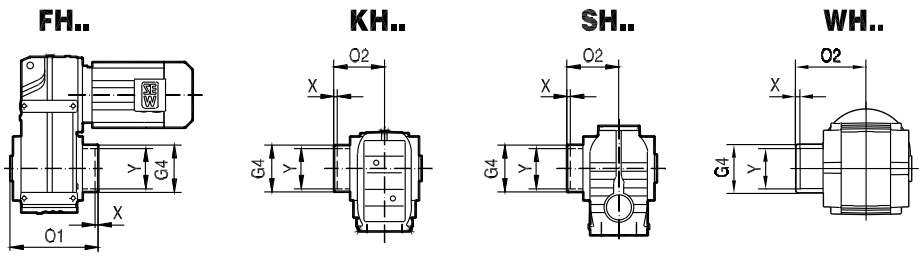

62664AXX

Parallel-shaft helical gearmotors	FH..37	FH..47	FH..57	FH..67	FH..77	FH..87	FH..97
Part number	643 513 0	643 514 9	643 515 7	643 515 7	643 516 5	643 517 3	643 518 1
G4	78	88	100	100	121	164	185
O1	157	188.5	207.5	221.5	255	295	363.5
X	2	4.5	7.5	6	6	4	6.5
Y	75	83	83	93	114	159	174

Helical-bevel gearmotors[1)]	KH..37	KH..47	KH..57	KH..67	KH..77	KH..87	KH..97
Part number	643 513 0	643 514 9	643 515 7	643 515 7	643 516 5	643 517 3	643 518 1
G4 [mm]	78	88	100	100	121	164	185
O2 [mm]	95	111.5	122.5	129	147	172	210.5
X [mm]	0	1.5	5.5	3	1	2	4.5
Y [mm]	75	83	83	93	114	159	174

1) Not possible in foot-mounted helical-bevel gear units with hollow shaft and shrink disk (KH..B).

Helical-worm gearmotors	SH..37	SH..47	SH..57	SH..67	SH..77	SH..87	SH..97
Part number	643 512 2	643 513 0	643 514 9	643 515 7	643 516 5	643 517 3	643 518 1
G4 [mm]	59	78	88	100	121	164	185
O2 [mm]	88	95	111.5	123	147	176	204.5
X [mm]	1	0	1.5	3	1	0	0.5
Y [mm]	53	75	83	93	114	159	174

SPIROPLAN® gearmotors	WH..37	WH..47
Part number	1 061 136 3	1 061 194 0
G4 [mm]	68	80.5
O2 [mm]	95.5	109.5
X [mm]	11	12.5
Y [mm]	50	72

6.12 Condition monitoring: Oil aging and vibration sensor

Technical data for oil aging sensor

DUO10A diagnostic unit

DUO10A	Technical data		
Preset oil grades	OIL1	CLP mineral oil.	T_{max} = 100 °C
		Bio oil	T_{max} = 100 °C
	OIL2	CLP HC synthetic oil:	T_{max} = 130 °C
		CLP PAO oil	T_{max} = 130 °C
	OIL3	CLP PG polyglycol	T_{max} = 130 °C
	OIL4	Food grade oil	T_{max} = 100 °C
Switch outputs	1: Early warning (time to next oil change can be set to between 2 and 100 days) 2: Main alarm (time to oil change 0 days) 3: Exceeded temperature T_{max} 4: DUO10A is ready for operation		
Permitted oil temperature	-40 °C to +130 °C		
Permitted temperature sensor	PT1000		
EMC	IEC1000-4-2/3/4/6		
Ambient temperature	-25 °C to +70 °C		
Operating voltage	DC 18-28 V		
Current consumption for DC 24 V	< 90 mA		
Protection class	III		
Degree of protection	IP67 (optionally IP69K)		
Housing materials	Evaluation unit: V2A, EPDM/X, PBT, FPM Temperature sensor: V4A		
Electrical connection	Evaluation unit: M12 plug connector PT1000 temperature sensor: M12 plug connector		

Designations and part numbers

Designation	Description	Part number
DUO10A 	Evaluation unit (basic unit)	1 343 875 1
DUO10A-PUR-M12-5m	5 m PUR cable with 1 connector	1 343 877 8
DUO10A-PVC-M12-5m	5 m PVC cable with 1 connector	1 343 878 6
DUO10A	Angle bracket	1 343 880 8
DUO10A D = 34	Mounting clamp	1 343 879 4
W4843 PT1000 	PT1000 temperature sensor	1 343 881 6
W4843_4x0.34-2m-PUR	2 m PUR cable for PT1000[1)]	1 343 882 4

Designation	Description	Part number
W4843_4x0.34-2m-PVC	2 m PVC cable for PT1000[2)]	1 343 883 2
DUO10A 	Protection cap (for aseptic design, IP69K)	1 343 902 2

1) PUR cables are particularly suited for use in oil-contaminated environments.

2) PVC cables are particularly suited for use in wet environments.

Mounting on standard gear units (R, F, K, S)

Adapter for mounting the PT1000 temperature sensor in screw plug holes:

Complete adapter for PT1000 sensor	Part number
M10 × 1	1 343 903 0
M12 × 1.5	1 343 904 9
M22 × 1.5	1 343 905 7
M33 × 2	1 343 906 5
M42 × 2	1 343 907 3

Mounting base for installing the diagnostic unit at the gear unit with an angle bracket:

Mounting base with sealing ring	Part number
M10 × 1	1 343 441 1
M12 × 1.5	1 343 827 1
M22 × 1.5	1 343 829 8
M33 × 2	1 343 830 1
M42 × 2	1 343 832 8

Technical data of vibration sensor

DUV10A and DUV30A vibration sensors are suited for early detection of gearmotor damage, which can be detected using vibration diagnostics, such as bearing damage or imbalance. The highest load of the drives at constant speed must be present to being able to use the full functionality of the diagnostic unit. Drives in which the maximum load is present during acceleration are suitable for monitoring using vibration sensors to a limited degree only.

DUV10A/DUV30A diagnostic unit

	Technical data	
	DUV10A	**DUV30A**
Measuring range	± 20 g	± 20 g
Frequency range	0.125 to 500 Hz	0.125 to 500 Hz / 0.125 to 5000 Hz
Spectral resolution	0.125 Hz	0.125 Hz / 1.25 Hz
Diagnostic methods	FFT, envelope-FFT, trend analysis	
Minimum measuring period	8.0 s	8.0 s / 0.8 s
Speed range	12 to 3500 rpm	12 to 3500 rpm 120 to 12000 rpm
Switch outputs	1: Early warning 2: Main alarm	
Operating voltage	DC 10-32 V	
Current consumption for DC 24 V	100 mA	
Protection class	III	
EMC	IEC1000-4-2/3/4/6	
Overload capacity	100 g	
Ambient temperature	-30 °C to +60 °C	-30 °C to +70 °C
Degree of protection	IP67	
Housing materials	Zinc die-casting, coating based on epoxy finish, polyester membrane keypad	
Electrical connection for supply and switching output	M12 plug connector	
Electrical connection RS-232 for communication	M8 plug connector	
Certificates and standards	CE, UL	

Designations and part numbers

Designation	Description	Part number
DUV10A / DUV30A 	Diagnostic unit (basic unit/ combined unit)	DUV10A: 1 406 629 7 DUV30A: 1 328 969 1
DUV.0A-S	Configuration software	1 406 630 0
DUV.0A-K-RS232-M8	Communication cable	1 406 631 9
DUV.0A-N24DC	DC 24 V power supply unit	1 406 632 7
DUV.0A-I	Pulse tester	1 406 633 5

Designation	Description	Part number
DUV.0A-K-M12-2m PUR	2 m PUR cable with 1 connector[1)]	1 406 634 3
DUV.0A-K-M12-5m PUR	5 m PUR cable with 1 connector[1)]	1 406 635 1
DUV.0A-K-M12-2m PVC	2 m PVC cable with 1 connector[2)]	1 326 620 9
DUV.0A-K-M12-5m PVC	5 m PVC cable with 1 connector[2)]	1 326 621 7

1) PUR cables are particularly suited for use in oil-contaminated environments.

2) PVC cables are particularly suited for use in wet environments.

Mounting to standard gear units (R, F, K, S)

Mounting base for installing the diagnostic unit:

Mounting base with sealing ring for gear unit	Part number
M10 × 1	1 343 441 1
M12 × 1.5	1 343 827 1
M22 × 1.5	1 343 829 8
M33 × 2	1 343 830 1
M42 × 2	1 343 832 8
G ¾	1 343 833 6
G 1	1 343 834 4
G 1 ¼	1 343 835 2
G 1 ½	1 343 836 0
Mounting base for motors	**Part number**
M 8	1 362 261 7
M 12	1 343 842 5
M 16	1 343 844 1
M 20	1 362 262 5

7 Important Information on Selection Tables and Dimension Sheets

7.1 Information on selection tables

Selection table example
AM

n_e = 1400 rpm														820 Nm
	i	n_a [rpm]	$M_{a\,max}$ [Nm]	F_{Ra} [N]	φ (/R) [']	AM 63	71	80	90	100	112	132S/M	132ML
R77 2	**5.31**	264	510	3990	8								
	5.99	234	540	3990	8								
	6.79	206	580	3850	8								
	7.74	181	610	3940	8								
	8.59	163	630	4110	7								
	9.64	145	630	6300	7								
	10.88	129	660	6490	6								

Numerical value given: The reduced backlash (/R) option is possible; the numerical value specifies the circumferential backlash of the reduced backlash version in angular minutes ['']. No data (-): The reduced backlash (/R) option is not possible for this i value.

Permitted overhung load at maximum output torque (foot-mounted gear unit with solid shaft)

Maximum output torque

Output speed

Gear unit reduction ratio

Stages of the following ratios

Note:

The following table shows the weight for gear units with IEC or NEMA adapter:

m [kg]		AM							
IEC	**s**	**63**	**71**	**80**	**90**	**100**	**112**	**132S/M**	**132ML**
R77	2	33	34	36	36	40	40	47	47
R77	3	34	35	37	37	41	41	48	48
NEMA		-	56	143	145	182	184	213/215	-
R77	2	-	34	36	36	39	39	45	-
R77	3	-	35	37	37	40	40	46	-
RF: + 5.7 kg / RM: + 30.7 kg									

Key

* Finite gear unit reduction ratio

Combination is **possible.**

Combination is **not possible.**

Reference to the associated dimension sheet page number

Sample selection table adapter AT

n_e **= 1400 rpm:**

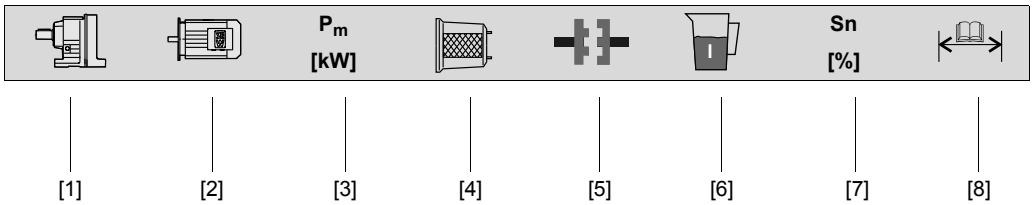

[1] Gear unit size
[2] Motor type
[3] Motor power
[4] Adapter type
[5] Coupling type
[6] Fill quantity [l]
[7] Rated slip of the coupling
[8] Dimension sheet page no.

Selection table example AD

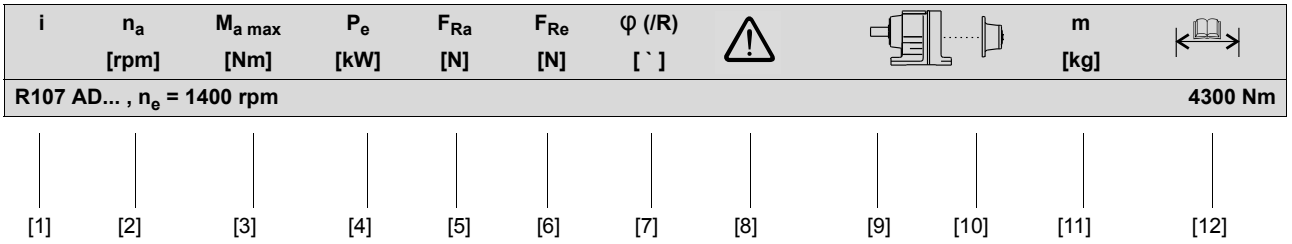

[1] Gear unit reduction ratio
[2] Output speed
[3] Maximum permitted output torque
[4] Calculated drive power of the gear unit
[5] Permitted overhung load at maximum output torque (foot-mounted gear unit with solid shaft)
[6] Permitted overhung load on the input side
[7] Numerical value given: The reduced backlash (/R) option is possible; the numerical value specifies the circumferential backlash of the reduced backlash version in angular minutes ['']. No data (-): The reduced backlash option (/R) is not possible for this i value.
[8] Please observe chapter "Thermal limit power for gear units with input shaft assembly" (see page 66 and subsequent pages.)
[9] Gear unit size
[10] Cover type
[11] Weight
[12] Dimension sheet page number

7.2 Notes on the dimension sheets

Scope of delivery



= Standard parts supplied by SEW-EURODRIVE.



= Standard parts not supplied by SEW-EURODRIVE.

Tolerances

Shaft heights

The following tolerances apply to the indicated dimensions:

h	≤ 250 mm	→ -0.5 mm
h	> 250 mm	→ -1 mm

Foot-mounted gear units: Check the mounted motor because it may project below the mounting surface.

Shaft ends

Diameter tolerance:

∅	≤ 50 mm	→ ISO k6
∅	> 50 mm	→ ISO m6

Center bores according to standard 332, shape DR:

∅	= 7...10 mm	→ M3	∅	> 30...38 mm	→ M12
∅	> 10...13 mm	→ M4	∅	> 38...50 mm	→ M16
∅	> 13...16 mm	→ M5	∅	> 50...85 mm	→ M20
∅	> 16...21 mm	→ M6	∅	> 85...130 mm	→ M24
∅	> 21...24 mm	→ M8	∅	> 130 mm	→ M30
∅	> 24...30 mm	→ M10			

Keys: according to standard 6885 (domed type)

Hollow shafts

Diameter tolerance:

∅	→ ISO H7 measured with plug gauge

Keys: according to standard 6885 (domed type)

Exception: Key for WA37 with shaft ∅ 25 mm according to standard 6885-3 (low type)

Multiple-spline shafts

Dm	= Measuring roller diameter
Me	= Check size

Flanges

Centering shoulder tolerance:

∅	≤ 230 mm (flange sizes A120...A300)	→ ISO j6
∅	> 230 mm (flange sizes A350...A660)	→ ISO h6

Up to 3 different flange dimensions are available for each size of helical gear units, SPIROPLAN® gear units, AC (brake) motors and explosion-proof AC (brake) motors. The respective dimension drawings will show the flanges approved for each size.

Eyebolts, suspension eye lugs

R07 - R27 helical gear units and SPIROPLAN® gearmotors W..10 to W..30 are delivered without special transportation fixtures. All other gear units and motors are equipped with cast-on suspension eye lugs, screw-on suspension eye lugs or screw-on lifting eyebolts.

Gear unit/motor type	Screw-on		Cast-on eyebolts
	lifting eyebolts	eyebolts	
RX57 - RX67	-	•	-
RX77 - RX107	•	-	-
R..37 - R..57	-	•	-
R..67 - R..167	•	-	-
F..27 - F..157	-	-	•
K..37 - K..157	-	-	•
K..167 - K..187	•	-	-
W..37, W..47	-	•	-
S..37 - S..47	-	•	-
S..57 - S..97	-	-	•

Breather valves

The gear unit dimension drawings always show the screw plugs. The corresponding screw plug is replaced by an activated breather valve at the factory depending on the ordered mounting position M1 to M6. The result may be slightly altered contour dimensions.

Shrink disk connection

Hollow shaft gear unit with shrink disk connection: If required, please request a detailed data sheet on shrink disks, data sheet no. 33 753 nn 95.

Splined hollow shaft

FV.. hollow shaft gear unit sizes 27 to 107, and KV.. sizes 37 to 107 are supplied with splining according to standard 5480.

Rubber buffer for FA/FH/FV/FT

Preload rubber buffer by the indicated value △L. The characteristic curve of spring for the rubber buffers is available at SEW-EURODRIVE on request.

Position of the arm

The following illustration shows the possible torque arm positions for helical-worm gear units and SPIROPLAN® gear units (135° position not possible with SPIROPLAN® gear units) as well as the respective angles:

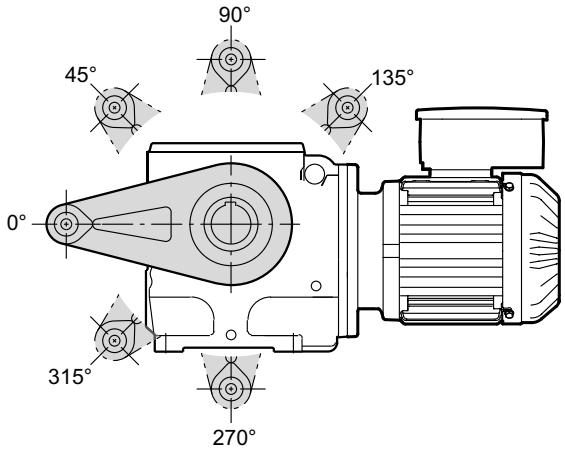

65930AXX

Figure 7: Position of the torque arm for S and W gear units

For information on torque arms for helical-worm gear units, refer to the dimension sheets from page 443, for specifications on torque arms for SPIROPLAN® gearmotors are found in the dimension sheets from page 520.

For specifications regarding torque arms for helical-bevel gear units, refer topage 353.

AD../P input shaft assembly with motor mounting platform

The following cases can arise with gear units with input shaft assemblies and motor mounting platforms:

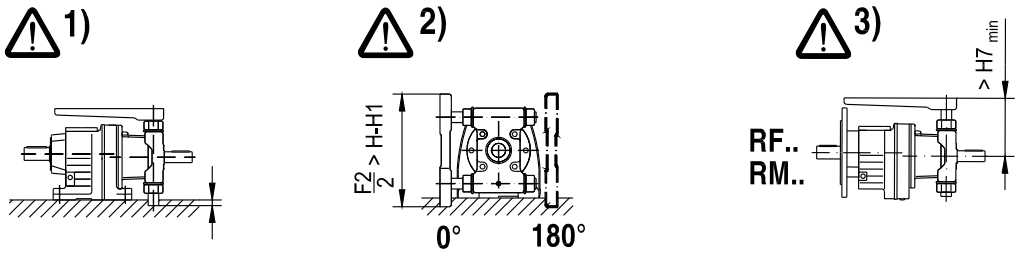

1. Depending on the setting, the column may protrude past the foot mounting surface
2. Motor mounting platform may protrude past the foot mounting surface
3. Motor mounting platform may collide with the gear unit flange, depending on the setting

The corresponding cases are indicated in the dimension tables in the following column:

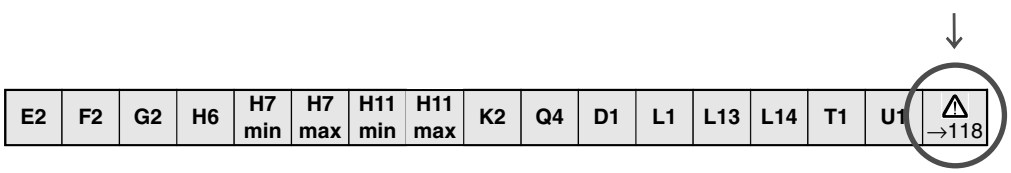

53696AXX

7.3 Gear unit (gearmotor) dimensions

Motor options

The motor dimensions may change when installing motor options. Refer to the dimension drawings of the motor options.

Special designs

The terminal box dimensions in special designs might vary from the standard.

EN 50347

European standard EN 50347 became effective in August 2001. This standard adopts the dimension designations for three-phase AC motors for sizes 56 to 315M and flange sizes 65 to 740 from the IEC 72-1 standard.

The new dimension designations given in EN 50347 / IEC 72-1 are used for the dimensions in question in the dimension tables of the dimensions sheets.

Gear unit dimensions

The dimensions of the gear units are described below:

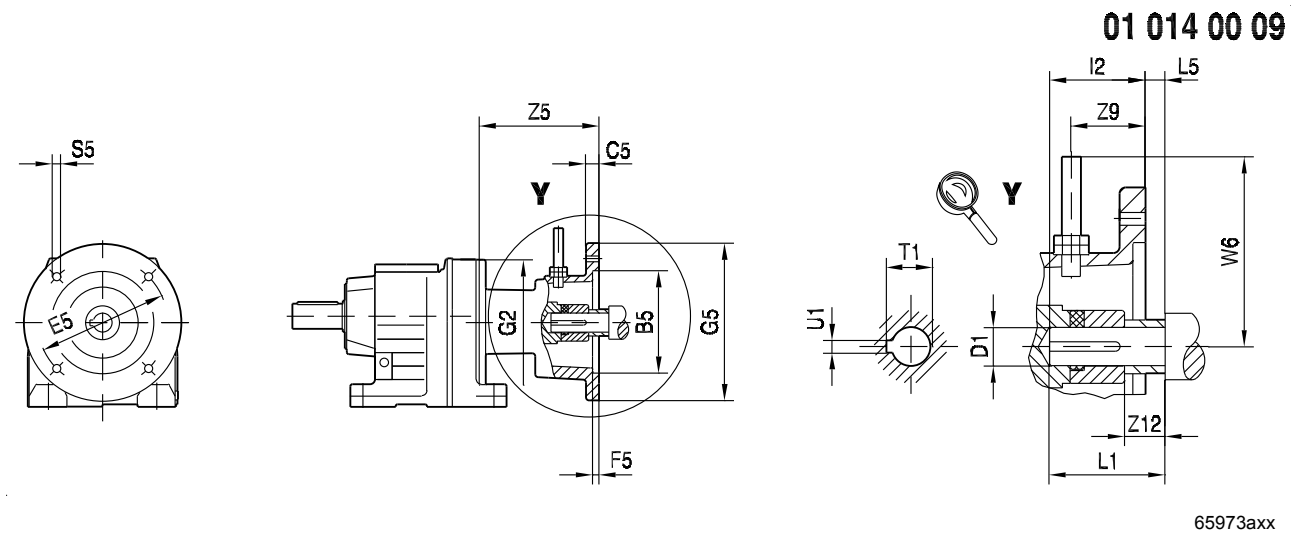

65973axx

G5	Adapter flange diameter	C5	Flange thickness
S5	Threaded hole	B5	Center bore diameter
E5	Hole circle diameter	F5	Centering depth
Z5	Adapter length	L1	Shaft end length (motor)
G2	Flange diameter of gear unit on input side	I2	Maximum insertion depth in adapter
D1	Coupling bore diameter	L5	Shaft collar length to flange surface
U1	Keyway width	Z9	Encoder position
T1	Keyway depth	W6	Encoder height
Z12	Shaft collar length to coupling		

INFORMATION

For motors with other feedback systems than resolvers, possible additional lengths must be considered.

AT../BMG

01 177 00 09

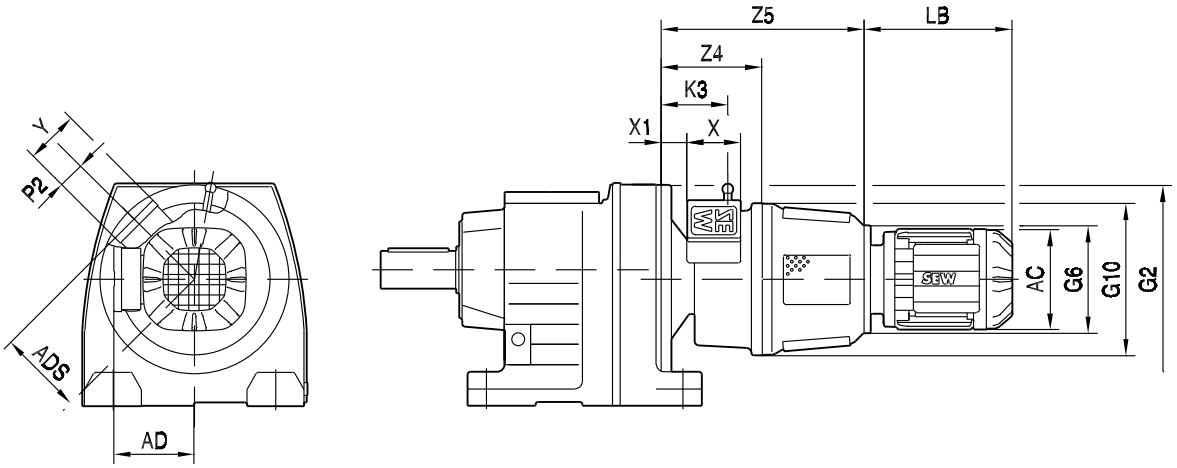

67785axx

LB	Motor length	G10	Housing diameter of centrifugal coupling
G6	Motor flange diameter	Z4	Distance between gear unit and hydraulic coupling
Z5	Adapter length	X1	Position of brake terminal box
K3	Manual release position	P2	Position of brake terminal box
X	Width of brake terminal box	ADS	Height of brake terminal box
Y	Length of brake terminal box	AD	Height of motor terminal box
AC	Motor diameter		

AD../ZR

01 178 00 09

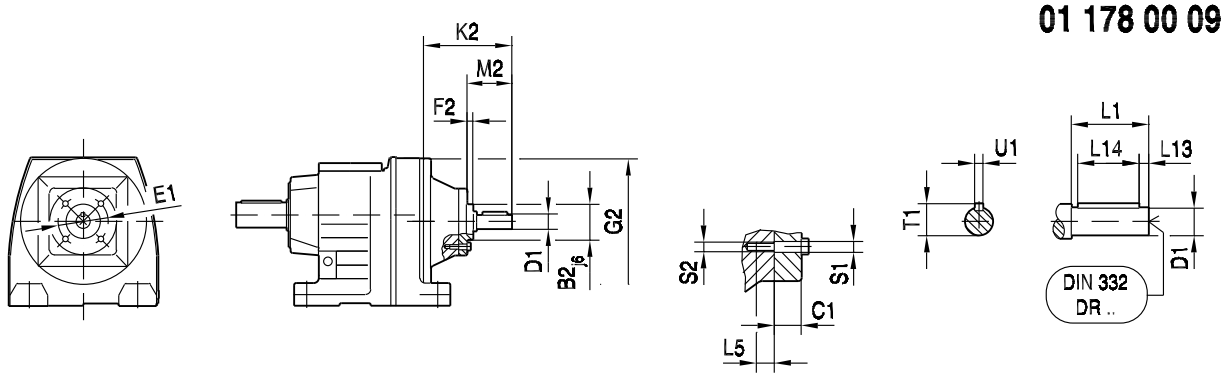

67786axx

K2	Input shaft assembly length	G2	Flange diameter on input side of gear unit
B2	Center bore diameter	F2	Center bore height
M2	Contact surface position	E1	Hole circle diameter
S1	Through bore	S2	Thread diameter
C1	Flange thickness	L5	Thread depth
D1	Shaft diameter	L1	Length of shaft end
L13	Position of key	L14	Key length
U1	Key width	T1	Key height in shaft

AD../P

01 179 00 09

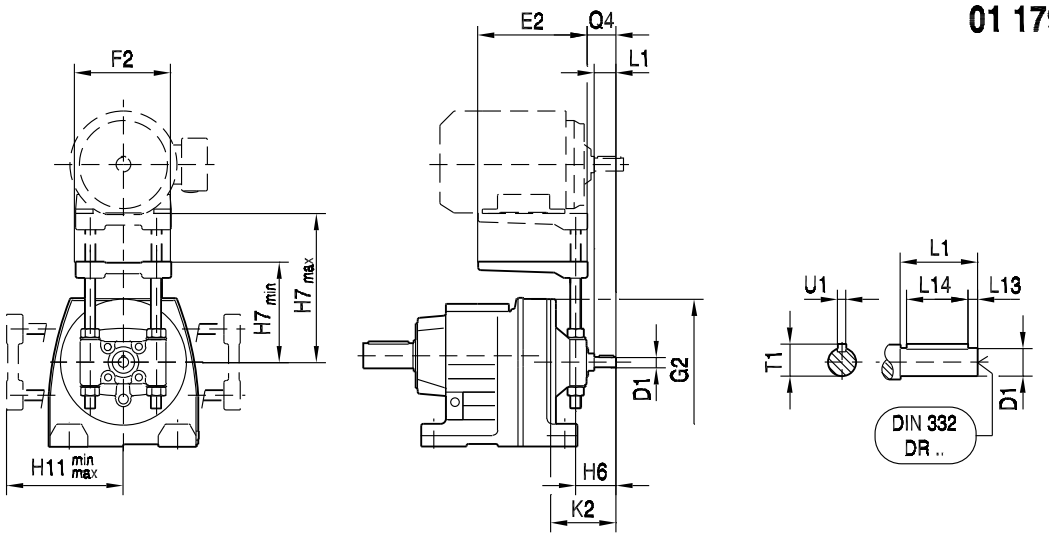

67784axx

K2	Input shaft assembly length	G2	Flange diameter on input side of gear unit
E2	Length of motor mounting platform	Q4	Distance of shaft end and base plate
F2	Width of motor mounting platform	H6	Distance of shaft end to middle of column
H7	Adjusting height	H11	Adjusting height (0°, 180°)
D1	Shaft diameter	L1	Length of shaft end
L13	Position of key	L14	Key length
U1	Key width	T1	Key height in shaft

8 R..

8.1 R(X).. AM.. [Nm]

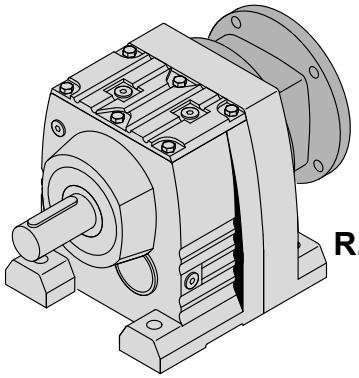

R.. AM..

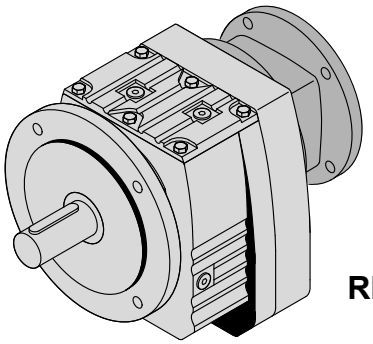

RF.. AM..

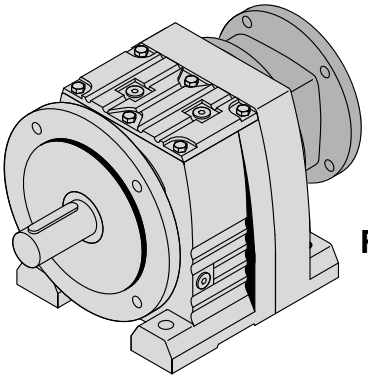

R..F AM..

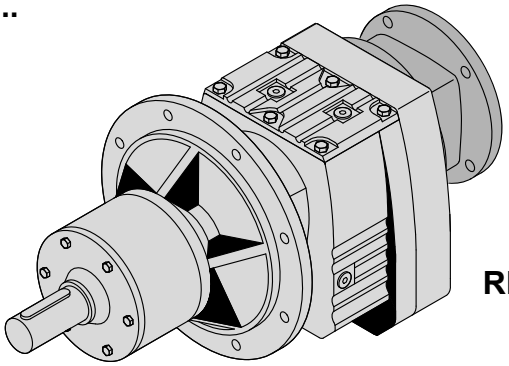

RM.. AM..

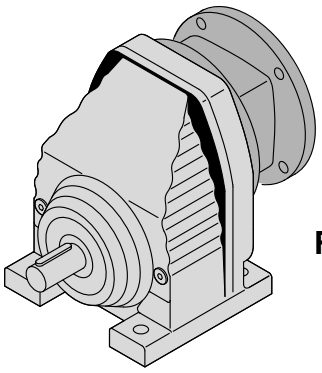

RX.. AM..

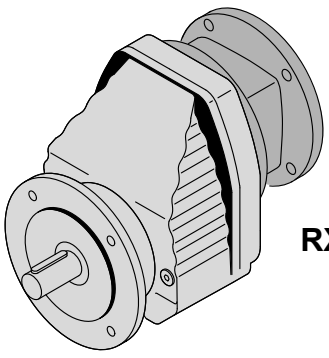

RXF.. AM ..

50392AXX

8.1.1 RX57

n_e = 1400 1/min													69 Nm
	i	n_a [1/min]	$M_{a\,max}$ [Nm]	F_{Ra} [N]	φ (/R) [']	AM 63	71	80	90	100	112	132S/M
RX57 1	**1.30**	1075	63	132	-							
	1.48	946	68	112	-							
	1.65	848	69	430	-							
	1.92	729	69	880	-							
	2.04	686	69	1070	-							
	2.37	591	69	1500	-							
	2.64	530	69	1810	-							
	2.91	481	67	2170	-							
	3.14	446	65	2320	-							
	3.55	394	69	2420	-							
	3.79	369	69	2480	-							
	4.35	322	68	2640	-							
	5.07	276	36	3030	-							
	5.50	255	39	3100	-							

m [kg]		AM						
IEC	**s**	**63**	**71**	**80**	**90**	**100**	**112**	**132S/M**
RX57	1	12	13	15	15	20	20	27
NEMA		-	56	143	145	182	184	213/215
RX57	1	-	13	15	15	19	19	24
RXF: + 1.9 kg								

8.1.2 RX67

n_e = 1400 1/min													134 Nm
	i	n_a [1/min]	$M_{a\,max}$ [Nm]	F_{Ra} [N]	φ (/R) [']	AM 63	71	80	90	100	112	132S/M
RX67 1	**1.40**	1000	104	205	-							
	1.61	870	114	245	-							
	1.86	753	126	225	-							
	2.04	686	134	230	-							
	2.40	583	123	1530	-							
	2.54	551	118	2000	-							
	2.89	484	106	2640	-							
	3.20	438	100	2800	-							
	3.77	371	87	3090	-							
	4.30	326	80	3300	-							
	4.53	309	82	3350	-							
	5.18	270	75	3580	-							
	6.07	231	43	4000	-							

m [kg]		AM						
IEC	**s**	**63**	**71**	**80**	**90**	**100**	**112**	**132S/M**
RX67	1	15	15	17	17	22	22	29
NEMA		-	56	143	145	182	184	213/215
RX67	1	-	16	17	17	21	21	27
RXF: + 4.0 kg								

8.1.3 RX77

n_e = 1400 1/min														215 Nm
	i	n_a [1/min]	$M_{a\,max}$ [Nm]	F_{Ra} [N]	φ (/R) [']	AM 63	71	80	90	100	112	132S/M	132ML
RX77 1	**1.42**	986	155	315	-								
	1.67	838	173	315	-								
	1.88	745	187	335	-								
	2.13	657	200	435	-								
	2.43	576	215	510	-								
	2.70	519	215	1110	-								
	3.08	455	193	2560	-								
	3.25	431	182	3200	-								
	3.70	378	153	4290	-								
	4.04	347	143	4500	-								
	4.73	296	123	4900	-								
	5.35	262	103	5240	-								
	5.63	249	110	5300	-								
	6.41	218	103	5600	-								
	7.47	187	53	6200	-								
	8.00	175	57	6330	-								

m [kg]		AM							
IEC	s	63	71	80	90	100	112	132S/M	132ML
RX77	1	25	25	27	27	32	32	39	39
NEMA		-	56	143	145	182	184	213/215	-
RX77	1	-	25	27	27	31	31	37	-
RXF: + 2.3 kg									

8.1.4 RX87

n_e = 1400 1/min														405 Nm
	i	n_a [1/min]	$M_{a\,max}$ [Nm]	F_{Ra} [N]	φ (/R) [']	AM 80	90	100	112	132S/M	132ML	160	180
RX87 1	**1.39**	1005	290	74	-								
	1.60	875	315	74	-								
	1.93	725	355	185	-								
	2.15	651	385	42	-								
	2.48	565	405	470	-								
	2.76	507	405	1200	-								
	3.09	453	405	1950	-								
	3.48	402	405	2730	-								
	3.78	370	305	5030	-								
	4.50	311	290	5500	-								
	5.07	276	250	5980	-								
	5.56	252	225	6320	-								
	6.45	217	192	6850	-								
	7.20	194	140	7380	-								
	7.63	183	149	7490	-								
	8.65	162	139	7890	-								

m [kg]		AM							
IEC	s	80	90	100	112	132S/M	132ML	160	180
RX87	1	43	43	48	48	56	56	72	72
NEMA		143	145	182	184	213/215	-	254/256	284/286
RX87	1	43	43	47	47	54	-	67	69
RXF: + 5.0 kg									

8.1.5 RX97

n_e = 1400 1/min													595 Nm
	i	n_a [1/min]	$M_{a\,max}$ [Nm]	F_{Ra} [N]	φ (/R) [']	AM 100	112	132S/M	132ML	160	180	200	225
RX97 1	**1.42**	986	455	132	-								
	1.64	854	505	51	-								
	1.96	714	570	19	-								
	2.24	625	595	495	-								
	2.64	530	595	1980	-								
	2.92	479	595	2810	-								
	3.30	424	595	3730	-								
	3.64	385	595	4530	-								
	4.04	347	595	5380	-								
	4.52	310	595	6180	-								
	4.91	285	395	7220	-								
	5.79	242	420	7630	-								
	6.56	213	300	8500	-								
	7.16	196	260	8950	-								
	8.23	170	225	9560	-								

m [kg]		AM							
IEC	s	100	112	132S/M	132ML	160	180	200	225
RX97	1	73	73	79	79	97	97	115	120
NEMA		182	184	213/215	-	254/256	284/286	324/326	364/365
RX97	1	72	72	77	-	92	94	110	110
RXF: + 8.6 kg									

8.1.6 RX107

n_e = 1400 1/min													830 Nm
	i	n_a [1/min]	$M_{a\,max}$ [Nm]	F_{Ra} [N]	φ (/R) [']	AM 100	112	132S/M	132ML	160	180	200	225
RX107 1	**1.44**	972	645	315	-								
	1.71	819	705	480	-								
	1.95	718	765	555	-								
	2.30	609	830	900	-								
	2.64	530	830	2160	-								
	3.07	456	830	3600	-								
	3.38	414	830	4490	-								
	3.81	367	830	5550	-								
	4.20	333	830	6420	-								
	4.65	301	695	7450	-								
	5.19	270	695	7850	-								
	5.61	250	455	9080	-								
	6.63	211	460	9700	-								

m [kg]		AM							
IEC	s	100	112	132S/M	132ML	160	180	200	225
RX107	1	105	105	110	110	130	130	145	150
NEMA		182	184	213/215	-	254/256	284/286	324/326	364/365
RX107	1	105	105	105	-	125	125	145	145
RXF: + 16.8 kg									

8.1.7 R27

n_e = 1400 1/min									130 Nm
	i	n_a [1/min]	$M_{a\,max}$ [Nm]	F_{Ra} [N]	φ (/R) [']	AM 63	AM 71	AM 80	AM 90
R27 2	**3.37**	415	79	900	-				
	4.00	350	85	900	-				
	4.27	328	87	920	-				
	5.00	280	95	860	-				
	5.60	250	99	880	-				
	6.59	212	106	880	-				
	7.63	183	112	900	-				
	8.16	172	116	870	-				
	9.41	149	122	900	-				
	10.13	138	122	1890	-				
	11.86	118	129	1980	-				
	13.28	105	130	2140	-				
	15.63	90	130	2290	-				
	18.08	77	130	2440	-				
	19.35	72	130	2510	-				
	22.32	63	130	2660	-				
	26.09	54	130	2840	-				
	28.37	49	130	2940	-				
R27 3	**24.47**	57	130	2760	-				
	28.78	49	130	2950	-				
	32.47	43	130	3100	-				
	36.79	38	130	3260	-				
	39.25	36	130	3350	-				
	44.90	31	130	3530	-				
	48.17	29	130	3630	-				
	55.87	25	130	3840	-				
	61.30	23	130	3980	-				
	69.47	20	130	4180	-				
	74.11	19	130	4230	-				
	84.78	17	130	4230	-				
	90.96	15	130	4230	-				
	105.49	13	130	4230	-				
	123.91	11	130	4230	-				
	135.09	10	130	4230	-				

m [kg]		AM			
IEC	s	63	71	80	90
R27	2	6.2	6.5	8.9	8.9
R27	3	6.5	6.7	9.1	9.2
NEMA		-	56	143	145
R27	2	-	6.8	8.9	8.9
R27	3	-	7.1	9.1	9.2
RF: + -0.1 kg					

8.1.8 R37

n_e = 1400 1/min									200 Nm
	i	n_a [1/min]	$M_{a\,max}$ [Nm]	F_{Ra} [N]	φ (/R) [']	AM 63	AM 71	AM 80	AM 90
R37 2	**3.41**	411	112	900	14				
	4.05	346	122	840	13				
	4.32	324	126	820	13				
	5.06	277	135	790	13				
	5.67	247	142	760	12				
	6.67	210	144	1000	12				
	7.97	176	156	1720	8				
	9.47	148	167	1760	8				
	10.11	138	170	1820	8				
	11.83	118	183	1810	8				
	13.25	106	190	1880	8				
	15.60	90	200	2010	8				
	18.05	78	200	2390	8				
	19.31	73	200	2570	7				
	22.27	63	200	2970	7				
	26.03	54	185	3860	7				
	28.32	49	200	3690	7				
R37 3	**24.42**	57	200	3240	9				
	28.73	49	200	3740	9				
	32.40	43	200	4120	9				
	36.72	38	200	4540	9				
	39.17	36	200	4760	9				
	44.81	31	200	4940	9				
	48.08	29	200	4940	9				
	55.76	25	200	4940	9				
	61.18	23	200	4940	8				
	69.33	20	200	4940	8				
	73.96	19	200	4940	8				
	84.61	17	200	4940	8				
	90.77	15	200	4940	8				
	105.28	13	200	4940	8				
	123.66	11	200	4940	8				
	134.82	10	200	4940	8				

m [kg]		AM			
IEC	s	63	71	80	90
R37	2	12	12	15	15
R37	3	12	13	15	15
NEMA		-	56	143	145
R37	2	-	13	15	15
R37	3	-	13	15	15
RF: + 1.5 kg					

8.1.9 R47

n_e = 1400 1/min													300 Nm
	i	n_a [1/min]	$M_{a\,max}$ [Nm]	F_{Ra} [N]	φ (/R) [']	AM 63	71	80	90	100	112	132S/M
R47 2	**3.83**	366	144	2080	11							
	4.34	323	146	2190	11							
	4.85	289	150	2280	10							
	5.64	248	155	2410	10							
	6.00	233	156	2470	10							
	6.96	201	159	2620	10							
	7.76	180	163	2720	10							
	8.01	175	205	2690	8							
	9.07	154	220	2780	8							
	10.15	138	230	2880	7							
	11.79	119	245	3020	7							
	12.54	112	250	3080	7							
	14.56	96	265	3230	7							
	16.22	86	275	3350	7							
	17.89	78	290	3390	7							
	19.27	73	295	3530	7							
	21.81	64	300	3710	7							
	23.28	60	300	3820	7							
	26.74	52	300	4050	7							
	31.12	45	220	4610	7							
	33.79	41	240	4680	7							
R47 3	**23.59**	59	300	3840	8							
	26.70	52	300	4050	8							
	29.88	47	300	4240	8							
	34.73	40	300	4520	8							
	36.93	38	300	4630	8							
	42.87	33	300	4930	8							
	47.75	29	300	5140	8							
	52.69	27	300	5350	8							
	56.73	25	300	5420	8							
	64.21	22	300	5420	8							
	68.54	20	300	5420	8							
	76.23	18	300	5420	7							
	84.90	16	300	5420	7							
	93.68	15	300	5420	7							
	100.86	14	300	5420	7							
	114.17	12	300	5420	7							
	121.87	11	300	5420	7							
	139.99	10	300	5420	7							
	162.94	8.6	300	5420	7							
	176.88	7.9	300	5420	7							

m [kg]		AM						
IEC	s	63	71	80	90	100	112	132S/M
R47	2	16	16	18	19	23	23	30
R47	3	17	17	19	19	24	24	31
NEMA		-	56	143	145	182	184	213/215
R47	2	-	17	18	19	22	22	28
R47	3	-	17	19	19	23	23	28
RF: + 0.1 kg								

8.1.10 R57

n_e = 1400 1/min													450 Nm
	i	n_a [1/min]	$M_{a\,max}$ [Nm]	F_{Ra} [N]	φ (/R) [']	AM 63	71	80	90	100	112	132S/M
R57 2	**4.39**	319	280	1900	10							
	5.05	277	305	1730	10							
	5.82	241	320	1820	10							
	6.41	218	335	1770	9							
	7.53	186	350	1950	9							
	7.97	176	355	2020	9							
	9.06	155	375	2010	9							
	9.35	150	370	3180	7							
	10.79	130	390	3330	7							
	11.88	118	405	3430	7							
	13.95	100	430	3610	7							
	14.77	95	435	3690	7							
	16.79	83	450	3860	7							
	18.60	75	450	4050	7							
	21.93	64	450	4370	7							
	24.99	56	450	4640	6							
	26.31	53	450	4750	6							
R57 3	**26.97**	52	450	4800	8							
	30.18	46	450	5040	8							
	35.07	40	450	5390	8							
	37.30	38	450	5530	8							
	43.30	32	450	5900	8							
	48.23	29	450	6170	8							
	53.22	26	450	6430	8							
	57.29	24	450	6630	8							
	64.85	22	450	6980	8							
	69.23	20	450	7100	7							
	80.55	17	450	7100	7							
	89.71	16	450	7100	7							
	98.99	14	450	7100	7							
	106.58	13	450	7100	7							
	120.63	12	450	7100	7							
	128.77	11	450	7100	7							
	147.92	9.5	450	7100	7							
	172.17	8.1	450	7100	7							
	186.89	7.5	450	7100	7							

m [kg]		AM						
IEC	s	63	71	80	90	100	112	132S/M
R57	2	21	21	23	23	28	28	35
R57	3	22	22	24	24	29	29	36
NEMA		-	56	143	145	182	184	213/215
R57	2	-	22	23	23	27	27	33
R57	3	-	22	24	24	28	28	34
RF: + 3.4 kg / RM: + 15.4 kg								

8.1.11 R67

n_e = 1400 1/min													600 Nm
	i	n_a [1/min]	$M_{a\,max}$ [Nm]	F_{Ra} [N]	φ (/R) [']	AM 63	71	80	90	100	112	132S/M
R67 2	**4.29**	326	270	5000	10							
	4.93	284	290	5210	9							
	5.70	246	310	5450	9							
	6.27	223	330	5590	9							
	7.36	190	370	5790	8							
	7.79	180	380	5830	8							
	8.70	161	440	5960	7							
	10.00	140	470	6220	7							
	11.54	121	500	6500	7							
	12.70	110	520	6640	6							
	14.91	94	550	6980	6							
	15.79	89	560	7130	6							
	17.95	78	590	7330	6							
	19.89	70	600	7560	6							
	23.44	60	560	8010	6							
	26.72	52	540	8210	6							
	28.13	50	540	8210	6							
R67 3	**28.83**	49	520	8400	7							
	32.27	43	540	8210	7							
	37.50	37	570	7900	7							
	39.88	35	580	7790	7							
	46.29	30	600	7560	7							
	51.56	27	600	7560	7							
	56.89	25	600	7560	7							
	61.26	23	600	7560	7							
	69.75	20	600	7560	7							
	74.17	19	600	7560	7							
	86.11	16	600	7560	6							
	95.91	15	600	7560	6							
	105.83	13	600	7560	6							
	113.94	12	600	7560	6							
	128.97	11	600	7560	6							
	137.67	10	600	7560	6							
	158.14	8.9	600	7560	6							
	184.07	7.6	600	7560	6							
	199.81	7.0	600	7560	6							

m [kg]		AM						
IEC	s	63	71	80	90	100	112	132S/M
R67	2	28	28	30	30	35	35	42
R67	3	28	29	31	31	36	36	43
NEMA		-	56	143	145	182	184	213/215
R67	2	-	28	30	30	34	34	39
R67	3	-	29	31	31	35	35	40
RF: + 3.2 kg / RM: + 19.0 kg								

8.1.12 R77

n_e = 1400 1/min														820 Nm
	i	n_a [1/min]	$M_{a\,max}$ [Nm]	F_{Ra} [N]	φ (/R) [']	AM 63	71	80	90	100	112	132S/M	132ML
R77 2	**5.31**	264	510	3990	8								
	5.99	234	540	3990	8								
	6.79	206	580	3850	8								
	7.74	181	610	3940	8								
	8.59	163	630	4110	7								
	9.64	145	630	6300	7								
	10.88	129	660	6490	6								
	12.33	114	690	6740	6								
	14.05	100	720	7050	6								
	15.60	90	740	7390	6								
	17.82	79	780	7620	6								
	18.80	74	780	7980	6								
	21.43	65	820	8250	6								
	23.37	60	820	8870	6								
R77 3	**25.23**	55	780	10100	7								
	29.00	48	820	9920	7								
	33.47	42	820	9920	7								
	36.83	38	820	9920	7								
	43.26	32	820	9920	7								
	45.81	31	820	9920	7								
	52.07	27	820	9920	7								
	57.68	24	820	9920	7								
	65.77	21	820	9920	7								
	77.24	18	820	9920	6								
	81.80	17	820	9920	6								
	92.97	15	820	9920	6								
	102.99	14	820	9920	6								
	121.42	12	820	9920	6								
	138.39	10	820	9920	6								
	145.67	9.6	820	9920	6								
	166.59	8.4	820	9920	6								
	195.24	7.2	820	9920	6								

m [kg]		AM							
IEC	s	63	71	80	90	100	112	132S/M	132ML
R77	2	33	34	36	36	40	40	47	47
R77	3	34	35	37	37	41	41	48	48
NEMA		-	56	143	145	182	184	213/215	-
R77	2	-	34	36	36	39	39	45	-
R77	3	-	35	37	37	40	40	46	-
RF: + 5.7 kg / RM: + 30.7 kg									

8.1.13 R87

n_e = 1400 1/min													1550 Nm
	i	n_a [1/min]	$M_{a\,max}$ [Nm]	F_{Ra} [N]	φ (/R) [']	AM 80	90	100	112	132S/M	132ML	160	180
R87 2	**5.30**	264	910	8980	7								
	6.39	219	1020	9450	7								
	7.13	196	1070	9780	7								
	8.22	170	1160	10200	7								
	9.14	153	1210	10500	6								
	9.90	141	1180	10400	6								
	11.93	117	1230	11200	6								
	13.33	105	1280	11600	6								
	15.35	91	1340	12100	6								
	17.08	82	1390	12600	6								
	19.10	73	1440	13000	6								
	21.51	65	1500	13600	6								
	23.40	60	1550	13900	6								
	27.84	50	1550	15000	6								
	31.40	45	1550	7820	5								
	34.40	41	1500	9480	5								
R87 3	**27.88**	50	1500	15100	7								
	32.66	43	1550	16000	7								
	36.84	38	1550	16800	7								
	41.74	34	1550	16900	7								
	47.58	29	1550	16900	7								
	52.82	27	1550	13500	6								
	60.35	23	1550	15200	6								
	63.68	22	1550	15800	6								
	72.57	19	1550	16900	6								
	81.92	17	1550	16900	6								
	93.38	15	1550	16900	6								
	103.65	14	1550	16900	6								
	118.43	12	1550	16900	6								
	124.97	11	1550	16900	6								
	142.41	9.8	1550	16900	6								
	155.34	9.0	1550	16900	6								
	181.77	7.7	1550	16900	6								
	205.71	6.8	1550	16900	6								
	216.54	6.5	1550	16900	6								
	246.54	5.7	1550	16900	6								

m [kg]		AM							
IEC	s	80	90	100	112	132S/M	132ML	160	180
R87	2	62	62	67	67	74	74	90	90
R87	3	63	63	68	68	76	76	92	92
NEMA		143	145	182	184	213/215	-	254/256	284/286
R87	2	62	62	66	66	72	-	85	88
R87	3	63	63	67	67	74	-	87	89
RF: + 7.1 kg / RM: + 36.8 kg									

8.1.14 R97

n_e = 1400 1/min														3000 Nm
	i	n_a [1/min]	$M_{a\,max}$ [Nm]	F_{Ra} [N]	φ (/R) [']	AM 100	112	132S/M	132ML	160	180	200	225
R97 2	**4.50**	311	1630	9500	6								
	5.20	269	1780	9850	6								
	6.21	225	1890	10500	6								
	7.12	197	2000	10900	6								
	8.39	167	2030	11700	6								
	9.29	151	2030	12200	6								
	10.83	129	2090	12100	6								
	12.39	113	2190	12700	6								
	14.62	96	2300	13400	6								
	16.17	87	2400	13800	6								
	18.24	77	2500	14400	6								
	20.14	70	2610	14800	5								
	22.37	63	2720	15300	5								
	25.03	56	2830	15900	5								
	27.19	51	2560	8380	5								
	32.05	44	2560	10600	5								
R97 3	**27.58**	51	2670	16900	6								
	33.25	42	2890	17900	6								
	37.13	38	3000	18600	6								
	42.78	33	3000	19800	6								
	47.58	29	3000	19800	6								
	53.21	26	3000	19800	6								
	59.92	23	3000	19800	6								
	65.21	21	3000	19800	6								
	72.17	19	3000	18000	6								
	83.15	17	3000	19800	6								
	92.48	15	3000	19800	6								
	103.44	14	3000	19800	6								
	116.48	12	3000	19800	6								
	126.75	11	3000	19800	6								
	150.78	9.3	3000	19800	6								
	170.02	8.2	3000	19800	6								
	186.30	7.5	3000	19800	6								
	216.28	6.5	3000	19800	6								
	241.25	5.8	3000	19800	6								
	255.71	5.5	3000	19800	6								
	289.74	4.8	3000	19800	6								

m [kg]		AM							
IEC	s	100	112	132S/M	132ML	160	180	200	225
R97	2	105	105	115	115	130	130	145	150
R97	3	110	110	115	115	135	135	150	155
NEMA		182	184	213/215	-	254/256	284/286	324/326	364/365
R97	2	105	105	110	-	125	130	145	145
R97	3	110	110	115	-	130	130	150	150
RF: + 17.2 kg / RM: + 68.5 kg									

8.1.15 R107

n_e = 1400 1/min													4300 Nm
	i	n_a [1/min]	$M_{a\,max}$ [Nm]	F_{Ra} [N]	φ (/R) [']	AM 100	112	132S/M	132ML	160	180	200	225
R107 2	**4.92**	285	2900	11300	9								
	5.82	241	2970	12100	9								
	6.66	210	2970	12800	9								
	7.86	178	2970	13800	9								
	8.56	164	4300	11300	7								
	10.13	138	4300	12400	7								
	11.59	121	4300	13300	7								
	13.66	102	4300	14400	7								
	15.65	89	4300	15400	7								
	18.21	77	4300	16600	7								
	20.07	70	4300	17300	7								
	22.62	62	4300	18300	7								
	24.90	56	4300	19200	7								
	27.58	51	4300	20100	7								
	30.77	45	4300	21100	7								
R107 3	**29.49**	47	4300	20700	7								
	35.26	40	4300	22400	7								
	40.37	35	4300	23800	7								
	47.63	29	4300	25500	7								
	52.68	27	4300	26600	7								
	59.41	24	4300	28000	7								
	65.60	21	4300	29200	7								
	72.88	19	4300	29500	7								
	78.57	18	4300	29500	7								
	92.70	15	4300	29500	7								
	102.53	14	4300	29500	7								
	115.63	12	4300	29500	7								
	127.68	11	4300	29500	7								
	141.83	9.9	4300	29500	7								
	158.68	8.8	4300	29500	7								
	172.34	8.1	4300	29500	7								
	203.16	6.9	4300	29500	7								
	229.95	6.1	4300	29500	7								
	251.15	5.6	4300	29500	7								

m [kg]		AM							
IEC	s	100	112	132S/M	132ML	160	180	200	225
R107	2	160	160	165	165	185	185	200	205
R107	3	170	170	170	170	190	190	205	210
NEMA		182	184	213/215	-	254/256	284/286	324/326	364/365
R107	2	160	160	160	-	180	180	200	200
R107	3	165	165	170	-	185	185	205	205
RF: + 6.0 kg / RM: + 94.0 kg									

8.1.16 R137

n_e = 1400 1/min												8000 Nm
	i	n_a [1/min]	$M_{a\,max}$ [Nm]	F_{Ra} [N]	φ (/R) [']	AM 132S/M	132ML	160	180	200	225
R137 2	**5.15**	272	4600	34500	8						
	6.38	219	5110	35900	8						
	7.59	184	5110	39000	8						
	8.71	161	7840	27600	6						
	10.79	130	8000	31100	6						
	12.83	109	8000	34700	6						
	14.51	96	8000	37300	6						
	16.80	83	8000	40600	6						
	19.04	74	8000	43500	6						
	22.00	64	8000	47100	6						
	24.12	58	8000	49400	6						
	29.57	47	7780	53900	6						
R137 3	**27.83**	50	7680	54100	6						
	32.91	43	8000	53400	6						
	37.65	37	8000	53400	6						
	44.39	32	8000	53400	6						
	50.86	28	8000	53400	6						
	59.17	24	8000	53400	6						
	65.20	21	8000	53400	6						
	73.49	19	8000	53400	6						
	80.91	17	8000	53400	6						
	88.70	16	8000	53400	6						
	103.20	14	8000	53400	6						
	113.72	12	8000	53400	6						
	128.18	11	8000	53400	6						
	141.12	9.9	8000	53400	6						
	156.31	9.0	8000	53400	6						
	174.40	8.0	8000	53400	6						
	188.45	7.4	8000	53400	6						
	222.60	6.3	8000	53400	6						

m [kg]		AM					
IEC	s	132S/M	132ML	160	180	200	225
R137	2	245	245	265	265	280	285
R137	3	255	255	275	275	290	295
NEMA		213/215	-	254/256	284/286	324/326	364/365
R137	2	245	-	260	260	280	280
R137	3	255	-	270	270	290	290
RF: + 23.3 kg / RM: + 134.4 kg							

8.1.17 R147

n_e = 1400 1/min													13000 Nm
	i	n_a [1/min]	$M_{a\,max}$ [Nm]	F_{Ra} [N]	φ (/R) [']	AM 132ML	160	180	200	225	250	280
R147 2	**5.00**	280	8670	49300	8							
	5.89	238	8670	53200	8							
	7.25	193	8670	58400	8							
	8.26	169	13000	49900	6							
	9.74	144	13000	54400	6							
	11.99	117	13000	60400	5							
	13.91	101	12600	63400	5							
	15.64	90	13000	62700	5							
	18.04	78	10500	67000	5							
	20.44	68	12000	64600	5							
R147 3	**24.19**	58	11900	64700	6							
	29.95	47	13000	62700	6							
	35.64	39	13000	62700	6							
	40.29	35	13000	62700	6							
	46.65	30	13000	62700	6							
	52.87	26	13000	62700	6							
	61.09	23	13000	62700	6							
	66.99	21	13000	62700	6							
	72.09	19	13000	62700	6							
	83.47	17	13000	62700	6							
	94.60	15	13000	62700	6							
	109.31	13	13000	62700	5							
	119.86	12	13000	62700	5							
	146.91	9.5	13000	62700	5							
	163.31	8.6	13000	62700	5							

m [kg]		AM						
IEC	s	132ML	160	180	200	225	250	280
R147	2	380	390	390	405	410	445	445
R147	3	390	405	405	420	425	455	455
NEMA		-	254/256	284/286	324/326	364/365	-	-
R147	2	-	385	390	405	405	-	-
R147	3	-	400	400	415	415	-	-
RF: + 8.3 kg / RM: + 175.7 kg								

8.1.18 R167

n_e = 1400 1/min												18000 Nm
	i	n_a [1/min]	$M_{a\,max}$ [Nm]	F_{Ra} [N]	φ (/R) [']	AM 160	AM 180	AM 200	AM 225	AM 250	AM 280
R167 2	**10.24**	137	17000	82500	5						
	11.99	117	17000	88700	5						
	14.48	97	18000	93800	5						
	16.98	82	15000	108900	5						
	19.03	74	16000	111400	5						
	21.85	64	13000	120000	5						
	24.57	57	14000	120000	5						
	30.71	46	10000	120000	5						
	37.74	37	9000	120000	5						
	46.00	30	7000	120000	5						
R167 3	**23.71**	59	18000	116500	6						
	27.96	50	18000	120000	6						
	34.41	41	18000	120000	6						
	39.92	35	18000	120000	6						
	44.87	31	18000	120000	6						
	51.76	27	18000	120000	6						
	58.65	24	18000	120000	6						
	67.40	21	18000	120000	6						
	73.70	19	18000	120000	6						
	82.91	17	18000	120000	5						
	93.19	15	18000	120000	5						
	107.49	13	18000	120000	5						
	121.81	11	18000	120000	5						
	139.98	10	18000	120000	5						
	153.07	9.1	18000	120000	5						
	186.93	7.5	18000	120000	5						
	229.71	6.1	18000	120000	5						

m [kg]		AM					
IEC	**s**	**160**	**180**	**200**	**225**	**250**	**280**
R167	2	650	650	670	670	700	700
R167	3	650	650	670	680	700	700
NEMA		254/256	284/286	324/326	364/365	-	-
R167	2	640	640	660	660	-	-
R167	3	650	650	670	670	-	-
RF: + 6.4 kg / RM: + 201.8 kg							

8.2 R.. AT.. [Nm]

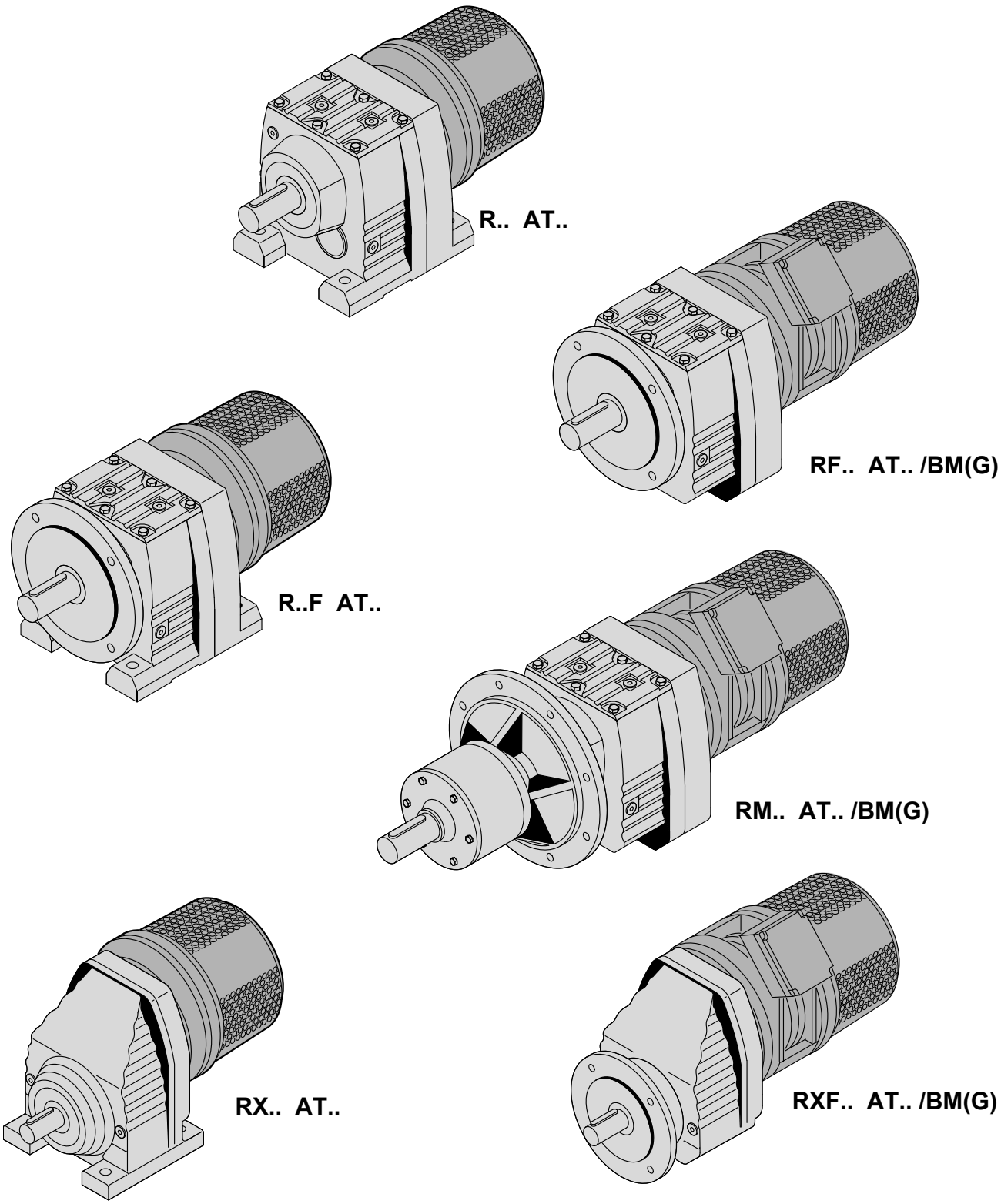

8.2.1 R..AT/ DRS..4

		P_m [kW]				Sn [%]	
R67	DRS71S4	0,37	AT311	T11	0,42	12	
	DRS71M4	0,55	AT312	T11D	0,55	11	
	DRS80S4	0,75	AT312	T11D	0,7	11	
	DRS80M4	1,1	AT312	T11D	0,72	15	
	DRS90M4	1,5	AT321	T21	0,85	9	
	DRS90L4	2,2	AT321	T21	0,9	13	
	DRS100M4	3	AT322	T21D	1,53	11	
	DRS100LC4	4	AT322	T21D	1,6	12	
R77	DRS71S4	0,37	AT311	T11	0,42	12	
	DRS71M4	0,55	AT312	T11D	0,55	11	
	DRS80S4	0,75	AT312	T11D	0,7	11	
	DRS80M4	1,1	AT312	T11D	0,72	15	
	DRS90M4	1,5	AT421	T21	0,85	9	
	DRS90L4	2,2	AT421	T21	0,9	13	
	DRS100M4	3	AT422	T21D	1,53	11	→ 214ff
	DRS100LC4	4	AT422	T21D	1,6	12	→ 217ff
	DRS112M4	4	AT422	T21D	1,6	12	
R87	DRS80M4	1,1	AT312	T11D	0,72	15	
	DRS90M4	1,5	AT421	T21	0,85	9	
	DRS90L4	2,2	AT421	T21	0,9	13	
	DRS100M4	3	AT422	T21D	1,53	11	
	DRS100LC4	4	AT422	T21D	1,6	12	
	DRS112M4	4	AT422	T21D	1,6	12	
	DRS132S4	5,5	AT541	T41	2	6	
	DRS132M4	7,5	AT541	T41	2,4	8	
	DRS132MC4	9,2	AT541	T41	2,5	10	
	DRS160S4	9,2	AT541	T41	2,5	10	
	DRS160M4	11	AT541	T41	2,5	13	
	DRS160MC4	15	AT542	T41D	4,2	8	
	DRS180S4	15	AT542	T41D	4.2	8	

		P_m [kW]				Sn [%]	
R97	DRS80M4	1.1	AT312	T11D	0.72	15	
	DRS90M4	1.5	AT421	T21	0.85	9	
	DRS90L4	2.2	AT421	T21	0.9	13	
	DRS100M4	3	AT422	T21D	1.53	11	
	DRS100LC4	4	AT422	T21D	1.6	12	
	DRS112M4	4	AT422	T21D	1.6	12	
	DRS132S4	5.5	AT541	T41	2	6	
	DRS132M4	7.5	AT541	T41	2.4	8	
	DRS132MC4	9.2	AT541	T41	2.5	10	
	DRS160S4	9.2	AT541	T41	2.5	10	
	DRS160M4	11	AT541	T41	2.5	13	
	DRS160MC4	15	AT542	T41D	4.2	8	
	DRS180S4	15	AT542	T41D	4.2	8	
	DRS180M4	18.5	AT542	T41D	4.3	10	
	DRS180L4	22	AT542	T41D	4.3	14	
R107	DRS90L4	2.2	AT421	T21	0.9	13	
	DRS100M4	3	AT422	T21D	1.53	11	
	DRS100LC4	4	AT422	T21D	1.6	12	
	DRS112M4	4	AT422	T21D	1.6	12	
	DRS132S4	5.5	AT541	T41	2	6	→ 214ff
	DRS132M4	7.5	AT541	T41	2.4	8	→ 217ff
	DRS132MC4	9.2	AT541	T41	2.5	10	
	DRS160S4	9.2	AT541	T41	2.5	10	
	DRS160M4	11	AT541	T41	2.5	13	
	DRS160MC4	15	AT542	T41D	4.2	8	
	DRS180S4	15	AT542	T41D	4.2	8	
	DRS180M4	18.5	AT542	T41D	4.3	10	
	DRS180L4	22	AT542	T41D	4.3	14	
R137	DRS90L4	2.2	AT421	T21	0.9	13	
	DRS100M4	3	AT422	T21D	1.53	11	
	DRS100LC4	4	AT422	T21D	1.6	12	
	DRS112M4	4	AT422	T21D	1.6	12	
	DRS132S4	5.5	AT541	T41	2	6	
	DRS132M4	7.5	AT541	T41	2.4	8	
	DRS132MC4	9.2	AT541	T41	2.5	10	
	DRS160S4	9.2	AT541	T41	2.5	10	
	DRS160M4	11	AT541	T41	2.5	13	
	DRS160MC4	15	AT542	T41D	4.2	8	
	DRS180S4	15	AT542	T41D	4.2	8	
	DRS180M4	18.5	AT542	T41D	4.3	10	
	DRS180L4	22	AT542	T41D	4.3	14	

		P_m [kW]				Sn [%]	
R147	DRS132M4	7.5	AT541	T41	2.4	8	
	DRS132MC4	9.2	AT541	T41	2.5	10	
	DRS160S4	9.2	AT541	T41	2.5	10	
	DRS160M4	11	AT541	T41	2.5	13	
	DRS160MC4	15	AT542	T41D	4.2	8	
	DRS180S4	15	AT542	T41D	4.2	8	→ 214ff
	DRS180M4	18.5	AT542	T41D	4.3	10	
	DRS180L4	22	AT542	T41D	4.3	14	→ 217ff
R167	DRS160M4	11	AT541	T41	2.5	13	
	DRS160MC4	15	AT542	T41D	4.2	8	
	DRS180S4	15	AT542	T41D	4.2	8	
	DRS180M4	18.5	AT542	T41D	4.3	10	
	DRS180L	22	AT542	T41D	4.3	14	

8.2.2 R..AT/ DRE..4

		P_m [kW]				Sn [%]	
R67	DRE80M4	0.75	AT312	T11D	0.7	11	
	DRE90M4	1.1	AT312	T11D	0.72	15	
	DRE90L4	1.5	AT321	T21	0.85	9	
	DRE100M4	2.2	AT321	T21	0.9	13	
	DRE100LC4	3	AT322	T21D	1.53	11	
R77	DRE80M4	0.75	AT312	T11D	0.7	11	
	DRE90M4	1.1	AT312	T11D	0.72	15	
	DRE90L4	1.5	AT421	T21	0.85	9	
	DRE100M4	2.2	AT421	T21	0.9	13	
	DRE100LC4	3	AT422	T21D	1.53	11	
	DRE112M4	3	AT422	T21D	1.53	11	
	DRE132S4	4	AT422	T21D	1.6	12	→ 214ff
R87	DRE90M4	1.1	AT312	T11D	0.72	15	→ 217ff
	DRE90L4	1.5	AT421	T21	0.85	9	
	DRE100M4	2.2	AT421	T21	0.9	13	
	DRE100LC4	3	AT422	T21D	1.53	11	
	DRE112M4	3	AT422	T21D	1.53	11	
	DRE132S4	4	AT422	T21D	1.6	12	
	DRE132M4	5.5	AT541	T41	2	6	
	DRE132MC4	7.5	AT541	T41	2.4	8	
	DRE160M4	9.2	AT541	T41	2.5	10	
	DRE160MC4	11	AT541	T41	2.5	13	
	DRE180S4	11	AT541	T41	2.5	13	
	DRE180M4	15	AT542	T41D	4.2	8	

		P_m [kW]				Sn [%]	
R97	DRE90M4	1.1	AT312	T11D	0.72	15	
	DRE90L4	1.5	AT421	T21	0.85	9	
	DRE100M4	2.2	AT421	T21	0.9	13	
	DRE100LC4	3	AT422	T21D	1.53	11	
	DRE112M4	3	AT422	T21D	1.53	11	
	DRE132S4	4	AT422	T21D	1.6	12	
	DRE132M4	5.5	AT541	T41	2	6	
	DRE132MC4	7.5	AT541	T41	2.4	8	
	DRE160M4	9.2	AT541	T41	2.5	10	
	DRE160MC4	11	AT541	T41	2.5	13	
	DRE180S4	11	AT541	T41	2.5	13	
	DRE180M4	15	AT542	T41D	4.2	8	
	DRE180L4	18.5	AT542	T41D	4.3	10	
R107	DRE100M4	2.2	AT421	T21	0.9	13	
	DRE100LC4	3	AT422	T21D	1.53	11	
	DRE112M4	3	AT422	T21D	1.53	11	
	DRE132S4	4	AT422	T21D	1.6	12	
	DRE132M4	5.5	AT541	T41	2	6	
	DRE132MC4	7.5	AT541	T41	2.4	8	
	DRE160M4	9.2	AT541	T41	2.5	10	
	DRE160MC4	11	AT541	T41	2.5	13	
	DRE180S4	11	AT541	T41	2.5	13	
	DRE180M4	15	AT542	T41D	4.2	8	
	DRE180L4	18.5	AT542	T41D	4.3	10	
R137	DRE100M4	2.2	AT421	T21	0.9	13	
	DRE100LC4	3	AT422	T21D	1.53	11	
	DRE112M4	3	AT422	T21D	1.53	11	
	DRE132S4	4	AT422	T21D	1.6	12	
	DRE132M4	5.5	AT541	T41	2	6	
	DRE132MC4	7.5	AT541	T41	2.4	8	
	DRE160M4	9.2	AT541	T41	2.5	10	
	DRE160MC4	11	AT541	T41	2.5	13	
	DRE180S44	11	AT541	T41	2.5	13	
	DRE180M4	15	AT542	T41D	4.2	8	
	DRE180L4	18.5	AT542	T41D	4.3	10	
R147	DRE132MC4	7.5	AT541	T41	2.4	8	
	DRE160M4	9.2	AT541	T41	2.5	10	
	DRE160MC4	11	AT541	T41	2.5	13	
	DRE180S4	11	AT541	T41	2.5	13	
	DRE180M4	15	AT542	T41D	4.2	8	
	DRE180L4	18.5	AT542	T41D	4.3	10	
R167	DRE160MC4	11	AT541	T41	2.5	13	
	DRE180S4	11	AT541	T41	2.5	13	
	DRE180M4	15	AT542	T41D	4.2	8	
	DRE180L4	18.5	AT542	T41D	4.3	10	

→ 214ff
→ 217ff

8.2.3 R..AT/ DRP..4

		P_m [kW]				Sn [%]	
R67	DRP90M4	0.75	AT312	T11D	0.7	11	
	DRP90L4	1.1	AT312	T11D	0.72	15	
	DRP100M4	1.5	AT321	T21	0.85	9	
	DRP100L4	2.2	AT321	T21	0.9	13	
R77	DRP90M4	0.75	AT312	T11D	0.7	11	
	DRP90L4	1.1	AT312	T11D	0.72	15	
	DRP100M4	1.5	AT421	T21	0.85	9	
	DRP100L4	2.2	AT421	T21	0.9	13	
	DRP112M4	3	AT422	T21D	1.53	11	
	DRP132M4	4	AT422	T21D	1.6	12	
R87	DRP90L4	1.1	AT312	T11D	0.72	15	
	DRP100M4	1.5	AT421	T21	0.85	9	
	DRP100L4	2.2	AT421	T21	0.9	13	
	DRP112M4	3	AT422	T21D	1.53	11	
	DRP132M4	4	AT422	T21D	1.6	12	
	DRP132MC4	5.5	AT541	T41	2	6	
	DRP160S4	5.5	AT541	T41	2	6	
	DRP160M4	7.5	AT541	T41	2.4	8	
	DRP160MC4	9.2	AT541	T41	2.5	10	
	DRP180S4	9.2	AT541	T41	2.5	10	
	DRP180M4	11	AT541	T41	2.5	13	
	DRP180L4	15	AT542	T41D	4.2	8	→ 214ff
R97	DRP90L4	1.1	AT312	T11D	0.72	15	→ 217ff
	DRP100M4	1.5	AT421	T21	0.85	9	
	DRP100L4	2.2	AT421	T21	0.9	13	
	DRP112M4	3	AT422	T21D	1.53	11	
	DRP132M4	4	AT422	T21D	1.6	12	
	DRP132MC4	5.5	AT541	T41	2	6	
	DRP160S4	5.5	AT541	T41	2	6	
	DRP160M4	7.5	AT541	T41	2.4	8	
	DRP160MC4	9.2	AT541	T41	2.5	10	
	DRP180S4	9.2	AT541	T41	2.5	10	
	DRP180M4	11	AT541	T41	2.5	13	
	DRP180L4	15	AT542	T41D	4.2	8	
R107	DRP100L4	2.2	AT421	T21	0.9	13	
	DRP112M4	3	AT422	T21D	1.53	11	
	DRP132M4	4	AT422	T21D	1.6	12	
	DRP132MC4	5.5	AT541	T41	2	6	
	DRP160S4	5.5	AT541	T41	2	6	
	DRP160M4	7.5	AT541	T41	2.4	8	
	DRP160MC4	9.2	AT541	T41	2.5	10	
	DRP180S4	9.2	AT541	T41	2.5	10	
	DRP180M4	11	AT541	T41	2.5	13	
	DRP180L4	15	AT542	T41D	4.2	8	

		P_m [kW]				Sn [%]	
R137	DRP100L4	2.2	AT421	T21	0.9	13	
	DRP112M4	3	AT422	T21D	1.53	11	
	DRP132M4	4	AT422	T21D	1.6	12	
	DRP132MC4	5.5	AT541	T41	2	6	
	DRP160S44	5.5	AT541	T41	2	6	
	DRP160M4	7.5	AT541	T41	2.4	8	
	DRP160MC4	9.2	AT541	T41	2.5	10	
	DRP180S4	9.2	AT541	T41	2.5	10	→ 214ff
	DRP180M4	11	AT541	T41	2.5	13	→ 217ff
	DRP180L4	15	AT542	T41D	4.2	8	
R147	DRP160M4	7.5	AT541	T41	2.4	8	
	DRP160MC4	9.2	AT541	T41	2.5	10	
	DRP180S4	9.2	AT541	T41	2.5	10	
	DRP180M4	11	AT541	T41	2.5	13	
	DRP180L4	15	AT542	T41D	4.2	8	
R167	DRP180M4	11	AT541	T41	2.5	13	
	DRP180L4	15	AT542	T41D	4.2	8	

8.2.4 R..AT/ DRS..2

		P_m [kW]				Sn [%]	
R67	DRS71M2	0.55	AT311	T11	0.19	3	
	DRS80S2	0.75	AT311	T11	0.22	4.5	
	DRS80M2	1.1	AT311	T11	0.27	6	
	DRS90M2	1.5	AT311	T11	0.29	8.5	
	DRS100M2	3	AT311	T11	0.4	12	
	DRS100LC2	4	AT312	T11D	0.52	10	
R77	DRS71M2	0.55	AT311	T11	0.19	3	
	DRS80S2	0.75	AT311	T11	0.22	4.5	
	DRS80M2	1.1	AT311	T11	0.27	6	
	DRS90M2	1.5	AT311	T11	0.29	8.5	→ 214ff
	DRS100M2	3	AT311	T11	0.4	12	→ 217ff
	DRS100LC2	4	AT312	T11D	0.52	10	
	DRS132M2	9.2	AT421	T21	0.65	8.5	
R87	DRS90M2	1.5	AT311	T11	0.29	8.5	
	DRS100M2	3	AT311	T11	0.4	12	
	DRS100LC2	4	AT312	T11D	0.52	10	
	DRS132M2	9.2	AT421	T21	0.65	8.5	
R97	DRS90M2	1.5	AT311	T11	0.29	8.5	
	DRS100M2	3	AT311	T11	0.4	12	
	DRS100LC2	4	AT312	T11D	0.52	10	
	DRS132M2	9.2	AT421	T21	0.65	8.5	

		P_m [kW]				Sn [%]	
R107	DRS100M2	3	AT311	T11	0.4	12	
	DRS100LC2	4	AT312	T11D	0.52	10	→ 214ff
	DRS132M2	9.2	AT421	T21	0.65	8.5	→ 217ff
R137	DRS132M2	9.2	AT421	T21	0.65	8.5	
R147	DRS132M2	9.2	AT421	T21	0.65	8.5	

8.2.5 R..AT/ DRE..2

		P_m [kW]				Sn [%]	
R67	DRE80M2	0.75	AT311	T11	0.22	4.5	
	DRE90M2	1.5	AT311	T11	0.29	8.5	
	DRE100M2	2.2	AT311	T11	0.31	11.5	
	DRE100L2	3	AT311	T11	0.4	12	
R77	DRE80M2	0.75	AT311	T11	0.22	4.5	
	DRE90M2	1.5	AT311	T11	0.29	8.5	
	DRE100M2	2.2	AT311	T11	0.31	11.5	
	DRE100L2	3	AT311	T11	0.4	12	
	DRE132M2	7.5	AT421	T21	0.6	8	
	DRE132MC2	9.2	AT421	T21	0.65	8.5	
R87	DRE90M2	1.5	AT311	T11	0.29	8.5	
	DRE100M2	2.2	AT311	T11	0.31	11.5	
	DRE100L2	3	AT311	T11	0.4	12	→ 214ff
	DRE132M2	7.5	AT421	T21	0.6	8	→ 217ff
	DRE132MC2	9.2	AT421	T21	0.65	8.5	
R97	DRE90M2	1.5	AT311	T11	0.29	8.5	
	DRE100M2	2.2	AT311	T11	0.31	11.5	
	DRE100L2	3	AT311	T11	0.4	12	
	DRE132M2	7.5	AT421	T21	0.6	8	
	DRE132MC2	9.2	AT421	T21	0.65	8.5	
R107	DRE100L2	3	AT311	T11	0.4	12	
	DRE132M2	7.5	AT421	T21	0.6	8	
	DRE132MC2	9.2	AT421	T21	0.65	8.5	
R137	DRE132M2	7.5	AT421	T21	0.6	8	
	DRE132MC2	9.2	AT421	T21	0.65	8.5	
R147	DRE132M2	7.5	AT421	T21	0.6	8	
	DRE132MC2	9.2	AT421	T21	0.65	8.5	

8.2.6 R..AT/ DRP..2

		P_m [kW]				Sn [%]	
R67	DRP80M2	0.75	AT311	T11	0.22	4.5	
	DRP90M2	1.1	AT311	T11	0.27	6	
	DRP100M2	2.2	AT311	T11	0.31	11.5	
	DRP100LC2	3	AT311	T11	0.4	12	
R77	DRP80M2	0.75	AT311	T11	0.22	4.5	
	DRP90M2	1.1	AT311	T11	0.27	6	→ 214ff
	DRP100M2	2.2	AT311	T11	0.31	11.5	→ 217ff
	DRP100LC2	3	AT311	T11	0.4	12	
R87	DRP100M2	2.2	AT311	T11	0.31	11.5	
	DRP100LC2	3	AT311	T11	0.4	12	
R97	DRP100M2	2.2	AT311	T11	0.31	11.5	
	DRP100LC2	3	AT311	T11	0.4	12	
R107	DRP100LC	3	AT311	T11	0.4	12	

8.3 R(X).. AD.. [kW]

i	n_a [1/min]	M_{amax}	P_e [kW]	F_{Ra} 1) [N]	F_{Re} [N]	φ (/R)	⚠				m [kg]	
RX57 AD.. , n_e = 1400 1/min												**69 Nm**
5.50*	255	37	1.0	3120	515	-	-					
5.07	276	34	1.0	3050	645	-	-					
4.35	322	61	2.1	2690	1110	-	-					
3.79	369	58	2.3	2560	1130	-	-	**RX**	**57**	**AD2**	**13**	→ 220
3.55*	394	55	2.3	2520	1150	-	-	**RXF**	**57**	**AD2**	**15**	
3.14	446	65	3.1	2320	990	-	-					
2.91	481	49	2.5	2370	1190	-	-					
2.64*	530	69	3.9	1810	880	-	-					
2.37	591	69	4.4	1500	1860	-	-					
2.04	686	69	5.1	1070	1810	-	-					
1.92*	729	69	5.4	880	1780	-	-	**RX**	**57**	**AD3**	**16**	→ 220
1.65	847	69	6.3	430	1720	-	-	**RXF**	**57**	**AD3**	**18**	
1.48	948	68	6.9	112	1660	-	-					
1.30	1075	63	7.2	132	1710	-	-					
RX67 AD.. , n_e = 1400 1/min												**134 Nm**
6.07	231	41	1.0	4020	630	-	-					
5.18	270	75	2.2	3580	1090	-	-					
4.53	309	71	2.4	3420	1120	-	-	**RX**	**67**	**AD2**	**15**	→ 220
4.30*	326	69	2.4	3370	1140	-	-	**RXF**	**67**	**AD2**	**19**	
3.77	371	87	3.5	3090	880	-	-					
3.20*	438	100	4.7	2800	1700	-	-					
2.89	485	105	5.4	2640	1610	-	-					
2.54	551	118	7.0	2000	1400	-	-					
2.40*	583	123	7.7	1530	1300	-	-	**RX**	**67**	**AD3**	**19**	→ 220
2.04	685	114	8.4	1260	1310	-	-	**RXF**	**67**	**AD3**	**23**	
1.86	754	108	8.7	1180	1340	-	-					
1.61	870	99	9.2	1080	1380	-	-					
1.40*	1000	90	9.6	1030	1420	-	-					
RX77 AD.. , n_e = 1400 1/min												**215 Nm**
8.00*	175	54	1.0	6350	520	-	-					
7.47	188	50	1.0	6220	655	-	-					
6.41	218	101	2.4	5610	1050	-	-	**RX**	**77**	**AD2**	**25**	→ 220
5.63	249	107	2.9	5320	970	-	-	**RXF**	**77**	**AD2**	**27**	
5.35*	262	101	2.8	5250	1020	-	-					
4.73	296	123	3.9	4900	1800	-	-					
4.04*	347	143	5.3	4500	1580	-	-	**RX**	**77**	**AD3**	**29**	→ 220
3.70	378	143	5.8	4350	1560	-	-	**RXF**	**77**	**AD3**	**31**	
3.25*	431	182	8.4	3200	3160	-	-					
3.08*	455	193	9.4	2560	3040	-	-					
2.70	519	215	11.9	1110	2780	-	-					
2.43	576	215	13.2	510	2670	-	-	**RX**	**77**	**AD4**	**35**	→ 220
2.13	657	200	14.0	435	2720	-	-	**RXF**	**77**	**AD4**	**37**	
1.88*	745	187	14.9	335	2750	-	-					
1.67	840	173	15.5	315	2800	-	-					
1.42	984	155	16.3	315	2870	-	-					
RX87 AD.. , n_e = 1400 1/min												**405 Nm**
8.65	162	139	2.4	7890	1070	-	-					
7.63	183	145	2.9	7510	1020	-	-	**RX**	**87**	**AD2**	**41**	→ 220
7.20*	194	136	2.8	7390	1060	-	-	**RXF**	**87**	**AD2**	**46**	
6.45	217	192	4.5	6850	1640	-	-					
5.56*	252	225	6.1	6320	1410	-	-	**RX**	**87**	**AD3**	**45**	→ 220
5.07	276	215	6.4	6140	1440	-	-	**RXF**	**87**	**AD3**	**50**	
4.50*	311	290	9.7	5500	3010	-	-	**RX**	**87**	**AD4**	**52**	→ 220
3.78	370	305	12.1	5030	2850	-	-	**RXF**	**87**	**AD4**	**56**	
3.48	403	405	17.4	2730	5330	-	-					
3.09	454	405	19.6	1950	5250	-	-					
2.76*	507	405	22	1200	5160	-	-					
2.48	564	405	24	470	5060	-	-	**RX**	**87**	**AD5**	**66**	→ 220
2.15	650	385	27	42	5050	-	-	**RXF**	**87**	**AD5**	**71**	
1.93	726	355	28	185	5150	-	-					
1.60*	875	315	29	74	5230	-	-					
1.39	1005	290	31	74	5310	-	-					
RX97 AD.. , n_e = 1400 1/min												**595 Nm**
8.23	170	225	4.2	9560	1710	-	-					
7.16*	196	260	5.5	8950	1520	-	-	**RX**	**97**	**AD3**	**70**	→ 220
6.56	214	300	6.9	8500	1260	-	-	**RXF**	**97**	**AD3**	**78**	

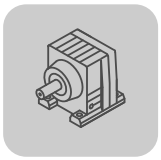

i	n_a [1/min]	M_{amax}	P_e [kW]	F_{Ra} [N] 1)	F_{Re} [N]	φ (/R)	⚠				m [kg]	
5.79	242	420	10.9	7630	2770	-	-	**RX**	**97**	**AD4**	**75**	→ 220
4.91	285	395	12.0	7220	2820	-	-	**RXF**	**97**	**AD4**	**84**	
4.52	309	595	19.7	6180	4980	-	-					
4.04	346	595	22	5380	4900	-	-					
3.64*	385	595	24	4530	4810	-	-					
3.30	425	595	27	3730	4730	-	-					
2.92	479	595	30	2810	4620	-	-	**RX**	**97**	**AD5**	**92**	→ 220
2.64	530	595	34	1980	4510	-	-	**RXF**	**97**	**AD5**	**100**	
2.24*	625	595	40	495	4280	-	-					
1.96	716	570	43	19	4260	-	-					
1.64	856	505	46	51	4390	-	-					
1.42	988	455	48	132	7450	-	-	**RX**	**97**	**AD6**	**105**	→ 220
								RXF	**97**	**AD6**	**115**	
RX107 AD.. , n_e = 1400 1/min												**830 Nm**
6.63*	211	460	10.4	9700	2710	-	-	**RX**	**107**	**AD4**	**110**	→ 220
5.61	250	455	12.2	9080	2660	-	-	**RXF**	**107**	**AD4**	**125**	
5.19	270	695	20	7850	4730	-	-					
4.65	301	695	22	7450	4660	-	-					
4.20*	333	830	30	6420	3800	-	-	**RX**	**107**	**AD5**	**125**	→ 220
3.81	367	830	32	5550	3610	-	-	**RXF**	**107**	**AD5**	**140**	
3.38	414	830	37	4490	3360	-	-					
3.07	456	830	40	3600	6560	-	-					
2.64*	530	830	47	2160	6350	-	-					
2.30	608	830	54	900	6150	-	-	**RX**	**107**	**AD6**	**135**	→ 220
1.95	716	730	56	1260	6410	-	-	**RXF**	**107**	**AD6**	**155**	
1.71	820	640	56	1840	6700	-	-					
1.44	969	540	56	2610	7070	-	-					
R27 AD.. , n_e = 1400 1/min												**130 Nm**
135.09	10	130	0.17	4230	750	-	-					
123.91	11	130	0.18	4230	750	-	-					
105.49	13	130	0.21	4230	745	-	-					
90.96	15	130	0.24	4230	740	-	-					
84.78	17	130	0.26	4230	740	-	-					
74.11	19	130	0.29	4230	735	-	-					
69.47	20	130	0.31	4180	735	-	-					
61.30	23	130	0.35	3980	725	-	-	**R**	**27**	**AD1**	**6.0**	→ 220
55.87	25	130	0.38	3840	565	-	-	**RF**	**27**	**AD1**	**5.9**	
48.17	29	130	0.43	3630	550	-	-					
44.90	31	130	0.47	3530	540	-	-					
39.25	36	130	0.53	3350	520	-	-					
36.79	38	130	0.56	3260	505	-	-					
32.47	43	130	0.64	3100	485	-	-					
28.78	49	130	0.72	2950	460	-	-					
24.47	57	130	0.84	2760	425	-	-					
28.37	49	130	0.72	2940	1080	-	-					
26.09	54	130	0.78	2840	1060	-	-					
22.32	63	130	0.91	2660	1020	-	-					
19.35	72	130	1.0	2510	1550	-	-					
18.08	77	130	1.1	2440	1540	-	-					
15.63	90	130	1.3	2290	1520	-	-					
13.28*	105	130	1.5	2140	1510	-	-					
11.86	118	129	1.7	1980	1490	-	-					
10.13	138	122	1.8	1890	1490	-	-	**R**	**27**	**AD2**	**6.9**	→ 220
9.41	149	122	2.0	900	1150	-	-	**RF**	**27**	**AD2**	**6.8**	
8.16	172	116	2.2	870	1160	-	-					
7.63*	184	112	2.2	900	1170	-	-					
6.59	212	106	2.4	880	1170	-	-					
5.60*	250	99	2.7	880	1190	-	-					
5.00*	280	95	2.9	860	1180	-	-					
4.27	328	87	3.1	920	1200	-	-					
4.00*	350	85	3.2	900	1200	-	-					
3.37	415	79	3.6	900	1190	-	-					

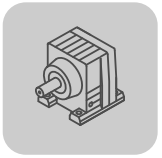

R..
R(X).. AD.. [kW]

i	n_a [1/min]	M_{amax}	P_e [kW]	F_{Ra} [N] 1)	F_{Re} [N]	φ (/R)	⚠				m [kg]	
R37 AD.. , n_e = 1400 1/min												**200 Nm**
134.82	10	200	0.25	4940	675	8	-					
123.66	11	200	0.27	4940	665	8	-					
105.28	13	200	0.31	4940	655	8	-					
90.77	15	200	0.36	4940	640	8	-					
84.61	17	200	0.38	4940	635	8	-	**R**	**37**	**AD1**	**12**	→📖 220
73.96	19	200	0.44	4940	615	8	-	**RF**	**37**	**AD1**	**13**	
69.33	20	200	0.47	4940	605	8	-					
61.18	23	200	0.53	4940	590	8	-					
55.76	25	200	0.57	4940	355	9	-					
48.08	29	200	0.66	4940	1510	9	-					
44.81	31	200	0.71	4940	1490	9	-					
39.17	36	200	0.81	4760	1460	9	-					
36.72	38	200	0.86	4540	1440	9	-	**R**	**37**	**AD2**	**13**	→📖 220
32.40	43	200	0.97	4120	1390	9	-	**RF**	**37**	**AD2**	**14**	
28.73	49	200	1.1	3740	1650	9	-					
24.42	57	200	1.3	3240	1630	9	-					
28.32	49	189	1.0	4000	490	7	-					
26.03	54	173	1.0	4180	620	7	-					
22.27	63	200	1.4	2970	1380	7	-					
19.31	73	200	1.6	2570	1360	7	-					
18.05	78	200	1.7	2390	1350	8	-					
15.60	90	200	2.0	2010	1320	8	-					
13.25	106	190	2.2	1880	1320	8	-					
11.83	118	183	2.4	1810	1320	8	-					
10.11	139	170	2.6	1820	1330	8	-	**R**	**37**	**AD2**	**13**	→📖 220
9.47	148	167	2.7	1760	1320	8	-	**RF**	**37**	**AD2**	**14**	
7.97	176	156	3.0	1720	1310	8	-					
6.67	210	144	3.3	1000	920	12	-					
5.67	247	142	3.8	760	890	12	-					
5.06	277	135	4.0	790	890	13	-					
4.32	324	126	4.4	820	900	13	-					
4.05	346	121	4.5	880	910	13	-					
3.41	411	107	4.8	1070	950	14	-					
R47 AD.. , n_e = 1400 1/min												**300 Nm**
176.88	7.9	300	0.29	5420	1790	7	-					
162.94	8.6	300	0.31	5420	1780	7	-					
139.99	10	300	0.36	5420	1780	7	-					
121.87	11	300	0.41	5420	1780	7	-					
114.17	12	300	0.43	5420	1770	7	-					
100.86	14	300	0.49	5420	1770	7	-					
93.68	15	300	0.52	5420	1760	7	-					
84.90	16	300	0.58	5420	1760	7	-					
76.23	18	300	0.64	5420	1760	7	-					
68.54	20	300	0.70	5420	1450	8	-	**R**	**47**	**AD2**	**17**	→📖 220
64.21	22	300	0.74	5420	1440	8	-	**RF**	**47**	**AD2**	**17**	
56.73	25	300	0.84	5420	1410	8	-					
52.69	27	300	0.90	5350	1380	8	-					
47.75	29	300	0.99	5140	1360	8	-					
42.87	33	300	1.1	4930	1640	8	-					
36.93	38	300	1.3	4630	1620	8	-					
34.73	40	300	1.4	4520	1620	8	-					
29.88	47	300	1.6	4240	1600	8	-					
26.70	52	300	1.8	4050	1580	8	-					
23.59	59	300	2.0	3840	1570	8	-					

i	n_a [1/min]	M_{amax}	P_e [kW]	F_{Ra} [N] 1)	F_{Re} [N]	φ (/R)	⚠				m [kg]	
33.79	41	225	1.0	4740	525	7	-					
31.12	45	205	1.0	4660	670	7	-					
26.74	52	300	1.7	4050	1270	7	-					
23.28	60	300	2.0	3820	1250	7	-					
21.81	64	300	2.1	3710	1240	7	-					
19.27	73	295	2.3	3530	1230	7	-					
17.89	78	290	2.5	3390	1220	7	-					
16.22	86	275	2.6	3350	1240	7	-					
14.56	96	265	2.8	3230	1240	7	-					
12.54	112	250	3.0	3080	1240	7	-	**R**	**47**	**AD2**	**16**	→ 220
11.79	119	245	3.2	3020	1240	7	-	**RF**	**47**	**AD2**	**17**	
10.15	138	230	3.4	2880	1240	7	-					
9.07	154	220	3.7	2780	1230	8	-					
8.01	175	205	3.9	2690	1250	8	-					
7.76*	181	163	3.2	2720	1080	10	-					
6.96	201	159	3.5	2620	1070	10	-					
6.00	233	156	4.0	2470	1040	10	-					
5.64*	248	155	4.2	2410	1020	10	-					
4.85	288	150	4.7	2280	1000	10	-					
4.34	323	146	5.1	2190	970	11	-					
3.83	365	144	5.7	2080	1970	11	-	**R**	**47**	**AD3**	**20**	→ 220
								RF	**47**	**AD3**	**20**	
R57 AD.. , n_e = 1400 1/min												**450 Nm**
186.89	7.5	450	0.40	7100	1700	7	-					
172.17	8.1	450	0.43	7100	1690	7	-					
147.92	9.5	450	0.50	7100	1670	7	-					
128.77	11	450	0.57	7100	1650	7	-					
120.63	12	450	0.60	7100	1640	7	-					
106.58	13	450	0.68	7100	1620	7	-					
98.99	14	450	0.73	7100	1590	7	-					
89.71	16	450	0.80	7100	1580	7	-					
80.55	17	450	0.89	7100	1550	7	-	**R**	**57**	**AD2**	**22**	
69.23	20	450	1.0	7100	1020	7	-	**RF**	**57**	**AD2**	**26**	→ 220
64.85	22	450	1.1	6980	1570	8	-	**RM**	**57**	**AD2**	**38**	
57.29	24	450	1.2	6630	1560	8	-					
53.22	26	450	1.3	6430	1540	8	-					
48.23	29	450	1.5	6170	1540	8	-					
43.30	32	450	1.6	5900	1520	8	-					
37.30*	38	450	1.9	5530	1500	8	-					
35.07	40	450	2.0	5390	1490	8	-					
30.18	46	450	2.3	5040	1460	8	-					
26.97	52	450	2.6	4800	1440	8	-					
26.31	53	420	2.4	4860	1100	6	-					
24.99*	56	410	2.5	4780	1120	6	-					
21.93	64	450	3.1	4370	1000	7	-	**R**	**57**	**AD2**	**21**	
18.60*	75	450	3.7	4050	960	7	-	**RF**	**57**	**AD2**	**25**	→ 220
16.79	83	450	4.1	3860	920	7	-	**RM**	**57**	**AD2**	**37**	
14.77*	95	435	4.5	3690	930	7	-					
13.95*	100	430	4.7	3610	1940	7	-					
11.88	118	405	5.2	3430	1930	7	-					
10.79	130	390	5.5	3330	1930	7	-					
9.35	150	370	6.0	3180	1920	7	-					
9.06	155	335	5.6	2900	1580	9	-	**R**	**57**	**AD3**	**25**	
7.97	176	355	6.8	2020	1460	9	-	**RF**	**57**	**AD3**	**28**	→ 220
7.53	186	350	7.0	1950	1460	9	-	**RM**	**57**	**AD3**	**40**	
6.41	218	335	7.9	1770	1420	9	-					
5.82	240	320	8.3	1820	1430	10	-					
5.05	277	305	9.2	1730	1400	10	-					
4.39	319	280	9.6	1900	1440	10	-					

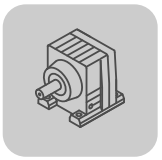

R..
R(X).. AD.. [kW]

i	n_a [1/min]	M_{amax}	P_e [kW]	F_{Ra} 1) [N]	F_{Re} [N]	φ (/R)	⚠				m [kg]	
R67 AD.. , n_e = 1400 1/min												**600 Nm**
199.81	7.0	600	0.49	7560	1510	6	-					
184.07	7.6	600	0.53	7560	1500	6	-					
158.14	8.8	600	0.61	7560	1480	6	-					
137.67	10	600	0.70	7560	1450	6	-					
128.97	11	600	0.74	7560	1440	6	-					
113.94	12	600	0.84	7560	1410	6	-					
105.83	13	600	0.90	7560	1380	6	-					
95.91	15	600	0.99	7560	1360	6	-					
86.11	16	600	1.1	7560	1640	6	-	**R**	**67**	**AD2**	**29**	
74.17	19	600	1.3	7560	1620	7	-	**RF**	**67**	**AD2**	**32**	→ 📖 220
69.75	20	600	1.4	7560	1620	7	-	**RM**	**67**	**AD2**	**48**	
61.26	23	600	1.5	7560	1450	7	-					
56.89	25	600	1.6	7560	1440	7	-					
51.56	27	600	1.8	7560	1420	7	-					
46.29	30	600	2.0	7560	1410	7	-					
39.88*	35	580	2.3	7790	1400	7	-					
37.50	37	570	2.4	7900	1390	7	-					
32.27	43	540	2.6	8210	1390	7	-					
28.83	49	520	2.8	8400	1380	7	-					
28.13	50	410	2.2	9270	1150	6	-	**R**	**67**	**AD2**	**28**	
26.72	52	400	2.3	9340	1160	6	-	**RF**	**67**	**AD2**	**31**	→ 📖 220
23.44	60	560	3.6	8010	810	6	-	**RM**	**67**	**AD2**	**47**	
19.89	70	600	4.6	7560	1710	6	-					
17.95	78	590	5.0	7330	1700	6	-					
15.79	89	560	5.4	7130	1720	6	-					
14.91	94	550	5.6	6980	1720	6	-					
12.70	110	520	6.2	6640	1700	6	-					
11.54	121	500	6.6	6500	1700	7	-					
10.00	140	470	7.1	6220	1700	7	-	**R**	**67**	**AD3**	**31**	
8.70*	161	440	7.7	5960	1710	7	-	**RF**	**67**	**AD3**	**34**	→ 📖 220
7.79	180	380	7.4	5830	1280	8	-	**RM**	**67**	**AD3**	**50**	
7.36*	190	370	7.6	5790	1290	8	-					
6.27	223	330	8.0	5590	1360	9	-					
5.70	246	310	8.2	5450	1400	9	-					
4.93	284	290	8.9	5210	1400	9	-					
4.29	326	270	9.5	5000	1410	10	-					
R77 AD.. , n_e = 1400 1/min												**820 Nm**
195.24*	7.2	820	0.68	9920	1300	6	-					
166.59	8.4	820	0.79	9920	1270	6	-					
145.67	9.6	820	0.90	9920	1240	6	-					
138.39	10	820	0.95	9920	1240	6	-					
121.42	12	820	1.1	9920	1630	6	-					
102.99	14	820	1.3	9920	1610	6	-					
92.97	15	820	1.4	9920	1600	6	-					
81.80	17	820	1.6	9920	1590	6	-					
77.24	18	820	1.7	9920	1590	6	-	**R**	**77**	**AD2**	**35**	
65.77	21	820	2.0	9920	1560	7	-	**RF**	**77**	**AD2**	**41**	→ 📖 220
57.68	24	820	2.2	9920	1380	7	-	**RM**	**77**	**AD2**	**66**	
52.07	27	820	2.4	9920	1370	7	-					
45.81	31	820	2.8	9920	1350	7	-					
43.26	32	820	2.9	9920	1340	7	-					
36.83	38	820	3.4	9920	1290	7	-					
33.47	42	820	3.8	9920	1270	7	-					
29.00	48	820	4.4	9920	1220	7	-					
25.23	55	780	4.8	10100	1210	7	-					
23.37	60	820	5.3	8870	1620	6	-					
21.43	65	820	5.8	8250	1600	6	-					
18.80	74	780	6.3	7980	1630	6	-					
17.82*	79	780	6.6	7620	1600	6	-	**R**	**77**	**AD3**	**37**	
15.60	90	740	7.2	7390	1620	6	-	**RF**	**77**	**AD3**	**43**	→ 📖 220
14.05	100	720	7.8	7050	1590	6	-	**RM**	**77**	**AD3**	**68**	
12.33	114	690	8.5	6740	1580	6	-					
10.88	129	660	9.2	6490	1570	6	-					
9.64	145	630	9.9	6300	1560	7	-					
8.59	163	630	11.1	4110	2970	7	-					
7.74	181	610	11.9	3940	2920	8	-	**R**	**77**	**AD4**	**43**	
6.79	206	580	12.9	3850	2930	8	-	**RF**	**77**	**AD4**	**49**	→ 📖 220
5.99*	234	540	13.6	3990	2970	8	-	**RM**	**77**	**AD4**	**74**	
5.31*	264	510	14.5	3990	2980	8	-					

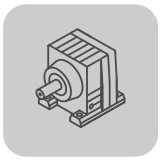

i	n_a [1/min]	M_{amax}	P_e [kW]	F_{Ra} [N] 1)	F_{Re} [N]	φ (/R)	⚠				m [kg]	
R87 AD.. , n_e = 1400 1/min												**1550 Nm**
246.54	5.7	1550	1.0	16900	1570	6	-					
216.54	6.5	1550	1.1	16900	1570	6	-					
205.71	6.8	1550	1.2	16900	1570	6	-					
181.77	7.7	1550	1.4	16900	1540	6	-					
155.34	9.0	1550	1.6	16900	1530	6	-					
142.41	9.8	1550	1.7	16900	1520	6	-					
124.97	11	1550	1.9	16900	1510	6	-					
118.43*	12	1550	2.0	16900	1500	6	-	**R**	**87**	**AD2**	**61**	
103.65	14	1550	2.3	16900	1480	6	-	**RF**	**87**	**AD2**	**68**	→ 220
93.38	15	1550	2.6	16900	1460	6	-	**RM**	**87**	**AD2**	**98**	
81.92	17	1550	3.0	16900	1440	6	-					
72.57	19	1550	3.3	16900	1160	6	-					
63.68*	22	1550	3.8	15800	1130	6	-					
60.35*	23	1550	4.0	15200	1120	6	-					
52.82	27	1550	4.5	13500	1080	6	-					
47.58	29	1550	5.0	12300	1040	7	-					
41.74	34	1550	5.7	16900	1940	7	-					
36.84*	38	1550	6.5	16800	1900	7	-	**R**	**87**	**AD3**	**65**	
32.66*	43	1550	7.3	16000	1850	7	-	**RF**	**87**	**AD3**	**72**	→ 220
27.88	50	1500	8.3	15100	1810	7	-	**RM**	**87**	**AD3**	**100**	
34.40*	41	1360	6.0	11500	1400	5	-	**R**	**87**	**AD3**	**64**	
31.40	45	1280	6.2	11700	1450	5	-	**RF**	**87**	**AD3**	**71**	→ 220
								RM	**87**	**AD3**	**100**	
27.84*	50	1550	8.5	15000	3200	6	-					
23.40	60	1550	10.1	13900	3130	6	-					
21.51	65	1500	10.6	13600	3120	6	-					
19.10	73	1440	11.4	13000	3130	6	-	**R**	**87**	**AD4**	**70**	
17.08*	82	1390	12.4	12600	3130	6	-	**RF**	**87**	**AD4**	**77**	→ 220
15.35	91	1340	13.2	12100	3130	6	-	**RM**	**87**	**AD4**	**105**	
13.33	105	1280	14.6	11600	3110	6	-					
11.93	117	1230	15.6	11200	3100	6	-					
9.90*	141	1180	18.1	10400	3020	6	-					
9.14*	153	1210	20	10500	5360	6	-					
8.22	170	1160	21	10200	5380	7	-	**R**	**87**	**AD5**	**85**	
7.13	196	1070	23	9780	5440	7	-	**RF**	**87**	**AD5**	**92**	→ 220
6.39	219	1020	24	9450	5450	7	-	**RM**	**87**	**AD5**	**120**	
5.30*	264	910	26	8980	5510	7	-					
R97 AD.. , n_e = 1400 1/min												**3000 Nm**
216.28	6.5	3000	2.2	19800	2210	6	-					
186.30	7.5	3000	2.5	19800	2200	6	-					
170.02	8.2	3000	2.8	19800	2180	6	-					
150.78	9.3	3000	3.1	19800	2170	6	-					
126.75	11	3000	3.7	19800	2140	6	-					
116.48	12	3000	4.0	19800	2130	6	-	**R**	**97**	**AD3**	**105**	
103.44	14	3000	4.5	19800	2100	6	-	**RF**	**97**	**AD3**	**125**	→ 220
92.48	15	3000	5.0	19800	2070	6	-	**RM**	**97**	**AD3**	**175**	
83.15	17	3000	5.6	19800	2040	6	-					
72.17	19	3000	6.5	18000	2000	6	-					
65.21	21	3000	7.1	19800	1550	6	-					
59.92	23	3000	7.7	19800	1510	6	-					
53.21	26	3000	8.7	19800	1460	6	-					
47.58	29	3000	9.7	19800	3440	6	-					
42.78	33	3000	10.8	19800	3400	6	-	**R**	**97**	**AD4**	**110**	
37.13	38	3000	12.4	18600	3320	6	-	**RF**	**97**	**AD4**	**130**	→ 220
33.25	42	2890	13.4	17900	3310	6	-	**RM**	**97**	**AD4**	**180**	
27.58	51	2670	14.9	16900	3290	6	-					
32.05	44	2560	12.1	10600	2370	5	-	**R**	**97**	**AD4**	**110**	
27.19	52	2430	13.6	9910	2490	5	-	**RF**	**97**	**AD4**	**125**	→ 220
								RM	**97**	**AD4**	**175**	

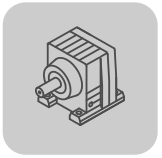

R..
R(X).. AD.. [kW]

i	n_a [1/min]	M_{amax}	P_e [kW]	F_{Ra} [N] 1)	F_{Re} [N]	φ (/R)	⚠				m [kg]	
25.03	56	2830	17.1	15900	5290	5	-					
22.37	63	2720	18.4	15300	5320	5	-					
20.14	70	2610	19.6	14800	5350	5	-					
18.24	77	2500	21	14400	5390	6	-					
16.17	87	2400	22	13800	5410	6	-					
14.62	96	2300	24	13400	5430	6	-	**R**	**97**	**AD5**	**125**	
12.39	113	2190	27	12700	5380	6	-	**RF**	**97**	**AD5**	**145**	→ 📖 220
10.83	129	2090	29	12100	5380	6	-	**RM**	**97**	**AD5**	**195**	
9.29	151	2030	33	12200	4260	6	-					
8.39	167	2030	37	11700	4140	6	-					
7.12	197	2000	42	10900	3810	6	-					
6.21	225	1890	46	10500	3940	6	-					
5.20	269	1780	52	9850	6870	6	-	**R**	**97**	**AD6**	**140**	
4.50*	311	1630	55	9500	6940	6	M2	**RF**	**97**	**AD6**	**155**	→ 📖 220
								RM	**97**	**AD6**	**210**	
R107 AD.. , n_e = 1400 1/min												**4300 Nm**
251.15	5.6	4300	2.7	29500	2150	7	-					
229.95	6.1	4300	3.0	29500	2140	7	-					
203.16	6.9	4300	3.3	29500	2130	7	-					
172.34	8.1	4300	3.9	29500	2110	7	-					
158.68	8.8	4300	4.2	29500	2090	7	-					
141.83	9.9	4300	4.7	29500	2070	7	-	**R**	**107**	**AD3**	**165**	
127.68	11	4300	5.2	29500	2040	7	-	**RF**	**107**	**AD3**	**170**	→ 📖 220
115.63	12	4300	5.8	29500	2020	7	-	**RM**	**107**	**AD3**	**260**	
102.53	14	4300	6.5	29500	1990	7	-					
92.70	15	4300	7.2	29500	1960	7	-					
78.57	18	4300	8.5	29500	1890	7	-					
72.88	19	4300	9.1	29500	1400	7	-					
65.60*	21	4300	10.1	29200	3400	7	-					
59.41	24	4300	11.2	28000	3360	7	-					
52.68	27	4300	12.6	26600	3310	7	-	**R**	**107**	**AD4**	**170**	
47.63	29	4300	13.9	25500	3260	7	-	**RF**	**107**	**AD4**	**175**	→ 📖 220
40.37*	35	4300	16.4	23800	3150	7	-	**RM**	**107**	**AD4**	**265**	
35.26	40	4300	18.8	22400	3070	7	-					
29.49	47	4300	22	20700	2920	7	-					
30.77	46	4300	21	21100	4810	7	-					
27.58	51	4300	24	20100	4730	7	-					
24.90*	56	4300	26	19200	4600	7	-	**R**	**107**	**AD5**	**180**	
22.62	62	4300	29	18300	4510	7	-	**RF**	**107**	**AD5**	**185**	→ 📖 220
20.07	70	4300	32	17300	4400	7	-	**RM**	**107**	**AD5**	**270**	
18.21	77	4300	36	16600	4300	7	-					
15.65	89	4300	42	15400	4070	7	-					
13.66	102	4300	48	14400	6890	7	-					
11.59	121	4280	56	13300	6650	7	-					
10.13	138	3740	56	13300	6930	7	-					
8.56	163	3160	56	13200	7280	7	M2	**R**	**107**	**AD6**	**190**	
7.86	178	2900	56	13900	6250	9	-	**RF**	**107**	**AD6**	**200**	→ 📖 220
6.66	210	2460	56	13500	6650	9	-	**RM**	**107**	**AD6**	**285**	
5.82	240	2150	56	13200	6930	9	-					
4.92	284	2000	61	12500	6950	9	M2					
R137 AD.. , n_e = 1400 1/min												**8000 Nm**
222.60*	6.3	8000	5.6	53400	3730	6	-					
188.45	7.4	8000	6.6	53400	3690	6	-					
174.40*	8.0	8000	7.1	53400	3660	6	-					
156.31	9.0	8000	7.9	53400	3640	6	-					
141.12*	9.9	8000	8.8	53400	3580	6	-					
128.18	11	8000	9.7	53400	3550	6	-	**R**	**137**	**AD4**	**255**	
113.72	12	8000	10.9	53400	3510	6	-	**RF**	**137**	**AD4**	**280**	→ 📖 220
103.20*	14	8000	12.0	53400	3470	6	-	**RM**	**137**	**AD4**	**390**	
88.70*	16	8000	14.0	53400	3400	6	-					
80.91*	17	8000	15.2	53400	2770	6	-					
73.49	19	8000	16.7	53400	2720	6	-					
65.20	21	8000	18.8	53400	2650	6	-					
59.17*	24	8000	21	53400	2580	6	-					
50.86*	28	8000	24	53400	5670	6	-					
44.39	32	8000	28	53400	5560	6	-	**R**	**137**	**AD5**	**270**	
37.65	37	8000	33	53400	5400	6	-	**RF**	**137**	**AD5**	**290**	→ 📖 220
32.91	43	8000	37	53400	5240	6	-	**RM**	**137**	**AD5**	**405**	
27.83	50	7680	42	54100	5160	6	M2					

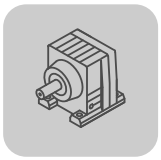

i	n_a [1/min]	M_{amax}	P_e [kW]	F_{Ra} [N] 1)	F_{Re} [N]	φ (/R)	⚠					m [kg]	
29.57*	47	7780	40	53900	5200	6	-	**R**	**137**	**AD6**	**270**		
24.12	58	8000	50	49400	4330	6	-	**RF**	**137**	**AD6**	**295**	→ 220	
								RM	**137**	**AD6**	**405**		
22.00*	64	8000	55	47100	11700	6	-						
19.04*	74	8000	63	43500	10700	6	-						
16.80*	83	8000	72	40600	9940	6	-						
14.51	96	8000	83	37300	8800	6	M2						
12.83	109	7390	87	37400	9850	6	M2	**R**	**137**	**AD7**	**280**		
10.79	130	7200	101	34700	8850	6	M1-6	**RF**	**137**	**AD7**	**305**	→ 220	
8.71	161	6900	120	31800	7540	6	M1-6	**RM**	**137**	**AD7**	**415**		
7.59	184	4600	91	41100	8460	8	M1-6						
6.38	219	4400	104	38900	7940	8	M1-6						
5.15	272	4100	120	36600	7410	8	M1-6						
R147 AD.. , n_e = 1400 1/min													**13000 Nm**
163.31	8.6	13000	12.3	62700	2970	5	-						
146.91	9.5	13000	13.6	62700	2920	5	-						
119.86	12	13000	16.7	62700	2780	5	-	**R**	**147**	**AD4**	**385**		
109.31	13	13000	18.3	62700	2730	5	-	**RF**	**147**	**AD4**	**395**	→ 220	
94.60*	15	13000	21	62700	2630	6	-	**RM**	**147**	**AD4**	**560**		
83.47	17	13000	24	62700	2540	6	-						
72.09	19	13000	28	62700	5670	6	-						
66.99	21	13000	30	62700	4550	6	-	**R**	**147**	**AD5**	**400**		
61.09	23	13000	33	62700	4470	6	-	**RF**	**147**	**AD5**	**410**	→ 220	
52.87	26	13000	38	62700	4310	6	-	**RM**	**147**	**AD5**	**570**		
46.65	30	13000	43	62700	4170	6	-						
40.29	35	13000	49	62700	6970	6	-	**R**	**147**	**AD6**	**410**		
								RF	**147**	**AD6**	**420**	→ 220	
								RM	**147**	**AD6**	**590**		
35.64	39	13000	56	62700	16800	6	-	**R**	**147**	**AD7**	**410**		
29.95	47	13000	66	62700	16600	6	M2	**RF**	**147**	**AD7**	**420**	→ 220	
24.19	58	11900	75	64700	16500	6	M1-6	**RM**	**147**	**AD7**	**590**		
20.44	68	11700	86	65100	23700	5	-						
18.04	78	10300	86	67300	24300	5	-						
15.64	90	13000	125	62700	22400	5	M1-6						
13.91	101	12300	133	64000	22500	5	M1-6						
11.99	117	10600	133	66900	23200	5	M1-6	**R**	**147**	**AD8**	**420**		
9.74	144	8650	134	67500	23900	6	M1-6	**RF**	**147**	**AD8**	**425**	→ 220	
8.26	169	7340	134	66900	24400	6	M1-6	**RM**	**147**	**AD8**	**590**		
7.25	193	6440	134	65300	23200	8	M1-6						
5.89	238	5230	134	64000	23900	8	M1-6						
5.00	280	4430	134	62600	24500	8	M1-6						
R167 AD.. , n_e = 1400 1/min													**18000 Nm**
229.71	6.1	18000	12.2	120000	6070	5	-						
186.93*	7.5	18000	14.9	120000	6000	5	-						
153.07	9.2	18000	18.1	120000	5880	5	-						
139.98	10	18000	19.8	120000	5840	5	-	**R**	**167**	**AD5**	**650**		
121.81*	11	18000	23	120000	5750	5	-	**RF**	**167**	**AD5**	**650**	→ 220	
107.49	13	18000	26	120000	5670	5	-	**RM**	**167**	**AD5**	**850**		
93.19	15	18000	30	120000	5560	5	-						
82.91*	17	18000	33	120000	5470	5	-						
73.70*	19	18000	37	120000	3380	6	-						
67.40	21	18000	41	120000	6690	6	-	**R**	**167**	**AD6**	**660**		
58.65	24	18000	47	120000	6530	6	-	**RF**	**167**	**AD6**	**670**	→ 220	
51.76	27	18000	53	120000	6380	6	-	**RM**	**167**	**AD6**	**870**		
44.87	31	18000	61	120000	16000	6	-	**R**	**167**	**AD7**	**660**		
39.92	35	18000	69	120000	15300	6	-	**RF**	**167**	**AD7**	**670**	→ 220	
34.41	41	18000	80	120000	14400	6	-	**RM**	**167**	**AD7**	**860**		
27.96	50	18000	99	120000	25500	6	M2,4	**R**	**167**	**AD8**	**680**		
23.71	59	18000	116	116500	25100	6	M1-6	**RF**	**167**	**AD8**	**690**	→ 220	
								RM	**167**	**AD8**	**880**		
46.00	30	7000	23	120000	4520	5	-	**R**	**167**	**AD5**	**640**		
								RF	**167**	**AD5**	**650**	→ 220	
								RM	**167**	**AD5**	**840**		
37.74	37	9000	36	120000	6270	5	-	**R**	**167**	**AD6**	**660**		
30.71	46	10000	49	120000	4550	5	-	**RF**	**167**	**AD6**	**670**	→ 220	
								RM	**167**	**AD6**	**860**		

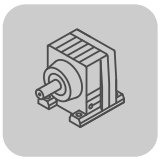

R..
R(X).. AD.. [kW]

i	n_a [1/min]	M_{amax}	P_e [kW]	F_{Ra} [N] 1)	F_{Re} [N]	φ (/R)	⚠					m [kg]	
24.57	57	14000	86	120000	23700	5	-						
21.85	64	13000	90	120000	24000	5	-						
19.03	74	16000	127	111400	22200	5	-	**R**	**167**	**AD8**	**680**		
16.98	82	15000	133	108900	22400	5	-	**RF**	**167**	**AD8**	**680**	→ 220	
14.48	97	18000	187	93800	20300	5	M1-6	**RM**	**167**	**AD8**	**880**		
11.99	117	17000	214	88700	20100	5	M1-6						
10.24	137	17000	250	82500	19400	5	M1-6						

8.4 R.. AM.. (IEC) [mm]

01 010 02 01

RX57..

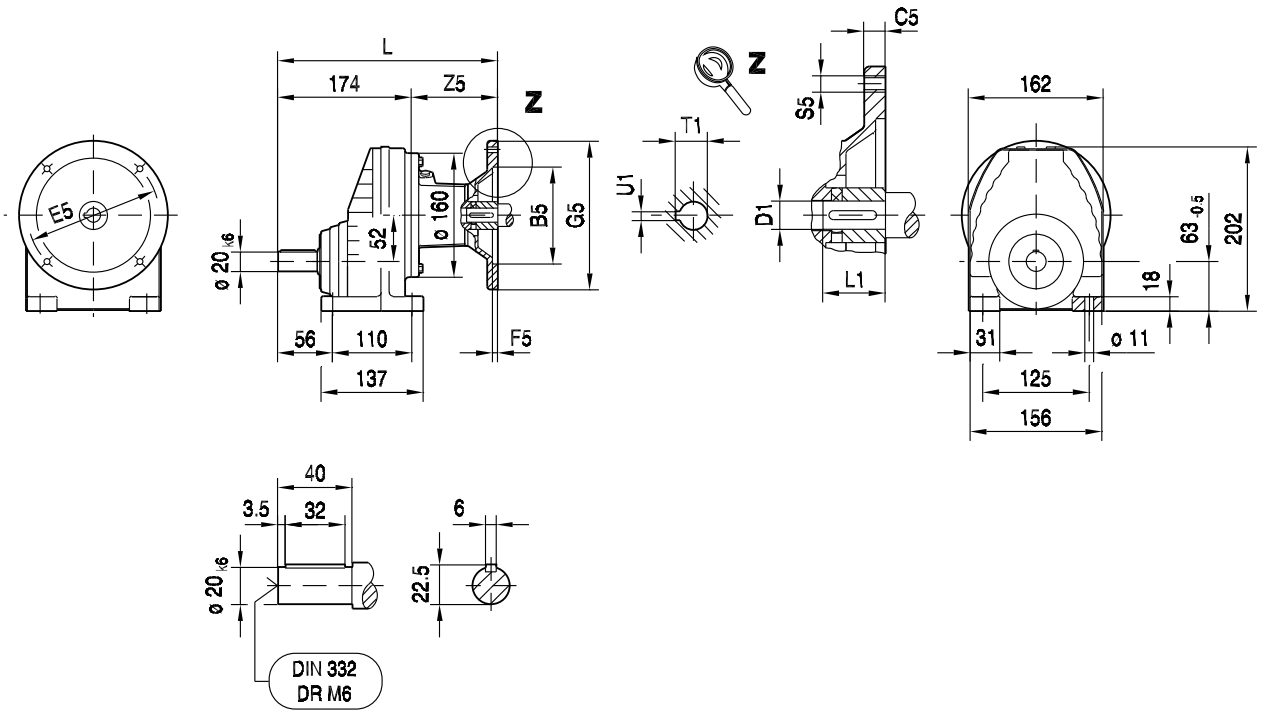

(→ 130)	B5	C5	E5	F5	G5	L	S5	Z5	D1	L1	T1	U1	
AM63	95	10	115	3.5	140	240	M8	66	11	23	12.8	4	
AM71	110	10	130	4.0	160	240	M8	66	14	30	16.3	5	
AM80	130	12	165	4.5	200	273	M10	99	19	40	21.8	6	
AM90	130	12	165	4.5	200	273	M10	99	24	50	27.3	8	
AM100	180	15	215	5.0	250	308	M12	134	28	60	31.3	8	
AM112	180	15	215	5.0	250	308	M12	134	28	60	31.3	8	
AM132S/M	230	16	265	5.0	300	365	M12	191	38	80	41.3	10	

01 011 02 01

RXF57..

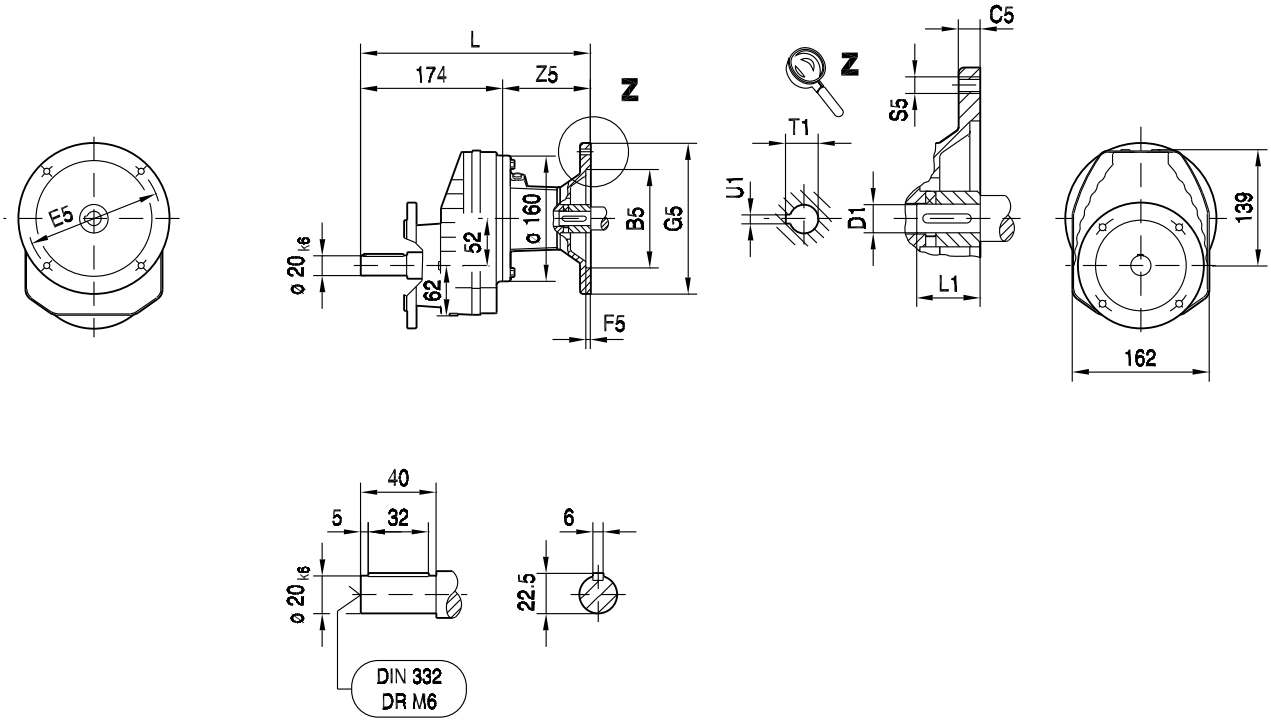

ø 140

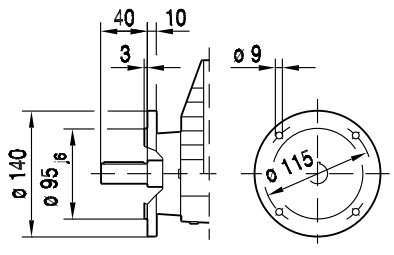

ø 160

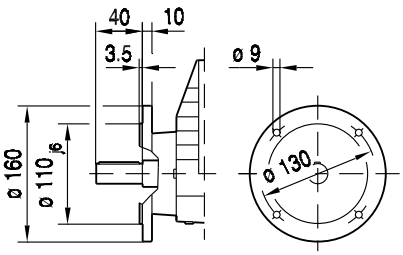

ø 200

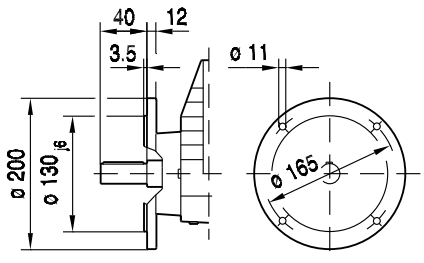

(→ 130)	B5	C5	E5	F5	G5	L	S5	Z5	D1	L1	T1	U1	
AM63	95	10	115	3.5	140	240	M8	66	11	23	12.8	4	
AM71	110	10	130	4.0	160	240	M8	66	14	30	16.3	5	
AM80	130	12	165	4.5	200	273	M10	99	19	40	21.8	6	
AM90	130	12	165	4.5	200	273	M10	99	24	50	27.3	8	
AM100	180	15	215	5.0	250	308	M12	134	28	60	31.3	8	
AM112	180	15	215	5.0	250	308	M12	134	28	60	31.3	8	
AM132S/M	230	16	265	5.0	300	365	M12	191	38	80	41.3	10	

01 012 02 01

RX67..

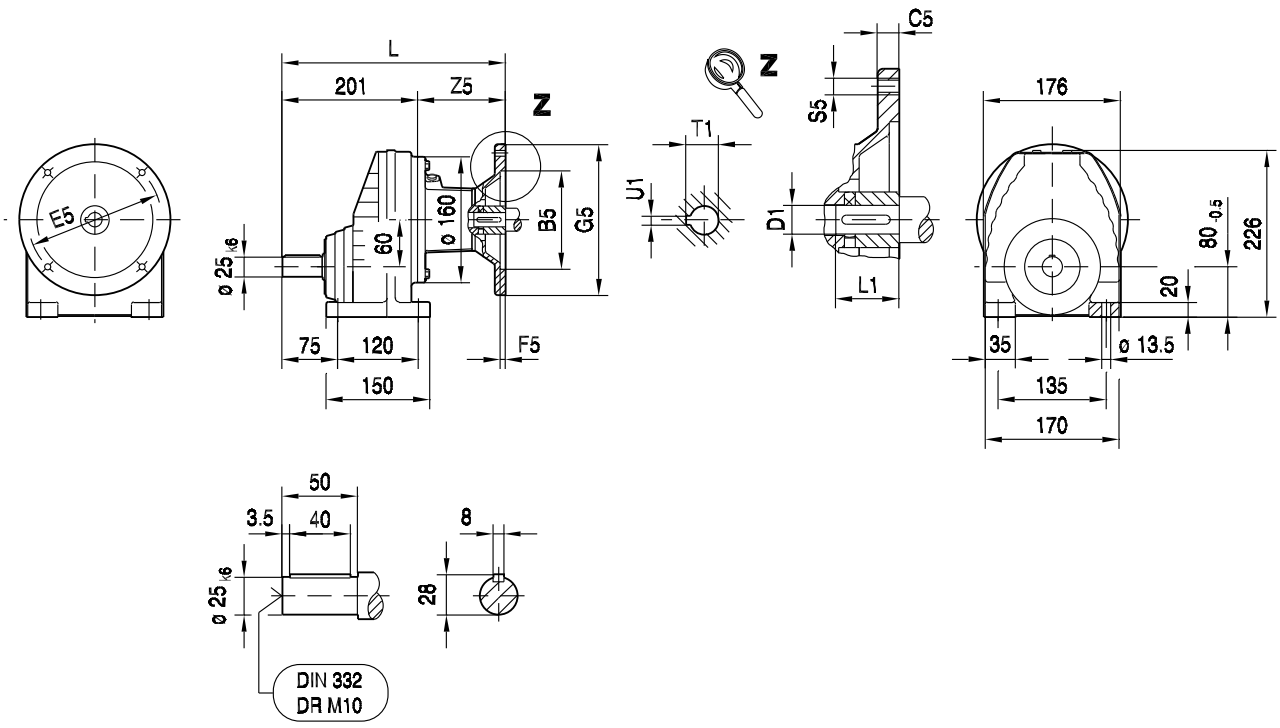

(→ 130)	B5	C5	E5	F5	G5	L	S5	Z5	D1	L1	T1	U1	
AM63	95	10	115	3.5	140	267	M8	66	11	23	12.8	4	
AM71	110	10	130	4.0	160	267	M8	66	14	30	16.3	5	
AM80	130	12	165	4.5	200	300	M10	99	19	40	21.8	6	
AM90	130	12	165	4.5	200	300	M10	99	24	50	27.3	8	
AM100	180	15	215	5.0	250	335	M12	134	28	60	31.3	8	
AM112	180	15	215	5.0	250	335	M12	134	28	60	31.3	8	
AM132S/M	230	16	265	5.0	300	392	M12	191	38	80	41.3	10	

01 013 02 01

RXF67..

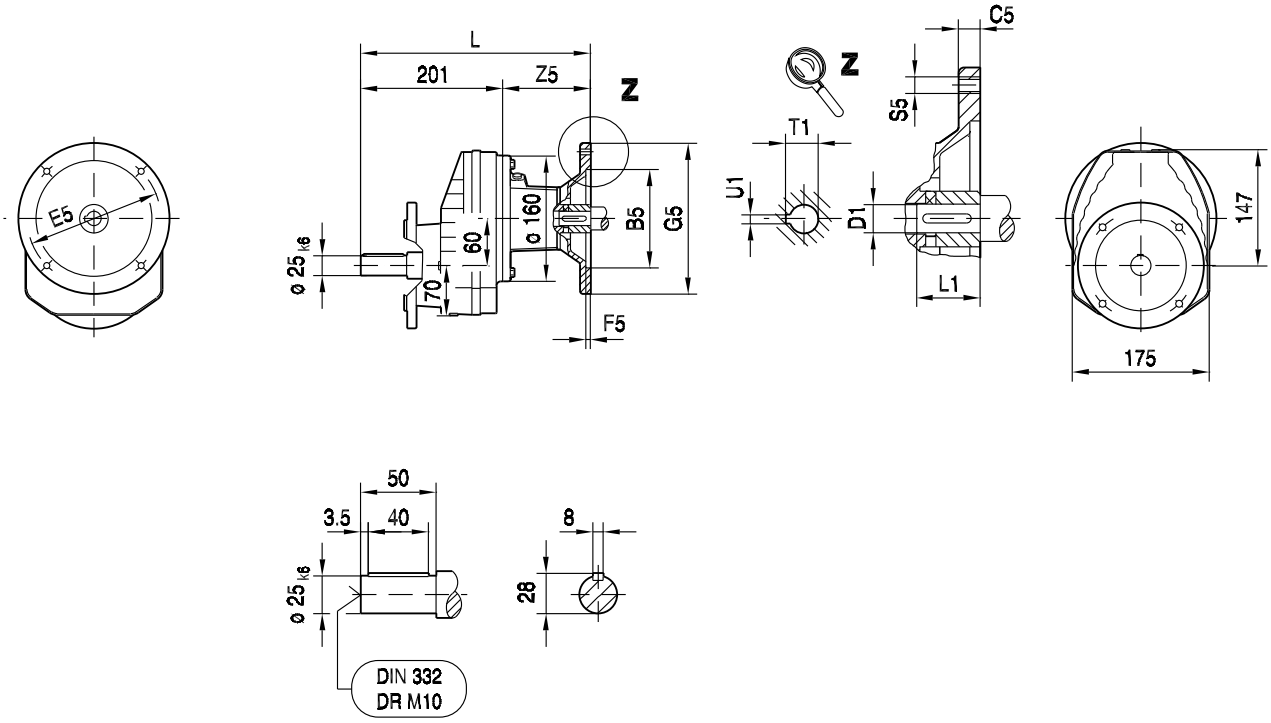

ø 160

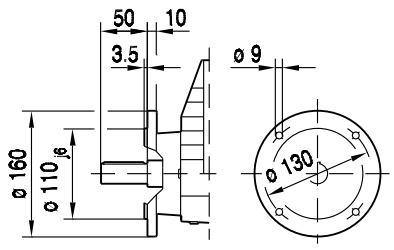

ø 200

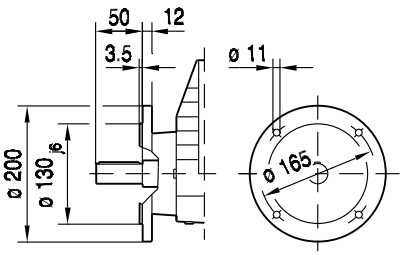

ø 250

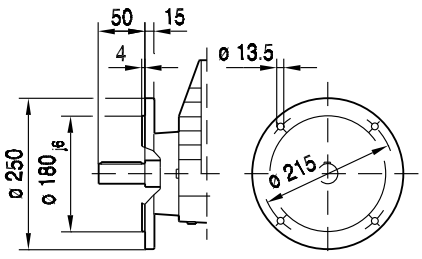

(→ 130)	B5	C5	E5	F5	G5	L	S5	Z5	D1	L1	T1	U1	
AM63	95	10	115	3.5	140	267	M8	66	11	23	12.8	4	
AM71	110	10	130	4.0	160	267	M8	66	14	30	16.3	5	
AM80	130	12	165	4.5	200	300	M10	99	19	40	21.8	6	
AM90	130	12	165	4.5	200	300	M10	99	24	50	27.3	8	
AM100	180	15	215	5.0	250	335	M12	134	28	60	31.3	8	
AM112	180	15	215	5.0	250	335	M12	134	28	60	31.3	8	
AM132S/M	230	16	265	5.0	300	392	M12	191	38	80	41.3	10	

01 014 02 01

RX77..

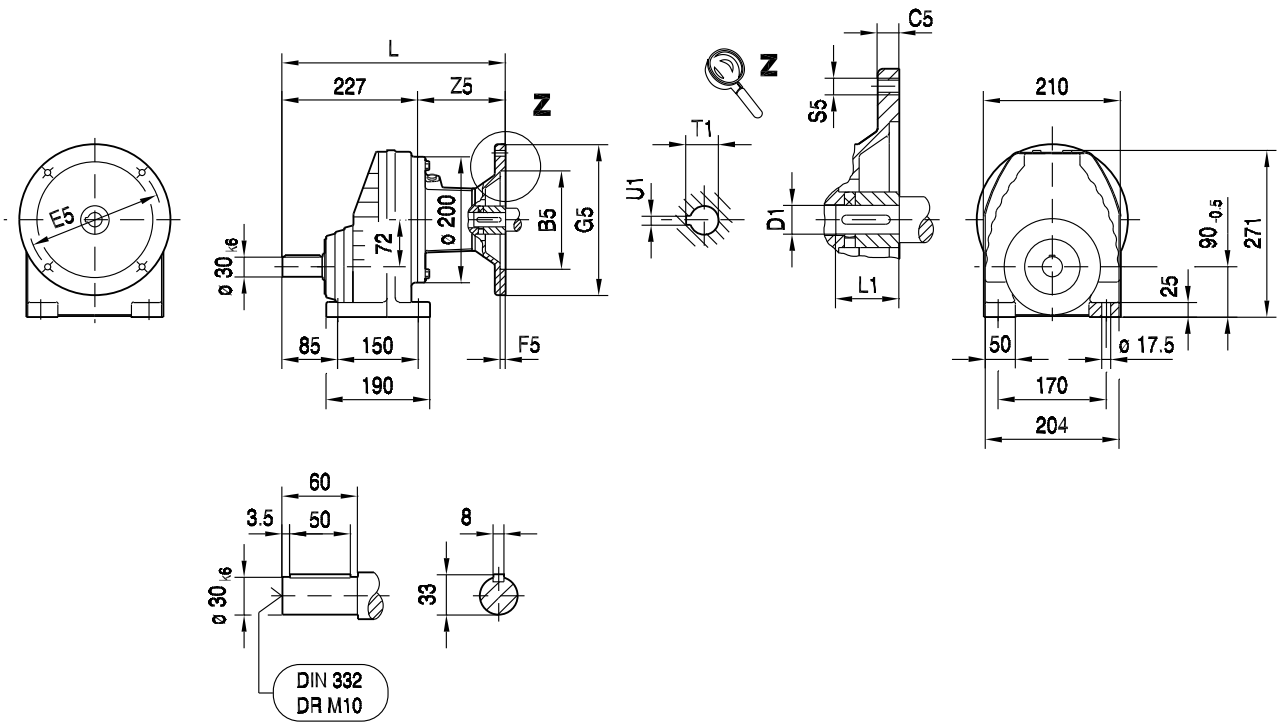

(→ 130)	B5	C5	E5	F5	G5	L	S5	Z5	D1	L1	T1	U1	
AM63	95	10	115	3.5	140	287	M8	60	11	23	12.8	4	
AM71	110	10	130	4.0	160	287	M8	60	14	30	16.3	5	
AM80	130	12	165	4.5	200	319	M10	92	19	40	21.8	6	
AM90	130	12	165	4.5	200	319	M10	92	24	50	27.3	8	
AM100	180	15	215	5.0	250	353	M12	126	28	60	31.3	8	
AM112	180	15	215	5.0	250	353	M12	126	28	60	31.3	8	
AM132S/M	230	16	265	5.0	300	406	M12	179	38	80	41.3	10	
AM132ML	230	16	265	5.0	300	406	M12	179	38	80	41.3	10	

01 015 02 01

RXF77..

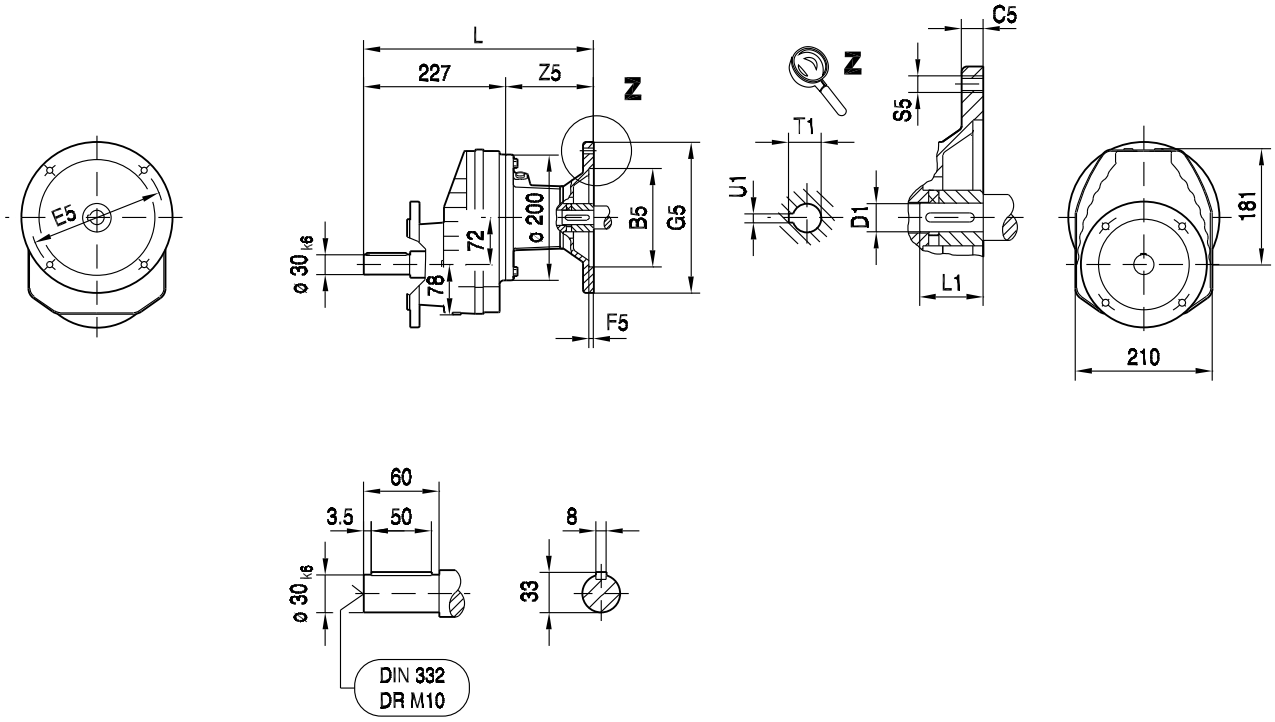

ø 200

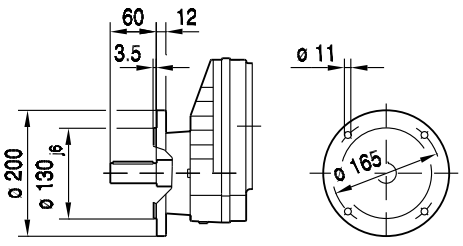

ø 250

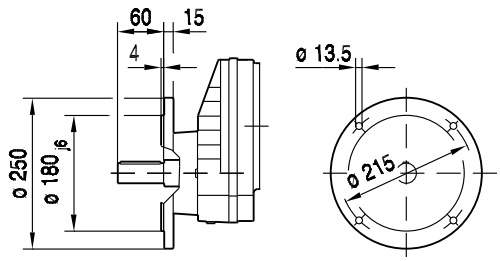

(→ 📖 130)	B5	C5	E5	F5	G5	L	S5	Z5	D1	L1	T1	U1	
AM63	95	10	115	3.5	140	287	M8	60	11	23	12.8	4	
AM71	110	10	130	4.0	160	287	M8	60	14	30	16.3	5	
AM80	130	12	165	4.5	200	319	M10	92	19	40	21.8	6	
AM90	130	12	165	4.5	200	319	M10	92	24	50	27.3	8	
AM100	180	15	215	5.0	250	353	M12	126	28	60	31.3	8	
AM112	180	15	215	5.0	250	353	M12	126	28	60	31.3	8	
AM132S/M	230	16	265	5.0	300	406	M12	179	38	80	41.3	10	
AM132ML	230	16	265	5.0	300	406	M12	179	38	80	41.3	10	

01 016 01 01

RX87..

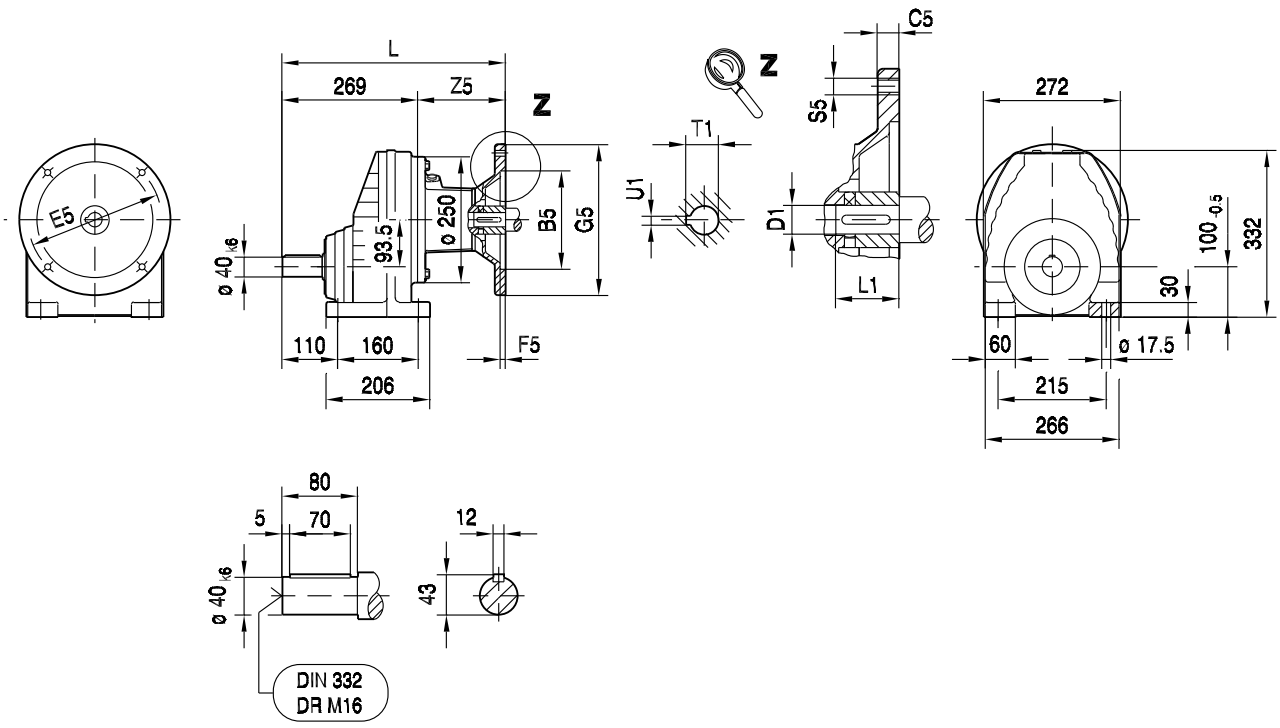

(→ 130)	B5	C5	E5	F5	G5	L	S5	Z5	D1	L1	T1	U1	
AM80	130	12	165	4.5	200	356	M10	87	19	40	21.8	6	
AM90	130	12	165	4.5	200	356	M10	87	24	50	27.3	8	
AM100	180	15	215	5.0	250	390	M12	121	28	60	31.3	8	
AM112	180	15	215	5.0	250	390	M12	121	28	60	31.3	8	
AM132S/M	230	16	265	5.0	300	443	M12	174	38	80	41.3	10	
AM132ML	230	16	265	5.0	300	443	M12	174	38	80	41.3	10	
AM160	250	18	300	6.0	350	501	M16	232	42	110	45.3	12	
AM180	250	18	300	6.0	350	501	M16	232	48	110	51.8	14	

01 017 01 01

RXF87..

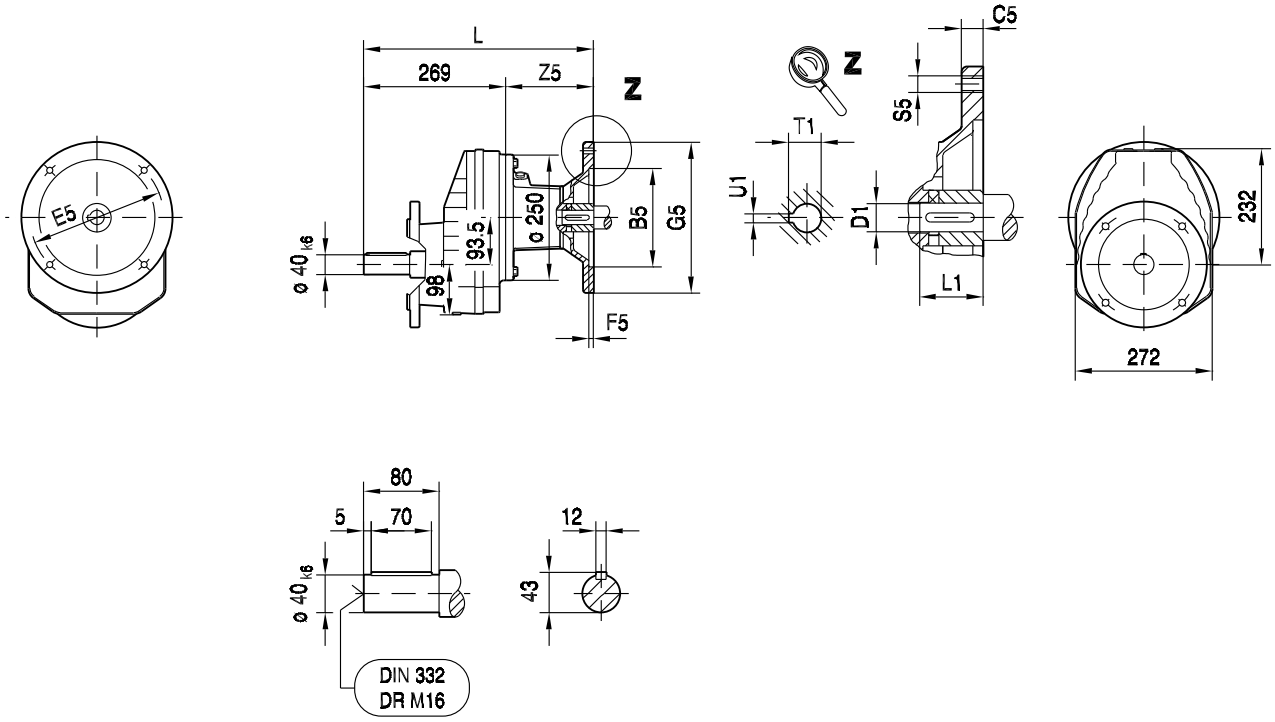

ø 250

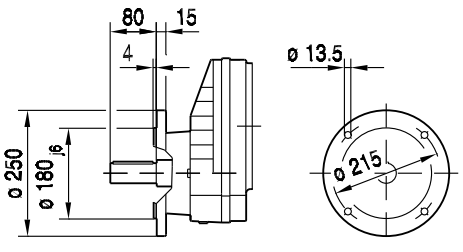

ø 300

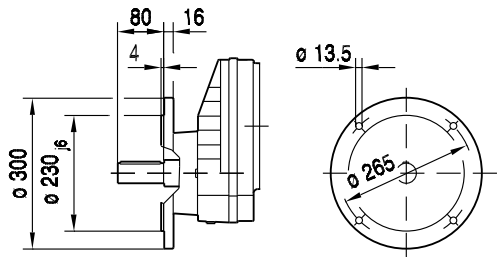

(→ 130)	B5	C5	E5	F5	G5	L	S5	Z5	D1	L1	T1	U1	
AM80	130	12	165	4.5	200	356	M10	87	19	40	21.8	6	
AM90	130	12	165	4.5	200	356	M10	87	24	50	27.3	8	
AM100	180	15	215	5.0	250	390	M12	121	28	60	31.3	8	
AM112	180	15	215	5.0	250	390	M12	121	28	60	31.3	8	
AM132S/M	230	16	265	5.0	300	443	M12	174	38	80	41.3	10	
AM132ML	230	16	265	5.0	300	443	M12	174	38	80	41.3	10	
AM160	250	18	300	6.0	350	501	M16	232	42	110	45.3	12	
AM180	250	18	300	6.0	350	501	M16	232	48	110	51.8	14	

01 018 01 01

RX97..

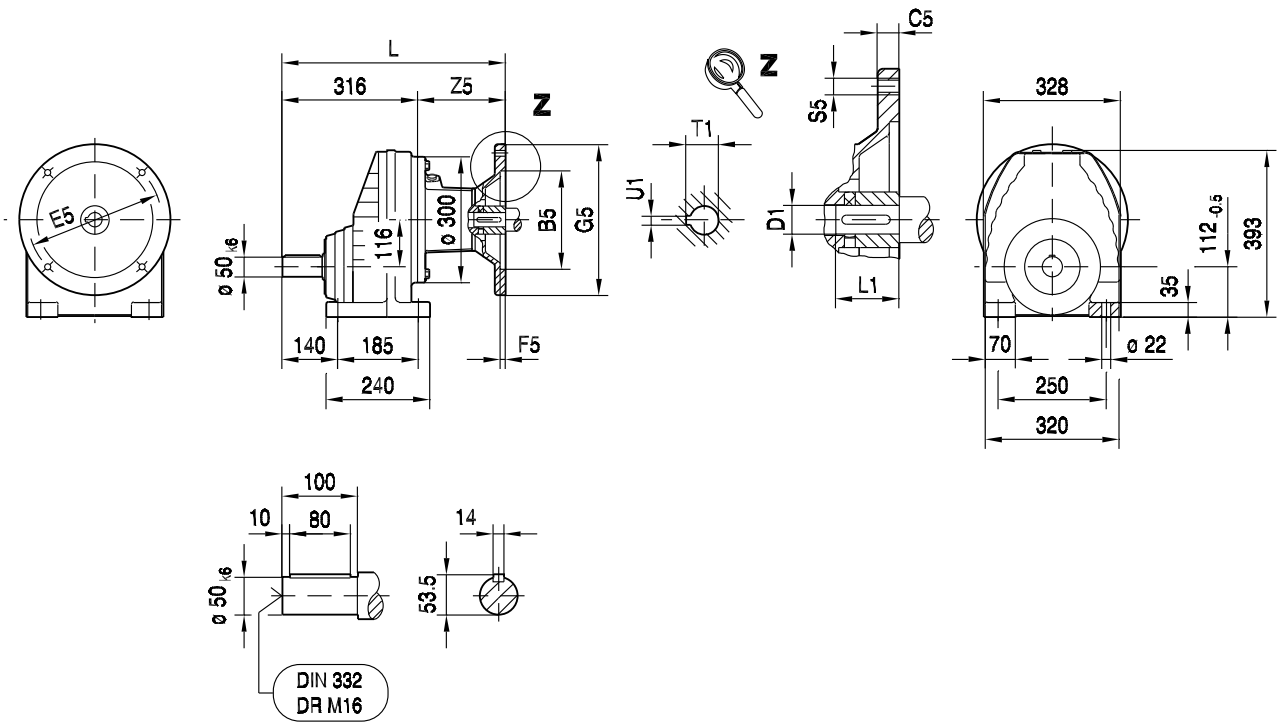

(→ 130)	B5	C5	E5	F5	G5	L	S5	Z5	D1	L1	T1	U1	
AM100	180	15	215	5.0	250	432	M12	116	28	60	31.3	8	
AM112	180	15	215	5.0	250	432	M12	116	28	60	31.3	8	
AM132S/M	230	16	265	5.0	300	485	M12	169	38	80	41.3	10	
AM132ML	230	16	265	5.0	300	485	M12	169	38	80	41.3	10	
AM160	250	18	300	6.0	350	543	M16	227	42	110	45.3	12	
AM180	250	18	300	6.0	350	543	M16	227	48	110	51.8	14	
AM200	300	20	350	7.0	400	584	M16	268	55	110	59.3	16	

01 019 01 01

RXF97..

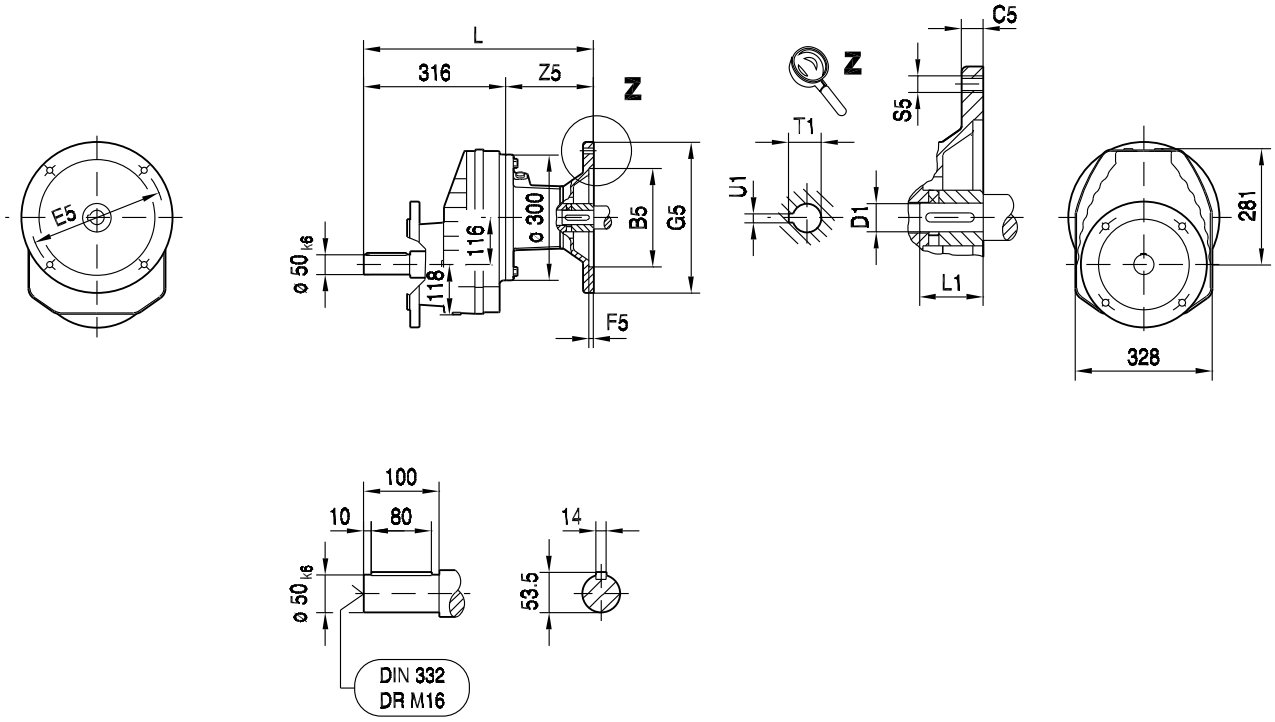

ø 300

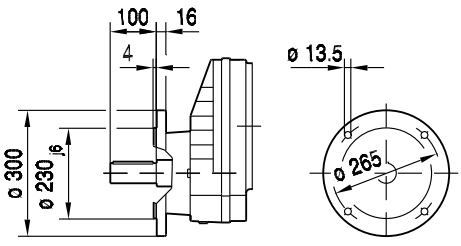

ø 350

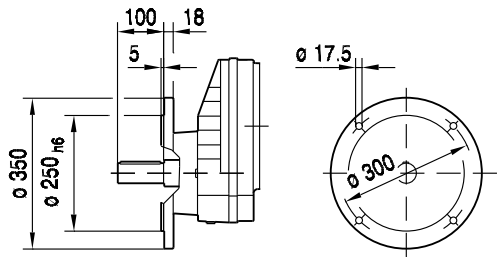

(→ 📖 130)	B5	C5	E5	F5	G5	L	S5	Z5	D1	L1	T1	U1	
AM100	180	15	215	5.0	250	432	M12	116	28	60	31.3	8	
AM112	180	15	215	5.0	250	432	M12	116	28	60	31.3	8	
AM132S/M	230	16	265	5.0	300	485	M12	169	38	80	41.3	10	
AM132ML	230	16	265	5.0	300	485	M12	169	38	80	41.3	10	
AM160	250	18	300	6.0	350	543	M16	227	42	110	45.3	12	
AM180	250	18	300	6.0	350	543	M16	227	48	110	51.8	14	
AM200	300	20	350	7.0	400	584	M16	268	55	110	59.3	16	

01 020 01 01

RX107..

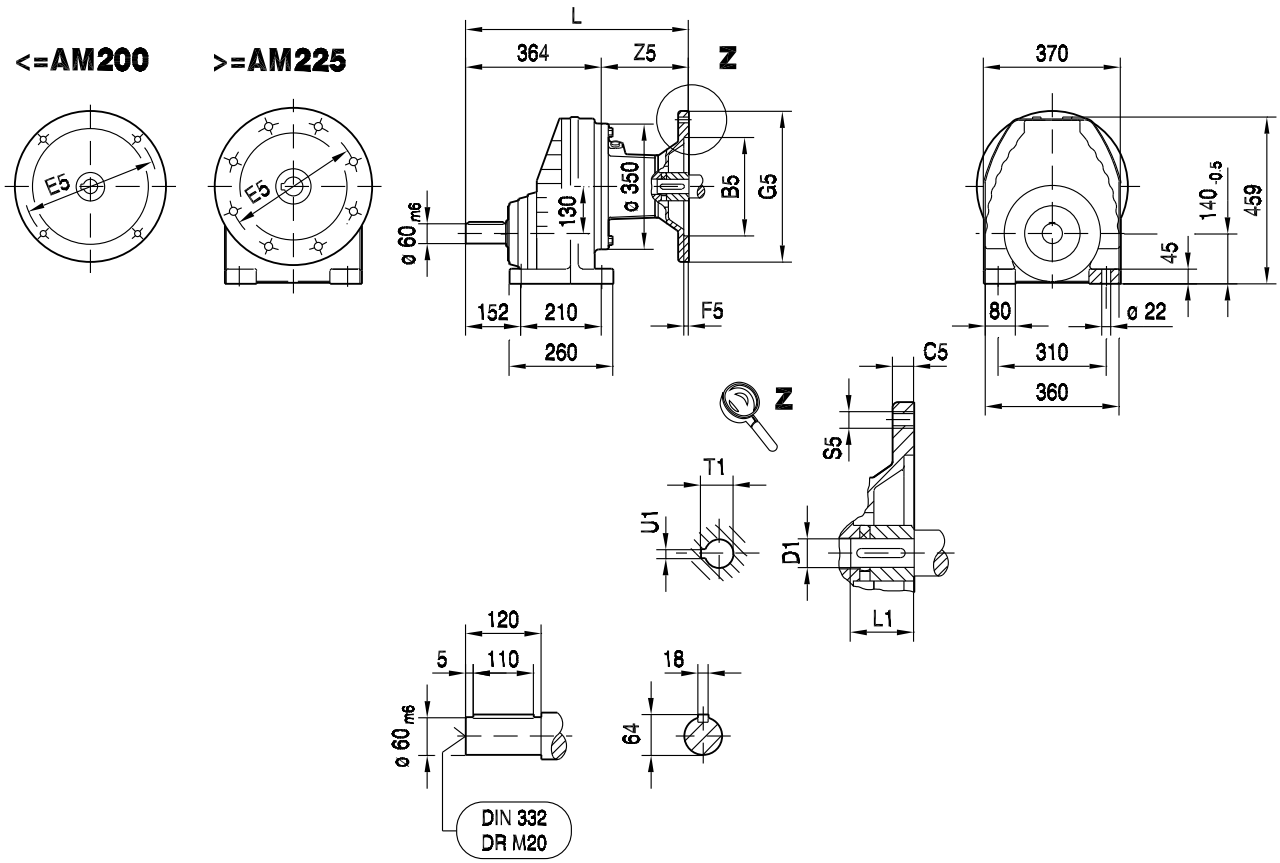

(→ 130)	B5	C5	E5	F5	G5	L	S5	Z5	D1	L1	T1	U1	
AM100	180	15	215	5.0	250	474	M12	110	28	60	31.3	8	
AM112	180	15	215	5.0	250	474	M12	110	28	60	31.3	8	
AM132S/M	230	16	265	5.0	300	527	M12	163	38	80	41.3	10	
AM132ML	230	16	265	5.0	300	527	M12	163	38	80	41.3	10	
AM160	250	18	300	6.0	350	585	M16	221	42	110	45.3	12	
AM180	250	18	300	6.0	350	585	M16	221	48	110	51.8	14	
AM200	300	20	350	7.0	400	626	M16	262	55	110	59.3	16	
AM225	350	22	400	7.0	450	641	M16	277	60	140	64.4	18	

01 021 01 01

RXF107..

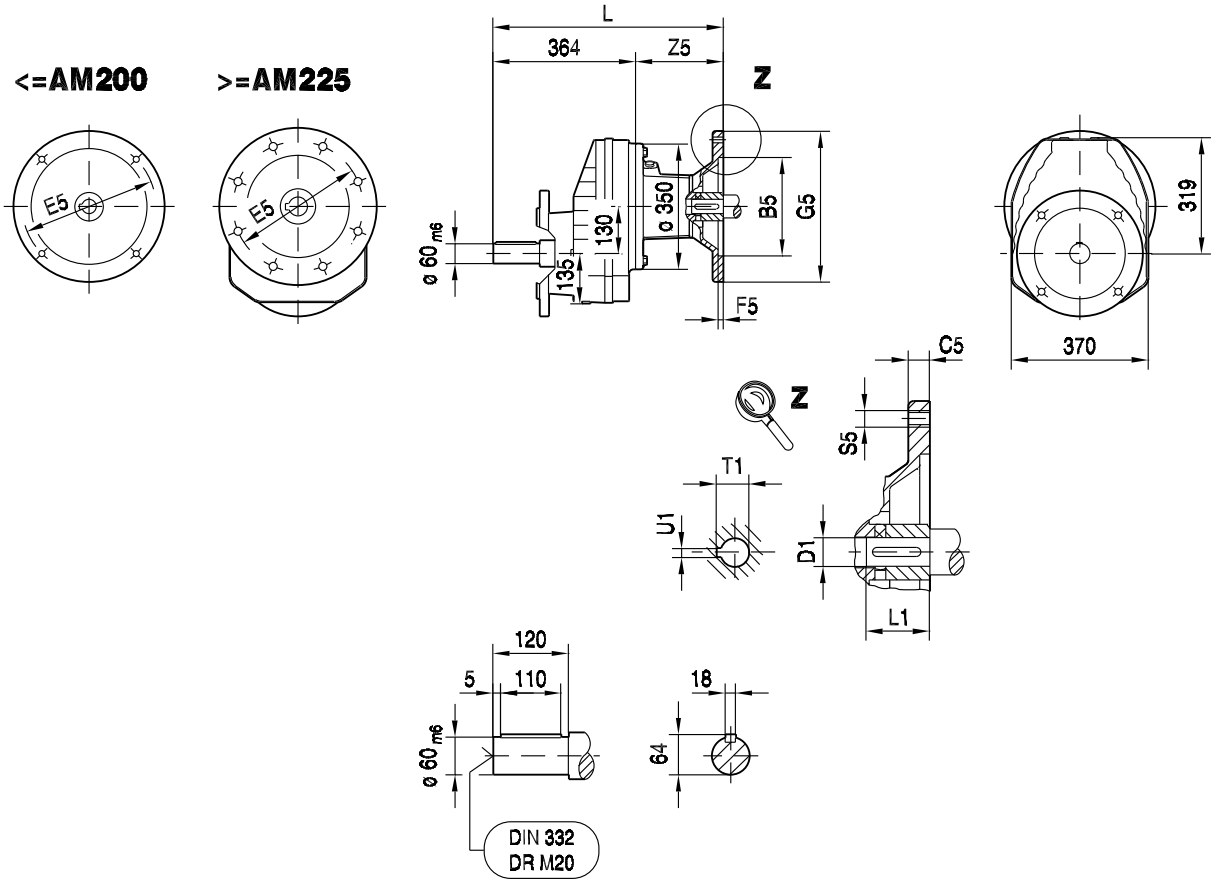

ø 350

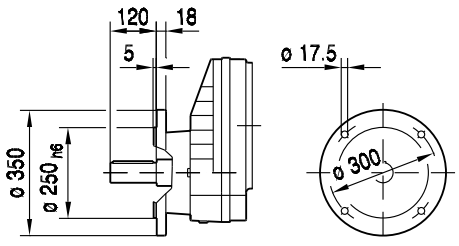

ø 450

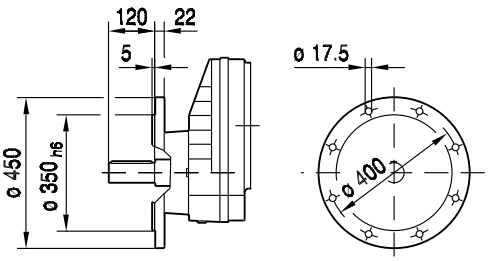

(→ 130)	B5	C5	E5	F5	G5	L	S5	Z5	D1	L1	T1	U1	
AM100	180	15	215	5.0	250	474	M12	110	28	60	31.3	8	
AM112	180	15	215	5.0	250	474	M12	110	28	60	31.3	8	
AM132S/M	230	16	265	5.0	300	527	M12	163	38	80	41.3	10	
AM132ML	230	16	265	5.0	300	527	M12	163	38	80	41.3	10	
AM160	250	18	300	6.0	350	585	M16	221	42	110	45.3	12	
AM180	250	18	300	6.0	350	585	M16	221	48	110	51.8	14	
AM200	300	20	350	7.0	400	626	M16	262	55	110	59.3	16	
AM225	350	22	400	7.0	450	641	M16	277	60	140	64.4	18	

01 022 02 01

R27..

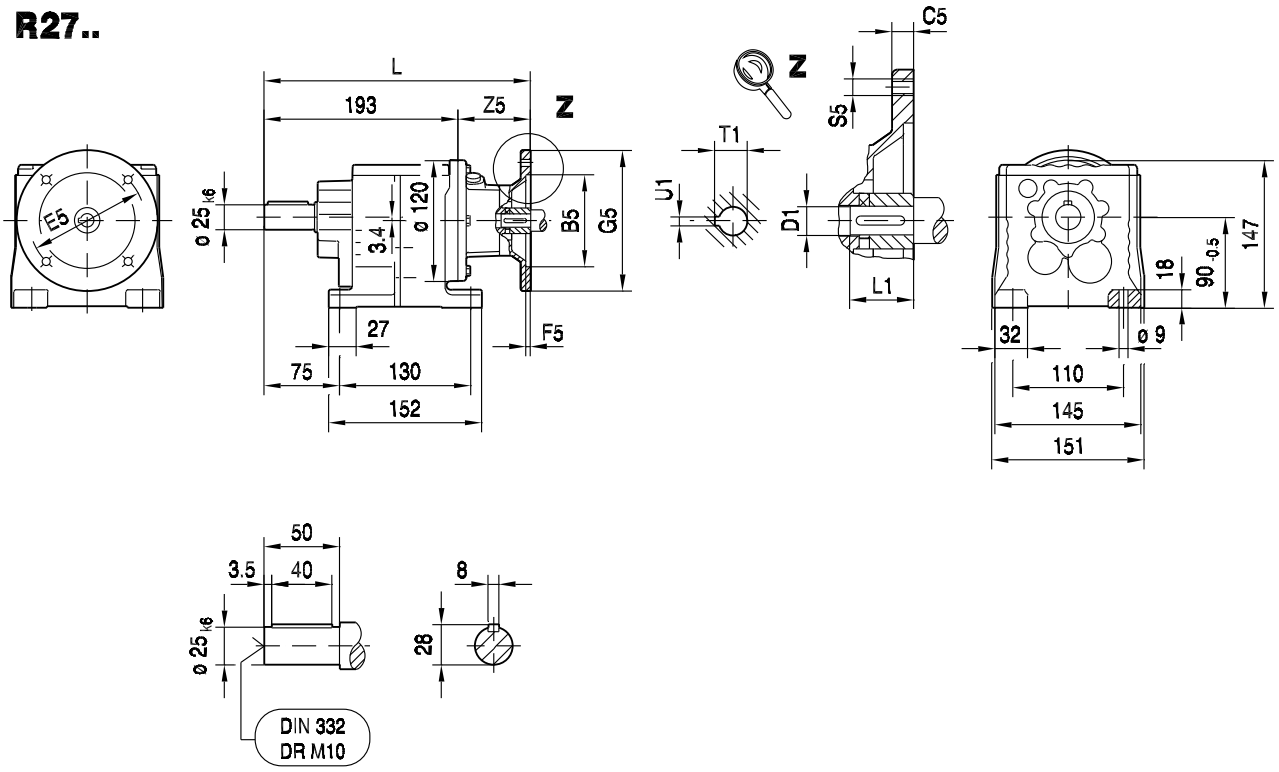

R27F..

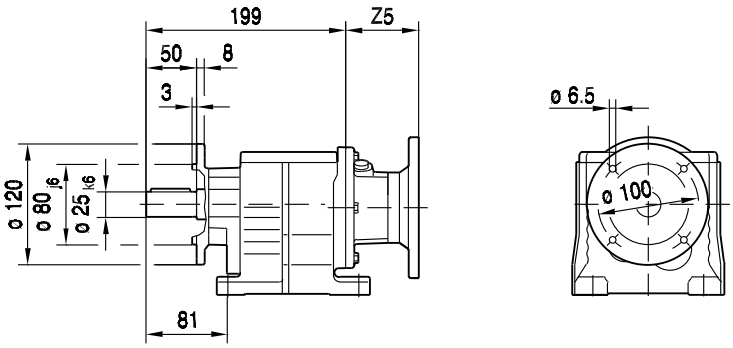

(→ 130)	B5	C5	E5	F5	G5	L	S5	Z5	D1	L1	T1	U1	
AM63	95	10	115	3.5	140	265	M8	72	11	23	12.8	4	
AM71	110	10	130	4.0	160	265	M8	72	14	30	16.3	5	
AM80	130	12	165	4.5	200	299	M10	106	19	40	21.8	6	
AM90	130	12	165	4.5	200	299	M10	106	24	50	27.3	8	

01 023 02 01

RF27..

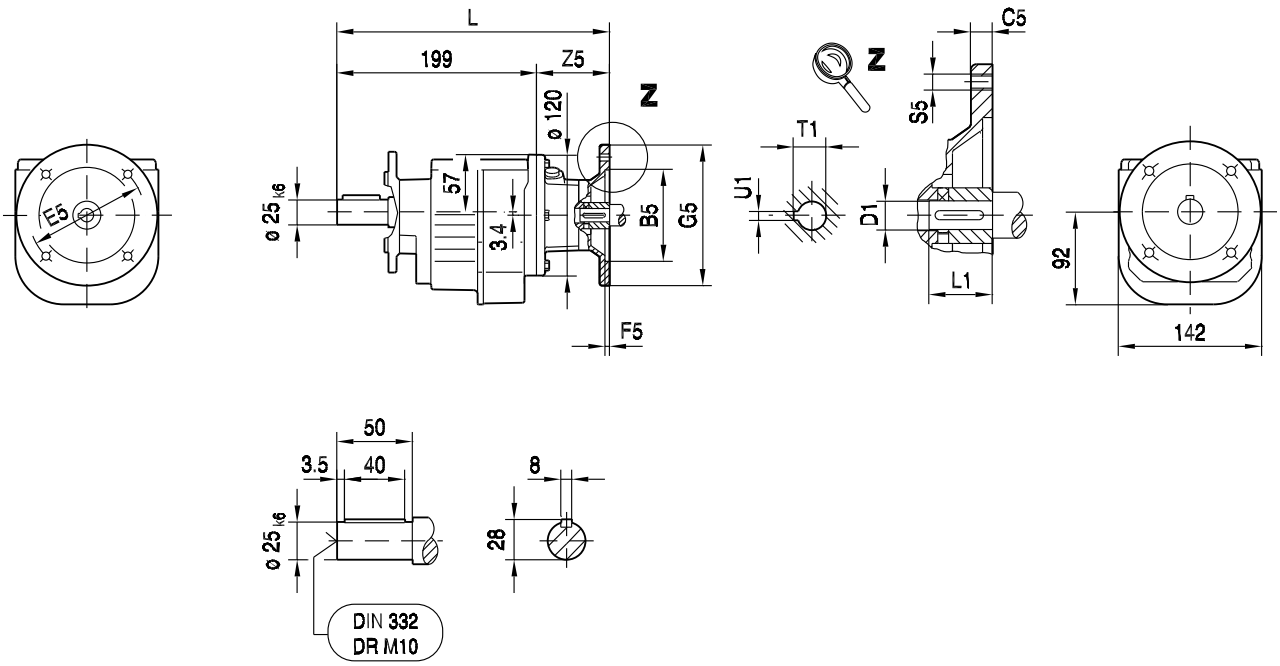

ø 120

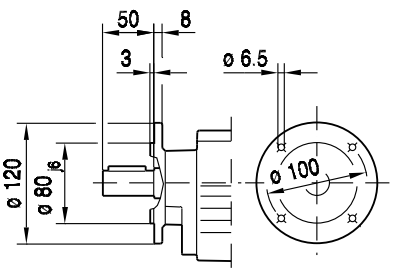

ø 140

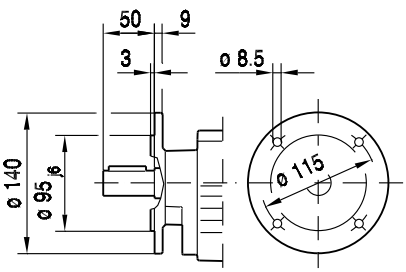

ø 160

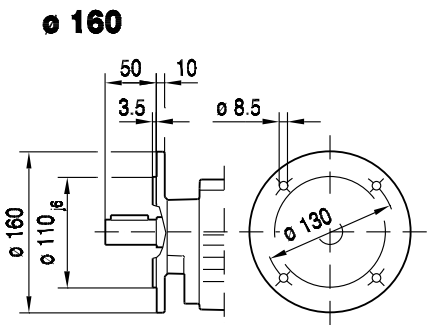

(→ 130)	B5	C5	E5	F5	G5	L	S5	Z5	D1	L1	T1	U1	
AM63	95	10	115	3.5	140	271	M8	72	11	23	12.8	4	
AM71	110	10	130	4.0	160	271	M8	72	14	30	16.3	5	
AM80	130	12	165	4.5	200	305	M10	106	19	40	21.8	6	
AM90	130	12	165	4.5	200	305	M10	106	24	50	27.3	8	

01 004 00 07

RZ27..

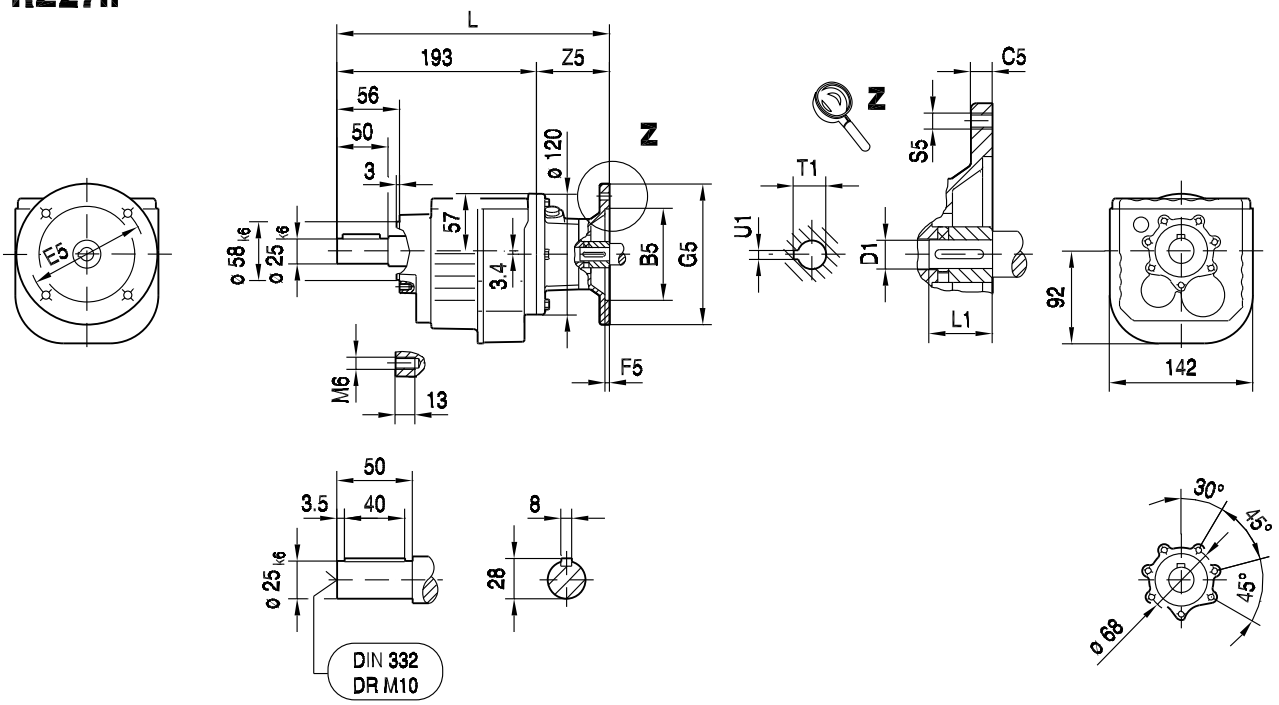

(→ 130)	B5	C5	E5	F5	G5	L	S5	Z5	D1	L1	T1	U1	
AM63	95	10	115	3.5	140	265	M8	72	11	23	12.8	4	
AM71	110	10	130	4.0	160	265	M8	72	14	30	16.3	5	
AM80	130	12	165	4.5	200	299	M10	106	19	40	21.8	6	
AM90	130	12	165	4.5	200	299	M10	106	24	50	27.3	8	

R37..

01 024 02 01

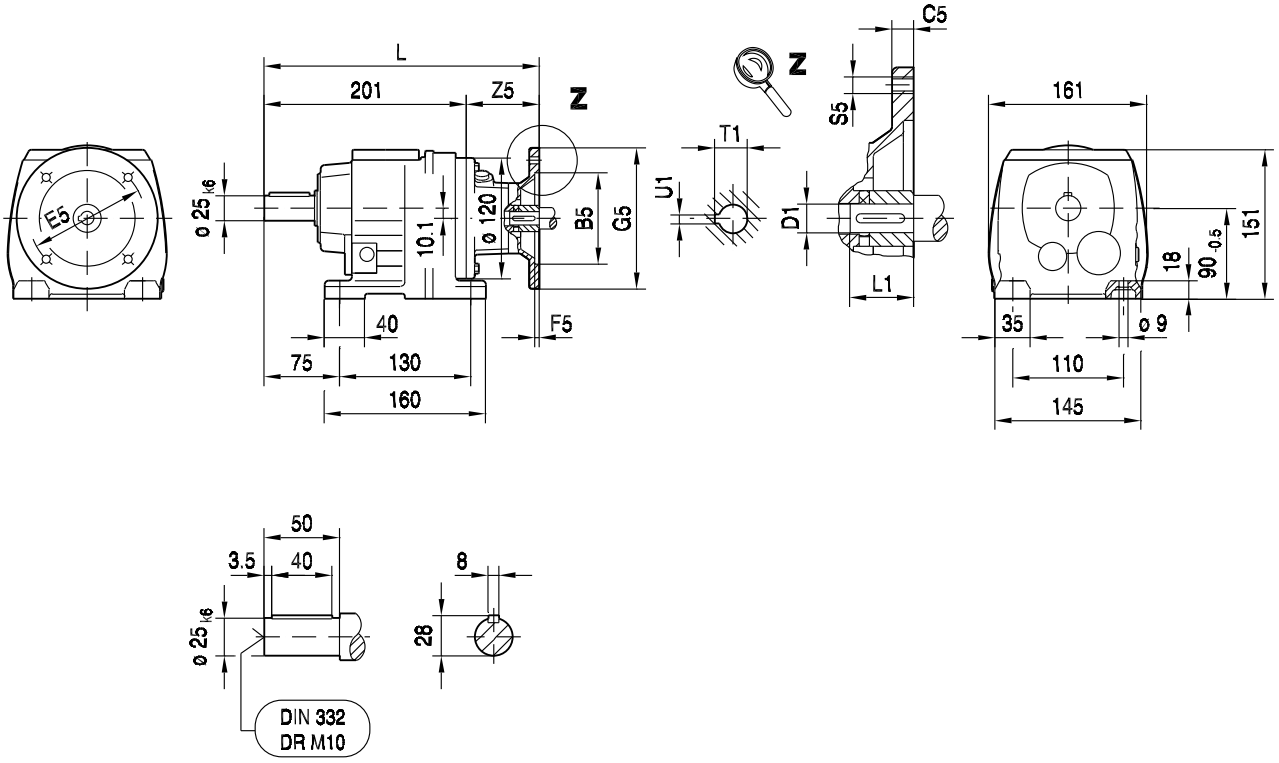

R37F..

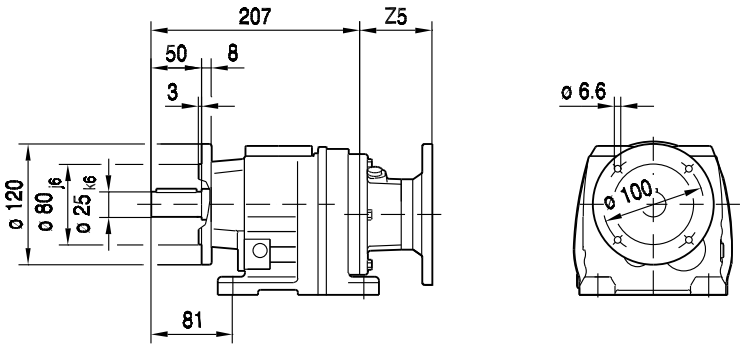

(→ 📖 130)	B5	C5	E5	F5	G5	L	S5	Z5	D1	L1	T1	U1	
AM63	95	10	115	3.5	140	273	M8	72	11	23	12.8	4	
AM71	110	10	130	4.0	160	273	M8	72	14	30	16.3	5	
AM80	130	12	165	4.5	200	307	M10	106	19	40	21.8	6	
AM90	130	12	165	4.5	200	307	M10	106	24	50	27.3	8	

01 025 02 01

RF37..

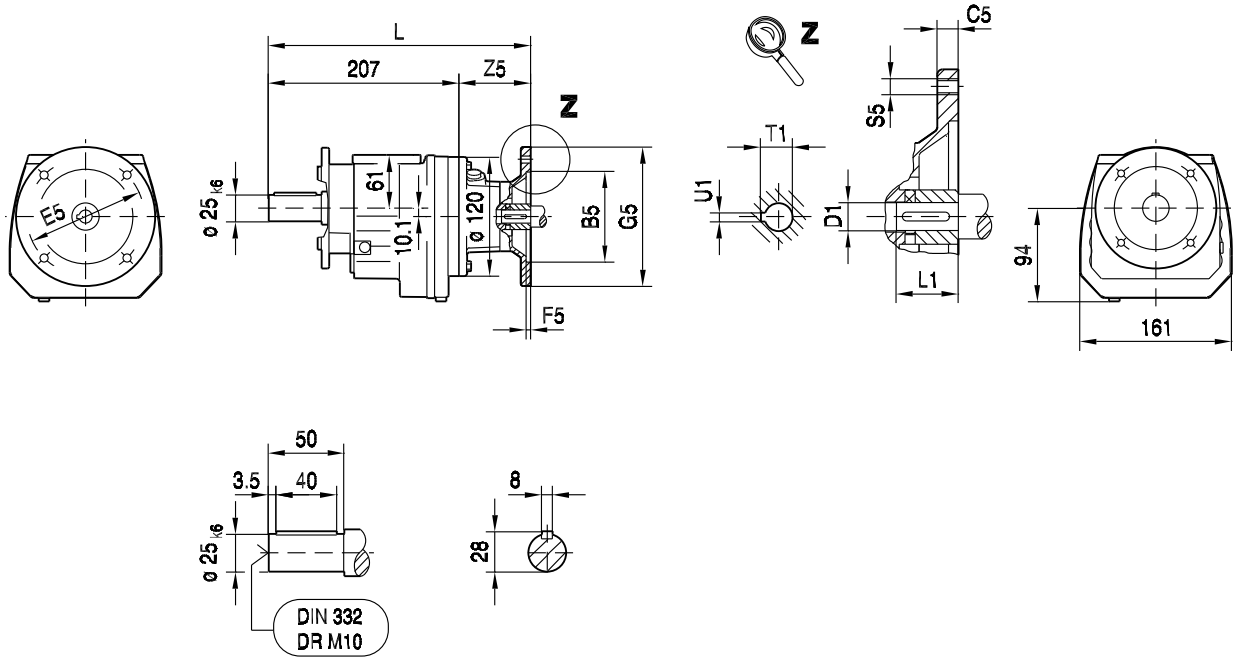

ø 120

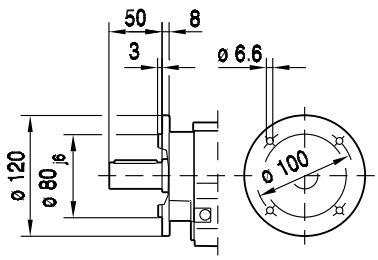

ø 160

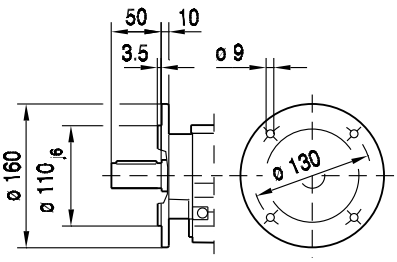

ø 200

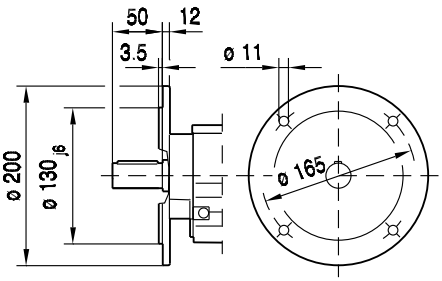

(→ 130)	B5	C5	E5	F5	G5	L	S5	Z5	D1	L1	T1	U1	
AM63	95	10	115	3.5	140	279	M8	72	11	23	12.8	4	
AM71	110	10	130	4.0	160	279	M8	72	14	30	16.3	5	
AM80	130	12	165	4.5	200	313	M10	106	19	40	21.8	6	
AM90	130	12	165	4.5	200	313	M10	106	24	50	27.3	8	

01 005 00 07

RZ37..

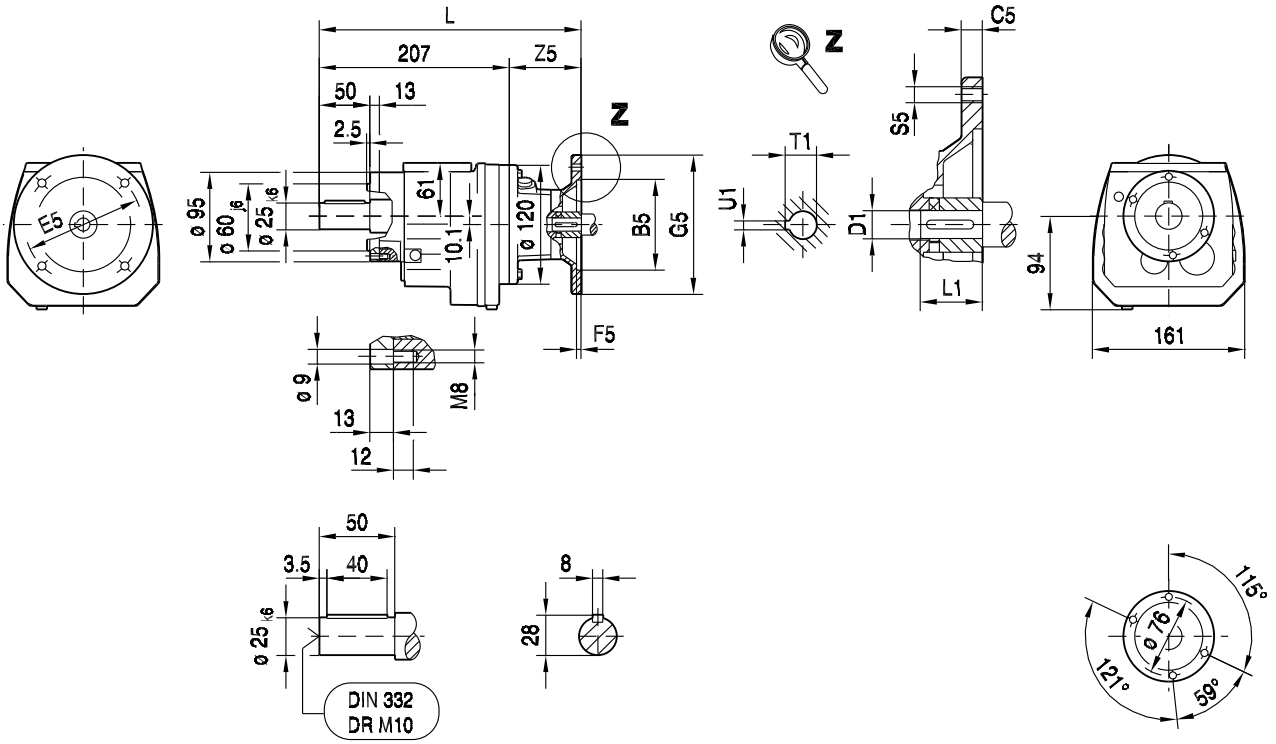

(→ 130)	B5	C5	E5	F5	G5	L	S5	Z5	D1	L1	T1	U1	
AM63	95	10	115	3.5	140	279	M8	72	11	23	12.8	4	
AM71	110	10	130	4.0	160	279	M8	72	14	30	16.3	5	
AM80	130	12	165	4.5	200	313	M10	106	19	40	21.8	6	
AM90	130	12	165	4.5	200	313	M10	106	24	50	27.3	8	

01 026 01 01

R47..

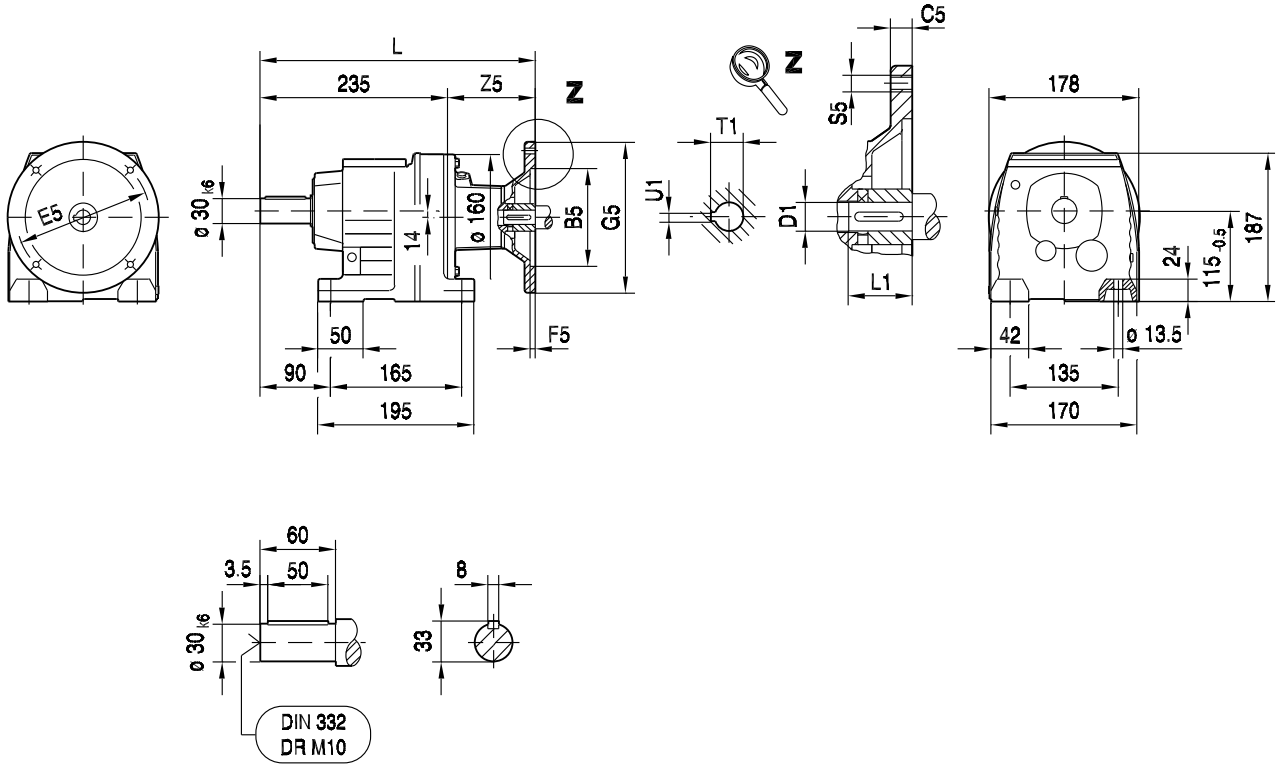

R47F..

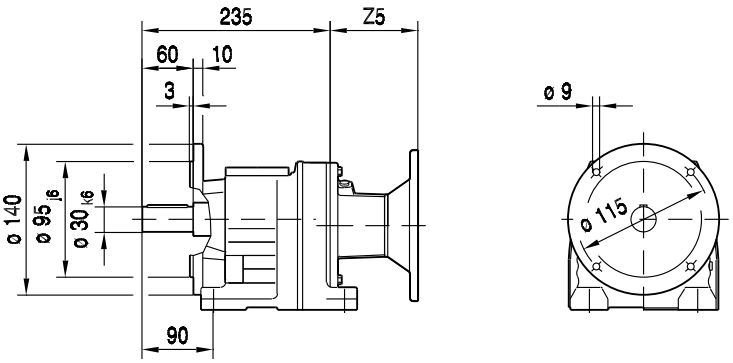

(→ 130)	B5	C5	E5	F5	G5	L	S5	Z5	D1	L1	T1	U1	
AM63	95	10	115	3.5	140	301	M8	66	11	23	12.8	4	
AM71	110	10	130	4.0	160	301	M8	66	14	30	16.3	5	
AM80	130	12	165	4.5	200	334	M10	99	19	40	21.8	6	
AM90	130	12	165	4.5	200	334	M10	99	24	50	27.3	8	
AM100	180	15	215	5.0	250	369	M12	134	28	60	31.3	8	
AM112	180	15	215	5.0	250	369	M12	134	28	60	31.3	8	
AM132S/M	230	16	265	5.0	300	426	M12	191	38	80	41.3	10	

01 027 02 01

RF47..

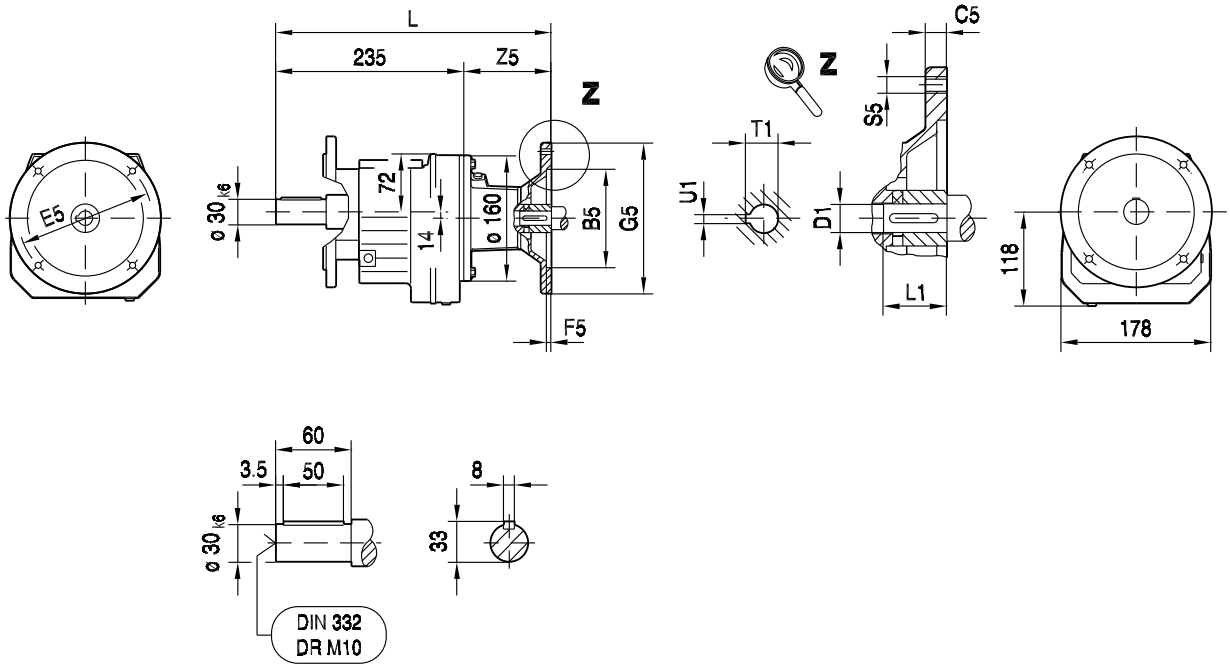

ø 140

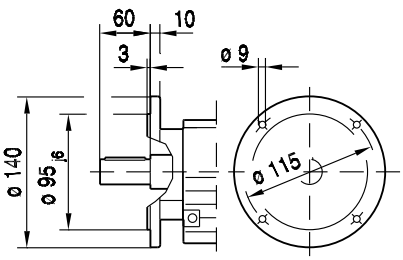

ø 160

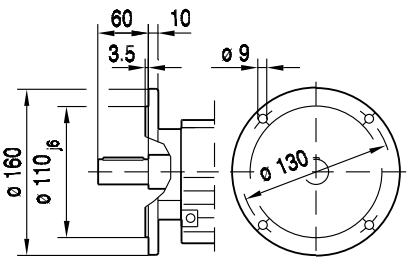

ø 200

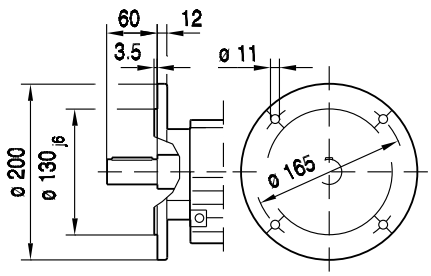

(→ 📖 130)	B5	C5	E5	F5	G5	L	S5	Z5	D1	L1	T1	U1	
AM63	95	10	115	3.5	140	301	M8	66	11	23	12.8	4	
AM71	110	10	130	4.0	160	301	M8	66	14	30	16.3	5	
AM80	130	12	165	4.5	200	334	M10	99	19	40	21.8	6	
AM90	130	12	165	4.5	200	334	M10	99	24	50	27.3	8	
AM100	180	15	215	5.0	250	369	M12	134	28	60	31.3	8	
AM112	180	15	215	5.0	250	369	M12	134	28	60	31.3	8	
AM132S/M	230	16	265	5.0	300	426	M12	191	38	80	41.3	10	

01 006 00 07

RZ47..

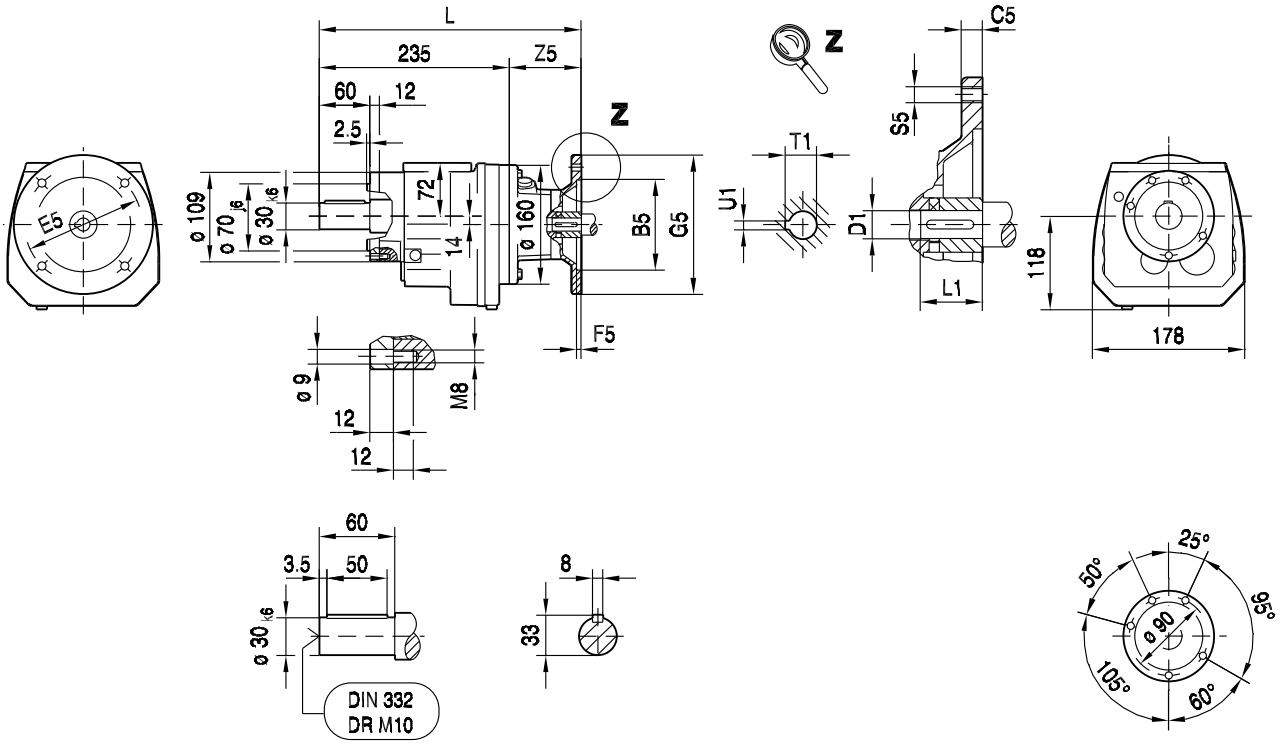

(→ 130)	B5	C5	E5	F5	G5	L	S5	Z5	D1	L1	T1	U1	
AM63	95	10	115	3.5	140	301	M8	66	11	23	12.8	4	
AM71	110	10	130	4.0	160	301	M8	66	14	30	16.3	5	
AM80	130	12	165	4.5	200	334	M10	99	19	40	21.8	6	
AM90	130	12	165	4.5	200	334	M10	99	24	50	27.3	8	
AM100	180	15	215	5.0	250	369	M12	134	28	60	31.3	8	
AM112	180	15	215	5.0	250	369	M12	134	28	60	31.3	8	
AM132S/M	230	16	265	5.0	300	426	M12	191	38	80	41.3	10	

01 028 02 01

R57..

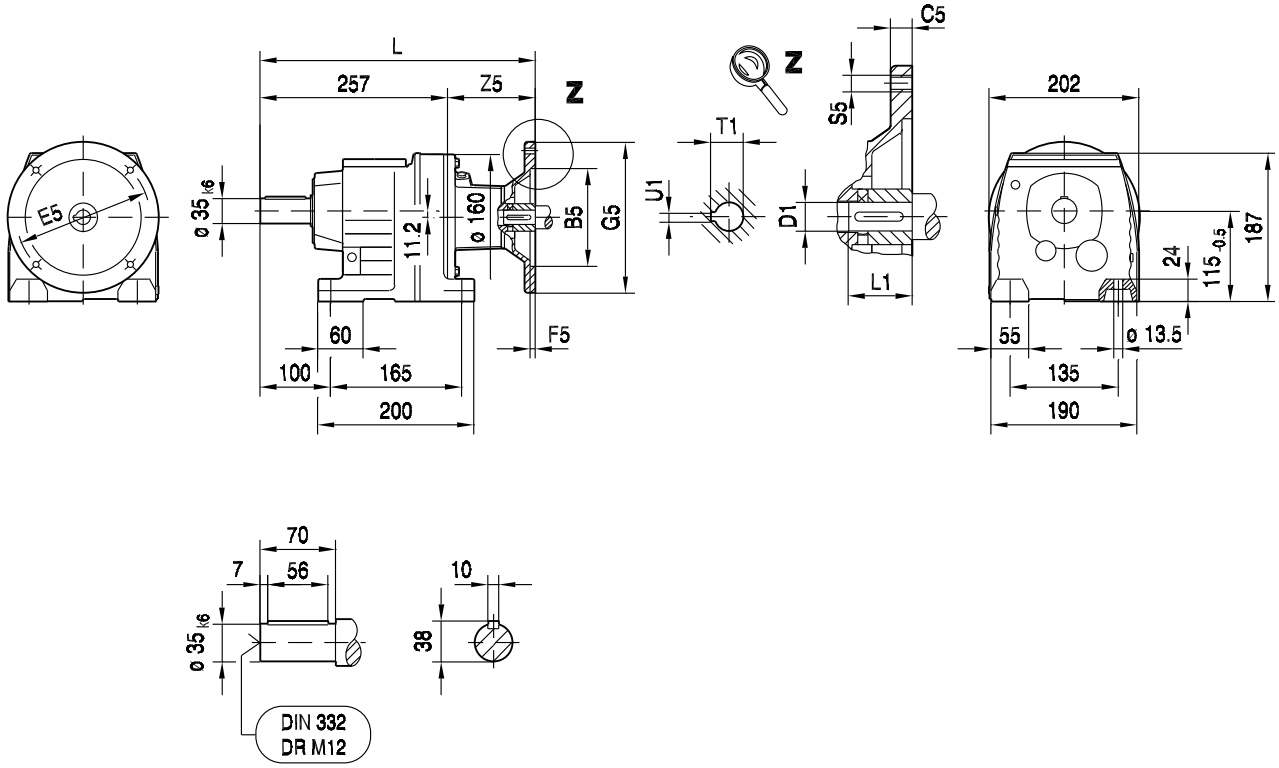

R57F..

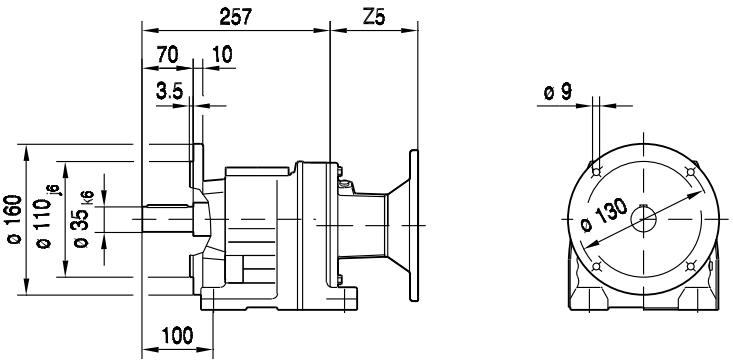

(→ 130)	B5	C5	E5	F5	G5	L	S5	Z5	D1	L1	T1	U1	
AM63	95	10	115	3.5	140	323	M8	66	11	23	12.8	4	
AM71	110	10	130	4.0	160	323	M8	66	14	30	16.3	5	
AM80	130	12	165	4.5	200	356	M10	99	19	40	21.8	6	
AM90	130	12	165	4.5	200	356	M10	99	24	50	27.3	8	
AM100	180	15	215	5.0	250	391	M12	134	28	60	31.3	8	
AM112	180	15	215	5.0	250	391	M12	134	28	60	31.3	8	
AM132S/M	230	16	265	5.0	300	448	M12	191	38	80	41.3	10	

01 029 02 01

RF57..

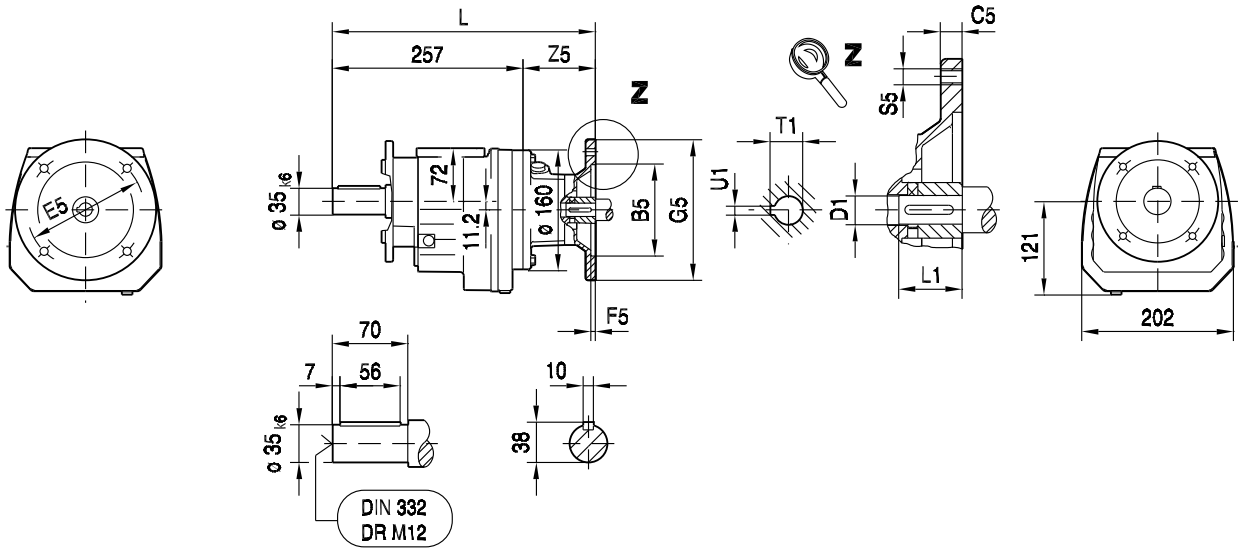

ø 160

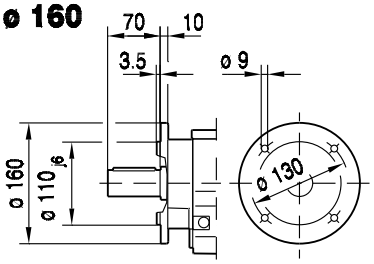

ø 200

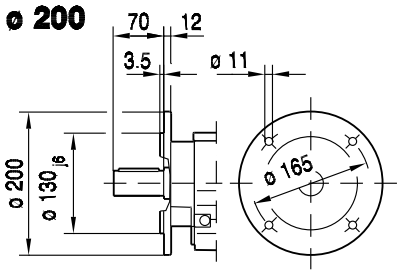

ø 250

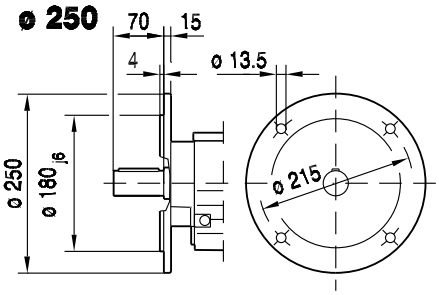

RM57..

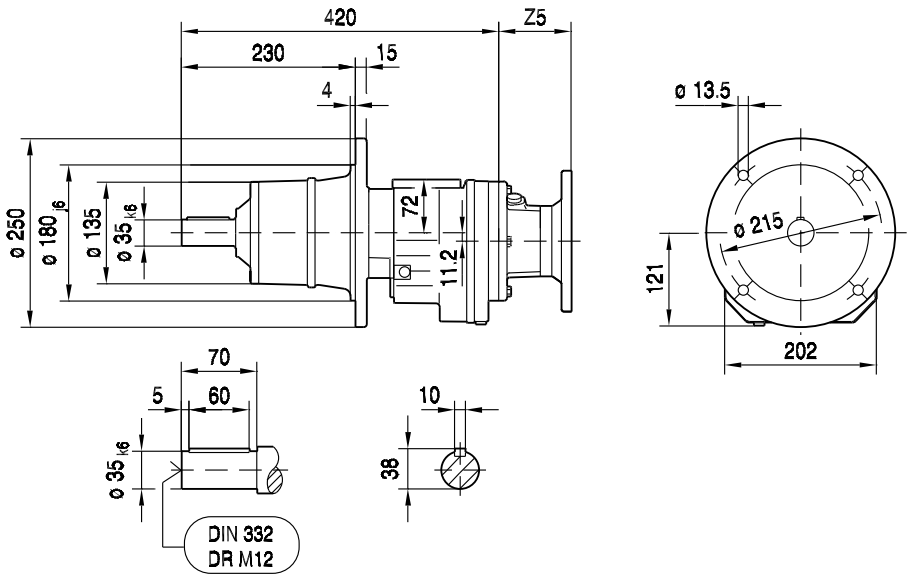

(→ 130)	B5	C5	E5	F5	G5	L	S5	Z5	D1	L1	T1	U1	
AM63	95	10	115	3.5	140	323	M8	66	11	23	12.8	4	
AM71	110	10	130	4.0	160	323	M8	66	14	30	16.3	5	
AM80	130	12	165	4.5	200	356	M10	99	19	40	21.8	6	
AM90	130	12	165	4.5	200	356	M10	99	24	50	27.3	8	
AM100	180	15	215	5.0	250	391	M12	134	28	60	31.3	8	
AM112	180	15	215	5.0	250	391	M12	134	28	60	31.3	8	
AM132S/M	230	16	265	5.0	300	448	M12	191	38	80	41.3	10	

01 007 00 07

RZ57..

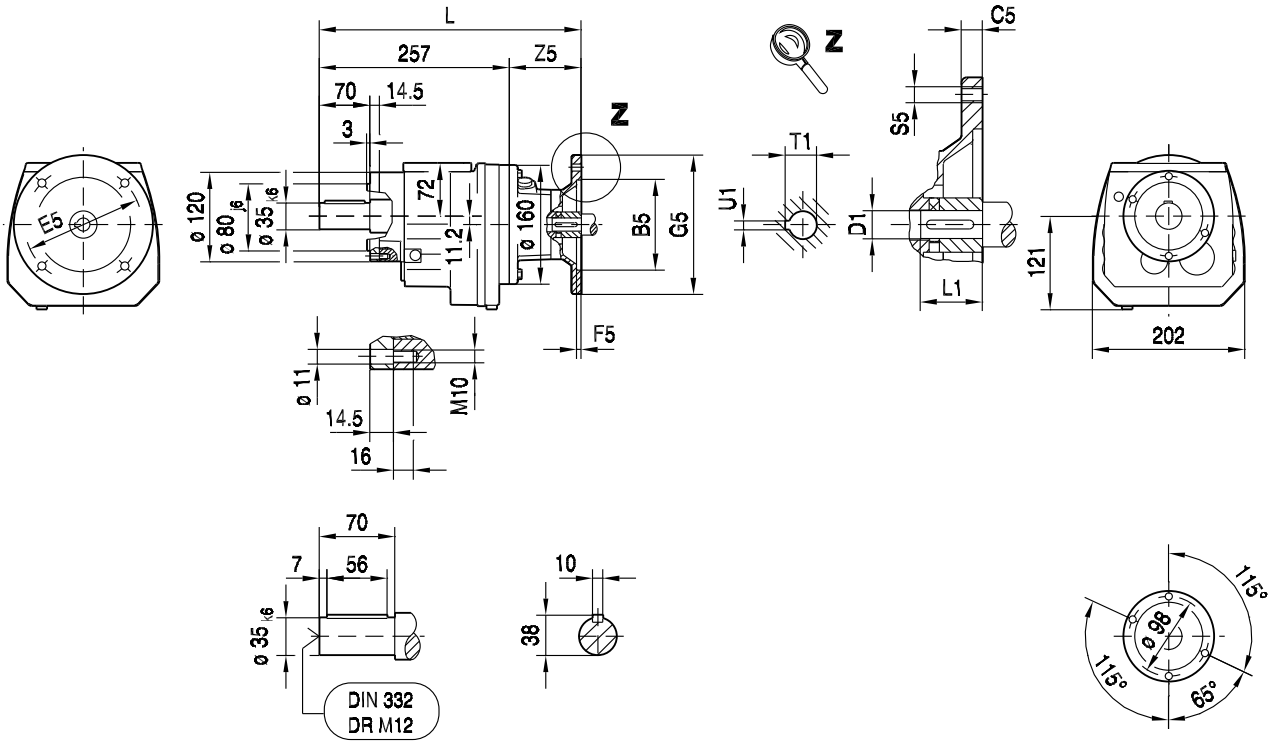

(→ 130)	B5	C5	E5	F5	G5	L	S5	Z5	D1	L1	T1	U1	
AM63	95	10	115	3.5	140	323	M8	66	11	23	12.8	4	
AM71	110	10	130	4.0	160	323	M8	66	14	30	16.3	5	
AM80	130	12	165	4.5	200	356	M10	99	19	40	21.8	6	
AM90	130	12	165	4.5	200	356	M10	99	24	50	27.3	8	
AM100	180	15	215	5.0	250	391	M12	134	28	60	31.3	8	
AM112	180	15	215	5.0	250	391	M12	134	28	60	31.3	8	
AM132S/M	230	16	265	5.0	300	448	M12	191	38	80	41.3	10	

01 030 01 01

R67..

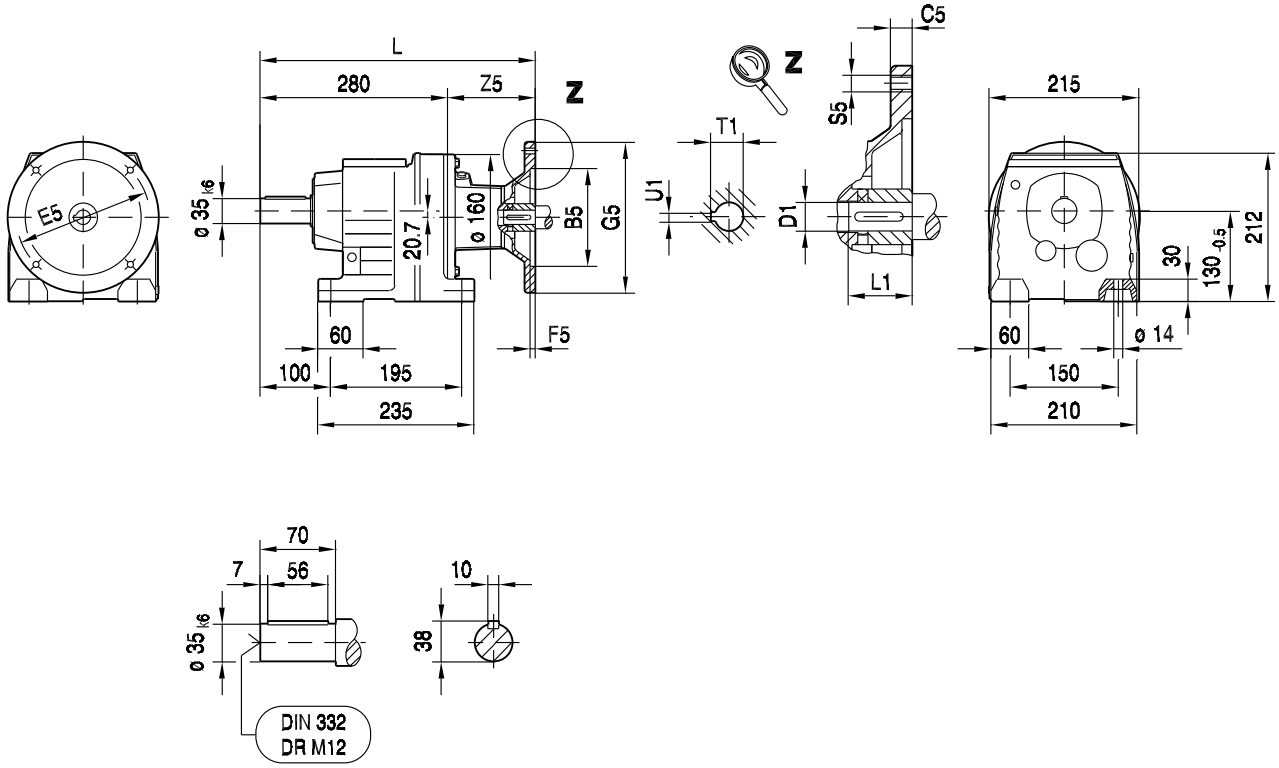

R67F..

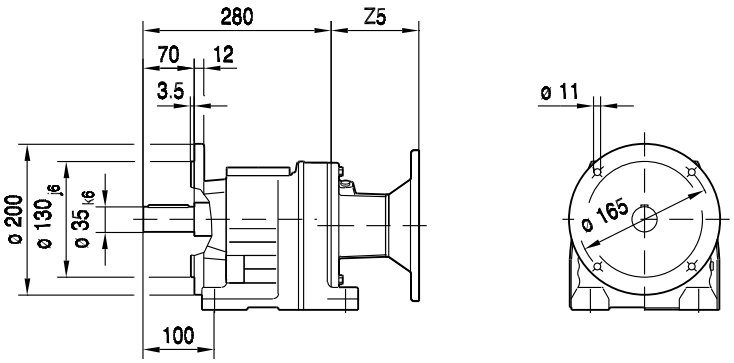

(→ 130)	B5	C5	E5	F5	G5	L	S5	Z5	D1	L1	T1	U1	
AM63	95	10	115	3.5	140	346	M8	66	11	23	12.8	4	
AM71	110	10	130	4.0	160	346	M8	66	14	30	16.3	5	
AM80	130	12	165	4.5	200	379	M10	99	19	40	21.8	6	
AM90	130	12	165	4.5	200	379	M10	99	24	50	27.3	8	
AM100	180	15	215	5.0	250	414	M12	134	28	60	31.3	8	
AM112	180	15	215	5.0	250	414	M12	134	28	60	31.3	8	
AM132S/M	230	16	265	5.0	300	471	M12	191	38	80	41.3	10	

01 031 02 01

RF67..

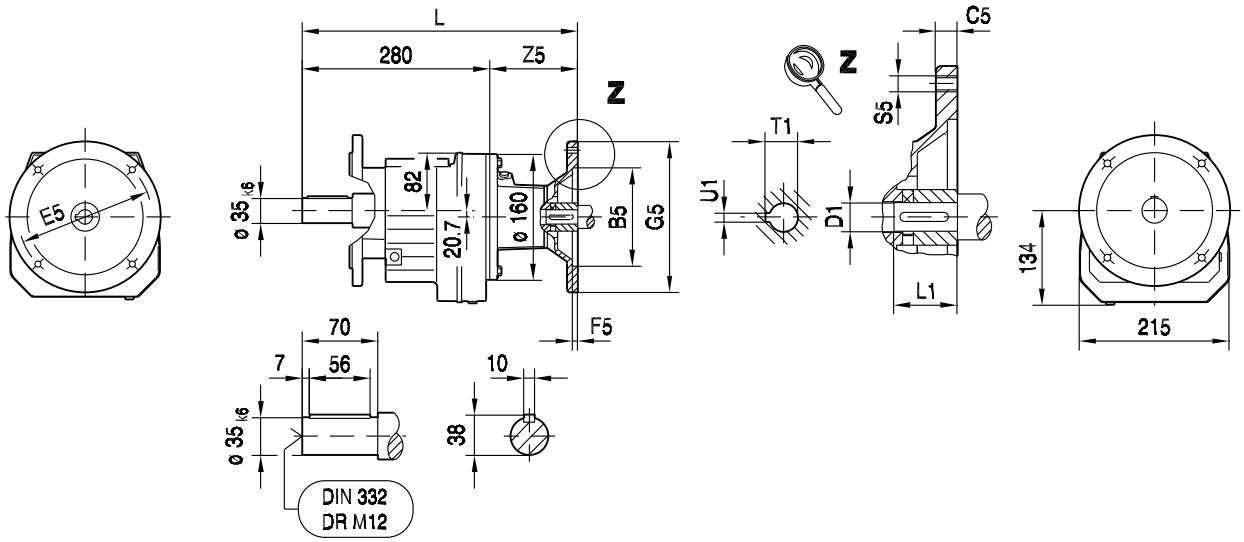

ø 200

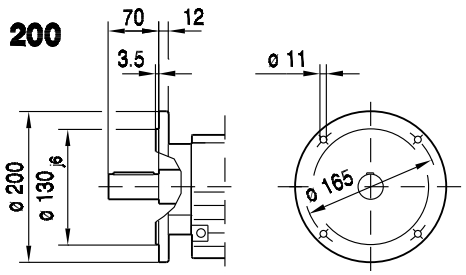

ø 250

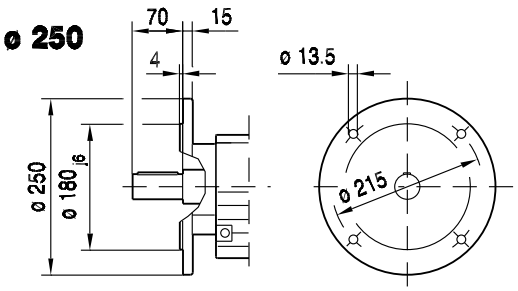

RM67..

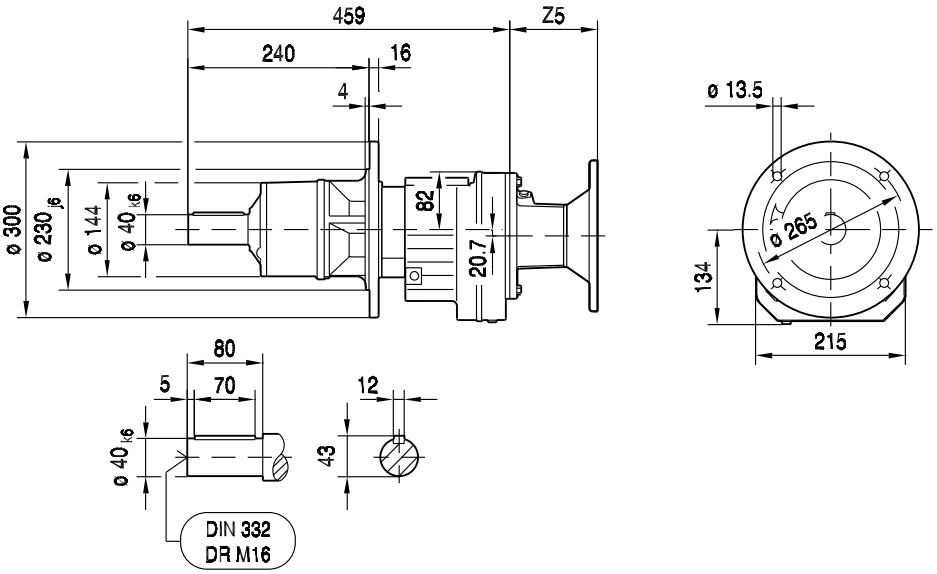

(→ 130)	B5	C5	E5	F5	G5	L	S5	Z5	D1	L1	T1	U1	
AM63	95	10	115	3.5	140	346	M8	66	11	23	12.8	4	
AM71	110	10	130	4.0	160	346	M8	66	14	30	16.3	5	
AM80	130	12	165	4.5	200	379	M10	99	19	40	21.8	6	
AM90	130	12	165	4.5	200	379	M10	99	24	50	27.3	8	
AM100	180	15	215	5.0	250	414	M12	134	28	60	31.3	8	
AM112	180	15	215	5.0	250	414	M12	134	28	60	31.3	8	
AM132S/M	230	16	265	5.0	300	471	M12	191	38	80	41.3	10	

01 008 00 07

RZ67..

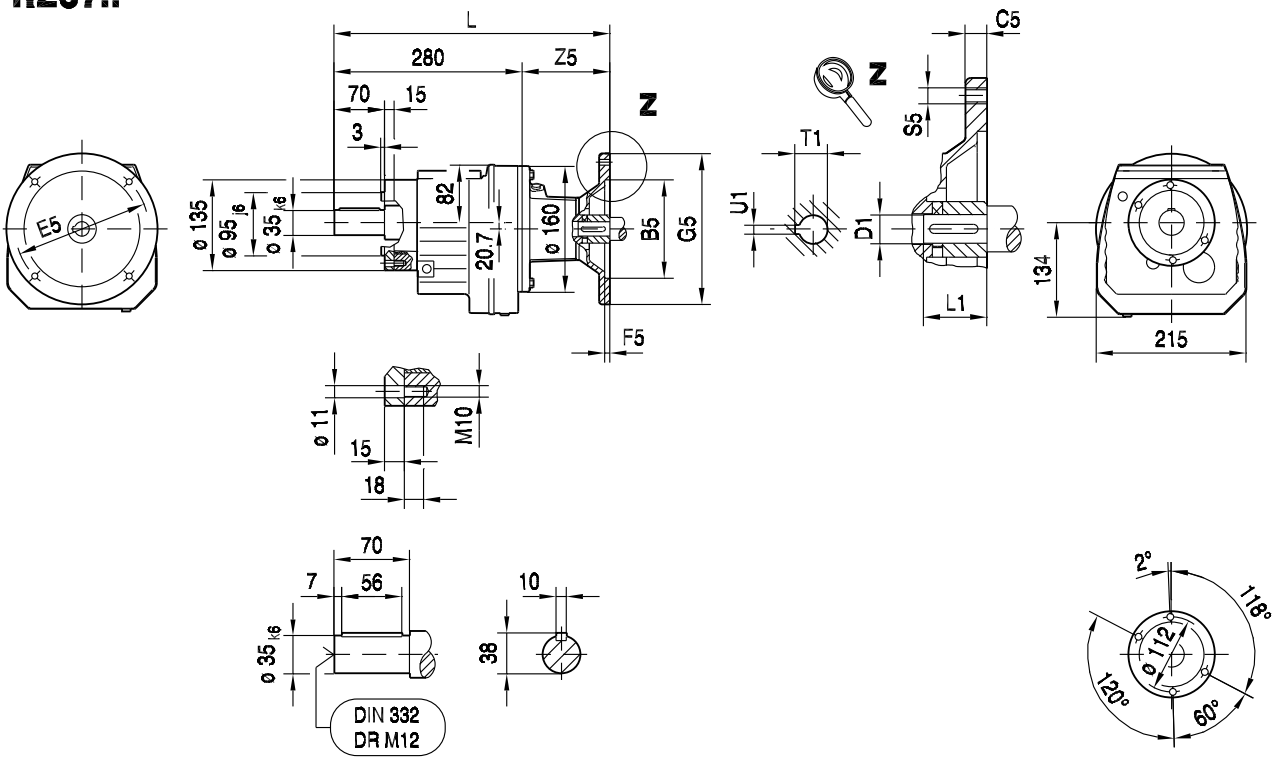

(→ 130)	B5	C5	E5	F5	G5	L	S5	Z5	D1	L1	T1	U1	
AM63	95	10	115	3.5	140	346	M8	66	11	23	12.8	4	
AM71	110	10	130	4.0	160	346	M8	66	14	30	16.3	5	
AM80	130	12	165	4.5	200	379	M10	99	19	40	21.8	6	
AM90	130	12	165	4.5	200	379	M10	99	24	50	27.3	8	
AM100	180	15	215	5.0	250	414	M12	134	28	60	31.3	8	
AM112	180	15	215	5.0	250	414	M12	134	28	60	31.3	8	
AM132S/M	230	16	265	5.0	300	471	M12	191	38	80	41.3	10	

01 032 02 01

R77..

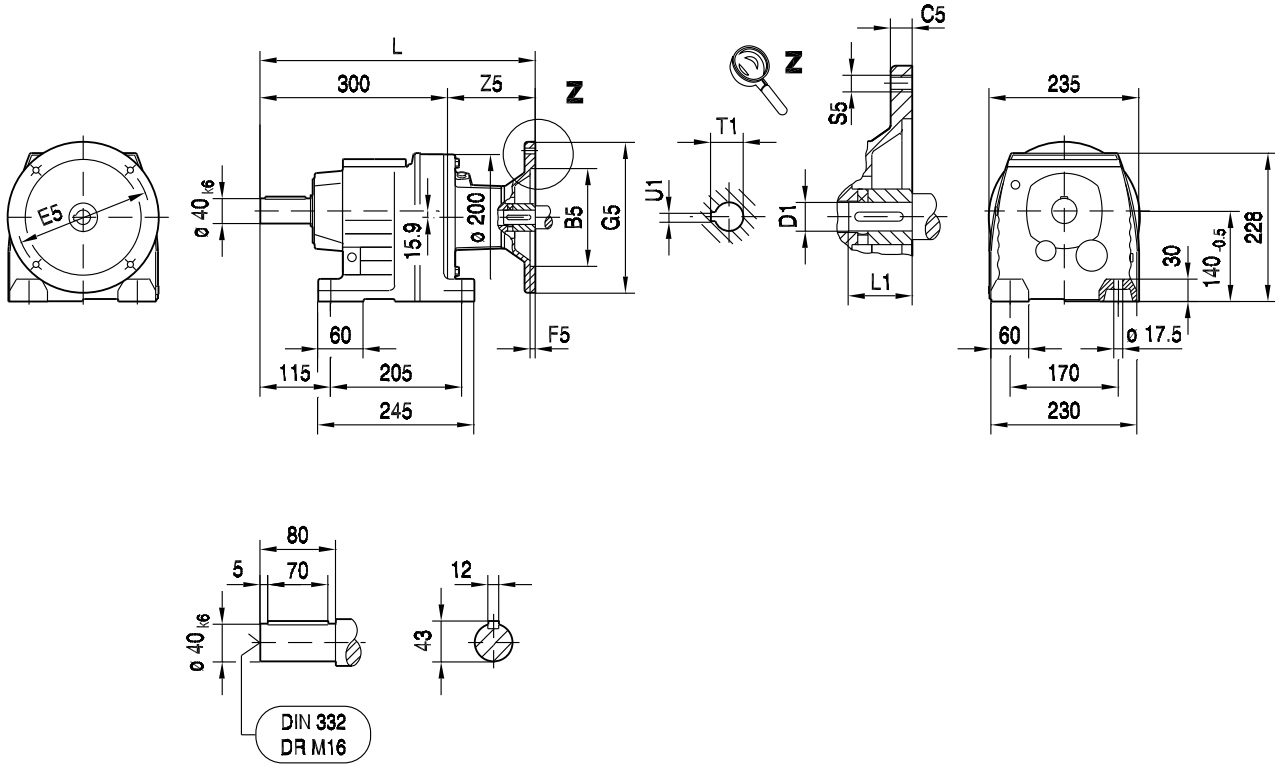

R77F..

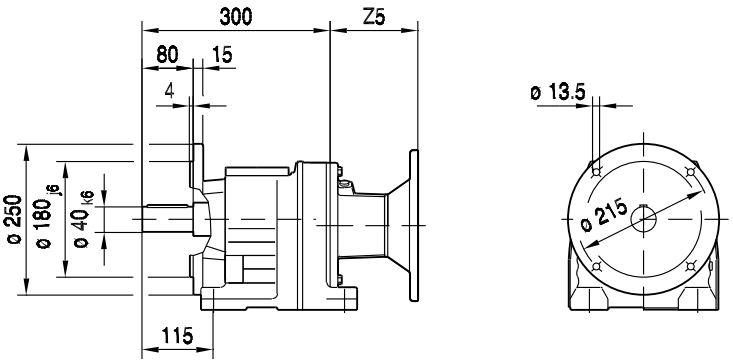

(→ 130)	B5	C5	E5	F5	G5	L	S5	Z5	D1	L1	T1	U1	
AM63	95	10	115	3.5	140	360	M8	60	11	23	12.8	4	
AM71	110	10	130	4.0	160	360	M8	60	14	30	16.3	5	
AM80	130	12	165	4.5	200	392	M10	92	19	40	21.8	6	
AM90	130	12	165	4.5	200	392	M10	92	24	50	27.3	8	
AM100	180	15	215	5.0	250	426	M12	126	28	60	31.3	8	
AM112	180	15	215	5.0	250	426	M12	126	28	60	31.3	8	
AM132S/M	230	16	265	5.0	300	479	M12	179	38	80	41.3	10	
AM132ML	230	16	265	5.0	300	479	M12	179	38	80	41.3	10	

01 033 02 01

RF77..

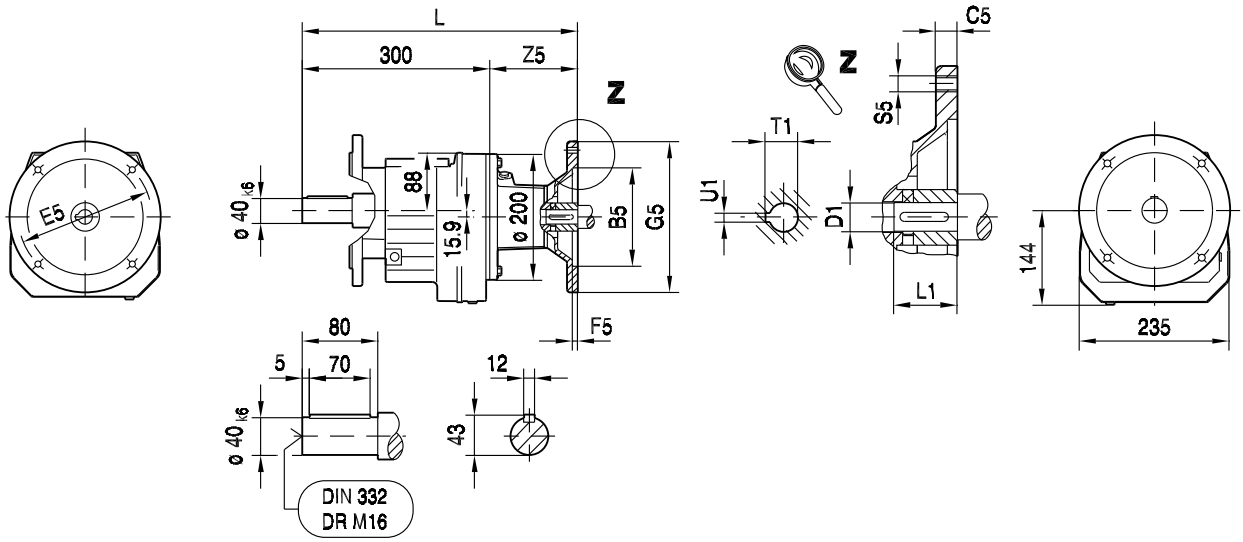

ø 250

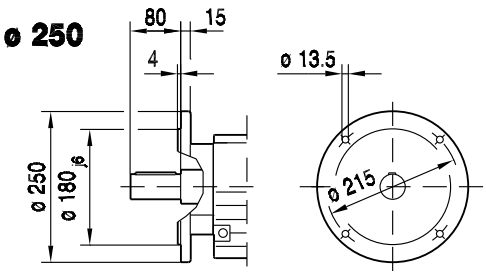

ø 300

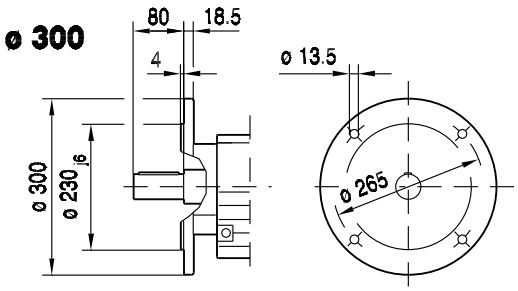

RM77..

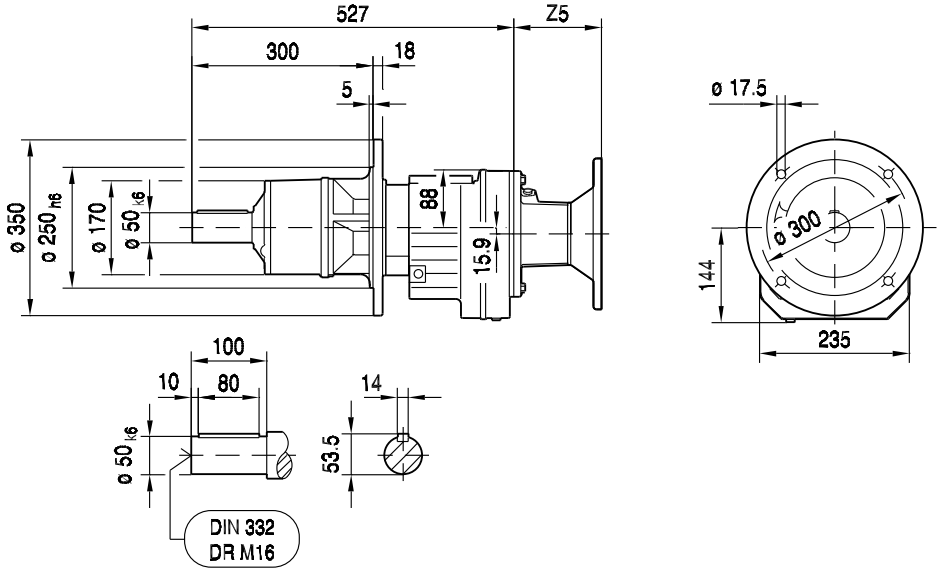

(→ 130)	B5	C5	E5	F5	G5	L	S5	Z5	D1	L1	T1	U1	
AM63	95	10	115	3.5	140	360	M8	60	11	23	12.8	4	
AM71	110	10	130	4.0	160	360	M8	60	14	30	16.3	5	
AM80	130	12	165	4.5	200	392	M10	92	19	40	21.8	6	
AM90	130	12	165	4.5	200	392	M10	92	24	50	27.3	8	
AM100	180	15	215	5.0	250	426	M12	126	28	60	31.3	8	
AM112	180	15	215	5.0	250	426	M12	126	28	60	31.3	8	
AM132S/M	230	16	265	5.0	300	479	M12	179	38	80	41.3	10	
AM132ML	230	16	265	5.0	300	479	M12	179	38	80	41.3	10	

01 009 00 07

RZ77..

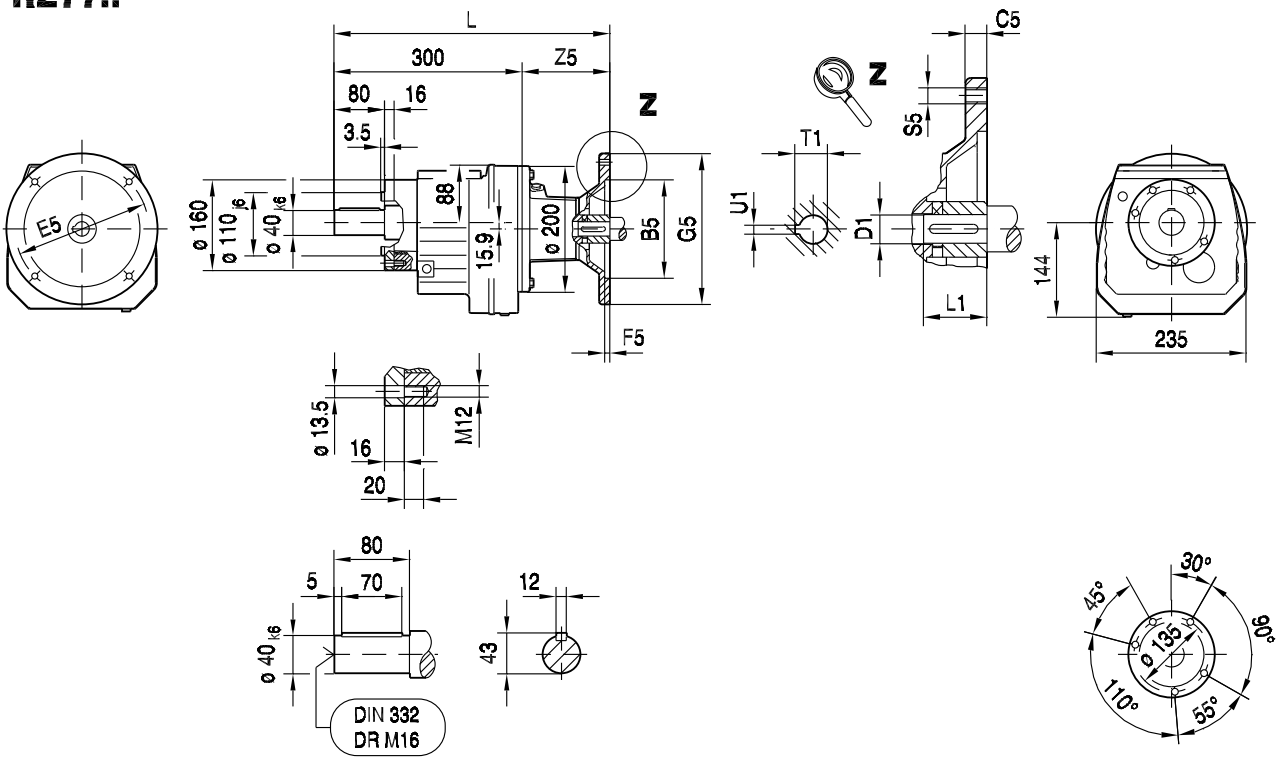

(→ 130)	B5	C5	E5	F5	G5	L	S5	Z5	D1	L1	T1	U1	
AM63	95	10	115	3.5	140	360	M8	60	11	23	12.8	4	
AM71	110	10	130	4.0	160	360	M8	60	14	30	16.3	5	
AM80	130	12	165	4.5	200	392	M10	92	19	40	21.8	6	
AM90	130	12	165	4.5	200	392	M10	92	24	50	27.3	8	
AM100	180	15	215	5.0	250	426	M12	126	28	60	31.3	8	
AM112	180	15	215	5.0	250	426	M12	126	28	60	31.3	8	
AM132S/M	230	16	265	5.0	300	479	M12	179	38	80	41.3	10	
AM132ML	230	16	265	5.0	300	479	M12	179	38	80	41.3	10	

01 034 01 01

R87..

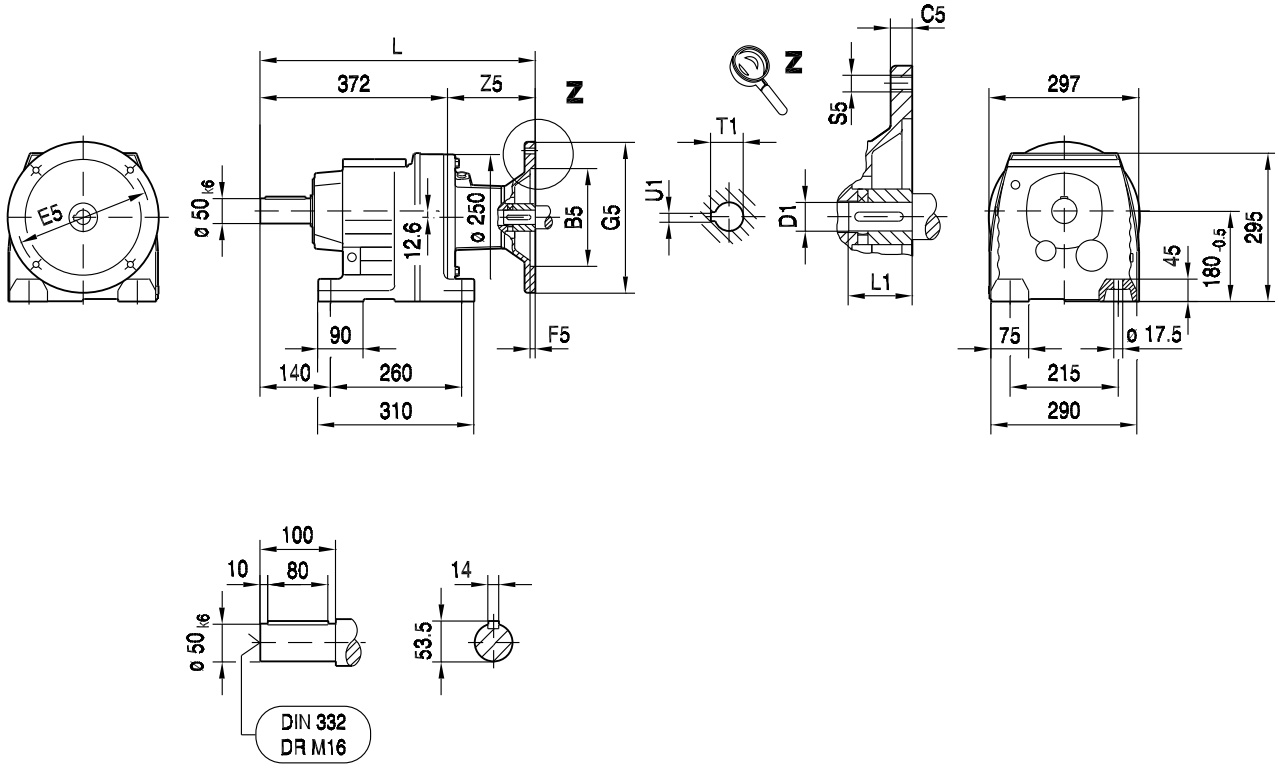

R87F..

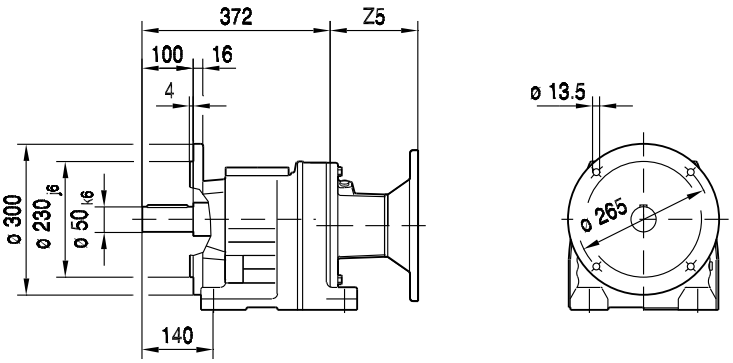

(→ 130)	B5	C5	E5	F5	G5	L	S5	Z5	D1	L1	T1	U1	
AM80	130	12	165	4.5	200	459	M10	87	19	40	21.8	6	
AM90	130	12	165	4.5	200	459	M10	87	24	50	27.3	8	
AM100	180	15	215	5.0	250	493	M12	121	28	60	31.3	8	
AM112	180	15	215	5.0	250	493	M12	121	28	60	31.3	8	
AM132S/M	230	16	265	5.0	300	546	M12	174	38	80	41.3	10	
AM132ML	230	16	265	5.0	300	546	M12	174	38	80	41.3	10	
AM160	250	18	300	6.0	350	604	M16	232	42	110	45.3	12	
AM180	250	18	300	6.0	350	604	M16	232	48	110	51.8	14	

01 035 01 01

RF87..

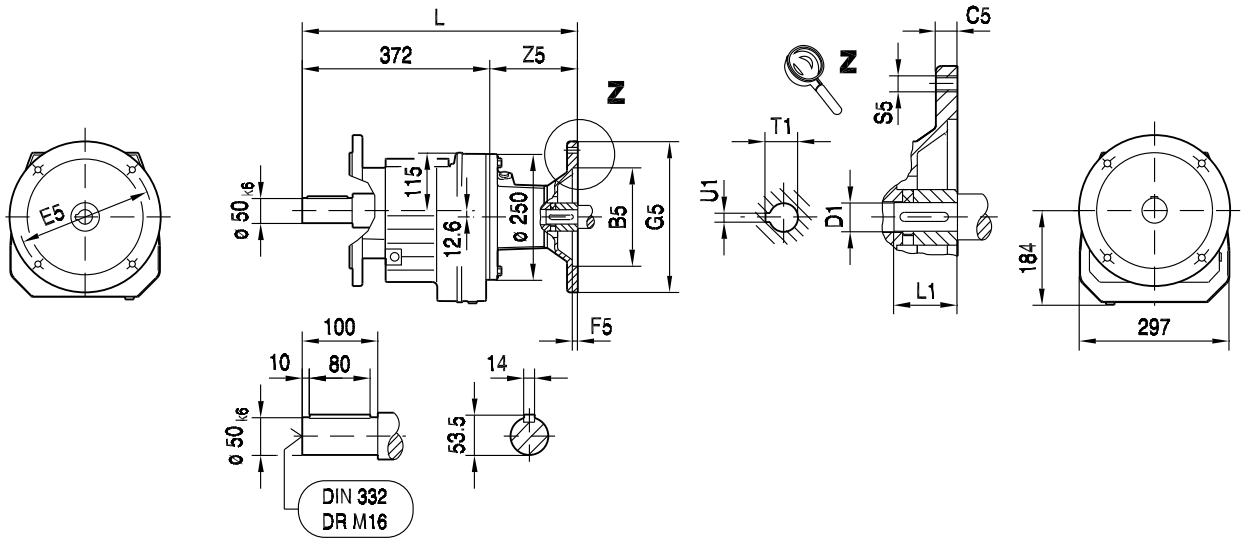

ø 300

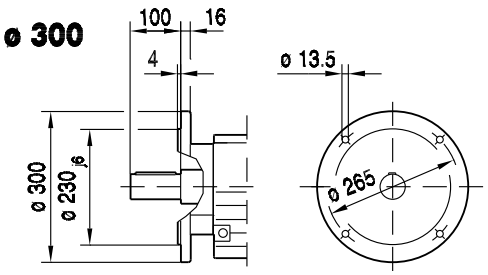

ø 350

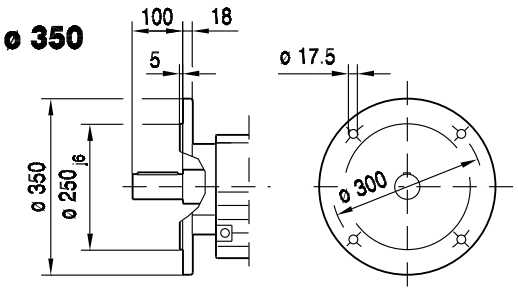

RM87..

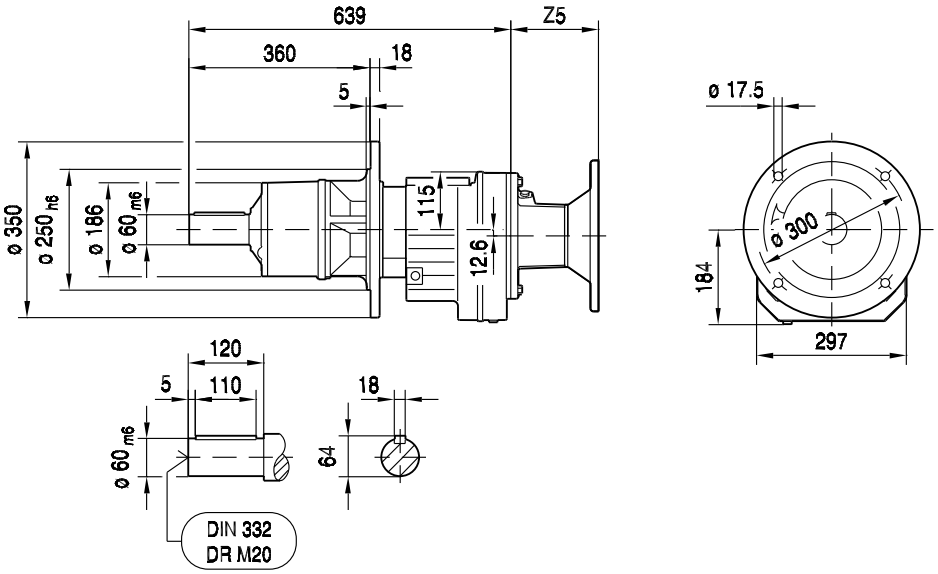

(→ 130)	B5	C5	E5	F5	G5	L	S5	Z5	D1	L1	T1	U1	
AM80	130	12	165	4.5	200	459	M10	87	19	40	21.8	6	
AM90	130	12	165	4.5	200	459	M10	87	24	50	27.3	8	
AM100	180	15	215	5.0	250	493	M12	121	28	60	31.3	8	
AM112	180	15	215	5.0	250	493	M12	121	28	60	31.3	8	
AM132S/M	230	16	265	5.0	300	546	M12	174	38	80	41.3	10	
AM132ML	230	16	265	5.0	300	546	M12	174	38	80	41.3	10	
AM160	250	18	300	6.0	350	604	M16	232	42	110	45.3	12	
AM180	250	18	300	6.0	350	604	M16	232	48	110	51.8	14	

01 010 00 07

RZ87..

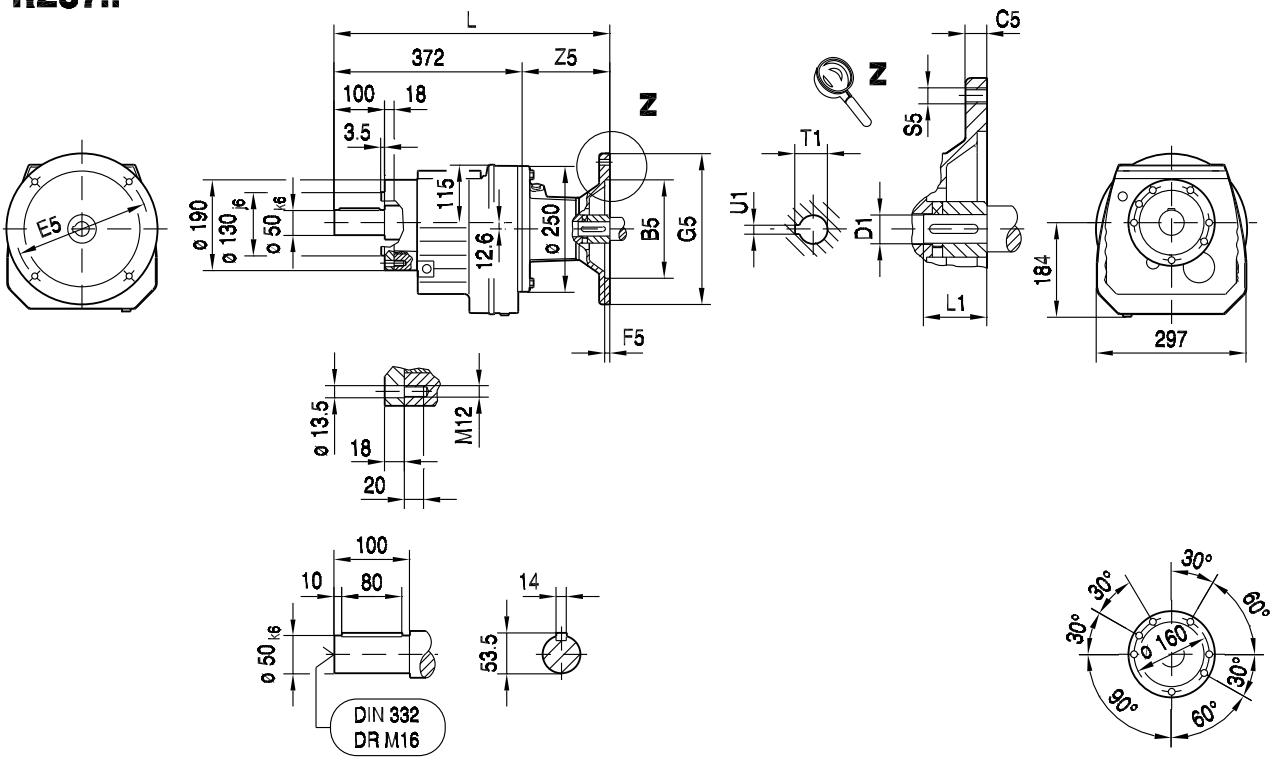

(→ 130)	B5	C5	E5	F5	G5	L	S5	Z5	D1	L1	T1	U1	
AM80	130	12	165	4.5	200	459	M10	87	19	40	21.8	6	
AM90	130	12	165	4.5	200	459	M10	87	24	50	27.3	8	
AM100	180	15	215	5.0	250	493	M12	121	28	60	31.3	8	
AM112	180	15	215	5.0	250	493	M12	121	28	60	31.3	8	
AM132S/M	230	16	265	5.0	300	546	M12	174	38	80	41.3	10	
AM132ML	230	16	265	5.0	300	546	M12	174	38	80	41.3	10	
AM160	250	18	300	6.0	350	604	M16	232	42	110	45.3	12	
AM180	250	18	300	6.0	350	604	M16	232	48	110	51.8	14	

01 036 01 01

R97..

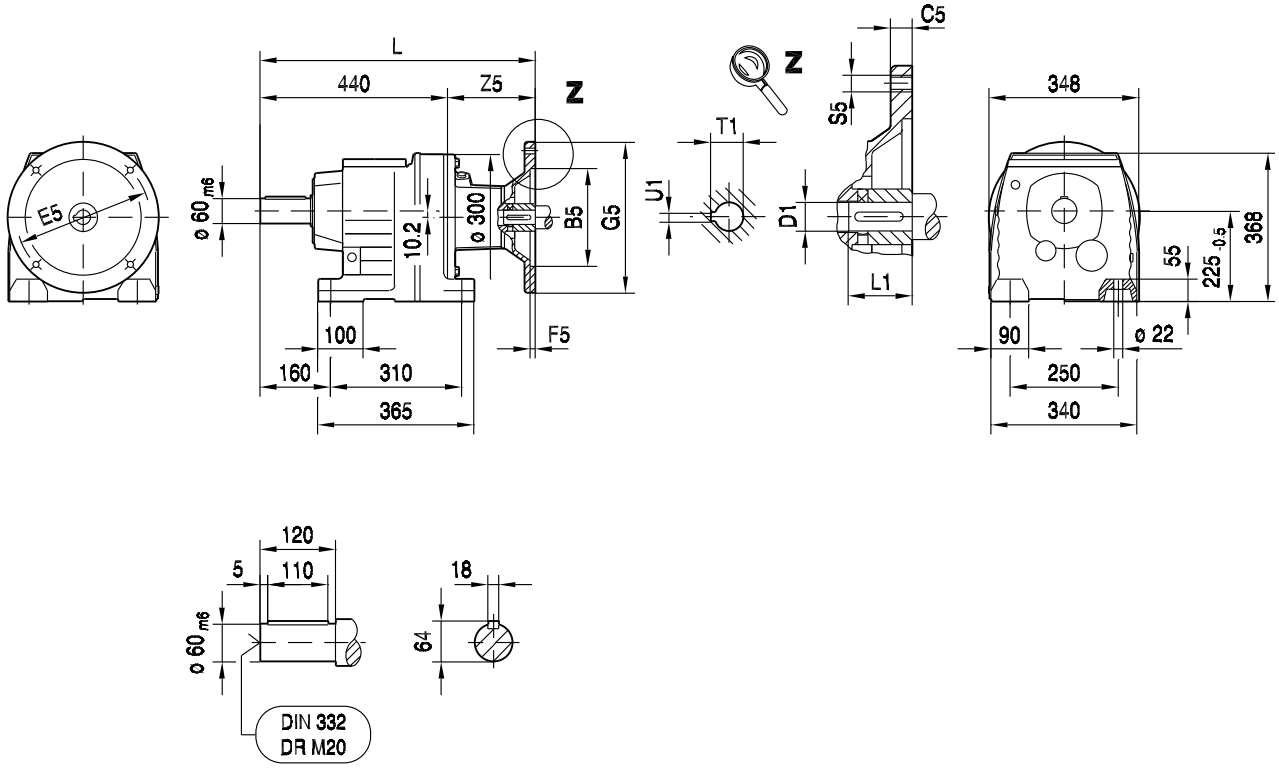

(→ 130)	B5	C5	E5	F5	G5	L	S5	Z5	D1	L1	T1	U1	
AM100	180	15	215	5.0	250	556	M12	116	28	60	31.3	8	
AM112	180	15	215	5.0	250	556	M12	116	28	60	31.3	8	
AM132S/M	230	16	265	5.0	300	609	M12	169	38	80	41.3	10	
AM132ML	230	16	265	5.0	300	609	M12	169	38	80	41.3	10	
AM160	250	18	300	6.0	350	667	M16	227	42	110	45.3	12	
AM180	250	18	300	6.0	350	667	M16	227	48	110	51.8	14	
AM200	300	20	350	7.0	400	708	M16	268	55	110	59.3	16	

01 037 01 01

RF97..

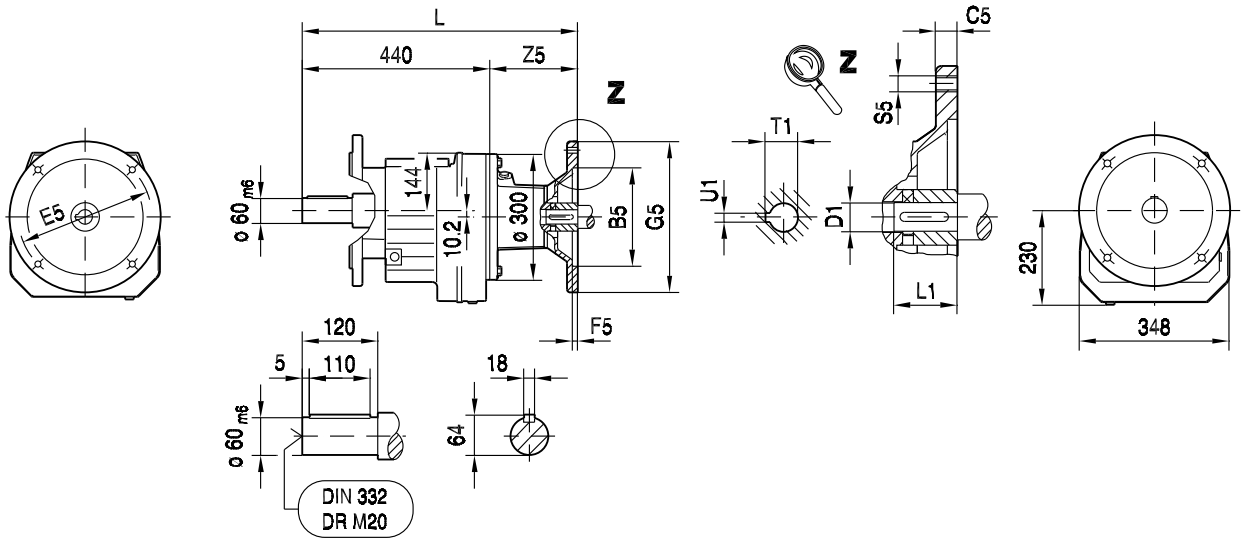

ø 350

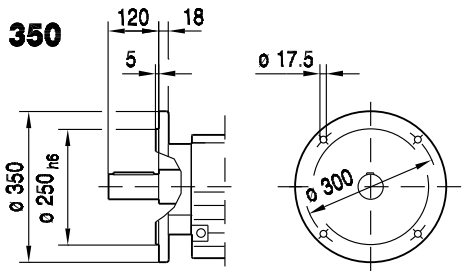

ø 450

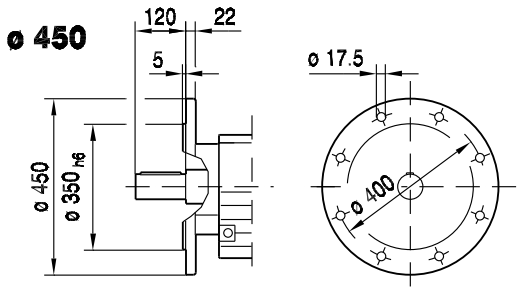

RM97..

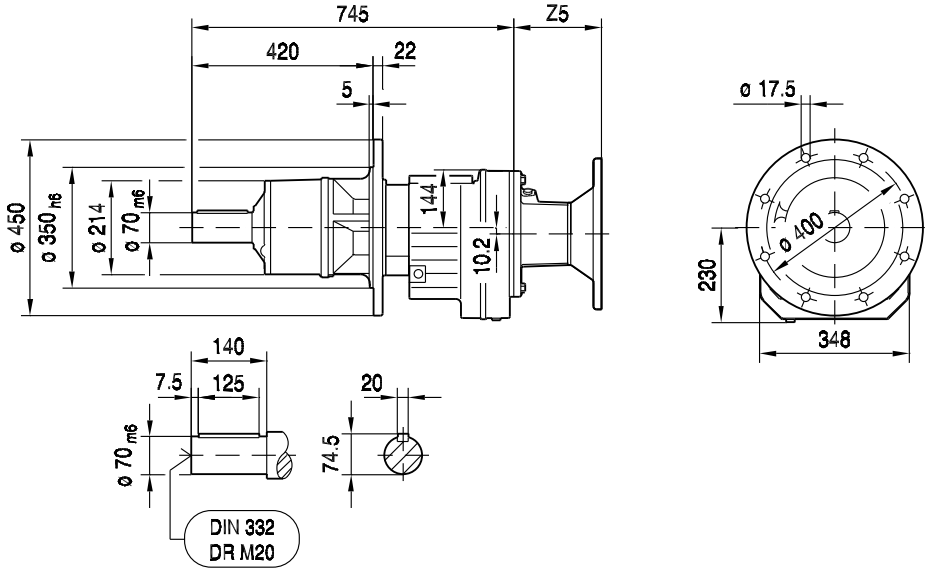

(→ 130)	B5	C5	E5	F5	G5	L	S5	Z5	D1	L1	T1	U1	
AM100	180	15	215	5.0	250	556	M12	116	28	60	31.3	8	
AM112	180	15	215	5.0	250	556	M12	116	28	60	31.3	8	
AM132S/M	230	16	265	5.0	300	609	M12	169	38	80	41.3	10	
AM132ML	230	16	265	5.0	300	609	M12	169	38	80	41.3	10	
AM160	250	18	300	6.0	350	667	M16	227	42	110	45.3	12	
AM180	250	18	300	6.0	350	667	M16	227	48	110	51.8	14	
AM200	300	20	350	7.0	400	708	M16	268	55	110	59.3	16	

01 038 01 01

R107..

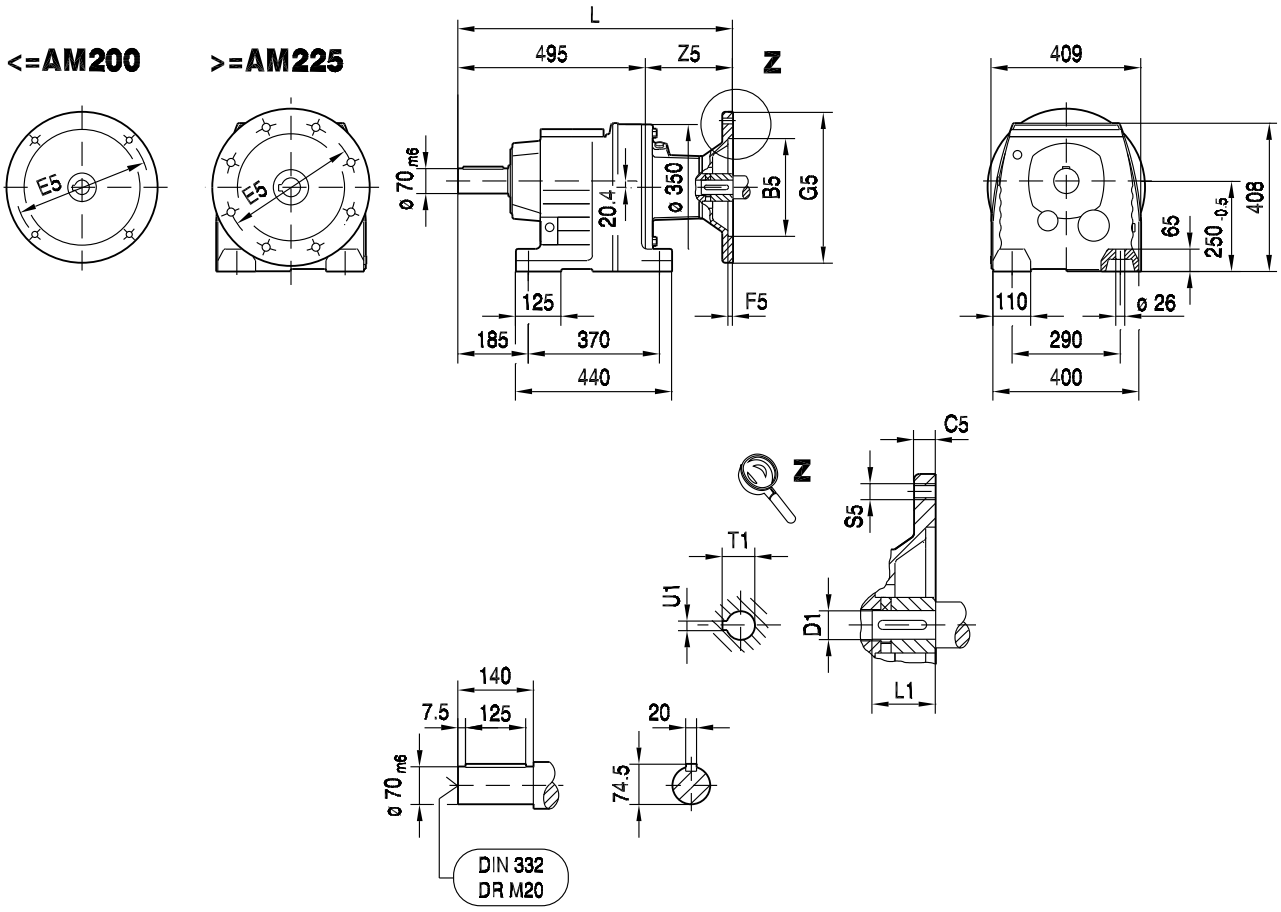

(→ 130)	B5	C5	E5	F5	G5	L	S5	Z5	D1	L1	T1	U1	
AM100	180	15	215	5.0	250	605	M12	110	28	60	31.3	8	
AM112	180	15	215	5.0	250	605	M12	110	28	60	31.3	8	
AM132S/M	230	16	265	5.0	300	658	M12	163	38	80	41.3	10	
AM132ML	230	16	265	5.0	300	658	M12	163	38	80	41.3	10	
AM160	250	18	300	6.0	350	716	M16	221	42	110	45.3	12	
AM180	250	18	300	6.0	350	716	M16	221	48	110	51.8	14	
AM200	300	20	350	7.0	400	757	M16	262	55	110	59.3	16	
AM225	350	22	400	7.0	450	772	M16	277	60	140	64.4	18	

01 039 01 01

RF107..

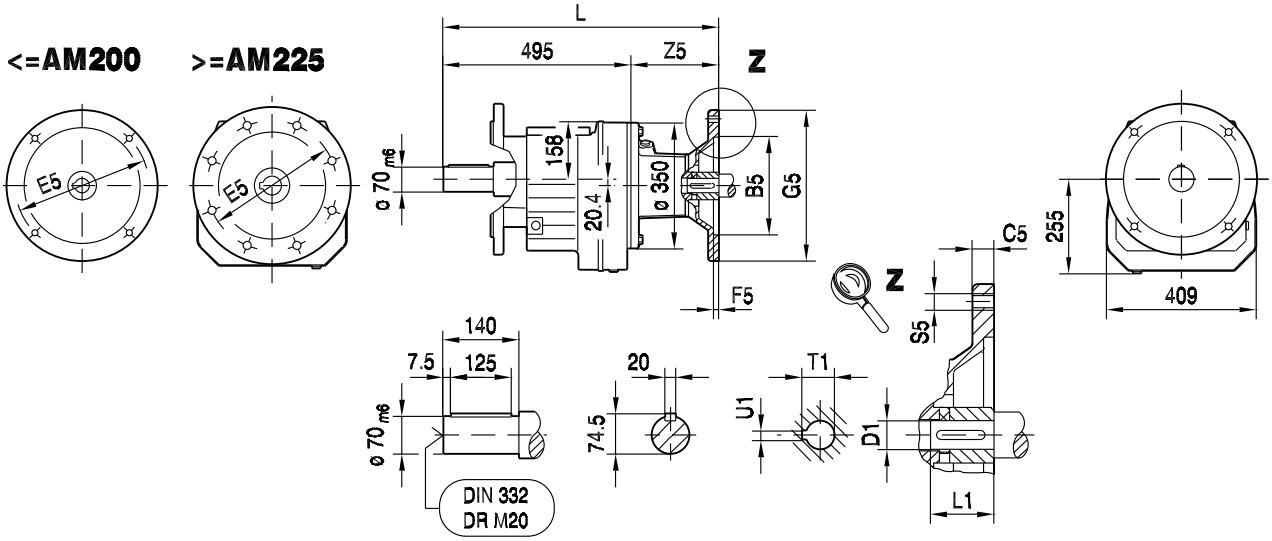

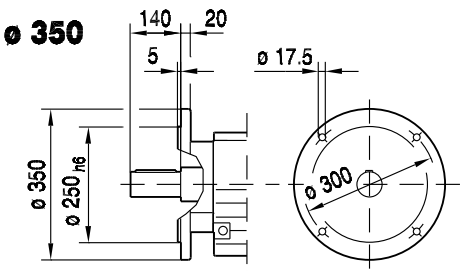

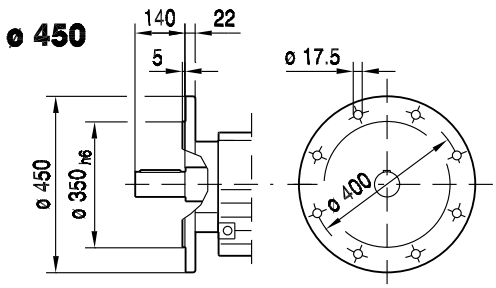

RM107..

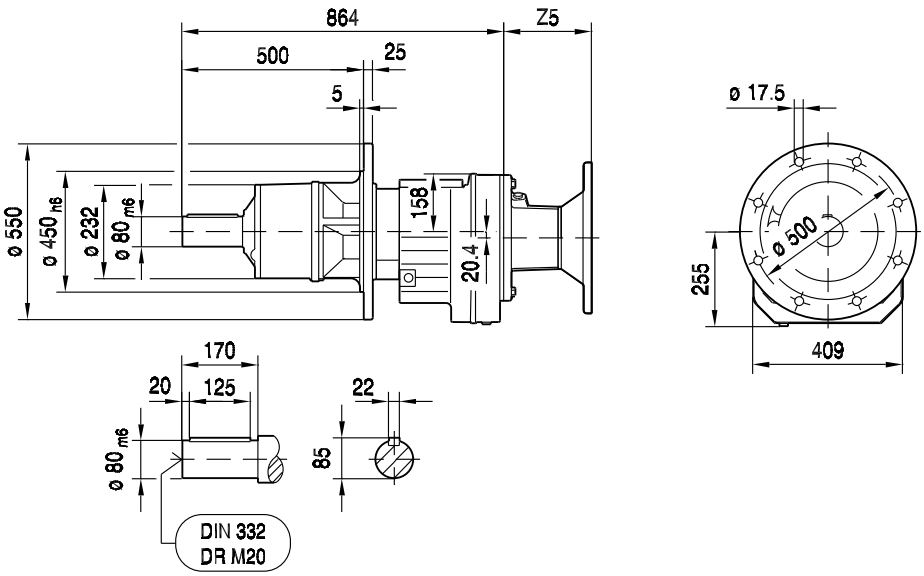

(→ 130)	B5	C5	E5	F5	G5	L	S5	Z5	D1	L1	T1	U1	
AM100	180	15	215	5.0	250	605	M12	110	28	60	31.3	8	
AM112	180	15	215	5.0	250	605	M12	110	28	60	31.3	8	
AM132S/M	230	16	265	5.0	300	658	M12	163	38	80	41.3	10	
AM132ML	230	16	265	5.0	300	658	M12	163	38	80	41.3	10	
AM160	250	18	300	6.0	350	716	M16	221	42	110	45.3	12	
AM180	250	18	300	6.0	350	716	M16	221	48	110	51.8	14	
AM200	300	20	350	7.0	400	757	M16	262	55	110	59.3	16	
AM225	350	22	400	7.0	450	772	M16	277	60	140	64.4	18	

01 040 01 01

R137..

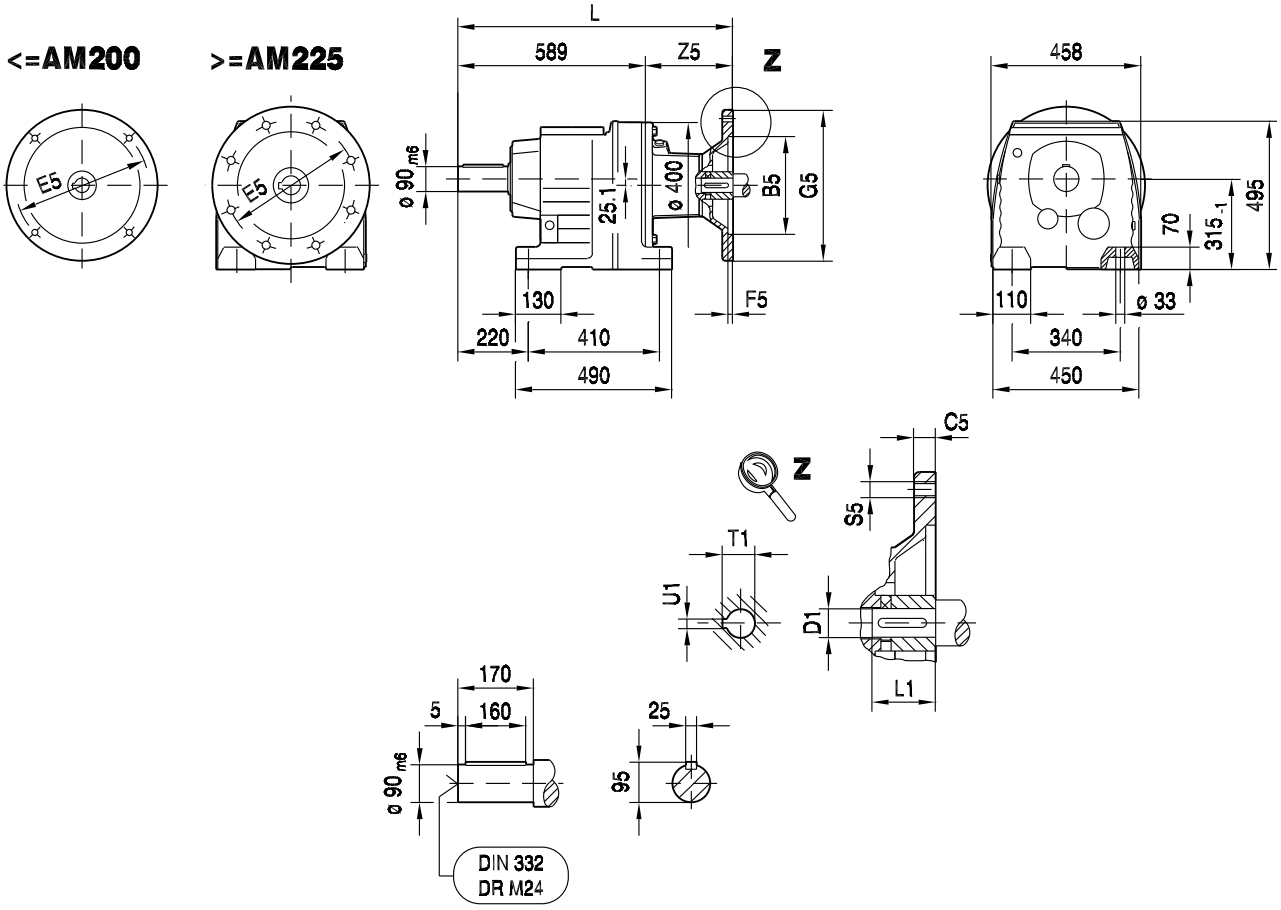

(→ 130)	B5	C5	E5	F5	G5	L	S5	Z5	D1	L1	T1	U1	
AM132S/M	230	16	265	5.0	300	745	M12	156	38	80	41.3	10	
AM132ML	230	16	265	5.0	300	745	M12	156	38	80	41.3	10	
AM160	250	18	300	6.0	350	803	M16	214	42	110	45.3	12	
AM180	250	18	300	6.0	350	803	M16	214	48	110	51.8	14	
AM200	300	20	350	7.0	400	844	M16	255	55	110	59.3	16	
AM225	350	22	400	7.0	450	859	M16	270	60	140	64.4	18	

01 041 01 01

RF137..

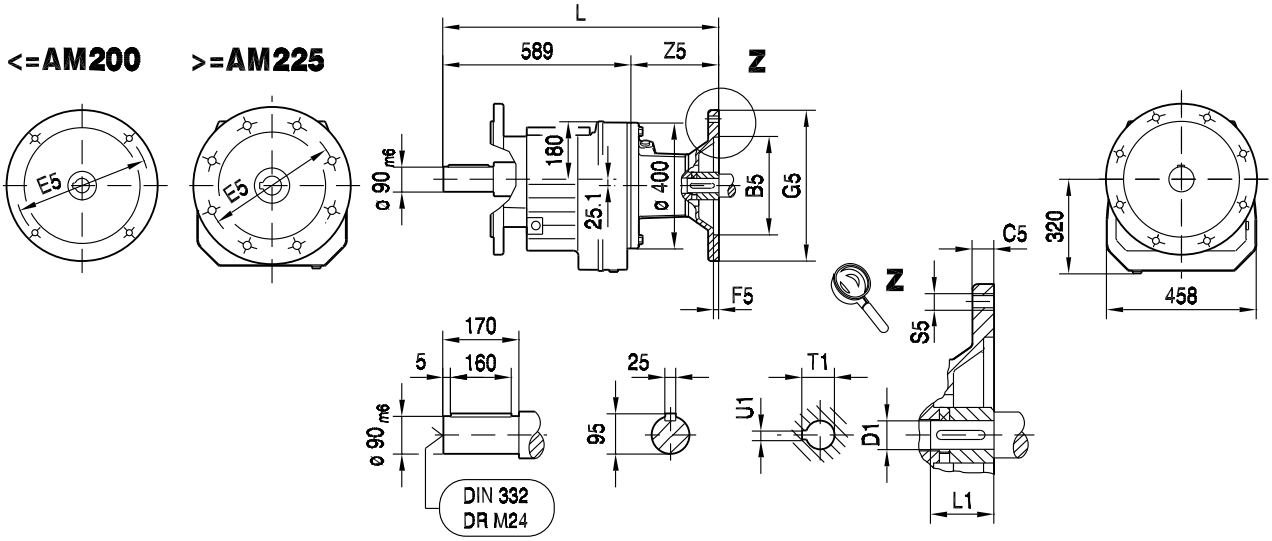

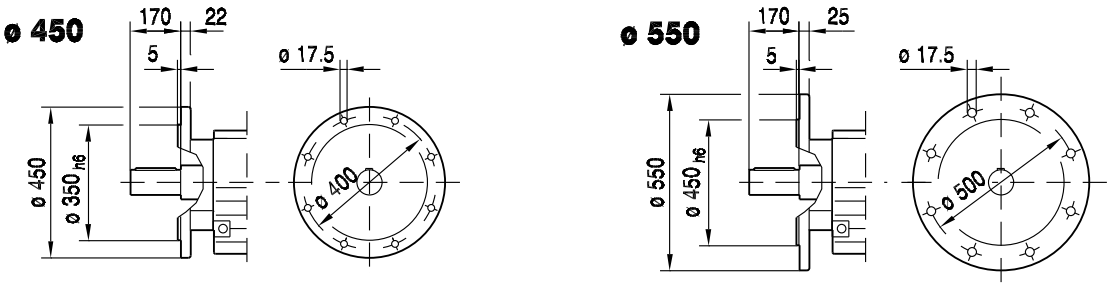

RM137..

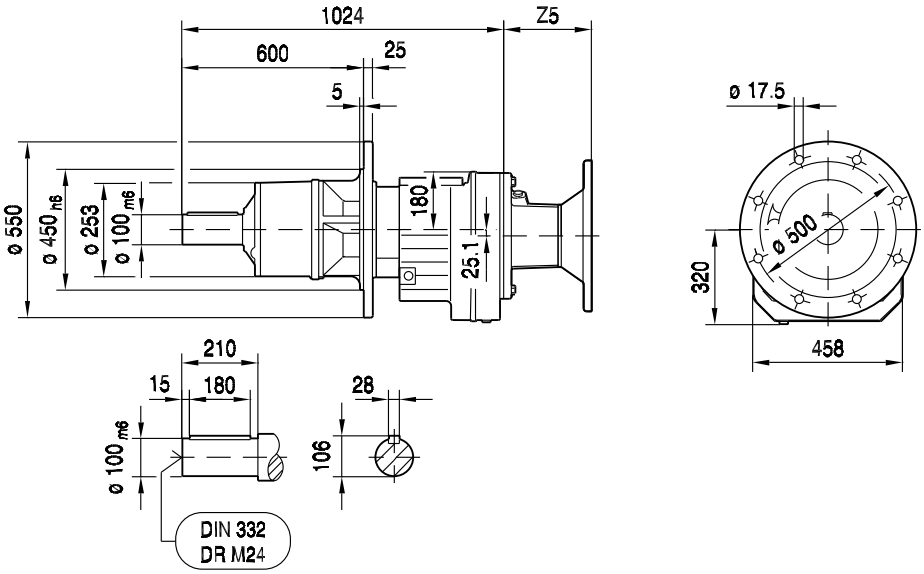

(→ 130)	B5	C5	E5	F5	G5	L	S5	Z5	D1	L1	T1	U1	
AM132S/M	230	16	265	5.0	300	745	M12	156	38	80	41.3	10	
AM132ML	230	16	265	5.0	300	745	M12	156	38	80	41.3	10	
AM160	250	18	300	6.0	350	803	M16	214	42	110	45.3	12	
AM180	250	18	300	6.0	350	803	M16	214	48	110	51.8	14	
AM200	300	20	350	7.0	400	844	M16	255	55	110	59.3	16	
AM225	350	22	400	7.0	450	859	M16	270	60	140	64.4	18	

01 042 01 01

R147..

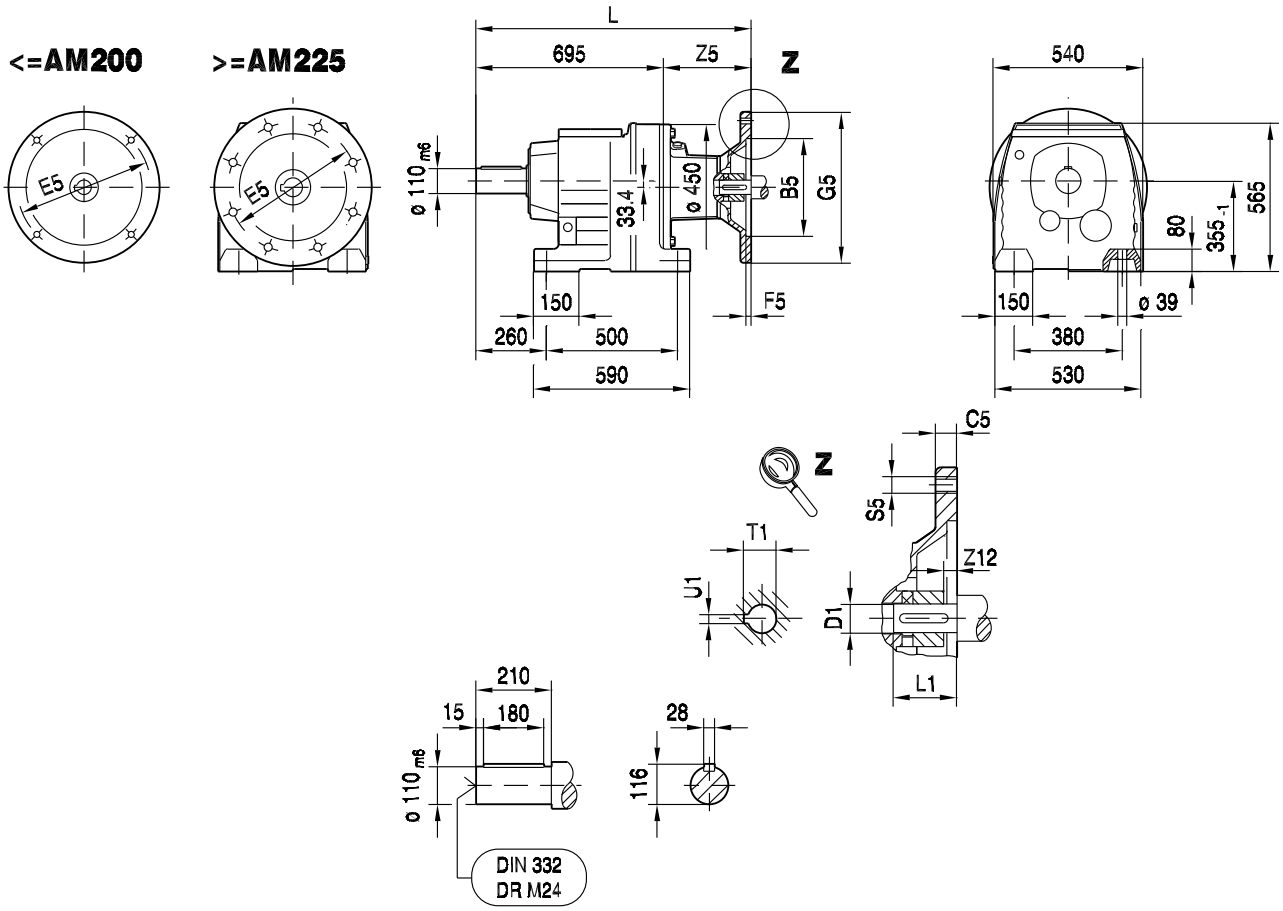

(→ 130)	B5	C5	E5	F5	G5	L	S5	Z5	Z12	D1	L1	T1	U1
AM132ML	230	16	265	5.0	300	843	M12	148	0	38	80	41.3	10
AM160	250	18	300	6.0	350	901	M16	206	0	42	110	45.3	12
AM180	250	18	300	6.0	350	901	M16	206	0	48	110	51.8	14
AM200	300	20	350	7.0	400	942	M16	247	0	55	110	59.3	16
AM225	350	22	400	7.0	450	957	M16	262	0	60	140	64.4	18
AM250	450	25	500	7.0	550	1031	M16	336	19	65	140	69.4	18
AM280	450	25	500	7.0	550	1031	M16	336	19	75	140	79.9	20

01 043 01 01

RF147..

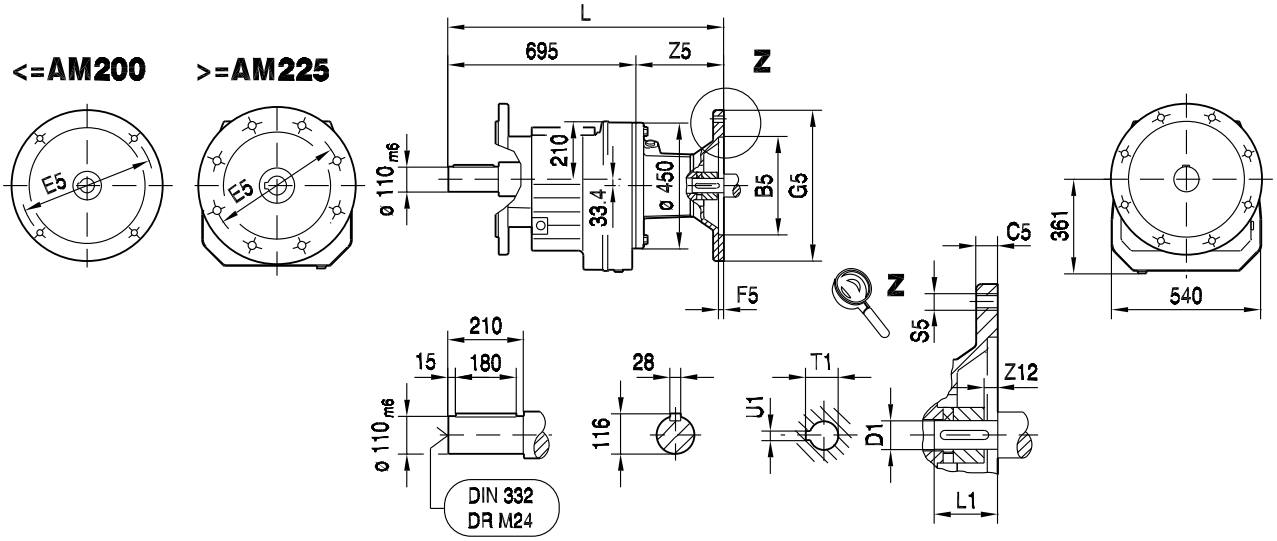

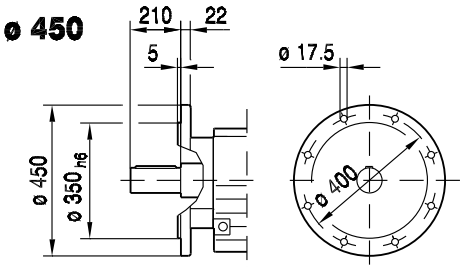

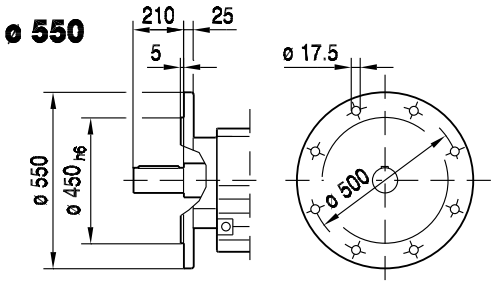

RM147..

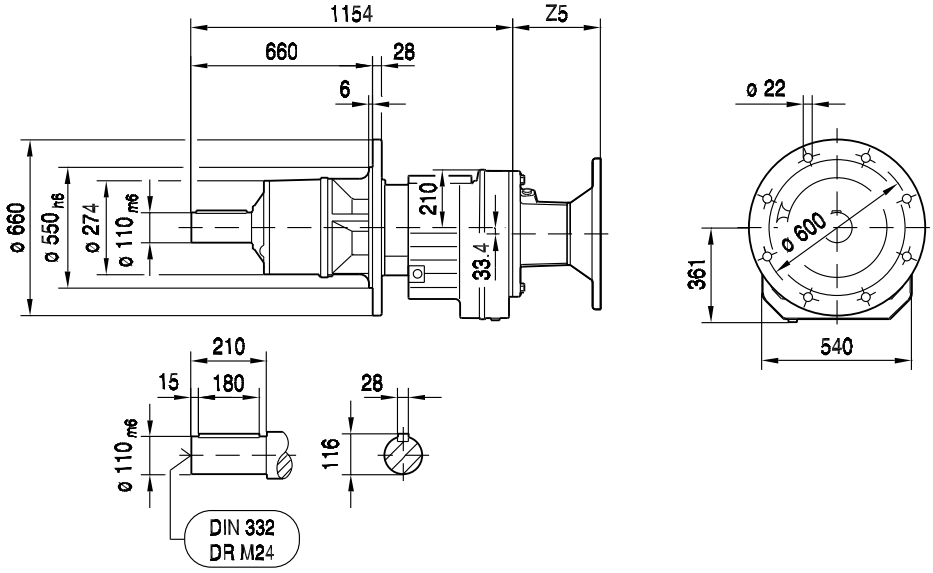

(→ 130)	B5	C5	E5	F5	G5	L	S5	Z5	Z12	D1	L1	T1	U1
AM132ML	230	16	265	5.0	300	843	M12	148	0	38	80	41.3	10
AM160	250	18	300	6.0	350	901	M16	206	0	42	110	45.3	12
AM180	250	18	300	6.0	350	901	M16	206	0	48	110	51.8	14
AM200	300	20	350	7.0	400	942	M16	247	0	55	110	59.3	16
AM225	350	22	400	7.0	450	957	M16	262	0	60	140	64.4	18
AM250	450	25	500	7.0	550	1031	M16	336	19	65	140	69.4	18
AM280	450	25	500	7.0	550	1031	M16	336	19	75	140	79.9	20

01 044 01 01

R167..

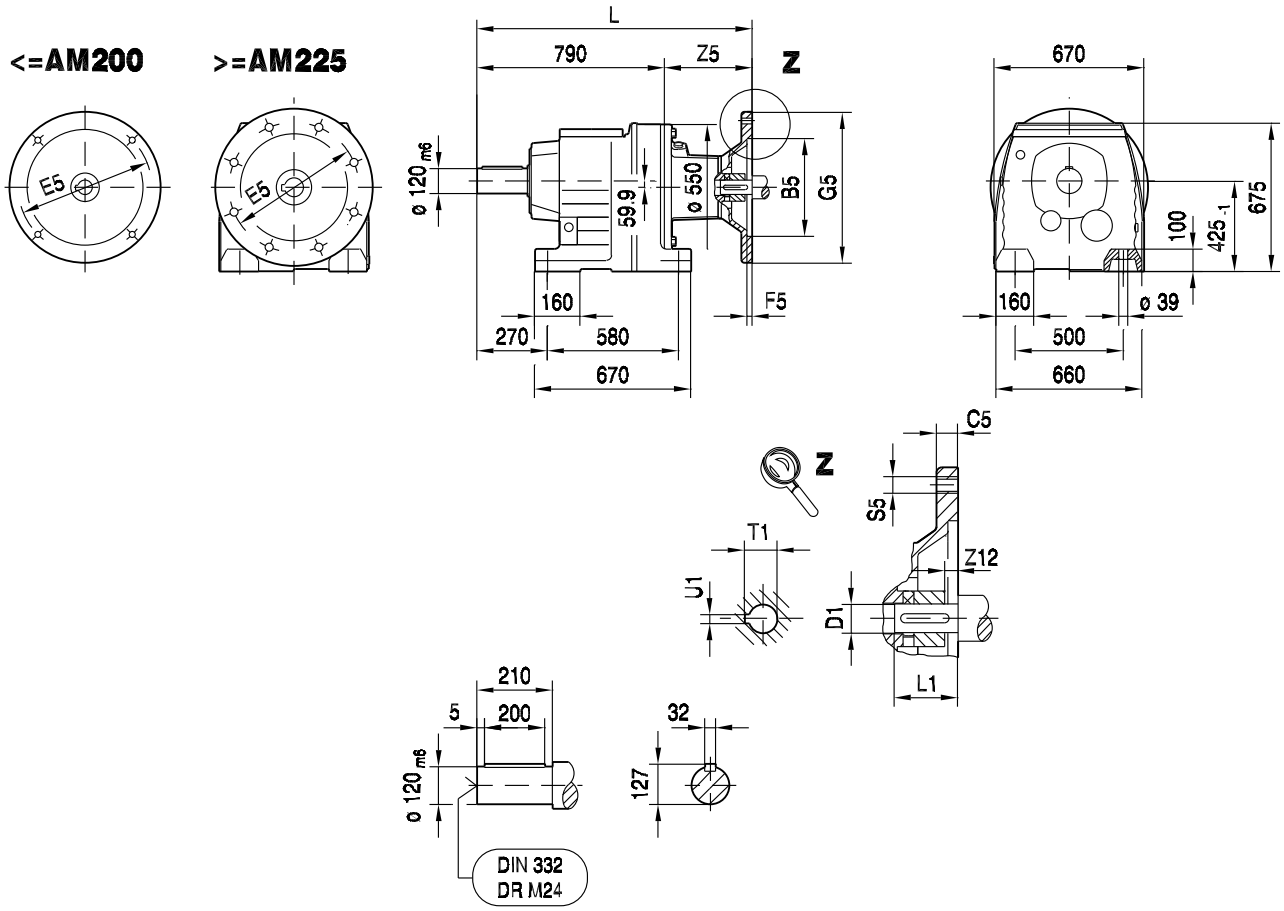

(→ 130)	B5	C5	E5	F5	G5	L	S5	Z5	Z12	D1	L1	T1	U1
AM160	250	18	300	6.0	350	988	M16	198	0	42	110	45.3	12
AM180	250	18	300	6.0	350	988	M16	198	0	48	110	51.8	14
AM200	300	20	350	7.0	400	1029	M16	239	0	55	110	59.3	16
AM225	350	22	400	7.0	450	1044	M16	254	0	60	140	64.4	18
AM250	450	25	500	7.0	550	1118	M16	328	19	65	140	69.4	18
AM280	450	25	500	7.0	550	1118	M16	328	19	75	140	79.9	20

01 045 01 01

RF167..

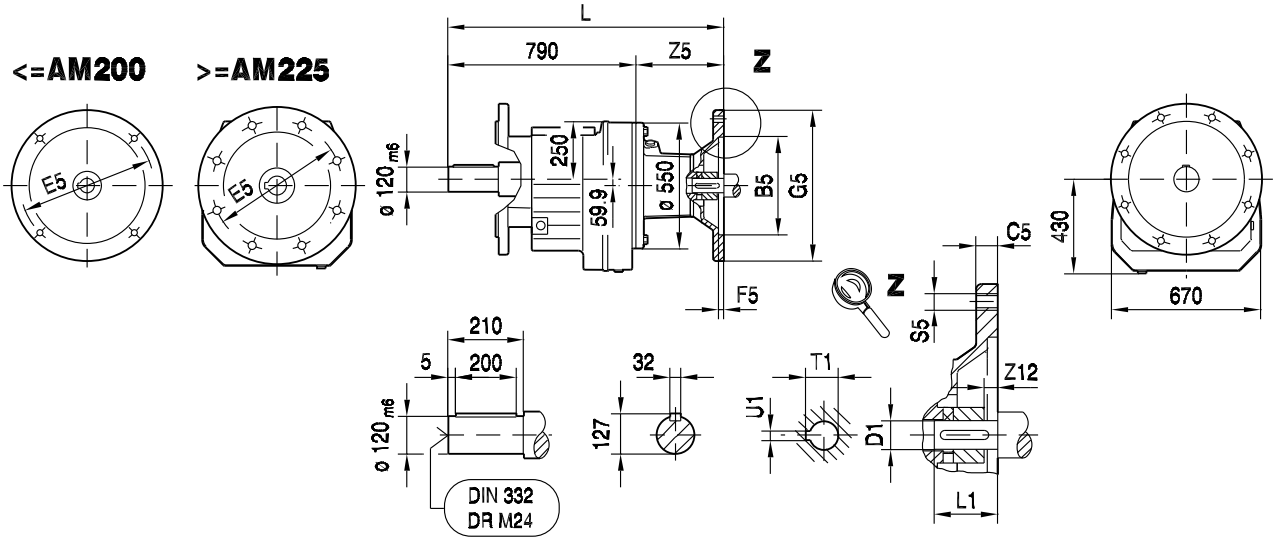

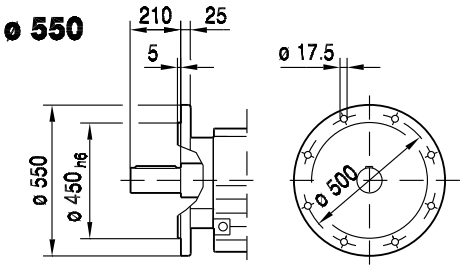

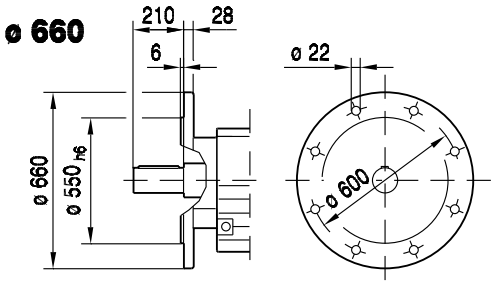

RM167..

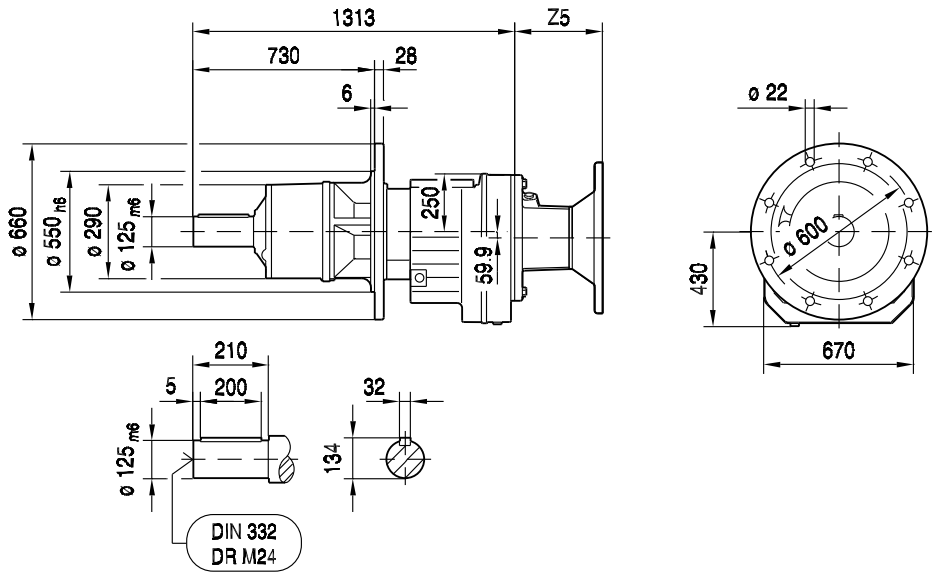

(→ 130)	B5	C5	E5	F5	G5	L	S5	Z5	Z12	D1	L1	T1	U1
AM160	250	18	300	6.0	350	988	M16	198	0	42	110	45.3	12
AM180	250	18	300	6.0	350	988	M16	198	0	48	110	51.8	14
AM200	300	20	350	7.0	400	1029	M16	239	0	55	110	59.3	16
AM225	350	22	400	7.0	450	1044	M16	254	0	60	140	64.4	18
AM250	450	25	500	7.0	550	1118	M16	328	19	65	140	69.4	18
AM280	450	25	500	7.0	550	1118	M16	328	19	75	140	79.9	20

8.5 R.. AM.. (NEMA) [mm]

01 047 02 01

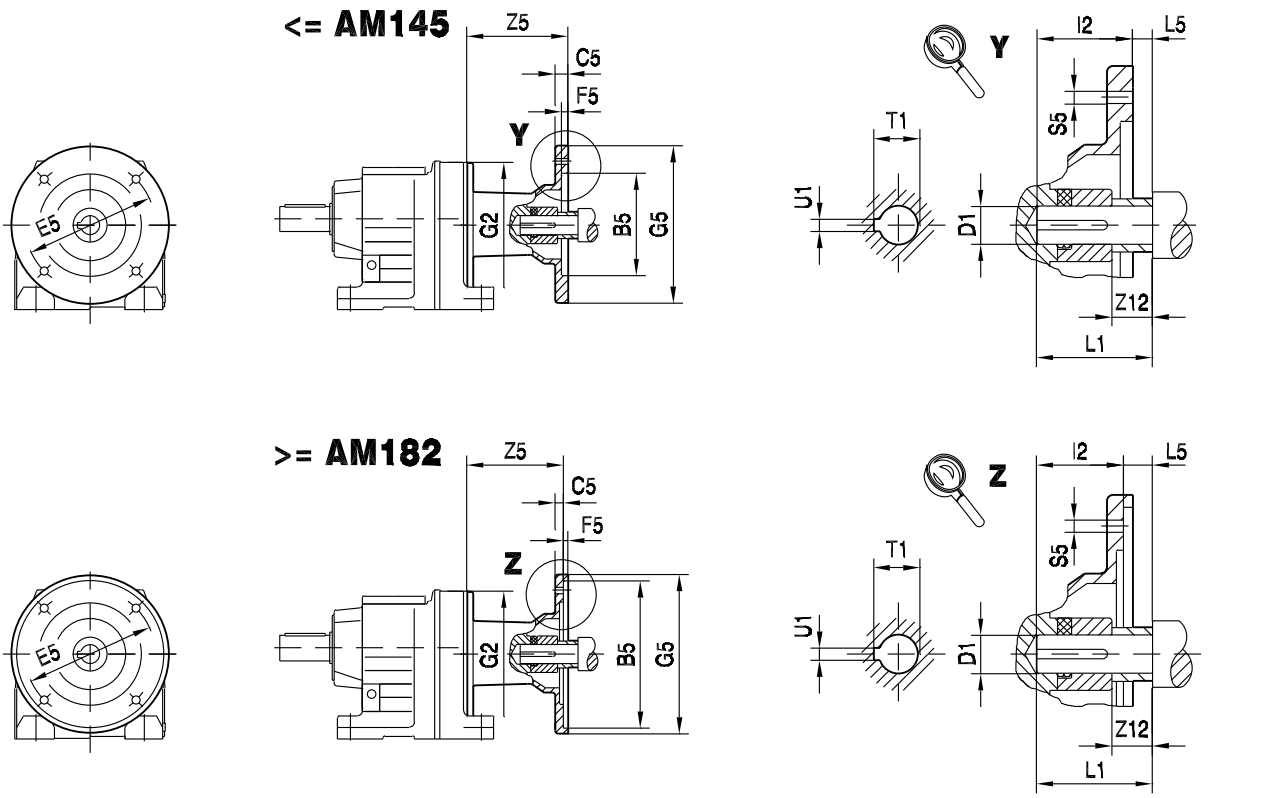

		B5	C5	E5	F5	G2	G5	I2	L5	S5	Z5	Z12	D1	L1	T1	U1
R..27 R..37	AM56	114.3	11	149.2	4.5	120	170	52.55	-4.8	10.5	93.5	16.5	15.875	47.75	18.1	4.76
	AM143		12					54.1	3		117	14.5	22.225	57.15	24.7	
	AM145															
R..47 R..57 R..67	AM56	114.3	11	149.2	4.5	160	170	52.55	-4.8	10.5	87	16.5	15.875	47.75	18.1	4.76
	AM143		12					54.1	3		110.5	14.5	22.225	57.15	24.7	
	AM145															
	AM182	215.9	10	184	5		228	66.85	3	15	147.5	16.5	28.575	69.85	31.7	6.35
	AM184															
	AM213/215		11					79.55	6.3		200.5	15.8	34.925	85.85	38.7	7.94
R..77	AM56	114.3	11	149.2	4.5	200	170	52.55	-4.8	10.5	81	16.5	15.875	47.75	18.1	4.76
	AM143		12					54.1	3		103.5	14.5	22.225	57.15	24.7	
	AM145															
	AM182	215.9	10	184	5		228	66,85	3	15	139.5	16.5	28.575	69.85	31.7	6.35
	AM184															
	AM213/215		11					79.55	6.3		188.5	15.8	34.925	85.85	38.7	7.94
R..87	AM143	114.3	12	149.2	4.5	250	170	54.1	3	10.5	98.5	14.5	22.225	57.15	24.7	4.76
	AM145															
	AM182	215.9	10	184	5		228	66.85	3	15	134.5	16.5	28.575	69.85	31.7	6.35
	AM184															
	AM213/215		11					79.55	6.3		183.5	15.8	34.925	85.85	38.7	7.94
	AM254/256		14					95.3	6.3		234	9	41.275	101.6	45.8	9.53
	AM284/286	266.7	15	228.6	5		286	111.05	6.3	15	241	15.8	47.625	117.35	53.4	12.7
R..97	AM182	215.9	10	184	5	300	228	66.85	3	15	129.5	16.5	28.575	69.85	31.7	6.35
	AM184															
	AM213/215		11					79.55	6.3		178.5	15.8	34.925	85.85	38.7	7.94
	AM254/256		12					95.3	6.3		229	9	41.275	101.6	45.8	9.53
	AM284/286	266.7	20	228.6	5		286	111.05	6.3	15	236	15.8	47.625	117.35	53.4	12.7
	AM324/326	317.5	17	279.4	5		356	127.05	6	17.5	296	34.8	53.975	133.35	60	12.7
	AM364/365							143.05					60.325	149.35	67.6	15.875

01 048 02 01

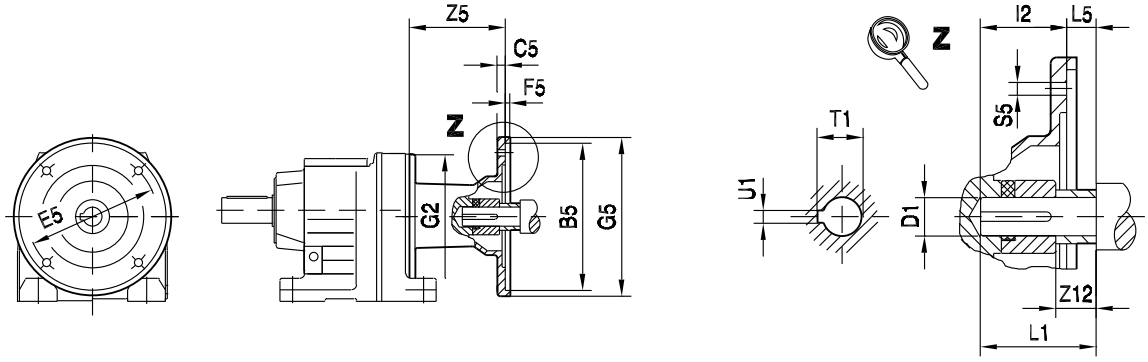

		B5	C5	E5	F5	G2	G5	I2	L5	S5	Z5	Z12	D1	L1	T1	U1
R..107	AM182	215.9	10	184	5	350	228	66.85	3	15	123.5	16.5	28.575	69.85	31.7	6.35
	AM184															
	AM213/215		11					79.55	6.3		172.5	15.8	34.925	85.85	38.7	7.94
	AM254/256		12					95.3	6.3		223	9	41.275	101.6	45.8	9.53
	AM284/286	266.7	15	228.6	5		286	111.05	6.3	15	230	15.8	47.625	117.35	53.4	12.7
	AM324/326	317.5	17	279.4	5		356	127.05	6.3	17.5	290	34.8	53.975	133.35	60	12.7
	AM364/365							143.05					60.325	149.35	67.6	15.875
R..137	AM213/215	215.9	11	184	5	400	228	79.55	6.3	15	165.5	15.8	34.925	85.85	38.7	7.94
	AM254/256		12					95.3	6.3		216	9	41.275	101.6	45.8	9.53
	AM284/286	266.7	15	228.6	5		286	111.05	6.3	15	223	15.8	47.625	117.35	53.4	12.7
	AM324/326	317.5	17	279.4	5		356	127.05	6.3	17.5	283	34.8	53.975	133.35	60	12.7
	AM364/365							143.05					60.325	149.35	67.6	15.875
R..147	AM213/215	215.9	11	184	5	450	228	79.55	6.3	15	157.5	15.8	34.925	85.85	38.7	7.94
	AM254/256		12					95.3	6.3		208	9	41.275	101.6	45.8	9.53
	AM284/286	266.7	15	228.6	5		286	111.05	6.3	15	215	15.8	47.625	117.35	53.4	12.7
	AM324/326	317.5	17	279.4	5		356	127.05	6.3	17.5	275	34.8	53.975	133.35	60	12.7
	AM364/365							143.05					60.325	149.35	67.6	15.875
R..167	AM254/256	215.9	12	184	5	550	228	95.3	6.3	15	200	9	41.275	101.6	45.8	9.53
	AM284/286	266.7	15	228.6	5		286	111.05	6.3	15	207	15.8	47.625	117.35	53.4	12.7
	AM324/326	317.5	17	279.4	5		356	127.05	6.3	17.5	267	34.8	53.975	133.35	60	12.7
	AM364/365							143.05					60.325	149.35	67.6	15.875

8.6 R.. AR.. [mm]

R.. AR..

01 052 02 01

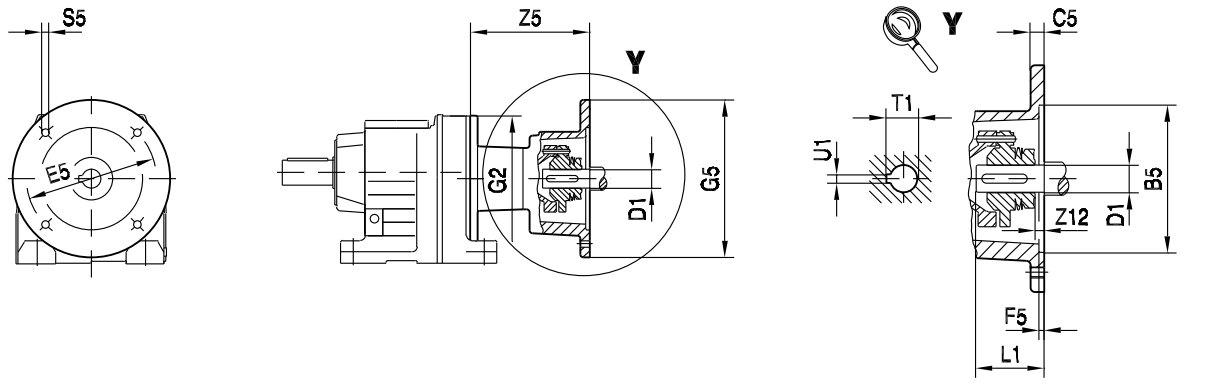

R.. AR../W

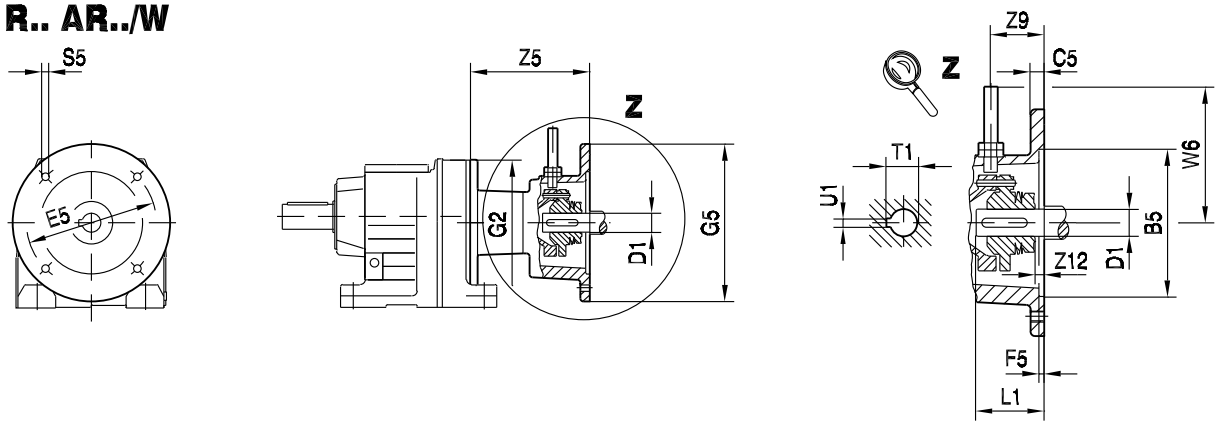

		B5	C5	E5	F5	G2	G5	S5	W6	Z5	Z9	Z12	D1	L1	T1	U1
R..27 R..37	**AR71**	110	10	130	3.5	120	160	M8	120	104	37	0	14	30	16.3	5
	AR80	130	12	165	4.5		200	M10		140.5			19	40	21.8	6
	AR90												24	50	27.3	8
R..47 R..57 R..67	**AR71**	110	10	130	3.5	160	160	M8	120	97.5	37	0	14	30	16.3	5
	AR80	130	12	165	4.5		200	M10		134			19	40	21.8	6
	AR90												24	50	27.3	8
	AR100	180	15	215	5		250	M12	130	174.5	52	5.5	28	60	31.3	8
	AR112															
R..77	**AR71**	110	10	130	3.5	200	160	M8	120	91.5	37	0	14	30	16.3	5
	AR80	130	12	165	4.5		200	M10		127			19	40	21.8	6
	AR90												24	50	27.3	8
	AR100	180	15	215	5		250	M12	130	166.5	52	5.5	28	60	31.3	8
	AR112															
	AR132S/M	230	16	265	5		300	M12	145	234	72	5	38	80	41.3	10
	AR132ML															
R..87	**AR80**	130	12	165	4.5	250	200	M10	120	122	37	0	19	40	21.8	6
	AR90												24	50	27.3	8
	AR100	180	15	215	5		250	M12	130	161.5	52	5.5	28	60	31.3	8
	AR112															
	AR132S/M	230	16	265	5		300	M12	145	229	72	5	38	80	41.3	10
	AR132ML															
	AR160	250	18	300	6		350	M16	165	306.5	105	35	42	110	45.3	12
	AR180												48	110	51.8	14

R.. AR..

01 053 02 01

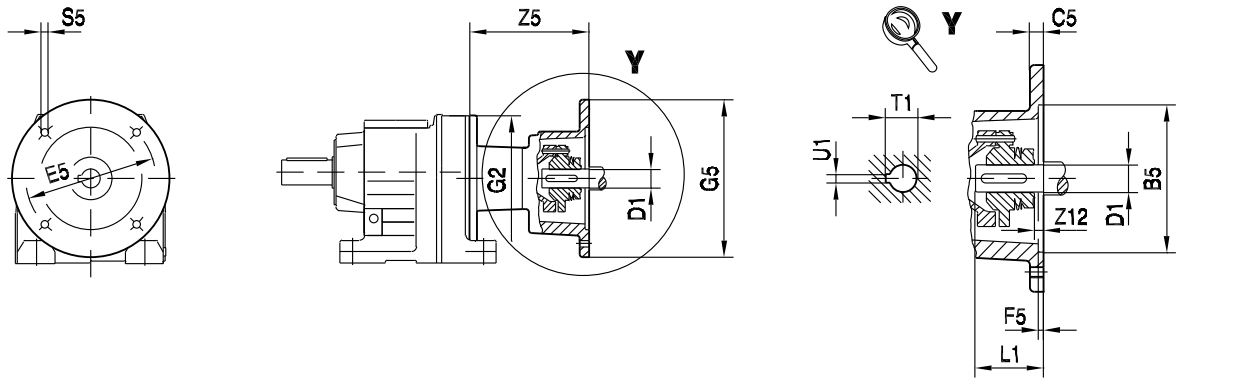

R.. AR../W

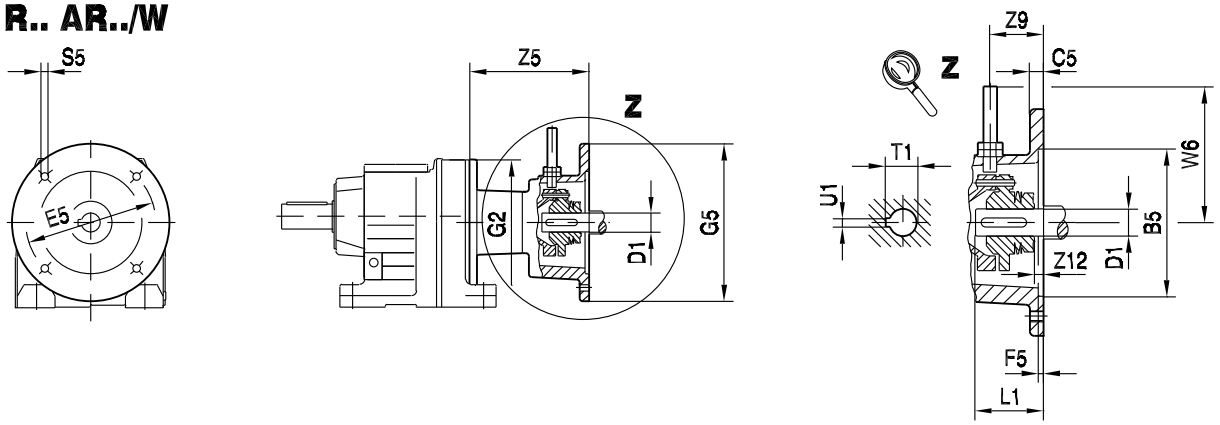

		B5	C5	E5	F5	G2	G5	S5	W6	Z5	Z9	Z12	D1	L1	T1	U1
R..97	AR100	180	15	215	5	300	250	M12	130	156.5	52	5.5	28	60	31.3	8
	AR112															
	AR132S/M	230	16	265	5		300	M12	145	224	72	5	38	80	41.3	10
	AR132ML															
	AR160	250	18	300	6		350	M16	165	301.5	105	35	42	110	45.3	12
	AR180												48	110	51.8	14
R..107	AR100	180	15	215	5	350	250	M12	130	150.5	52	5.5	28	60	31.3	8
	AR112															
	AR132S/M	230	16	265	5		300	M12	145	218	72	5	38	80	41.3	10
	AR132ML															
	AR160	250	18	300	6		350	M16	165	295.5	105	35	42	110	45.3	12
	AR180												48	110	51.8	14
R..137	AR132S/M	230	16	265	5	400	300	M12	145	211	72	5	38	80	41.3	10
	AR132ML															
	AR160	250	18	300	6		350	M16	165	288.5	105	35	42	110	45.3	12
	AR180												48	110	51.8	14
R..147	AR132S/M	230	16	265	5	450	300	M12	145	203	72	5	38	80	41.3	10
	AR132ML															
	AR160	250	18	300	6		350	M16	165	280.5	105	35	42	110	45.3	12
	AR180												48	110	51.8	14
R..167	AR160	250	18	300	6	550	350	M16	165	272.5	105	35	42	110	45.3	12
	AR180												48	110	51.8	14

8.7 R.. AT.. [mm]

25 001 02 01

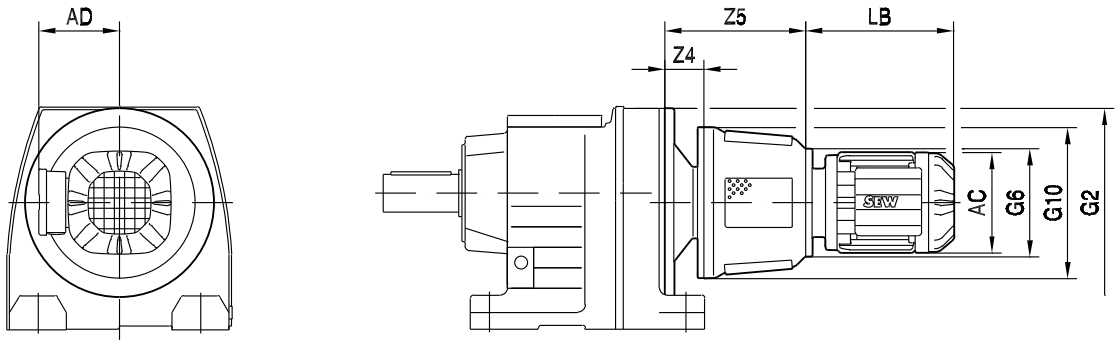

			AC	AD	G6	G10	LB	Z4	Z5	G2
R..67	AT311 AT312	DR.71S	139	119	200	280	198	97	286	160
		DR.71M					223			
		DR.80S	156	128			241			
		DR.80M					272			
		DR.90M	179	140			266			
		DR.90L					286			
		DR.100M	197	157			316			
		DR.100L/LC					346			
	AT321 AT322	DR.90M	179	140	250	350	266	97	333	
		DR.90L					286			
		DR.100M	197	157			316			
		DR.100L/LC					346			
R..77	AT311 AT312	DR.71S	139	119	200	280	198	89	278	200
		DR.71M					223			
		DR.80S	156	128			241			
		DR.80M					272			
		DR.90M	179	140			266			
		DR.90L					286			
		DR.100M	197	157			316			
		DR.100L/LC					346			
	AT421 AT422	DR.90M	179	140	250	350	266	133	368	
		DR.90L					286			
		DR.100M	197	157			316			
		DR.100L/LC					346			
		DR.112M	221	170			352			
		DR.132S					387			
		DR.132M/MC					437			

25 002 02 01

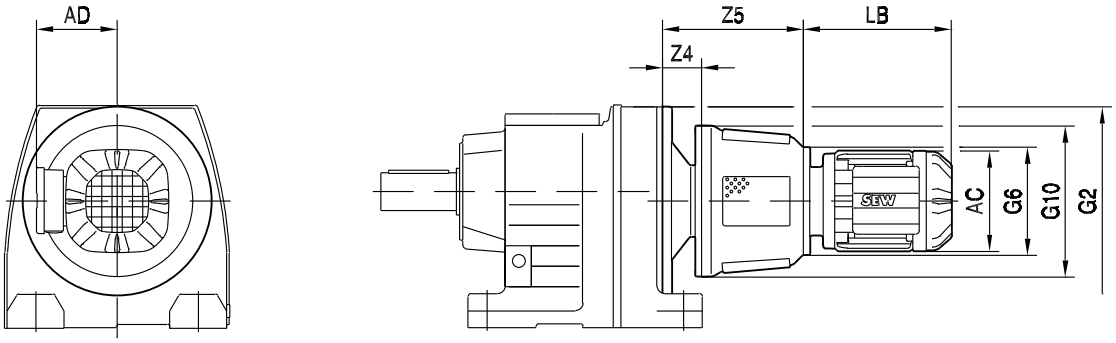

			AC	AD	G6	G10	LB	Z4	Z5	G2
R..87	AT311 AT312	DR.80M	156	128	200	280	272	84	273	250
		DR.90M	179	140			266			
		DR.90L					286			
		DR.100M	197	157			316			
		DR.100L/LC					346			
	AT421 AT422	DR.90M	179	140	250	350	266	128	363	
		DR.90L					286			
		DR.100M	197	157			316			
		DR.100L/LC					346			
		DR.112M	221	170			352			
		DR.132S					387			
		DR.132M/MC					437			
	AT522 AT541 AT542	DR.132S	221	170	350	470	363	159	478	
		DR.132M/MC					413			
		DR.160S/M/MC	270	228			460			
		DR.180S/M	316	253			523			
		DR.180L					583			
R..97	AT311 AT312	DR.80M	156	128	200	280	272	79	268	300
		DR.90M	179	140			266			
		DR.90L					286			
		DR.100M	197	157			316			
		DR.100L/LC					346			
	AT421 AT422	DR.90M	179	140	250	350	266	123	358	
		DR.90L					286			
		DR.100M	197	157			316			
		DR.100L/LC					346			
		DR.112M	221	170			352			
		DR.132S					387			
		DR.132M/MC					437			
	AT522 AT541 AT542	DR.132S	221	170	350	470	363	154	473	
		DR.132M/MC					413			
		DR.160S/M/MC	270	228			460			
		DR.180S/M	316	253			523			
		DR.180L					583			

25 003 02 01

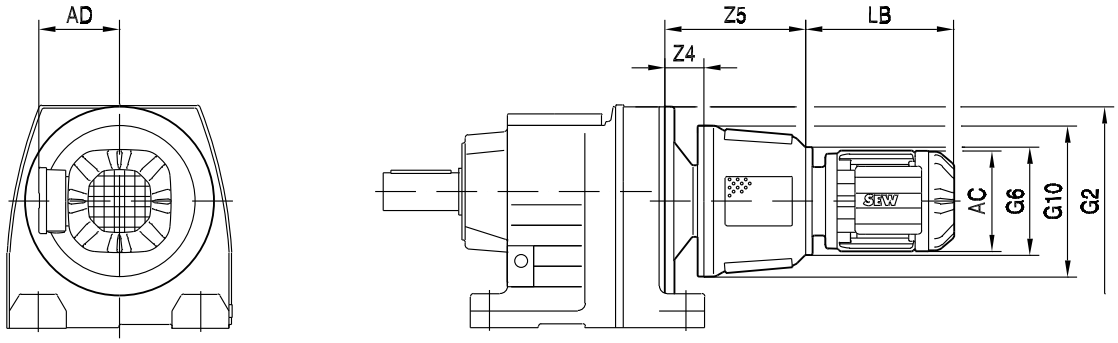

			AC	AD	G6	G10	LB	Z4	Z5	G2
R..107	AT311 AT312	DR.100M	197	157	200	280	316	73	262	350
		DR.100L/LC					346			
	AT421 AT422	DR.90L	179	140	250	350	286	117	352	
		DR.100M	197	157			316			
		DR.100L/LC					346			
		DR.112M	221	170			352			
		DR.132S					387			
		DR.132M/MC					437			
	AT522 AT541 AT542	DR.132S	221	170	350	470	363	148	467	
		DR.132M/MC					413			
		DR.160S/M/MC	270	228			460			
		DR.180S/M	316	253			523			
		DR.180L					583			
R..137	AT421 AT422	DR.90L	179	140	250	350	286	110	345	400
		DR.100M	197	157			316			
		DR.100L/LC					346			
		DR.112M	221	170			352			
		DR.132S					387			
		DR.132M/MC					437			
	AT522 AT541 AT542	DR.132S	221	170	350	470	363	141	460	
		DR.132M/MC					413			
		DR.160S/M/MC	270	228			460			
		DR.180S/M	316	253			523			
		DR.180L					583			
R..147	AT421 AT422	DR.132M/MC	221	170	250	350	437	102	337	450
	AT522 AT541 AT542	DR.132M/MC	221	170	350	470	413	133	452	
		DR.160S/M/MC	270	228			460			
		DR.180S/M	316	253			523			
		DR.180L					583			
R..167	AT522 AT541 AT542	DR.160M/MC	270	228	350	470	460	125	444	550
		DR.180S/M	316	253			523			
		DR.180L					583			

8.8 R.. AT../BMG [mm]

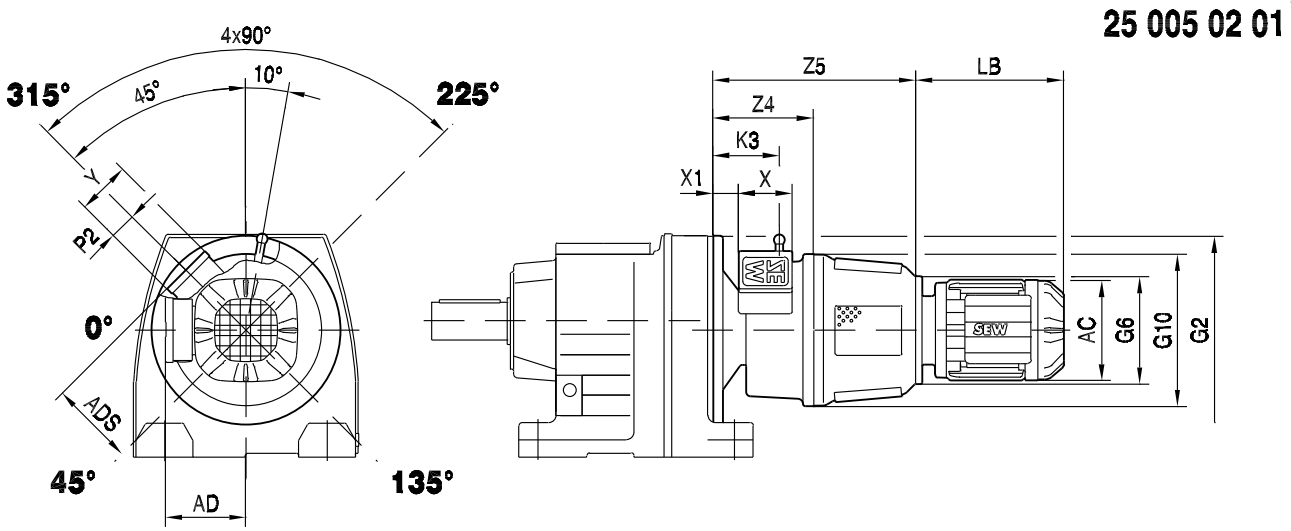

			AC	AD	ADS	G6	G10	LB	K3	P2	X	X1	Y	Z4	Z5	G2
R..67	AT311/BMG AT312/BMG	DR.71S	139	119	184	200	282	198	153	84	97	89	127	223	411	160
		DR.71M						223								
		DR.80S	156	128				241								
		DR.80M						272								
		DR.90M	179	140				266								
		DR.90L						286								
		DR.100M	197	157				316								
		DR.100L/LC						346								
	AT321/BMG AT322/BMG	DR.90M	179	140	215	250	352	266							458	
		DR.90L						286								
		DR.100M	197	157				316								
		DR.100L/LC						346								
R..77	AT311/BMG AT312/BMG	DR.71S	139	119	184	200	282	198	145	84	97	81	127	215	403	200
		DR.71M						223								
		DR.80S	156	128				241								
		DR.80M						272								
		DR.90M	179	140				266								
		DR.90L						286								
		DR.100M	197	157				316								
		DR.100L/LC						346								
	AT421/BMG AT422/BMG	DR.90M	179	140	215	250	352	266	183	84	97	119	127	252	488	
		DR.90L						286								
		DR.100M	197	157				316								
		DR.100L/LC						346								
		DR.112M	221	170				352								
		DR.132S						387								
		DR.132M/MC						437								

25 006 02 01

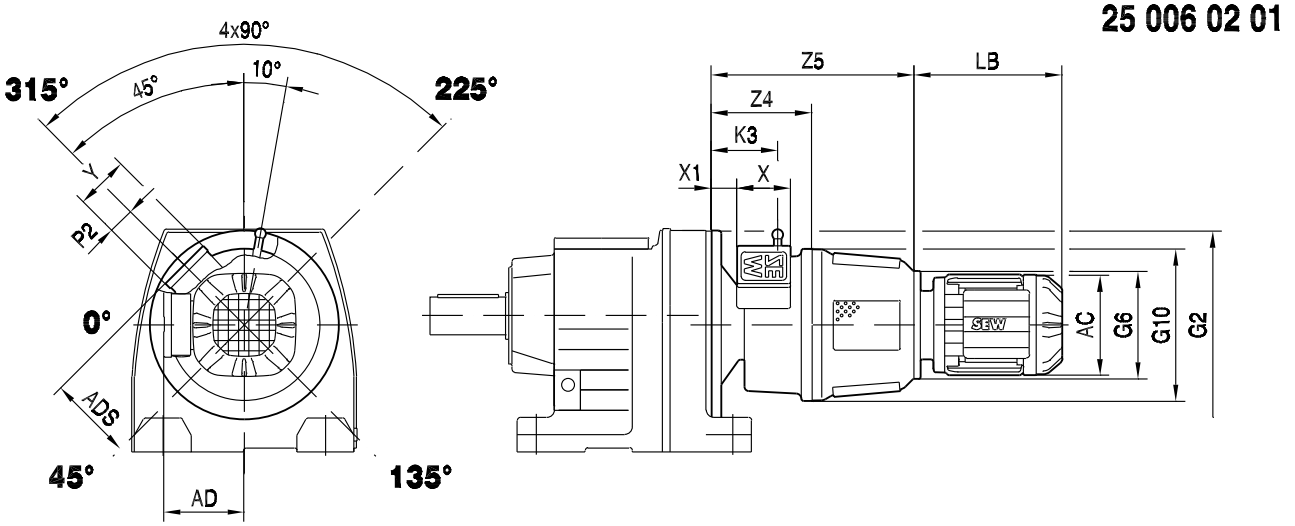

			AC	AD	ADS	G6	G10	LB	K3	P2	X	X1	Y	Z4	Z5	G2
R..87	AT311/BMG AT312/BMG	DR.80M	156	128	184	200	282	272	140	84	97	76	127	210	398	250
		DR.90M	179	140				266								
		DR.90L						286								
		DR.100M	197	157				316								
		DR.100L/LC						346								
	AT421/BMG AT422/BMG	DR.90M	179	140	215	250	352	266	178	84	97	114	127	247	483	
		DR.90L						286								
		DR.100M	197	157				316								
		DR.100L/LC						346								
		DR.112M	221	170				352								
		DR.132S						387								
		DR.132M/MC						437								
	AT522/BM AT541/BM AT542/BM	DR.132S	221	170	275	350	472	363	244	84	97	148	127	331	650	
		DR.132M/MC						413								
		DR.160S/M/MC	270	228				460								
		DR.180S/M	316	253				523								
		DR.180L						583								
R..97	AT311/BMG AT312/BMG	DR.80M	156	128	184	200	282	272	135	84	97	71	127	205	393	300
		DR.90M	179	140				266								
		DR.90L						286								
		DR.100M	197	157				316								
		DR.100L/LC						346								
	AT421/BMG AT422/BMG	DR.90M	179	140	215	250	352	266	173	84	97	109	127	242	478	
		DR.90L						286								
		DR.100M	197	157				316								
		DR.100L/LC						346								
		DR.112M	221	170				352								
		DR.132S						387								
		DR.132M/MC						437								
	AT522/BM AT541/BM AT542/BM	DR.132S	221	170	275	350	472	363	239	84	97	143	127	326	645	
		DR.132M/MC						413								
		DR.160S/M/MC	270	228				460								
		DR.180S/M	316	253				523								
		DR.180L						583								

25 007 02 01

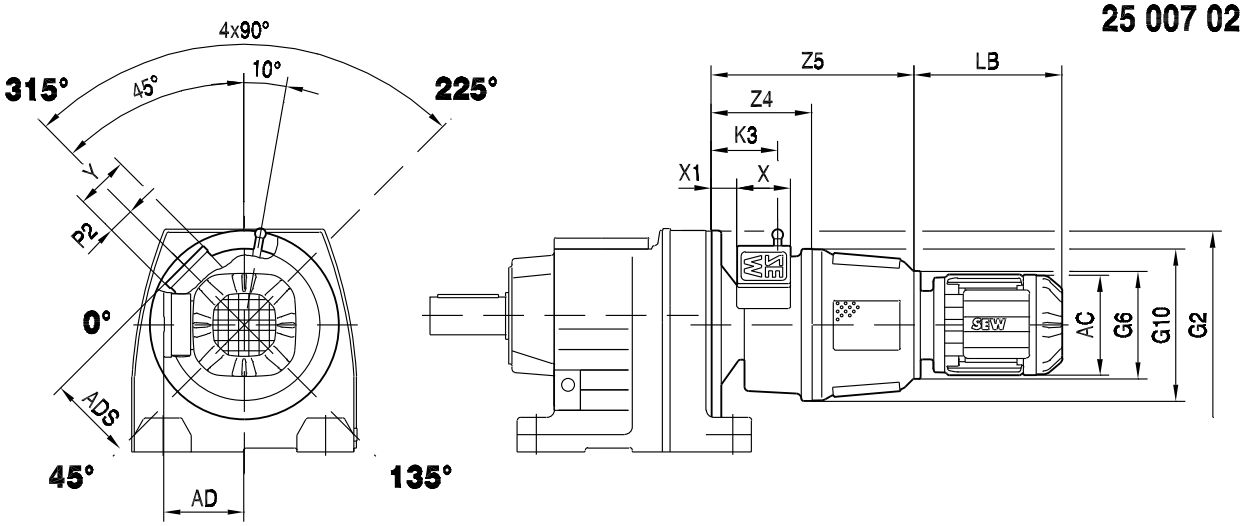

			AC	AD	ADS	G6	G10	LB	K3	P2	X	X1	Y	Z4	Z5	G2
R..107	AT311/BMG AT312/BMG	DR.100M	197	157	184	200	282	316	129	84	97	65	127	199	387	350
		DR.100L/LC						346								
	AT421/BMG AT422/BMG	DR.90L	179	140	215	250	352	286	167	84	97	103	127	236	472	
		DR.100M	197	157				316								
		DR.100L/LC						346								
		DR.112M	221	170				352								
		DR.132S						387								
		DR.132M/MC						437								
	AT522/BMp AT541/BMp AT542/BM	DR.132S	221	170	275	350	472	363	233	84	97	137	127	320	639	
		DR.132M/MC						413								
		DR.160S/M/MC	270	228				460								
		DR.180S/M	316	253				523								
		DR.180L						583								
R..137	AT421/BMG AT422/BMG	DR.90L	179	140	215	250	352	286	160	84	97	96	127	229	465	400
		DR.100M	197	157				316								
		DR.100L/LC						346								
		DR.112M	221	170				352								
		DR.132S						387								
		DR.132M/MC						437								
	AT522/BM AT541/BM AT542/BM	DR.132S	221	170	275	350	472	363	226	84	97	130	127	313	632	
		DR.132M/MC						413								
		DR.160S/M/MC	270	228				460								
		DR.180S/M	316	253				523								
		DR.180L						583								
R..147	AT421/BMG AT422/BMG	DR.132M/MC	221	170	215	250	352	437	152	84	97	88	127	221	457	450
	AT522/BM AT541/BM AT542/BM	DR.132M/MC	221	170	275	350	472	413	218	84	97	122	127	305	624	
		DR.160S/M/MC	270	228				460								
		DR.180S/M	316	253				523								
		DR.180L						583								
R..167	AT522/BM AT541/BM AT542/BM	DR.160M/MC	270	228	275	350	472	460	210	84	97	114	127	297	616	550
		DR.180S/M	316	253				523								
		DR.180L						583								

8.9 R.. AD.. [mm]

R.. AD..

01 054 01 01

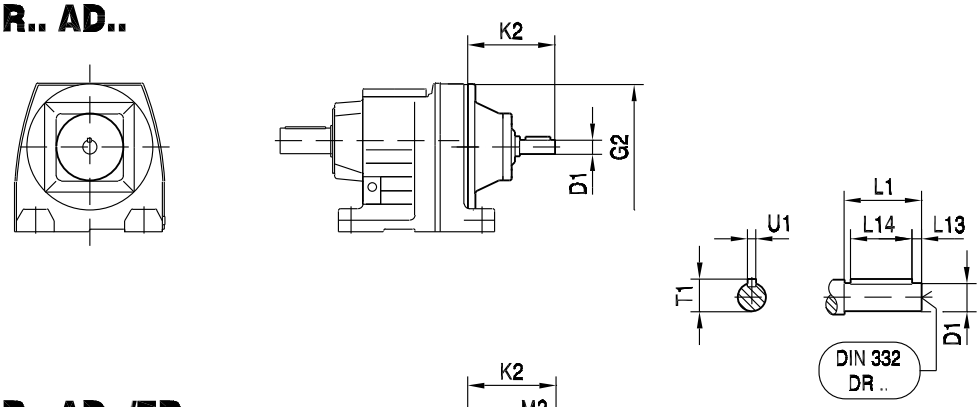

R.. AD../ZR

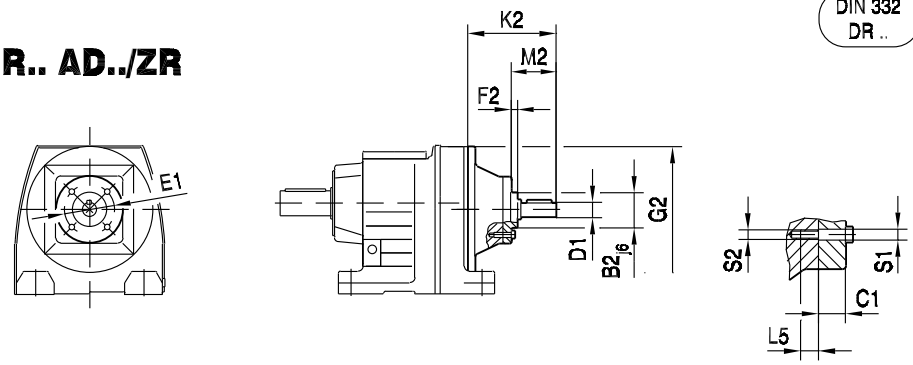

		B2	C1	E1	F2	G2	K2	L5	M2	S1	S2	D1	L1	L13	L14	T1	U1
R..27	**AD1**	-	-	-	-	120	102	-	-	-	-	16	40	4	32	18	5
R..37	**AD2 , AD2/ZR**	55	13.5	80	8		130	12	50	9	M8	19	40	4	32	21.5	6
R..47	**AD2 , AD2/ZR**	55	13.5	80	8	160	123	12	50	9	M8	19	40	4	32	21.5	6
R..57 **R..67**	**AD3 , AD3/ZR**	70	15.5	105	8		159	16	60	11	M10	24	50	5	40	27	8
R..77	**AD2 , AD2/ZR**	55	13.5	80	8	200	116	12	50	9	M8	19	40	4	32	21.5	6
	AD3 , AD3/ZR	70	15.5	105	8		151	16	60	11	M10	24	50	5	40	27	8
	AD4 , AD4/ZR	100	16	130	13		224	20	95.5	13.5	M12	38	80	5	70	41	10
R..87	**AD2 , AD2/ZR**	55	13.5	80	8	250	111	12	50	9	M8	19	40	4	32	21.5	6
	AD3 , AD3/ZR	70	15.5	105	8		156	16	70	11	M10	28	60	5	50	31	8
	AD4 , AD4/ZR	100	16	130	13		219	20	95.5	13.5	M12	38	80	5	70	41	10
	AD5 , AD5/ZR	120	24	180	11		292	20	126	13.5	M12	42	110	10	70	45	12
R..97	**AD3 , AD3/ZR**	70	15.5	105	8	300	151	16	70	11	M10	28	60	5	50	31	8
	AD4 , AD4/ZR	100	16	130	13		214	20	95.5	13.5	M12	38	80	5	70	41	10
	AD5 , AD5/ZR	120	24	180	11		287	20	126	13.5	M12	42	110	10	70	45	12
	AD6 , AD6/ZR	130	22.5	200	11		327	26	130.5	17.5	M16	48	110	10	80	51.5	14
R..107	**AD3 , AD3/ZR**	70	15.5	105	8	350	145	16	70	11	M10	28	60	5	50	31	8
	AD4 , AD4/ZR	100	16	130	13		208	20	95.5	13.5	M12	38	80	5	70	41	10
	AD5 , AD5/ZR	120	24	180	11		281	20	126	13.5	M12	42	110	10	70	45	12
	AD6 , AD6/ZR	130	22.5	200	11		321	26	130.5	17.5	M16	48	110	10	80	51.5	14
R..137	**AD4 , AD4/ZR**	100	16	130	13	400	201	20	95.5	13.5	M12	38	80	5	70	41	10
	AD5 , AD5/ZR	120	24	180	11		274	20	126	13.5	M12	42	110	10	70	45	12
	AD6 , AD6/ZR	130	22.5	200	11		314	26	130.5	17.5	M16	48	110	10	80	51.5	14
	AD7 , AD7/ZR	125	19	190	13		308	30	133	22	M20	55	110	10	90	59	16
R..147	**AD4 , AD4/ZR**	100	16	130	13	450	193	20	95.5	13.5	M12	38	80	5	70	41	10
	AD5 , AD5/ZR	120	24	180	11		266	20	126	13.5	M12	42	110	10	70	45	12
	AD6 , AD6/ZR	130	22.5	200	11		306	26	130.5	17.5	M16	48	110	10	80	51.5	14
	AD7 , AD7/ZR	125	19	190	13		300	30	133	22	M20	55	110	10	90	59	16
	AD8 , AD8/ZR	120	22.5	210	5		383	19.5	155	13.5	M12	70	140	15	110	74.5	20
R..167	**AD5 , AD5/ZR**	120	24	180	11	550	258	20	126	13.5	M12	42	110	10	70	45	12
	AD6 , AD6/ZR	130	22.5	200	11		298	26	130.5	17.5	M16	48	110	10	80	51.5	14
	AD7 , AD7/ZR	125	19	190	13		292	30	133	22	M20	55	110	10	90	59	16
	AD8 , AD8/ZR	120	22.5	210	5		374	19.5	155	13.5	M12	70	140	15	110	74.5	20

8.10 R.. AD../P [mm]

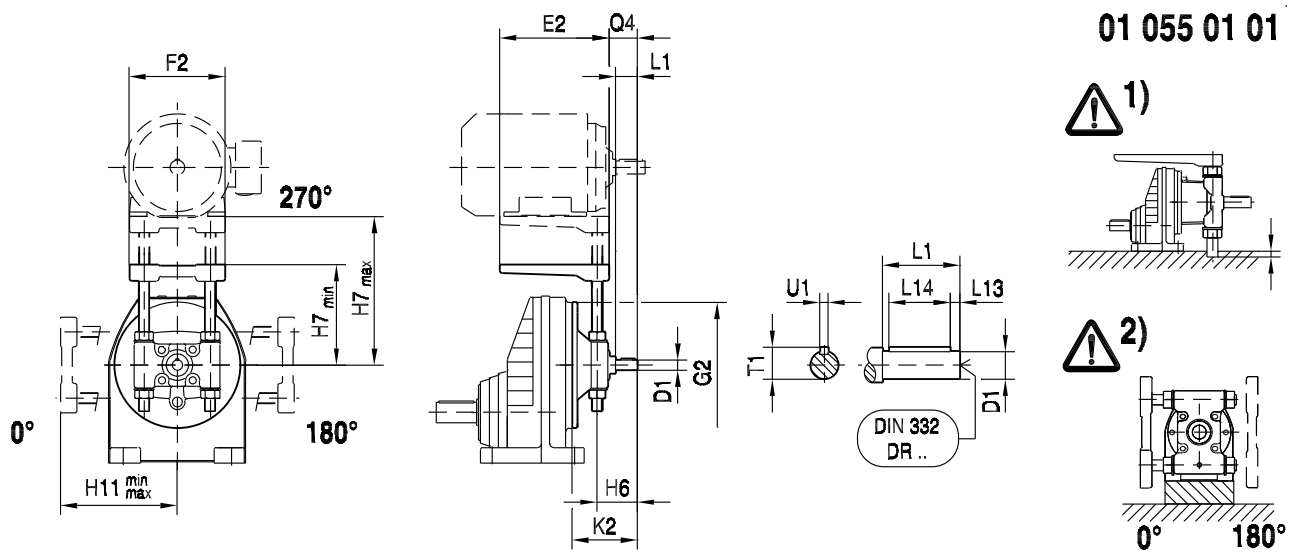

		E2	F2	G2	H6	H7 min	H7 max	H11 min	H11 max	K2	Q4	D1	L1	L13	L14	T1	U1	⚠ →129
RX..57	**AD2/P**	195	180	160	65	110	165	115	165	123	43	19	40	4	32	21.5	6	
	AD3/P	230	240		80	110	175	120	175	159	54	24	50	5	40	27	8	1), 2)
RX..67	**AD2/P**	195	180	160	65	110	165	125	165	123	43	19	40	4	32	21.5	6	
	AD3/P	230	240		80	110	175	130	175	159	54	24	50	5	40	27	8	1)
RX..77	**AD2/P**	195	180	200	65	130	165	140	200	116	43	19	40	4	32	21.5	6	
	AD3/P	230	240		80	135	175	145	175	151	54	24	50	5	40	27	8	
	AD4/P	345	291		118	145	210	160	210	224	83	38	80	5	70	41	10	1), 2)
RX..87	**AD2/P**	195	180	250	65	160	200	170	200	111	43	19	40	4	32	21.5	6	
	AD3/P	230	240		90	165	230	175	230	156	64	28	60	5	50	31	8	
	AD4/P	345	291		118	170	210	195	280	219	83	38	80	5	70	41	10	
	AD5/P	430	355		153	175	250	200	250	292	113	42	110	10	70	45	12	1), 2)
RX..97	**AD3/P**	230	240	300	90	185	230	205	320	151	64	28	60	5	50	31	8	
	AD4/P	345	291		118	195	280	220	280	214	83	38	80	5	70	41	10	
	AD5/P	430	355		153	195	250	225	325	287	113	42	110	10	70	45	12	
RX..107	**AD3/P**	230	240	350	90	210	320	225	320	145	64	28	60	5	50	31	8	
	AD4/P	345	291		118	220	280	270	360	208	83	38	80	5	70	41	10	
	AD5/P	430	355		153	220	325	275	325	281	113	42	110	10	70	45	12	
	AD6/P	495	457		163	245	310	250	310	321	114	48	110	10	80	51.5	14	

R..
R.. AD../P [mm]

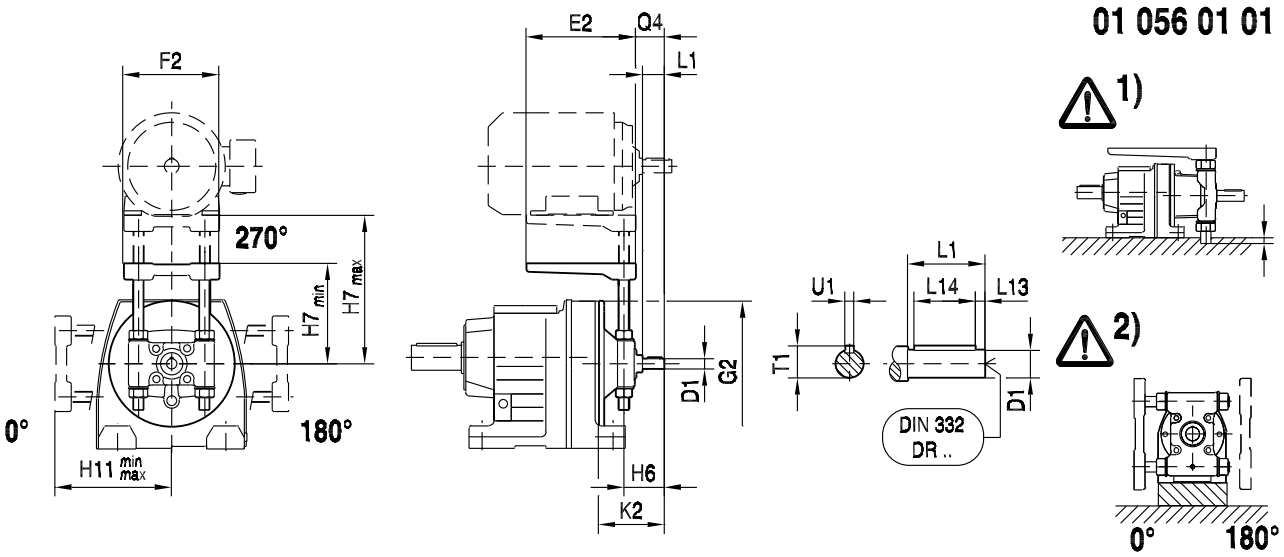

		E2	F2	G2	H6	H7 min	H7 max	H11 min	H11 max	K2	Q4	D1	L1	L13	L14	T1	U1	⚠ →129
R..27	**AD2/P**	195	180	120	65	100	165	120	165	130	43	19	40	4	32	21.5	6	1), 2)
R..37	**AD2/P**	195	180	120	65	110	165	120	165	130	43	19	40	4	32	21.5	6	1), 2)
R..47	**AD2/P**	195	180	160	65	125	165	135	165	123	43	19	40	4	32	21.5	6	
	AD3/P	230	240		80	130	175	140	175	159	54	24	50	5	40	27	8	1), 2)
R..57	**AD2/P**	195	180	160	65	125	165	145	200	123	43	19	40	4	32	21.5	6	
	AD3/P	230	240		80	130	175	155	230	159	54	24	50	5	40	27	8	1), 2)
R..67	**AD2/P**	195	180	160	65	125	165	155	200	123	43	19	40	4	32	21.5	6	
	AD3/P	230	240		80	130	175	160	230	159	54	24	50	5	40	27	8	1), 2)
R..77	**AD2/P**	195	180	200	65	135	200	165	200	116	43	19	40	4	32	21.5	6	1)
	AD3/P	230	240		80	145	175	170	230	151	54	24	50	5	40	27	8	
	AD4/P	345	291		118	150	210	175	210	224	83	38	80	5	70	41	10	1), 2)
R..87	**AD2/P**	195	180	250	65	155	200	195	260	111	43	19	40	4	32	21.5	6	
	AD3/P	230	240		90	165	230	185	230	156	64	28	60	5	50	31	8	
	AD4/P	345	291		118	165	210	205	280	219	83	38	80	5	70	41	10	
	AD5/P	430	355		153	210	250	215	250	292	113	42	110	10	70	45	12	1), 2)
R..97	**AD3/P**	230	240	300	90	180	230	235	320	151	64	28	60	5	50	31	8	
	AD4/P	345	291		118	190	280	240	280	214	83	38	80	5	70	41	10	
	AD5/P	430	355		153	190	250	245	325	287	113	42	110	10	70	45	12	
R..107	**AD3/P**	230	240	350	90	230	320	230	320	145	64	28	60	5	50	31	8	
	AD4/P	345	291		118	230	280	265	360	208	83	38	80	5	70	41	10	
	AD5/P	430	355		153	225	325	270	325	281	113	42	110	10	70	45	12	1)
	AD6/P	495	457		163	245	310	250	310	321	114	48	110	10	80	51.5	14	
R..137	**AD4/P**	345	291	400	118	245	280	280	360	201	83	38	80	5	70	41	10	
	AD5/P	430	355		153	245	325	285	325	274	113	42	110	10	70	45	12	1)
	AD6/P	495	457		163	270	335	275	335	314	114	48	110	10	80	51.5	14	
R..147	**AD4/P**	345	291	450	118	270	360	315	360	193	83	38	80	5	70	41	10	
	AD5/P	430	355		153	275	325	330	405	266	113	42	110	10	70	45	12	
	AD6/P	495	457		163	295	360	310	360	306	114	48	110	10	80	51.5	14	
	AD7/P	650	570		170	300	365	300	365	300	112	55	110	10	90	59	16	3)
R..167	**AD5/P**	430	355	550	153	345	405	385	495	258	113	42	110	10	70	45	12	
	AD6/P	495	457		163	375	475	375	475	298	114	48	110	10	80	51.5	14	
	AD7/P	650	570		170	375	475	380	475	292	112	55	110	10	90	59	16	

Page remains empty for printing reasons.

9 F..

9.1 F.. AM.. [Nm]

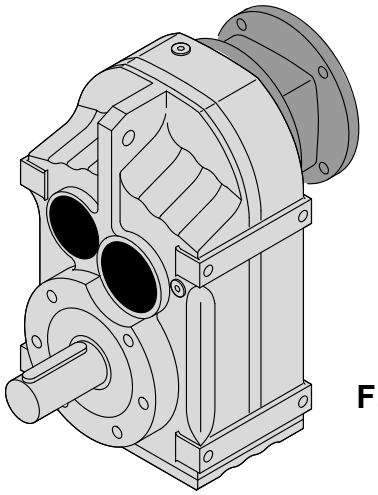

F.. AM..

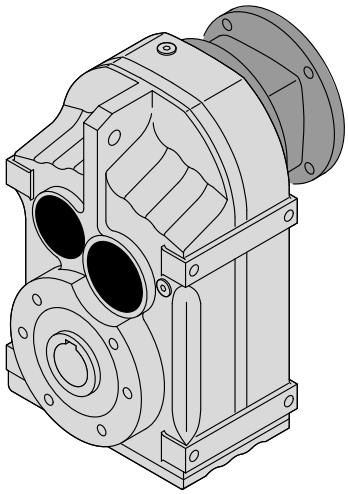

FA..B AM..
FV..B AM..

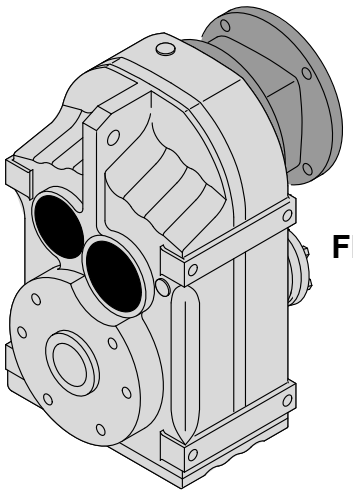

FH..B AM..

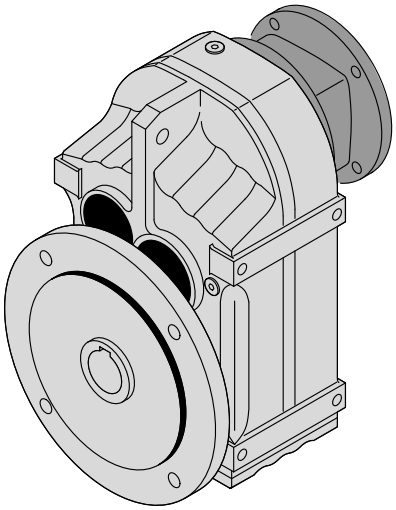

FAF.. AM..
FVF.. AM ..

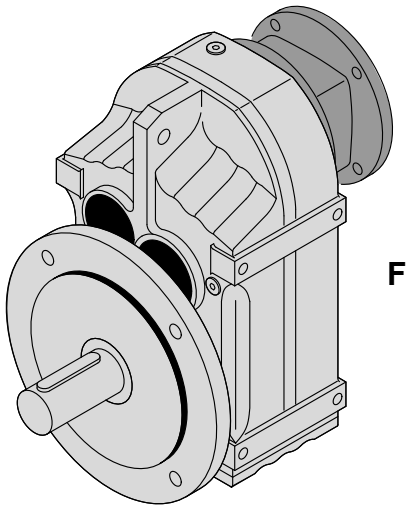

FF.. AM..

50397AXX

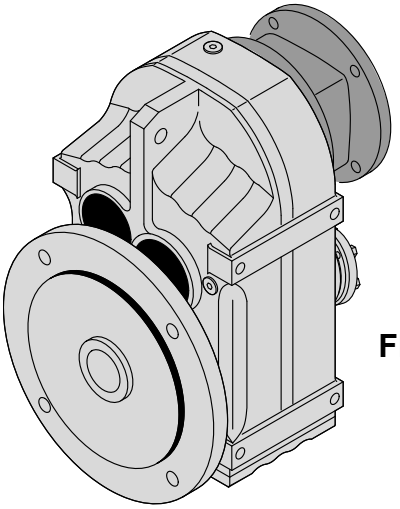

FHF .. AM..

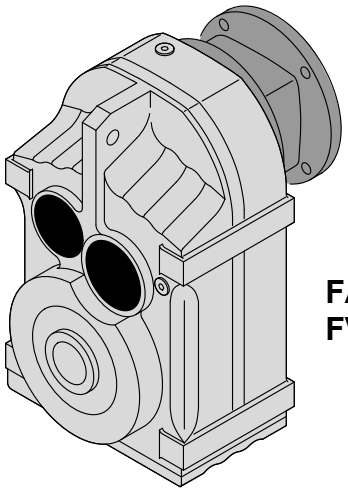

FA.. AM..
FV.. AM..

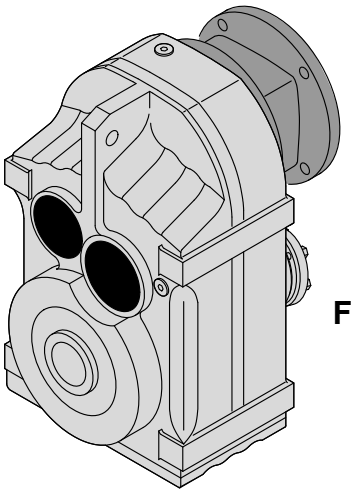

FH.. AM..

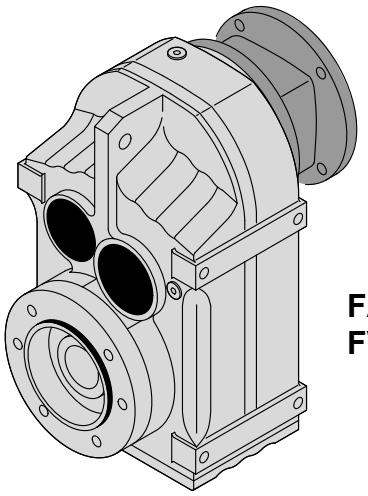

FAZ.. AM..
FVZ.. AM..

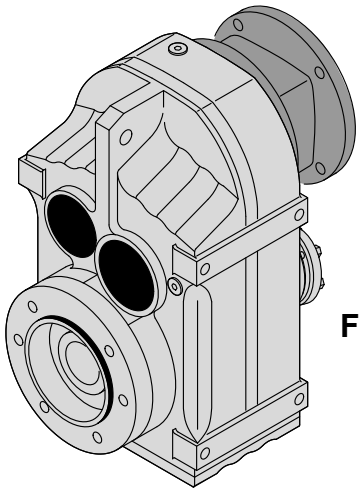

FHZ.. AM..

50398AXX

9.1.1 FA27

n_e = 1400 1/min									130 Nm
	i	n_a [1/min]	$M_{a\,max}$ [Nm]	F_{Ra} [N]	φ (/R) [']	AM 63	AM 71	AM 80	AM 90
FA27 2	**4.16**	337	87	1380	-				
	4.93	284	96	1420	-				
	5.27	266	100	1440	-				
	6.17	227	109	1480	-				
	6.91	203	114	1530	-				
	8.13	172	123	1580	-				
	9.40	149	130	1660	-				
	9.88	142	130	1830	-				
	10.55	133	130	1900	-				
	12.35	113	130	2060	-				
	13.84	101	130	2180	-				
	16.28	86	130	2370	-				
	18.84	74	130	2550	-				
	20.15	69	130	2630	-				
	23.25	60	130	2820	-				
	27.18	52	130	3030	-				
	29.56	47	130	3140	-				
FA27 3	**33.83**	41	130	3340	-				
	38.33	37	130	3530	-				
	40.89	34	130	3640	-				
	46.78	30	130	3860	-				
	50.19	28	130	3980	-				
	56.62	25	130	4180	-				
	63.86	22	130	4400	-				
	72.37	19	130	4500	-				
	77.21	18	130	4500	-				
	88.32	16	130	4500	-				
	94.76	15	130	4500	-				
	109.90	13	130	4500	-				
	129.09	11	130	4500	-				
	140.74	9.9	130	4500	-				

m [kg]		AM			
IEC	**s**	**63**	**71**	**80**	**90**
FA27	2	7.9	8.1	10	11
FA27	3	8.1	8.4	11	11
NEMA		-	56	143	145
FA27	2	-	8.5	10	11
FA27	3	-	8.7	11	11
FAF: + 0.7 kg / F: + 0.5 kg / FF: + 1.3 kg					

9.1.2 FA37

n_e = 1400 1/min									200 Nm
	i	n_a [1/min]	$M_{a\,max}$ [Nm]	F_{Ra} [N]	φ (/R) [']	AM 63	AM 71	AM 80	AM 90
FA37 2	**3.77**	371	105	1970	12				
	4.22	332	110	2030	11				
	4.90	286	120	2100	11				
	5.21	269	125	2120	10				
	6.05	231	135	2190	10				
	6.74	208	140	2270	10				
	7.44	188	145	2350	10				
	8.01	175	170	2360	7				
	8.97	156	175	2460	7				
	10.42	134	185	2580	7				
	11.08	126	190	2620	7				
	12.87	109	200	2750	7				
	14.33	98	200	2910	6				
	15.81	89	200	3070	6				
	17.03	82	200	3180	6				
	19.27	73	200	3390	6				
	20.57	68	200	3500	6				
	23.63	59	200	3740	6				
FA37 3	**23.88**	59	200	3760	8				
	28.09	50	200	4060	8				
	31.69	44	200	4290	8				
	35.91	39	200	4290	8				
	38.31	37	200	4290	8				
	43.83	32	200	4290	8				
	47.02	30	200	4290	8				
	51.70	27	200	4290	7				
	54.54	26	200	4290	8				
	58.32	24	200	4290	7				
	66.09	21	200	4290	7				
	70.50	20	200	4290	7				
	80.65	17	200	4290	7				
	86.53	16	200	4290	7				
	100.36	14	200	4290	7				
	117.88	12	200	4290	7				
	128.51	11	200	4290	7				

m [kg]		AM			
IEC	s	63	71	80	90
FA37	2	14	14	17	17
FA37	3	14	14	17	17
NEMA		-	56	143	145
FA37	2	-	15	17	17
FA37	3	-	15	17	17
FAF: + 1.5 kg / F: + 0.5 kg / FF: + 2.3 kg					

9.1.3 FA47

n_e = 1400 1/min									400 Nm
	i	n_a [1/min]	$M_{a\,max}$ [Nm]	F_{Ra} [N]	φ (/R) [']	AM 63	AM 71	AM 80	AM 90
FA47 2	**4.99**	281	320	2310	9				
	5.76	243	340	2390	9				
	6.34	221	350	2470	8				
	7.44	188	380	2530	8				
	7.88	178	380	2630	8				
	8.96	156	330	3250	8				
	10.97	128	400	3440	6				
	12.66	111	400	3740	6				
	13.93	101	400	3950	6				
	16.36	86	400	4320	6				
	17.33	81	400	4450	6				
	19.70	71	400	4770	6				
	21.82	64	400	5030	6				
	25.72	54	400	5460	6				
	29.32	48	400	5830	6				
	30.86	45	400	5920	6				
FA47 3	**28.88**	48	400	5790	7				
	34.29	41	400	5920	7				
	36.61	38	400	5920	7				
	42.86	33	400	5920	7				
	48.00	29	400	5920	7				
	56.49	25	400	5920	7				
	65.36	21	400	5920	7				
	68.09	21	400	5920	6				
	79.72	18	400	5920	6				
	89.29	16	400	5920	6				
	105.09	13	400	5920	6				
	121.57	12	400	5920	6				
	130.07	11	400	5920	6				
	150.06	9.3	400	5920	6				
	175.38	8.0	400	5920	6				
	190.76	7.3	400	5920	6				

m [kg]		AM			
IEC	s	63	71	80	90
FA47	2	18	19	21	21
FA47	3	19	19	22	22
NEMA		-	56	143	145
FA47	2	-	19	21	21
FA47	3	-	20	22	22
FAF: + 2.7 kg / F: + 0.8 kg / FF: + 3.9 kg					

9.1.4 FA57

n_e = 1400 1/min													600 Nm
	i	n_a [1/min]	$M_{a\,max}$ [Nm]	F_{Ra} [N]	φ (/R) [']	AM 63	71	80	90	100	112	132S/M
FA57 2	**5.18**	270	415	3460	9							
	5.98	234	420	3730	9							
	6.58	213	420	3940	8							
	7.73	181	420	4310	8							
	8.19	171	420	4450	8							
	9.31	150	420	4760	8							
	10.64	132	600	4320	6							
	12.29	114	600	4710	6							
	13.52	104	600	4980	6							
	15.88	88	600	5450	6							
	16.81	83	600	5620	6							
	19.11	73	600	6020	6							
	21.17	66	600	6350	6							
	24.96	56	575	7060	6							
	28.45	49	535	7760	6							
	29.94	47	545	7890	6							
	34.24	41	500	8670	6							
	40.13	35	290	10500	6							
FA57 3	**30.15**	46	590	7650	7							
	35.79	39	600	8250	7							
	38.21	37	600	8510	7							
	44.73	31	600	9160	7							
	50.10	28	600	9200	7							
	58.97	24	600	9200	7							
	68.22	21	600	9200	6							
	72.98	19	600	9200	6							
	83.46	17	600	9200	6							
	93.47	15	600	9200	6							
	110.01	13	600	9200	6							
	127.27	11	600	9200	6							
	136.16	10	600	9200	6							
	157.09	8.9	600	9200	6							
	183.60	7.6	600	9200	6							
	199.70	7.0	600	9200	6							

m [kg]		AM						
IEC	**s**	**63**	**71**	**80**	**90**	**100**	**112**	**132S/M**
FA57	2	26	26	29	29	33	33	40
FA57	3	27	27	29	29	34	34	41
NEMA		-	56	143	145	182	184	213/215
FA57	2	-	27	29	29	32	32	38
FA57	3	-	27	29	29	33	33	39
FAF: + 5.5 kg / F: + 0.2 kg / FF: + 6.6 kg								

9.1.5 FA67

n_e = 1400 1/min													820 Nm
	i	n_a [1/min]	$M_{a\,max}$ [Nm]	F_{Ra} [N]	φ (/R) [']	AM 63	71	80	90	100	112	132S/M
FA67 2	**3.97**	353	500	8390	10							
	4.66	300	560	8590	9							
	5.25	267	590	8850	9							
	5.95	235	610	9200	9							
	6.78	206	620	9660	9							
	7.53	186	610	10100	8							
	8.60	163	570	10900	8							
	9.08	154	530	11400	8							
	9.66	145	820	10300	6							
	11.31	124	820	10300	6							
	12.76	110	820	10300	6							
	14.46	97	820	10300	6							
	16.48	85	820	10300	6							
	18.29	77	820	10300	6							
	20.90	67	820	10300	5							
	22.05	63	820	10300	5							
	25.13	56	820	10300	5							
	27.41	51	820	10300	5							
	32.08	44	820	10300	5							
	36.30	39	820	10300	5							
FA67 3	**34.01**	41	740	11000	6							
	39.26	36	780	10700	6							
	43.20	32	820	10300	6							
	50.74	28	820	10300	6							
	53.73	26	820	10300	6							
	61.07	23	820	10300	6							
	67.65	21	820	10300	6							
	79.76	18	820	10300	6							
	90.59	15	820	10300	6							
	95.94	15	820	10300	6							
	109.04	13	820	10300	6							
	120.79	12	820	10300	6							
	142.40	9.8	820	10300	6							
	162.31	8.6	820	10300	6							
	170.85	8.2	820	10300	6							
	195.39	7.2	820	10300	6							
	228.99	6.1	820	10300	6							

m [kg]		AM						
IEC	s	63	71	80	90	100	112	132S/M
FA67	2	30	30	32	32	37	37	44
FA67	3	31	31	33	33	38	38	45
NEMA		-	56	143	145	182	184	213/215
FA67	2	-	30	32	32	36	36	41
FA67	3	-	31	33	33	37	37	43
FAF: + 6.3 kg / F: + 2.8 kg / FF: + 8.9 kg								

9.1.6 FA77

n_e = 1400 1/min														1500 Nm
	i	n_a [1/min]	$M_{a\,max}$ [Nm]	F_{Ra} [N]	φ (/R) [']	AM 63	71	80	90	100	112	132S/M	132ML
FA77 2	**4.28**	327	1010	10200	8								
	5.16	271	1080	10700	8								
	5.76	243	1080	11300	8								
	6.64	211	1080	12000	8								
	7.39	189	1080	12500	7								
	8.26	169	1080	13100	7								
	9.30	151	1080	13800	7								
	10.93	128	1500	14200	6								
	12.20	115	1500	14900	5								
	14.06	100	1500	15700	5								
	15.64	90	1500	15700	5								
	17.49	80	1500	15700	5								
	19.70	71	1500	15700	5								
	21.43	65	1500	15700	5								
	25.50	55	1500	15700	5								
	28.75	49	1430	16200	5								
	31.51	44	1380	16500	5								
	36.58	38	1110	17900	5								
FA77 3	**25.54**	55	1450	16100	6								
	29.91	47	1500	15700	6								
	33.74	41	1500	15700	6								
	38.23	37	1500	15700	6								
	43.58	32	1500	15700	6								
	48.37	29	1500	15700	6								
	55.27	25	1500	15700	6								
	58.32	24	1500	15700	6								
	66.46	21	1500	15700	6								
	72.50	19	1500	15700	6								
	75.02	19	1500	15700	6								
	85.52	16	1500	15700	6								
	94.93	15	1500	15700	5								
	108.46	13	1500	15700	5								
	114.45	12	1500	15700	5								
	130.42	11	1500	15700	5								
	142.27	9.8	1500	15700	5								
	166.47	8.4	1500	15700	5								
	188.40	7.4	1500	15700	5								
	198.31	7.1	1500	15700	5								
	225.79	6.2	1500	15700	5								
	262.93	5.3	1500	15700	5								
	281.71	5.0	1500	15700	5								

m [kg]		AM							
IEC	s	63	71	80	90	100	112	132S/M	132ML
FA77	2	52	52	55	55	59	59	66	66
FA77	3	53	54	56	56	60	60	67	68
NEMA		-	56	143	145	182	184	213/215	-
FA77	2	-	53	55	55	58	58	64	-
FA77	3	-	54	56	56	59	59	65	-
FAF: + 6.6 kg / F: + 3.8 kg / FF: + 14.4 kg									

9.1.7 FA87

n_e = 1400 1/min													3000 Nm
	i	n_a [1/min]	$M_{a\,max}$ [Nm]	F_{Ra} [N]	φ (/R) [']	AM 80	90	100	112	132S/M	132ML	160	180
FA87 2	**4.12**	340	1460	5980	7								
	4.92	285	1530	6430	7								
	5.63	249	1530	7020	7								
	6.65	211	1530	7790	7								
	7.35	190	1530	8280	7								
	8.29	169	1530	8890	7								
	9.58	146	2880	5050	7								
	11.46	122	3000	5580	7								
	13.12	107	3000	6370	7								
	15.48	90	3000	7390	7								
	17.12	82	3000	8040	7								
	19.31	73	3000	8840	7								
	21.32	66	3000	9520	7								
	23.68	59	3000	10300	7								
	26.50	53	3000	11100	7								
	28.78	49	2450	13900	7								
	33.92	41	2610	14600	7								
FA87 3	**29.20**	48	2510	13800	8								
	35.19	40	2610	14900	8								
	39.30	36	2720	15400	8								
	45.28	31	2820	16200	8								
	50.36	28	2940	16800	7								
	56.75	25	3000	17700	7								
	68.40	20	3000	19600	7								
	76.39	18	3000	19800	7								
	88.01	16	3000	19800	7								
	97.89	14	3000	19800	7								
	109.49	13	3000	19800	7								
	123.29	11	3000	19800	7								
	134.16	10	3000	19800	7								
	159.61	8.8	3000	19800	7								
	179.97	7.8	3000	19800	7								
	197.20	7.1	3000	19800	7								
	228.93	6.1	3000	19800	7								
	255.37	5.5	3000	19800	7								
	270.68	5.2	3000	19800	7								

m [kg]		AM							
IEC	s	80	90	100	112	132S/M	132ML	160	180
FA87	2	92	92	97	97	105	105	120	120
FA87	3	95	95	100	100	105	105	125	125
NEMA		143	145	182	184	213/215	-	254/256	284/286
FA87	2	92	92	96	96	100	-	115	120
FA87	3	95	95	99	99	105	-	120	120
FAF: + 12.7 kg / F: + 5.7 kg / FF: + 21.3 kg									

9.1.8 FA97

n_e = 1400 1/min														4300 Nm
	i	n_a [1/min]	$M_{a\,max}$ [Nm]	F_{Ra} [N]	φ (/R) [']	AM 100	112	132S/M	132ML	160	180	200	225
FA97 2	**3.87**	362	1800	9960	9								
	4.57	306	2050	9950	9								
	5.23	268	2150	10400	9								
	6.17	227	2250	11100	9								
	7.07	198	2360	11500	9								
	8.22	170	2360	12600	8								
	9.06	155	2360	13400	9								
	11.16	125	4100	10000	6								
	12.77	110	4300	10500	6								
	15.06	93	4300	11900	6								
	17.25	81	4300	13200	6								
	20.07	70	4300	14600	6								
	22.11	63	4300	15600	6								
	24.92	56	4300	16800	6								
	27.44	51	4300	17900	6								
	30.39	46	4300	19000	6								
	33.91	41	4300	20300	6								
	36.64	38	3070	25500	6								
	43.28	32	3070	27600	6								
FA97 3	**32.50**	43	4300	19800	6								
	38.86	36	4300	21900	6								
	44.49	31	4300	23600	6								
	52.49	27	4300	25800	6								
	58.06	24	4300	27200	6								
	65.47	21	4300	29000	6								
	72.29	19	4300	29900	6								
	75.63	19	4300	29900	6								
	80.31	17	4300	29900	6								
	86.59	16	4300	29900	6								
	89.85	16	4300	29900	6								
	97.58	14	4300	29900	6								
	102.16	14	4300	29900	6								
	112.99	12	4300	29900	6								
	127.42	11	4300	29900	6								
	140.71	9.9	4300	29900	6								
	156.30	9.0	4300	29900	6								
	174.87	8.0	4300	29900	6								
	189.92	7.4	4300	29900	6								
	223.88	6.3	4300	29900	6								
	253.41	5.5	4300	29900	6								
	276.77	5.1	4300	29900	6								

m [kg]		AM							
IEC	s	100	112	132S/M	132ML	160	180	200	225
FA97	2	160	160	165	165	185	185	200	205
FA97	3	165	165	170	170	190	190	205	210
NEMA		182	184	213/215	-	254/256	284/286	324/326	364/365
FA97	2	160	160	165	-	180	180	195	195
FA97	3	165	165	170	-	185	185	205	205
FAF: + 21.7 kg / F: + 7.5 kg / FF: + 40.3 kg									

9.1.9 FA107

n_e = 1400 1/min													7840 Nm
	i	n_a [1/min]	$M_{a\,max}$ [Nm]	F_{Ra} [N]	φ (/R) [']	AM 100	112	132S/M	132ML	160	180	200	225
FA107 2	**5.03**	278	4600	16400	7								
	6.22	225	4600	19000	7								
	7.40	189	4600	21300	7								
	8.37	167	4800	22000	7								
	9.69	144	4910	23500	7								
	9.96	141	6500	21500	5								
	12.33	114	7000	22600	5								
	14.67	95	7680	22400	5								
	16.58	84	7840	23900	5								
	19.20	73	7840	26500	5								
	21.76	64	7840	28800	5								
	25.14	56	7840	31500	5								
	27.57	51	7840	33300	5								
	33.79	41	7400	38300	5								
FA107 3	**31.80**	44	7680	36500	6								
	37.61	37	7680	39500	6								
	43.03	33	7680	42000	6								
	50.73	28	7680	45100	6								
	58.12	24	7680	47800	6								
	67.62	21	7680	49800	6								
	74.52	19	7680	49800	6								
	83.99	17	7680	49800	6								
	88.49	16	7680	49800	5								
	92.47	15	7680	49800	6								
	101.38	14	7680	49800	5								
	117.94	12	7680	49800	5								
	129.97	11	7680	49800	5								
	146.49	9.6	7680	49800	5								
	161.28	8.7	7680	49800	5								
	178.64	7.8	7680	49800	5								
	199.31	7.0	7680	49800	5								
	215.37	6.5	7680	49800	5								
	254.40	5.5	7680	49800	5								

m [kg]		AM							
IEC	s	100	112	132S/M	132ML	160	180	200	225
FA107	2	230	230	235	235	255	255	270	275
FA107	3	240	240	245	245	260	265	280	285
NEMA		182	184	213/215	-	254/256	284/286	324/326	364/365
FA107	2	230	230	230	-	250	250	265	265
FA107	3	240	240	240	-	255	260	275	275
FAF: + 21.0 kg / F: + 16.6 kg / FF: + 43.9 kg									

9.1.10 FA127

n_e = 1400 1/min													12000 Nm
	i	n_a [1/min]	$M_{a\,max}$ [Nm]	F_{Ra} [N]	φ (/R) [']	AM 132S/M	132ML	160	180	200	225	250	280
FA127 2	**4.68**	299	6000	29500	7								
	5.52	254	6000	31700	7								
	6.80	206	7000	32200	7								
	7.88	178	6000	37000	6								
	8.86	158	7000	36400	6								
	10.19	137	9500	30900	5								
	12.54	112	10000	33300	5								
	14.55	96	11000	32600	5								
	16.36	86	11000	35400	5								
	18.87	74	11000	38800	5								
	21.38	65	12000	38000	5								
	24.57	57	8500	53300	5								
	26.86	52	8500	55300	5								
FA127 3	**25.30**	55	12000	42400	5								
	31.33	45	12000	48300	5								
	37.28	38	12000	53200	5								
	42.15	33	12000	56800	5								
	48.80	29	12000	61300	5								
	55.31	25	12000	65200	5								
	63.91	22	12000	69400	5								
	70.07	20	12000	72100	5								
	75.41	19	12000	74300	5								
	87.31	16	12000	79000	5								
	98.95	14	12000	83000	5								
	114.34	12	12000	88000	5								
	125.37	11	12000	90000	5								
	153.67	9.1	12000	90000	5								
	170.83	8.2	12000	90000	5								

m [kg]		AM							
IEC	**s**	**132S/M**	**132ML**	**160**	**180**	**200**	**225**	**250**	**280**
FA127	2	385	385	400	400	410	415	450	450
FA127	3	395	395	410	410	425	430	460	460
NEMA		213/215	-	254/256	284/286	324/326	364/365	-	-
FA127	2	380	-	395	395	410	410	-	-
FA127	3	395	-	405	405	420	420	-	-
FAF: + 37.4 kg / F: + 36.5 kg / FF: + 81.1 kg									

9.1.11 FA157

n_e = 1400 1/min												18000 Nm
	i	n_a [1/min]	$M_{a\,max}$ [Nm]	F_{Ra} [N]	φ (/R) [']	AM 160	180	200	225	250	280
FA157 2	**11.92**	117	16000	40900	5						
	13.96	100	17000	42500	5						
	16.85	83	18000	44900	5						
	19.77	71	17000	50900	4						
	22.16	63	18000	51800	4						
	25.43	55	15000	61500	4						
	28.60	49	17000	60800	4						
	35.75	39	11000	79300	4						
	43.94	32	10000	87800	4						
	53.55	26	8000	98400	4						
FA157 3	**27.60**	51	18000	57800	5						
	32.55	43	18000	62500	5						
	40.06	35	18000	68900	5						
	46.48	30	18000	73600	5						
	52.24	27	18000	77500	5						
	60.25	23	18000	82500	5						
	68.28	21	18000	87000	5						
	78.46	18	18000	92300	5						
	85.80	16	18000	95800	5						
	96.53	15	18000	100300	5						
	108.49	13	18000	100300	5						
	125.14	11	18000	100300	5						
	141.80	9.9	18000	100300	5						
	162.96	8.6	18000	100300	5						
	178.20	7.9	18000	100300	5						
	217.62	6.4	18000	100300	5						
	267.43	5.2	18000	100300	5						

m [kg]		AM					
IEC	s	160	180	200	225	250	280
FA157	2	660	660	680	680	710	710
FA157	3	670	670	690	690	720	720
NEMA		254/256	284/286	324/326	364/365	-	-
FA157	2	660	660	680	680	-	-
FA157	3	660	660	680	680	-	-
FAF: + 58.6 kg / F: + 20.6 kg / FF: + 127.5 kg							

9.2 F.. AT..

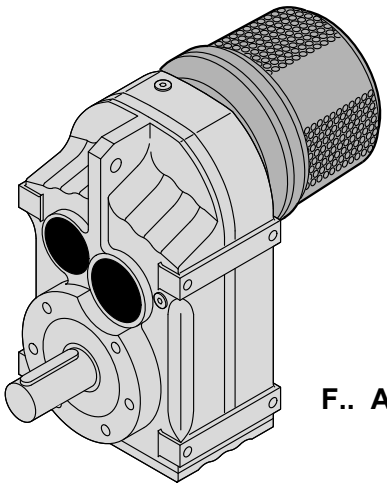

F.. AT..

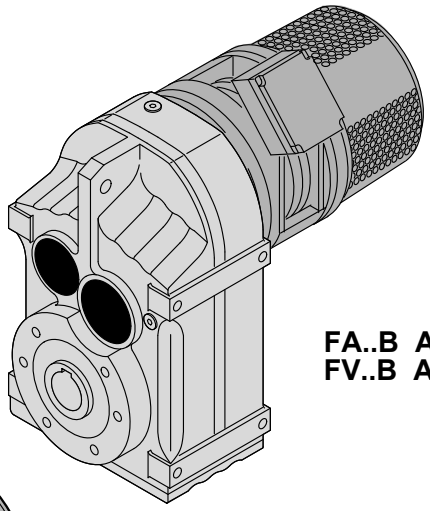

FA..B AT.. /BM(G)
FV..B AT.. /BM(G)

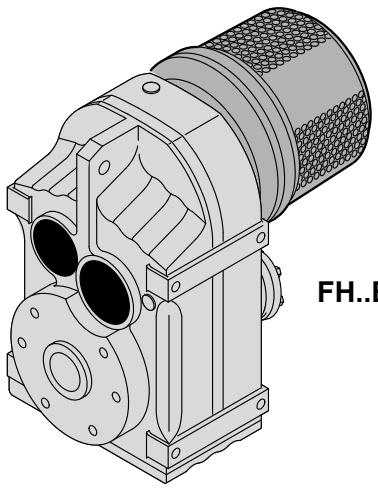

FH..B AT..

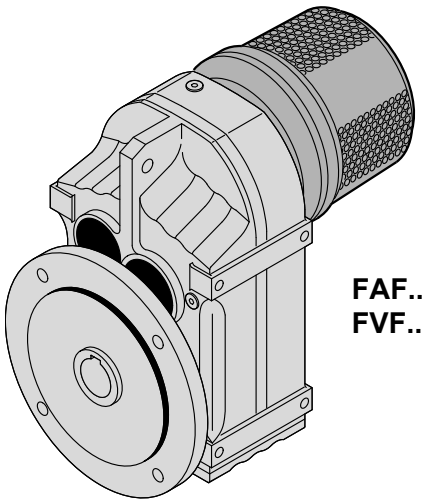

FAF.. AT..
FVF.. AT ..

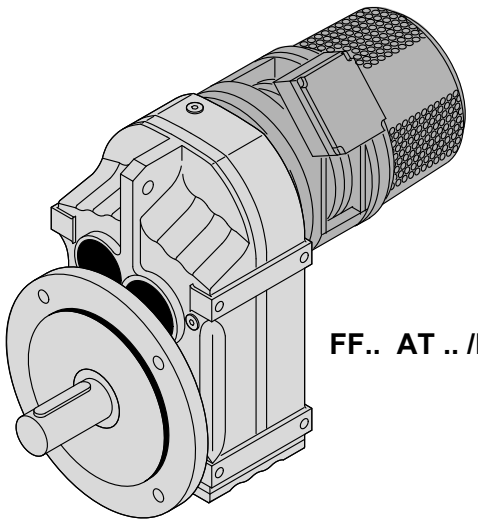

FF.. AT .. /BM(G)

50403AXX

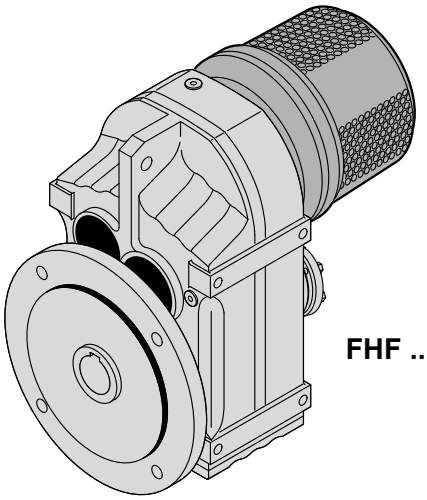

FHF .. AT ..

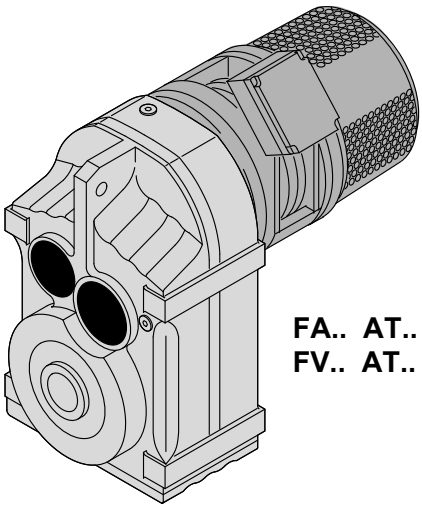

FA.. AT.. /BM(G)
FV.. AT.. /BM(G)

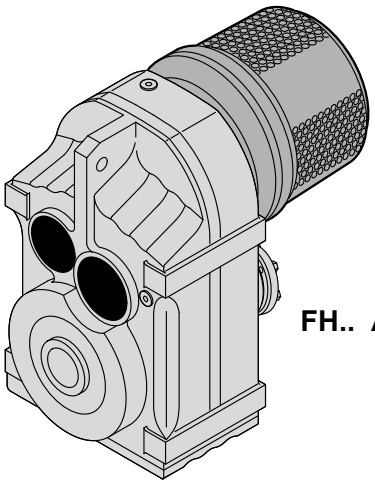

FH.. AT..

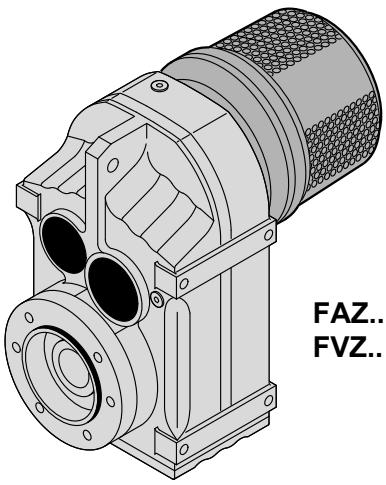

FAZ.. AT..
FVZ.. AT..

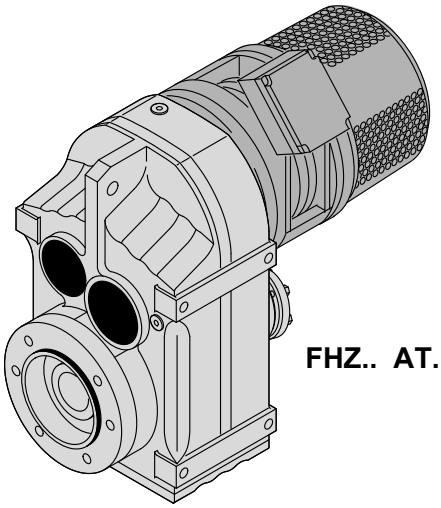

FHZ.. AT.. /BM(G)

50404AXX

9.2.1 F..AT/ DRS..4

		P_m [kW]				Sn [%]	
F67	DRS71S4	0,37	AT311	T11	0,42	12	
	DRS71M4	0,55	AT312	T11D	0,55	11	
	DRS80S4	0,75	AT312	T11D	0,7	11	
	DRS80M4	1,1	AT312	T11D	0,72	15	
	DRS90M4	1,5	AT321	T21	0,85	9	
	DRS90L4	2,2	AT321	T21	0,9	13	
	DRS100M4	3	AT322	T21D	1,53	11	
	DRS100LC4	4	AT322	T21D	1,6	12	
F77	DRS71S4	0,37	AT311	T11	0,42	12	
	DRS71M4	0,55	AT312	T11D	0,55	11	
	DRS80S4	0,75	AT312	T11D	0,7	11	
	DRS80M4	1,1	AT312	T11D	0,72	15	
	DRS90M4	1,5	AT421	T21	0,85	9	
	DRS90L4	2,2	AT421	T21	0,9	13	
	DRS100M4	3	AT422	T21D	1,53	11	→ 312ff
	DRS100LC4	4	AT422	T21D	1,6	12	→ 315ff
	DRS112M4	4	AT422	T21D	1,6	12	
F87	DRS80M4	1,1	AT312	T11D	0,72	15	
	DRS90M4	1,5	AT421	T21	0,85	9	
	DRS90L4	2,2	AT421	T21	0,9	13	
	DRS100M4	3	AT422	T21D	1,53	11	
	DRS100LC4	4	AT422	T21D	1,6	12	
	DRS112M4	4	AT422	T21D	1,6	12	
	DRS132S4	5,5	AT541	T41	2	6	
	DRS132M4	7,5	AT541	T41	2,4	8	
	DRS132MC4	9,2	AT541	T41	2,5	10	
	DRS160S4	9,2	AT541	T41	2,5	10	
	DRS160M4	11	AT541	T41	2,5	13	
	DRS160MC4	15	AT542	T41D	4,2	8	
	DRS180S4	15	AT542	T41D	4,2	8	

		P_m [kW]				Sn [%]	
F97	DRS80M4	1,1	AT312	T11D	0,72	15	
	DRS90M4	1,5	AT421	T21	0,85	9	
	DRS90L4	2,2	AT421	T21	0,9	13	
	DRS100M4	3	AT422	T21D	1,53	11	
	DRS100LC4	4	AT422	T21D	1,6	12	
	DRS112M4	4	AT422	T21D	1,6	12	
	DRS132S4	5,5	AT541	T41	2	6	
	DRS132M4	7,5	AT541	T41	2,4	8	
	DRS132MC4	9,2	AT541	T41	2,5	10	
	DRS160S4	9,2	AT541	T41	2,5	10	
	DRS160M4	11	AT541	T41	2,5	13	
	DRS160MC4	15	AT542	T41D	4,2	8	
	DRS180S4	15	AT542	T41D	4,2	8	
	DRS180M4	18,5	AT542	T41D	4,3	10	
	DRS180L4	22	AT542	T41D	4,3	14	
F107	DRS90L4	2,2	AT421	T21	0,9	13	
	DRS100M4	3	AT422	T21D	1,53	11	
	DRS100LC4	4	AT422	T21D	1,6	12	
	DRS112M4	4	AT422	T21D	1,6	12	
	DRS132S4	5,5	AT541	T41	2	6	→ 312ff
	DRS132M4	7,5	AT541	T41	2,4	8	
	DRS132MC4	9,2	AT541	T41	2,5	10	→ 315ff
	DRS160S4	9,2	AT541	T41	2,5	10	
	DRS160M4	11	AT541	T41	2,5	13	
	DRS160MC4	15	AT542	T41D	4,2	8	
	DRS180S4	15	AT542	T41D	4,2	8	
	DRS180M4	18,5	AT542	T41D	4,3	10	
	DRS180L4	22	AT542	T41D	4,3	14	
F127	DRS132M4	7,5	AT541	T41	2,4	8	
	DRS132MC4	9,2	AT541	T41	2,5	10	
	DRS160S4	9,2	AT541	T41	2,5	10	
	DRS160M4	11	AT541	T41	2,5	13	
	DRS160MC4	15	AT542	T41D	4,2	8	
	DRS180S4	15	AT542	T41D	4,2	8	
	DRS180M4	18,5	AT542	T41D	4,3	10	
	DRS180L4	22	AT542	T41D	4,3	14	
F157	DRS160M4	11	AT541	T41	2,5	13	
	DRS160MC4	15	AT542	T41D	4,2	8	
	DRS180S4	15	AT542	T41D	4,2	8	
	DRS180M4	18,5	AT542	T41D	4,3	10	
	DRS180L	22	AT542	T41D	4,3	14	

9.2.2 F..AT/ DRE..4

		P_m [kW]				Sn [%]	
F67	DRE80M4	0,75	AT312	T11D	0,7	11	
	DRE90M4	1,1	AT312	T11D	0,72	15	
	DRE90L4	1,5	AT321	T21	0,85	9	
	DRE100M4	2,2	AT321	T21	0,9	13	
	DRE100LC4	3	AT322	T21D	1,53	11	
F77	DRE80M4	0,75	AT312	T11D	0,7	11	
	DRE90M4	1,1	AT312	T11D	0,72	15	
	DRE90L4	1,5	AT421	T21	0,85	9	
	DRE100M4	2,2	AT421	T21	0,9	13	
	DRE100LC4	3	AT422	T21D	1,53	11	
	DRE112M4	3	AT422	T21D	1,53	11	
	DRE132S4	4	AT422	T21D	1,6	12	
F87	DRE90M4	1,1	AT312	T11D	0,72	15	
	DRE90L4	1,5	AT421	T21	0,85	9	
	DRE100M4	2,2	AT421	T21	0,9	13	
	DRE100LC4	3	AT422	T21D	1,53	11	
	DRE112M4	3	AT422	T21D	1,53	11	
	DRE132S4	4	AT422	T21D	1,6	12	→ 312ff
	DRE132M4	5,5	AT541	T41	2	6	→ 315ff
	DRE132MC4	7,5	AT541	T41	2,4	8	
	DRE160M4	9,2	AT541	T41	2,5	10	
	DRE160MC4	11	AT541	T41	2,5	13	
	DRE180S4	11	AT541	T41	2,5	13	
	DRE180M4	15	AT542	T41D	4,2	8	
F97	DRE90M4	1,1	AT312	T11D	0,72	15	
	DRE90L4	1,5	AT421	T21	0,85	9	
	DRE100M4	2,2	AT421	T21	0,9	13	
	DRE100LC4	3	AT422	T21D	1,53	11	
	DRE112M4	3	AT422	T21D	1,53	11	
	DRE132S4	4	AT422	T21D	1,6	12	
	DRE132M4	5,5	AT541	T41	2	6	
	DRE132MC4	7,5	AT541	T41	2,4	8	
	DRE160M4	9,2	AT541	T41	2,5	10	
	DRE160MC4	11	AT541	T41	2,5	13	
	DRE180S4	11	AT541	T41	2,5	13	
	DRE180M4	15	AT542	T41D	4,2	8	
	DRE180L4	18,5	AT542	T41D	4,3	10	

		P_m [kW]				Sn [%]	
F107	DRE100M4	2,2	AT421	T21	0,9	13	
	DRE100LC4	3	AT422	T21D	1,53	11	
	DRE112M4	3	AT422	T21D	1,53	11	
	DRE132S4	4	AT422	T21D	1,6	12	
	DRE132M4	5,5	AT541	T41	2	6	
	DRE132MC4	7,5	AT541	T41	2,4	8	
	DRE160M4	9,2	AT541	T41	2,5	10	
	DRE160MC4	11	AT541	T41	2,5	13	
	DRE180S4	11	AT541	T41	2,5	13	
	DRE180M4	15	AT542	T41D	4,2	8	→ 312ff
	DRE180L4	18,5	AT542	T41D	4,3	10	→ 315ff
F127	DRE132MC4	7,5	AT541	T41	2,4	8	
	DRE160M4	9,2	AT541	T41	2,5	10	
	DRE160MC4	11	AT541	T41	2,5	13	
	DRE180S4	11	AT541	T41	2,5	13	
	DRE180M4	15	AT542	T41D	4,2	8	
	DRE180L4	18,5	AT542	T41D	4,3	10	
F157	DRE160MC4	11	AT541	T41	2,5	13	
	DRE180S4	11	AT541	T41	2,5	13	
	DRE180M4	15	AT542	T41D	4,2	8	
	DRE180L4	18,5	AT542	T41D	4,3	10	

9.2.3 F..AT/ DRP..4

		P_m [kW]				Sn [%]	
F67	DRP90M4	0,75	AT312	T11D	0,7	11	
	DRP90L4	1,1	AT312	T11D	0,72	15	
	DRP100M4	1,5	AT321	T21	0,85	9	
	DRP100L4	2,2	AT321	T21	0,9	13	
F77	DRP90M4	0,75	AT312	T11D	0,7	11	→ 312ff
	DRP90L4	1,1	AT312	T11D	0,72	15	→ 315ff
	DRP100M4	1,5	AT421	T21	0,85	9	
	DRP100L4	2,2	AT421	T21	0,9	13	
	DRP112M4	3	AT422	T21D	1,53	11	
	DRP132M4	4	AT422	T21D	1,6	12	

		P_m [kW]				Sn [%]	
F87	DRP90L4	1,1	AT312	T11D	0,72	15	
	DRP100M4	1,5	AT421	T21	0,85	9	
	DRP100L4	2,2	AT421	T21	0,9	13	
	DRP112M4	3	AT422	T21D	1,53	11	
	DRP132M4	4	AT422	T21D	1,6	12	
	DRP132MC4	5,5	AT541	T41	2	6	
	DRP160S4	5,5	AT541	T41	2	6	
	DRP160M4	7,5	AT541	T41	2,4	8	
	DRP160MC4	9,2	AT541	T41	2,5	10	
	DRP180S4	9,2	AT541	T41	2,5	10	
	DRP180M4	11	AT541	T41	2,5	13	
	DRP180L4	15	AT542	T41D	4,2	8	
F97	DRP90L4	1,1	AT312	T11D	0,72	15	
	DRP100M4	1,5	AT421	T21	0,85	9	
	DRP100L4	2,2	AT421	T21	0,9	13	
	DRP112M4	3	AT422	T21D	1,53	11	
	DRP132M4	4	AT422	T21D	1,6	12	
	DRP132MC4	5,5	AT541	T41	2	6	
	DRP160S4	5,5	AT541	T41	2	6	
	DRP160M4	7,5	AT541	T41	2,4	8	→ 312ff
	DRP160MC4	9,2	AT541	T41	2,5	10	→ 315ff
	DRP180S4	9,2	AT541	T41	2,5	10	
	DRP180M4	11	AT541	T41	2,5	13	
	DRP180L4	15	AT542	T41D	4,2	8	
F107	DRP100L4	2,2	AT421	T21	0,9	13	
	DRP112M4	3	AT422	T21D	1,53	11	
	DRP132M4	4	AT422	T21D	1,6	12	
	DRP132MC4	5,5	AT541	T41	2	6	
	DRP160S4	5,5	AT541	T41	2	6	
	DRP160M4	7,5	AT541	T41	2,4	8	
	DRP160MC4	9,2	AT541	T41	2,5	10	
	DRP180S4	9,2	AT541	T41	2,5	10	
	DRP180M4	11	AT541	T41	2,5	13	
	DRP180L4	15	AT542	T41D	4,2	8	
F127	DRP160M4	7,5	AT541	T41	2,4	8	
	DRP160MC4	9,2	AT541	T41	2,5	10	
	DRP180S4	9,2	AT541	T41	2,5	10	
	DRP180M4	11	AT541	T41	2,5	13	
	DRP180L4	15	AT542	T41D	4,2	8	
F157	DRP180M4	11	AT541	T41	2,5	13	
	DRP180L4	15	AT542	T41D	4,2	8	

9.2.4 F..AT/ DRS..2

		P_m [kW]				Sn [%]	
F67	DRS71M2	0,55	AT311	T11	0,19	3	
	DRS80S2	0,75	AT311	T11	0,22	4,5	
	DRS80M2	1,1	AT311	T11	0,27	6	
	DRS90M2	1,5	AT311	T11	0,29	8,5	
	DRS100M2	3	AT311	T11	0,4	12	
	DRS100LC2	4	AT312	T11D	0,52	10	
F77	DRS71M2	0,55	AT311	T11	0,19	3	
	DRS80S2	0,75	AT311	T11	0,22	4,5	
	DRS80M2	1,1	AT311	T11	0,27	6	
	DRS90M2	1,5	AT311	T11	0,29	8,5	
	DRS100M2	3	AT311	T11	0,4	12	
	DRS100LC2	4	AT312	T11D	0,52	10	→ 312ff
	DRS132M2	9,2	AT421	T21	0,65	8,5	→ 315ff
F87	DRS90M2	1,5	AT311	T11	0,29	8,5	
	DRS100M2	3	AT311	T11	0,4	12	
	DRS100LC2	4	AT312	T11D	0,52	10	
	DRS132M2	9,2	AT421	T21	0,65	8,5	
F97	DRS90M2	1,5	AT311	T11	0,29	8,5	
	DRS100M2	3	AT311	T11	0,4	12	
	DRS100LC2	4	AT312	T11D	0,52	10	
	DRS132M2	9,2	AT421	T21	0,65	8,5	
F107	DRS100M2	3	AT311	T11	0,4	12	
	DRS100LC2	4	AT312	T11D	0,52	10	
	DRS132M2	9,2	AT421	T21	0,65	8,5	
F127	DRS132M2	9,2	AT421	T21	0,65	8,5	

9.2.5 F..AT/ DRE..2

		P_m [kW]				Sn [%]	
F67	DRE80M2	0,75	AT311	T11	0,22	4,5	
	DRE90M2	1,5	AT311	T11	0,29	8,5	
	DRE100M2	2,2	AT311	T11	0,31	11,5	
	DRE100L2	3	AT311	T11	0,4	12	
F77	DRE80M2	0,75	AT311	T11	0,22	4,5	→ 312ff
	DRE90M2	1,5	AT311	T11	0,29	8,5	→ 315ff
	DRE100M2	2,2	AT311	T11	0,31	11,5	
	DRE100L2	3	AT311	T11	0,4	12	
	DRE132M2	7,5	AT421	T21	0,6	8	
	DRE132MC2	9,2	AT421	T21	0,65	8,5	

		P_m [kW]				Sn [%]	
F87	DRE90M2	1,5	AT311	T11	0,29	8,5	
	DRE100M2	2,2	AT311	T11	0,31	11,5	
	DRE100L2	3	AT311	T11	0,4	12	
	DRE132M2	7,5	AT421	T21	0,6	8	
	DRE132MC2	9,2	AT421	T21	0,65	8,5	
F97	DRE90M2	1,5	AT311	T11	0,29	8,5	
	DRE100M2	2,2	AT311	T11	0,31	11,5	→ 312ff
	DRE100L2	3	AT311	T11	0,4	12	→ 315ff
	DRE132M2	7,5	AT421	T21	0,6	8	
	DRE132MC2	9,2	AT421	T21	0,65	8,5	
F107	DRE100L2	3	AT311	T11	0,4	12	
	DRE132M2	7,5	AT421	T21	0,6	8	
	DRE132MC2	9,2	AT421	T21	0,65	8,5	
F127	DRE132M2	7,5	AT421	T21	0,6	8	
	DRE132MC2	9,2	AT421	T21	0,65	8,5	

9

9.2.6 F..AT/ DRP..2

		P_m [kW]				Sn [%]	
F67	DRP80M2	0,75	AT311	T11	0,22	4,5	
	DRP90M2	1,1	AT311	T11	0,27	6	
	DRP100M2	2,2	AT311	T11	0,31	11,5	
	DRP100LC2	3	AT311	T11	0,4	12	
F77	DRP80M2	0,75	AT311	T11	0,22	4,5	
	DRP90M2	1,1	AT311	T11	0,27	6	→ 312ff
	DRP100M2	2,2	AT311	T11	0,31	11,5	→ 315ff
	DRP100LC2	3	AT311	T11	0,4	12	
F87	DRP100M2	2,2	AT311	T11	0,31	11,5	
	DRP100LC2	3	AT311	T11	0,4	12	
F97	DRP100M2	2,2	AT311	T11	0,31	11,5	
	DRP100LC2	3	AT311	T11	0,4	12	
F107	DRP100LC	3	AT311	T11	0,4	12	

9.3 F.. AD.. [kW]

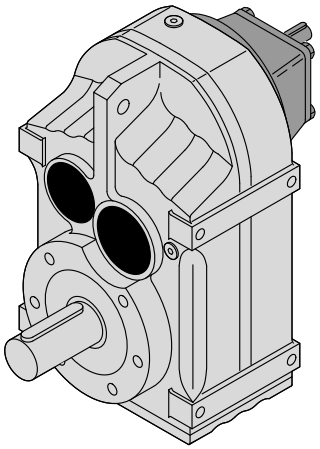

F.. AD..

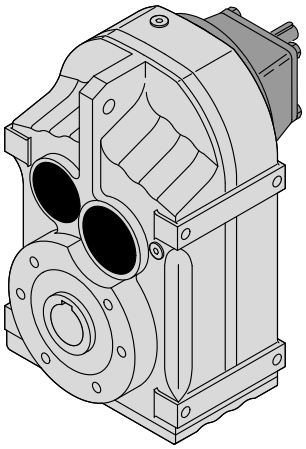

FA..B AD..
FV..B AD..

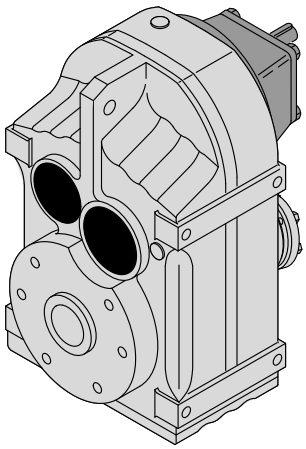

FH..B AD..

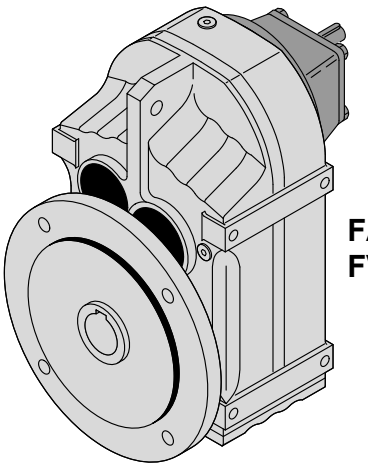

FAF.. AD..
FVF.. AD ..

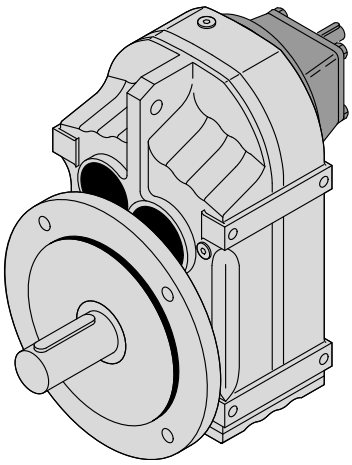

FF.. AD..

50401AXX

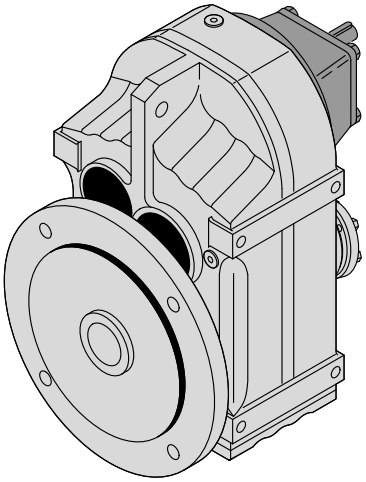

FHF .. AD ..

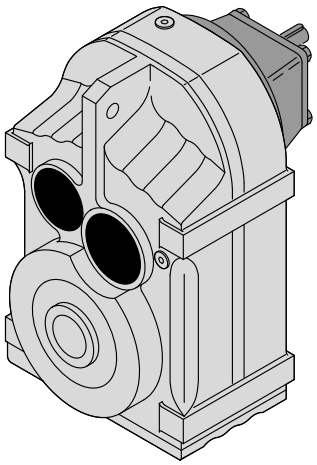

FA.. AD..
FV.. AD..

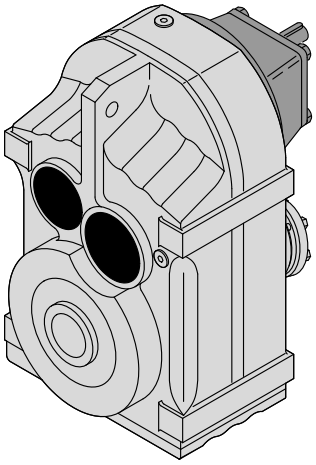

FH.. AD..

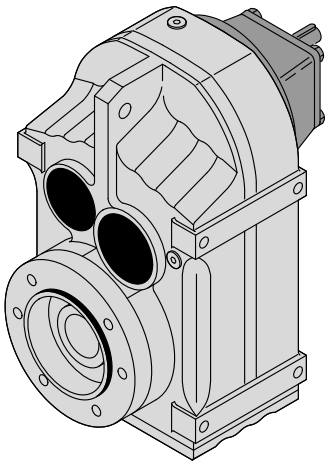

FAZ.. AD..
FVZ.. AD..

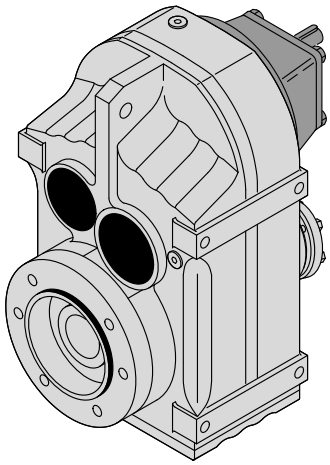

FHZ.. AD..

50402AXX



F..
F.. AD.. [kW]

i	n_a [1/min]	M_{amax}	P_e [kW]	F_{Ra} [N] 1)	F_{Re} [N]	φ (/R)	⚠				m [kg]	
FA27 AD.. , n_e = 1400 1/min												**130 Nm**
140.74	10.0	130	0.16	4500	755	-	-					
129.09	11	130	0.18	4500	755	-	-					
109.90	13	130	0.20	4500	755	-	-					
94.76	15	130	0.23	4500	750	-	-					
88.32	16	130	0.25	4500	750	-	-					
77.21	18	130	0.28	4500	745	-	-	**FA**	**27**	**AD1**	**7.6**	
72.37	19	130	0.30	4500	745	-	-	**FAF**	**27**	**AD1**	**8.3**	→ 318
63.86	22	130	0.33	4400	740	-	-	**F**	**27**	**AD1**	**8.1**	
56.62	25	130	0.37	4180	735	-	-	**FF**	**27**	**AD1**	**8.9**	
50.19	28	130	0.42	3980	580	-	-					
46.78	30	130	0.45	3860	570	-	-					
40.89	34	130	0.51	3640	555	-	-					
38.33	37	130	0.54	3530	545	-	-					
33.83	41	130	0.61	3340	525	-	-					
29.56	47	130	0.69	3140	1150	-	-					
27.18	52	130	0.75	3030	1130	-	-					
23.25	60	130	0.87	2820	1090	-	-					
20.15	69	130	1.0	2630	1040	-	-					
18.84	74	130	1.1	2550	1570	-	-					
16.28	86	130	1.2	2370	1550	-	-					
13.84	101	130	1.4	2180	1530	-	-					
12.35	113	130	1.6	2060	1520	-	-	**FA**	**27**	**AD2**	**8.5**	
10.55	133	130	1.9	1900	1490	-	-	**FAF**	**27**	**AD2**	**9.2**	→ 318
9.88	142	130	2.0	1830	1480	-	-	**F**	**27**	**AD2**	**9.0**	
9.40	149	130	2.1	1660	1230	-	-	**FF**	**27**	**AD2**	**9.8**	
8.13	172	123	2.3	1580	1230	-	-					
6.91	203	114	2.5	1530	1250	-	-					
6.17	227	109	2.7	1480	1250	-	-					
5.27	266	100	2.9	1440	1270	-	-					
4.93	284	96	3.0	1420	1270	-	-					
4.16	337	87	3.2	1380	1280	-	-					
FA37 AD.. , n_e = 1400 1/min												**200 Nm**
128.51	11	200	0.26	4290	655	7	-					
117.88	12	200	0.28	4290	650	7	-					
100.36	14	200	0.33	4290	640	7	-					
86.53	16	200	0.37	4290	625	7	-	**FA**	**37**	**AD1**	**14**	
80.65	17	200	0.40	4290	615	7	-	**FAF**	**37**	**AD1**	**15**	→ 318
70.50	20	200	0.45	4290	600	7	-	**F**	**37**	**AD1**	**14**	
66.09	21	200	0.48	4290	595	7	-	**FF**	**37**	**AD1**	**16**	
58.32	24	200	0.54	4290	575	7	-					
54.54	26	200	0.58	4290	335	8	-					
51.70	27	200	0.61	4290	555	7	-					
47.02	30	200	0.68	4290	1490	8	-					
43.83	32	200	0.72	4290	1480	8	-					
38.31	37	200	0.82	4290	1440	8	-	**FA**	**37**	**AD2**	**15**	
35.91	39	200	0.88	4290	1420	8	-	**FAF**	**37**	**AD2**	**16**	→ 318
31.69	44	200	0.99	4290	1380	8	-	**F**	**37**	**AD2**	**15**	
28.09	50	200	1.1	4060	1640	8	-	**FF**	**37**	**AD2**	**17**	
23.88	59	200	1.3	3760	1620	8	-					
23.63	59	200	1.3	3740	1420	6	-					
20.57	68	200	1.5	3500	1400	6	-					
19.27	73	200	1.6	3390	1390	6	-					
17.03	82	200	1.8	3180	1370	6	-					
15.81	89	200	1.9	3070	1360	6	-					
14.33	98	200	2.1	2910	1340	6	-					
12.87	109	200	2.4	2750	1320	7	-					
11.08	126	190	2.6	2620	1320	7	-	**FA**	**37**	**AD2**	**15**	
10.42	134	185	2.7	2580	1320	7	-	**FAF**	**37**	**AD2**	**16**	→ 318
8.97	156	175	3.0	2460	1320	7	-	**F**	**37**	**AD2**	**15**	
8.01	175	170	3.2	2360	1300	7	-	**FF**	**37**	**AD2**	**17**	
7.44	188	121	2.5	2560	1200	10	-					
6.74	208	140	3.2	2270	1070	10	-					
6.05	231	135	3.4	2190	1070	10	-					
5.21	269	125	3.6	2120	1090	10	-					
4.90	286	120	3.7	2100	1100	11	-					
4.22	332	110	4.0	2030	1120	11	-					
3.77	372	105	4.2	1970	1110	12	-					

i	n_a [1/min]	M_{amax}	P_e [kW]	F_{Ra} [N] 1)	F_{Re} [N]	φ (/R)	⚠				m [kg]	
FA47 AD.. , n_e = 1400 1/min												**400 Nm**
190.76	7.3	400	0.35	5920	545	6	-					
175.38	8.0	400	0.37	5920	535	6	-					
150.06	9.3	400	0.43	5920	525	6	-					
130.07	11	400	0.49	5920	510	6	-	**FA**	**47**	**AD1**	**19**	
121.57	12	400	0.53	5920	500	6	-	**FAF**	**47**	**AD1**	**21**	
105.09	13	400	0.61	5920	475	6	-	**F**	**47**	**AD1**	**19**	→ 318
89.29	16	400	0.71	5920	455	6	-	**FF**	**47**	**AD1**	**22**	
79.72	18	400	0.79	5920	430	6	-					
68.09	21	400	0.92	5920	400	6	-					
65.36	21	400	0.97	5920	1180	7	-					
56.49	25	400	1.1	5920	1600	7	-					
48.00*	29	400	1.3	5920	1580	7	-	**FA**	**47**	**AD2**	**20**	
42.86	33	400	1.4	5920	1570	7	-	**FAF**	**47**	**AD2**	**22**	
36.61	38	400	1.7	5920	1550	7	-	**F**	**47**	**AD2**	**20**	→ 318
34.29	41	400	1.8	5920	1540	7	-	**FF**	**47**	**AD2**	**24**	
28.88	48	400	2.1	5790	1510	7	-					
30.86	45	400	2.0	5920	1230	6	-					
29.32	48	400	2.1	5830	1220	6	-					
25.72	54	400	2.4	5460	1200	6	-					
21.82	64	400	2.8	5030	1170	6	-					
19.70	71	400	3.1	4770	1150	6	-					
17.33	81	400	3.5	4450	1120	6	-					
16.36	86	400	3.7	4320	1110	6	-	**FA**	**47**	**AD2**	**19**	
13.93	100	400	4.4	3950	1040	6	-	**FAF**	**47**	**AD2**	**22**	
12.66	111	400	4.8	3740	1010	6	-	**F**	**47**	**AD2**	**20**	→ 318
10.97	128	380	5.2	3580	1000	6	-	**FF**	**47**	**AD2**	**23**	
8.96	156	250	4.2	3860	860	8	-					
7.88	178	230	4.4	3770	910	8	-					
7.44*	188	225	4.6	3710	920	8	-					
6.34	221	200	4.8	3610	960	8	-					
5.76	243	191	5.0	3520	960	9	-					
4.99	281	173	5.2	3430	1000	9	-					
FA57 AD.. , n_e = 1400 1/min												**600 Nm**
199.70	7.0	600	0.50	9200	1510	6	-					
183.60	7.6	600	0.54	9200	1500	6	-					
157.09	8.9	600	0.62	9200	1470	6	-					
136.16	10	600	0.71	9200	1440	6	-					
127.27	11	600	0.76	9200	1430	6	-					
110.01	13	600	0.87	9200	1380	6	-					
93.47	15	600	1.0	9200	1340	6	-	**FA**	**57**	**AD2**	**27**	
83.46	17	600	1.1	9200	1640	6	-	**FAF**	**57**	**AD2**	**33**	
72.98	19	600	1.3	9200	1480	6	-	**F**	**57**	**AD2**	**27**	→ 318
68.22	21	600	1.4	9200	1470	6	-	**FF**	**57**	**AD2**	**34**	
58.97	24	600	1.6	9200	1440	7	-					
50.10	28	600	1.9	9200	1420	7	-					
44.73	31	600	2.1	9160	1400	7	-					
38.21	37	600	2.4	8510	1370	7	-					
35.79	39	600	2.6	8250	1350	7	-					
30.15	46	590	3.0	7650	1320	7	-					
40.13	35	265	1.0	10700	605	6	-					
34.24	41	440	2.0	9020	1140	6	-	**FA**	**57**	**AD2**	**27**	
29.94	47	415	2.1	8660	1170	6	-	**FAF**	**57**	**AD2**	**32**	
28.45	49	410	2.2	8500	1170	6	-	**F**	**57**	**AD2**	**27**	→ 318
24.96	56	575	3.5	7060	830	6	-	**FF**	**57**	**AD2**	**33**	
21.17	66	600	4.3	6350	1760	6	-					
19.11	73	600	4.8	6020	1730	6	-					
16.81	83	600	5.4	5620	1700	6	-					
15.88	88	600	5.7	5450	1670	6	-					
13.52	104	600	6.7	4980	1580	6	-					
12.29	114	600	7.4	4710	1530	6	-	**FA**	**57**	**AD3**	**30**	
10.64	132	600	8.5	4320	1440	6	-	**FAF**	**57**	**AD3**	**35**	
9.31	150	310	5.1	5490	1660	8	-	**F**	**57**	**AD3**	**30**	→ 318
8.19	171	400	7.4	4580	1250	8	-	**FF**	**57**	**AD3**	**36**	
7.73	181	390	7.6	4510	1260	8	-					
6.58	213	355	8.2	4370	1300	8	-					
5.98	234	335	8.5	4290	1330	9	-					
5.18	270	305	8.9	4190	1380	9	-					



F..
F.. AD.. [kW]

i	n_a [1/min]	M_{amax}	P_e [kW]	F_{Ra} [N] 1)	F_{Re} [N]	φ (/R)	⚠				m [kg]	
FA67 AD.. , n_e = 1400 1/min												**820 Nm**
228.99	6.1	820	0.59	10300	1420	6	-					
195.39	7.2	820	0.68	10300	1390	6	-					
170.85	8.2	820	0.77	10300	1360	6	-					
162.31	8.6	820	0.81	10300	1370	6	-					
142.40	9.8	820	0.92	10300	1320	6	-					
120.79	12	820	1.1	10300	1630	6	-					
109.04	13	820	1.2	10300	1620	6	-					
95.94	15	820	1.3	10300	1620	6	-	**FA**	**67**	**AD2**	**31**	
90.59	15	820	1.4	10300	1610	6	-	**FAF**	**67**	**AD2**	**37**	
79.76	18	820	1.6	10300	1440	6	-	**F**	**67**	**AD2**	**34**	→ 318
67.65	21	820	1.9	10300	1420	6	-	**FF**	**67**	**AD2**	**40**	
61.07	23	820	2.1	10300	1400	6	-					
53.73	26	820	2.4	10300	1390	6	-					
50.74	28	820	2.5	10300	1380	6	-					
43.20	32	820	2.9	10300	1340	6	-					
39.26	36	780	3.1	10700	1340	6	-					
34.01	41	740	3.4	11000	1340	6	-					
36.30	39	590	2.5	12000	1100	5	-	**FA**	**67**	**AD2**	**30**	
								FAF	**67**	**AD2**	**36**	
								F	**67**	**AD2**	**33**	→ 318
								FF	**67**	**AD2**	**39**	
32.08	44	820	3.9	10300	1760	5	-					
27.41	51	820	4.6	10300	1720	5	-					
25.13	56	820	5.0	10300	1700	5	-					
22.05	63	820	5.6	10300	1660	5	-					
20.90*	67	820	6.0	10300	1640	5	-					
18.29	77	820	6.8	10300	1590	6	-					
16.48	85	820	7.5	10300	1530	6	-					
14.46	97	820	8.6	10300	1460	6	-					
12.76	110	800	9.5	10500	1420	6	-	**FA**	**67**	**AD3**	**33**	
11.31	124	745	10.0	10900	1450	6	-	**FAF**	**67**	**AD3**	**39**	
9.66	145	670	10.5	11500	1490	6	-	**F**	**67**	**AD3**	**36**	→ 318
9.08	154	450	7.5	11800	1230	8	-	**FF**	**67**	**AD3**	**42**	
8.60	163	440	7.8	11700	1260	8	-					
7.53	186	410	8.2	11300	1310	8	-					
6.78	206	385	8.6	11000	1330	9	-					
5.95	235	355	9.0	10700	1380	9	-					
5.25	267	330	9.5	10300	1420	9	-					
4.66	301	305	9.9	10100	1450	9	-					
3.97	352	275	10.5	9680	1490	10	-					
FA77 AD.. , n_e = 1400 1/min												**1500 Nm**
281.71	5.0	1500	0.87	15700	880	5	-					
262.93	5.3	1500	0.93	15700	880	5	-					
225.79	6.2	1500	1.1	15700	1540	5	-					
198.31	7.1	1500	1.2	15700	1540	5	-					
188.40	7.4	1500	1.3	15700	1540	5	-					
166.47	8.4	1500	1.4	15700	1510	5	-					
142.27	9.8	1500	1.7	15700	1500	5	-					
130.42	11	1500	1.8	15700	1490	5	-	**FA**	**77**	**AD2**	**54**	
114.45	12	1500	2.0	15700	1480	5	-	**FAF**	**77**	**AD2**	**60**	
108.46*	13	1500	2.2	15700	1470	5	-	**F**	**77**	**AD2**	**58**	→ 318
94.93	15	1500	2.5	15700	1450	5	-	**FF**	**77**	**AD2**	**68**	
85.52	16	1500	2.7	15700	1430	6	-					
75.02	19	1500	3.1	15700	1400	6	-					
72.50	19	1500	3.2	15700	1110	6	-					
66.46	21	1500	3.5	15700	1100	6	-					
58.32	24	1500	4.0	15700	1070	6	-					
55.27	25	1500	4.2	15700	1060	6	-					
48.37	29	1500	4.8	15700	1020	6	-					
43.58	32	1500	5.3	15700	2010	6	-					
38.23	37	1500	6.0	15700	1970	6	-	**FA**	**77**	**AD3**	**57**	
33.74	42	1500	6.8	15700	1920	6	-	**FAF**	**77**	**AD3**	**64**	
29.91	47	1500	7.7	15700	1860	6	-	**F**	**77**	**AD3**	**61**	→ 318
25.54	55	1450	8.7	16100	1820	6	-	**FF**	**77**	**AD3**	**72**	
36.58	38	1110	4.6	17900	1580	5	-	**FA**	**77**	**AD3**	**56**	
31.51	44	1110	5.4	17900	1540	5	-	**FAF**	**77**	**AD3**	**63**	
28.75	49	1200	6.4	17400	1400	5	-	**F**	**77**	**AD3**	**60**	→ 318
								FF	**77**	**AD3**	**70**	

i	n_a [1/min]	M_{amax}	P_e [kW]	F_{Ra} [N] 1)	F_{Re} [N]	φ (/R)	⚠				m [kg]	
25.50*	55	1500	8.9	15700	3020	5	-					
21.43	65	1500	10.6	15700	2950	5	-					
19.70	71	1500	11.5	15700	2880	5	-					
17.49	80	1500	13.0	15700	2820	5	-					
15.64*	90	1500	14.5	15700	2750	5	-					
14.06	100	1500	16.1	15700	2680	5	-					
12.20	115	1500	18.6	14900	2560	5	-	**FA**	**77**	**AD4**	**62**	
10.93	128	1500	21	14200	2470	6	-	**FAF**	**77**	**AD4**	**69**	
9.30	151	1080	17.6	13800	1300	7	-	**F**	**77**	**AD4**	**66**	→ 318
8.26	170	1080	19.8	13100	1110	7	-	**FF**	**77**	**AD4**	**76**	
7.39	190	1080	22	12500	900	7	-					
6.64	211	1080	25	12000	690	8	-					
5.76	243	1060	28	11400	475	8	-					
5.16	271	940	27	11400	1000	8	-					
4.28	327	790	28	11200	1550	8	-					
FA87 AD.. , n_e = 1400 1/min												**3000 Nm**
270.68	5.2	3000	1.8	19800	1350	7	-					
255.37	5.5	3000	1.9	19800	1350	7	-					
228.93	6.1	3000	2.1	19800	1330	7	-					
197.20	7.1	3000	2.4	19800	1310	7	-					
179.97	7.8	3000	2.6	19800	1300	7	-	**FA**	**87**	**AD2**	**93**	
159.61	8.8	3000	2.9	19800	1290	7	-	**FAF**	**87**	**AD2**	**105**	
134.16	10	3000	3.5	19800	1260	7	-	**F**	**87**	**AD2**	**99**	→ 318
123.29	11	3000	3.8	19800	1240	7	-	**FF**	**87**	**AD2**	**115**	
109.49	13	3000	4.2	19800	1220	7	-					
97.89	14	3000	4.7	19800	1190	7	-					
88.01	16	3000	5.3	19800	1160	7	-					
76.39	18	3000	6.1	19800	1110	7	-					
68.40	20	3000	6.8	19600	2020	7	-					
56.75	25	3000	8.2	17700	1940	7	-	**FA**	**87**	**AD3**	**97**	
50.36	28	2940	9.0	16800	1540	7	-	**FAF**	**87**	**AD3**	**110**	
45.28	31	2820	9.6	16200	1540	8	-	**F**	**87**	**AD3**	**105**	→ 318
39.30	36	2720	10.6	15400	1510	8	-	**FF**	**87**	**AD3**	**120**	
35.19	40	2610	11.4	14900	3530	8	-	**FA**	**87**	**AD4**	**105**	
29.20	48	2510	13.2	13800	3470	8	-	**FAF**	**87**	**AD4**	**115**	
								F	**87**	**AD4**	**110**	→ 318
								FF	**87**	**AD4**	**125**	
33.92	41	2560	11.5	14800	2540	7	-	**FA**	**87**	**AD4**	**100**	
28.78	49	2390	12.6	14100	2610	7	-	**FAF**	**87**	**AD4**	**115**	
								F	**87**	**AD4**	**105**	→ 318
								FF	**87**	**AD4**	**120**	
26.50	53	3000	17.2	11100	5210	7	-					
23.68	59	3000	19.2	10300	5140	7	-					
21.32*	66	3000	21	9520	5060	7	-					
19.31	73	3000	24	8840	4980	7	-					
17.12	82	3000	26	8040	4890	7	-					
15.48	90	3000	29	7390	4790	7	-					
13.12*	107	3000	35	6370	4580	7	-	**FA**	**87**	**AD5**	**115**	
11.46	122	3000	40	5580	4420	7	-	**FAF**	**87**	**AD5**	**130**	
9.58	146	2880	45	5050	4280	7	-	**F**	**87**	**AD5**	**120**	→ 318
8.29	169	1530	28	8890	4450	7	-	**FF**	**87**	**AD5**	**135**	
7.35	190	1530	31	8280	4340	7	-					
6.65	211	1530	35	7790	4220	7	-					
5.63	248	1530	41	7020	3980	7	-					
4.92	284	1510	46	6510	3760	7	-					
4.12	340	1260	46	6830	4210	7	-					



i	n_a [1/min]	M_{amax}	P_e [kW]	F_{Ra} [N] 1)	F_{Re} [N]	φ (/R)	⚠					m [kg]	
FA97 AD.. , n_e = 1400 1/min													**4300 Nm**
276.77	5.1	4300	2.5	29900	2180	6	-						
253.41	5.5	4300	2.7	29900	2170	6	-						
223.88	6.2	4300	3.0	29900	2150	6	-						
189.92	7.4	4300	3.6	29900	2130	6	-						
174.87	8.0	4300	3.9	29900	2110	6	-						
156.30	9.0	4300	4.3	29900	2090	6	-						
140.71	10.0	4300	4.8	29900	2070	6	-	**FA**	**97**	**AD3**	**160**		
127.42	11	4300	5.3	29900	2050	6	-	**FAF**	**97**	**AD3**	**185**		
112.99	12	4300	5.9	29900	2020	6	-	**F**	**97**	**AD3**	**170**	→ 318	
102.16	14	4300	6.6	29900	1990	6	-	**FF**	**97**	**AD3**	**200**		
97.58	14	4300	6.8	29900	1520	6	-						
89.85	16	4300	7.4	29900	1490	6	-						
86.59	16	4300	7.7	29900	1930	6	-						
80.31	17	4300	8.3	29900	1450	6	-						
75.63	19	4300	8.8	29900	1880	6	-						
72.29	19	4300	9.2	29900	1410	6	-						
65.47	21	4300	10.1	29000	3410	6	-						
58.06	24	4300	11.4	27200	3370	6	-	**FA**	**97**	**AD4**	**165**		
52.49	27	4300	12.6	25800	3320	6	-	**FAF**	**97**	**AD4**	**190**		
44.49	31	4300	14.9	23600	3220	6	-	**F**	**97**	**AD4**	**175**	→ 318	
38.86	36	4300	17.1	21900	3140	6	-	**FF**	**97**	**AD4**	**205**		
32.50	43	4300	20	19800	3000	6	-						
43.28	32	3070	10.8	27600	2700	6	-	**FA**	**97**	**AD4**	**160**		
36.64	38	3070	12.7	25500	2620	6	-	**FAF**	**97**	**AD4**	**185**		
								F	**97**	**AD4**	**170**	→ 318	
								FF	**97**	**AD4**	**200**		
33.91	41	4300	19.2	20300	4940	6	-						
30.39	46	4300	21	19000	4870	6	-						
27.44*	51	4300	24	17900	4750	6	-	**FA**	**97**	**AD5**	**180**		
24.92	56	4300	26	16800	4670	6	-	**FAF**	**97**	**AD5**	**200**		
22.11	63	4300	29	15600	4570	6	-	**F**	**97**	**AD5**	**185**	→ 318	
20.07	70	4300	32	14600	4470	6	-	**FF**	**97**	**AD5**	**220**		
17.25*	81	4300	38	13200	4290	6	-						
15.06	93	4300	43	11900	4110	6	-						
12.77	110	4300	51	10500	6840	6	-						
11.16	125	4100	56	10000	6800	6	-						
9.06	154	2360	39	13400	6470	9	-						
8.22	170	2360	43	12600	6350	8	-	**FA**	**97**	**AD6**	**190**		
7.07	198	2360	50	11500	6130	9	-	**FAF**	**97**	**AD6**	**215**		
6.17	227	2250	55	11100	6130	9	-	**F**	**97**	**AD6**	**200**	→ 318	
5.23	268	1930	56	11300	6490	9	-	**FF**	**97**	**AD6**	**230**		
4.57	306	1690	56	11400	6780	9	-						
3.87	362	1430	56	11400	7140	9	-						
FA107 AD.. , n_e = 1400 1/min													**7840 Nm**
254.40*	5.5	7680	4.8	49800	1850	5	-						
215.37	6.5	7680	5.6	49800	1820	5	-						
199.31	7.0	7680	6.0	49800	1800	5	-	**FA**	**107**	**AD3**	**235**		
178.64	7.8	7680	6.7	49800	1780	5	-	**FAF**	**107**	**AD3**	**260**		
161.28*	8.7	7680	7.4	49800	1720	5	-	**F**	**107**	**AD3**	**255**	→ 318	
146.49	9.6	7680	8.1	49800	1690	5	-	**FF**	**107**	**AD3**	**280**		
129.97	11	7680	9.2	49800	1650	5	-						
117.94	12	7680	10.1	49800	1610	5	-						
101.38*	14	7680	11.8	49800	3570	5	-						
92.47*	15	7680	12.8	49800	3030	6	-						
88.49	16	7680	13.5	49800	3510	5	-	**FA**	**107**	**AD4**	**245**		
83.99	17	7680	14.1	49800	2980	6	-	**FAF**	**107**	**AD4**	**265**		
74.52	19	7680	15.9	49800	2920	6	-	**F**	**107**	**AD4**	**260**	→ 318	
67.62	21	7680	17.5	49800	2860	6	-	**FF**	**107**	**AD4**	**290**		
58.12*	24	7680	20	47800	2760	6	-						
50.73	28	7680	23	45100	2650	6	-						
43.03	33	7680	28	42000	5730	6	-	**FA**	**107**	**AD5**	**255**		
37.61	37	7680	31	39500	5600	6	-	**FAF**	**107**	**AD5**	**280**		
31.80	44	7680	37	36500	5440	6	-	**F**	**107**	**AD5**	**275**	→ 318	
								FF	**107**	**AD5**	**300**		

i	n_a [1/min]	M_{amax}	P_e [kW]	F_{Ra} [1)] [N]	F_{Re} [N]	φ (/R)	⚠					m [kg]	
33.79*	41	7400	33	38300	6580	5	-						
27.57	51	7840	43	33300	5940	5	-						
25.14	56	7840	47	31500	5710	5	-						
21.76*	64	7840	54	28800	5270	5	-						
19.20*	73	7090	56	29600	6050	5	-						
16.58	84	6120	56	30600	6480	5	-	**FA**	**107**	**AD6**	**260**		
14.67	95	5410	56	30800	6780	5	-	**FAF**	**107**	**AD6**	**280**		
12.33	114	4540	56	30800	7140	5	M4	**F**	**107**	**AD6**	**275**	→ 318	
9.96	141	4000	61	29600	7220	5	M2,4-6	**FF**	**107**	**AD6**	**305**		
9.69	144	3580	56	29300	6050	7	-						
8.37	167	3090	56	29100	6480	7	-						
7.40	189	2730	56	28800	6780	7	-						
6.22	225	2290	56	28200	7140	7	M4						
5.03	279	2020	61	26800	7220	7	-						
FA127 AD.. , n_e = 1400 1/min													**12000 Nm**
170.83	8.2	12000	10.9	90000	3160	5	-						
153.67*	9.1	12000	12.1	90000	3120	5	-						
125.37	11	12000	14.8	90000	3000	5	-	**FA**	**127**	**AD4**	**390**		
114.34	12	12000	16.2	88000	2950	5	-	**FAF**	**127**	**AD4**	**430**	→ 318	
98.95	14	12000	18.8	83000	2860	5	-	**F**	**127**	**AD4**	**430**		
87.31*	16	12000	21	79000	2780	5	-	**FF**	**127**	**AD4**	**475**		
75.41*	19	12000	25	74300	2680	5	-						
70.07	20	12000	26	72100	4930	5	-						
63.91	22	12000	29	69400	4850	5	-	**FA**	**127**	**AD5**	**405**		
55.31	25	12000	33	65200	4710	5	-	**FAF**	**127**	**AD5**	**440**	→ 318	
48.80	29	12000	38	61300	4590	5	-	**F**	**127**	**AD5**	**440**		
42.15	33	12000	44	56800	4420	5	-	**FF**	**127**	**AD5**	**485**		
37.28	38	12000	50	53200	7220	5	-	**FA**	**127**	**AD6**	**415**		
								FAF	**127**	**AD6**	**455**	→ 318	
								F	**127**	**AD6**	**455**		
								FF	**127**	**AD6**	**495**		
31.33	45	12000	59	48300	17000	5	-	**FA**	**127**	**AD7**	**415**		
25.30	55	12000	73	42400	16600	5	-	**FAF**	**127**	**AD7**	**455**	→ 318	
								F	**127**	**AD7**	**450**		
								FF	**127**	**AD7**	**495**		
26.86	52	8500	48	55300	4990	5	-	**FA**	**127**	**AD6**	**405**		
24.57	57	8500	52	53300	4770	5	-	**FAF**	**127**	**AD6**	**440**	→ 318	
								F	**127**	**AD6**	**440**		
								FF	**127**	**AD6**	**485**		
21.38	65	12000	85	38000	23800	5	-						
18.87	74	10800	86	39600	24200	5	-						
16.36	86	11000	102	35400	23900	5	-						
14.55	96	11000	114	32600	23600	5	M2						
12.54	112	10000	120	33300	23900	5	M2-6	**FA**	**127**	**AD8**	**425**		
10.19	137	9040	134	32700	23900	5	M1-6	**FAF**	**127**	**AD8**	**465**	→ 318	
8.86	158	7000	119	36400	22800	6	M2,4-6	**F**	**127**	**AD8**	**460**		
7.88	178	6000	115	37000	23500	6	M2,5,6	**FF**	**127**	**AD8**	**510**		
6.80	206	6030	134	34700	23200	7	M1-6						
5.52	254	4900	134	34500	23900	7	M1-6						
4.68	299	4150	134	34100	24400	7	M1-6						
FA157 AD.. , n_e = 1400 1/min													**18000 Nm**
267.43	5.2	18000	10.6	100300	6300	5	-						
217.62*	6.4	18000	12.9	100300	6240	5	-						
178.20*	7.9	18000	15.7	100300	6140	5	-						
162.96	8.6	18000	17.1	100300	6110	5	-						
141.80*	9.9	18000	19.7	100300	6030	5	-	**FA**	**157**	**AD5**	**660**		
125.14	11	18000	22	100300	5960	5	-	**FAF**	**157**	**AD5**	**720**	→ 318	
108.49	13	18000	26	100300	5870	5	-	**F**	**157**	**AD5**	**680**		
96.53*	14	18000	29	100300	5780	5	-	**FF**	**157**	**AD5**	**790**		
85.80*	16	18000	32	95800	4350	5	-						
78.46	18	18000	35	92300	4280	5	-						
68.28*	21	18000	40	87000	4130	5	-						
60.25	23	18000	46	82500	3950	5	-						
52.24	27	18000	53	77500	6790	5	-	**FA**	**157**	**AD6**	**680**		
								FAF	**157**	**AD6**	**740**	→ 318	
								F	**157**	**AD6**	**700**		
								FF	**157**	**AD6**	**810**		



F..
F.. AD.. [kW]

i	n_a [1/min]	M_{amax}	P_e [kW]	F_{Ra} 1) [N]	F_{Re} [N]	φ (/R)	⚠					m [kg]	
46.48*	30	18000	59	73600	16700	5	-	**FA**	**157**	**AD7**	**670**	→ 318
40.06	35	18000	69	68900	16500	5	-	**FAF**	**157**	**AD7**	**730**	
32.55	43	18000	85	62500	15800	5	M2	**F**	**157**	**AD7**	**690**	
								FF	**157**	**AD7**	**800**	
27.60	51	18000	100	57800	25800	5	M2-6	**FA**	**157**	**AD8**	**700**	→ 318
								FAF	**157**	**AD8**	**750**	
								F	**157**	**AD8**	**720**	
								FF	**157**	**AD8**	**820**	
53.55	26	8000	23	98400	4560	4	-	**FA**	**157**	**AD5**	**650**	→ 318
								FAF	**157**	**AD5**	**710**	
								F	**157**	**AD5**	**680**	
								FF	**157**	**AD5**	**780**	
43.94*	32	10000	35	87800	6580	4	-	**FA**	**157**	**AD6**	**670**	→ 318
35.75*	39	11000	47	79300	5200	4	-	**FAF**	**157**	**AD6**	**730**	
								F	**157**	**AD6**	**690**	
								FF	**157**	**AD6**	**800**	
28.60*	49	17000	90	60800	23400	4	-					→ 318
25.43	55	15000	89	61500	24000	4	-	**FA**	**157**	**AD8**	**690**	
22.16	63	18000	123	51800	22500	4	-	**FAF**	**157**	**AD8**	**750**	
19.77	71	17000	130	50900	22600	4	-	**F**	**157**	**AD8**	**710**	
16.85	83	18000	161	44900	21700	5	M2,4-6	**FF**	**157**	**AD8**	**820**	
13.96	100	17000	184	42500	21500	5	M1-6					
11.92	117	16000	203	40900	21400	5	M1-6					

9.4 F.. AM.. (IEC) [mm]

42 040 02 01

F27..

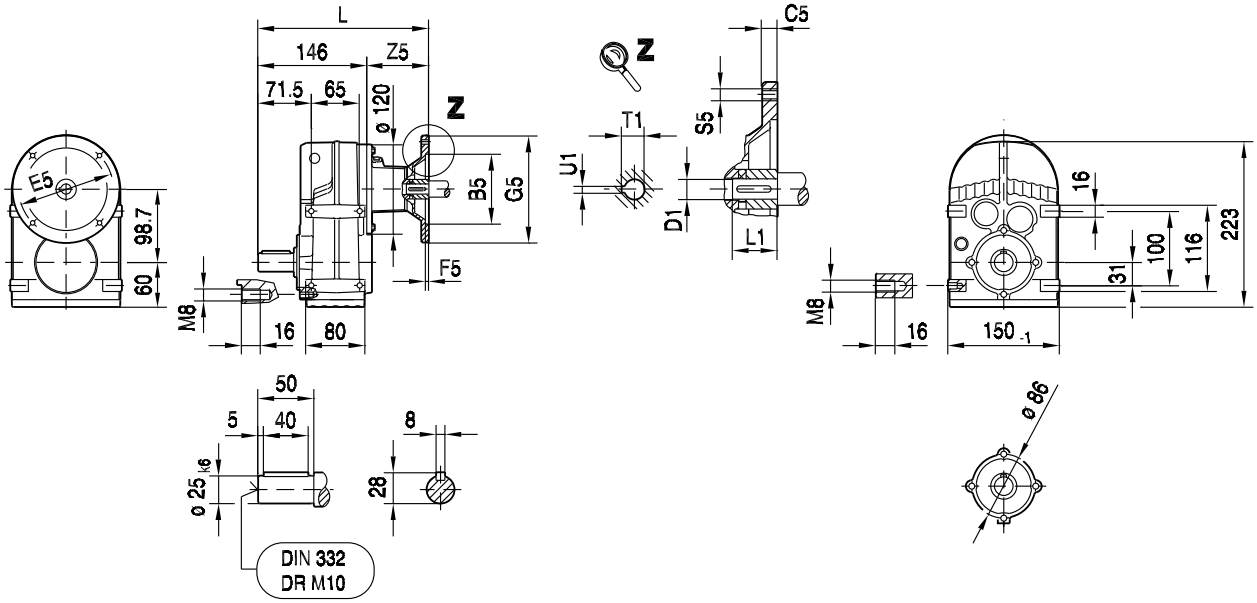

FA27B..

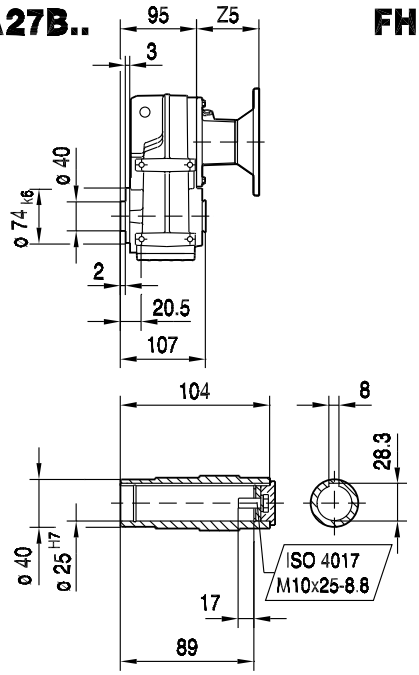

FH27B..

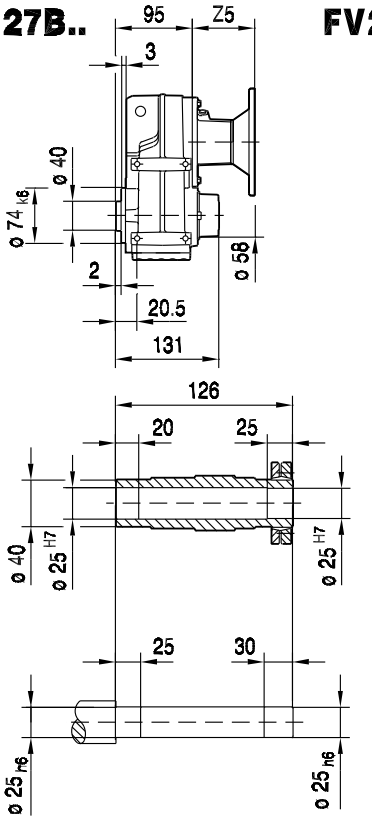

FV27B..

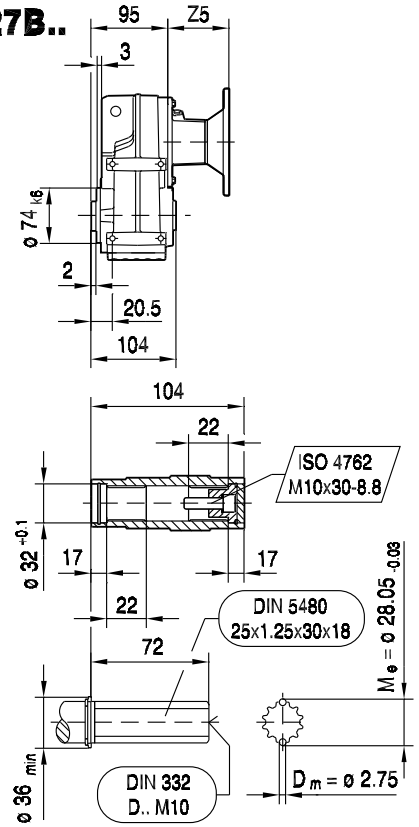

(→ 130)	B5	C5	E5	F5	G5	L	S5	Z5	D1	L1	T1	U1	
AM63	95	10	115	3.5	140	218	M8	72	11	23	12.8	4	
AM71	110	10	130	4.0	160	218	M8	72	14	30	16.3	5	
AM80	130	12	165	4.5	200	252	M10	106	19	40	21.8	6	
AM90	130	12	165	4.5	200	252	M10	106	24	50	27.3	8	

42 041 02 01

FF27..

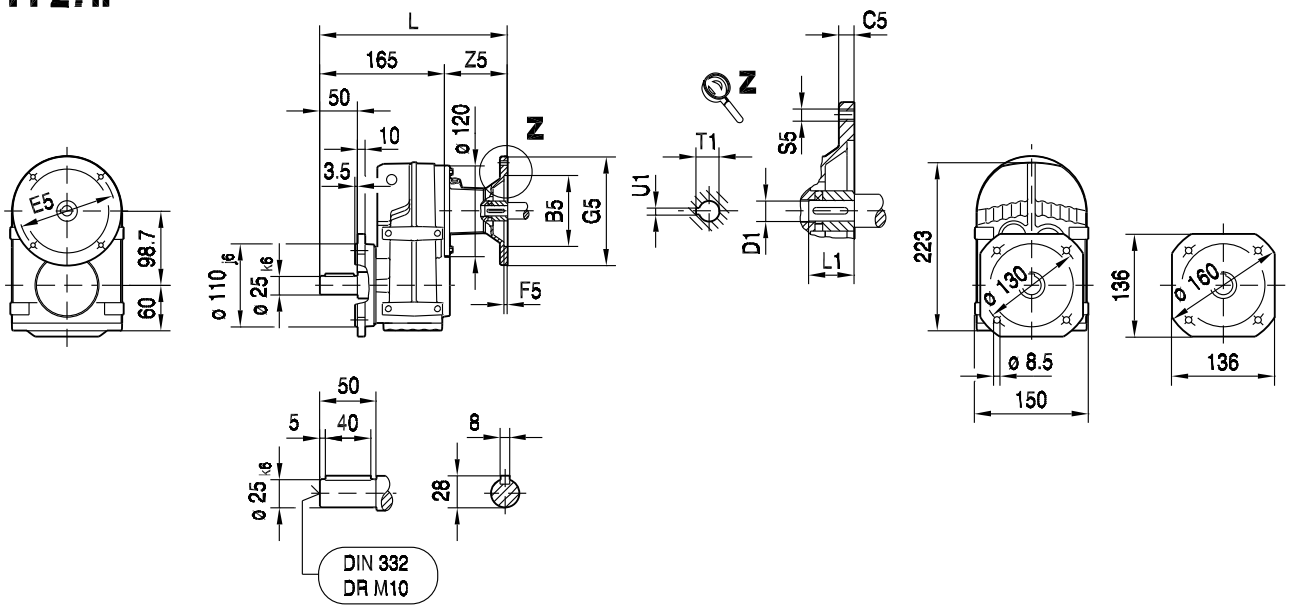

FAF27..

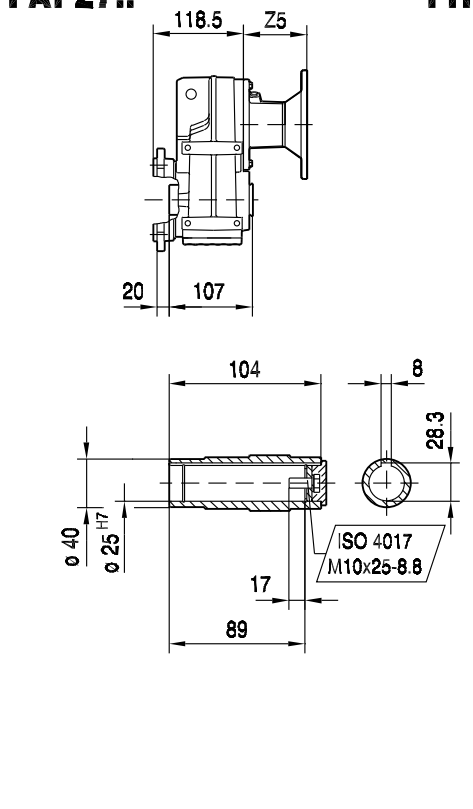

FHF27..

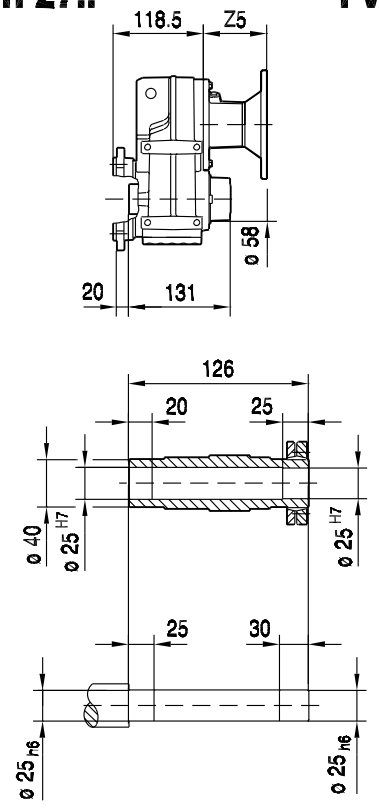

FVF27..

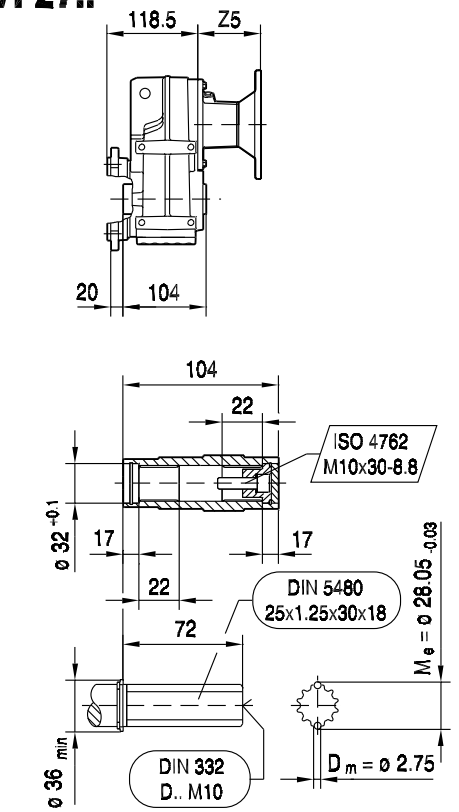

(→ 130)	B5	C5	E5	F5	G5	L	S5	Z5	D1	L1	T1	U1	
AM63	95	10	115	3.5	140	237	M8	72	11	23	12.8	4	
AM71	110	10	130	4.0	160	237	M8	72	14	30	16.3	5	
AM80	130	12	165	4.5	200	271	M10	106	19	40	21.8	6	
AM90	130	12	165	4.5	200	271	M10	106	24	50	27.3	8	

42 042 02 01

FA27..

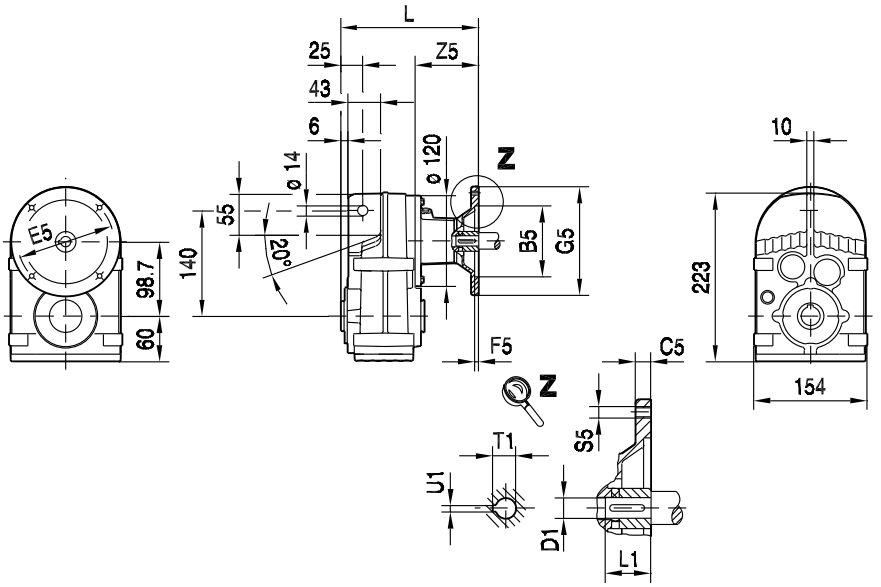

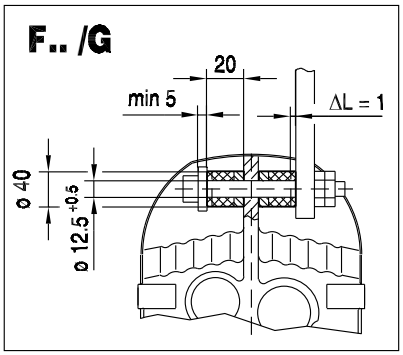

FA27..

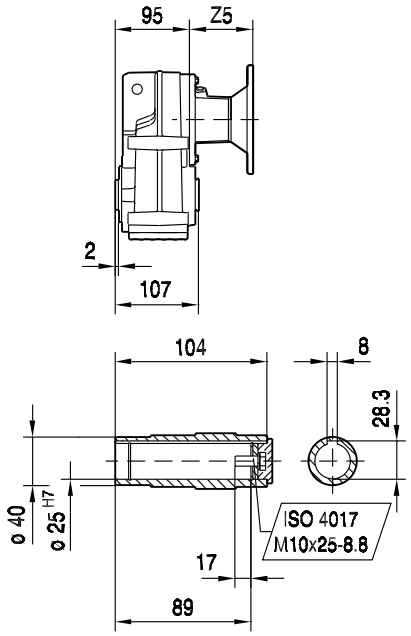

FH27..

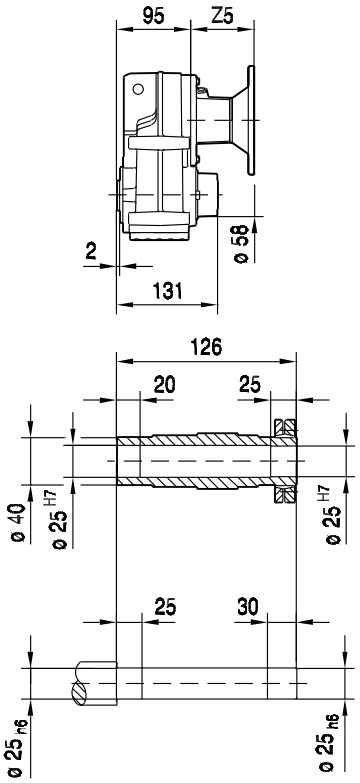

FV27..

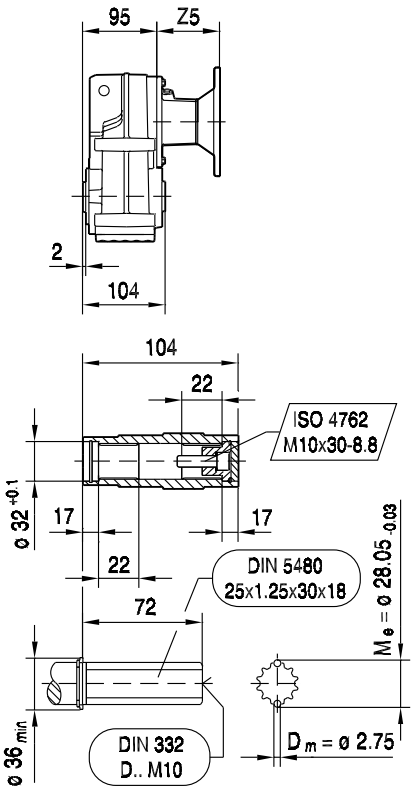

(→ 130)	B5	C5	E5	F5	G5	L	S5	Z5	D1	L1	T1	U1	
AM63	95	10	115	3.5	140	167	M8	72	11	23	12.8	4	
AM71	110	10	130	4.0	160	167	M8	72	14	30	16.3	5	
AM80	130	12	165	4.5	200	201	M10	106	19	40	21.8	6	
AM90	130	12	165	4.5	200	201	M10	106	24	50	27.3	8	

42 043 02 01

FAZ27..

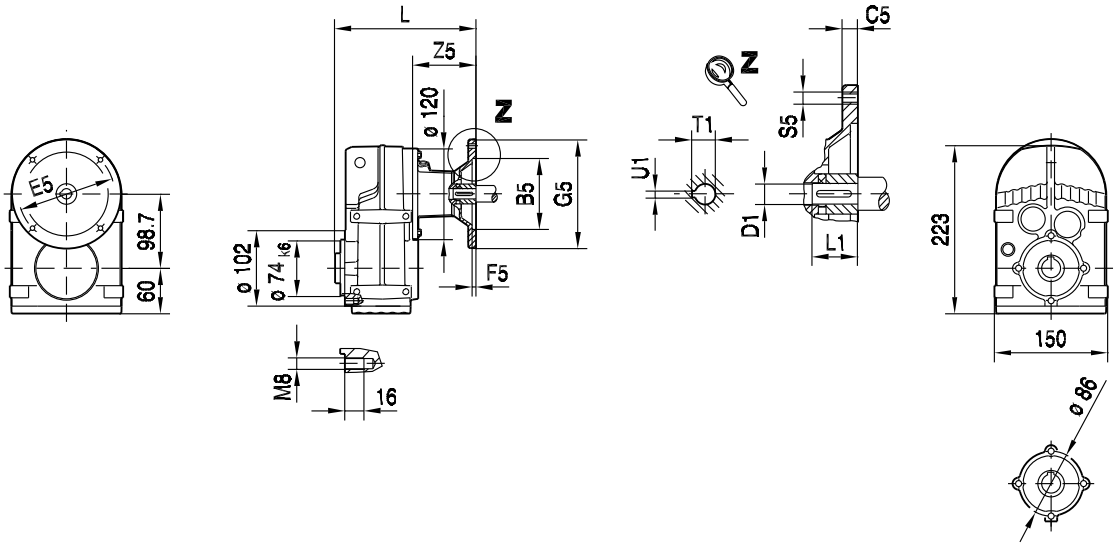

FAZ27..

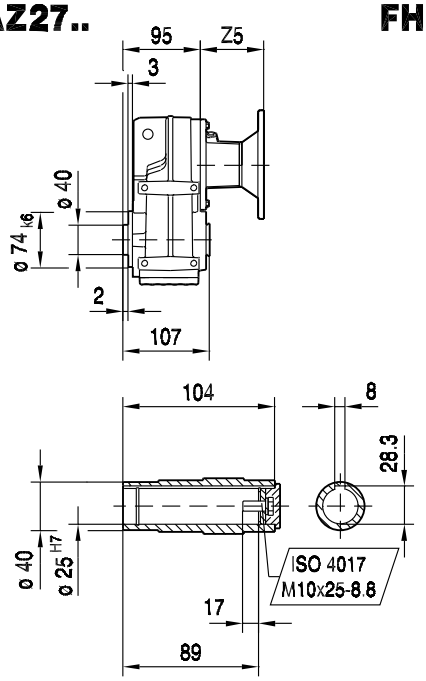

FHZ27..

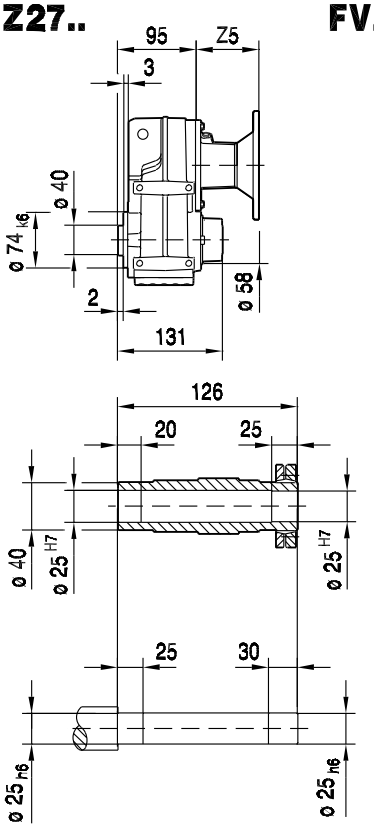

FVZ27..

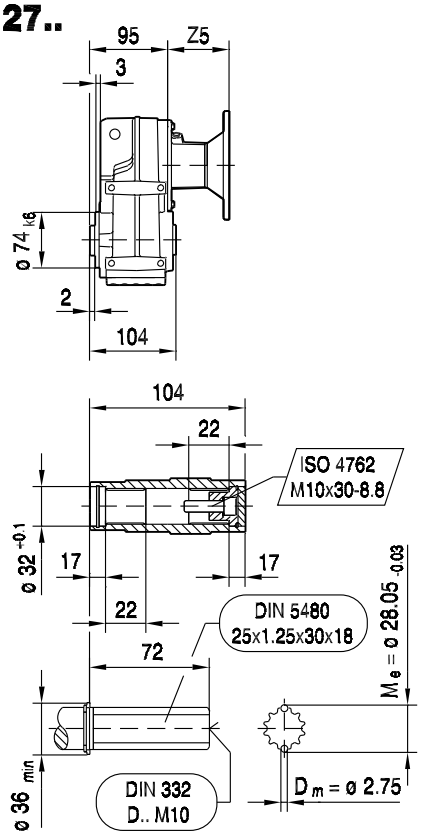

(→ 130)	B5	C5	E5	F5	G5	L	S5	Z5	D1	L1	T1	U1	
AM63	95	10	115	3.5	140	167	M8	72	11	23	12.8	4	
AM71	110	10	130	4.0	160	167	M8	72	14	30	16.3	5	
AM80	130	12	165	4.5	200	201	M10	106	19	40	21.8	6	
AM90	130	12	165	4.5	200	201	M10	106	24	50	27.3	8	

F37..

42 044 02 01

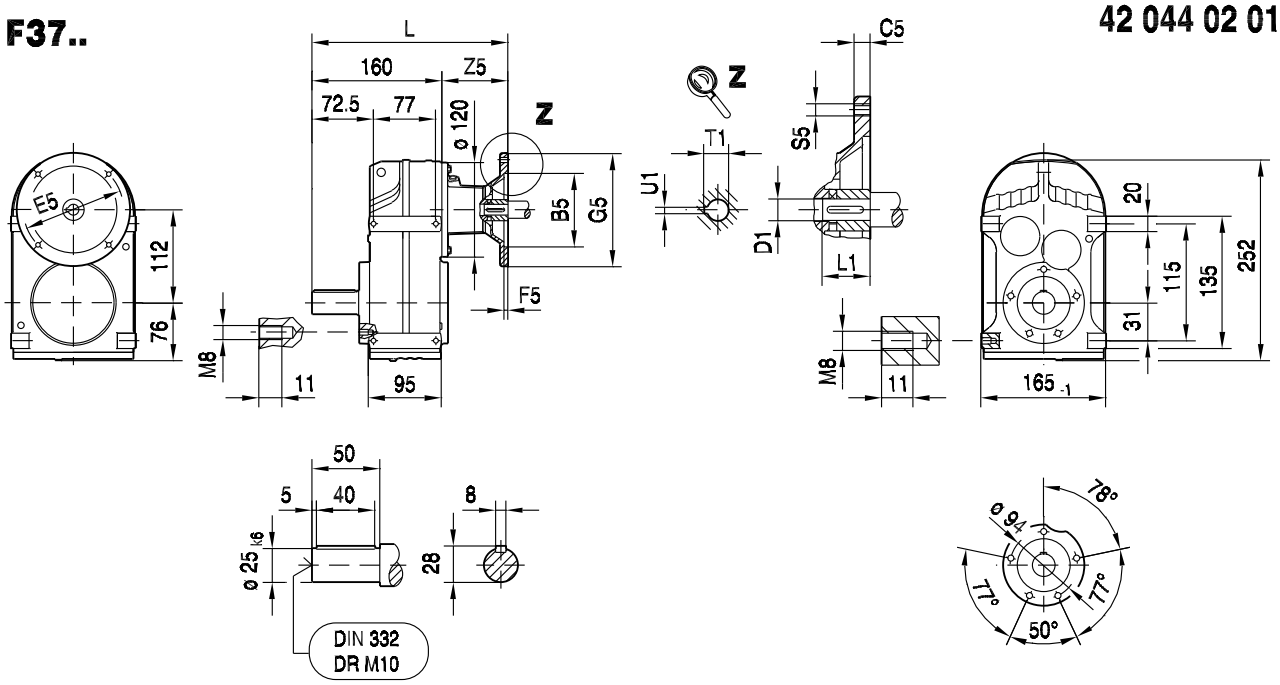

FA37B..

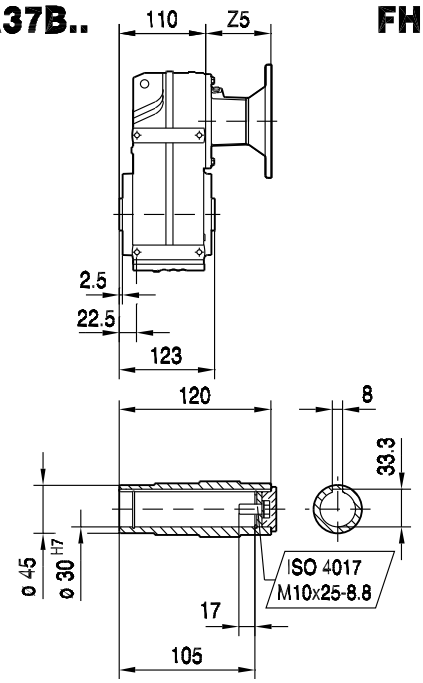

FH37B..

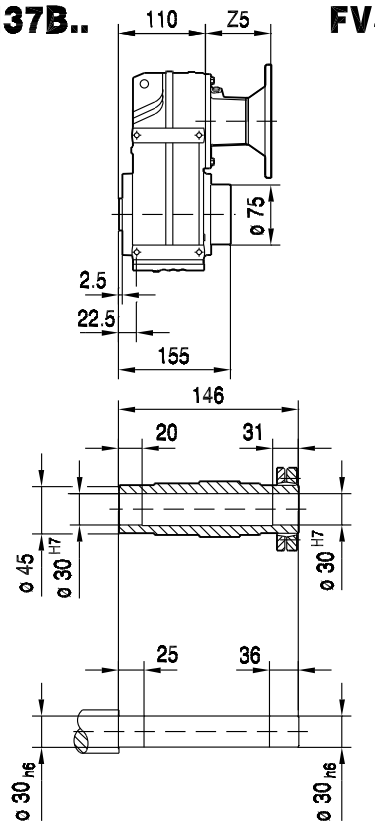

FV37B..

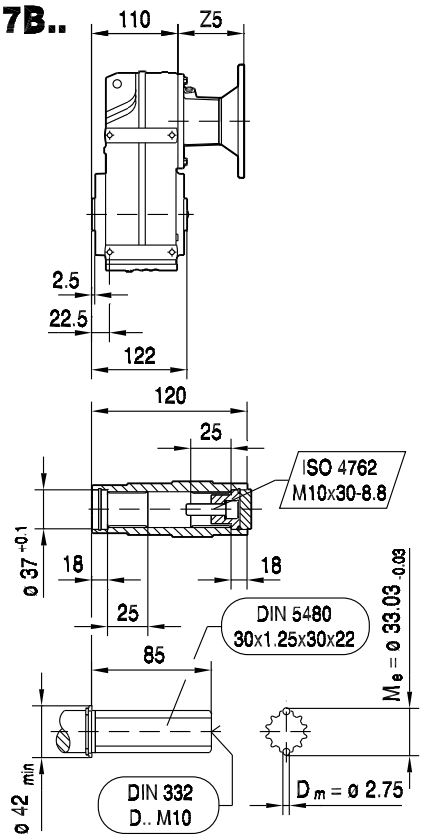

(→ 130)	B5	C5	E5	F5	G5	L	S5	Z5	D1	L1	T1	U1	
AM63	95	10	115	3.5	140	232	M8	72	11	23	12.8	4	
AM71	110	10	130	4.0	160	232	M8	72	14	30	16.3	5	
AM80	130	12	165	4.5	200	266	M10	106	19	40	21.8	6	
AM90	130	12	165	4.5	200	266	M10	106	24	50	27.3	8	

FF37..

42 045 02 01

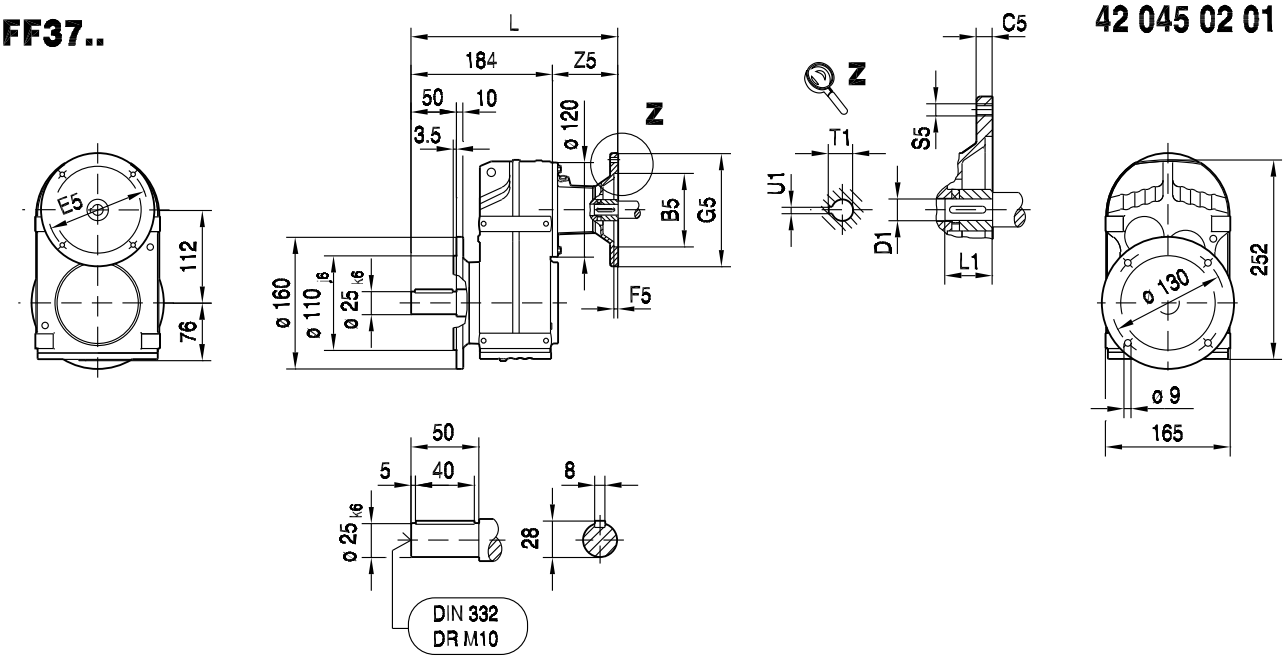

FAF37..

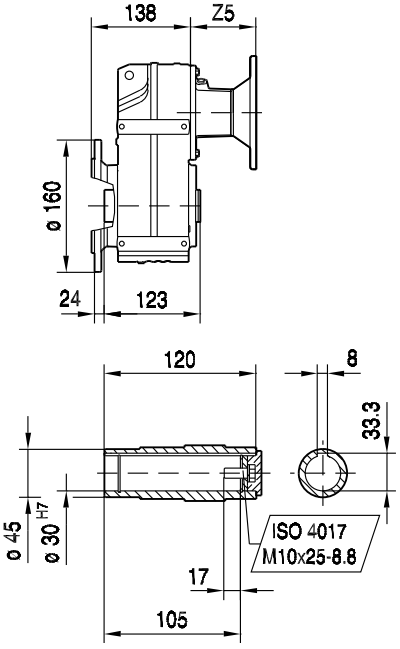

FHF37..

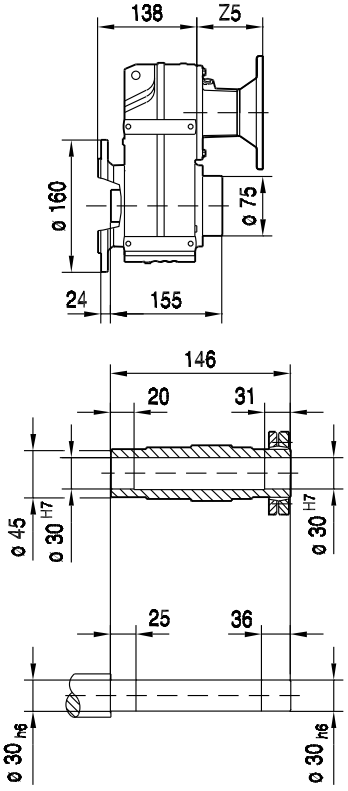

FVF37..

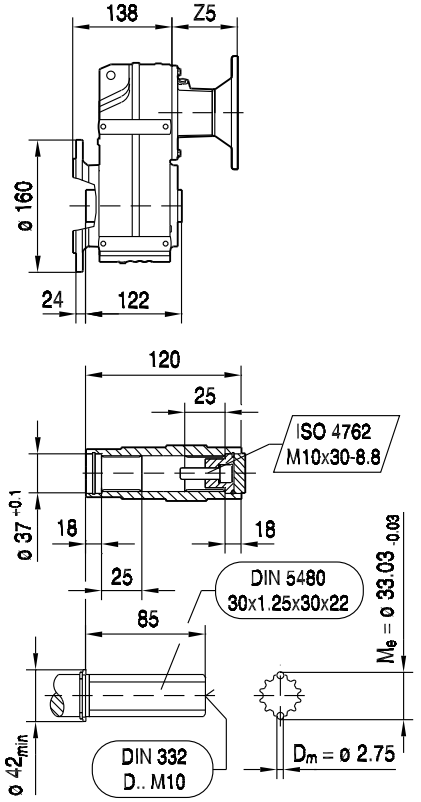

(→ 130)	B5	C5	E5	F5	G5	L	S5	Z5	D1	L1	T1	U1	
AM63	95	10	115	3.5	140	256	M8	72	11	23	12.8	4	
AM71	110	10	130	4.0	160	256	M8	72	14	30	16.3	5	
AM80	130	12	165	4.5	200	290	M10	106	19	40	21.8	6	
AM90	130	12	165	4.5	200	290	M10	106	24	50	27.3	8	

FA37..

42 046 02 01

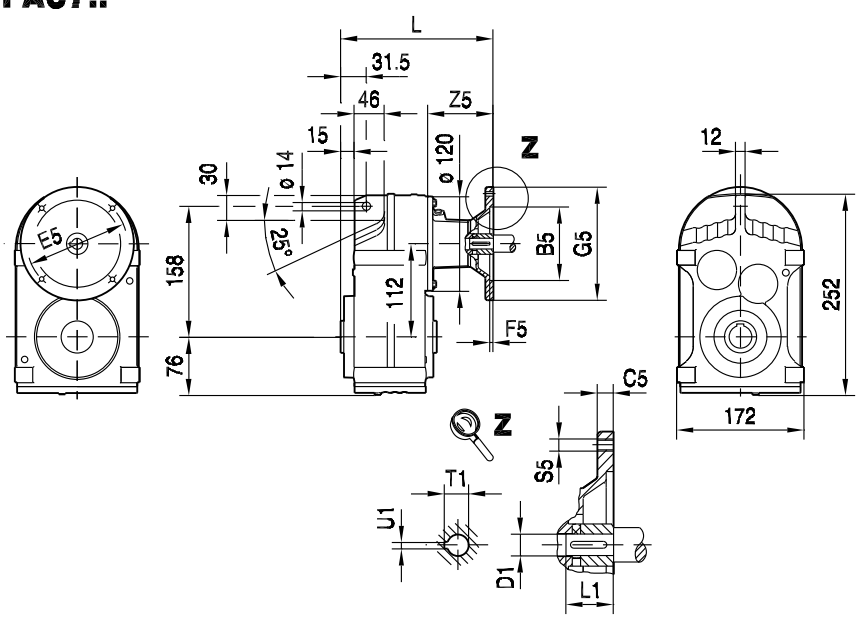

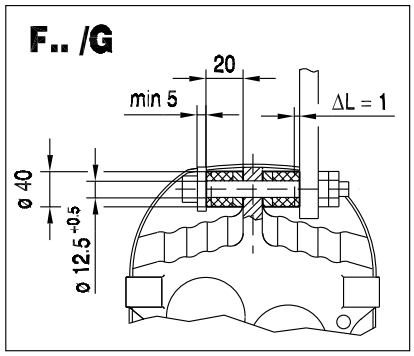

9

FA37..

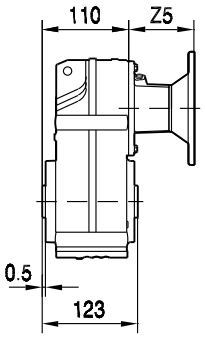

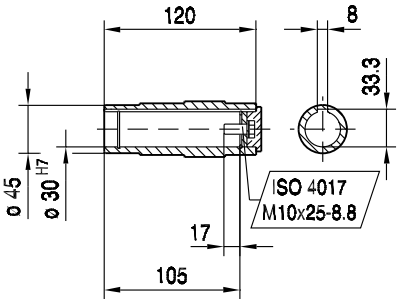

FH37..

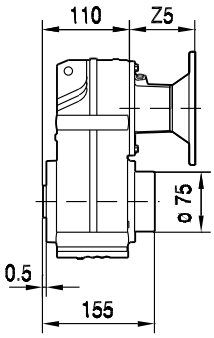

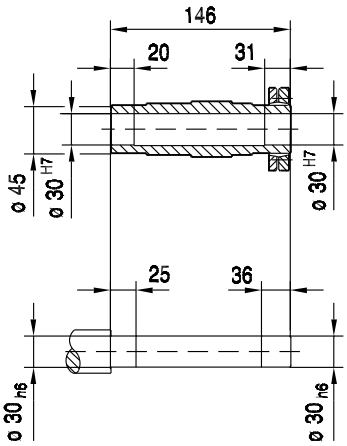

FV37..

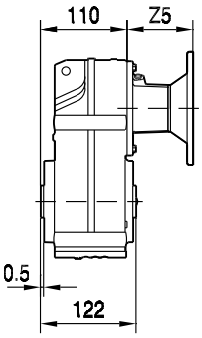

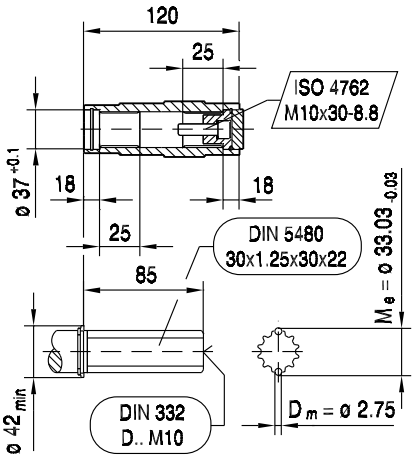

(→ 130)	B5	C5	E5	F5	G5	L	S5	Z5	D1	L1	T1	U1	
AM63	95	10	115	3.5	140	182	M8	72	11	23	12.8	4	
AM71	110	10	130	4.0	160	182	M8	72	14	30	16.3	5	
AM80	130	12	165	4.5	200	216	M10	106	19	40	21.8	6	
AM90	130	12	165	4.5	200	216	M10	106	24	50	27.3	8	

FAZ37..

42 047 02 01

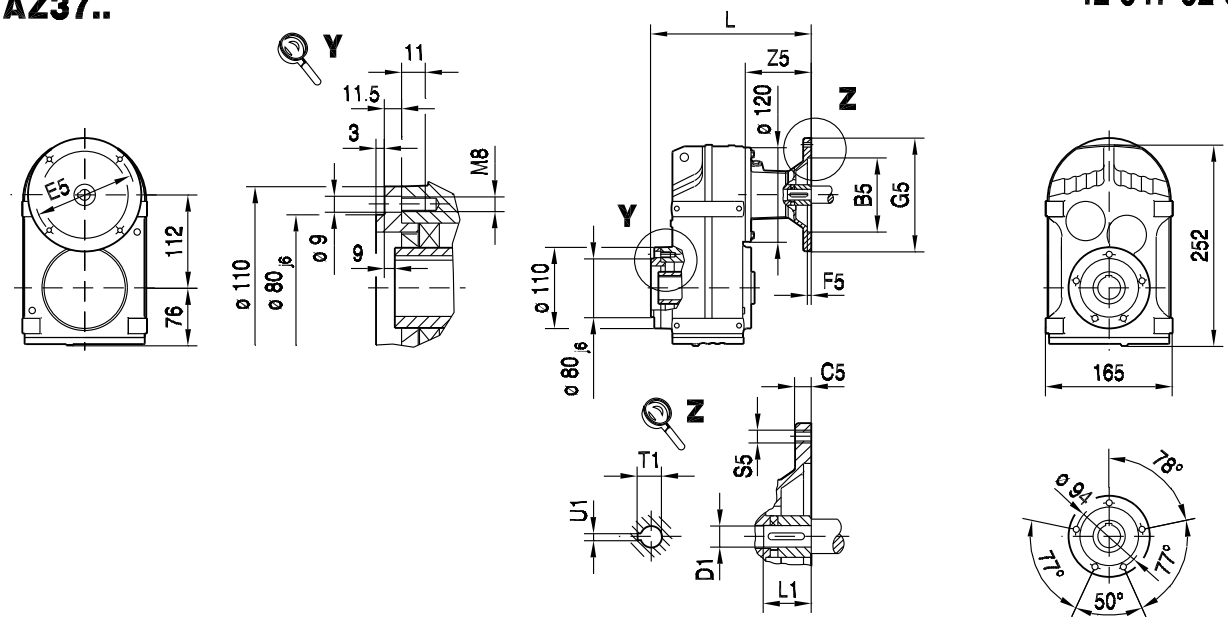

FAZ37..

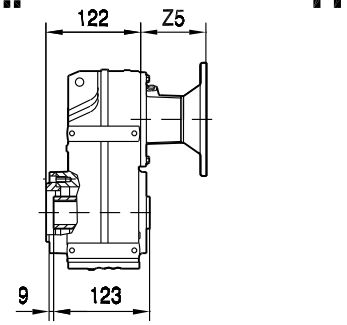

FHZ37..

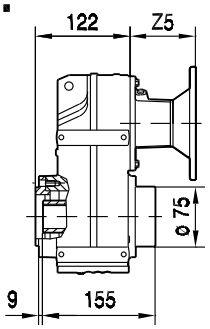

FVZ37..

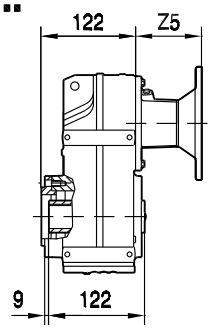

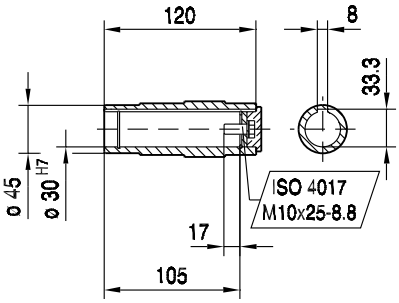

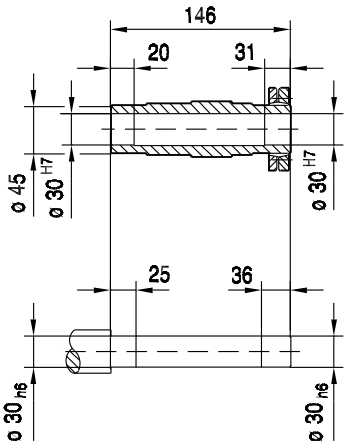

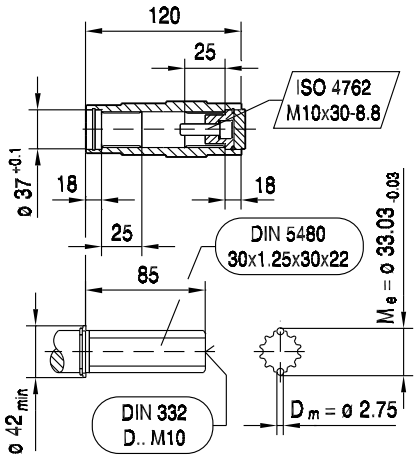

(→ 130)	B5	C5	E5	F5	G5	L	S5	Z5	D1	L1	T1	U1	
AM63	95	10	115	3.5	140	194	M8	72	11	23	12.8	4	
AM71	110	10	130	4.0	160	194	M8	72	14	30	16.3	5	
AM80	130	12	165	4.5	200	228	M10	106	19	40	21.8	6	
AM90	130	12	165	4.5	200	228	M10	106	24	50	27.3	8	

FT37..

42 013 00 04

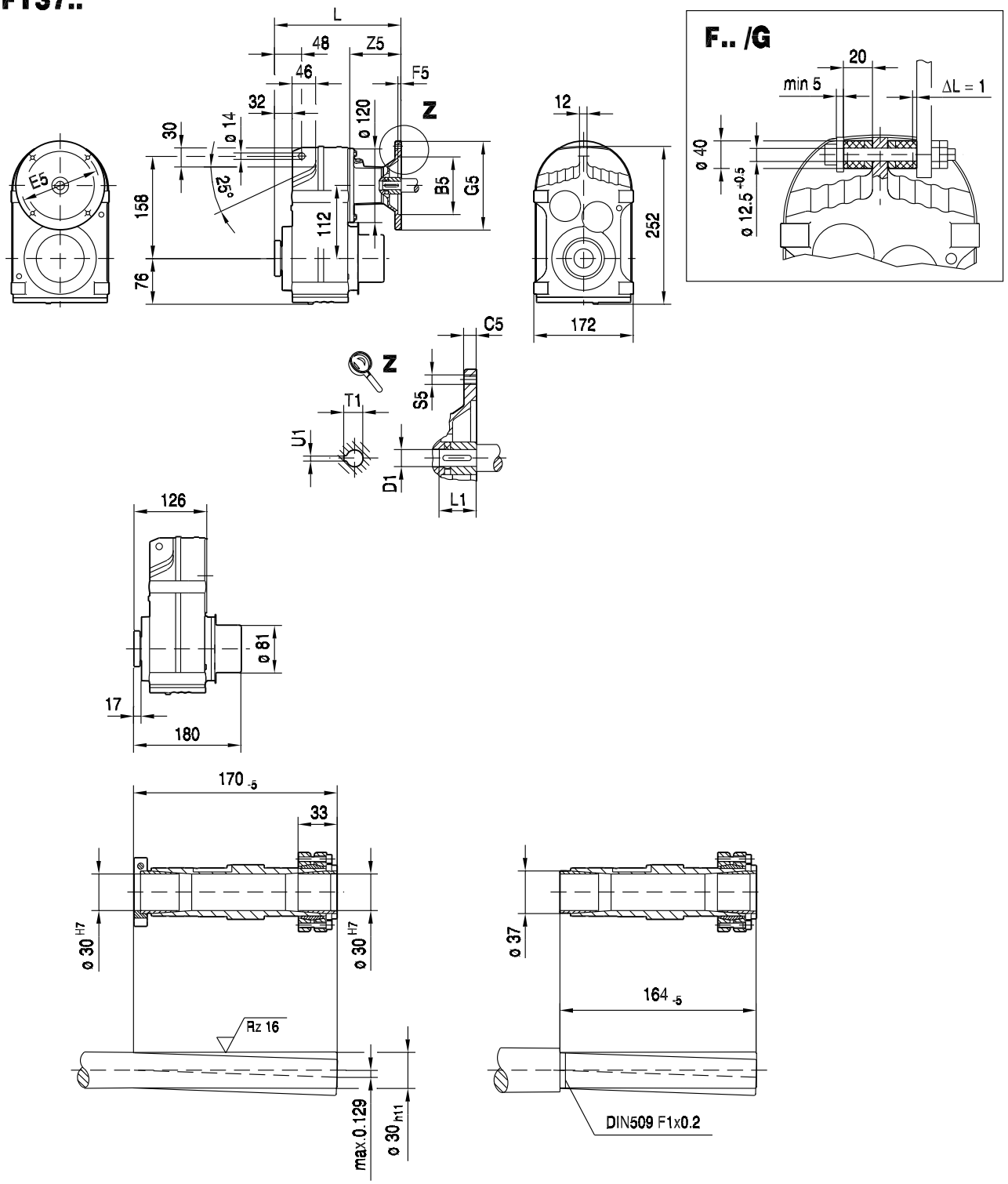

(→ 130)	B5	C5	E5	F5	G5	L	S5	Z5	D1	L1	T1	U1	
AM63	95	10	115	3.5	140	198	M8	72	11	23	12.8	4	
AM71	110	10	130	4.0	160	198	M8	72	14	30	16.3	5	
AM80	130	12	165	4.5	200	232	M10	106	19	40	21.8	6	
AM90	130	12	165	4.5	200	232	M10	106	24	50	27.3	8	

F47..

42 048 03 01

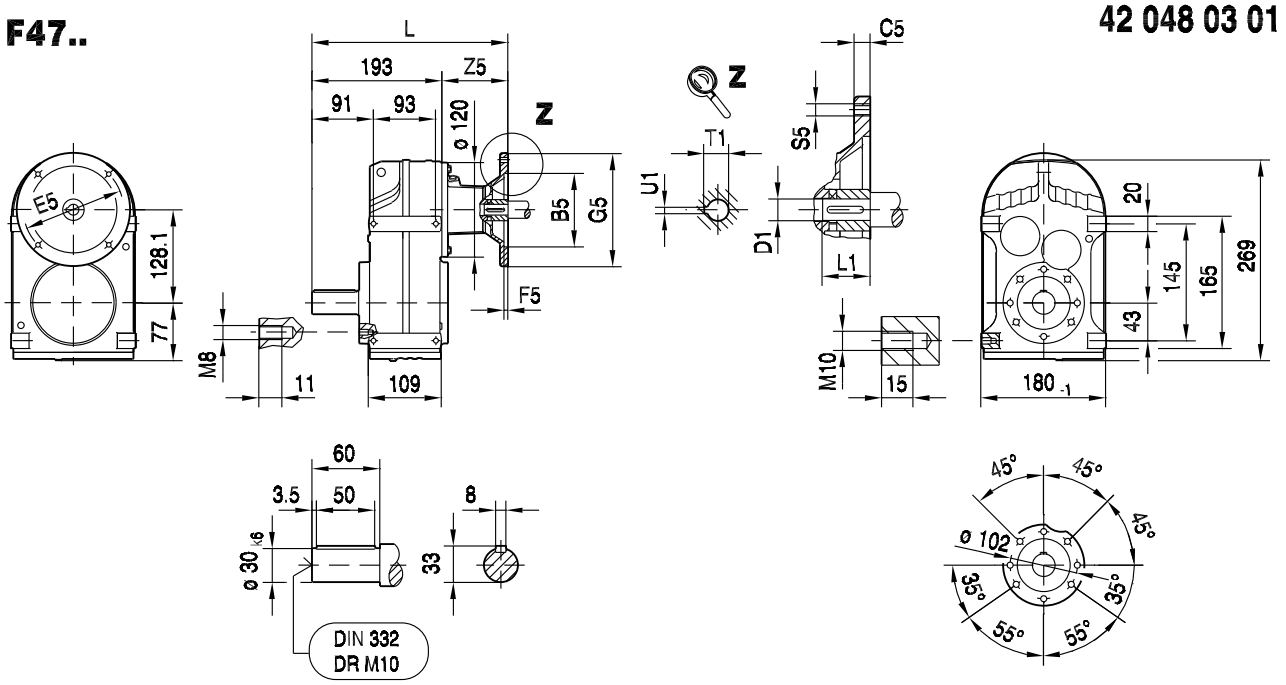

FA47B..

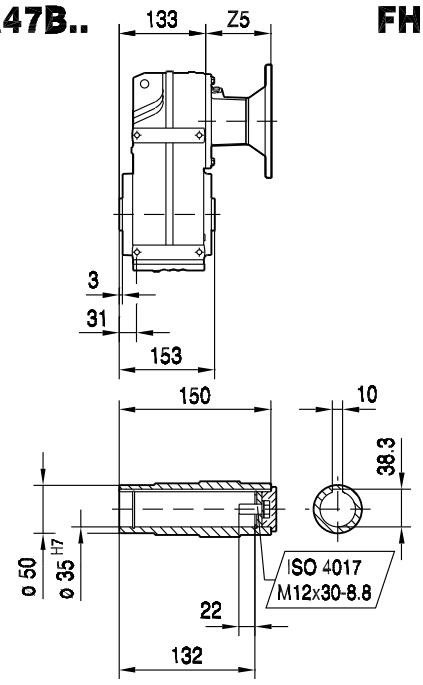

FH47B..

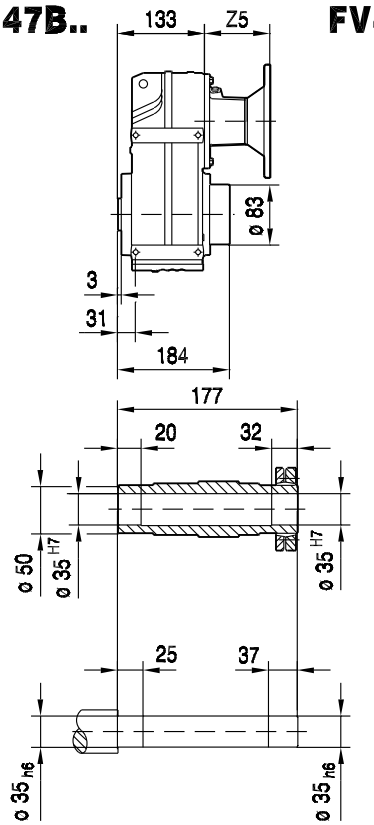

FV47B..

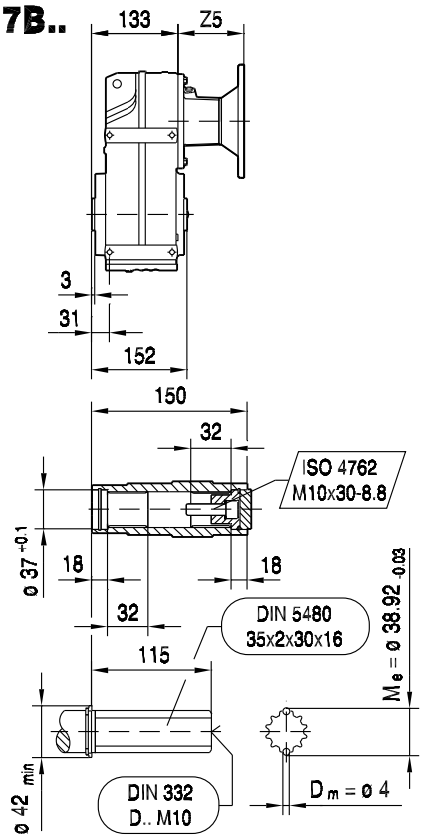

(→ 130)	B5	C5	E5	F5	G5	L	S5	Z5	D1	L1	T1	U1	
AM63	95	10	115	3.5	140	265	M8	72	11	23	12.8	4	
AM71	110	10	130	4.0	160	265	M8	72	14	30	16.3	5	
AM80	130	12	165	4.5	200	299	M10	106	19	40	21.8	6	
AM90	130	12	165	4.5	200	299	M10	106	24	50	27.3	8	

FF47..

42 049 02 01

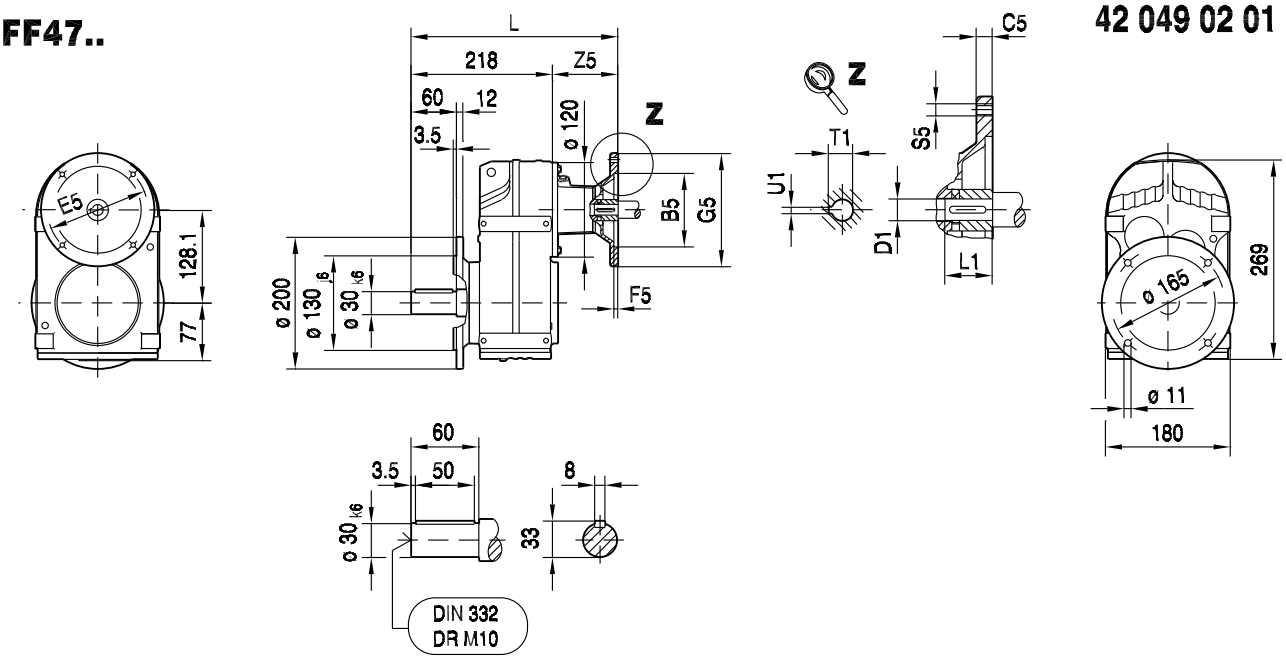

FAF47..

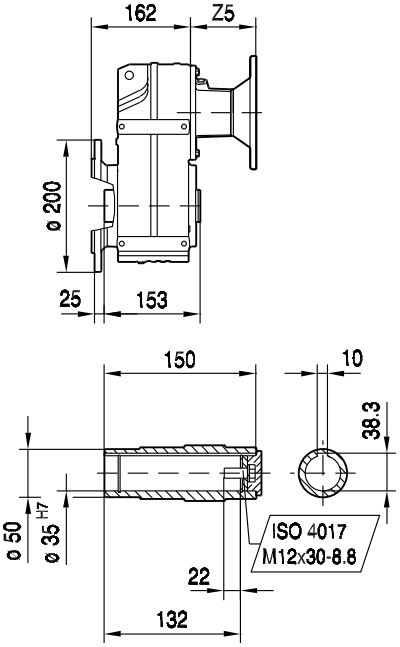

FHF47..

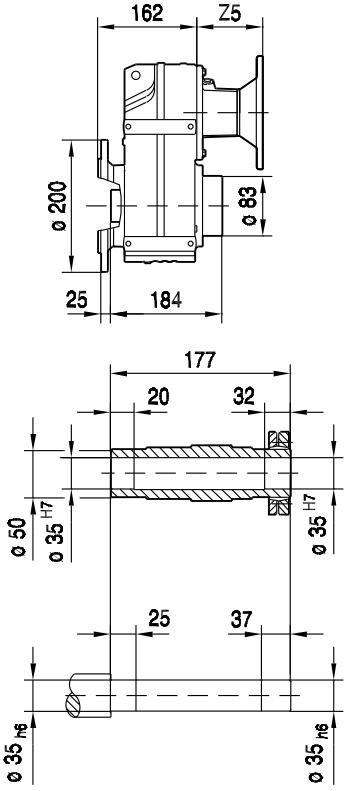

FVF47..

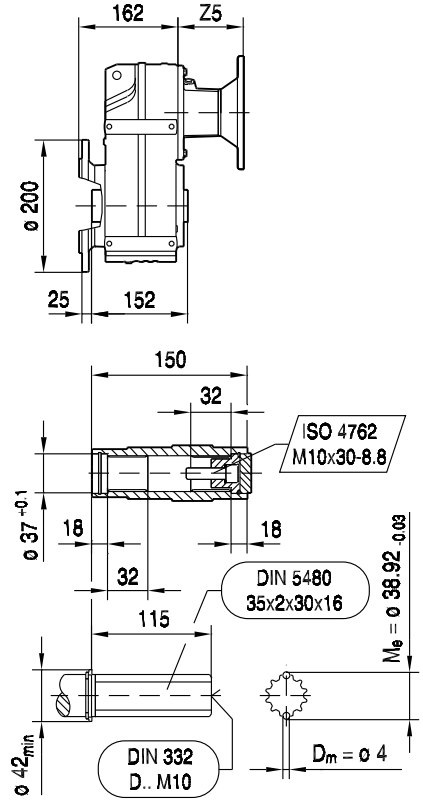

(→ 130)	B5	C5	E5	F5	G5	L	S5	Z5	D1	L1	T1	U1	
AM63	95	10	115	3.5	140	290	M8	72	11	23	12.8	4	
AM71	110	10	130	4.0	160	290	M8	72	14	30	16.3	5	
AM80	130	12	165	4.5	200	324	M10	106	19	40	21.8	6	
AM90	130	12	165	4.5	200	324	M10	106	24	50	27.3	8	

FA47..

42 050 02 01

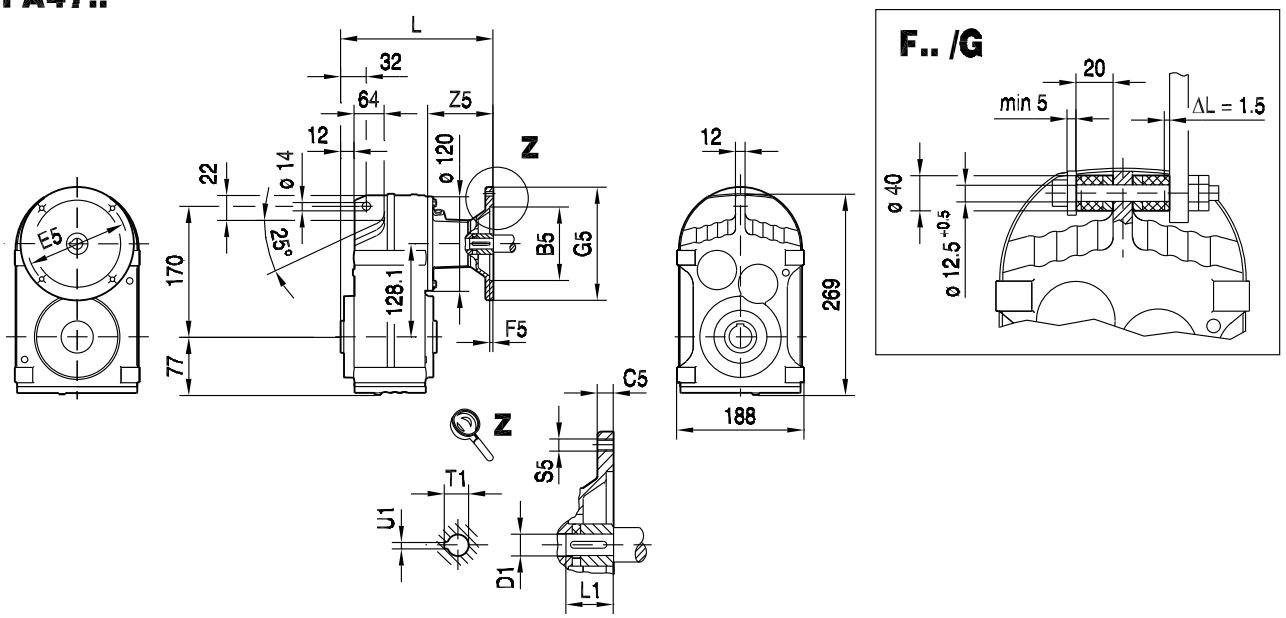

FA47..

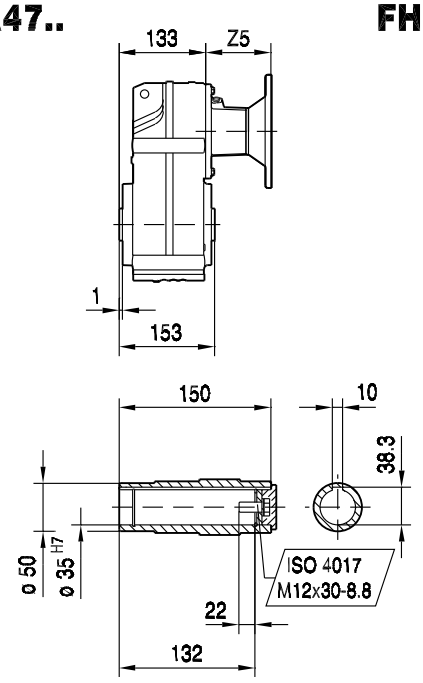

FH47..

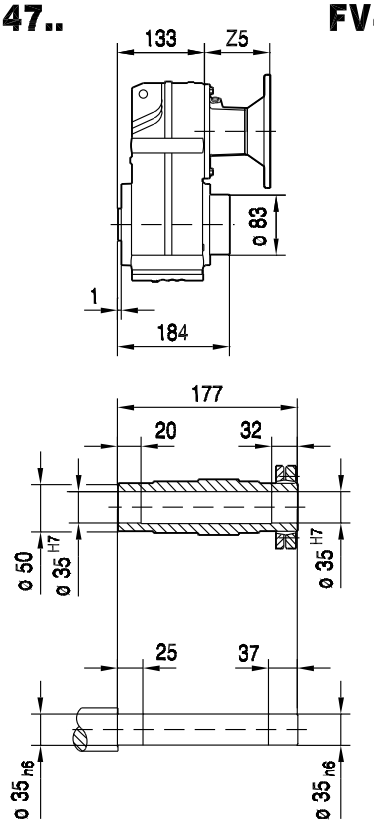

FV47..

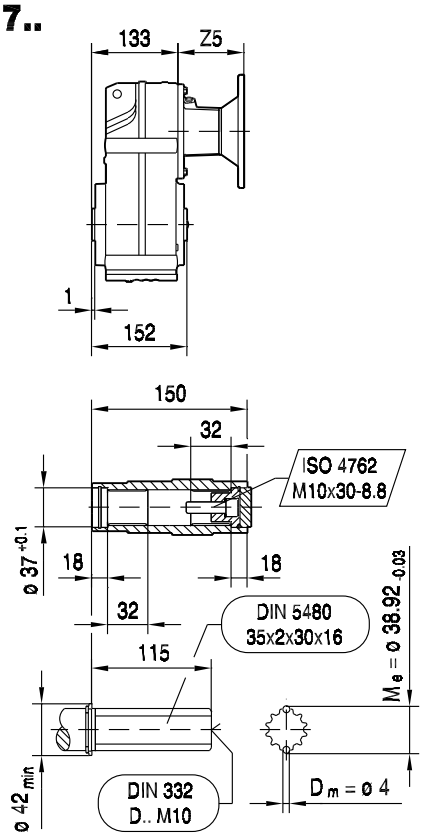

(→ 130)	B5	C5	E5	F5	G5	L	S5	Z5	D1	L1	T1	U1	
AM63	95	10	115	3.5	140	205	M8	72	11	23	12.8	4	
AM71	110	10	130	4.0	160	205	M8	72	14	30	16.3	5	
AM80	130	12	165	4.5	200	239	M10	106	19	40	21.8	6	
AM90	130	12	165	4.5	200	239	M10	106	24	50	27.3	8	

FAZ47..

42 051 02 01

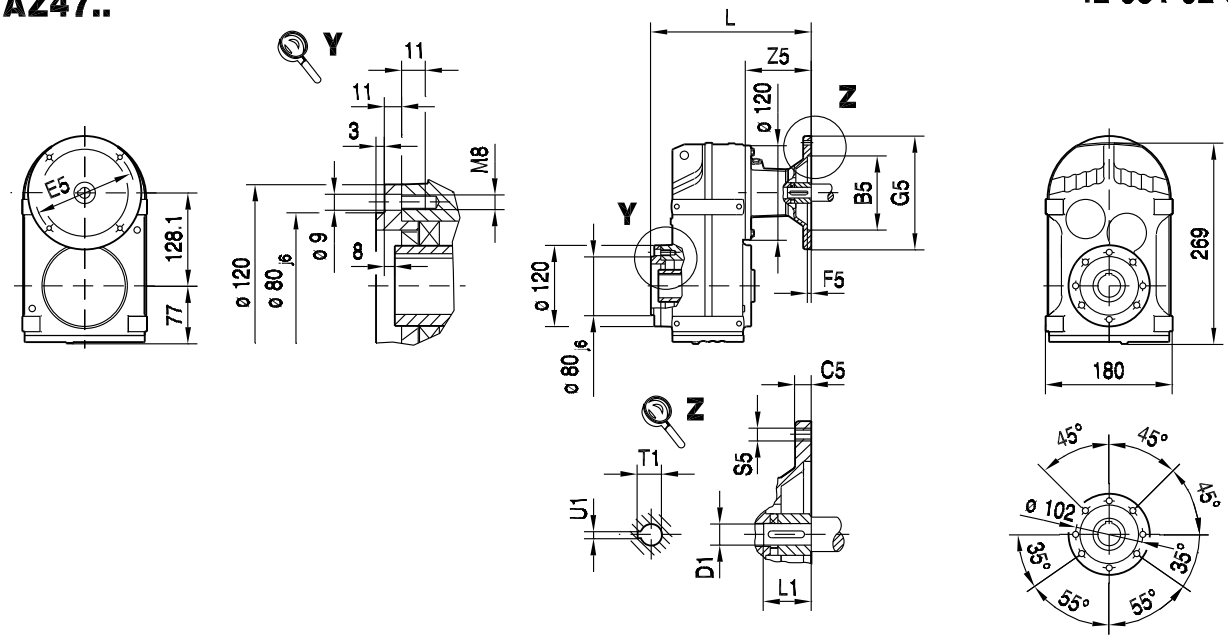

9

FAZ47..

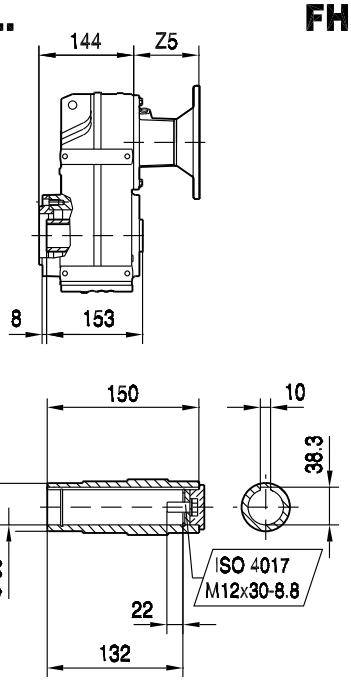

FHZ47..

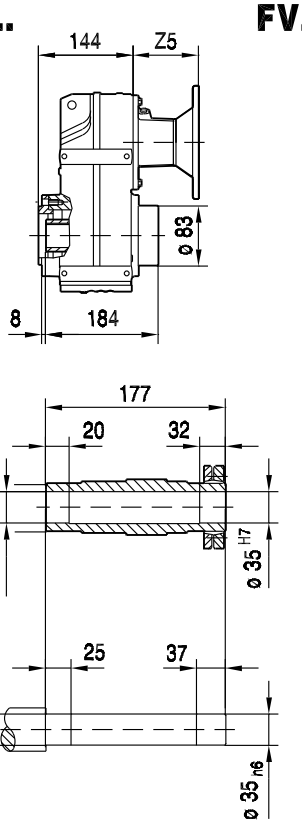

FVZ47..

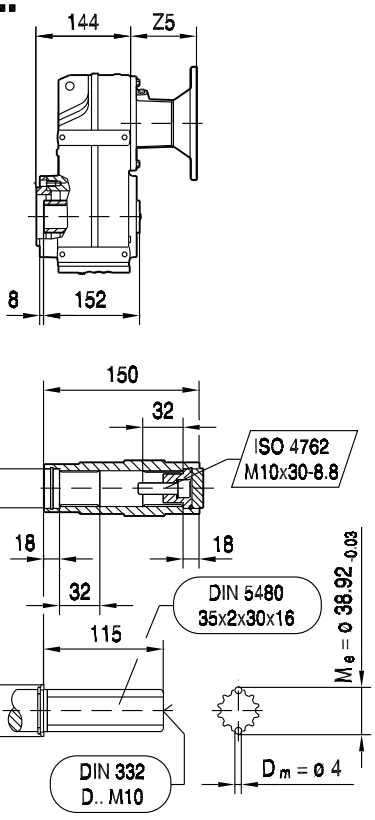

(→ 130)	B5	C5	E5	F5	G5	L	S5	Z5	D1	L1	T1	U1	
AM63	95	10	115	3.5	140	216	M8	72	11	23	12.8	4	
AM71	110	10	130	4.0	160	216	M8	72	14	30	16.3	5	
AM80	130	12	165	4.5	200	250	M10	106	19	40	21.8	6	
AM90	130	12	165	4.5	200	250	M10	106	24	50	27.3	8	

FT47..

42 014 00 04

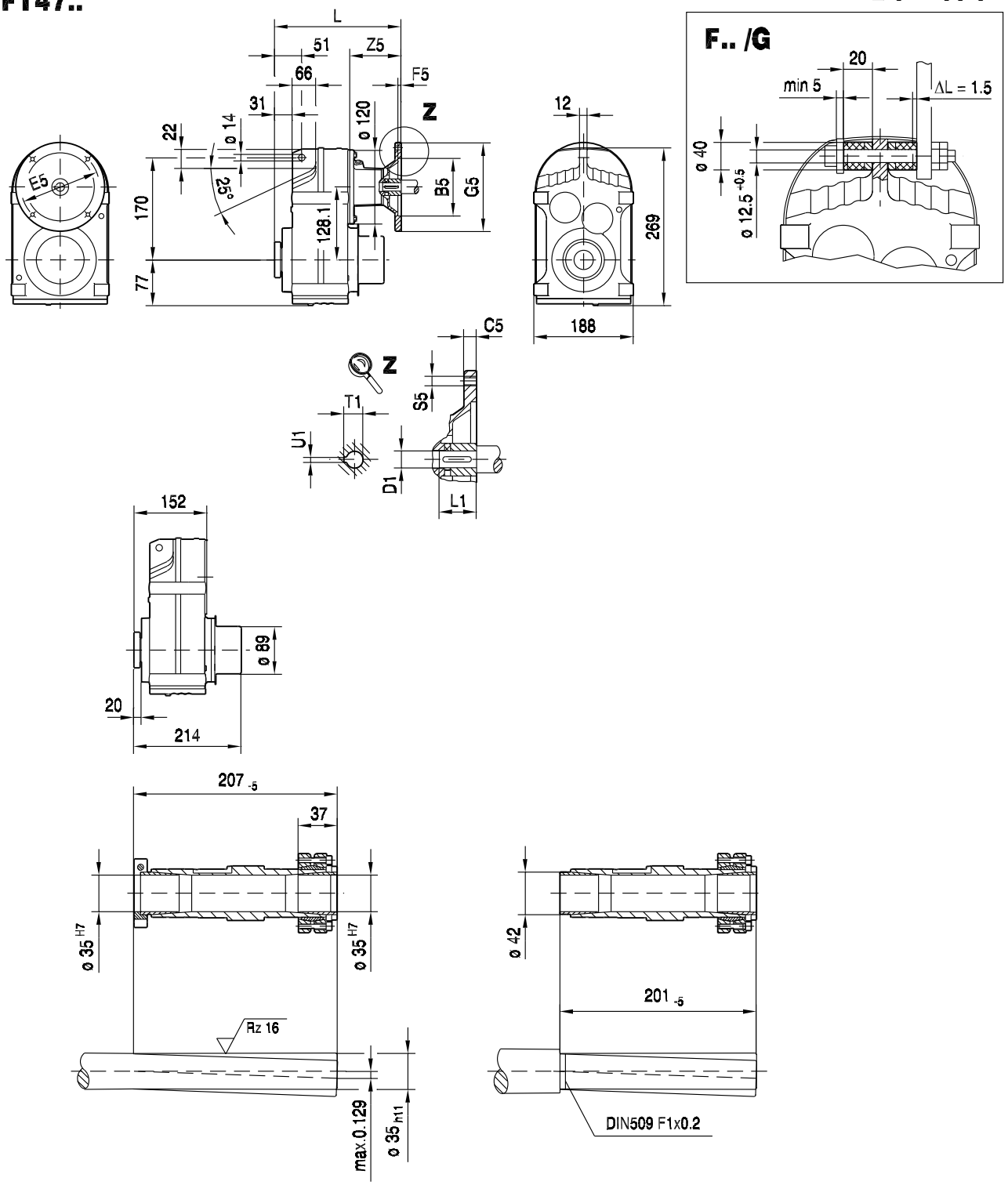

(→ 130)	B5	C5	E5	F5	G5	L	S5	Z5	D1	L1	T1	U1	
AM63	95	10	115	3.5	140	223	M8	72	11	23	12.8	4	
AM71	110	10	130	4.0	160	223	M8	72	14	30	16.3	5	
AM80	130	12	165	4.5	200	257	M10	106	19	40	21.8	6	
AM90	130	12	165	4.5	200	257	M10	106	24	50	27.3	8	

F57..

42 052 02 01

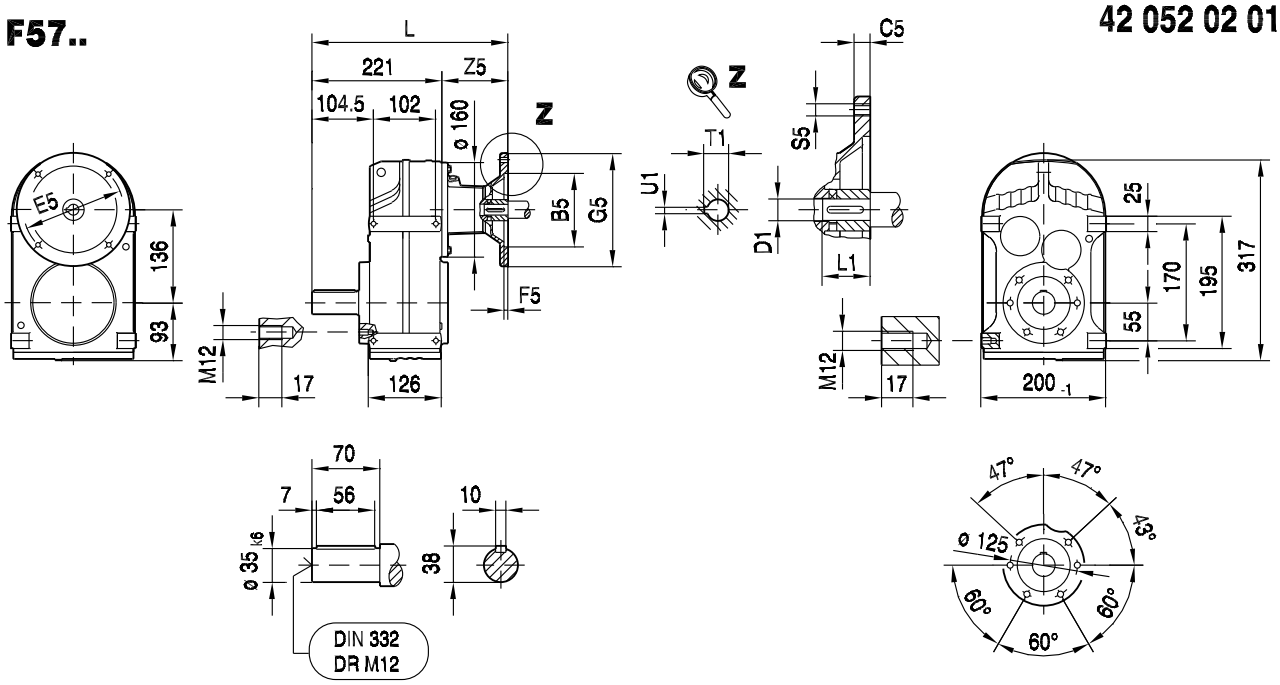

9

FA57B..

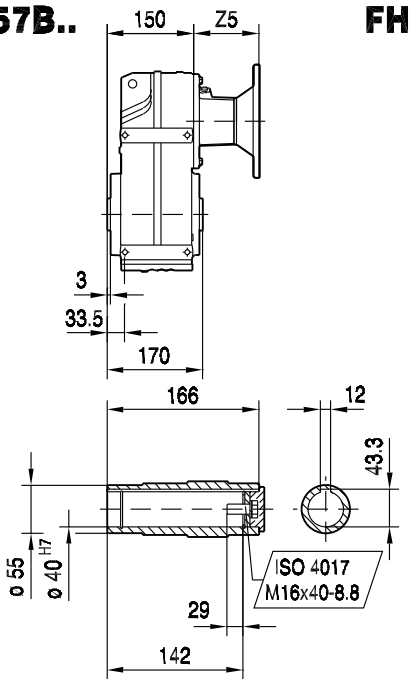

FH57B..

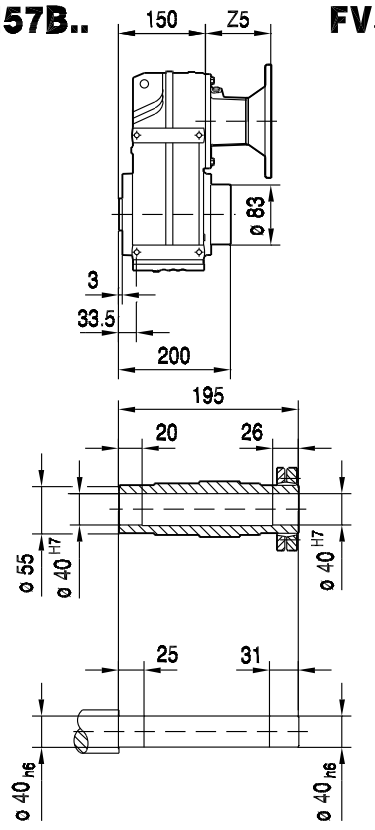

FV57B..

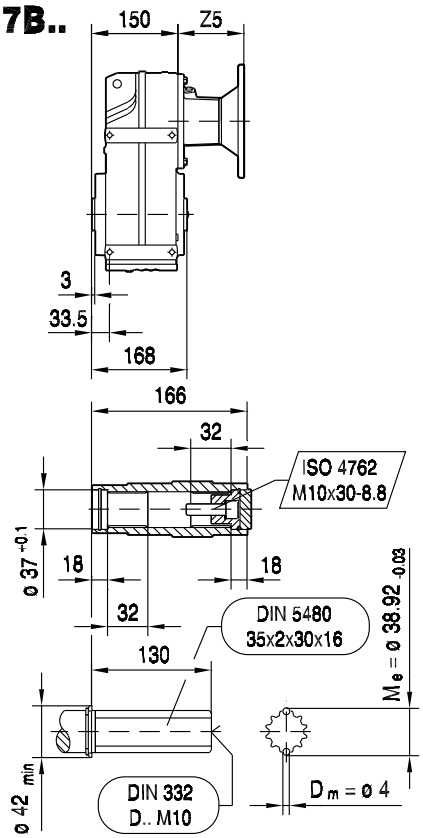

(→ 130)	B5	C5	E5	F5	G5	L	S5	Z5	D1	L1	T1	U1	
AM63	95	10	115	3.5	140	287	M8	66	11	23	12.8	4	
AM71	110	10	130	4.0	160	287	M8	66	14	30	16.3	5	
AM80	130	12	165	4.5	200	320	M10	99	19	40	21.8	6	
AM90	130	12	165	4.5	200	320	M10	99	24	50	27.3	8	
AM100	180	15	215	5.0	250	355	M12	134	28	60	31.3	8	
AM112	180	15	215	5.0	250	355	M12	134	28	60	31.3	8	
AM132S/M	230	16	265	5.0	300	412	M12	191	38	80	41.3	10	

FF57..

42 053 02 01

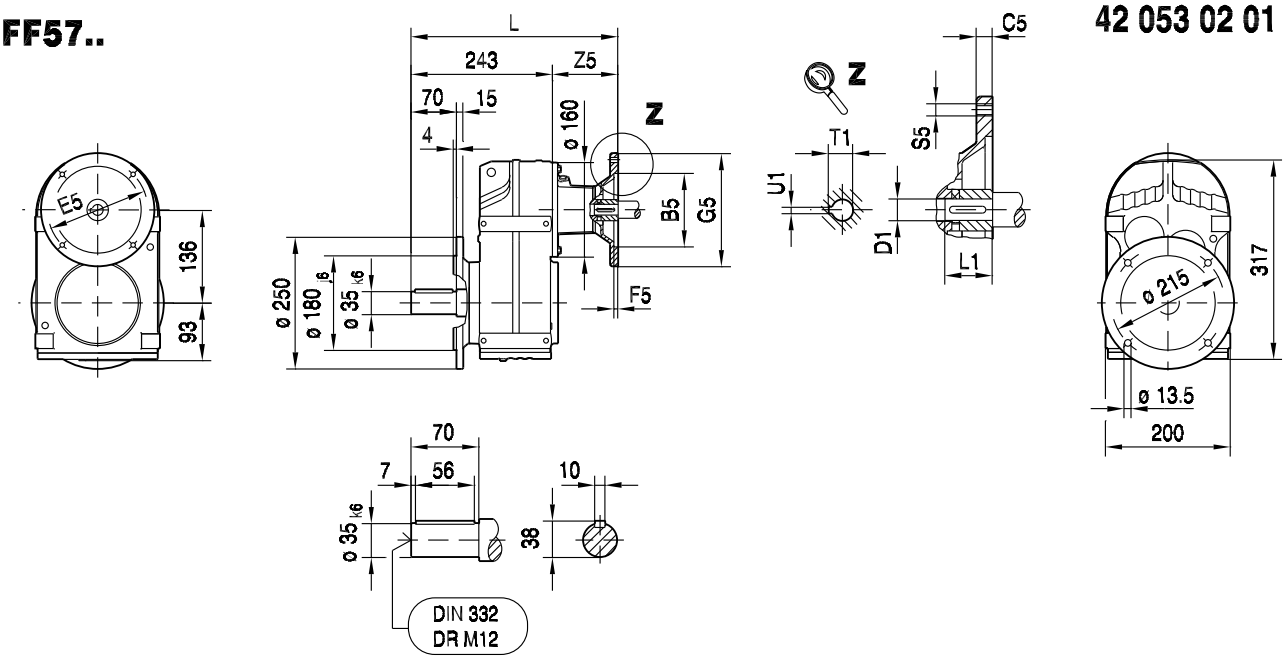

FAF57..

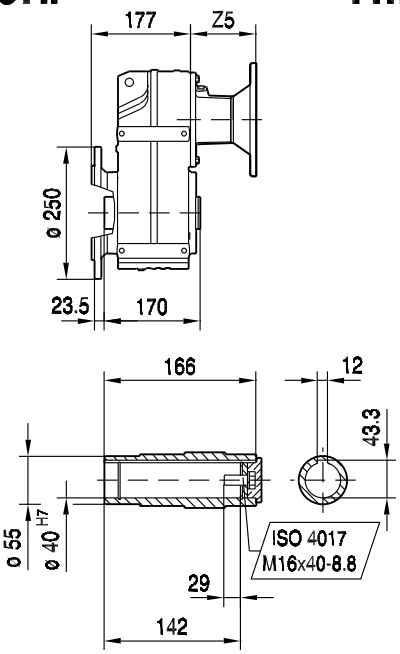

FHF57..

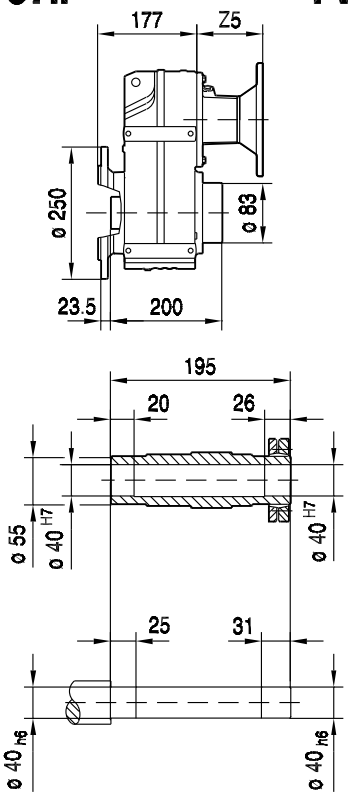

FVF57..

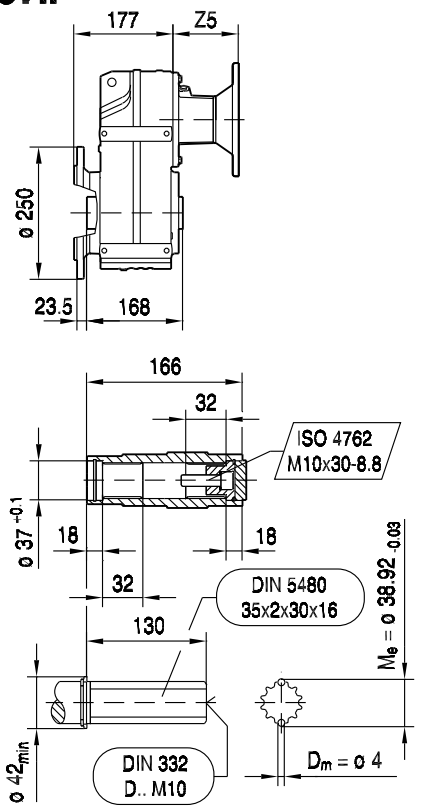

(→ 130)	B5	C5	E5	F5	G5	L	S5	Z5	D1	L1	T1	U1	
AM63	95	10	115	3.5	140	309	M8	66	11	23	12.8	4	
AM71	110	10	130	4.0	160	309	M8	66	14	30	16.3	5	
AM80	130	12	165	4.5	200	342	M10	99	19	40	21.8	6	
AM90	130	12	165	4.5	200	342	M10	99	24	50	27.3	8	
AM100	180	15	215	5.0	250	377	M12	134	28	60	31.3	8	
AM112	180	15	215	5.0	250	377	M12	134	28	60	31.3	8	
AM132S/M	230	16	265	5.0	300	434	M12	191	38	80	41.3	10	

FA57..

42 054 02 01

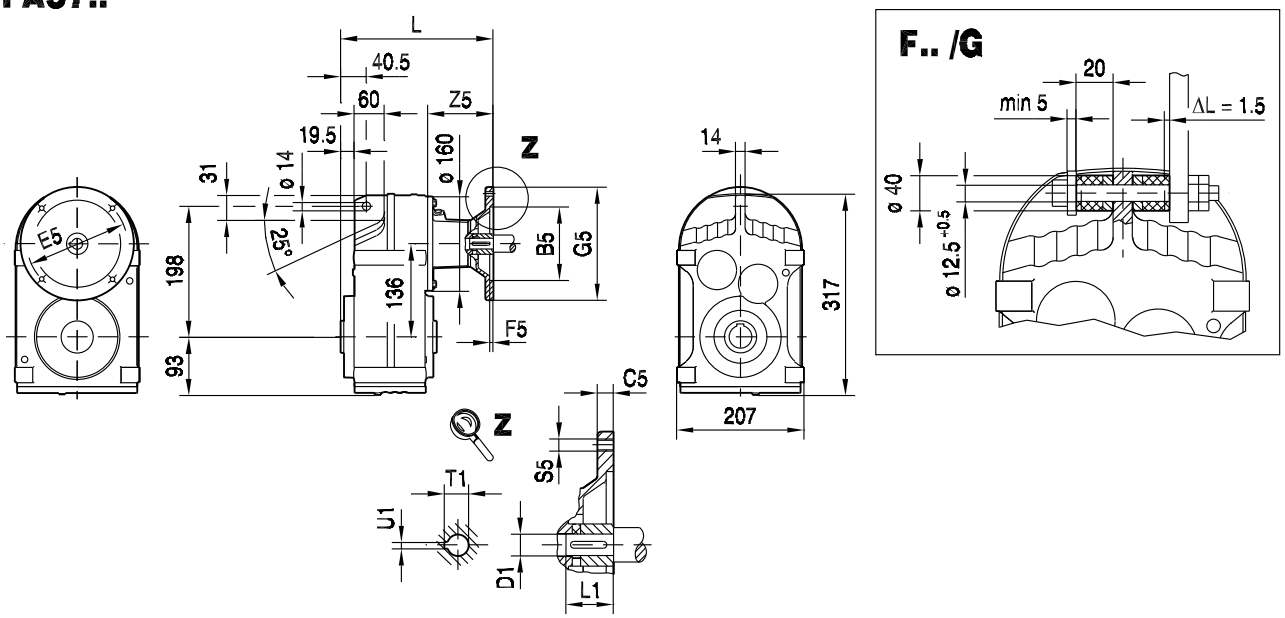

9

FA57..

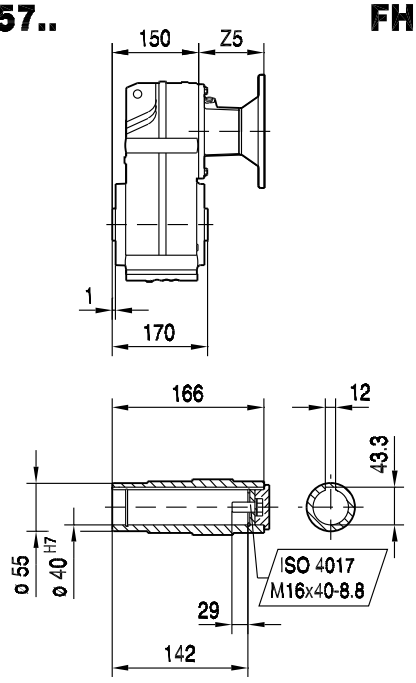

FH57..

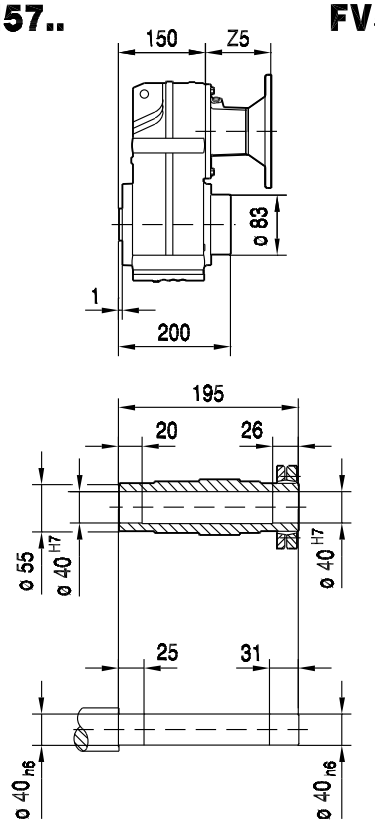

FV57..

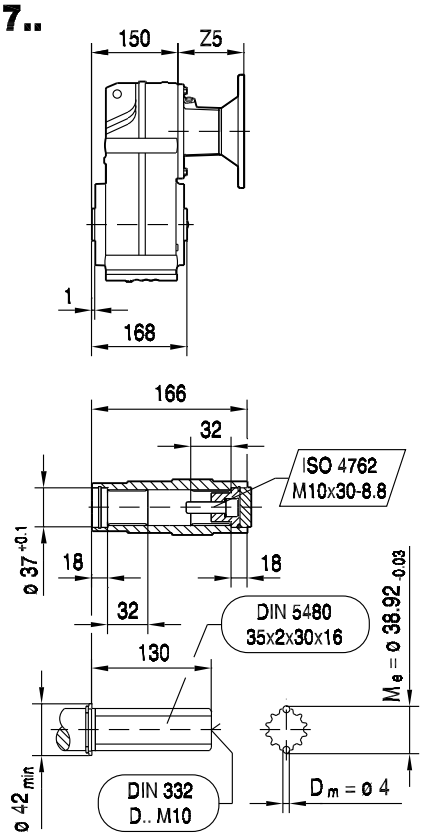

(→ 130)	B5	C5	E5	F5	G5	L	S5	Z5	D1	L1	T1	U1	
AM63	95	10	115	3.5	140	216	M8	66	11	23	12.8	4	
AM71	110	10	130	4.0	160	216	M8	66	14	30	16.3	5	
AM80	130	12	165	4.5	200	249	M10	99	19	40	21.8	6	
AM90	130	12	165	4.5	200	249	M10	99	24	50	27.3	8	
AM100	180	15	215	5.0	250	284	M12	134	28	60	31.3	8	
AM112	180	15	215	5.0	250	284	M12	134	28	60	31.3	8	
AM132S/M	230	16	265	5.0	300	341	M12	191	38	80	41.3	10	

FAZ57..

42 055 02 01

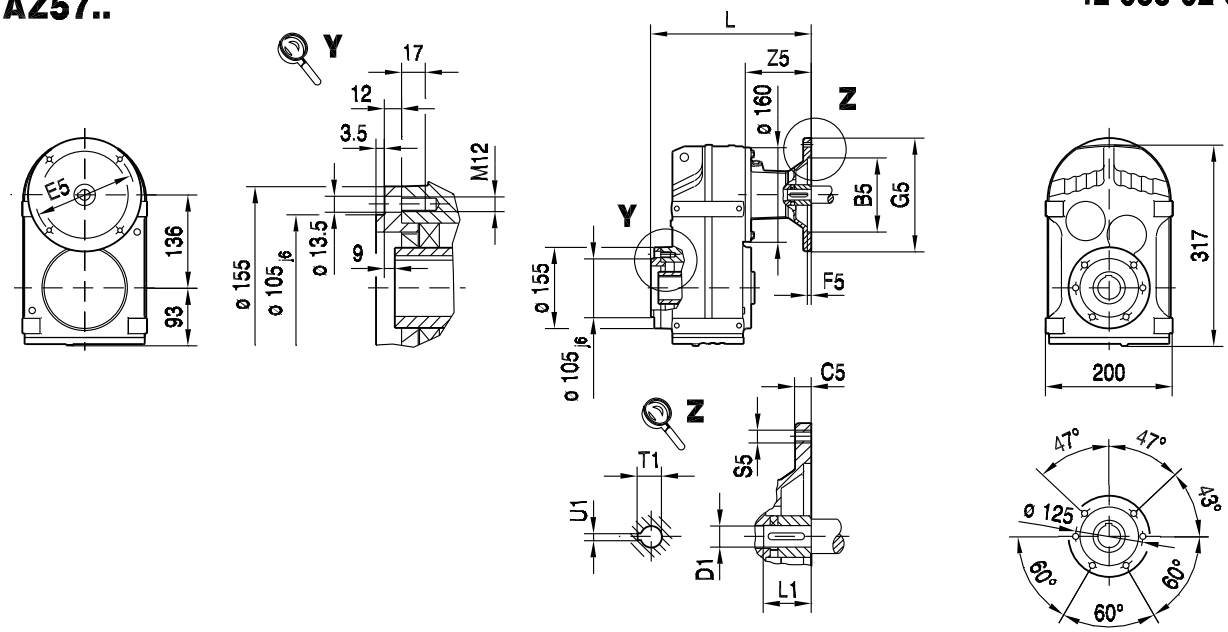

FAZ57..

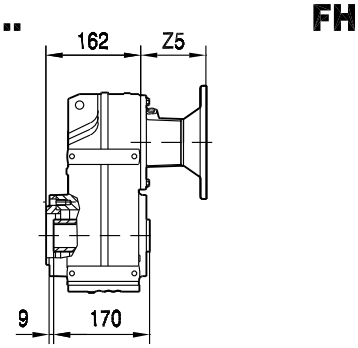

FHZ57..

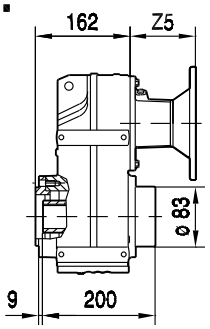

FVZ57..

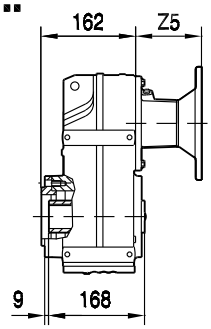

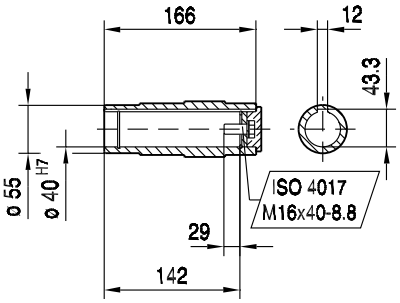

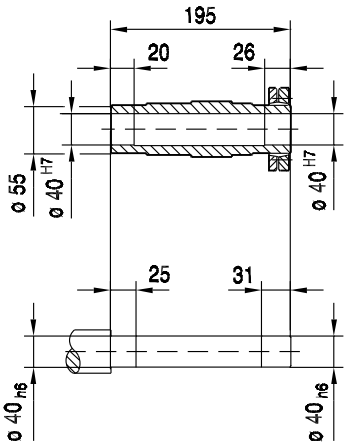

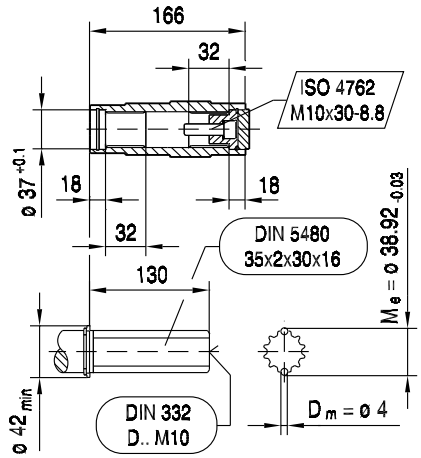

(→ 130)	B5	C5	E5	F5	G5	L	S5	Z5	D1	L1	T1	U1	
AM63	95	10	115	3.5	140	228	M8	66	11	23	12.8	4	
AM71	110	10	130	4.0	160	228	M8	66	14	30	16.3	5	
AM80	130	12	165	4.5	200	261	M10	99	19	40	21.8	6	
AM90	130	12	165	4.5	200	261	M10	99	24	50	27.3	8	
AM100	180	15	215	5.0	250	296	M12	134	28	60	31.3	8	
AM112	180	15	215	5.0	250	296	M12	134	28	60	31.3	8	
AM132S/M	230	16	265	5.0	300	353	M12	191	38	80	41.3	10	

FT57..

42 015 00 04

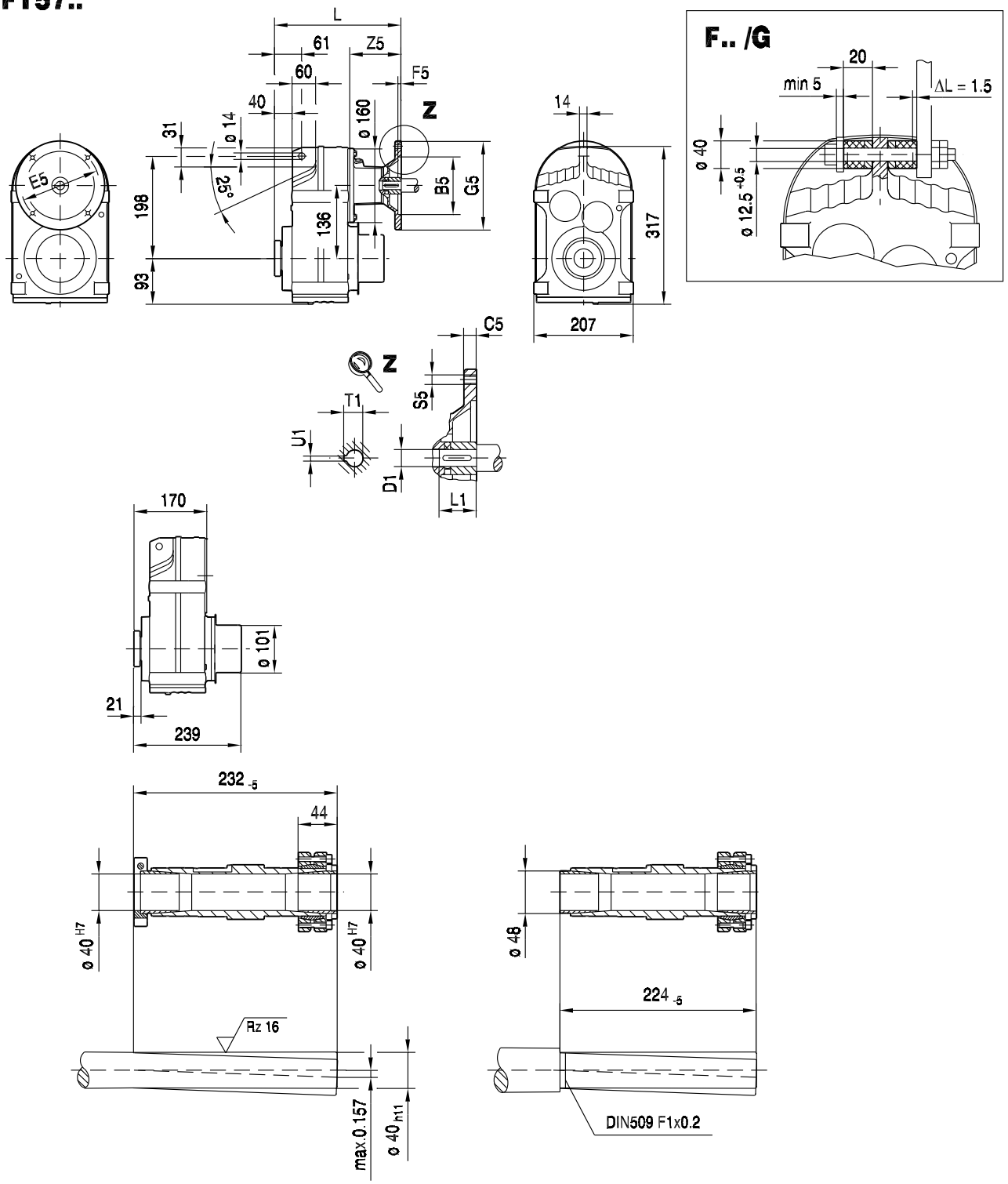

(→ 130)	B5	C5	E5	F5	G5	L	S5	Z5	D1	L1	T1	U1	
AM63	95	10	115	3.5	140	235	M8	66	11	23	12.8	4	
AM71	110	10	130	4.0	160	235	M8	66	14	30	16.3	5	
AM80	130	12	165	4.5	200	268	M10	99	19	40	21.8	6	
AM90	130	12	165	4.5	200	268	M10	99	24	50	27.3	8	
AM100	180	15	215	5.0	250	303	M12	134	28	60	31.3	8	
AM112	180	15	215	5.0	250	303	M12	134	28	60	31.3	8	
AM132S/M	230	16	265	5.0	300	360	M12	191	38	80	41.3	10	

F67..

42 056 02 01

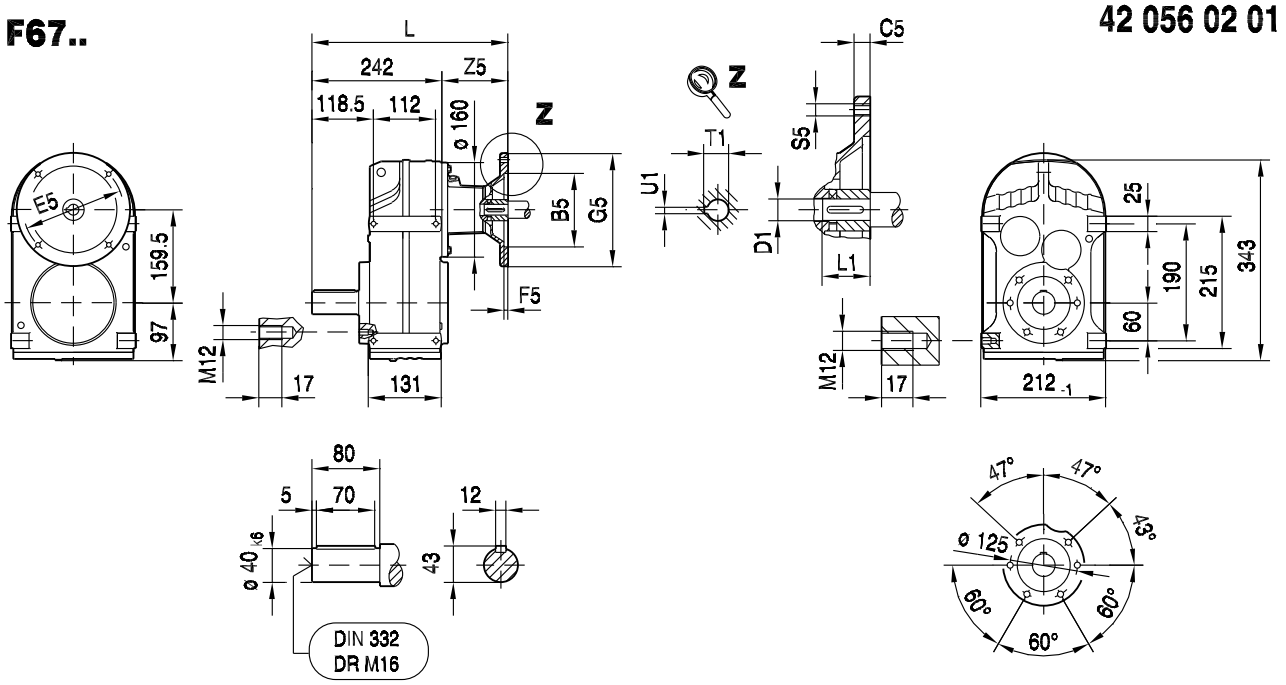

FA67B..

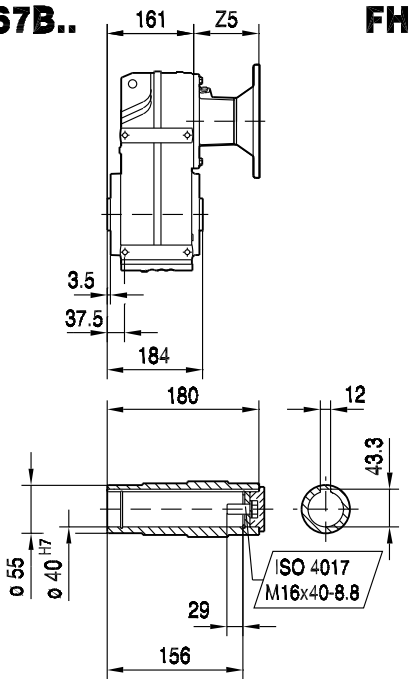

FH67B..

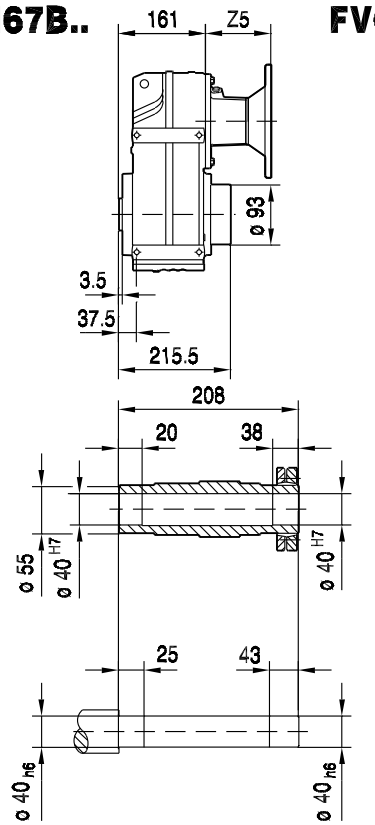

FV67B..

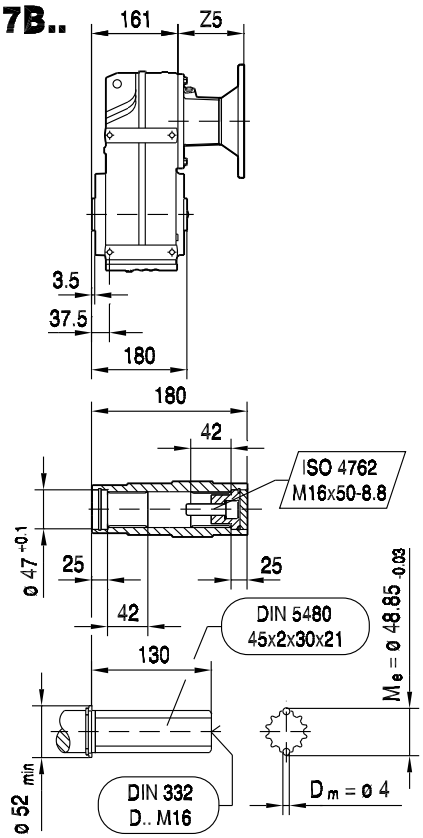

(→ 130)	B5	C5	E5	F5	G5	L	S5	Z5	D1	L1	T1	U1	
AM63	95	10	115	3.5	140	308	M8	66	11	23	12.8	4	
AM71	110	10	130	4.0	160	308	M8	66	14	30	16.3	5	
AM80	130	12	165	4.5	200	341	M10	99	19	40	21.8	6	
AM90	130	12	165	4.5	200	341	M10	99	24	50	27.3	8	
AM100	180	15	215	5.0	250	376	M12	134	28	60	31.3	8	
AM112	180	15	215	5.0	250	376	M12	134	28	60	31.3	8	
AM132S/M	230	16	265	5.0	300	433	M12	191	38	80	41.3	10	

FF67..

42 057 02 01

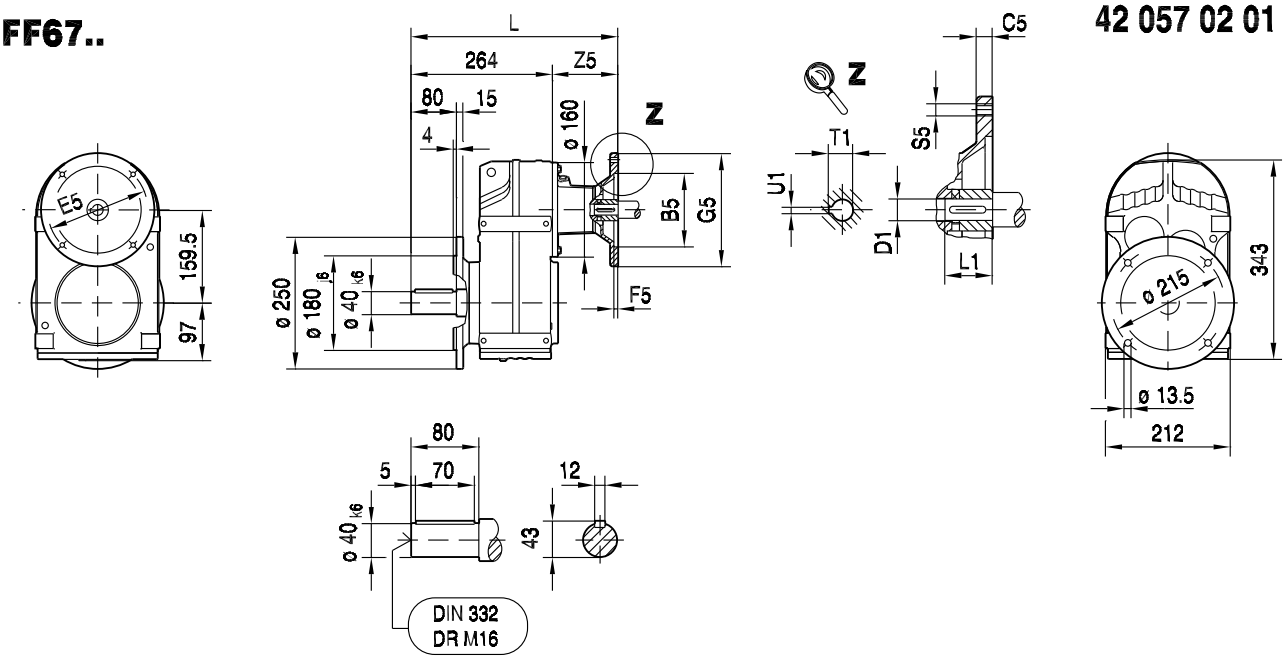

9

FAF67..

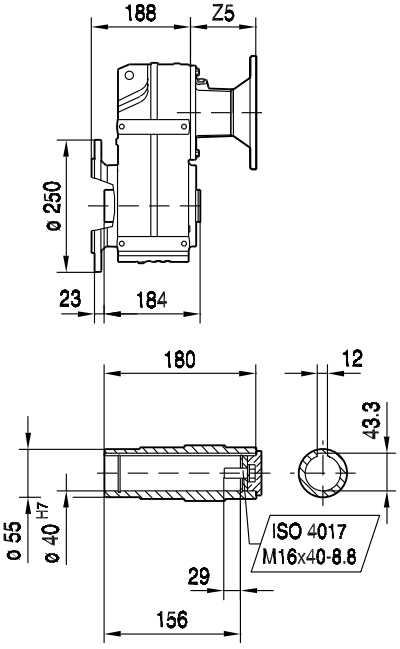

FHF67..

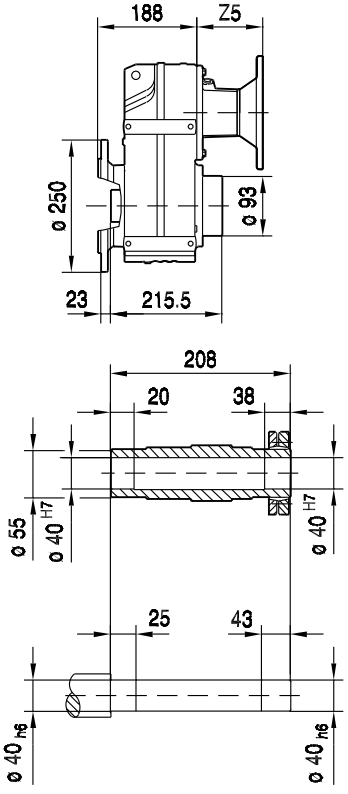

FVF67..

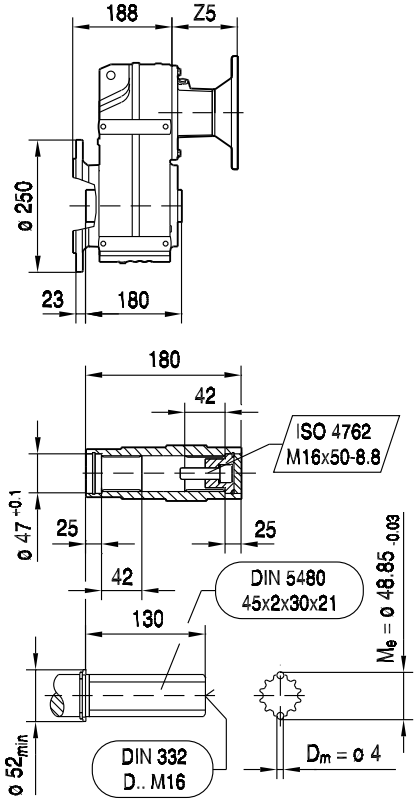

(→ 130)	B5	C5	E5	F5	G5	L	S5	Z5	D1	L1	T1	U1	
AM63	95	10	115	3.5	140	330	M8	66	11	23	12.8	4	
AM71	110	10	130	4.0	160	330	M8	66	14	30	16.3	5	
AM80	130	12	165	4.5	200	363	M10	99	19	40	21.8	6	
AM90	130	12	165	4.5	200	363	M10	99	24	50	27.3	8	
AM100	180	15	215	5.0	250	398	M12	134	28	60	31.3	8	
AM112	180	15	215	5.0	250	398	M12	134	28	60	31.3	8	
AM132S/M	230	16	265	5.0	300	455	M12	191	38	80	41.3	10	

FA67..

42 058 02 01

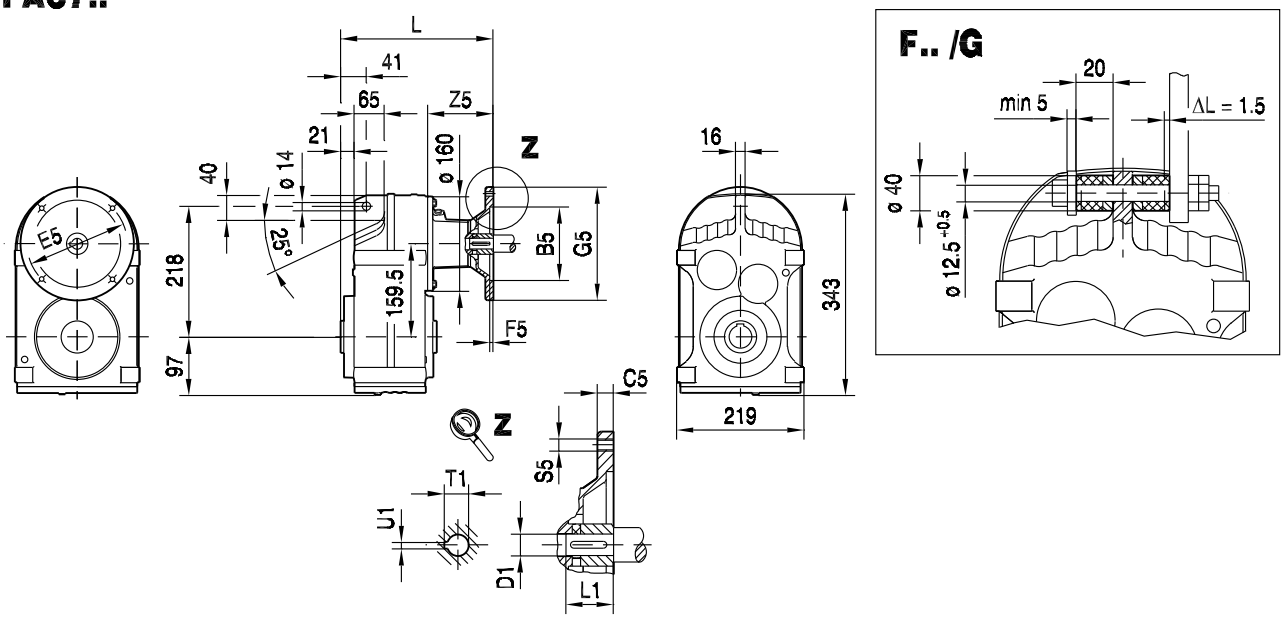

FA67..

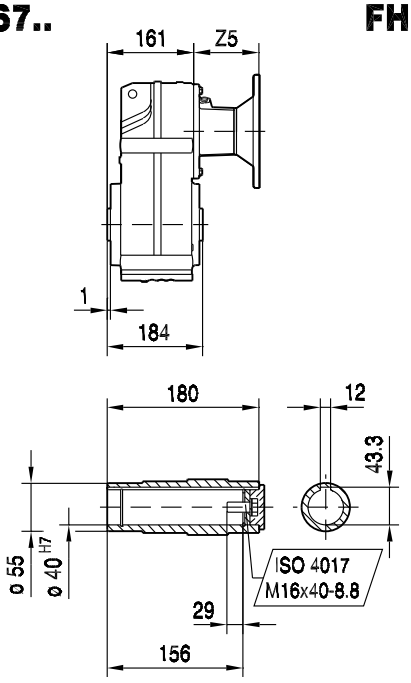

FH67..

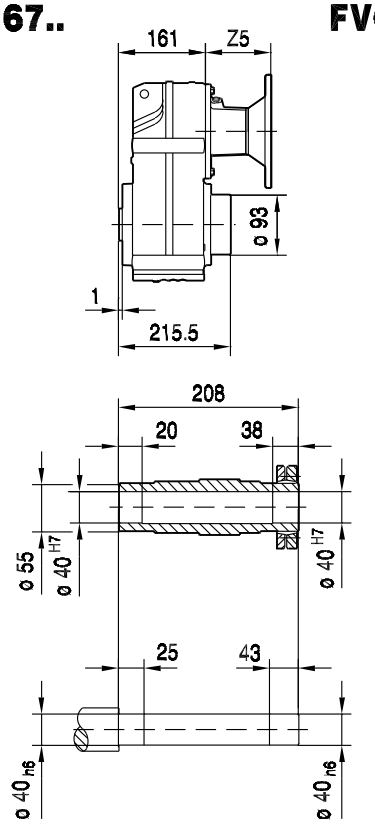

FV67..

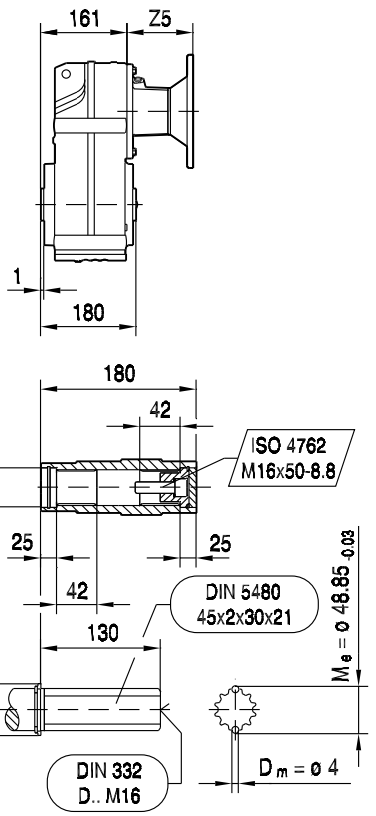

(→ 130)	B5	C5	E5	F5	G5	L	S5	Z5	D1	L1	T1	U1	
AM63	95	10	115	3.5	140	227	M8	66	11	23	12.8	4	
AM71	110	10	130	4.0	160	227	M8	66	14	30	16.3	5	
AM80	130	12	165	4.5	200	260	M10	99	19	40	21.8	6	
AM90	130	12	165	4.5	200	260	M10	99	24	50	27.3	8	
AM100	180	15	215	5.0	250	295	M12	134	28	60	31.3	8	
AM112	180	15	215	5.0	250	295	M12	134	28	60	31.3	8	
AM132S/M	230	16	265	5.0	300	352	M12	191	38	80	41.3	10	

FAZ67..

42 059 02 01

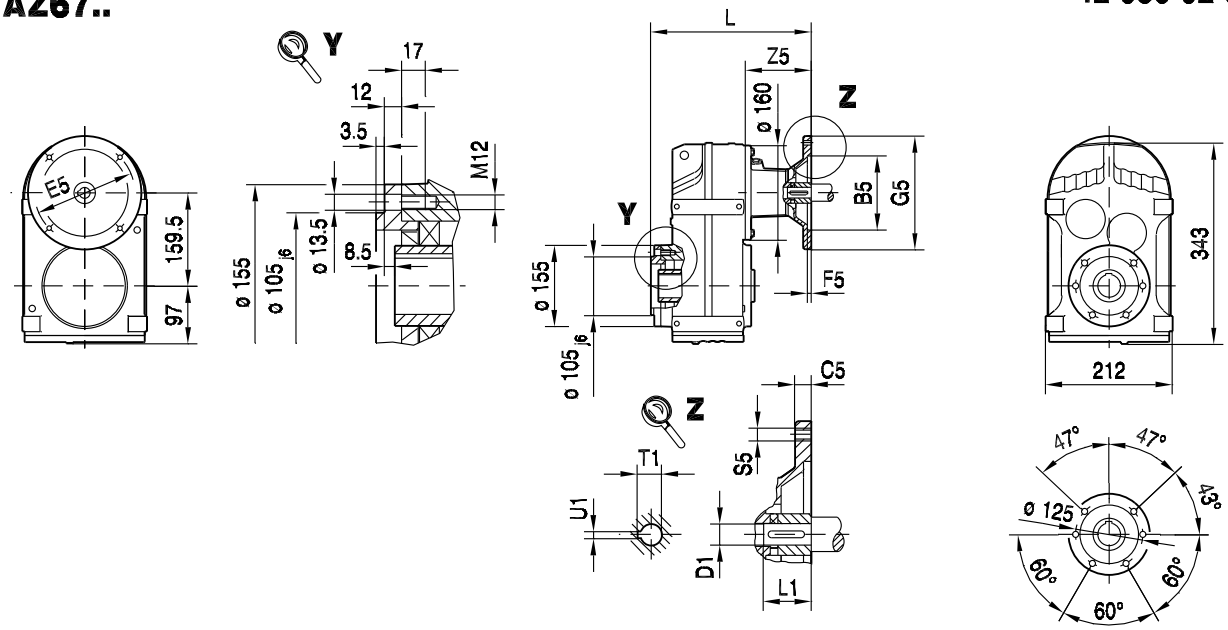

FAZ67..

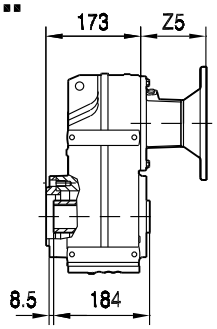

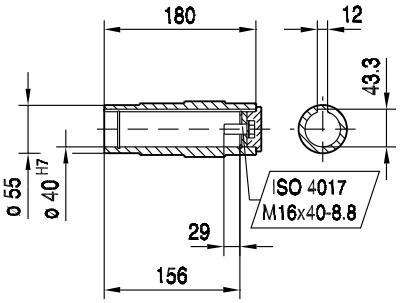

FHZ67..

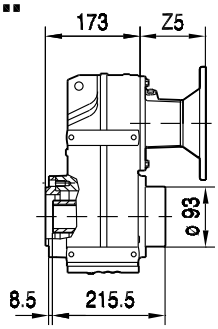

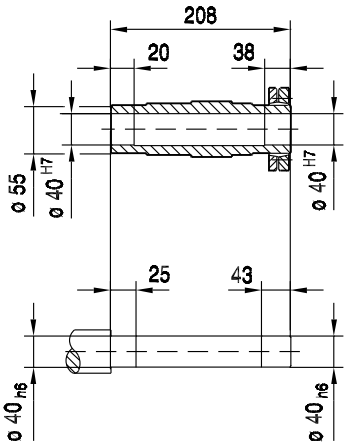

FVZ67..

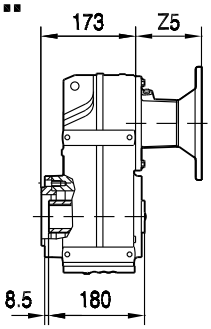

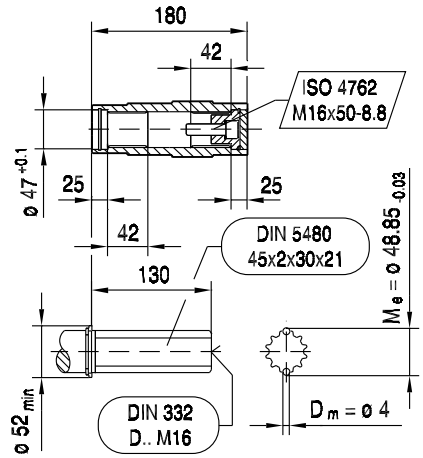

(→ 130)	B5	C5	E5	F5	G5	L	S5	Z5	D1	L1	T1	U1	
AM63	95	10	115	3.5	140	239	M8	66	11	23	12.8	4	
AM71	110	10	130	4.0	160	239	M8	66	14	30	16.3	5	
AM80	130	12	165	4.5	200	272	M10	99	19	40	21.8	6	
AM90	130	12	165	4.5	200	272	M10	99	24	50	27.3	8	
AM100	180	15	215	5.0	250	307	M12	134	28	60	31.3	8	
AM112	180	15	215	5.0	250	307	M12	134	28	60	31.3	8	
AM132S/M	230	16	265	5.0	300	364	M12	191	38	80	41.3	10	

FT67..

42 016 00 04

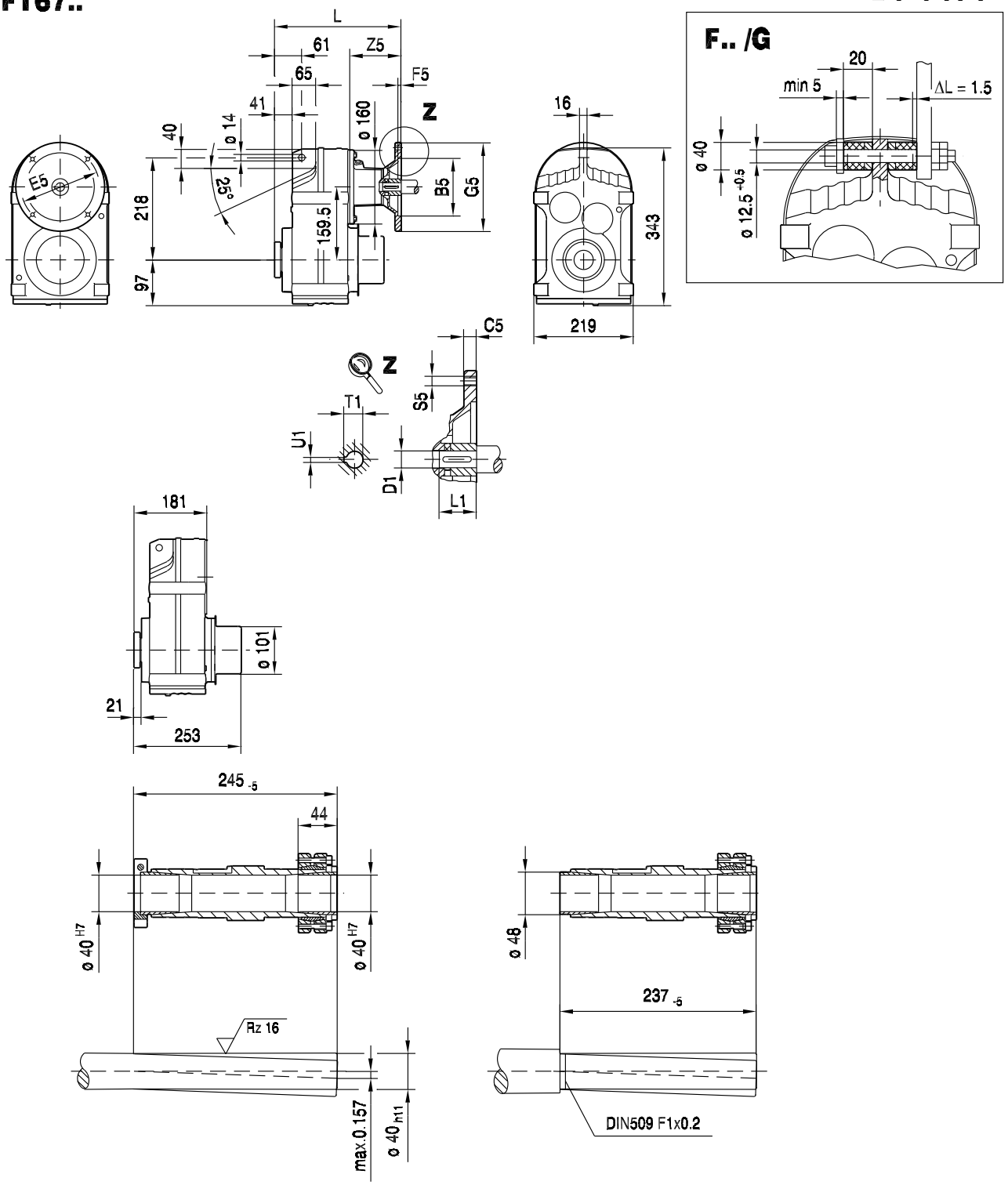

(→ 130)	B5	C5	E5	F5	G5	L	S5	Z5	D1	L1	T1	U1	
AM63	95	10	115	3.5	140	247	M8	66	11	23	12.8	4	
AM71	110	10	130	4.0	160	247	M8	66	14	30	16.3	5	
AM80	130	12	165	4.5	200	280	M10	99	19	40	21.8	6	
AM90	130	12	165	4.5	200	280	M10	99	24	50	27.3	8	
AM100	180	15	215	5.0	250	315	M12	134	28	60	31.3	8	
AM112	180	15	215	5.0	250	315	M12	134	28	60	31.3	8	
AM132S/M	230	16	265	5.0	300	372	M12	191	38	80	41.3	10	

F77..

42 060 02 01

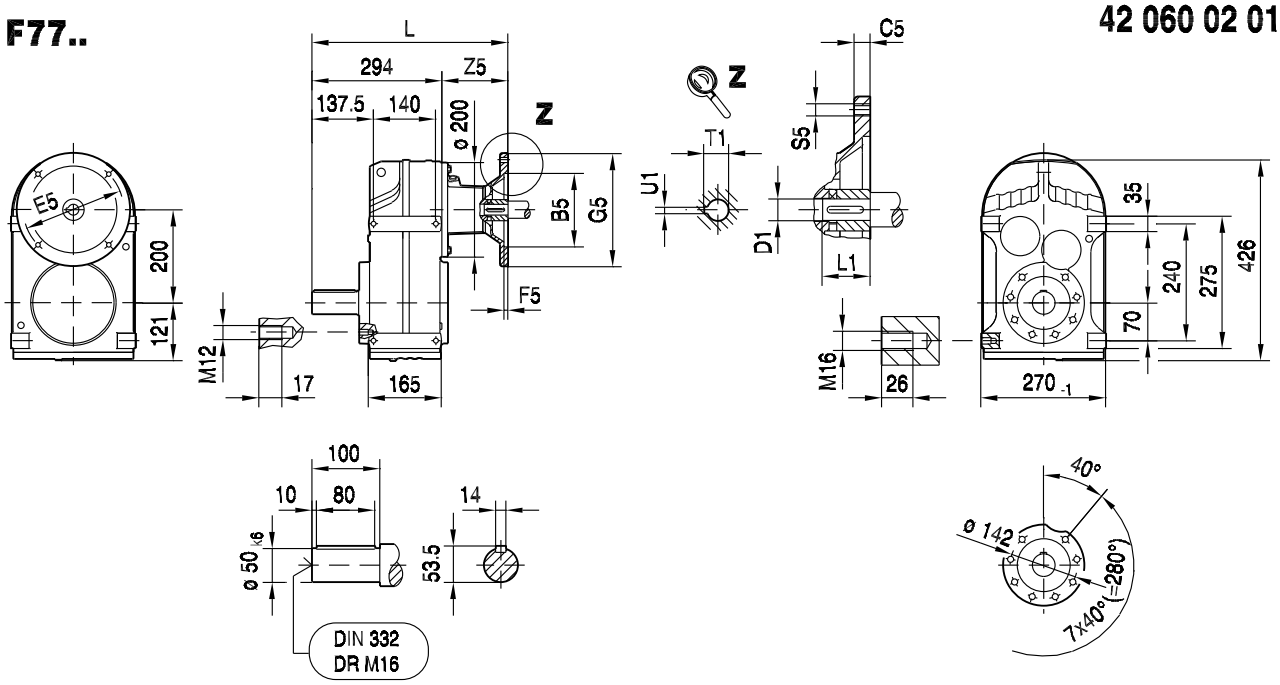

FA77B..

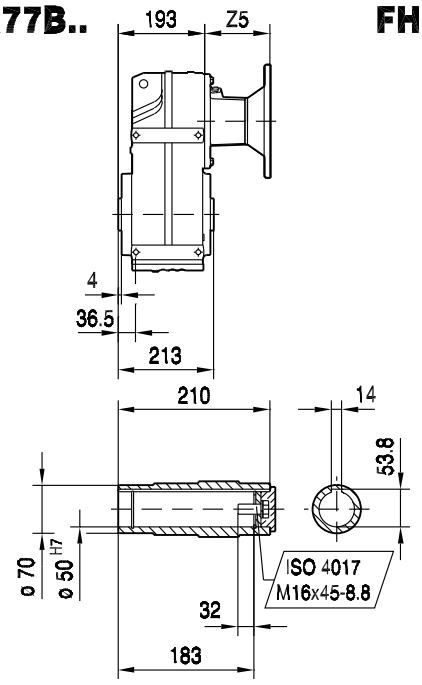

FH77B..

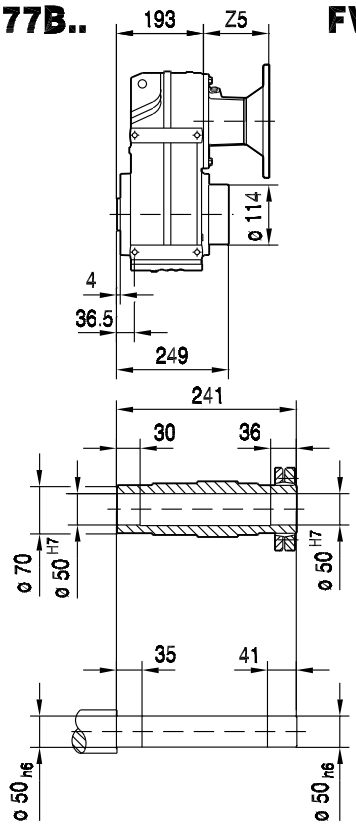

FV77B..

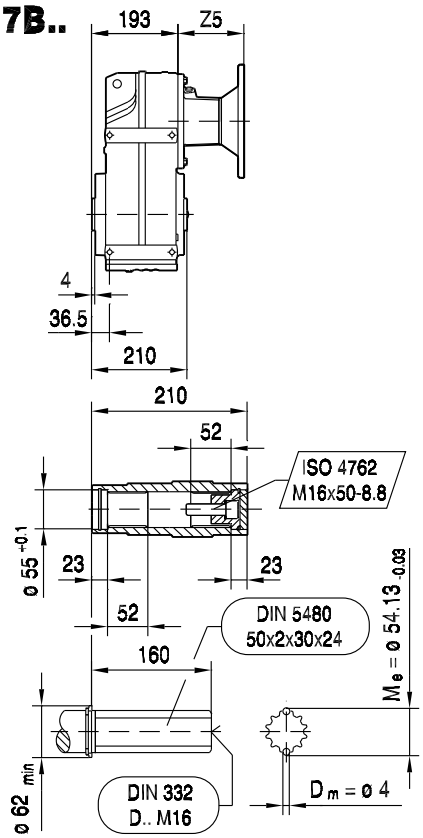

(→ 130)	B5	C5	E5	F5	G5	L	S5	Z5	D1	L1	T1	U1	
AM63	95	10	115	3.5	140	354	M8	60	11	23	12.8	4	
AM71	110	10	130	4.0	160	354	M8	60	14	30	16.3	5	
AM80	130	12	165	4.5	200	386	M10	92	19	40	21.8	6	
AM90	130	12	165	4.5	200	386	M10	92	24	50	27.3	8	
AM100	180	15	215	5.0	250	420	M12	126	28	60	31.3	8	
AM112	180	15	215	5.0	250	420	M12	126	28	60	31.3	8	
AM132S/M	230	16	265	5.0	300	473	M12	179	38	80	41.3	10	
AM132ML	230	16	265	5.0	300	473	M12	179	38	80	41.3	10	

FF77..

42 061 02 01

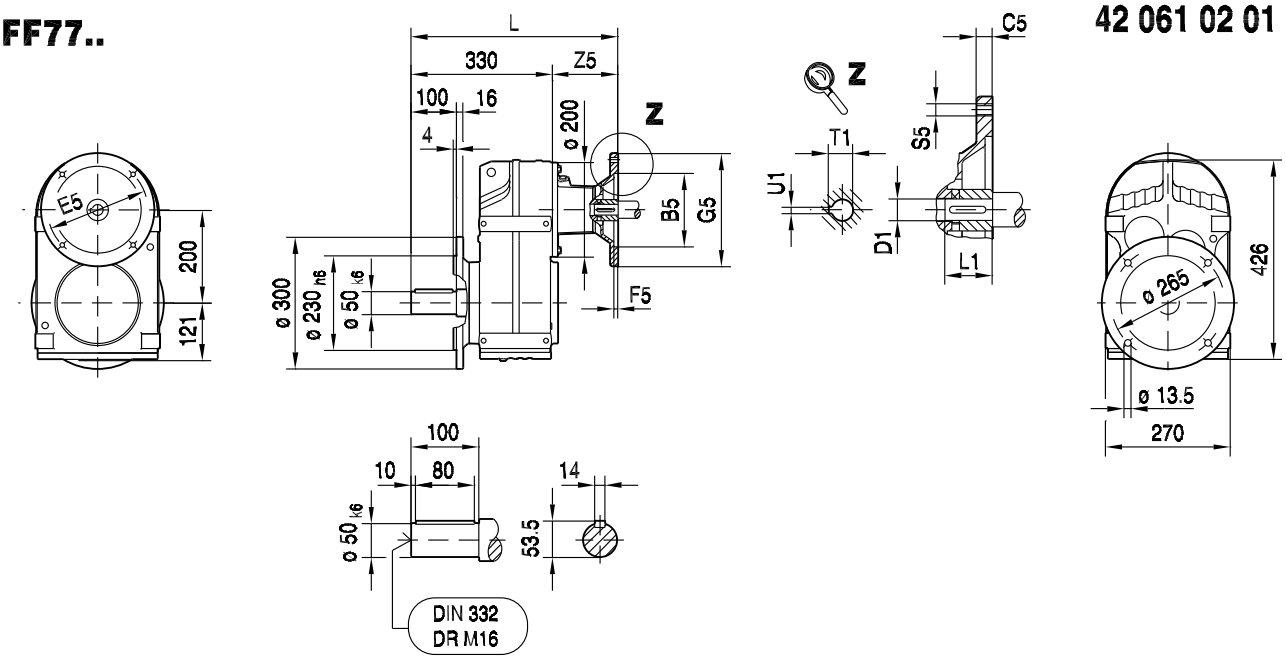

FAF77..

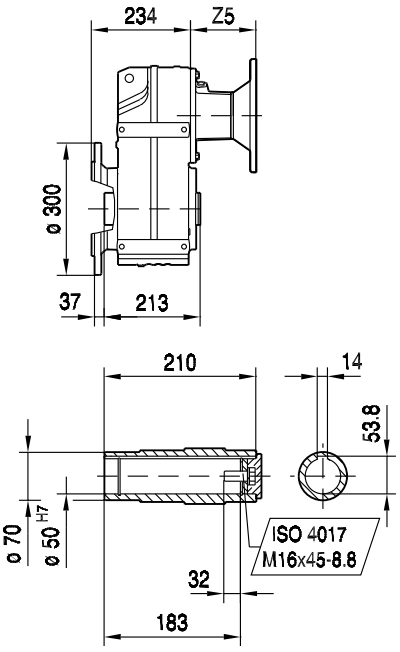

FHF77..

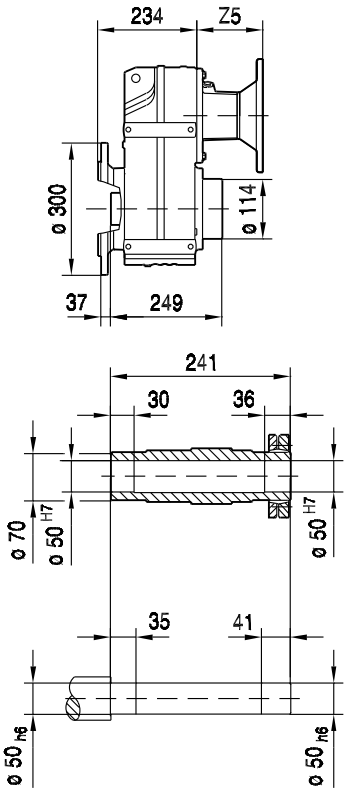

FVF77..

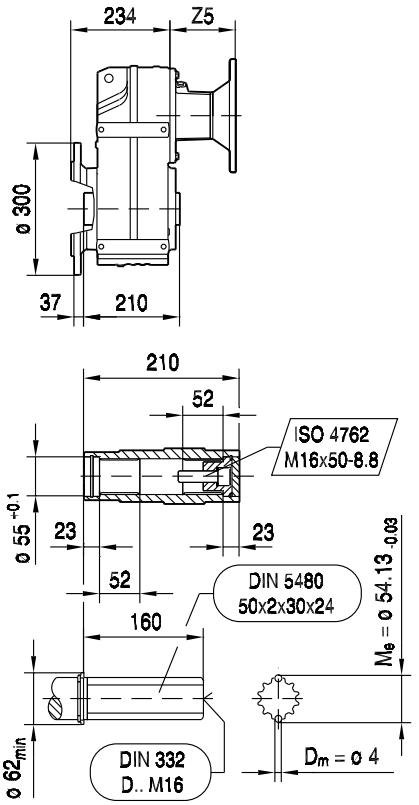

(→ 130)	B5	C5	E5	F5	G5	L	S5	Z5	D1	L1	T1	U1	
AM63	95	10	115	3.5	140	390	M8	60	11	23	12.8	4	
AM71	110	10	130	4.0	160	390	M8	60	14	30	16.3	5	
AM80	130	12	165	4.5	200	422	M10	92	19	40	21.8	6	
AM90	130	12	165	4.5	200	422	M10	92	24	50	27.3	8	
AM100	180	15	215	5.0	250	456	M12	126	28	60	31.3	8	
AM112	180	15	215	5.0	250	456	M12	126	28	60	31.3	8	
AM132S/M	230	16	265	5.0	300	509	M12	179	38	80	41.3	10	
AM132ML	230	16	265	5.0	300	509	M12	179	38	80	41.3	10	

FA77..

42 062 02 01

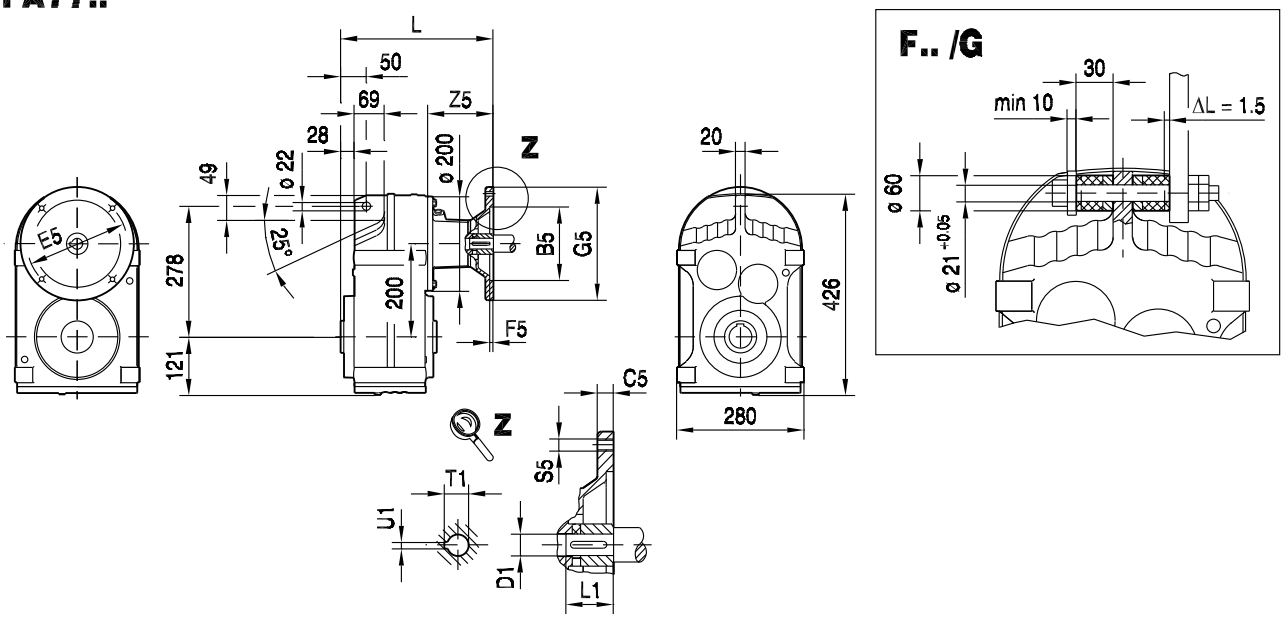

9

FA77..

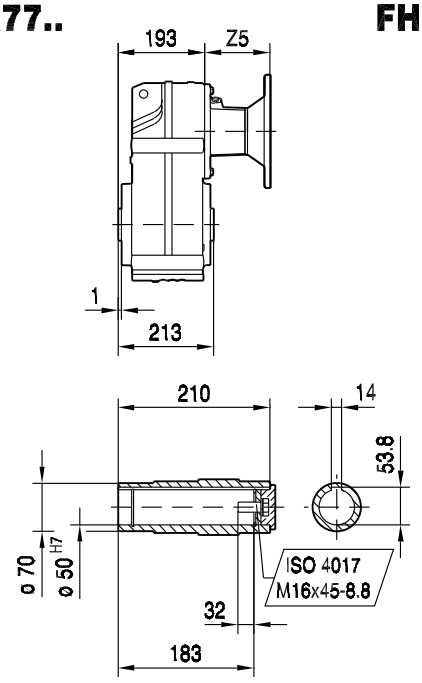

FH77..

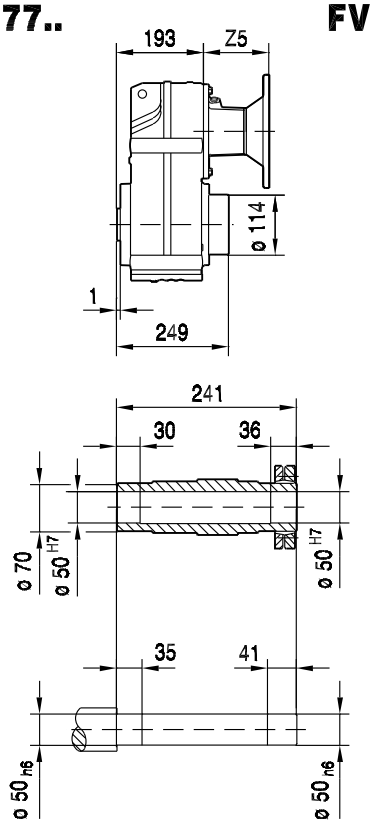

FV77..

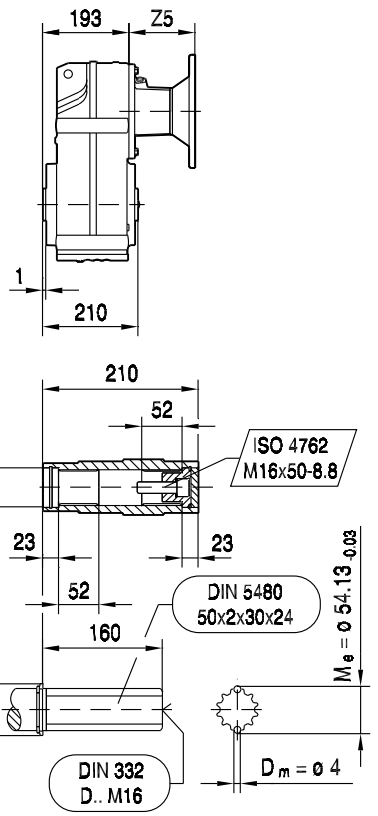

(→ 130)	B5	C5	E5	F5	G5	L	S5	Z5	D1	L1	T1	U1	
AM63	95	10	115	3.5	140	253	M8	60	11	23	12.8	4	
AM71	110	10	130	4.0	160	253	M8	60	14	30	16.3	5	
AM80	130	12	165	4.5	200	285	M10	92	19	40	21.8	6	
AM90	130	12	165	4.5	200	285	M10	92	24	50	27.3	8	
AM100	180	15	215	5.0	250	319	M12	126	28	60	31.3	8	
AM112	180	15	215	5.0	250	319	M12	126	28	60	31.3	8	
AM132S/M	230	16	265	5.0	300	372	M12	179	38	80	41.3	10	
AM132ML	230	16	265	5.0	300	372	M12	179	38	80	41.3	10	

FAZ77..

42 063 02 01

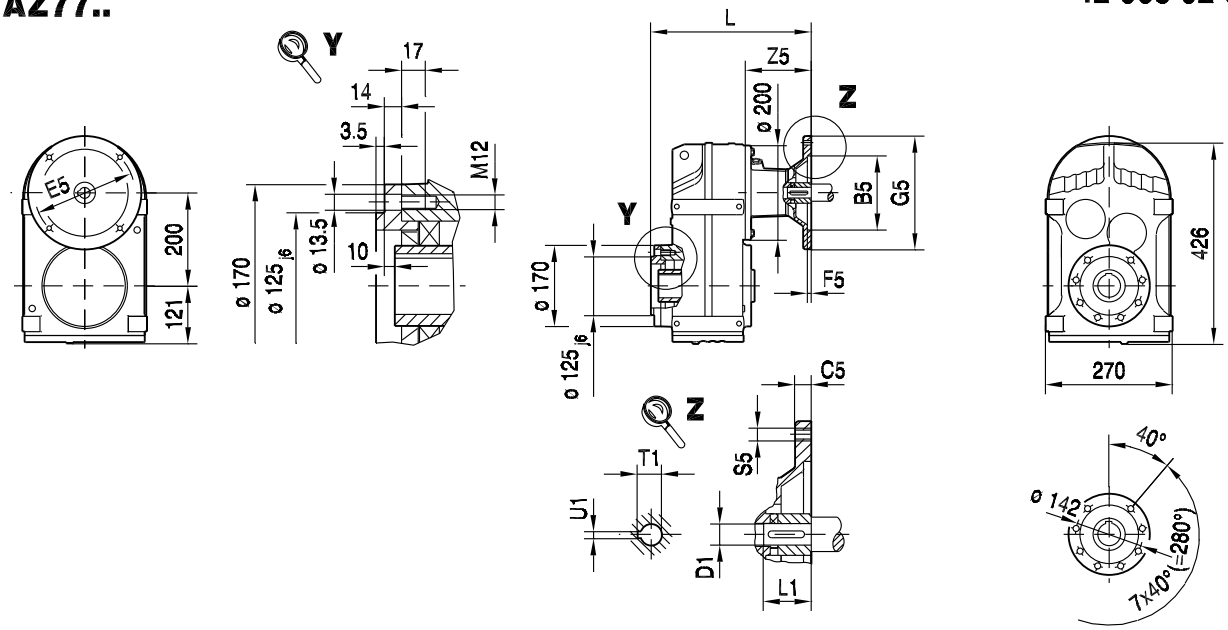

FAZ77..

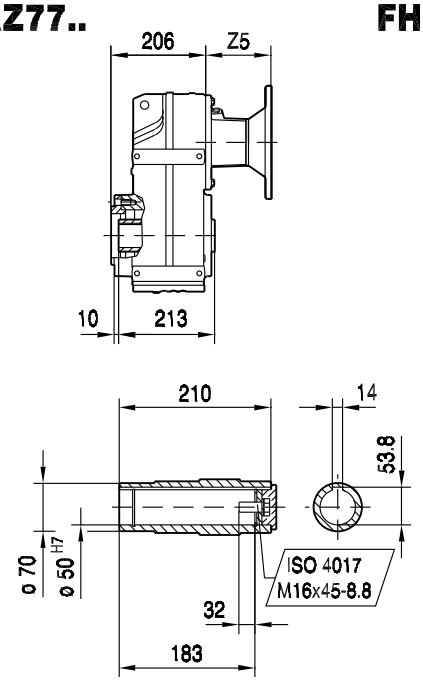

FHZ77..

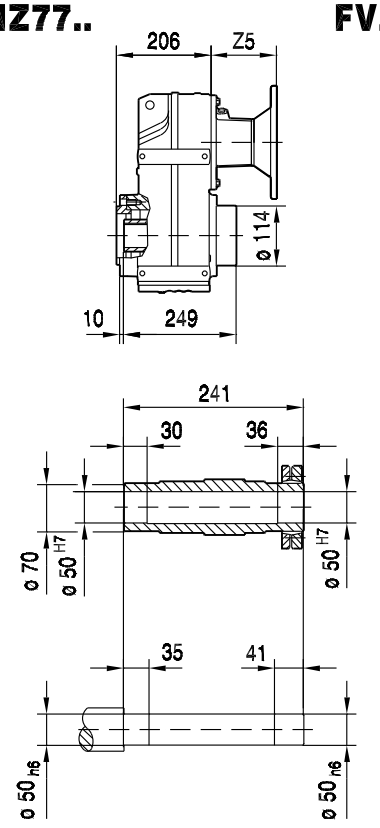

FVZ77..

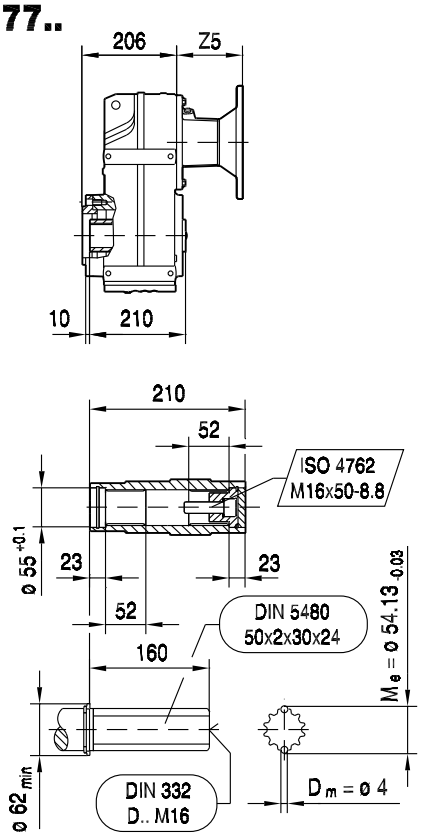

(→ 130)	B5	C5	E5	F5	G5	L	S5	Z5	D1	L1	T1	U1	
AM63	95	10	115	3.5	140	266	M8	60	11	23	12.8	4	
AM71	110	10	130	4.0	160	266	M8	60	14	30	16.3	5	
AM80	130	12	165	4.5	200	298	M10	92	19	40	21.8	6	
AM90	130	12	165	4.5	200	298	M10	92	24	50	27.3	8	
AM100	180	15	215	5.0	250	332	M12	126	28	60	31.3	8	
AM112	180	15	215	5.0	250	332	M12	126	28	60	31.3	8	
AM132S/M	230	16	265	5.0	300	385	M12	179	38	80	41.3	10	
AM132ML	230	16	265	5.0	300	385	M12	179	38	80	41.3	10	

FT77..

42 017 00 04

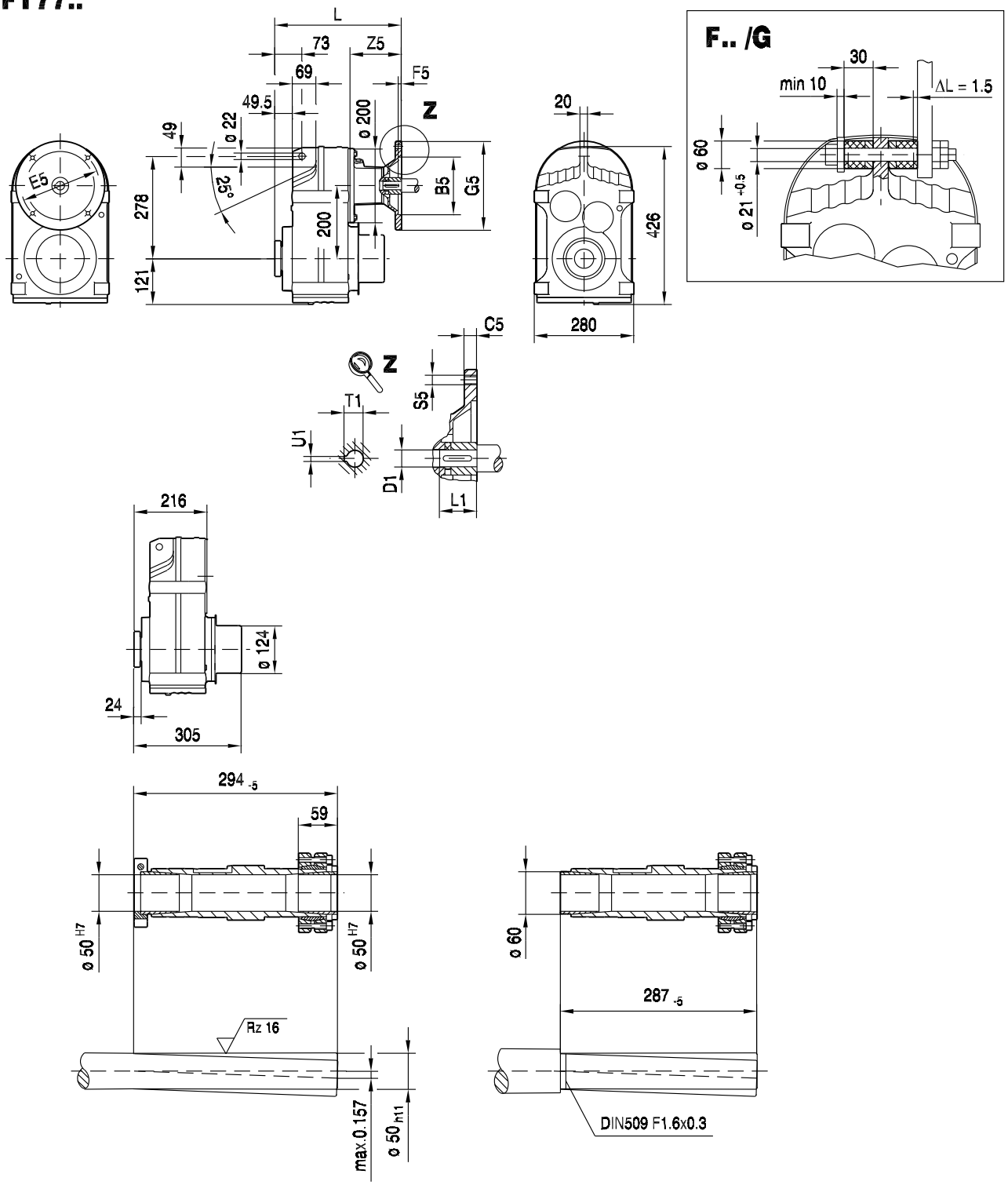

(→ 130)	B5	C5	E5	F5	G5	L	S5	Z5	D1	L1	T1	U1	
AM63	95	10	115	3.5	140	275	M8	60	11	23	12.8	4	
AM71	110	10	130	4.0	160	275	M8	60	14	30	16.3	5	
AM80	130	12	165	4.5	200	307	M10	92	19	40	21.8	6	
AM90	130	12	165	4.5	200	307	M10	92	24	50	27.3	8	
AM100	180	15	215	5.0	250	341	M12	126	28	60	31.3	8	
AM112	180	15	215	5.0	250	341	M12	126	28	60	31.3	8	
AM132S/M	230	16	265	5.0	300	394	M12	179	38	80	41.3	10	
AM132ML	230	16	265	5.0	300	394	M12	179	38	80	41.3	10	

F87..

42 064 01 01

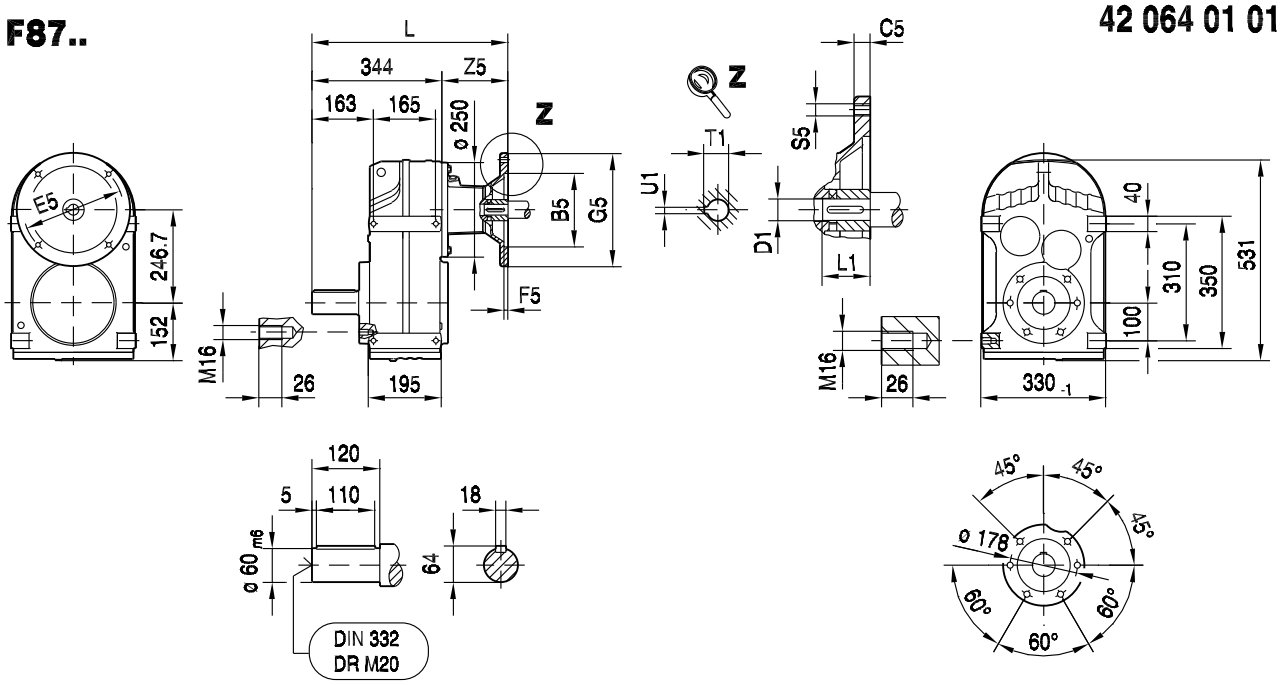

FA87B..

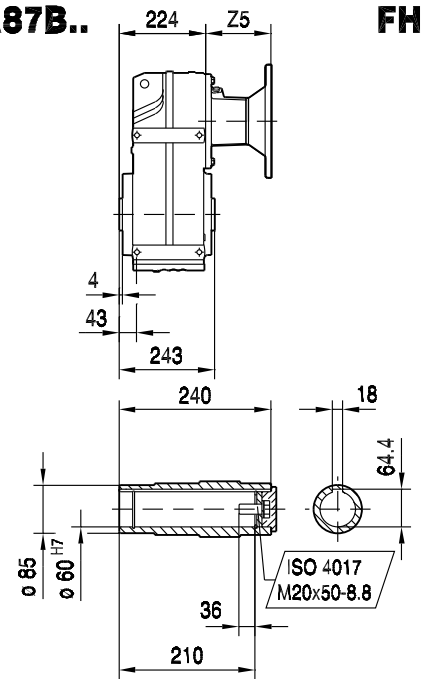

FH87B..

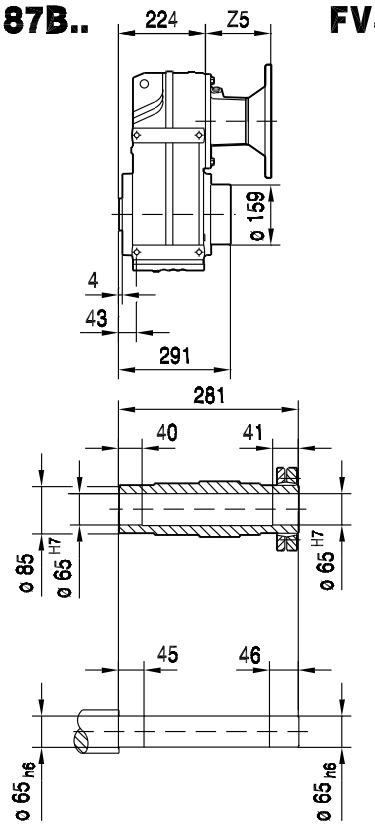

FV87B..

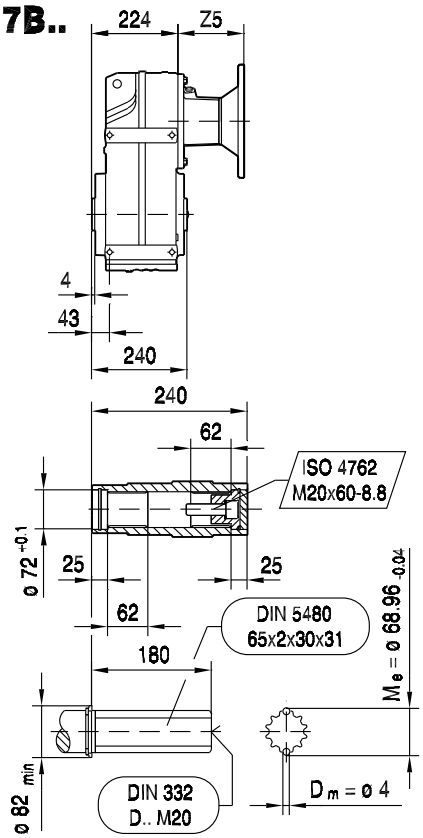

(→ 130)	B5	C5	E5	F5	G5	L	S5	Z5	D1	L1	T1	U1	
AM80	130	12	165	4.5	200	431	M10	87	19	40	21.8	6	
AM90	130	12	165	4.5	200	431	M10	87	24	50	27.3	8	
AM100	180	15	215	5.0	250	465	M12	121	28	60	31.3	8	
AM112	180	15	215	5.0	250	465	M12	121	28	60	31.3	8	
AM132S/M	230	16	265	5.0	300	518	M12	174	38	80	41.3	10	
AM132ML	230	16	265	5.0	300	518	M12	174	38	80	41.3	10	
AM160	250	18	300	6.0	350	576	M16	232	42	110	45.3	12	
AM180	250	18	300	6.0	350	576	M16	232	48	110	51.8	14	

FF87..

42 065 01 01

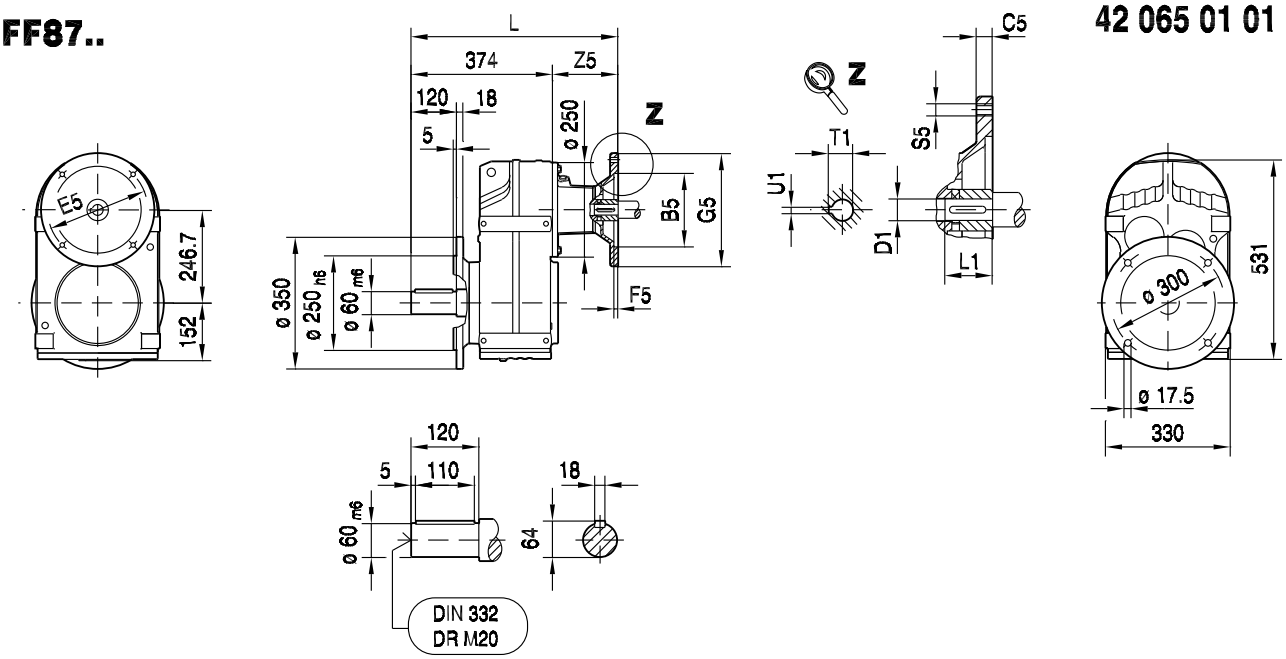

FAF87..

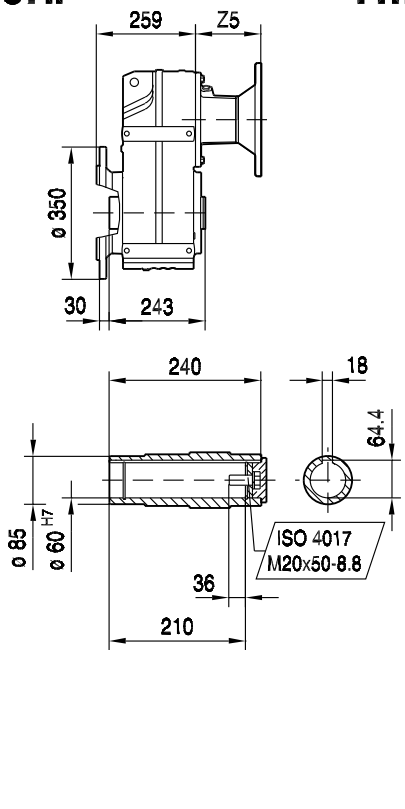

FHF87..

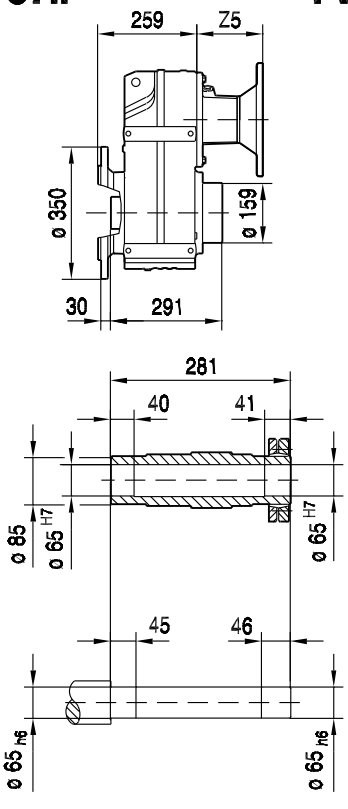

FVF87..

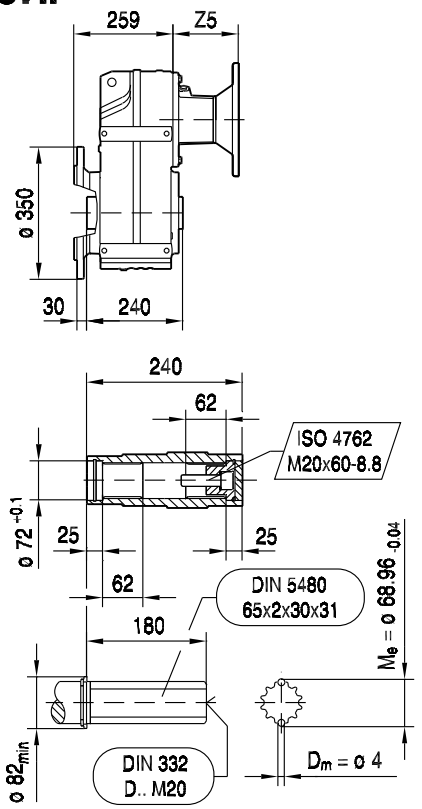

(→ 130)	B5	C5	E5	F5	G5	L	S5	Z5	D1	L1	T1	U1	
AM80	130	12	165	4.5	200	461	M10	87	19	40	21.8	6	
AM90	130	12	165	4.5	200	461	M10	87	24	50	27.3	8	
AM100	180	15	215	5.0	250	495	M12	121	28	60	31.3	8	
AM112	180	15	215	5.0	250	495	M12	121	28	60	31.3	8	
AM132S/M	230	16	265	5.0	300	548	M12	174	38	80	41.3	10	
AM132ML	230	16	265	5.0	300	548	M12	174	38	80	41.3	10	
AM160	250	18	300	6.0	350	606	M16	232	42	110	45.3	12	
AM180	250	18	300	6.0	350	606	M16	232	48	110	51.8	14	

FA87..

42 066 01 01

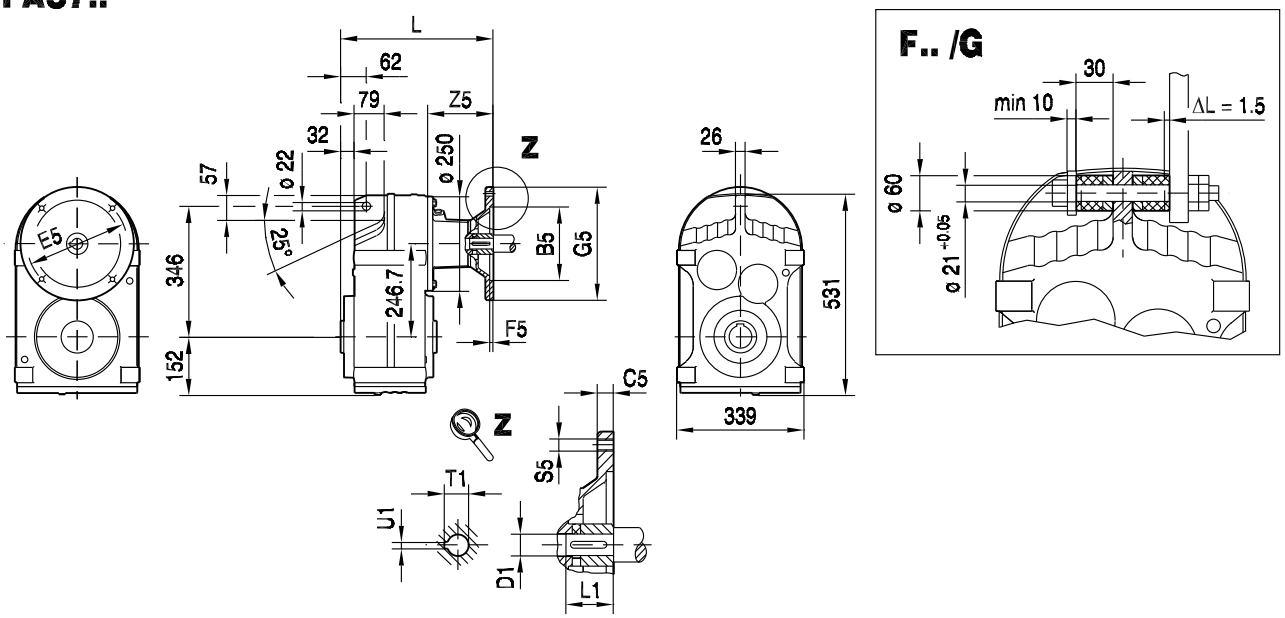

FA87..

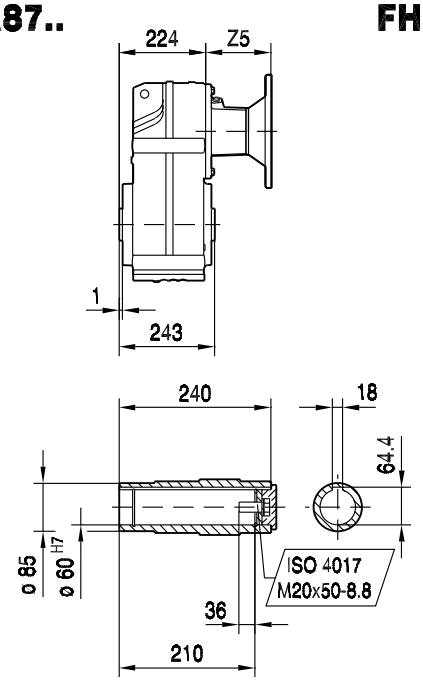

FH87..

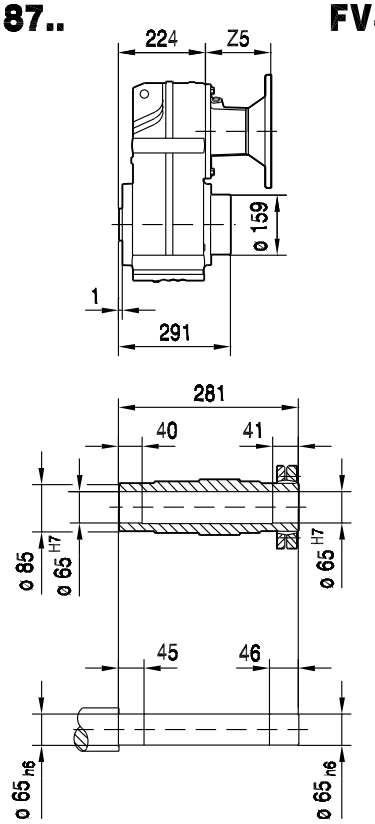

FV87..

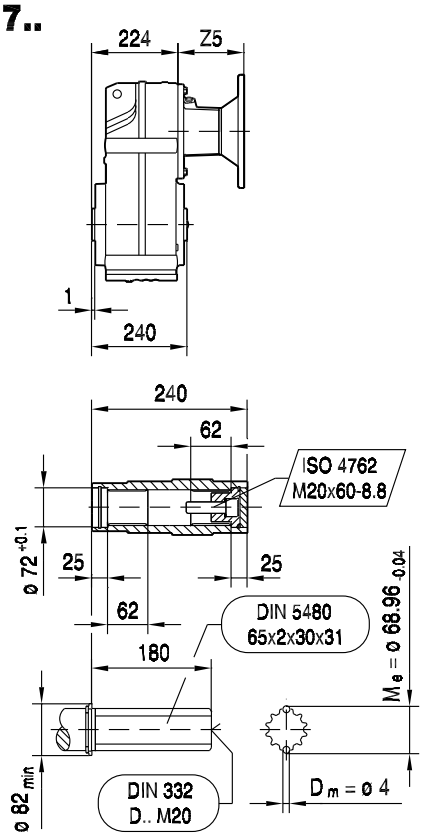

(→ 130)	B5	C5	E5	F5	G5	L	S5	Z5	D1	L1	T1	U1	
AM80	130	12	165	4.5	200	311	M10	87	19	40	21.8	6	
AM90	130	12	165	4.5	200	311	M10	87	24	50	27.3	8	
AM100	180	15	215	5.0	250	345	M12	121	28	60	31.3	8	
AM112	180	15	215	5.0	250	345	M12	121	28	60	31.3	8	
AM132S/M	230	16	265	5.0	300	398	M12	174	38	80	41.3	10	
AM132ML	230	16	265	5.0	300	398	M12	174	38	80	41.3	10	
AM160	250	18	300	6.0	350	456	M16	232	42	110	45.3	12	
AM180	250	18	300	6.0	350	456	M16	232	48	110	51.8	14	

FAZ87..

42 067 01 01

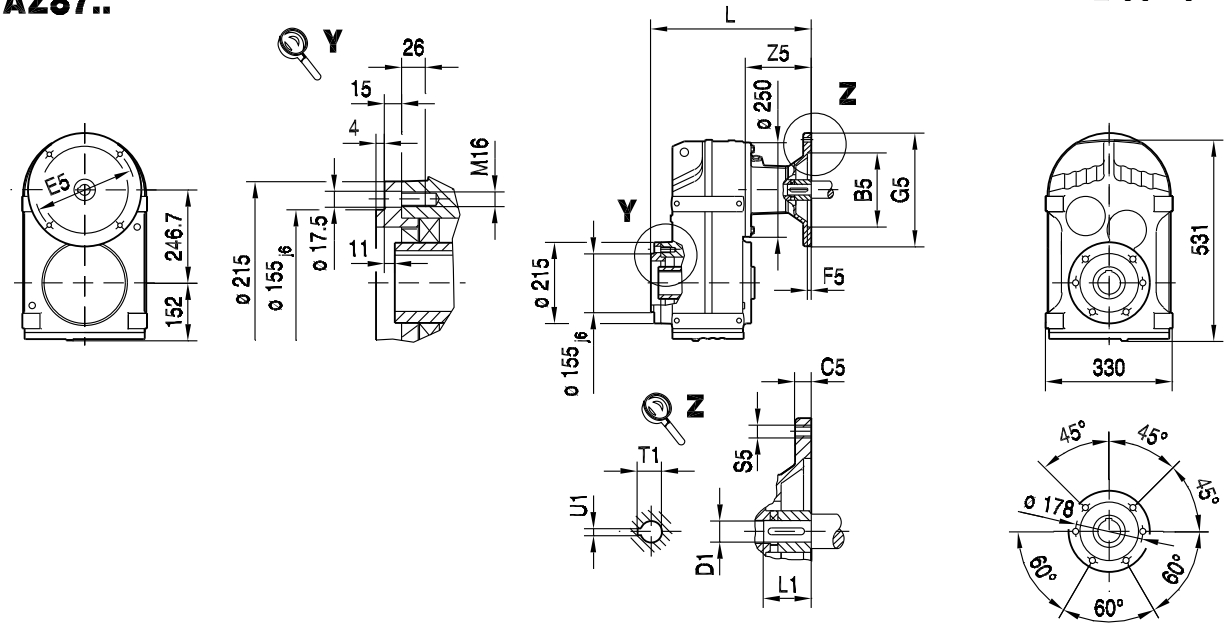

9

FAZ87..

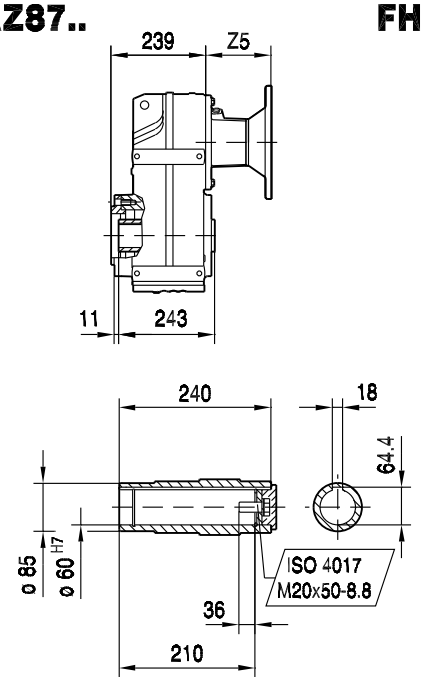

FHZ87..

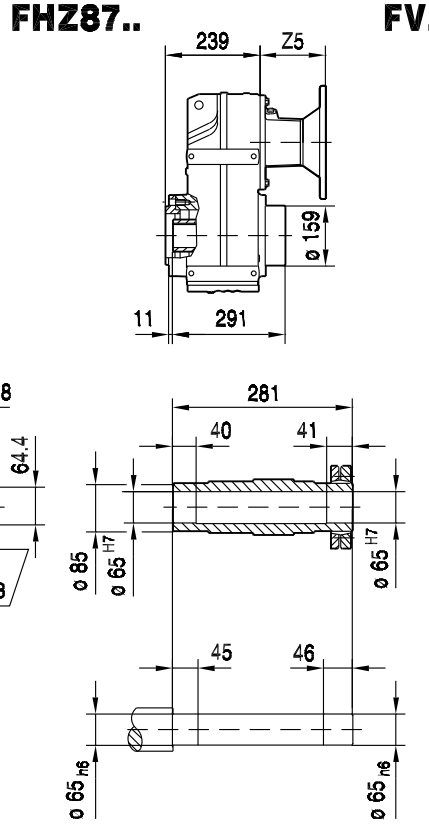

FVZ87..

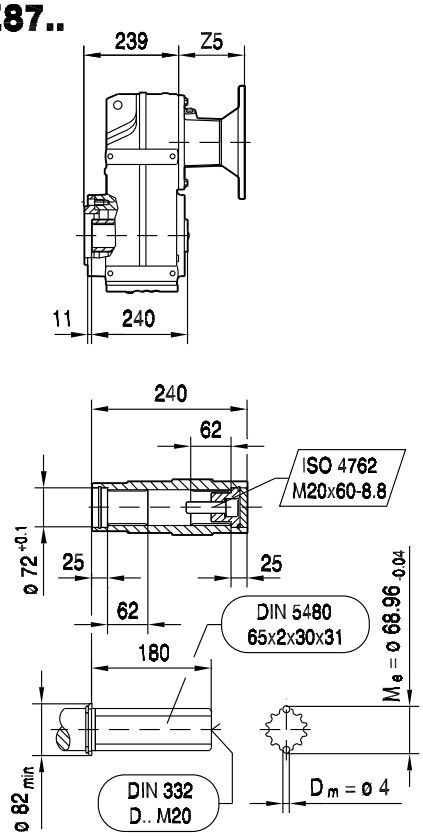

(→ 130)	B5	C5	E5	F5	G5	L	S5	Z5	D1	L1	T1	U1	
AM80	130	12	165	4.5	200	326	M10	87	19	40	21.8	6	
AM90	130	12	165	4.5	200	326	M10	87	24	50	27.3	8	
AM100	180	15	215	5.0	250	360	M12	121	28	60	31.3	8	
AM112	180	15	215	5.0	250	360	M12	121	28	60	31.3	8	
AM132S/M	230	16	265	5.0	300	413	M12	174	38	80	41.3	10	
AM132ML	230	16	265	5.0	300	413	M12	174	38	80	41.3	10	
AM160	250	18	300	6.0	350	471	M16	232	42	110	45.3	12	
AM180	250	18	300	6.0	350	471	M16	232	48	110	51.8	14	

FT87..

42 018 00 04

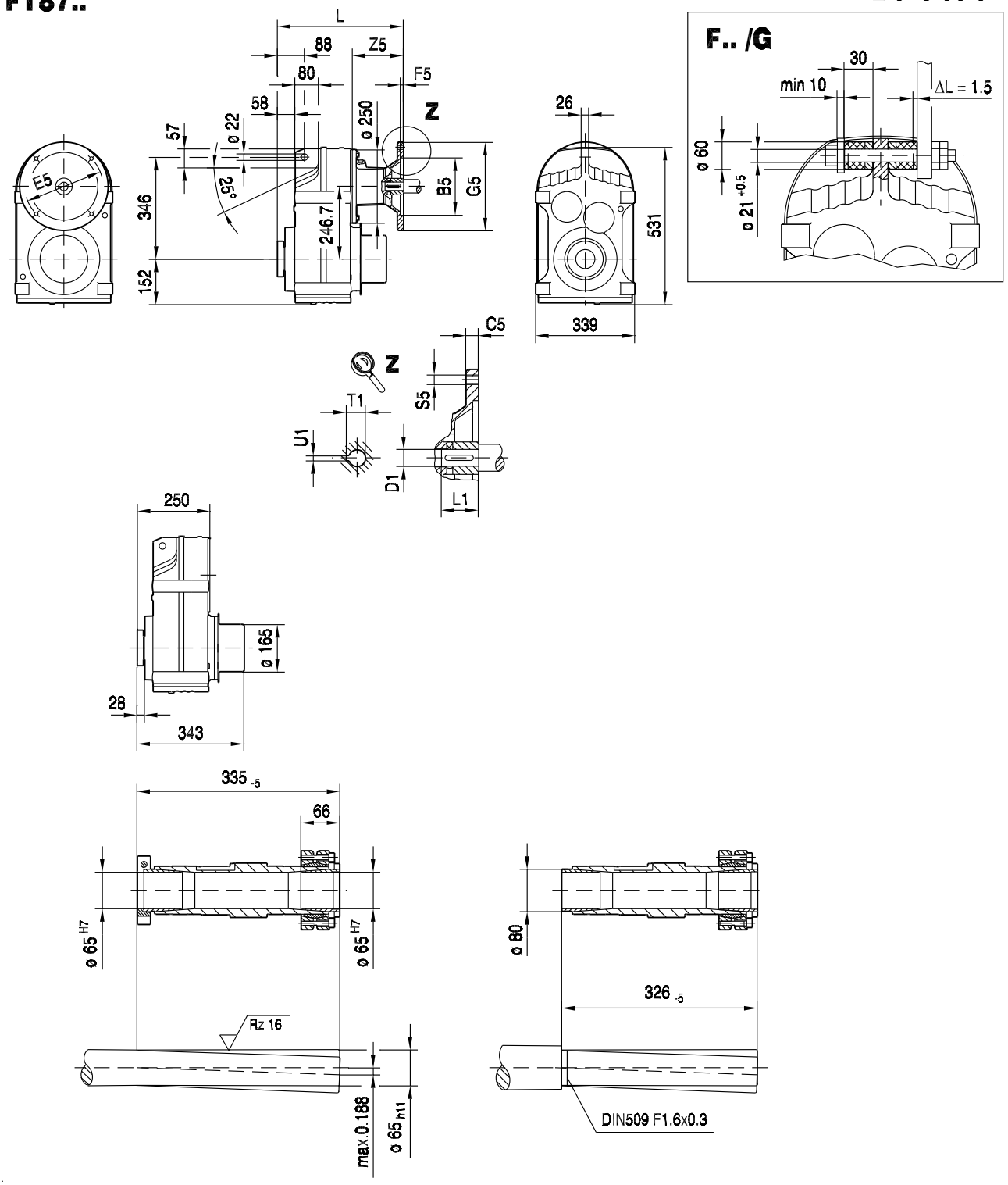

(→ 130)	B5	C5	E5	F5	G5	L	S5	Z5	D1	L1	T1	U1	
AM80	130	12	165	4.5	200	336	M10	87	19	40	21.8	6	
AM90	130	12	165	4.5	200	336	M10	87	24	50	27.3	8	
AM100	180	15	215	5.0	250	370	M12	121	28	60	31.3	8	
AM112	180	15	215	5.0	250	370	M12	121	28	60	31.3	8	
AM132S/M	230	16	265	5.0	300	423	M12	174	38	80	41.3	10	
AM132ML	230	16	265	5.0	300	423	M12	174	38	80	41.3	10	
AM160	250	18	300	6.0	350	481	M16	232	42	110	45.3	12	
AM180	250	18	300	6.0	350	481	M16	232	48	110	51.8	14	

F97..

42 068 01 01

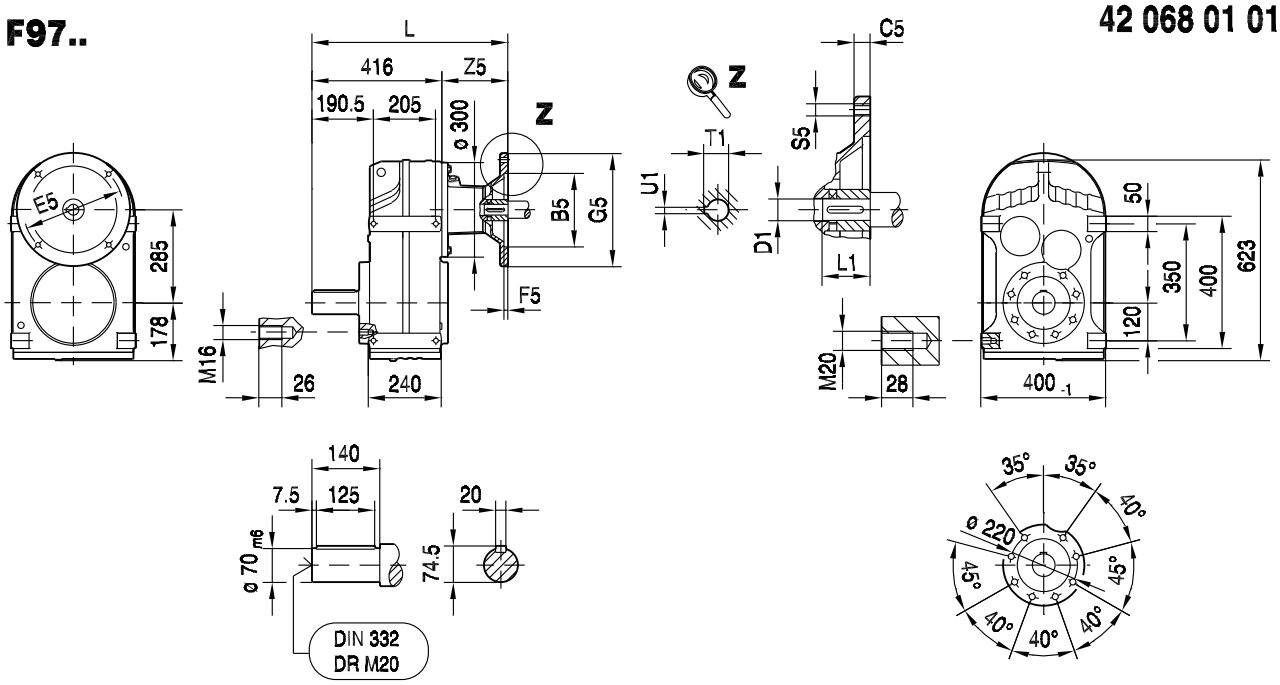

FA97B..

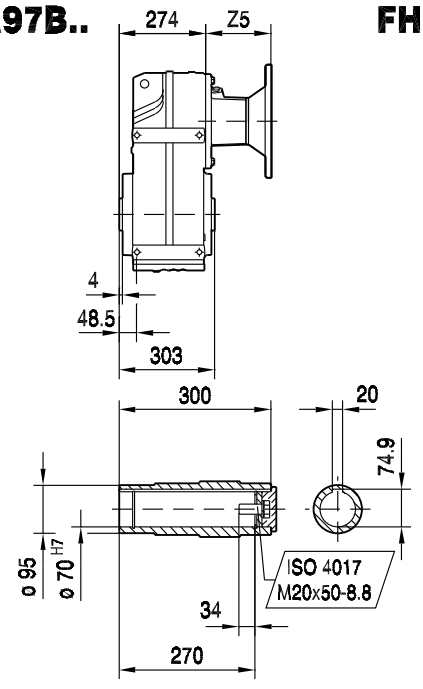

FH97B..

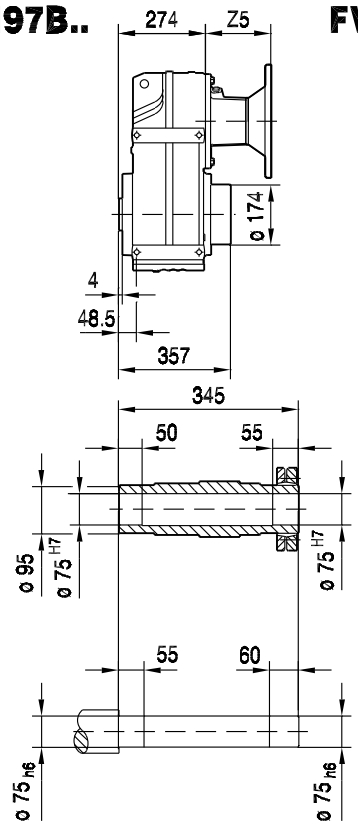

FV97B..

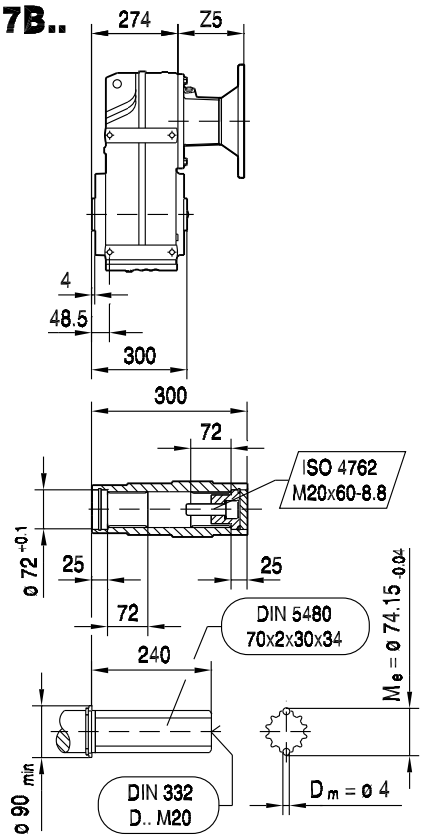

(→ 130)	B5	C5	E5	F5	G5	L	S5	Z5	D1	L1	T1	U1	
AM100	180	15	215	5.0	250	532	M12	116	28	60	31.3	8	
AM112	180	15	215	5.0	250	532	M12	116	28	60	31.3	8	
AM132S/M	230	16	265	5.0	300	585	M12	169	38	80	41.3	10	
AM132ML	230	16	265	5.0	300	585	M12	169	38	80	41.3	10	
AM160	250	18	300	6.0	350	643	M16	227	42	110	45.3	12	
AM180	250	18	300	6.0	350	643	M16	227	48	110	51.8	14	
AM200	300	20	350	7.0	400	684	M16	268	55	110	59.3	16	

FF97..

42 069 01 01

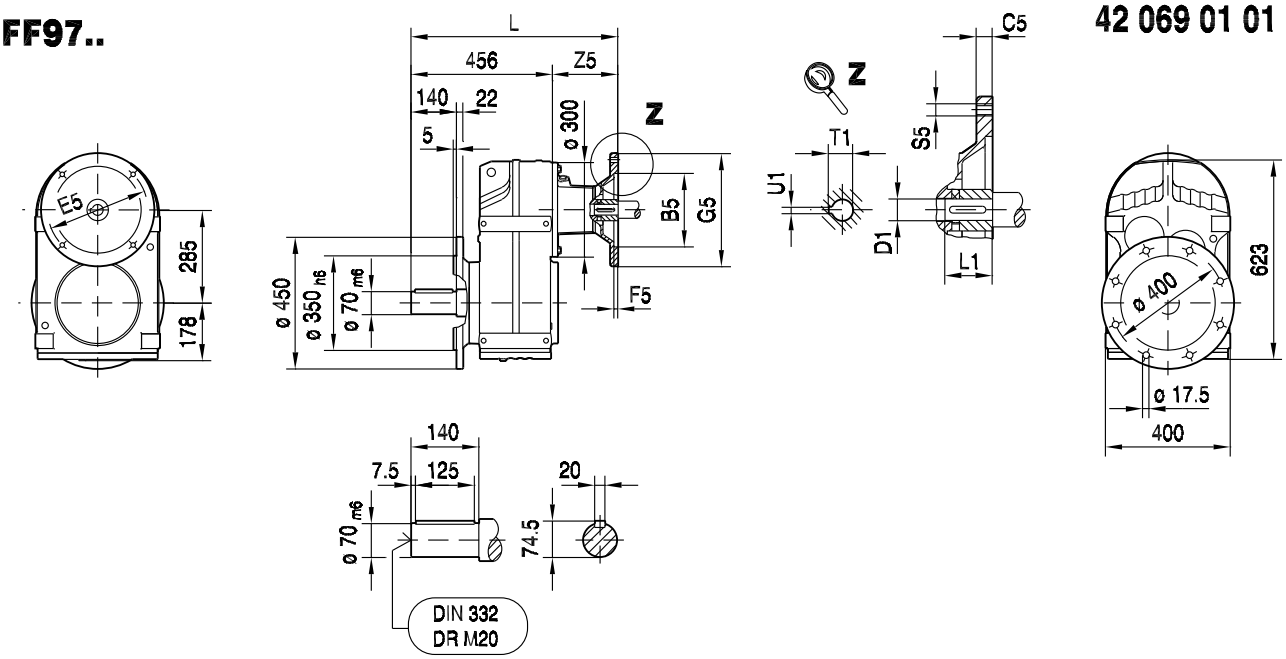

FAF97..

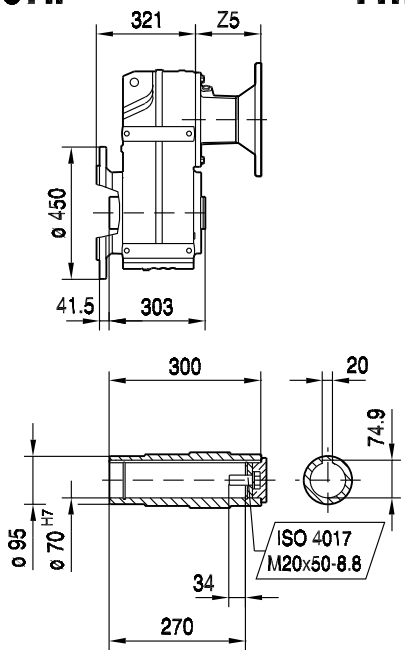

FHF97..

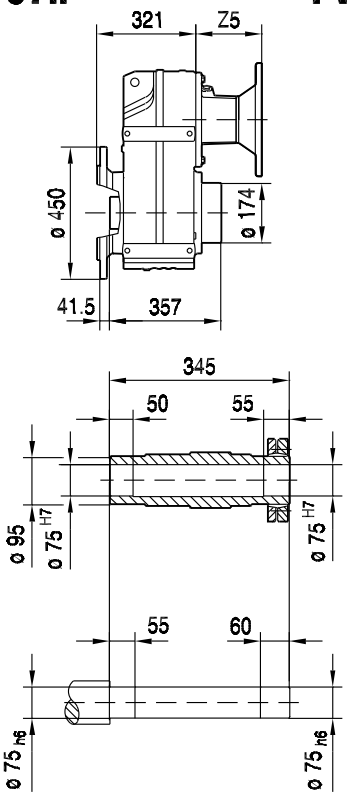

FVF97..

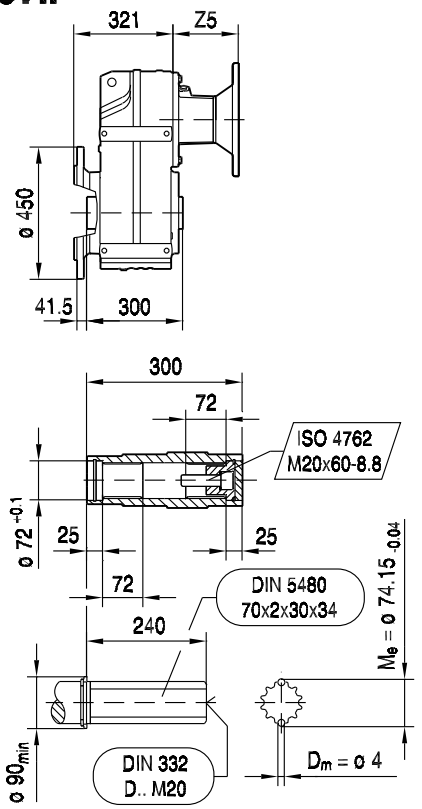

(→ 130)	B5	C5	E5	F5	G5	L	S5	Z5	D1	L1	T1	U1	
AM100	180	15	215	5.0	250	572	M12	116	28	60	31.3	8	
AM112	180	15	215	5.0	250	572	M12	116	28	60	31.3	8	
AM132S/M	230	16	265	5.0	300	625	M12	169	38	80	41.3	10	
AM132ML	230	16	265	5.0	300	625	M12	169	38	80	41.3	10	
AM160	250	18	300	6.0	350	683	M16	227	42	110	45.3	12	
AM180	250	18	300	6.0	350	683	M16	227	48	110	51.8	14	
AM200	300	20	350	7.0	400	724	M16	268	55	110	59.3	16	

FA97..

42 070 01 01

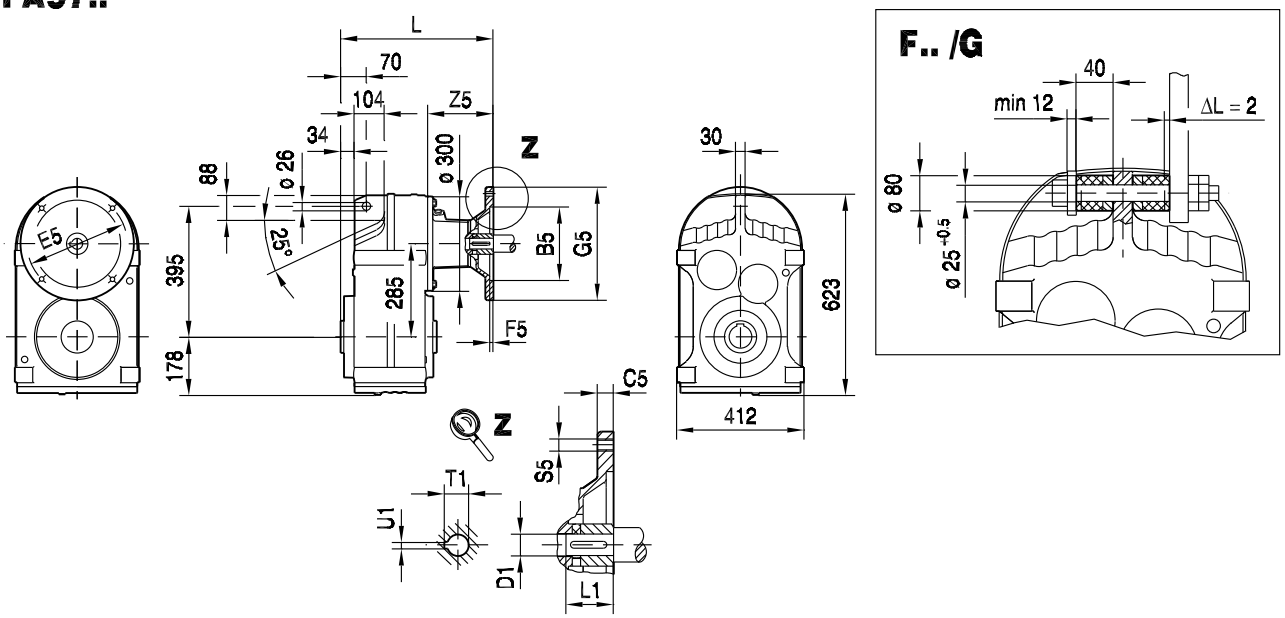

9

FA97..

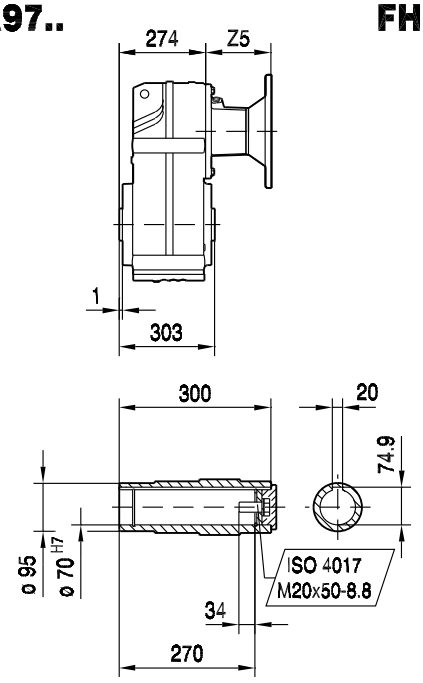

FH97..

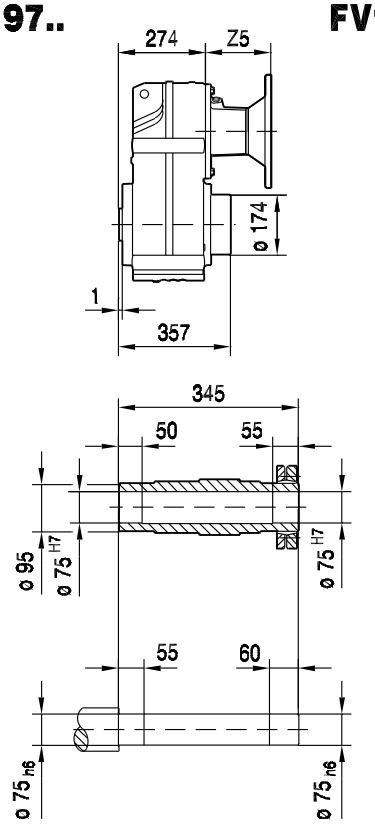

FV97..

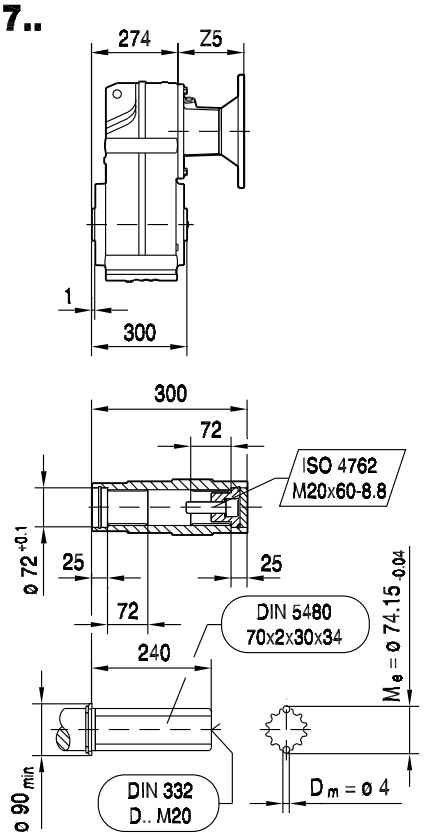

(→ 130)	B5	C5	E5	F5	G5	L	S5	Z5	D1	L1	T1	U1	
AM100	180	15	215	5.0	250	390	M12	116	28	60	31.3	8	
AM112	180	15	215	5.0	250	390	M12	116	28	60	31.3	8	
AM132S/M	230	16	265	5.0	300	443	M12	169	38	80	41.3	10	
AM132ML	230	16	265	5.0	300	443	M12	169	38	80	41.3	10	
AM160	250	18	300	6.0	350	501	M16	227	42	110	45.3	12	
AM180	250	18	300	6.0	350	501	M16	227	48	110	51.8	14	
AM200	300	20	350	7.0	400	542	M16	268	55	110	59.3	16	

FAZ97..

42 071 01 01

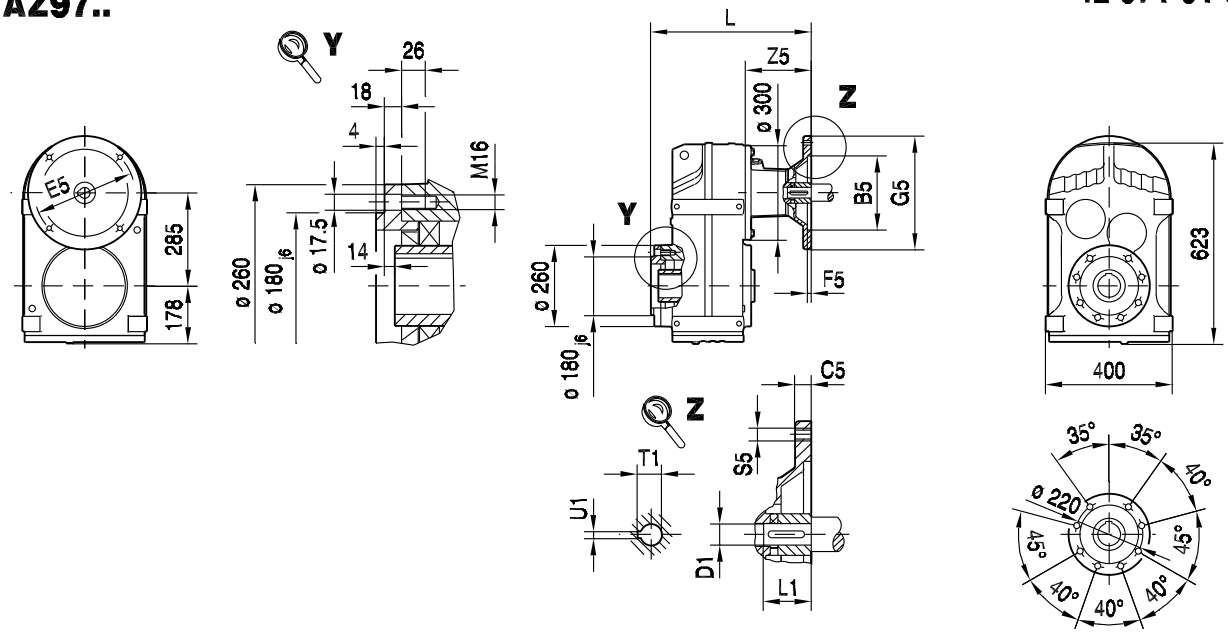

FAZ97..

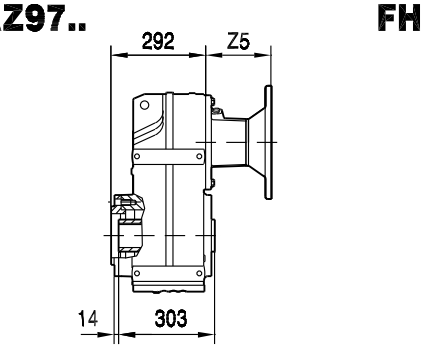

FHZ97..

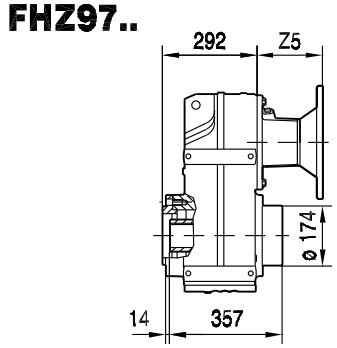

FVZ97..

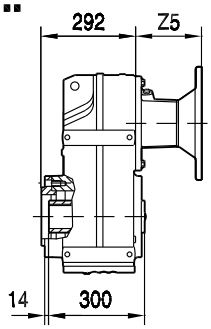

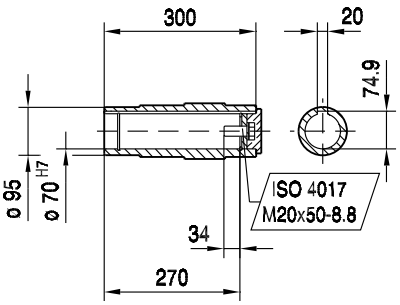

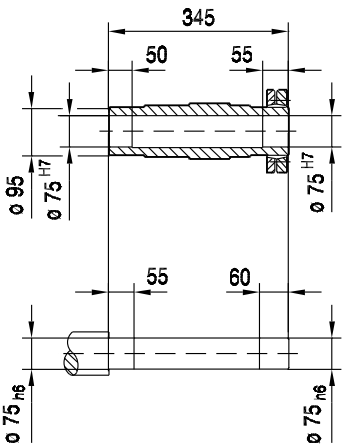

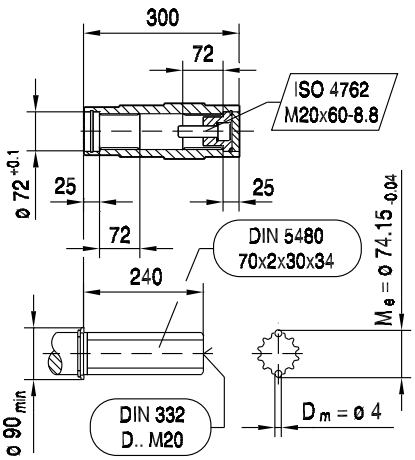

(→ 130)	B5	C5	E5	F5	G5	L	S5	Z5	D1	L1	T1	U1	
AM100	180	15	215	5.0	250	408	M12	116	28	60	31.3	8	
AM112	180	15	215	5.0	250	408	M12	116	28	60	31.3	8	
AM132S/M	230	16	265	5.0	300	461	M12	169	38	80	41.3	10	
AM132ML	230	16	265	5.0	300	461	M12	169	38	80	41.3	10	
AM160	250	18	300	6.0	350	519	M16	227	42	110	45.3	12	
AM180	250	18	300	6.0	350	519	M16	227	48	110	51.8	14	
AM200	300	20	350	7.0	400	560	M16	268	55	110	59.3	16	

FT97..

42 019 00 04

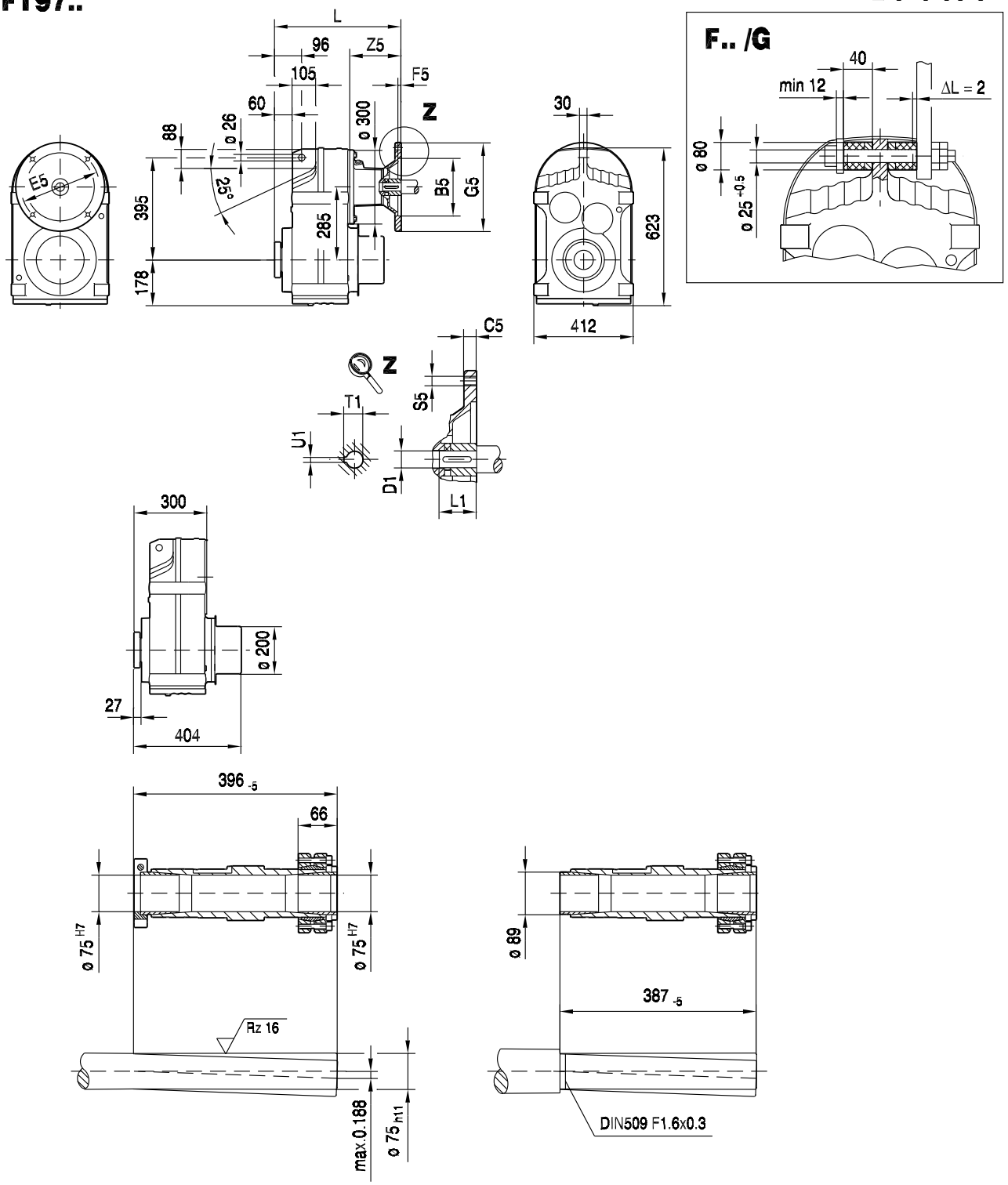

(→ 130)	B5	C5	E5	F5	G5	L	S5	Z5	D1	L1	T1	U1	
AM100	180	15	215	5.0	250	415	M12	116	28	60	31.3	8	
AM112	180	15	215	5.0	250	415	M12	116	28	60	31.3	8	
AM132S/M	230	16	265	5.0	300	468	M12	169	38	80	41.3	10	
AM132ML	230	16	265	5.0	300	468	M12	169	38	80	41.3	10	
AM160	250	18	300	6.0	350	526	M16	227	42	110	45.3	12	
AM180	250	18	300	6.0	350	526	M16	227	48	110	51.8	14	
AM200	300	20	350	7.0	400	567	M16	268	55	110	59.3	16	

F107..

42 072 01 01

<=AM200 >=AM225

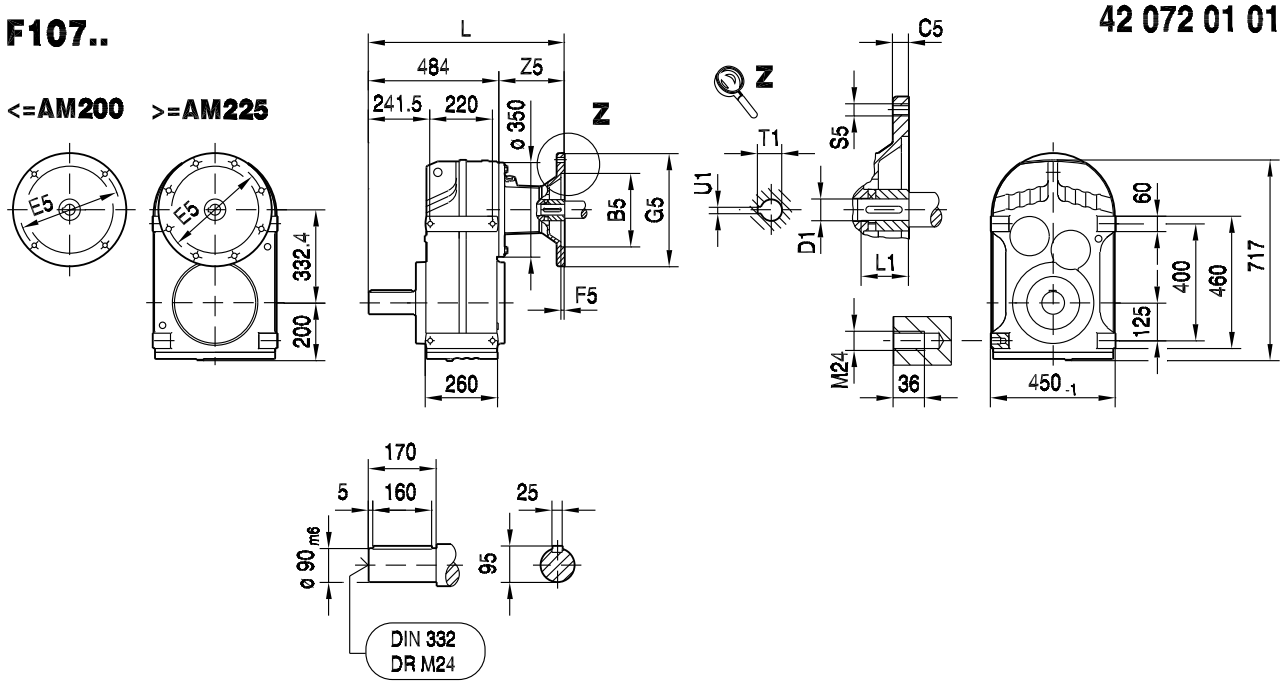

FA107B..

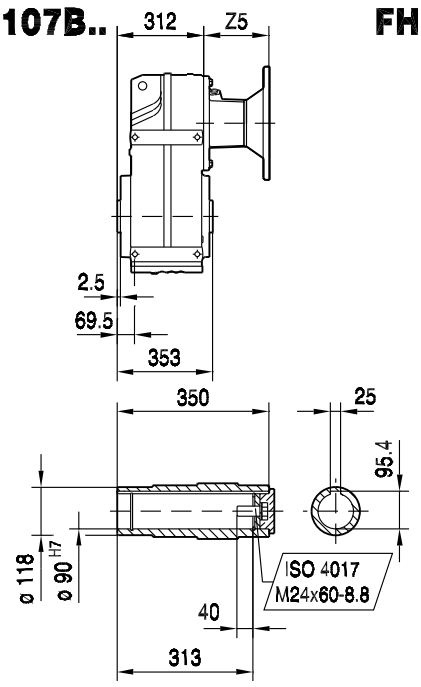

FH107B..

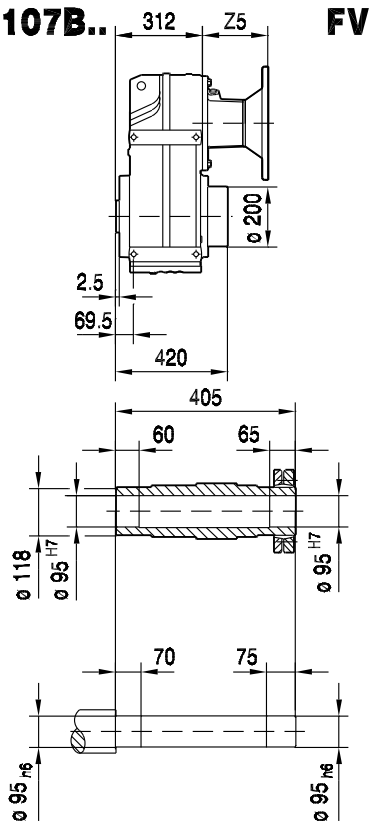

FV107B..

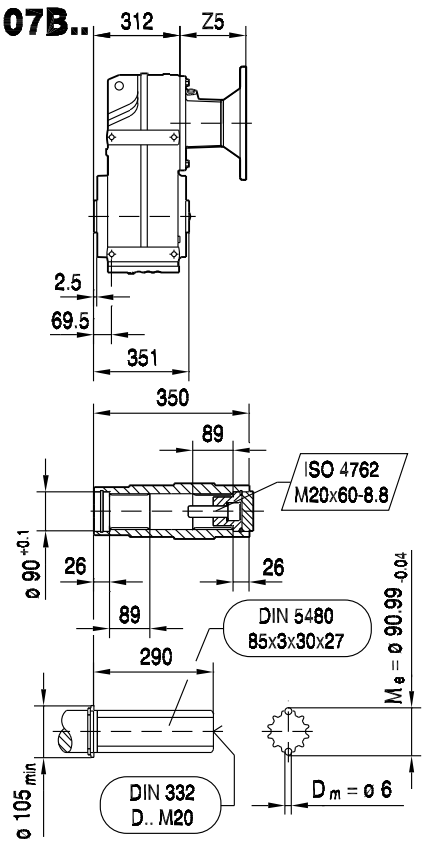

(→ 130)	B5	C5	E5	F5	G5	L	S5	Z5	D1	L1	T1	U1	
AM100	180	15	215	5.0	250	594	M12	110	28	60	31.3	8	
AM112	180	15	215	5.0	250	594	M12	110	28	60	31.3	8	
AM132S/M	230	16	265	5.0	300	647	M12	163	38	80	41.3	10	
AM132ML	230	16	265	5.0	300	647	M12	163	38	80	41.3	10	
AM160	250	18	300	6.0	350	705	M16	221	42	110	45.3	12	
AM180	250	18	300	6.0	350	705	M16	221	48	110	51.8	14	
AM200	300	20	350	7.0	400	746	M16	262	55	110	59.3	16	
AM225	350	22	400	7.0	450	761	M16	277	60	140	64.4	18	

FF107..

42 073 01 01

<=AM200 >=AM225

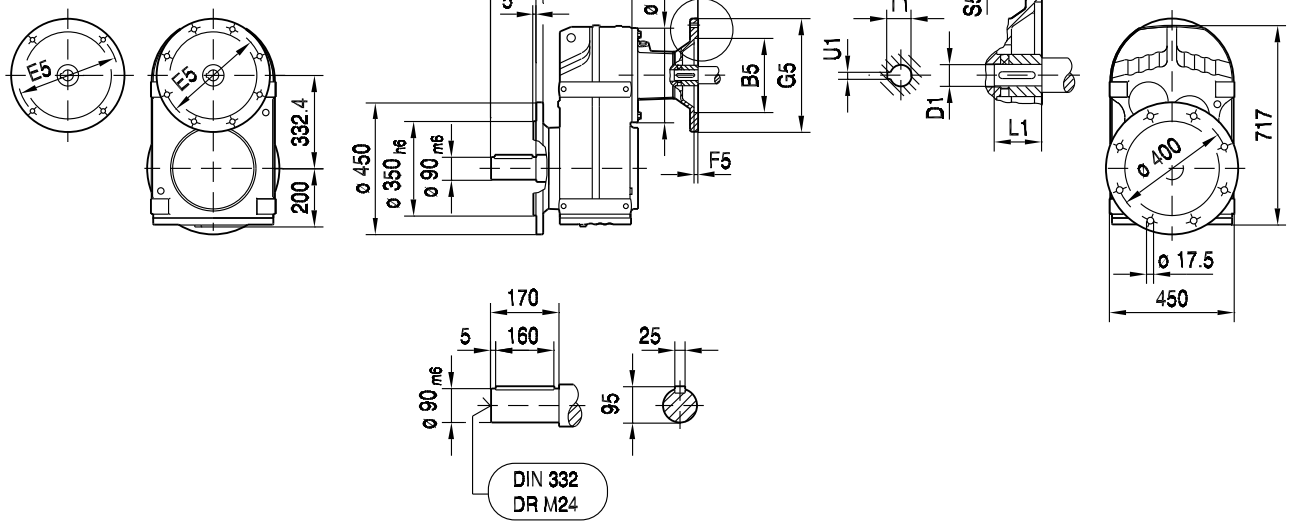

9

FAF107..

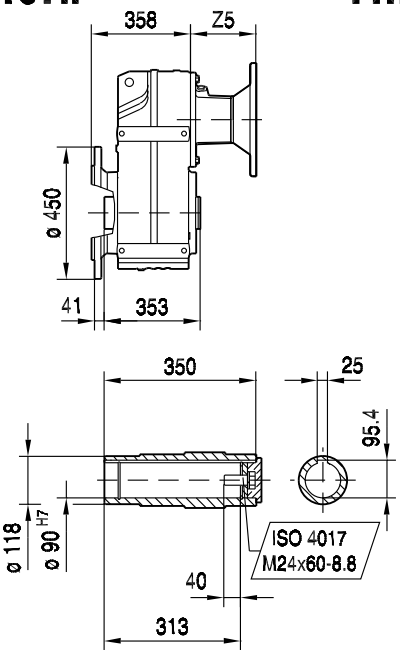

FHF107..

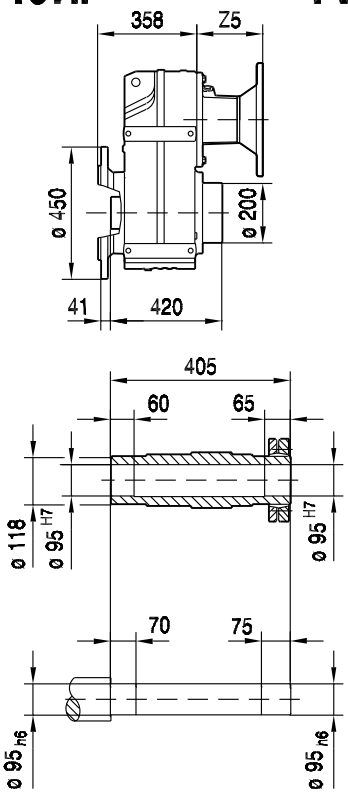

FVF107..

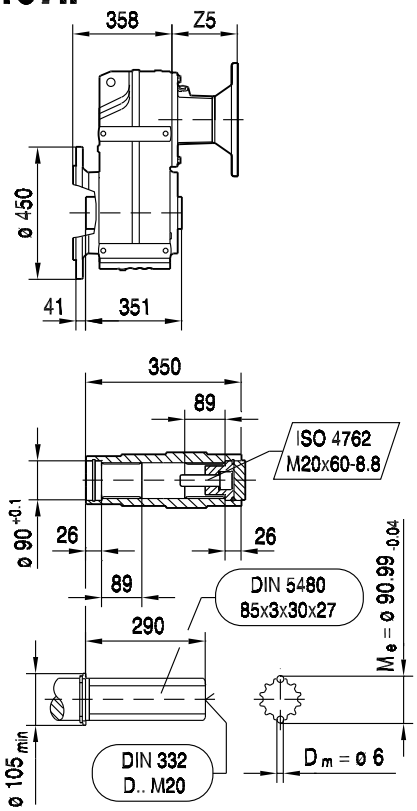

(→ 130)	B5	C5	E5	F5	G5	L	S5	Z5	D1	L1	T1	U1	
AM100	180	15	215	5.0	250	633	M12	110	28	60	31.3	8	
AM112	180	15	215	5.0	250	633	M12	110	28	60	31.3	8	
AM132S/M	230	16	265	5.0	300	686	M12	163	38	80	41.3	10	
AM132ML	230	16	265	5.0	300	686	M12	163	38	80	41.3	10	
AM160	250	18	300	6.0	350	744	M16	221	42	110	45.3	12	
AM180	250	18	300	6.0	350	744	M16	221	48	110	51.8	14	
AM200	300	20	350	7.0	400	785	M16	262	55	110	59.3	16	
AM225	350	22	400	7.0	450	800	M16	277	60	140	64.4	18	

FA107..

42 074 01 01

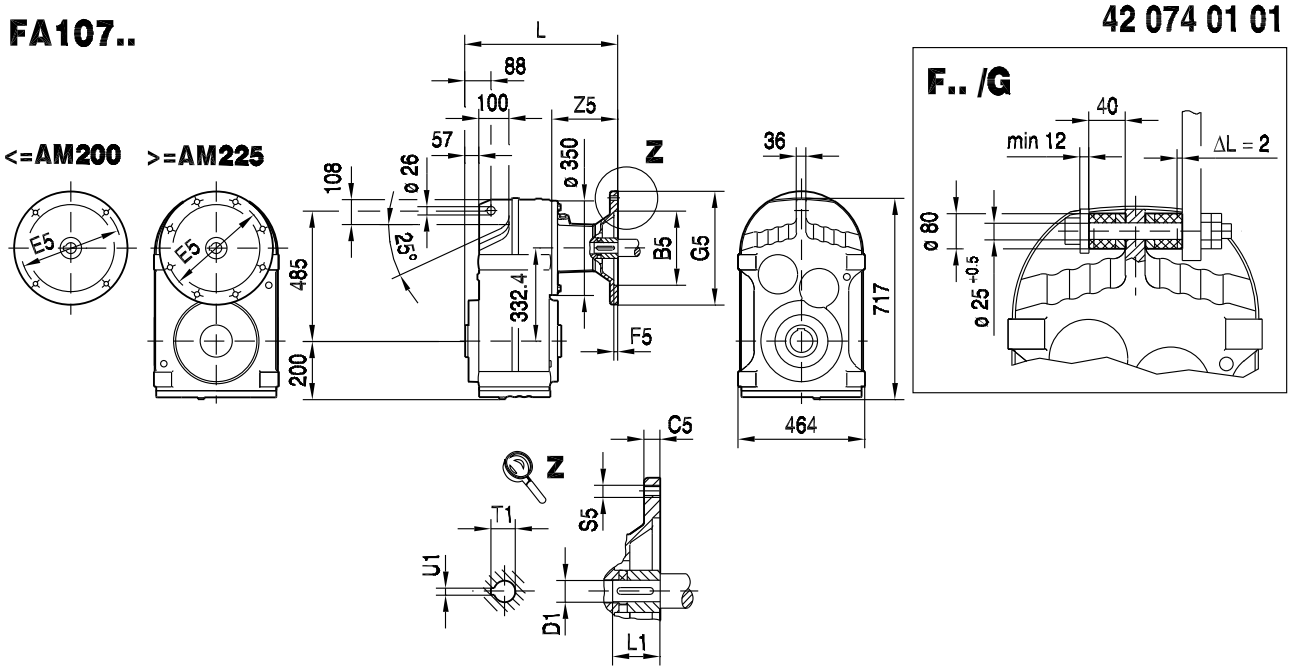

FA107..

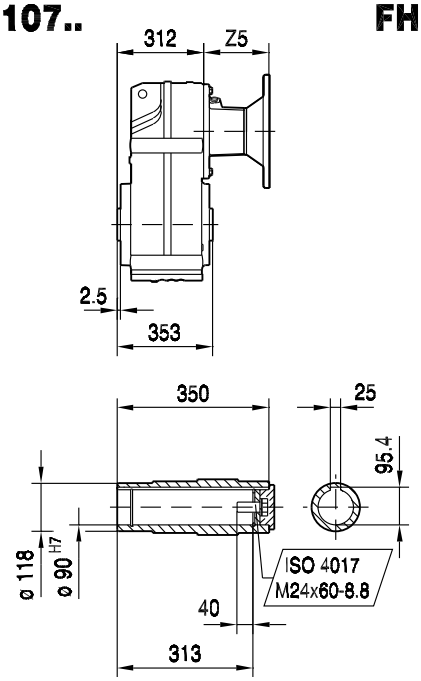

FH107..

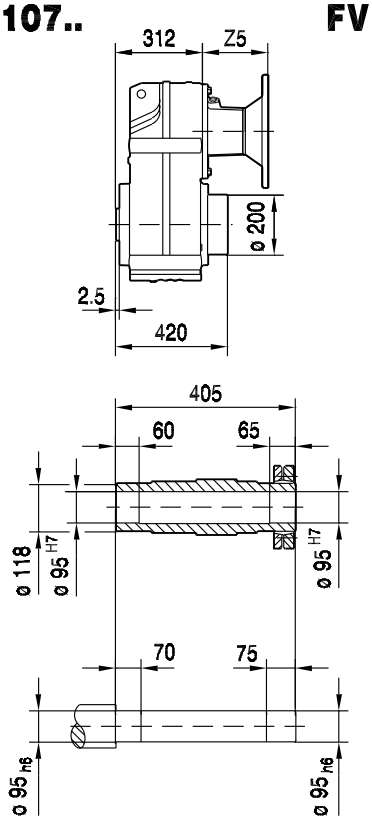

FV107..

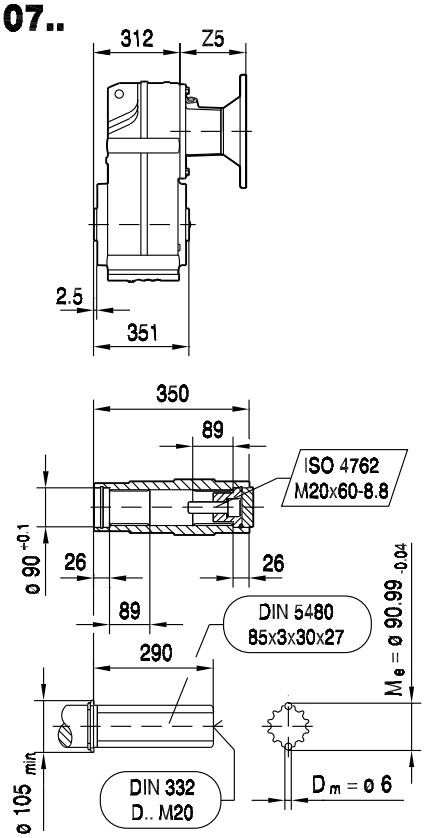

(→ 130)	B5	C5	E5	F5	G5	L	S5	Z5	D1	L1	T1	U1	
AM100	180	15	215	5.0	250	422	M12	110	28	60	31.3	8	
AM112	180	15	215	5.0	250	422	M12	110	28	60	31.3	8	
AM132S/M	230	16	265	5.0	300	475	M12	163	38	80	41.3	10	
AM132ML	230	16	265	5.0	300	475	M12	163	38	80	41.3	10	
AM160	250	18	300	6.0	350	533	M16	221	42	110	45.3	12	
AM180	250	18	300	6.0	350	533	M16	221	48	110	51.8	14	
AM200	300	20	350	7.0	400	574	M16	262	55	110	59.3	16	
AM225	350	22	400	7.0	450	589	M16	277	60	140	64.4	18	

FAZ107..

42 075 01 01

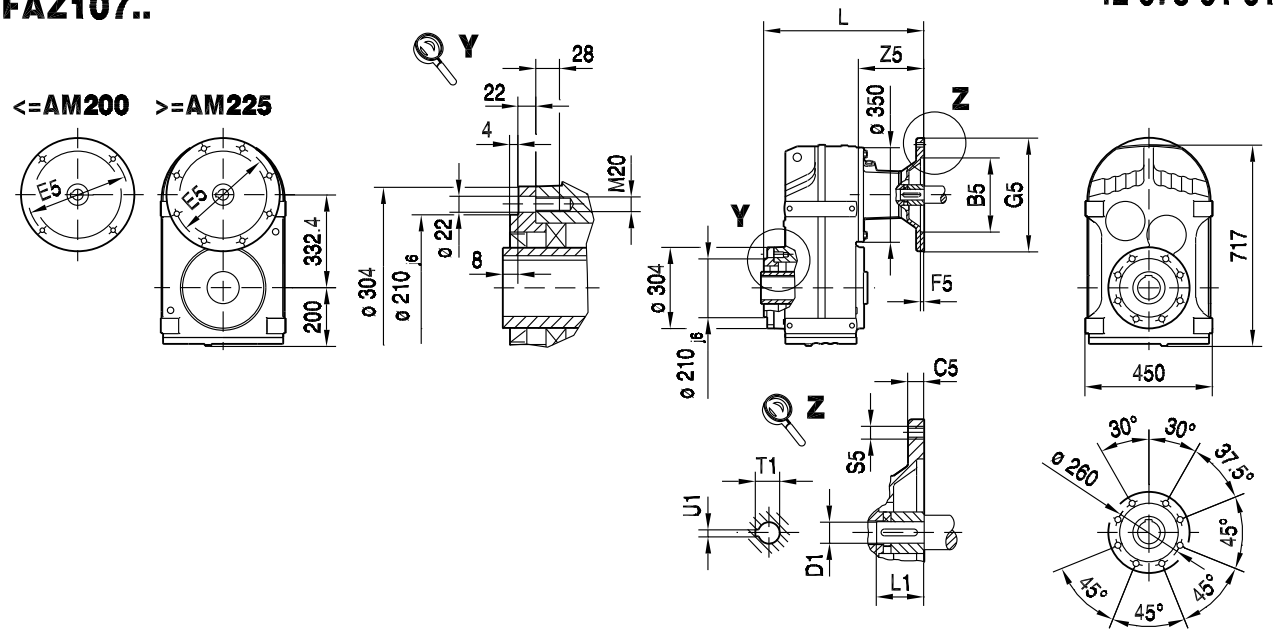

9

FAZ107..

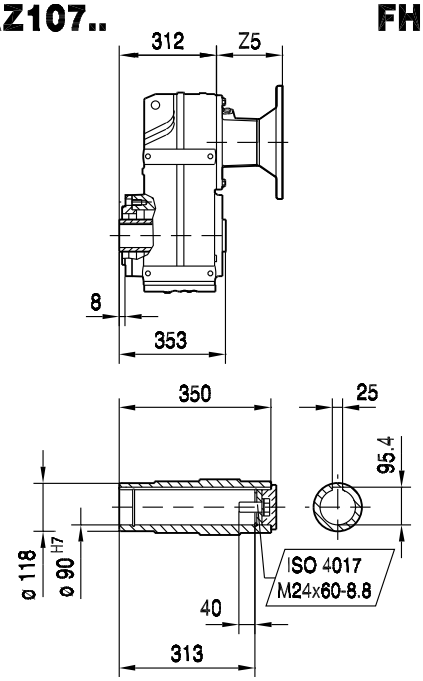

FHZ107..

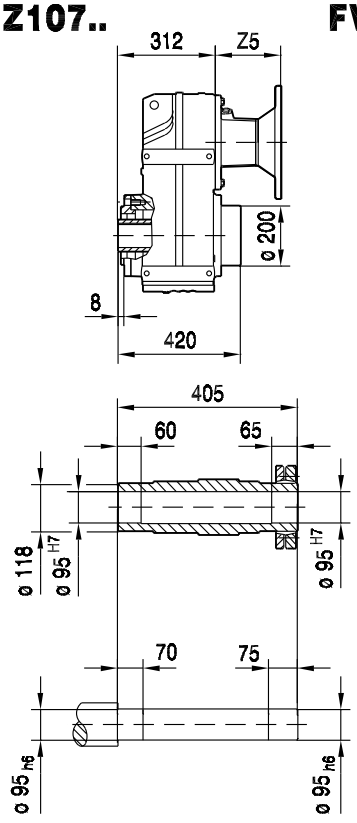

FVZ107..

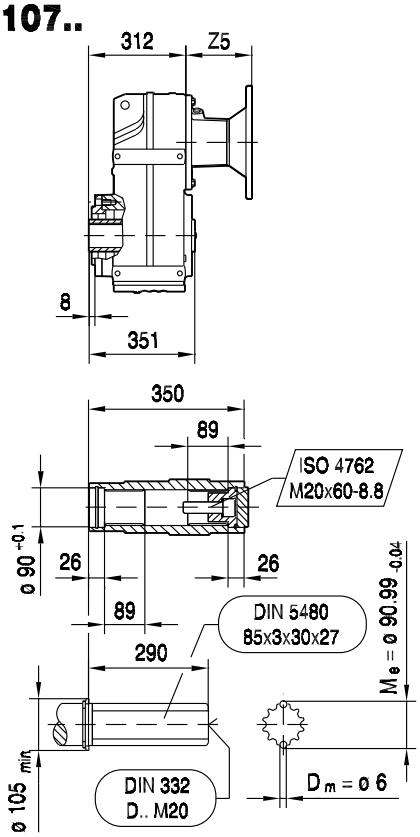

(→ 130)	B5	C5	E5	F5	G5	L	S5	Z5	D1	L1	T1	U1	
AM100	180	15	215	5.0	250	422	M12	110	28	60	31.3	8	
AM112	180	15	215	5.0	250	422	M12	110	28	60	31.3	8	
AM132S/M	230	16	265	5.0	300	475	M12	163	38	80	41.3	10	
AM132ML	230	16	265	5.0	300	475	M12	163	38	80	41.3	10	
AM160	250	18	300	6.0	350	533	M16	221	42	110	45.3	12	
AM180	250	18	300	6.0	350	533	M16	221	48	110	51.8	14	
AM200	300	20	350	7.0	400	574	M16	262	55	110	59.3	16	
AM225	350	22	400	7.0	450	589	M16	277	60	140	64.4	18	

FT107..

42 003 00 07

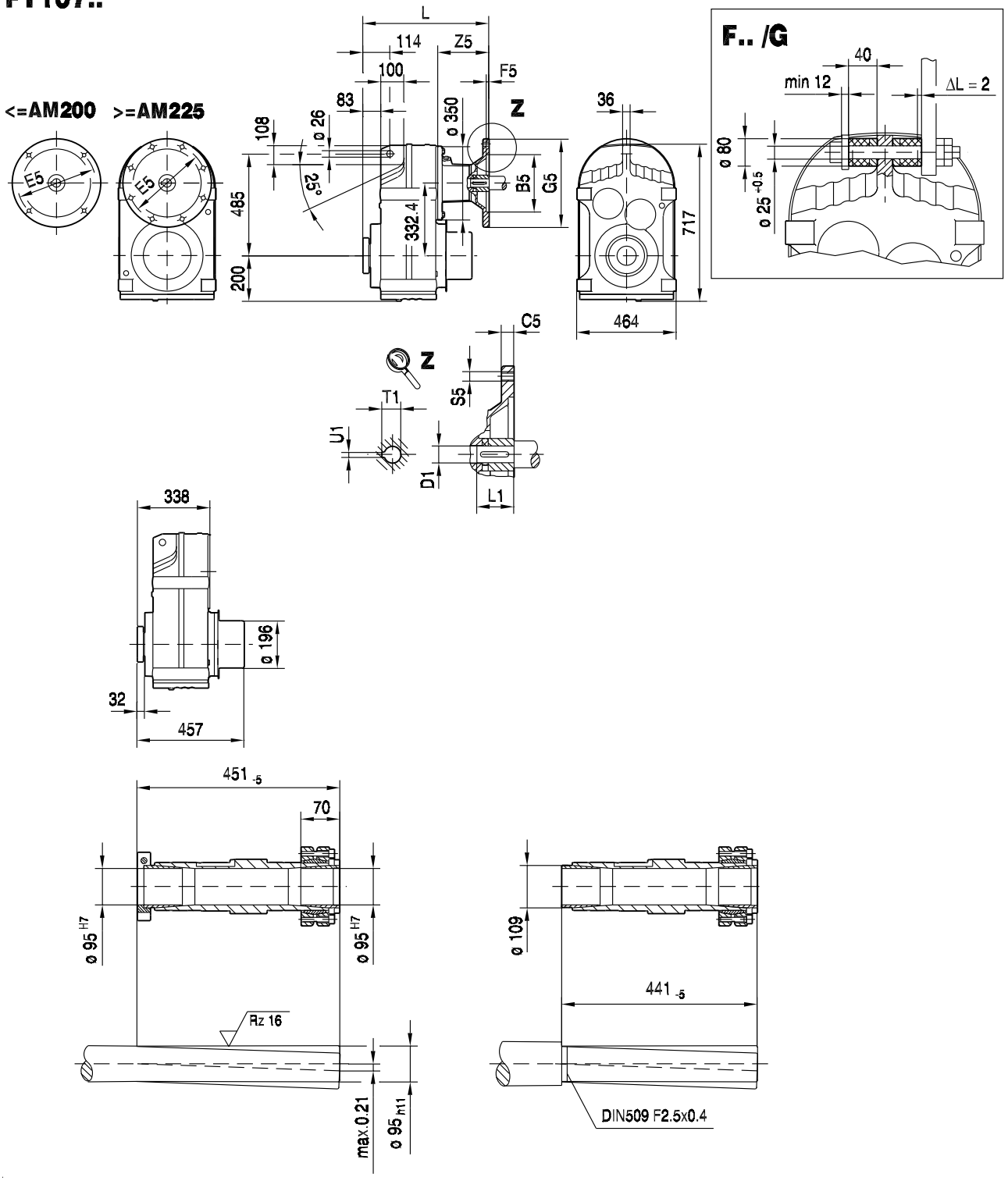

(→ 130)	B5	C5	E5	F5	G5	L	S5	Z5	D1	L1	T1	U1	
AM100	180	15	215	5.0	250	448	M12	110	28	60	31.3	8	
AM112	180	15	215	5.0	250	448	M12	110	28	60	31.3	8	
AM132S/M	230	16	265	5.0	300	501	M12	163	38	80	41.3	10	
AM132ML	230	16	265	5.0	300	501	M12	163	38	80	41.3	10	
AM160	250	18	300	6.0	350	559	M16	221	42	110	45.3	12	
AM180	250	18	300	6.0	350	559	M16	221	48	110	51.8	14	
AM200	300	20	350	7.0	400	600	M16	262	55	110	59.3	16	
AM225	350	22	400	7.0	450	615	M16	277	60	140	64.4	18	

42 076 01 01

F127..

<=AM200 >=AM225

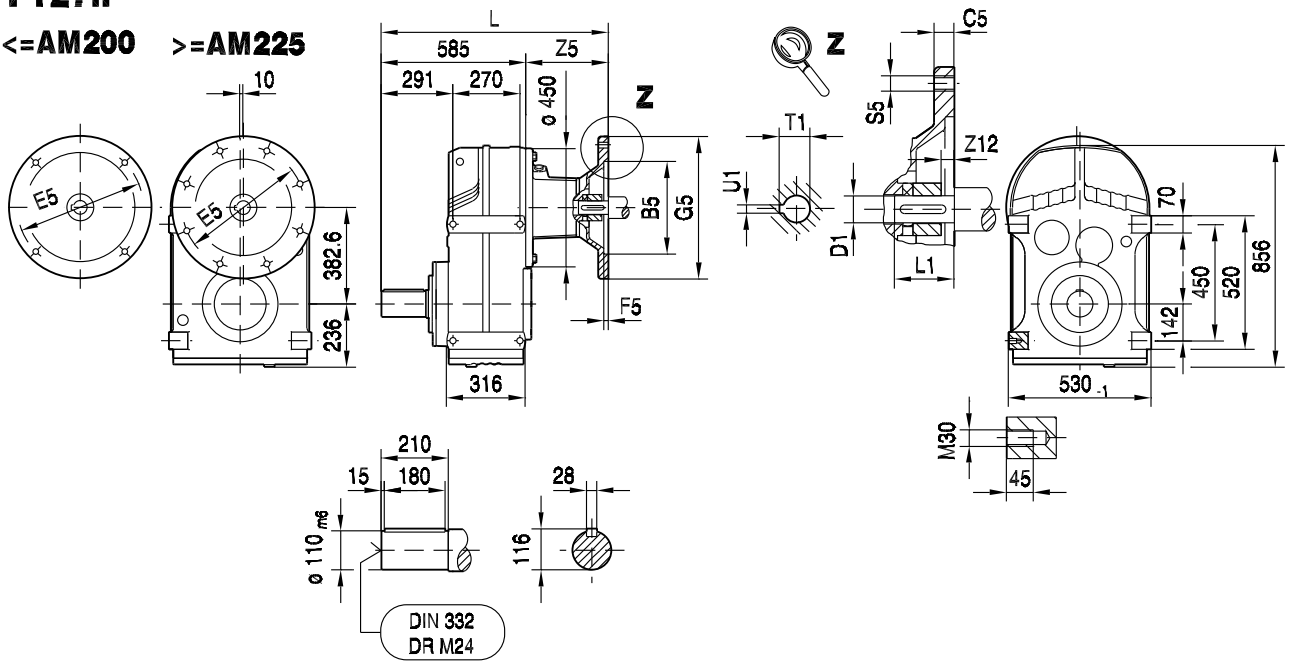

FA127B..

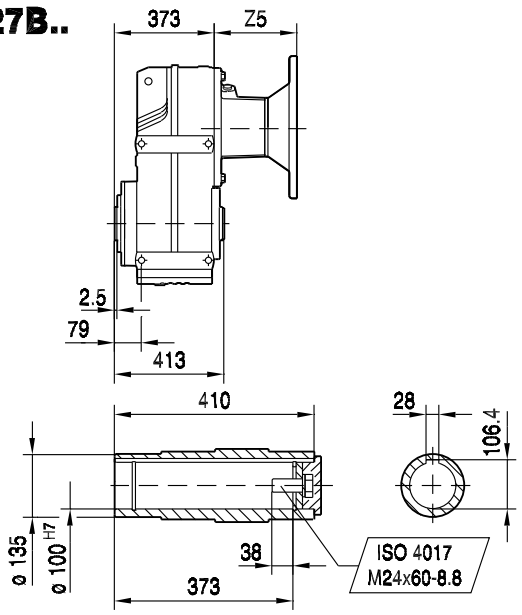

FH127B..

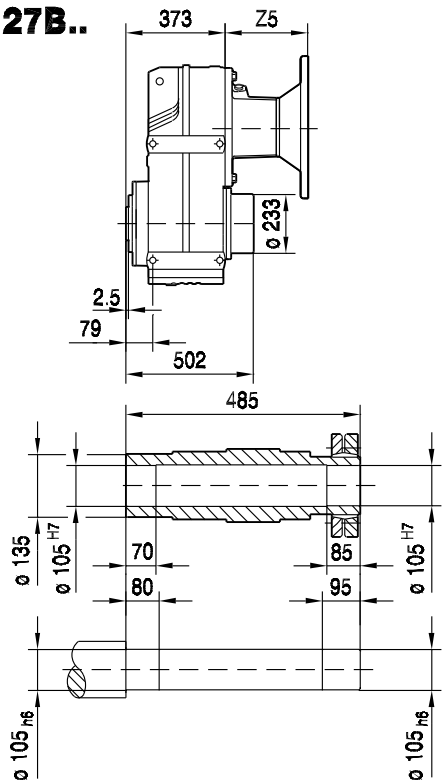

(→ 130)	B5	C5	E5	F5	G5	L	S5	Z5	Z12	D1	L1	T1	U1
AM132S/M	230	16	265	5.0	300	733	M12	148	0	38	80	41.3	10
AM132ML	230	16	265	5.0	300	733	M12	148	0	38	80	41.3	10
AM160	250	18	300	6.0	350	791	M16	206	0	42	110	45.3	12
AM180	250	18	300	6.0	350	791	M16	206	0	48	110	51.8	14
AM200	300	20	350	7.0	400	832	M16	247	0	55	110	59.3	16
AM225	350	22	400	7.0	450	847	M16	262	0	60	140	64.4	18
AM250	450	25	500	7.0	550	921	M16	336	19	65	140	69.4	18
AM280	450	25	500	7.0	550	921	M16	336	19	75	140	79.9	20

42 077 01 01

FF127..

<=AM200 >=AM225

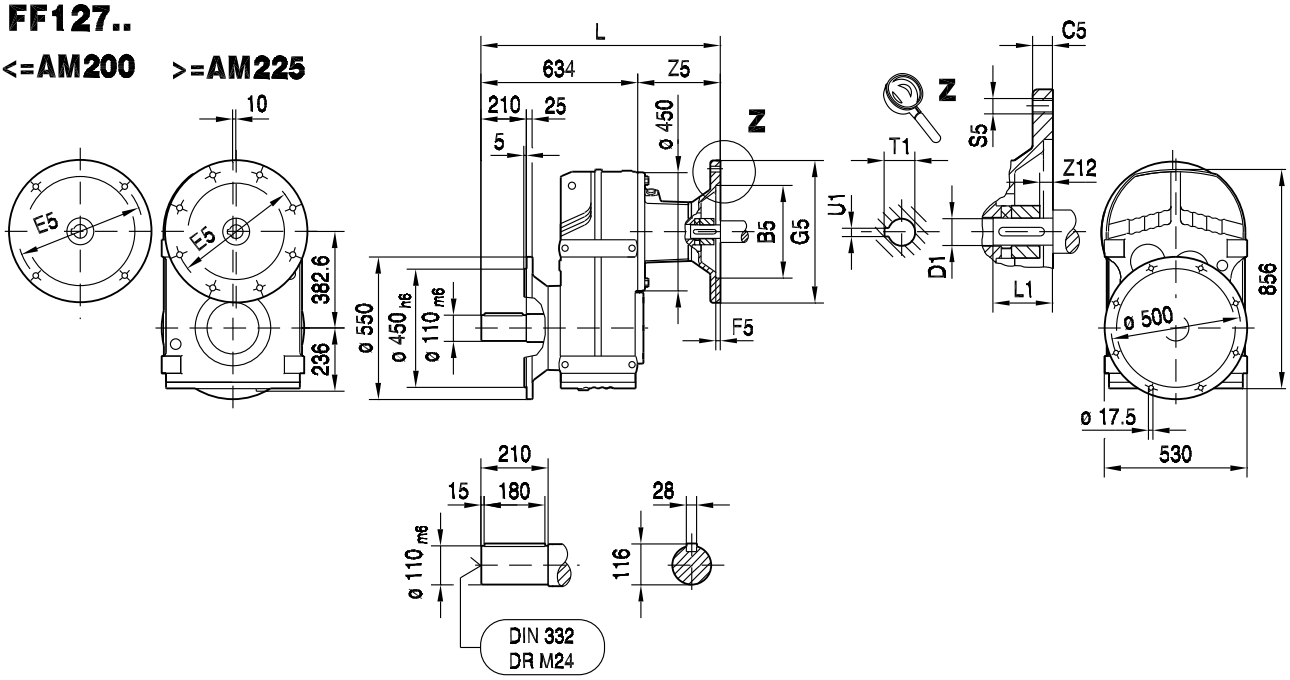

FAF127..

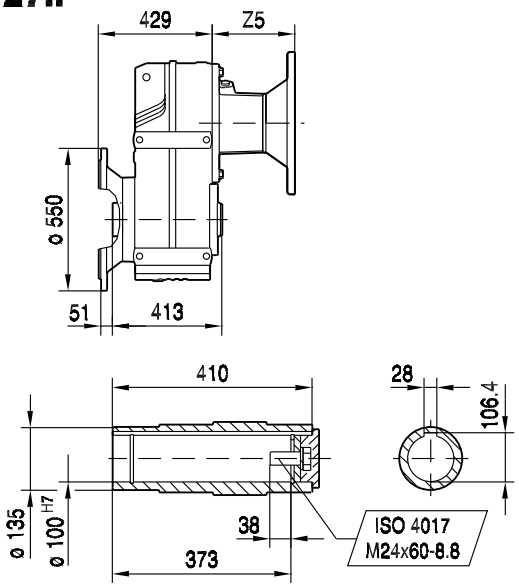

FHF127..

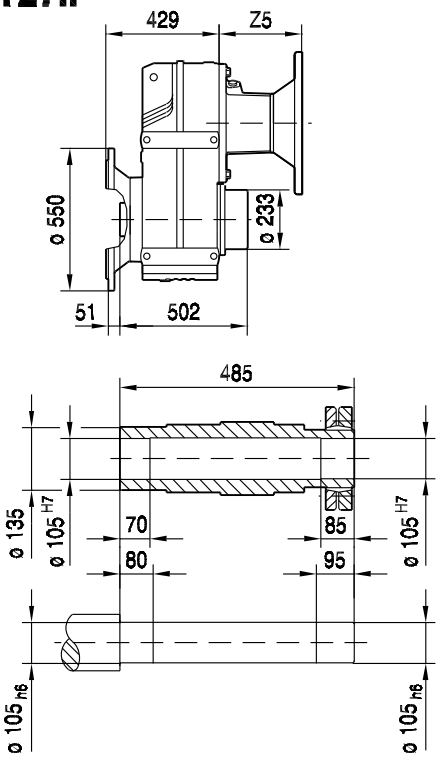

(→ 130)	B5	C5	E5	F5	G5	L	S5	Z5	Z12	D1	L1	T1	U1
AM132S/M	230	16	265	5.0	300	782	M12	148	0	38	80	41.3	10
AM132ML	230	16	265	5.0	300	782	M12	148	0	38	80	41.3	10
AM160	250	18	300	6.0	350	840	M16	206	0	42	110	45.3	12
AM180	250	18	300	6.0	350	840	M16	206	0	48	110	51.8	14
AM200	300	20	350	7.0	400	881	M16	247	0	55	110	59.3	16
AM225	350	22	400	7.0	450	896	M16	262	0	60	140	64.4	18
AM250	450	25	500	7.0	550	970	M16	336	19	65	140	69.4	18
AM280	450	25	500	7.0	550	970	M16	336	19	75	140	79.9	20

42 078 01 01

FA127..

<=AM200 **>=AM225**

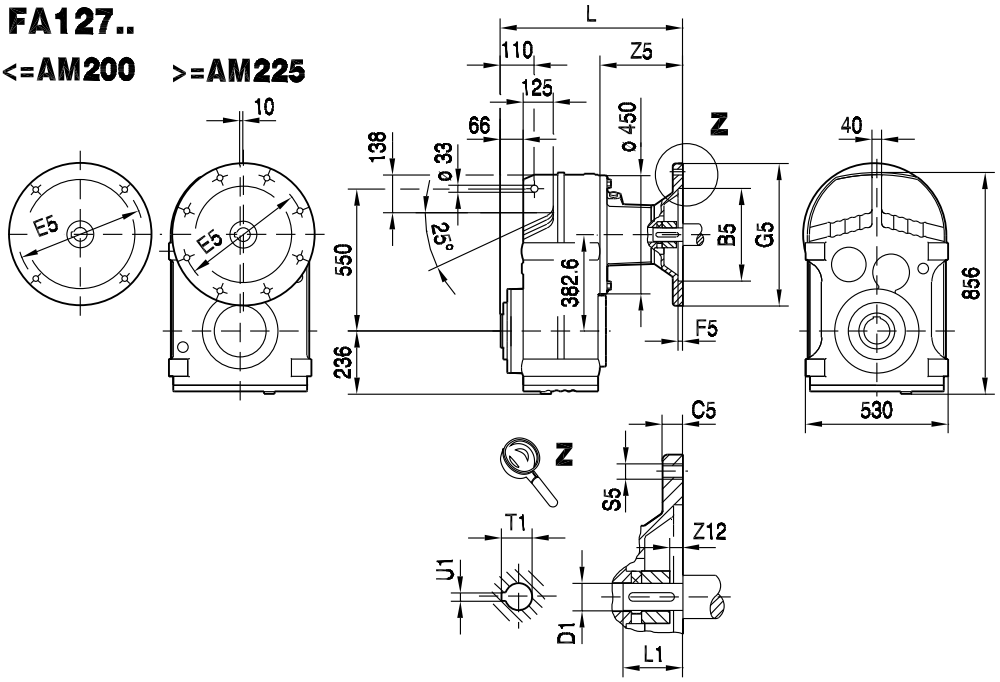

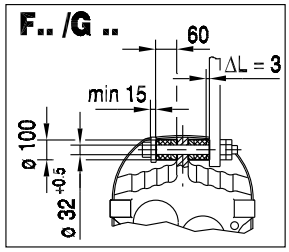

FA127..

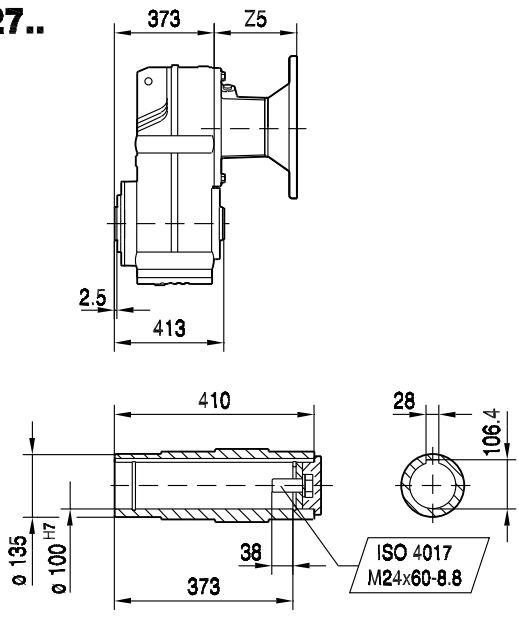

FH127..

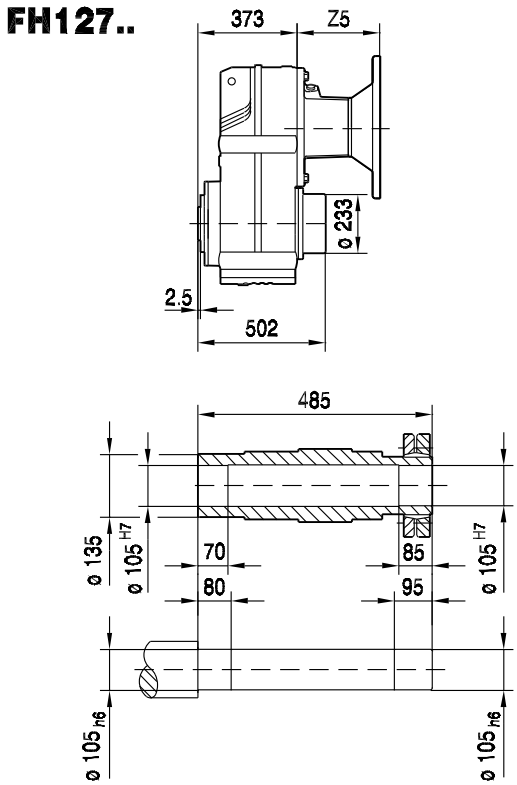

(→ 130)	B5	C5	E5	F5	G5	L	S5	Z5	Z12	D1	L1	T1	U1
AM132S/M	230	16	265	5.0	300	521	M12	148	0	38	80	41.3	10
AM132ML	230	16	265	5.0	300	521	M12	148	0	38	80	41.3	10
AM160	250	18	300	6.0	350	579	M16	206	0	42	110	45.3	12
AM180	250	18	300	6.0	350	579	M16	206	0	48	110	51.8	14
AM200	300	20	350	7.0	400	620	M16	247	0	55	110	59.3	16
AM225	350	22	400	7.0	450	635	M16	262	0	60	140	64.4	18
AM250	450	25	500	7.0	550	709	M16	336	19	65	140	69.4	18
AM280	450	25	500	7.0	550	709	M16	336	19	75	140	79.9	20

42 079 01 01

FAZ127..

<=AM200 >=AM225

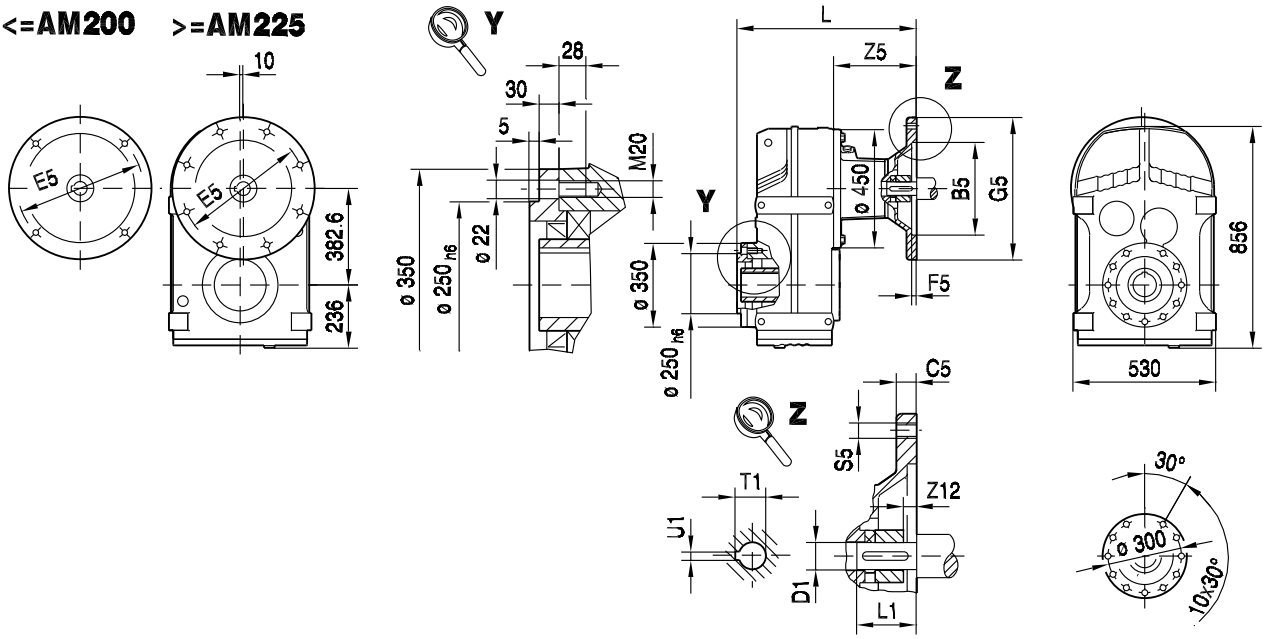

FAZ127..

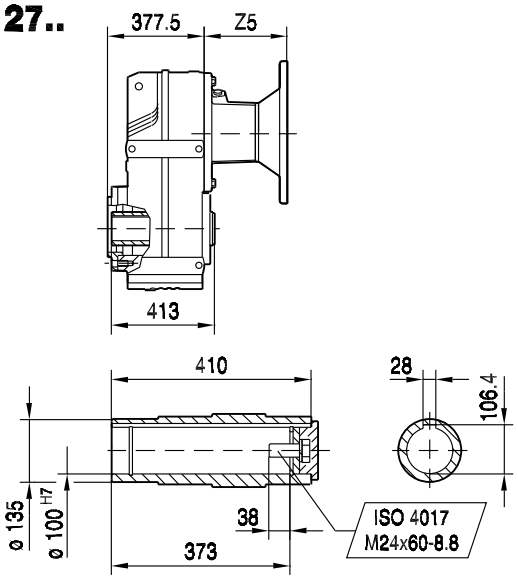

FHZ127..

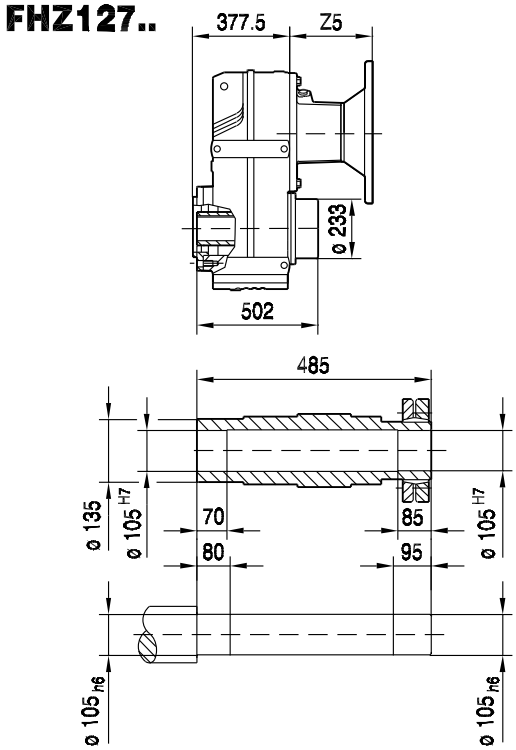

(→ 130)	B5	C5	E5	F5	G5	L	S5	Z5	Z12	D1	L1	T1	U1
AM132S/M	230	16	265	5.0	300	526	M12	148	0	38	80	41.3	10
AM132ML	230	16	265	5.0	300	526	M12	148	0	38	80	41.3	10
AM160	250	18	300	6.0	350	584	M16	206	0	42	110	45.3	12
AM180	250	18	300	6.0	350	584	M16	206	0	48	110	51.8	14
AM200	300	20	350	7.0	400	625	M16	247	0	55	110	59.3	16
AM225	350	22	400	7.0	450	640	M16	262	0	60	140	64.4	18
AM250	450	25	500	7.0	550	714	M16	336	19	65	140	69.4	18
AM280	450	25	500	7.0	550	714	M16	336	19	75	140	79.9	20

42 004 00 07

FT127..

<=AM200 >=AM225

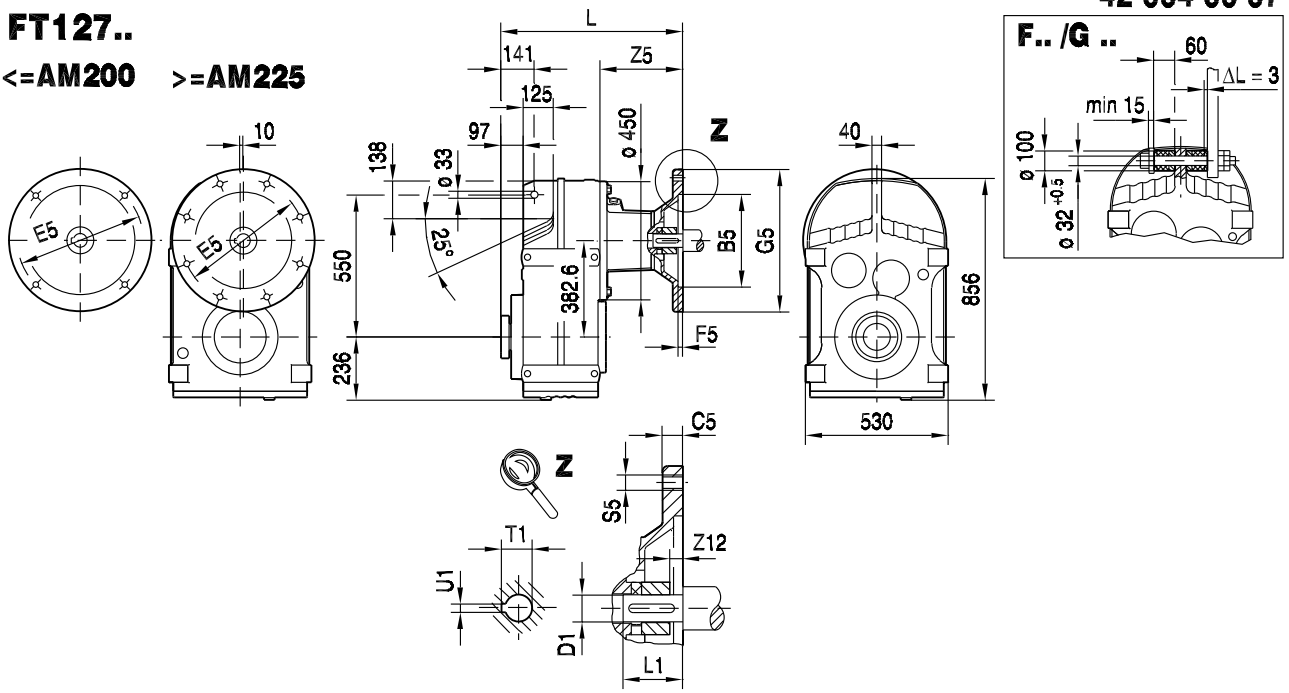

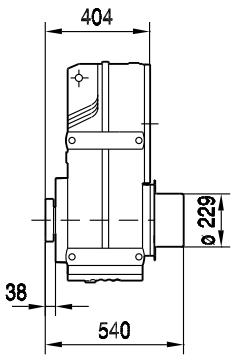

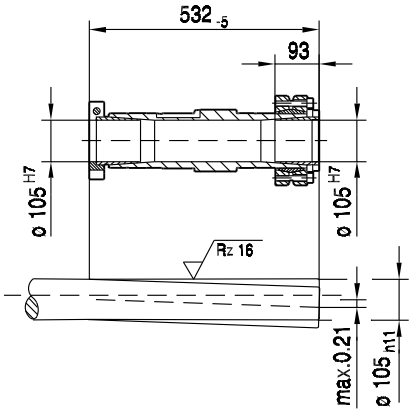

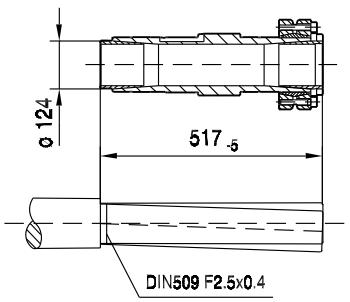

(→ 130)	B5	C5	E5	F5	G5	L	S5	Z5	Z12	D1	L1	T1	U1
AM132S/M	230	16	265	5.0	300	552	M12	148	0	38	80	41.3	10
AM132ML	230	16	265	5.0	300	552	M12	148	0	38	80	41.3	10
AM160	250	18	300	6.0	350	610	M16	206	0	42	110	45.3	12
AM180	250	18	300	6.0	350	610	M16	206	0	48	110	51.8	14
AM200	300	20	350	7.0	400	651	M16	247	0	55	110	59.3	16
AM225	350	22	400	7.0	450	666	M16	262	0	60	140	64.4	18
AM250	450	25	500	7.0	550	740	M16	336	19	65	140	69.4	18
AM280	450	25	500	7.0	550	740	M16	336	19	75	140	79.9	20

42 080 01 01

F157..

<=AM200 >=AM225

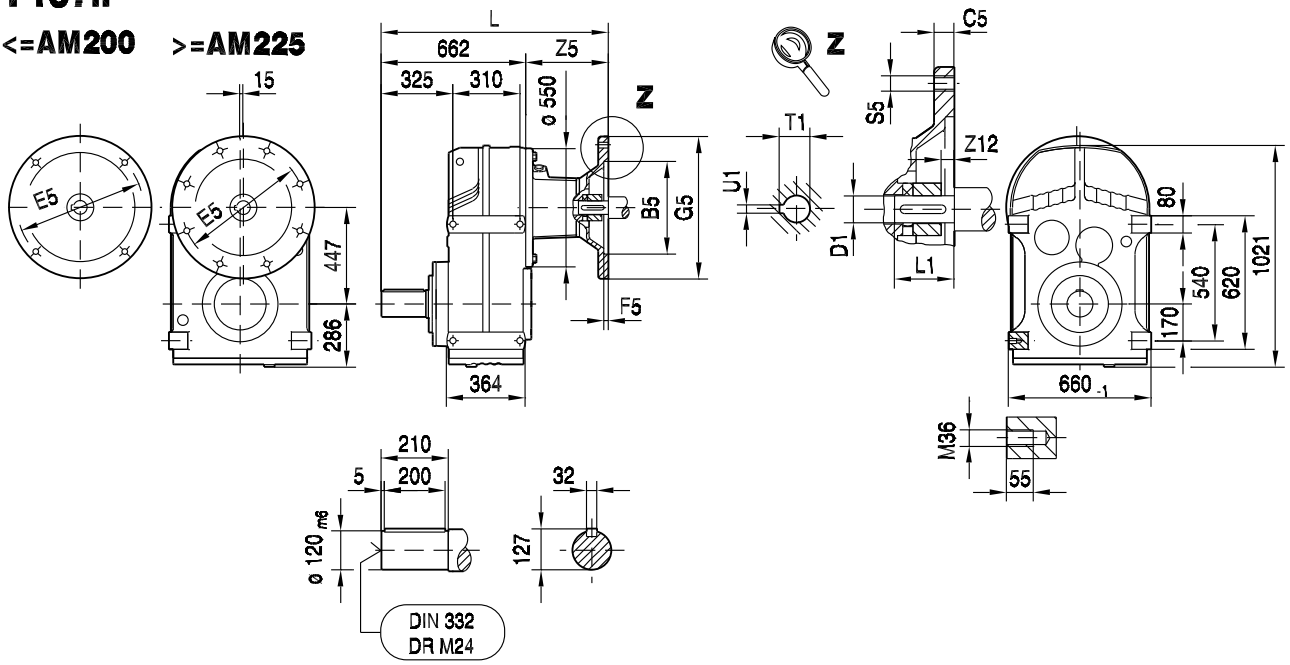

FA157B..

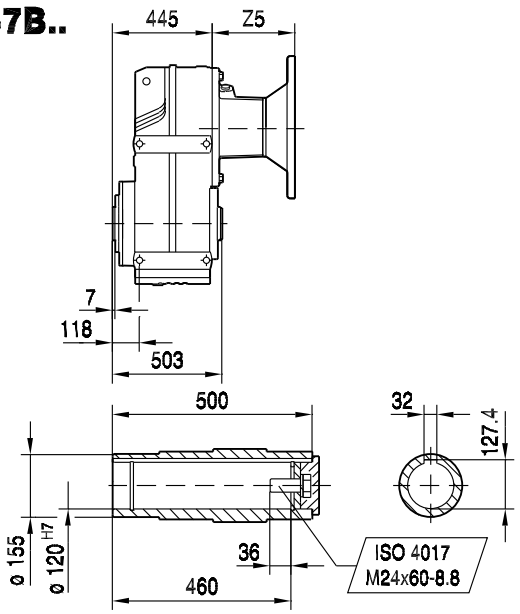

FH157B..

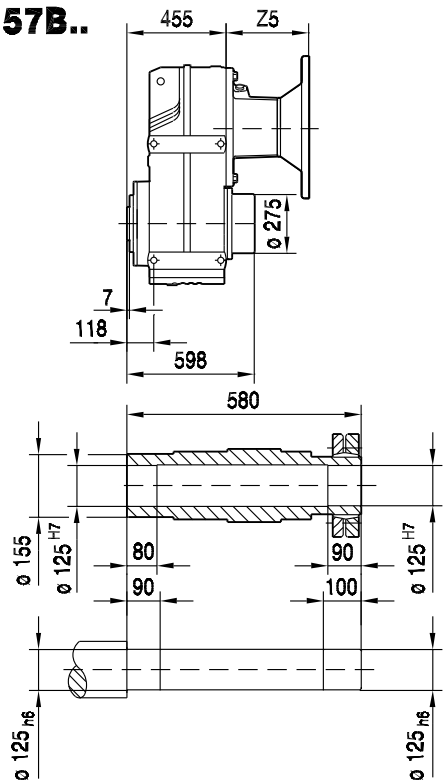

(→ 130)	B5	C5	E5	F5	G5	L	S5	Z5	Z12	D1	L1	T1	U1
AM160	250	18	300	6.0	350	860	M16	198	0	42	110	45.3	12
AM180	250	18	300	6.0	350	860	M16	198	0	48	110	51.8	14
AM200	300	20	350	7.0	400	901	M16	239	0	55	110	59.3	16
AM225	350	22	400	7.0	450	916	M16	254	0	60	140	64.4	18
AM250	450	25	500	7.0	550	990	M16	328	19	65	140	69.4	18
AM280	450	25	500	7.0	550	990	M16	328	19	75	140	79.9	20

42 081 01 01

FF157..

<=AM200 >=AM225

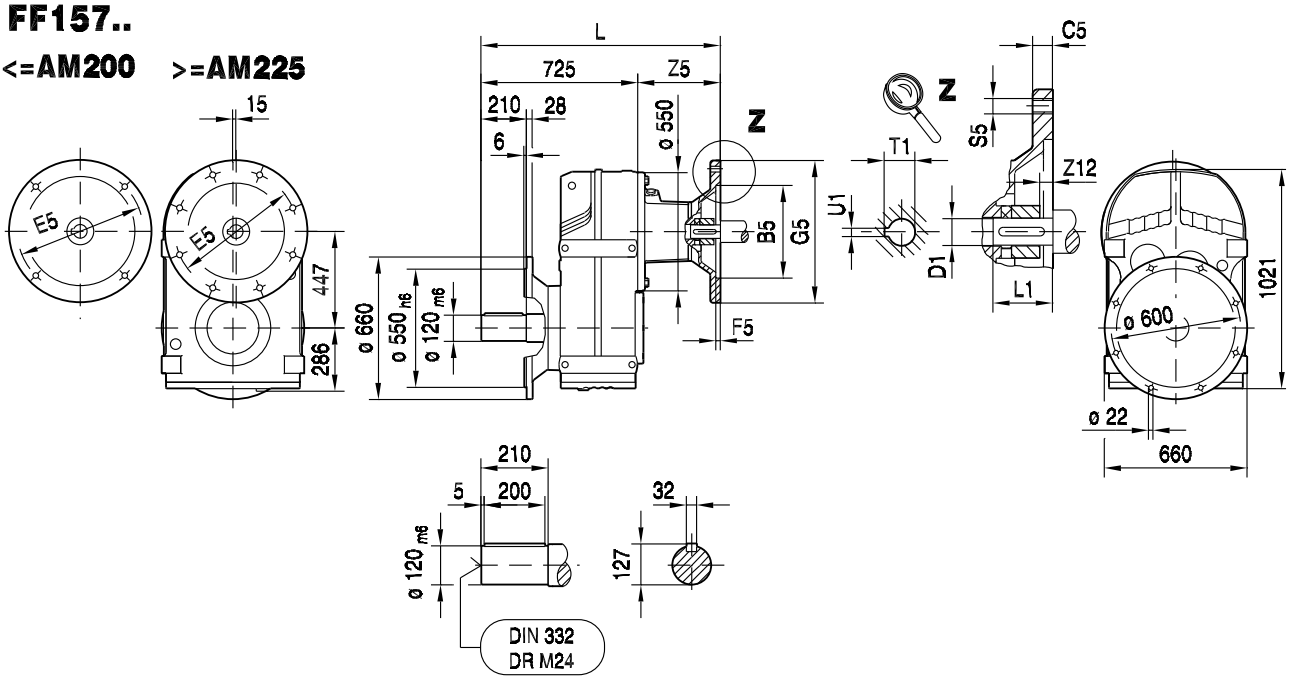

FAF157..

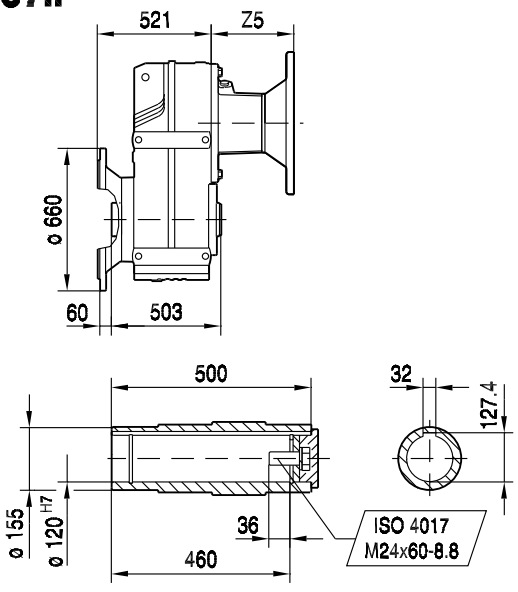

FHF157..

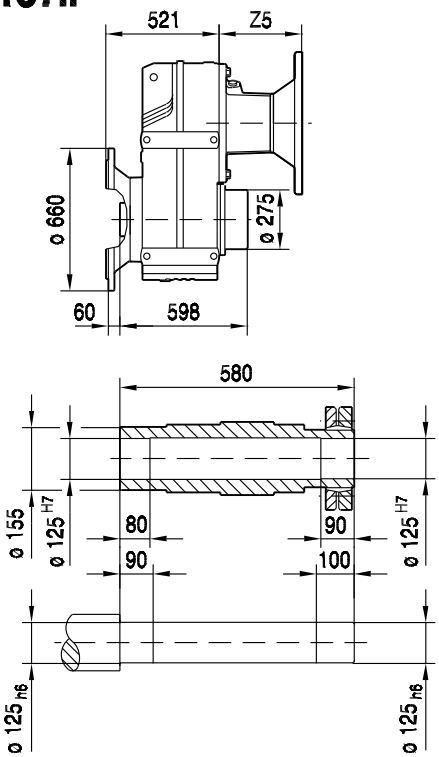

(→ 130)	B5	C5	E5	F5	G5	L	S5	Z5	Z12	D1	L1	T1	U1
AM160	250	18	300	6.0	350	923	M16	198	0	42	110	45.3	12
AM180	250	18	300	6.0	350	923	M16	198	0	48	110	51.8	14
AM200	300	20	350	7.0	400	964	M16	239	0	55	110	59.3	16
AM225	350	22	400	7.0	450	979	M16	254	0	60	140	64.4	18
AM250	450	25	500	7.0	550	1053	M16	328	19	65	140	69.4	18
AM280	450	25	500	7.0	550	1053	M16	328	19	75	140	79.9	20

42 082 01 01

FA157..

<=AM200 >=AM225

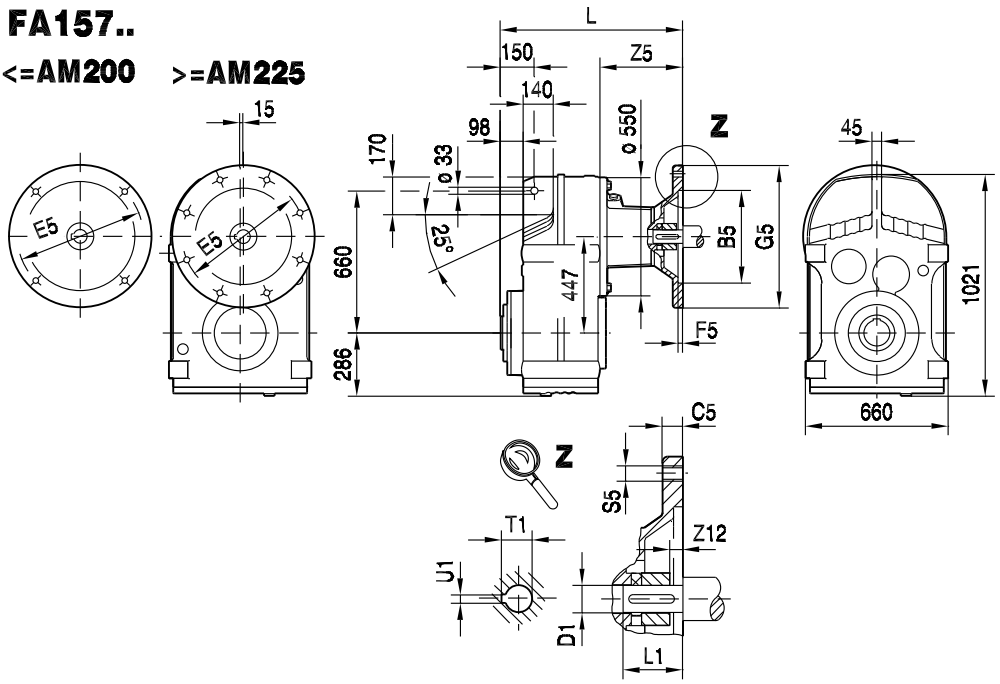

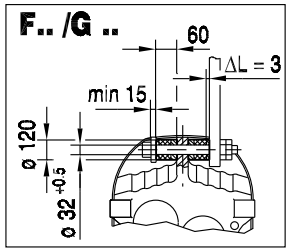

FA157..

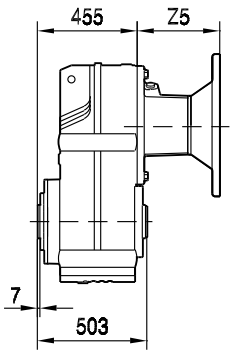

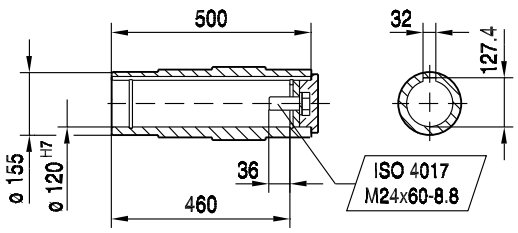

FH157..

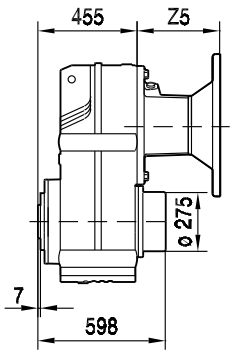

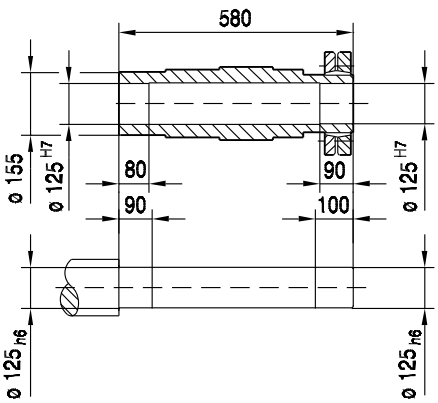

(→ 130)	B5	C5	E5	F5	G5	L	S5	Z5	Z12	D1	L1	T1	U1
AM160	250	18	300	6.0	350	653	M16	198	0	42	110	45.3	12
AM180	250	18	300	6.0	350	653	M16	198	0	48	110	51.8	14
AM200	300	20	350	7.0	400	694	M16	239	0	55	110	59.3	16
AM225	350	22	400	7.0	450	709	M16	254	0	60	140	64.4	18
AM250	450	25	500	7.0	550	783	M16	328	19	65	140	69.4	18
AM280	450	25	500	7.0	550	783	M16	328	19	75	140	79.9	20

42 083 01 01

FAZ157..

<=AM200 >=AM225

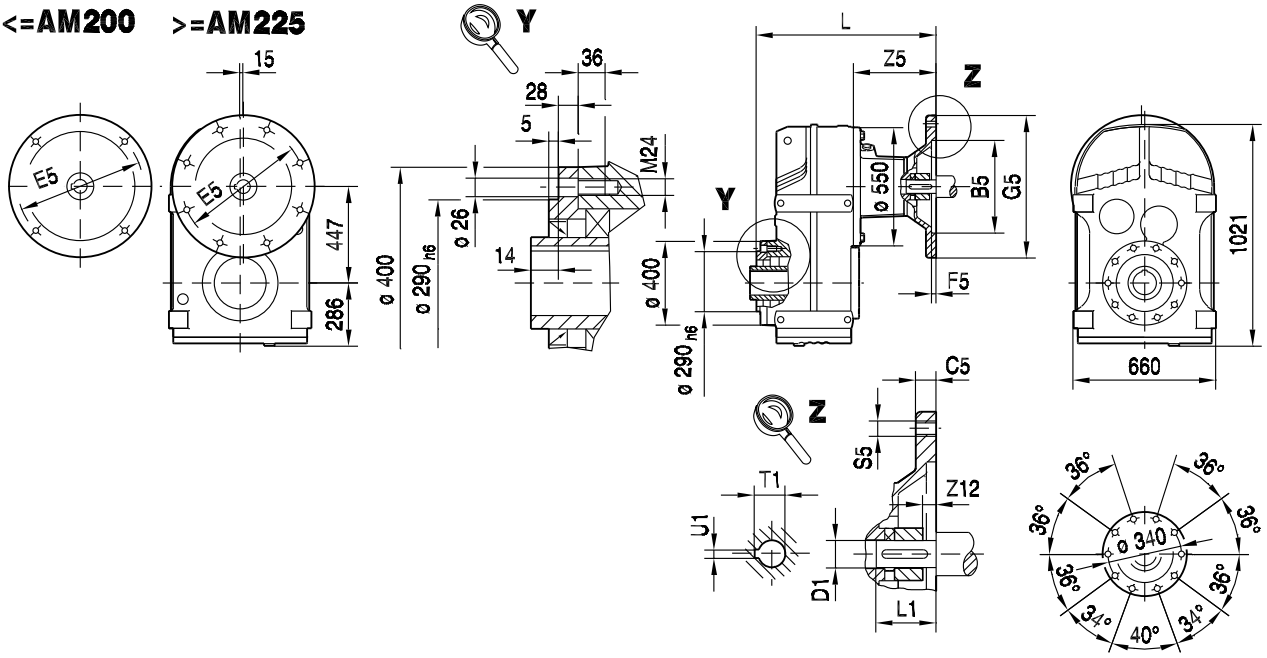

FAZ157..

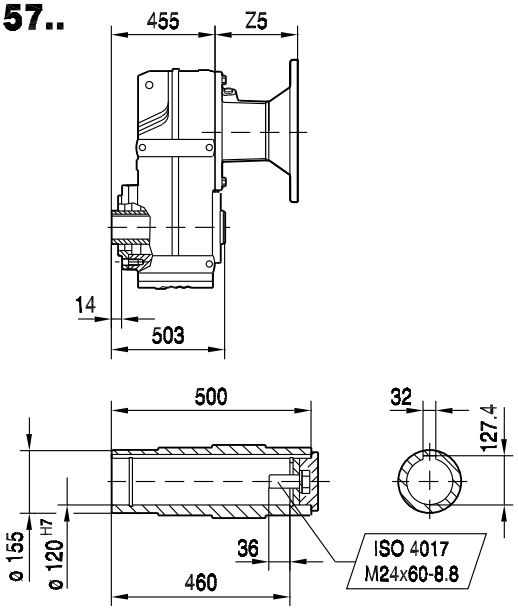

FHZ157..

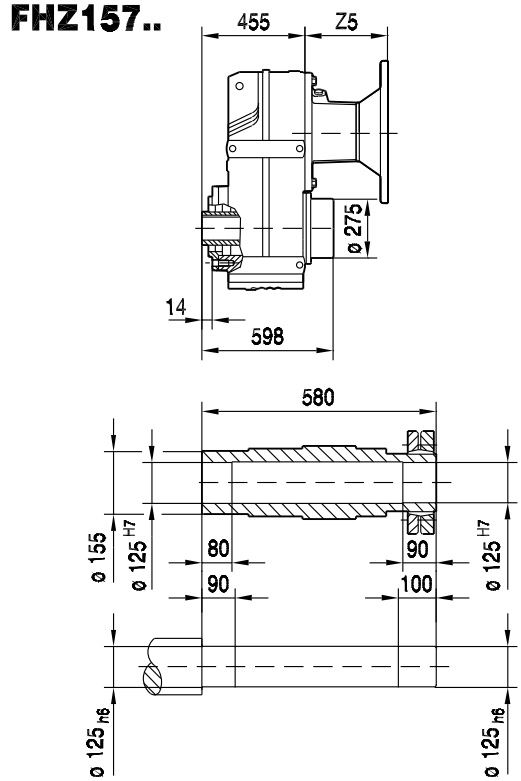

(→ 130)	B5	C5	E5	F5	G5	L	S5	Z5	Z12	D1	L1	T1	U1
AM160	250	18	300	6.0	350	653	M16	198	0	42	110	45.3	12
AM180	250	18	300	6.0	350	653	M16	198	0	48	110	51.8	14
AM200	300	20	350	7.0	400	694	M16	239	0	55	110	59.3	16
AM225	350	22	400	7.0	450	709	M16	254	0	60	140	64.4	18
AM250	450	25	500	7.0	550	783	M16	328	19	65	140	69.4	18
AM280	450	25	500	7.0	550	783	M16	328	19	75	140	79.9	20

42 005 00 07

FT157..

<=AM200 >=AM225

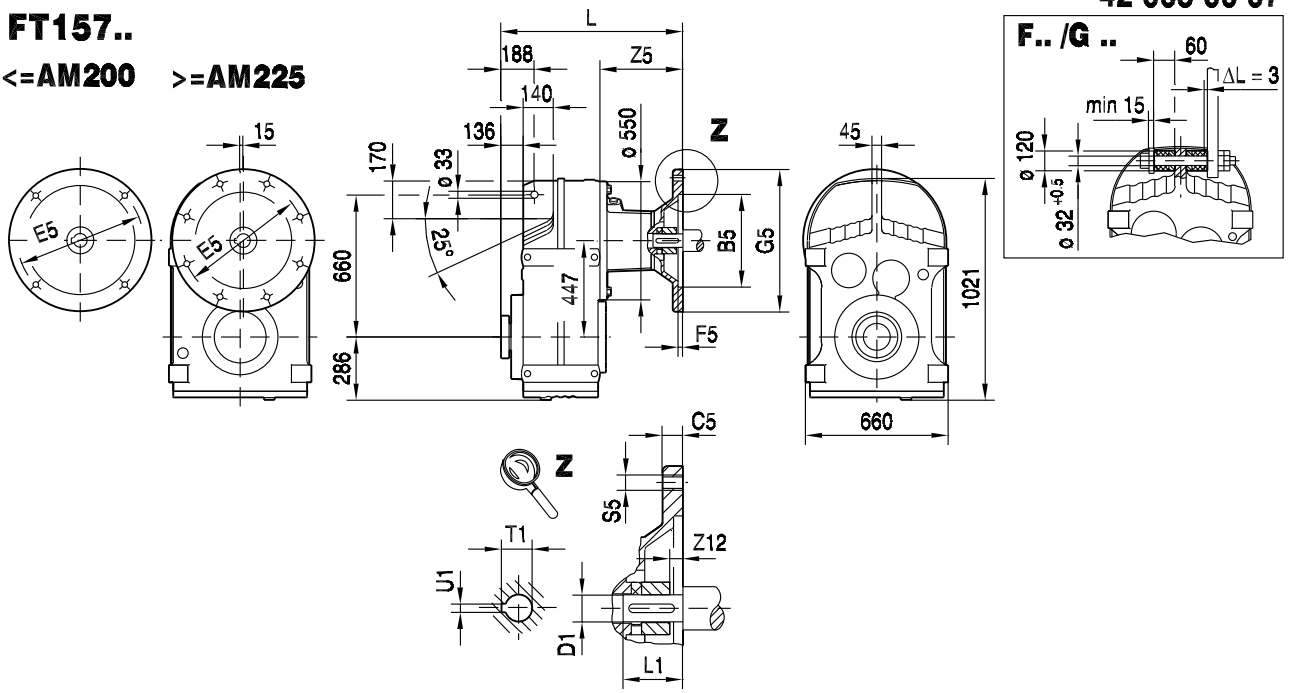

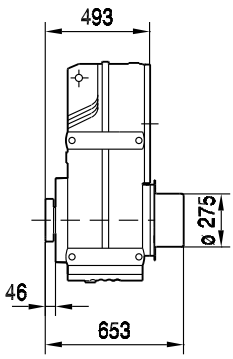

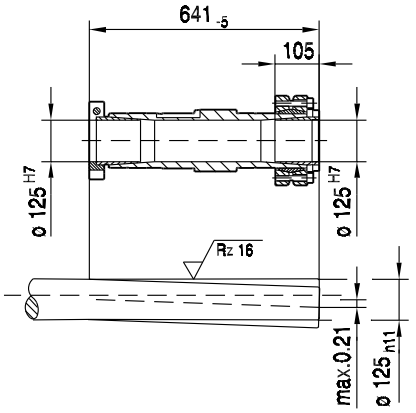

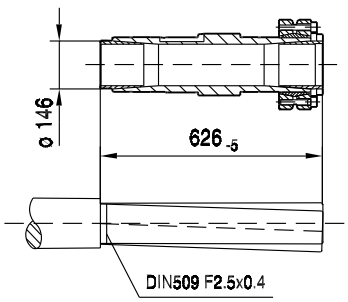

(→ 130)	B5	C5	E5	F5	G5	L	S5	Z5	Z12	D1	L1	T1	U1
AM160	250	18	300	6.0	350	691	M16	198	0	42	110	45.3	12
AM180	250	18	300	6.0	350	691	M16	198	0	48	110	51.8	14
AM200	300	20	350	7.0	400	732	M16	239	0	55	110	59.3	16
AM225	350	22	400	7.0	450	747	M16	254	0	60	140	64.4	18
AM250	450	25	500	7.0	550	821	M16	328	19	65	140	69.4	18
AM280	450	25	500	7.0	550	821	M16	328	19	75	140	79.9	20

9.5 F.. AM.. (NEMA) [mm]

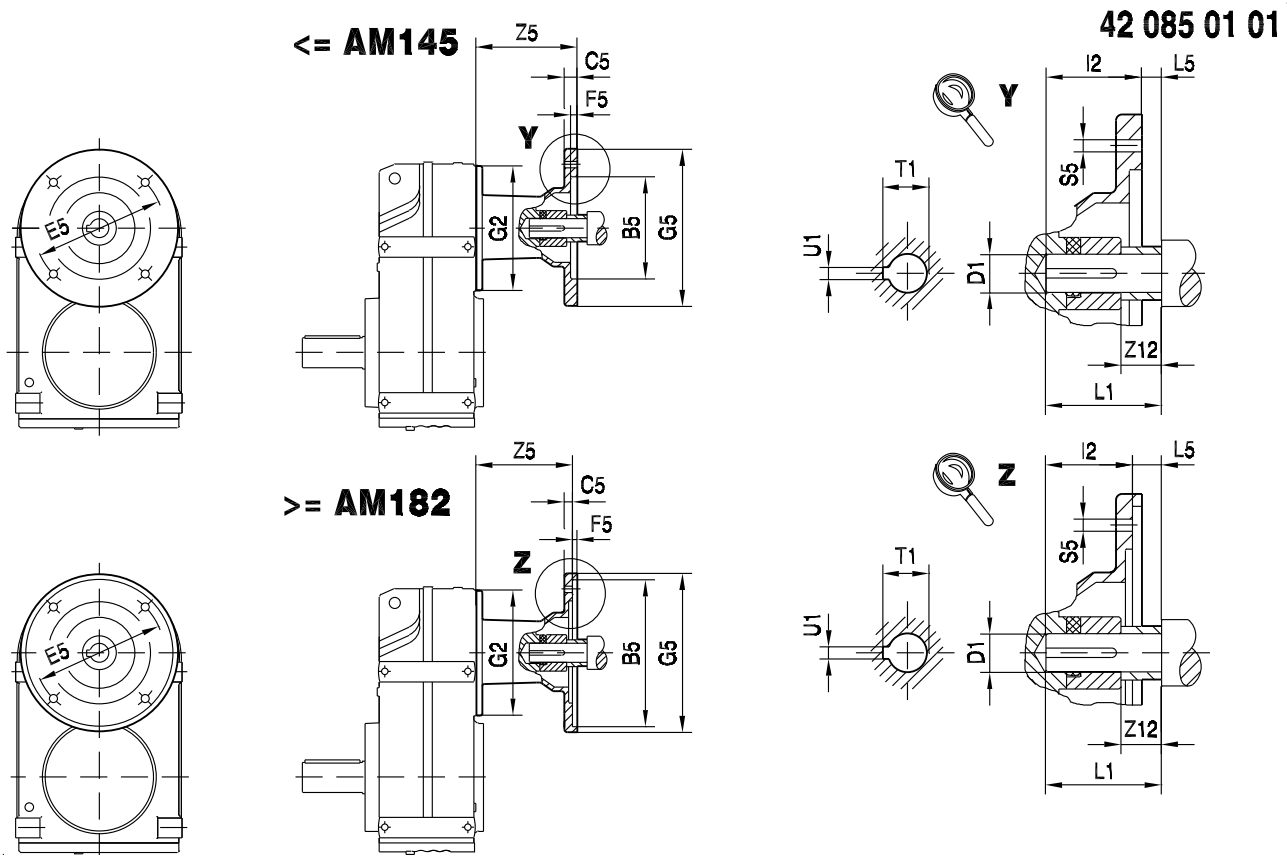

		B5	C5	E5	F5	G2	G5	I2	L5	S5	Z5	Z12	D1	L1	T1	U1
F..27 F..37 F..47	AM56	114.3	11	149.2	4.5	120	170	52.55	-4.8	10.5	93.5	16.5	15.875	47.75	18.1	4.76
	AM143		12					54.1	3.05		117	14.5	22.225	57.15	24.7	
	AM145															
F..57 F..67	AM56	114.3	11	149.2	4.5	160	170	52.55	-4.8	10.5	87	16.5	15.875	47.75	18.1	4.76
	AM143		12					54.1	3.05		110.5	14.5	22.225	57.15	24.7	
	AM145															
	AM182	215.9	10	184	5		228	66,85	3	15	147.5	16.5	28.575	69.85	31.7	6.35
	AM184															
	AM213/215		11					79.55	6.3		200.5	15.8	34.925	85.85	38.7	7.94
F..77	AM56	114.3	11	149.2	4.5	200	170	52.55	-4.8	10.5	81	16.5	15.875	47.75	18.1	4.76
	AM143		12					54.1	3.05		103.5	14.5	22.225	57.15	24.7	
	AM145															
	AM182	215.9	10	184	5		228	66,85	3	15	139.5	16.5	28.575	69.85	31.7	6.35
	AM184															
	AM213/215		11					79.55	6.3		188.5	15.8	34.925	85.85	38.7	7.94
F..87	AM143	114.3	12	149.2	4.5	250	170	54.1	3.05	10.5	98.5	14.5	22.225	57.15	24.7	4.76
	AM145															
	AM182	215.9	10	184	5		228	66,85	3	15	134.5	16.5	28.575	69.85	31.7	6.35
	AM184															
	AM213/215		11					79.55	6.3		183.5	15.8	34.925	85.85	38.7	7.94
	AM254/256		12					95.3	6.3		234	9	41.275	101.6	45.8	9.53
	AM284/286	266.7	15	228.6	5		286	111.05	6.3	15	241	15.8	47.625	117.35	53.4	12.7
F..97	AM182	215.9	10	184	5	300	228	66,85	3	15	129.5	16.5	28.575	69.85	31.7	6.35
	AM184															
	AM213/215		11					79.55	6.3		178.5	15.8	34.925	85.85	38.7	7.94
	AM254/256		12					95.3	6.3		229	9	41.275	101.6	45.8	9.53
	AM284/286	266.7	20	228.6	5		286	111.05	6.3	15	236	15.8	47.625	117.35	53.4	12.7
	AM324/326	317.5	17	279.4	5		356	127.05	6.3	17.5	296	34.8	53.975	133.35	60	12.7
	AM364/365							143.05					60.325	149.35	67.6	15.875

9.6 F.. AR.. [mm]

F.. AR..

42 090 02 01

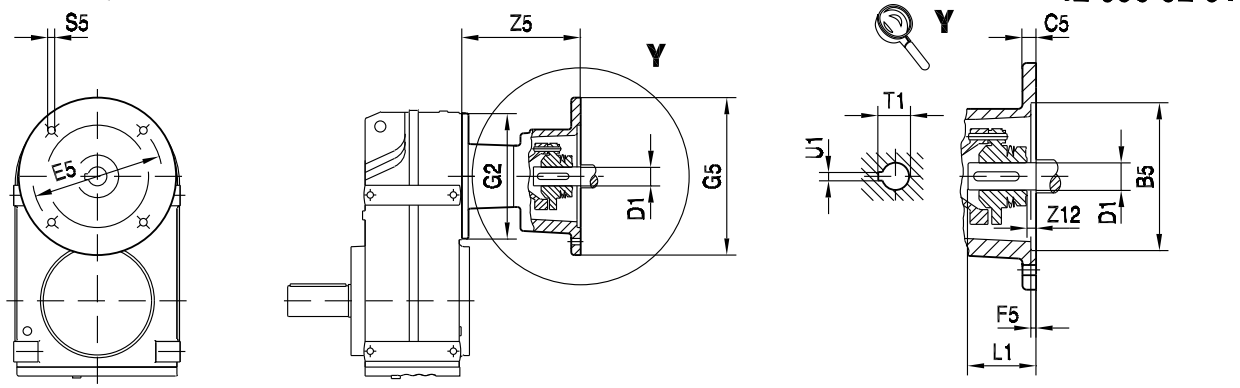

F.. AR../W

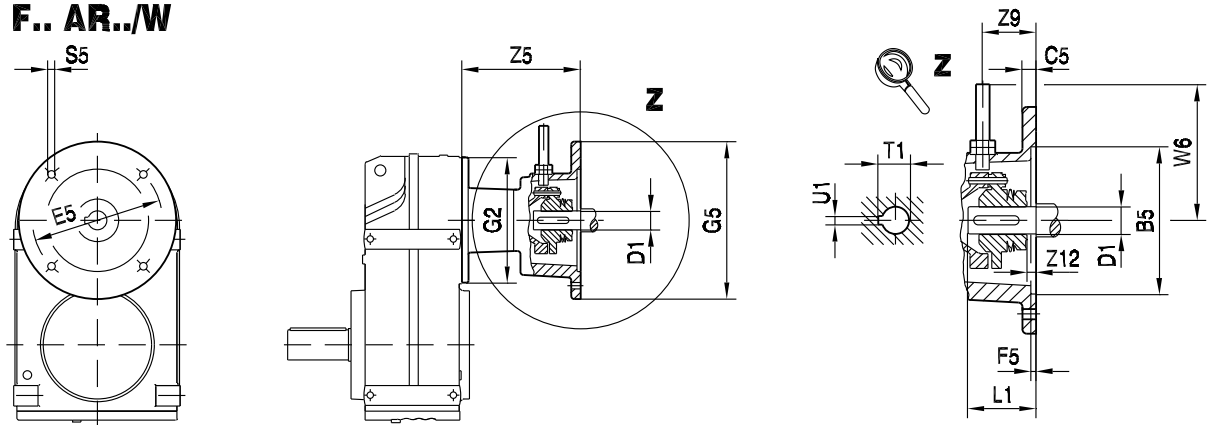

		B5	C5	E5	F5	G2	G5	S5	W6	Z5	Z9	Z12	D1	L1	T1	U1
F..27	**AR71**	110	10	130	3.5	120	160	M8	120	104	37	0	14	30	16.3	5
F..37	**AR80**	130	12	165	4.5		200	M10		140.5			19	40	21.8	6
F..47	**AR90**												24	50	27.3	8
	AR71	110	10	130	3.5	160	160	M8	120	97.5	37	0	14	30	16.3	5
	AR80	130	12	165	4.5		200	M10		134			19	40	21.8	6
F..57	**AR90**												24	50	27.3	8
F..67	**AR100**	180	15	215	5		250	M12	130	174.5	52	5.5	28	60	31.3	8
	AR112															
	AR71	110	10	130	3.5	200	160	M8	120	91.5	37	0	14	30	16.3	5
	AR80	130	12	165	4.5		200	M10		127			19	40	21.8	6
	AR90												24	50	27.3	8
F..77	**AR100**	180	15	215	5		250	M12	130	166.5	52	5.5	28	60	31.3	8
	AR112															
	AR132S/M	230	16	265	5		300	M12	145	234	72	5	38	80	41.3	10
	AR132ML															
	AR80	130	12	165	4.5	250	200	M10	120	122	37	0	19	40	21.8	6
	AR90												24	50	27.3	8
	AR100	180	15	215	5		250	M12	130	161.5	52	5.5	28	60	31.3	8
	AR112															
F..87	**AR132S/M**	230	16	265	5		300	M12	145	229	72	5	38	80	41.3	10
	AR132ML															
	AR160	250	18	300	6		350	M16	165	306.5	105	35	42	110	45.3	12
	AR180												48	110	51.8	14

F.. AR..

42 091 02 01

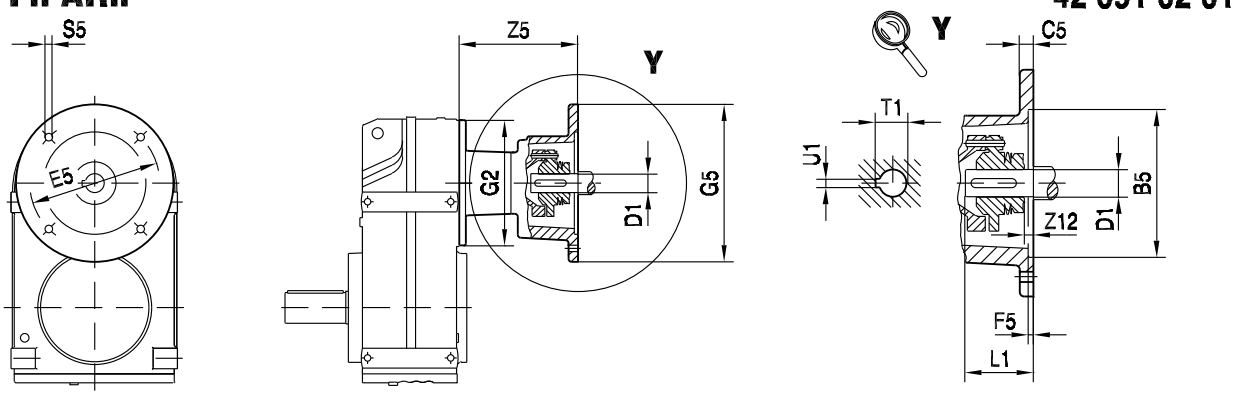

F.. AR../W

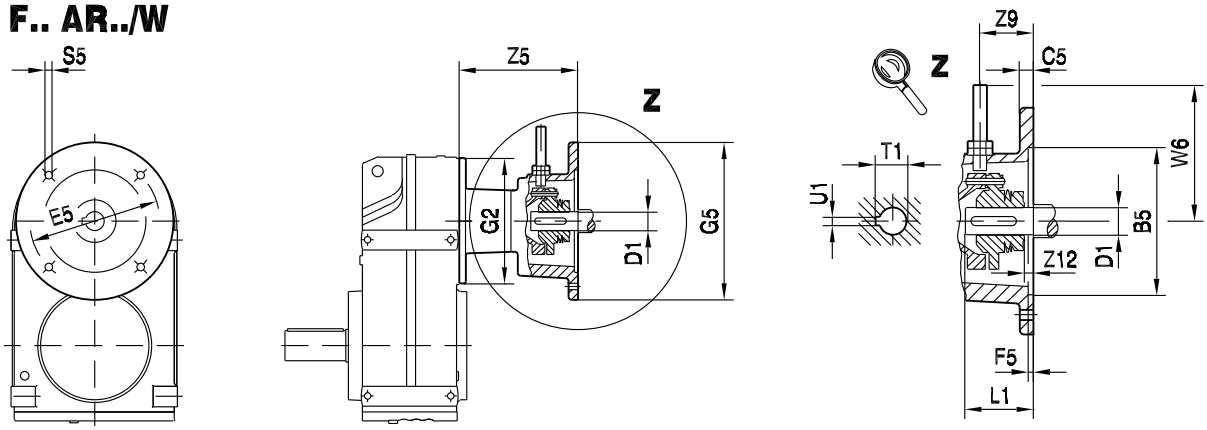

		B5	C5	E5	F5	G2	G5	S5	W6	Z5	Z9	Z12	D1	L1	T1	U1
F..97	AR100	180	15	215	5	300	250	M12	130	156.5	52	5.5	28	60	31.3	8
	AR112															
	AR132S/M	230	16	265	5		300	M12	145	224	72	5	38	80	41.3	10
	AR132ML															
	AR160	250	18	300	6		350	M16	165	301.5	105	35	42	110	45.3	12
	AR180												48	110	51.8	14
F..107	AR100	180	15	215	5	350	250	M12	130	150.5	52	5.5	28	60	31.3	8
	AR112															
	AR132S/M	230	16	265	5		300	M12	145	218	72	5	38	80	41.3	10
	AR132ML															
	AR160	250	18	300	6		350	M16	165	295.5	105	35	42	110	45.3	12
	AR180												48	110	51.8	14
F..147	AR132S/M	230	16	265	5	450	300	M12	145	203	72	5	38	80	41.3	10
	AR132ML															
	AR160	250	18	300	6		350	M16	165	280.5	105	35	42	110	45.3	12
	AR180												48	110	51.8	14
F..167	AR160	250	18	300	6	550	350	M16	165	272.5	105	35	42	110	45.3	12
	AR180												48	110	51.8	14

9.7 F.. AT.. [mm]

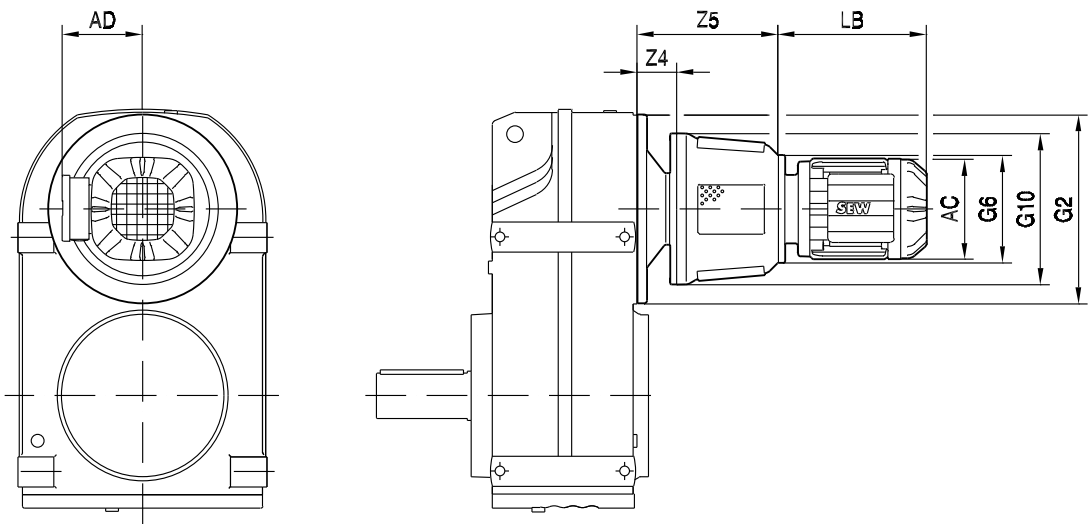

			AC	AD	G6	G10	LB	Z4	Z5	G2
F..67	AT311 AT312	DR.71S	139	119	200	280	198	97	286	160
		DR.71M					223			
		DR.80S	156	128			241			
		DR.80M					272			
		DR.90M	179	140			266			
		DR.90L					286			
		DR.100M	197	157			316			
		DR.100L/LC					346			
	AT321 AT322	DR.90M	179	140	250	350	266	97	333	
		DR.90L					286			
		DR.100M	197	157			316			
		DR.100L/LC					346			
F..77	AT311 AT312	DR.71S	139	119	200	280	198	89	278	200
		DR.71M					223			
		DR.80S	156	128			241			
		DR.80M					272			
		DR.90M	179	140			266			
		DR.90L					286			
		DR.100M	197	157			316			
		DR.100L/LC					346			
	AT421 AT422	DR.90M	179	140	250	350	266	133	368	
		DR.90L					286			
		DR.100M	197	157			316			
		DR.100L/LC					346			
		DR.112M	221	170			352			
		DR.132S					387			
		DR.132M/MC					437			

42 093 02 01

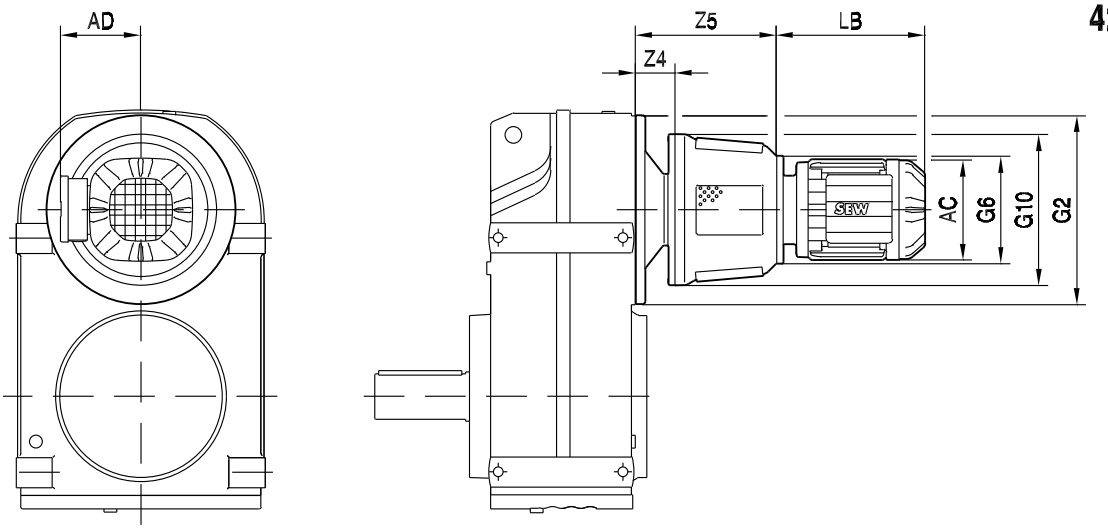

			AC	AD	G6	G10	LB	Z4	Z5	G2
F..87	AT311 AT312	DR.80M	156	128	200	280	272	84	273	250
		DR.90M	179	140			266			
		DR.90L					286			
		DR.100M	197	157			316			
		DR.100L/LC					346			
	AT421 AT422	DR.90M	179	140	250	350	266	128	363	
		DR.90L					286			
		DR.100M	197	157			316			
		DR.100L/LC					346			
		DR.112M	221	170			352			
		DR.132S					387			
		DR.132M/MC					437			
	AT522 AT541 AT542	DR.132S	221	170	350	470	363	159	478	
		DR.132M/MC					413			
		DR.160S/M/MC	270	228			460			
		DR.180S/M	316	253			523			
		DR.180L					583			
F..97	AT311 AT312	DR.80M	156	128	200	280	272	79	268	300
		DR.90M	179	140			266			
		DR.90L					286			
		DR.100M	197	157			316			
		DR.100L/LC					346			
	AT421 AT422	DR.90M	179	140	250	350	266	123	358	
		DR.90L					286			
		DR.100M	197	157			316			
		DR.100L/LC					346			
		DR.112M	221	170			352			
		DR.132S					387			
		DR.132M/MC					437			
	AT522 AT541 AT542	DR.132S	221	170	350	470	363	154	473	
		DR.132M/MC					413			
		DR.160S/M/MC	270	228			460			
		DR.180S/M	316	253			523			
		DR.180L					583			



F..
F.. AT.. [mm]

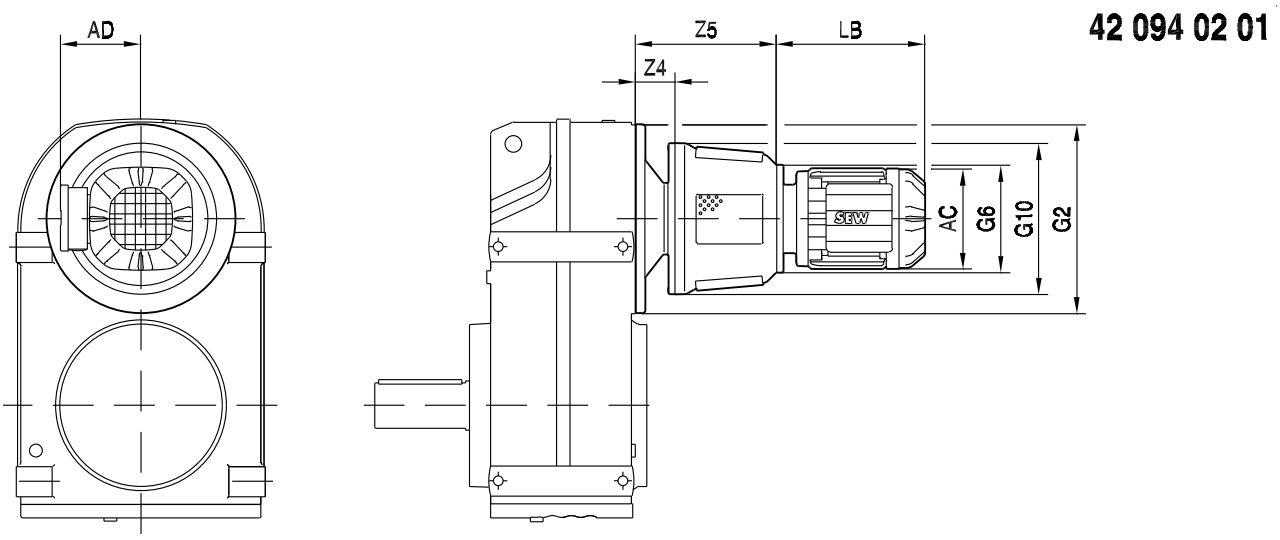

			AC	AD	G6	G10	LB	Z4	Z5	G2
F..107	AT311 AT312	DR.100M	197	157	200	280	316	73	262	350
		DR.100L/LC					346			
	AT421 AT422	DR.90L	179	140	250	350	286	117	352	
		DR.100M	197	157			316			
		DR.100L/LC					346			
		DR.112M	221	170			352			
		DR.132S					387			
		DR.132M/MC					437			
	AT522 AT541 AT542	DR.132S	221	170	350	470	363	148	467	
		DR.132M/MC					413			
		DR.160S/M/MC	270	228			460			
		DR.180S/M	316	253			523			
		DR.180L					583			
F..127	AT421 AT422	DR.132M/MC	221	170	250	350	437	102	337	450
	AT522 AT541 AT542	DR.132M/MC	221	170	350	470	413	133	452	
		DR.160S/M/MC	270	228			460			
		DR.180S/M	316	253			523			
		DR.180L					583			
F..157	AT522 AT541 AT542	DR.160M/MC	270	228	350	470	460	125	444	550
		DR.180S/M	316	253			523			
		DR.180L					583			

9.8 F.. AT../BMG [mm]

42 095 02 01

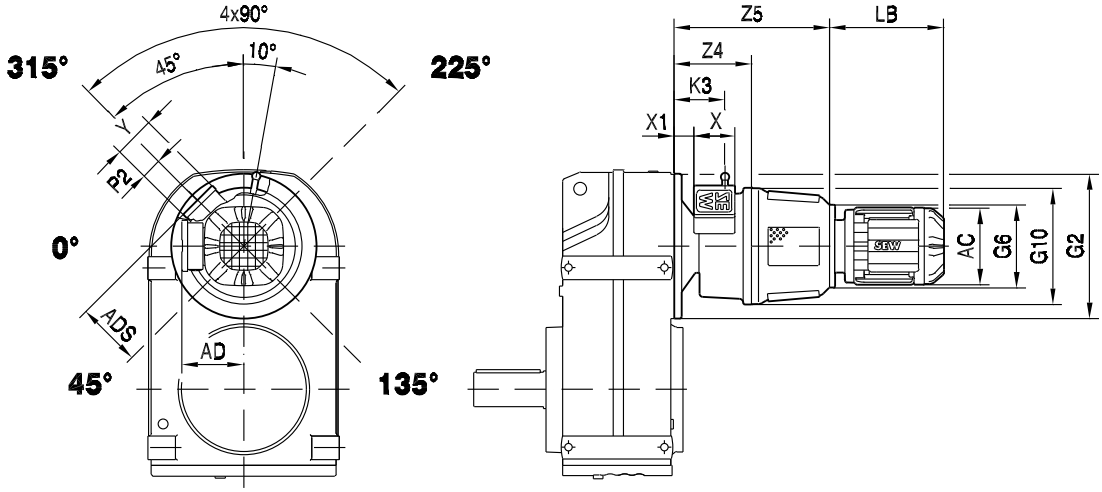

			AC	AD	ADS	G6	G10	LB	K3	P2	X	X1	Y	Z4	Z5	G2
F..67	AT311/BMG AT312/BMG	DR.71S	139	119	184	200	282	198	153	84	97	89	127	223	411	160
		DR.71M						223								
		DR.80S	156	128				241								
		DR.80M						272								
		DR.90M	179	140				266								
		DR.90L						286								
		DR.100M	197	157				316								
		DR.100L/LC						346								
	AT321/BMG AT322/BMG	DR.90M	179	140	215	250	352	266							458	
		DR.90L						286								
		DR.100M	197	157				316								
		DR.100L/LC						346								
F..77	AT311/BMG AT312/BMG	DR.71S	139	119	184	200	282	198	145	84	97	81	127	215	403	200
		DR.71M						223								
		DR.80S	156	128				241								
		DR.80M						272								
		DR.90M	179	140				266								
		DR.90L						286								
		DR.100M	197	157				316								
		DR.100L/LC						346								
	AT421/BMG AT422/BMG	DR.90M	179	140	215	250	352	266	183	84	97	119	127	252	488	
		DR.90L						286								
		DR.100M	197	157				316								
		DR.100L/LC						346								
		DR.112M	221	170				352								
		DR.132S						387								
		DR.132M/MC						437								

42 096 02 01

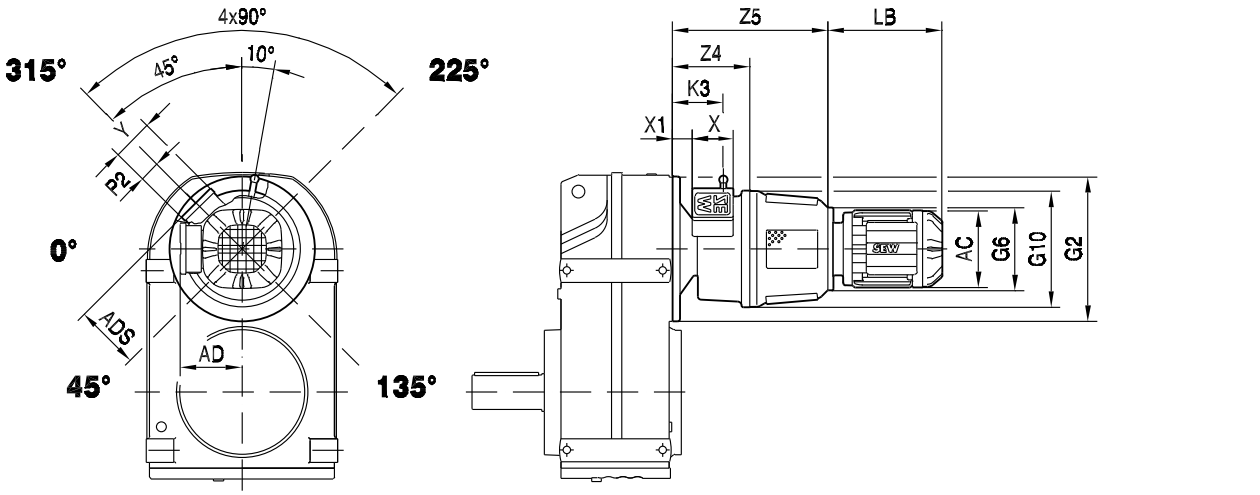

			AC	AD	ADS	G6	G10	LB	K3	P2	X	X1	Y	Z4	Z5	G2
F..87	AT311/BMG AT312/BMG	DR.80M	156	128	184	200	282	272	140	84	97	76	127	210	398	250
		DR.90M	179	140				266								
		DR.90L						286								
		DR.100M	197	157				316								
		DR.100L/LC						346								
	AT421/BMG AT422/BMG	DR.90M	179	140	215	250	352	266	178	84	97	114	127	247	483	
		DR.90L						286								
		DR.100M	197	157				316								
		DR.100L/LC						346								
		DR.112M	221	170				352								
		DR.132S						387								
		DR.132M/MC						437								
	AT522/BM AT541/BM AT542/BM	DR.132S	221	170	275	350	472	363	244	84	97	148	127	331	650	
		DR.132M/MC						413								
		DR.160S/M/MC	270	228				460								
		DR.180S/M	316	253				523								
		DR.180L						583								
F..97	AT311/BMG AT312/BMG	DR.80M	156	128	184	200	282	272	135	84	97	71	127	205	393	300
		DR.90M	179	140				266								
		DR.90L						286								
		DR.100M	197	157				316								
		DR.100L/LC						346								
	AT421/BMG AT422/BMG	DR.90M	179	140	215	250	352	266	173	84	97	109	127	242	478	
		DR.90L						286								
		DR.100M	197	157				316								
		DR.100L/LC						346								
		DR.112M	221	170				352								
		DR.132S						387								
		DR.132M/MC						437								
	AT522/BM AT541/BM AT542/BM	DR.132S	221	170	275	350	472	363	239	84	97	143	127	326	645	
		DR.132M/MC						413								
		DR.160S/M/MC	270	228				460								
		DR.180S/M	316	253				523								
		DR.180L						583								

42 097 02 01

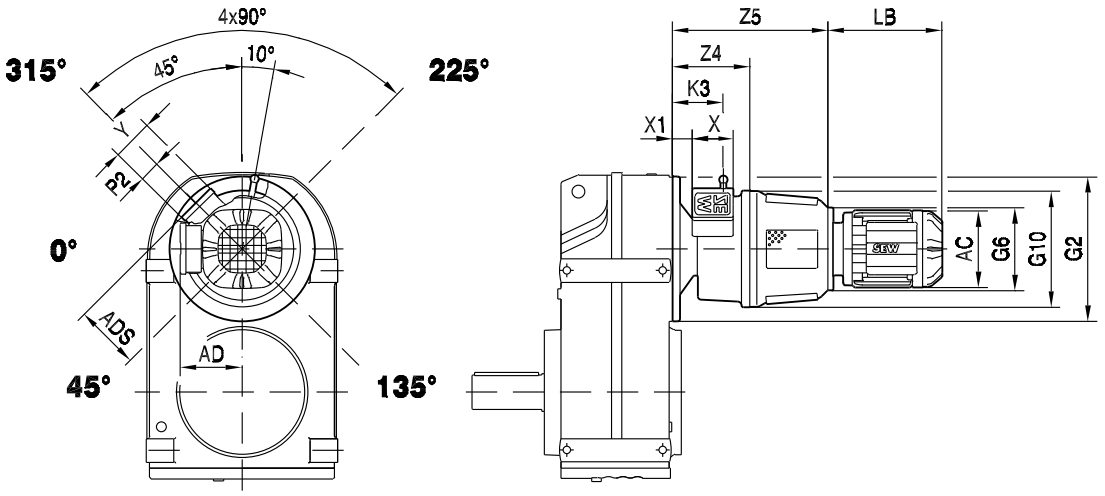

			AC	AD	ADS	G6	G10	LB	K3	P2	X	X1	Y	Z4	Z5	G2
F..107	AT311/BMG AT312/BMG	DR.100M	197	157	184	200	282	316	129	84	97	65	127	199	387	350
		DR.100L/LC						346								
	AT421/BMG AT422/BMG	DR.90L	179	140	215	250	352	286	167	84	97	103	127	236	472	
		DR.100M	197	157				316								
		DR.100L/LC						346								
		DR.112M	221	170				352								
		DR.132S						387								
		DR.132M/MC						437								
	AT522/BM AT541/BM AT542/BM	DR.132S	221	170	275	350	472	363	233	84	97	137	127	320	639	
		DR.132M/MC						413								
		DR.160S/M/MC	270	228				460								
		DR.180S/M	316	253				523								
		DR.180L						583								
F..127	AT421/BMG AT422/BMG	DR.132M/MC	221	170	215	250	352	437	152	84	97	88	127	221	457	450
	AT522/BM AT541/BM AT542/BM	DR.132M/MC	221	170	275	350	472	413	218	84	97	122	127	294	624	
		DR.160S/M/MC	270	228				460								
		DR.180S/M	316	253				523								
		DR.180L						583								
F..157	AT522/BM AT541/BM AT542/BM	DR.160M/MC	270	228	275	350	472	460	210	84	97	114	127	297	616	550
		DR.180S/M	316	253				523								
		DR.180L						583								

9.9 F.. AD.. [mm]

F.. AD..

42 098 01 01

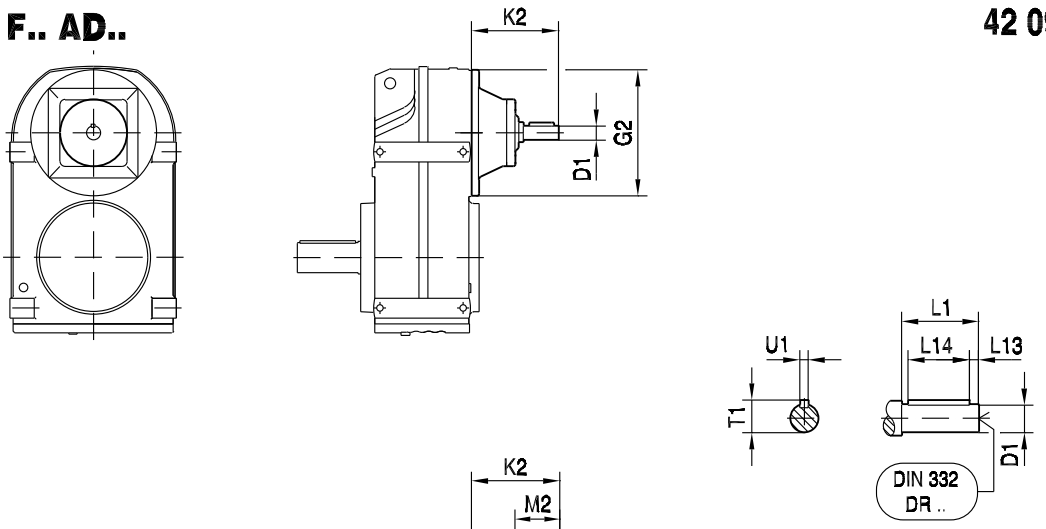

F.. AD../ZR

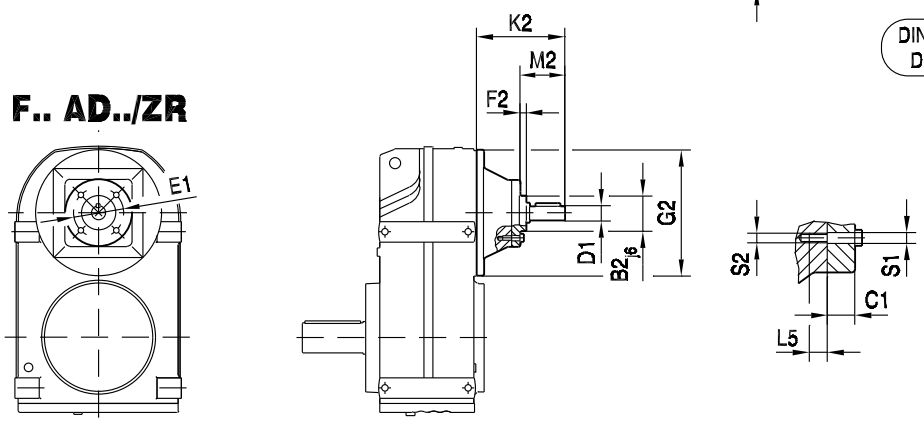

		B2	C1	E1	F2	G2	K2	L5	M2	S1	S2	D1	L1	L13	L14	T1	U1
F..27, F..37, F..47	AD1	-	-	-	-	120	102	-	-	-	-	16	40	4	32	18	5
	AD2 , AD2/ZR	55	13.5	80	8		130	12	50	9	M8	19	40	4	32	21.5	6
F..57 F..67	AD2 , AD2/ZR	55	13.5	80	8	160	123	12	50	9	M8	19	40	4	32	21.5	6
	AD3 , AD3/ZR	70	15.5	105	8		159	16	60	11	M10	24	50	5	40	27	8
F..77	AD2 , AD2/ZR	55	13.5	80	8	200	116	12	50	9	M8	19	40	4	32	21.5	6
	AD3 , AD3/ZR	70	15.5	105	8		151	16	60	11	M10	24	50	5	40	27	8
	AD4 , AD4/ZR	100	16	130	13		224	20	95.5	13.5	M12	38	80	5	70	41	10
F..87	AD2 , AD2/ZR	55	13.5	80	8	250	111	12	50	9	M8	19	40	4	32	21.5	6
	AD3 , AD3/ZR	70	15.5	105	8		156	16	70	11	M10	28	60	5	50	31	8
	AD4 , AD4/ZR	100	16	130	13		219	20	95.5	13.5	M12	38	80	5	70	41	10
	AD5 , AD5/ZR	120	24	180	11		292	20	126	13.5	M12	42	110	10	70	45	12
F..97	AD3 , AD3/ZR	70	15.5	105	8	300	151	16	70	11	M10	28	60	5	50	31	8
	AD4 , AD4/ZR	100	16	130	13		214	20	95.5	13.5	M12	38	80	5	70	41	10
	AD5 , AD5/ZR	120	24	180	11		287	20	126	13.5	M12	42	110	10	70	45	12
	AD6 , AD6/ZR	130	22.5	200	11		327	26	130.5	17.5	M16	48	110	10	80	51.5	14
F..107	AD3 , AD3/ZR	70	15.5	105	8	350	145	16	70	11	M10	28	60	5	50	31	8
	AD4 , AD4/ZR	100	16	130	13		208	20	95.5	13.5	M12	38	80	5	70	41	10
	AD5 , AD5/ZR	120	24	180	11		281	20	126	13.5	M12	42	110	10	70	45	12
	AD6 , AD6/ZR	130	22.5	200	11		321	26	130.5	17.5	M16	48	110	10	80	51.5	14
F..127	AD4 , AD4/ZR	100	16	130	13	450	193	20	95.5	13.5	M12	38	80	5	70	41	10
	AD5 , AD5/ZR	120	24	180	11		266	20	126	13.5	M12	42	110	10	70	45	12
	AD6 , AD6/ZR	130	22.5	200	11		306	26	130.5	17.5	M16	48	110	10	80	51.5	14
	AD7 , AD7/ZR	125	19	190	13		300	30	133	22	M20	55	110	10	90	59	16
	AD8 , AD8/ZR	120	22.5	210	5		383	19.5	155	13.5	M12	70	140	15	110	74.5	20
F..157	AD5 , AD5/ZR	120	24	180	11	550	258	20	126	13.5	M12	42	110	10	70	45	12
	AD6 , AD6/ZR	130	22.5	200	11		298	26	130.5	17.5	M16	48	110	10	80	51.5	14
	AD7 , AD7/ZR	125	19	190	13		292	30	133	22	M20	55	110	10	90	59	16
	AD8 , AD8/ZR	120	22.5	210	5		374	19.5	155	13.5	M12	70	140	15	110	74.5	20

9.10 F.. AD../P [mm]

42 099 01 01

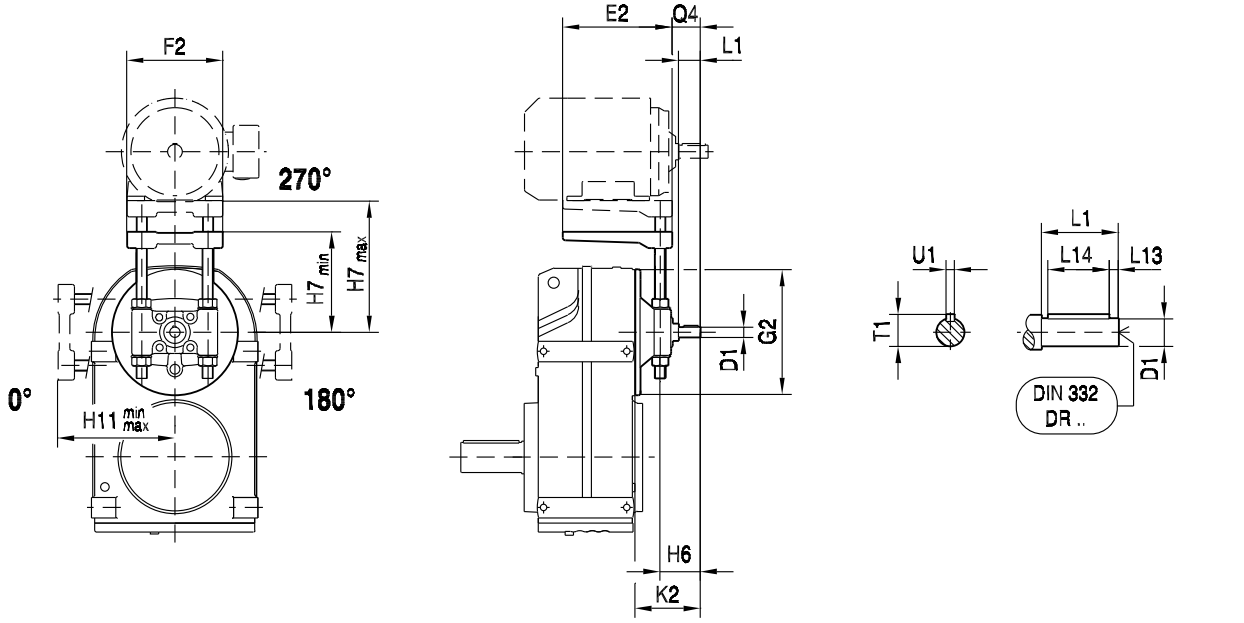

		E2	F2	G2	H6	H7min	H7max	H11min	H11max	K2	Q4	D1	L1	L13	L14	T1	U1
F..27	**AD2/P**	195	180	120	65	100	165	125	165	130	43	19	40	4	32	21.5	6
F..37	**AD2/P**	195	180	120	65	100	165	125	165	130	43	19	40	4	32	21.5	6
F..47	**AD2/P**	195	180	120	65	105	165	125	165	130	43	19	40	4	32	21.5	6
F..57	**AD2/P**	195	180	160	65	125	165	140	200	123	43	19	40	4	32	21.5	6
	AD3/P	230	240		80	130	175	150	230	159	54	24	50	5	40	27	8
F..67	**AD2/P**	195	180	160	65	125	165	145	200	123	43	19	40	4	32	21.5	6
	AD3/P	230	240		80	130	175	155	230	159	54	24	50	5	40	27	8
F..77	**AD2/P**	195	180	200	65	145	200	170	200	116	43	19	40	4	32	21.5	6
	AD3/P	230	240		80	150	230	175	230	151	54	24	50	5	40	27	8
	AD4/P	345	291		118	155	210	185	210	224	83	38	80	5	70	41	10
F..87	**AD2/P**	195	180	250	65	170	260	205	260	111	43	19	40	4	32	21.5	6
	AD3/P	230	240		90	175	230	210	320	156	64	28	60	5	50	31	8
	AD4/P	345	291		118	180	280	215	280	219	83	38	80	5	70	41	10
	AD5/P	430	355		153	185	250	225	325	292	113	42	110	10	70	45	12
F..97	**AD3/P**	230	240	300	90	205	320	240	320	151	64	28	60	5	50	31	8
	AD4/P	345	291		118	210	280	245	280	214	83	38	80	5	70	41	10
	AD5/P	430	355		153	215	325	250	325	287	113	42	110	10	70	45	12
F..107	**AD3/P**	230	240	350	90	230	320	270	320	145	64	28	60	5	50	31	8
	AD4/P	345	291		118	240	280	275	360	208	83	38	80	5	70	41	10
	AD5/P	430	355		153	240	325	280	325	281	113	42	110	10	70	45	12
	AD6/P	495	457		163	245	310	285	310	321	114	48	110	10	80	51.5	14

42 101 01 01

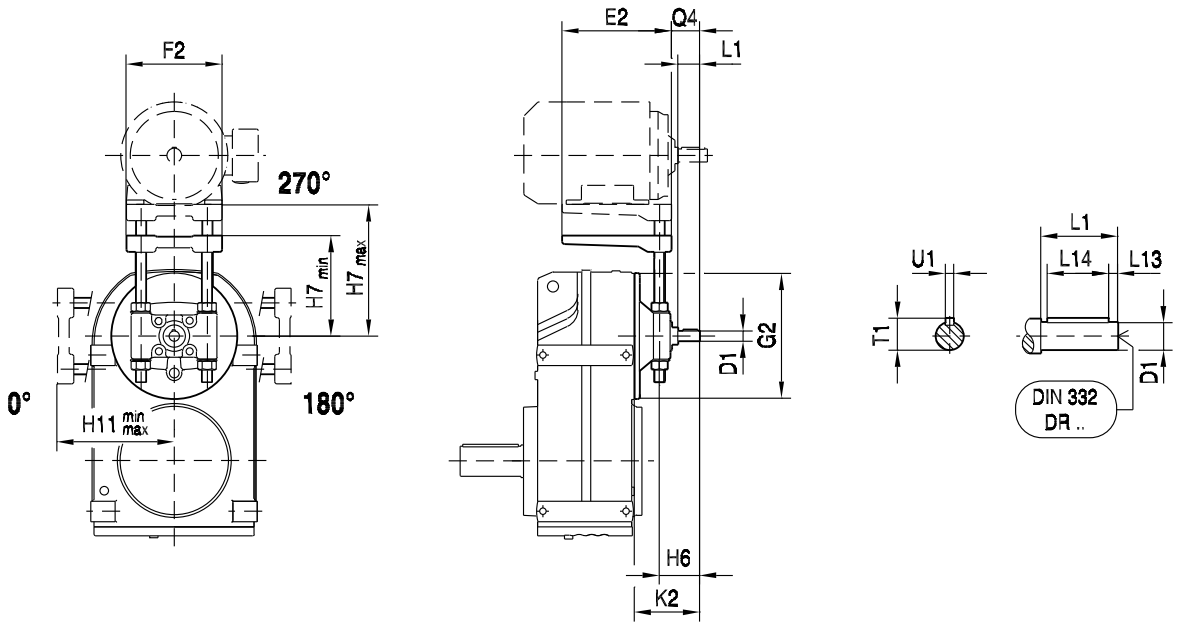

		E2	F2	G2	H6	H7min	H7max	H11min	H11max	K2	Q4	D1	L1	L13	L14	T1	U1
F..127	**AD4/P**	345	291	450	118	240	280	310	360	193	83	38	80	5	70	41	10
	AD5/P	430	355		153	295	405	320	405	266	113	42	110	10	70	45	12
	AD6/P	495	457		163	295	360	310	360	306	114	48	110	10	80	51.5	14
	AD7/P	650	570		170	300	365	310	365	300	112	55	110	10	90	59	16
F..157	**AD5/P**	430	355	550	153	345	405	370	405	258	113	42	110	10	70	45	12
	AD6/P	495	457		163	375	475	380	475	298	114	48	110	10	80	51.5	14
	AD7/P	650	570		170	375	475	385	475	292	112	55	110	10	90	59	16

Seite bleibt aus drucktechnischen Gründen frei.

Page remains empty for printing reasons.

10 K..

10.1 K.. AM.. [Nm]

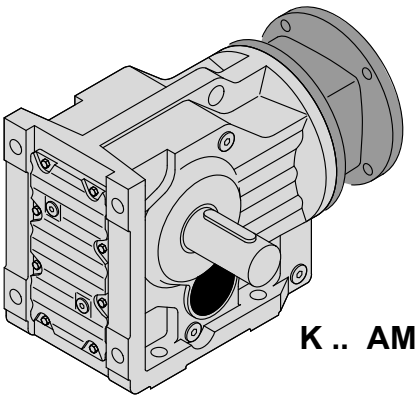

K .. AM..

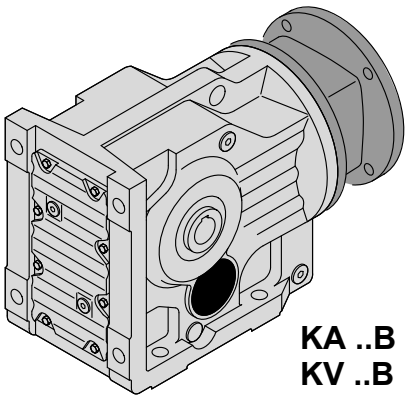

KA ..B AM..
KV ..B AM..

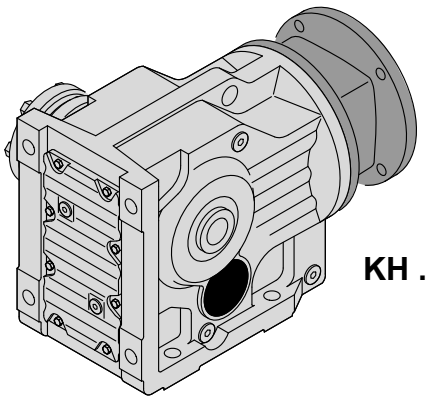

KH ..B AM..

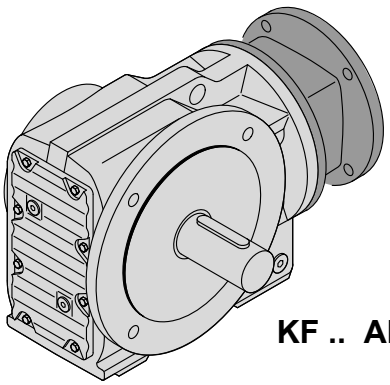

KF .. AM..

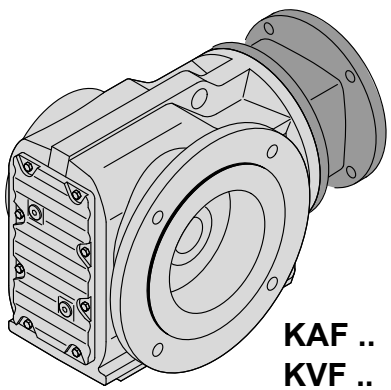

KAF .. AM..
KVF .. AM ..

50405AXX

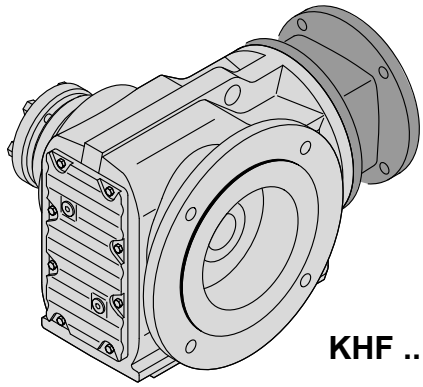

KHF .. AM..

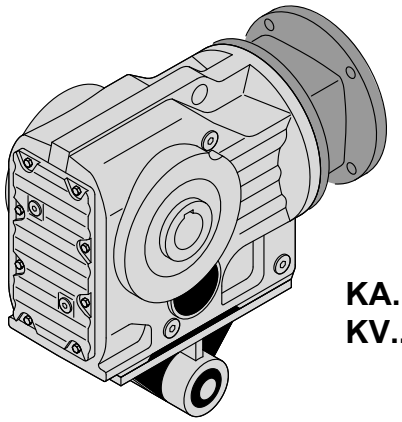

KA../T AM..
KV../T AM..

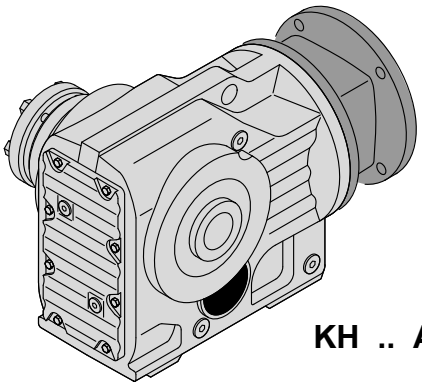

KH .. AM..

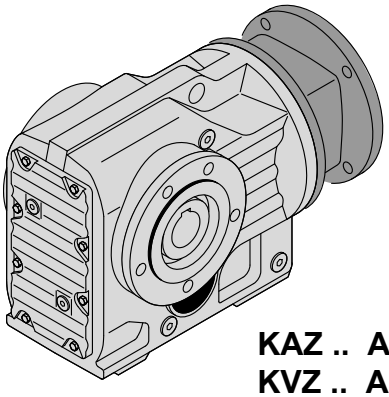

KAZ .. AM..
KVZ .. AM..

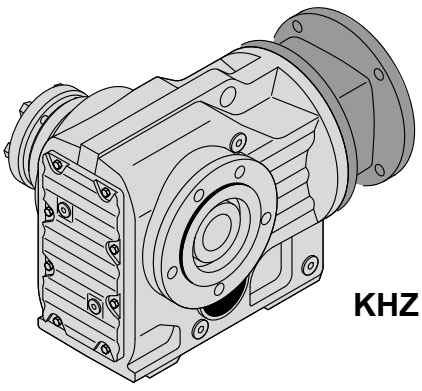

KHZ .. AM..

50406AXX

10.1.1 K37

n_e = 1400 1/min										200 Nm
	i	n_a [1/min]	$M_{a\,max}$ [Nm]	F_{Ra} [N]	φ (/R) [']	AM 63	AM 71	AM 80	AM 90
K37  3	**3.98**	352	125	1660	13				
	5.36	261	140	1810	13				
	6.37	220	145	1950	13				
	6.80	206	150	1980	13				
	7.96	176	155	2110	13				
	8.91	157	160	2200	12				
	10.49	133	160	2410	12				
	12.14	115	160	2600	12				
	13.08	107	165	2650	9				
	15.31	91	175	2780	8				
	17.15	82	180	2900	8				
	20.19	69	185	3110	8				
	23.36	60	195	3260	8				
	24.99	56	200	3330	8				
	28.83	49	200	3580	8				
	29.96	47	200	3650	7				
	35.57	39	200	3970	7				
	37.97	37	200	4100	7				
	44.46	31	200	4420	7				
	49.79	28	200	4660	7				
	58.60	24	200	5020	7				
	67.80	21	200	5360	7				
	72.54	19	200	5520	7				
	83.69	17	200	5640	7				
	97.81	14	200	5640	7				
	106.38	13	200	5640	7				

m [kg]		AM			
IEC	**s**	**63**	**71**	**80**	**90**
K37		14	14	17	17
NEMA		-	56	143	145
K37		-	15	17	17
KF: + 2.3 kg / KA: + -0.2 kg / KAF: + 1.5 kg					

10.1.2 K47

n_e = 1400 1/min												400 Nm
	i	n_a [1/min]	$M_{a\,max}$ [Nm]	F_{Ra} [N]	φ (/R) [']	AM 63	71	80	90	100	112
K47 3	**4.64**	302	205	2980	12						
	5.81	241	230	3140	12						
	6.58	213	240	3270	12						
	7.36	190	250	3380	11						
	8.56	164	270	3500	11						
	9.10	154	280	3540	11						
	10.56	133	280	3830	11						
	11.77	119	280	4060	10						
	12.19	115	350	3720	8						
	13.65	103	360	3890	8						
	15.86	88	380	4080	8						
	16.86	83	380	4220	8						
	19.58	72	400	4440	8						
	21.81	64	400	4710	8						
	24.06	58	400	4970	8						
	25.91	54	400	5170	8						
	29.32	48	400	5520	8						
	31.30	45	400	5700	7						
	35.39	40	400	5920	7						
	39.61	35	400	5920	7						
	46.03	30	400	5920	7						
	48.95	29	400	5920	7						
	56.83	25	400	5920	7						
	63.30	22	400	5920	6						
	69.84	20	400	5920	6						
	75.20	19	400	5920	6						
	85.12	16	400	5920	6						
	90.86	15	400	5920	6						
	104.37	13	400	5920	6						
	121.48	12	400	5920	6						
	131.87	11	400	5920	6						

m [kg]		AM					
IEC	**s**	**63**	**71**	**80**	**90**	**100**	**112**
K47	3	21	21	23	24	28	28
NEMA		-	56	143	145	182	184
K47	3	-	22	23	24	27	27
KF: + 3.2 kg / KA: + -0.9 kg / KAF: + 2.0 kg							

10.1.3 K57

n_e = 1400 1/min													600 Nm
	i	n_a [1/min]	$M_{a\,max}$ [Nm]	F_{Ra} [N]	φ (/R) [']	AM 63	71	80	90	100	112	132S/M
K57 3	**4.69**	299	300	3800	11							
	6.57	213	345	4180	10							
	7.55	185	365	4360	10							
	8.71	161	390	4520	10							
	9.59	146	405	4650	10							
	11.26	124	415	4990	9							
	11.92	117	415	5150	9							
	13.25	106	510	5190	7							
	15.22	92	535	5430	7							
	17.57	80	555	5740	7							
	19.34	72	575	5910	7							
	22.71	62	600	6280	7							
	24.05	58	600	6480	7							
	27.34	51	600	6930	7							
	30.28	46	600	7300	7							
	35.70	39	600	7630	7							
	38.49	36	600	7630	6							
	44.43	32	600	7630	6							
	48.89	29	600	7630	6							
	57.42	24	600	7630	6							
	60.81	23	600	7630	6							
	69.12	20	600	7630	6							
	76.56	18	600	7630	6							
	90.26	16	600	7630	6							
	102.88	14	600	7630	6							
	108.29	13	600	7630	6							
	123.85	11	600	7630	6							
	145.14	9.6	600	7630	6							

m [kg]		AM						
IEC	**s**	**63**	**71**	**80**	**90**	**100**	**112**	**132S/M**
K57	3	27	27	29	29	34	34	41
NEMA		-	56	143	145	182	184	213/215
K57	3	-	27	29	29	33	33	39
KF: + 4.7 kg / KA: + -2.1 kg / KAF: + 3.6 kg								

10.1.4 K67

n_e = 1400 1/min													820 Nm
	i	n_a [1/min]	$M_{a\,max}$ [Nm]	F_{Ra} [N]	φ (/R) [']	AM 63	71	80	90	100	112	132S/M
K67 3	**5.20**	269	350	9860	10							
	7.28	192	420	10700	9							
	8.37	167	440	11100	9							
	9.66	145	480	11500	9							
	10.63	132	500	11800	9							
	12.48	112	530	12300	9							
	13.22	106	670	11500	8							
	15.19	92	700	11300	8							
	17.54	80	740	11000	7							
	19.30	73	760	10800	7							
	22.66	62	780	10700	7							
	24.00	58	800	10500	7							
	27.28	51	820	10300	7							
	30.22	46	820	10300	7							
	35.62	39	820	10300	7							
	38.39	36	800	10500	6							
	44.32	32	820	10300	6							
	48.77	29	820	10300	6							
	57.28	24	820	10300	6							
	60.66	23	820	10300	6							
	68.95	20	820	10300	6							
	76.37	18	820	10300	6							
	90.04	16	820	10300	6							
	102.62	14	820	10300	6							
	108.03	13	820	10300	6							
	123.54	11	820	10300	6							
	144.79	9.7	820	10300	6							

m [kg]		AM						
IEC	**s**	**63**	**71**	**80**	**90**	**100**	**112**	**132S/M**
K67	3	33	33	35	35	40	40	47
NEMA		-	56	143	145	182	184	213/215
K67	3	-	33	35	35	39	39	45
KF: + 5.6 kg / KA: + -2.7 kg / KAF: + 3.0 kg								

10.1.5 K77

n_e = 1400 1/min														1550 Nm
	i	n_a [1/min]	$M_{a\,max}$ [Nm]	F_{Ra} [N]	φ (/R) [']	AM 63	71	80	90	100	112	132S/M	132ML
K77 3	**7.24**	193	820	13100	8								
	8.48	165	890	13500	8								
	9.56	146	940	13900	8								
	10.84	129	990	14400	8								
	12.36	113	1000	15100	8								
	13.52	104	1340	14800	7								
	15.84	88	1400	15500	6								
	17.87	78	1450	16100	6								
	20.25	69	1500	15700	6								
	23.08	61	1550	15400	6								
	25.62	55	1550	15400	6								
	29.27	48	1550	15400	6								
	30.89	45	1550	15400	6								
	35.20	40	1550	15400	6								
	38.39	36	1500	15700	6								
	40.04	35	1550	15400	6								
	45.16	31	1550	15400	6								
	51.18	27	1550	15400	6								
	58.34	24	1550	15400	6								
	64.75	22	1550	15400	5								
	73.99	19	1550	15400	5								
	78.07	18	1550	15400	5								
	88.97	16	1550	15400	5								
	97.05	14	1550	15400	5								
	113.56	12	1550	15400	5								
	128.52	11	1550	15400	5								
	135.28	10	1550	15400	5								
	154.02	9.1	1550	15400	5								
	179.37	7.8	1450	16100	5								
	192.18	7.3	1450	16100	5								

m [kg]		AM							
IEC	**s**	**63**	**71**	**80**	**90**	**100**	**112**	**132S/M**	**132ML**
K77	3	57	58	60	60	64	64	71	71
NEMA		-	56	143	145	182	184	213/215	-
K77	3	-	58	60	60	63	63	69	-
KF: + 8.3 kg / KA: + -7.5 kg / KAF: + 0.4 kg									

10.1.6 K87

n_e = 1400 1/min						AM							2700 Nm
	i	n_a [1/min]	$M_{a\,max}$ [Nm]	F_{Ra} [N]	φ (/R) [']	80	90	100	112	132S/M	132ML	160	180
K87 3	**7.21**	194	1300	13200	7								
	8.29	169	1400	13500	7								
	10.00	140	1500	14200	7								
	11.17	125	1500	14900	7								
	12.56	111	2000	14800	6								
	14.45	97	2100	15300	6								
	16.00	88	1800	16000	6								
	17.42	80	2200	16300	6								
	19.45	72	2300	16800	6								
	22.41	62	2300	17900	6								
	24.92	56	2500	18000	6								
	27.88	50	2600	18500	6								
	31.39	45	2700	19200	6								
	36.52	38	2500	21400	6								
	44.02	32	2600	22800	6								
	49.16	28	2700	23500	5								
	56.64	25	2700	25000	5								
	63.00	22	2700	26200	5								
	70.46	20	2700	27300	5								
	79.34	18	2700	27300	5								
	86.34	16	2700	27300	5								
	102.71	14	2700	27300	5								
	115.82	12	2700	27300	5								
	126.91	11	2700	27300	5								
	147.32	9.5	2700	27300	5								
	164.34	8.5	2700	27300	5								
	174.19	8.0	2700	27300	5								
	197.37	7.1	2700	27300	5								

m [kg]		AM							
IEC	**s**	**80**	**90**	**100**	**112**	**132S/M**	**132ML**	**160**	**180**
K87	3	95	95	100	100	110	110	125	125
NEMA		143	145	182	184	213/215	-	254/256	284/286
K87	3	95	95	100	100	105	-	120	120
KF: + 9.2 kg / KA: + -12.1 kg / KAF: + 1.1 kg									

10.1.7 K97

n_e = 1400 1/min														4300 Nm
	i	n_a [1/min]	$M_{a\,max}$ [Nm]	F_{Ra} [N]	φ (/R) [']	AM 100	112	132S/M	132ML	160	180	200	225
K97 3	**7.54**	186	2400	15700	10								
	8.71	161	2660	15800	10								
	10.41	134	2870	16400	10								
	11.99	117	3890	16200	8								
	13.85	101	4300	16100	8								
	16.56	85	4300	17800	8								
	18.96	74	4300	19100	8								
	22.37	63	4300	20900	8								
	24.75	57	4300	22000	8								
	27.91	50	4300	23300	8								
	30.82	45	4300	24500	7								
	34.23	41	4300	25700	7								
	38.30	37	4300	27100	7								
	41.87	33	4300	28300	7								
	47.93	29	4300	30000	7								
	56.55	25	4300	32300	7								
	62.55	22	4300	33800	7								
	70.54	20	4300	35600	7								
	77.89	18	4300	37100	7								
	86.52	16	4300	38800	7								
	96.80	14	4300	40000	7								
	105.13	13	4300	40000	7								
	123.93	11	4300	40000	7								
	140.28	10.0	4300	40000	7								
	153.21	9.1	4300	40000	7								
	176.05	8.0	4300	40000	7								

m [kg]		AM							
IEC	s	100	112	132S/M	132ML	160	180	200	225
K97	3	160	160	165	165	185	185	200	205
NEMA		182	184	213/215	-	254/256	284/286	324/326	364/365
K97	3	160	160	165	-	180	180	200	200
KF: + 20.1 kg / KA: + -18.2 kg / KAF: + 6.7 kg									

10.1.8 K107

n_e = 1400 1/min													8000 Nm
	i	n_a [1/min]	$M_{a\,max}$ [Nm]	F_{Ra} [N]	φ (/R) [']	AM 100	112	132S/M	132ML	160	180	200	225
K107 3	**7.35**	190	3600	24400	9								
	8.69	161	4070	24600	9								
	9.94	141	4190	25800	9								
	11.73	119	4300	27500	9								
	13.43	104	4300	29200	9								
	14.64	96	6890	19500	7								
	16.75	84	7050	21000	7								
	19.74	71	7200	23200	6								
	22.62	62	7200	25800	6								
	26.32	53	7200	28800	6								
	29.00	48	7200	30700	6								
	31.28	45	6800	34200	6								
	32.69	43	7200	33200	6								
	37.00	38	7200	35800	6								
	42.33	33	7360	37900	6								
	49.90	28	7840	39300	6								
	57.17	24	8000	41700	6								
	66.52	21	8000	45400	6								
	73.30	19	8000	47900	6								
	82.61	17	8000	50900	6								
	90.96	15	8000	53500	6								
	100.75	14	8000	56200	6								
	112.41	12	8000	59300	6								
	121.46	12	8000	61500	6								
	143.47	9.8	8000	65000	6								

m [kg]		AM							
IEC	s	100	112	132S/M	132ML	160	180	200	225
K107	3	275	275	280	280	295	295	315	320
NEMA		182	184	213/215	-	254/256	284/286	324/326	364/365
K107	3	275	275	275	-	290	295	310	310
KF: + 12.1 kg / KA: + -27.2 kg / KAF: + -3.2 kg									

10.1.9 K127

n_e = 1400 1/min						AM							13000 Nm
	i	n_a [1/min]	$M_{a\,max}$ [Nm]	F_{Ra} [N]	φ (/R) [']	132S/M	132ML	160	180	200	225	250	280
K127 3	**8.68**	161	7230	32500	8								
	10.74	130	8000	33900	8								
	12.79	109	8530	35400	8								
	14.35	98	12100	31000	6								
	17.77	79	13000	32600	6								
	21.15	66	13000	37200	6								
	23.91	59	13000	39800	6								
	27.68	51	13000	43000	6								
	31.37	45	13000	45900	6								
	36.25	39	13000	49400	6								
	40.19	35	13000	52000	5								
	47.82	29	13000	56500	5								
	54.07	26	13000	59800	5								
	62.60	22	13000	64000	5								
	70.95	20	13000	67700	5								
	81.98	17	13000	72100	5								
	89.89	16	13000	75100	5								
	110.18	13	13000	79200	5								
	122.48	11	13000	79200	5								
	136.14	10	13000	79200	5								
	146.07	9.6	13000	79200	5								

m [kg]		AM							
IEC	s	132S/M	132ML	160	180	200	225	250	280
K127	3	440	440	455	455	470	475	510	510
NEMA		213/215	-	254/256	284/286	324/326	364/365	-	-
K127	3	440	-	450	450	465	465	-	-
KF: + 42.3 kg / KA: + -28.2 kg / KAF: + 9.2 kg									

10.1.10 K157

n_e = 1400 1/min												18000 Nm
	i	n_a [1/min]	$M_{a\,max}$ [Nm]	F_{Ra} [N]	φ (/R) [']	AM 160	180	200	225	250	280
K157 3	12.65	111	17000	36700	6						
	14.92	94	18000	38200	6						
	18.37	76	18000	43200	6						
	21.31	66	18000	47000	6						
	23.95	58	18000	50000	6						
	27.62	51	18000	54000	6						
	31.30	45	18000	57500	6						
	38.02	37	18000	63400	5						
	46.79	30	18000	70000	5						
	54.29	26	18000	74900	5						
	61.02	23	18000	79000	5						
	70.38	20	18000	84200	5						
	79.75	18	18000	88900	5						
	91.65	15	18000	94400	5						
	100.22	14	18000	98000	5						
	122.39	11	18000	106500	5						
	150.41	9.3	18000	112200	5						

m [kg]		AM					
IEC	s	160	180	200	225	250	280
K157	3	690	690	710	710	740	740
NEMA		254/256	284/286	324/326	364/365	-	-
K157	3	680	690	710	710	-	-
KF: + 78.4 kg / KA: + -36.9 kg / KAF: + 21.7 kg							

10.1.11 K167

n_e = 1400 1/min												32000 Nm
	i	n_a [1/min]	$M_{a\,max}$ [Nm]	F_{Ra} [N]	φ (/R) [']	AM 160	180	200	225	250	280
K167 3	**17.34**	81	32000	67900	5						
	20.32	69	32000	74000	5						
	24.52	57	32000	81700	5						
	28.77	49	32000	88600	5						
	32.25	43	32000	93700	5						
	36.61	38	32000	99700	5						
	42.89	33	32000	107400	5						
	51.77	27	32000	117000	5						
	60.74	23	32000	125600	5						
	68.07	21	32000	132000	5						
	78.14	18	32000	140100	5						
	87.86	16	32000	147200	5						
	109.83	13	32000	150000	5						
	134.99	10	32000	150000	4						
	164.50	8.5	32000	150000	4						

m [kg]		AM					
IEC	s	160	180	200	225	250	280
K167	3	1080	1080	1100	1110	1130	1130
NEMA		254/256	284/286	324/326	364/365	-	-
K167	3	1080	1080	1100	1100	-	-
KH: + -38.0 kg							

10.1.12 K187

n_e = 1400 1/min												50000 Nm
	i	n_a [1/min]	$M_{a\,max}$ [Nm]	F_{Ra} [N]	φ (/R) [']	AM 160	180	200	225	250	280
K187  3	**17.18**	81	41400	80800	4						
	20.15	69	43900	84000	4						
	24.18	58	47600	86800	4						
	27.92	50	50000	90200	4						
	33.23	42	50000	99100	4						
	38.57	36	50000	107200	4						
	42.51	33	50000	112700	4						
	45.50	31	50000	116600	4						
	53.36	26	50000	126100	4						
	64.04	22	50000	137600	4						
	73.96	19	50000	147000	4						
	88.00	16	50000	159000	4						
	102.16	14	50000	169900	4						
	112.60	12	50000	177200	4						
	129.69	11	50000	188200	4						
	144.59	9.7	50000	190000	4						
	165.21	8.5	50000	190000	4						
	179.86	7.8	50000	190000	4						

m [kg]		AM					
IEC	s	160	180	200	225	250	280
K187	3	1670	1670	1690	1690	1720	1720
NEMA		254/256	284/286	324/326	364/365	-	-
K187	3	1660	1660	1680	1680	-	-
KH: + -67.0 kg							

10.2 K.. AT..

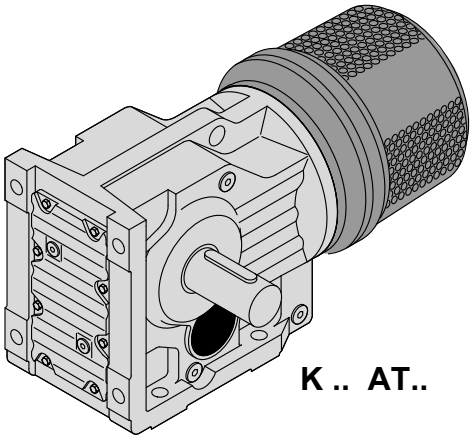

K .. AT..

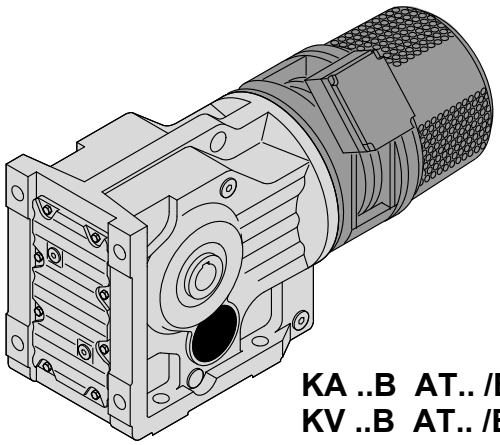

KA ..B AT.. /BM(G)
KV ..B AT.. /BM(G)

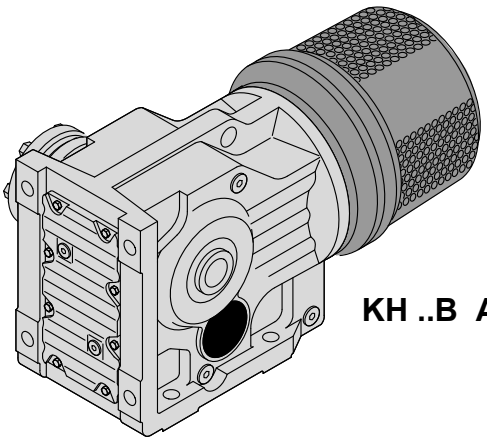

KH ..B AT..

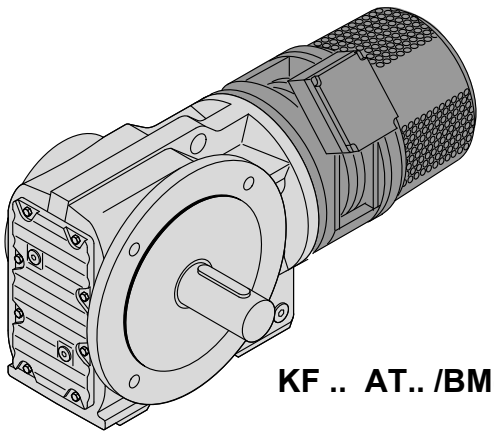

KF .. AT.. /BM(G)

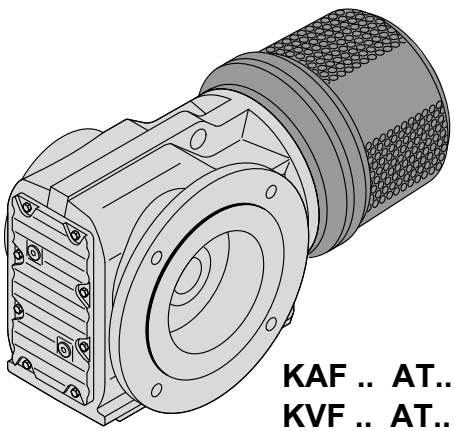

KAF .. AT..
KVF .. AT..

50411AXX

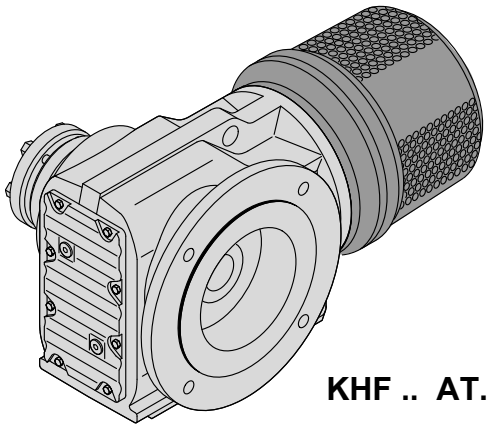

KHF .. AT..

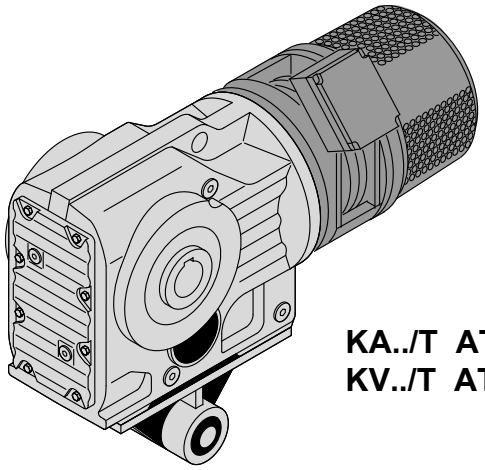

KA../T AT.. /BM(G)
KV../T AT.. /BM(G)

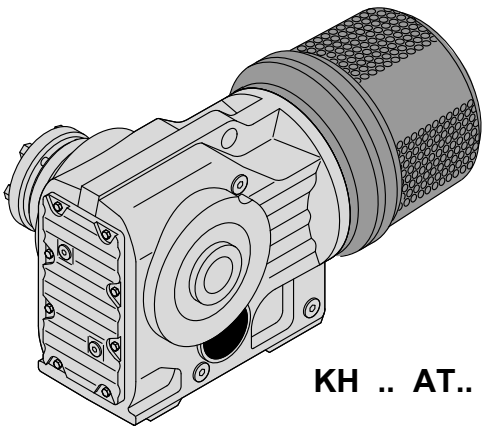

KH .. AT..

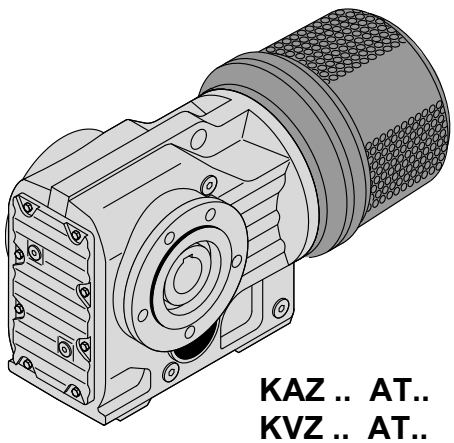

KAZ .. AT..
KVZ .. AT..

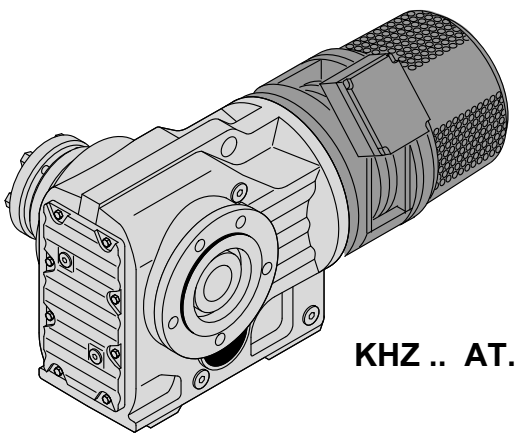

KHZ .. AT.. /BM(G)

50412AXX

10.2.1 K..AT/ DRS..4

		P_m [kW]				Sn [%]	
K67	DRS71S4	0,37	AT311	T11	0,42	12	
	DRS71M4	0,55	AT312	T11D	0,55	11	
	DRS80S4	0,75	AT312	T11D	0,7	11	
	DRS80M4	1,1	AT312	T11D	0,72	15	
	DRS90M4	1,5	AT321	T21	0,85	9	
	DRS90L4	2,2	AT321	T21	0,9	13	
	DRS100M4	3	AT322	T21D	1,53	11	
	DRS100LC4	4	AT322	T21D	1,6	12	
K77	DRS71S4	0,37	AT311	T11	0,42	12	
	DRS71M4	0,55	AT312	T11D	0,55	11	
	DRS80S4	0,75	AT312	T11D	0,7	11	
	DRS80M4	1,1	AT312	T11D	0,72	15	
	DRS90M4	1,5	AT421	T21	0,85	9	
	DRS90L4	2,2	AT421	T21	0,9	13	
	DRS100M4	3	AT422	T21D	1,53	11	→ 411ff
	DRS100LC4	4	AT422	T21D	1,6	12	→ 414ff
	DRS112M4	4	AT422	T21D	1,6	12	
K87	DRS80M4	1,1	AT312	T11D	0,72	15	
	DRS90M4	1,5	AT421	T21	0,85	9	
	DRS90L4	2,2	AT421	T21	0,9	13	
	DRS100M4	3	AT422	T21D	1,53	11	
	DRS100LC4	4	AT422	T21D	1,6	12	
	DRS112M4	4	AT422	T21D	1,6	12	
	DRS132S4	5,5	AT541	T41	2	6	
	DRS132M4	7,5	AT541	T41	2,4	8	
	DRS132MC4	9,2	AT541	T41	2,5	10	
	DRS160S4	9,2	AT541	T41	2,5	10	
	DRS160M4	11	AT541	T41	2,5	13	
	DRS160MC4	15	AT542	T41D	4,2	8	
	DRS180S4	15	AT542	T41D	4,2	8	

		P_m [kW]				Sn [%]	
K97	DRS80M4	1,1	AT312	T11D	0,72	15	
	DRS90M4	1,5	AT421	T21	0,85	9	
	DRS90L4	2,2	AT421	T21	0,9	13	
	DRS100M4	3	AT422	T21D	1,53	11	
	DRS100LC4	4	v422	T21D	1,6	12	
	DRS112M4	4	AT422	T21D	1,6	12	
	DRS132S4	5,5	AT541	T41	2	6	
	DRS132M4	7,5	AT541	T41	2,4	8	
	DRS132MC4	9,2	AT541	T41	2,5	10	
	DRS160S4	9,2	AT541	T41	2,5	10	
	DRS160M4	11	AT541	T41	2,5	13	
	DRS160MC4	15	v542	T41D	4,2	8	
	DRS180S4	15	AT542	T41D	4,2	8	
	DRS180M4	18,5	AT542	T41D	4,3	10	
	DRS180L4	22	AT542	T41D	4,3	14	
K107	DRS90L4	2,2	AT421	T21	0,9	13	
	DRS100M4	3	AT422	T21D	1,53	11	
	DRS100LC4	4	AT422	T21D	1,6	12	
	DRS112M4	4	AT422	T21D	1,6	12	
	DRS132S4	5,5	AT541	T41	2	6	→ 411ff
	DRS132M4	7,5	AT541	T41	2,4	8	
	DRS132MC4	9,2	AT541	T41	2,5	10	→ 414ff
	DRS160S4	9,2	AT541	T41	2,5	10	
	DRS160M4	11	AT541	T41	2,5	13	
	DRS160MC4	15	AT542	T41D	4,2	8	
	DRS180S4	15	AT542	T41D	4,2	8	
	DRS180M4	18,5	AT542	T41D	4,3	10	
	DRS180L4	22	AT542	T41D	4,3	14	
K127	DRS132M4	7,5	AT541	T41	2,4	8	
	DRS132MC4	9,2	AT541	T41	2,5	10	
	DRS160S4	9,2	AT541	T41	2,5	10	
	DRS160M4	11	AT541	T41	2,5	13	
	DRS160MC4	15	AT542	T41D	4,2	8	
	DRS180S4	15	AT542	T41D	4,2	8	
	DRS180M4	18,5	AT542	T41D	4,3	10	
	DRS180L4	22	AT542	T41D	4,3	14	
K157 **K167** **K187**	DRS160M4	11	AT541	T41	2,5	13	
	DRS160MC4	15	AT542	T41D	4,2	8	
	DRS180S4	15	AT542	T41D	4,2	8	
	DRS180M4	18,5	AT542	T41D	4,3	10	
	DRS180L	22	AT542	T41D	4,3	14	

10.2.2 K..AT/ DRE..4

		P_m [kW]				Sn [%]	
K67	DRE80M4	0,75	AT312	T11D	0,7	11	
	DRE90M4	1,1	AT312	T11D	0,72	15	
	DRE90L4	1,5	AT321	T21	0,85	9	
	DRE100M4	2,2	AT321	T21	0,9	13	
	DRE100LC4	3	AT322	T21D	1,53	11	
K77	DRE80M4	0,75	AT312	T11D	0,7	11	
	DRE90M4	1,1	AT312	T11D	0,72	15	
	DRE90L4	1,5	AT421	T21	0,85	9	
	DRE100M4	2,2	AT421	T21	0,9	13	
	DRE100LC4	3	AT422	T21D	1,53	11	
	DRE112M4	3	AT422	T21D	1,53	11	
	DRE132S4	4	AT422	T21D	1,6	12	
K87	DRE90M4	1,1	AT312	T11D	0,72	15	
	DRE90L4	1,5	AT421	T21	0,85	9	
	DRE100M4	2,2	AT421	T21	0,9	13	
	DRE100LC4	3	AT422	T21D	1,53	11	
	DRE112M4	3	AT422	T21D	1,53	11	
	DRE132S4	4	AT422	T21D	1,6	12	→ 411ff
	DRE132M4	5,5	AT541	T41	2	6	
	DRE132MC4	7,5	AT541	T41	2,4	8	→ 414ff
	DRE160M4	9,2	AT541	T41	2,5	10	
	DRE160MC4	11	AT541	T41	2,5	13	
	DRE180S4	11	AT541	T41	2,5	13	
	DRE180M4	15	AT542	T41D	4,2	8	
K97	DRE90M4	1,1	AT312	T11D	0,72	15	
	DRE90L4	1,5	AT421	T21	0,85	9	
	DRE100M4	2,2	AT421	T21	0,9	13	
	DRE100LC4	3	AT422	T21D	1,53	11	
	DRE112M4	3	AT422	T21D	1,53	11	
	DRE132S4	4	AT422	T21D	1,6	12	
	DRE132M4	5,5	AT541	T41	2	6	
	DRE132MC4	7,5	AT541	T41	2,4	8	
	DRE160M4	9,2	AT541	T41	2,5	10	
	DRE160MC4	11	AT541	T41	2,5	13	
	DRE180S4	11	AT541	T41	2,5	13	
	DRE180M4	15	AT542	T41D	4,2	8	
	DRE180L4	18,5	AT542	T41D	4,3	10	

		P_m [kW]				Sn [%]	
K107	DRE100M4	2,2	AT421	T21	0,9	13	
	DRE100LC4	3	AT422	T21D	1,53	11	
	DRE112M4	3	AT422	T21D	1,53	11	
	DRE132S4	4	ATv422	T21D	1,6	12	
	DRE132M4	5,5	AT541	T41	2	6	
	DRE132MC4	7,5	AT541	T41	2,4	8	
	DRE160M4	9,2	AT541	T41	2,5	10	
	DRE160MC4	11	AT541	T41	2,5	13	
	DRE180S4	11	AT541	T41	2,5	13	
	DRE180M4	15	AT542	T41D	4,2	8	→ 411ff
	DRE180L4	18,5	AT542	T41D	4,3	10	→ 414ff
K127	DRE132MC4	7,5	AT541	T41	2,4	8	
	DRE160M4	9,2	AT541	T41	2,5	10	
	DRE160MC4	11	AT541	T41	2,5	13	
	DRE180S4	11	AT541	T41	2,5	13	
	DRE180M4	15	AT542	T41D	4,2	8	
	DRE180L4	18,5	AT542	T41D	4,3	10	
K157 **K167** **K187**	DRE160MC4	11	AT541	T41	2,5	13	
	DRE180S4	11	AT541	T41	2,5	13	
	DRE180M4	15	AT542	T41D	4,2	8	
	DRE180L4	18,5	AT542	T41D	4,3	10	

10.2.3 K..AT/ DRP..4

		P_m [kW]				Sn [%]	
K67	DRP90M4	0,75	AT312	T11D	0,7	11	
	DRP90L4	1,1	AT312	T11D	0,72	15	
	DRP100M4	1,5	AT321	T21	0,85	9	
	DRP100L4	2,2	AT321	T21	0,9	13	
K77	DRP90M4	0,75	AT312	T11D	0,7	11	→ 411ff
	DRP90L4	1,1	AT312	T11D	0,72	15	→ 414ff
	DRP100M4	1,5	AT421	T21	0,85	9	
	DRP100L4	2,2	AT421	T21	0,9	13	
	DRP112M4	3	AT422	T21D	1,53	11	
	DRP132M4	4	AT422	T21D	1,6	12	

		P_m [kW]				Sn [%]	
K87	DRP90L4	1,1	AT312	T11D	0,72	15	
	DRP100M4	1,5	AT421	T21	0,85	9	
	DRP100L4	2,2	AT421	T21	0,9	13	
	DRP112M4	3	AT422	T21D	1,53	11	
	DRP132M4	4	AT422	T21D	1,6	12	
	DRP132MC4	5,5	AT541	T41	2	6	
	DRP160S4	5,5	AT541	T41	2	6	
	DRP160M4	7,5	AT541	T41	2,4	8	
	DRP160MC4	9,2	AT541	T41	2,5	10	
	DRP180S4	9,2	AT541	T41	2,5	10	
	DRP180M4	11	AT541	T41	2,5	13	
	DRP180L4	15	AT542	T41D	4,2	8	
K97	DRP90L4	1,1	AT312	T11D	0,72	15	
	DRP100M4	1,5	AT421	T21	0,85	9	
	DRP100L4	2,2	AT421	T21	0,9	13	
	DRP112M4	3	AT422	T21D	1,53	11	
	DRP132M4	4	AT422	T21D	1,6	12	
	DRP132MC4	5,5	AT541	T41	2	6	
	DRP160S4	5,5	AT541	T41	2	6	
	DRP160M4	7,5	AT541	T41	2,4	8	
	DRP160MC4	9,2	AT541	T41	2,5	10	→ 411ff
	DRP180S4	9,2	AT541	T41	2,5	10	→ 414ff
	DRP180M4	11	AT541	T41	2,5	13	
	DRP180L4	15	AT542	T41D	4,2	8	
K107	DRP100L4	2,2	AT421	T21	0,9	13	
	DRP112M4	3	AT422	T21D	1,53	11	
	DRP132M4	4	AT422	T21D	1,6	12	
	DRP132MC4	5,5	AT541	T41	2	6	
	DRP160S4	5,5	AT541	T41	2	6	
	DRP160M4	7,5	AT541	T41	2,4	8	
	DRP160MC4	9,2	AT541	T41	2,5	10	
	DRP180S4	9,2	AT541	T41	2,5	10	
	DRP180M4	11	AT541	T41	2,5	13	
	DRP180L4	15	AT542	T41D	4,2	8	
K127	DRP160M4	7,5	AT541	T41	2,4	8	
	DRP160MC4	9,2	AT541	T41	2,5	10	
	DRP180S4	9,2	AT541	T41	2,5	10	
	DRP180M4	11	AT541	T41	2,5	13	
	DRP180L4	15	AT542	T41D	4,2	8	
R157 **R167** **R187**	DRP180M4	11	AT541	T41	2,5	13	
	DRP180L4	15	AT542	T41D	4,2	8	

10.2.4 K..AT/ DRS..2

		P_m [kW]				Sn [%]	
K67	DRS71M2	0,55	AT311	T11	0,19	3	
	DRS80S2	0,75	AT311	T11	0,22	4,5	
	DRS80M2	1,1	AT311	T11	0,27	6	
	DRS90M2	1,5	AT311	T11	0,29	8,5	
	DRS100M2	3	AT311	T11	0,4	12	
	DRS100LC2	4	AT312	T11D	0,52	10	
K77	DRS71M2	0,55	AT311	T11	0,19	3	
	DRS80S2	0,75	AT311	T11	0,22	4,5	
	DRS80M2	1,1	AT311	T11	0,27	6	
	DRS90M2	1,5	AT311	T11	0,29	8,5	
	DRS100M2	3	AT311	T11	0,4	12	
	DRS100LC2	4	AT312	T11D	0,52	10	
	DRS132M2	9,2	AT421	T21	0,65	8,5	
K87	DRS90M2	1,5	AT311	T11	0,29	8,5	
	DRS100M2	3	AT311	T11	0,4	12	
	DRS100LC2	4	AT312	T11D	0,52	10	
	DRS132M2	9,2	AT421	T21	0,65	8,5	
K97	DRS90M2	1,5	AT311	T11	0,29	8,5	
	DRS100M2	3	AT311	T11	0,4	12	
	DRS100LC2	4	AT312	T11D	0,52	10	
	DRS132M2	9,2	AT421	T21	0,65	8,5	
K107	DRS100M2	3	AT311	T11	0,4	12	
	DRS100LC2	4	AT312	T11D	0,52	10	
	DRS132M2	9,2	AT421	T21	0,65	8,5	
K137	DRS132M2	9,2	AT421	T21	0,65	8,5	

→ 411ff
→ 414ff

10.2.5 K..AT/ DRE..2

		P_m [kW]				Sn [%]	
K67	DRE80M2	0,75	AT311	T11	0,22	4,5	
	DRE90M2	1,5	AT311	T11	0,29	8,5	
	DRE100M2	2,2	AT311	T11	0,31	11,5	
	DRE100L2	3	AT311	T11	0,4	12	
K77	DRE80M2	0,75	AT311	T11	0,22	4,5	
	DRE90M2	1,5	AT311	T11	0,29	8,5	
	DRE100M2	2,2	AT311	T11	0,31	11,5	
	DRE100L2	3	AT311	T11	0,4	12	
	DRE132M2	7,5	AT421	T21	0,6	8	
	DRE132MC2	9,2	AT421	T21	0,65	8,5	

→ 411ff
→ 414ff

		P_m [kW]				Sn [%]	
K87	DRE90M2	1,5	AT311	T11	0,29	8,5	
	DRE100M2	2,2	AT311	T11	0,31	11,5	
	DRE100L2	3	AT311	T11	0,4	12	
	DRE132M2	7,5	AT421	T21	0,6	8	
	DRE132MC2	9,2	AT421	T21	0,65	8,5	
K97	DRE90M2	1,5	AT311	T11	0,29	8,5	
	DRE100M2	2,2	AT311	T11	0,31	11,5	→ 411ff
	DRE100L2	3	AT311	T11	0,4	12	→ 414ff
	DRE132M2	7,5	AT421	T21	0,6	8	
	DRE132MC2	9,2	AT421	T21	0,65	8,5	
K107	DRE100L2	3	AT311	T11	0,4	12	
	DRE132M2	7,5	AT421	T21	0,6	8	
	DRE132MC2	9,2	AT421	T21	0,65	8,5	
K127	DRE132M2	7,5	AT421	T21	0,6	8	
	DRE132MC2	9,2	AT421	T21	0,65	8,5	

10.2.6 K..AT/ DRP..2

		P_m [kW]				Sn [%]	
K67	DRP80M2	0,75	AT311	T11	0,22	4,5	
	DRP90M2	1,1	AT311	T11	0,27	6	
	DRP100M2	2,2	AT311	T11	0,31	11,5	
	DRP100LC2	3	AT311	T11	0,4	12	
K77	DRP80M2	0,75	AT311	T11	0,22	4,5	
	DRP90M2	1,1	AT311	T11	0,27	6	→ 411ff
	DRP100M2	2,2	AT311	T11	0,31	11,5	→ 414ff
	DRP100LC2	3	AT311	T11	0,4	12	
K87	DRP100M2	2,2	AT311	T11	0,31	11,5	
	DRP100LC2	3	AT311	T11	0,4	12	
K97	DRP100M2	2,2	AT311	T11	0,31	11,5	
	DRP100LC2	3	AT311	T11	0,4	12	
K107	DRP100LC	3	AT311	T11	0,4	12	

10.3 K.. AD.. [kW]

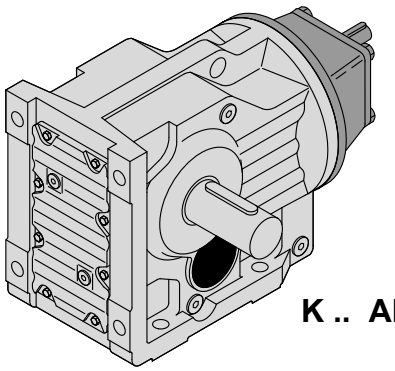

K .. AD..

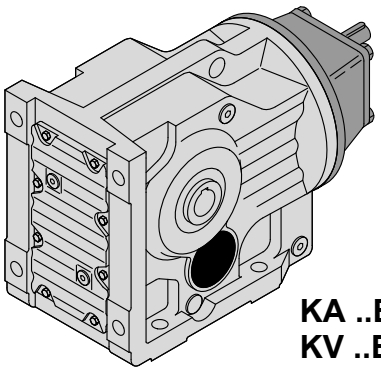

KA ..B AD..
KV ..B AD..

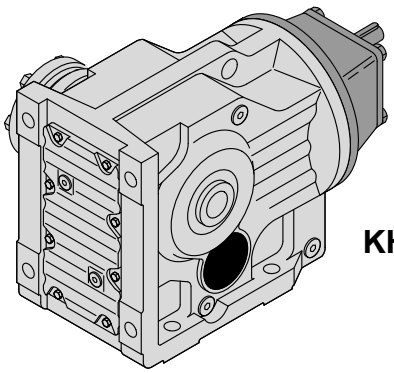

KH ..B AD..

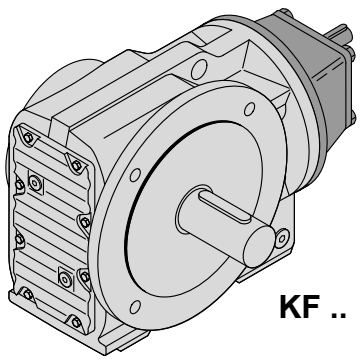

KF .. AD..

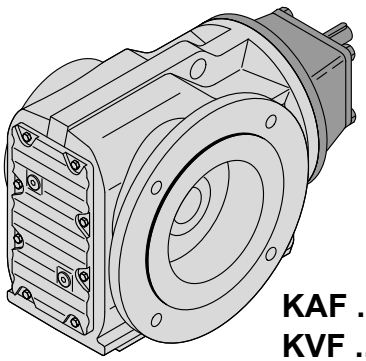

KAF .. AD..
KVF .. AD..

50409AXX

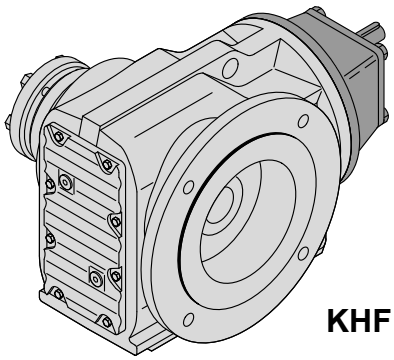

KHF .. AD..

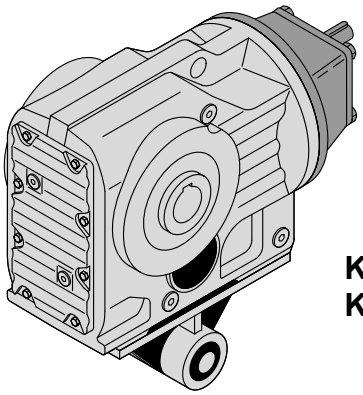

KA../T AD..
KV../T AD..

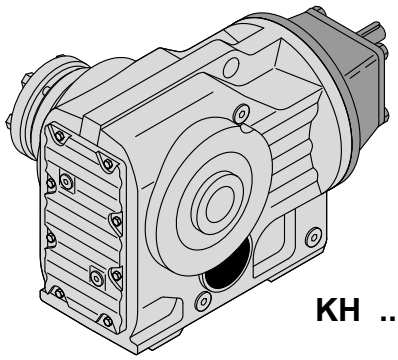

KH .. AD..

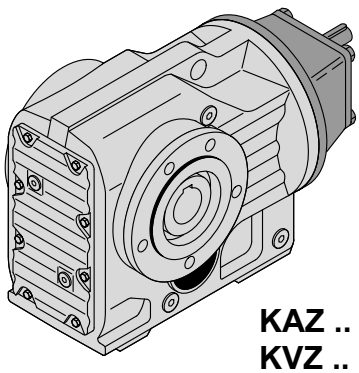

KAZ .. AD..
KVZ .. AD..

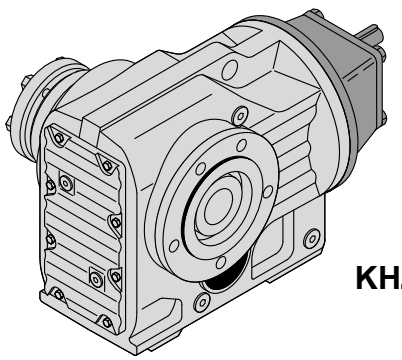

KHZ .. AD..

50410AXX

i	n_a [1/min]	M_{amax}	P_e [kW]	F_{Ra} [1)] [N]	F_{Re} [N]	φ (/R)	⚠				m [kg]	
K37 AD.. , n_e = 1400 1/min												**200 Nm**
106.38	13	200	0.31	5640	590	7	-					
97.81	14	200	0.34	5640	585	7	-					
83.69	17	200	0.39	5640	575	7	-					
72.54	19	200	0.45	5520	560	7	-	**K**	**37**	**AD1**	**14**	
67.80	21	200	0.47	5360	550	7	-	**KF**	**37**	**AD1**	**16**	→ 📖 417
58.60	24	200	0.55	5020	530	7	-	**KA**	**37**	**AD1**	**13**	
49.79	28	200	0.64	4660	505	7	-	**KAF**	**37**	**AD1**	**15**	
44.46	31	200	0.72	4420	485	7	-					
37.97	37	200	0.84	4100	455	7	-					
35.57	39	200	0.89	3970	440	7	-					
29.96	47	200	1.1	3650	1710	7	-					
28.83	49	200	1.1	3580	1520	8	-					
24.99	56	200	1.2	3330	1510	8	-					
23.36	60	195	1.3	3260	1510	8	-					
20.19	69	185	1.4	3110	1510	8	-					
17.15	82	180	1.6	2900	1500	8	-					
15.31	91	175	1.8	2780	1500	8	-	**K**	**37**	**AD2**	**15**	
13.08	107	165	2.0	2650	1490	9	-	**KF**	**37**	**AD2**	**17**	→ 📖 417
12.14	115	160	2.0	2600	1280	12	-	**KA**	**37**	**AD2**	**15**	
10.49	133	160	2.3	2410	1240	12	-	**KAF**	**37**	**AD2**	**16**	
8.91	157	160	2.8	2200	1210	12	-					
7.96	176	155	3.0	2110	1210	13	-					
6.80	206	150	3.4	1980	1180	13	-					
6.37	220	145	3.5	1950	1190	13	-					
5.36	261	140	4.0	1810	1150	13	-					
3.98	352	125	4.8	1660	1110	13	-					
K47 AD.. , n_e = 1400 1/min												**400 Nm**
131.87*	11	400	0.50	5920	1540	6	-					
121.48*	12	400	0.54	5920	1530	6	-					
104.37	13	400	0.62	5920	1500	6	-					
90.86	15	400	0.71	5920	1480	6	-					
85.12*	16	400	0.76	5920	1470	6	-					
75.20*	19	400	0.85	5920	1440	6	-					
69.84	20	400	0.91	5920	1410	6	-					
63.30*	22	400	1.0	5920	1390	6	-					
56.83	25	400	1.1	5920	1660	7	-					
48.95*	29	400	1.3	5920	1640	7	-					
46.03*	30	400	1.4	5920	1640	7	-					
39.61	35	400	1.6	5920	1620	7	-	**K**	**47**	**AD2**	**21**	
35.39	40	400	1.8	5920	1600	7	-	**KF**	**47**	**AD2**	**25**	→ 📖 417
31.30	45	400	2.0	5700	1290	7	-	**KA**	**47**	**AD2**	**21**	
29.32	48	400	2.1	5520	1280	8	-	**KAF**	**47**	**AD2**	**23**	
25.91	54	400	2.4	5170	1260	8	-					
24.06	58	400	2.6	4970	1240	8	-					
21.81	64	400	2.8	4710	1220	8	-					
19.58	72	400	3.1	4440	1200	8	-					
16.86	83	380	3.5	4220	1190	8	-					
15.86	88	380	3.7	4080	1180	8	-					
13.65	103	360	4.0	3890	1170	8	-					
12.19	115	350	4.4	3720	1150	8	-					
11.77	119	280	3.6	4060	1020	10	-					
10.56	133	280	4.1	3830	980	11	-					
9.10	154	280	4.7	3540	930	11	-					
8.56	164	270	4.8	3500	1960	11	-					
7.36	190	250	5.2	3380	1980	11	-	**K**	**47**	**AD3**	**25**	
6.58	213	240	5.6	3270	1960	12	-	**KF**	**47**	**AD3**	**28**	→ 📖 417
5.81	241	230	6.1	3140	1960	12	-	**KA**	**47**	**AD3**	**24**	
4.64	302	205	6.8	2980	1920	12	-	**KAF**	**47**	**AD3**	**27**	



i	n_a [1/min]	M_{amax}	P_e [kW]	F_{Ra} [N] 1)	F_{Re} [N]	φ (/R)	⚠				m [kg]	
K57 AD.. , n_e = 1400 1/min												**600 Nm**
145.14*	9.6	600	0.67	7630	1280	6	-					
123.85	11	600	0.78	7630	1240	6	-					
108.29	13	600	0.89	7630	1220	6	-					
102.88*	14	600	0.93	7630	1210	6	-					
90.26*	16	600	1.1	7630	1610	6	-					
76.56*	18	600	1.2	7630	1590	6	-					
69.12	20	600	1.4	7630	1580	6	-					
60.81*	23	600	1.6	7630	1570	6	-					
57.42*	24	600	1.6	7630	1560	6	-	**K**	**57**	**AD2**	**27**	
48.89	29	600	1.9	7630	1540	6	-	**KF**	**57**	**AD2**	**32**	
44.43	32	600	2.1	7630	1520	6	-	**KA**	**57**	**AD2**	**25**	→ 417
38.49	36	600	2.4	7630	1500	6	-	**KAF**	**57**	**AD2**	**31**	
35.70	39	600	2.6	7630	1160	7	-					
30.28	46	600	3.0	7300	1120	7	-					
27.34	51	600	3.4	6930	1100	7	-					
24.05	58	600	3.8	6480	1070	7	-					
22.71	62	600	4.1	6280	1050	7	-					
19.34	72	575	4.6	5910	1030	7	-					
17.57	80	555	4.8	5740	1020	7	-					
15.22	92	535	5.4	5430	2030	7	-					
13.25	106	510	5.9	5190	2010	7	-					
11.92	117	415	5.4	5150	1770	9	-					
11.26	124	415	5.7	4990	1750	9	-	**K**	**57**	**AD3**	**30**	
9.59	146	405	6.5	4650	1690	10	-	**KF**	**57**	**AD3**	**35**	
8.71	161	390	6.9	4520	1690	10	-	**KA**	**57**	**AD3**	**28**	→ 417
7.55	186	365	7.4	4360	1700	10	-	**KAF**	**57**	**AD3**	**34**	
6.57	213	345	8.1	4180	1690	10	-					
4.69	298	300	9.8	3800	1630	11	-					
K67 AD.. , n_e = 1400 1/min												**820 Nm**
144.79*	9.7	820	0.91	10300	880	6	-					
123.54	11	820	1.1	10300	1530	6	-					
108.03	13	820	1.2	10300	1520	6	-					
102.62	14	820	1.3	10300	1520	6	-					
90.04	16	820	1.4	10300	1500	6	-					
76.37	18	820	1.7	10300	1480	6	-	**K**	**67**	**AD2**	**33**	
68.95	20	820	1.9	10300	1460	6	-	**KF**	**67**	**AD2**	**39**	
60.66	23	820	2.1	10300	1450	6	-	**KA**	**67**	**AD2**	**30**	→ 417
57.28	24	820	2.2	10300	1440	6	-	**KAF**	**67**	**AD2**	**36**	
48.77	29	820	2.6	10300	1400	6	-					
44.32	32	820	2.9	10300	1380	6	-					
38.39	36	800	3.3	10500	1360	6	-					
35.62	39	820	3.5	10300	880	7	-					
30.22	46	820	4.2	10300	1860	7	-					
27.28	51	820	4.6	10300	1820	7	-					
24.00	58	800	5.1	10500	1820	7	-					
22.66	62	780	5.3	10700	1820	7	-					
19.30	73	760	6.0	10800	1780	7	-					
17.54	80	740	6.5	11000	1760	7	-	**K**	**67**	**AD3**	**36**	
15.19	92	700	7.1	11300	1750	8	-	**KF**	**67**	**AD3**	**42**	
13.22	106	670	7.8	11500	1730	8	-	**KA**	**67**	**AD3**	**34**	→ 417
12.48	112	530	6.5	12300	1570	9	-	**KAF**	**67**	**AD3**	**39**	
10.63	132	500	7.2	11800	1560	9	-					
9.66	145	480	7.6	11500	1560	9	-					
8.37	167	440	8.1	11100	1590	9	-					
7.28	192	420	8.8	10700	1570	9	-					
5.20	269	350	10.3	9860	1560	10	-					

i	n_a [1/min]	M_{amax}	P_e [kW]	F_{Ra} [N] 1)	F_{Re} [N]	φ (/R)	⚠				m [kg]	
K77 AD.. , n_e = 1400 1/min												**1550 Nm**
192.18	7.3	1240	1.0	17200	570	5	-					
179.37	7.8	1160	1.0	17600	685	5	-					
154.02	9.1	1550	1.6	15400	1360	5	-					
135.28	10	1550	1.8	15400	1350	5	-					
128.52	11	1550	1.9	15400	1350	5	-					
113.56	12	1550	2.1	15400	1310	5	-	**K**	**77**	**AD2**	**58**	
97.05	14	1550	2.5	15400	1290	5	-	**KF**	**77**	**AD2**	**66**	→ 📖 417
88.97	16	1550	2.7	15400	1280	5	-	**KA**	**77**	**AD2**	**50**	
78.07	18	1550	3.1	15400	1250	5	-	**KAF**	**77**	**AD2**	**58**	
73.99	19	1550	3.3	15400	1240	5	-					
64.75	22	1550	3.7	15400	1210	5	-					
58.34	24	1550	4.1	15400	1180	6	-					
51.18	27	1550	4.7	15400	1140	6	-					
45.16	31	1550	5.3	15400	1100	6	-					
40.04	35	1550	6.0	15400	2090	6	-	**K**	**77**	**AD3**	**61**	
38.39	36	1490	6.0	15800	1470	6	-	**KF**	**77**	**AD3**	**70**	→ 📖 417
35.20	40	1410	6.2	16300	1530	6	-	**KA**	**77**	**AD3**	**54**	
30.89	45	1550	7.7	15400	1280	6	-	**KAF**	**77**	**AD3**	**62**	
29.27	48	1550	8.2	15400	3310	6	-					
25.62	55	1550	9.3	15400	3250	6	-					
23.08	61	1550	10.3	15400	3170	6	-					
20.25	69	1500	11.4	15700	3140	6	-					
17.87	78	1450	12.4	16100	3120	6	-	**K**	**77**	**AD4**	**67**	
15.84	88	1400	13.6	15500	3090	6	-	**KF**	**77**	**AD4**	**76**	→ 📖 417
13.52	104	1340	15.2	14800	3050	7	-	**KA**	**77**	**AD4**	**60**	
12.36	113	1000	12.4	15100	2860	8	-	**KAF**	**77**	**AD4**	**68**	
10.84	129	990	14.0	14400	2790	8	-					
9.56	146	940	15.0	13900	2790	8	-					
8.48	165	890	16.1	13500	2800	8	-					
7.24	193	820	17.3	13100	2810	8	-					
K87 AD.. , n_e = 1400 1/min												**2700 Nm**
197.37	7.1	2700	2.2	27300	1170	5	-					
174.19	8.0	2700	2.4	27300	1150	5	-					
164.34*	8.5	2700	2.6	27300	1150	5	-	**K**	**87**	**AD2**	**93**	
147.32*	9.5	2700	2.9	27300	1120	5	-	**KF**	**87**	**AD2**	**105**	→ 📖 417
126.91*	11	2700	3.3	27300	1100	5	-	**KA**	**87**	**AD2**	**81**	
115.82	12	2700	3.6	27300	1080	5	-	**KAF**	**87**	**AD2**	**94**	
102.71*	14	2700	4.1	27300	1060	5	-					
86.34	16	2700	4.9	27300	1020	5	-					
79.34	18	2700	5.3	27300	1940	5	-					
70.46	20	2700	6.0	27300	1910	5	-					
63.00*	22	2700	6.7	26200	1870	5	-	**K**	**87**	**AD3**	**98**	
56.64	25	2700	7.4	25000	1840	5	-	**KF**	**87**	**AD3**	**105**	→ 📖 417
49.16	28	2700	8.6	23500	1780	5	-	**KA**	**87**	**AD3**	**85**	
44.02	32	2600	9.2	22800	1760	6	-	**KAF**	**87**	**AD3**	**99**	
36.52*	38	2500	10.7	21400	1700	6	-					
31.39	45	2700	13.2	19200	2770	6	-					
27.88	50	2600	14.3	18500	2770	6	-					
24.92	56	2500	15.4	18000	2780	6	-					
22.41	62	2300	15.7	17900	2860	6	-	**K**	**87**	**AD4**	**105**	
19.45	72	2300	18.1	16800	2760	6	-	**KF**	**87**	**AD4**	**115**	→ 📖 417
17.42	80	2200	19.4	16300	2750	6	-	**KA**	**87**	**AD4**	**92**	
16.00	88	1800	17.2	16000	2090	6	-	**KAF**	**87**	**AD4**	**105**	
14.45	97	2100	22	15300	2660	6	-					
12.56	111	2000	24	14800	2640	6	-					
11.17	125	1500	21	14900	2440	7	-					
10.00	140	1500	23	14200	5590	7	-	**K**	**87**	**AD5**	**120**	
8.29	169	1400	26	13500	5550	7	-	**KF**	**87**	**AD5**	**130**	→ 📖 417
7.21	194	1300	28	13200	5590	7	-	**KA**	**87**	**AD5**	**105**	
								KAF	**87**	**AD5**	**120**	



K..
K.. AD.. [kW]

i	n_a [1/min]	M_{amax}	P_e [kW]	F_{Ra} [1)] [N]	F_{Re} [N]	φ (/R)	⚠				m [kg]	
K97 AD.. , n_e = 1400 1/min												**4300 Nm**
176.05*	8.0	4300	3.8	40000	1780	7	-					
153.21*	9.1	4300	4.4	40000	1760	7	-					
140.28	10.0	4300	4.8	40000	1740	7	-					
123.93*	11	4300	5.5	40000	1710	7	-	**K**	**97**	**AD3**	**160**	
105.13	13	4300	6.4	40000	1670	7	-	**KF**	**97**	**AD3**	**180**	
96.80	14	4300	7.0	40000	1640	7	-	**KA**	**97**	**AD3**	**140**	→ 417
86.52	16	4300	7.8	38800	1600	7	-	**KAF**	**97**	**AD3**	**165**	
77.89*	18	4300	8.7	37100	1570	7	-					
70.54	20	4300	9.6	35600	1520	7	-					
62.55	22	4300	10.8	33800	3510	7	-	**K**	**97**	**AD4**	**165**	
56.55	25	4300	12.0	32300	3460	7	-	**KF**	**97**	**AD4**	**185**	
47.93*	29	4300	14.1	30000	3380	7	-	**KA**	**97**	**AD4**	**145**	→ 417
41.87	33	4300	16.2	28300	3300	7	-	**KAF**	**97**	**AD4**	**170**	
38.30	37	4300	17.3	27100	5300	7	-					
34.23	41	4300	19.3	25700	5220	7	-					
30.82	45	4300	21	24500	5150	7	-	**K**	**97**	**AD5**	**180**	
27.91	50	4300	24	23300	5070	8	-	**KF**	**97**	**AD5**	**200**	
24.75	57	4300	27	22000	4980	8	-	**KA**	**97**	**AD5**	**160**	→ 417
22.37	63	4300	30	20900	4880	8	-	**KAF**	**97**	**AD5**	**185**	
18.96	74	4300	35	19100	4680	8	-					
16.56	85	4300	40	17800	4520	8	-					
13.85	101	4300	48	16100	7200	8	-	**K**	**97**	**AD6**	**195**	
11.99	117	3890	50	16200	7300	8	M2,4-6	**KF**	**97**	**AD6**	**215**	
								KA	**97**	**AD6**	**175**	→ 417
								KAF	**97**	**AD6**	**200**	
10.41	134	2870	42	16400	4320	10	-	**K**	**97**	**AD5**	**180**	
								KF	**97**	**AD5**	**200**	
								KA	**97**	**AD5**	**160**	→ 417
								KAF	**97**	**AD5**	**185**	
8.71	161	2660	47	15800	7250	10	-	**K**	**97**	**AD6**	**195**	
7.54	186	2400	49	15700	7360	10	-	**KF**	**97**	**AD6**	**215**	
								KA	**97**	**AD6**	**175**	→ 417
								KAF	**97**	**AD6**	**200**	
K107 AD.. , n_e = 1400 1/min												**8000 Nm**
143.47*	9.8	8000	8.7	65000	3090	6	-					
121.46	12	8000	10.3	61500	3030	6	-					
112.41*	12	8000	11.1	59300	2980	6	-					
100.75	14	8000	12.4	56200	2930	6	-	**K**	**107**	**AD4**	**280**	
90.96*	15	8000	13.8	53500	2850	6	-	**KF**	**107**	**AD4**	**290**	
82.61	17	8000	15.2	50900	2800	6	-	**KA**	**107**	**AD4**	**250**	→ 417
73.30	19	8000	17.1	47900	2730	6	-	**KAF**	**107**	**AD4**	**275**	
66.52*	21	8000	18.8	45400	2670	6	-					
57.17*	24	8000	22	41700	2550	6	-					
49.90	28	7840	25	39300	2480	6	-					
42.33*	33	7360	27	37900	5700	6	-	**K**	**107**	**AD5**	**290**	
37.00*	38	7200	31	35800	5620	6	-	**KF**	**107**	**AD5**	**305**	
32.69	43	7200	34	33200	3360	6	-	**KA**	**107**	**AD5**	**265**	→ 417
31.28*	45	6800	34	34200	5590	6	-	**KAF**	**107**	**AD5**	**290**	
29.00	48	7200	38	30700	6610	6	-					
26.32	53	7200	42	28800	6500	6	-					
22.62	62	7200	49	25800	6280	6	-					
19.74	71	7170	56	23400	6090	6	-					
16.75	84	6080	56	26200	6500	7	-	**K**	**107**	**AD6**	**305**	
14.64	96	5310	56	27800	6790	7	-	**KF**	**107**	**AD6**	**320**	
13.43	104	4300	49	29200	6260	9	-	**KA**	**107**	**AD6**	**280**	→ 417
11.73	119	4260	56	27600	6090	9	-	**KAF**	**107**	**AD6**	**300**	
9.94	141	3610	56	27800	6500	9	-					
8.69	161	3150	56	27800	6800	9	-					
7.35	191	2660	56	27600	7150	9	-					
K127 AD.. , n_e = 1400 1/min												**13000 Nm**
146.07	9.6	13000	13.9	79200	2390	5	-	**K**	**127**	**AD4**	**435**	
136.14	10	13000	14.9	79200	2320	5	-	**KF**	**127**	**AD4**	**480**	
122.48	11	13000	16.6	79200	2220	5	-	**KA**	**127**	**AD4**	**410**	→ 417
110.18	13	13000	18.4	79200	2080	5	-	**KAF**	**127**	**AD4**	**445**	

i	n_a [1/min]	M_{amax}	P_e [kW]	F_{Ra} [N] 1)	F_{Re} [N]	φ (/R)	⚠					m [kg]	
89.89	16	13000	23	75100	5360	5	-						
81.98	17	13000	25	72100	5300	5	-	**K**	**127**	**AD5**	**450**		
70.95*	20	13000	29	67700	5180	5	-	**KF**	**127**	**AD5**	**490**	→ 📖 417	
62.60	22	13000	32	64000	5080	5	-	**KA**	**127**	**AD5**	**420**		
54.07	26	13000	38	59800	4930	5	-	**KAF**	**127**	**AD5**	**460**		
47.82	29	13000	43	56500	4790	5	-						
40.19	35	13000	51	52000	7500	5	-	**K**	**127**	**AD6**	**460**		
								KF	**127**	**AD6**	**500**	→ 📖 417	
								KA	**127**	**AD6**	**430**		
								KAF	**127**	**AD6**	**470**		
36.25	39	13000	55	49400	11400	6	-	**K**	**127**	**AD7**	**460**		
31.37	45	13000	63	45900	10500	6	-	**KF**	**127**	**AD7**	**500**	→ 📖 417	
27.68	51	13000	72	43000	9650	6	-	**KA**	**127**	**AD7**	**430**		
23.91	59	13000	83	39800	8490	6	-	**KAF**	**127**	**AD7**	**470**		
21.15	66	13000	94	37200	24500	6	M2,4-6						
17.77	79	13000	112	32600	24100	6	M1-6	**K**	**127**	**AD8**	**480**		
14.35	98	12100	129	31000	23900	6	M1-6	**KF**	**127**	**AD8**	**520**	→ 📖 417	
12.79	110	8530	102	35400	24100	8	M2-6	**KA**	**127**	**AD8**	**455**		
10.74	130	8000	114	33900	24000	8	M1-6	**KAF**	**127**	**AD8**	**490**		
8.68	161	7230	128	32500	24000	8	M1-6						
K157 AD.. , n_e = 1400 1/min													**18000 Nm**
150.41	9.3	18000	18.7	112200	5190	5	-						
122.39	11	18000	23	106500	5070	5	-						
100.22	14	18000	28	98000	4880	5	-	**K**	**157**	**AD5**	**680**		
91.65	15	18000	31	94400	4810	5	-	**KF**	**157**	**AD5**	**760**	→ 📖 417	
79.75	18	18000	35	88900	4680	5	-	**KA**	**157**	**AD5**	**650**		
70.38	20	18000	40	84200	4560	5	-	**KAF**	**157**	**AD5**	**710**		
61.02	23	18000	46	79000	4400	5	-						
54.29	26	18000	52	74900	7200	5	-	**K**	**157**	**AD6**	**700**		
								KF	**157**	**AD6**	**780**	→ 📖 417	
								KA	**157**	**AD6**	**660**		
								KAF	**157**	**AD6**	**720**		
46.79	30	18000	60	70000	17100	5	-	**K**	**157**	**AD7**	**690**		
38.02	37	18000	74	63400	16700	5	-	**KF**	**157**	**AD7**	**770**	→ 📖 417	
								KA	**157**	**AD7**	**660**		
								KAF	**157**	**AD7**	**720**		
31.30	45	17700	86	58200	23700	6	-						
27.62	51	16000	89	58300	24100	6	-						
23.95	58	18000	115	50000	23000	6	-	**K**	**157**	**AD8**	**720**		
21.31	66	18000	129	47000	22700	6	-	**KF**	**157**	**AD8**	**800**	→ 📖 417	
18.37	76	18000	150	43200	22400	6	M1-6	**KA**	**157**	**AD8**	**680**		
14.92	94	18000	184	38200	21600	6	M1-6	**KAF**	**157**	**AD8**	**740**		
12.65	111	17000	206	36700	21400	6	M1-6						
K167 AD.. , n_e = 1400 1/min													**32000 Nm**
164.50	8.5	29500	28	150000	2960	4	-	**K**	**167**	**AD5**	**1080**	→ 📖 417	
								KH	**167**	**AD5**	**1040**		
134.99	10	32000	37	150000	5880	4	-	**K**	**167**	**AD6**	**1100**	→ 📖 417	
109.83	13	32000	45	150000	5420	5	-	**KH**	**167**	**AD6**	**1060**		
87.86	16	32000	57	147200	13200	5	-						
78.14	18	32000	64	140100	12700	5	-	**K**	**167**	**AD7**	**1090**	→ 📖 417	
68.07	21	32000	73	132000	11800	5	-	**KH**	**167**	**AD7**	**1050**		
60.74	23	32000	82	125600	11100	5	-						
51.77	27	32000	96	117000	24900	5	-						
42.89	33	32000	116	107400	24500	5	M2,4,6						
36.61	38	32000	136	99700	24100	5	M1-6						
32.25	43	28100	133	100900	21500	5	-	**K**	**167**	**AD8**	**1110**	→ 📖 417	
28.77	49	25100	134	101300	22100	5	-	**KH**	**167**	**AD8**	**1070**		
24.52	57	32000	199	81700	19300	5	M1-6						
20.32	69	31000	233	75900	18800	5	M1-6						
17.34	81	28100	248	75000	19100	5	M1-6						
K187 AD.. , n_e = 1400 1/min													**50000 Nm**
179.86	7.8	50000	43	190000	6030	4	-	**K**	**187**	**AD6**	**1680**	→ 📖 417	
165.21	8.5	50000	47	190000	5880	4	-	**KH**	**187**	**AD6**	**1610**		
144.59	9.7	50000	54	190000	5570	4	-						
129.69	11	50000	60	188200	14300	4	-	**K**	**187**	**AD7**	**1670**	→ 📖 417	
112.60	12	50000	69	177200	13400	4	-	**KH**	**187**	**AD7**	**1600**		
102.16	14	50000	76	169900	13100	4	-						



K..
K.. AD.. [kW]

i	n_a [1/min]	M_{amax}	P_e [kW]	F_{Ra} [N] 1)	F_{Re} [N]	φ (/R)	⚠				m [kg]	
88.00	16	50000	89	159000	25400	4	-					
73.96	19	50000	106	147000	25100	4	M2					
64.04	22	50000	122	137600	24800	4	M2-6					
53.36	26	50000	146	126100	24300	4	M1-6					
45.50*	31	50000	172	116600	23900	4	M1-6					
42.51	33	40000	144	128200	21000	4	-	**K**	**187**	**AD8**	**1690**	→ 📖 417
38.57	36	40000	159	122700	20800	4	-	**KH**	**187**	**AD8**	**1630**	
33.23	42	46400	213	104700	18800	4	M1-6					
27.92	50	43300	237	100500	18800	4	M1-6					
24.18	58	39100	248	100000	19300	4	M1-6					
20.15	69	32600	248	101500	20300	4	M1-6					
17.18	82	32000	286	95300	19700	4	M1-6					

10.4 K.. AM.. (IEC) [mm]

33 010 02 01

K37..

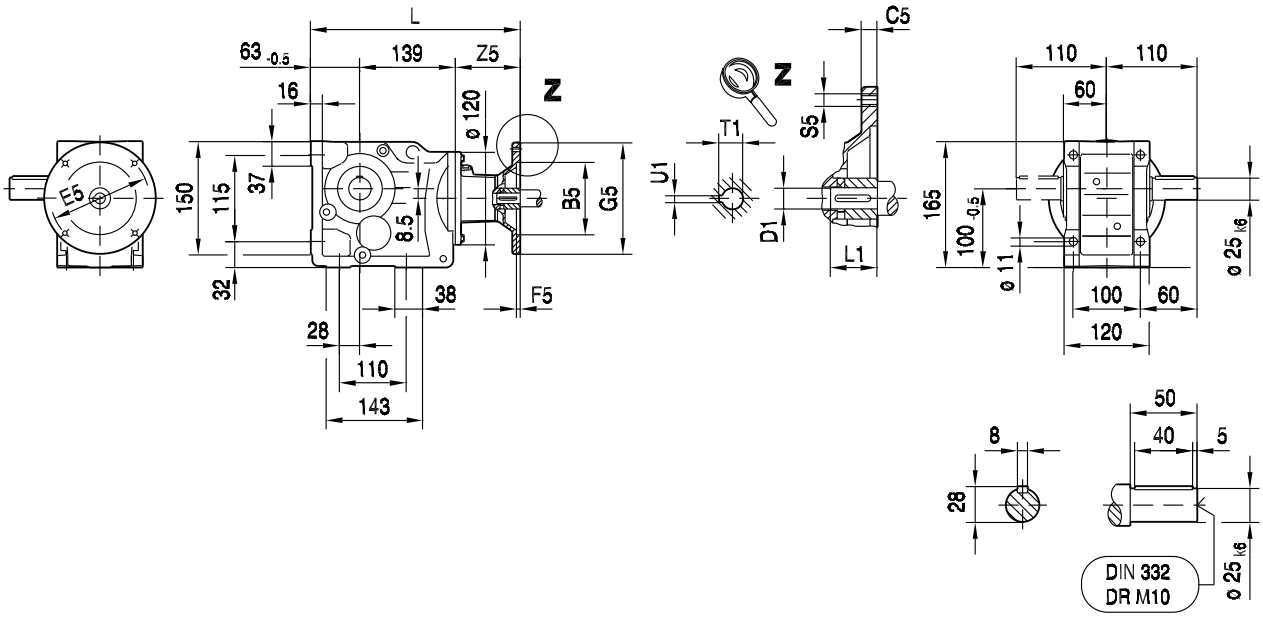

(→ 130)	B5	C5	E5	F5	G5	L	S5	Z5	D1	L1	T1	U1	
AM63	95	10	115	3.5	140	274	M8	72	11	23	12.8	4	
AM71	110	10	130	4.0	160	274	M8	72	14	30	16.3	5	
AM80	130	12	165	4.5	200	308	M10	106	19	40	21.8	6	
AM90	130	12	165	4.5	200	308	M10	106	24	50	27.3	8	

33 011 02 01

KF37..

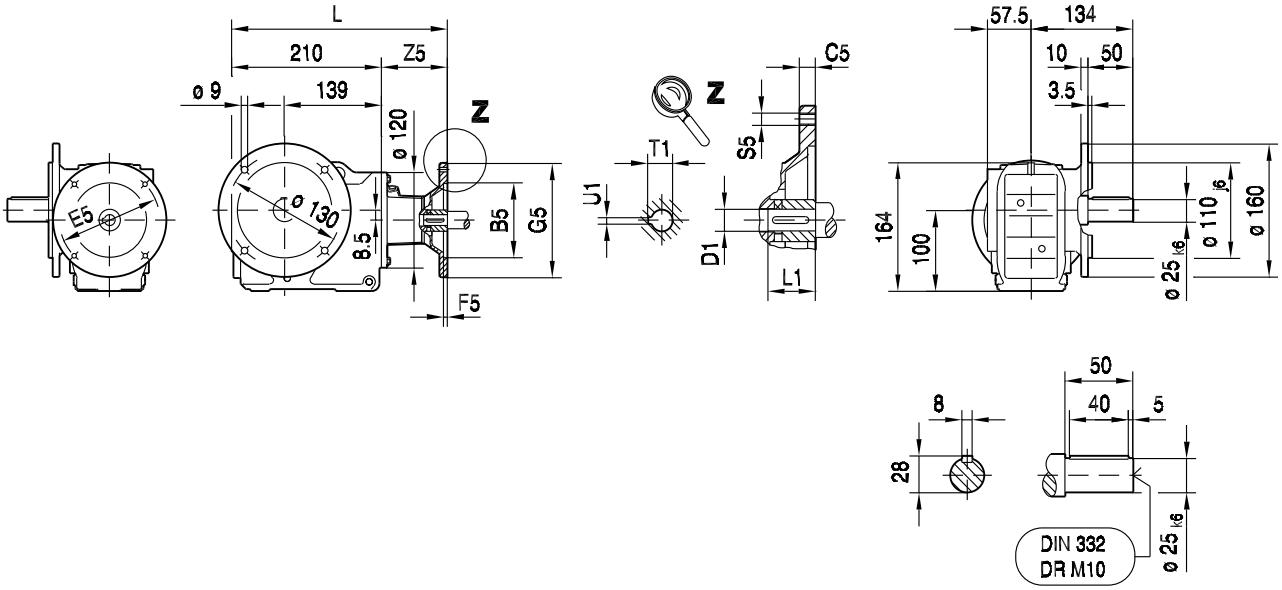

KAF37..

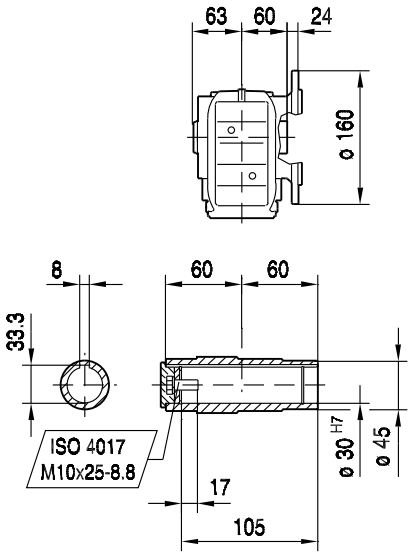

KHF37..

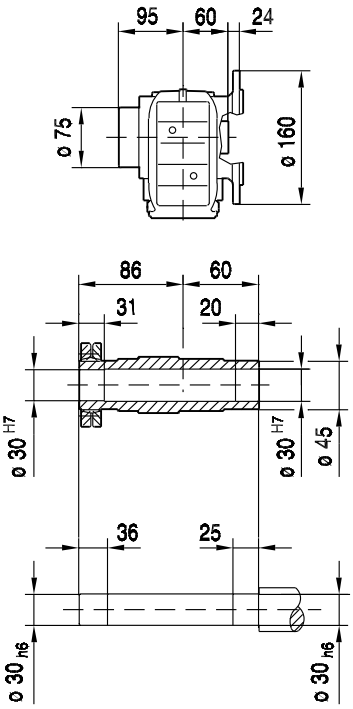

KVF37..

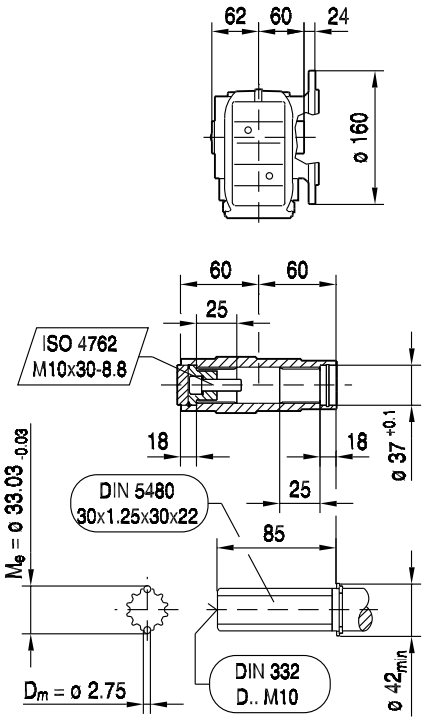

(→ 130)	B5	C5	E5	F5	G5	L	S5	Z5	D1	L1	T1	U1	
AM63	95	10	115	3.5	140	282	M8	72	11	23	12.8	4	
AM71	110	10	130	4.0	160	282	M8	72	14	30	16.3	5	
AM80	130	12	165	4.5	200	316	M10	106	19	40	21.8	6	
AM90	130	12	165	4.5	200	316	M10	106	24	50	27.3	8	

38 010 02 01

KA37..

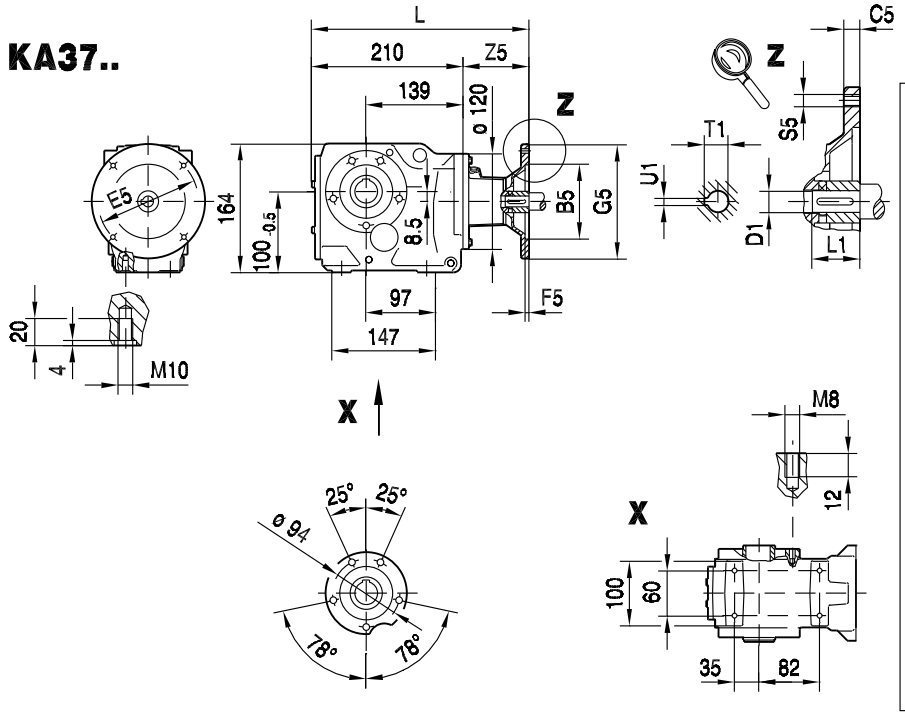

K.. /T..

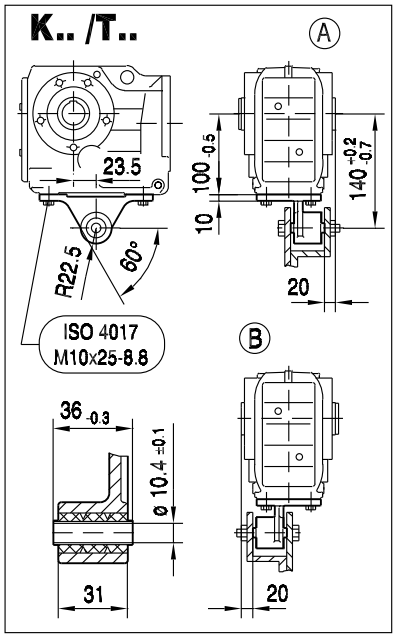

10

KA37..

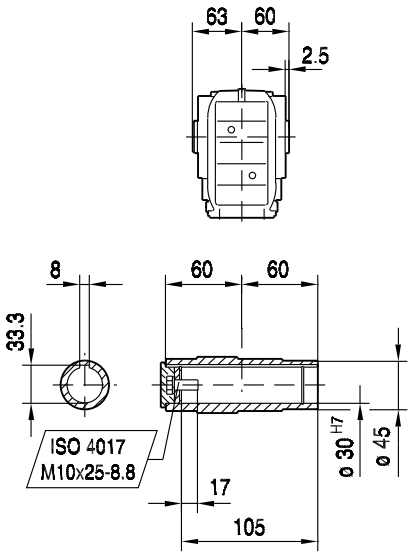

KH37..

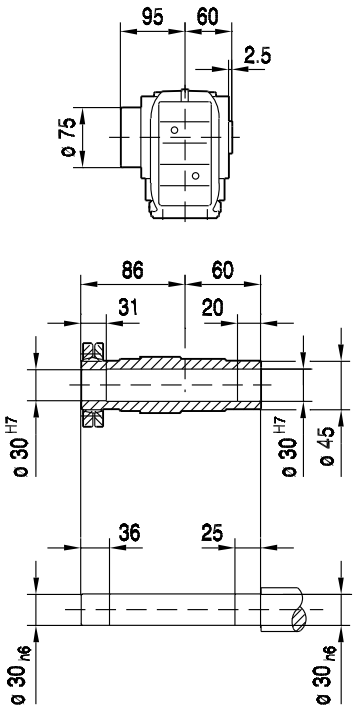

KV37..

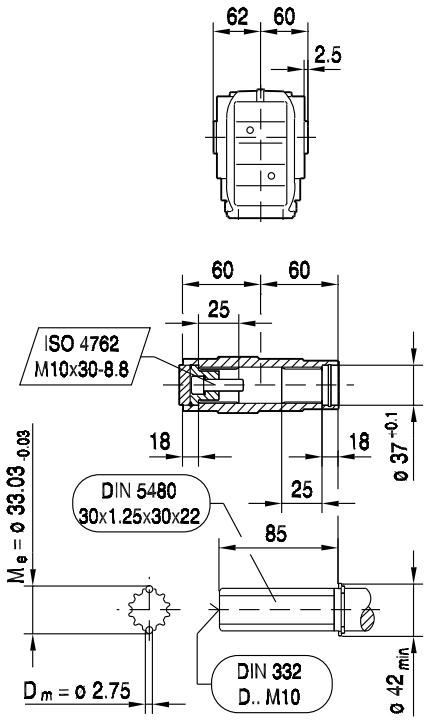

(→ 130)	B5	C5	E5	F5	G5	L	S5	Z5	D1	L1	T1	U1	
AM63	95	10	115	3.5	140	282	M8	72	11	23	12.8	4	
AM71	110	10	130	4.0	160	282	M8	72	14	30	16.3	5	
AM80	130	12	165	4.5	200	316	M10	106	19	40	21.8	6	
AM90	130	12	165	4.5	200	316	M10	106	24	50	27.3	8	

38 011 02 01

KAZ37..

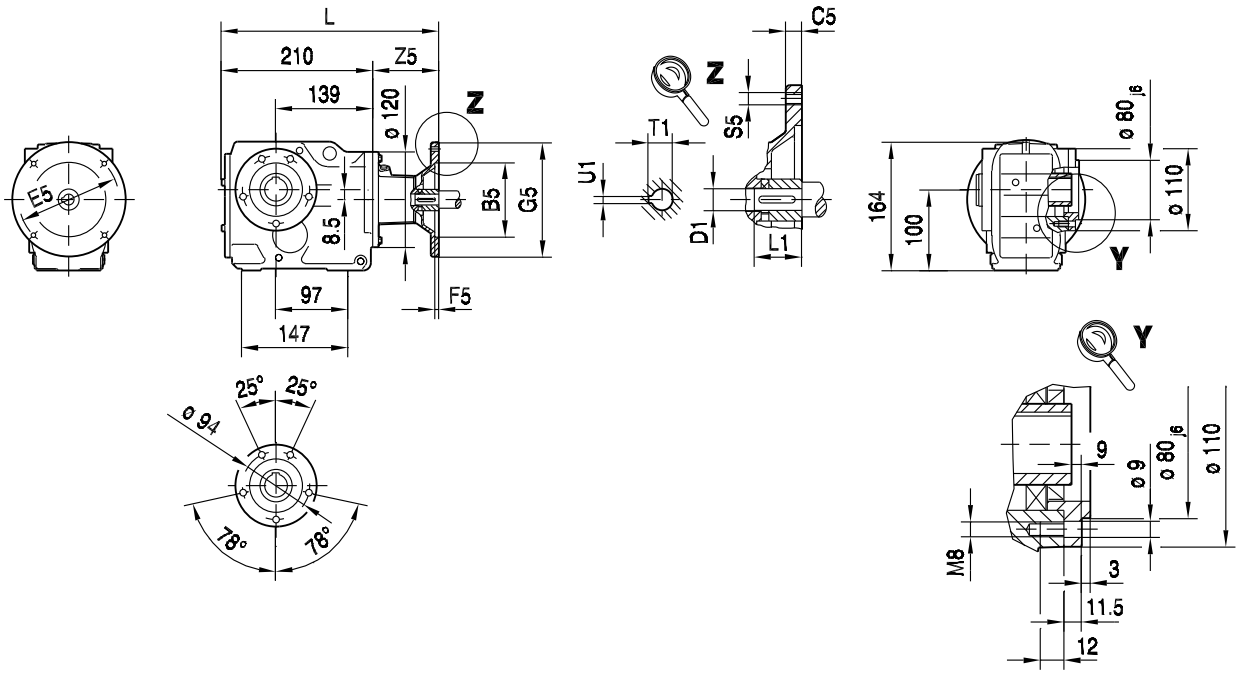

KAZ37..

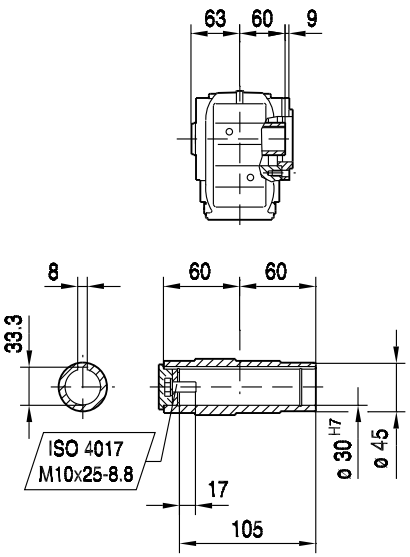

KHZ37..

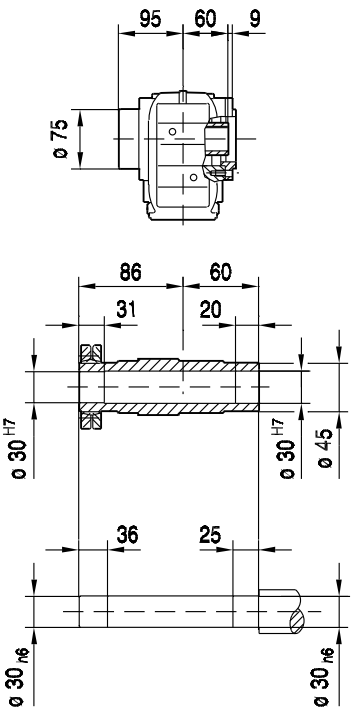

KVZ37..

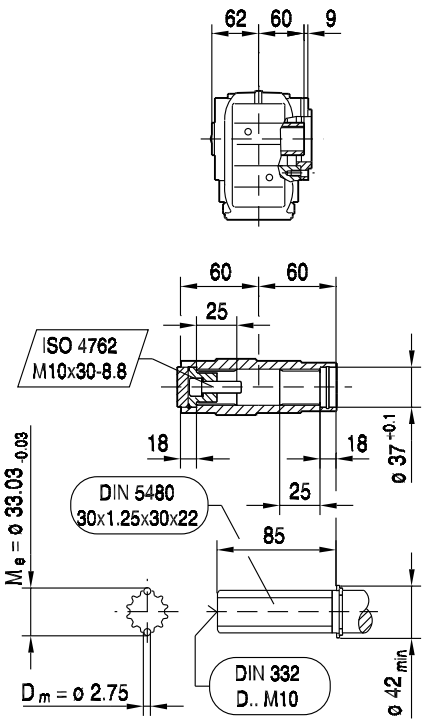

(→ 130)	B5	C5	E5	F5	G5	L	S5	Z5	D1	L1	T1	U1	
AM63	95	10	115	3.5	140	282	M8	72	11	23	12.8	4	
AM71	110	10	130	4.0	160	282	M8	72	14	30	16.3	5	
AM80	130	12	165	4.5	200	316	M10	106	19	40	21.8	6	
AM90	130	12	165	4.5	200	316	M10	106	24	50	27.3	8	

38 002 00 04

KT37..

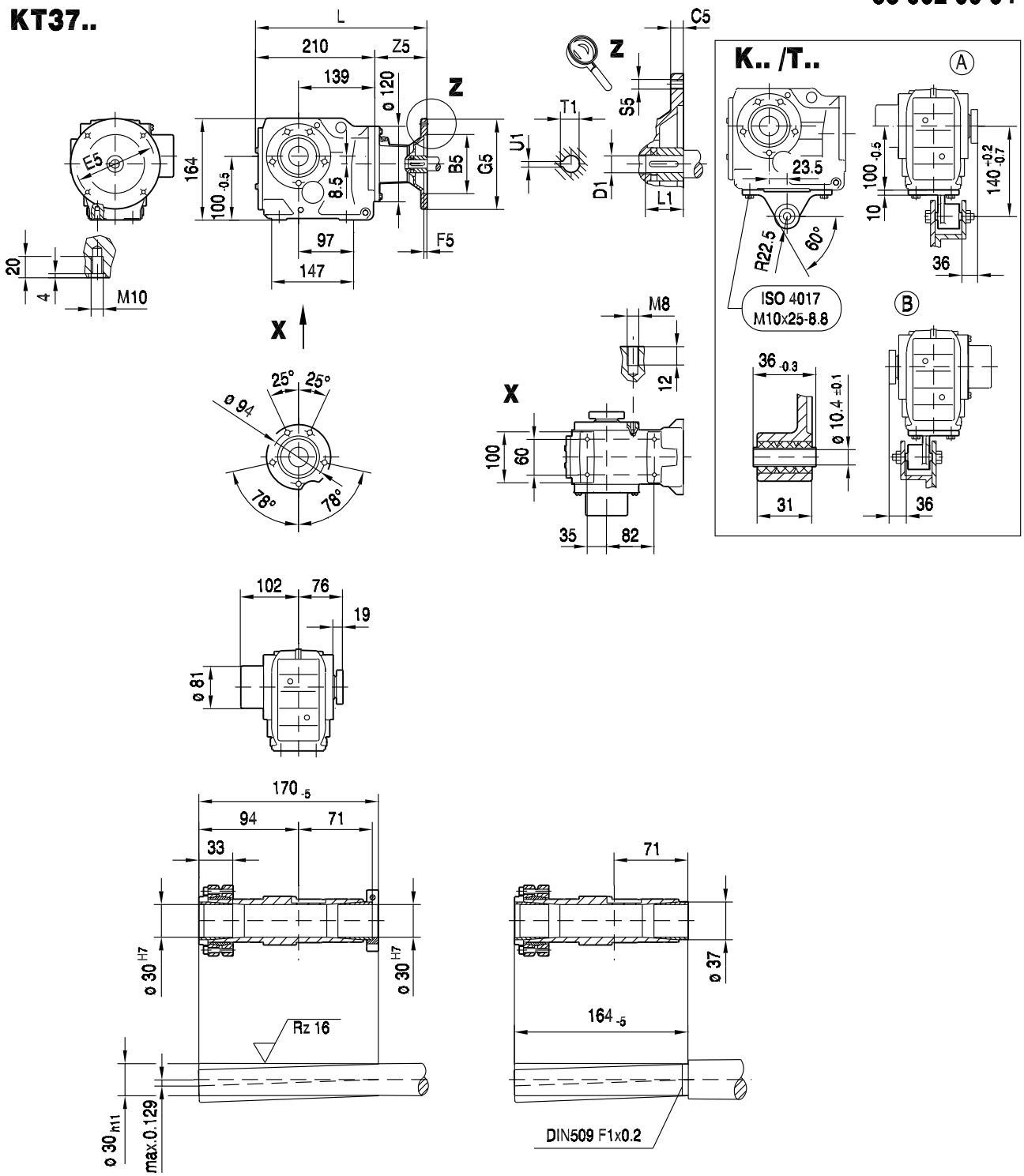

(→ 130)	B5	C5	E5	F5	G5	L	S5	Z5	D1	L1	T1	U1	
AM63	95	10	115	3.5	140	282	M8	72	11	23	12.8	4	
AM71	110	10	130	4.0	160	282	M8	72	14	30	16.3	5	
AM80	130	12	165	4.5	200	316	M10	106	19	40	21.8	6	
AM90	130	12	165	4.5	200	316	M10	106	24	50	27.3	8	

33 012 02 01

K47..

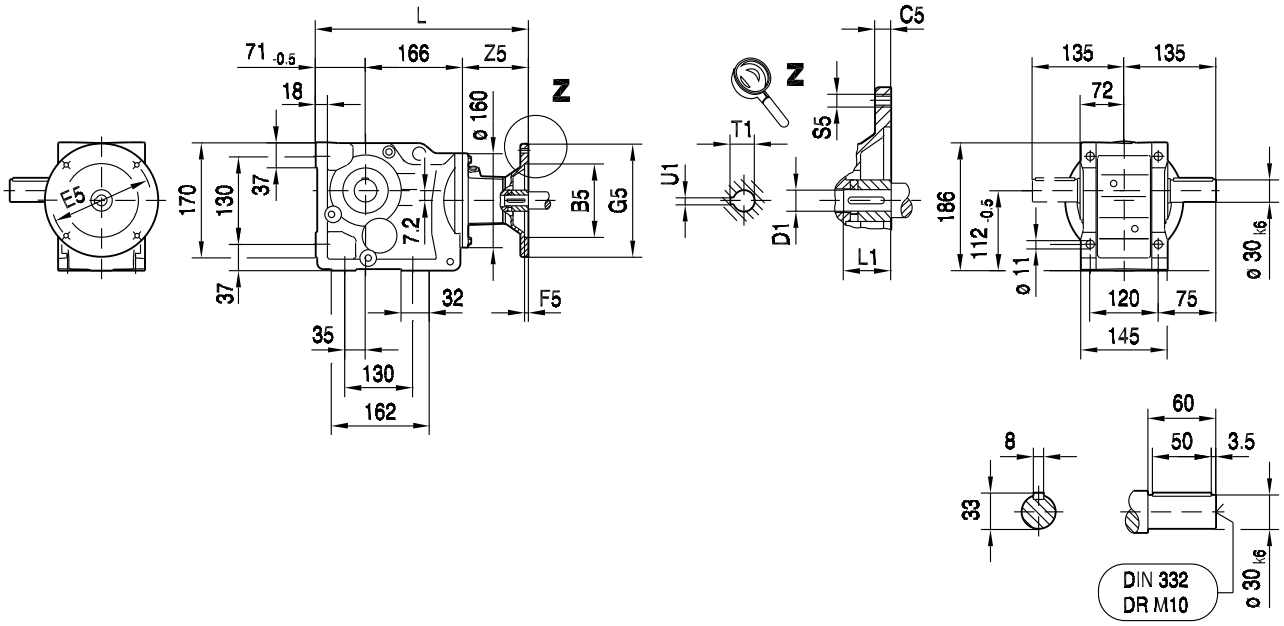

KA47B..

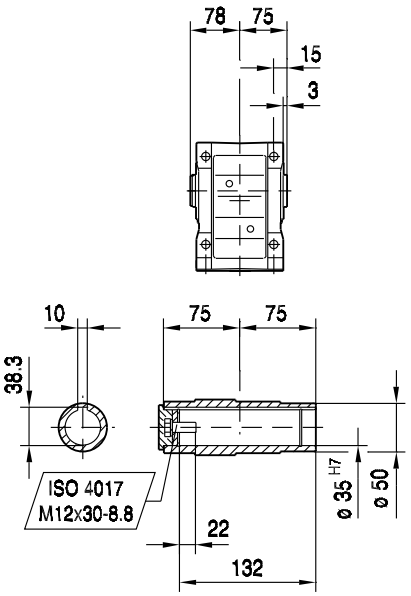

KH47B..

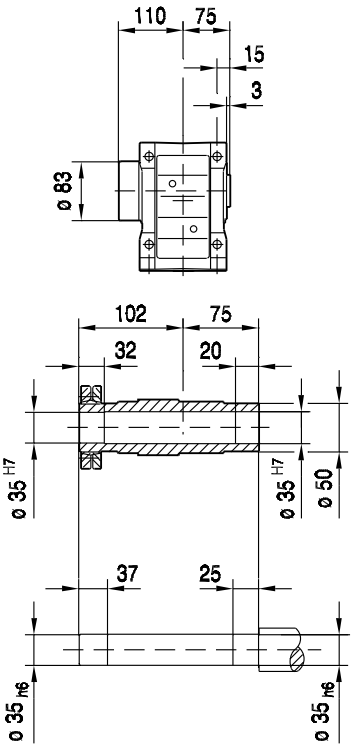

KV47B..

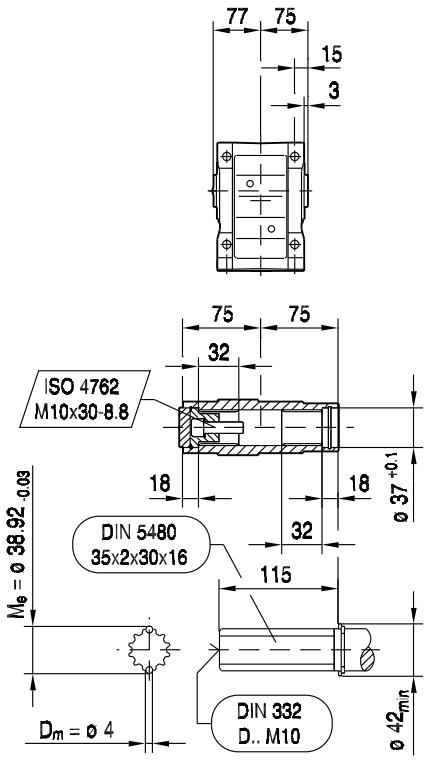

(→ 130)	B5	C5	E5	F5	G5	L	S5	Z5	D1	L1	T1	U1	
AM63	95	10	115	3.5	140	303	M8	66	11	23	12.8	4	
AM71	110	10	130	4.0	160	303	M8	66	14	30	16.3	5	
AM80	130	12	165	4.5	200	336	M10	99	19	40	21.8	6	
AM90	130	12	165	4.5	200	336	M10	99	24	50	27.3	8	
AM100	180	15	215	5.0	250	371	M12	134	28	60	31.3	8	
AM112	180	15	215	5.0	250	371	M12	134	28	60	31.3	8	

33 013 02 01

KF47..

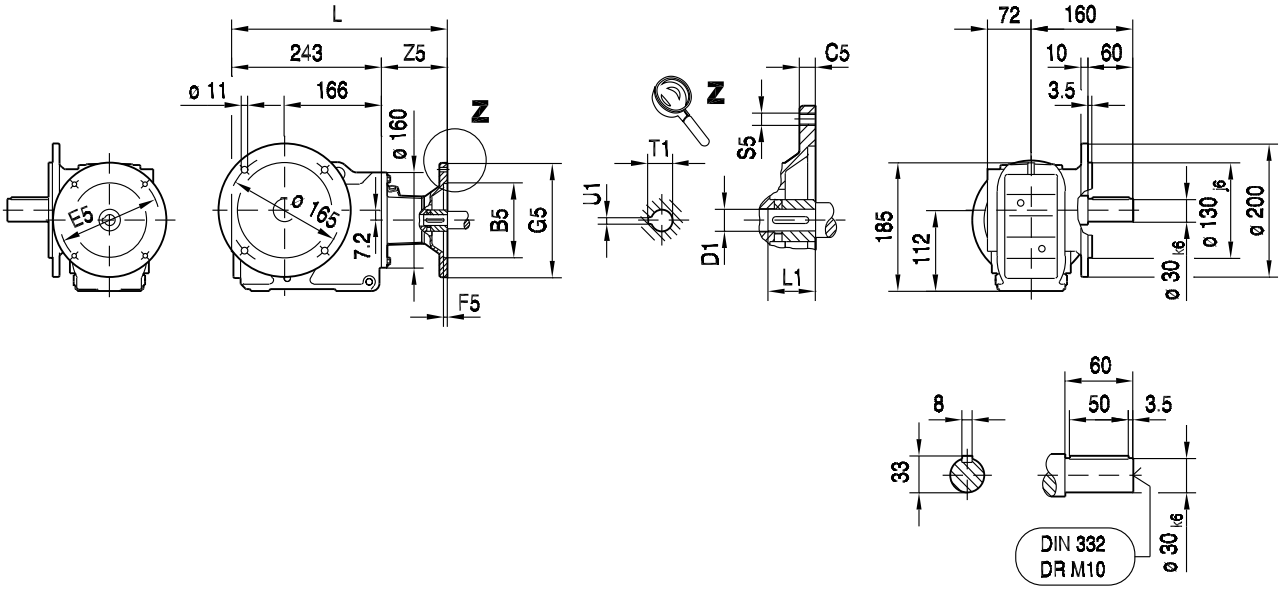

10

KAF47..

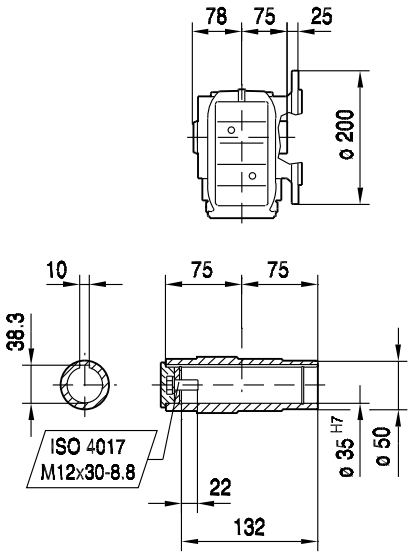

KHF47..

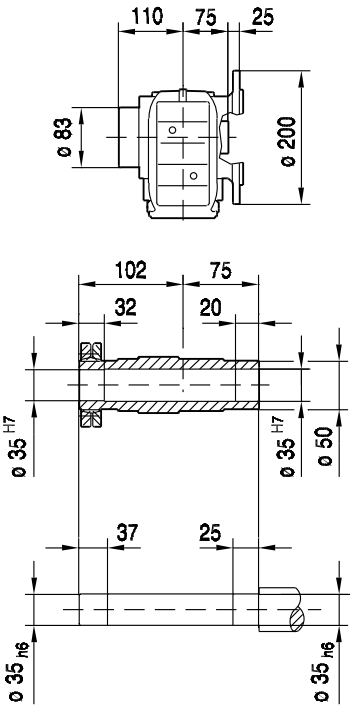

KVF47..

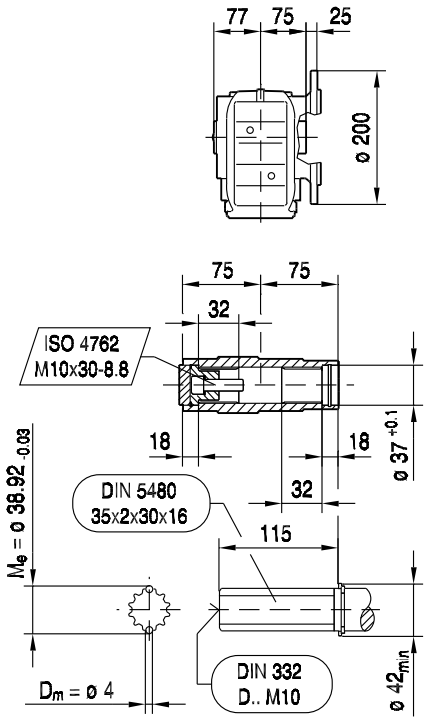

(→ 130)	B5	C5	E5	F5	G5	L	S5	Z5	D1	L1	T1	U1	
AM63	95	10	115	3.5	140	309	M8	66	11	23	12.8	4	
AM71	110	10	130	4.0	160	309	M8	66	14	30	16.3	5	
AM80	130	12	165	4.5	200	342	M10	99	19	40	21.8	6	
AM90	130	12	165	4.5	200	342	M10	99	24	50	27.3	8	
AM100	180	15	215	5.0	250	377	M12	134	28	60	31.3	8	
AM112	180	15	215	5.0	250	377	M12	134	28	60	31.3	8	

38 012 02 01

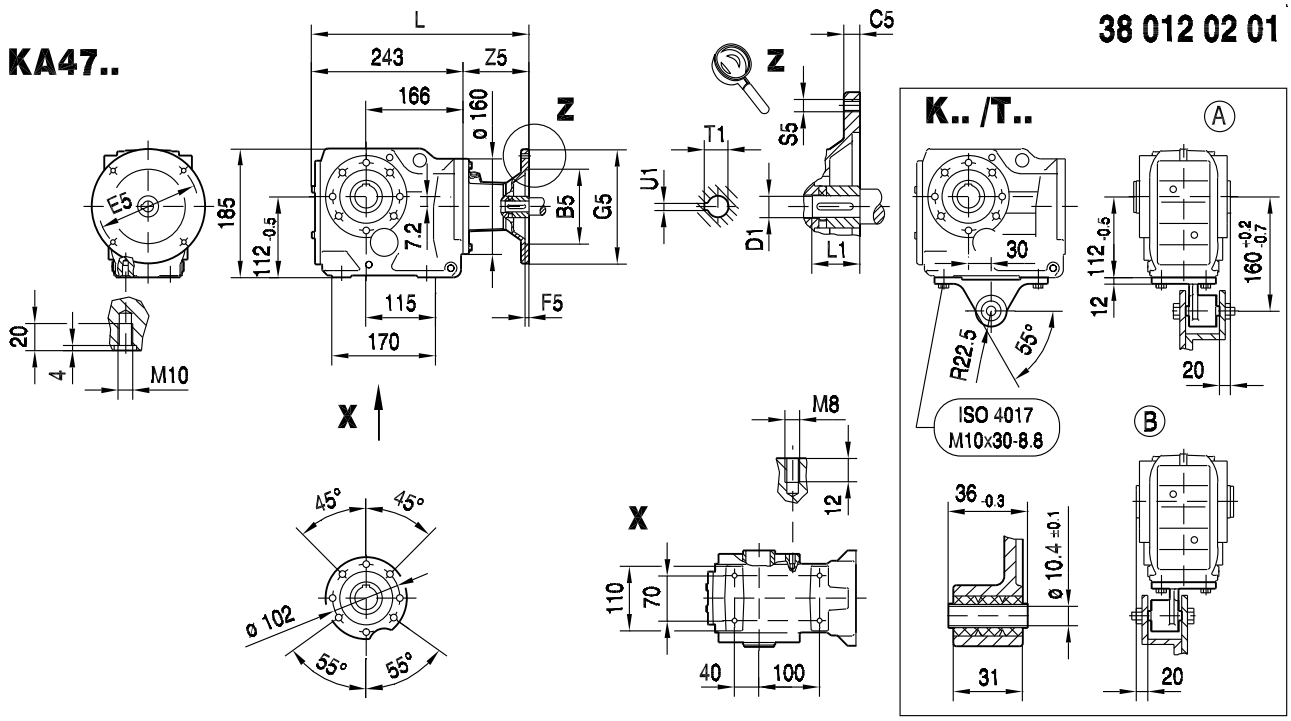

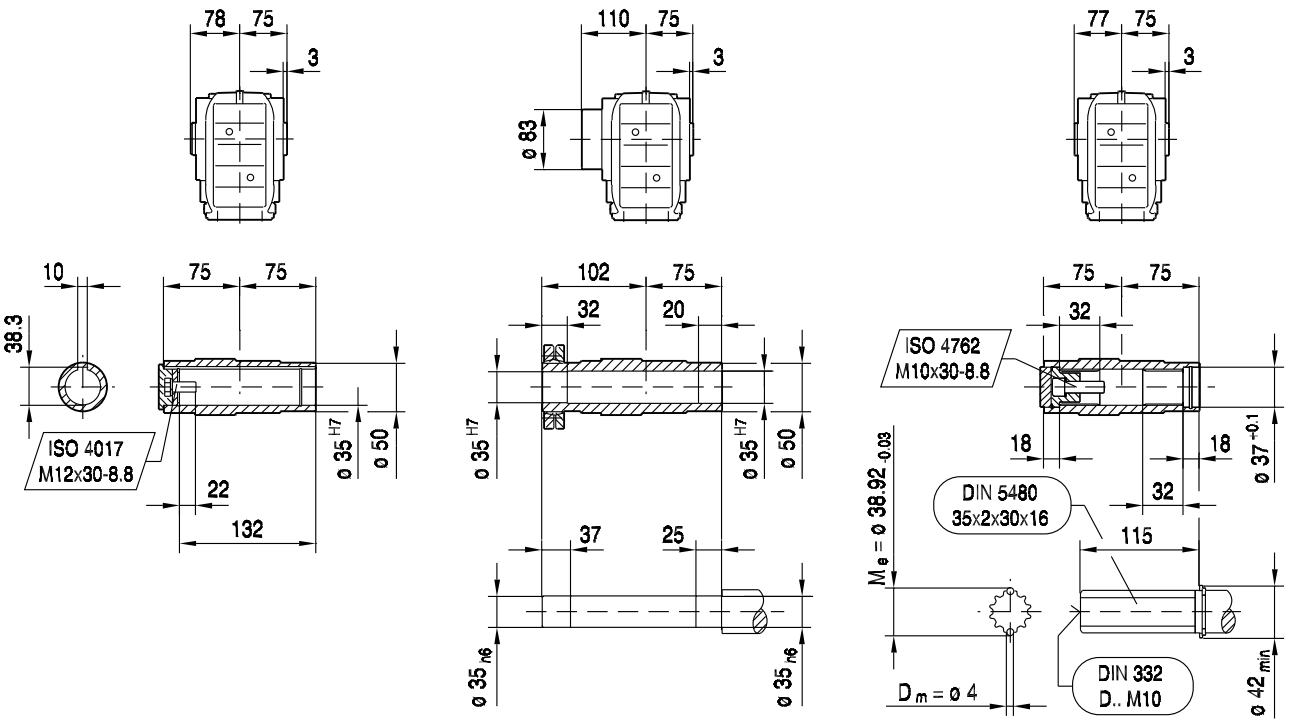

(→ 130)	B5	C5	E5	F5	G5	L	S5	Z5	D1	L1	T1	U1	
AM63	95	10	115	3.5	140	309	M8	66	11	23	12.8	4	
AM71	110	10	130	4.0	160	309	M8	66	14	30	16.3	5	
AM80	130	12	165	4.5	200	342	M10	99	19	40	21.8	6	
AM90	130	12	165	4.5	200	342	M10	99	24	50	27.3	8	
AM100	180	15	215	5.0	250	377	M12	134	28	60	31.3	8	
AM112	180	15	215	5.0	250	377	M12	134	28	60	31.3	8	

38 013 02 01

KAZ47..

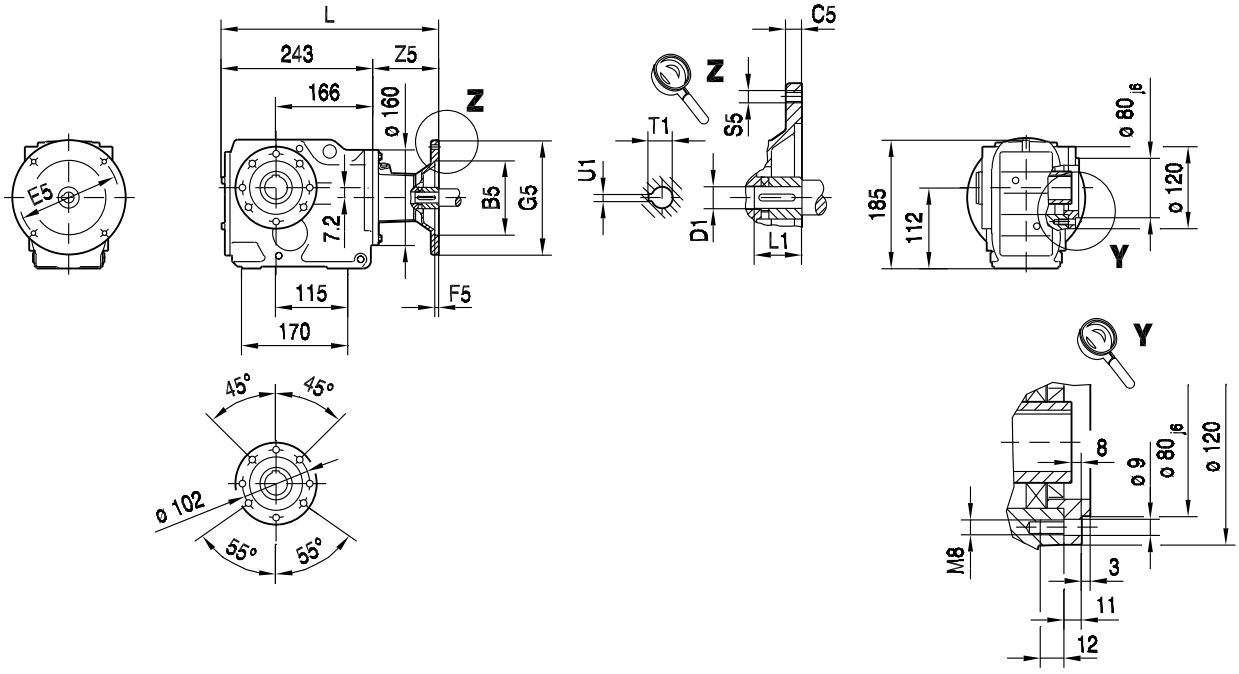

10

KAZ47..

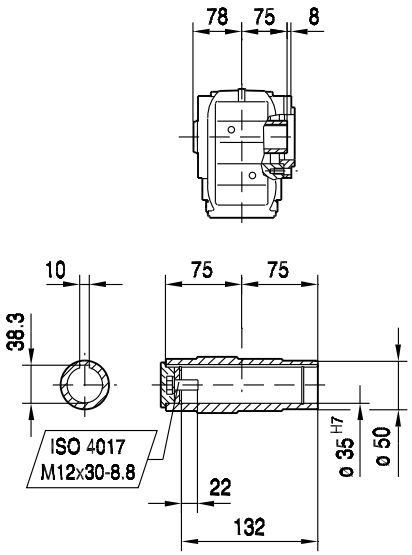

KHZ47..

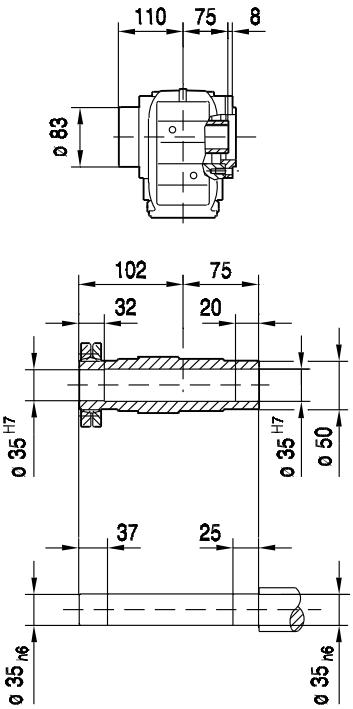

KVZ47..

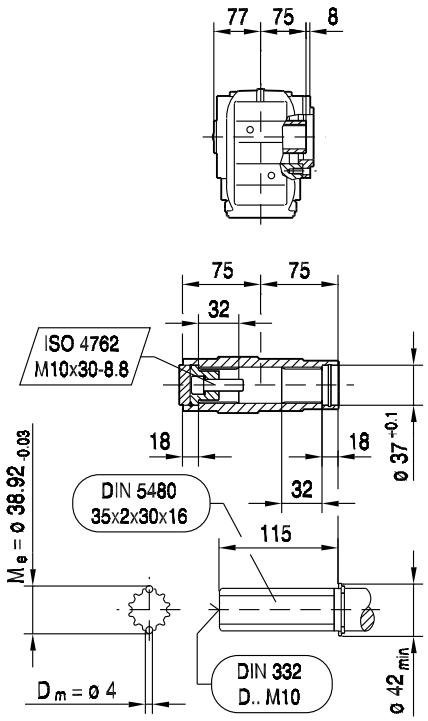

(→ 130)	B5	C5	E5	F5	G5	L	S5	Z5	D1	L1	T1	U1	
AM63	95	10	115	3.5	140	309	M8	66	11	23	12.8	4	
AM71	110	10	130	4.0	160	309	M8	66	14	30	16.3	5	
AM80	130	12	165	4.5	200	342	M10	99	19	40	21.8	6	
AM90	130	12	165	4.5	200	342	M10	99	24	50	27.3	8	
AM100	180	15	215	5.0	250	377	M12	134	28	60	31.3	8	
AM112	180	15	215	5.0	250	377	M12	134	28	60	31.3	8	

38 003 00 04

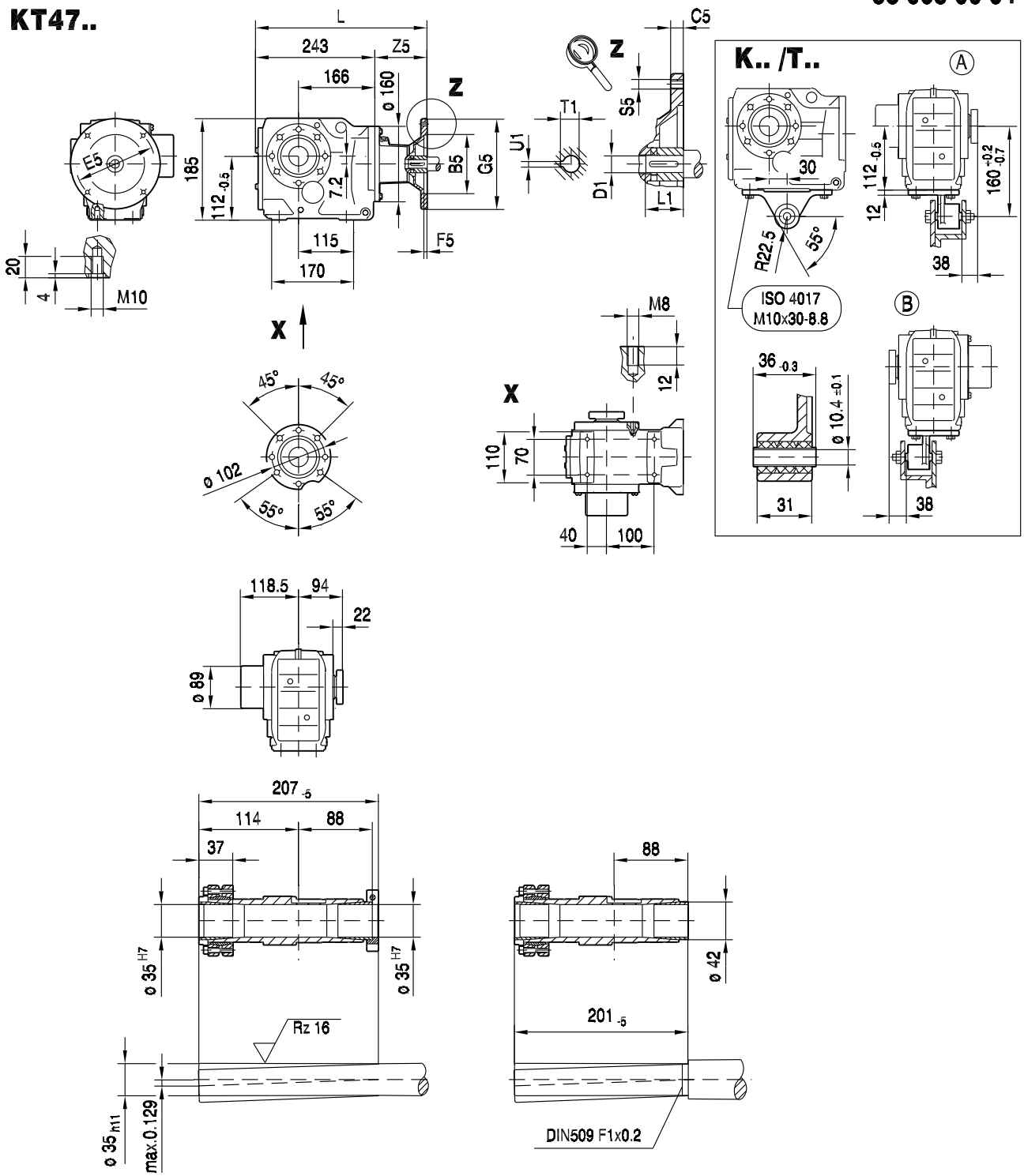

(→ 130)	B5	C5	E5	F5	G5	L	S5	Z5	D1	L1	T1	U1	
AM63	95	10	115	3.5	140	309	M8	66	11	23	12.8	4	
AM71	110	10	130	4.0	160	309	M8	66	14	30	16.3	5	
AM80	130	12	165	4.5	200	342	M10	99	19	40	21.8	6	
AM90	130	12	165	4.5	200	342	M10	99	24	50	27.3	8	
AM100	180	15	215	5.0	250	377	M12	134	28	60	31.3	8	
AM112	180	15	215	5.0	250	377	M12	134	28	60	31.3	8	

33 014 02 01

K57..

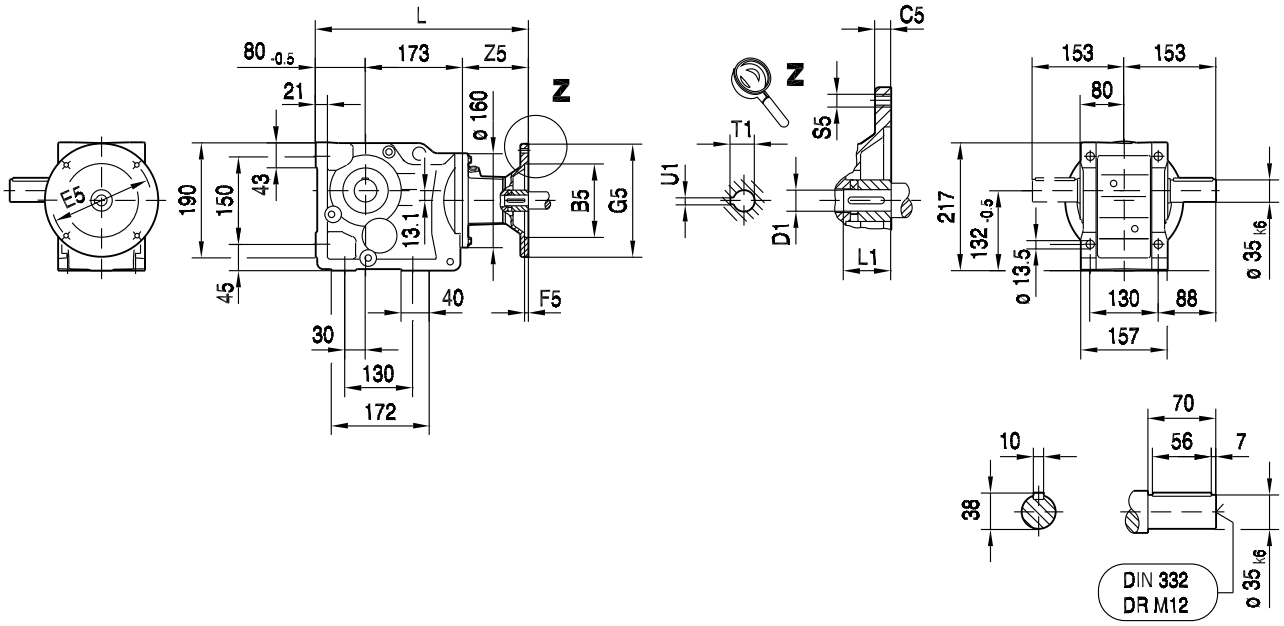

10

KA57B..

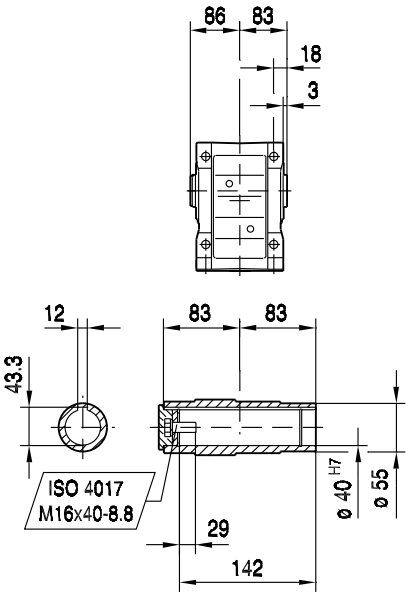

KH57B..

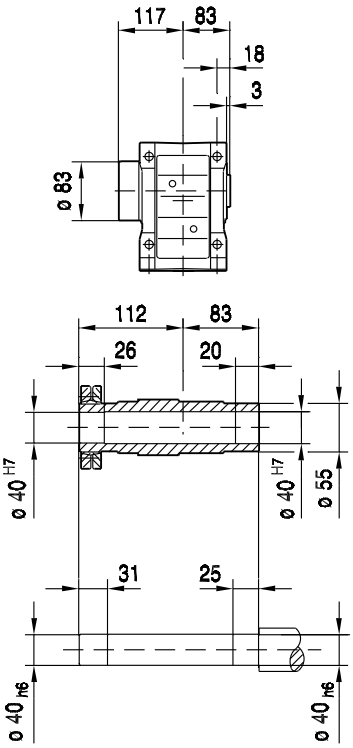

KV57B..

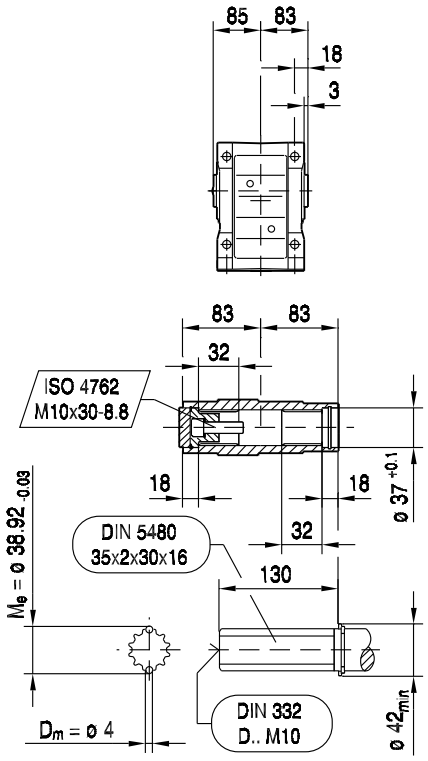

(→ 130)	B5	C5	E5	F5	G5	L	S5	Z5	D1	L1	T1	U1	
AM63	95	10	115	3.5	140	319	M8	66	11	23	12.8	4	
AM71	110	10	130	4.0	160	319	M8	66	14	30	16.3	5	
AM80	130	12	165	4.5	200	352	M10	99	19	40	21.8	6	
AM90	130	12	165	4.5	200	352	M10	99	24	50	27.3	8	
AM100	180	15	215	5.0	250	387	M12	134	28	60	31.3	8	
AM112	180	15	215	5.0	250	387	M12	134	28	60	31.3	8	
AM132S/M	230	16	265	5.0	300	444	M12	191	38	80	41.3	10	

33 015 02 01

KF57..

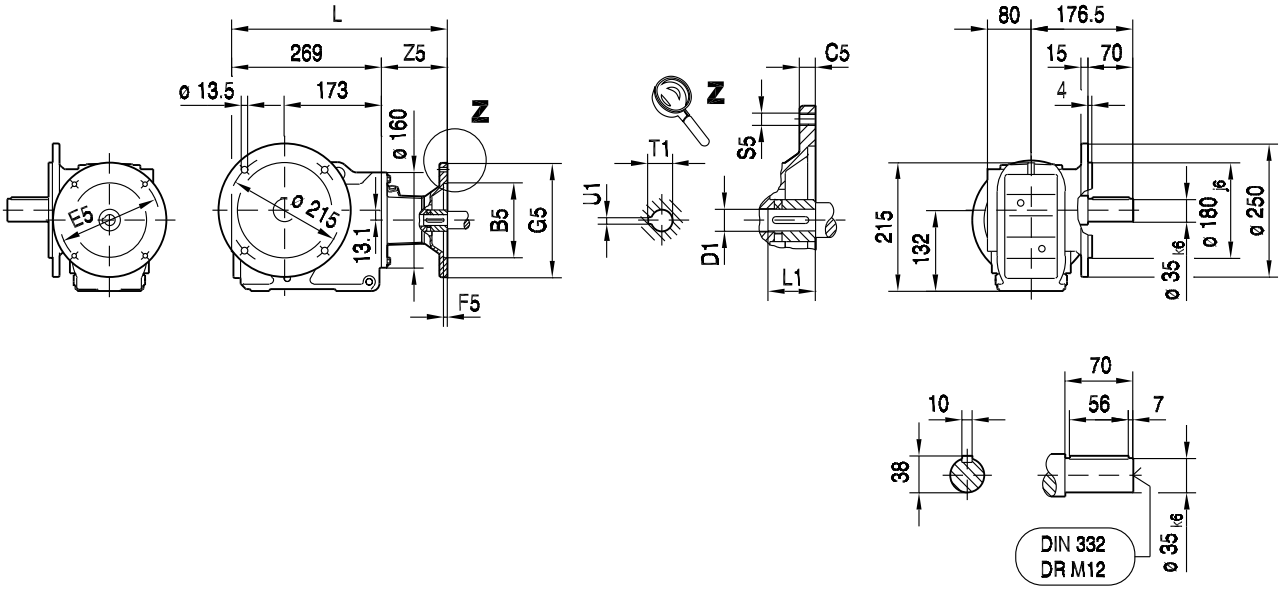

KAF57..

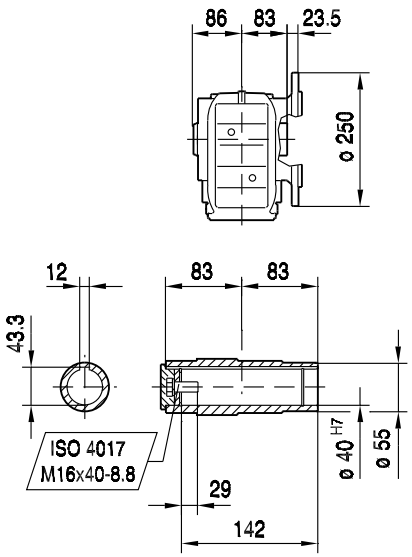

KHF57..

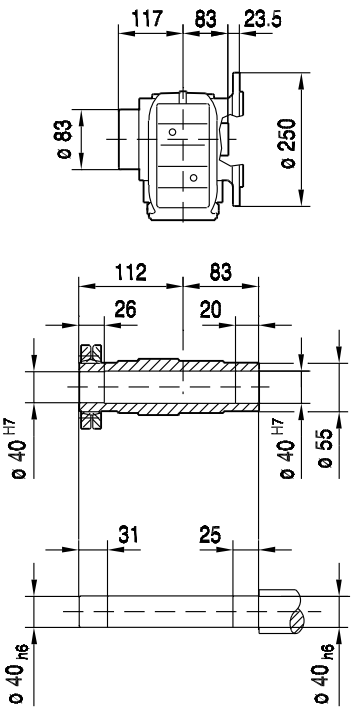

KVF57..

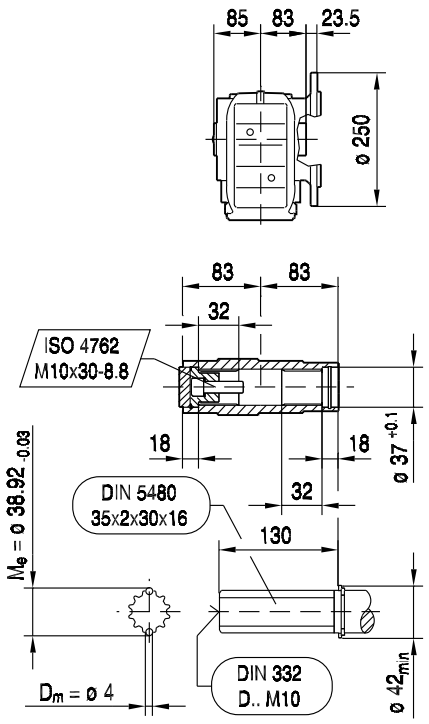

(→ 130)	B5	C5	E5	F5	G5	L	S5	Z5	D1	L1	T1	U1	
AM63	95	10	115	3.5	140	335	M8	66	11	23	12.8	4	
AM71	110	10	130	4.0	160	335	M8	66	14	30	16.3	5	
AM80	130	12	165	4.5	200	368	M10	99	19	40	21.8	6	
AM90	130	12	165	4.5	200	368	M10	99	24	50	27.3	8	
AM100	180	15	215	5.0	250	403	M12	134	28	60	31.3	8	
AM112	180	15	215	5.0	250	403	M12	134	28	60	31.3	8	
AM132S/M	230	16	265	5.0	300	460	M12	191	38	80	41.3	10	

38 014 02 01

KA57..

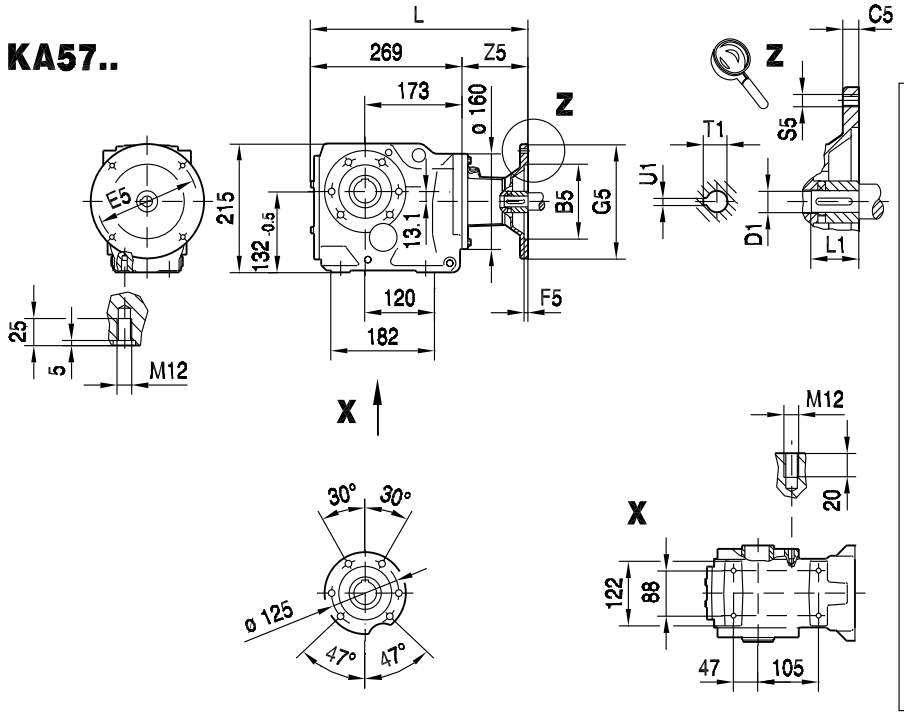

K.. /T..

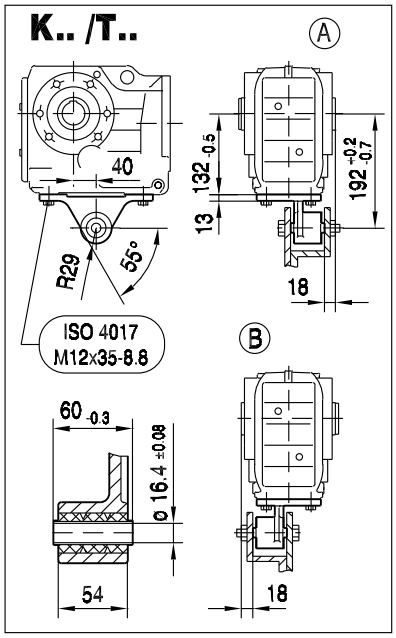

10

KA57..

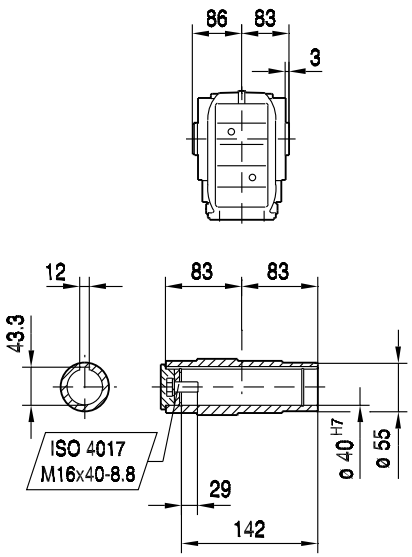

KH57..

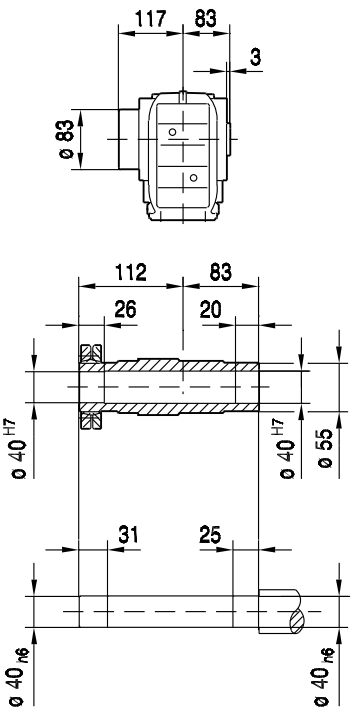

KV57..

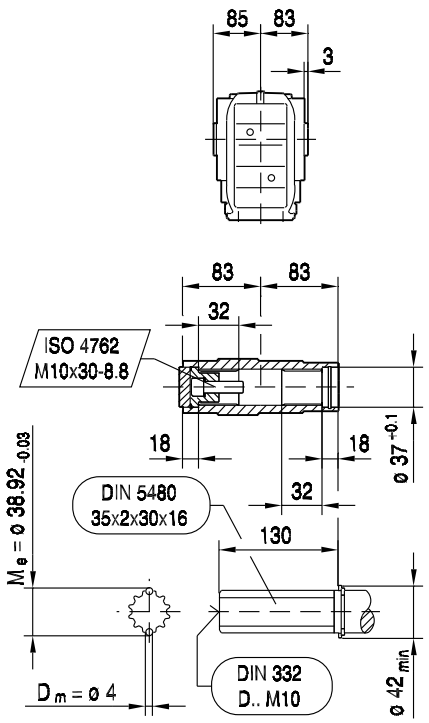

(→ 130)	B5	C5	E5	F5	G5	L	S5	Z5	D1	L1	T1	U1	
AM63	95	10	115	3.5	140	335	M8	66	11	23	12.8	4	
AM71	110	10	130	4.0	160	335	M8	66	14	30	16.3	5	
AM80	130	12	165	4.5	200	368	M10	99	19	40	21.8	6	
AM90	130	12	165	4.5	200	368	M10	99	24	50	27.3	8	
AM100	180	15	215	5.0	250	403	M12	134	28	60	31.3	8	
AM112	180	15	215	5.0	250	403	M12	134	28	60	31.3	8	
AM132S/M	230	16	265	5.0	300	460	M12	191	38	80	41.3	10	

38 015 02 01

KAZ57..

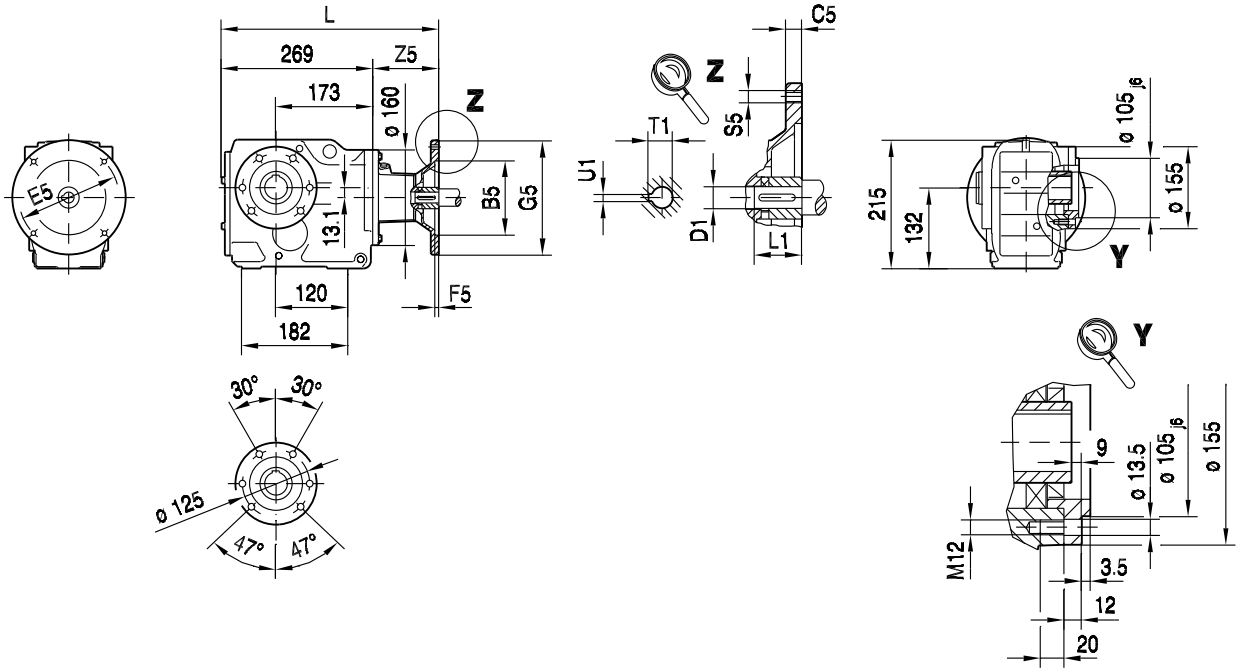

KAZ57..

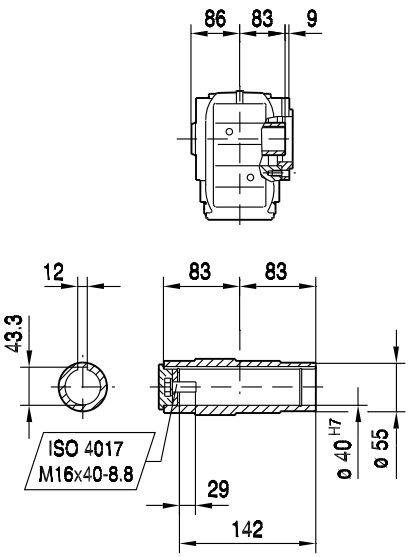

KHZ57..

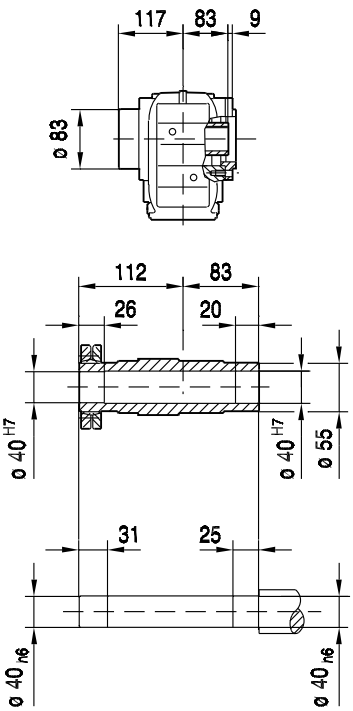

KVZ57..

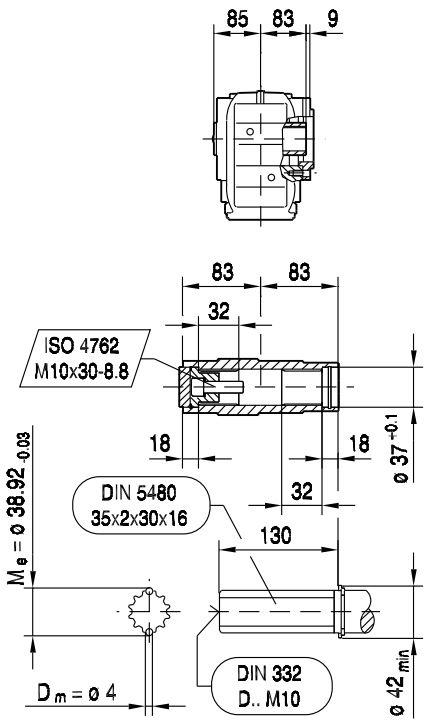

(→ 130)	B5	C5	E5	F5	G5	L	S5	Z5	D1	L1	T1	U1	
AM63	95	10	115	3.5	140	335	M8	66	11	23	12.8	4	
AM71	110	10	130	4.0	160	335	M8	66	14	30	16.3	5	
AM80	130	12	165	4.5	200	368	M10	99	19	40	21.8	6	
AM90	130	12	165	4.5	200	368	M10	99	24	50	27.3	8	
AM100	180	15	215	5.0	250	403	M12	134	28	60	31.3	8	
AM112	180	15	215	5.0	250	403	M12	134	28	60	31.3	8	
AM132S/M	230	16	265	5.0	300	460	M12	191	38	80	41.3	10	

38 004 00 04

KT57..

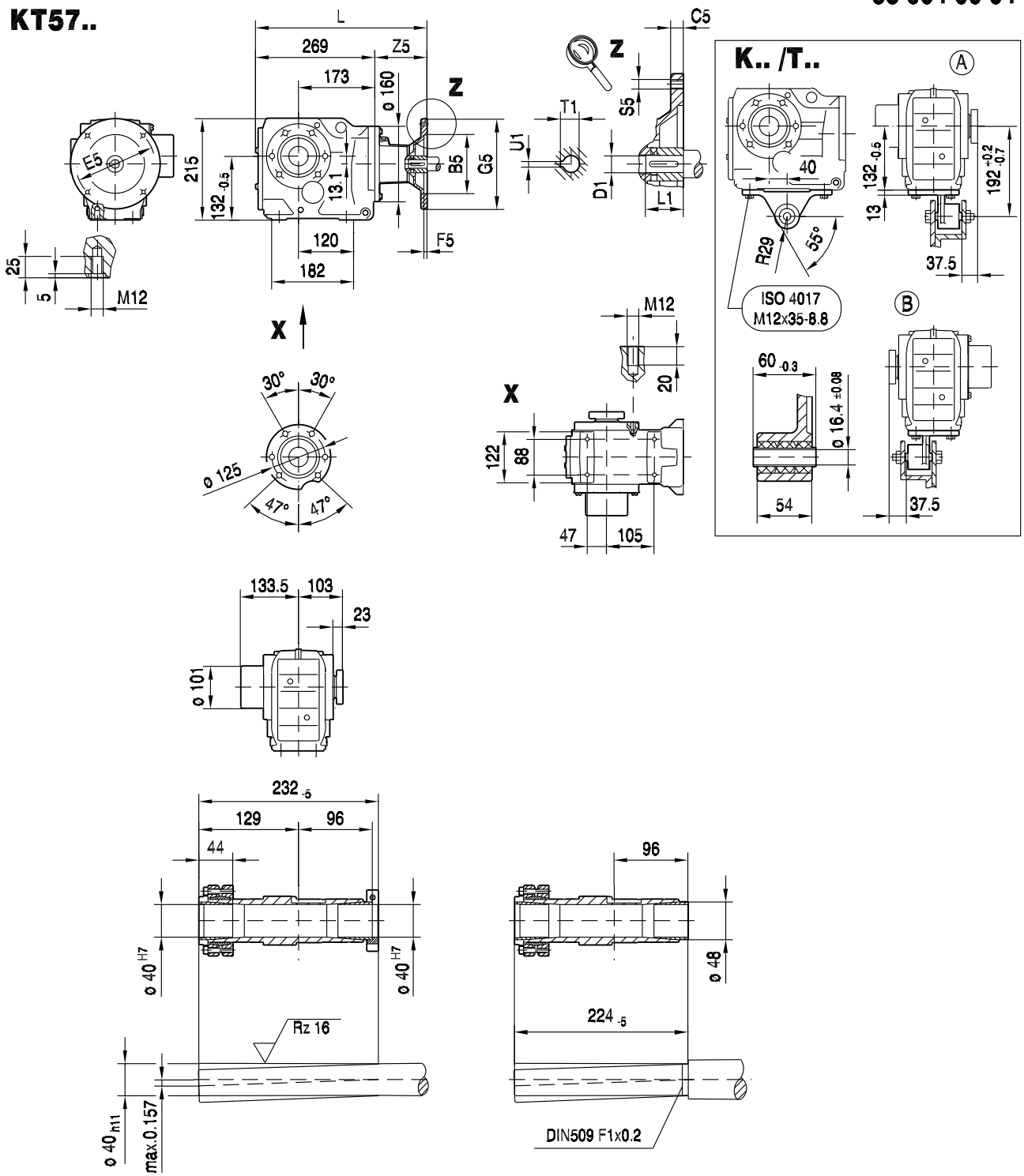

(→ 130)	B5	C5	E5	F5	G5	L	S5	Z5	D1	L1	T1	U1	
AM63	95	10	115	3.5	140	335	M8	66	11	23	12.8	4	
AM71	110	10	130	4.0	160	335	M8	66	14	30	16.3	5	
AM80	130	12	165	4.5	200	368	M10	99	19	40	21.8	6	
AM90	130	12	165	4.5	200	368	M10	99	24	50	27.3	8	
AM100	180	15	215	5.0	250	403	M12	134	28	60	31.3	8	
AM112	180	15	215	5.0	250	403	M12	134	28	60	31.3	8	
AM132S/M	230	16	265	5.0	300	460	M12	191	38	80	41.3	10	

33 016 02 01

K67..

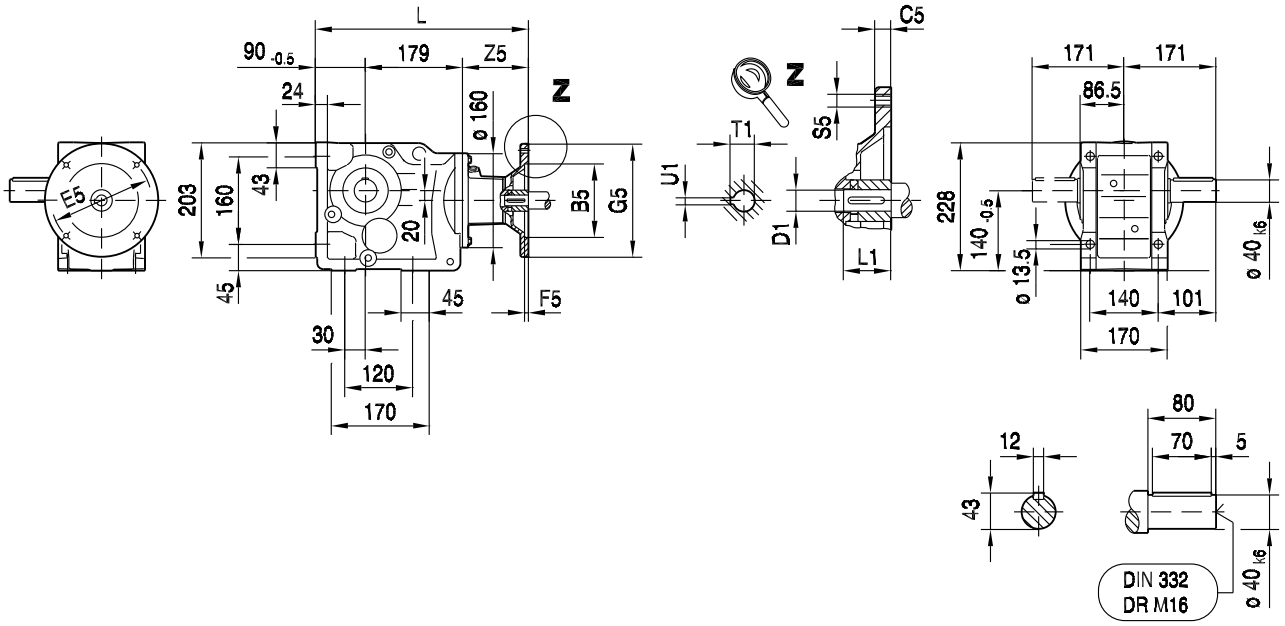

KA67B..

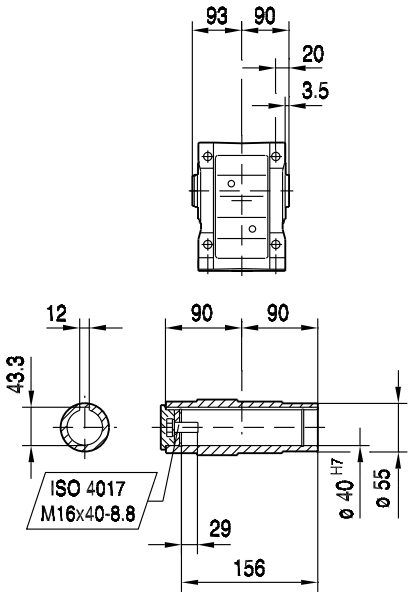

KH67B..

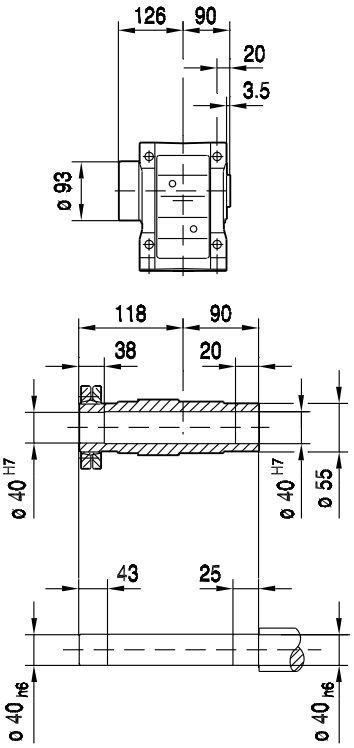

KV67B..

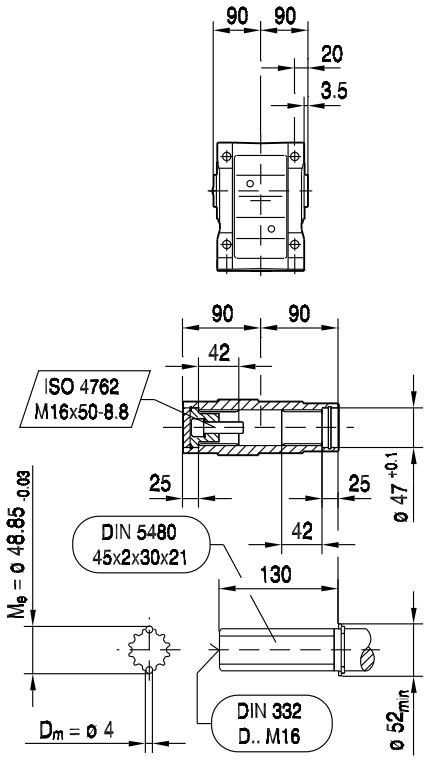

(→ 130)	B5	C5	E5	F5	G5	L	S5	Z5	D1	L1	T1	U1	
AM63	95	10	115	3.5	140	335	M8	66	11	23	12.8	4	
AM71	110	10	130	4.0	160	335	M8	66	14	30	16.3	5	
AM80	130	12	165	4.5	200	368	M10	99	19	40	21.8	6	
AM90	130	12	165	4.5	200	368	M10	99	24	50	27.3	8	
AM100	180	15	215	5.0	250	403	M12	134	28	60	31.3	8	
AM112	180	15	215	5.0	250	403	M12	134	28	60	31.3	8	
AM132S/M	230	16	265	5.0	300	460	M12	191	38	80	41.3	10	

33 017 02 01

KF67..

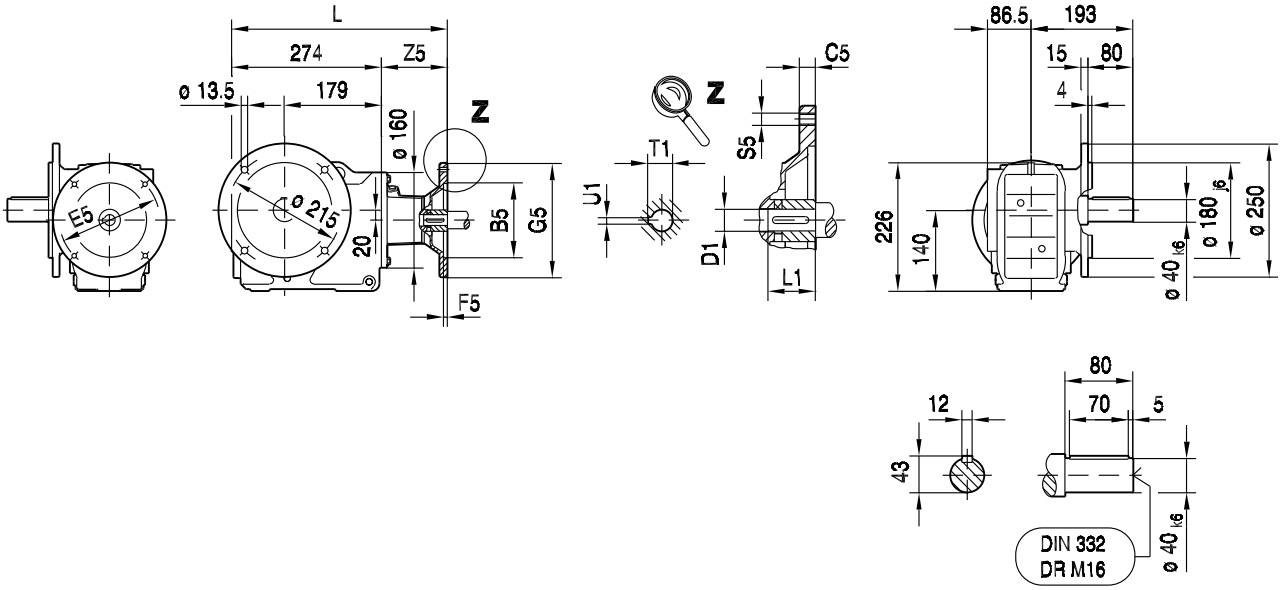

10

KAF67..

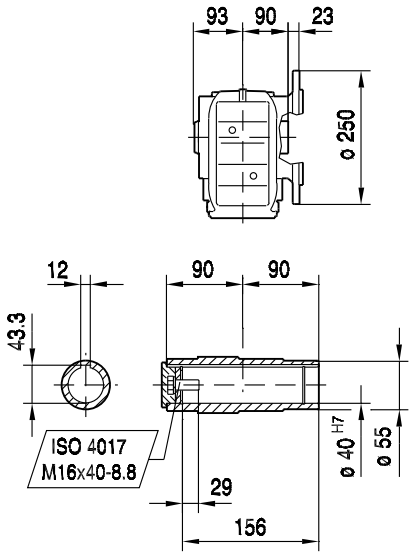

KHF67..

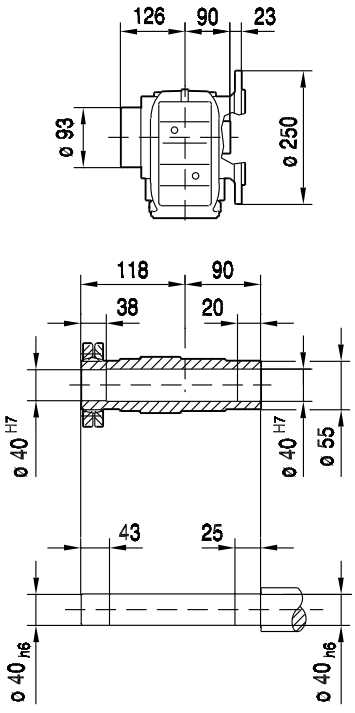

KVF67..

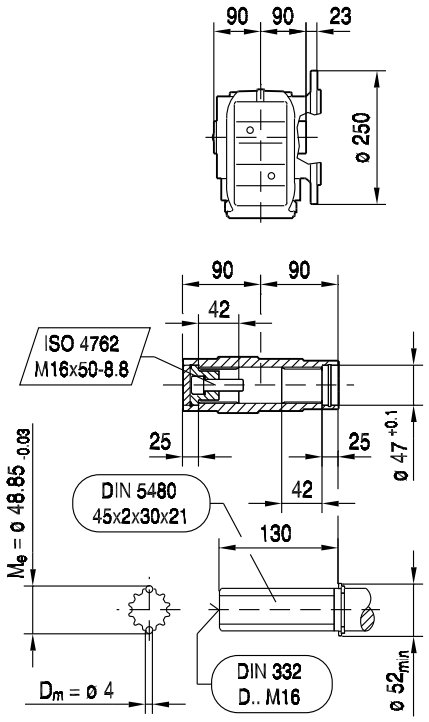

(→ 130)	B5	C5	E5	F5	G5	L	S5	Z5	D1	L1	T1	U1	
AM63	95	10	115	3.5	140	340	M8	66	11	23	12.8	4	
AM71	110	10	130	4.0	160	340	M8	66	14	30	16.3	5	
AM80	130	12	165	4.5	200	373	M10	99	19	40	21.8	6	
AM90	130	12	165	4.5	200	373	M10	99	24	50	27.3	8	
AM100	180	15	215	5.0	250	408	M12	134	28	60	31.3	8	
AM112	180	15	215	5.0	250	408	M12	134	28	60	31.3	8	
AM132S/M	230	16	265	5.0	300	465	M12	191	38	80	41.3	10	

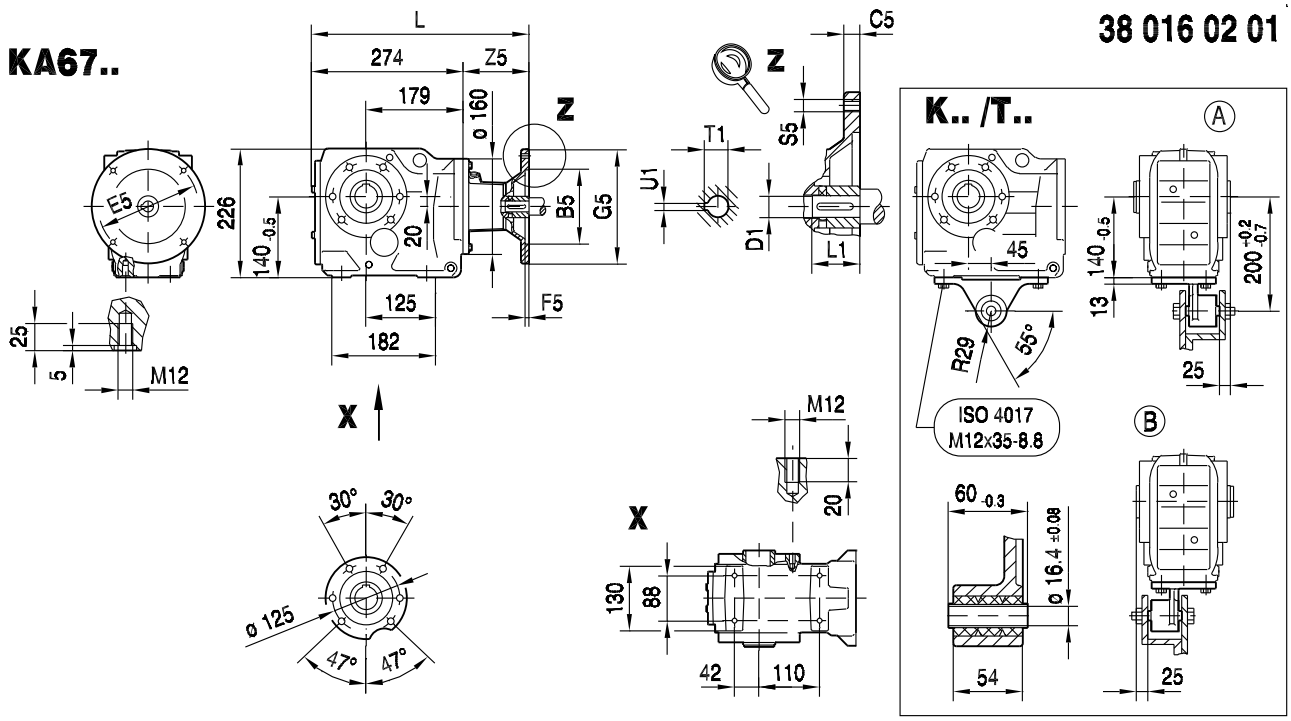

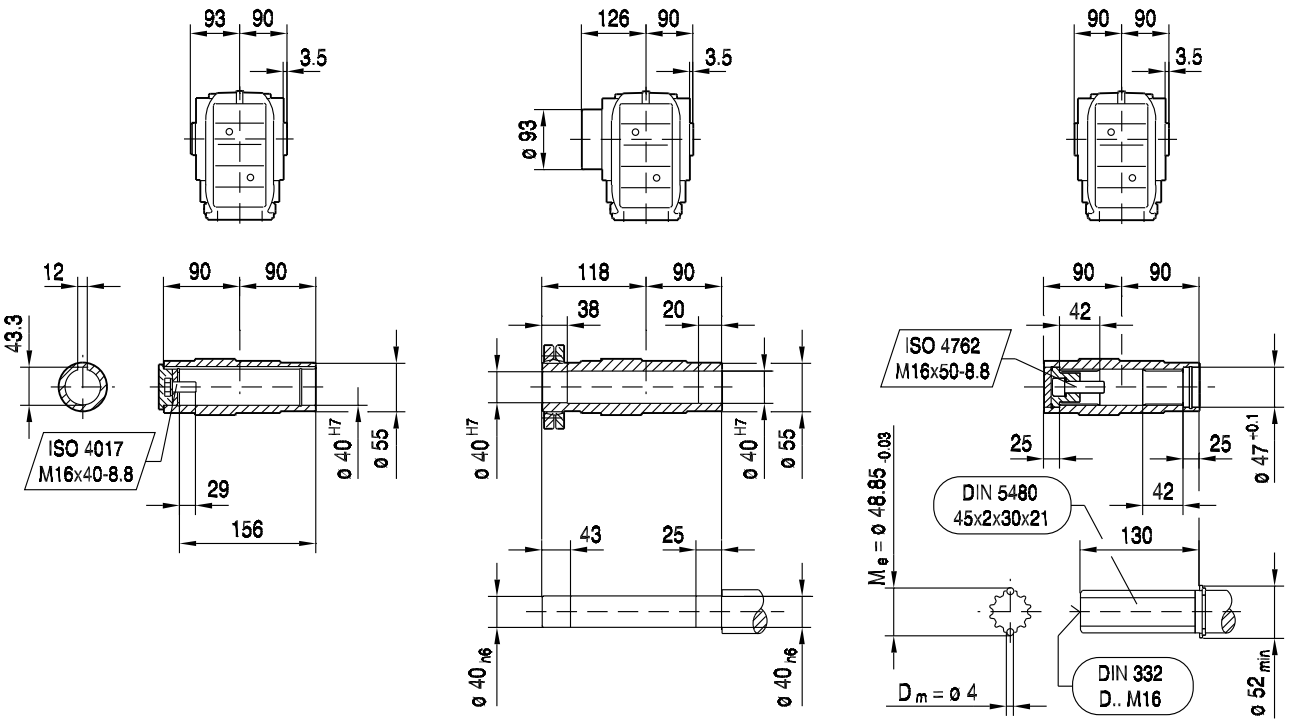

(→ 130)	B5	C5	E5	F5	G5	L	S5	Z5	D1	L1	T1	U1	
AM63	95	10	115	3.5	140	340	M8	66	11	23	12.8	4	
AM71	110	10	130	4.0	160	340	M8	66	14	30	16.3	5	
AM80	130	12	165	4.5	200	373	M10	99	19	40	21.8	6	
AM90	130	12	165	4.5	200	373	M10	99	24	50	27.3	8	
AM100	180	15	215	5.0	250	408	M12	134	28	60	31.3	8	
AM112	180	15	215	5.0	250	408	M12	134	28	60	31.3	8	
AM132S/M	230	16	265	5.0	300	465	M12	191	38	80	41.3	10	

38 017 02 01

KAZ67..

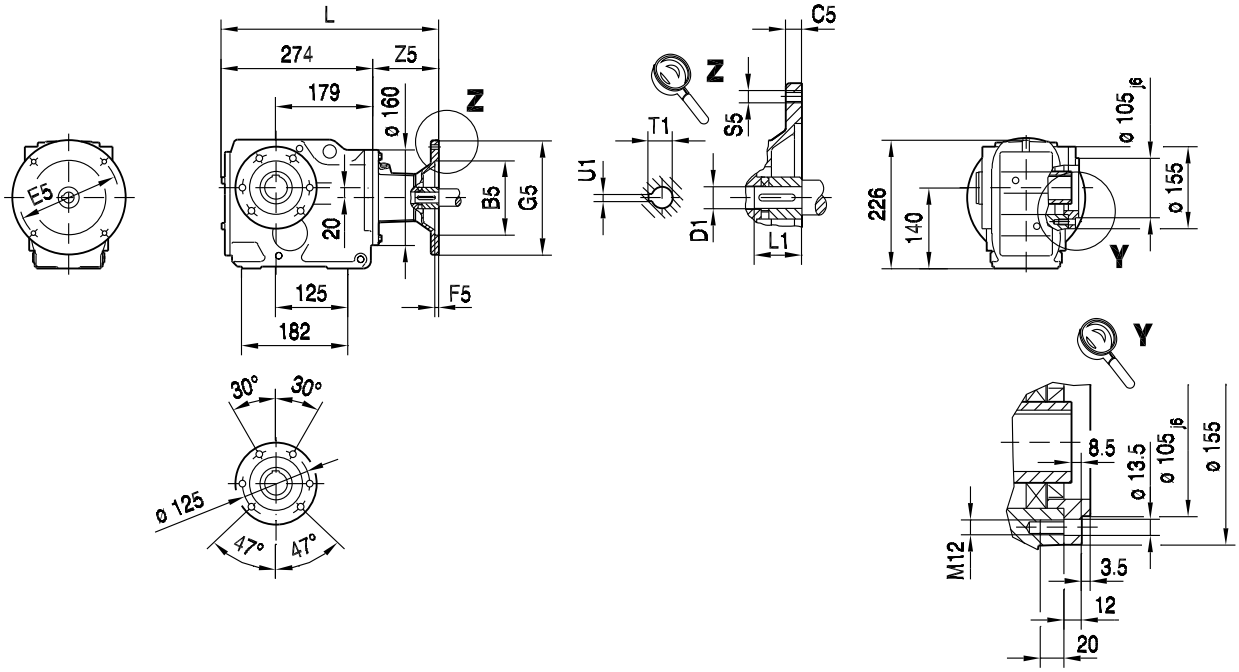

10

KAZ67..

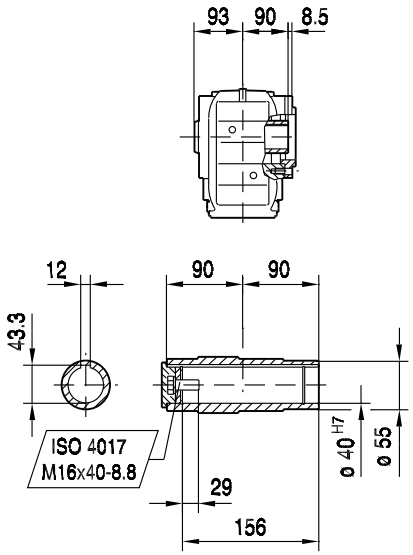

KHZ67..

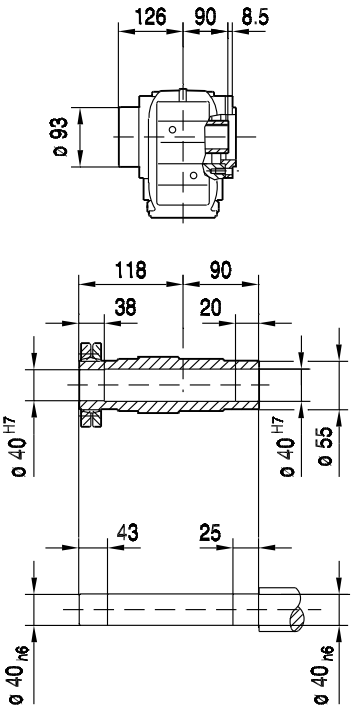

KVZ67..

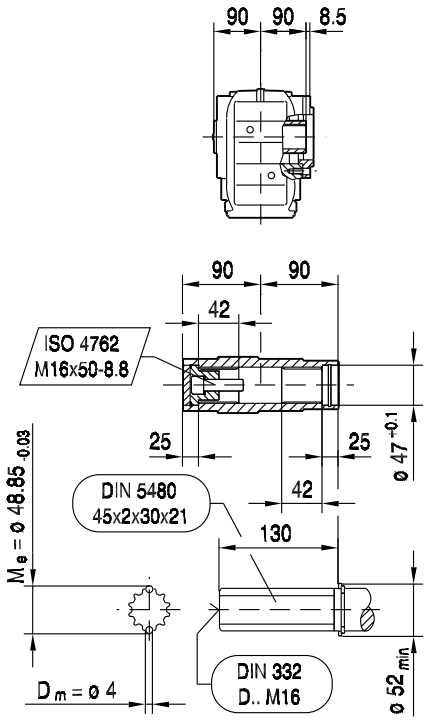

(→ 130)	B5	C5	E5	F5	G5	L	S5	Z5	D1	L1	T1	U1	
AM63	95	10	115	3.5	140	340	M8	66	11	23	12.8	4	
AM71	110	10	130	4.0	160	340	M8	66	14	30	16.3	5	
AM80	130	12	165	4.5	200	373	M10	99	19	40	21.8	6	
AM90	130	12	165	4.5	200	373	M10	99	24	50	27.3	8	
AM100	180	15	215	5.0	250	408	M12	134	28	60	31.3	8	
AM112	180	15	215	5.0	250	408	M12	134	28	60	31.3	8	
AM132S/M	230	16	265	5.0	300	465	M12	191	38	80	41.3	10	

38 005 00 04

KT67..

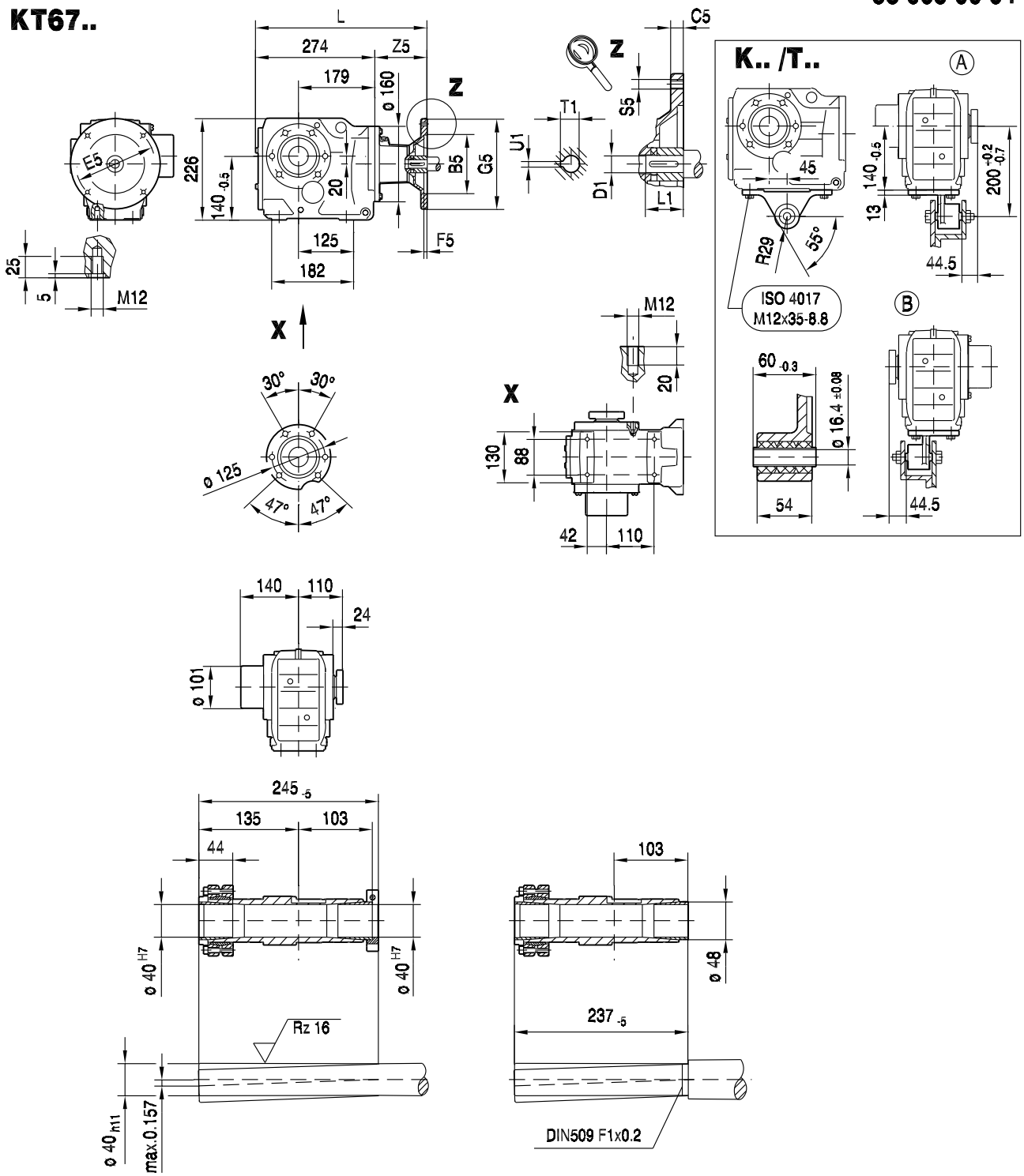

(→ 130)	B5	C5	E5	F5	G5	L	S5	Z5	D1	L1	T1	U1	
AM63	95	10	115	3.5	140	340	M8	66	11	23	12.8	4	
AM71	110	10	130	4.0	160	340	M8	66	14	30	16.3	5	
AM80	130	12	165	4.5	200	373	M10	99	19	40	21.8	6	
AM90	130	12	165	4.5	200	373	M10	99	24	50	27.3	8	
AM100	180	15	215	5.0	250	408	M12	134	28	60	31.3	8	
AM112	180	15	215	5.0	250	408	M12	134	28	60	31.3	8	
AM132S/M	230	16	265	5.0	300	465	M12	191	38	80	41.3	10	

33 018 02 01

K77..

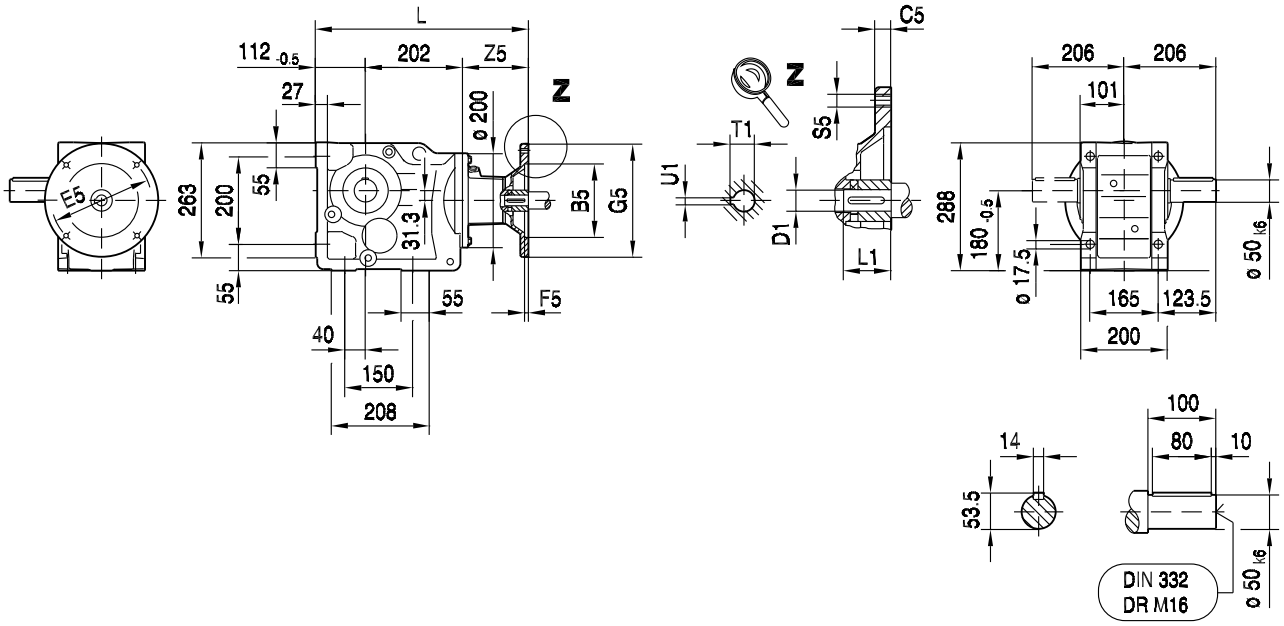

10

KA77B..

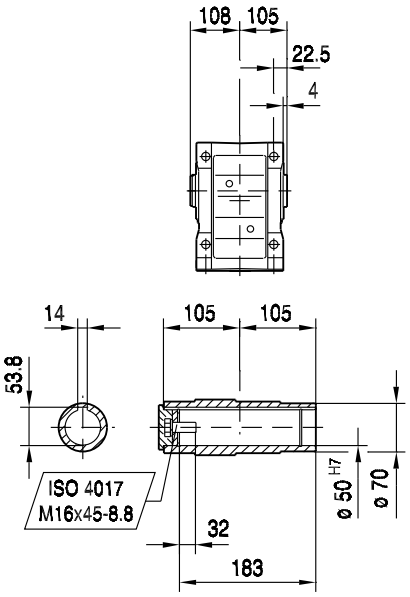

KH77B..

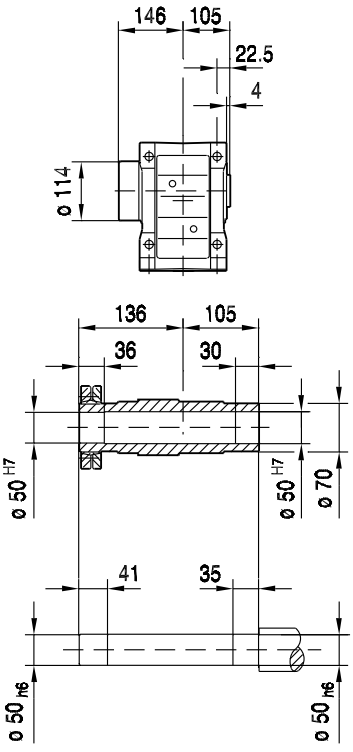

KV77B..

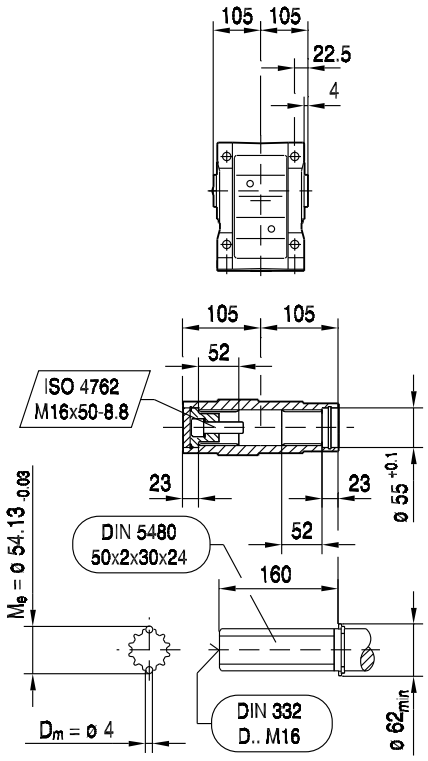

(→ 130)	B5	C5	E5	F5	G5	L	S5	Z5	D1	L1	T1	U1	
AM63	95	10	115	3.5	140	374	M8	60	11	23	12.8	4	
AM71	110	10	130	4.0	160	374	M8	60	14	30	16.3	5	
AM80	130	12	165	4.5	200	406	M10	92	19	40	21.8	6	
AM90	130	12	165	4.5	200	406	M10	92	24	50	27.3	8	
AM100	180	15	215	5.0	250	440	M12	126	28	60	31.3	8	
AM112	180	15	215	5.0	250	440	M12	126	28	60	31.3	8	
AM132S/M	230	16	265	5.0	300	493	M12	179	38	80	41.3	10	
AM132ML	230	16	265	5.0	300	493	M12	179	38	80	41.3	10	

33 019 02 01

KF77..

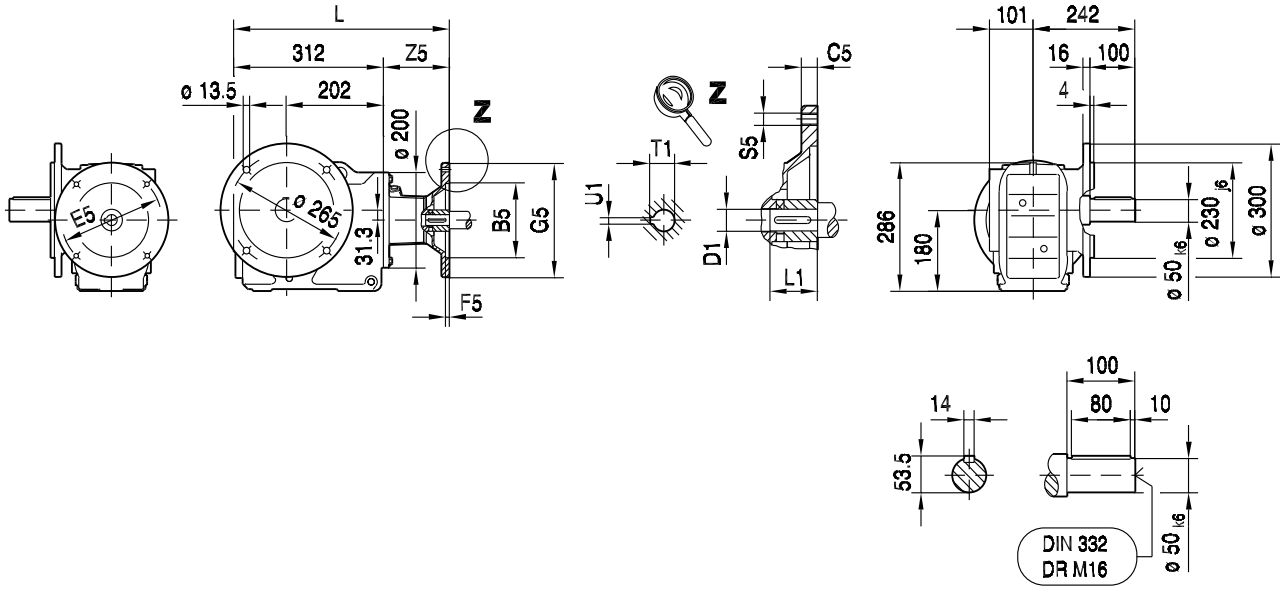

KAF77..

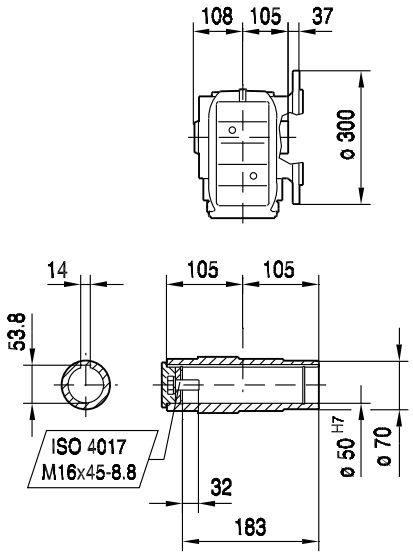

KHF77..

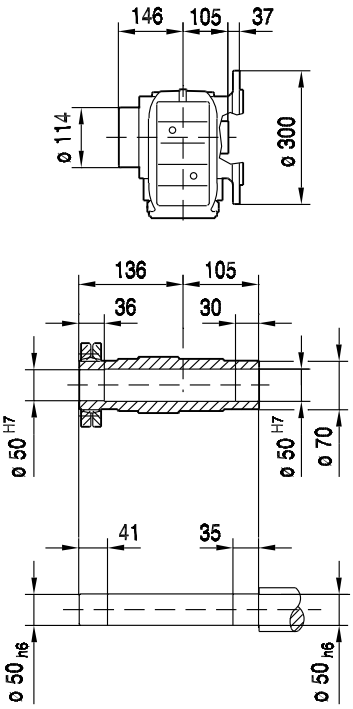

KVF77..

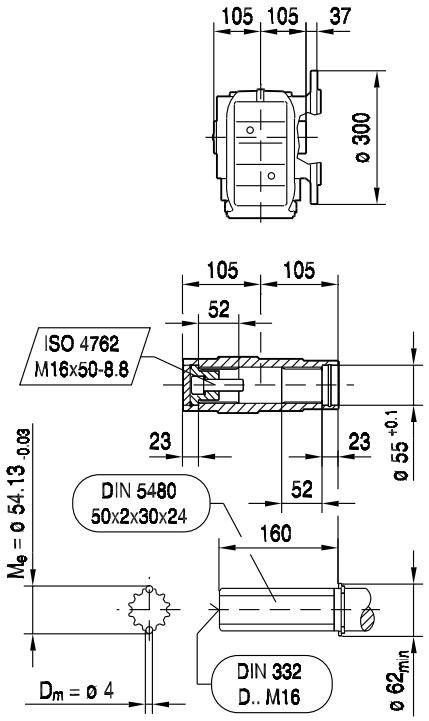

(→ 130)	B5	C5	E5	F5	G5	L	S5	Z5	D1	L1	T1	U1	
AM63	95	10	115	3.5	140	372	M8	60	11	23	12.8	4	
AM71	110	10	130	4.0	160	372	M8	60	14	30	16.3	5	
AM80	130	12	165	4.5	200	404	M10	92	19	40	21.8	6	
AM90	130	12	165	4.5	200	404	M10	92	24	50	27.3	8	
AM100	180	15	215	5.0	250	438	M12	126	28	60	31.3	8	
AM112	180	15	215	5.0	250	438	M12	126	28	60	31.3	8	
AM132S/M	230	16	265	5.0	300	491	M12	179	38	80	41.3	10	
AM132ML	230	16	265	5.0	300	491	M12	179	38	80	41.3	10	

38 018 02 01

KA77..

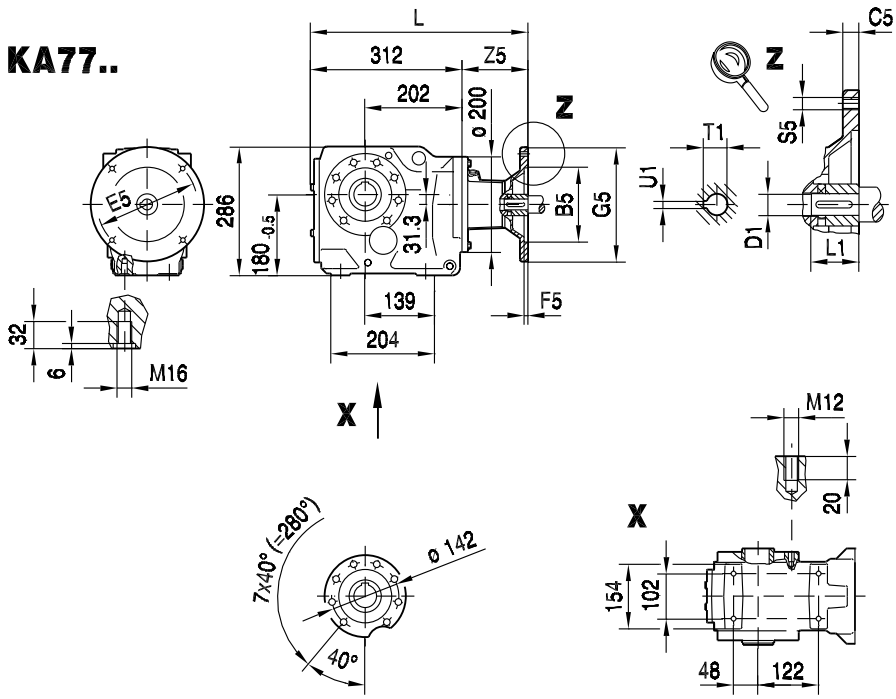

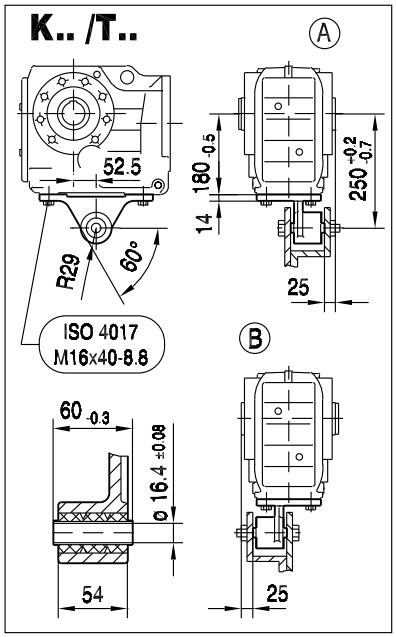

KA77..

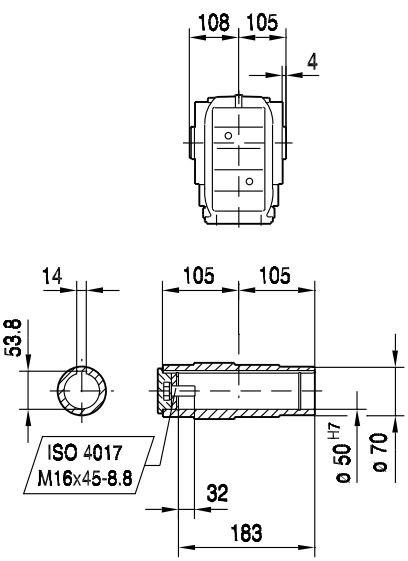

KH77..

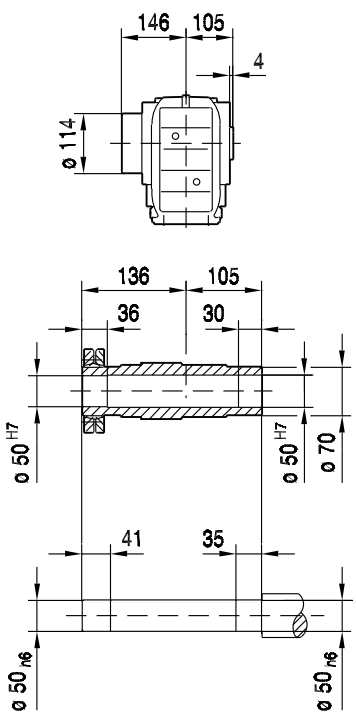

KV77..

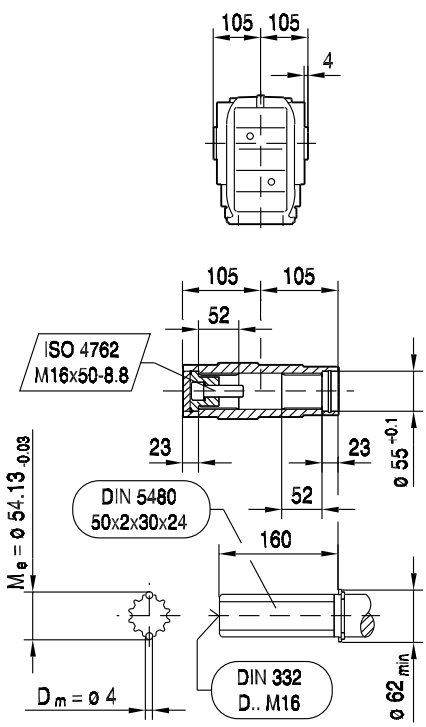

(→ 📖 130)	B5	C5	E5	F5	G5	L	S5	Z5	D1	L1	T1	U1	
AM63	95	10	115	3.5	140	372	M8	60	11	23	12.8	4	
AM71	110	10	130	4.0	160	372	M8	60	14	30	16.3	5	
AM80	130	12	165	4.5	200	404	M10	92	19	40	21.8	6	
AM90	130	12	165	4.5	200	404	M10	92	24	50	27.3	8	
AM100	180	15	215	5.0	250	438	M12	126	28	60	31.3	8	
AM112	180	15	215	5.0	250	438	M12	126	28	60	31.3	8	
AM132S/M	230	16	265	5.0	300	491	M12	179	38	80	41.3	10	
AM132ML	230	16	265	5.0	300	491	M12	179	38	80	41.3	10	

38 019 02 01

KAZ77..

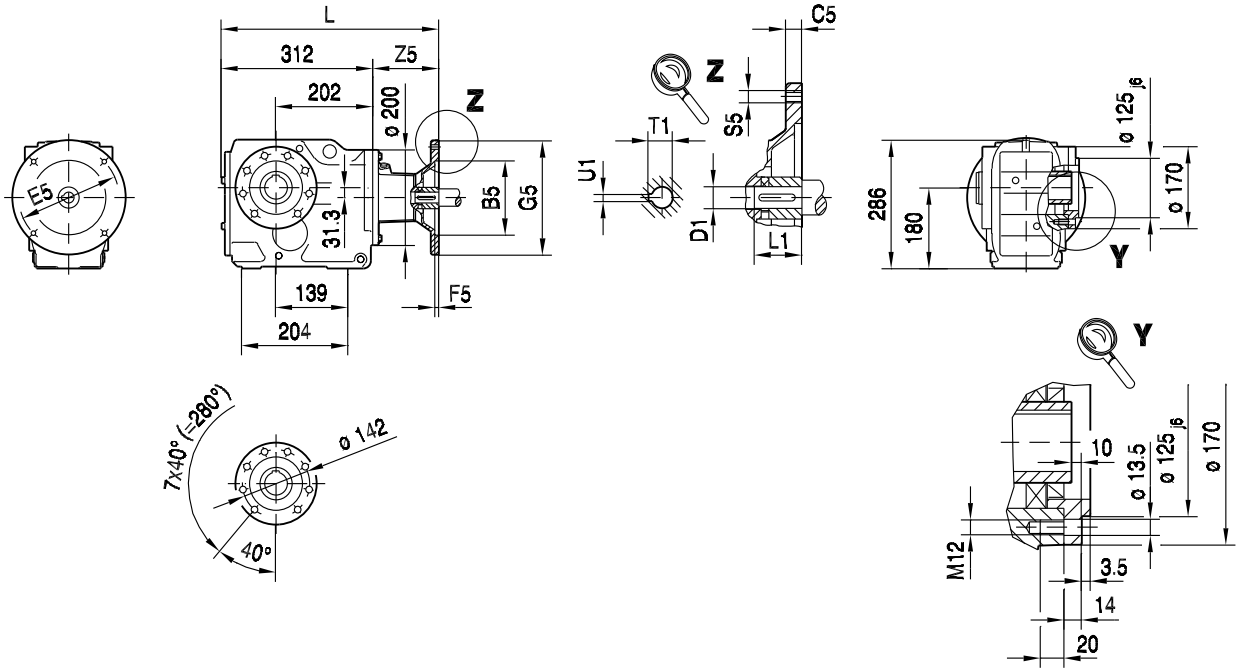

KAZ77..

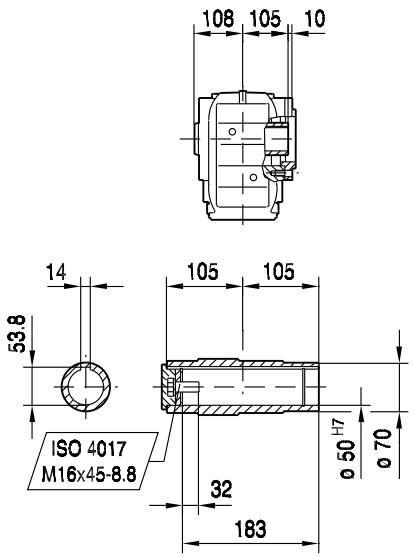

KHZ77..

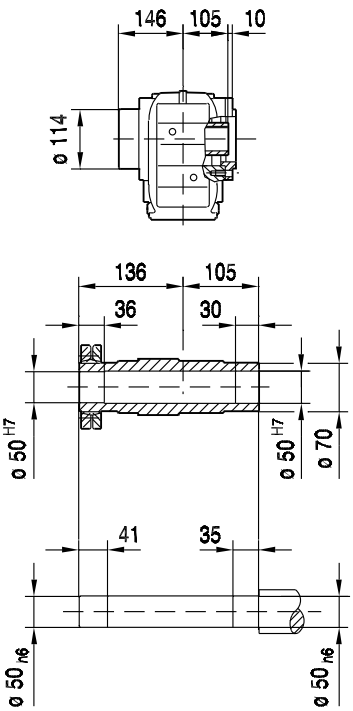

KVZ77..

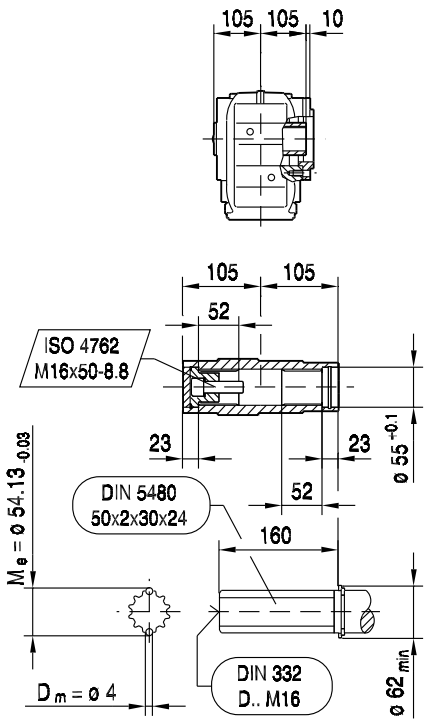

(→ 130)	B5	C5	E5	F5	G5	L	S5	Z5	D1	L1	T1	U1	
AM63	95	10	115	3.5	140	372	M8	60	11	23	12.8	4	
AM71	110	10	130	4.0	160	372	M8	60	14	30	16.3	5	
AM80	130	12	165	4.5	200	404	M10	92	19	40	21.8	6	
AM90	130	12	165	4.5	200	404	M10	92	24	50	27.3	8	
AM100	180	15	215	5.0	250	438	M12	126	28	60	31.3	8	
AM112	180	15	215	5.0	250	438	M12	126	28	60	31.3	8	
AM132S/M	230	16	265	5.0	300	491	M12	179	38	80	41.3	10	
AM132ML	230	16	265	5.0	300	491	M12	179	38	80	41.3	10	

38 006 00 04

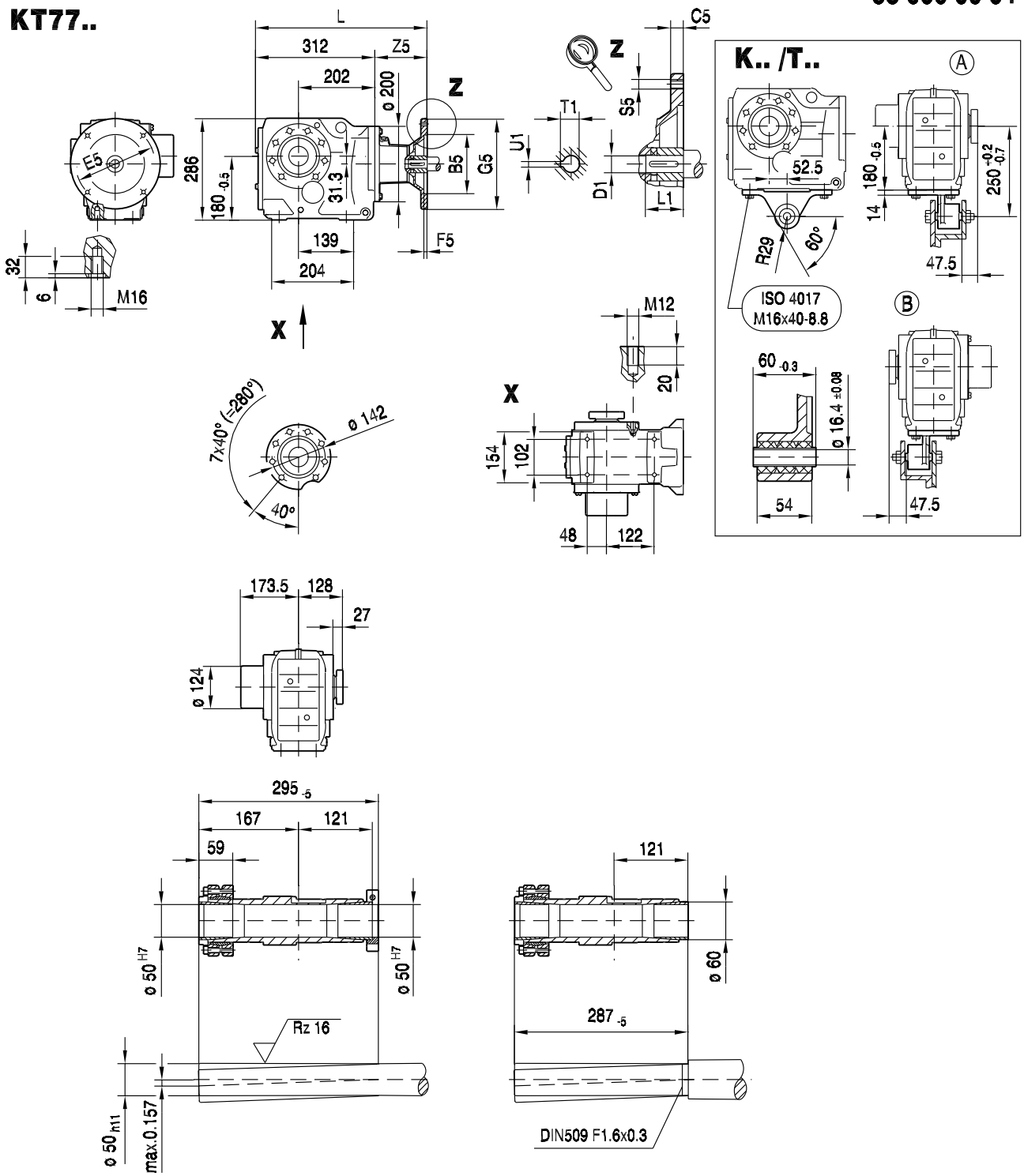

(→ 130)	B5	C5	E5	F5	G5	L	S5	Z5	D1	L1	T1	U1	
AM63	95	10	115	3.5	140	372	M8	60	11	23	12.8	4	
AM71	110	10	130	4.0	160	372	M8	60	14	30	16.3	5	
AM80	130	12	165	4.5	200	404	M10	92	19	40	21.8	6	
AM90	130	12	165	4.5	200	404	M10	92	24	50	27.3	8	
AM100	180	15	215	5.0	250	438	M12	126	28	60	31.3	8	
AM112	180	15	215	5.0	250	438	M12	126	28	60	31.3	8	
AM132S/M	230	16	265	5.0	300	491	M12	179	38	80	41.3	10	
AM132ML	230	16	265	5.0	300	491	M12	179	38	80	41.3	10	

33 020 01 01

K87..

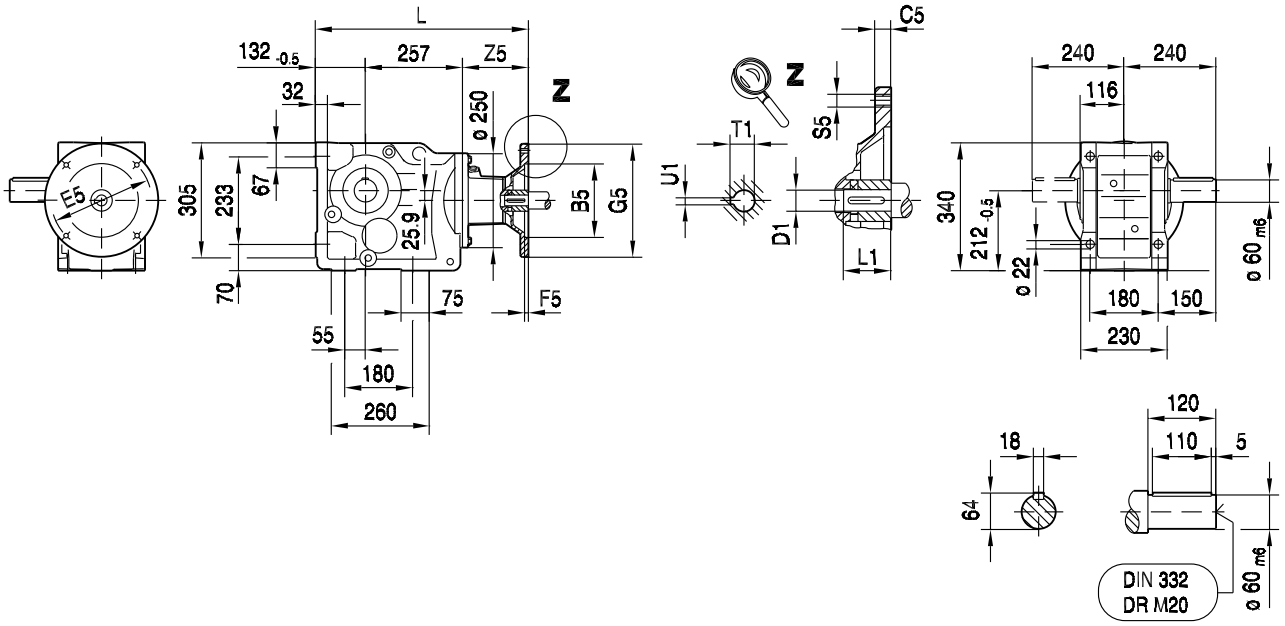

KA87B..

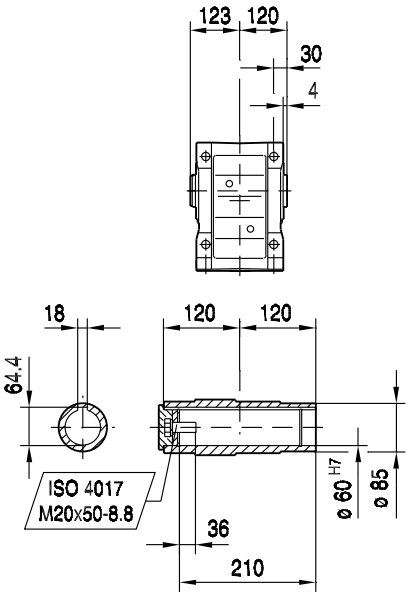

KH87B..

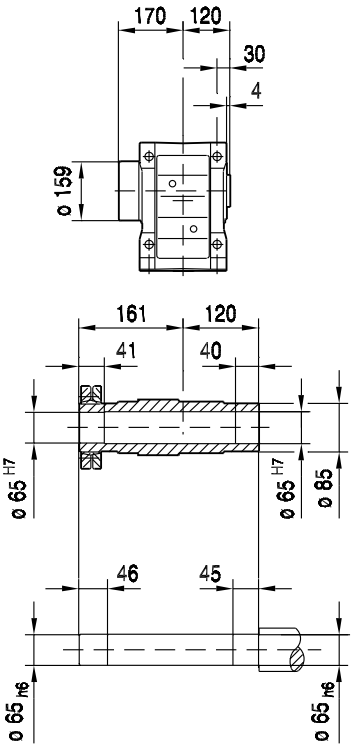

KV87B..

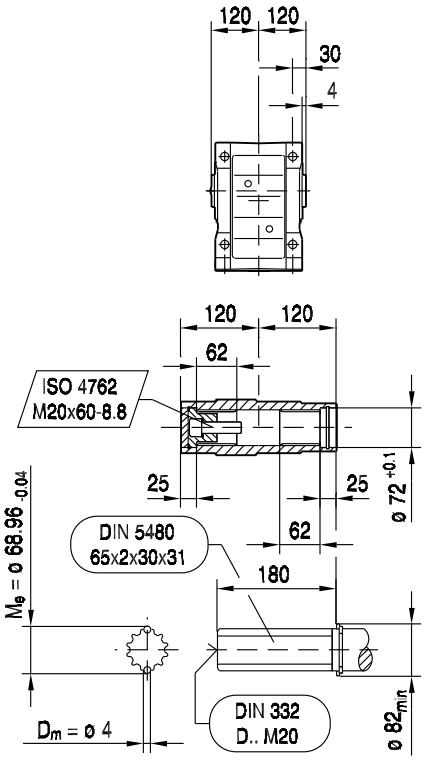

(→ 130)	B5	C5	E5	F5	G5	L	S5	Z5	D1	L1	T1	U1	
AM80	130	12	165	4.5	200	476	M10	87	19	40	21.8	6	
AM90	130	12	165	4.5	200	476	M10	87	24	50	27.3	8	
AM100	180	15	215	5.0	250	510	M12	121	28	60	31.3	8	
AM112	180	15	215	5.0	250	510	M12	121	28	60	31.3	8	
AM132S/M	230	16	265	5.0	300	563	M12	174	38	80	41.3	10	
AM132ML	230	16	265	5.0	300	563	M12	174	38	80	41.3	10	
AM160	250	18	300	6.0	350	621	M16	232	42	110	45.3	12	
AM180	250	18	300	6.0	350	621	M16	232	48	110	51.8	14	

33 021 01 01

KF87..

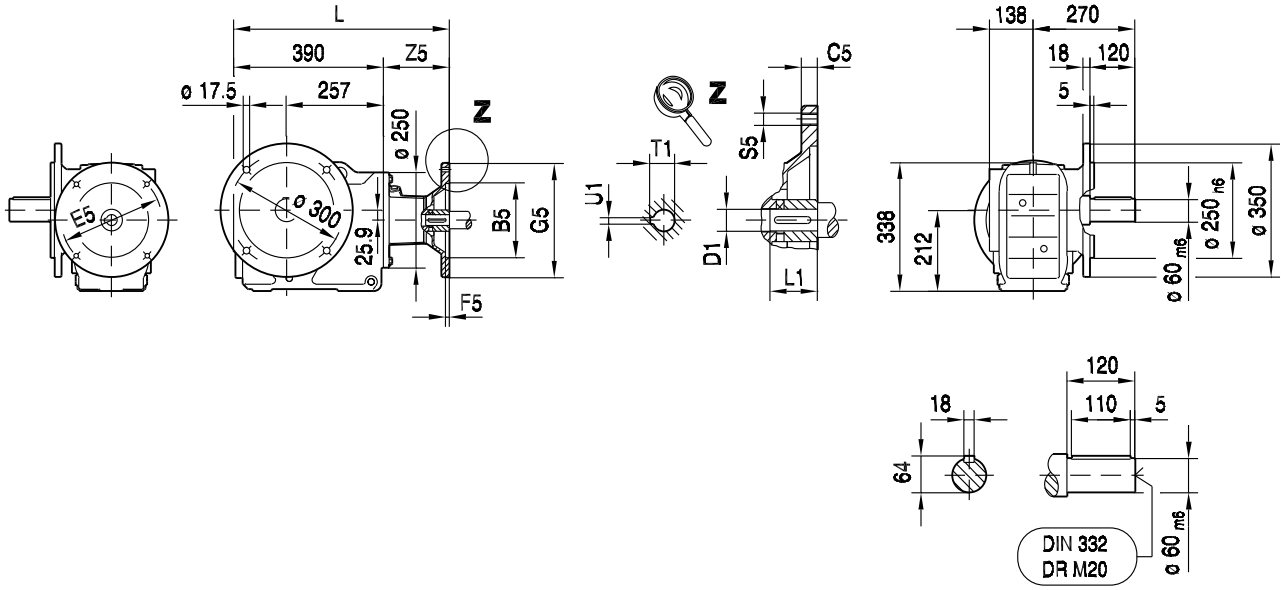

10

KAF87..

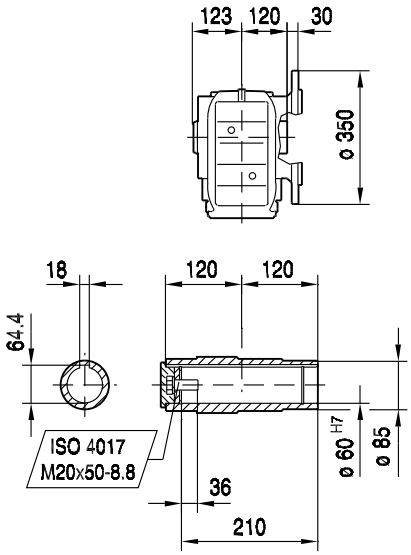

KHF87..

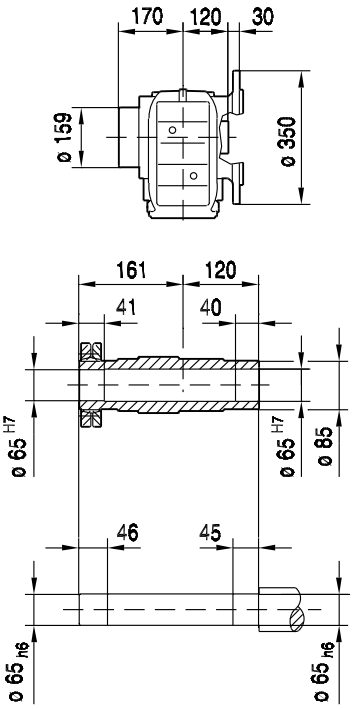

KVF87..

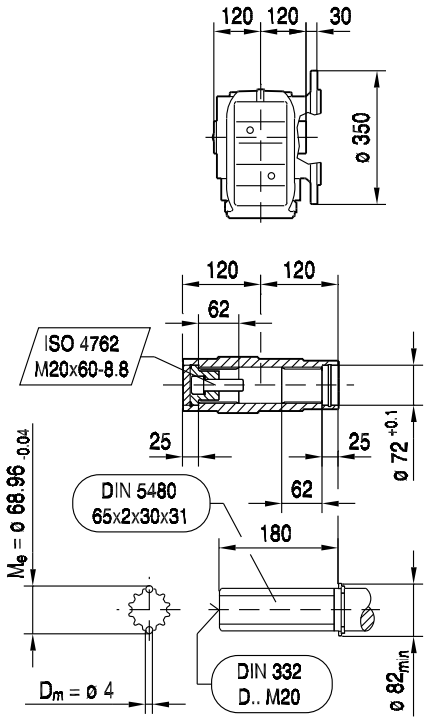

(→ 130)	B5	C5	E5	F5	G5	L	S5	Z5	D1	L1	T1	U1	
AM80	130	12	165	4.5	200	477	M10	87	19	40	21.8	6	
AM90	130	12	165	4.5	200	477	M10	87	24	50	27.3	8	
AM100	180	15	215	5.0	250	511	M12	121	28	60	31.3	8	
AM112	180	15	215	5.0	250	511	M12	121	28	60	31.3	8	
AM132S/M	230	16	265	5.0	300	564	M12	174	38	80	41.3	10	
AM132ML	230	16	265	5.0	300	564	M12	174	38	80	41.3	10	
AM160	250	18	300	6.0	350	622	M16	232	42	110	45.3	12	
AM180	250	18	300	6.0	350	622	M16	232	48	110	51.8	14	

38 020 01 01

KA87..

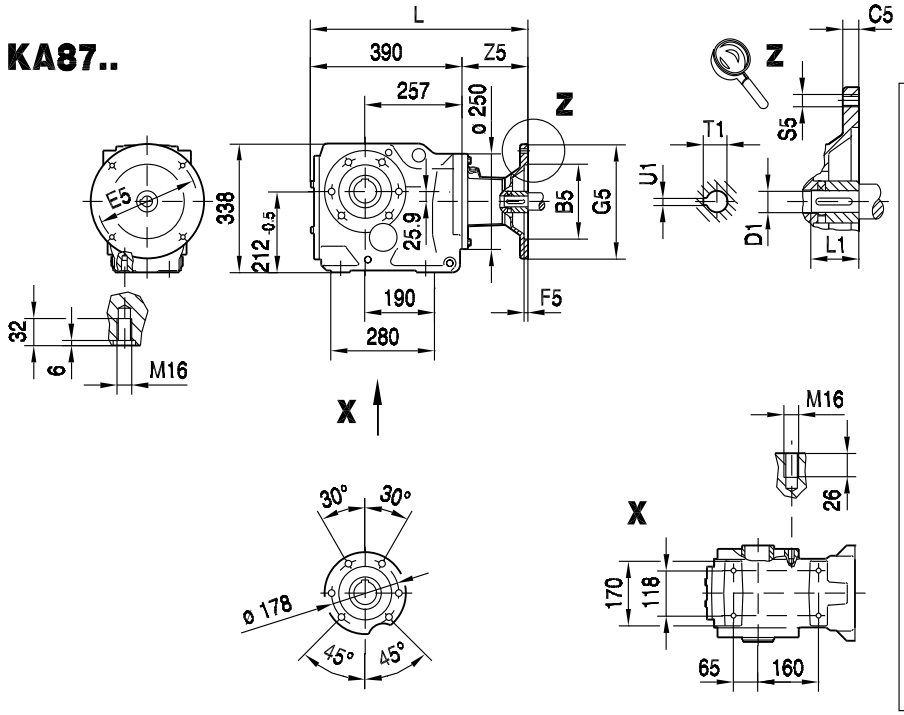

K.. /T..

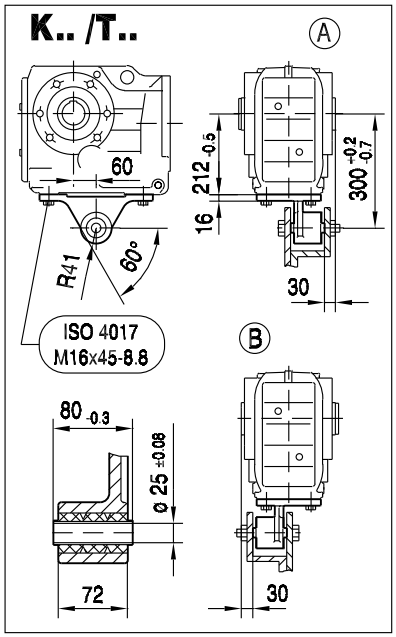

KA87..

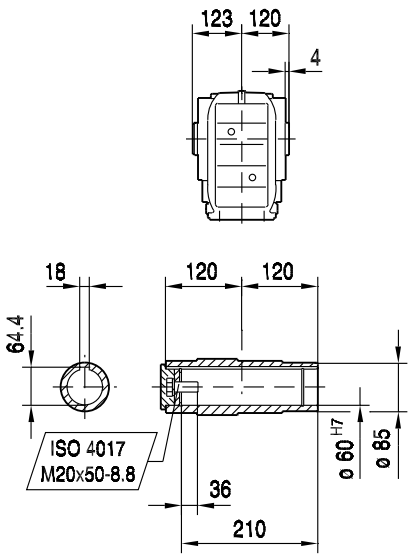

KH87..

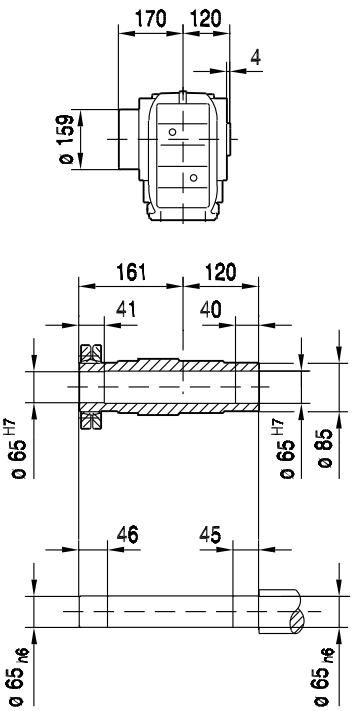

KV87..

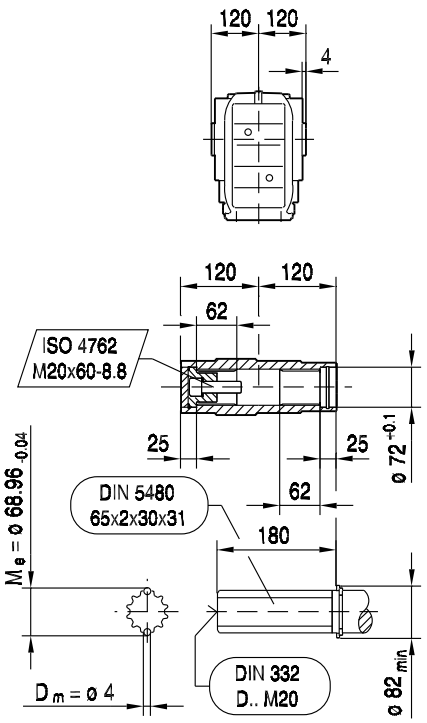

(→ 130)	B5	C5	E5	F5	G5	L	S5	Z5	D1	L1	T1	U1	
AM80	130	12	165	4.5	200	477	M10	87	19	40	21.8	6	
AM90	130	12	165	4.5	200	477	M10	87	24	50	27.3	8	
AM100	180	15	215	5.0	250	511	M12	121	28	60	31.3	8	
AM112	180	15	215	5.0	250	511	M12	121	28	60	31.3	8	
AM132S/M	230	16	265	5.0	300	564	M12	174	38	80	41.3	10	
AM132ML	230	16	265	5.0	300	564	M12	174	38	80	41.3	10	
AM160	250	18	300	6.0	350	622	M16	232	42	110	45.3	12	
AM180	250	18	300	6.0	350	622	M16	232	48	110	51.8	14	

38 021 01 01

KAZ87..

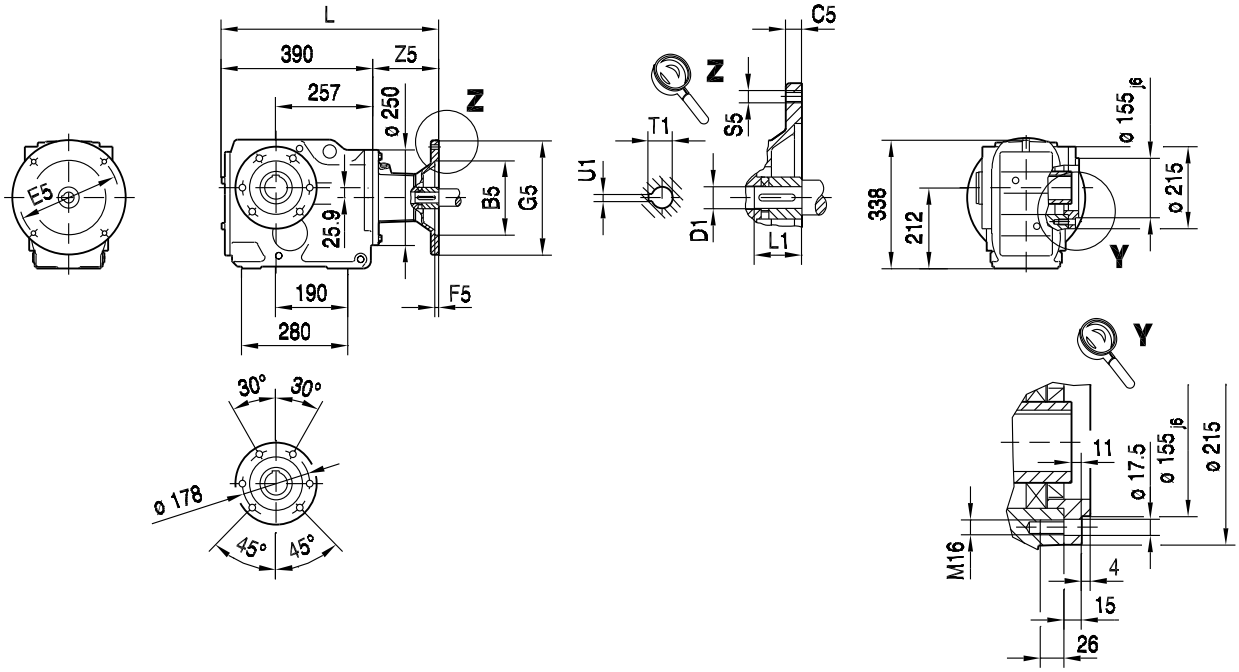

10

KAZ87..

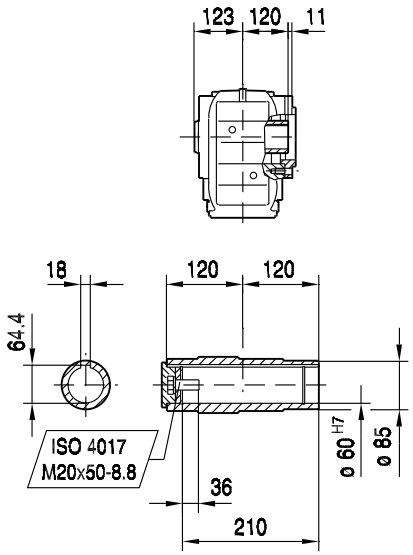

KHZ87..

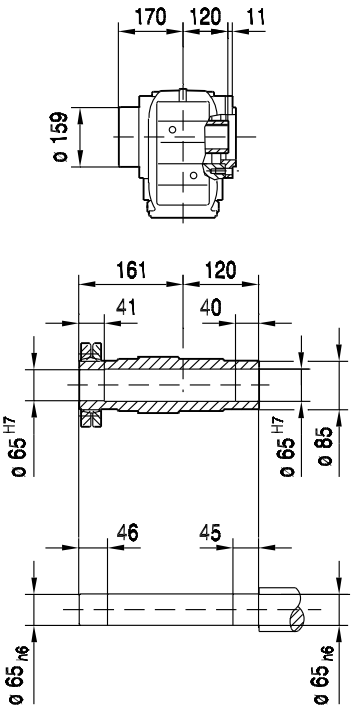

KVZ87..

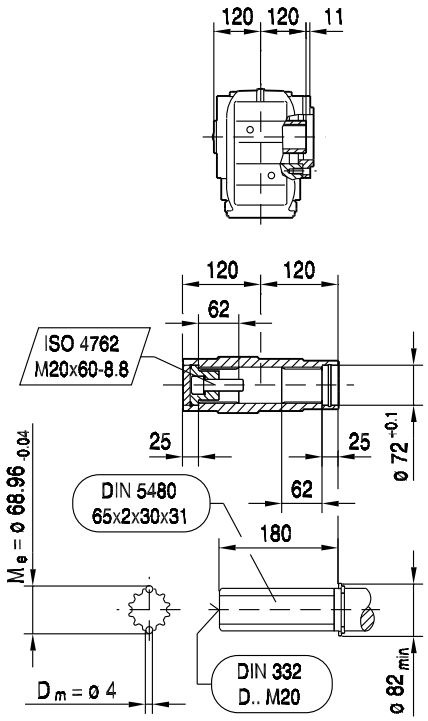

(→ 130)	B5	C5	E5	F5	G5	L	S5	Z5	D1	L1	T1	U1	
AM80	130	12	165	4.5	200	477	M10	87	19	40	21.8	6	
AM90	130	12	165	4.5	200	477	M10	87	24	50	27.3	8	
AM100	180	15	215	5.0	250	511	M12	121	28	60	31.3	8	
AM112	180	15	215	5.0	250	511	M12	121	28	60	31.3	8	
AM132S/M	230	16	265	5.0	300	564	M12	174	38	80	41.3	10	
AM132ML	230	16	265	5.0	300	564	M12	174	38	80	41.3	10	
AM160	250	18	300	6.0	350	622	M16	232	42	110	45.3	12	
AM180	250	18	300	6.0	350	622	M16	232	48	110	51.8	14	

38 007 00 04

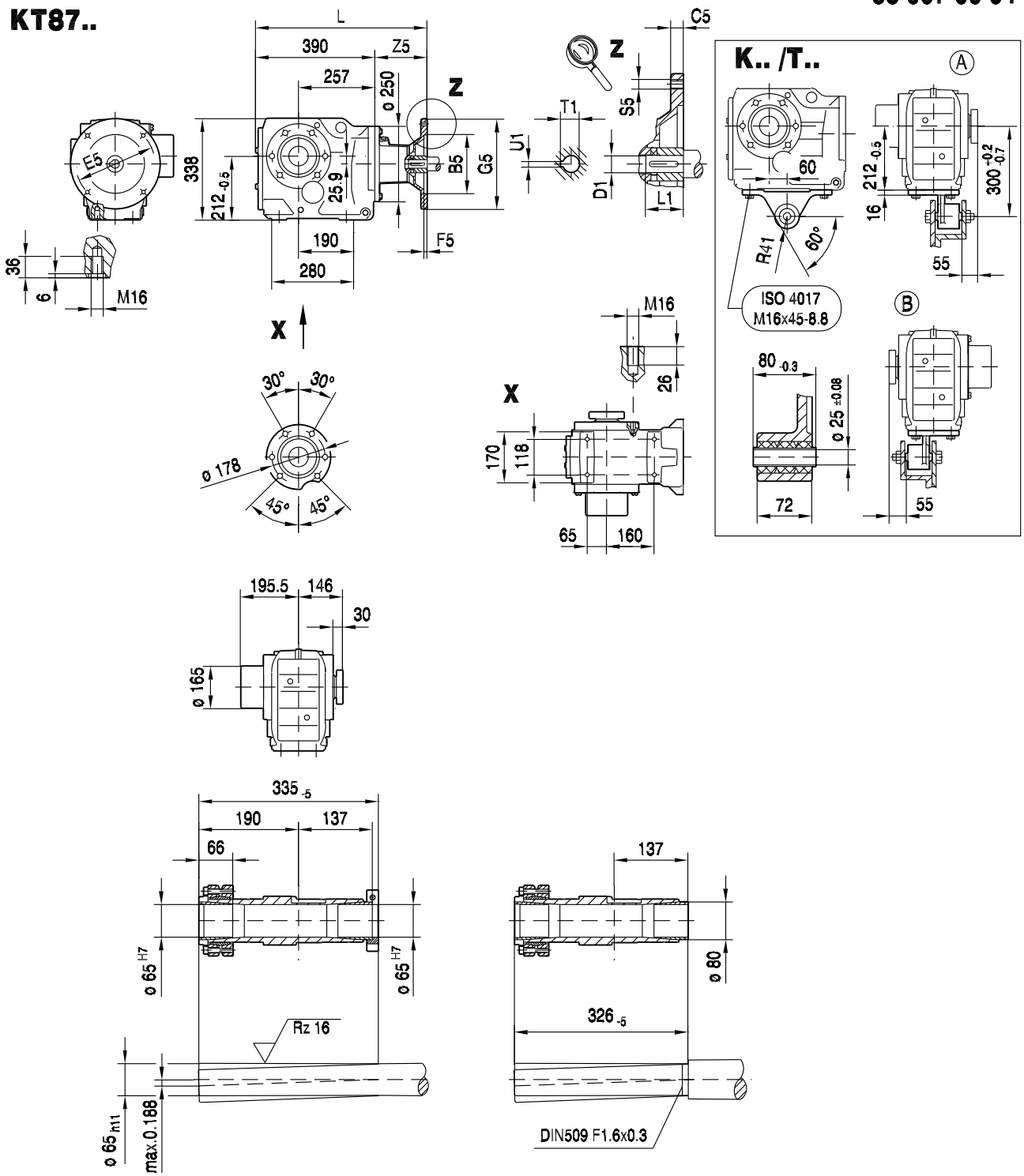

(→ 130)	B5	C5	E5	F5	G5	L	S5	Z5	D1	L1	T1	U1	
AM80	130	12	165	4.5	200	477	M10	87	19	40	21.8	6	
AM90	130	12	165	4.5	200	477	M10	87	24	50	27.3	8	
AM100	180	15	215	5.0	250	511	M12	121	28	60	31.3	8	
AM112	180	15	215	5.0	250	511	M12	121	28	60	31.3	8	
AM132S/M	230	16	265	5.0	300	564	M12	174	38	80	41.3	10	
AM132ML	230	16	265	5.0	300	564	M12	174	38	80	41.3	10	
AM160	250	18	300	6.0	350	622	M16	232	42	110	45.3	12	
AM180	250	18	300	6.0	350	622	M16	232	48	110	51.8	14	

33 022 01 01

K97..

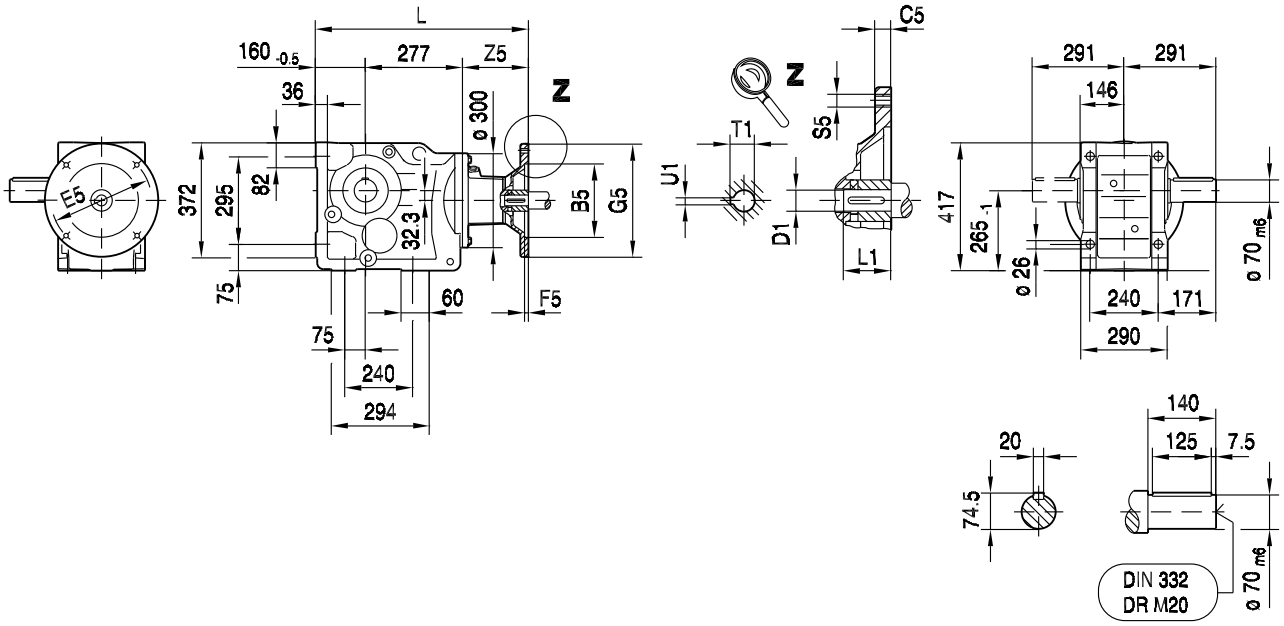

10

KA97B..

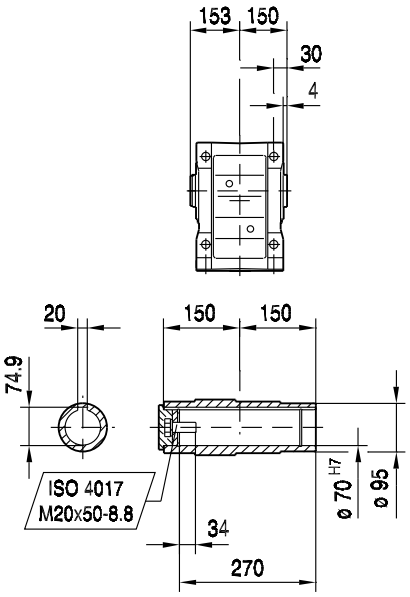

KH97B..

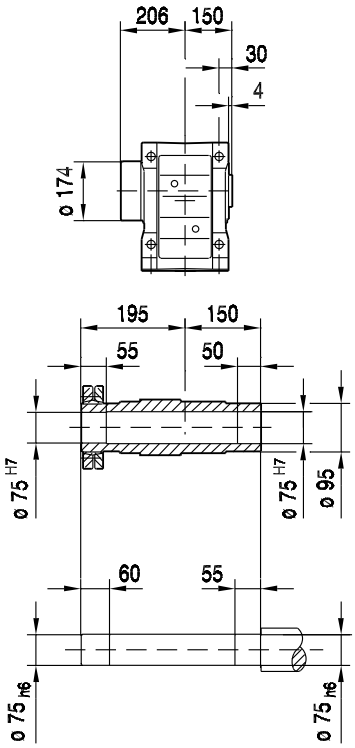

KV97B..

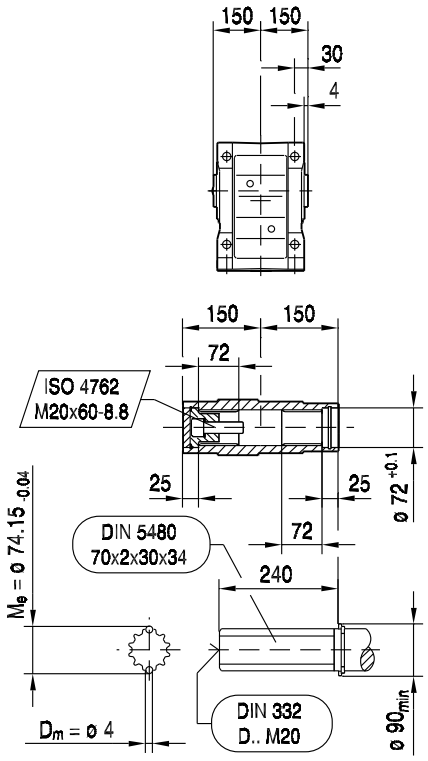

(→ 130)	B5	C5	E5	F5	G5	L	S5	Z5	D1	L1	T1	U1	
AM100	180	15	215	5.0	250	553	M12	116	28	60	31.3	8	
AM112	180	15	215	5.0	250	553	M12	116	28	60	31.3	8	
AM132S/M	230	16	265	5.0	300	606	M12	169	38	80	41.3	10	
AM132ML	230	16	265	5.0	300	606	M12	169	38	80	41.3	10	
AM160	250	18	300	6.0	350	664	M16	227	42	110	45.3	12	
AM180	250	18	300	6.0	350	664	M16	227	48	110	51.8	14	
AM200	300	20	350	7.0	400	705	M16	268	55	110	59.3	16	

33 023 01 01

KF97..

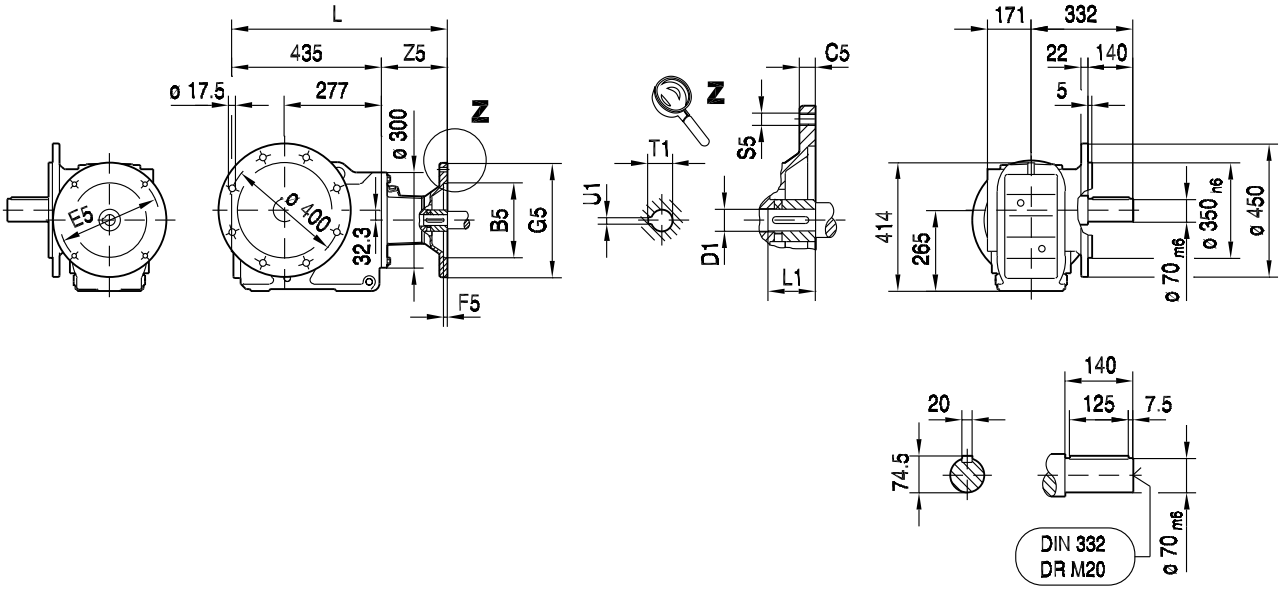

KAF97..

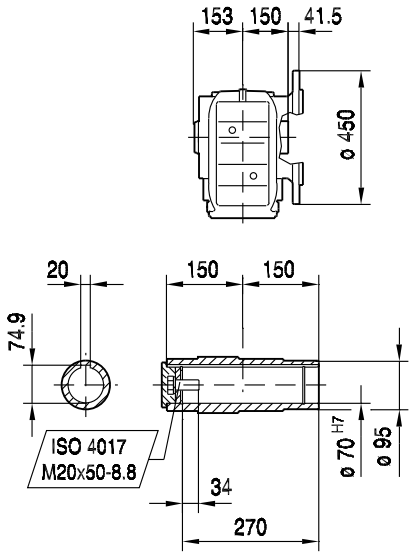

KHF97..

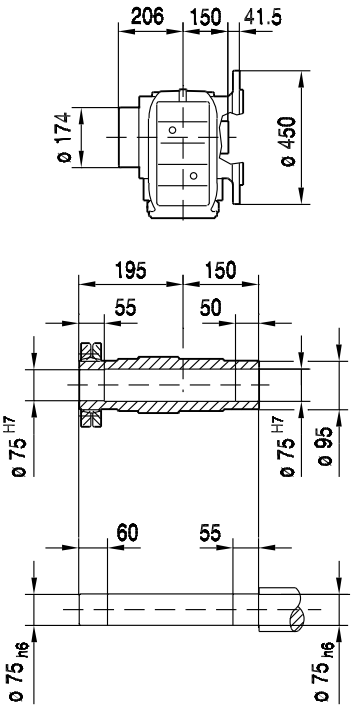

KVF97..

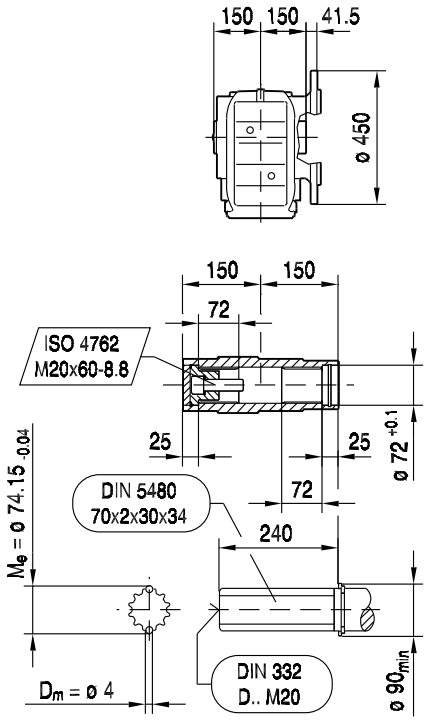

(→ 130)	B5	C5	E5	F5	G5	L	S5	Z5	D1	L1	T1	U1	
AM100	180	15	215	5.0	250	551	M12	116	28	60	31.3	8	
AM112	180	15	215	5.0	250	551	M12	116	28	60	31.3	8	
AM132S/M	230	16	265	5.0	300	604	M12	169	38	80	41.3	10	
AM132ML	230	16	265	5.0	300	604	M12	169	38	80	41.3	10	
AM160	250	18	300	6.0	350	662	M16	227	42	110	45.3	12	
AM180	250	18	300	6.0	350	662	M16	227	48	110	51.8	14	
AM200	300	20	350	7.0	400	703	M16	268	55	110	59.3	16	

38 022 01 01

KA97..

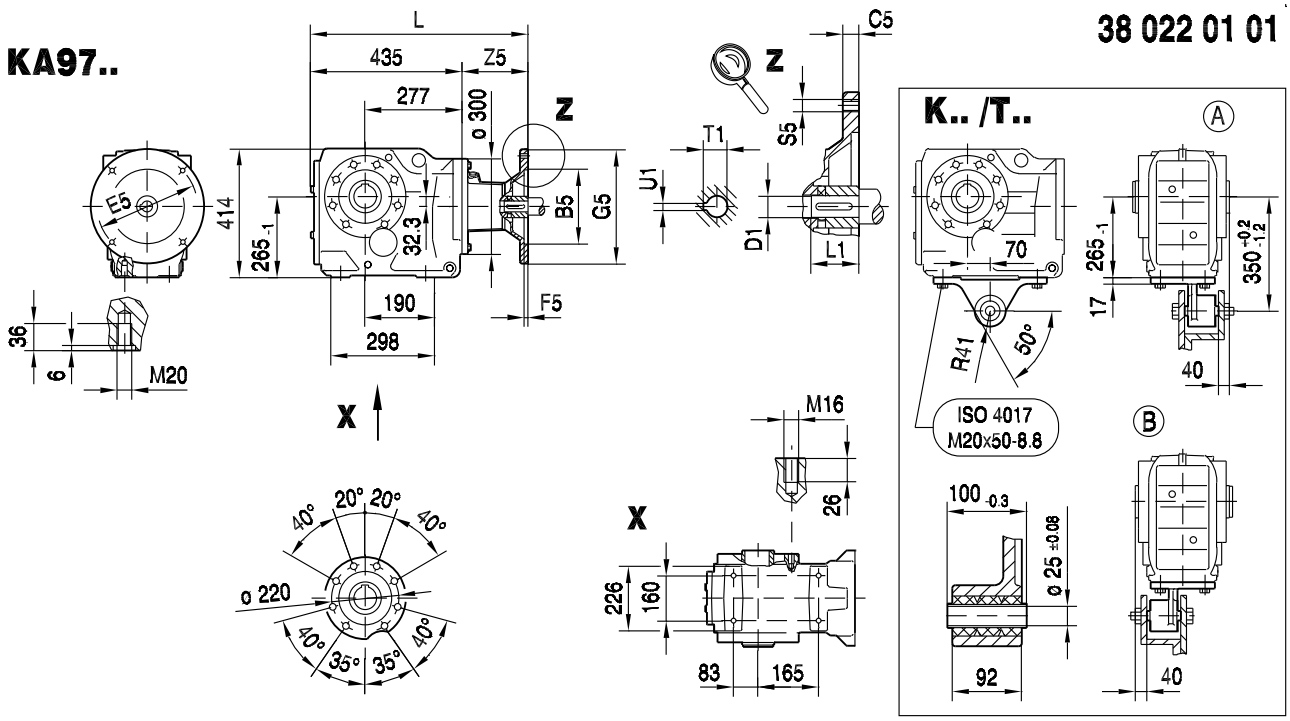

10

KA97..

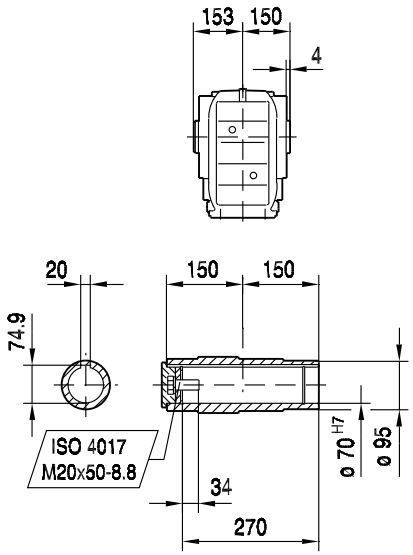

KH97..

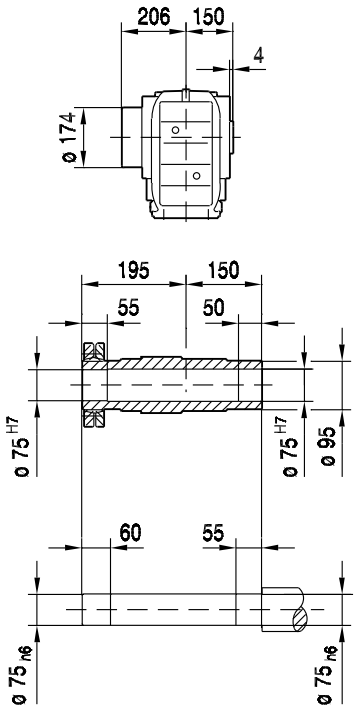

KV97..

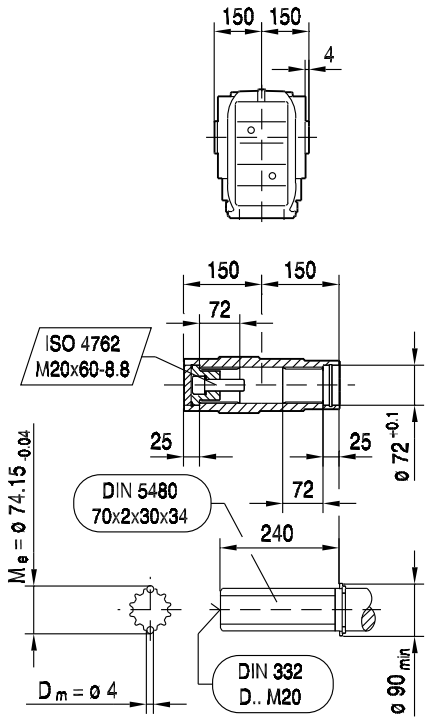

(→ 130)	B5	C5	E5	F5	G5	L	S5	Z5	D1	L1	T1	U1	
AM100	180	15	215	5.0	250	551	M12	116	28	60	31.3	8	
AM112	180	15	215	5.0	250	551	M12	116	28	60	31.3	8	
AM132S/M	230	16	265	5.0	300	604	M12	169	38	80	41.3	10	
AM132ML	230	16	265	5.0	300	604	M12	169	38	80	41.3	10	
AM160	250	18	300	6.0	350	662	M16	227	42	110	45.3	12	
AM180	250	18	300	6.0	350	662	M16	227	48	110	51.8	14	
AM200	300	20	350	7.0	400	703	M16	268	55	110	59.3	16	

38 023 01 01

KAZ97..

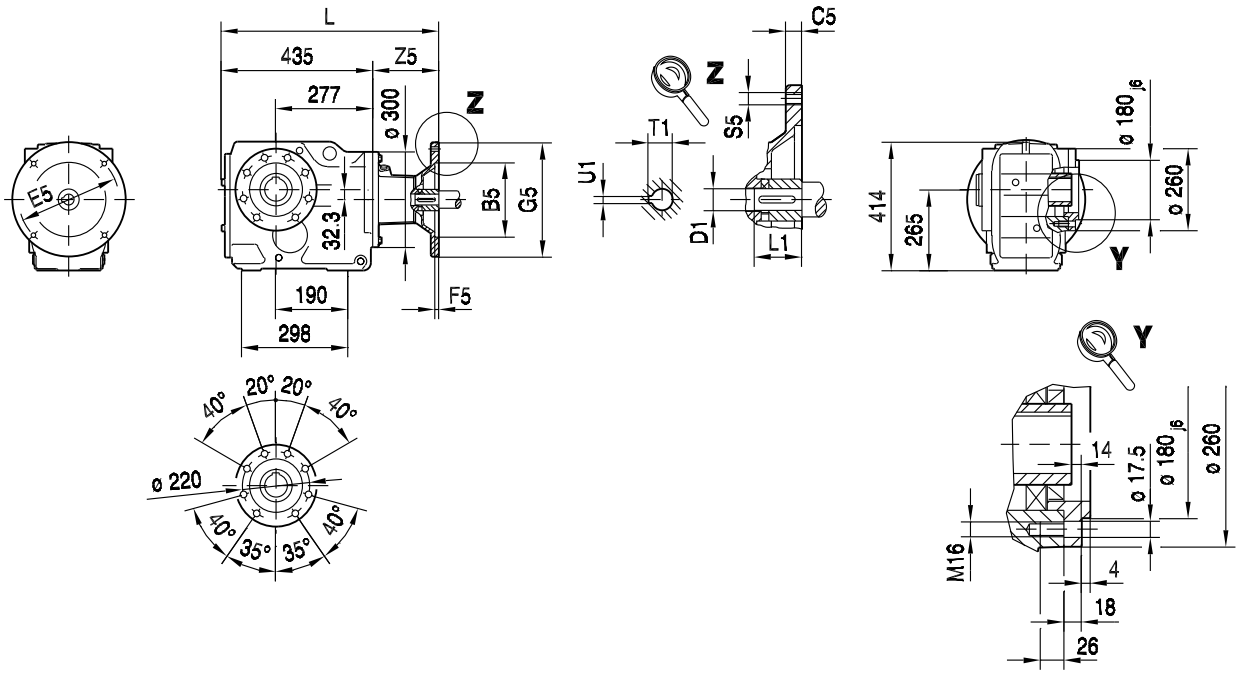

KAZ97..

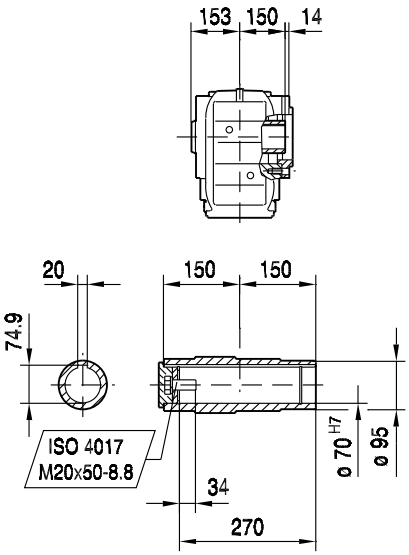

KHZ97..

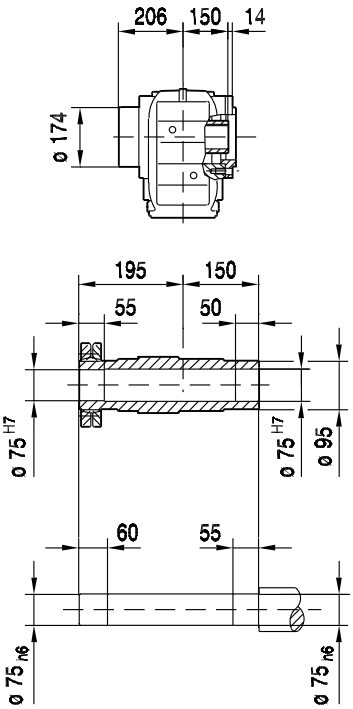

KVZ97..

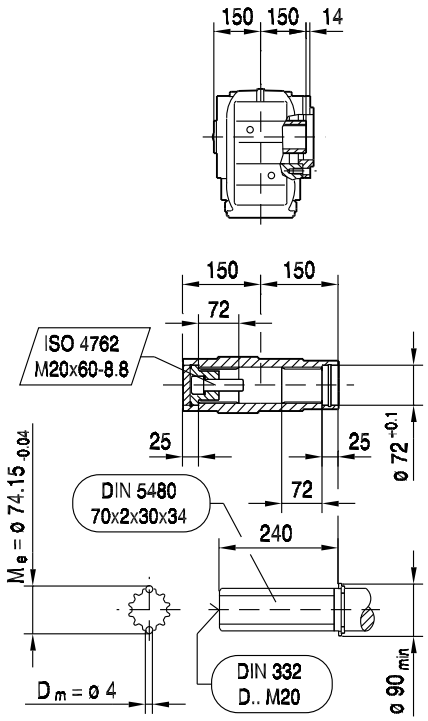

(→ 130)	B5	C5	E5	F5	G5	L	S5	Z5	D1	L1	T1	U1	
AM100	180	15	215	5.0	250	551	M12	116	28	60	31.3	8	
AM112	180	15	215	5.0	250	551	M12	116	28	60	31.3	8	
AM132S/M	230	16	265	5.0	300	604	M12	169	38	80	41.3	10	
AM132ML	230	16	265	5.0	300	604	M12	169	38	80	41.3	10	
AM160	250	18	300	6.0	350	662	M16	227	42	110	45.3	12	
AM180	250	18	300	6.0	350	662	M16	227	48	110	51.8	14	
AM200	300	20	350	7.0	400	703	M16	268	55	110	59.3	16	

38 008 00 04

KT97..

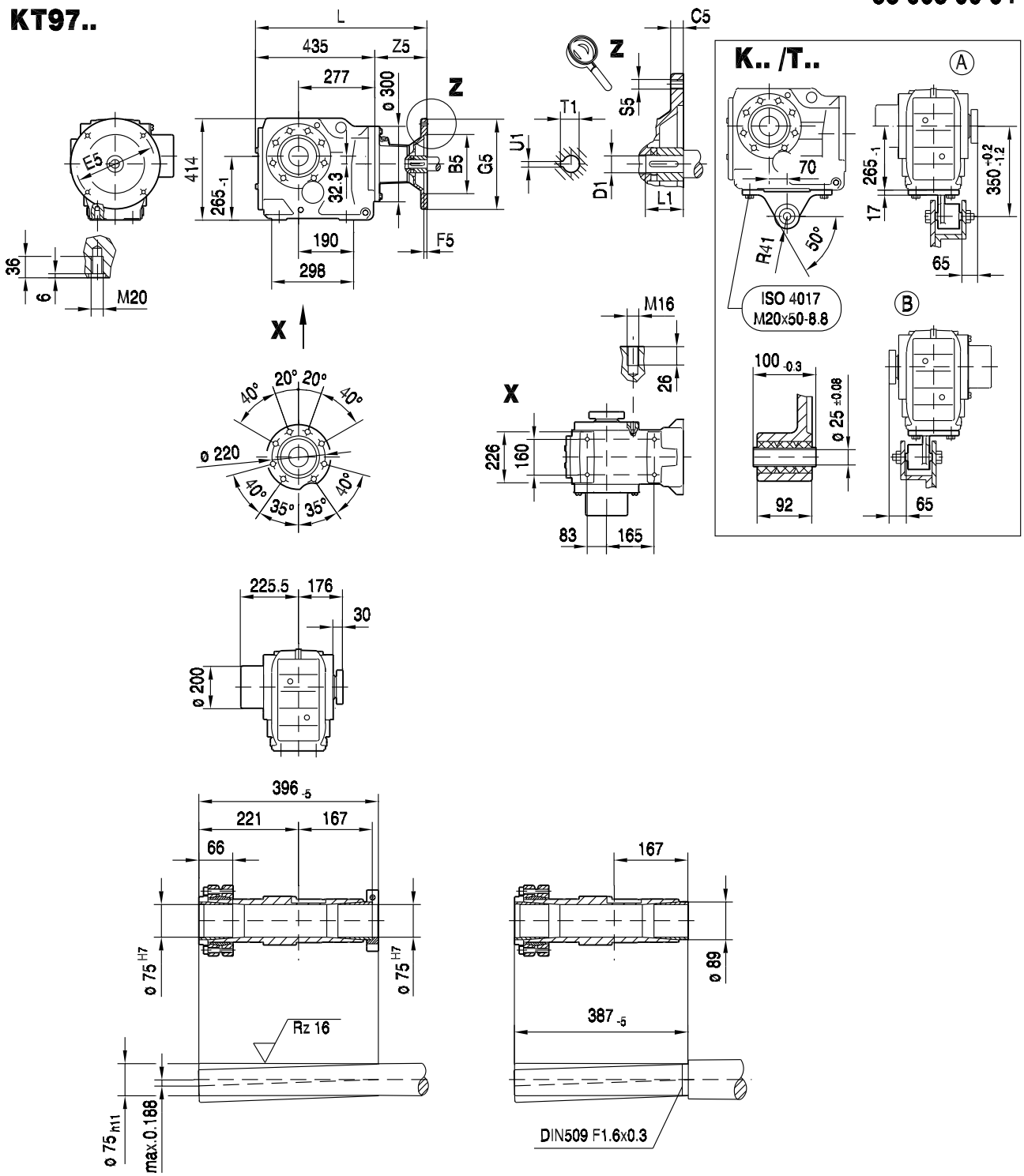

(→ 130)	B5	C5	E5	F5	G5	L	S5	Z5	D1	L1	T1	U1	
AM100	180	15	215	5.0	250	551	M12	116	28	60	31.3	8	
AM112	180	15	215	5.0	250	551	M12	116	28	60	31.3	8	
AM132S/M	230	16	265	5.0	300	604	M12	169	38	80	41.3	10	
AM132ML	230	16	265	5.0	300	604	M12	169	38	80	41.3	10	
AM160	250	18	300	6.0	350	662	M16	227	42	110	45.3	12	
AM180	250	18	300	6.0	350	662	M16	227	48	110	51.8	14	
AM200	300	20	350	7.0	400	703	M16	268	55	110	59.3	16	

33 024 01 01

K107..

<=AM200 >=AM225

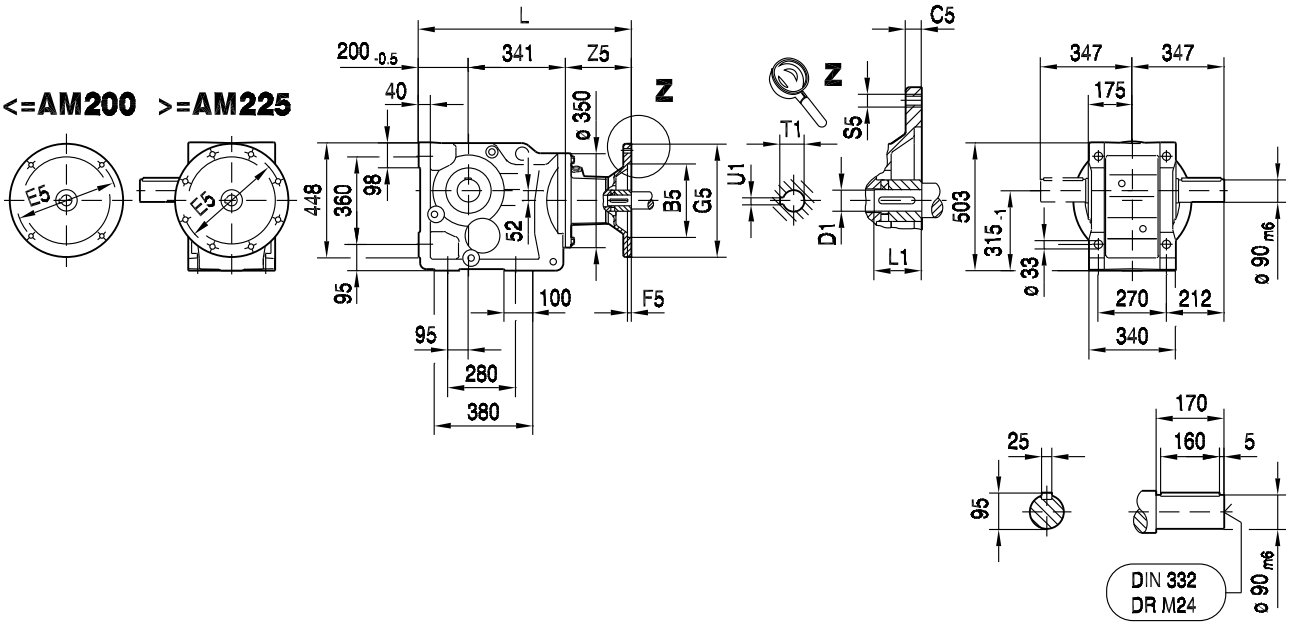

KA107B..

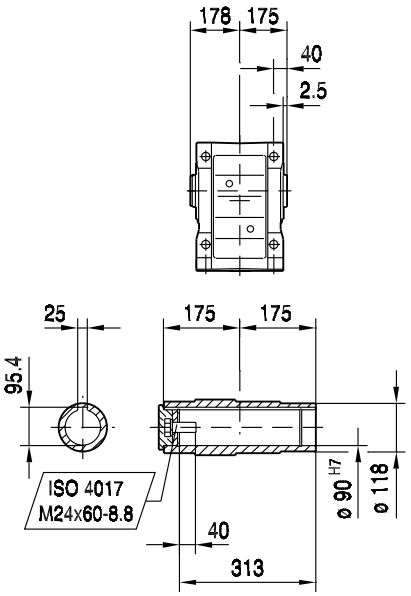

KH107B..

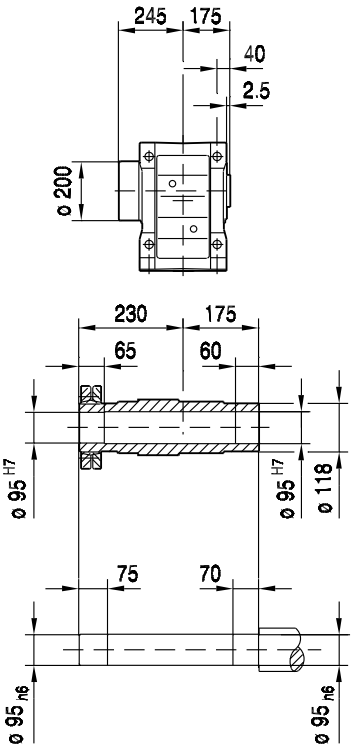

KV107B..

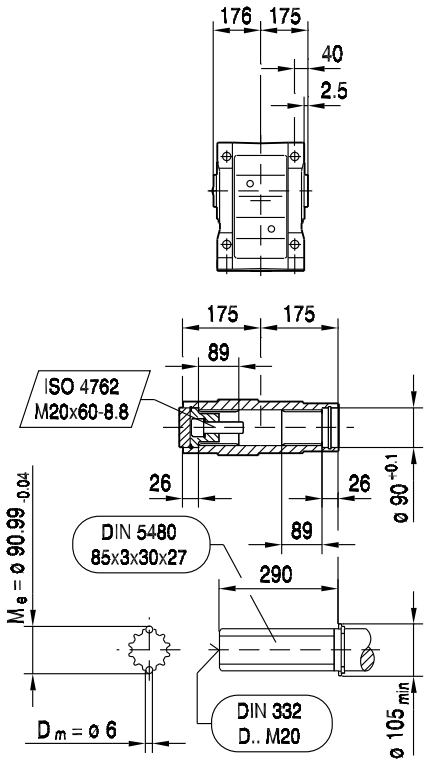

(→ 130)	B5	C5	E5	F5	G5	L	S5	Z5	D1	L1	T1	U1	
AM100	180	15	215	5.0	250	651	M12	110	28	60	31.3	8	
AM112	180	15	215	5.0	250	651	M12	110	28	60	31.3	8	
AM132S/M	230	16	265	5.0	300	704	M12	163	38	80	41.3	10	
AM132ML	230	16	265	5.0	300	704	M12	163	38	80	41.3	10	
AM160	250	18	300	6.0	350	762	M16	221	42	110	45.3	12	
AM180	250	18	300	6.0	350	762	M16	221	48	110	51.8	14	
AM200	300	20	350	7.0	400	803	M16	262	55	110	59.3	16	
AM225	350	22	400	7.0	450	818	M16	277	60	140	64.4	18	

33 025 01 01

KF107..

<=AM200 >=AM225

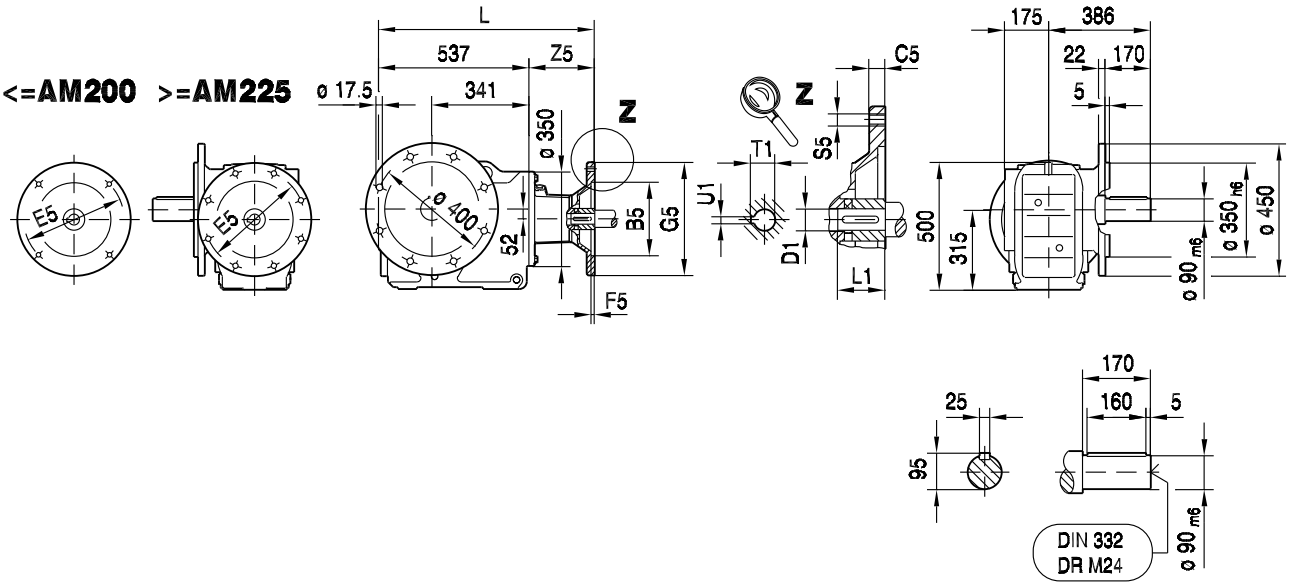

10

KAF107..

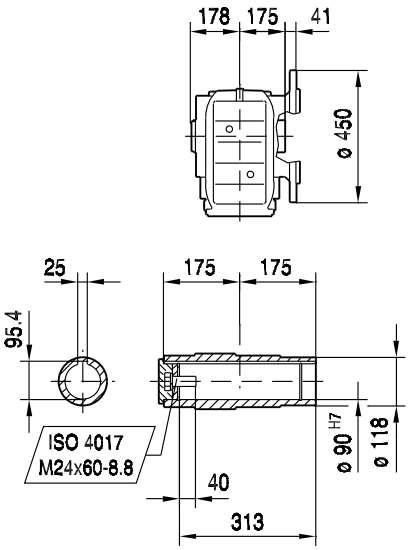

KHF107..

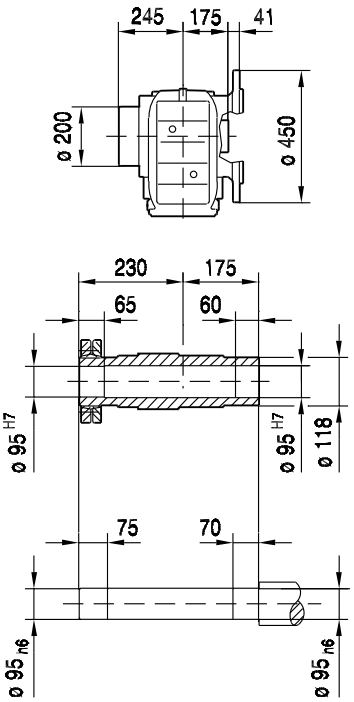

KVF107..

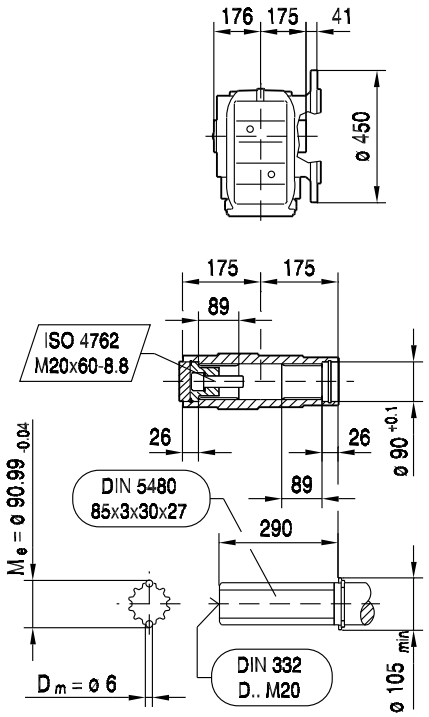

(→ 130)	B5	C5	E5	F5	G5	L	S5	Z5	D1	L1	T1	U1	
AM100	180	15	215	5.0	250	647	M12	110	28	60	31.3	8	
AM112	180	15	215	5.0	250	647	M12	110	28	60	31.3	8	
AM132S/M	230	16	265	5.0	300	700	M12	163	38	80	41.3	10	
AM132ML	230	16	265	5.0	300	700	M12	163	38	80	41.3	10	
AM160	250	18	300	6.0	350	758	M16	221	42	110	45.3	12	
AM180	250	18	300	6.0	350	758	M16	221	48	110	51.8	14	
AM200	300	20	350	7.0	400	799	M16	262	55	110	59.3	16	
AM225	350	22	400	7.0	450	814	M16	277	60	140	64.4	18	

38 024 01 01

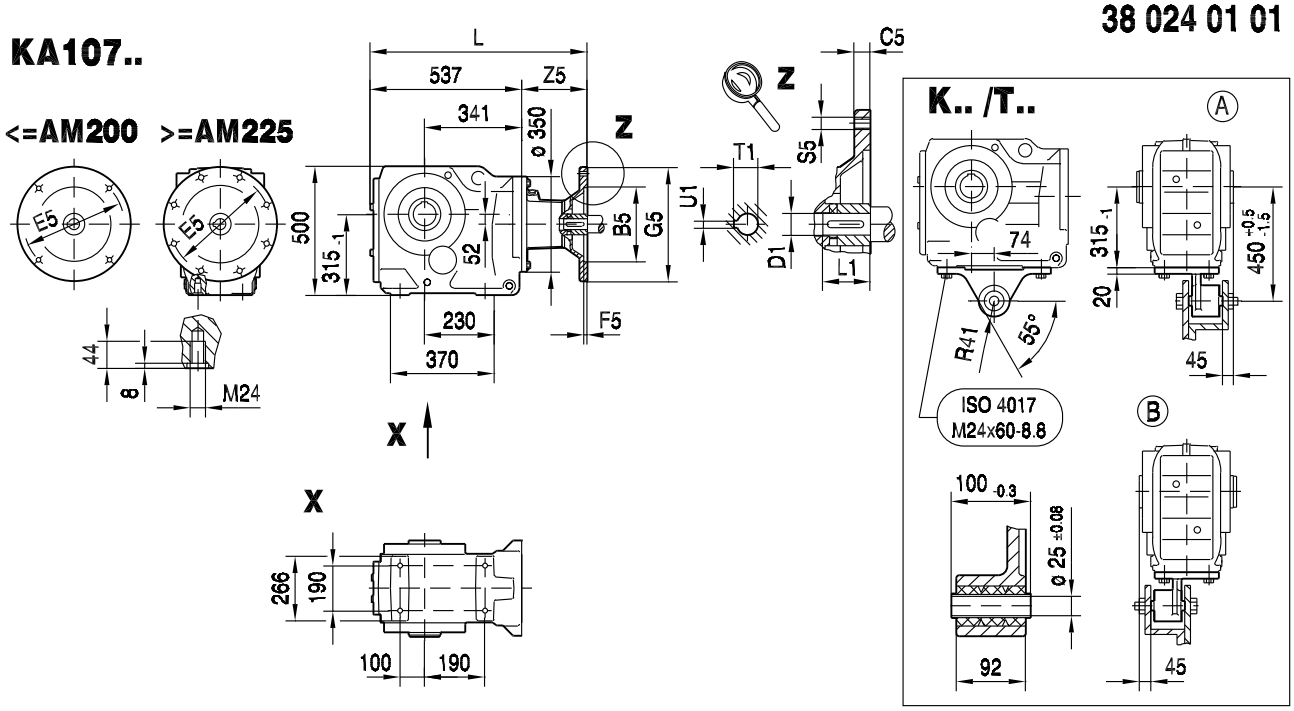

KA107..

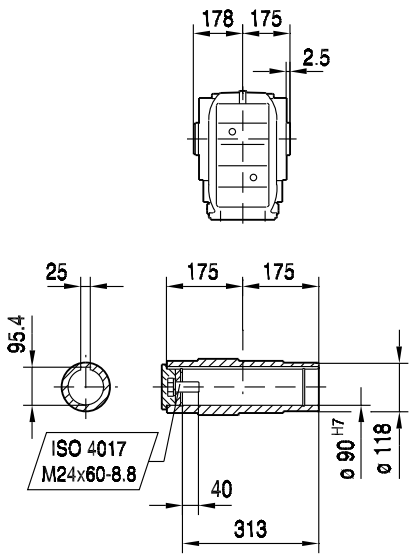

KH107..

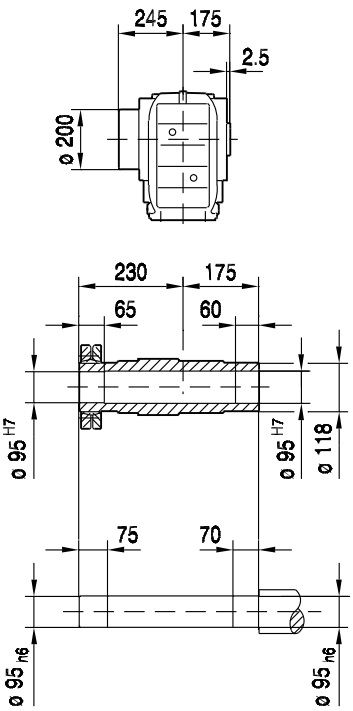

KV107..

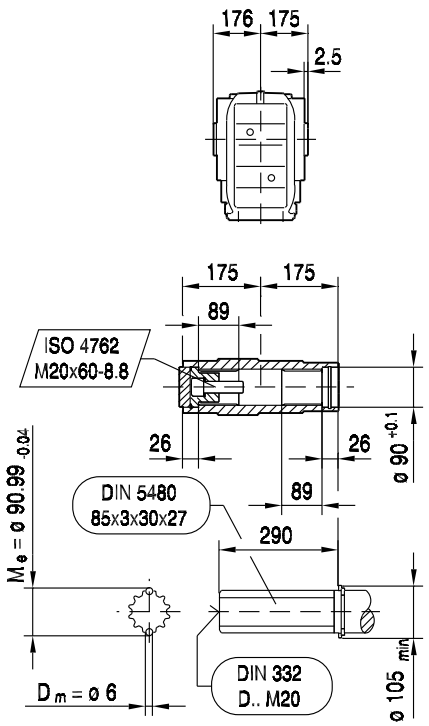

(→ 130)	B5	C5	E5	F5	G5	L	S5	Z5	D1	L1	T1	U1	
AM100	180	15	215	5.0	250	647	M12	110	28	60	31.3	8	
AM112	180	15	215	5.0	250	647	M12	110	28	60	31.3	8	
AM132S/M	230	16	265	5.0	300	700	M12	163	38	80	41.3	10	
AM132ML	230	16	265	5.0	300	700	M12	163	38	80	41.3	10	
AM160	250	18	300	6.0	350	758	M16	221	42	110	45.3	12	
AM180	250	18	300	6.0	350	758	M16	221	48	110	51.8	14	
AM200	300	20	350	7.0	400	799	M16	262	55	110	59.3	16	
AM225	350	22	400	7.0	450	814	M16	277	60	140	64.4	18	

38 025 01 01

KAZ107..

<=AM200 >=AM225

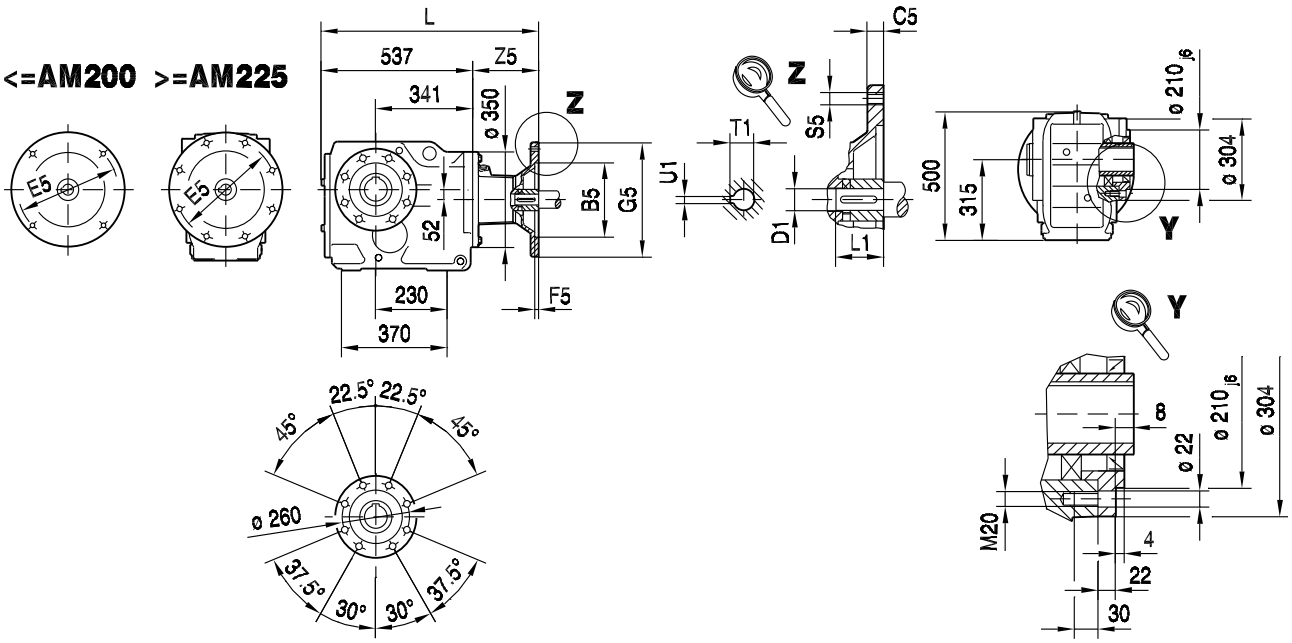

10

KAZ107..

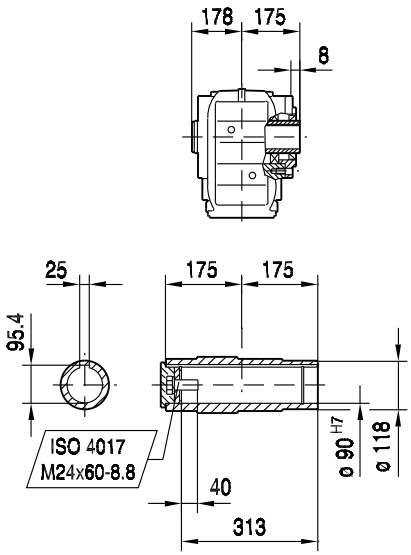

KHZ107..

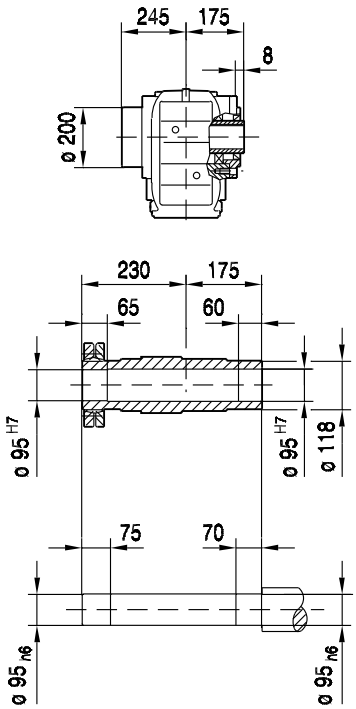

KVZ107..

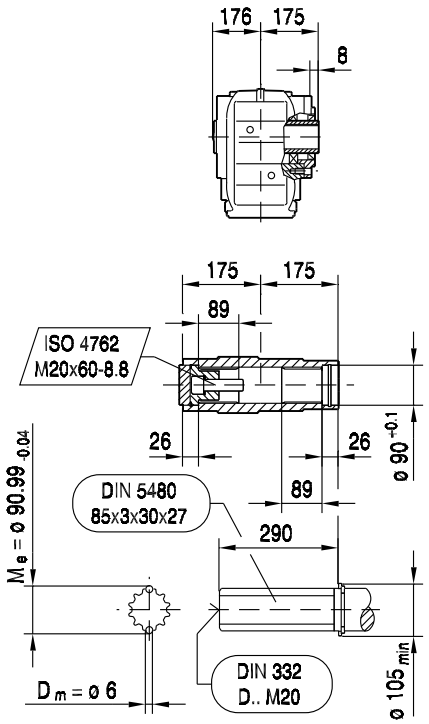

(→ 130)	B5	C5	E5	F5	G5	L	S5	Z5	D1	L1	T1	U1	
AM100	180	15	215	5.0	250	647	M12	110	28	60	31.3	8	
AM112	180	15	215	5.0	250	647	M12	110	28	60	31.3	8	
AM132S/M	230	16	265	5.0	300	700	M12	163	38	80	41.3	10	
AM132ML	230	16	265	5.0	300	700	M12	163	38	80	41.3	10	
AM160	250	18	300	6.0	350	758	M16	221	42	110	45.3	12	
AM180	250	18	300	6.0	350	758	M16	221	48	110	51.8	14	
AM200	300	20	350	7.0	400	799	M16	262	55	110	59.3	16	
AM225	350	22	400	7.0	450	814	M16	277	60	140	64.4	18	

33 004 00 07

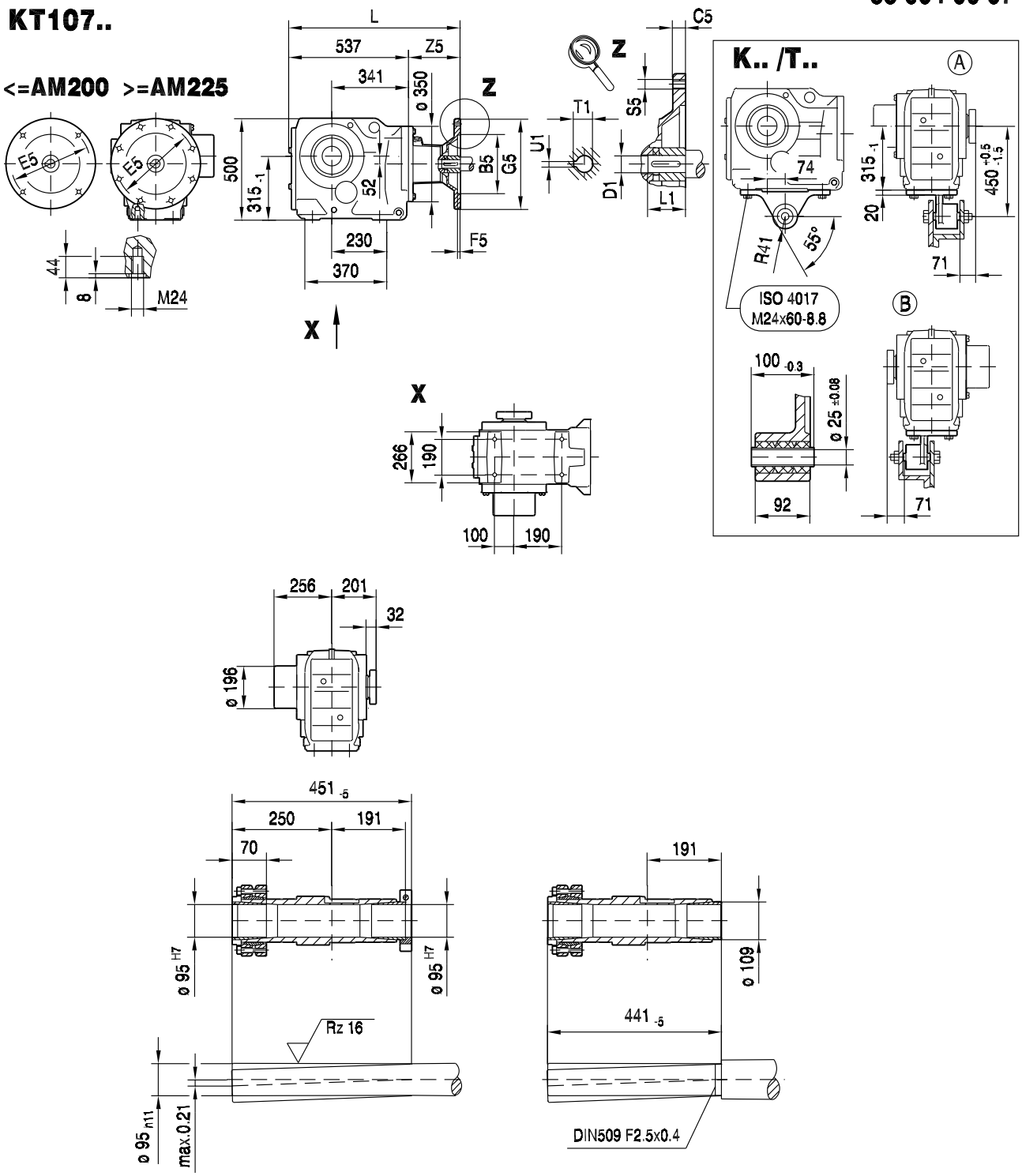

(→ 130)	B5	C5	E5	F5	G5	L	S5	Z5	D1	L1	T1	U1	
AM100	180	15	215	5.0	250	647	M12	110	28	60	31.3	8	
AM112	180	15	215	5.0	250	647	M12	110	28	60	31.3	8	
AM132S/M	230	16	265	5.0	300	700	M12	163	38	80	41.3	10	
AM132ML	230	16	265	5.0	300	700	M12	163	38	80	41.3	10	
AM160	250	18	300	6.0	350	758	M16	221	42	110	45.3	12	
AM180	250	18	300	6.0	350	758	M16	221	48	110	51.8	14	
AM200	300	20	350	7.0	400	799	M16	262	55	110	59.3	16	
AM225	350	22	400	7.0	450	814	M16	277	60	140	64.4	18	

33 026 01 01

K127..

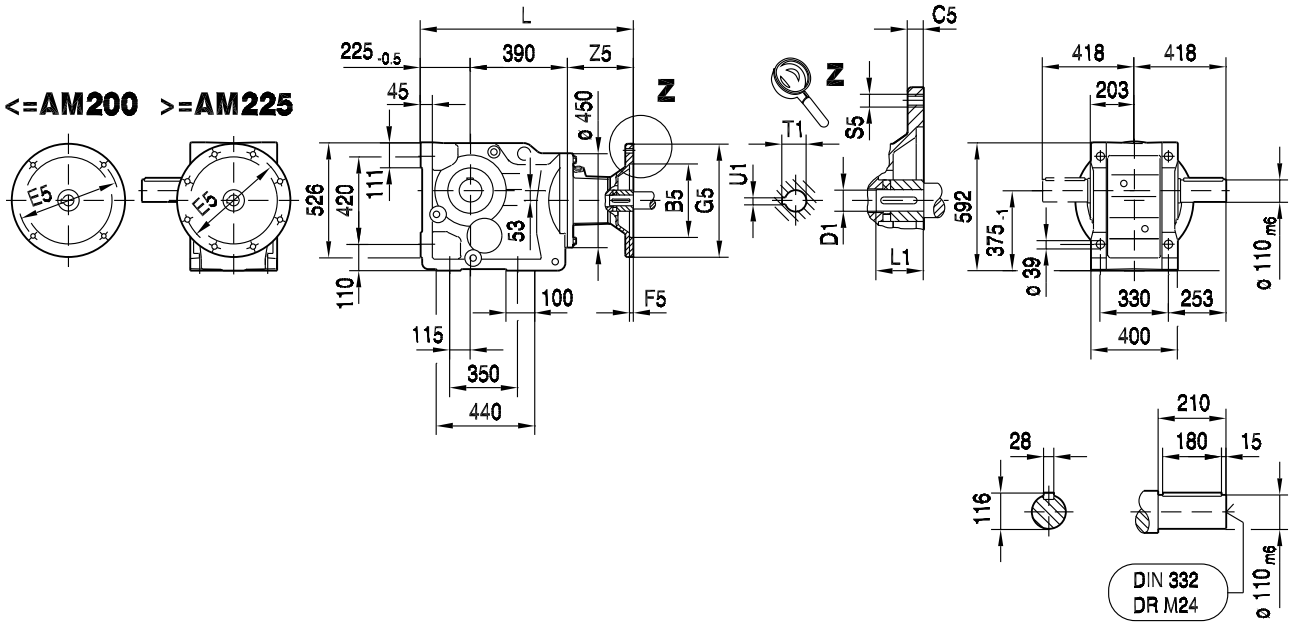

10

KA127B..

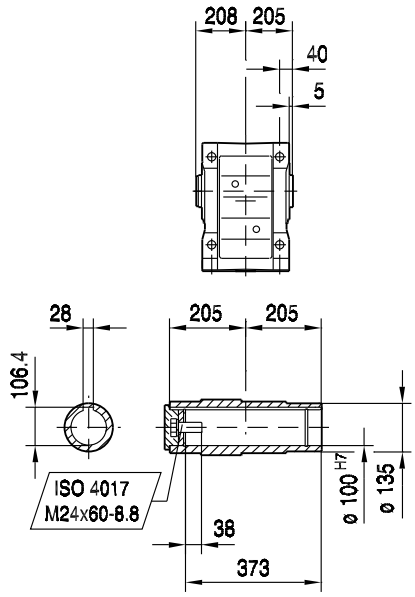

KH127B..

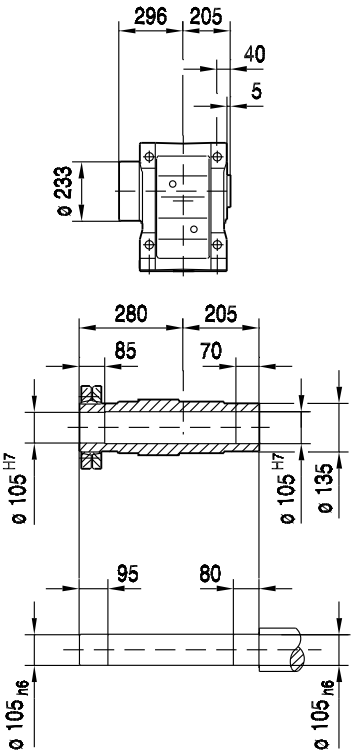

(→ 130)	B5	C5	E5	F5	G5	L	S5	Z5	Z12	D1	L1	T1	U1
AM132S/M	230	16	265	5.0	300	763	M12	148	0	38	80	41.3	10
AM132ML	230	16	265	5.0	300	763	M12	148	0	38	80	41.3	10
AM160	250	18	300	6.0	350	821	M16	206	0	42	110	45.3	12
AM180	250	18	300	6.0	350	821	M16	206	0	48	110	51.8	14
AM200	300	20	350	7.0	400	862	M16	247	0	55	110	59.3	16
AM225	350	22	400	7.0	450	877	M16	262	0	60	140	64.4	18
AM250	450	25	500	7.0	550	951	M16	336	19	65	140	69.4	18
AM280	450	25	500	7.0	550	951	M16	336	19	75	140	79.9	20

33 027 01 01

KF127..

<=AM200 >=AM225

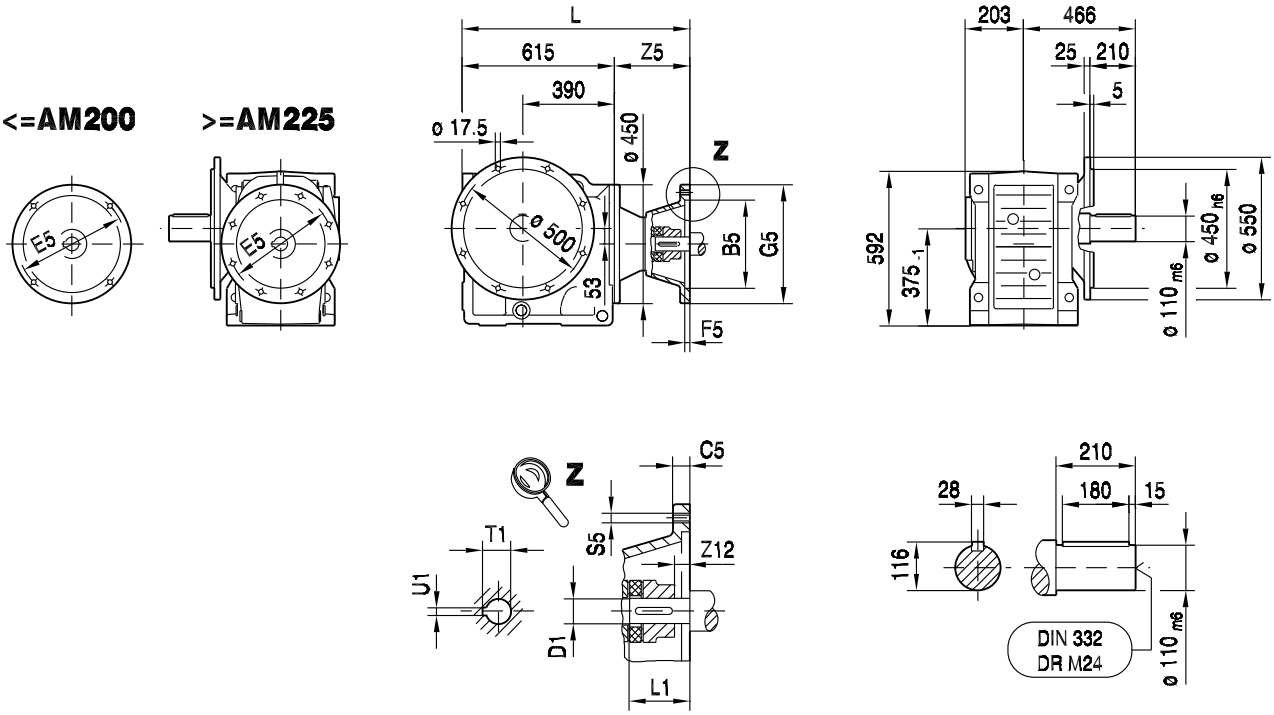

KAF127..

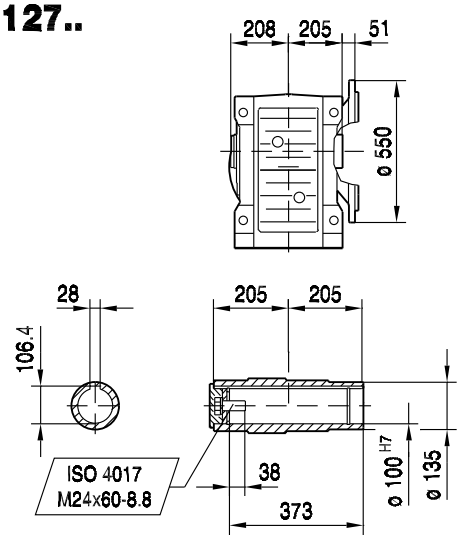

KHF127..

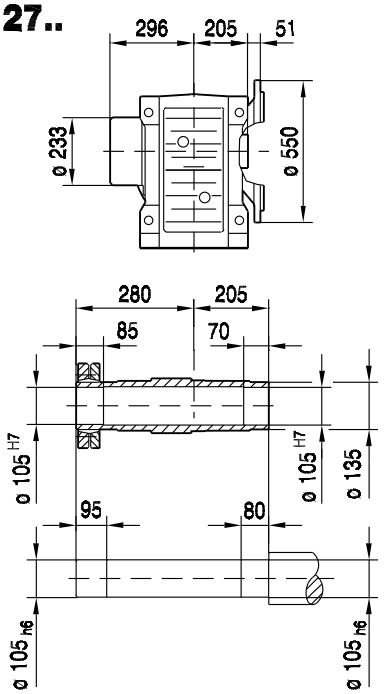

(→ 130)	B5	C5	E5	F5	G5	L	S5	Z5	Z12	D1	L1	T1	U1
AM132S/M	230	16	265	5.0	300	763	M12	148	0	38	80	41.3	10
AM132ML	230	16	265	5.0	300	763	M12	148	0	38	80	41.3	10
AM160	250	18	300	6.0	350	821	M16	206	0	42	110	45.3	12
AM180	250	18	300	6.0	350	821	M16	206	0	48	110	51.8	14
AM200	300	20	350	7.0	400	862	M16	247	0	55	110	59.3	16
AM225	350	22	400	7.0	450	877	M16	262	0	60	140	64.4	18
AM250	450	25	500	7.0	550	951	M16	336	19	65	140	69.4	18
AM280	450	25	500	7.0	550	951	M16	336	19	75	140	79.9	20

38 026 01 01

KA127..

<=AM200 >=AM225

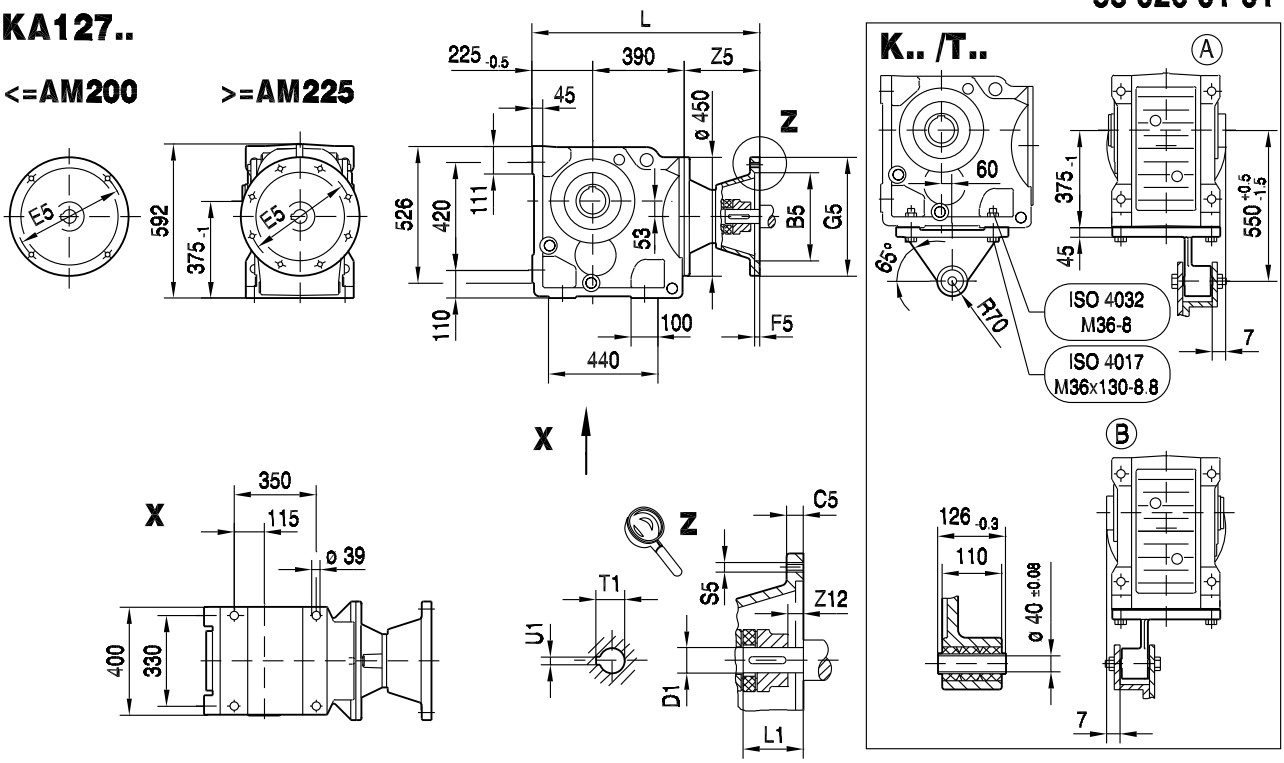

KA127..

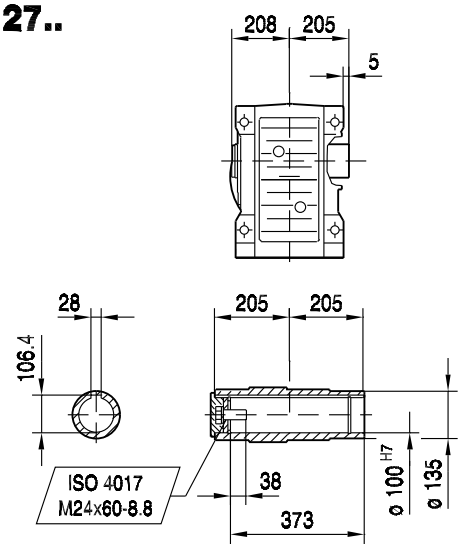

KH127..

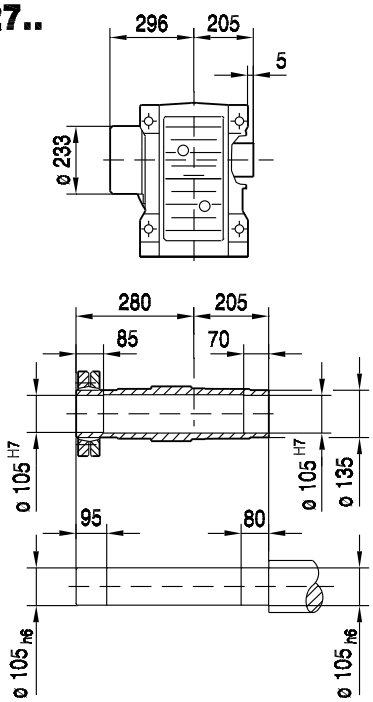

(→ 130)	B5	C5	E5	F5	G5	L	S5	Z5	Z12	D1	L1	T1	U1
AM132S/M	230	16	265	5.0	300	763	M12	148	0	38	80	41.3	10
AM132ML	230	16	265	5.0	300	763	M12	148	0	38	80	41.3	10
AM160	250	18	300	6.0	350	821	M16	206	0	42	110	45.3	12
AM180	250	18	300	6.0	350	821	M16	206	0	48	110	51.8	14
AM200	300	20	350	7.0	400	862	M16	247	0	55	110	59.3	16
AM225	350	22	400	7.0	450	877	M16	262	0	60	140	64.4	18
AM250	450	25	500	7.0	550	951	M16	336	19	65	140	69.4	18
AM280	450	25	500	7.0	550	951	M16	336	19	75	140	79.9	20

38 027 01 01

KAZ127..

<=AM200 >=AM225

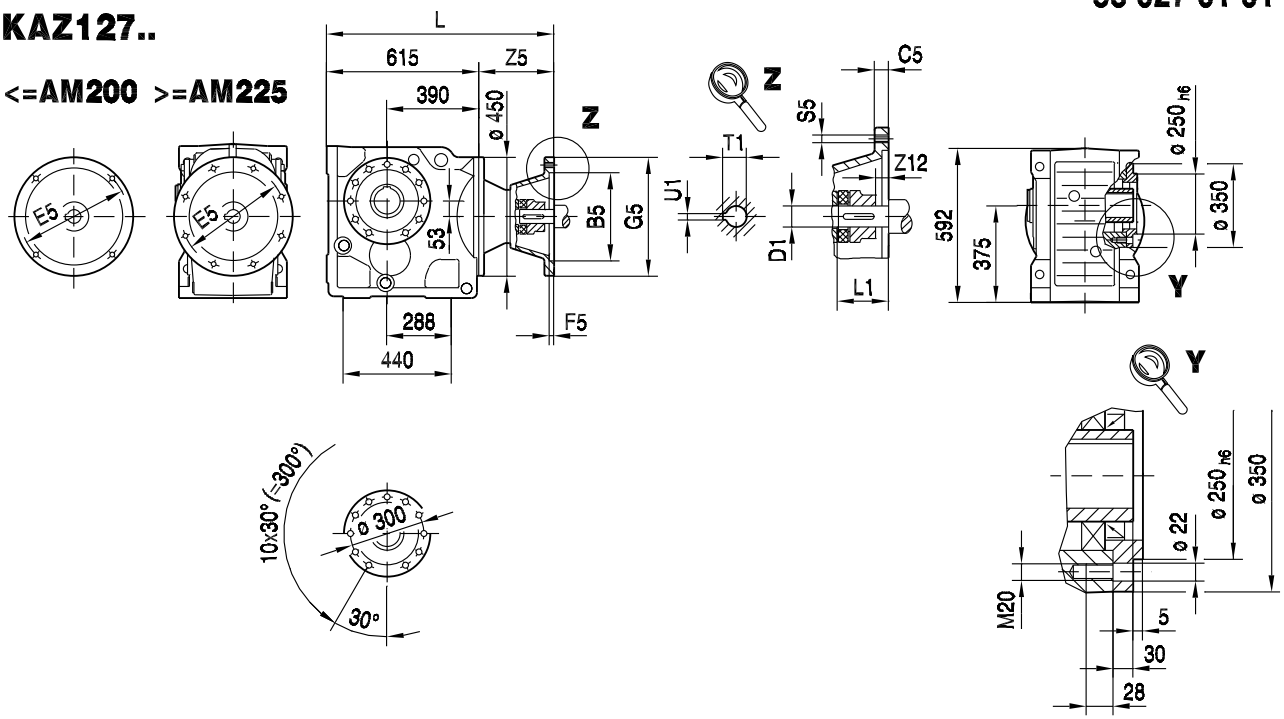

KAZ127..

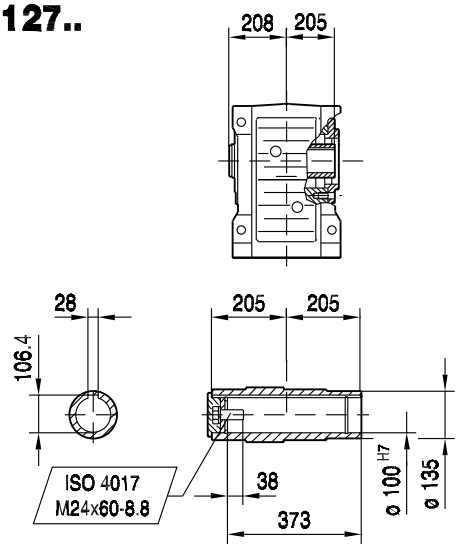

KHZ127..

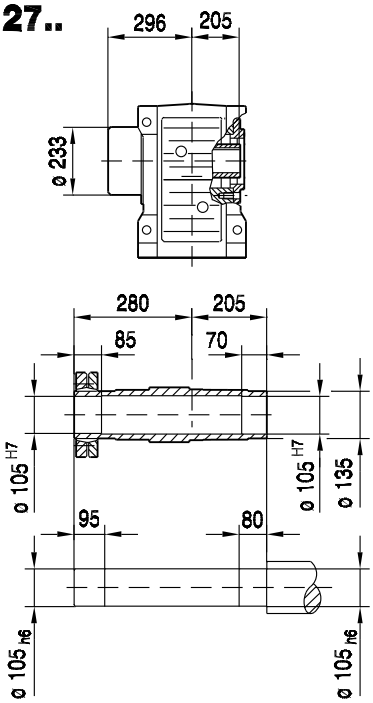

(→ 130)	B5	C5	E5	F5	G5	L	S5	Z5	Z12	D1	L1	T1	U1
AM132S/M	230	16	265	5.0	300	763	M12	148	0	38	80	41.3	10
AM132ML	230	16	265	5.0	300	763	M12	148	0	38	80	41.3	10
AM160	250	18	300	6.0	350	821	M16	206	0	42	110	45.3	12
AM180	250	18	300	6.0	350	821	M16	206	0	48	110	51.8	14
AM200	300	20	350	7.0	400	862	M16	247	0	55	110	59.3	16
AM225	350	22	400	7.0	450	877	M16	262	0	60	140	64.4	18
AM250	450	25	500	7.0	550	951	M16	336	19	65	140	69.4	18
AM280	450	25	500	7.0	550	951	M16	336	19	75	140	79.9	20

33 005 00 07

KT127..

<=AM200 >=AM225

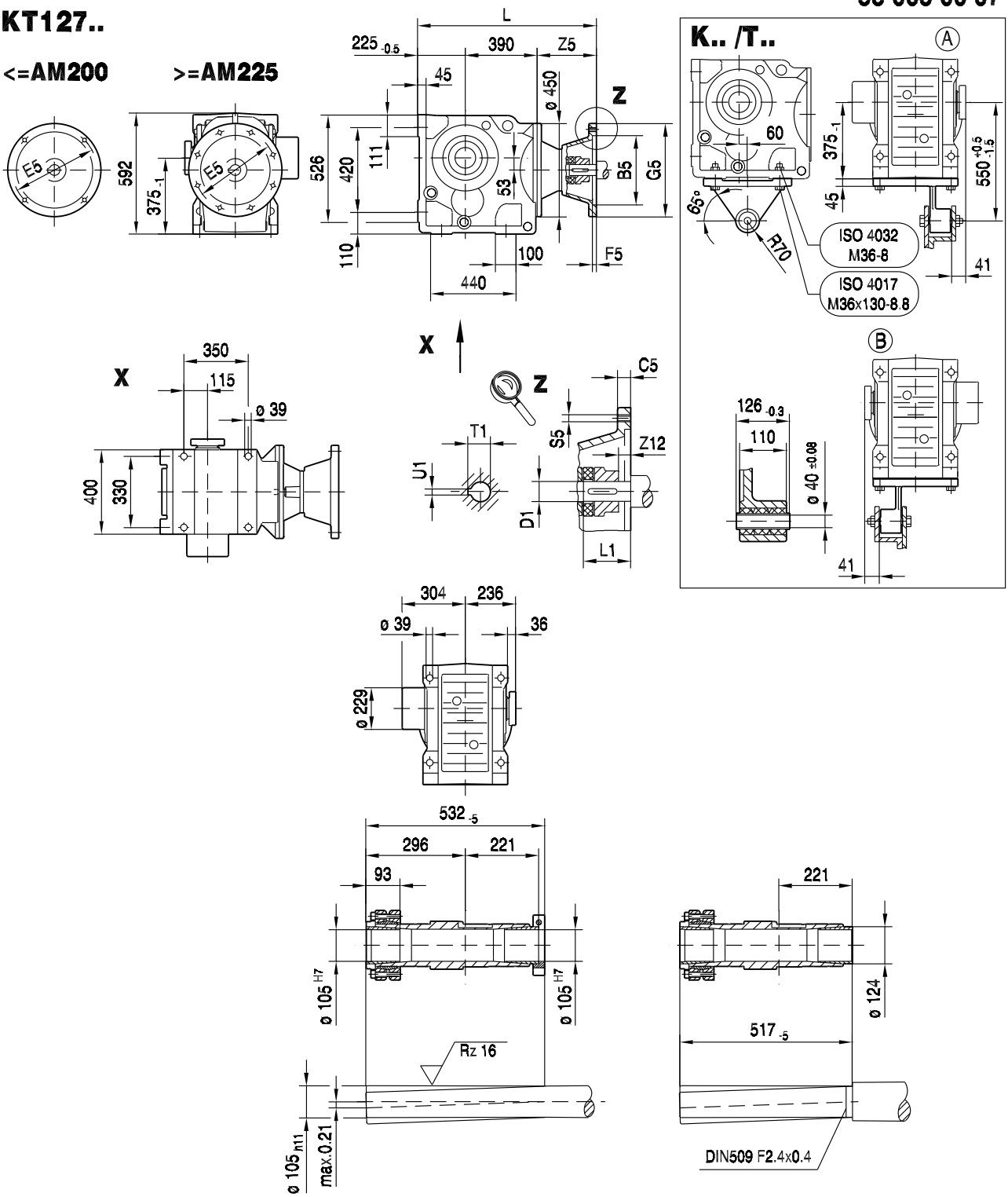

(→ 130)	B5	C5	E5	F5	G5	L	S5	Z5	Z12	D1	L1	T1	U1
AM132S/M	230	16	265	5.0	300	763	M12	148	0	38	80	41.3	10
AM132ML	230	16	265	5.0	300	763	M12	148	0	38	80	41.3	10
AM160	250	18	300	6.0	350	821	M16	206	0	42	110	45.3	12
AM180	250	18	300	6.0	350	821	M16	206	0	48	110	51.8	14
AM200	300	20	350	7.0	400	862	M16	247	0	55	110	59.3	16
AM225	350	22	400	7.0	450	877	M16	262	0	60	140	64.4	18
AM250	450	25	500	7.0	550	951	M16	336	19	65	140	69.4	18
AM280	450	25	500	7.0	550	951	M16	336	19	75	140	79.9	20

33 028 01 01

K157..

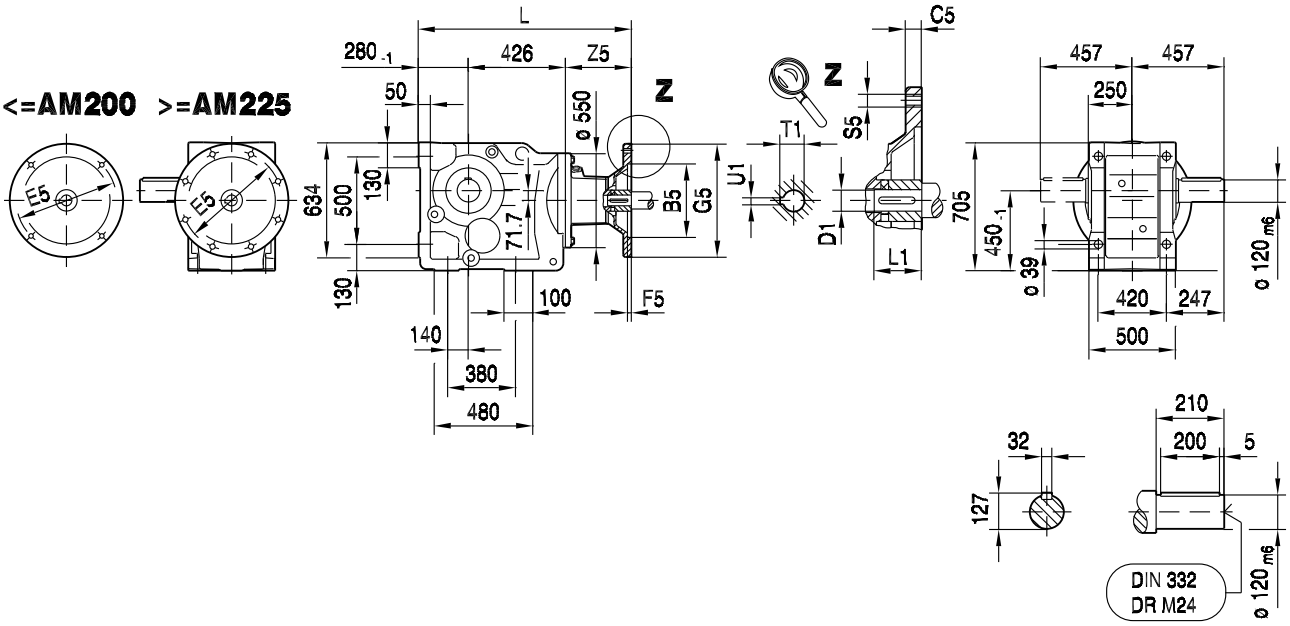

KA157B..

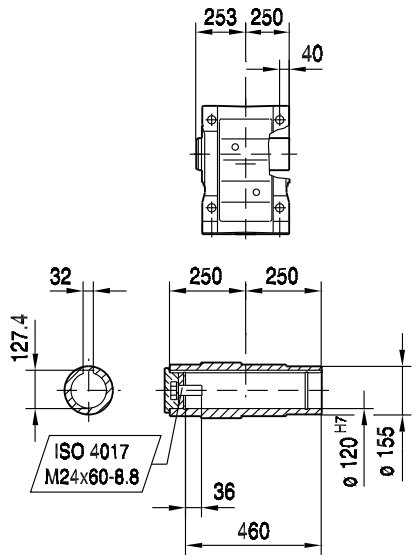

KH157B..

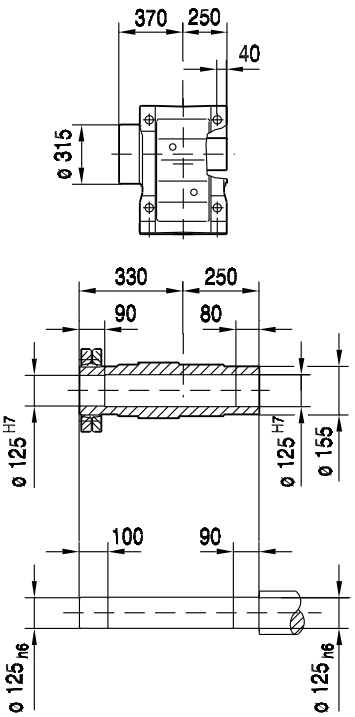

(→ 130)	B5	C5	E5	F5	G5	L	S5	Z5	Z12	D1	L1	T1	U1
AM160	250	18	300	6.0	350	904	M16	198	0	42	110	45.3	12
AM180	250	18	300	6.0	350	904	M16	198	0	48	110	51.8	14
AM200	300	20	350	7.0	400	945	M16	239	0	55	110	59.3	16
AM225	350	22	400	7.0	450	960	M16	254	0	60	140	64.4	18
AM250	450	25	500	7.0	550	1034	M16	328	19	65	140	69.4	18
AM280	450	25	500	7.0	550	1034	M16	328	19	75	140	79.9	20

33 029 01 01

KF157..

<=AM200 >=AM225

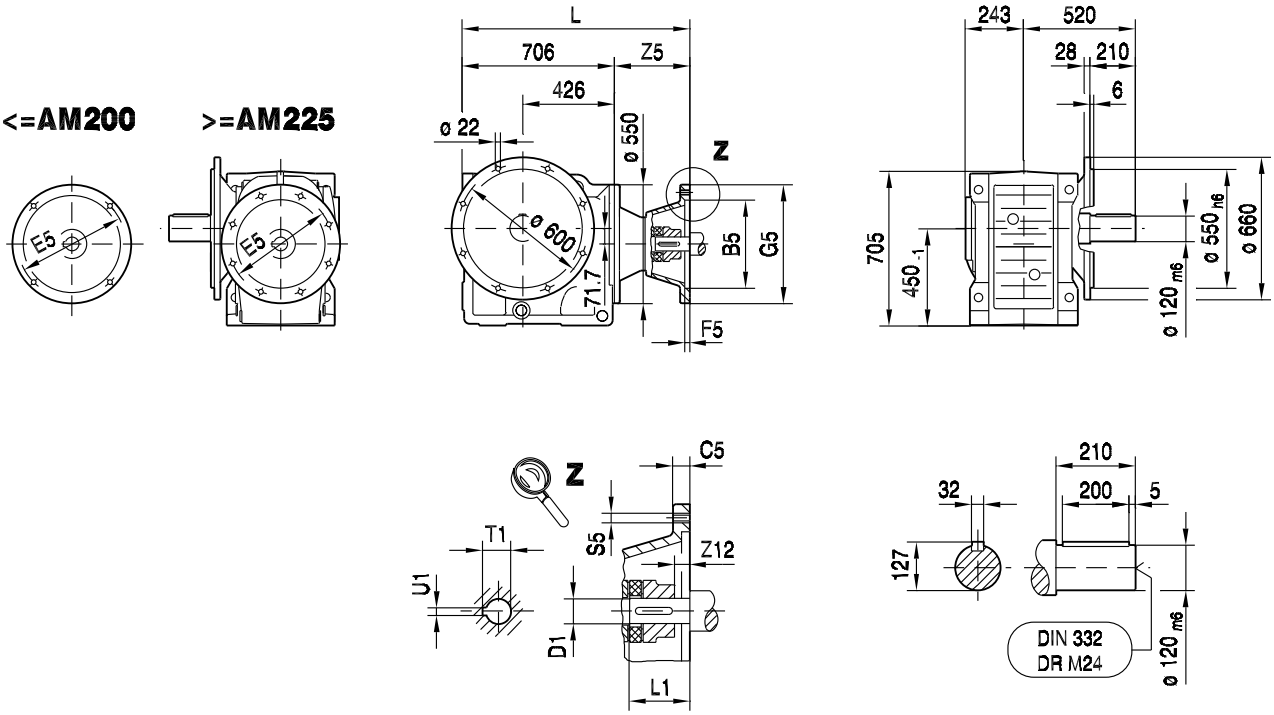

10

KAF157..

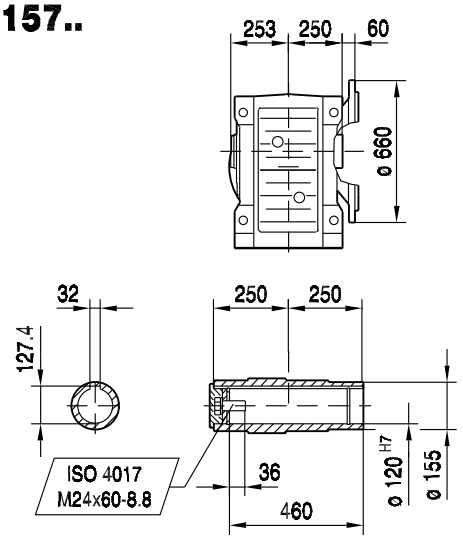

KHF157..

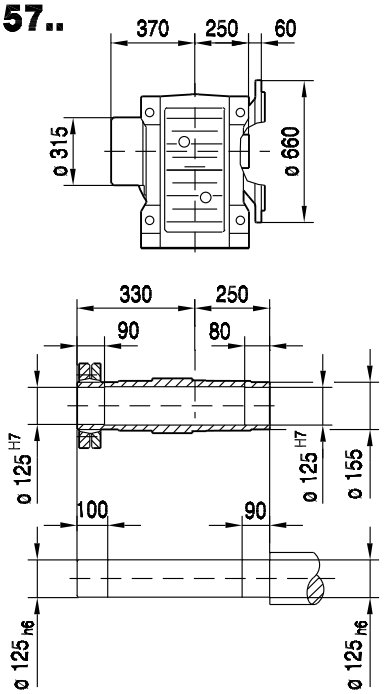

(→ 130)	B5	C5	E5	F5	G5	L	S5	Z5	Z12	D1	L1	T1	U1
AM160	250	18	300	6.0	350	904	M16	198	0	42	110	45.3	12
AM180	250	18	300	6.0	350	904	M16	198	0	48	110	51.8	14
AM200	300	20	350	7.0	400	945	M16	239	0	55	110	59.3	16
AM225	350	22	400	7.0	450	960	M16	254	0	60	140	64.4	18
AM250	450	25	500	7.0	550	1034	M16	328	19	65	140	69.4	18
AM280	450	25	500	7.0	550	1034	M16	328	19	75	140	79.9	20

38 028 01 01

KA157..

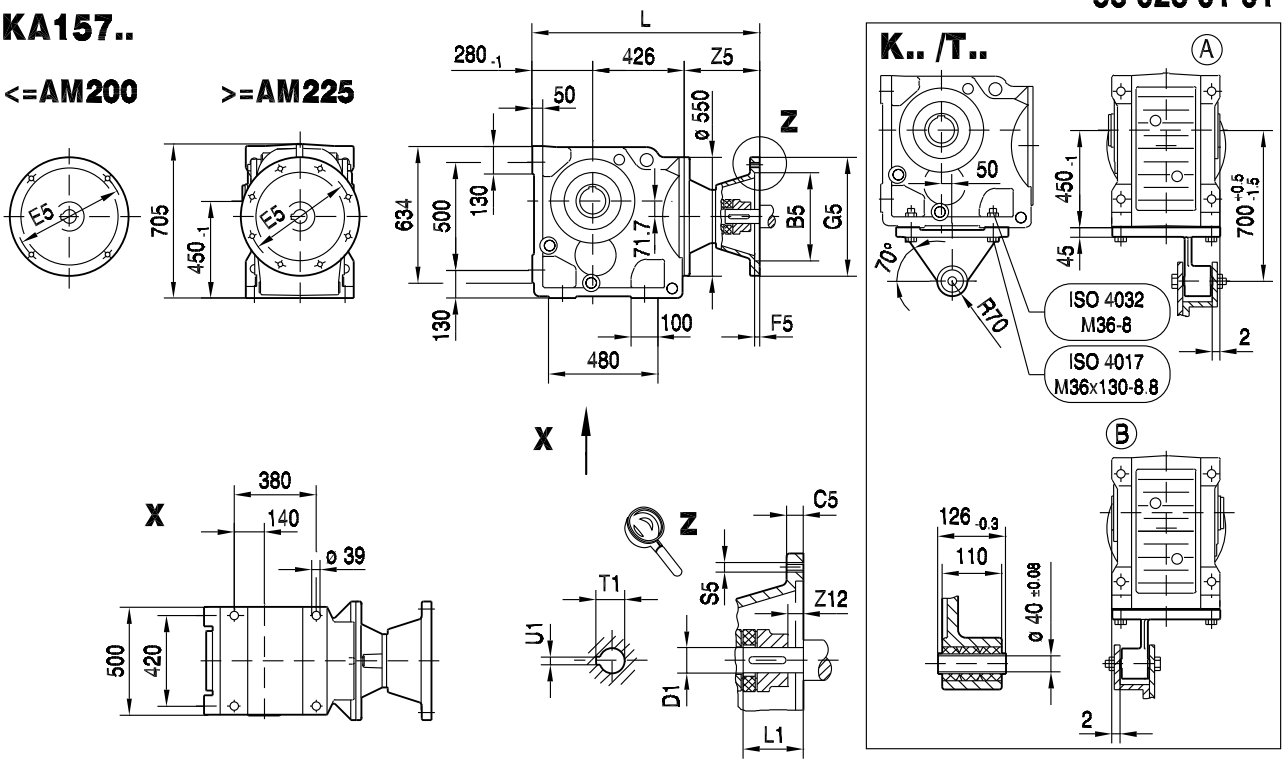

KA157..

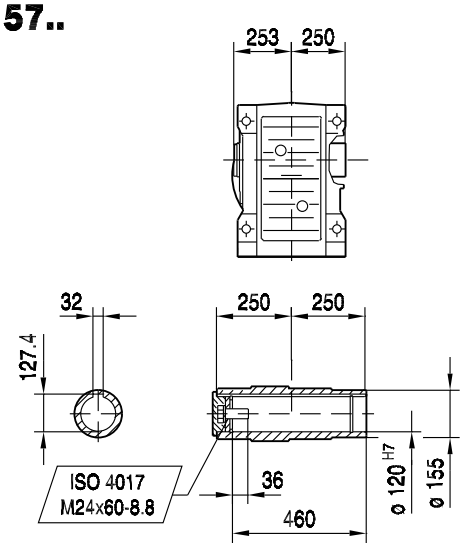

KH157..

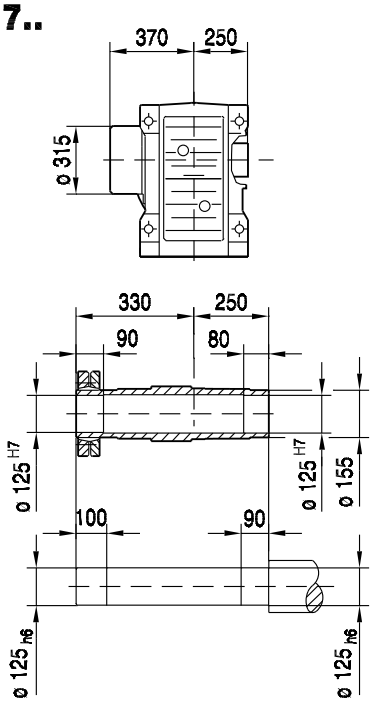

(→ 130)	B5	C5	E5	F5	G5	L	S5	Z5	Z12	D1	L1	T1	U1
AM160	250	18	300	6.0	350	904	M16	198	0	42	110	45.3	12
AM180	250	18	300	6.0	350	904	M16	198	0	48	110	51.8	14
AM200	300	20	350	7.0	400	945	M16	239	0	55	110	59.3	16
AM225	350	22	400	7.0	450	960	M16	254	0	60	140	64.4	18
AM250	450	25	500	7.0	550	1034	M16	328	19	65	140	69.4	18
AM280	450	25	500	7.0	550	1034	M16	328	19	75	140	79.9	20

38 029 01 01

KAZ157..

<=AM200 >=AM225

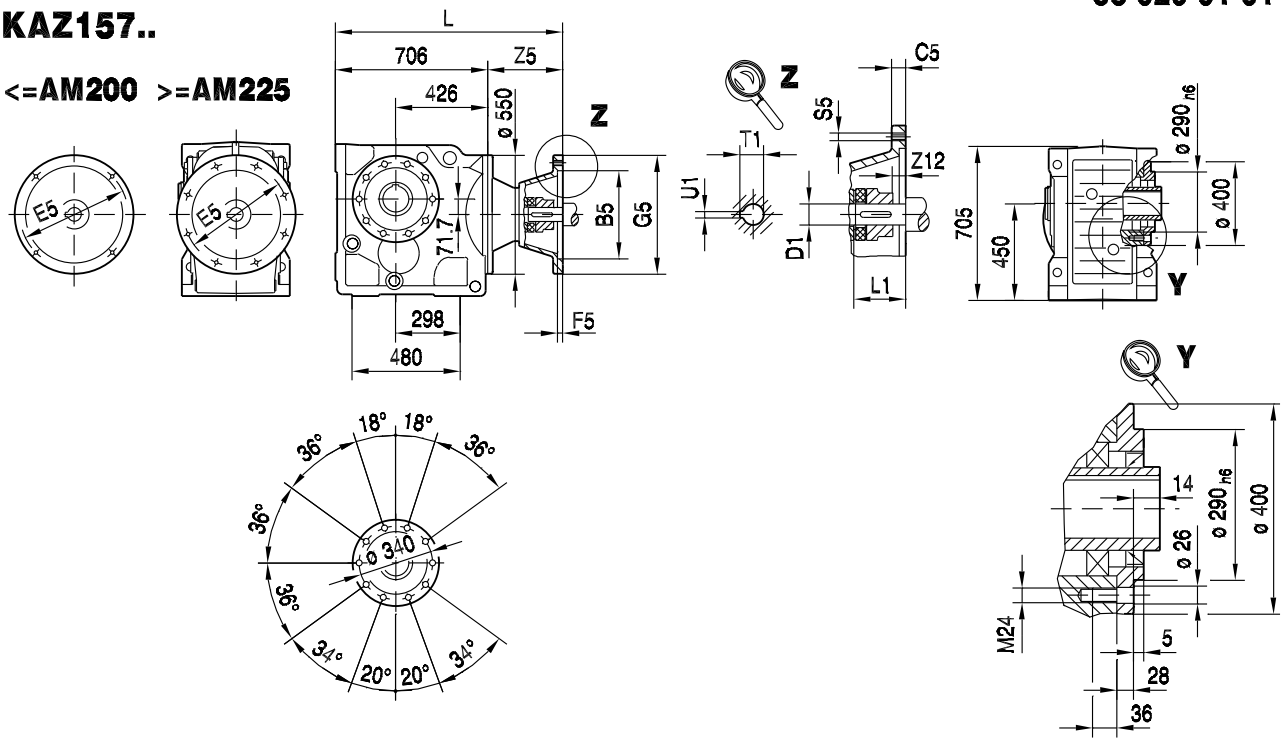

10

KAZ157..

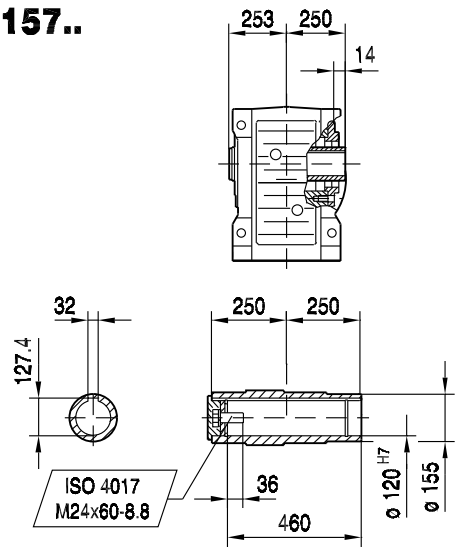

KHZ157..

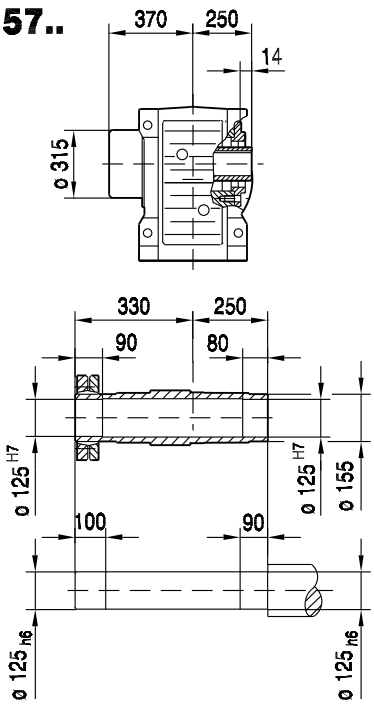

(→ 130)	B5	C5	E5	F5	G5	L	S5	Z5	Z12	D1	L1	T1	U1
AM160	250	18	300	6.0	350	904	M16	198	0	42	110	45.3	12
AM180	250	18	300	6.0	350	904	M16	198	0	48	110	51.8	14
AM200	300	20	350	7.0	400	945	M16	239	0	55	110	59.3	16
AM225	350	22	400	7.0	450	960	M16	254	0	60	140	64.4	18
AM250	450	25	500	7.0	550	1034	M16	328	19	65	140	69.4	18
AM280	450	25	500	7.0	550	1034	M16	328	19	75	140	79.9	20

33 006 00 07

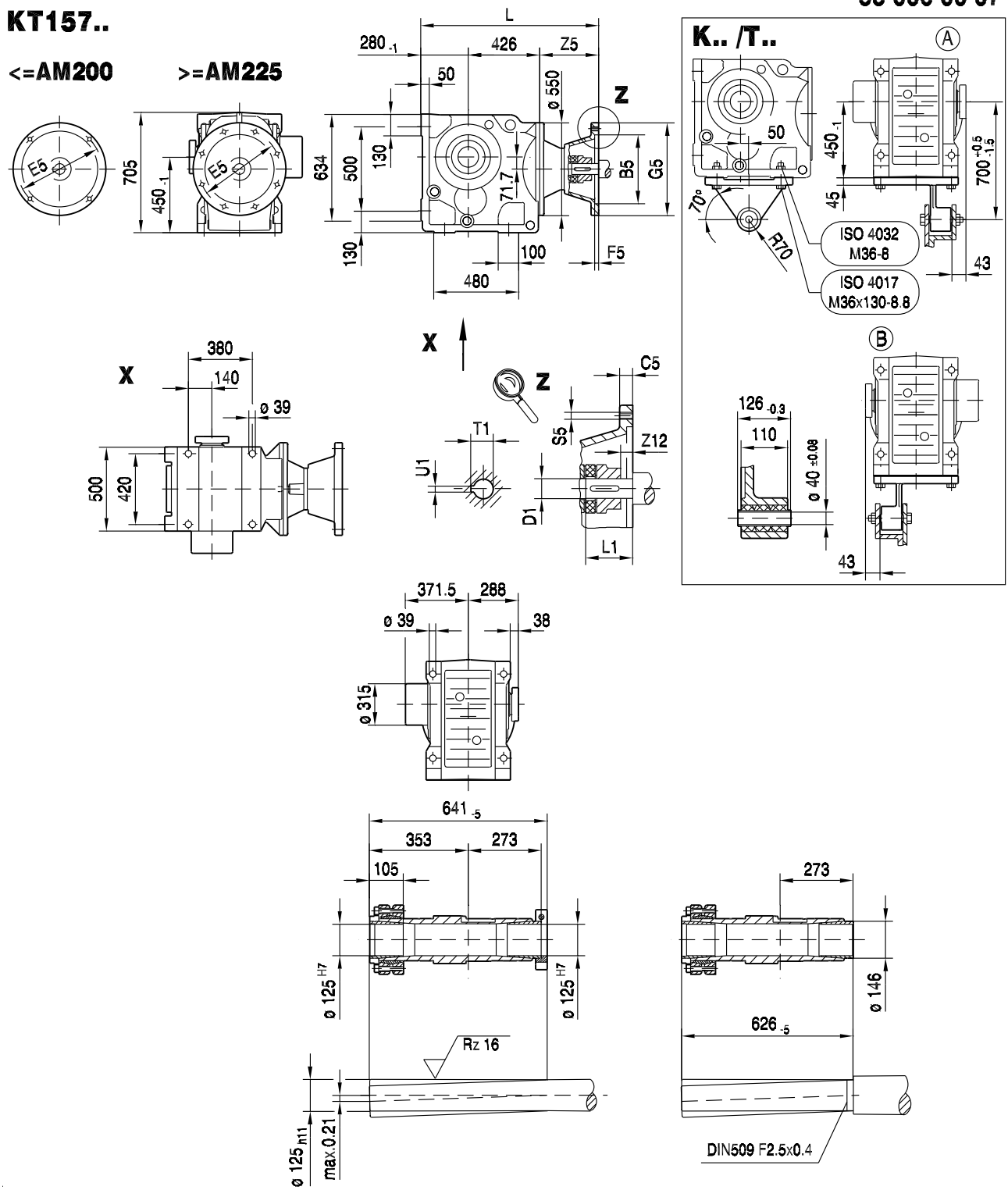

(→ 130)	B5	C5	E5	F5	G5	L	S5	Z5	Z12	D1	L1	T1	U1
AM160	250	18	300	6.0	350	904	M16	198	0	42	110	45.3	12
AM180	250	18	300	6.0	350	904	M16	198	0	48	110	51.8	14
AM200	300	20	350	7.0	400	945	M16	239	0	55	110	59.3	16
AM225	350	22	400	7.0	450	960	M16	254	0	60	140	64.4	18
AM250	450	25	500	7.0	550	1034	M16	328	19	65	140	69.4	18
AM280	450	25	500	7.0	550	1034	M16	328	19	75	140	79.9	20

33 030 01 01

K167..

<=AM200 >=AM225

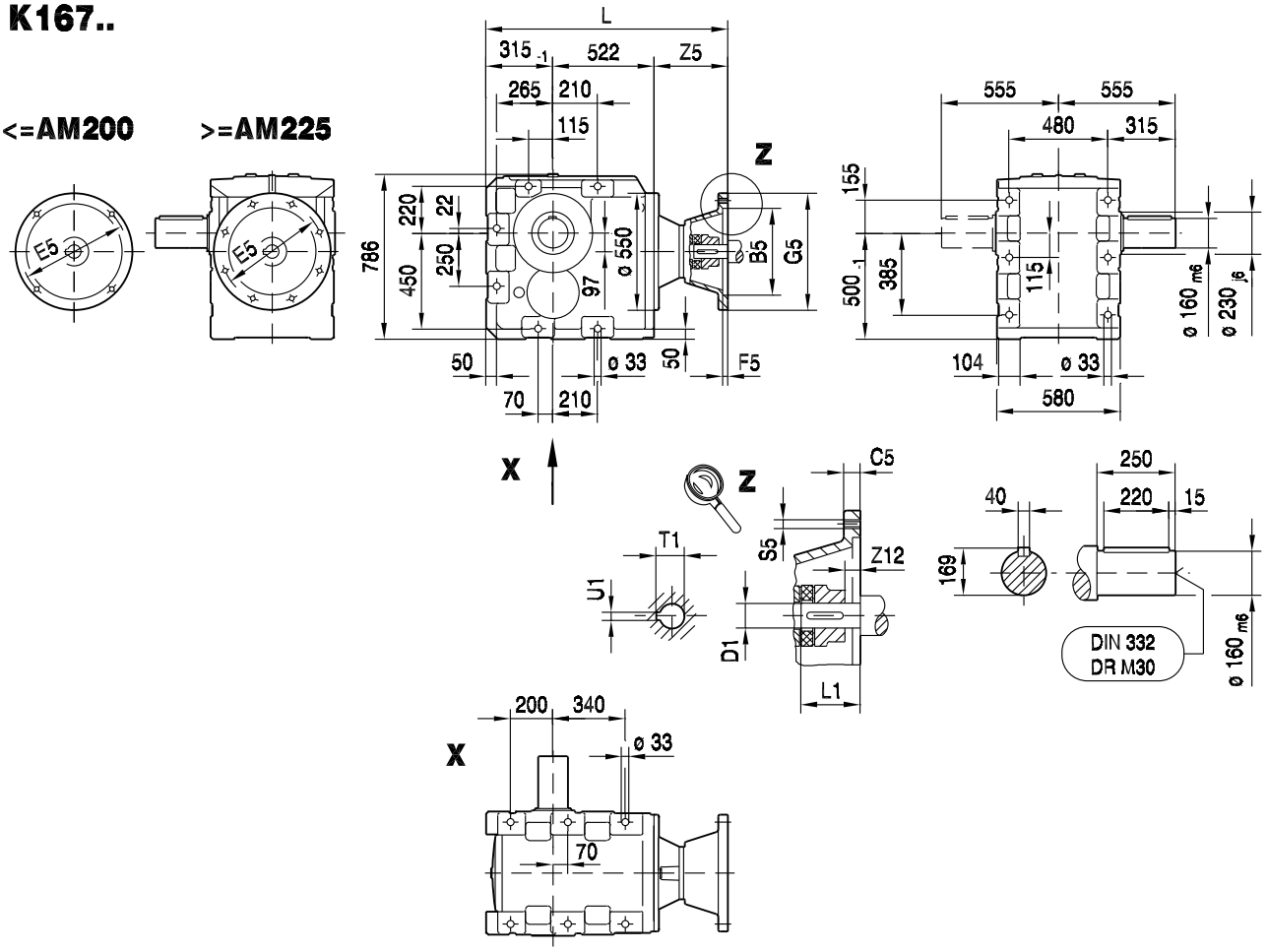

KH167B..

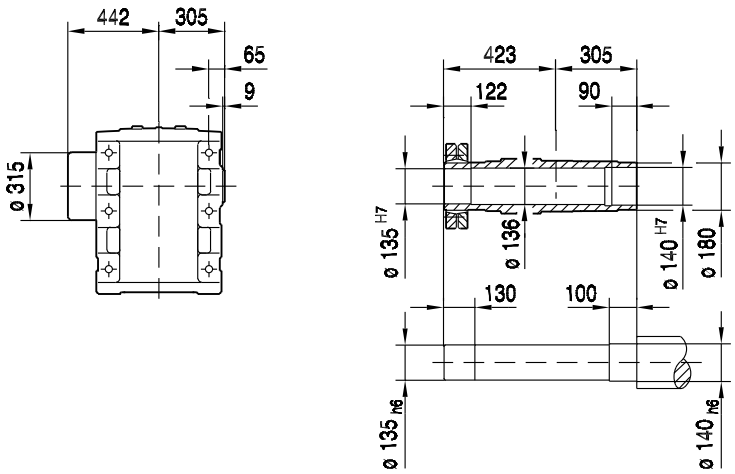

(→ 130)	B5	C5	E5	F5	G5	L	S5	Z5	Z12	D1	L1	T1	U1
AM160	250	18	300	6.0	350	1035	M16	198	0	42	110	45.3	12
AM180	250	18	300	6.0	350	1035	M16	198	0	48	110	51.8	14
AM200	300	20	350	7.0	400	1076	M16	239	0	55	110	59.3	16
AM225	350	22	400	7.0	450	1091	M16	254	0	60	140	64.4	18
AM250	450	25	500	7.0	550	1165	M16	328	19	65	140	69.4	18
AM280	450	25	500	7.0	550	1165	M16	328	19	75	140	79.9	20

38 030 01 01

KH167..

<=AM200 >=AM225

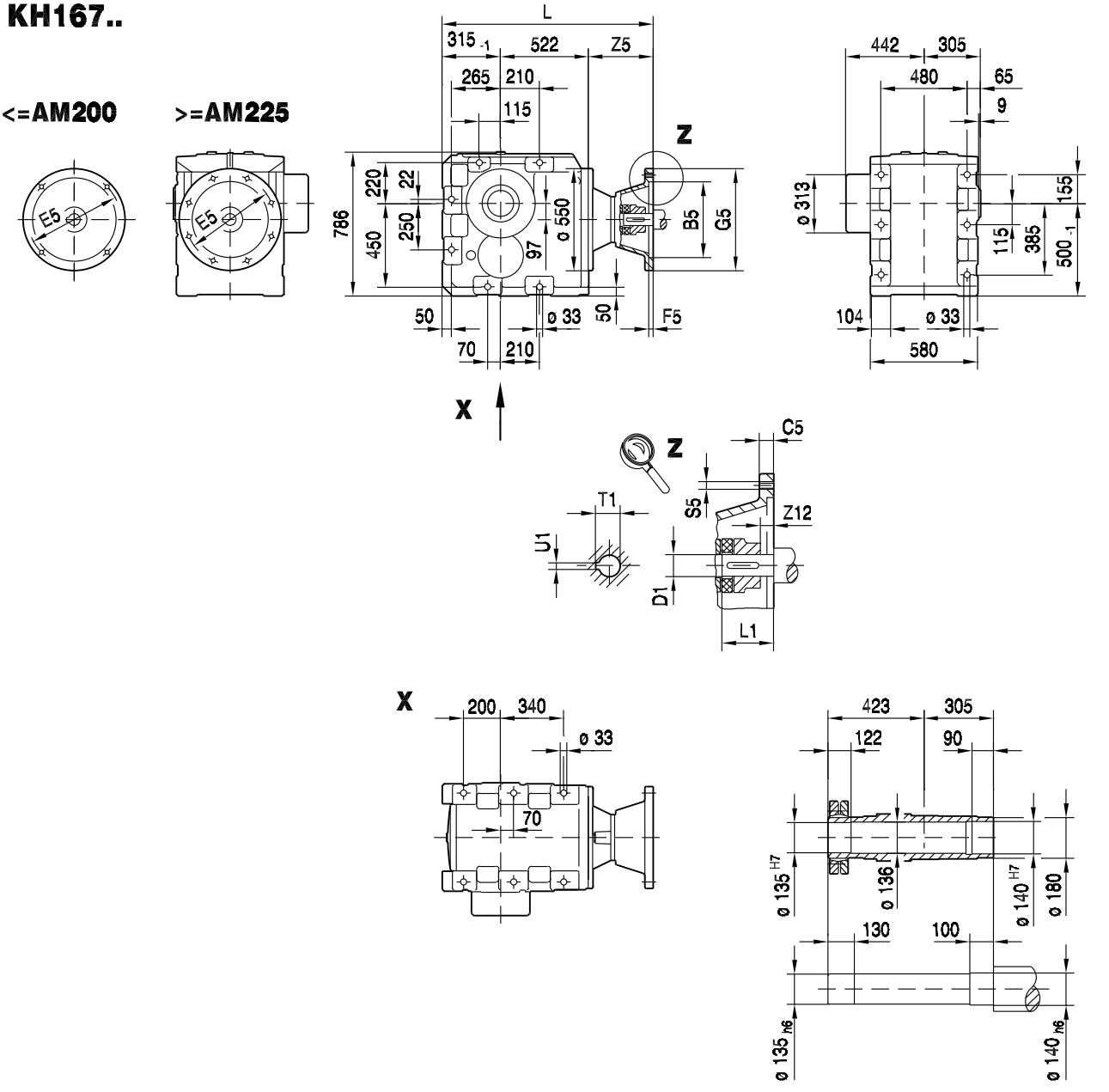

(→ 130)	B5	C5	E5	F5	G5	L	S5	Z5	Z12	D1	L1	T1	U1
AM160	250	18	300	6.0	350	1035	M16	198	0	42	110	45.3	12
AM180	250	18	300	6.0	350	1035	M16	198	0	48	110	51.8	14
AM200	300	20	350	7.0	400	1076	M16	239	0	55	110	59.3	16
AM225	350	22	400	7.0	450	1091	M16	254	0	60	140	64.4	18
AM250	450	25	500	7.0	550	1165	M16	328	19	65	140	69.4	18
AM280	450	25	500	7.0	550	1165	M16	328	19	75	140	79.9	20

33 031 01 01

K187..

<=AM200 >=AM225

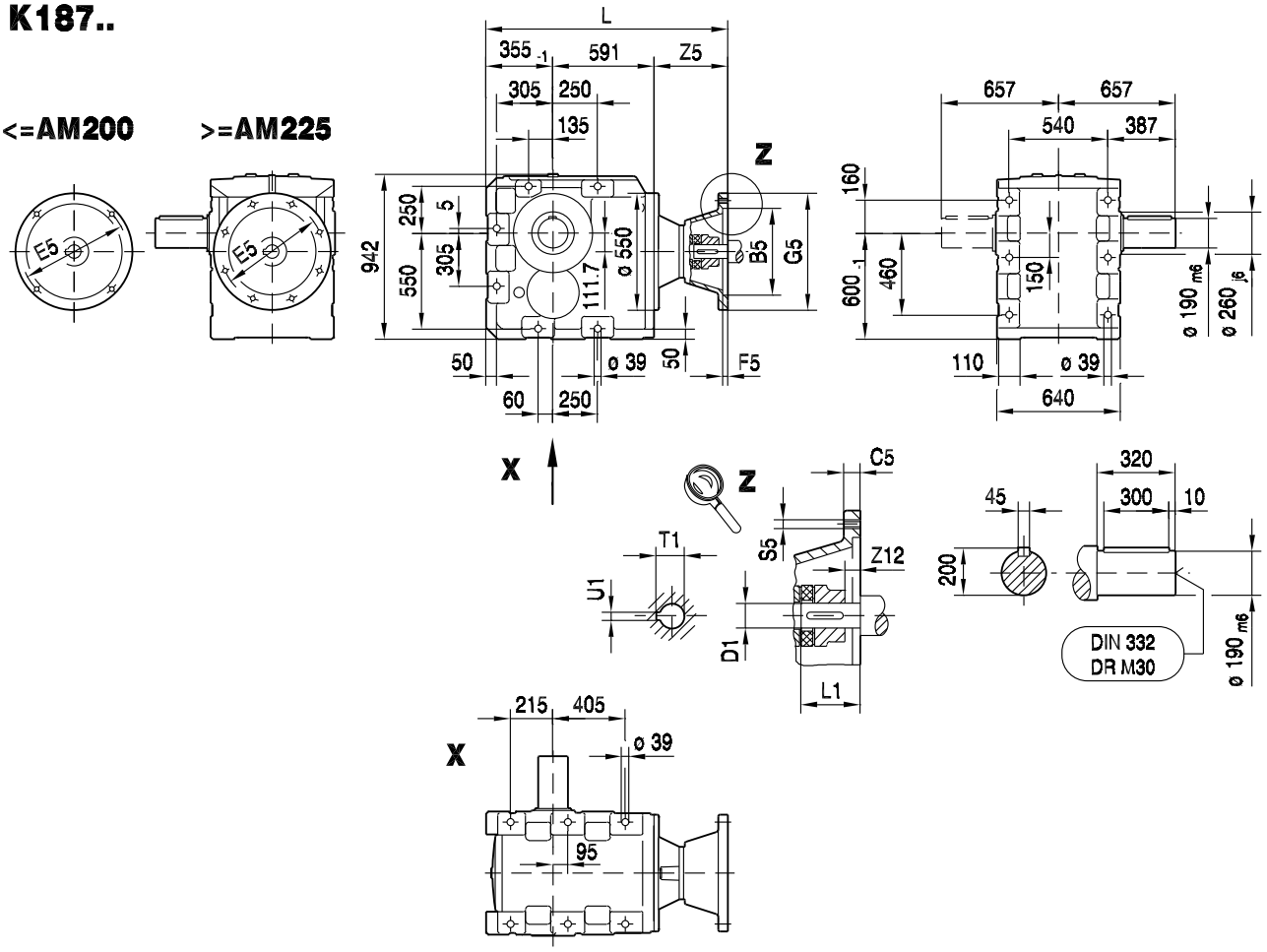

KH187B..

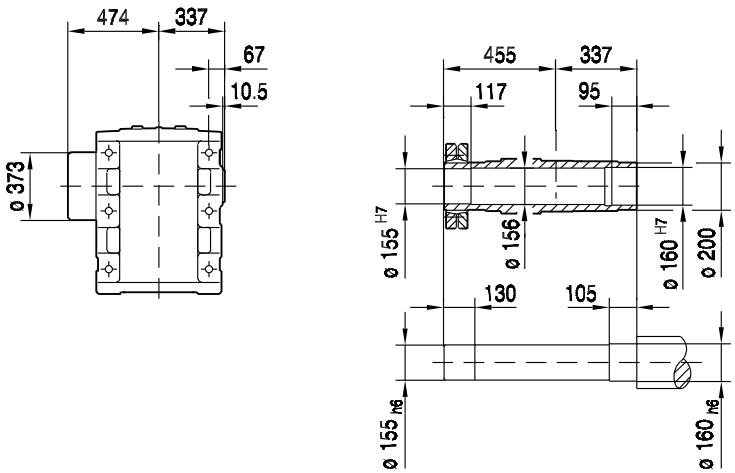

(→ 130)	B5	C5	E5	F5	G5	L	S5	Z5	Z12	D1	L1	T1	U1
AM160	250	18	300	6.0	350	1144	M16	198	0	42	110	45.3	12
AM180	250	18	300	6.0	350	1144	M16	198	0	48	110	51.8	14
AM200	300	20	350	7.0	400	1185	M16	239	0	55	110	59.3	16
AM225	350	22	400	7.0	450	1200	M16	254	0	60	140	64.4	18
AM250	450	25	500	7.0	550	1274	M16	328	19	65	140	69.4	18
AM280	450	25	500	7.0	550	1274	M16	328	19	75	140	79.9	20

38 031 01 01

KH187..

<=AM200 >=AM225

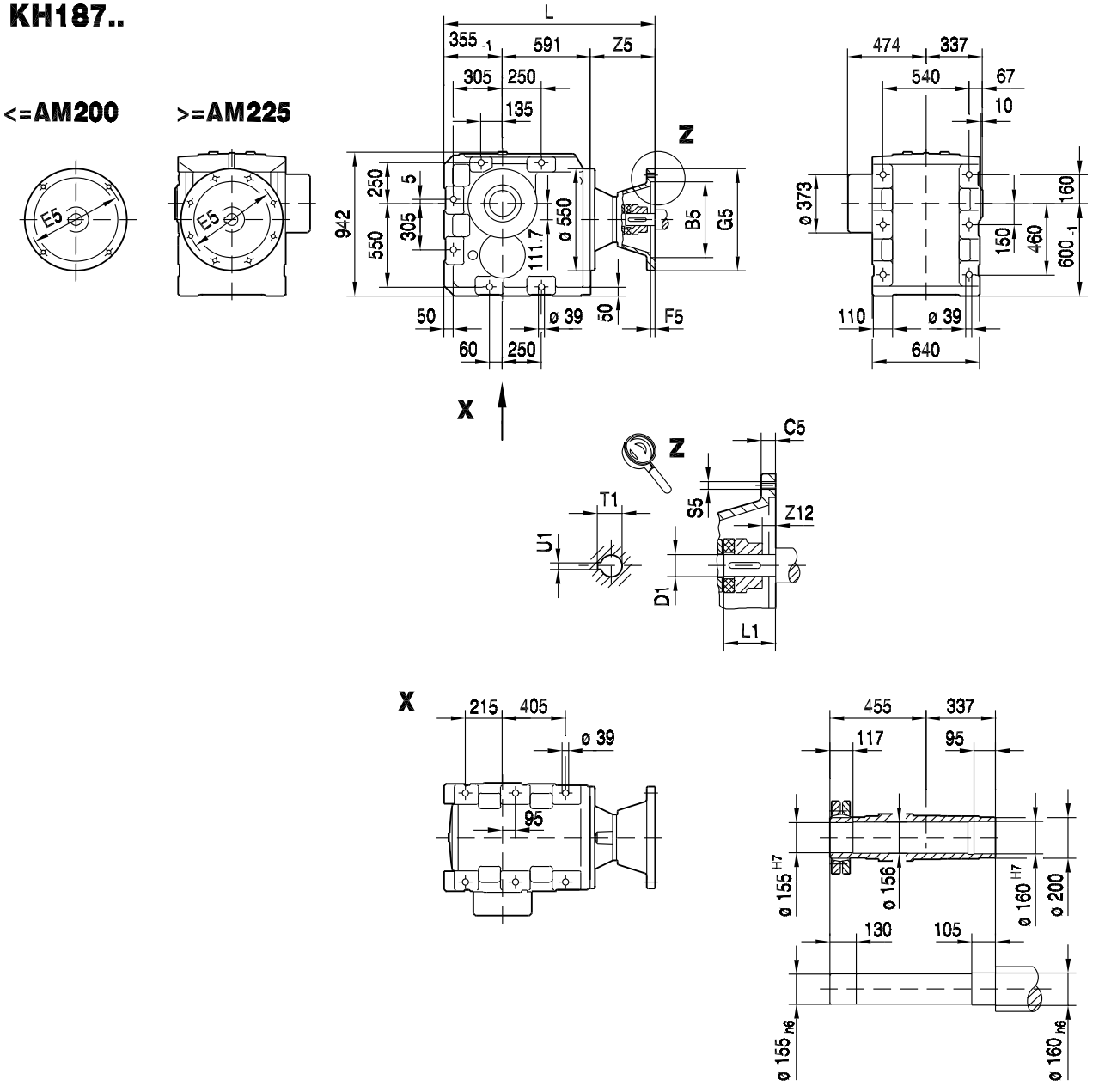

(→ 130)	B5	C5	E5	F5	G5	L	S5	Z5	Z12	D1	L1	T1	U1
AM160	250	18	300	6.0	350	1144	M16	198	0	42	110	45.3	12
AM180	250	18	300	6.0	350	1144	M16	198	0	48	110	51.8	14
AM200	300	20	350	7.0	400	1185	M16	239	0	55	110	59.3	16
AM225	350	22	400	7.0	450	1200	M16	254	0	60	140	64.4	18
AM250	450	25	500	7.0	550	1274	M16	328	19	65	140	69.4	18
AM280	450	25	500	7.0	550	1274	M16	328	19	75	140	79.9	20

10.5 K.. AM.. (NEMA) [mm]

33 032 02 01

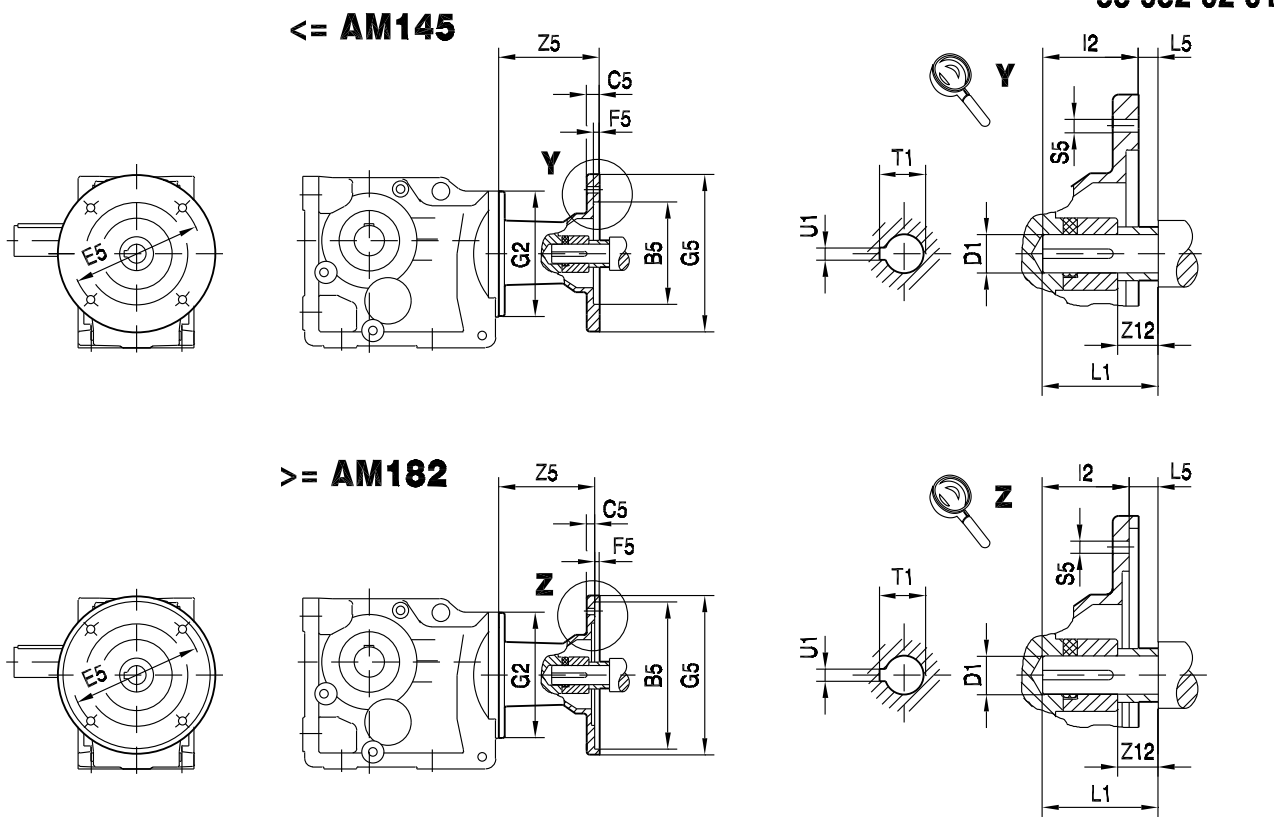

		B5	C5	E5	F5	G2	G5	I2	L5	S5	Z5	Z12	D1	L1	T1	U1
K..37	AM56	114.3	11	149.2	4.5	120	170	52.55	-4.8	10.5	93.5	16.5	15.875	47.75	18.1	4.76
	AM143		12					54.1	3.05		117	14.5	22.225	57.15	24.7	
	AM145															
K..47	AM56	114.3	11	149.2	4.5	160	170	52.55	-4.8	10.5	87	16.5	15.875	47.75	18.1	4.76
	AM143		12					54.1	3.05		110.5	14.5	22.225	57.15	24.7	
	AM145															
	AM182	215.9	10	184	5		228	66.85	3	15	147.5	16.5	28.575	69.85	31.7	6.35
	AM184															
K..57K..67	AM56	114.3	11	149.2	4.5	160	170	52.55	-4.8	10.5	87	16.5	15.875	47.75	18.1	4.76
	AM143		12					54.1	3.05		110.5	14.5	22.225	57.15	24.7	
	AM145															
	AM182	215.9	10	184	5		228	66,85	3	15	147.5	16.5	28.575	69.85	31.7	6.35
	AM184															
	AM213/215		11					79.55	6.3		200.5	15.8	34.925	85.85	38.7	7.94
K..77	AM56	114.3	11	149.2	4.5	200	170	52.55	-4.8	10.5	81	16.5	15.875	47.75	18.1	4.76
	AM143		12					54.1	3.05		103.5	14.5	22.225	57.15	24.7	
	AM145															
	AM182	215.9	10	184	5		228	66,85	3	15	139.5	16.5	28.575	69.85	31.7	6.35
	AM184															
	AM213/215		11					79.55	6.3		188.5	15.8	34.925	85.85	38.7	7.94
K..87	AM143	114.3	12	149.2	4.5	250	170	54.1	3.05	10.5	98.5	14.5	22.225	57.15	24.7	4.76
	AM145															
	AM182	215.9	10	184	5		228	66,85	3	15	134.5	16.5	28.575	69.85	31.7	6.35
	AM184															
	AM213/215		11					79.55	6.3		183.5	15.8	34.925	85.85	38.7	7.94
	AM254/256		12					95.3	6.3		234	9	41.275	101.6	45.8	9.53
	AM284/286	266.7	15	228.6	5		286	111.05	6.3	15	241	15.8	47.625	117.35	53.4	12.7

33 033 02 01

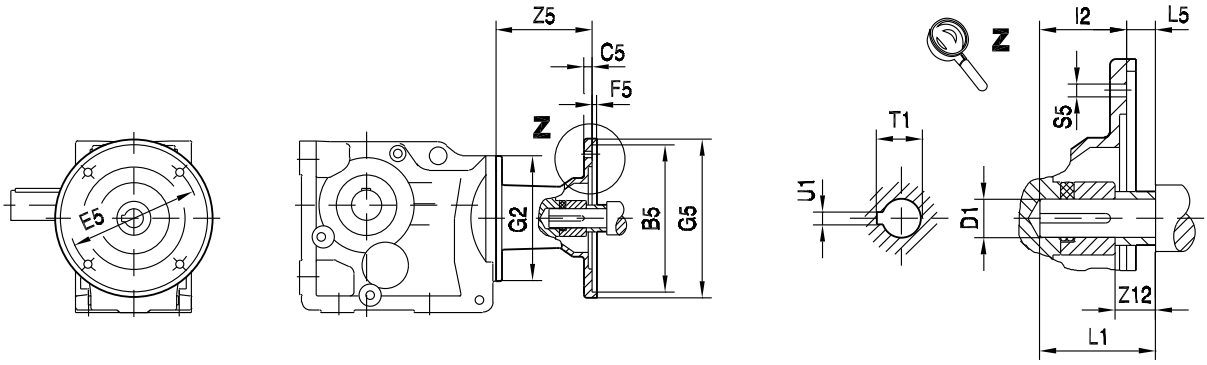

		B5	C5	E5	F5	G2	G5	I2	L5	S5	Z5	Z12	D1	L1	T1	U1
	AM182		10					66.85	3		129.5	16.5	28.575	69.85	31.7	6.35
	AM184	215.9		184	5		228			15						
	AM213/215		11					79.55	6.3		178.5	15.8	34.925	85.85	38.7	7.94
K..97	**AM254/256**		12			300		95.3	6.3		229	9	41.275	101.6	45.8	9.53
	AM284/286	266.7	20	228.6	5		286	111.05	6.3	15	236	15.8	47.625	117.35	53.4	12.7
	AM324/326	317.5	17	279.4	5		356	127.05	6.3	17.5	296	34.8	53.975	133.35	60	12.7
	AM364/365							143.05					60.325	149.35	67.6	15.875
	AM182		10					66.85	3		123.5	16.5	28.575	69.85	31.7	6.35
	AM184	215.9		184	5		228			15						
	AM213/215		11					79.55	6.3		172.5	15.8	34.925	85.85	38.7	7.94
K..107	**AM254/256**		12			350		95.3	6.3		223	9	41.275	101.6	45.8	9.53
	AM284/286	266.7	15	228.6	5		286	111.05	6.3	15	230	15.8	47.625	117.35	53.4	12.7
	AM324/326	317.5	17	279.4	5		356	127.05	6.3	17.5	290	34.8	53.975	133.35	60	12.7
	AM364/365							143.05					60.325	149.35	67.6	15.875
	AM213/215	215.9	11	184	5		228	79.55	6.3	15	157.5	15.8	34.925	85.85	38.7	7.94
	AM254/256		12					95.3	6.3		208	9	41.275	101.6	45.8	9.53
K..127	**AM284/286**	266.7	15	228.6	5	450	286	111.05	6.3	15	215	15.8	47.625	117.35	53.4	12.7
	AM324/326	317.5	17	279.4	5		356	127.05	6.3	17.5	275	34.8	53.975	133.35	60	12.7
	AM364/365							143.05					60.325	149.35	67.6	15.875
	AM254/256	215.9	12	184	5		228	95.3	6.3	15	200	9	41.275	101.6	45.8	9.53
K..157	**AM284/286**	266.7	15	228.6	5		286	111.05	6.3	15	207	15.8	47.625	117.35	53.4	12.7
K..167	**AM324/326**	317.5	17	279.4	5	550	356	127.05	6.3	17.5	267	34.8	53.975	133.35	60	12.7
K..187	**AM364/365**							143.05					60.325	149.35	67.6	15.875

10.6 K.. AR.. [mm]

K.. AR..

33 037 02 01

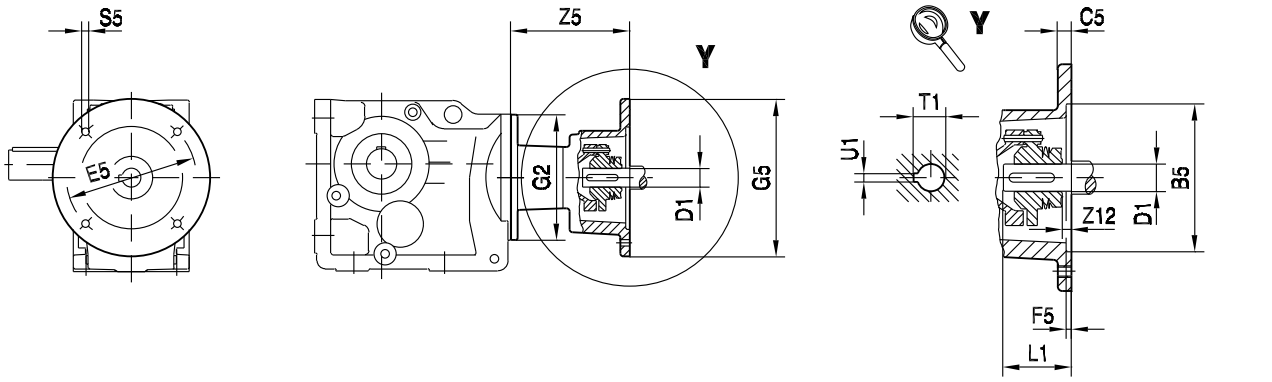

K.. AR../W

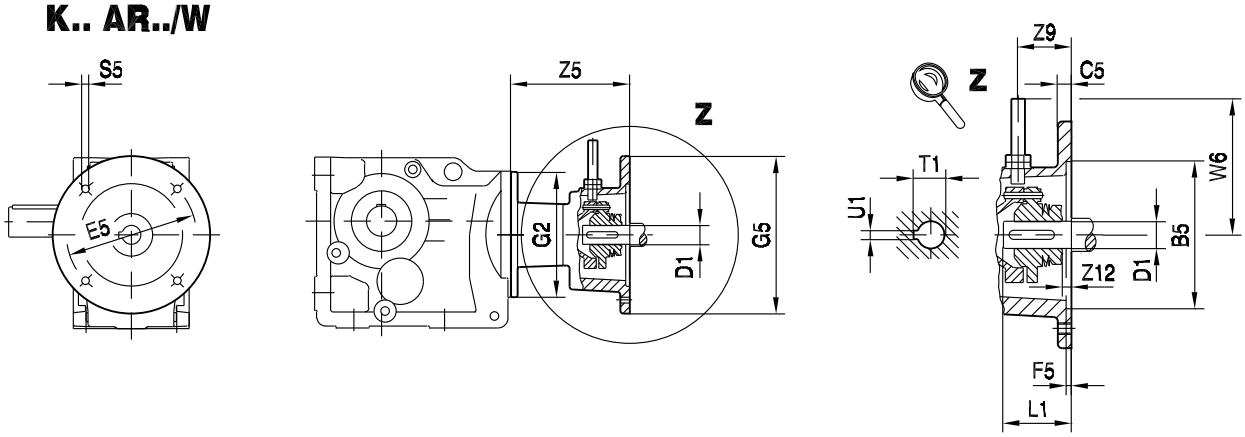

		B5	C5	E5	F5	G2	G5	S5	W6	Z5	Z9	Z12	D1	L1	T1	U1
K..37	AR71	110	10	130	3.5	120	160	M8	120	104	37	0	14	30	16.3	5
	AR80	130	12	165	4.5		200	M10		140.5			19	40	21.8	6
	AR90												24	50	27.3	8
K..47 K..57 K..67	AR71	110	10	130	3.5	160	160	M8	120	97.5	37	0	14	30	16.3	5
	AR80	130	12	165	4.5		200	M10		134			19	40	21.8	6
	AR90												24	50	27.3	8
	AR100	180	15	215	5		250	M12	130	174.5	52	5.5	28	60	31.3	8
	AR112															
K..77	AR71	110	10	130	3.5	200	160	M8	120	91.5	37	0	14	30	16.3	5
	AR80	130	12	165	4.5		200	M10		127			19	40	21.8	6
	AR90												24	50	27.3	8
	AR100	180	15	215	5		250	M12	130	166.5	52	5.5	28	60	31.3	8
	AR112															
	AR132S/M	230	16	265	5		300	M12	145	234	72	5	38	80	41.3	10
	AR132ML															
K..87	AR80	130	12	165	4.5	250	200	M10	120	122	37	0	19	40	21.8	6
	AR90												24	50	27.3	8
	AR100	180	15	215	5		250	M12	130	161.5	52	5.5	28	60	31.3	8
	AR112															
	AR132S/M	230	16	265	5		300	M12	145	229	72	5	38	80	41.3	10
	AR132ML															
	AR160	250	18	300	6		350	M16	165	306.5	105	35	42	110	45.3	12
	AR180												48	110	51.8	14

K.. AR..

33 038 02 01

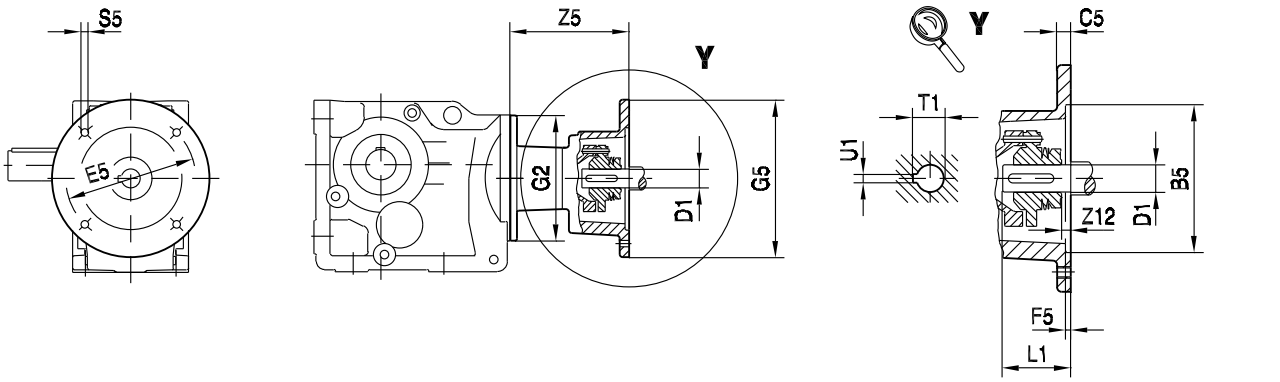

K.. AR../W

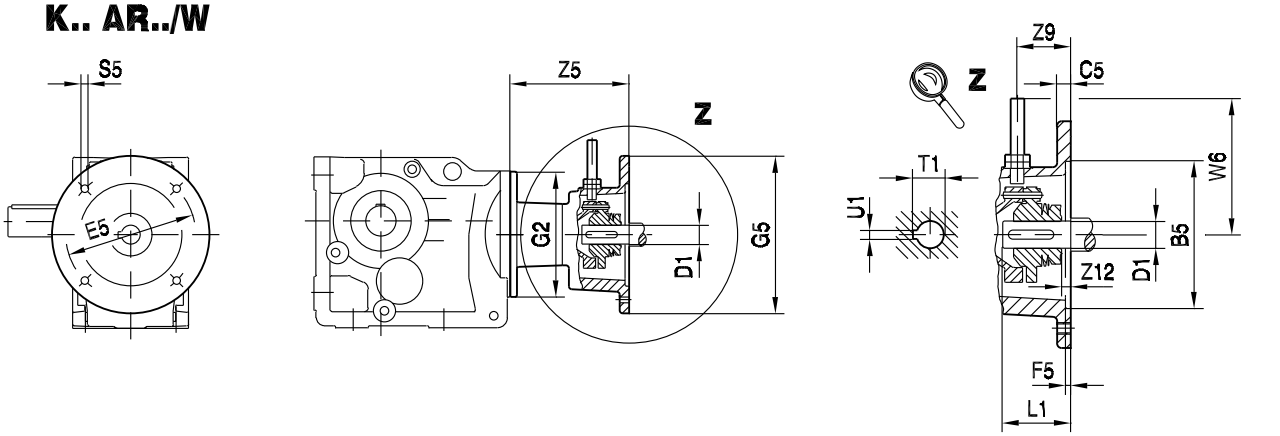

		B5	C5	E5	F5	G2	G5	S5	W6	Z5	Z9	Z12	D1	L1	T1	U1
K..97	AR100	180	15	215	5	300	250	M12	130	156.5	52	5.5	28	60	31.3	8
	AR112															
	AR132S/M	230	16	265	5		300	M12	145	224	72	5	38	80	41.3	10
	AR132ML															
	AR160	250	18	300	6		350	M16	165	301.5	105	35	42	110	45.3	12
	AR180												48	110	51.8	14
K..107	AR100	180	15	215	5	350	250	M12	130	150.5	52	5.5	28	60	31.3	8
	AR112															
	AR132S/M	230	16	265	5		300	M12	145	218	72	5	38	80	41.3	10
	AR132ML															
	AR160	250	18	300	6		350	M16	165	295.5	105	35	42	110	45.3	12
	AR180												48	110	51.8	14
K..127	AR132S/M	230	16	265	5	450	300	M12	145	203	72	5	38	80	41.3	10
	AR132ML															
	AR160	250	18	300	6		350	M16	165	280.5	105	35	42	110	45.3	12
	AR180												48	110	51.8	14
K..157 K..167 K..187	AR160	250	18	300	6	550	350	M16	165	272.5	105	35	42	110	45.3	12
	AR180												48	110	51.8	14

10.7 K.. AT.. [mm]

36 001 02 01

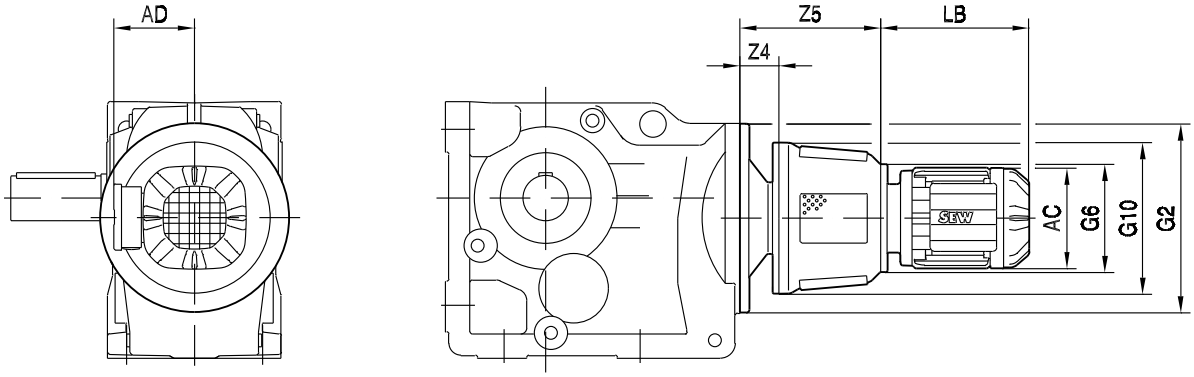

			AC	AD	G6	G10	LB	Z4	Z5	G2
K..67	AT311 AT312	DR.71S	139	119	200	280	198	97	286	160
		DR.71M					223			
		DR.80S	156	128			241			
		DR.80M					272			
		DR.90M	179	140			266			
		DR.90L					286			
		DR.100M	197	157			316			
		DR.100L/LC					346			
	AT321 AT322	DR.90M	179	140	250	350	266	97	333	
		DR.90L					286			
		DR.100M	197	157			316			
		DR.100L/LC					346			
K..77	AT311 AT312	DR.71S	139	119	200	280	198	89	278	200
		DR.71M					223			
		DR.80S	156	128			241			
		DR.80M					272			
		DR.90M	179	140			266			
		DR.90L					286			
		DR.100M	197	157			316			
		DR.100L/LC					346			
	AT421 AT422	DR.90M	179	140	250	350	266	133	368	
		DR.90L					286			
		DR.100M	197	157			316			
		DR.100L/LC					346			
		DR.112M	221	170			352			
		DR.132S					387			
		DR.132M/MC					437			

36 002 02 01

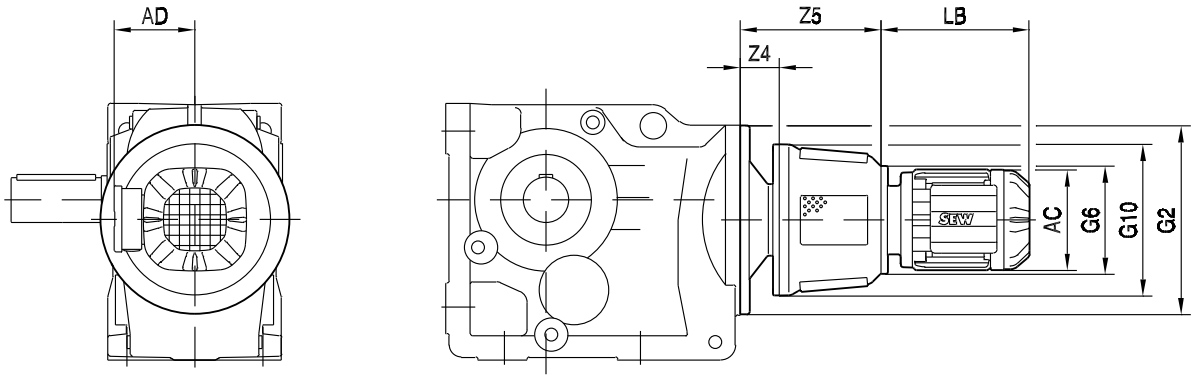

			AC	AD	G6	G10	LB	Z4	Z5	G2
K..87	AT311 AT312	DR.80M	156	128	200	280	272	84	273	250
		DR.90M	179	140			266			
		DR.90L					286			
		DR.100M	197	157			316			
		DR.100L/LC					346			
	AT421 AT422	DR.90M	179	140	250	350	266	128	363	
		DR.90L					286			
		DR.100M	197	157			316			
		DR.100L/LC					346			
		DR.112M	221	170			352			
		DR.132S					387			
		DR.132M/MC					437			
	AT522 AT541 AT542	DR.132S	221	170	350	470	363	159	478	
		DR.132M/MC					413			
		DR.160S/M/MC	270	228			460			
		DR.180S/M	316	253			523			
		DR.180L					583			
K..97	AT311 AT312	DR.80M	156	128	200	280	272	79	268	300
		DR.90M	179	140			266			
		DR.90L					286			
		DR.100M	197	157			316			
		DR.100L/LC					346			
	AT421 AT422	DR.90M	179	140	250	350	266	123	358	
		DR.90L					286			
		DR.100M	197	157			316			
		DR.100L/LC					346			
		DR.112M	221	170			352			
		DR.132S					387			
		DR.132M/MC					437			
	AT522 AT541 AT542	DR.132S	221	170	350	470	363	154	473	
		DR.132M/MC					413			
		DR.160S/M/MC	270	228			460			
		DR.180S/M	316	253			523			
		DR.180L					583			

36 003 02 01

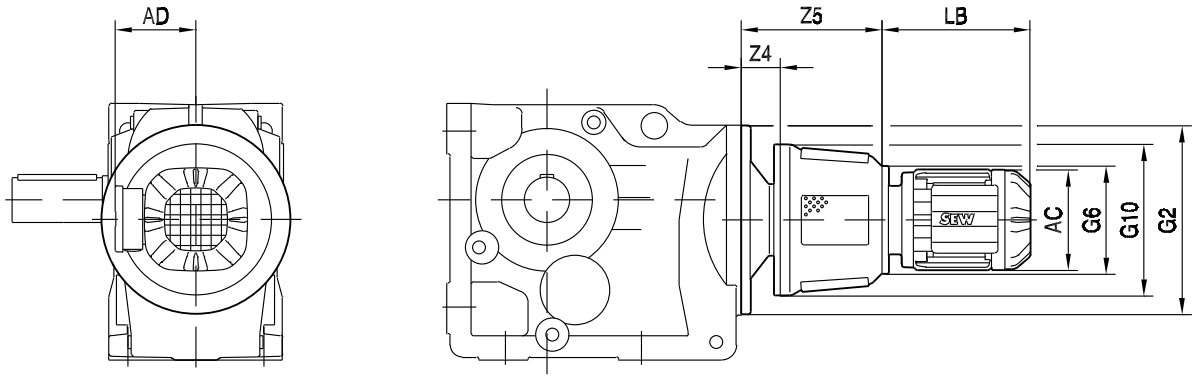

			AC	AD	G6	G10	LB	Z4	Z5	G2
K..107	AT311 AT312	DR.100M	197	157	200	280	316	73	262	350
		DR.100L/LC					346			
	AT421 AT422	DR.90L	179	140	250	350	286	117	352	
		DR.100M	197	157			316			
		DR.100L/LC					346			
		DR.112M	221	170			352			
		DR.132S					387			
		DR.132M/MC					437			
	AT522 AT541 AT542	DR.132S	221	170	350	470	363	148	467	
		DR.132M/MC					413			
		DR.160S/M/MC	270	228			460			
		DR.180S/M	316	253			523			
		DR.180L					583			
K..127	AT421 AT422	DR.132M/MC	221	170	250	350	437	102	337	450
	AT522 AT541 AT542	DR.132M/MC	221	170	350	470	413	133	452	
		DR.160S/M/MC	270	228			460			
		DR.180S/M	316	253			523			
		DR.180L					583			
K..157 K..167 K..187	AT522 AT541 AT542	DR.160M/MC	270	228	350	470	460	125	444	550
		DR.180S/M	316	253			523			
		DR.180L					583			

10.8 K.. AT../BM(G) [mm]

36 004 02 01

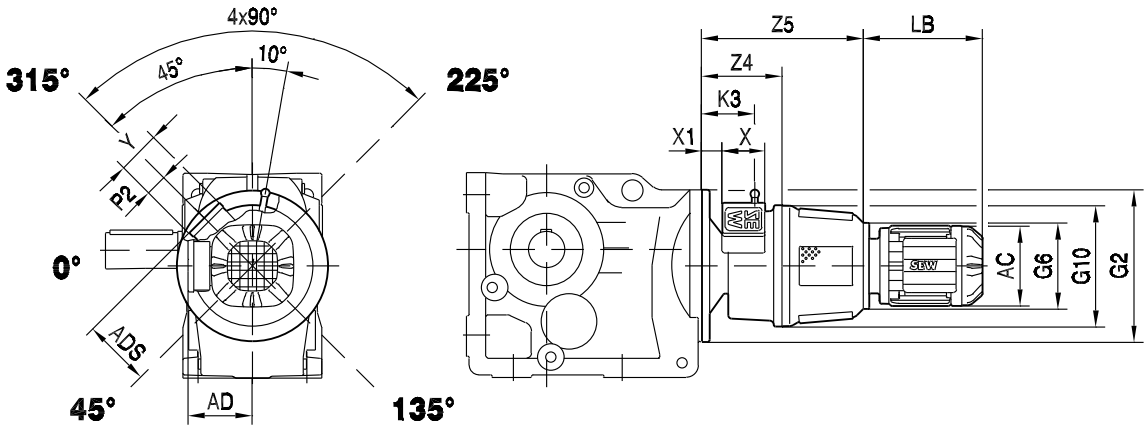

			AC	AD	ADS	G6	G10	LB	K3	P2	X	X1	Y	Z4	Z5	G2
K..67	AT311/BMG AT312/BMG	DR.71S	139	119	184	200	282	198	153	84	97	89	127	223	411	160
		DR.71M						223								
		DR.80S	156	128				241								
		DR.80M						272								
		DR.90M	179	140				266								
		DR.90L						286								
		DR.100M	197	157				316								
		DR.100L/LC						346								
	AT321/BMG AT322/BMG	DR.90M	179	140	215	250	352	266							458	
		DR.90L						286								
		DR.100M	197	157				316								
		DR.100L/LC						346								
K..77	AT311/BMG AT312/BMG	DR.71S	139	119	184	200	282	198	145	84	97	81	127	215	403	200
		DR.71M						223								
		DR.80S	156	128				241								
		DR.80M						272								
		DR.90M	179	140				266								
		DR.90L						286								
		DR.100M	197	157				316								
		DR.100L/LC						346								
	AT421/BMG AT422/BMG	DR.90M	179	140	215	250	352	266	183	84	97	119	127	252	488	
		DR.90L						286								
		DR.100M	197	157				316								
		DR.100L/LC						346								
		DR.112M	221	170				352								
		DR.132S						387								
		DR.132M/MC						437								

36 005 02 01

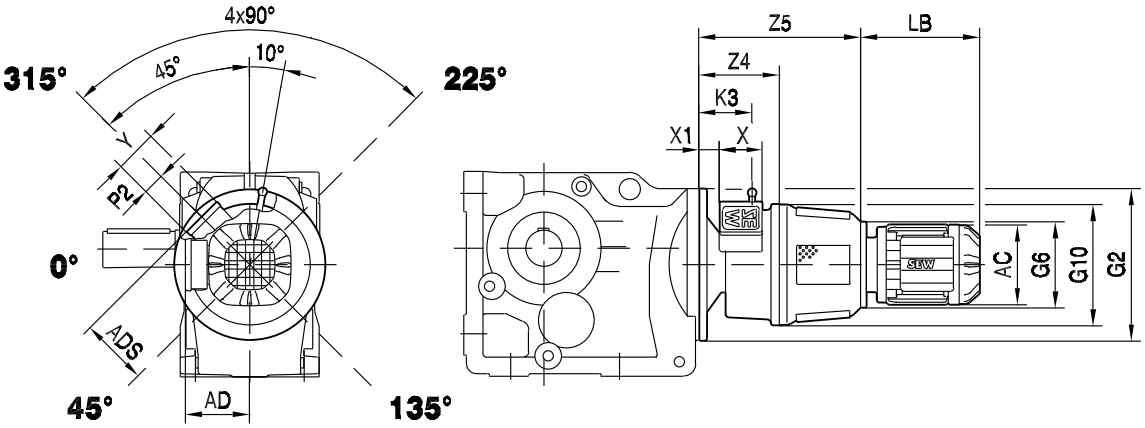

			AC	AD	ADS	G6	G10	LB	K3	P2	X	X1	Y	Z4	Z5	G2
K..87	AT311/BMG AT312/BMG	DR.80M	156	128	184	200	282	272	140	84	97	76	127	210	398	250
		DR.90M	179	140				266								
		DR.90L						286								
		DR.100M	197	157				316								
		DR.100L/LC						346								
	AT421/BMG AT422/BMG	DR.90M	179	140	215	250	352	266	178	84	97	114	127	247	483	
		DR.90L						286								
		DR.100M	197	157				316								
		DR.100L/LC						346								
		DR.112M	221	170				352								
		DR.132S						387								
		DR.132M/MC						437								
	AT522/BM AT541/BM AT542/BM	DR.132S	221	170	275	350	472	363	244	84	97	148	127	331	650	
		DR.132M/MC						413								
		DR.160S/M/MC	270	228				460								
		DR.180S/M	316	253				523								
		DR.180L						583								
K..97	AT311/BMG AT312/BMG	DR.80M	156	128	184	200	282	272	135	84	97	71	127	205	393	300
		DR.90M	179	140				266								
		DR.90L						286								
		DR.100M	197	157				316								
		DR.100L/LC						346								
	AT421/BMG AT422/BMG	DR.90M	179	140	215	250	352	266	173	84	97	109	127	242	478	
		DR.90L						286								
		DR.100M	197	157				316								
		DR.100L/LC						346								
		DR.112M	221	170				352								
		DR.132S						387								
		DR.132M/MC						437								
	AT522/BM AT541/BM AT542/BM	DR.132S	221	170	275	350	472	363	239	84	97	143	127	326	645	
		DR.132M/MC						413								
		DR.160S/M/MC	270	228				460								
		DR.180S/M	316	253				523								
		DR.180L						583								

36 006 02 01

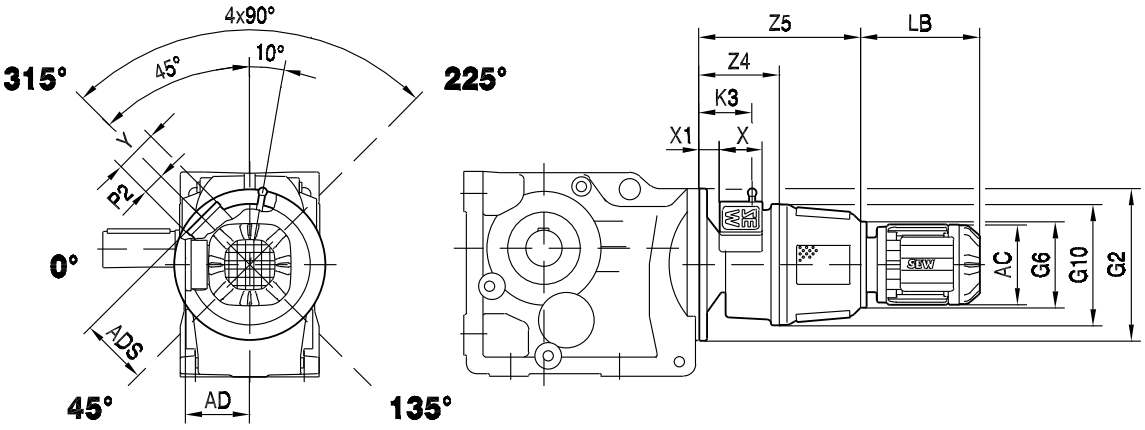

			AC	AD	ADS	G6	G10	LB	K3	P2	X	X1	Y	Z4	Z5	G2
K..107	AT311/BMG AT312/BMG	DR.100M	197	157	184	200	282	316	129	84	97	65	127	199	387	350
		DR.100L/LC						346								
	AT421/BMG AT422/BMG	DR.90L	179	140	215	250	352	286	167	84	97	103	127	236	472	
		DR.100M	197	157				316								
		DR.100L/LC						346								
		DR.112M	221	170				352								
		DR.132S						387								
		DR.132M/MC						437								
	AT522/BM AT541/BM AT542/BM	DR.132S	221	170	275	350	472	363	233	84	97	137	127	320	639	
		DR.132M/MC						413								
		DR.160S/M/MC	270	228				460								
		DR.180S/M	316	253				523								
		DR.180L						583								
K..127	AT421/BMG AT422/BMG	DR.132M/MC	221	170	215	250	352	437	152	84	97	88	127	221	457	450
	AT522/BM AT541/BM AT542/BM	DR.132M/MC	221	170	275	350	472	413	218	84	97	122	127	305	624	
		DR.160S/M/MC	270	228				460								
		DR.180S/M	316	253				523								
		DR.180L						583								
K..157 K..167 K..187	AT522/BM AT541/BM AT542/BM	DR.160M/MC	270	228	275	350	472	460	210	84	97	114	127	297	616	550
		DR.180S/M	316	253				523								
		DR.180L						583								

10.9 K.. AD.. [mm]

K.. AD..

33 039 02 01

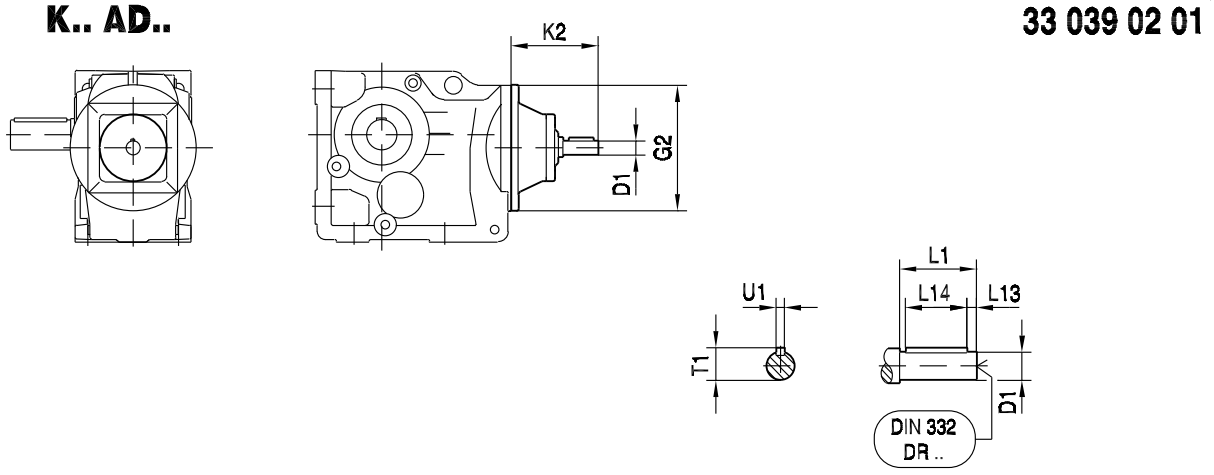

K.. AD../ZR

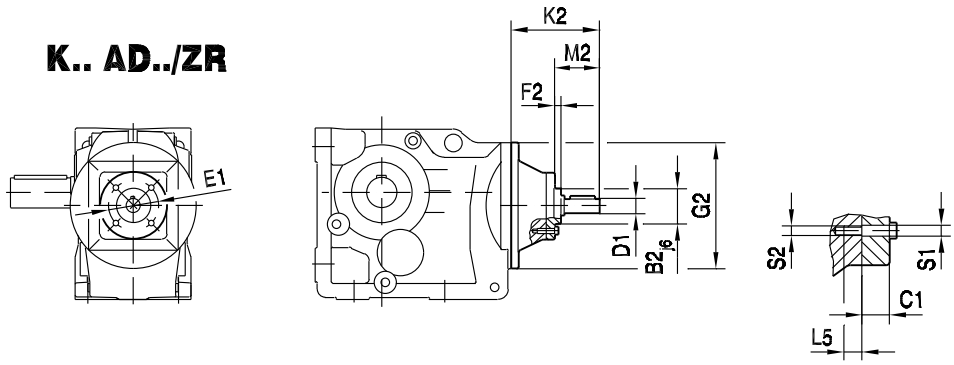

		B2	C1	E1	F2	G2	K2	L5	M2	S1	S2	D1	L1	L13	L14	T1	U1
K..37	**AD1**	-	-	-	-	120	102	-	-	-	-	16	40	4	32	18	5
	AD2 , AD2/ZR	55	13.5	80	8		130	12	50	9	M8	19	40	4	32	21.5	6
K..47, K..57, K..67	**AD2 , AD2/ZR**	55	13.5	80	8	160	123	12	50	9	M8	19	40	4	32	21.5	6
	AD3 , AD3/ZR	70	15.5	105	8		159	16	60	11	M10	24	50	5	40	27	8
K..77	**AD2 , AD2/ZR**	55	13.5	80	8	200	116	12	50	9	M8	19	40	4	32	21.5	6
	AD3 , AD3/ZR	70	15.5	105	8		151	16	60	11	M10	24	50	5	40	27	8
	AD4 , AD4/ZR	100	16	130	13		224	20	95.5	13.5	M12	38	80	5	70	41	10
K..87	**AD2 , AD2/ZR**	55	13.5	80	8	250	111	12	50	9	M8	19	40	4	32	21.5	6
	AD3 , AD3/ZR	70	15.5	105	8		156	16	70	11	M10	28	60	5	50	31	8
	AD4 , AD4/ZR	100	16	130	13		219	20	95.5	13.5	M12	38	80	5	70	41	10
	AD5 , AD5/ZR	120	24	180	11		292	20	126	13.5	M12	42	110	10	70	45	12
K..97	**AD3 , AD3/ZR**	70	15.5	105	8	300	151	16	70	11	M10	28	60	5	50	31	8
	AD4 , AD4/ZR	100	16	130	13		214	20	95.5	13.5	M12	38	80	5	70	41	10
	AD5 , AD5/ZR	120	24	180	11		287	20	126	13.5	M12	42	110	10	70	45	12
	AD6 , AD6/ZR	130	22.5	200	11		327	26	130.5	17.5	M16	48	110	10	80	51.5	14
K..107	**AD3 , AD3/ZR**	70	15.5	105	8	350	145	16	70	11	M10	28	60	5	50	31	8
	AD4 , AD4/ZR	100	16	130	13		208	20	95.5	13.5	M12	38	80	5	70	41	10
	AD5 , AD5/ZR	120	24	180	11		281	20	126	13.5	M12	42	110	10	70	45	12
	AD6 , AD6/ZR	130	22.5	200	11		321	26	130.5	17.5	M16	48	110	10	80	51.5	14
K..127	**AD4 , AD4/ZR**	100	16	130	13	450	193	20	95.5	13.5	M12	38	80	5	70	41	10
	AD5 , AD5/ZR	120	24	180	11		266	20	126	13.5	M12	42	110	10	70	45	12
	AD6 , AD6/ZR	130	22.5	200	11		306	26	130.5	17.5	M16	48	110	10	80	51.5	14
	AD7 , AD7/ZR	125	19	190	13		300	30	133	22	M20	55	110	10	90	59	16
	AD8 , AD8/ZR	120	22.5	210	5		383	19.5	155	13.5	M12	70	140	15	110	74.5	20
K..157 K..167 K..187	**AD5 , AD5/ZR**	120	24	180	11	550	258	20	126	13.5	M12	42	110	10	70	45	12
	AD6 , AD6/ZR	130	22.5	200	11		298	26	130.5	17.5	M16	48	110	10	80	51.5	14
	AD7 , AD7/ZR	125	19	190	13		292	30	133	22	M20	55	110	10	90	59	16
	AD8 , AD8/ZR	120	22.5	210	5		374	19.5	155	13.5	M12	70	140	15	110	74.5	20

10.10 K.. AD../P [mm

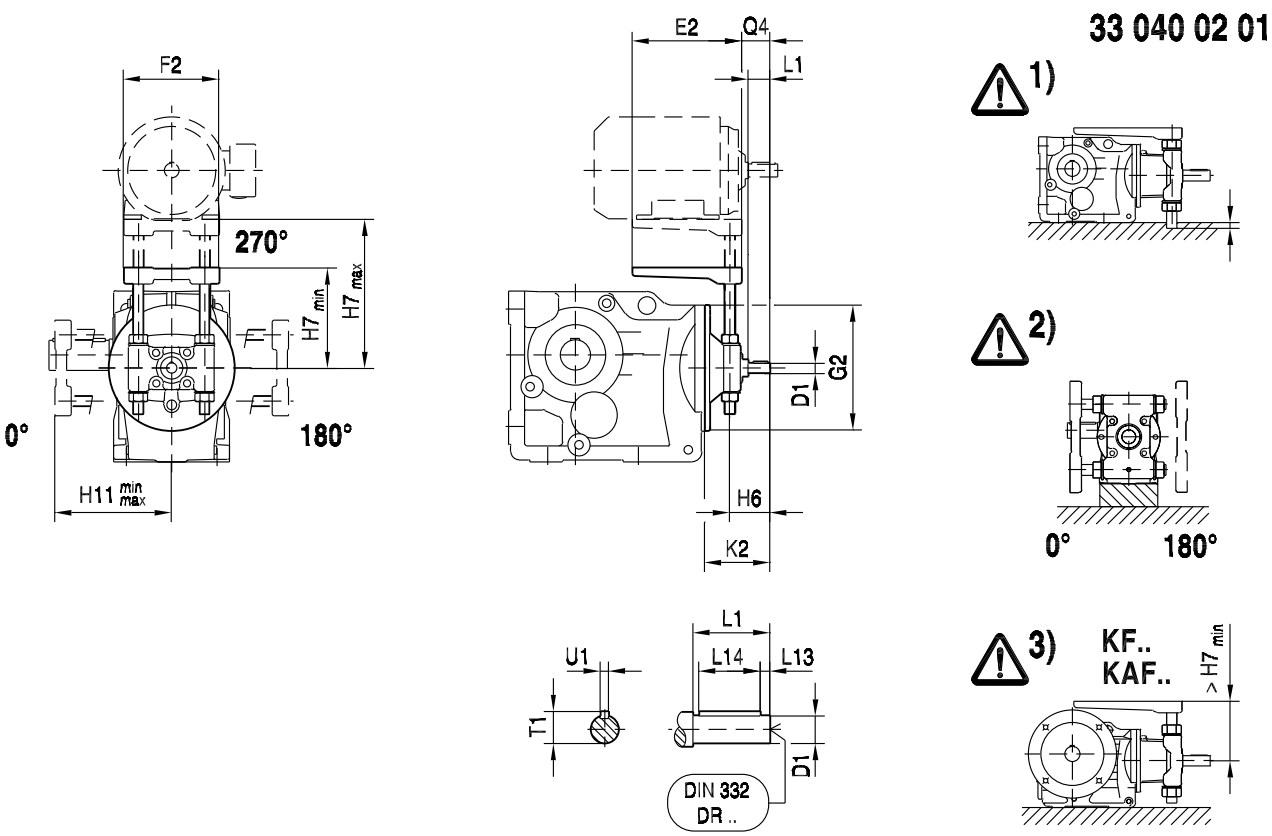

		E2	F2	G2	H6	H7 min	H7 max	H11 min	H11 max	K2	Q4	D1	L1	L13	L14	T1	U1	⚠ →129
K..37	**AD2/P**	195	180	120	65	100	165	95	165	130	43	19	40	4	32	21.5	6	1)
K..47	**AD2/P**	195	180	160	65	110	165	110	165	123	43	19	40	4	32	21.5	6	1)
	AD3/P	230	240		80	125	175	125	175	159	54	24	50	5	40	27	8	1), 2)
K..57	**AD2/P**	195	180	160	65	120	165	120	165	123	43	19	40	4	32	21.5	6	
	AD3/P	230	240		80	130	175	130	175	159	54	24	50	5	40	27	8	1), 2), 3)
K..67	**AD2/P**	195	180	160	65	130	200	125	165	123	43	19	40	4	32	21.5	6	1)
	AD3/P	230	240		80	135	175	130	175	159	54	24	50	5	40	27	8	3)
K..77	**AD2/P**	195	180	200	65	160	260	140	260	116	43	19	40	4	32	21.5	6	1)
	AD3/P	230	240		80	160	230	145	175	151	54	24	50	5	40	27	8	1)
	AD4/P	345	291		118	170	210	150	210	224	83	38	80	5	70	41	10	3)
K..87	**AD2/P**	195	180	250	65	180	260	170	200	111	43	19	40	4	32	21.5	6	
	AD3/P	230	240		90	180	230	175	230	156	64	28	60	5	50	31	8	
	AD4/P	345	291		118	190	280	180	210	219	83	38	80	5	70	41	10	1)
	AD5/P	430	355		153	190	250	185	250	292	113	42	110	10	70	45	12	1), 3)
K..97	**AD3/P**	230	240	300	90	210	320	210	320	151	64	28	60	5	50	31	8	
	AD4/P	345	291		118	215	280	215	280	214	83	38	80	5	70	41	10	
	AD5/P	430	355		153	225	325	215	250	287	113	42	110	10	70	45	12	1), 3)
K..107	**AD3/P**	230	240	350	90	260	320	220	320	145	64	28	60	5	50	31	8	
	AD4/P	345	291		118	265	360	220	280	208	83	38	80	5	70	41	10	
	AD5/P	430	355		153	270	325	225	325	281	113	42	110	10	70	45	12	
	AD6/P	495	457		163	270	310	250	310	321	114	48	110	10	80	51.5	14	3)
K..127	**AD4/P**	345	291	450	118	305	360	245	280	193	83	38	80	5	70	41	10	
	AD5/P	430	355		153	310	405	255	325	266	113	42	110	10	70	45	12	
	AD6/P	495	457		163	305	360	300	360	306	114	48	110	10	80	51.5	14	3)
	AD7/P	650	570		170	305	365	305	365	300	112	55	110	10	90	59	16	3)

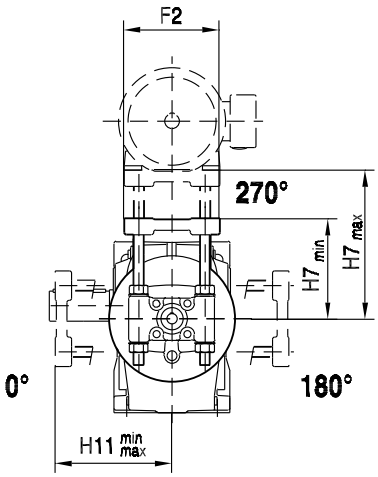

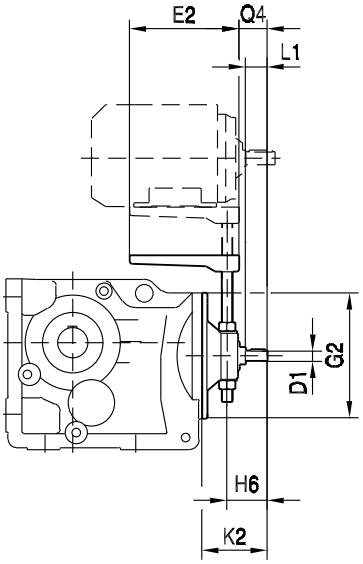

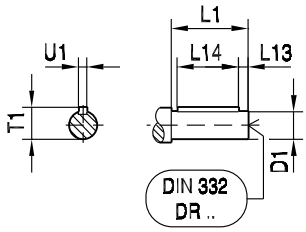

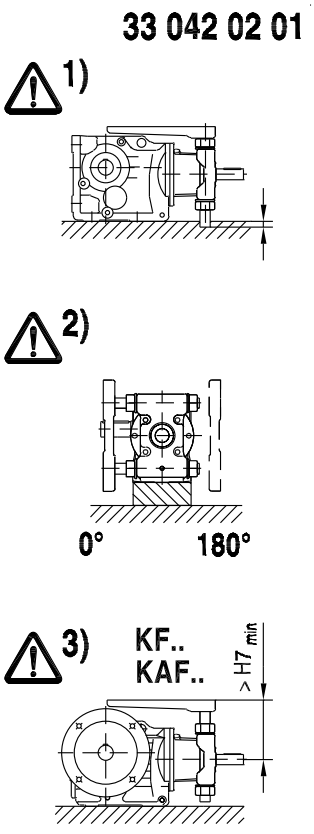

		E2	F2	G2	H6	H7 min	H7 max	H11 min	H11 max	K2	Q4	D1	L1	L13	L14	T1	U1	⚠ →129
K..157	**AD5/P**	430	355	550	153	360	405	295	325	258	113	42	110	10	70	45	12	
	AD6/P	495	457		163	375	475	375	475	298	114	48	110	10	80	51.5	14	3)
	AD7/P	650	570		170	375	475	375	475	292	112	55	110	10	90	59	16	3)
K..167	**AD5/P**	430	355	550	153	415	495	350	405	258	113	42	110	10	70	45	12	
	AD6/P	495	457		163	420	475	375	475	298	114	48	110	10	80	51.5	14	
	AD7/P	650	570		170	420	475	375	475	292	112	55	110	10	90	59	16	
K..187	**AD5/P**	430	355	550	153	480	545	380	495	258	113	42	110	10	70	45	12	
	AD6/P	495	457		163	485	525	380	475	298	114	48	110	10	80	51.5	14	
	AD7/P	650	570		170	485	525	380	475	292	112	55	110	10	90	59	16	

11 S..

11.1 S.. AM.. [Nm]

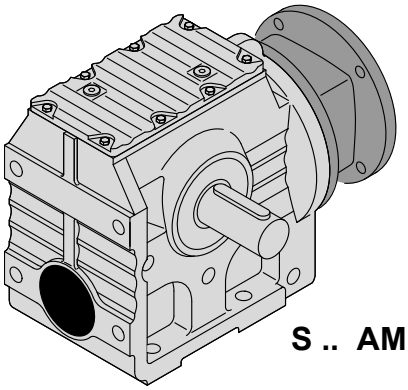

S .. AM..

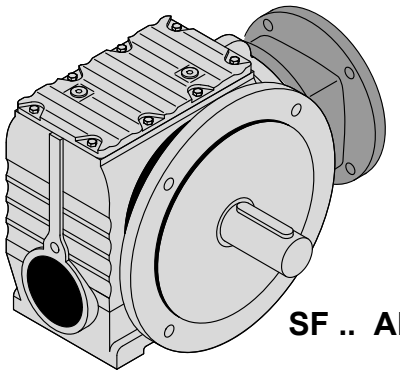

SF .. AM..

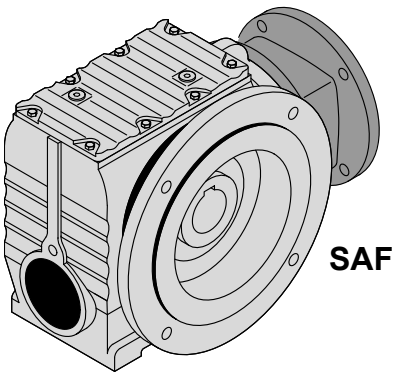

SAF .. AM..

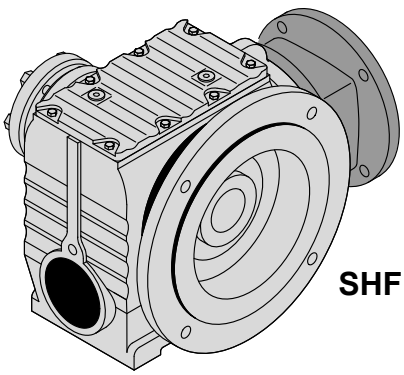

SHF .. AM..

50413axx

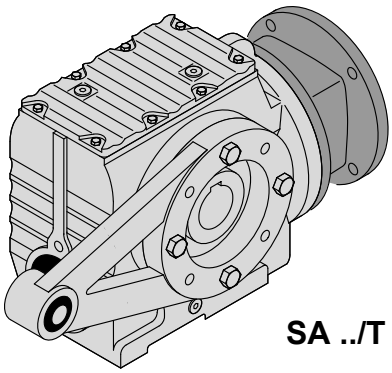

SA ../T AM..

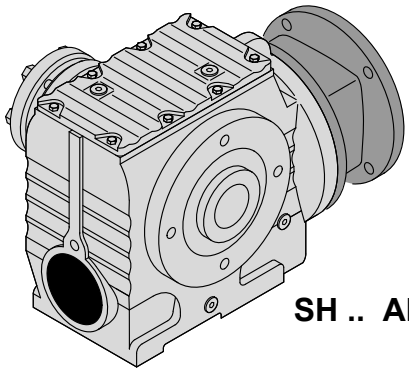

SH .. AM..

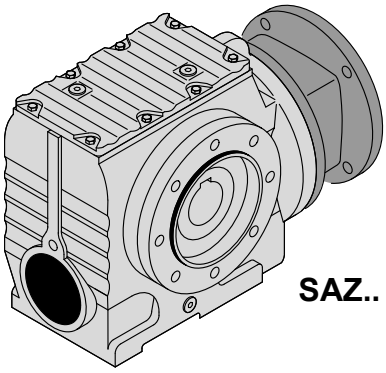

SAZ.. AM..

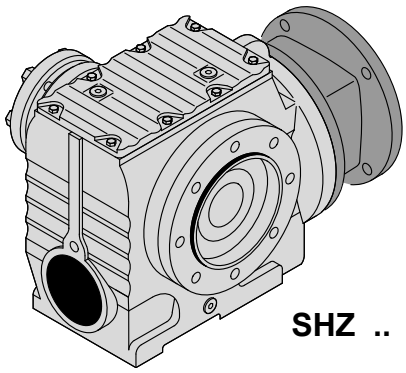

SHZ .. AM..

50414axx

11.1.1 S37

n_e = 1400 1/min						AM			92 Nm
	i	n_a [1/min]	$M_{a\,max}$ [Nm]	F_{Ra} [N]	φ (/R) [']	63	71	80	90
S37  2	**3.97**	353	32	1400	-				
	4.86	288	33	1520	-				
	5.38	260	34	1570	-				
	6.33	221	35	1670	-				
	6.80	206	43	1630	-				
	8.00	175	45	1730	-				
	9.02	155	46	1810	-				
	10.23	137	47	1900	-				
	10.91	128	48	1940	-				
	12.48	112	48	2060	-				
	13.39	105	49	2110	-				
	15.53	90	50	2240	-				
	18.24	77	52	2380	-				
	19.13	73	71	2380	-				
	19.89	70	52	2470	-				
	22.50	62	73	2530	-				
	25.38	55	74	2660	-				
	28.76	49	75	2800	-				
	30.68	46	76	2860	-				
	35.10	40	78	3000	-				
	37.66	37	79	3000	-				
	43.68	32	81	3000	-				
	51.30	27	81	3000	-				
	53.83	26	80	3000	-				
	55.93	25	81	3000	-				
	63.33	22	82	3000	-				
	71.44	20	84	3000	-				
	80.96	17	85	3000	-				
	86.36	16	86	3000	-				
	98.80	14	87	3000	-				
	106.00	13	88	3000	-				
	122.94	11	91	3000	-				
	144.40	9.7	92	3000	-				
	157.43	8.9	92	3000	-				

m [kg]		AM			
IEC	s	63	71	80	90
S37	2	8.8	9.0	11	11
NEMA		-	56	143	145
S37	2	-	9.4	11	11
SF: + 1.3 kg / SA: + -0.3 kg / SAF: + 1.3 kg					

11.1.2 S47

n_e = 1400 1/min									185 Nm
	i	n_a [1/min]	$M_{a\,max}$ [Nm]	F_{Ra} [N]	φ (/R) [']	AM 63	AM 71	AM 80	AM 90
S47 2	**4.00**	350	61	1980	-				
	4.76	294	72	2010	-				
	5.39	260	74	2110	-				
	6.40	219	76	2260	-				
	6.83	205	78	2300	-				
	7.28	192	103	2110	-				
	8.64	162	109	2230	-				
	9.23	152	109	2310	-				
	10.80	130	109	2500	-				
	12.10	116	109	2650	-				
	14.24	98	110	2850	-				
	16.47	85	110	3060	-				
	17.62	79	110	3160	-				
	19.54	72	144	3370	-				
	20.33	69	110	3370	-				
	23.20	60	152	3570	-				
	24.77	57	155	3650	-				
	29.00	48	155	3920	-				
	32.48	43	155	4120	-				
	38.23	37	155	4420	-				
	44.22	32	155	4710	-				
	47.32	30	155	4850	-				
	54.59	26	155	5150	-				
	56.61	25	165	5320	-				
	63.80	22	155	5370	-				
	67.20	21	167	5360	-				
	69.39	20	155	5370	-				
	71.75	20	167	5360	-				
	84.00	17	167	5360	-				
	94.08	15	168	5350	-				
	110.73	13	168	5350	-				
	128.10	11	168	5350	-				
	137.05	10	168	5350	-				
	158.12	8.9	170	5340	-				
	184.80	7.6	170	5340	-				
	201.00	7.0	170	5340	-				

m [kg]		AM			
IEC	**s**	**63**	**71**	**80**	**90**
S47	2	12	12	14	14
NEMA		-	56	143	145
S47	2	-	12	14	14
SF: + 3.6 kg / SA: + 1.1 kg / SAF: + 2.8 kg					

11.1.3 S57

n_e = 1400 1/min									330 Nm
	i	n_a [1/min]	$M_{a\,max}$ [Nm]	F_{Ra} [N]	φ (/R) [']	AM 63	AM 71	AM 80	AM 90
S57 2	**4.00**	350	88	3380	-				
	4.76	294	93	3590	-				
	5.39	260	95	3760	-				
	6.40	219	98	4010	-				
	6.83	205	100	4100	-				
	7.28	192	146	3790	-				
	8.64	162	166	3900	-				
	9.23	152	169	3990	-				
	10.80	130	169	4290	-				
	12.10	116	169	4520	-				
	14.24	98	169	4860	-				
	16.47	85	168	5200	-				
	17.62	79	168	5350	-				
	19.54	72	215	5720	-				
	20.33	69	168	5690	-				
	23.20	60	245	5930	-				
	24.77	57	245	6100	-				
	29.00	48	245	6520	-				
	32.48	43	245	6840	-				
	38.23	37	245	7320	-				
	44.22	32	245	7520	-				
	47.32	30	245	7520	-				
	54.59	26	245	7520	-				
	56.61	25	265	7370	-				
	63.80	22	245	7520	-				
	67.20	21	285	7220	-				
	69.39	20	245	7520	-				
	71.75	20	290	7170	-				
	84.00	17	295	7130	-				
	94.08	15	295	7130	-				
	110.73	13	295	7130	-				
	128.10	11	295	7130	-				
	137.05	10	295	7130	-				
	158.12	8.9	295	7130	-				
	184.80	7.6	295	7130	-				
	201.00	7.0	295	7130	-				

m [kg]		AM			
IEC	**s**	**63**	**71**	**80**	**90**
S57	2	16	16	18	18
NEMA		-	56	143	145
S57	2	-	16	18	18
SF: + 3.8 kg / SA: + -0.3 kg / SAF: + 2.6 kg					

11.1.4 S67

n_e = 1400 1/min													570 Nm
	i	n_a [1/min]	$M_{a\,max}$ [Nm]	F_{Ra} [N]	φ (/R) [']	AM 63	71	80	90	100	112	132S/M
S67 2	**7.56**	185	295	3220	-							
	8.69	161	335	2860	-							
	10.03	140	340	3290	-							
	11.03	127	340	3660	-							
	12.96	108	340	4310	-							
	13.73	102	340	4510	-							
	15.60	90	340	4820	-							
	17.28	81	340	5080	-							
	20.30	69	425	5760	-							
	20.37	69	340	5520	-							
	23.22	60	340	5890	-							
	23.33	60	480	5810	-							
	24.44	57	340	6040	-							
	26.93	52	480	6240	-							
	29.63	47	480	6540	-							
	34.80	40	480	7060	-							
	36.85	38	480	7250	-							
	41.89	33	480	7690	-							
	46.40	30	480	8060	-							
	54.70	26	480	8670	-							
	58.80	24	500	8850	-							
	62.35	22	480	9020	-							
	65.63	21	480	9020	-							
	67.57	21	520	8680	-							
	75.06	19	480	9020	-							
	78.00	18	520	8680	-							
	85.83	16	520	8680	-							
	100.80	14	520	8680	-							
	106.75	13	520	8680	-							
	121.33	12	520	8680	-							
	134.40	10	520	8680	-							
	158.45	8.8	520	8680	-							
	180.60	7.8	520	8680	-							
	190.11	7.4	520	8680	-							
	217.41	6.4	520	8680	-							

m [kg]		AM						
IEC	s	63	71	80	90	100	112	132S/M
S67	2	27	27	29	29	34	34	41
NEMA		-	56	143	145	182	184	213/215
S67	2	-	27	29	29	33	33	39
SF: + 6.5 kg / SA: + 1.0 kg / SAF: + 5.5 kg								

11.1.5 S77

n_e = 1400 1/min														1270 Nm
	i	n_a [1/min]	$M_{a\,max}$ [Nm]	F_{Ra} [N]	φ (/R) [']	AM 63	71	80	90	100	112	132S/M	132ML
S77 2	**8.06**	174	680	440	-								
	9.44	148	725	415	-								
	10.65	131	720	1130	-								
	12.07	116	720	1800	-								
	13.76	102	710	2710	-								
	15.28	92	710	3320	-								
	17.45	80	710	4120	-								
	18.42	76	705	4550	-								
	18.97	74	930	6390	-								
	20.99	67	705	5380	-								
	22.22	63	980	6740	-								
	22.89	61	705	5960	-								
	25.07	56	1020	7010	-								
	28.41	49	1050	7370	-								
	32.38	43	1090	7720	-								
	35.94	39	1100	8140	-								
	41.07	34	1100	8750	-								
	43.33	32	1100	9010	-								
	49.38	28	1100	9650	-								
	53.87	26	1100	10100	-								
	56.92	25	990	11600	-								
	63.03	22	1100	10900	-								
	66.67	21	1040	12300	-								
	71.33	20	1100	11600	-								
	75.09	19	1100	11900	-								
	75.20	19	1070	12800	-								
	85.22	16	1100	13100	-								
	97.14	14	1140	12800	-								
	107.83	13	1170	12600	-								
	123.20	11	1200	12300	-								
	130.00	11	1210	12200	-								
	148.15	9.4	1240	12000	-								
	161.60	8.7	1260	11800	-								
	189.09	7.4	1270	11700	-								
	214.00	6.5	1270	11700	-								
	225.26	6.2	1270	11700	-								
	256.47	5.5	1270	11700	-								

m [kg]		AM							
IEC	**s**	**63**	**71**	**80**	**90**	**100**	**112**	**132S/M**	**132ML**
S77	2	47	47	49	49	54	54	61	61
NEMA		-	56	143	145	182	184	213/215	-
S77	2	-	47	49	49	53	53	59	-
SF: + 9.7 kg / SA: + -0.5 kg / SAF: + 6.2 kg									

11.1.6 S87

n_e = 1400 1/min													2500 Nm
	i	n_a [1/min]	$M_{a\,max}$ [Nm]	F_{Ra} [N]	φ (/R) [']	AM 80	90	100	112	132S/M	132ML	160	180
S87 2	**7.88**	178	1010	15700	-								
	9.07	154	1140	15900	-								
	10.93	128	1240	16400	-								
	12.21	115	1240	17400	-								
	14.06	100	1240	18500	-								
	15.64	90	1240	19300	-								
	17.49	80	1240	20200	-								
	19.70	71	1240	21100	-								
	20.27	69	1600	22100	-								
	21.43	65	1240	21800	-								
	24.43	57	1600	23700	-								
	25.50	55	1240	23400	-								
	27.28	51	1600	24700	-								
	31.43	45	1600	26000	-								
	34.96	40	1600	27100	-								
	39.10	36	1600	28200	-								
	44.03	32	1600	29000	-								
	47.91	29	1600	29000	-								
	57.00	25	1600	29000	-								
	64.00	22	1700	28900	-								
	64.27	22	1600	29000	-								
	70.43	20	1600	29000	-								
	77.14	18	1820	28700	-								
	81.76	17	1600	29000	-								
	86.15	16	1880	28600	-								
	91.20	15	1510	29100	-								
	99.26	14	1960	28500	-								
	110.40	13	2000	28400	-								
	123.48	11	2060	28300	-								
	139.05	10	2100	28300	-								
	151.30	9.3	2150	28200	-								
	180.00	7.8	2210	28100	-								
	202.96	6.9	2260	28000	-								
	222.40	6.3	2280	27900	-								
	258.18	5.4	2280	27900	-								
	288.00	4.9	2280	27900	-								

m [kg]		AM							
IEC	**s**	**80**	**90**	**100**	**112**	**132S/M**	**132ML**	**160**	**180**
S87	2	85	85	90	90	97	97	115	115
NEMA		143	145	182	184	213/215	-	254/256	284/286
S87	2	85	85	89	89	95	-	110	110
SF: + 21.7 kg / SA: + -2.4 kg / SAF: + 13.8 kg									

11.1.7 S97

n_e = 1400 1/min														4200 Nm
	i	n_a [1/min]	$M_{a\,max}$ [Nm]	F_{Ra} [N]	φ (/R) [']	AM 100	112	132S/M	132ML	160	180	200	225
S97 2	**8.26**	169	1770	18800	-								
	9.55	147	2040	18200	-								
	11.41	123	2210	18400	-								
	13.07	107	2330	18800	-								
	15.42	91	2470	19400	-								
	17.05	82	2570	19700	-								
	19.23	73	2600	21200	-								
	21.23	66	2600	22800	-								
	23.59	59	2600	24500	-								
	24.13	58	2870	28000	-								
	26.39	53	2600	26100	-								
	27.63	51	3010	29000	-								
	32.60	43	3200	30400	-								
	36.05	39	3300	31300	-								
	40.65	34	3300	32800	-								
	44.89	31	3300	34100	-								
	49.87	28	3300	34500	-								
	55.79	25	3300	34500	-								
	60.59	23	3300	34500	-								
	65.45	21	2900	35100	-								
	71.43	20	3300	34500	-								
	78.26	18	3080	34800	-								
	80.85	17	3230	34600	-								
	89.60	16	3240	34600	-								
	105.71	13	3440	34300	-								
	116.92	12	3510	34100	-								
	131.85	11	3650	33900	-								
	145.60	9.6	3730	33700	-								
	161.74	8.7	3840	33500	-								
	180.95	7.7	3920	33400	-								
	196.52	7.1	4000	33200	-								
	231.67	6.0	4000	33200	-								
	262.22	5.3	4000	33200	-								
	286.40	4.9	4000	33200	-								

m [kg]		AM							
IEC	s	100	112	132S/M	132ML	160	180	200	225
S97	2	150	150	155	155	175	175	190	195
NEMA		182	184	213/215	-	254/256	284/286	324/326	364/365
S97	2	150	150	155	-	170	170	190	190
SF: + 32.7 kg / SA: + -5.4 kg / SAF: + 20.7 kg									

11.2 S.. AT..

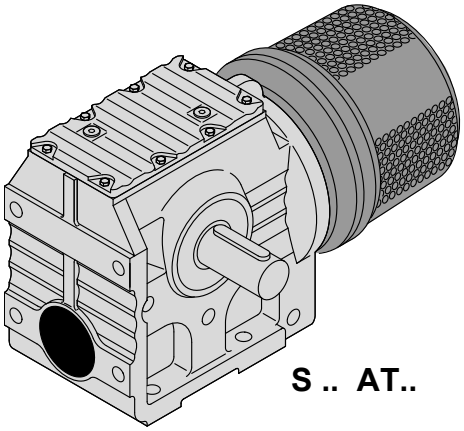

S .. AT..

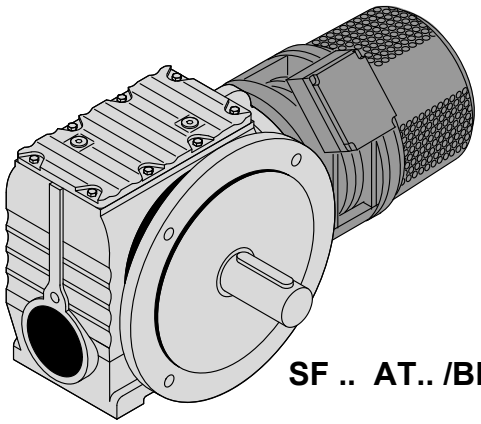

SF .. AT.. /BM(G)

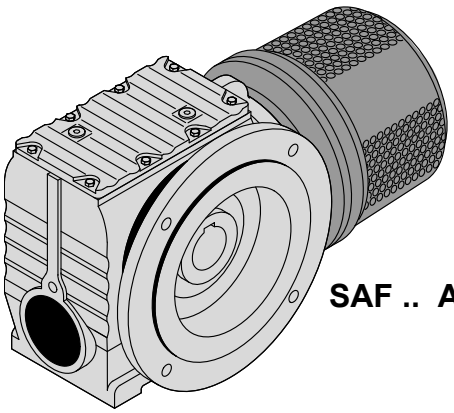

SAF .. AT..

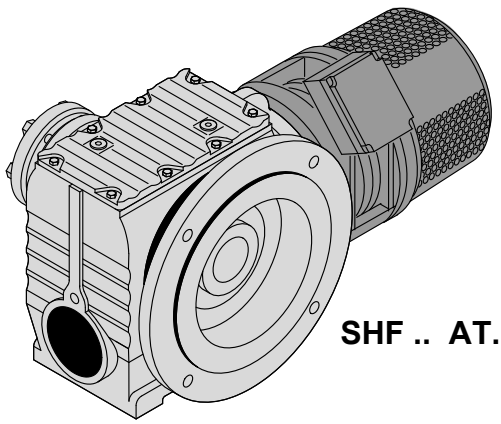

SHF .. AT.. /BM(G)

50419AXX

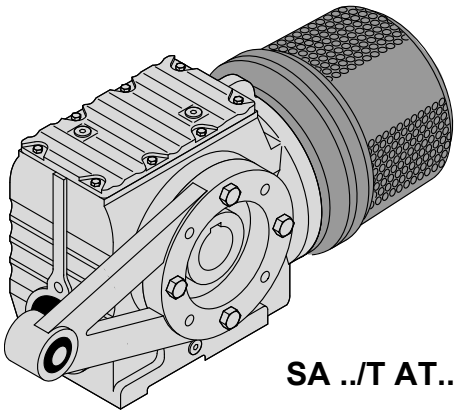

SA ../T AT..

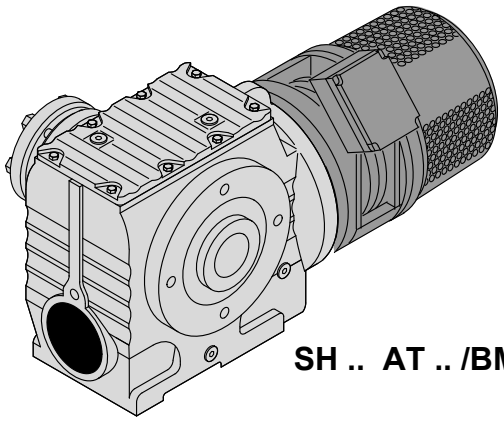

SH .. AT .. /BM(G)

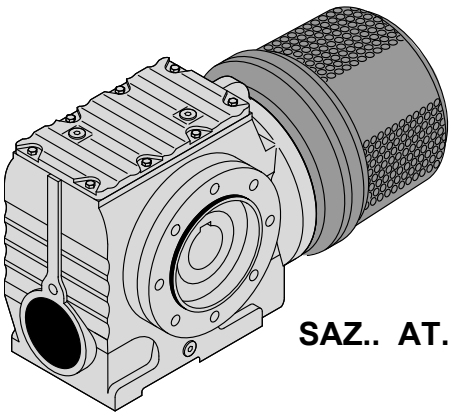

SAZ.. AT..

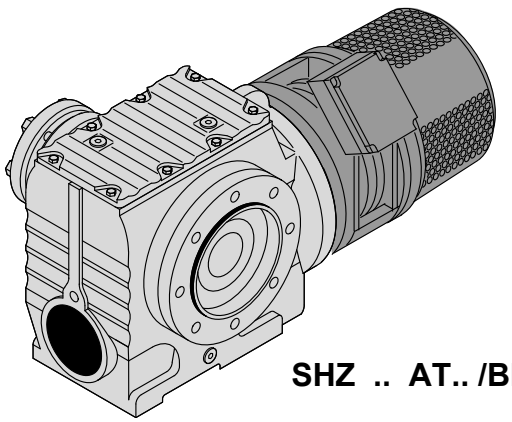

SHZ .. AT.. /BM(G)

50420AXX

11.2.1 S..AT/ DRS..4

		P_m [kW]				Sn [%]	
S67	DRS71S4	0,37	AT311	T11	0,42	12	
	DRS71M4	0,55	AT312	T11D	0,55	11	
	DRS80S4	0,75	AT312	T11D	0,7	11	
	DRS80M4	1,1	AT312	T11D	0,72	15	
	DRS90M4	1,5	AT321	T21	0,85	9	
	DRS90L4	2,2	AT321	T21	0,9	13	
	DRS100M4	3	AT322	T21D	1,53	11	
	DRS100LC4	4	AT322	T21D	1,6	12	
S77	DRS71S4	0,37	AT311	T11	0,42	12	
	DRS71M4	0,55	AT312	T11D	0,55	11	
	DRS80S4	0,75	AT312	T11D	0,7	11	
	DRS80M4	1,1	AT312	T11D	0,72	15	
	DRS90M4	1,5	AT421	T21	0,85	9	
	DRS90L4	2,2	AT421	T21	0,9	13	
	DRS100M4	3	AT422	T21D	1,53	11	→ 479ff
	DRS100LC4	4	AT422	T21D	1,6	12	→ 481ff
	DRS112M4	4	AT422	T21D	1,6	12	
S87	DRS80M4	1,1	AT312	T11D	0,72	15	
	DRS90M4	1,5	AT421	T21	0,85	9	
	DRS90L4	2,2	AT421	T21	0,9	13	
	DRS100M4	3	AT422	T21D	1,53	11	
	DRS100LC4	4	AT422	T21D	1,6	12	
	DRS112M4	4	AT422	T21D	1,6	12	
	DRS132S4	5,5	AT541	T41	2	6	
	DRS132M4	7,5	AT541	T41	2,4	8	
	DRS132MC4	9,2	AT541	T41	2,5	10	
	DRS160S4	9,2	AT541	T41	2,5	10	
	DRS160M4	11	AT541	T41	2,5	13	
	DRS160MC4	15	AT542	T41D	4,2	8	
	DRS180S4	15	AT542	T41D	4,2	8	

		P_m [kW]				Sn [%]	
S97	DRS80M4	1,1	AT312	T11D	0,72	15	
	DRS90M4	1,5	AT421	T21	0,85	9	
	DRS90L4	2,2	AT421	T21	0,9	13	
	DRS100M4	3	AT422	T21D	1,53	11	
	DRS100LC4	4	AT422	T21D	1,6	12	
	DRS112M4	4	AT422	T21D	1,6	12	
	DRS132S4	5,5	AT541	T41	2	6	→ 479ff
	DRS132M4	7,5	AT541	T41	2,4	8	→ 481ff
	DRS132MC4	9,2	AT541	T41	2,5	10	
	DRS160S4	9,2	AT541	T41	2,5	10	
	DRS160M4	11	AT541	T41	2,5	13	
	DRS160MC4	15	AT542	T41D	4,2	8	
	DRS180S4	15	AT542	T41D	4,2	8	
	DRS180M4	18,5	AT542	T41D	4,3	10	
	DRS180L4	22	AT542	T41D	4,3	14	

11.2.2 S..AT/ DRE..4

		P_m [kW]				Sn [%]	
S67	DRE80M4	0,75	AT312	T11D	0,7	11	
	DRE90M4	1,1	AT312	T11D	0,72	15	
	DRE90L4	1,5	AT321	T21	0,85	9	
	DRE100M4	2,2	AT321	T21	0,9	13	
	DRE100LC4	3	AT322	T21D	1,53	11	
S77	DRE80M4	0,75	AT312	T11D	0,7	11	
	DRE90M4	1,1	AT312	T11D	0,72	15	
	DRE90L4	1,5	AT421	T21	0,85	9	
	DRE100M4	2,2	AT421	T21	0,9	13	
	DRE100LC4	3	AT422	T21D	1,53	11	
	DRE112M4	3	AT422	T21D	1,53	11	
	DRE132S4	4	AT422	T21D	1,6	12	→ 479ff
S87	DRE90M4	1,1	AT312	T11D	0,72	15	→ 481ff
	DRE90L4	1,5	AT421	T21	0,85	9	
	DRE100M4	2,2	AT421	T21	0,9	13	
	DRE100LC4	3	AT422	T21D	1,53	11	
	DRE112M4	3	AT422	T21D	1,53	11	
	DRE132S4	4	AT422	T21D	1,6	12	
	DRE132M4	5,5	AT541	T41	2	6	
	DRE132MC4	7,5	AT541	T41	2,4	8	
	DRE160M4	9,2	AT541	T41	2,5	10	
	DRE160MC4	11	AT541	T41	2,5	13	
	DRE180S4	11	AT541	T41	2,5	13	
	DRE180M4	15	AT542	T41D	4,2	8	

		P_m [kW]				Sn [%]	
S97	DRE90M4	1,1	AT312	T11D	0,72	15	
	DRE90L4	1,5	AT421	T21	0,85	9	
	DRE100M4	2,2	AT421	T21	0,9	13	
	DRE100LC4	3	AT422	T21D	1,53	11	
	DRE112M4	3	AT422	T21D	1,53	11	
	DRE132S4	4	AT422	T21D	1,6	12	→ 479ff
	DRE132M4	5,5	AT541	T41	2	6	
	DRE132MC4	7,5	AT541	T41	2,4	8	→ 481ff
	DRE160M4	9,2	AT541	T41	2,5	10	
	DRE160MC4	11	AT541	T41	2,5	13	
	DRE180S4	11	AT541	T41	2,5	13	
	DRE180M4	15	AT542	T41D	4,2	8	
	DRE180L4	18,5	AT542	T41D	4,3	10	

11.2.3 S..AT/ DRP..4

		P_m [kW]				Sn [%]	
S67	DRP90M4	0,75	AT312	T11D	0,7	11	
	DRP90L4	1,1	AT312	T11D	0,72	15	
	DRP100M4	1,5	AT321	T21	0,85	9	
	DRP100L4	2,2	AT321	T21	0,9	13	
S77	DRP90M4	0,75	AT312	T11D	0,7	11	
	DRP90L4	1,1	AT312	T11D	0,72	15	
	DRP100M4	1,5	AT421	T21	0,85	9	
	DRP100L4	2,2	AT421	T21	0,9	13	
	DRP112M4	3	AT422	T21D	1,53	11	
	DRP132M4	4	AT422	T21D	1,6	12	
S87	DRP90L4	1,1	AT312	T11D	0,72	15	→ 479ff
	DRP100M4	1,5	AT421	T21	0,85	9	→ 481ff
	DRP100L4	2,2	AT421	T21	0,9	13	
	DRP112M4	3	AT422	T21D	1,53	11	
	DRP132M4	4	AT422	T21D	1,6	12	
	DRP132MC4	5,5	AT541	T41	2	6	
	DRP160S4	5,5	AT541	T41	2	6	
	DRP160M4	7,5	AT541	T41	2,4	8	
	DRP160MC4	9,2	AT541	T41	2,5	10	
	DRP180S4	9,2	AT541	T41	2,5	10	
	DRP180M4	11	AT541	T41	2,5	13	
	DRP180L4	15	AT542	T41D	4,2	8	

		P_m [kW]				Sn [%]	
S97	DRP90L4	1,1	AT312	T11D	0,72	15	
	DRP100M4	1,5	AT421	T21	0,85	9	
	DRP100L4	2,2	AT421	T21	0,9	13	
	DRP112M4	3	AT422	T21D	1,53	11	
	DRP132M4	4	AT422	T21D	1,6	12	
	DRP132MC4	5,5	AT541	T41	2	6	→ 479ff
	DRP160S4	5,5	AT541	T41	2	6	→ 481ff
	DRP160M4	7,5	AT541	T41	2,4	8	
	DRP160MC4	9,2	AT541	T41	2,5	10	
	DRP180S4	9,2	AT541	T41	2,5	10	
	DRP180M4	11	AT541	T41	2,5	13	
	DRP180L4	15	AT542	T41D	4,2	8	

11.2.4 S..AT/ DRS..2

		P_m [kW]				Sn [%]	
S67	DRS71M2	0,55	AT311	T11	0,19	3	
	DRS80S2	0,75	AT311	T11	0,22	4,5	
	DRS80M2	1,1	AT311	T11	0,27	6	
	DRS90M2	1,5	AT311	T11	0,29	8,5	
	DRS100M2	3	AT311	T11	0,4	12	
	DRS100LC2	4	AT312	T11D	0,52	10	
S77	DRS71M2	0,55	AT311	T11	0,19	3	
	DRS80S2	0,75	AT311	T11	0,22	4,5	
	DRS80M2	1,1	AT311	T11	0,27	6	
	DRS90M2	1,5	AT311	T11	0,29	8,5	→ 479ff
	DRS100M2	3	AT311	T11	0,4	12	→ 481ff
	DRS100LC2	4	AT312	T11D	0,52	10	
	DRS132M2	9,2	AT421	T21	0,65	8,5	
S87	DRS90M2	1,5	AT311	T11	0,29	8,5	
	DRS100M2	3	AT311	T11	0,4	12	
	DRS100LC2	4	AT312	T11D	0,52	10	
	DRS132M2	9,2	AT421	T21	0,65	8,5	
S97	DRS90M2	1,5	AT311	T11	0,29	8,5	
	DRS100M2	3	AT311	T11	0,4	12	
	DRS100LC2	4	AT312	T11D	0,52	10	
	DRS132M2	9,2	AT421	T21	0,65	8,5	

11.2.5 S..AT/ DRE..2

		P_m [kW]				Sn [%]	
S67	DRE80M2	0,75	AT311	T11	0,22	4,5	
	DRE90M2	1,5	AT311	T11	0,29	8,5	
	DRE100M2	2,2	AT311	T11	0,31	11,5	
	DRE100L2	3	AT311	T11	0,4	12	
S77	DRE80M2	0,75	AT311	T11	0,22	4,5	
	DRE90M2	1,5	AT311	T11	0,29	8,5	
	DRE100M2	2,2	AT311	T11	0,31	11,5	
	DRE100L2	3	AT311	T11	0,4	12	
	DRE132M2	7,5	AT421	T21	0,6	8	
	DRE132MC2	9,2	AT421	T21	0,65	8,5	→ 479ff
S87	DRE90M2	1,5	AT311	T11	0,29	8,5	→ 481ff
	DRE100M2	2,2	AT311	T11	0,31	11,5	
	DRE100L2	3	AT311	T11	0,4	12	
	DRE132M2	7,5	AT421	T21	0,6	8	
	DRE132MC2	9,2	AT421	T21	0,65	8,5	
S97	DRE90M2	1,5	AT311	T11	0,29	8,5	
	DRE100M2	2,2	AT311	T11	0,31	11,5	
	DRE100L2	3	AT311	T11	0,4	12	
	DRE132M2	7,5	AT421	T21	0,6	8	
	DRE132MC2	9,2	AT421	T21	0,65	8,5	

11.2.6 S..AT/ DRP..2

		P_m [kW]				Sn [%]	
S67	DRP80M2	0,75	AT311	T11	0,22	4,5	
	DRP90M2	1,1	AT311	T11	0,27	6	
	DRP100M2	2,2	AT311	T11	0,31	11,5	
	DRP100LC2	3	AT311	T11	0,4	12	
S77	DRP80M2	0,75	AT311	T11	0,22	4,5	
	DRP90M2	1,1	AT311	T11	0,27	6	→ 479ff
	DRP100M2	2,2	AT311	T11	0,31	11,5	→ 481ff
	DRP100LC2	3	AT311	T11	0,4	12	
S87	DRP100M2	2,2	AT311	T11	0,31	11,5	
	DRP100LC2	3	AT311	T11	0,4	12	
S97	DRP100M2	2,2	AT311	T11	0,31	11,5	
	DRP100LC2	3	AT311	T11	0,4	12	

11.3 S.. AD.. [Nm]

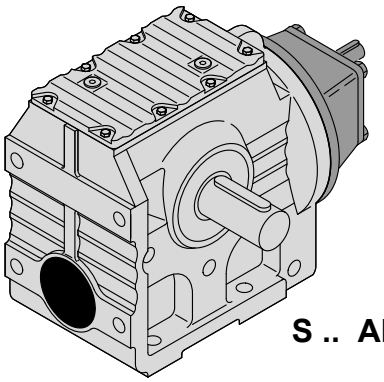

S .. AD..

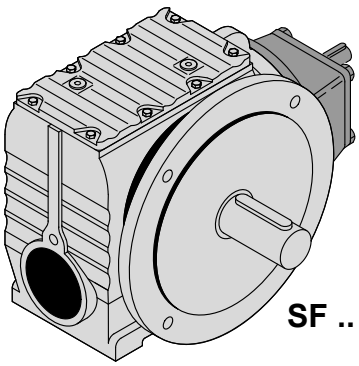

SF .. AD..

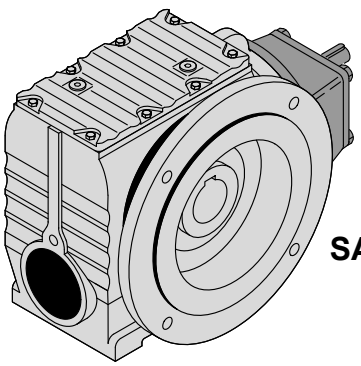

SAF .. AD..

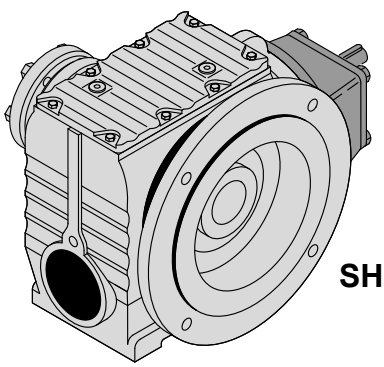

SHF .. AD..

50417AXX

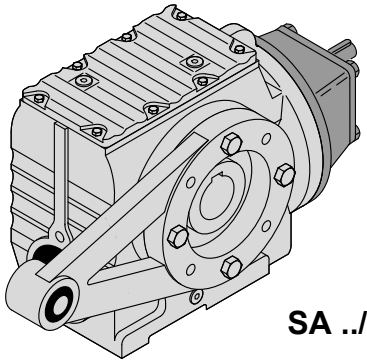

SA ../T AD..

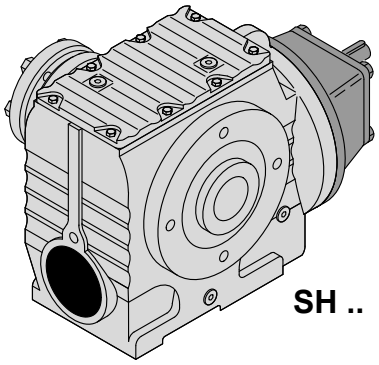

SH .. AD..

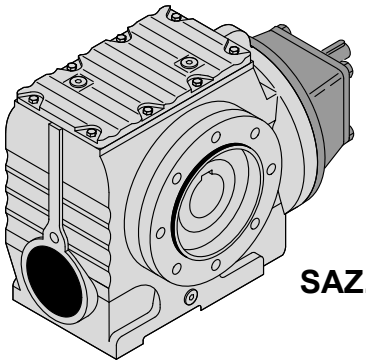

SAZ.. AD..

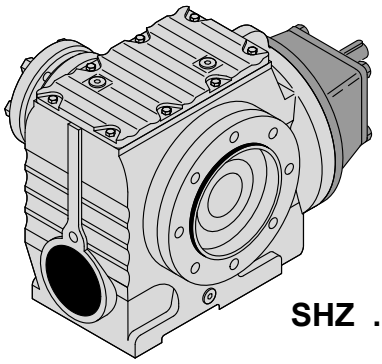

SHZ .. AD..

50418AXX

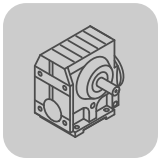

S..
S.. AD.. [Nm]

i	n_a [1/min]	M_{amax}	P_e [kW]	F_{Ra} 1) [N]	F_{Re} [N]	φ (/R)	⚠				m [kg]	
S37 AD.. , n_e = 1400 1/min												**92 Nm**
157.43	8.9	92	0.18	3000	745	-	-					
144.40*	9.7	92	0.19	3000	745	-	-					
122.94	11	91	0.22	3000	740	-	-					
106.00*	13	88	0.24	3000	745	-	-	**S**	**37**	**AD1**	**8.3**	
98.80*	14	87	0.25	3000	745	-	-	**SF**	**37**	**AD1**	**9.6**	→ 📖 483
86.36	16	86	0.27	3000	740	-	-	**SA**	**37**	**AD1**	**8.0**	
80.96	17	85	0.29	3000	740	-	-	**SAF**	**37**	**AD1**	**9.5**	
71.44*	20	84	0.31	3000	740	-	-					
63.33	22	82	0.34	3000	740	-	-					
55.93	25	81	0.31	3000	575	-	-					
53.83	26	80	0.39	3000	1820	-	-	**S**	**37**	**AD2**	**9.4**	
								SF	**37**	**AD2**	**11**	→ 📖 483
								SA	**37**	**AD2**	**9.1**	
								SAF	**37**	**AD2**	**11**	
51.30*	27	81	0.33	3000	565	-	-					
43.68	32	81	0.38	3000	555	-	-					
37.66	37	79	0.43	3000	555	-	-					
35.10*	40	78	0.45	3000	550	-	-	**S**	**37**	**AD1**	**8.3**	
30.68	46	76	0.49	2860	550	-	-	**SF**	**37**	**AD1**	**9.6**	→ 📖 483
28.76	49	75	0.52	2800	545	-	-	**SA**	**37**	**AD1**	**8.0**	
25.38*	55	74	0.57	2660	535	-	-	**SAF**	**37**	**AD1**	**9.5**	
22.50*	62	73	0.63	2530	520	-	-					
19.89	70	52	0.47	2470	330	-	-					
19.13*	73	71	0.72	2380	1740	-	-	**S**	**37**	**AD2**	**9.4**	
								SF	**37**	**AD2**	**11**	→ 📖 483
								SA	**37**	**AD2**	**9.1**	
								SAF	**37**	**AD2**	**11**	
18.24*	77	52	0.51	2380	320	-	-	**S**	**37**	**AD1**	**8.3**	
15.53	90	50	0.57	2240	320	-	-	**SF**	**37**	**AD1**	**9.6**	→ 📖 483
								SA	**37**	**AD1**	**8.0**	
								SAF	**37**	**AD1**	**9.5**	
13.39	105	49	0.65	2110	1500	-	-					
12.48*	112	48	0.68	2060	1500	-	-					
10.91	128	48	0.78	1940	1470	-	-					
10.23	137	47	0.81	1900	1470	-	-					
9.02*	155	46	0.89	1810	1460	-	-	**S**	**37**	**AD2**	**9.4**	
8.00*	175	45	0.98	1730	1440	-	-	**SF**	**37**	**AD2**	**11**	→ 📖 483
6.80*	206	43	1.1	1630	1660	-	-	**SA**	**37**	**AD2**	**9.1**	
6.33	221	35	0.95	1670	1670	-	-	**SAF**	**37**	**AD2**	**11**	
5.38	260	34	1.1	1570	1660	-	-					
4.86*	288	33	1.2	1520	1650	-	-					
3.97	353	32	1.4	1400	1630	-	-					
S47 AD.. , n_e = 1400 1/min												**185 Nm**
201.00*	7.0	170	0.25	5340	680	-	-					
184.80*	7.6	170	0.27	5340	680	-	-					
158.12	8.8	170	0.30	5340	670	-	-					
137.05	10	168	0.34	5350	670	-	-					
128.10*	11	168	0.36	5350	665	-	-	**S**	**47**	**AD1**	**11**	
110.73	13	168	0.40	5350	655	-	-	**SF**	**47**	**AD1**	**15**	→ 📖 483
94.08*	15	168	0.46	5350	645	-	-	**SA**	**47**	**AD1**	**12**	
84.00*	17	167	0.51	5360	640	-	-	**SAF**	**47**	**AD1**	**14**	
71.75*	20	167	0.58	5360	625	-	-					
69.39	20	155	0.46	5370	385	-	-					
67.20*	21	167	0.62	5360	615	-	-					
63.80*	22	155	0.50	5370	380	-	-					
56.61	25	165	0.72	5320	1780	-	-	**S**	**47**	**AD2**	**12**	
								SF	**47**	**AD2**	**16**	→ 📖 483
								SA	**47**	**AD2**	**14**	
								SAF	**47**	**AD2**	**15**	
54.59	26	155	0.57	5150	360	-	-	**S**	**47**	**AD1**	**11**	
47.32	30	155	0.65	4850	345	-	-	**SF**	**47**	**AD1**	**15**	→ 📖 483
44.22*	32	155	0.69	4710	335	-	-	**SA**	**47**	**AD1**	**12**	
								SAF	**47**	**AD1**	**14**	

i	n_a [1/min]	M_{amax}	P_e [kW]	F_{Ra} [1)] [N]	F_{Re} [N]	φ (/R)	⚠				m [kg]	
38.23	37	155	0.80	4420	1480	-	-					
32.48*	43	155	0.93	4120	1460	-	-					
29.00*	48	155	1.0	3920	1430	-	-					
24.77	57	155	1.2	3650	1660	-	-					
23.20*	60	152	1.2	3570	1660	-	-					
20.33	69	110	0.95	3370	990	-	-					
19.54	72	144	1.4	3370	1650	-	-					
17.62	79	110	1.1	3160	1560	-	-					
16.47*	85	110	1.2	3060	1550	-	-	**S**	**47**	**AD2**	**12**	
14.24	98	110	1.3	2850	1530	-	-	**SF**	**47**	**AD2**	**16**	→ 📖 483
12.10*	116	109	1.6	2650	1520	-	M1-6	**SA**	**47**	**AD2**	**14**	
10.80*	130	109	1.7	2500	1510	-	M1-6	**SAF**	**47**	**AD2**	**15**	
9.23*	152	109	2.0	2310	1480	-	M1-6					
8.64*	162	109	2.1	2230	1470	-	M1-6					
7.28	192	103	2.4	2110	1460	-	M1-6					
6.83	205	78	1.9	2300	1500	-	M1-6					
6.40*	219	76	2.0	2260	1500	-	M1-6					
5.39	260	74	2.3	2110	1480	-	M1-6					
4.76	294	72	2.5	2010	1460	-	M1-6					
4.00*	350	61	2.5	1980	1500	-	M1-6					
S57 AD.. , n_e = 1400 1/min												**330 Nm**
201.00*	7.0	295	0.40	7130	455	-	-					
184.80*	7.6	295	0.43	7130	455	-	-					
158.12	8.8	295	0.49	7130	450	-	-	**S**	**57**	**AD1**	**15**	
137.05	10	295	0.55	7130	440	-	-	**SF**	**57**	**AD1**	**19**	→ 📖 483
128.10*	11	295	0.58	7130	435	-	-	**SA**	**57**	**AD1**	**15**	
110.73	13	295	0.66	7130	410	-	-	**SAF**	**57**	**AD1**	**18**	
94.08*	15	295	0.76	7130	395	-	-					
84.00*	17	295	0.84	7130	380	-	-					
71.75*	20	290	0.96	7170	1570	-	-					
69.39	20	245	0.71	7520	1120	-	-					
67.20*	21	285	1.0	7220	1570	-	-					
63.80*	22	245	0.77	7520	1100	-	-					
56.61	25	265	1.1	7370	1700	-	-					
54.59	26	245	0.88	7520	1080	-	-					
47.32	30	245	1.0	7520	1050	-	-					
44.22*	32	245	1.1	7520	1570	-	-					
38.23	37	245	1.2	7320	1560	-	-					
32.48*	43	245	1.4	6840	1540	-	-					
29.00*	48	245	1.6	6520	1530	-	-					
24.77	57	245	1.8	6100	1510	-	-					
23.20*	60	245	1.9	5930	1500	-	-	**S**	**57**	**AD2**	**16**	
20.33	69	168	1.4	5690	1380	-	-	**SF**	**57**	**AD2**	**20**	→ 📖 483
19.54	72	215	2.0	5720	1520	-	-	**SA**	**57**	**AD2**	**16**	
17.62	79	168	1.6	5350	1360	-	-	**SAF**	**57**	**AD2**	**19**	
16.47*	85	168	1.8	5200	1350	-	-					
14.24	98	169	2.0	4860	1320	-	-					
12.10*	116	169	2.4	4520	1300	-	-					
10.80*	130	169	2.6	4290	1270	-	-					
9.23*	152	169	3.1	3990	1230	-	M1-6					
8.64*	162	166	3.2	3900	1230	-	M1-6					
7.28	192	146	3.3	3790	1260	-	M1-6					
6.83	205	100	2.4	4100	1380	-	M1-6					
6.40*	219	98	2.5	4010	1370	-	M1-6					
5.39	260	95	2.9	3760	1340	-	M1-6					
4.76	294	93	3.2	3590	1320	-	M1-6					
4.00*	350	88	3.6	3380	1300	-	M1-6					

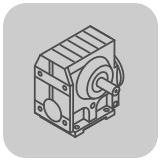

S..
S.. AD.. [Nm]

i	n_a [1/min]	M_{amax}	P_e [kW]	F_{Ra} [N] 1)	F_{Re} [N]	φ (/R)	⚠				m [kg]	
S67 AD.. , n_e = 1400 1/min												**570 Nm**
217.41	6.4	520	0.62	8680	1480	-	-					
190.11	7.4	520	0.70	8680	1470	-	-					
180.60*	7.8	520	0.73	8680	1470	-	-					
158.45	8.8	520	0.82	8680	1440	-	-					
134.40*	10	520	0.95	8680	1420	-	-					
121.33	12	520	1.0	8680	1400	-	-	**S**	**67**	**AD2**	**27**	
106.75*	13	520	1.2	8680	1660	-	-	**SF**	**67**	**AD2**	**34**	→ 📖 483
100.80*	14	520	1.2	8680	1650	-	-	**SA**	**67**	**AD2**	**28**	
85.83	16	520	1.4	8680	1640	-	-	**SAF**	**67**	**AD2**	**33**	
78.00*	18	520	1.5	8680	1630	-	-					
75.06	19	480	1.2	9020	1460	-	-					
67.57	21	520	1.7	8680	1620	-	-					
65.63	21	480	1.4	9020	1450	-	-					
62.35*	22	480	1.5	9020	1450	-	-					
58.80*	24	500	1.9	8850	2620	-	-	**S**	**67**	**AD3**	**30**	
								SF	**67**	**AD3**	**37**	→ 📖 483
								SA	**67**	**AD3**	**32**	
								SAF	**67**	**AD3**	**36**	
54.70	26	480	1.7	8670	1420	-	-					
46.40*	30	480	1.9	8060	1410	-	-					
41.89	33	480	2.1	7690	1390	-	-					
36.85	38	480	2.4	7250	1380	-	-					
34.80*	40	480	2.5	7060	1370	-	-	**S**	**67**	**AD2**	**27**	
29.63	47	480	3.0	6540	1330	-	-	**SF**	**67**	**AD2**	**34**	→ 📖 483
26.93	52	480	3.2	6240	1310	-	-	**SA**	**67**	**AD2**	**28**	
24.44	57	340	2.4	6040	1120	-	-	**SAF**	**67**	**AD2**	**33**	
23.33	60	480	3.7	5810	1280	-	-					
23.22*	60	340	2.5	5890	1120	-	-					
20.37	69	340	2.8	5520	1080	-	-					
20.30*	69	425	3.8	5760	2340	-	-	**S**	**67**	**AD3**	**30**	
								SF	**67**	**AD3**	**37**	→ 📖 483
								SA	**67**	**AD3**	**32**	
								SAF	**67**	**AD3**	**36**	
17.28*	81	340	3.3	5080	1050	-	-	**S**	**67**	**AD2**	**27**	
15.60*	90	340	3.6	4820	1020	-	-	**SF**	**67**	**AD2**	**34**	→ 📖 483
13.73*	102	340	4.1	4510	1000	-	-	**SA**	**67**	**AD2**	**28**	
12.96*	108	340	4.4	4310	980	-	-	**SAF**	**67**	**AD2**	**33**	
11.03	127	340	5.1	3660	1940	-	-	**S**	**67**	**AD3**	**30**	
10.03	140	340	5.6	3290	1910	-	M1-6	**SF**	**67**	**AD3**	**37**	→ 📖 483
8.69	161	335	6.4	2860	1860	-	M1-6	**SA**	**67**	**AD3**	**32**	
7.56*	185	295	6.4	3220	1930	-	M1-6	**SAF**	**67**	**AD3**	**36**	
S77 AD.. , n_e = 1400 1/min												**1270 Nm**
256.47	5.5	1270	1.2	11700	1510	-	-					
225.26	6.2	1270	1.3	11700	1500	-	-					
214.00*	6.5	1270	1.4	11700	1510	-	-					
189.09	7.4	1270	1.5	11700	1480	-	-					
161.60*	8.7	1260	1.8	11800	1480	-	-					
148.15	9.4	1240	1.9	12000	1480	-	-					
130.00*	11	1210	2.0	12200	1480	-	-					
123.20*	11	1200	2.1	12300	1480	-	-					
107.83	13	1170	2.4	12600	1470	-	-					
97.14	14	1140	2.5	12800	1460	-	-	**S**	**77**	**AD2**	**47**	
85.22	16	1100	2.8	13100	1460	-	-	**SF**	**77**	**AD2**	**57**	→ 📖 483
75.20*	19	1070	3.0	12800	1450	-	-	**SA**	**77**	**AD2**	**47**	
75.09	19	1100	2.6	11900	1090	-	-	**SAF**	**77**	**AD2**	**53**	
71.33	20	1100	2.8	11600	1090	-	-					
66.67	21	1040	3.3	12300	1440	-	-					
63.03	22	1100	3.1	10900	1040	-	-					
56.92	25	990	3.6	11600	1430	-	-					
53.87	26	1100	3.6	10100	1010	-	-					
49.38	28	1100	3.9	9650	1000	-	-					
43.33	32	1100	4.4	9010	970	-	-					
41.07	34	1100	4.7	8750	950	-	-					

i	n_a [1/min]	M_{amax}	P_e [kW]	F_{Ra} [N] 1)	F_{Re} [N]	φ (/R)	⚠				m [kg]	
35.94	39	1100	5.3	8140	1950	-	-					
32.38	43	1090	5.8	7720	1920	-	-					
28.41	49	1050	6.4	7370	1910	-	-					
25.07	56	1020	7.0	7010	1890	-	-					
22.89	61	705	5.1	5960	1680	-	-					
22.22	63	980	7.6	6740	1880	-	-	**S**	**77**	**AD3**	**50**	
20.99	67	705	5.6	5380	1660	-	-	**SF**	**77**	**AD3**	**60**	→ 📖 483
18.97	74	930	8.4	6390	1860	-	-	**SA**	**77**	**AD3**	**50**	
18.42	76	705	6.3	4550	1620	-	-	**SAF**	**77**	**AD3**	**57**	
17.45	80	710	6.7	4120	1590	-	-					
15.28	92	710	7.6	3320	1540	-	-					
13.76	102	710	8.4	2710	1480	-	-					
12.07	116	720	9.7	1800	1390	-	M1-6					
10.65	131	720	11.0	1130	3300	-	M1-6	**S**	**77**	**AD4**	**57**	
9.44	148	725	12.4	415	3220	-	M1-6	**SF**	**77**	**AD4**	**66**	→ 📖 483
8.06	174	680	13.6	440	3210	-	M1-6	**SA**	**77**	**AD4**	**56**	
								SAF	**77**	**AD4**	**63**	
S87 AD.. , n_e = 1400 1/min												**2500 Nm**
288.00*	4.9	2280	1.8	27900	1390	-	-					
258.18	5.4	2280	2.0	27900	1380	-	-					
222.40*	6.3	2280	2.2	27900	1370	-	-					
202.96	6.9	2260	2.4	28000	1370	-	-					
180.00*	7.8	2210	2.6	28100	1370	-	-					
151.30	9.2	2150	3.0	28200	1360	-	-					
139.05	10	2100	3.2	28300	1360	-	-	**S**	**87**	**AD2**	**83**	
123.48	11	2060	3.5	28300	1360	-	-	**SF**	**87**	**AD2**	**105**	→ 📖 483
110.40*	13	2000	3.8	28400	1350	-	-	**SA**	**87**	**AD2**	**80**	
99.26	14	1960	4.1	28500	1340	-	-	**SAF**	**87**	**AD2**	**97**	
91.20*	15	1510	2.9	29100	1040	-	-					
86.15	16	1880	4.4	28600	1340	-	-					
81.76	17	1600	3.4	29000	970	-	-					
77.14	18	1820	4.8	28700	1330	-	-					
70.43	20	1600	4.0	29000	950	-	-					
64.27	22	1600	4.3	29000	930	-	-					
64.00*	22	1700	5.4	28900	2250	-	-	**S**	**87**	**AD3**	**87**	
								SF	**87**	**AD3**	**110**	→ 📖 483
								SA	**87**	**AD3**	**85**	
								SAF	**87**	**AD3**	**100**	
57.00*	25	1600	4.9	29000	910	-	-	**S**	**87**	**AD2**	**83**	
								SF	**87**	**AD2**	**105**	→ 📖 483
								SA	**87**	**AD2**	**80**	
								SAF	**87**	**AD2**	**97**	
47.91	29	1600	5.8	29000	1820	-	-					
44.03	32	1600	6.2	29000	1800	-	-	**S**	**87**	**AD3**	**87**	
39.10	36	1600	7.0	28200	1760	-	-	**SF**	**87**	**AD3**	**110**	→ 📖 483
34.96*	40	1600	7.8	27100	1720	-	-	**SA**	**87**	**AD3**	**85**	
31.43	45	1600	8.6	26000	1680	-	-	**SAF**	**87**	**AD3**	**100**	
27.28	51	1600	9.9	24700	1620	-	-					
25.50*	55	1240	8.0	23400	3310	-	-					
24.43	57	1600	11.1	23700	3590	-	-					
21.43	65	1240	9.5	21800	3260	-	-					
20.27	69	1600	13.2	22100	3490	-	-					
19.70	71	1240	10.3	21100	3200	-	-	**S**	**87**	**AD4**	**93**	
17.49	80	1240	11.5	20200	3150	-	-	**SF**	**87**	**AD4**	**115**	→ 📖 483
15.64*	90	1240	12.8	19300	3100	-	-	**SA**	**87**	**AD4**	**91**	
14.06	100	1240	14.3	18500	3040	-	-	**SAF**	**87**	**AD4**	**105**	
12.21	115	1240	16.4	17400	2950	-	M1-6					
10.93	128	1240	18.2	16400	2870	-	M1-6					
9.07	154	1140	20	15900	2860	-	M1-6					
7.88	178	1010	21	15700	2980	-	M1-6					

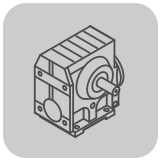

i	n_a [1/min]	M_{amax}	P_e [kW]	F_{Ra} [N] 1)	F_{Re} [N]	φ (/R)	⚠					m [kg]	
S97 AD.. , n_e = 1400 1/min													**4200 Nm**
286.40*	4.9	4000	3.0	33200	2100	-	-						
262.22	5.3	4000	3.2	33200	2100	-	-						
231.67	6.0	4000	3.6	33200	2080	-	-						
196.52	7.1	4000	4.2	33200	2060	-	-						
180.95	7.7	3920	4.5	33400	2060	-	-						
161.74	8.7	3840	4.8	33500	2060	-	-	**S**	**97**	**AD3**	**145**		
145.60*	9.6	3730	5.2	33700	2060	-	-	**SF**	**97**	**AD3**	**180**	→ 📖 483	
131.85	11	3650	5.6	33900	2060	-	-	**SA**	**97**	**AD3**	**140**		
116.92	12	3510	6.0	34100	2060	-	-	**SAF**	**97**	**AD3**	**165**		
105.71	13	3440	6.5	34300	2060	-	-						
89.60*	16	3240	7.2	34600	2050	-	-						
80.85	17	3230	6.8	34600	1280	-	-						
78.26	18	3080	7.8	34800	2050	-	-						
71.43	20	3300	7.9	34500	3300	-	-	**S**	**97**	**AD4**	**150**		
								SF	**97**	**AD4**	**185**	→ 📖 483	
								SA	**97**	**AD4**	**145**		
								SAF	**97**	**AD4**	**170**		
65.45	21	2900	8.7	35100	2030	-	-	**S**	**97**	**AD3**	**145**		
								SF	**97**	**AD3**	**180**	→ 📖 483	
								SA	**97**	**AD3**	**140**		
								SAF	**97**	**AD3**	**165**		
60.59	23	3300	9.2	34500	3260	-	-						
55.79	25	3300	10.0	34500	3210	-	-						
49.87	28	3300	11.1	34500	3180	-	-	**S**	**97**	**AD4**	**150**		
44.89	31	3300	12.3	34100	3130	-	-	**SF**	**97**	**AD4**	**185**	→ 📖 483	
40.65	34	3300	13.6	32800	3090	-	-	**SA**	**97**	**AD4**	**145**		
36.05	39	3300	15.3	31300	3040	-	-	**SAF**	**97**	**AD4**	**170**		
32.60	43	3200	16.3	30400	3030	-	-						
27.63	51	3010	18.1	29000	6220	-	-	**S**	**97**	**AD5**	**170**		
								SF	**97**	**AD5**	**200**	→ 📖 483	
								SA	**97**	**AD5**	**165**		
								SAF	**97**	**AD5**	**190**		
26.39	53	2600	15.8	26100	2040	-	-	**S**	**97**	**AD4**	**150**		
								SF	**97**	**AD4**	**185**	→ 📖 483	
								SA	**97**	**AD4**	**145**		
								SAF	**97**	**AD4**	**170**		
24.13	58	2870	19.7	28000	6220	-	-						
23.59	59	2600	17.7	24500	5470	-	-						
21.23	66	2600	19.6	22800	5410	-	-						
19.23	73	2600	22	21200	5350	-	-	**S**	**97**	**AD5**	**170**		
17.05	82	2570	24	19700	5300	-	M1-6	**SF**	**97**	**AD5**	**200**	→ 📖 483	
15.42	91	2470	26	19400	5320	-	M1-6	**SA**	**97**	**AD5**	**165**		
13.07	107	2330	28	18800	5300	-	M1-6	**SAF**	**97**	**AD5**	**190**		
11.41	123	2210	31	18400	5310	-	M1-6						
9.55	147	2040	34	18200	5310	-	M1-6						
8.26	169	1770	34	18800	5480	-	M1-6						

11.4 S.. AM.. (IEC) [mm]

02 010 02 01

S37..

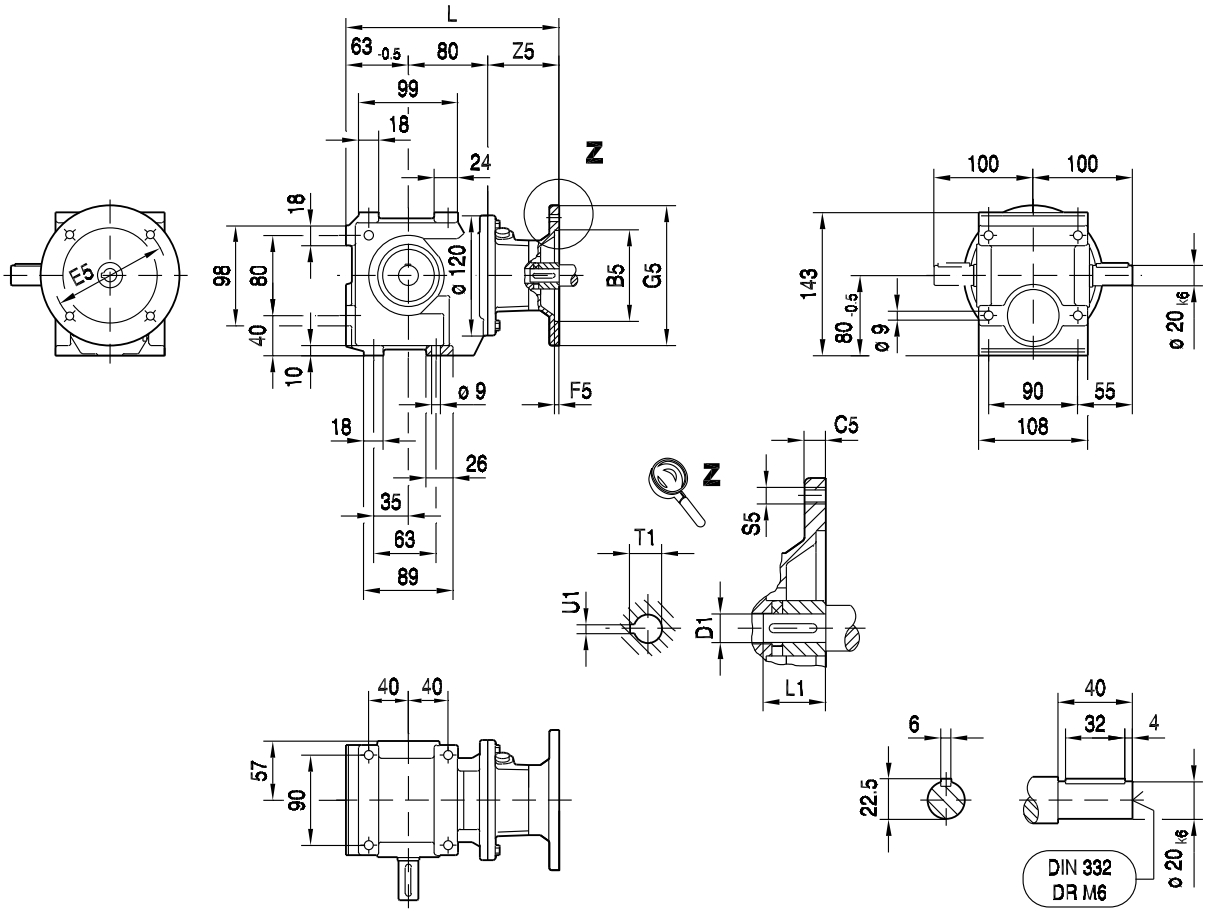

(→ 130)	B5	C5	E5	F5	G5	L	S5	Z5	D1	L1	T1	U1	
AM63	95	10	115	3.5	140	215	M8	72	11	23	12.8	4	
AM71	110	10	130	4.0	160	215	M8	72	14	30	16.3	5	
AM80	130	12	165	4.5	200	249	M10	106	19	40	21.8	6	
AM90	130	12	165	4.5	200	249	M10	106	24	50	27.3	8	

02 011 02 01

SF37..

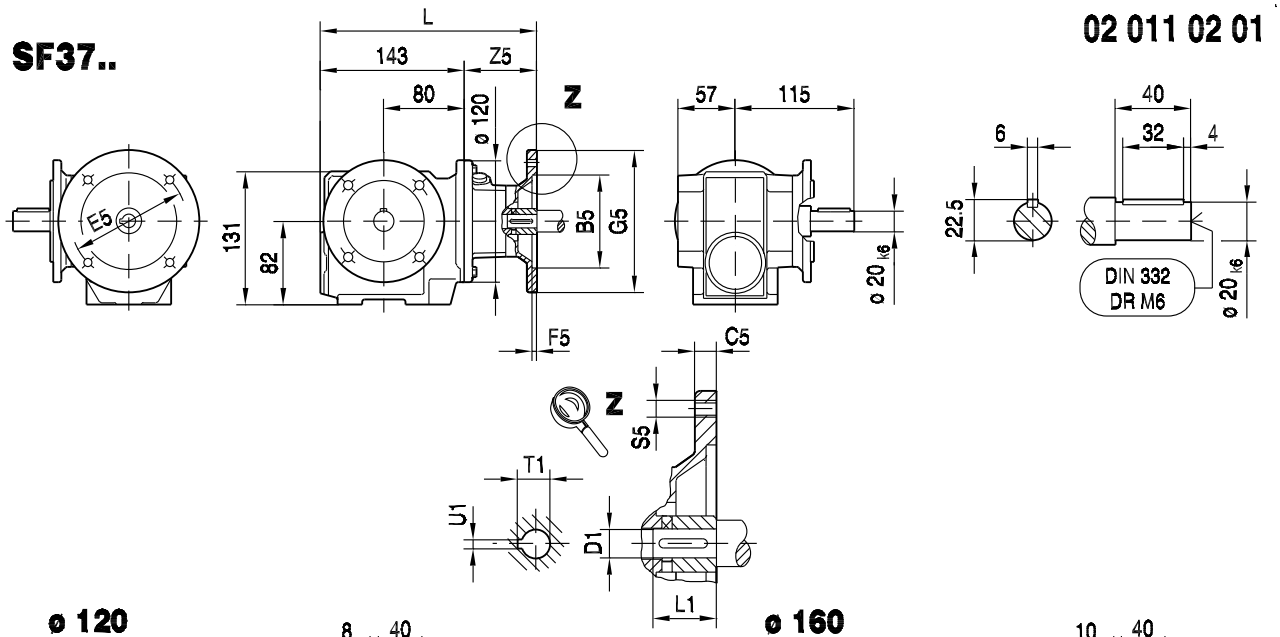

ø 120

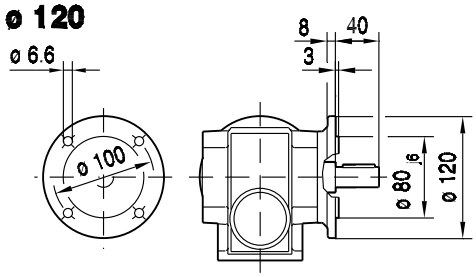

ø 160

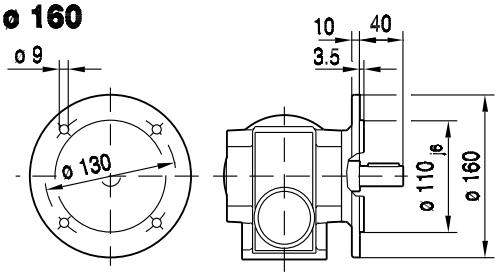

SAF37..

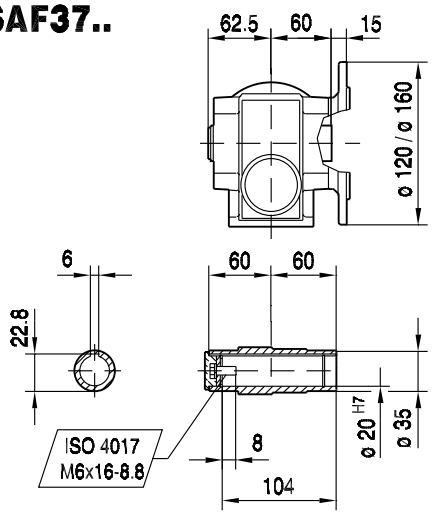

SHF37..

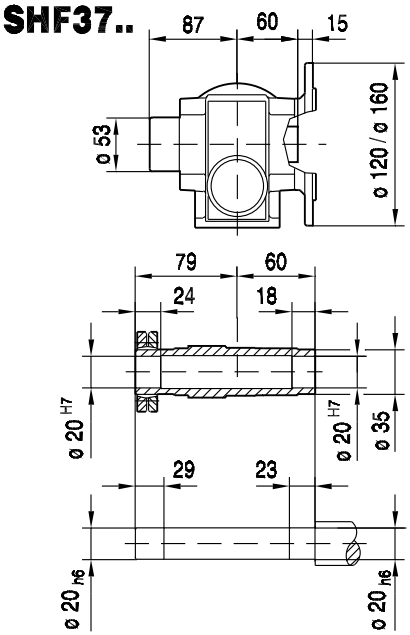

(→ 130)	B5	C5	E5	F5	G5	L	S5	Z5	D1	L1	T1	U1	
AM63	95	10	115	3.5	140	215	M8	72	11	23	12.8	4	
AM71	110	10	130	4.0	160	215	M8	72	14	30	16.3	5	
AM80	130	12	165	4.5	200	249	M10	106	19	40	21.8	6	
AM90	130	12	165	4.5	200	249	M10	106	24	50	27.3	8	

27 001 02 01

SA37..

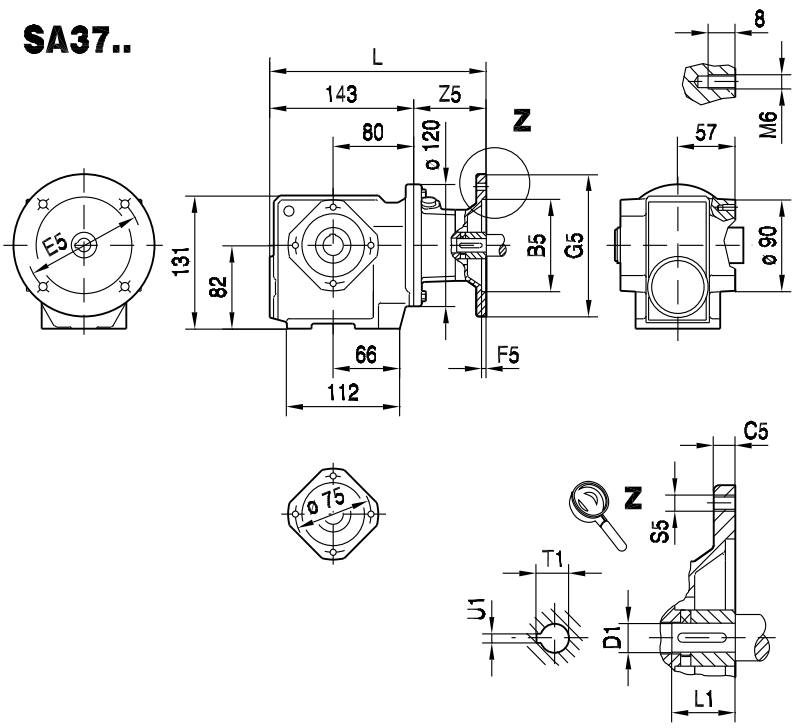

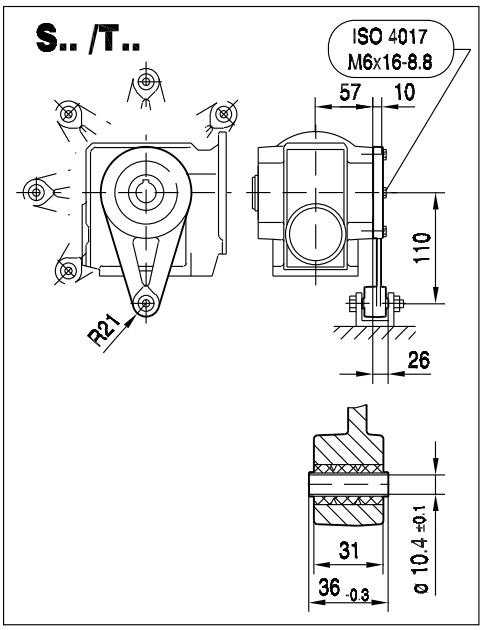

11

SA37..

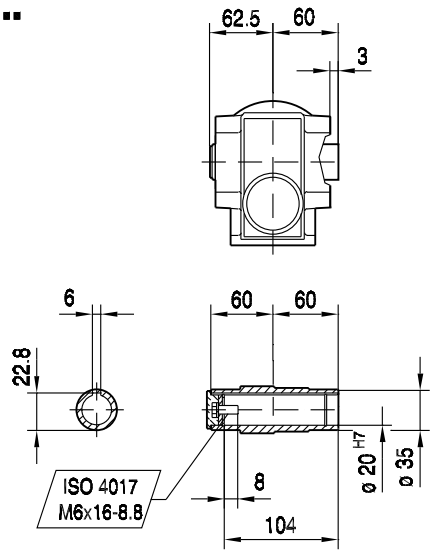

SH37..

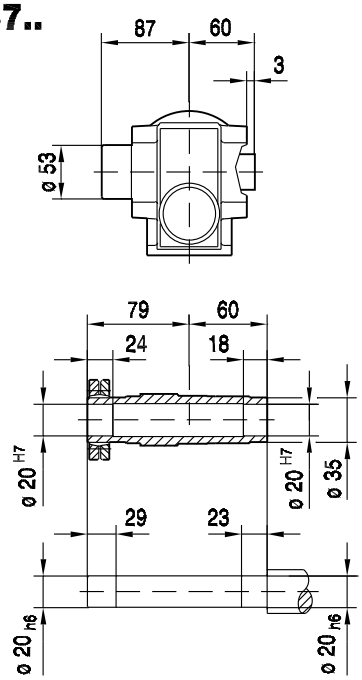

(→ 130)	B5	C5	E5	F5	G5	L	S5	Z5	D1	L1	T1	U1	
AM63	95	10	115	3.5	140	215	M8	72	11	23	12.8	4	
AM71	110	10	130	4.0	160	215	M8	72	14	30	16.3	5	
AM80	130	12	165	4.5	200	249	M10	106	19	40	21.8	6	
AM90	130	12	165	4.5	200	249	M10	106	24	50	27.3	8	

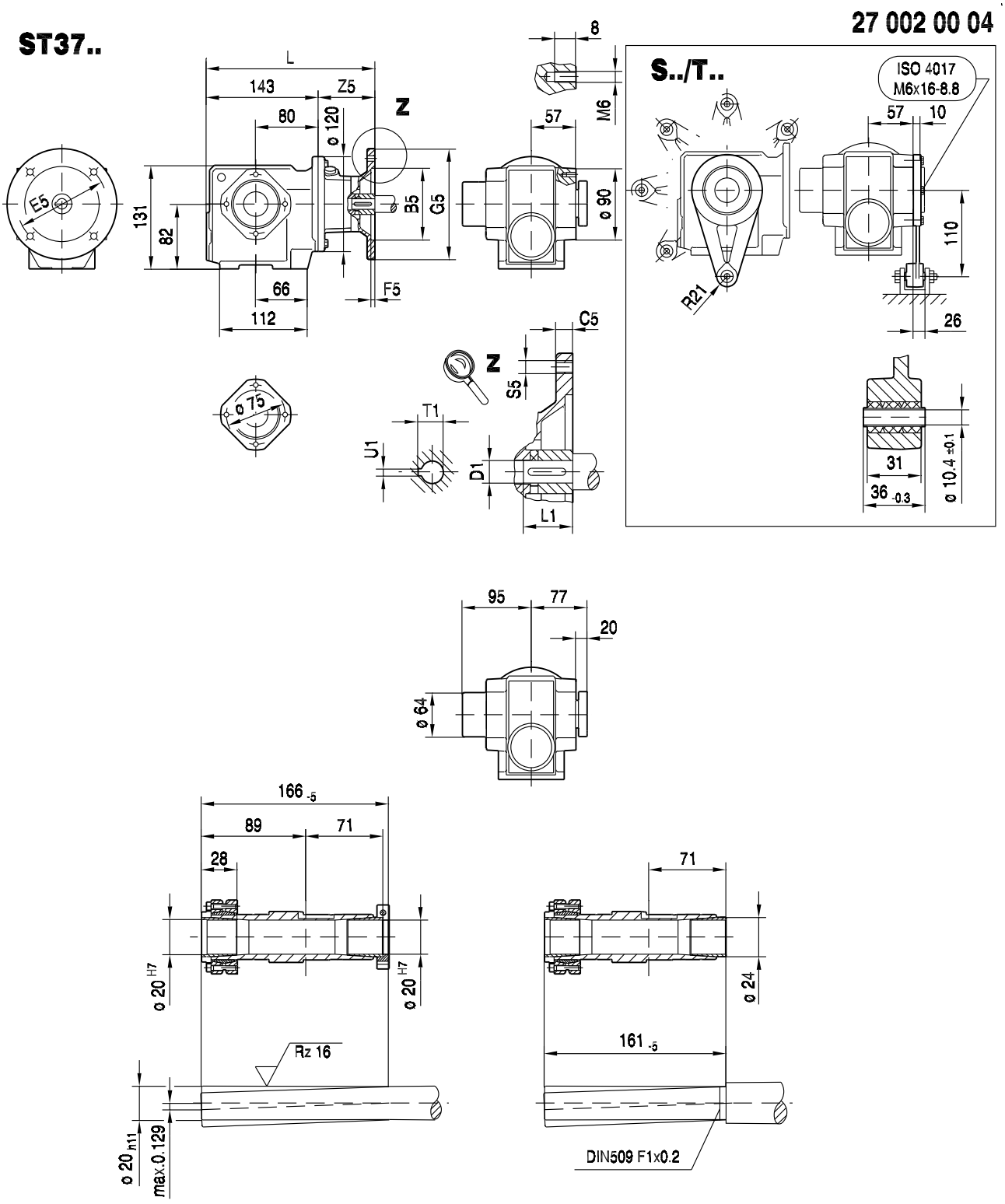

(→ 130)	B5	C5	E5	F5	G5	L	S5	Z5	D1	L1	T1	U1	
AM63	95	10	115	3.5	140	215	M8	72	11	23	12.8	4	
AM71	110	10	130	4.0	160	215	M8	72	14	30	16.3	5	
AM80	130	12	165	4.5	200	249	M10	106	19	40	21.8	6	
AM90	130	12	165	4.5	200	249	M10	106	24	50	27.3	8	

02 012 02 01

S47..

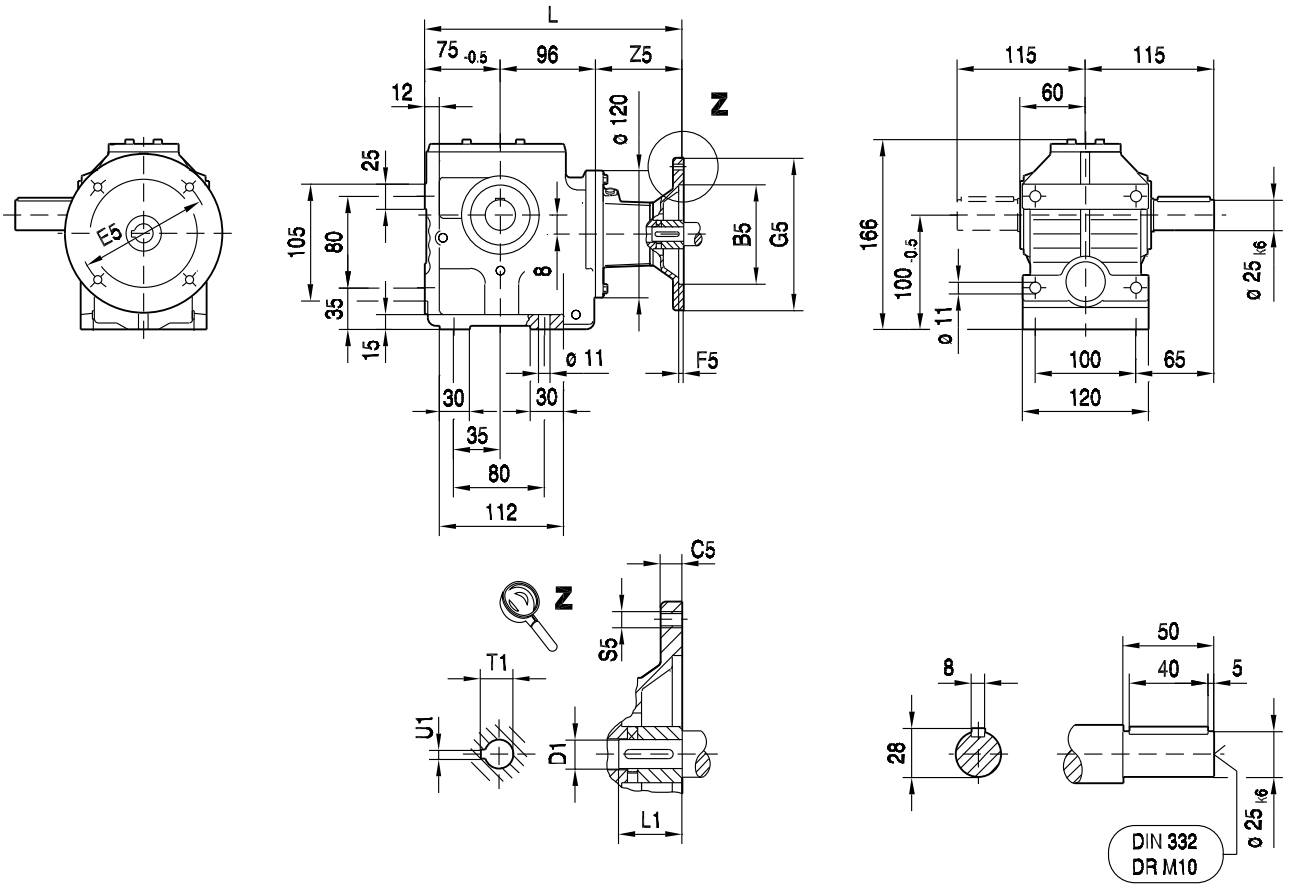

(→ 130)	B5	C5	E5	F5	G5	L	S5	Z5	D1	L1	T1	U1	
AM63	95	10	115	3.5	140	243	M8	72	11	23	12.8	4	
AM71	110	10	130	4.0	160	243	M8	72	14	30	16.3	5	
AM80	130	12	165	4.5	200	277	M10	106	19	40	21.8	6	
AM90	130	12	165	4.5	200	277	M10	106	24	50	27.3	8	

02 013 02 01

SF47..

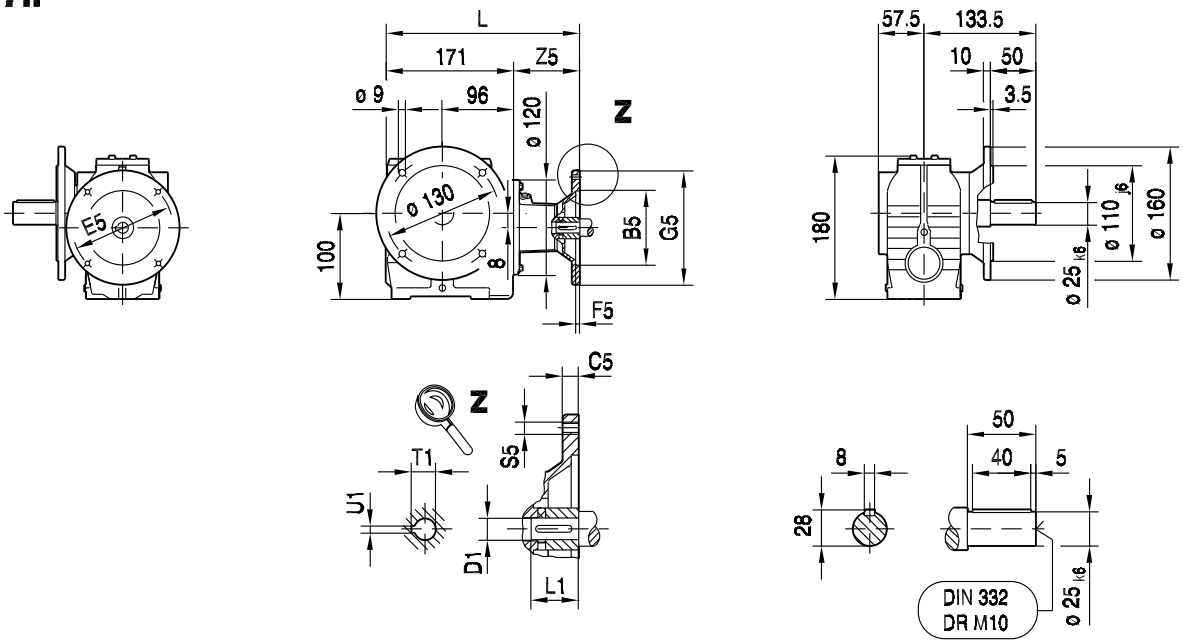

SAF47..

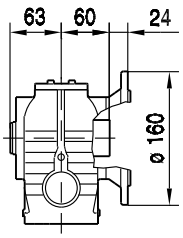

SHF47..

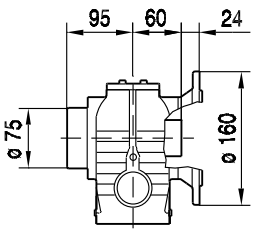

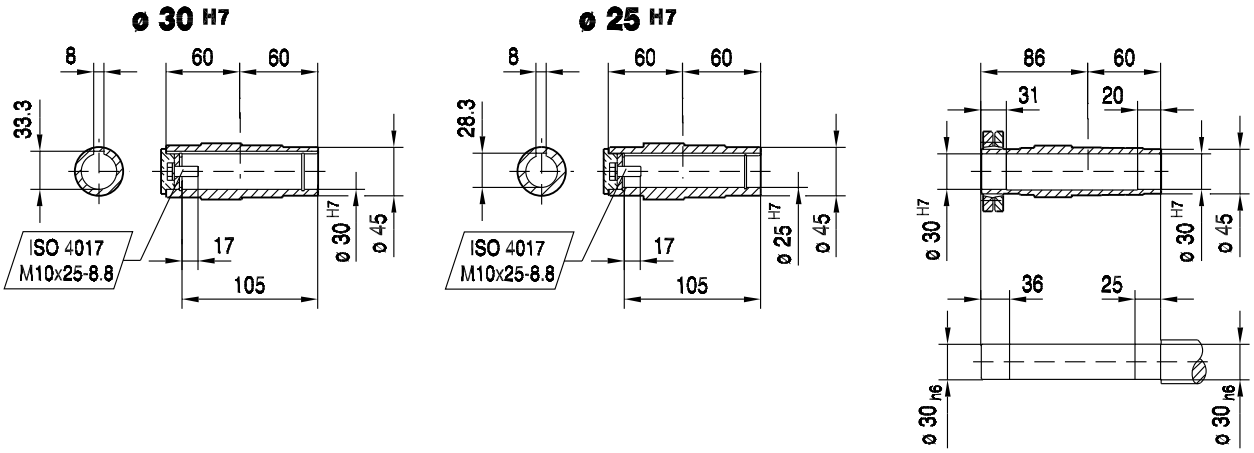

(→ 130)	B5	C5	E5	F5	G5	L	S5	Z5	D1	L1	T1	U1	
AM63	95	10	115	3.5	140	243	M8	72	11	23	12.8	4	
AM71	110	10	130	4.0	160	243	M8	72	14	30	16.3	5	
AM80	130	12	165	4.5	200	277	M10	106	19	40	21.8	6	
AM90	130	12	165	4.5	200	277	M10	106	24	50	27.3	8	

27 002 02 01

SA47..

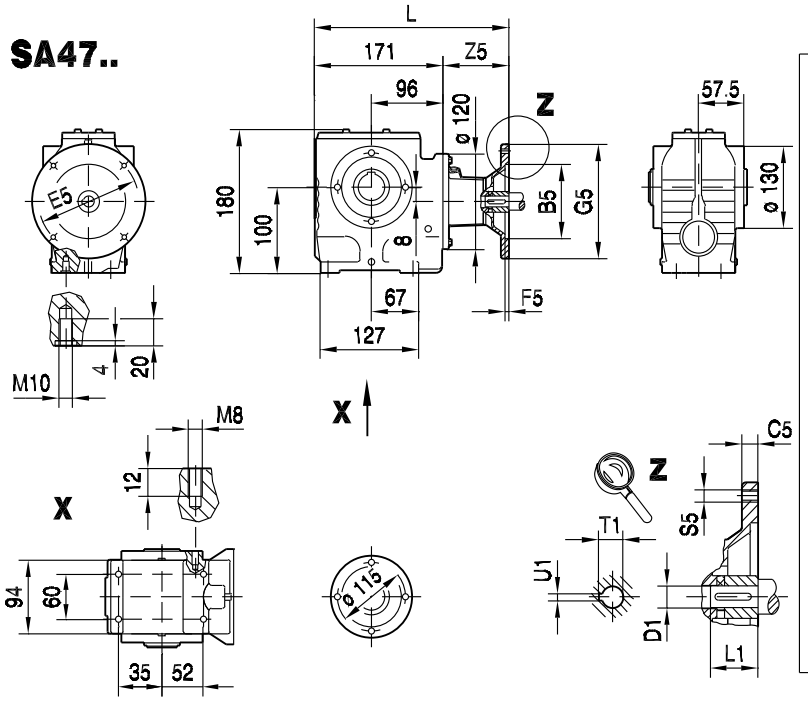

S.. /T..

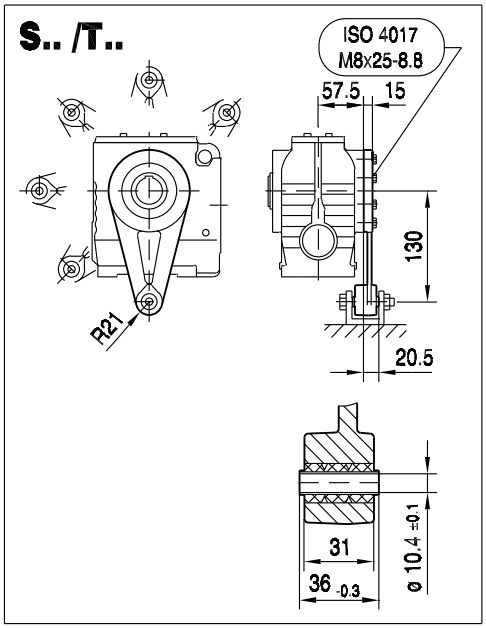

SA47..

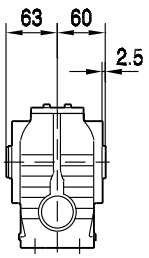

SH47..

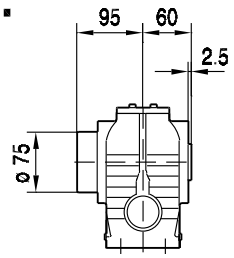

ø 30 H7

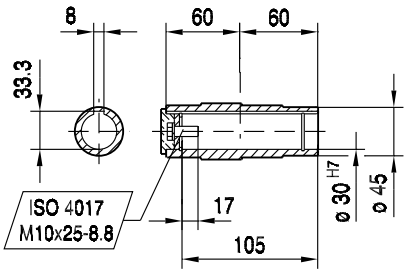

ø 25 H7

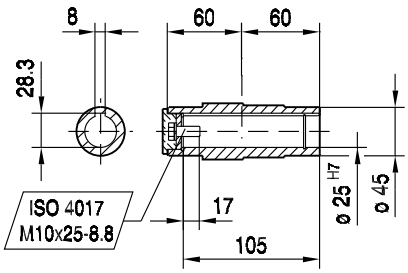

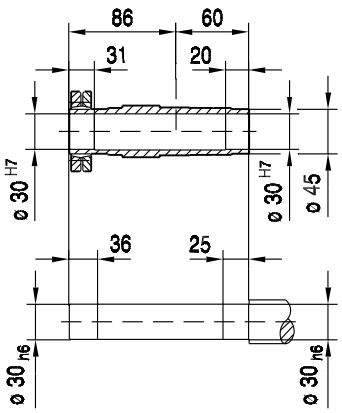

(→ 130)	B5	C5	E5	F5	G5	L	S5	Z5	D1	L1	T1	U1	
AM63	95	10	115	3.5	140	243	M8	72	11	23	12.8	4	
AM71	110	10	130	4.0	160	243	M8	72	14	30	16.3	5	
AM80	130	12	165	4.5	200	277	M10	106	19	40	21.8	6	
AM90	130	12	165	4.5	200	277	M10	106	24	50	27.3	8	

27 003 02 01

SAZ47..

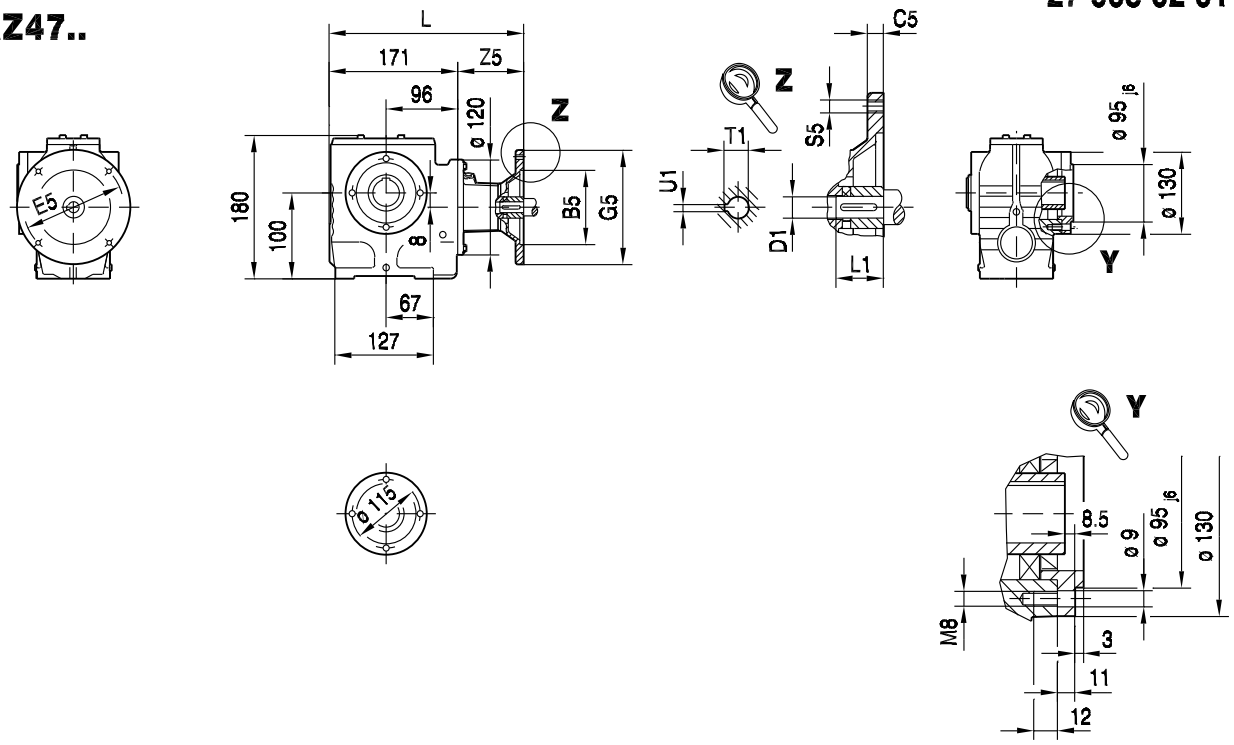

SAZ47..

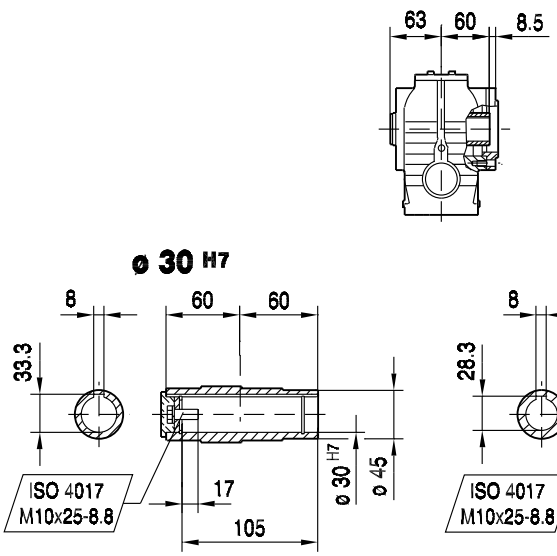

SHZ47..

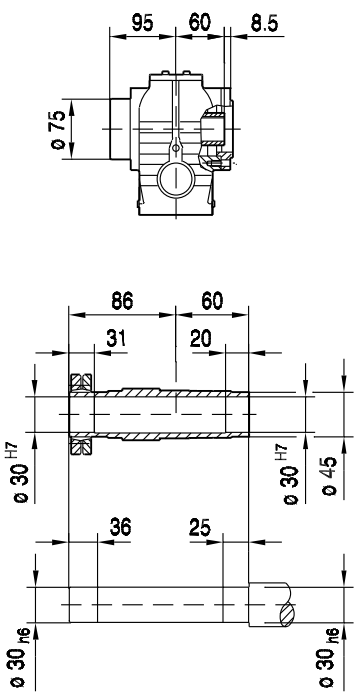

(→ 130)	B5	C5	E5	F5	G5	L	S5	Z5	D1	L1	T1	U1	
AM63	95	10	115	3.5	140	243	M8	72	11	23	12.8	4	
AM71	110	10	130	4.0	160	243	M8	72	14	30	16.3	5	
AM80	130	12	165	4.5	200	277	M10	106	19	40	21.8	6	
AM90	130	12	165	4.5	200	277	M10	106	24	50	27.3	8	

27 003 00 04

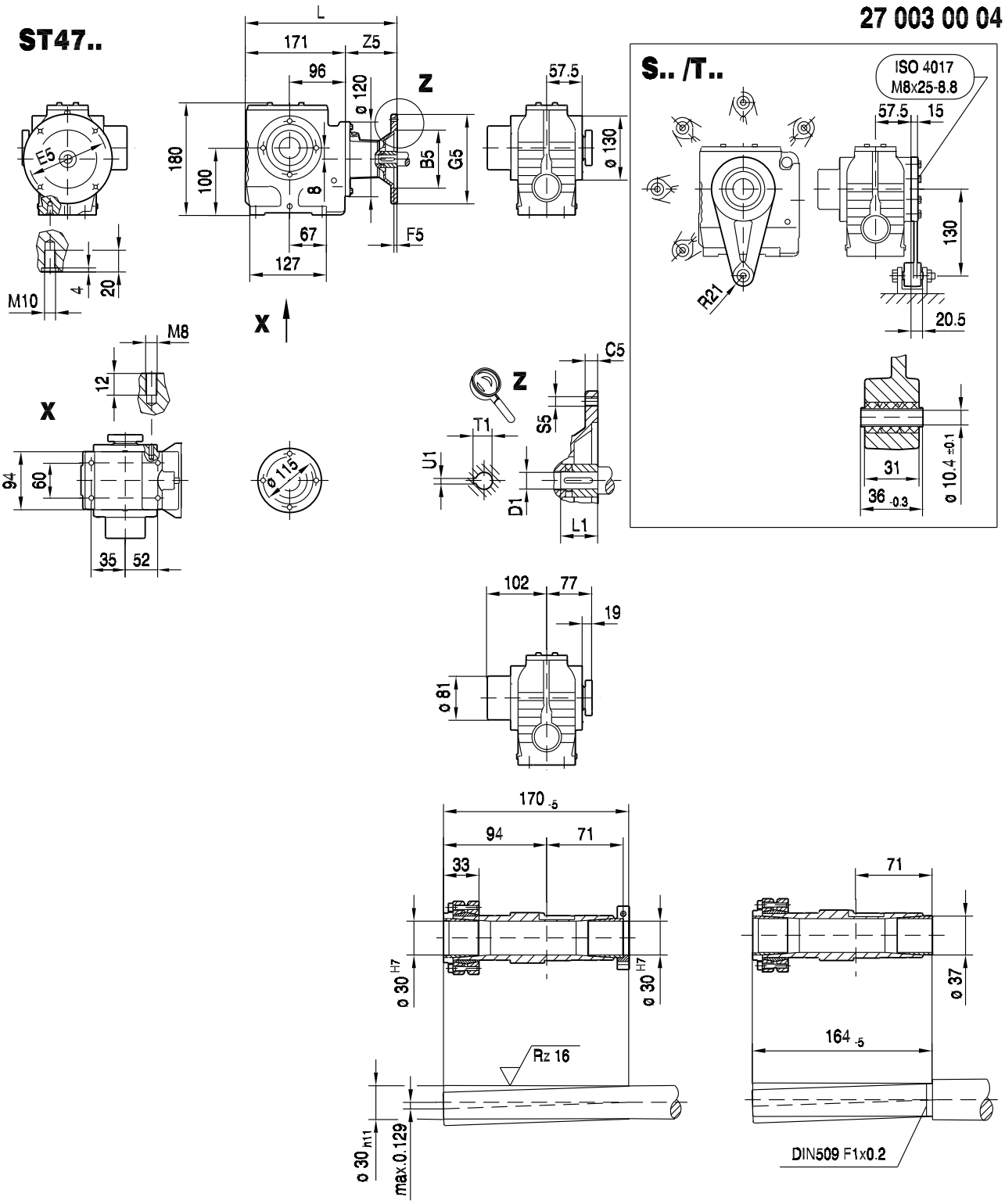

(→ 130)	B5	C5	E5	F5	G5	L	S5	Z5	D1	L1	T1	U1	
AM63	95	10	115	3.5	140	243	M8	72	11	23	12.8	4	
AM71	110	10	130	4.0	160	243	M8	72	14	30	16.3	5	
AM80	130	12	165	4.5	200	277	M10	106	19	40	21.8	6	
AM90	130	12	165	4.5	200	277	M10	106	24	50	27.3	8	

02 014 02 01

S57..

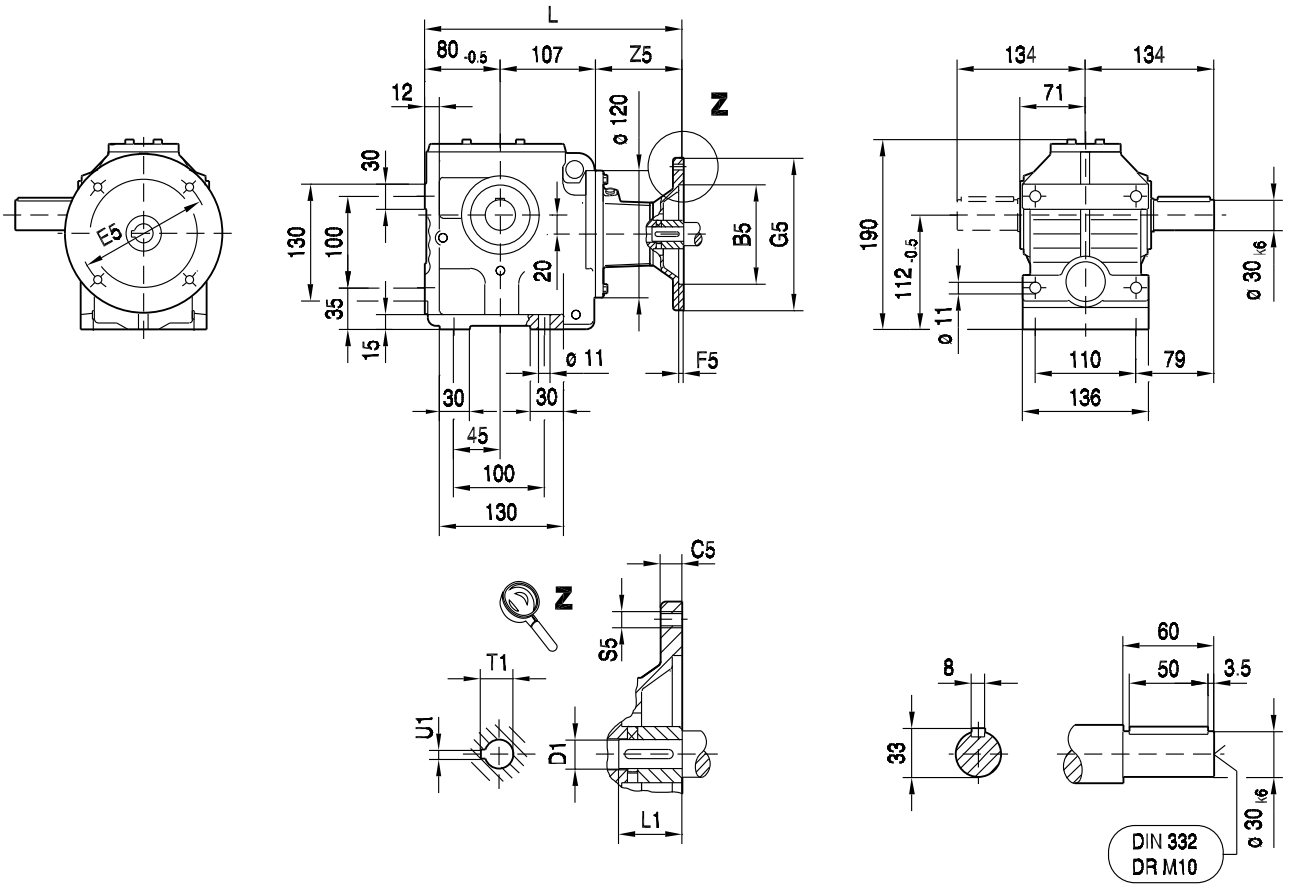

(→ 130)	B5	C5	E5	F5	G5	L	S5	Z5	D1	L1	T1	U1	
AM63	95	10	115	3.5	140	259	M8	72	11	23	12.8	4	
AM71	110	10	130	4.0	160	259	M8	72	14	30	16.3	5	
AM80	130	12	165	4.5	200	293	M10	106	19	40	21.8	6	
AM90	130	12	165	4.5	200	293	M10	106	24	50	27.3	8	

02 015 02 01

SF57..

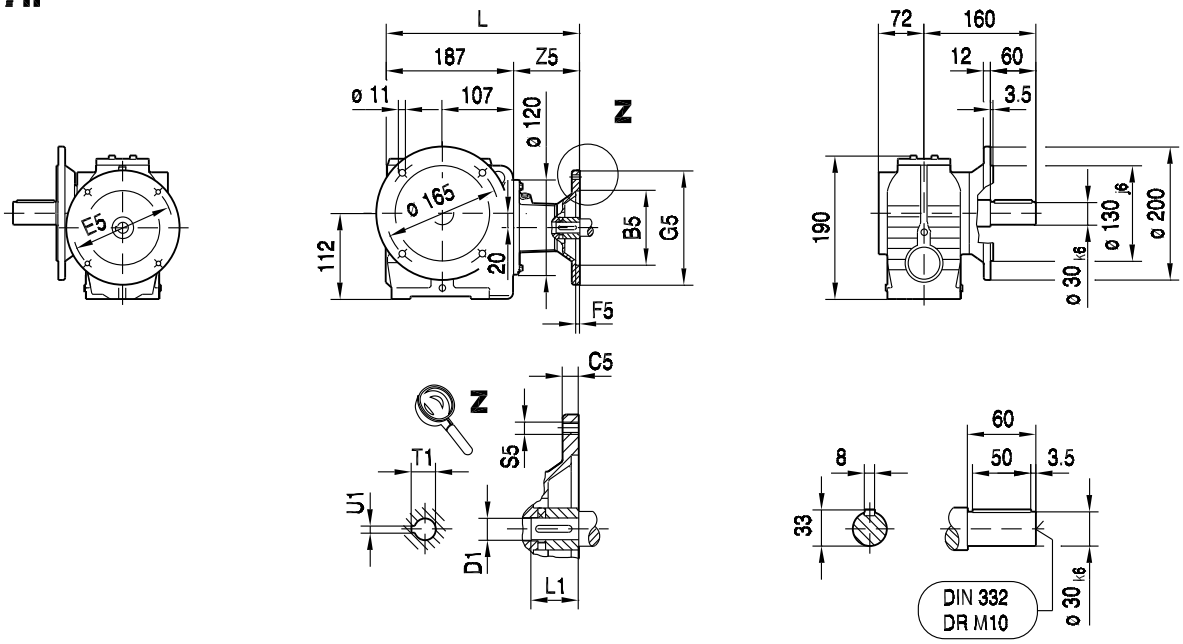

SAF57..

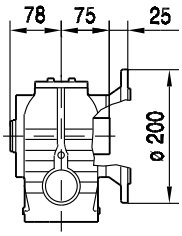

SHF57..

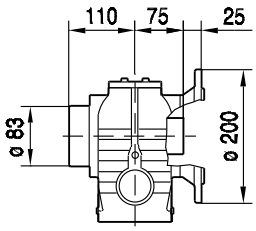

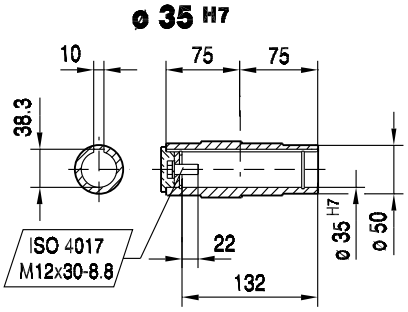

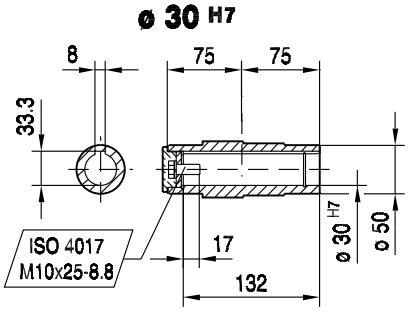

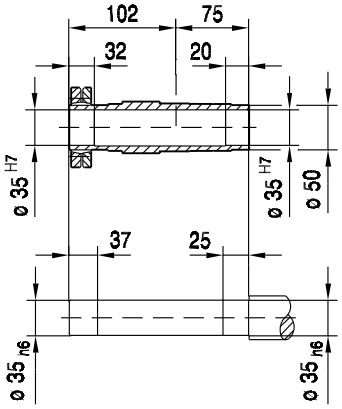

(→ 130)	B5	C5	E5	F5	G5	L	S5	Z5	D1	L1	T1	U1	
AM63	95	10	115	3.5	140	259	M8	72	11	23	12.8	4	
AM71	110	10	130	4.0	160	259	M8	72	14	30	16.3	5	
AM80	130	12	165	4.5	200	293	M10	106	19	40	21.8	6	
AM90	130	12	165	4.5	200	293	M10	106	24	50	27.3	8	

27 004 02 01

SA57..

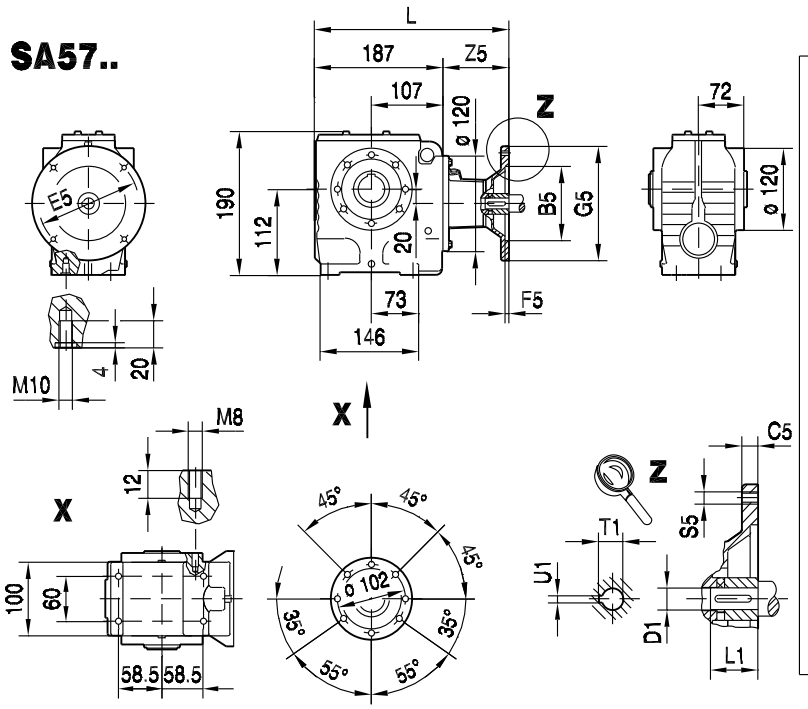

S.. /T..

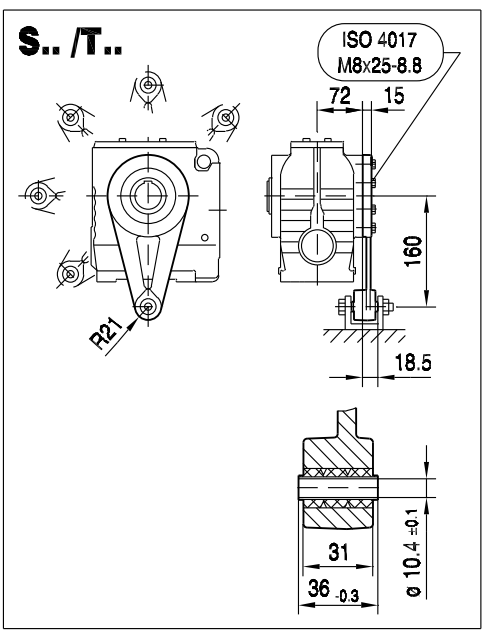

SA57..

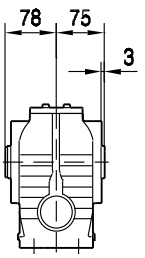

SH57..

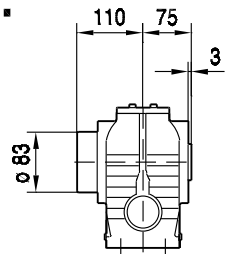

ø 35 H7

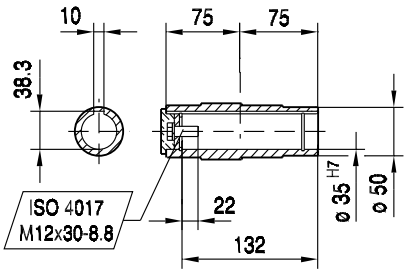

ø 30 H7

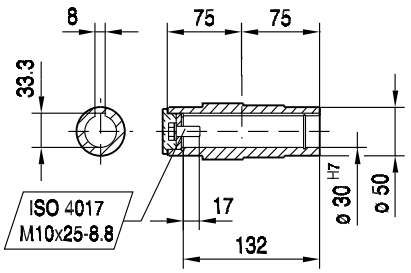

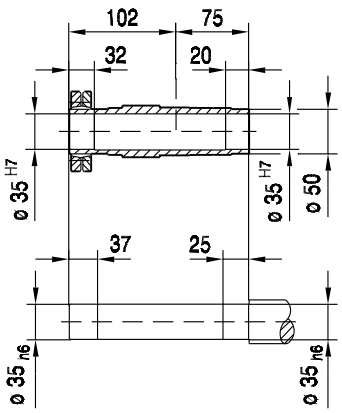

(→ 130)	B5	C5	E5	F5	G5	L	S5	Z5	D1	L1	T1	U1	
AM63	95	10	115	3.5	140	259	M8	72	11	23	12.8	4	
AM71	110	10	130	4.0	160	259	M8	72	14	30	16.3	5	
AM80	130	12	165	4.5	200	293	M10	106	19	40	21.8	6	
AM90	130	12	165	4.5	200	293	M10	106	24	50	27.3	8	

27 005 02 01

SAZ57..

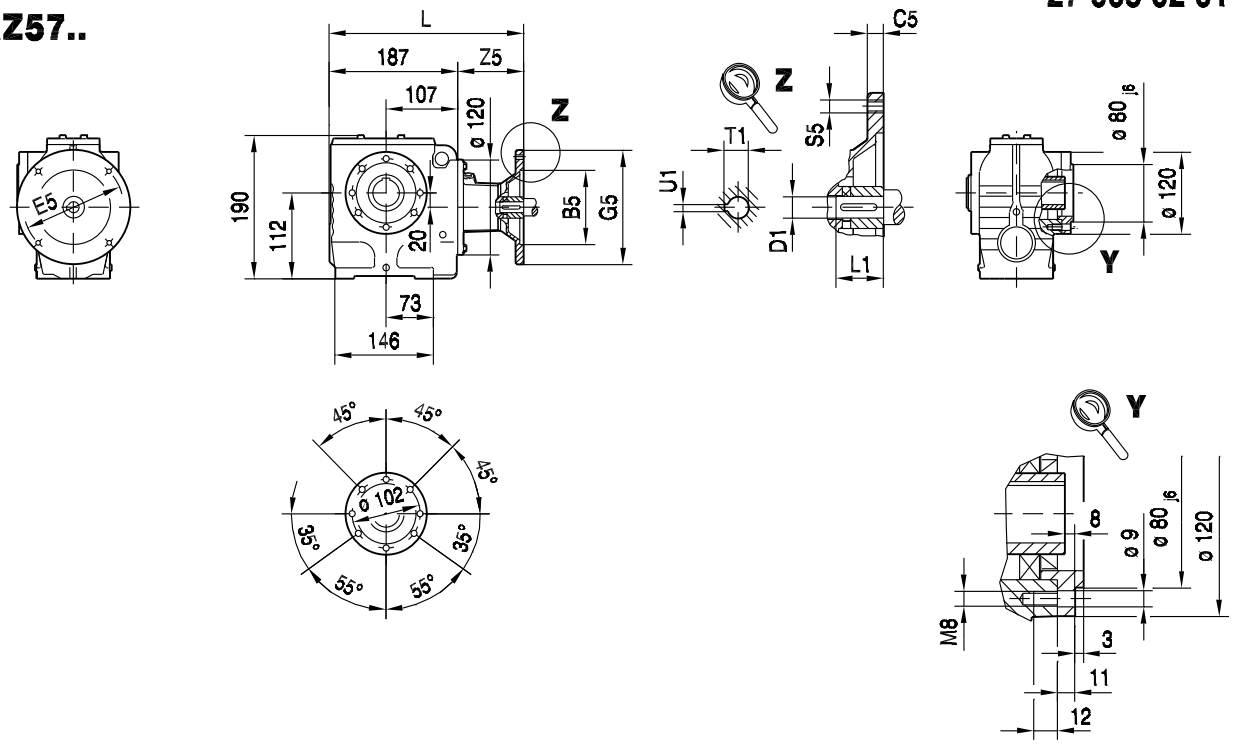

SAZ57..

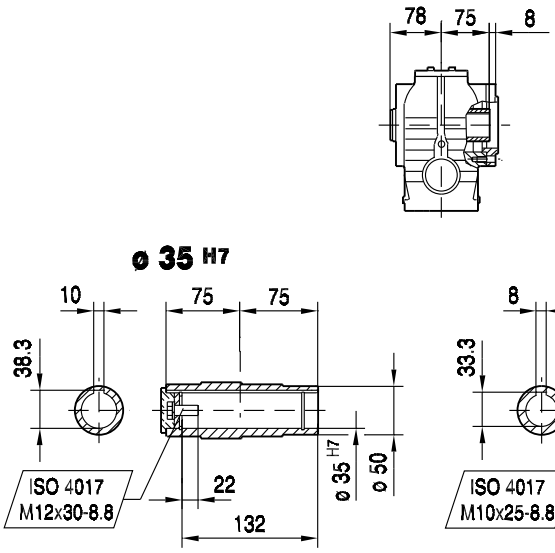

SHZ57..

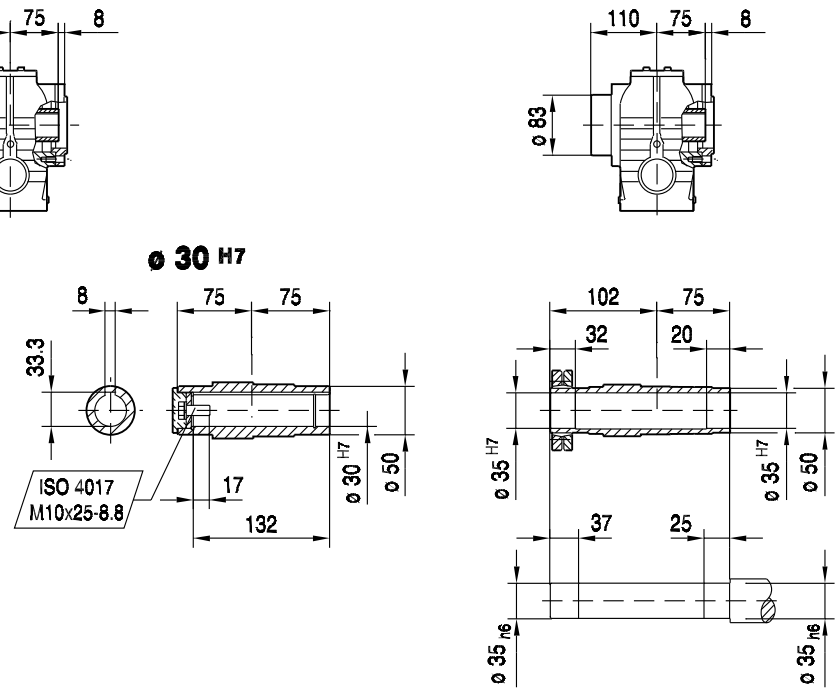

(→ 130)	B5	C5	E5	F5	G5	L	S5	Z5	D1	L1	T1	U1	
AM63	95	10	115	3.5	140	259	M8	72	11	23	12.8	4	
AM71	110	10	130	4.0	160	259	M8	72	14	30	16.3	5	
AM80	130	12	165	4.5	200	293	M10	106	19	40	21.8	6	
AM90	130	12	165	4.5	200	293	M10	106	24	50	27.3	8	

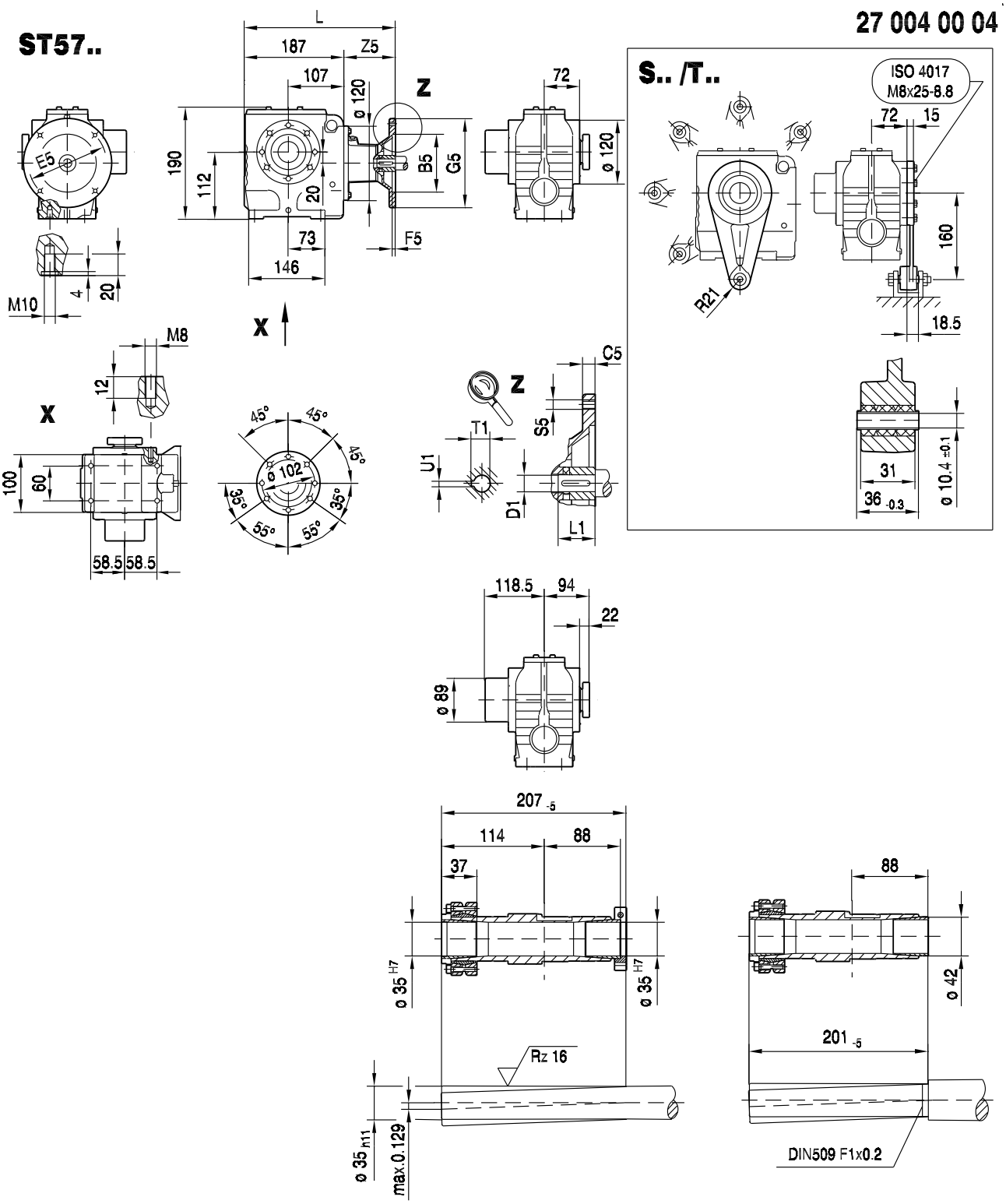

(→ 130)	B5	C5	E5	F5	G5	L	S5	Z5	D1	L1	T1	U1	
AM63	95	10	115	3.5	140	259	M8	72	11	23	12.8	4	
AM71	110	10	130	4.0	160	259	M8	72	14	30	16.3	5	
AM80	130	12	165	4.5	200	293	M10	106	19	40	21.8	6	
AM90	130	12	165	4.5	200	293	M10	106	24	50	27.3	8	

02 016 02 01

S67..

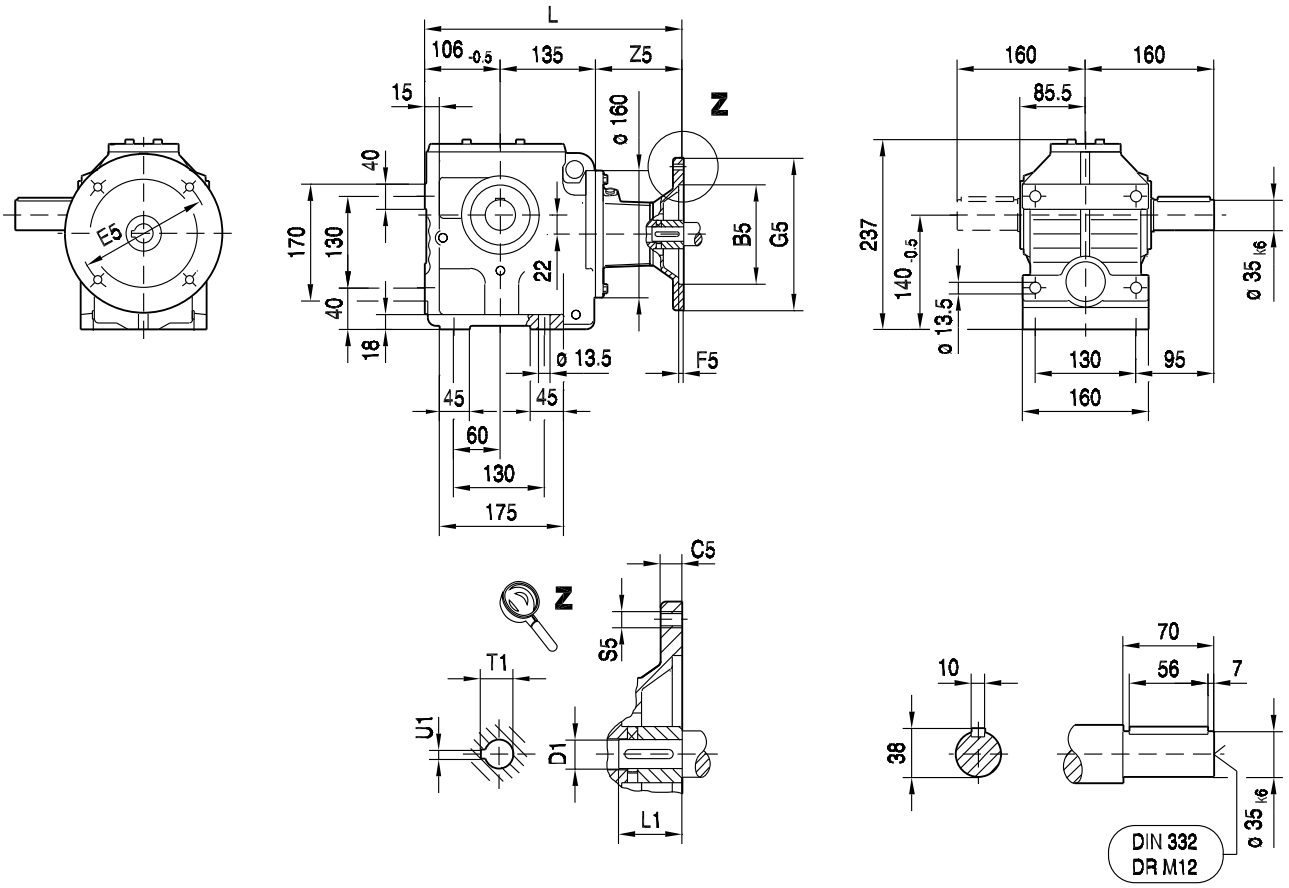

(→ 📖 130)	B5	C5	E5	F5	G5	L	S5	Z5	D1	L1	T1	U1	
AM63	95	10	115	3.5	140	307	M8	66	11	23	12.8	4	
AM71	110	10	130	4.0	160	307	M8	66	14	30	16.3	5	
AM80	130	12	165	4.5	200	340	M10	99	19	40	21.8	6	
AM90	130	12	165	4.5	200	340	M10	99	24	50	27.3	8	
AM100	180	15	215	5.0	250	375	M12	134	28	60	31.3	8	
AM112	180	15	215	5.0	250	375	M12	134	28	60	31.3	8	
AM132S/M	230	16	265	5.0	300	432	M12	191	38	80	41.3	10	

02 017 02 01

SF67..

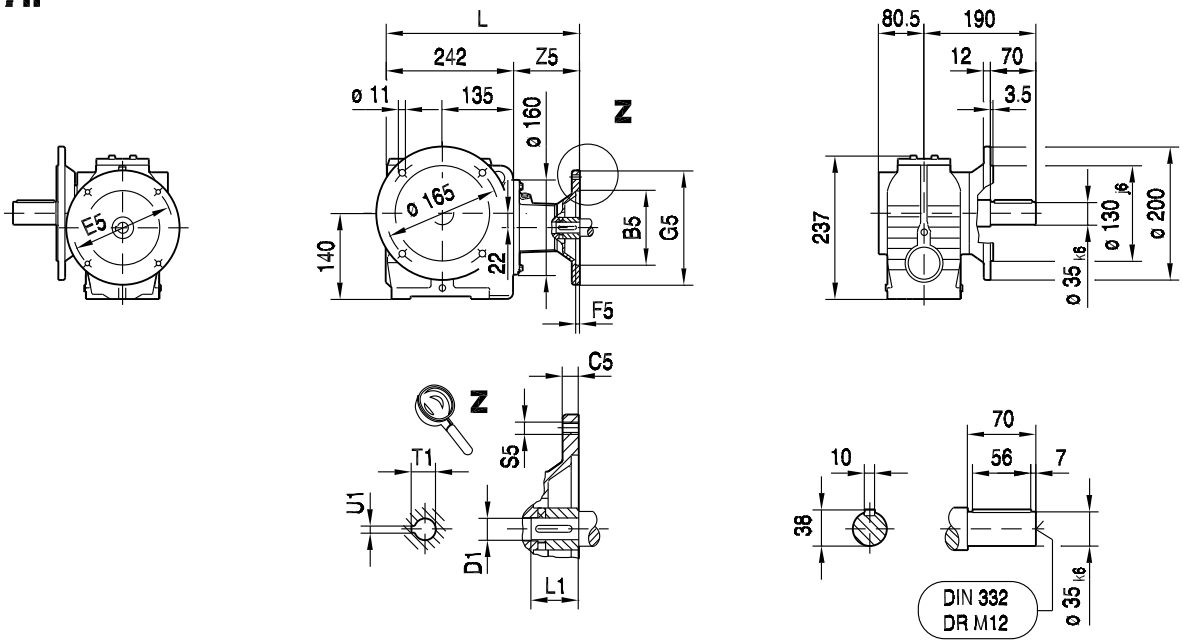

SAF67..

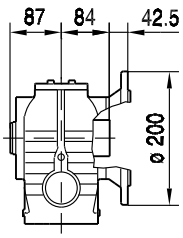

SHF67..

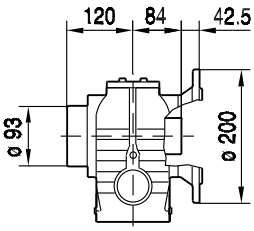

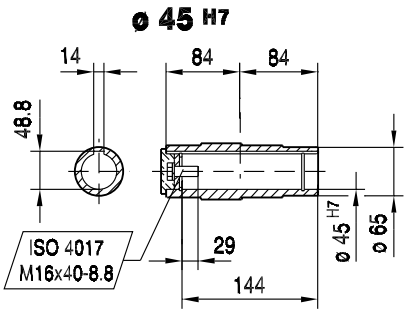

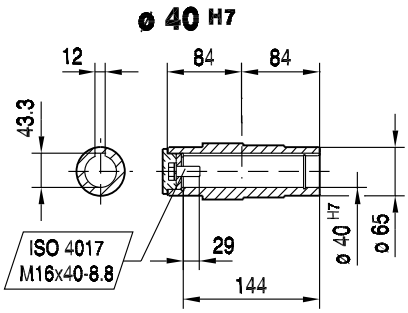

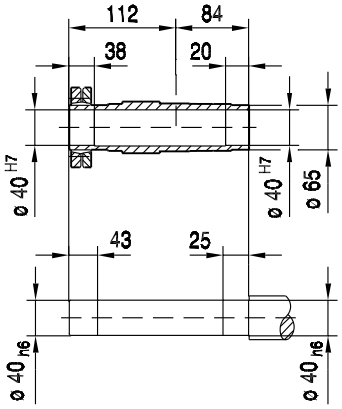

(→ 130)	B5	C5	E5	F5	G5	L	S5	Z5	D1	L1	T1	U1	
AM63	95	10	115	3.5	140	308	M8	66	11	23	12.8	4	
AM71	110	10	130	4.0	160	308	M8	66	14	30	16.3	5	
AM80	130	12	165	4.5	200	341	M10	99	19	40	21.8	6	
AM90	130	12	165	4.5	200	341	M10	99	24	50	27.3	8	
AM100	180	15	215	5.0	250	376	M12	134	28	60	31.3	8	
AM112	180	15	215	5.0	250	376	M12	134	28	60	31.3	8	
AM132S/M	230	16	265	5.0	300	433	M12	191	38	80	41.3	10	

27 006 02 01

SA67..

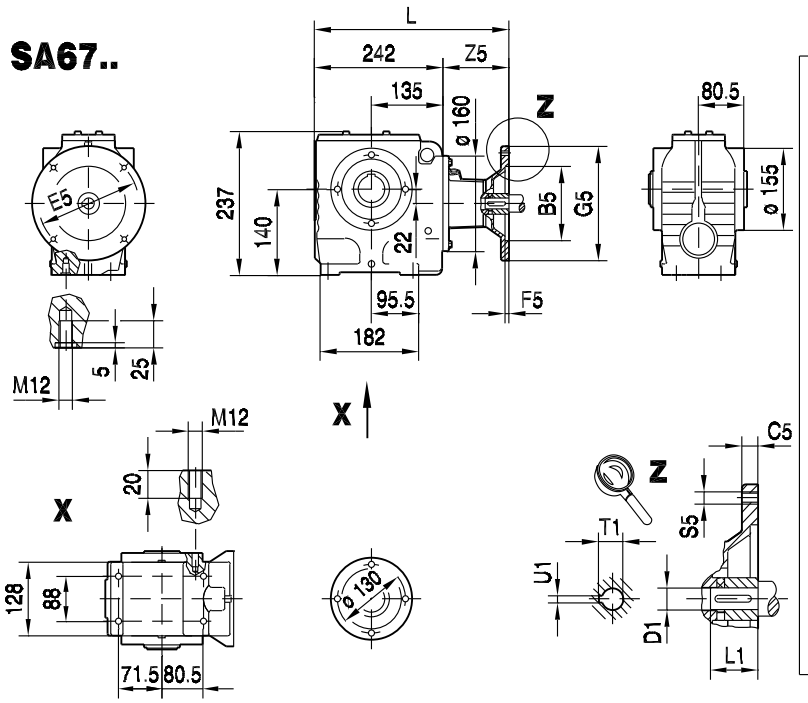

S.. /T..

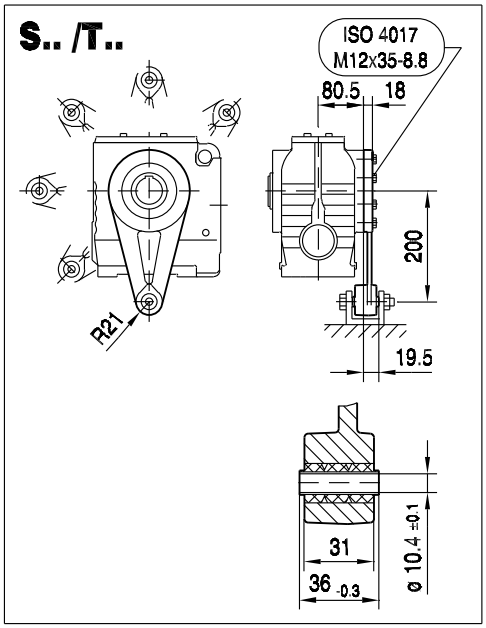

SA67..

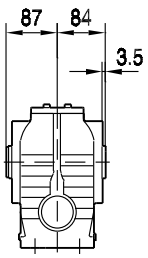

SH67..

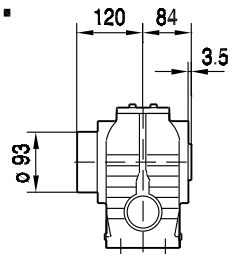

ø 45 H7

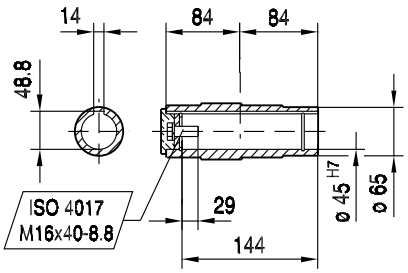

ø 40 H7

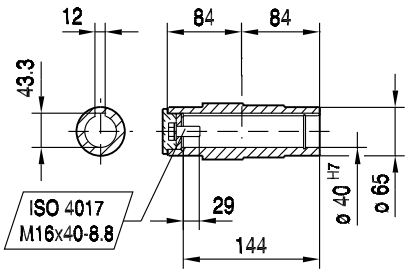

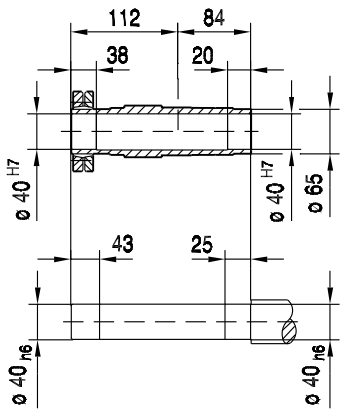

(→ 130)	B5	C5	E5	F5	G5	L	S5	Z5	D1	L1	T1	U1	
AM63	95	10	115	3.5	140	308	M8	66	11	23	12.8	4	
AM71	110	10	130	4.0	160	308	M8	66	14	30	16.3	5	
AM80	130	12	165	4.5	200	341	M10	99	19	40	21.8	6	
AM90	130	12	165	4.5	200	341	M10	99	24	50	27.3	8	
AM100	180	15	215	5.0	250	376	M12	134	28	60	31.3	8	
AM112	180	15	215	5.0	250	376	M12	134	28	60	31.3	8	
AM132S/M	230	16	265	5.0	300	433	M12	191	38	80	41.3	10	

27 007 02 01

SAZ67..

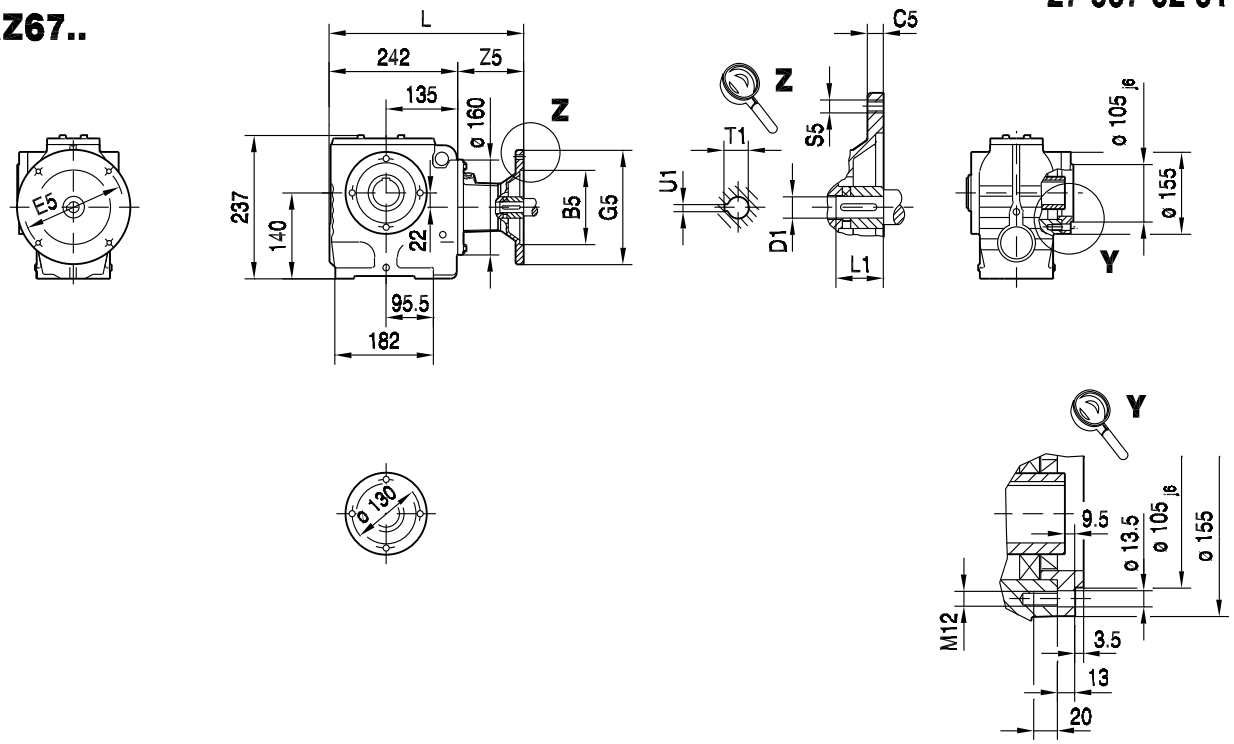

SAZ67..

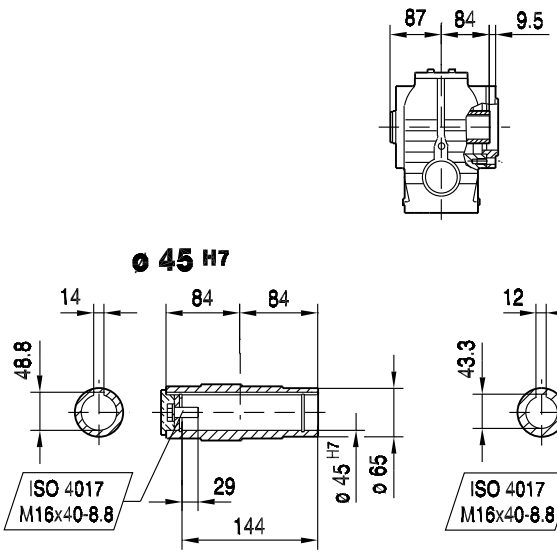

SHZ67..

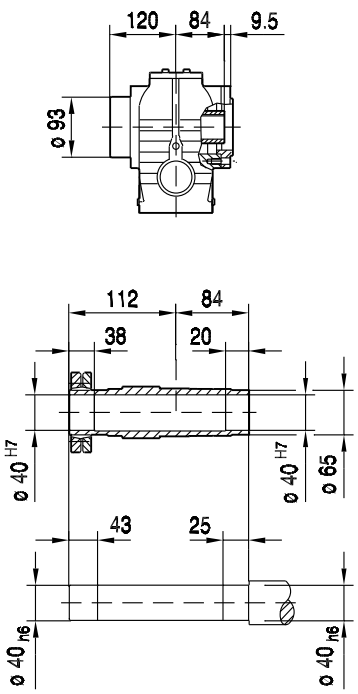

(→ 130)	B5	C5	E5	F5	G5	L	S5	Z5	D1	L1	T1	U1	
AM63	95	10	115	3.5	140	308	M8	66	11	23	12.8	4	
AM71	110	10	130	4.0	160	308	M8	66	14	30	16.3	5	
AM80	130	12	165	4.5	200	341	M10	99	19	40	21.8	6	
AM90	130	12	165	4.5	200	341	M10	99	24	50	27.3	8	
AM100	180	15	215	5.0	250	376	M12	134	28	60	31.3	8	
AM112	180	15	215	5.0	250	376	M12	134	28	60	31.3	8	
AM132S/M	230	16	265	5.0	300	433	M12	191	38	80	41.3	10	

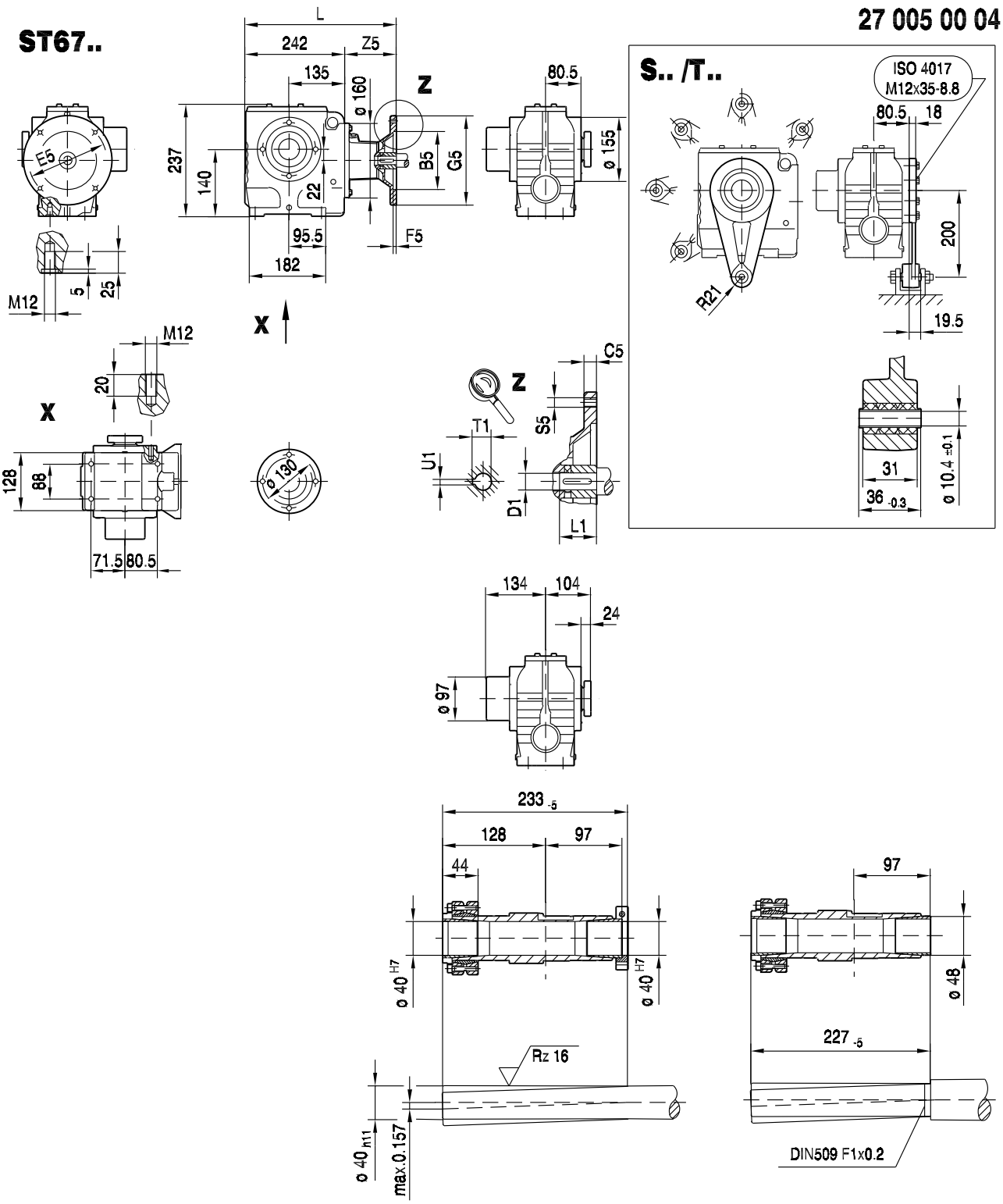

(→ 130)	B5	C5	E5	F5	G5	L	S5	Z5	D1	L1	T1	U1	
AM63	95	10	115	3.5	140	308	M8	66	11	23	12.8	4	
AM71	110	10	130	4.0	160	308	M8	66	14	30	16.3	5	
AM80	130	12	165	4.5	200	341	M10	99	19	40	21.8	6	
AM90	130	12	165	4.5	200	341	M10	99	24	50	27.3	8	
AM100	180	15	215	5.0	250	376	M12	134	28	60	31.3	8	
AM112	180	15	215	5.0	250	376	M12	134	28	60	31.3	8	
AM132S/M	230	16	265	5.0	300	433	M12	191	38	80	41.3	10	

02 018 02 01

S77..

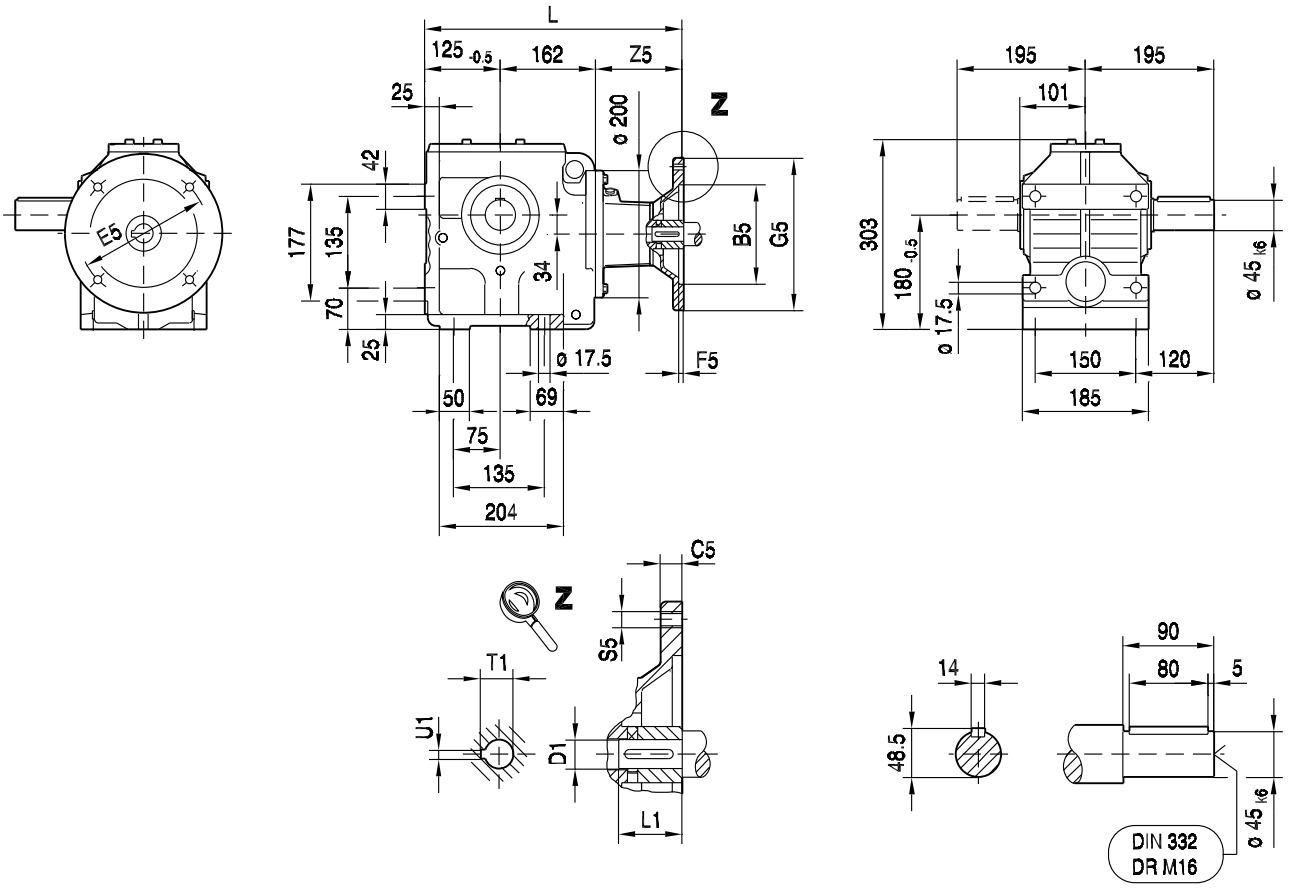

(→ 130)	B5	C5	E5	F5	G5	L	S5	Z5	D1	L1	T1	U1	
AM63	95	10	115	3.5	140	347	M8	60	11	23	12.8	4	
AM71	110	10	130	4.0	160	347	M8	60	14	30	16.3	5	
AM80	130	12	165	4.5	200	379	M10	92	19	40	21.8	6	
AM90	130	12	165	4.5	200	379	M10	92	24	50	27.3	8	
AM100	180	15	215	5.0	250	413	M12	126	28	60	31.3	8	
AM112	180	15	215	5.0	250	413	M12	126	28	60	31.3	8	
AM132S/M	230	16	265	5.0	300	466	M12	179	38	80	41.3	10	
AM132ML	230	16	265	5.0	300	466	M12	179	38	80	41.3	10	

02 019 02 01

SF77..

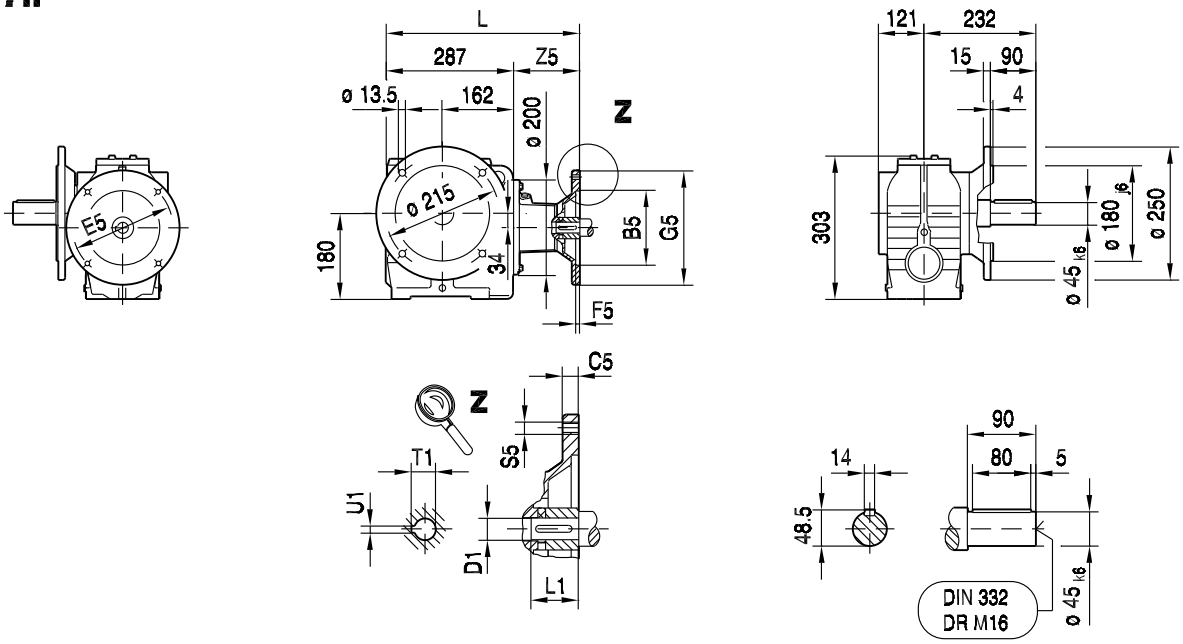

SAF77..

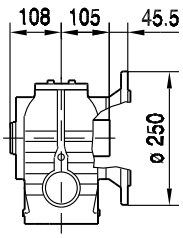

SHF77..

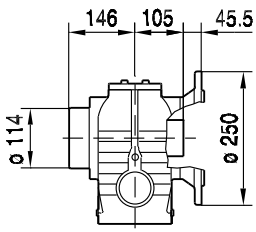

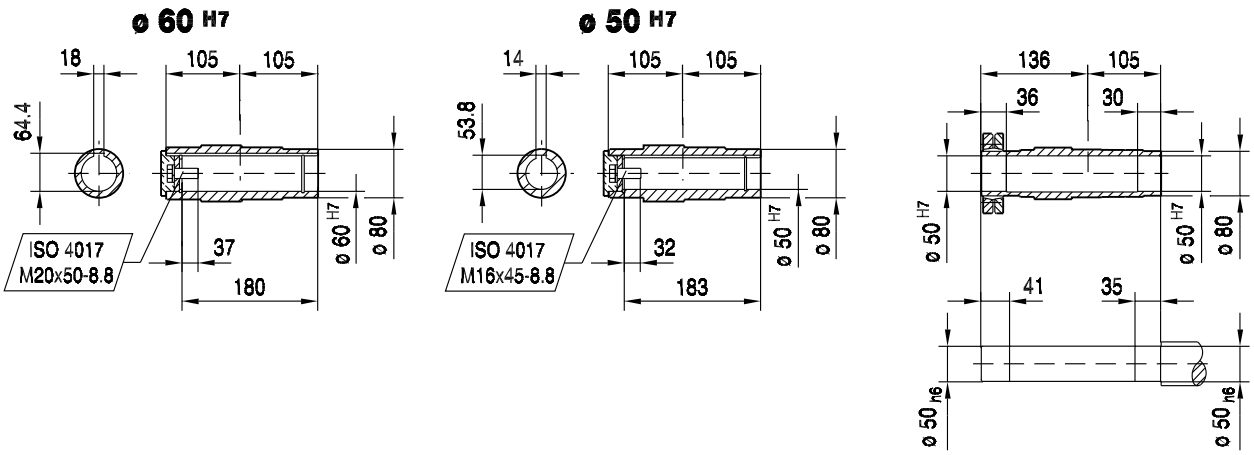

(→ 130)	B5	C5	E5	F5	G5	L	S5	Z5	D1	L1	T1	U1	
AM63	95	10	115	3.5	140	347	M8	60	11	23	12.8	4	
AM71	110	10	130	4.0	160	347	M8	60	14	30	16.3	5	
AM80	130	12	165	4.5	200	379	M10	92	19	40	21.8	6	
AM90	130	12	165	4.5	200	379	M10	92	24	50	27.3	8	
AM100	180	15	215	5.0	250	413	M12	126	28	60	31.3	8	
AM112	180	15	215	5.0	250	413	M12	126	28	60	31.3	8	
AM132S/M	230	16	265	5.0	300	466	M12	179	38	80	41.3	10	
AM132ML	230	16	265	5.0	300	466	M12	179	38	80	41.3	10	

27 008 02 01

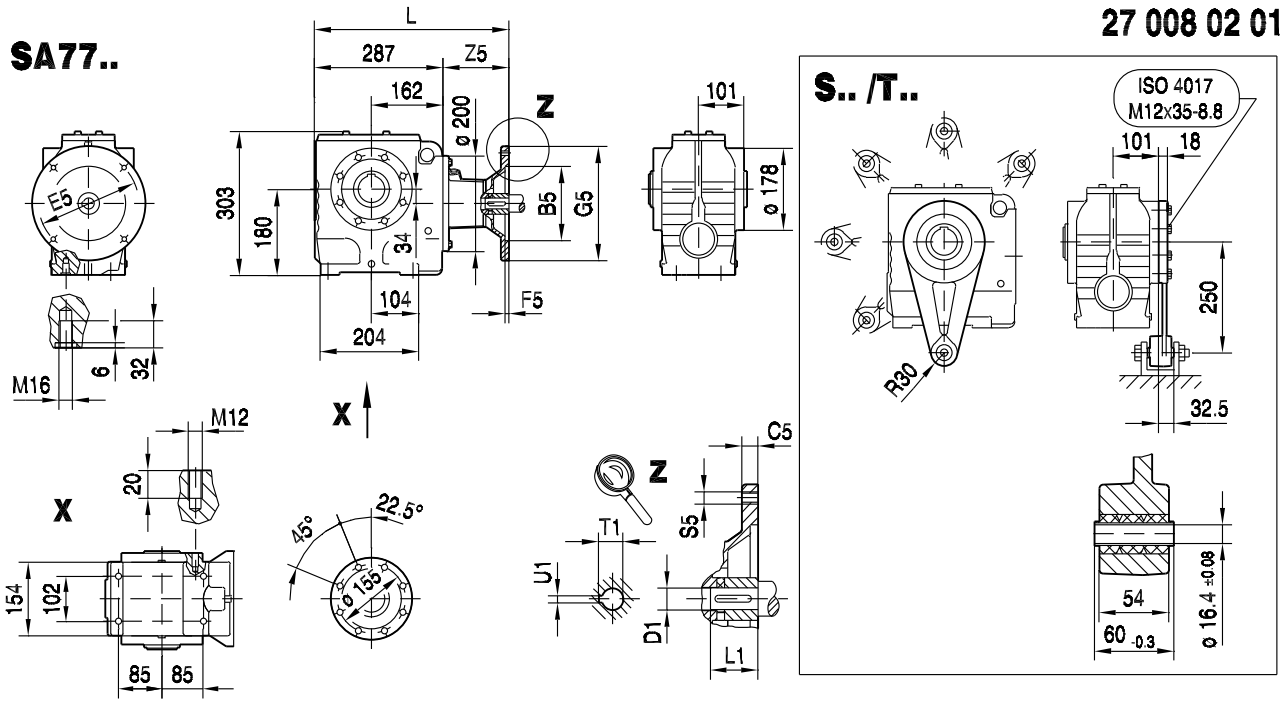

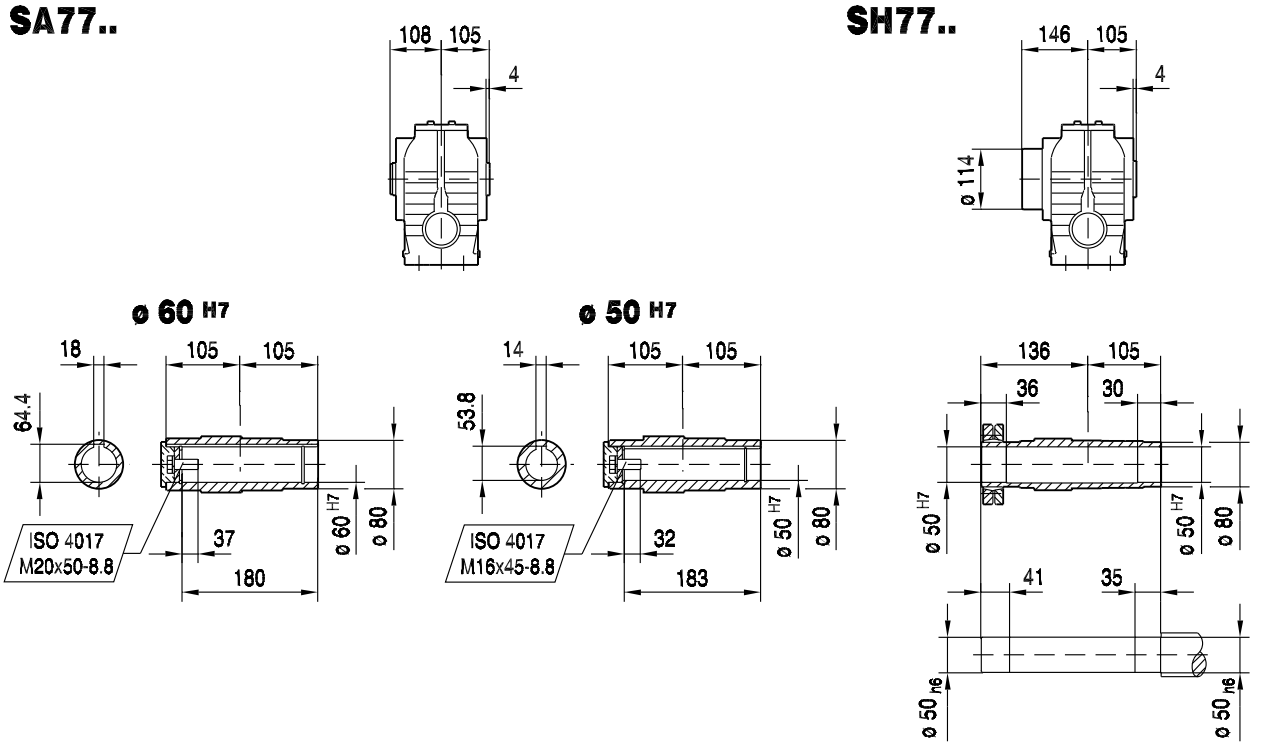

(→ 130)	B5	C5	E5	F5	G5	L	S5	Z5	D1	L1	T1	U1	
AM63	95	10	115	3.5	140	347	M8	60	11	23	12.8	4	
AM71	110	10	130	4.0	160	347	M8	60	14	30	16.3	5	
AM80	130	12	165	4.5	200	379	M10	92	19	40	21.8	6	
AM90	130	12	165	4.5	200	379	M10	92	24	50	27.3	8	
AM100	180	15	215	5.0	250	413	M12	126	28	60	31.3	8	
AM112	180	15	215	5.0	250	413	M12	126	28	60	31.3	8	
AM132S/M	230	16	265	5.0	300	466	M12	179	38	80	41.3	10	
AM132ML	230	16	265	5.0	300	466	M12	179	38	80	41.3	10	

27 009 02 01

SAZ77..

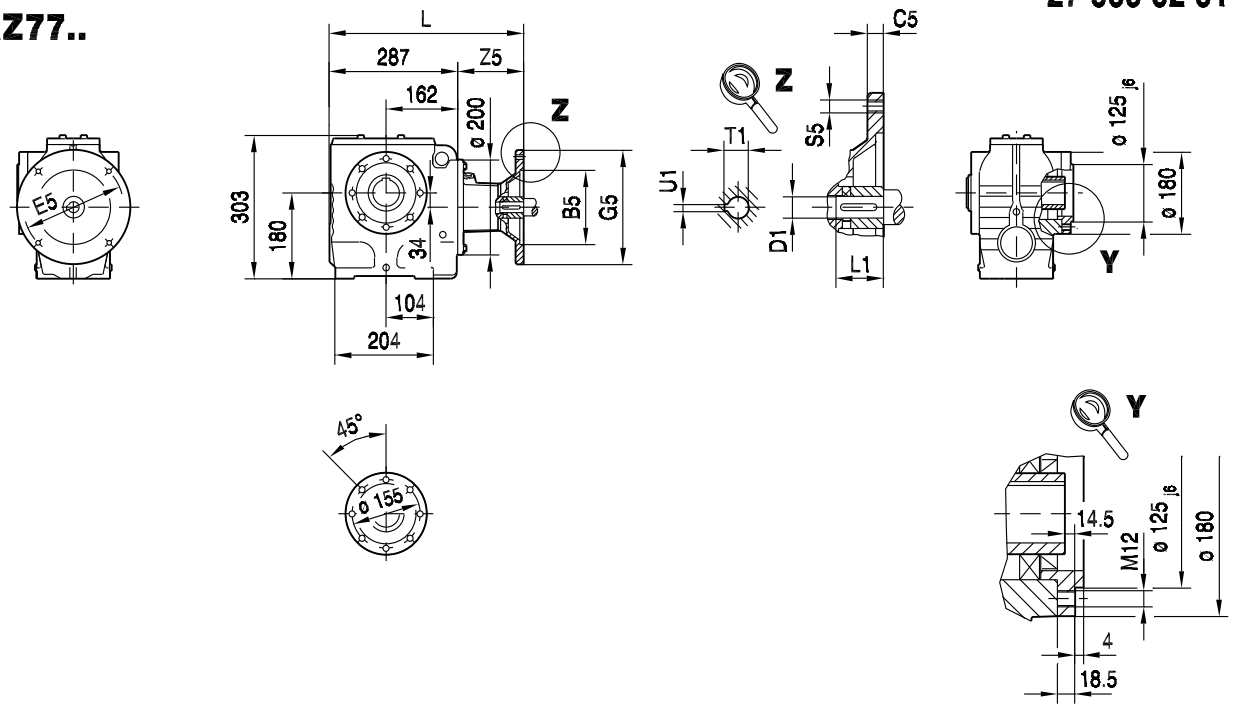

SAZ77..

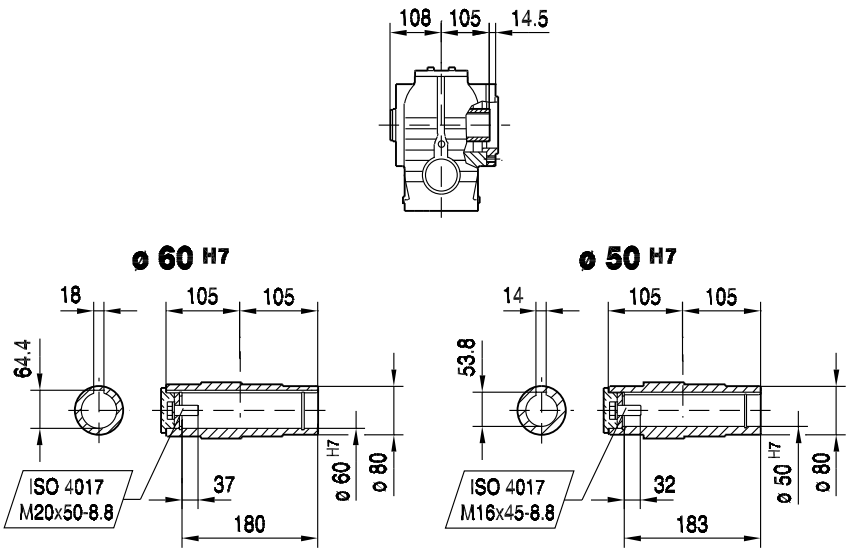

SHZ77..

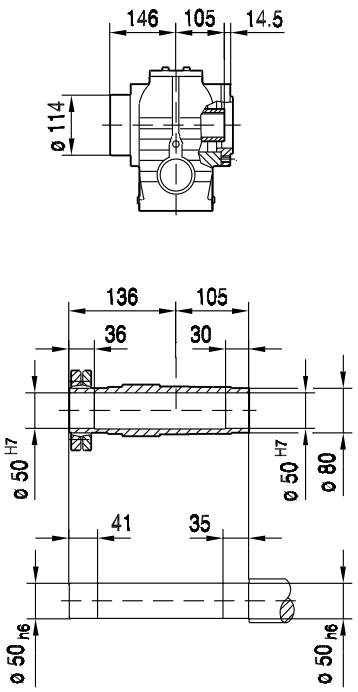

(→ 130)	B5	C5	E5	F5	G5	L	S5	Z5	D1	L1	T1	U1	
AM63	95	10	115	3.5	140	347	M8	60	11	23	12.8	4	
AM71	110	10	130	4.0	160	347	M8	60	14	30	16.3	5	
AM80	130	12	165	4.5	200	379	M10	92	19	40	21.8	6	
AM90	130	12	165	4.5	200	379	M10	92	24	50	27.3	8	
AM100	180	15	215	5.0	250	413	M12	126	28	60	31.3	8	
AM112	180	15	215	5.0	250	413	M12	126	28	60	31.3	8	
AM132S/M	230	16	265	5.0	300	466	M12	179	38	80	41.3	10	
AM132ML	230	16	265	5.0	300	466	M12	179	38	80	41.3	10	

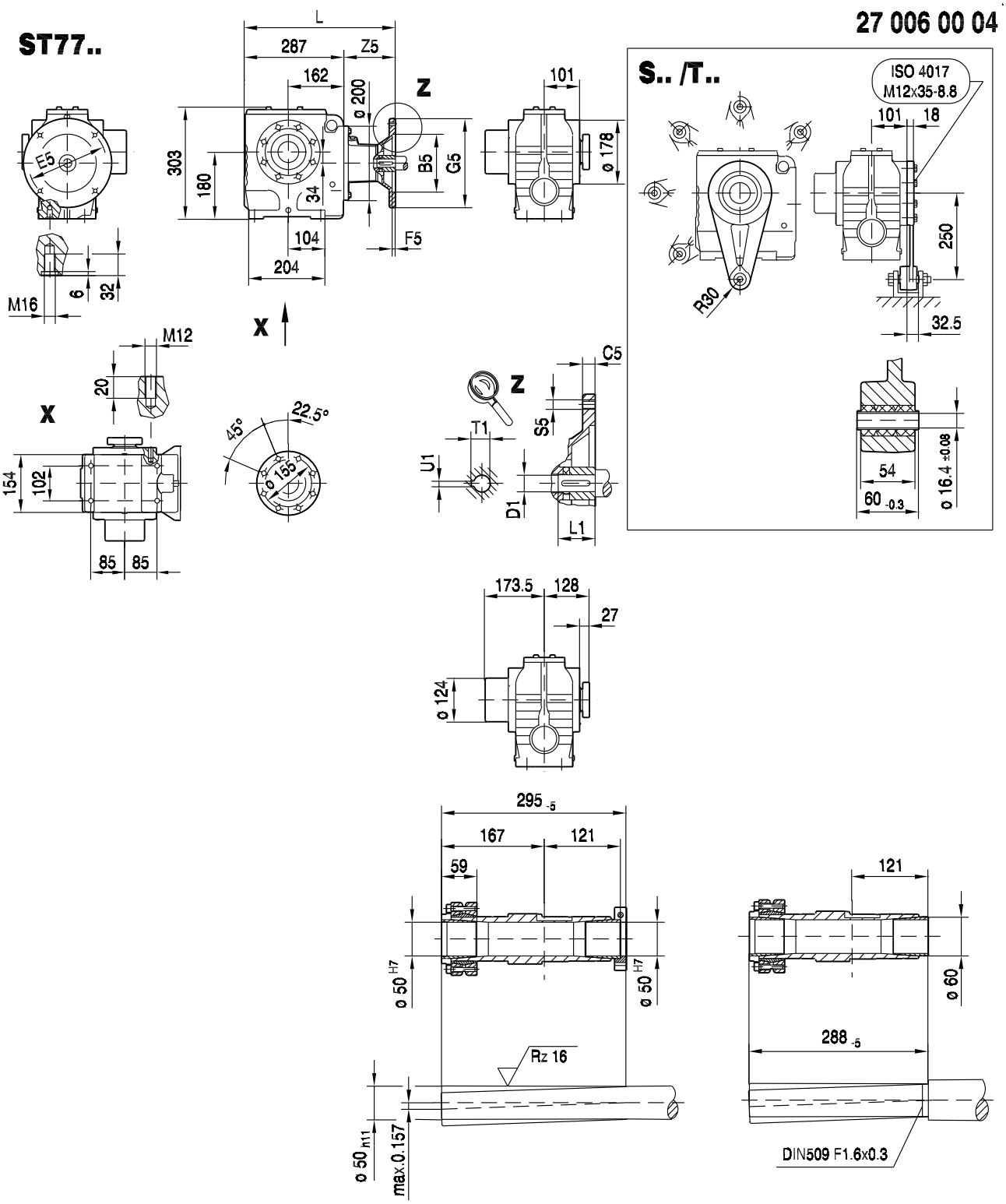

(→ 130)	B5	C5	E5	F5	G5	L	S5	Z5	D1	L1	T1	U1	
AM63	95	10	115	3.5	140	347	M8	60	11	23	12.8	4	
AM71	110	10	130	4.0	160	347	M8	60	14	30	16.3	5	
AM80	130	12	165	4.5	200	379	M10	92	19	40	21.8	6	
AM90	130	12	165	4.5	200	379	M10	92	24	50	27.3	8	
AM100	180	15	215	5.0	250	413	M12	126	28	60	31.3	8	
AM112	180	15	215	5.0	250	413	M12	126	28	60	31.3	8	
AM132S/M	230	16	265	5.0	300	466	M12	179	38	80	41.3	10	
AM132ML	230	16	265	5.0	300	466	M12	179	38	80	41.3	10	

02 020 01 01

S87..

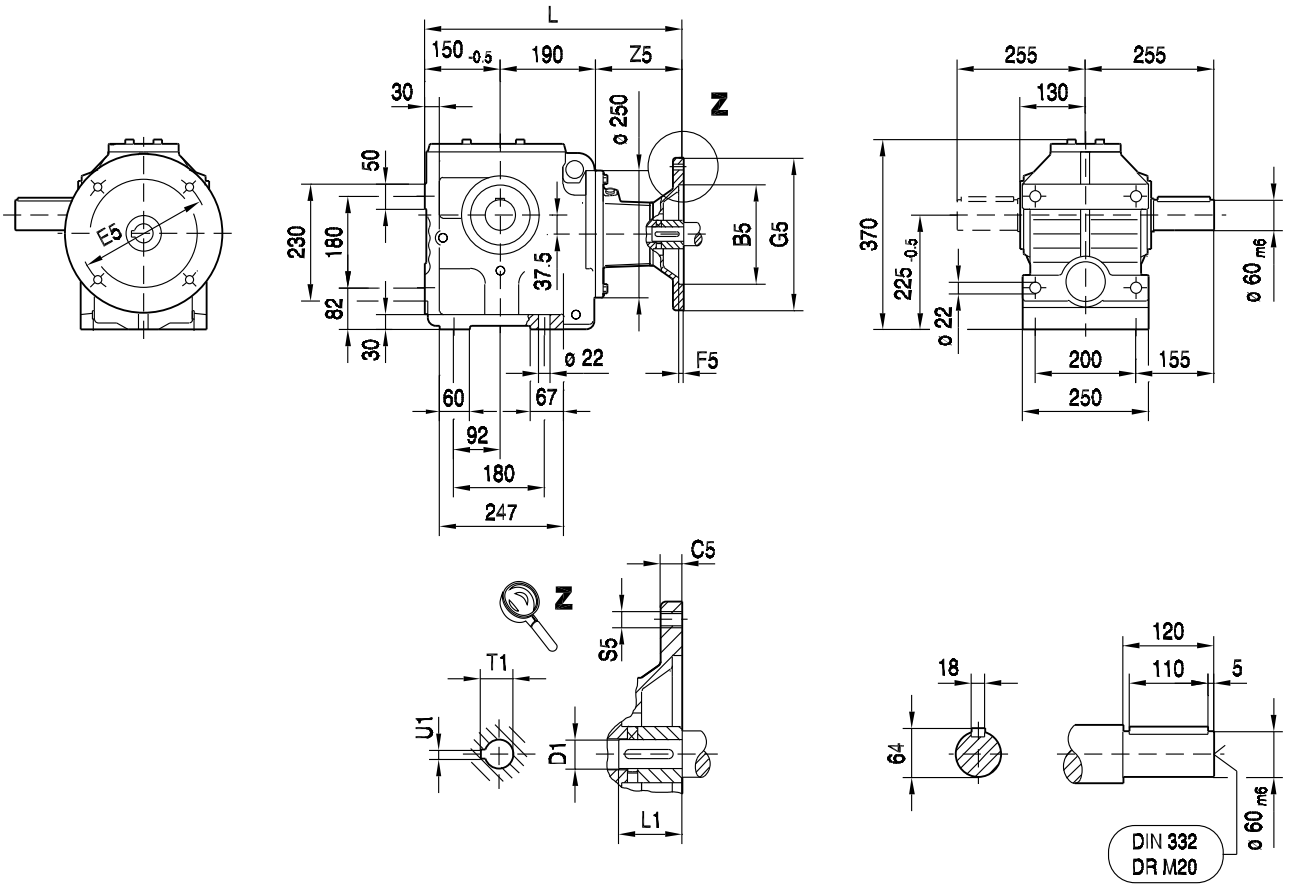

(→ 130)	B5	C5	E5	F5	G5	L	S5	Z5	D1	L1	T1	U1	
AM80	130	12	165	4.5	200	427	M10	87	19	40	21.8	6	
AM90	130	12	165	4.5	200	427	M10	87	24	50	27.3	8	
AM100	180	15	215	5.0	250	461	M12	121	28	60	31.3	8	
AM112	180	15	215	5.0	250	461	M12	121	28	60	31.3	8	
AM132S/M	230	16	265	5.0	300	514	M12	174	38	80	41.3	10	
AM132ML	230	16	265	5.0	300	514	M12	174	38	80	41.3	10	
AM160	250	18	300	6.0	350	572	M16	232	42	110	45.3	12	

02 021 01 01

SF87..

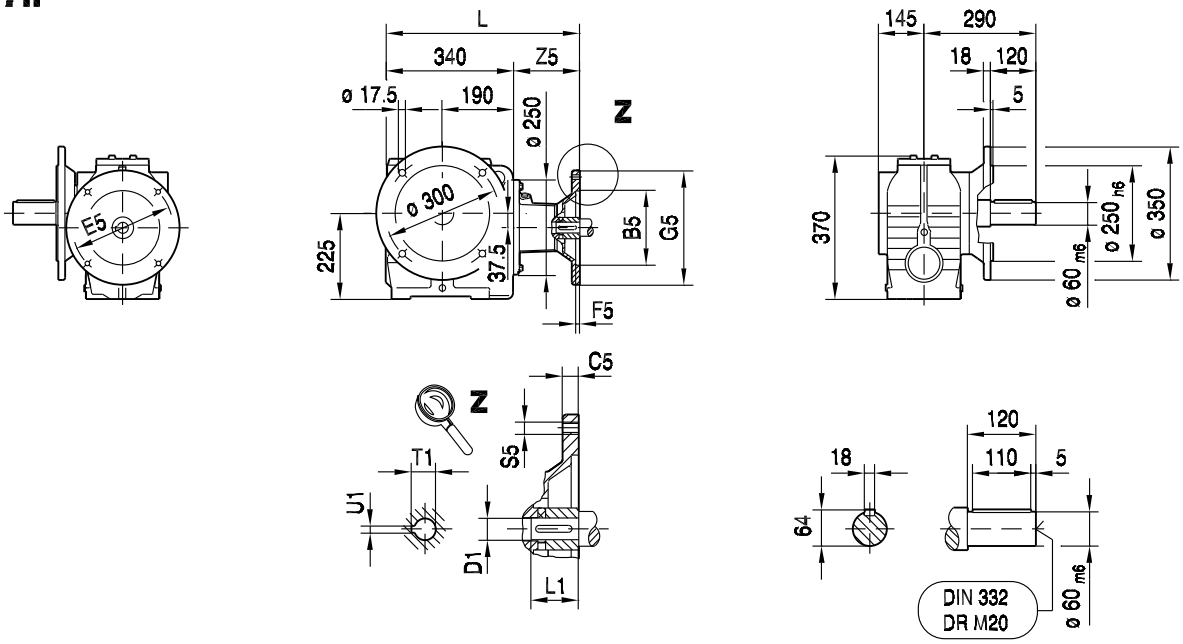

SAF87..

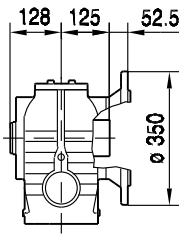

SHF87..

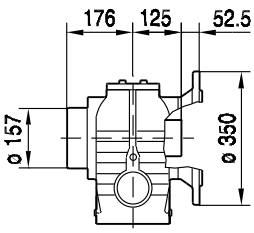

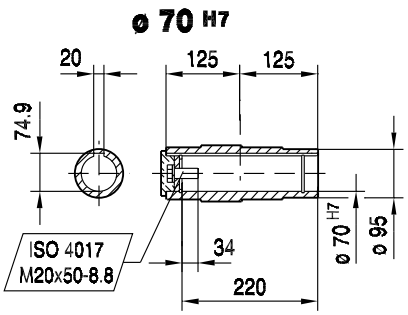

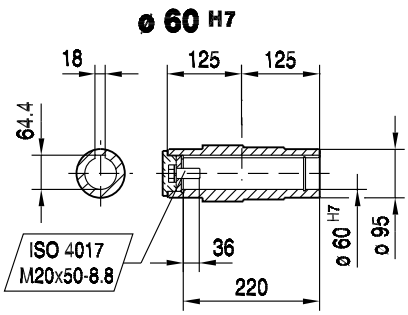

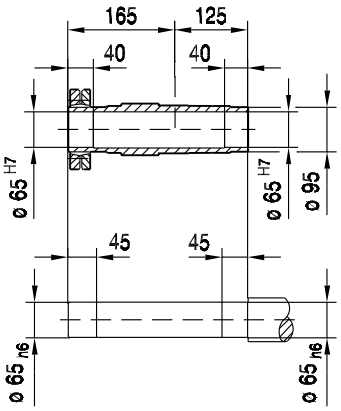

(→ 130)	B5	C5	E5	F5	G5	L	S5	Z5	D1	L1	T1	U1	
AM80	130	12	165	4.5	200	427	M10	87	19	40	21.8	6	
AM90	130	12	165	4.5	200	427	M10	87	24	50	27.3	8	
AM100	180	15	215	5.0	250	461	M12	121	28	60	31.3	8	
AM112	180	15	215	5.0	250	461	M12	121	28	60	31.3	8	
AM132S/M	230	16	265	5.0	300	514	M12	174	38	80	41.3	10	
AM132ML	230	16	265	5.0	300	514	M12	174	38	80	41.3	10	
AM160	250	18	300	6.0	350	572	M16	232	42	110	45.3	12	

27 010 01 01

SA87..

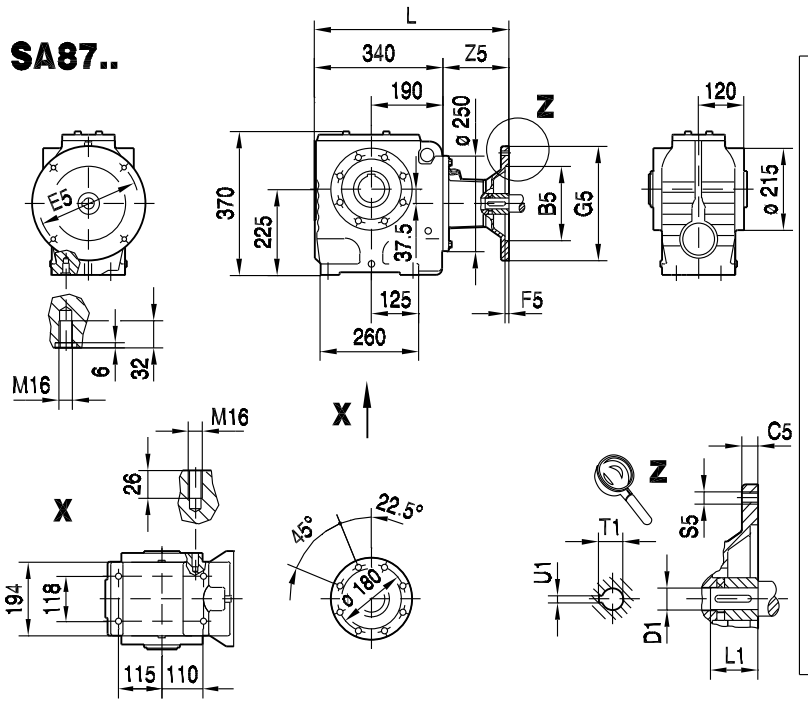

S.. /T..

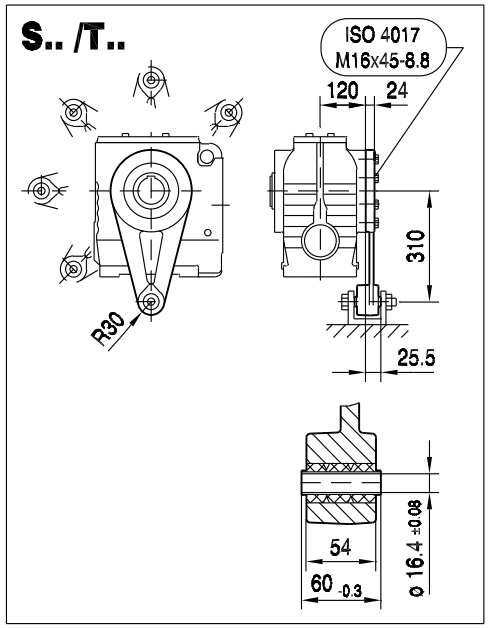

SA87..

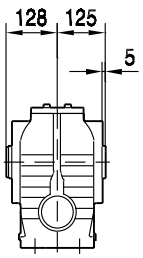

SH87..

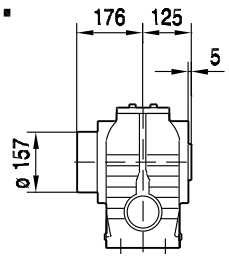

ø 70 H7

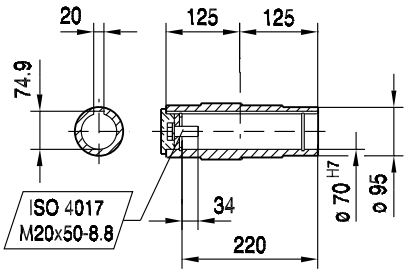

ø 60 H7

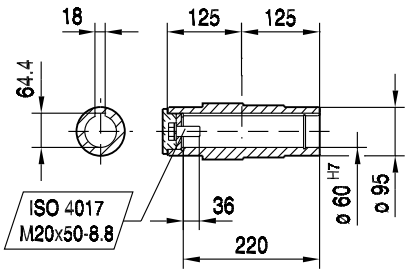

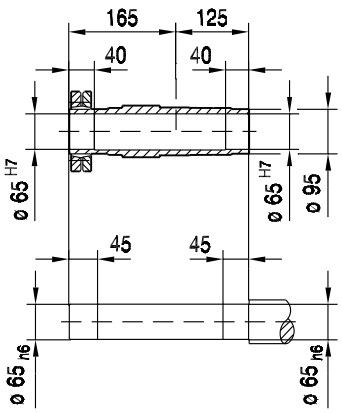

(→ 130)	B5	C5	E5	F5	G5	L	S5	Z5	D1	L1	T1	U1	
AM80	130	12	165	4.5	200	427	M10	87	19	40	21.8	6	
AM90	130	12	165	4.5	200	427	M10	87	24	50	27.3	8	
AM100	180	15	215	5.0	250	461	M12	121	28	60	31.3	8	
AM112	180	15	215	5.0	250	461	M12	121	28	60	31.3	8	
AM132S/M	230	16	265	5.0	300	514	M12	174	38	80	41.3	10	
AM132ML	230	16	265	5.0	300	514	M12	174	38	80	41.3	10	
AM160	250	18	300	6.0	350	572	M16	232	42	110	45.3	12	

27 011 01 01

SAZ87..

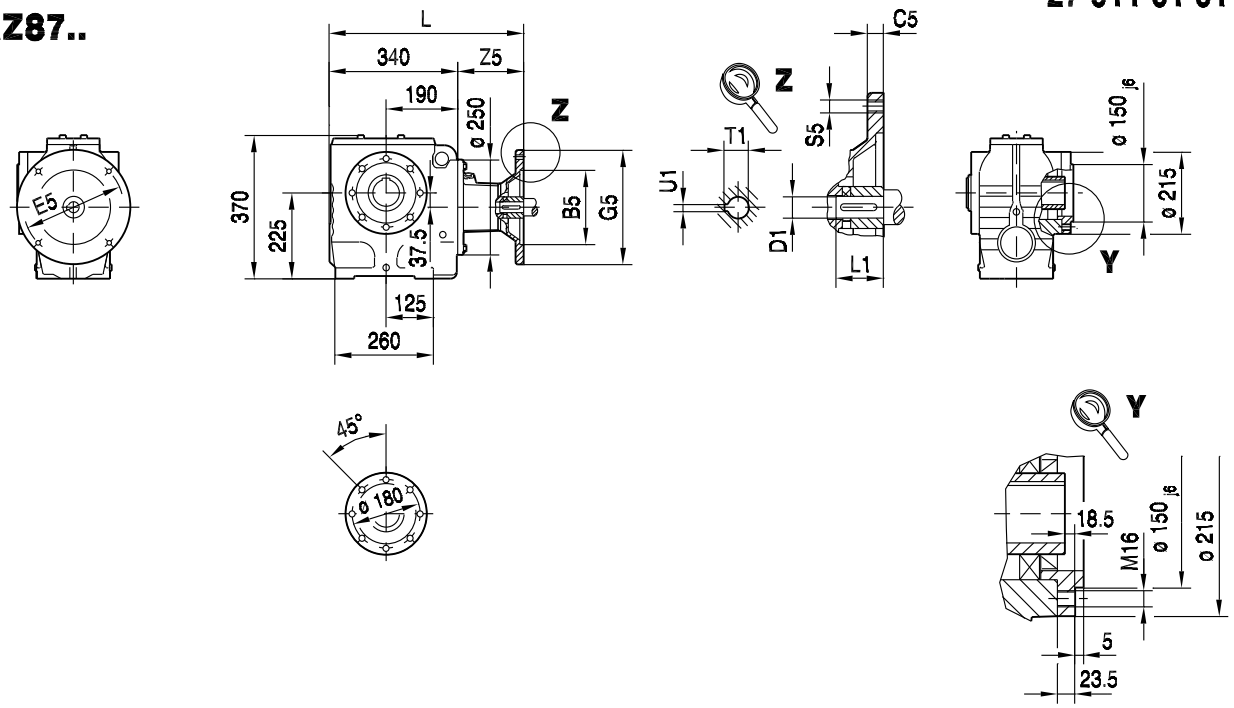

SAZ87..

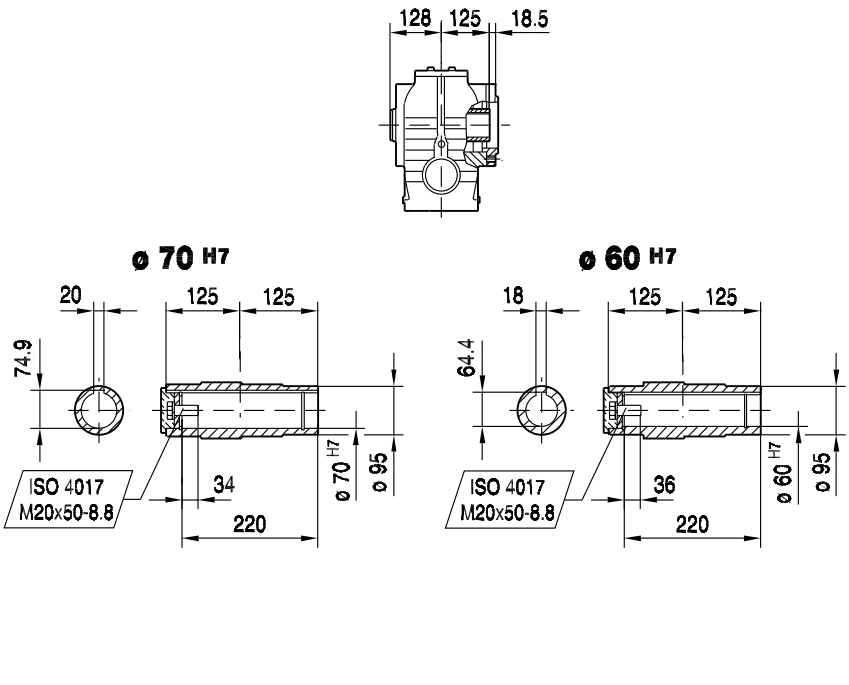

SHZ87..

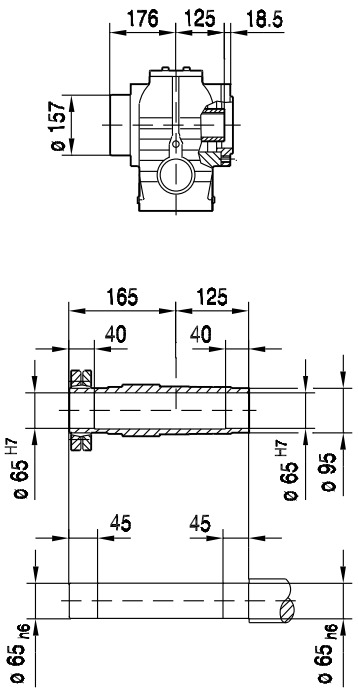

(→ 130)	B5	C5	E5	F5	G5	L	S5	Z5	D1	L1	T1	U1	
AM80	130	12	165	4.5	200	427	M10	87	19	40	21.8	6	
AM90	130	12	165	4.5	200	427	M10	87	24	50	27.3	8	
AM100	180	15	215	5.0	250	461	M12	121	28	60	31.3	8	
AM112	180	15	215	5.0	250	461	M12	121	28	60	31.3	8	
AM132S/M	230	16	265	5.0	300	514	M12	174	38	80	41.3	10	
AM132ML	230	16	265	5.0	300	514	M12	174	38	80	41.3	10	
AM160	250	18	300	6.0	350	572	M16	232	42	110	45.3	12	

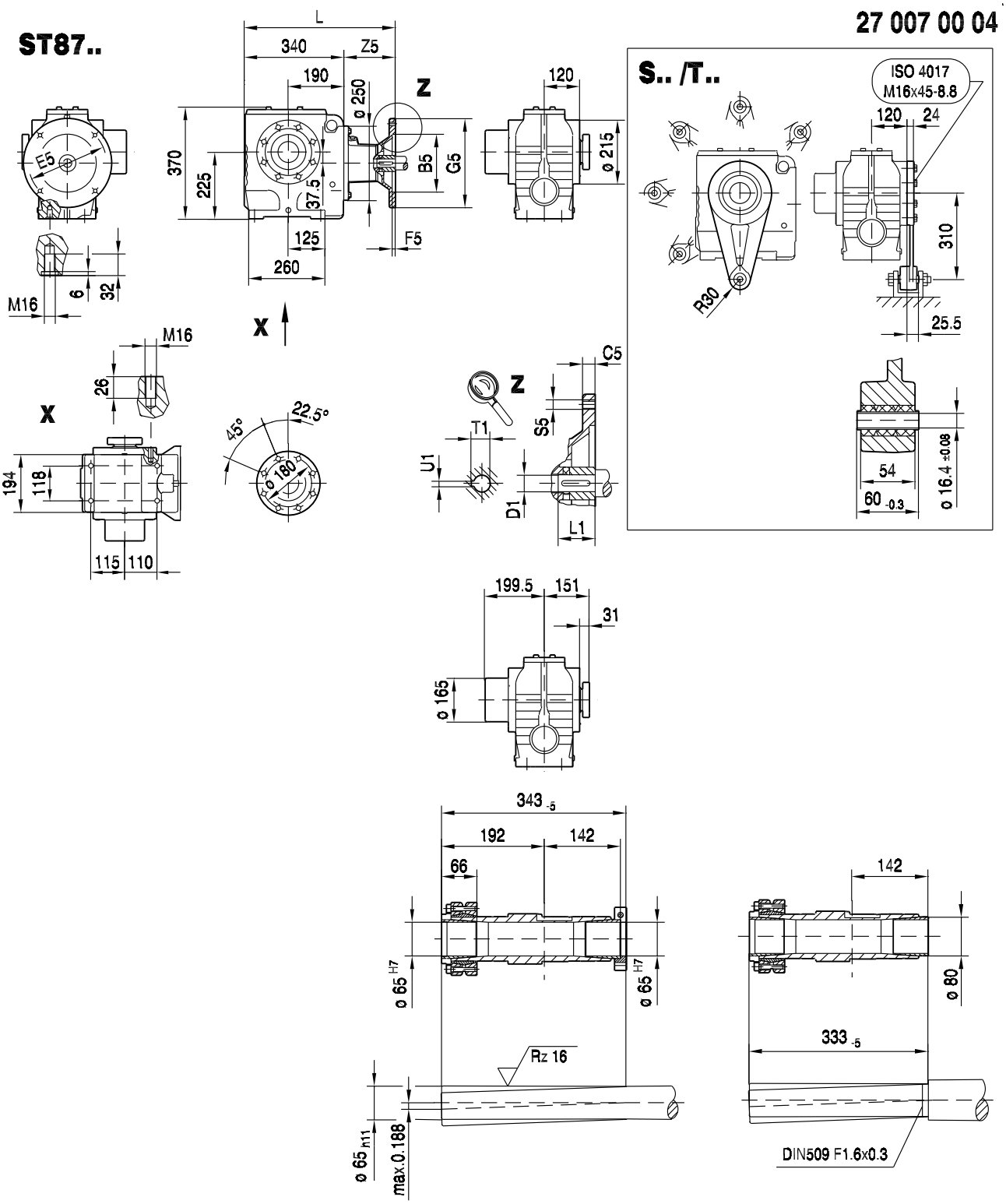

(→ 130)	B5	C5	E5	F5	G5	L	S5	Z5	D1	L1	T1	U1	
AM80	130	12	165	4.5	200	427	M10	87	19	40	21.8	6	
AM90	130	12	165	4.5	200	427	M10	87	24	50	27.3	8	
AM100	180	15	215	5.0	250	461	M12	121	28	60	31.3	8	
AM112	180	15	215	5.0	250	461	M12	121	28	60	31.3	8	
AM132S/M	230	16	265	5.0	300	514	M12	174	38	80	41.3	10	
AM132ML	230	16	265	5.0	300	514	M12	174	38	80	41.3	10	
AM160	250	18	300	6.0	350	572	M16	232	42	110	45.3	12	

02 022 01 01

S97..

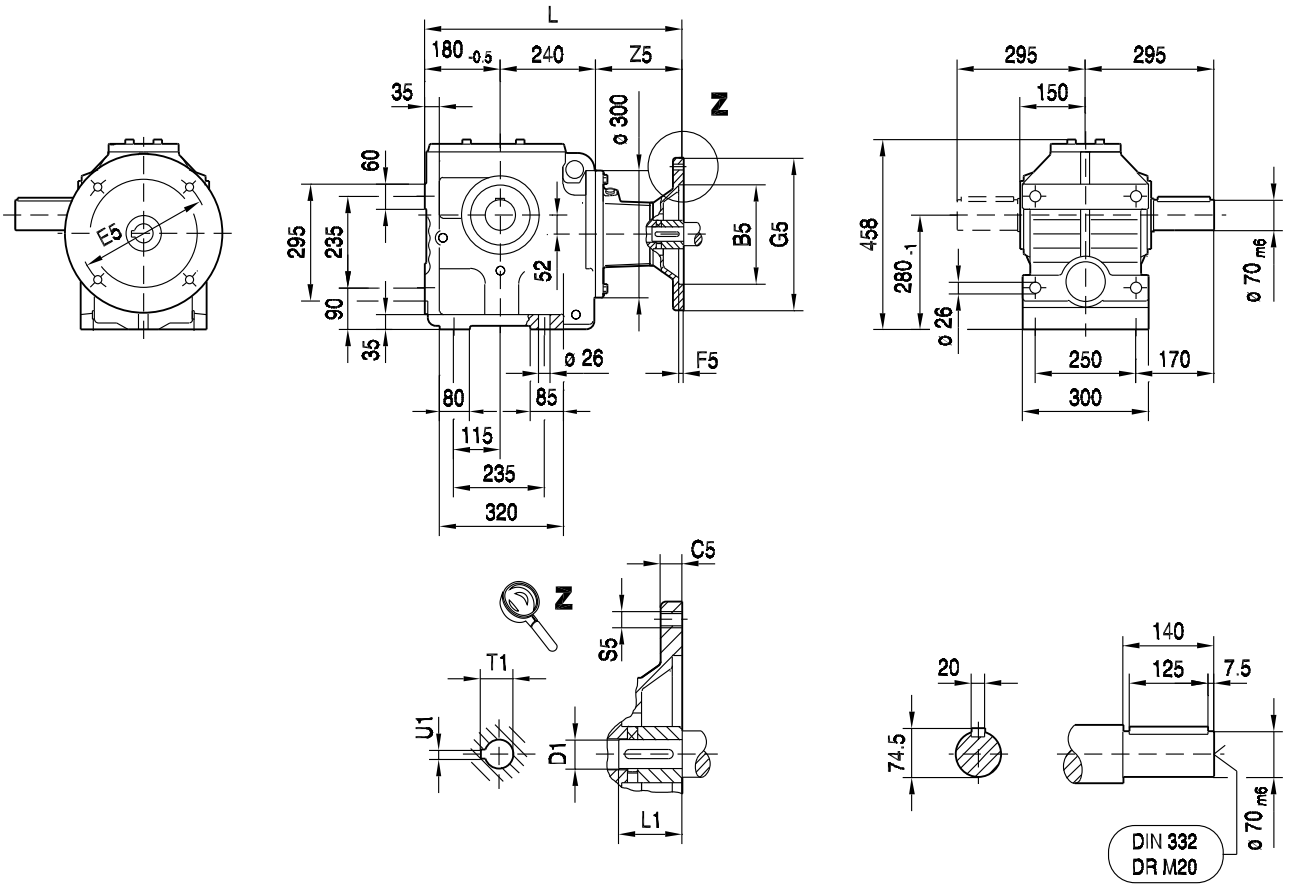

(→ 130)	B5	C5	E5	F5	G5	L	S5	Z5	D1	L1	T1	U1	
AM100	180	15	215	5.0	250	536	M12	116	28	60	31.3	8	
AM112	180	15	215	5.0	250	536	M12	116	28	60	31.3	8	
AM132S/M	230	16	265	5.0	300	589	M12	169	38	80	41.3	10	
AM132ML	230	16	265	5.0	300	589	M12	169	38	80	41.3	10	
AM160	250	18	300	6.0	350	647	M16	227	42	110	45.3	12	
AM180	250	18	300	6.0	350	647	M16	227	48	110	51.8	14	

02 023 01 01

SF97..

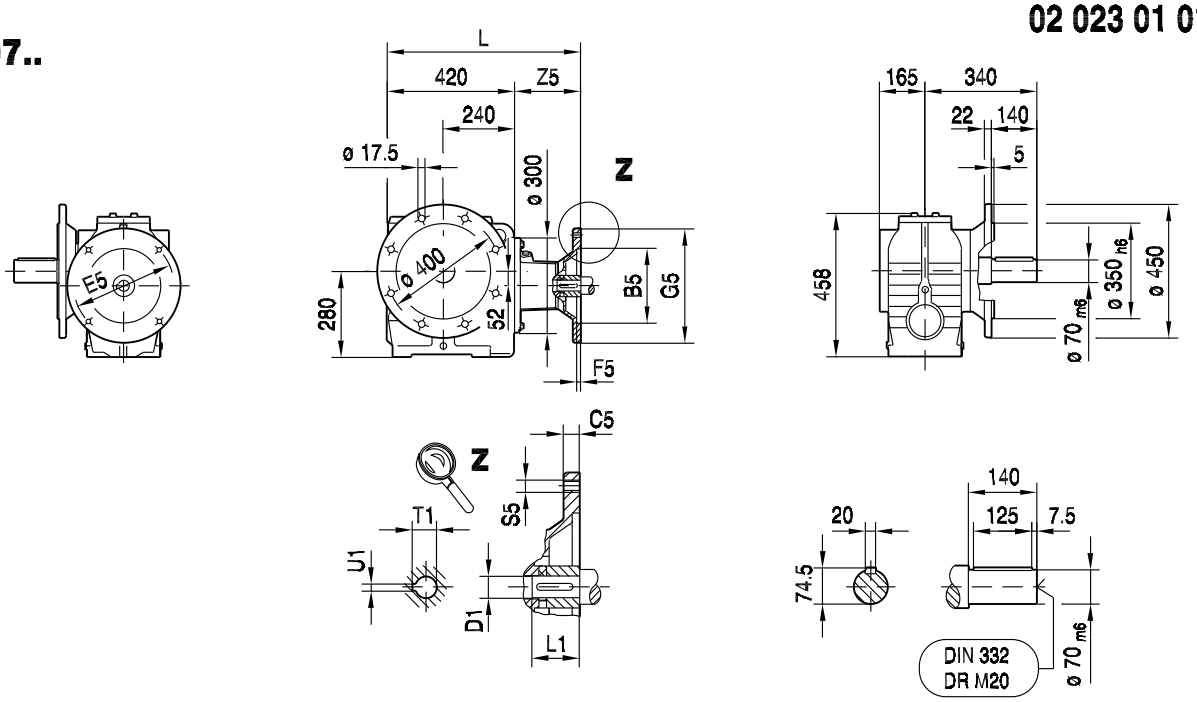

SAF97..

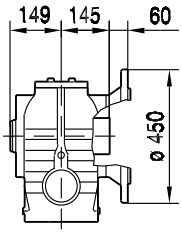

SHF97..

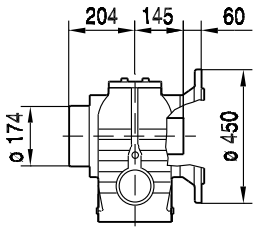

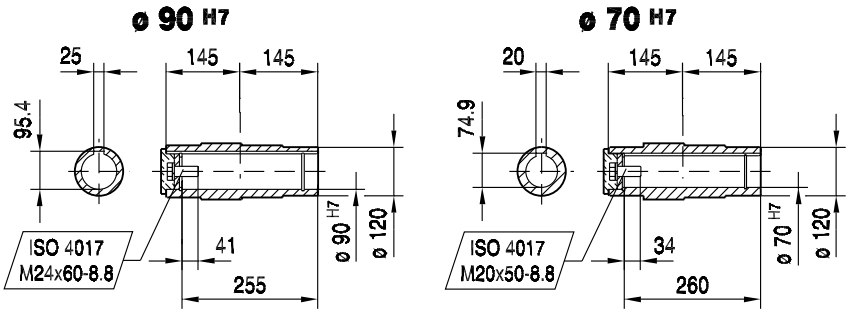

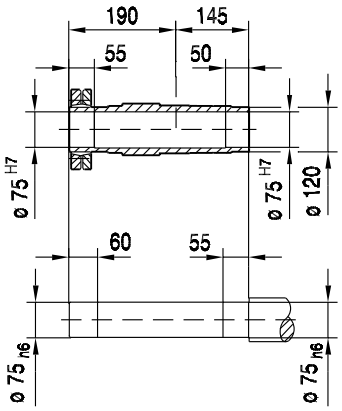

(→ 130)	B5	C5	E5	F5	G5	L	S5	Z5	D1	L1	T1	U1	
AM100	180	15	215	5.0	250	536	M12	116	28	60	31.3	8	
AM112	180	15	215	5.0	250	536	M12	116	28	60	31.3	8	
AM132S/M	230	16	265	5.0	300	589	M12	169	38	80	41.3	10	
AM132ML	230	16	265	5.0	300	589	M12	169	38	80	41.3	10	
AM160	250	18	300	6.0	350	647	M16	227	42	110	45.3	12	
AM180	250	18	300	6.0	350	647	M16	227	48	110	51.8	14	

27 012 01 01

SA97..

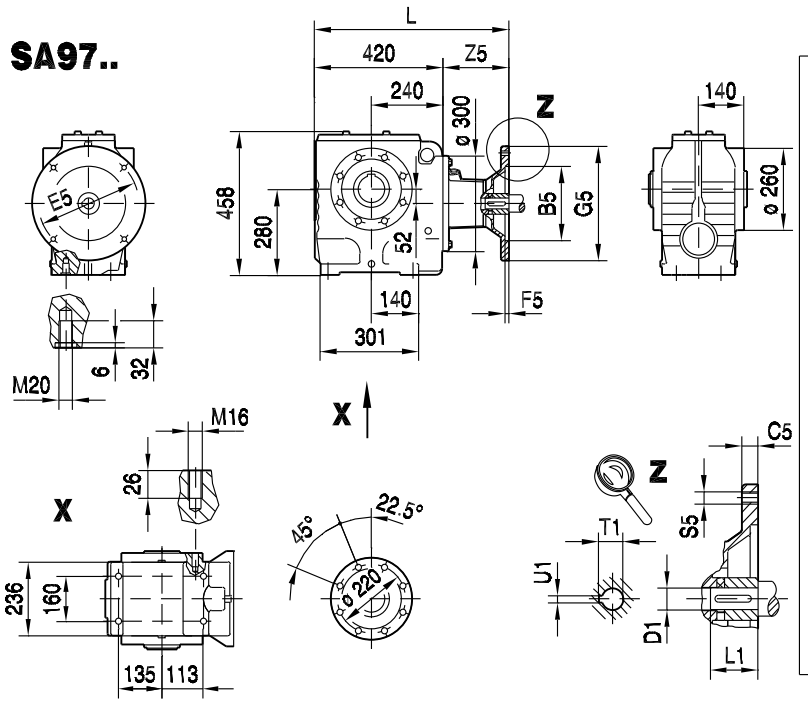

S.. /T..

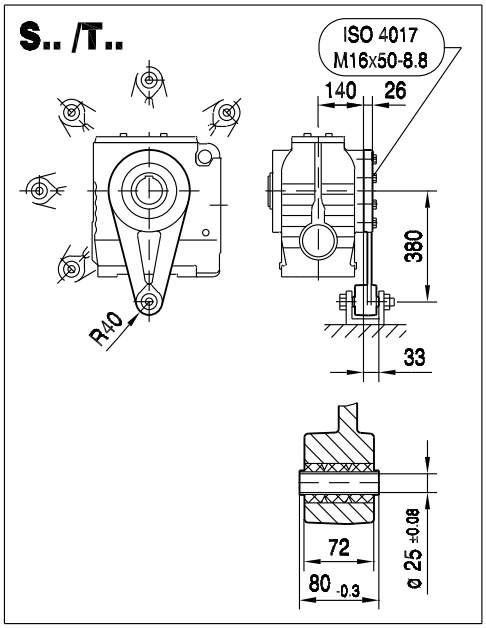

SA97..

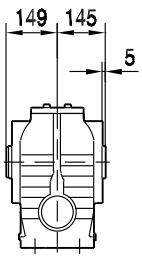

SH97..

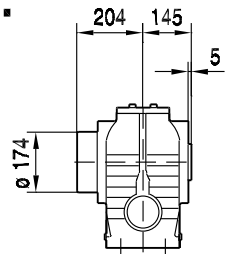

ø 90 H7

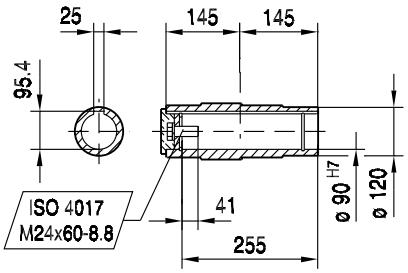

ø 70 H7

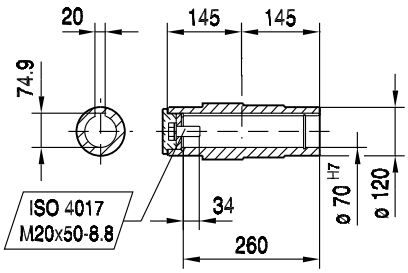

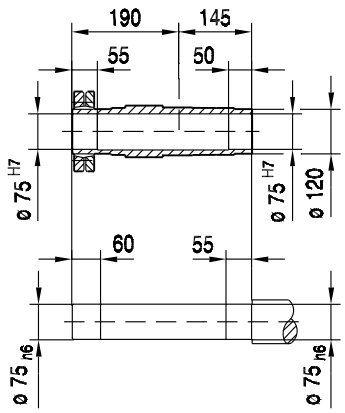

(→ 130)	B5	C5	E5	F5	G5	L	S5	Z5	D1	L1	T1	U1	
AM100	180	15	215	5.0	250	536	M12	116	28	60	31.3	8	
AM112	180	15	215	5.0	250	536	M12	116	28	60	31.3	8	
AM132S/M	230	16	265	5.0	300	589	M12	169	38	80	41.3	10	
AM132ML	230	16	265	5.0	300	589	M12	169	38	80	41.3	10	
AM160	250	18	300	6.0	350	647	M16	227	42	110	45.3	12	
AM180	250	18	300	6.0	350	647	M16	227	48	110	51.8	14	

27 013 01 01

SAZ97..

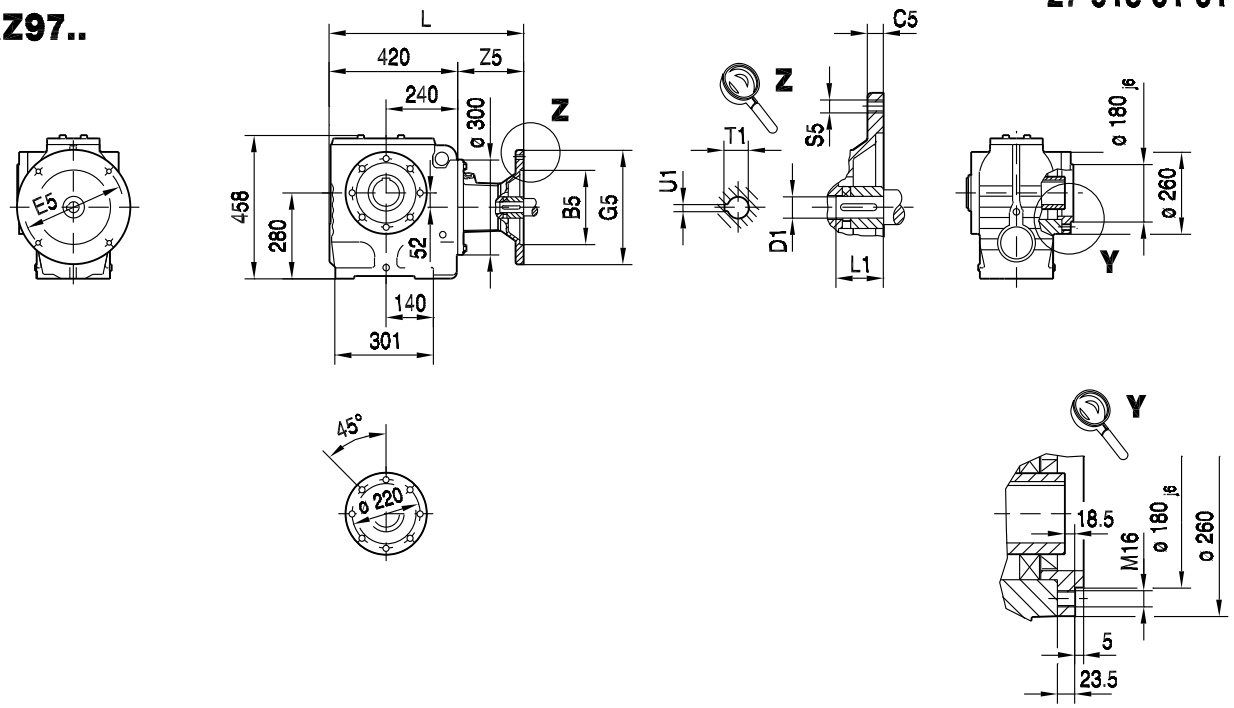

SAZ97..

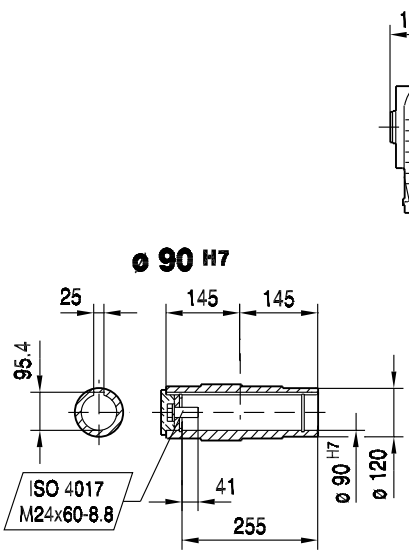

SHZ97..

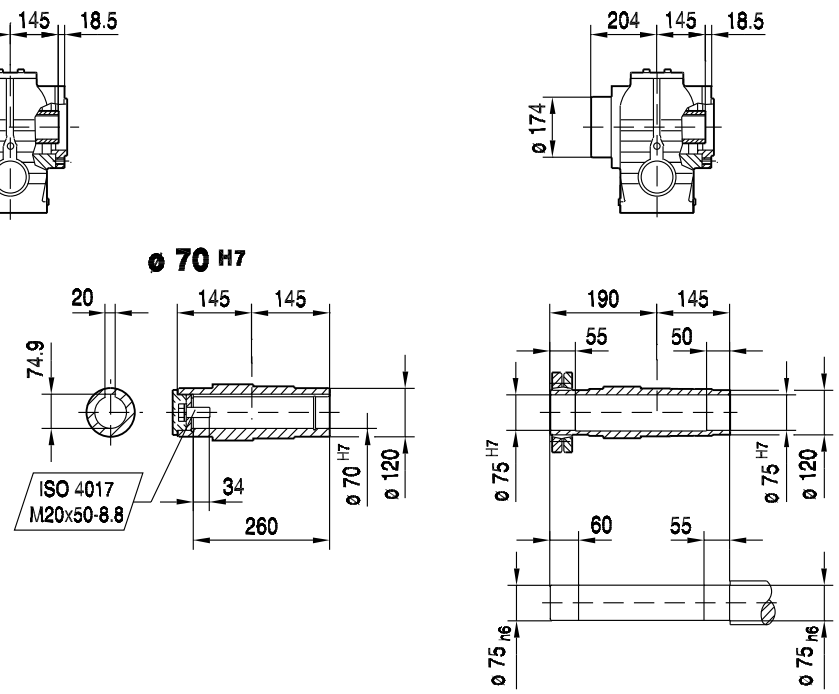

(→ 130)	B5	C5	E5	F5	G5	L	S5	Z5	D1	L1	T1	U1	
AM100	180	15	215	5.0	250	536	M12	116	28	60	31.3	8	
AM112	180	15	215	5.0	250	536	M12	116	28	60	31.3	8	
AM132S/M	230	16	265	5.0	300	589	M12	169	38	80	41.3	10	
AM132ML	230	16	265	5.0	300	589	M12	169	38	80	41.3	10	
AM160	250	18	300	6.0	350	647	M16	227	42	110	45.3	12	
AM180	250	18	300	6.0	350	647	M16	227	48	110	51.8	14	

27 008 00 04

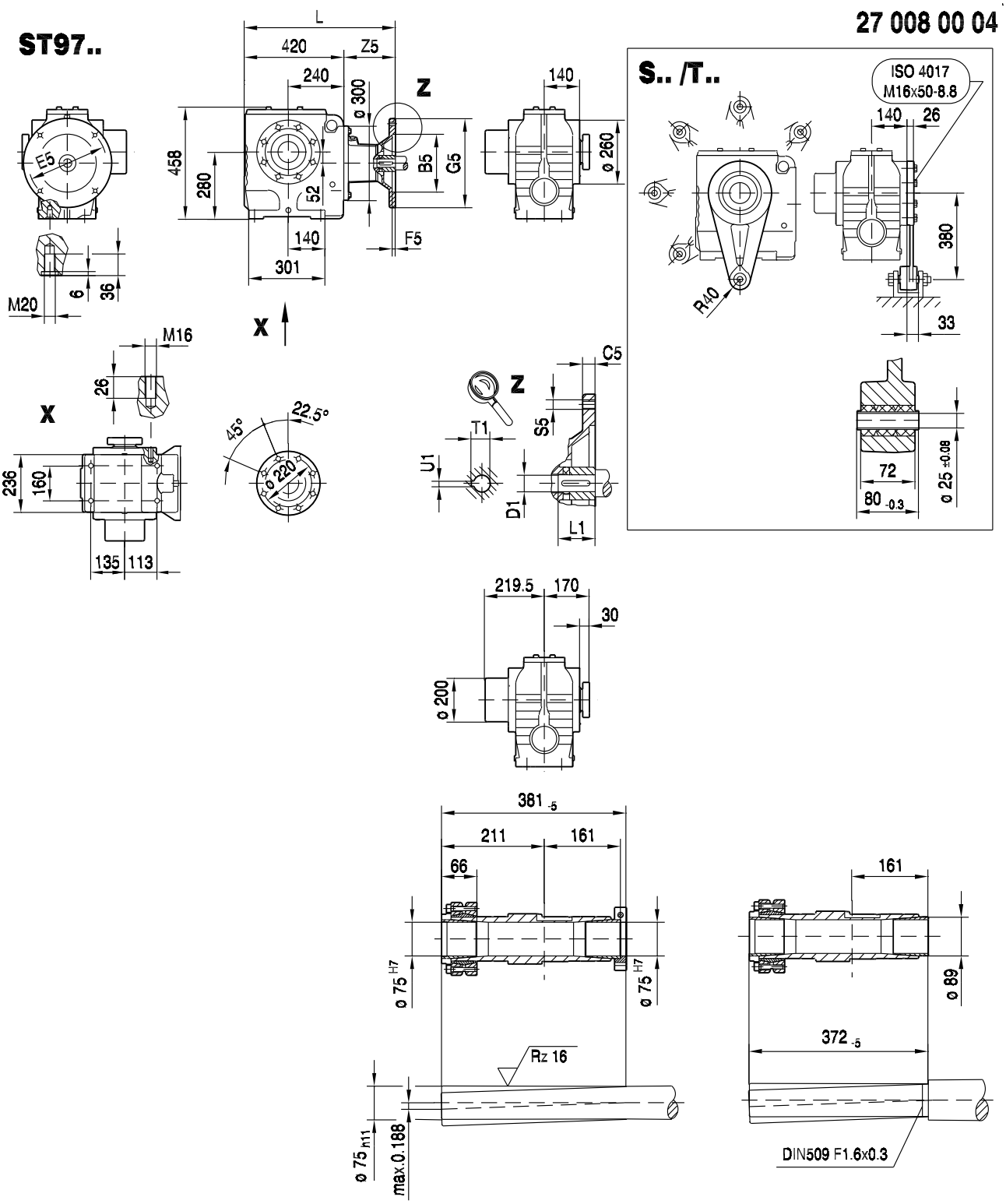

(→ 130)	B5	C5	E5	F5	G5	L	S5	Z5	D1	L1	T1	U1	
AM100	180	15	215	5.0	250	536	M12	116	28	60	31.3	8	
AM112	180	15	215	5.0	250	536	M12	116	28	60	31.3	8	
AM132S/M	230	16	265	5.0	300	589	M12	169	38	80	41.3	10	
AM132ML	230	16	265	5.0	300	589	M12	169	38	80	41.3	10	
AM160	250	18	300	6.0	350	647	M16	227	42	110	45.3	12	
AM180	250	18	300	6.0	350	647	M16	227	48	110	51.8	14	

11.5 S.. AM.. (NEMA) [mm]

02 024 02 01

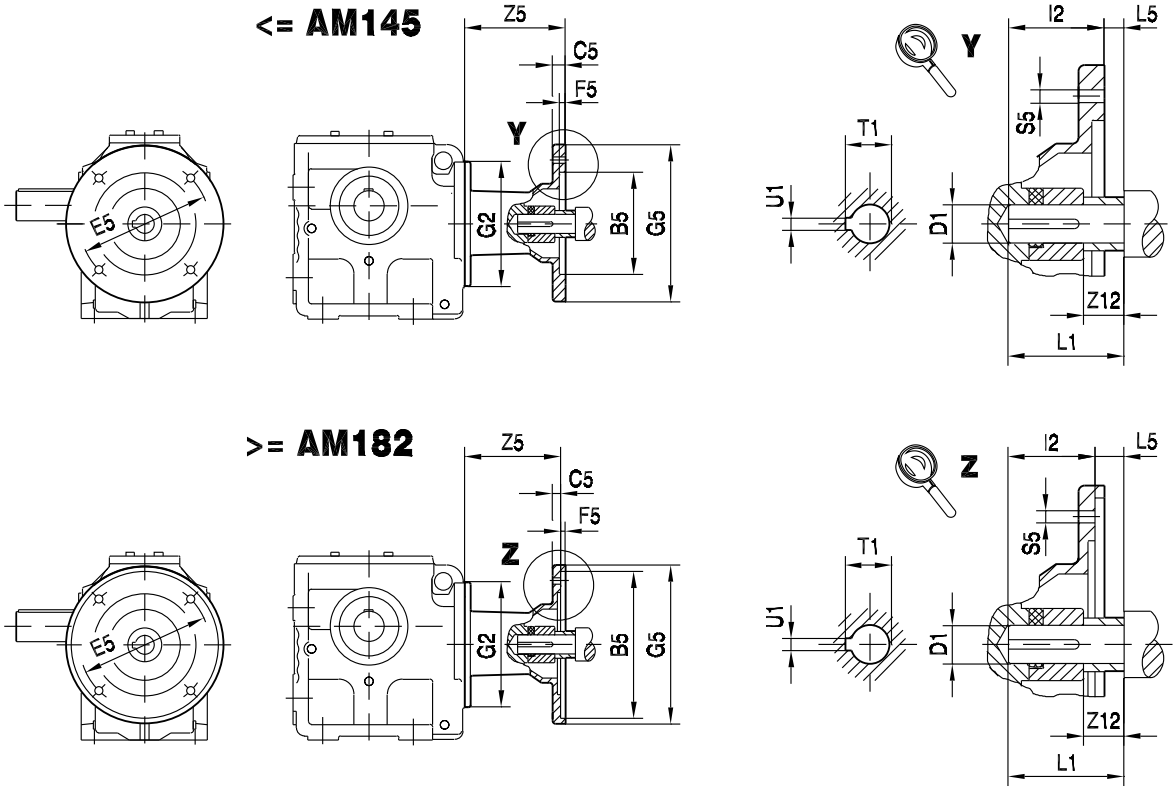

		B5	C5	E5	F5	G2	G5	I2	L5	S5	Z5	Z12	D1	L1	T1	U1
S..37	**AM56**	114.3	11	149.2	4.5	120	170	52.55	-4.8	10.5	93.5	16.5	15.875	47.75	18.1	4.76
S..47	**AM143**		12					54.1	3.05		117	14.5	22.225	57.15	24.7	
S..57	**AM145**															
S..67	**AM56**	114.3	11	149.2	4.5	160	170	52.55	-4.8	10.5	87	16.5	15.875	47.75	18.1	4.76
	AM143		12					54.1	3.05		110.5	14.5	22.225	57.15	24.7	
	AM145															
	AM182	215.9	10	184	5		228	66,85	3	15	147.5	16.5	28.575	69.85	31.7	6.35
	AM184															
	AM213/215		11					79.55	6.3		200.5	15.8	34.925	85.85	38.7	7.94
S..77	**AM56**	114.3	11	149.2	4.5	200	170	52.55	-4.8	10.5	81	16.5	15.875	47.75	18.1	4.76
	AM143		12					54.1	3.05		103.5	14.5	22.225	57.15	24.7	
	AM145															
	AM182	215.9	10	184	5		228	66,85	3	15	139.5	16.5	28.575	69.85	31.7	6.35
	AM184															
	AM213/215		11					79.55	6.3		188.5	15.8	34.925	85.85	38.7	7.94
S..87	**AM143**	114.3	12	149.2	4.5	250	170	54.1	3.05	10.5	98.5	14.5	22.225	57.15	24.7	4.76
	AM145															
	AM182	215.9	10	184	5		228	66,85	3	15	134.5	16.5	28.575	69.85	31.7	6.35
	AM184															
	AM213/215		11					79.55	6.3		183.5	15.8	34.925	85.85	38.7	7.94
	AM254/256		12					95.3	6.3		234	9	41.275	101.6	45.8	9.53
	AM284/286	266.7	15	228.6	5		286	111.05	6.3	15	241	15.8	47.625	117.35	53.4	12.7
S..97	**AM182**	215.9	10	184	5	300	228	66,85	3	15	129.5	16.5	28.575	69.85	31.7	6.35
	AM184															
	AM213/215		11					79.55	6.3		178.5	15.8	34.925	85.85	38.7	7.94
	AM254/256		12					95.3	6.3		229	9	41.275	101.6	45.8	9.53
	AM284/286	266.7	20	228.6	5		286	111.05	6.3	15	236	15.8	47.625	117.35	53.4	12.7
	AM324/326	317.5	17	279.4	5		356	127.05	6.3	17.5	296	34.8	53.975	133.35	60	12.7
	AM364/365							143.05					60.325	149.35	67.6	15.875

11.6 S.. AR.. [mm]

S.. AR..

02 028 02 01

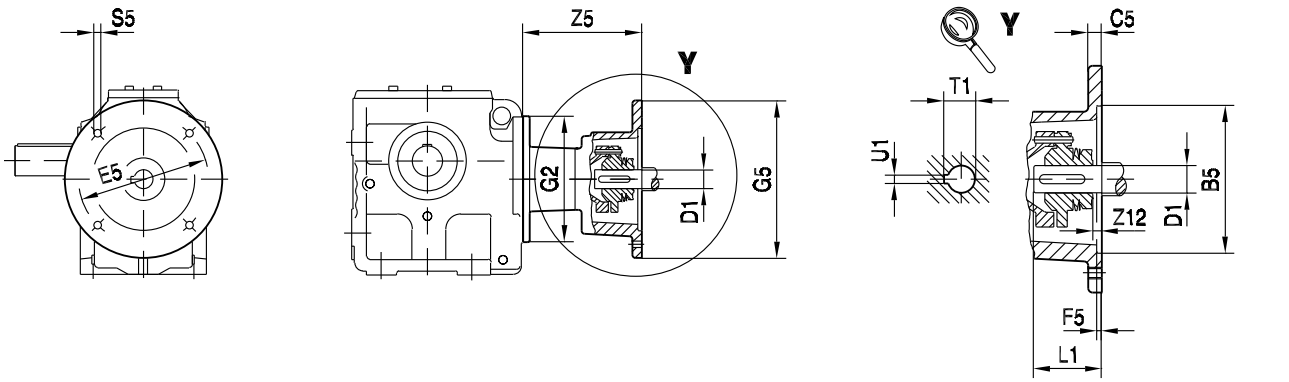

S.. AR../W

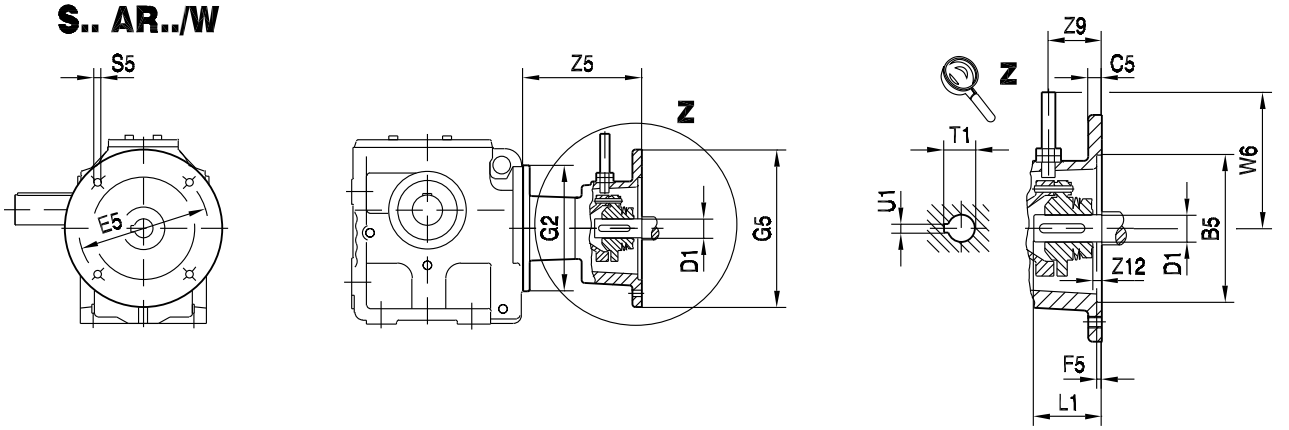

		B5	C5	E5	F5	G2	G5	S5	W6	Z5	Z9	Z12	D1	L1	T1	U1
S..37	**AR71**	110	10	130	3.5	120	160	M8	120	104	37	0	14	30	16.3	5
S..47	**AR80**	130	12	165	4.5		200	M10		140.5			19	40	21.8	6
S..57	**AR90**												24	50	27.3	8
S..67	**AR71**	110	10	130	3.5	160	160	M8	120	97.5	37	0	14	30	16.3	5
	AR80	130	12	165	4.5		200	M10		134			19	40	21.8	6
	AR90												24	50	27.3	8
	AR100	180	15	215	5		250	M12	130	174.5	52	5.5	28	60	31.3	8
	AR112															
S..77	**AR71**	110	10	130	3.5	200	160	M8	120	91.5	37	0	14	30	16.3	5
	AR80	130	12	165	4.5		200	M10		127			19	40	21.8	6
	AR90												24	50	27.3	8
	AR100	180	15	215	5		250	M12	130	166.5	52	5.5	28	60	31.3	8
	AR112															
	AR132S/M	230	16	265	5		300	M12	145	234	72	5	38	80	41.3	10
	AR132ML															
S..87	**AR80**	130	12	165	4.5	250	200	M10	120	122	37	0	19	40	21.8	6
	AR90												24	50	27.3	8
	AR100	180	15	215	5		250	M12	130	161.5	52	5.5	28	60	31.3	8
	AR112															
	AR132S/M	230	16	265	5		300	M12	145	229	72	5	38	80	41.3	10
	AR132ML															
	AR160	250	18	300	6		350	M16	165	306.5	105	35	42	110	45.3	12
	AR180												48	110	51.8	14
S..97	**AR100**	180	15	215	5	300	250	M12	130	156.5	52	5.5	28	60	31.3	8
	AR112															
	AR132S/M	230	16	265	5		300	M12	145	224	72	5	38	80	41.3	10
	AR132ML															
	AR160	250	18	300	6		350	M16	165	301.5	105	35	42	110	45.3	12
	AR180												48	110	51.8	14

11.7 S.. AT.. [mm]

26 001 02 01

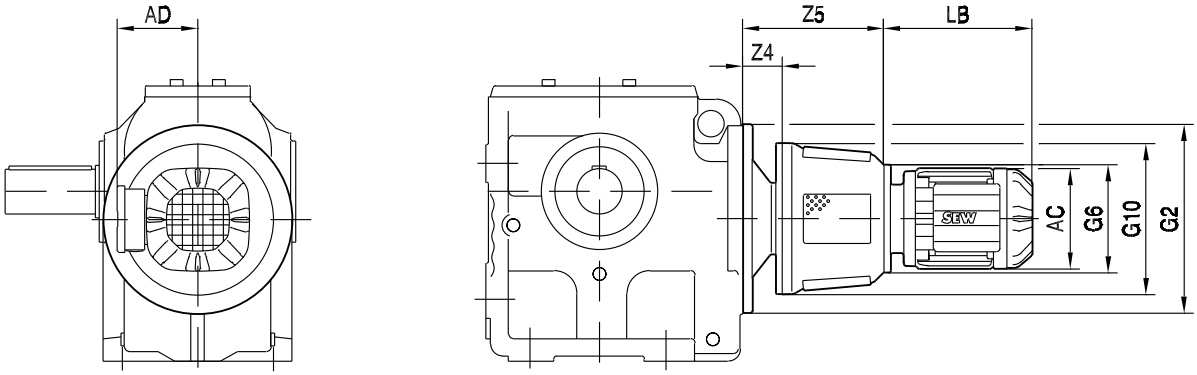

			AC	AD	G6	G10	LB	Z4	Z5	G2
S..67	AT311 AT312	DR.71S	139	119	200	280	198	97	286	160
		DR.71M					223			
		DR.80S	156	128			241			
		DR.80M					272			
		DR.90M	179	140			266			
		DR.90L					286			
		DR.100M	197	157			316			
		DR.100L/LC					346			
	AT321 AT322	DR.90M	179	140	250	350	266	97	333	
		DR.90L					286			
		DR.100M	197	157			316			
		DR.100L/LC					346			
S..77	AT311 AT312	DR.71S	139	119	200	280	198	89	278	200
		DR.71M					223			
		DR.80S	156	128			241			
		DR.80M					272			
		DR.90M	179	140			266			
		DR.90L					286			
		DR.100M	197	157			316			
		DR.100L/LC					346			
	AT421 AT422	DR.90M	179	140	250	350	266	133	368	
		DR.90L					286			
		DR.100M	197	157			316			
		DR.100L/LC					346			
		DR.112M	221	170			352			
		DR.132S					387			
		DR.132M/MC					437			

26 002 02 01

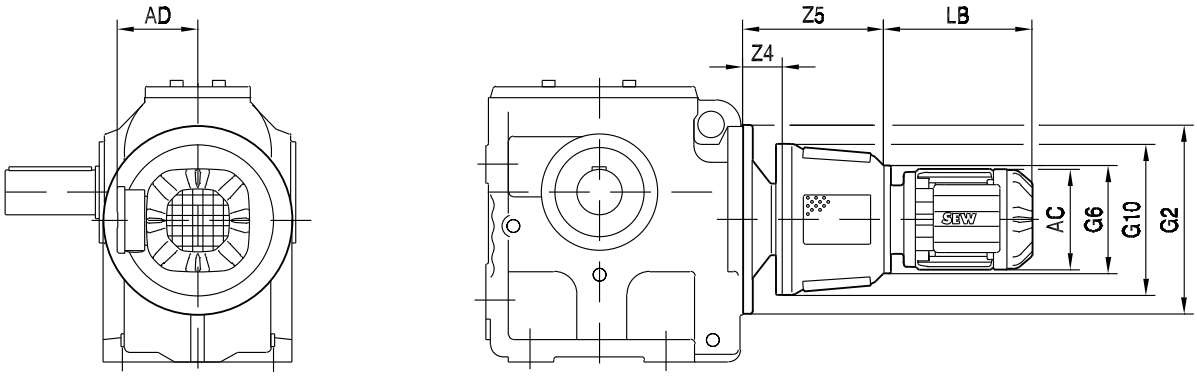

			AC	AD	G6	G10	LB	Z4	Z5	G2
S..87	AT311 AT312	DR.80M	156	128	200	280	272	84	273	250
		DR.90M	179	140			266			
		DR.90L					286			
		DR.100M	197	157			316			
		DR.100L/LC					346			
	AT421 AT422	DR.90M	179	140	250	350	266	128	363	
		DR.90L					286			
		DR.100M	197	157			316			
		DR.100L/LC					346			
		DR.112M	221	170			352			
		DR.132S					387			
		DR.132M/MC					437			
	AT522 AT541 AT542	DR.132S	221	170	350	470	363	159	478	
		DR.132M/MC					413			
		DR.160S/M/MC	270	228			460			
		DR.180S/M	316	253			523			
		DR.180L					583			
S..97	AT311 AT312	DR.80M	156	128	200	280	272	79	268	300
		DR.90M	179	140			266			
		DR.90L					286			
		DR.100M	197	157			316			
		DR.100L/LC					346			
	AT421 AT422	DR.90M	179	140	250	350	266	123	358	
		DR.90L					286			
		DR.100M	197	157			316			
		DR.100L/LC					346			
		DR.112M	221	170			352			
		DR.132S					387			
		DR.132M/MC					437			
	AT522 AT541 AT542	DR.132S	221	170	350	470	363	154	473	
		DR.132M/MC					413			
		DR.160S/M/MC	270	228			460			
		DR.180S/M	316	253			523			
		DR.180L					583			

11.8 S.. AT../BM(G) [mm]

26 003 02 01

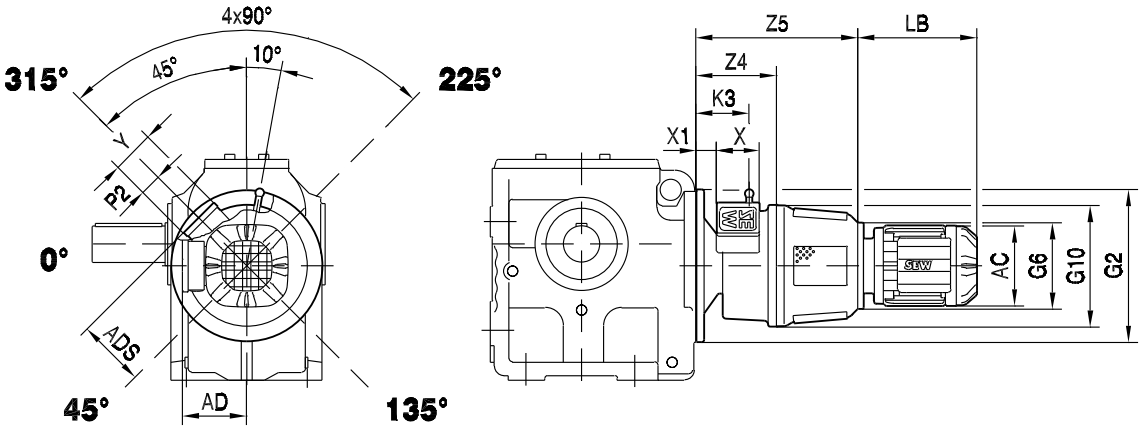

			AC	AD	ADS	G6	G10	LB	K3	P2	X	X1	Y	Z4	Z5	G2
S..67	AT311/BMG AT312/BMG	DR.71S	139	119	184	200	282	198	153	84	97	89	127	223	411	160
		DR.71M						223								
		DR.80S	156	128				241								
		DR.80M						272								
		DR.90M	179	140				266								
		DR.90L						286								
		DR.100M	197	157				316								
		DR.100L/LC						346								
	AT321/BMG AT322/BMG	DR.90M	179	140	215	250	352	266							458	
		DR.90L						286								
		DR.100M	197	157				316								
		DR.100L/LC						346								
S..77	AT311/BMG AT312/BMG	DR.71S	139	119	184	200	282	198	145	84	97	81	127	215	403	200
		DR.71M						223								
		DR.80S	156	128				241								
		DR.80M						272								
		DR.90M	179	140				266								
		DR.90L						286								
		DR.100M	197	157				316								
		DR.100L/LC						346								
	AT421/BMG AT422/BMG	DR.90M	179	140	215	250	352	266	183	84	97	119	127	252	488	
		DR.90L						286								
		DR.100M	197	157				316								
		DR.100L/LC						346								
		DR.112M	221	170				352								
		DR.132S						387								
		DR.132M/MC						437								

26 004 02 01

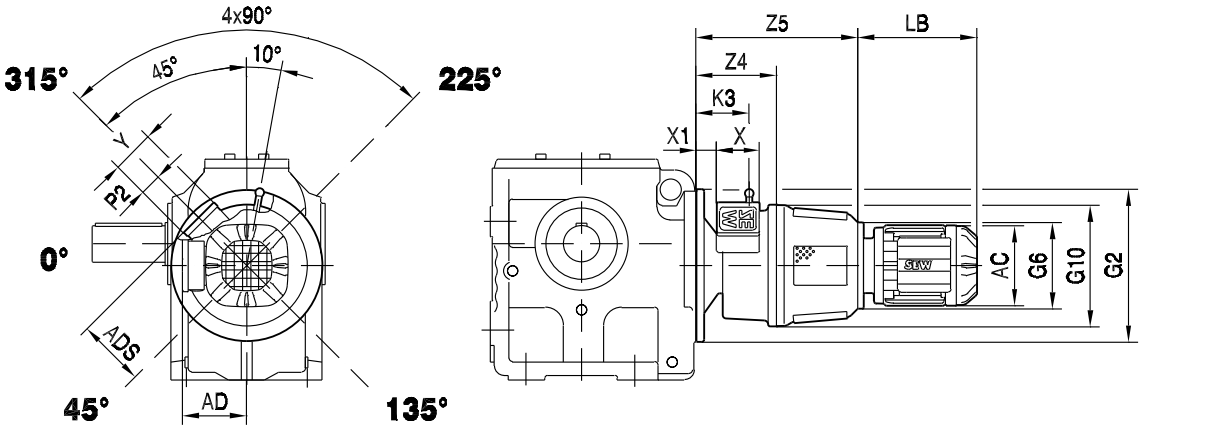

			AC	AD	ADS	G6	G10	LB	K3	P2	X	X1	Y	Z4	Z5	G2
S..87	AT311/BMG AT312/BMG	DR.80M	156	128	184	200	282	272	140	84	97	76	127	210	398	250
		DR.90M	179	140				266								
		DR.90L						286								
		DR.100M	197	157				316								
		DR.100L/LC						346								
	AT421/BMG AT422/BMG	DR.90M	179	140	215	250	352	266	178	84	97	114	127	247	483	
		DR.90L						286								
		DR.100M	197	157				316								
		DR.100L/LC						346								
		DR.112M	221	170				352								
		DR.132S						387								
		DR.132M/MC						437								
	AT522/BM AT541/BM AT542/BM	DR.132S	221	170	275	350	472	363	244	84	97	148	127	331	650	
		DR.132M/MC						413								
		DR.160S/M/MC	270	228				460								
		DR.180S/M	316	253				523								
		DR.180L						583								
S..97	AT311/BMG AT312/BMG	DR.80M	156	128	184	200	282	272	135	84	97	71	127	205	393	300
		DR.90M	179	140				266								
		DR.90L						286								
		DR.100M	197	157				316								
		DR.100L/LC						346								
	AT421/BMG AT422/BMG	DR.90M	179	140	215	250	352	266	173	84	97	109	127	242	478	
		DR.90L						286								
		DR.100M	197	157				316								
		DR.100L/LC						346								
		DR.112M	221	170				352								
		DR.132S						387								
		DR.132M/MC						437								
	AT522/BM AT541/BM AT542/BM	DR.132S	221	170	275	350	472	363	239	84	97	143	127	326	645	
		DR.132M/MC						413								
		DR.160S/M/MC	270	228				460								
		DR.180S/M	316	253				523								
		DR.180L						583								

11.9 S.. AD.. [mm]

S.. AD..

02 029 02 01

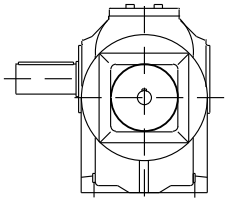

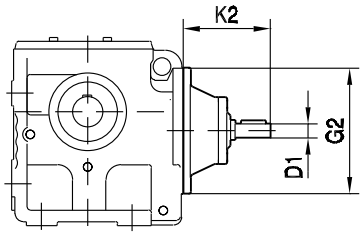

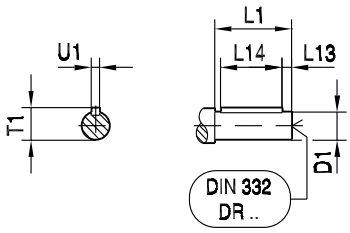

S.. AD../ZR

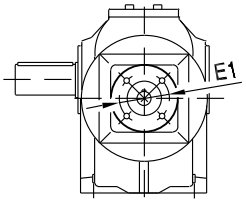

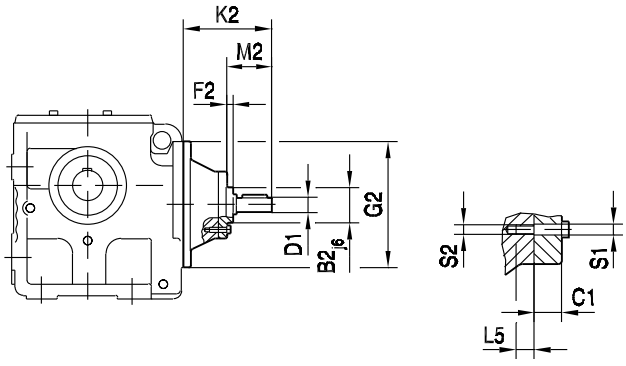

		B2	C1	E1	F2	G2	K2	L5	M2	S1	S2	D1	L1	L13	L14	T1	U1
S..37	**AD1**	-	-	-	-	120	102	-	-	-	-	16	40	4	32	18	5
S..47 **S..57**	**AD2 , AD2/ZR**	55	13.5	80	8		130	12	50	9	M8	19	40	4	32	21.5	6
S..67	**AD2 , AD2/ZR**	55	13.5	80	8	160	123	12	50	9	M8	19	40	4	32	21.5	6
	AD3 , AD3/ZR	70	15.5	105	8		159	16	60	11	M10	24	50	5	40	27	8
S..77	**AD2 , AD2/ZR**	55	13.5	80	8	200	116	12	50	9	M8	19	40	4	32	21.5	6
	AD3 , AD3/ZR	70	15.5	105	8		151	16	60	11	M10	24	50	5	40	27	8
	AD4 , AD4/ZR	100	16	130	13		224	20	95.5	13.5	M12	38	80	5	70	41	10
S..87	**AD2 , AD2/ZR**	55	13.5	80	8	250	111	12	50	9	M8	19	40	4	32	21.5	6
	AD3 , AD3/ZR	70	15.5	105	8		156	16	70	11	M10	28	60	5	50	31	8
	AD4 , AD4/ZR	100	16	130	13		219	20	95.5	13.5	M12	38	80	5	70	41	10
	AD5 , AD5/ZR	120	24	180	11		292	20	126	13.5	M12	42	110	10	70	45	12
S..97	**AD3 , AD3/ZR**	70	15.5	105	8	300	151	16	70	11	M10	28	60	5	50	31	8
	AD4 , AD4/ZR	100	16	130	13		214	20	95.5	13.5	M12	38	80	5	70	41	10
	AD5 , AD5/ZR	120	24	180	11		287	20	126	13.5	M12	42	110	10	70	45	12
	AD6 , AD6/ZR	130	22.5	200	11		327	26	130.5	17.5	M16	48	110	10	80	51.5	14

11.10 S.. AD../P [mm]

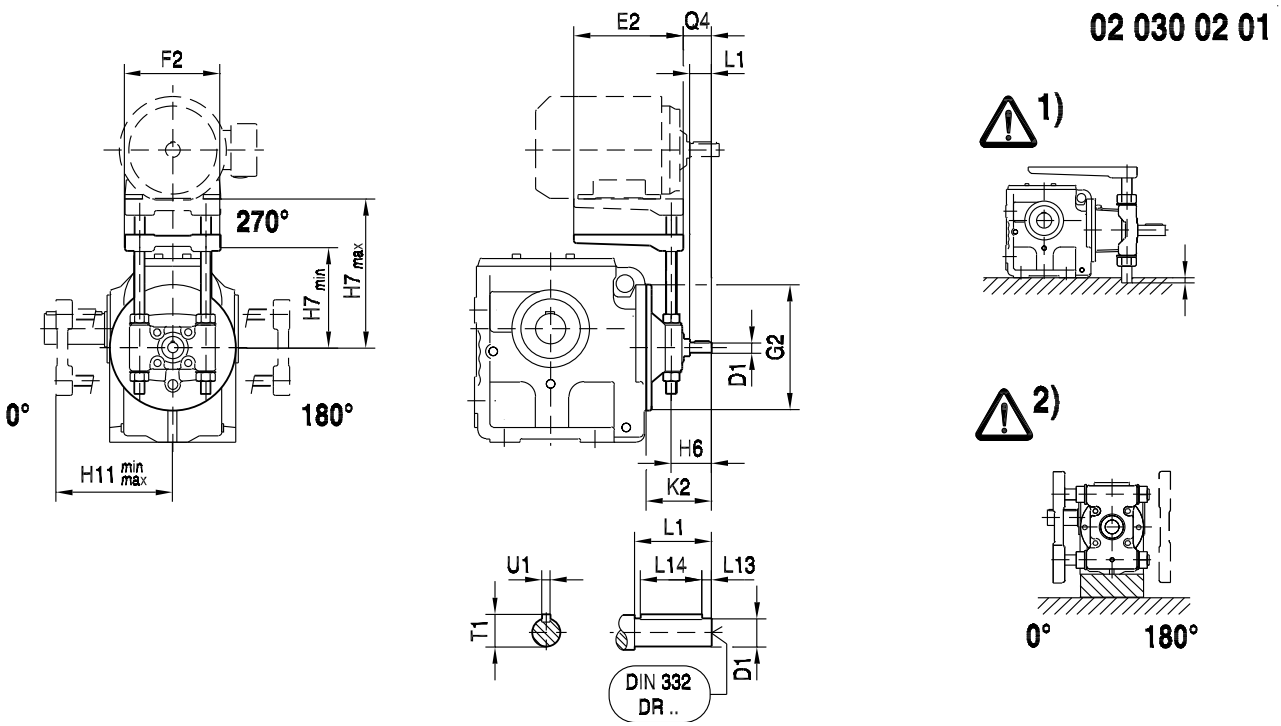

		E2	F2	G2	H6	H7 min	H7 max	H11 min	H11 max	K2	Q4	D1	L1	L13	L14	T1	U1	⚠ →129
S..37 S..47	**AD2/P**	195	180	120	65	110	165	95	165	130	43	19	40	4	32	21.5	6	1), 2)
S..57	**AD2/P**	195	180	120	65	140	200	110	165	130	43	19	40	4	32	21.5	6	1)
S..67	**AD2/P**	195	180	160	65	140	200	125	165	123	43	19	40	4	32	21.5	6	1)
	AD3/P	230	240		80	145	175	130	175	159	54	24	50	5	40	27	8	2)
S..77	**AD2/P**	195	180	200	65	175	260	145	200	116	43	19	40	4	32	21.5	6	
	AD3/P	230	240		80	180	230	150	230	151	54	24	50	5	40	27	8	
	AD4/P	345	291		118	190	280	150	210	224	83	38	80	5	70	41	10	1)
S..87	**AD2/P**	195	180	250	65	215	260	165	200	111	43	19	40	4	32	21.5	6	
	AD3/P	230	240		90	230	320	170	230	156	64	28	60	5	50	31	8	
	AD4/P	345	291		118	250	360	170	210	219	83	38	80	5	70	41	10	1)
	AD5/P	430	355		153	260	325	185	250	292	113	42	110	10	70	45	12	1), 2)
S..97	**AD3/P**	230	240	300	90	275	320	190	230	151	64	28	60	5	50	31	8	
	AD4/P	345	291		118	305	360	190	280	214	83	38	80	5	70	41	10	
	AD5/P	430	355		153	315	405	200	250	287	113	42	110	10	70	45	12	

11.11 S, SF, SA, SAF 37

3400 - 2800 1/min

02 955 197

i_{ges}	i_{sch}	n_e = 3400 1/min				n_e = 3200 1/min				n_e = 2800 1/min			
		n_a [1/min]	M_{amax} [Nm]	P_e [kW]	η [%]	n_a [1/min]	M_{amax} [Nm]	P_e [kW]	η [%]	n_a [1/min]	M_{amax} [Nm]	P_e [kW]	η [%]
157.43	38/1	**22**	78	0.31	57	**20**	80	0.30	57	**18**	82	0.27	57
144.40		**24**	76	0.33	58	**22**	78	0.31	58	**19**	80	0.28	57
122.94		**28**	74	0.37	58	**26**	75	0.35	58	**23**	78	0.32	58
106.00		**32**	71	0.41	59	**30**	72	0.39	59	**26**	76	0.36	59
98.80		**34**	70	0.43	59	**32**	72	0.41	59	**28**	75	0.38	59
86.36		**39**	68	0.47	60	**37**	69	0.45	60	**32**	72	0.41	60
80.96		**42**	66	0.49	60	**40**	68	0.47	60	**35**	72	0.43	60
71.44		**48**	55	0.47	58	**45**	64	0.50	60	**39**	70	0.47	61
63.33		**54**	37	0.41	51	**51**	51	0.47	57	**44**	67	0.51	61
53.83		**63**	29	0.39	49	**59**	32	0.40	50	**52**	53	0.49	59
55.93	27/2	**61**	70	0.58	77	**57**	71	0.56	76	**50**	72	0.50	76
51.30		**66**	68	0.61	77	**62**	70	0.60	77	**55**	72	0.54	76
43.68		**78**	66	0.70	77	**73**	67	0.67	77	**64**	70	0.61	77
37.66		**90**	64	0.78	78	**85**	65	0.74	78	**74**	68	0.68	78
35.10		**97**	62	0.81	78	**91**	64	0.78	78	**80**	66	0.71	78
30.68		**111**	61	0.90	78	**104**	62	0.87	78	**91**	64	0.78	78
28.76		**118**	58	0.92	78	**111**	61	0.91	78	**97**	64	0.83	78
25.38		**134**	47	0.86	77	**126**	53	0.90	78	**110**	62	0.91	79
22.50		**151**	31	0.69	71	**142**	43	0.84	76	**124**	57	0.94	79
19.13		**178**	24	0.65	69	**167**	27	0.67	70	**146**	44	0.87	77
19.89	24/5	**171**	42	0.88	86	**161**	43	0.85	86	**141**	44	0.76	86
18.24		**186**	41	0.93	86	**175**	42	0.90	86	**154**	44	0.83	86
15.53		**219**	39	1.0	86	**206**	40	1.0	86	**180**	42	0.92	86
13.39		**254**	37	1.1	86	**239**	39	1.1	86	**209**	41	1.0	86
12.48		**272**	37	1.2 *	86	**256**	38	1.2 *	86	**224**	40	1.1	86
10.91		**312**	35	1.3 *	86	**293**	36	1.3 *	86	**257**	39	1.2 *	87
10.23		**332**	35	1.4 *	87	**313**	36	1.4 *	87	**274**	38	1.3 *	87
9.02		**377**	31	1.4 *	86	**355**	34	1.5 *	87	**310**	36	1.3 *	87
8.00		**425**	20	1.1	82	**400**	29	1.4 *	86	**350**	35	1.5 *	87
6.80		**500**	16	1.0	81	**471**	18	1.1	82	**412**	29	1.4 *	86
6.33		**537**	24	1.6 *	87	**506**	27	1.6 *	88	**442**	32	1.7 *	88
5.38		**632**	20	1.5 *	87	**595**	22	1.6 *	87	**520**	26	1.6 *	88
4.86		**700**	18	1.5 *	87	**658**	19	1.5 *	87	**576**	24	1.7 *	88
3.97		**856**	14	1.5 *	86	**806**	15	1.5 *	87	**705**	19	1.6 *	88

* P_{emax} = 1.1 kW

2200 - 1400 1/min

02 955 197

		n_e = 2200 1/min				n_e = 1700 1/min				n_e = 1400 1/min			
i_{ges}	i_{sch}	n_a [1/min]	M_{amax} [Nm]	P_e [kW]	η [%]	n_a [1/min]	M_{amax} [Nm]	P_e [kW]	η [%]	n_a [1/min]	M_{amax} [Nm]	P_e [kW]	η [%]
157.43		**14**	87	0.23	56	**11**	91	0.19	54	**8.9**	92	0.16	53
144.40		**15**	86	0.24	56	**12**	90	0.20	55	**9.7**	92	0.17	54
122.94		**18**	83	0.27	57	**14**	87	0.22	56	**11**	91	0.20	55
106.00		**21**	81	0.30	58	**16**	86	0.25	57	**13**	88	0.22	56
98.80		**22**	80	0.32	58	**17**	85	0.27	57	**14**	87	0.23	56
86.36	38/1	**25**	78	0.35	59	**20**	82	0.29	58	**16**	86	0.25	57
80.96		**27**	77	0.37	60	**21**	82	0.31	59	**17**	85	0.27	58
71.44		**31**	75	0.40	60	**24**	80	0.33	60	**20**	84	0.29	59
63.33		**35**	73	0.44	61	**27**	79	0.37	60	**22**	82	0.32	60
53.83		**41**	69	0.48	62	**32**	76	0.41	61	**26**	80	0.36	61
55.93		**39**	77	0.42	75	**30**	81	0.35	74	**25**	81	0.29	73
51.30		**43**	76	0.45	76	**33**	80	0.37	75	**27**	81	0.31	74
43.68		**50**	74	0.51	76	**39**	78	0.42	76	**32**	81	0.36	75
37.66		**58**	72	0.57	77	**45**	76	0.47	76	**37**	79	0.41	76
35.10	27/2	**63**	71	0.60	77	**48**	75	0.50	77	**40**	78	0.43	76
30.68		**72**	70	0.67	78	**55**	73	0.55	77	**46**	76	0.47	76
28.76		**76**	68	0.70	78	**59**	73	0.58	77	**49**	75	0.50	77
25.38		**87**	67	0.77	79	**67**	71	0.64	78	**55**	74	0.55	77
22.50		**98**	66	0.85	79	**76**	70	0.70	79	**62**	73	0.61	78
19.13		**115**	63	0.95	80	**89**	68	0.80	79	**73**	71	0.69	79
19.89		**111**	48	0.65	85	**85**	50	0.53	85	**70**	52	0.46	84
18.24		**121**	47	0.70	85	**93**	49	0.56	85	**77**	52	0.50	84
15.53		**142**	45	0.78	86	**109**	48	0.64	85	**90**	50	0.56	85
13.39		**164**	44	0.88	86	**127**	47	0.73	86	**105**	49	0.63	85
12.48		**176**	43	0.92	86	**136**	46	0.76	86	**112**	48	0.66	86
10.91		**202**	42	1.0	87	**156**	45	0.85	86	**128**	48	0.75	86
10.23	24/5	**215**	41	1.1	87	**166**	45	0.90	87	**137**	47	0.78	86
9.02		**244**	40	1.2 *	87	**188**	43	0.98	87	**155**	46	0.86	87
8.00		**275**	39	1.3 *	87	**213**	43	1.1	87	**175**	45	0.95	87
6.80		**324**	37	1.4 *	88	**250**	41	1.2 *	88	**206**	43	1.1	87
6.33		**348**	35	1.5 *	88	**269**	35	1.1 *	88	**221**	35	0.9	87
5.38		**409**	34	1.7 *	88	**316**	34	1.3 *	88	**260**	34	1.1	88
4.86		**453**	32	1.7 *	89	**350**	33	1.3 *	88	**288**	33	1.1	88
3.97		**554**	26	1.7 *	88	**428**	32	1.6 *	89	**353**	32	1.3 *	88

* P_{emax} = 1.1 kW

1100 - 700 1/min

02 956 197

i_{ges}	i_{sch}	n_e = 1100 1/min				n_e = 900 1/min				n_e = 700 1/min			
		n_a [1/min]	M_{amax} [Nm]	P_e [kW]	η [%]	n_a [1/min]	M_{amax} [Nm]	P_e [kW]	η [%]	n_a [1/min]	M_{amax} [Nm]	P_e [kW]	η [%]
157.43		**7.0**	92	0.13	52	**5.7**	92	0.11	50	**4.4**	92	0.09	49
144.40		**7.6**	92	0.14	52	**6.2**	92	0.12	51	**4.8**	92	0.09	50
122.94		**8.9**	92	0.16	54	**7.3**	92	0.14	52	**5.7**	92	0.11	51
106.00		**10**	92	0.18	55	**8.5**	92	0.15	53	**6.6**	92	0.12	52
98.80		**11**	92	0.19	55	**9.1**	92	0.16	54	**7.1**	92	0.13	52
86.36	38/1	**13**	90	0.21	56	**10**	92	0.18	55	**8.1**	92	0.15	53
80.96		**14**	89	0.22	57	**11**	92	0.19	55	**8.6**	92	0.16	54
71.44		**15**	87	0.24	57	**13**	91	0.21	56	**9.8**	92	0.17	55
63.33		**17**	86	0.27	58	**14**	89	0.23	57	**11**	92	0.19	56
53.83		**20**	84	0.30	60	**17**	87	0.26	58	**13**	91	0.22	57
55.93		**20**	87	0.25	72	**16**	91	0.21	71	**13**	92	0.17	70
51.30		**21**	87	0.27	73	**18**	90	0.23	72	**14**	92	0.19	71
43.68		**25**	84	0.30	74	**21**	87	0.26	73	**16**	92	0.22	71
37.66		**29**	82	0.34	75	**24**	86	0.29	74	**19**	89	0.24	72
35.10		**31**	82	0.36	75	**26**	84	0.31	74	**20**	88	0.25	73
30.68	27/2	**36**	80	0.40	76	**29**	82	0.34	75	**23**	87	0.28	74
28.76		**38**	79	0.42	76	**31**	82	0.36	75	**24**	86	0.30	74
25.38		**43**	78	0.46	77	**35**	81	0.40	76	**28**	84	0.33	75
22.50		**49**	77	0.51	77	**40**	79	0.43	76	**31**	82	0.36	75
19.13		**58**	75	0.58	78	**47**	78	0.50	77	**37**	81	0.41	76
19.89		**55**	55	0.38	83	**45**	58	0.33	83	**35**	60	0.27	82
18.24		**60**	54	0.41	84	**49**	56	0.35	83	**38**	60	0.29	82
15.53		**71**	53	0.47	84	**58**	55	0.40	84	**45**	58	0.33	83
13.39		**82**	52	0.53	85	**67**	54	0.45	84	**52**	56	0.37	83
12.48		**88**	51	0.55	85	**72**	53	0.47	84	**56**	55	0.39	84
10.91		**101**	50	0.62	86	**82**	52	0.53	85	**64**	54	0.43	84
10.23	24/5	**108**	49	0.64	86	**88**	51	0.55	85	**68**	54	0.46	84
9.02		**122**	48	0.71	86	**100**	50	0.61	86	**78**	53	0.51	85
8.00		**138**	47	0.78	87	**113**	49	0.67	86	**88**	52	0.56	85
6.80		**162**	46	0.90	87	**132**	48	0.77	87	**103**	51	0.64	86
6.33		**174**	45	0.94	87	**142**	45	0.77	87	**111**	45	0.61	86
5.38		**204**	43	1.05	88	**167**	43	0.86	87	**130**	43	0.68	87
4.86		**226**	42	1.13	88	**185**	42	0.93	88	**144**	42	0.73	87
3.97		**277**	40	1.31	88	**227**	40	1.08	88	**176**	40	0.84	88

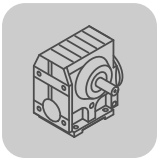

500 - 10 1/min

02 956 197

		n_e = 500 1/min				n_e = 250 1/min				n_e = 10 1/min			
i_{ges}	i_{sch}	n_a [1/min]	M_{amax} [Nm]	P_e [kW]	η [%]	n_a [1/min]	M_{amax} [Nm]	P_e [kW]	η [%]	n_a [1/min]	M_{amax} [Nm]	P_e [kW]	η [%]
157.43		**3.2**	92	0.06	47	**1.6**	92	0.033	46	**0.06**	92	< 0.05	26
144.40		**3.5**	92	0.07	48	**1.7**	92	0.036	46	**0.07**	92	< 0.05	27
122.94		**4.1**	92	0.08	49	**2.0**	92	0.042	46	**0.08**	92	< 0.05	29
106.00		**4.7**	92	0.09	50	**2.4**	92	0.049	47	**0.09**	92	< 0.05	30
98.80		**5.1**	92	0.10	50	**2.5**	92	0.05	47	**0.10**	92	< 0.05	31
86.36	38/1	**5.8**	92	0.11	51	**2.9**	92	0.06	47	**0.12**	92	< 0.05	32
80.96		**6.2**	92	0.12	51	**3.1**	92	0.06	47	**0.12**	92	< 0.05	33
71.44		**7.0**	92	0.13	52	**3.5**	92	0.07	48	**0.14**	92	< 0.05	35
63.33		**7.9**	92	0.14	53	**3.9**	92	0.08	49	**0.16**	92	< 0.05	37
53.83		**9.3**	92	0.16	55	**4.6**	92	0.09	50	**0.19**	92	< 0.05	39
55.93		**8.9**	92	0.13	69	**4.5**	92	0.06	67	**0.18**	92	< 0.05	48
51.30		**9.7**	92	0.14	69	**4.9**	92	0.07	67	**0.19**	92	< 0.05	49
43.68		**11**	92	0.16	70	**5.7**	92	0.08	67	**0.23**	92	< 0.05	51
37.66		**13**	92	0.18	71	**6.6**	92	0.10	67	**0.27**	92	< 0.05	53
35.10		**14**	92	0.19	71	**7.1**	92	0.10	68	**0.28**	92	< 0.05	54
30.68	27/2	**16**	92	0.22	72	**8.1**	92	0.11	68	**0.33**	92	< 0.05	56
28.76		**17**	91	0.23	72	**8.7**	92	0.12	69	**0.35**	92	< 0.05	57
25.38		**20**	89	0.25	73	**9.9**	92	0.14	69	**0.39**	92	< 0.05	59
22.50		**22**	87	0.28	74	**11**	92	0.15	70	**0.44**	92	< 0.05	61
19.13		**26**	85	0.31	75	**13**	92	0.18	71	**0.52**	92	< 0.05	62
19.89		**25**	68	0.22	81	**13**	72	0.12	79	**0.50**	72	< 0.05	65
18.24		**27**	66	0.23	81	**14**	72	0.13	79	**0.55**	72	< 0.05	66
15.53		**32**	63	0.26	82	**16**	72	0.15	79	**0.64**	72	< 0.05	68
13.39		**37**	61	0.29	82	**19**	72	0.18	80	**0.75**	72	< 0.05	71
12.48		**40**	59	0.30	82	**20**	72	0.19	80	**0.80**	72	< 0.05	72
10.91		**46**	58	0.34	83	**23**	71	0.21	81	**0.92**	71	< 0.05	73
10.23		**49**	57	0.35	83	**24**	70	0.22	81	**0.98**	70	< 0.05	73
9.02	24/5	**55**	56	0.39	84	**28**	66	0.24	81	**1.1**	66	< 0.05	74
8.00		**63**	55	0.43	84	**31**	63	0.25	82	**1.2**	63	< 0.05	74
6.80		**74**	54	0.49	85	**37**	61	0.29	82	**1.5**	61	< 0.05	75
6.33		**79**	45	0.44	85	**39**	45	0.23	83	**1.6**	45	< 0.05	80
5.38		**93**	43	0.49	86	**46**	43	0.25	83	**1.9**	43	< 0.05	80
4.86		**103**	42	0.53	86	**51**	42	0.27	84	**2.1**	42	< 0.05	80
3.97		**126**	40	0.61	87	**63**	40	0.31	84	**2.5**	40	< 0.05	80

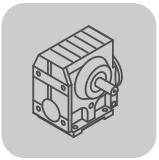

11.12 S, SF, SA, SAF 47

3400 - 2800 1/min

02 957 197

i_{ges}	i_{sch}	n_e = 3400 1/min				n_e = 3200 1/min				n_e = 2800 1/min			
		n_a [1/min]	M_{amax} [Nm]	P_e [kW]	η [%]	n_a [1/min]	M_{amax} [Nm]	P_e [kW]	η [%]	n_a [1/min]	M_{amax} [Nm]	P_e [kW]	η [%]
201.00		**17**	150	0.44	60	**16**	150	0.42	60	**14**	150	0.37	59
184.80		**18**	150	0.48	60	**17**	150	0.45	60	**15**	150	0.40	59
158.12		**22**	150	0.55	61	**20**	150	0.52	61	**18**	150	0.46	60
137.05		**25**	150	0.63	62	**23**	150	0.59	62	**20**	150	0.52	61
128.10		**27**	150	0.67	63	**25**	150	0.63	62	**22**	150	0.56	62
110.73	42/1	**31**	138	0.70	63	**29**	148	0.71	63	**25**	150	0.63	63
94.08		**36**	113	0.69	62	**34**	123	0.70	63	**30**	146	0.72	63
84.00		**40**	95	0.66	61	**38**	107	0.69	62	**33**	130	0.71	63
71.75		**47**	58	0.55	53	**45**	82	0.64	60	**39**	107	0.70	63
67.20		**51**	53	0.54	52	**48**	68	0.60	57	**42**	99	0.69	62
56.61		**60**	40	0.51	49	**57**	46	0.53	51	**49**	75	0.65	60
69.39		**49**	140	0.91	79	**46**	140	0.86	78	**40**	140	0.76	78
63.80		**53**	140	0.99	79	**50**	140	0.93	79	**44**	140	0.82	78
54.59		**62**	140	1.1	80	**59**	140	1.1	79	**51**	140	0.95	79
47.32		**72**	139	1.3	80	**68**	140	1.2	80	**59**	140	1.1	80
44.22		**77**	129	1.3	80	**72**	139	1.3	80	**63**	140	1.2	80
38.23	29/2	**89**	112	1.3	80	**84**	120	1.3	80	**73**	139	1.3	80
32.48		**105**	91	1.3	79	**99**	100	1.3	80	**86**	117	1.3	80
29.00		**117**	76	1.2	78	**110**	86	1.3	79	**97**	104	1.3	80
24.77		**137**	47	0.94	72	**129**	66	1.2	77	**113**	87	1.3	80
23.20		**147**	42	0.90	71	**138**	54	1.0	75	**121**	79	1.3	79
19.54		**174**	32	0.84	69	**164**	37	0.89	71	**143**	59	1.1	77
20.33		**167**	100	2.0 *	88	**157**	100	1.9 *	88	**138**	100	1.6 *	88
17.62		**193**	97	2.2 *	88	**182**	100	2.2 *	88	**159**	100	1.9 *	88
16.47		**206**	90	2.2 *	88	**194**	97	2.2 *	88	**170**	100	2.0 *	88
14.24		**239**	78	2.2 *	88	**225**	83	2.2 *	88	**197**	97	2.3 *	88
12.10		**281**	63	2.1 *	88	**264**	69	2.2 *	88	**231**	82	2.2 *	88
10.80		**315**	53	2.0 *	87	**296**	60	2.1 *	88	**259**	72	2.2 *	88
9.23	27/5	**368**	32	1.5	83	**347**	45	1.9 *	86	**303**	60	2.2 *	88
8.64		**394**	29	1.5	82	**370**	37	1.7 *	85	**324**	55	2.1 *	88
7.28		**467**	22	1.3	81	**440**	25	1.4	82	**385**	41	1.9 *	86
6.83		**498**	34	2.0 *	87	**469**	37	2.0 *	88	**410**	45	2.2 *	88
6.40		**531**	31	2.0 *	87	**500**	34	2.0 *	87	**438**	42	2.2 *	88
5.39		**631**	24	1.8 *	86	**594**	27	1.9 *	87	**519**	34	2.1 *	88
4.76		**714**	20	1.8 *	85	**672**	23	1.9 *	86	**588**	29	2.0 *	87
4.00		**850**	16	1.7 *	85	**800**	18	1.8 *	85	**700**	23	1.9 *	87

* P_{emax} = 1.5 kW

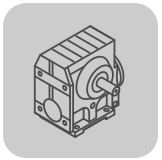

2200 - 1400 1/min

02 957 197

		n_e = 2200 1/min				n_e = 1700 1/min				n_e = 1400 1/min			
i_{ges}	i_{sch}	n_a [1/min]	M_{amax} [Nm]	P_e [kW]	η [%]	n_a [1/min]	M_{amax} [Nm]	P_e [kW]	η [%]	n_a [1/min]	M_{amax} [Nm]	P_e [kW]	η [%]
201.00		**11**	167	0.33	58	**8.5**	170	0.27	56	**7.0**	170	0.23	55
184.80		**12**	167	0.36	58	**9.2**	168	0.29	57	**7.6**	170	0.24	56
158.12		**14**	167	0.41	60	**11**	168	0.33	58	**8.9**	170	0.28	57
137.05		**16**	165	0.46	60	**12**	167	0.37	59	**10**	168	0.31	58
128.10		**17**	165	0.49	61	**13**	167	0.39	59	**11**	168	0.33	58
110.73	42/1	**20**	165	0.55	62	**15**	167	0.44	61	**13**	168	0.38	59
94.08		**23**	165	0.64	63	**18**	167	0.51	62	**15**	168	0.43	60
84.00		**26**	162	0.70	64	**20**	167	0.57	62	**17**	167	0.48	61
71.75		**31**	145	0.73	64	**24**	167	0.65	63	**20**	167	0.55	62
67.20		**33**	137	0.73	64	**25**	164	0.68	64	**21**	167	0.58	63
56.61		**39**	115	0.73	64	**30**	152	0.74	65	**25**	165	0.67	64
69.39		**32**	155	0.67	77	**24**	155	0.52	76	**20**	155	0.44	75
63.80		**34**	155	0.72	77	**27**	155	0.57	76	**22**	155	0.47	75
54.59		**40**	155	0.84	78	**31**	155	0.66	77	**26**	155	0.55	76
47.32		**46**	155	0.96	79	**36**	155	0.75	78	**30**	155	0.63	77
44.22		**50**	155	1.0	79	**38**	155	0.80	78	**32**	155	0.67	77
38.23	29/2	**58**	154	1.2	80	**44**	155	0.92	79	**37**	155	0.76	78
32.48		**68**	146	1.3	80	**52**	155	1.1	80	**43**	155	0.89	79
29.00		**76**	137	1.3	81	**59**	154	1.2	80	**48**	155	0.99	79
24.77		**89**	117	1.3	81	**69**	145	1.3	81	**57**	155	1.1	80
23.20		**95**	111	1.4	81	**73**	142	1.3	81	**60**	152	1.2	80
19.54		**113**	92	1.3	81	**87**	123	1.4	81	**72**	144	1.3	81
20.33		**108**	109	1.4	87	**84**	110	1.1	87	**69**	110	0.92	86
17.62		**125**	108	1.6 *	88	**96**	109	1.3	87	**79**	110	1.1	86
16.47		**134**	108	1.7 *	88	**103**	109	1.4	87	**85**	110	1.1	87
14.24		**154**	108	2.0 *	88	**119**	109	1.6 *	88	**98**	110	1.3	87
12.10		**182**	105	2.3 *	89	**140**	109	1.8 *	88	**116**	109	1.5	88
10.80		**204**	95	2.3 *	89	**157**	108	2.0 *	88	**130**	109	1.7 *	88
9.23	27/5	**238**	82	2.3 *	89	**184**	105	2.3 *	89	**152**	109	2.0 *	88
8.64		**255**	77	2.3 *	89	**197**	100	2.3 *	89	**162**	109	2.1 *	88
7.28		**302**	64	2.3 *	89	**234**	86	2.4 *	89	**192**	103	2.3 *	89
6.83		**322**	62	2.4 *	89	**249**	78	2.3 *	89	**205**	78	1.9 *	89
6.40		**344**	58	2.4 *	89	**266**	76	2.4 *	89	**219**	76	2.0 *	89
5.39		**408**	48	2.3 *	89	**315**	65	2.4 *	89	**260**	74	2.3 *	89
4.76		**462**	42	2.3 *	89	**357**	58	2.4 *	89	**294**	72	2.5 *	90
4.00		**550**	34	2.2 *	88	**425**	48	2.4 *	89	**350**	61	2.5 *	90

* P_{emax} = 1.5 kW

1100 - 700 1/min

02 958 197

i_{ges}	i_{sch}	n_e = 1100 1/min				n_e = 900 1/min				n_e = 700 1/min			
		n_a [1/min]	M_{amax} [Nm]	P_e [kW]	η [%]	n_a [1/min]	M_{amax} [Nm]	P_e [kW]	η [%]	n_a [1/min]	M_{amax} [Nm]	P_e [kW]	η [%]
201.00		**5.5**	176	0.19	53	**4.5**	180	0.16	52	**3.5**	185	0.13	51
184.80		**6.0**	174	0.20	54	**4.9**	178	0.17	53	**3.8**	183	0.14	51
158.12		**7.0**	172	0.23	55	**5.7**	176	0.20	54	**4.4**	180	0.16	52
137.05		**8.0**	171	0.26	56	**6.6**	172	0.22	55	**5.1**	178	0.18	53
128.10		**8.6**	171	0.27	57	**7.0**	172	0.23	55	**5.5**	176	0.19	54
110.73	42/1	**9.9**	169	0.30	58	**8.1**	171	0.26	56	**6.3**	174	0.21	55
94.08		**12**	169	0.35	59	**9.6**	171	0.30	57	**7.4**	172	0.24	56
84.00		**13**	169	0.39	60	**11**	169	0.32	58	**8.3**	171	0.26	57
71.75		**15**	169	0.45	61	**13**	169	0.37	60	**9.8**	171	0.30	58
67.20		**16**	169	0.47	61	**13**	169	0.40	60	**10**	171	0.32	58
56.61		**19**	169	0.55	63	**16**	169	0.46	61	**12**	171	0.37	60
69.39		**16**	173	0.39	74	**13**	176	0.33	73	**10**	180	0.27	71
63.80		**17**	173	0.42	74	**14**	175	0.35	73	**11**	180	0.29	72
54.59		**20**	171	0.48	75	**16**	173	0.40	74	**13**	176	0.33	73
47.32		**23**	171	0.55	76	**19**	173	0.46	75	**15**	175	0.37	73
44.22		**25**	171	0.58	76	**20**	171	0.49	75	**16**	175	0.39	74
38.23	29/2	**29**	169	0.66	77	**24**	171	0.56	76	**18**	173	0.44	75
32.48		**34**	169	0.77	78	**28**	171	0.65	77	**22**	171	0.51	75
29.00		**38**	170	0.86	78	**31**	171	0.72	77	**24**	171	0.57	76
24.77		**44**	169	0.99	79	**36**	170	0.83	78	**28**	171	0.66	77
23.20		**47**	164	1.0	79	**39**	170	0.88	79	**30**	171	0.70	77
19.54		**56**	154	1.1	80	**46**	165	1.0	79	**36**	170	0.81	78
20.33		**54**	112	0.75	85	**44**	114	0.63	84	**34**	116	0.50	83
17.62		**62**	112	0.86	86	**51**	113	0.71	85	**40**	115	0.57	84
16.47		**67**	112	0.91	86	**55**	113	0.76	85	**43**	114	0.60	84
14.24		**77**	111	1.0	86	**63**	112	0.86	86	**49**	113	0.69	85
12.10		**91**	111	1.2	87	**74**	111	1.0	86	**58**	113	0.80	85
10.80		**102**	111	1.4	87	**83**	111	1.1	87	**65**	112	0.88	86
9.23	27/5	**119**	110	1.6 *	88	**98**	111	1.3	87	**76**	112	1.0	86
8.64		**127**	109	1.7 *	88	**104**	111	1.4	87	**81**	112	1.1	87
7.28		**151**	109	2.0 *	88	**124**	111	1.6 *	88	**96**	111	1.3	87
6.83		**161**	95	1.8 *	89	**132**	95	1.5	88	**102**	95	1.2	88
6.40		**172**	93	1.9 *	89	**141**	93	1.6 *	88	**109**	93	1.2	88
5.39		**204**	89	2.1 *	89	**167**	89	1.8 *	89	**130**	89	1.4	88
4.76		**231**	87	2.4 *	89	**189**	87	1.9 *	89	**147**	87	1.5	89
4.00		**275**	78	2.5 *	90	**225**	84	2.2 *	89	**175**	84	1.7 *	89

* P_{emax} = 1.5 kW

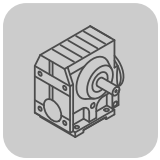

500 - 10 1/min

02 958 197

		n_e = 500 1/min				n_e = 250 1/min				n_e = 10 1/min			
i_{ges}	i_{sch}	n_a [1/min]	M_{amax} [Nm]	P_e [kW]	η [%]	n_a [1/min]	M_{amax} [Nm]	P_e [kW]	η [%]	n_a [1/min]	M_{amax} [Nm]	P_e [kW]	η [%]
201.00		**2.5**	185	0.10	49	**1.2**	185	0.05	48	**0.05**	185	< 0.05	32
184.80		**2.7**	185	0.11	49	**1.4**	185	0.05	48	**0.05**	185	< 0.05	32
158.12		**3.2**	185	0.12	50	**1.6**	185	0.06	48	**0.06**	185	< 0.05	35
137.05		**3.6**	185	0.14	51	**1.8**	185	0.07	48	**0.07**	185	< 0.05	37
128.10		**3.9**	183	0.15	51	**2.0**	185	0.08	48	**0.08**	185	< 0.05	38
110.73	42/1	**4.5**	181	0.16	52	**2.3**	185	0.09	49	**0.09**	185	< 0.05	40
94.08		**5.3**	178	0.19	54	**2.7**	185	0.10	49	**0.11**	185	< 0.05	42
84.00		**6.0**	176	0.20	54	**3.0**	185	0.12	50	**0.12**	185	< 0.05	43
71.75		**7.0**	174	0.23	56	**3.5**	185	0.13	51	**0.14**	185	< 0.05	44
67.20		**7.4**	172	0.24	56	**3.7**	185	0.14	51	**0.15**	185	< 0.05	44
56.61		**8.8**	172	0.28	57	**4.4**	181	0.16	53	**0.18**	181	< 0.05	45
69.39		**7.2**	185	0.20	70	**3.6**	185	0.10	68	**0.14**	185	< 0.05	56
63.80		**7.8**	185	0.22	70	**3.9**	185	0.11	68	**0.16**	185	< 0.05	57
54.59		**9.2**	185	0.25	71	**4.6**	185	0.13	68	**0.18**	185	< 0.05	60
47.32		**11**	181	0.28	72	**5.3**	185	0.15	68	**0.21**	185	< 0.05	61
44.22		**11**	180	0.30	72	**5.7**	185	0.16	69	**0.23**	185	< 0.05	62
38.23	29/2	**13**	178	0.33	73	**6.5**	185	0.18	69	**0.26**	185	< 0.05	63
32.48		**15**	174	0.38	74	**7.7**	185	0.21	70	**0.31**	185	< 0.05	64
29.00		**17**	174	0.42	74	**8.6**	185	0.24	71	**0.34**	185	< 0.05	65
24.77		**20**	172	0.48	75	**10**	183	0.27	71	**0.40**	183	< 0.05	66
23.20		**22**	172	0.51	76	**11**	181	0.28	72	**0.43**	181	< 0.05	66
19.54		**26**	172	0.60	77	**13**	178	0.33	73	**0.51**	178	< 0.05	67
20.33		**25**	124	0.39	82	**12**	157	0.25	80	**0.49**	157	< 0.05	75
17.62		**28**	120	0.43	83	**14**	149	0.28	80	**0.57**	149	< 0.05	76
16.47		**30**	118	0.45	83	**15**	145	0.29	81	**0.61**	145	< 0.05	76
14.24		**35**	116	0.51	84	**18**	138	0.31	81	**0.70**	138	< 0.05	77
12.10		**41**	115	0.59	84	**21**	131	0.35	82	**0.83**	131	< 0.05	77
10.80		**46**	114	0.65	85	**23**	127	0.37	82	**0.93**	127	< 0.05	77
9.23	27/5	**54**	113	0.75	85	**27**	121	0.41	83	**1.1**	121	< 0.05	78
8.64		**58**	113	0.80	86	**29**	120	0.44	83	**1.2**	120	< 0.05	78
7.28		**69**	112	0.93	86	**34**	117	0.50	84	**1.4**	117	< 0.05	78
6.83		**73**	95	0.84	87	**37**	95	0.43	84	1.5	95	< 0.05	81
6.40		**78**	93	0.88	87	**39**	93	0.45	85	**1.6**	93	< 0.05	81
5.39		**93**	89	0.99	87	**46**	89	0.51	85	**1.9**	89	< 0.05	81
4.76		**105**	87	1.09	88	**53**	87	0.56	86	**2.1**	87	< 0.05	81
4.00		**125**	84	1.25	88	**63**	84	0.64	86	**2.5**	84	< 0.05	81

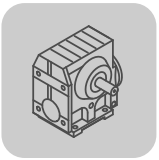

11.13 S, SF, SA, SAF 57

3400 - 2800 1/min

02 959 197

i_{ges}	i_{sch}	n_e = 3400 1/min				n_e = 3200 1/min				n_e = 2800 1/min			
		n_a [1/min]	M_{amax} [Nm]	P_e [kW]	η [%]	n_a [1/min]	M_{amax} [Nm]	P_e [kW]	η [%]	n_a [1/min]	M_{amax} [Nm]	P_e [kW]	η [%]
201.00		**17**	270	0.75	64	**16**	270	0.71	63	**14**	270	0.63	62
184.80		**18**	270	0.81	64	**17**	270	0.77	64	**15**	270	0.68	63
158.12		**22**	270	0.93	65	**20**	270	0.88	65	**18**	270	0.78	64
137.05		**25**	255	1.0	66	**23**	270	1.0	66	**20**	270	0.89	65
128.10		**27**	245	1.0	66	**25**	255	1.0	66	**22**	270	0.94	65
110.73	42/1	**31**	215	1.0	67	**29**	230	1.0	67	**25**	255	1.0	66
94.08		**36**	184	1.0	67	**34**	196	1.0	67	**30**	225	1.1	67
84.00		**40**	165	1.0	67	**38**	175	1.0	67	**33**	200	1.0	67
71.75		**47**	139	1.0	67	**45**	149	1.0	67	**39**	174	1.1	67
67.20		**51**	128	1.0	66	**48**	139	1.0	67	**42**	164	1.1	67
56.61		**60**	103	1.0	65	**57**	114	1.0	66	**49**	138	1.1	67
69.39		**49**	220	1.4	81	**46**	220	1.3	80	**40**	220	1.2	80
63.80		**53**	220	1.5	81	**50**	220	1.4	81	**44**	220	1.3	80
54.59		**62**	220	1.8	81	**59**	220	1.7	81	**51**	220	1.5	81
47.32		**72**	210	1.9	82	**68**	220	1.9	82	**59**	220	1.7	81
44.22		**77**	197	1.9	82	**72**	205	1.9	82	**63**	220	1.8	81
38.23	29/2	**89**	174	2.0	82	**84**	184	2.0	82	**73**	205	1.9	82
32.48		**105**	148	2.0	82	**99**	157	2.0	82	**86**	180	2.0	82
29.00		**117**	131	2.0	82	**110**	141	2.0	82	**97**	162	2.0	82
24.77		**137**	111	1.9	82	**129**	120	2.0	82	**113**	139	2.0	82
23.20		**147**	102	1.9	82	**138**	111	2.0	82	**121**	131	2.0	82
19.54		**174**	81	1.8	81	**164**	90	1.9	82	**143**	109	2.0	82
20.33		**167**	160	3.2 *	89	**157**	160	3.0	89	**138**	160	2.6	88
17.62		**193**	140	3.2 *	89	**182**	149	3.2 *	89	**159**	160	3.0	89
16.47		**206**	132	3.2 *	89	**194**	140	3.2 *	89	**170**	158	3.2 *	89
14.24		**239**	116	3.2 *	89	**225**	123	3.2 *	89	**197**	139	3.2 *	89
12.10		**281**	99	3.3 *	89	**264**	105	3.3 *	89	**231**	121	3.3 *	89
10.80		**315**	88	3.3 *	89	**296**	94	3.3 *	89	**259**	108	3.3 *	89
9.23	27/5	**368**	73	3.2 *	89	**347**	79	3.2 *	89	**303**	93	3.3 *	89
8.64		**394**	68	3.2 *	89	**370**	74	3.2 *	89	**324**	87	3.3 *	89
7.28		**467**	54	3.0	88	**440**	60	3.1 *	89	**385**	72	3.2 *	89
6.83		**498**	54	3.2 *	89	**469**	58	3.2 *	89	**410**	69	3.3 *	90
6.40		**531**	50	3.1 *	89	**500**	54	3.2 *	89	**438**	64	3.3 *	89
5.39		**631**	41	3.1 *	89	**594**	44	3.1 *	89	**519**	53	3.2 *	89
4.76		**714**	35	3.0 *	88	**672**	38	3.0 *	89	**588**	46	3.2 *	89
4.00		**850**	28	2.8	88	**800**	31	2.9	88	**700**	38	3.1 *	89

* P_{emax} = 3.0 kW

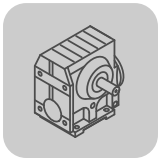

2200 - 1400 1/min

02 959 197

		n_e = 2200 1/min				n_e = 1700 1/min				n_e = 1400 1/min			
i_{ges}	i_{sch}	n_a [1/min]	M_{amax} [Nm]	P_e [kW]	η [%]	n_a [1/min]	M_{amax} [Nm]	P_e [kW]	η [%]	n_a [1/min]	M_{amax} [Nm]	P_e [kW]	η [%]
201.00		**11**	295	0.55	61	**8.5**	295	0.44	59	**7.0**	295	0.37	58
184.80		**12**	295	0.60	62	**9.2**	295	0.48	60	**7.6**	295	0.40	58
158.12		**14**	295	0.69	63	**11**	295	0.55	61	**8.9**	295	0.46	60
137.05		**16**	295	0.78	64	**12**	295	0.62	62	**10**	295	0.52	61
128.10		**17**	295	0.83	64	**13**	295	0.66	62	**11**	295	0.55	61
110.73	42/1	**20**	290	0.93	65	**15**	295	0.75	63	**13**	295	0.63	62
94.08		**23**	275	1.0	66	**18**	300	0.88	65	**15**	295	0.73	63
84.00		**26**	250	1.0	67	**20**	285	0.93	65	**17**	295	0.80	64
71.75		**31**	220	1.1	67	**24**	275	1.0	66	**20**	290	0.91	65
67.20		**33**	210	1.1	67	**25**	260	1.0	67	**21**	285	0.95	65
56.61		**39**	179	1.1	68	**30**	225	1.1	67	**25**	265	1.0	67
69.39		**32**	245	1.0	79	**24**	245	0.81	77	**20**	245	0.68	76
63.80		**34**	245	1.1	79	**27**	245	0.88	78	**22**	245	0.73	77
54.59		**40**	245	1.3	80	**31**	245	1.0	79	**26**	245	0.85	78
47.32		**46**	245	1.5	81	**36**	245	1.2	79	**30**	245	0.97	79
44.22		**50**	245	1.6	81	**38**	245	1.2	80	**32**	245	1.0	79
38.23	29/2	**58**	245	1.8	81	**44**	245	1.4	80	**37**	245	1.2	80
32.48		**68**	225	1.9	82	**52**	245	1.7	81	**43**	245	1.4	80
29.00		**76**	200	1.9	82	**59**	245	1.8	81	**48**	245	1.5	81
24.77		**89**	177	2.0	82	**69**	220	1.9	82	**57**	245	1.8	81
23.20		**95**	167	2.0	83	**73**	210	2.0	82	**60**	245	1.9	82
19.54		**113**	143	2.0	83	**87**	183	2.0	83	**72**	215	2.0	82
20.33		**108**	168	2.2	88	**84**	168	1.7	87	**69**	168	1.4	87
17.62		**125**	168	2.5	88	**96**	168	1.9	88	**79**	168	1.6	87
16.47		**134**	169	2.7	88	**103**	168	2.1	88	**85**	168	1.7	87
14.24		**154**	169	3.1 *	89	**119**	169	2.4	88	**98**	169	2.0	88
12.10		**182**	150	3.2 *	89	**140**	169	2.8	89	**116**	169	2.3	88
10.80		**204**	136	3.2 *	89	**157**	169	3.1 *	89	**130**	169	2.6	88
9.23	27/5	**238**	119	3.3 *	89	**184**	149	3.2 *	89	**152**	169	3.0	89
8.64		**255**	112	3.3 *	89	**197**	141	3.3 *	89	**162**	166	3.2 *	89
7.28		**302**	96	3.4 *	90	**234**	122	3.3 *	90	**192**	146	3.3 *	89
6.83		**322**	91	3.4 *	90	**249**	100	2.9	90	**205**	100	2.4	89
6.40		**344**	85	3.4 *	90	**266**	98	3.0	90	**219**	98	2.5	89
5.39		**408**	72	3.4 *	90	**315**	95	3.5 *	90	**260**	95	2.9	90
4.76		**462**	63	3.4 *	90	**357**	84	3.5 *	90	**294**	93	3.2 *	90
4.00		**550**	53	3.4 *	90	**425**	71	3.5 *	90	**350**	88	3.6 *	90

* P_{emax} = 3.0 kW

1100 - 700 1/min

02 960 197

i_{ges}	i_{sch}	n_e = 1100 1/min				n_e = 900 1/min				n_e = 700 1/min			
		n_a [1/min]	M_{amax} [Nm]	P_e [kW]	η [%]	n_a [1/min]	M_{amax} [Nm]	P_e [kW]	η [%]	n_a [1/min]	M_{amax} [Nm]	P_e [kW]	η [%]
201.00		**5.5**	295	0.30	56	**4.5**	300	0.26	55	**3.5**	310	0.21	53
184.80		**6.0**	295	0.32	57	**4.9**	300	0.28	55	**3.8**	305	0.23	54
158.12		**7.0**	295	0.37	58	**5.7**	295	0.31	56	**4.4**	300	0.25	55
137.05		**8.0**	295	0.42	59	**6.6**	295	0.35	57	**5.1**	300	0.29	56
128.10		**8.6**	295	0.45	59	**7.0**	295	0.37	58	**5.5**	295	0.30	56
110.73	42/1	**9.9**	295	0.51	61	**8.1**	295	0.43	59	**6.3**	295	0.34	57
94.08		**12**	295	0.59	62	**9.6**	295	0.49	60	**7.4**	295	0.39	58
84.00		**13**	295	0.65	63	**11**	295	0.54	61	**8.3**	295	0.43	59
71.75		**15**	295	0.74	64	**13**	295	0.62	62	**9.8**	295	0.50	61
67.20		**16**	300	0.80	64	**13**	295	0.66	63	**10**	295	0.53	61
56.61		**19**	290	0.91	65	**16**	300	0.78	64	**12**	295	0.61	62
69.39		**16**	270	0.60	75	**13**	270	0.49	74	**10**	270	0.39	73
63.80		**17**	270	0.64	76	**14**	270	0.53	75	**11**	270	0.42	73
54.59		**20**	270	0.74	77	**16**	270	0.62	75	**13**	270	0.49	74
47.32		**23**	270	0.85	77	**19**	270	0.70	76	**15**	270	0.56	75
44.22		**25**	270	0.91	78	**20**	270	0.75	77	**16**	270	0.59	75
38.23	29/2	**29**	270	1.0	79	**24**	270	0.86	77	**18**	270	0.68	76
32.48		**34**	270	1.2	79	**28**	270	1.0	78	**22**	270	0.79	77
29.00		**38**	270	1.3	80	**31**	270	1.1	79	**24**	270	0.88	78
24.77		**44**	270	1.6	81	**36**	270	1.3	80	**28**	270	1.0	78
23.20		**47**	270	1.7	81	**39**	270	1.4	80	**30**	270	1.1	79
19.54		**56**	250	1.8	81	**46**	270	1.6	81	**36**	270	1.3	80
20.33		**54**	168	1.1	86	**44**	170	0.93	85	**34**	172	0.74	84
17.62		**62**	169	1.3	86	**51**	169	1.1	86	**40**	170	0.83	85
16.47		**67**	168	1.4	87	**55**	168	1.1	86	**43**	170	0.89	85
14.24		**77**	168	1.6	87	**63**	168	1.3	86	**49**	170	1.0	86
12.10		**91**	169	1.8	88	**74**	169	1.5	87	**58**	169	1.2	86
10.80		**102**	169	2.1	88	**83**	169	1.7	87	**65**	169	1.3	87
9.23	27/5	**119**	170	2.4	88	**98**	168	2.0	88	**76**	168	1.5	87
8.64		**127**	170	2.6	88	**104**	169	2.1	88	**81**	168	1.6	87
7.28		**151**	170	3.0	89	**124**	170	2.5	88	**96**	170	1.9	88
6.83		**161**	120	2.3	89	**132**	120	1.9	89	**102**	120	1.5	88
6.4		**172**	117	2.4	89	**141**	117	1.9	89	**109**	117	1.5	88
5.39		**204**	111	2.7	90	**167**	111	2.2	89	**130**	111	1.7	89
4.76		**231**	108	2.9	90	**189**	108	2.4	90	**147**	108	1.9	89
4.00		**275**	103	3.3 *	90	**225**	103	2.7	90	**175**	103	2.1	89

* P_{emax} = 3.0 kW

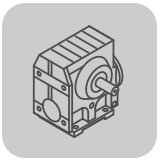

500 - 10 1/min

02 960 197

		n_e = 500 1/min				n_e = 250 1/min				n_e = 10 1/min			
i_{ges}	i_{sch}	n_a [1/min]	M_{amax} [Nm]	P_e [kW]	η [%]	n_a [1/min]	M_{amax} [Nm]	P_e [kW]	η [%]	n_a [1/min]	M_{amax} [Nm]	P_e [kW]	η [%]
201.00		**2.5**	330	0.17	51	**1.2**	330	0.09	49	**0.05**	330	< 0.05	42
184.80		**2.7**	330	0.18	51	**1.4**	330	0.10	49	**0.05**	330	< 0.05	43
158.12		**3.2**	315	0.20	52	**1.6**	330	0.11	49	**0.06**	330	< 0.05	44
137.05		**3.6**	310	0.22	53	**1.8**	330	0.13	50	**0.07**	330	< 0.05	45
128.10		**3.9**	305	0.23	54	**2.0**	330	0.14	50	**0.08**	330	< 0.05	46
110.73	42/1	**4.5**	300	0.26	55	**2.3**	330	0.15	51	**0.09**	330	< 0.05	46
94.08		**5.3**	300	0.30	56	**2.7**	330	0.18	51	**0.11**	330	< 0.05	47
84.00		**6.0**	295	0.32	57	**3.0**	325	0.19	52	**0.12**	325	< 0.05	47
71.75		**7.0**	295	0.37	58	**3.5**	310	0.21	53	**0.14**	310	< 0.05	48
67.20		**7.4**	295	0.39	58	**3.7**	310	0.23	54	**0.15**	310	< 0.05	48
56.61		**8.8**	295	0.46	60	**4.4**	300	0.25	55	**0.18**	300	< 0.05	48
69.39		**7.2**	300	0.32	71	**3.6**	300	0.17	68	**0.14**	300	< 0.05	63
63.80		**7.8**	300	0.34	71	**3.9**	300	0.18	68	**0.16**	300	< 0.05	64
54.59		**9.2**	300	0.40	72	**4.6**	300	0.21	69	**0.18**	300	< 0.05	65
47.32		**11**	300	0.45	73	**5.3**	300	0.24	70	**0.21**	300	< 0.05	66
44.22		**11**	300	0.48	74	**5.7**	300	0.25	70	**0.23**	300	< 0.05	66
38.23	29/2	**13**	295	0.54	74	**6.5**	300	0.29	71	**0.26**	300	< 0.05	67
32.48		**15**	295	0.63	75	**7.7**	300	0.34	71	**0.31**	300	< 0.05	67
29.00		**17**	295	0.70	76	**8.6**	300	0.38	72	**0.34**	300	< 0.05	67
24.77		**20**	295	0.81	77	**10**	300	0.43	73	**0.40**	300	< 0.05	68
23.20		**22**	295	0.86	77	**11**	300	0.46	73	**0.43**	300	< 0.05	68
19.54		**26**	295	1.0	78	**13**	295	0.53	74	**0.51**	295	< 0.05	68
20.33		**25**	181	0.56	83	**12**	215	0.35	80	**0.49**	215	< 0.05	77
17.62		**28**	175	0.62	83	**14**	210	0.39	81	**0.57**	210	< 0.05	77
16.47		**30**	174	0.66	84	**15**	205	0.40	81	**0.61**	205	< 0.05	78
14.24		**35**	172	0.75	84	**18**	198	0.45	81	**0.70**	198	< 0.05	78
12.10		**41**	170	0.87	85	**21**	188	0.49	82	**0.83**	188	< 0.05	78
10.80		**46**	170	0.97	85	**23**	184	0.54	83	**0.93**	184	< 0.05	78
9.23	27/5	**54**	170	1.1	86	**27**	177	0.60	83	**1.1**	177	< 0.05	79
8.64		**58**	170	1.2	86	**29**	175	0.64	83	**1.2**	175	< 0.05	79
7.28		**69**	170	1.4	87	**34**	172	0.73	84	**1.4**	172	< 0.05	79
6.83		**73**	120	1.1	87	**37**	120	0.54	85	**1.5**	120	< 0.05	81
6.40		**78**	117	1.1	87	**39**	117	0.56	85	**1.6**	117	< 0.05	81
5.39		**93**	111	1.2	88	**46**	111	0.63	86	**1.9**	111	< 0.05	81
4.76		**105**	108	1.4	88	**53**	108	0.69	86	**2.1**	108	< 0.05	81
4.00		**125**	1.52	1.5	89	**63**	103	0.78	87	**2.5**	103	< 0.05	81

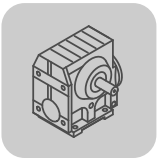

11.14 S, SF, SA, SAF 67

3400 - 2800 1/min

02 961 097

i_{ges}	i_{sch}	n_e = 3400 1/min				n_e = 3200 1/min				n_e = 2800 1/min			
		n_a [1/min]	M_{amax} [Nm]	P_e [kW]	η [%]	n_a [1/min]	M_{amax} [Nm]	P_e [kW]	η [%]	n_a [1/min]	M_{amax} [Nm]	P_e [kW]	η [%]
217.41		**16**	465	1.2	66	**15**	465	1.1	66	**13**	465	0.96	65
190.11		**18**	465	1.3	67	**17**	465	1.2	67	**15**	465	1.1	66
180.60		**19**	465	1.4	67	**18**	465	1.3	67	**16**	465	1.1	66
158.45		**21**	465	1.5	68	**20**	465	1.5	68	**18**	465	1.3	67
134.40		**25**	465	1.8	69	**24**	465	1.7	68	**21**	465	1.5	68
121.33		**28**	455	1.9	69	**26**	465	1.9	69	**23**	465	1.6	68
106.75	42/1	**32**	405	2.0	69	**30**	430	2.0	69	**26**	465	1.9	69
100.80		**34**	380	1.9	69	**32**	410	2.0	69	**28**	465	2.0	69
85.83		**40**	320	1.9	69	**37**	345	1.9	69	**33**	400	2.0	70
78.00		**44**	285	1.9	69	**41**	310	1.9	69	**36**	365	2.0	70
67.57		**50**	235	1.8	67	**47**	260	1.9	68	**41**	315	2.0	69
58.80		**58**	184	1.7	65	**54**	215	1.8	67	**48**	270	1.9	69
75.06		**45**	435	2.5	82	**43**	435	2.4	82	**37**	435	2.1	81
65.63		**52**	435	2.9	82	**49**	435	2.7	82	**43**	435	2.4	82
62.35		**55**	435	3.0	83	**51**	435	2.8	82	**45**	435	2.5	82
54.70		**62**	435	3.4	83	**59**	435	3.2	83	**51**	435	2.8	83
46.40		**73**	395	3.6	83	**69**	415	3.6	83	**60**	435	3.3	83
41.89		**81**	355	3.6	83	**76**	380	3.6	83	**67**	430	3.6	83
36.85	29/2	**92**	310	3.6	83	**87**	335	3.6	84	**76**	380	3.6	84
34.80		**98**	295	3.6	83	**92**	315	3.6	84	**80**	365	3.7	84
29.63		**115**	250	3.6	83	**108**	270	3.7	83	**94**	310	3.7	84
26.93		**126**	220	3.5	83	**119**	240	3.6	83	**104**	280	3.6	84
23.33		**146**	182	3.4	82	**137**	200	3.5	83	**120**	245	3.7	84
20.30		**167**	141	3.1	81	**158**	164	3.3	82	**138**	205	3.6	83
24.44		**139**	315	5.1	90	**131**	315	4.8	90	**115**	315	4.2	89
23.22		**146**	315	5.4	90	**138**	315	5.1	90	**121**	315	4.4	90
20.37		**167**	315	6.1 *	90	**157**	315	5.8 *	90	**137**	315	5.0	90
17.28		**197**	270	6.2 *	90	**185**	290	6.2 *	90	**162**	315	5.9 *	90
15.60		**218**	245	6.2 *	90	**205**	260	6.2 *	90	**179**	295	6.1 *	90
13.73	27/5	**248**	215	6.2 *	90	**233**	230	6.2 *	90	**204**	265	6.3 *	90
12.96		**262**	200	6.1 *	90	**247**	215	6.1 *	90	**216**	250	6.3 *	90
11.03		**308**	169	6.1 *	90	**290**	183	6.2 *	90	**254**	215	6.3 *	90
10.03		**339**	151	6.0 *	90	**319**	164	6.1 *	90	**279**	194	6.3 *	90
8.69		**391**	124	5.7 *	89	**368**	137	5.9 *	90	**322**	166	6.2 *	90
7.56		**450**	95	5.1	88	**423**	112	5.6 *	89	**370**	141	6.1 *	90

* P_{emax} = 5.5 kW

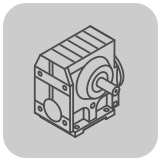

2200 - 1400 1/min

02 961 097

		n_e = 2200 1/min				n_e = 1700 1/min				n_e = 1400 1/min			
i_{ges}	i_{sch}	n_a [1/min]	M_{amax} [Nm]	P_e [kW]	η [%]	n_a [1/min]	M_{amax} [Nm]	P_e [kW]	η [%]	n_a [1/min]	M_{amax} [Nm]	P_e [kW]	η [%]
217.41		**10**	520	0.86	64	**7.8**	520	0.69	62	**6.4**	520	0.58	61
190.11		**12**	520	0.97	65	**8.9**	520	0.77	63	**7.4**	520	0.65	62
180.60		**12**	520	1.0	65	**9.4**	520	0.81	63	**7.8**	520	0.68	62
158.45		**14**	520	1.1	66	**11**	520	0.91	64	**8.8**	520	0.76	63
134.40		**16**	520	1.3	67	**13**	520	1.1	65	**10**	520	0.88	64
121.33		**18**	520	1.5	68	**14**	520	1.2	66	**12**	520	0.97	65
106.75	42/1	**21**	520	1.6	68	**16**	520	1.3	67	**13**	520	1.1	66
100.80		**22**	510	1.7	69	**17**	520	1.4	67	**14**	520	1.1	66
85.83		**26**	490	1.9	69	**20**	520	1.6	68	**16**	520	1.3	67
78.00		**28**	465	2.0	70	**22**	510	1.7	69	**18**	520	1.4	68
67.57		**33**	410	2.0	70	**25**	495	1.9	69	**21**	520	1.6	69
58.80		**37**	360	2.0	70	**29**	460	2.0	70	**24**	500	1.8	69
75.06		**29**	480	1.8	81	**23**	480	1.4	79	**19**	480	1.2	79
65.63		**34**	480	2.1	81	**26**	480	1.6	80	**21**	480	1.4	79
62.35		**35**	480	2.2	81	**27**	480	1.7	80	**22**	480	1.4	79
54.70		**40**	480	2.5	82	**31**	480	1.9	81	**26**	480	1.6	80
46.40		**47**	480	2.9	82	**37**	480	2.3	82	**30**	480	1.9	81
41.89		**53**	480	3.2	83	**41**	480	2.5	82	**33**	480	2.1	81
36.85	29/2	**60**	475	3.6	83	**46**	480	2.8	82	**38**	480	2.3	82
34.80		**63**	450	3.6	83	**49**	480	3.0	83	**40**	480	2.5	82
29.63		**74**	395	3.7	84	**57**	480	3.5	83	**47**	480	2.9	83
26.93		**82**	360	3.7	84	**63**	455	3.6	83	**52**	480	3.2	83
23.33		**94**	320	3.8	84	**73**	405	3.7	84	**60**	480	3.6	83
20.30		**108**	280	3.8	84	**84**	360	3.8	84	**69**	425	3.7	84
24.44		**90**	340	3.6	89	**70**	340	2.8	88	**57**	340	2.3	88
23.22		**95**	340	3.8	89	**73**	340	2.9	89	**60**	340	2.4	88
20.37		**108**	340	4.3	89	**83**	340	3.3	89	**69**	340	2.8	88
17.28		**127**	340	5.0	90	**98**	340	3.9	89	**81**	340	3.2	89
15.60		**141**	340	5.6 *	90	**109**	340	4.3	89	**90**	340	3.6	89
13.73	27/5	**160**	330	6.1 *	90	**124**	340	4.9	90	**102**	340	4.1	89
12.96		**170**	315	6.2 *	90	**131**	340	5.2	90	**108**	340	4.3	89
11.03		**199**	275	6.3 *	90	**154**	340	6.1 *	90	**127**	340	5.0	90
10.03		**219**	250	6.3 *	91	**169**	315	6.2 *	90	**140**	340	5.5	90
8.69		**253**	220	6.4 *	91	**196**	280	6.3 *	91	**161**	335	6.3 *	90
7.56		**291**	192	6.5 *	91	**225**	250	6.5 *	91	**185**	295	6.3 *	91

* P_{emax} = 5.5 kW

1100 - 700 1/min

02 962 097

i_{ges}	i_{sch}	n_e = 1100 1/min				n_e = 900 1/min				n_e = 700 1/min			
		n_a [1/min]	M_{amax} [Nm]	P_e [kW]	η [%]	n_a [1/min]	M_{amax} [Nm]	P_e [kW]	η [%]	n_a [1/min]	M_{amax} [Nm]	P_e [kW]	η [%]
217.41		**5.1**	555	0.50	59	**4.1**	560	0.42	58	**3.2**	570	0.34	56
190.11		**5.8**	555	0.56	60	**4.7**	560	0.47	59	**3.7**	565	0.38	57
180.60		**6.1**	555	0.59	61	**5.0**	555	0.49	59	**3.9**	565	0.40	57
158.45		**6.9**	550	0.65	62	**5.7**	555	0.55	60	**4.4**	560	0.44	58
134.40		**8.2**	550	0.75	63	**6.7**	550	0.63	61	**5.2**	555	0.51	60
121.33		**9.1**	550	0.82	63	**7.4**	550	0.69	62	**5.8**	555	0.56	60
106.75	42/1	**10**	550	0.92	64	**8.4**	550	0.77	63	**6.6**	555	0.62	61
100.80		**11**	550	0.97	65	**8.9**	550	0.81	63	**6.9**	555	0.66	62
85.83		**13**	550	1.1	66	**10**	550	0.94	64	**8.2**	550	0.75	63
78.00		**14**	550	1.2	66	**12**	550	1.0	65	**9.0**	550	0.82	63
67.57		**16**	550	1.4	67	**13**	550	1.2	66	**10**	550	0.93	64
58.80		**19**	530	1.5	68	**15**	550	1.3	67	**12**	550	1.0	65
75.06		**15**	525	1.0	77	**12**	525	0.86	76	**9.3**	525	0.68	75
65.63		**17**	525	1.2	78	**14**	525	0.98	77	**11**	525	0.77	76
62.35		**18**	525	1.2	78	**14**	525	1.0	77	**11**	525	0.81	76
54.70		**20**	525	1.4	79	**16**	525	1.2	78	**13**	525	0.92	77
46.40		**24**	525	1.6	80	**19**	525	1.4	79	**15**	525	1.1	78
41.89		**26**	525	1.8	80	**21**	525	1.5	79	**17**	525	1.2	78
36.85	29/2	**30**	525	2.0	81	**24**	525	1.7	80	**19**	525	1.3	79
34.80		**32**	525	2.1	81	**26**	525	1.8	80	**20**	525	1.4	79
29.63		**37**	525	2.5	82	**30**	525	2.1	81	**24**	525	1.6	80
26.93		**41**	525	2.7	82	**33**	525	2.3	81	**26**	525	1.8	80
23.33		**47**	525	3.1	83	**39**	525	2.6	82	**30**	525	2.0	81
20.30		**54**	520	3.5	83	**44**	525	3.0	82	**34**	525	2.3	81
24.44		**45**	355	1.9	87	**37**	360	1.6	87	**29**	365	1.3	86
23.22		**47**	355	2.0	87	**39**	360	1.7	87	**30**	365	1.3	86
20.37		**54**	355	2.3	88	**44**	355	1.9	87	**34**	365	1.5	86
17.28		**64**	355	2.7	88	**52**	355	2.2	88	**41**	360	1.8	87
15.60		**71**	350	2.9	88	**58**	355	2.4	88	**45**	355	1.9	87
13.73	27/5	**80**	350	3.3	89	**66**	355	2.8	88	**51**	355	2.2	88
12.96		**85**	350	3.5	89	**69**	350	2.9	88	**54**	355	2.3	88
11.03		**100**	350	4.1	89	**82**	350	3.4	89	**63**	355	2.7	88
10.03		**110**	345	4.4	90	**90**	350	3.7	89	**70**	355	2.9	88
8.69		**127**	345	5.1	90	**104**	350	4.2	89	**81**	350	3.3	89
7.56		**146**	345	5.8 *	90	**119**	345	4.8	90	**93**	350	3.8	89

* P_{emax} = 5.5 kW

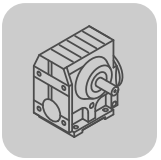

500 - 10 1/min

02 962 097

		n_e = 500 1/min				n_e = 250 1/min				n_e = 10 1/min			
i_{ges}	i_{sch}	n_a [1/min]	M_{amax} [Nm]	P_e [kW]	η [%]	n_a [1/min]	M_{amax} [Nm]	P_e [kW]	η [%]	n_a [1/min]	M_{amax} [Nm]	P_e [kW]	η [%]
217.41		**2.3**	570	0.25	54	**1.1**	570	0.13	51	**0.05**	570	< 0.05	47
190.11		**2.6**	570	0.29	55	**1.3**	570	0.15	51	**0.05**	570	< 0.05	48
180.60		**2.8**	570	0.30	55	**1.4**	570	0.16	51	**0.06**	570	< 0.05	48
158.45		**3.2**	570	0.34	56	**1.6**	570	0.18	52	**0.06**	570	< 0.05	49
134.40		**3.7**	565	0.38	57	**1.9**	570	0.21	53	**0.07**	570	< 0.05	50
121.33	42/1	**4.1**	560	0.42	58	**2.1**	570	0.23	53	**0.08**	570	< 0.05	50
106.75		**4.7**	560	0.47	59	**2.3**	570	0.26	54	**0.09**	570	< 0.05	50
100.80		**5.0**	560	0.49	59	**2.5**	570	0.27	55	**0.10**	570	< 0.05	50
85.83		**5.8**	555	0.56	60	**2.9**	570	0.31	56	**0.12**	570	< 0.05	51
78.00		**6.4**	555	0.61	61	**3.2**	570	0.34	56	**0.13**	570	< 0.05	51
67.57		**7.4**	555	0.69	62	**3.7**	565	0.38	57	**0.15**	565	< 0.05	51
58.80		**8.5**	550	0.78	63	**4.3**	560	0.43	58	**0.17**	560	< 0.05	51
75.06		**6.7**	570	0.54	73	**3.3**	570	0.28	70	**0.13**	570	< 0.05	68
65.63		**7.6**	570	0.61	74	**3.8**	570	0.32	71	**0.15**	570	< 0.05	68
62.35		**8.0**	570	0.64	74	**4.0**	570	0.34	71	**0.16**	570	< 0.05	69
54.70		**9.1**	570	0.73	75	**4.6**	570	0.38	71	**0.18**	570	< 0.05	69
46.40		**11**	570	0.85	76	**5.4**	570	0.44	72	**0.22**	570	< 0.05	69
41.89	29/2	**12**	570	0.93	76	**6.0**	570	0.49	73	**0.24**	570	< 0.05	69
36.85		**14**	570	1.1	77	**6.8**	570	0.55	73	**0.27**	570	< 0.05	69
34.80		**14**	570	1.1	77	**7.2**	570	0.58	74	**0.29**	570	< 0.05	69
29.63		**17**	565	1.3	78	**8.4**	570	0.68	75	**0.34**	570	< 0.05	70
26.93		**19**	565	1.4	79	**9.3**	570	0.74	75	**0.37**	570	< 0.05	70
23.33		**21**	565	1.6	79	**11**	570	0.84	76	**0.43**	570	< 0.05	70
20.30		**25**	565	1.8	80	**12**	570	0.96	77	**0.49**	570	< 0.05	70
24.44		**20**	365	0.93	85	**10**	355	0.46	82	**0.41**	355	0.019	80
23.22		**22**	365	0.97	85	**11**	355	0.49	82	**0.43**	355	< 0.05	80
20.37		**25**	380	1.1	85	**12**	365	0.57	83	**0.49**	365	< 0.05	80
17.28		**29**	365	1.3	86	**14**	435	0.79	83	**0.58**	435	< 0.05	81
15.60		**32**	365	1.4	86	**16**	430	0.86	84	**0.64**	430	< 0.05	81
13.73	27/5	**36**	365	1.6	87	**18**	415	0.94	84	**0.73**	415	< 0.05	81
12.96		**39**	360	1.7	87	**19**	410	0.98	84	**0.77**	410	< 0.05	81
11.03		**45**	355	1.9	87	**23**	390	1.1	85	**0.91**	390	< 0.05	81
10.03		**50**	355	2.1	88	**25**	380	1.2	85	**1.0**	380	< 0.05	81
8.69		**58**	355	2.4	88	**29**	370	1.3	86	**1.2**	370	0.06	81
7.56		**66**	355	2.8	88	**33**	365	1.5	86	**1.3**	365	0.06	81

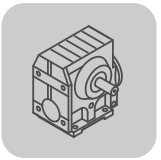

11.15 S, SF, SA, SAF 77

3400 - 2800 1/min

02 963 097

		n_e = 3400 1/min				n_e = 3200 1/min				n_e = 2800 1/min			
i_{ges}	i_{sch}	n_a [1/min]	M_{amax} [Nm]	P_e [kW]	η [%]	n_a [1/min]	M_{amax} [Nm]	P_e [kW]	η [%]	n_a [1/min]	M_{amax} [Nm]	P_e [kW]	η [%]
256.47		**13**	1160	2.3	71	**12**	1160	2.1	71	**11**	1160	1.9	70
225.26		**15**	1130	2.5	72	**14**	1150	2.4	71	**12**	1160	2.1	71
214.00		**16**	1110	2.6	72	**15**	1140	2.5	71	**13**	1160	2.2	71
189.09		**18**	1080	2.8	72	**17**	1100	2.7	72	**15**	1140	2.5	71
161.60		**21**	1040	3.1	73	**20**	1050	3.0	73	**17**	1090	2.7	72
148.15		**23**	1010	3.3	73	**22**	1030	3.2	73	**19**	1070	2.9	73
130.00		**26**	970	3.6	74	**25**	990	3.5	74	**22**	1030	3.2	73
123.20	40/1	**28**	950	3.7	74	**26**	970	3.6	74	**23**	1010	3.3	73
107.83		**32**	900	4.0	74	**30**	920	3.9	74	**26**	970	3.6	74
97.14		**35**	860	4.2	75	**33**	880	4.1	74	**29**	930	3.8	74
85.22		**40**	770	4.3	75	**38**	820	4.3	75	**33**	880	4.1	75
75.20		**45**	675	4.3	74	**43**	725	4.3	75	**37**	830	4.3	75
66.67		**51**	585	4.2	74	**48**	635	4.3	75	**42**	745	4.4	75
56.92		**60**	485	4.1	73	**56**	530	4.2	74	**49**	635	4.4	75
75.09		**45**	1020	5.6	86	**43**	1020	5.3	86	**37**	1020	4.6	86
71.33		**48**	1020	5.9	87	**45**	1020	5.5	86	**39**	1020	4.9	86
63.03		**54**	1020	6.6	87	**51**	1020	6.2	87	**44**	1020	5.5	86
53.87		**63**	980	7.4	87	**59**	1000	7.1	87	**52**	1020	6.4	87
49.38		**69**	950	7.8	87	**65**	970	7.5	87	**57**	1010	6.9	87
43.33		**78**	910	8.5	88	**74**	930	8.2	88	**65**	970	7.5	87
41.07	40/3	**83**	900	8.9	88	**78**	910	8.5	88	**68**	950	7.8	87
35.94		**95**	800	9.0	88	**89**	850	9.0	88	**78**	910	8.5	88
32.38		**105**	725	9.1	88	**99**	770	9.1	88	**86**	880	9.1	88
28.41		**120**	635	9.1	88	**113**	680	9.1	88	**99**	780	9.1	88
25.07		**136**	560	9.1	88	**128**	600	9.1	88	**112**	695	9.2	88
22.22		**153**	485	8.9	88	**144**	525	9.0	88	**126**	615	9.2	88
18.97		**179**	395	8.5	87	**169**	440	8.9	88	**148**	520	9.1	88
22.89		**149**	590	10.0 *	91	**140**	590	9.5 *	91	**122**	590	8.3	91
20.99		**162**	590	10.9 *	92	**152**	590	10.3 *	92	**133**	590	9.0	91
18.42		**185**	590	12.4 *	92	**174**	590	11.7 *	92	**152**	590	10.3 *	92
17.45		**195**	590	13.1 *	92	**183**	590	12.4 *	92	**160**	590	10.8 *	92
15.28		**223**	530	13.5 *	92	**209**	560	13.4 *	92	**183**	590	12.3 *	92
13.76	34/6	**247**	480	13.5 *	92	**233**	505	13.4 *	92	**203**	585	13.6 *	92
12.07		**282**	415	13.3 *	92	**265**	445	13.4 *	92	**232**	515	13.6 *	92
10.65		**319**	365	13.3 *	92	**300**	390	13.4 *	92	**263**	455	13.6 *	92
9.44		**360**	315	13.0 *	92	**339**	345	13.3 *	92	**297**	405	13.7 *	92
8.06		**422**	260	12.6 *	91	**397**	285	12.9 *	92	**347**	340	13.5 *	92

* P_{emax} = 9.2 kW

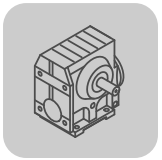

2200 - 1400 1/min

02 963 097

		n_e = 2200 1/min				n_e = 1700 1/min				n_e = 1400 1/min			
i_{ges}	i_{sch}	n_a [1/min]	M_{amax} [Nm]	P_e [kW]	η [%]	n_a [1/min]	M_{amax} [Nm]	P_e [kW]	η [%]	n_a [1/min]	M_{amax} [Nm]	P_e [kW]	η [%]
256.47		**8.6**	1260	1.6	69	**6.6**	1270	1.3	67	**5.5**	1270	1.1	66
225.26		**9.8**	1230	1.8	69	**7.5**	1270	1.5	68	**6.2**	1270	1.2	67
214.00		**10**	1220	1.9	70	**7.9**	1270	1.6	68	**6.5**	1270	1.3	67
189.09		**12**	1200	2.1	70	**9.0**	1240	1.7	69	**7.4**	1270	1.5	68
161.60		**14**	1160	2.3	71	**11**	1220	1.9	70	**8.7**	1260	1.7	69
148.15		**15**	1140	2.5	72	**11**	1200	2.1	70	**9.4**	1240	1.8	69
130.00		**17**	1100	2.7	72	**13**	1170	2.3	71	**11**	1210	1.9	70
123.20	40/1	**18**	1080	2.8	73	**14**	1150	2.3	71	**11**	1200	2.0	70
107.83		**20**	1040	3.0	73	**16**	1110	2.5	72	**13**	1170	2.2	71
97.14		**23**	1010	3.3	74	**18**	1090	2.8	73	**14**	1140	2.4	72
85.22		**26**	970	3.5	74	**20**	1050	3.0	73	**16**	1100	2.6	72
75.20		**29**	920	3.8	74	**23**	1010	3.2	74	**19**	1070	2.9	73
66.67		**33**	880	4.1	75	**25**	970	3.5	74	**21**	1040	3.1	73
56.92		**39**	830	4.5	75	**30**	920	3.9	75	**25**	990	3.4	74
75.09		**29**	1100	4.0	85	**23**	1100	3.1	84	**19**	1100	2.6	83
71.33		**31**	1100	4.2	85	**24**	1100	3.2	85	**20**	1100	2.7	84
63.03		**35**	1100	4.7	86	**27**	1100	3.7	85	**22**	1100	3.0	84
53.87		**41**	1100	5.5	86	**32**	1100	4.3	86	**26**	1100	3.5	85
49.38		**45**	1080	5.8	87	**34**	1100	4.6	86	**28**	1100	3.8	85
43.33		**51**	1050	6.4	87	**39**	1100	5.2	86	**32**	1100	4.3	86
41.07	40/3	**54**	1030	6.6	87	**41**	1100	5.5	86	**34**	1100	4.6	86
35.94		**61**	980	7.2	87	**47**	1060	6.1	87	**39**	1100	5.2	86
32.38		**68**	960	7.8	88	**53**	1040	6.6	87	**43**	1090	5.7	87
28.41		**77**	920	8.5	88	**60**	990	7.1	87	**49**	1050	6.2	87
25.07		**88**	870	9.1	88	**68**	960	7.8	88	**56**	1020	6.8	87
22.22		**99**	790	9.3 *	88	**77**	920	8.4	88	**63**	980	7.4	87
18.97		**116**	680	9.4 *	88	**90**	860	9.2	88	**74**	930	8.2	88
22.89		**96**	710	7.9	91	**74**	705	6.1	90	**61**	705	5.0	90
20.99		**105**	710	8.6	91	**81**	705	6.6	91	**67**	705	5.5	90
18.42		**119**	720	9.9 *	91	**92**	710	7.6	91	**76**	705	6.2	90
17.45		**126**	720	10.4 *	91	**97**	710	8.0	91	**80**	710	6.6	91
15.28		**144**	720	11.9 *	92	**111**	720	9.2	91	**92**	710	7.5	91
13.76	34/6	**160**	725	13.2 *	92	**124**	720	10.2 *	91	**102**	710	8.3	91
12.07		**182**	650	13.5 *	92	**141**	725	11.7 *	92	**116**	720	9.6 *	91
10.65		**207**	580	13.6 *	92	**160**	725	13.2 *	92	**131**	720	10.8 *	92
9.44		**233**	520	13.8 *	92	**180**	655	13.4 *	92	**148**	725	12.3 *	92
8.06		**273**	445	13.8 *	92	**211**	575	13.8 *	92	**174**	680	13.5 *	92

* P_{emax} = 9.2 kW

1100 - 700 1/min

02 964 097

i_{ges}	i_{sch}	n_e = 1100 1/min				n_e = 900 1/min				n_e = 700 1/min			
		n_a [1/min]	M_{amax} [Nm]	P_e [kW]	η [%]	n_a [1/min]	M_{amax} [Nm]	P_e [kW]	η [%]	n_a [1/min]	M_{amax} [Nm]	P_e [kW]	η [%]
256.47		**4.3**	1270	0.89	64	**3.5**	1270	0.75	63	**2.7**	1270	0.60	61
225.26		**4.9**	1270	1.0	65	**4.0**	1270	0.84	63	**3.1**	1270	0.67	62
214.00		**5.1**	1270	1.0	65	**4.2**	1270	0.88	64	**3.3**	1270	0.70	62
189.09		**5.8**	1270	1.2	66	**4.8**	1270	0.98	65	**3.7**	1270	0.78	63
161.60		**6.8**	1270	1.3	67	**5.6**	1270	1.1	66	**4.3**	1270	0.90	64
148.15		**7.4**	1270	1.5	68	**6.1**	1270	1.2	66	**4.7**	1270	0.97	65
130.00	40/1	**8.5**	1260	1.6	69	**6.9**	1270	1.4	67	**5.4**	1270	1.1	66
123.20		**8.9**	1250	1.7	69	**7.3**	1270	1.4	68	**5.7**	1270	1.1	66
107.83		**10**	1220	1.9	70	**8.3**	1260	1.6	69	**6.5**	1270	1.3	67
97.14		**11**	1200	2.0	70	**9.3**	1250	1.8	69	**7.2**	1270	1.4	68
85.22		**13**	1170	2.2	71	**11**	1220	1.9	70	**8.2**	1270	1.6	69
75.20		**15**	1140	2.4	72	**12**	1190	2.1	71	**9.3**	1250	1.8	69
66.67		**16**	1110	2.6	72	**13**	1160	2.3	71	**10**	1220	1.9	70
56.92		**19**	1060	2.9	73	**16**	1120	2.6	72	**12**	1190	2.2	71
75.09		**15**	1120	2.1	83	**12**	1130	1.7	82	**9.3**	1170	1.4	81
71.33		**15**	1120	2.2	83	**13**	1130	1.8	82	**9.8**	1120	1.4	81
63.03		**17**	1120	2.5	83	**14**	1120	2.0	82	**11**	1130	1.6	81
53.87		**20**	1120	2.9	84	**17**	1120	2.4	83	**13**	1120	1.9	82
49.38		**22**	1120	3.1	84	**18**	1120	2.6	83	**14**	1120	2.0	82
43.33		**25**	1130	3.5	85	**21**	1120	2.9	84	**16**	1120	2.3	83
41.07	40/3	**27**	1130	3.7	85	**22**	1120	3.1	84	**17**	1120	2.4	83
35.94		**31**	1150	4.3	85	**25**	1130	3.5	85	**19**	1120	2.7	84
32.38		**34**	1130	4.7	86	**28**	1130	3.9	85	**22**	1120	3.0	84
28.41		**39**	1110	5.2	86	**32**	1150	4.5	86	**25**	1130	3.4	85
25.07		**44**	1080	5.7	87	**36**	1120	4.9	86	**28**	1130	3.9	85
22.22		**50**	1050	6.3	87	**41**	1100	5.4	86	**32**	1150	4.4	86
18.97		**58**	1010	7.0	87	**47**	1060	6.1	87	**37**	1120	5.0	86
22.89		**48**	695	3.9	89	**39**	695	3.2	89	**31**	705	2.6	88
20.99		**52**	705	4.3	90	**43**	695	3.5	89	**33**	705	2.8	88
18.42		**60**	700	4.9	90	**49**	700	4.0	89	**38**	700	3.1	89
17.45		**63**	700	5.1	90	**52**	700	4.2	90	**40**	700	3.3	89
15.28	34/6	**72**	710	5.9	90	**59**	700	4.8	90	**46**	700	3.8	89
13.76		**80**	710	6.6	91	**65**	700	5.3	90	**51**	700	4.2	90
12.07		**91**	710	7.5	91	**75**	710	6.1	90	**58**	700	4.7	90
10.65		**103**	715	8.5	91	**85**	710	6.9	91	**66**	710	5.4	90
9.44		**117**	720	9.6 *	91	**95**	715	7.8	91	**74**	710	6.1	90
8.06		**136**	725	11.3 *	92	**112**	720	9.2	91	**87**	710	7.1	91

* P_{emax} = 9.2 kW

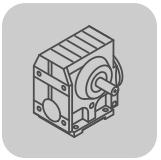

500 - 10 1/min

02 964 097

		n_e = 500 1/min				n_e = 250 1/min				n_e = 10 1/min			
i_{ges}	i_{sch}	n_a [1/min]	M_{amax} [Nm]	P_e [kW]	η [%]	n_a [1/min]	M_{amax} [Nm]	P_e [kW]	η [%]	n_a [1/min]	M_{amax} [Nm]	P_e [kW]	η [%]
256.47		**1.9**	1270	0.44	59	**0.97**	1270	0.23	56	**0.04**	1270	< 0.05	54
225.26		**2.2**	1270	0.49	60	**1.1**	1270	0.26	56	**0.04**	1270	< 0.05	55
214.00		**2.3**	1270	0.52	60	**1.2**	1270	0.28	56	**0.05**	1270	< 0.05	55
189.09		**2.6**	1270	0.58	61	**1.3**	1270	0.31	57	**0.05**	1270	< 0.05	55
161.60		**3.1**	1270	0.67	62	**1.5**	1270	0.36	58	**0.06**	1270	< 0.05	55
148.15		**3.4**	1270	0.72	62	**1.7**	1270	0.39	58	**0.07**	1270	< 0.05	55
130.00	40/1	**3.8**	1270	0.81	63	**1.9**	1270	0.43	59	**0.08**	1270	< 0.05	55
123.20		**4.1**	1270	0.85	64	**2.0**	1270	0.46	59	**0.08**	1270	< 0.05	55
107.83		**4.6**	1270	0.95	65	**2.3**	1270	0.51	60	**0.09**	1270	< 0.05	56
97.14		**5.1**	1270	1.0	65	**2.6**	1270	0.56	61	**0.10**	1270	< 0.05	56
85.22		**5.9**	1270	1.2	66	**2.9**	1270	0.63	62	**0.12**	1270	< 0.05	56
75.20		**6.6**	1270	1.3	67	**3.3**	1270	0.71	62	**0.13**	1270	< 0.05	56
66.67		**7.5**	1270	1.5	68	**3.7**	1270	0.79	63	**0.15**	1270	< 0.05	56
56.92		**8.8**	1260	1.7	69	**4.4**	1270	0.91	64	**0.18**	1270	< 0.05	56
75.09		**6.7**	1160	1.0	79	**3.3**	1120	0.51	76	**0.13**	1120	< 0.05	75
71.33		**7.0**	1110	1.0	79	**3.5**	1060	0.51	77	**0.14**	1060	< 0.05	75
63.03		**7.9**	1230	1.3	80	**4.0**	1200	0.65	77	**0.16**	1200	< 0.05	76
53.87		**9.3**	1180	1.4	81	**4.6**	1240	0.77	78	**0.19**	1240	< 0.05	76
49.38		**10**	1160	1.5	81	**5.1**	1240	0.84	78	**0.20**	1240	< 0.05	76
43.33		**12**	1120	1.7	82	**5.8**	1240	0.95	79	**0.23**	1240	< 0.05	76
41.07	40/3	**12**	1120	1.7	82	**6.1**	1240	1.0	79	**0.24**	1240	< 0.05	76
35.94		**14**	1120	2.0	82	**7.0**	1240	1.1	79	**0.28**	1240	< 0.05	76
32.38		**15**	1120	2.2	83	**7.7**	1240	1.3	80	**0.31**	1240	0.05	76
28.41		**18**	1120	2.5	83	**8.8**	1190	1.4	80	**0.35**	1190	0.06	76
25.07		**20**	1120	2.8	84	**10**	1170	1.5	81	**0.40**	1170	0.06	76
22.22		**23**	1130	3.2	84	**11**	1130	1.6	81	**0.45**	1130	0.07	76
18.97		**26**	1130	3.7	85	**13**	1120	1.9	82	**0.53**	1120	0.08	76
22.89		**22**	690	1.8	87	**11**	675	0.91	85	**0.44**	675	< 0.05	83
20.99		**24**	725	2.1	87	**12**	740	1.1	85	**0.48**	740	< 0.05	83
18.42		**27**	705	2.3	88	**14**	830	1.4	86	**0.54**	830	0.06	83
17.45		**29**	705	2.4	88	**14**	810	1.4	86	**0.57**	810	0.06	83
15.28	34/6	**33**	705	2.7	88	**16**	785	1.6	86	**0.65**	785	0.06	83
13.76		**36**	695	3.0	89	**18**	770	1.7	87	**0.73**	770	0.07	83
12.07		**41**	695	3.4	89	**21**	750	1.9	87	**0.83**	750	0.08	83
10.65		**47**	695	3.8	89	**23**	725	2.0	87	**0.94**	725	0.09	83
9.44		**53**	705	4.4	90	**26**	705	2.2	88	**1.1**	705	0.09	83
8.06		**62**	705	5.1	90	**31**	705	2.6	88	**1.2**	705	0.11	83

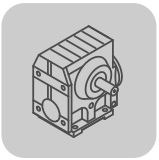

11.16 S, SF, SA, SAF 87

3400 - 2800 1/min

02 965 097

		n_e = 3400 1/min				n_e = 3200 1/min				n_e = 2800 1/min			
i_{ges}	i_{sch}	n_a [1/min]	M_{amax} [Nm]	P_e [kW]	η [%]	n_a [1/min]	M_{amax} [Nm]	P_e [kW]	η [%]	n_a [1/min]	M_{amax} [Nm]	P_e [kW]	η [%]
288.00		**12**	2030	3.4	74	**11**	2070	3.3	73	**9.7**	2070	2.9	73
258.18		**13**	1990	3.7	74	**12**	2010	3.5	74	**11**	2070	3.2	73
222.40		**15**	1910	4.1	75	**14**	1950	4.0	74	**13**	2010	3.6	74
202.96		**17**	1850	4.3	75	**16**	1890	4.2	75	**14**	1970	3.8	74
180.00		**19**	1800	4.7	75	**18**	1830	4.5	75	**16**	1910	4.2	75
151.30		**22**	1690	5.3	75	**21**	1730	5.1	75	**19**	1800	4.6	75
139.05	40/1	**24**	1630	5.5	76	**23**	1680	5.4	76	**20**	1760	4.9	75
123.48		**28**	1570	6.0	76	**26**	1600	5.7	76	**23**	1690	5.3	76
110.40		**31**	1430	6.1	76	**29**	1540	6.2	76	**25**	1620	5.7	76
99.26		**34**	1260	6.0	75	**32**	1380	6.2	76	**28**	1550	6.0	76
86.15		**39**	1030	5.8	74	**37**	1150	6.0	75	**33**	1390	6.2	76
77.14		**44**	830	5.3	72	**41**	970	5.7	74	**36**	1220	6.1	76
64.00		**53**	500	4.3	65	**50**	620	4.7	68	**44**	960	5.9	75
91.20		**37**	1470	6.6	88	**35**	1470	6.2	87	**31**	1470	5.4	87
81.76		**42**	1470	7.3	88	**39**	1470	6.9	88	**34**	1470	6.0	87
70.43		**48**	1470	8.4	88	**45**	1470	7.9	88	**40**	1470	7.0	88
64.27		**53**	1470	9.2	88	**50**	1470	8.7	88	**44**	1470	7.6	88
57.00		**60**	1470	10.4	88	**56**	1470	9.8	88	**49**	1470	8.6	88
47.91		**71**	1470	12.3	89	**67**	1470	11.6	89	**58**	1470	10.2	88
44.03	38/3	**77**	1470	13.4	89	**73**	1470	12.6	89	**64**	1470	11.0	89
39.10		**87**	1300	13.3	89	**82**	1400	13.5	89	**72**	1470	12.4	89
34.96		**97**	1140	13.1	89	**92**	1240	13.4	89	**80**	1440	13.6	89
31.43		**108**	1000	12.8	88	**102**	1090	13.1	89	**89**	1290	13.5	89
27.28		**125**	810	12.1	88	**117**	910	12.7	88	**103**	1110	13.4	89
24.43		**139**	660	11.1	87	**131**	775	12.1	88	**115**	960	13.0	89
20.27		**168**	395	8.4	82	**158**	490	9.6	84	**138**	755	12.4	88
25.50		**133**	990	15.0	92	**125**	990	14.1	92	**110**	990	12.4	92
21.43		**159**	990	17.8 *	92	**149**	990	16.8 *	92	**131**	990	14.7	92
19.70		**173**	990	19 *	92	**162**	990	18.3 *	92	**142**	990	16.0 *	92
17.49		**194**	870	19 *	92	**183**	930	19 *	92	**160**	990	18.0 *	92
15.64	34/6	**217**	760	19 *	92	**205**	830	19 *	92	**179**	960	19 *	92
14.06		**242**	660	18.2 *	92	**228**	725	19 *	92	**199**	860	19 *	92
12.21		**278**	540	17.2 *	91	**262**	605	18.1 *	92	**229**	730	19 *	92
10.93		**311**	440	15.8 *	90	**293**	510	17.1 *	91	**256**	645	19 *	92
9.07		**375**	255	11.5	87	**353**	325	13.5	89	**309**	500	17.7 *	92
7.88		**431**	200	10.5	86	**406**	230	11.3	87	**355**	375	15.5 *	90

* P_{emax} = 15 kW

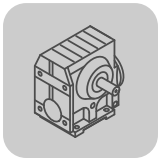

2200 - 1400 1/min

02 965 097

		n_e = 2200 1/min				n_e = 1700 1/min				n_e = 1400 1/min			
i_{ges}	i_{sch}	n_a [1/min]	M_{amax} [Nm]	P_e [kW]	η [%]	n_a [1/min]	M_{amax} [Nm]	P_e [kW]	η [%]	n_a [1/min]	M_{amax} [Nm]	P_e [kW]	η [%]
288.00		**7.6**	2210	2.5	71	**5.9**	2280	2.0	70	**4.9**	2280	1.7	69
258.18		**8.5**	2170	2.7	72	**6.6**	2260	2.2	71	**5.4**	2280	1.9	69
222.40		**9.9**	2130	3.0	73	**7.6**	2210	2.5	71	**6.3**	2280	2.1	70
202.96		**11**	2080	3.2	73	**8.4**	2190	2.7	72	**6.9**	2260	2.3	71
180.00		**12**	2020	3.5	74	**9.4**	2130	2.9	73	**7.8**	2210	2.5	72
151.30		**15**	1940	4.0	75	**11**	2060	3.3	74	**9.3**	2150	2.9	73
139.05	40/1	**16**	1880	4.2	75	**12**	2020	3.5	74	**10**	2100	3.0	73
123.48		**18**	1820	4.5	75	**14**	1960	3.8	74	**11**	2060	3.3	74
110.40		**20**	1770	4.9	76	**15**	1900	4.1	75	**13**	2000	3.6	74
99.26		**22**	1700	5.2	76	**17**	1840	4.4	75	**14**	1960	3.9	75
86.15		**26**	1620	5.7	76	**20**	1770	4.8	76	**16**	1880	4.3	75
77.14		**29**	1540	6.0	76	**22**	1700	5.2	76	**18**	1820	4.6	76
64.00		**34**	1360	6.4	77	**27**	1580	5.7	77	**22**	1700	5.1	76
91.20		**24**	1540	4.5	87	**19**	1520	3.5	86	**15**	1510	2.9	85
81.76		**27**	1600	5.2	87	**21**	1600	4.0	86	**17**	1600	3.4	86
70.43		**31**	1600	6.0	87	**24**	1600	4.7	87	**20**	1600	3.9	86
64.27		**34**	1600	6.6	88	**26**	1600	5.1	87	**22**	1600	4.2	86
57.00		**39**	1600	7.4	88	**30**	1600	5.7	87	**25**	1600	4.8	87
47.91		**46**	1600	8.7	88	**35**	1600	6.8	88	**29**	1600	5.6	87
44.03	38/3	**50**	1600	9.5	88	**39**	1600	7.4	88	**32**	1600	6.1	87
39.10		**56**	1600	10.6	89	**43**	1600	8.3	88	**36**	1600	6.8	88
34.96		**63**	1600	11.9	89	**49**	1600	9.2	88	**40**	1600	7.6	88
31.43		**70**	1600	13.2	89	**54**	1600	10.2	89	**45**	1600	8.5	88
27.28		**81**	1450	13.7	89	**62**	1600	11.7	89	**51**	1600	9.7	89
24.43		**90**	1310	13.8	89	**70**	1600	13.1	89	**57**	1600	10.8	89
20.27		**109**	1080	13.8	89	**84**	1420	14.0	89	**69**	1600	13.0	89
25.50		**86**	1240	12.2	92	**67**	1240	9.5	91	**55**	1240	7.8	91
21.43		**103**	1240	14.5	92	**79**	1240	11.2	92	**65**	1240	9.3	91
19.70		**112**	1240	15.7 *	92	**86**	1240	12.2	92	**71**	1240	10.1	91
17.49		**126**	1240	17.7 *	92	**97**	1240	13.7	92	**80**	1240	11.3	92
15.64	34/6	**141**	1230	20 *	92	**109**	1240	15.3 *	92	**90**	1240	12.7	92
14.06		**156**	1110	20 *	92	**121**	1240	17.0 *	92	**100**	1240	14.1	92
12.21		**180**	970	20 *	93	**139**	1240	20 *	92	**115**	1240	16.1 *	92
10.93		**201**	870	20 *	93	**156**	1130	20 *	93	**128**	1240	18.0 *	92
9.07		**243**	720	20 *	92	**187**	950	20 *	93	**154**	1140	20 *	93
7.88		**279**	605	19 *	92	**216**	830	20 *	93	**178**	1010	20 *	93

* P_{emax} = 15 kW

1100 - 700 1/min

02 966 097

i_{ges}	i_{sch}	n_e = 1100 1/min				n_e = 900 1/min				n_e = 700 1/min			
		n_a [1/min]	M_{amax} [Nm]	P_e [kW]	η [%]	n_a [1/min]	M_{amax} [Nm]	P_e [kW]	η [%]	n_a [1/min]	M_{amax} [Nm]	P_e [kW]	η [%]
288.00		**3.8**	2400	1.4	67	**3.1**	2450	1.2	66	**2.4**	2480	0.98	64
258.18		**4.3**	2380	1.6	68	**3.5**	2430	1.3	67	**2.7**	2470	1.1	65
222.40		**4.9**	2350	1.8	69	**4.0**	2400	1.5	68	**3.1**	2450	1.2	66
202.96		**5.4**	2330	1.9	70	**4.4**	2380	1.6	68	**3.4**	2430	1.3	67
180.00		**6.1**	2280	2.1	70	**5.0**	2350	1.8	69	**3.9**	2400	1.4	68
151.30		**7.3**	2240	2.4	71	**5.9**	2310	2.0	70	**4.6**	2350	1.7	69
139.05	40/1	**7.9**	2190	2.5	72	**6.5**	2260	2.2	71	**5.0**	2330	1.8	69
123.48		**8.9**	2150	2.8	73	**7.3**	2240	2.4	71	**5.7**	2310	2.0	70
110.40		**10**	2110	3.0	73	**8.2**	2190	2.6	72	**6.3**	2280	2.1	71
99.26		**11**	2070	3.3	74	**9.1**	2150	2.8	73	**7.1**	2240	2.3	71
86.15		**13**	2000	3.6	74	**10**	2090	3.1	73	**8.1**	2190	2.6	72
77.14		**14**	1940	3.9	75	**12**	2040	3.4	74	**9.1**	2150	2.8	73
64.00		**17**	1840	4.4	76	**14**	1960	3.9	75	**11**	2070	3.2	74
91.20		**12**	1490	2.2	84	**9.9**	1480	1.8	83	**7.7**	1460	1.4	82
81.76		**13**	1760	2.9	85	**11**	1760	2.4	84	**8.6**	1760	1.9	83
70.43		**16**	1760	3.4	85	**13**	1760	2.8	85	**9.9**	1760	2.2	83
64.27		**17**	1760	3.7	86	**14**	1760	3.0	85	**11**	1760	2.4	84
57.00		**19**	1760	4.1	86	**16**	1760	3.4	85	**12**	1760	2.7	84
47.91		**23**	1760	4.9	87	**19**	1760	4.0	86	**15**	1760	3.2	85
44.03	38/3	**25**	1760	5.3	87	**20**	1760	4.4	86	**16**	1760	3.4	85
39.10		**28**	1760	6.0	87	**23**	1760	4.9	87	**18**	1760	3.9	86
34.96		**31**	1760	6.6	88	**26**	1760	5.5	87	**20**	1760	4.3	86
31.43		**35**	1760	7.4	88	**29**	1760	6.1	87	**22**	1760	4.7	87
27.28		**40**	1760	8.4	88	**33**	1760	6.9	88	**26**	1760	5.4	87
24.43		**45**	1760	9.4	88	**37**	1760	7.7	88	**29**	1760	6.0	87
20.27		**54**	1760	11.3	89	**44**	1760	9.3	88	**35**	1760	7.2	88
25.50		**43**	1340	6.7	90	**35**	1340	5.5	90	**27**	1340	4.3	89
21.43		**51**	1340	7.9	91	**42**	1340	6.5	90	**33**	1340	5.1	90
19.70		**56**	1340	8.6	91	**46**	1340	7.1	91	**36**	1340	5.5	90
17.49		**63**	1340	9.7	91	**51**	1340	7.9	91	**40**	1340	6.2	90
15.64	34/6	**70**	1340	10.8	92	**58**	1340	8.9	91	**45**	1340	6.9	91
14.06		**78**	1340	12.0	92	**64**	1340	9.8	91	**50**	1340	7.7	91
12.21		**90**	1340	13.8	92	**74**	1340	11.3	92	**57**	1340	8.8	91
10.93		**101**	1340	15.3 *	92	**82**	1340	12.6	92	**64**	1340	9.8	91
9.07		**121**	1340	18.4 *	92	**99**	1340	15.1 *	92	**77**	1340	11.8	92
7.88		**140**	1260	20 *	93	**114**	1340	17.4 *	92	**89**	1340	13.6	92

* P_{emax} = 15 kW

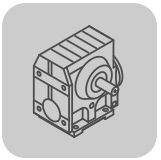

500 - 10 1/min

02 966 097

		n_e = 500 1/min				n_e = 250 1/min				n_e = 10 1/min			
i_{ges}	i_{sch}	n_a [1/min]	M_{amax} [Nm]	P_e [kW]	η [%]	n_a [1/min]	M_{amax} [Nm]	P_e [kW]	η [%]	n_a [1/min]	M_{amax} [Nm]	P_e [kW]	η [%]
288.00		**1.7**	2500	0.73	62	**0.87**	2500	0.38	59	**0.03**	2500	< 0.05	58
258.18		**1.9**	2500	0.80	63	**0.97**	2500	0.43	59	**0.04**	2500	< 0.05	58
222.40		**2.2**	2500	0.92	64	**1.1**	2500	0.49	60	**0.04**	2500	< 0.05	59
202.96		**2.5**	2480	0.99	64	**1.2**	2500	0.53	61	**0.05**	2500	< 0.05	59
180.00		**2.8**	2480	1.1	65	**1.4**	2500	0.60	61	**0.06**	2500	< 0.05	59
151.30		**3.3**	2430	1.3	67	**1.7**	2500	0.70	62	**0.07**	2500	< 0.05	59
139.05	40/1	**3.6**	2430	1.4	67	**1.8**	2500	0.75	63	**0.07**	2500	< 0.05	59
123.48		**4.0**	2400	1.5	68	**2.0**	2500	0.84	63	**0.08**	2500	< 0.05	59
110.40		**4.5**	2380	1.6	69	**2.3**	2500	0.93	64	**0.09**	2500	< 0.05	59
99.26		**5.0**	2330	1.8	69	**2.5**	2470	1.0	65	**0.10**	2470	< 0.05	59
86.15		**5.8**	2310	2.0	70	**2.9**	2450	1.1	66	**0.12**	2450	0.05	59
77.14		**6.5**	2260	2.2	71	**3.2**	2430	1.2	66	**0.13**	2430	0.06	59
64.00		**7.8**	2220	2.5	72	**3.9**	2400	1.5	68	**0.16**	2400	0.07	59
91.20		**5.5**	1450	1.0	81	**2.7**	1390	0.51	79	**0.11**	1390	< 0.05	78
81.76		**6.1**	1960	1.5	82	**3.1**	1880	0.76	79	**0.12**	1880	< 0.05	78
70.43		**7.1**	1980	1.8	82	**3.5**	1980	0.92	80	**0.14**	1980	< 0.05	79
64.27		**7.8**	1980	2.0	83	**3.9**	1980	1.0	80	**0.16**	1980	< 0.05	79
57.00		**8.8**	1980	2.2	83	**4.4**	1980	1.1	80	**0.18**	1980	< 0.05	79
47.91		**10**	1980	2.6	84	**5.2**	1980	1.3	81	**0.21**	1980	0.06	79
44.03	38/3	**11**	1980	2.8	84	**5.7**	1980	1.4	81	**0.23**	1980	0.06	79
39.10		**13**	1980	3.1	85	**6.4**	1980	1.6	82	**0.26**	1980	0.07	79
34.96		**14**	1980	3.5	85	**7.2**	1980	1.8	82	**0.29**	1980	0.08	79
31.43		**16**	1980	3.9	85	**8.0**	1980	2.0	83	**0.32**	1980	0.08	79
27.28		**18**	1980	4.4	86	**9.2**	1980	2.3	83	**0.37**	1980	0.10	79
24.43		**20**	1980	4.9	86	**10**	1980	2.5	84	**0.41**	1980	0.11	79
20.27		**25**	1980	5.9	87	**12**	1980	3.0	85	**0.49**	1980	0.13	79
25.50		**20**	1430	3.3	88	**9.8**	1390	1.6	87	**0.39**	1390	0.07	85
21.43		**23**	1420	3.9	89	**12**	1510	2.1	87	**0.47**	1510	0.09	85
19.70		**25**	1410	4.2	89	**13**	1570	2.4	87	**0.51**	1570	0.10	85
17.49		**29**	1390	4.6	89	**14**	1570	2.7	88	**0.57**	1570	0.11	85
15.64	34/6	**32**	1390	5.2	90	**16**	1540	2.9	88	**0.64**	1540	0.12	85
14.06		**36**	1390	5.7	90	**18**	1510	3.2	88	**0.71**	1510	0.13	85
12.21		**41**	1390	6.6	90	**20**	1460	3.5	89	**0.82**	1460	0.15	85
10.93		**46**	1390	7.3	91	**23**	1430	3.9	89	**0.91**	1430	0.16	85
9.07		**55**	1410	8.9	91	**28**	1390	4.5	89	**1.1**	1390	0.19	85
7.88		**63**	1410	10.3	91	**32**	1390	5.1	90	**1.3**	1390	0.22	85

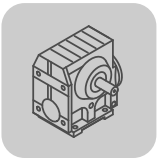

11.17 S, SF, SA, SAF 97

3400 - 2800 1/min

02 967 097

i_{ges}	i_{sch}	n_e = 3400 1/min				n_e = 3200 1/min				n_e = 2800 1/min			
		n_a [1/min]	M_{amax} [Nm]	P_e [kW]	η [%]	n_a [1/min]	M_{amax} [Nm]	P_e [kW]	η [%]	n_a [1/min]	M_{amax} [Nm]	P_e [kW]	η [%]
286.40		**12**	3520	5.8	76	**11**	3590	5.6	76	**9.8**	3700	5.0	75
262.22		**13**	3450	6.2	76	**12**	3520	5.9	76	**11**	3630	5.4	75
231.67		**15**	3310	6.7	76	**14**	3380	6.4	76	**12**	3520	5.9	76
196.52		**17**	3120	7.4	77	**16**	3210	7.2	76	**14**	3350	6.6	76
180.95		**19**	3030	7.8	77	**18**	3120	7.5	77	**15**	3250	6.9	76
161.74		**21**	2910	8.3	77	**20**	2970	8.0	77	**17**	3120	7.4	77
145.60	40/1	**23**	2760	8.8	77	**22**	2850	8.5	77	**19**	3000	7.9	77
131.85		**26**	2660	9.4	77	**24**	2740	9.1	77	**21**	2880	8.3	77
116.92		**29**	2320	9.3	76	**27**	2550	9.5	77	**24**	2740	8.9	77
105.71		**32**	1980	8.9	75	**30**	2210	9.2	76	**26**	2630	9.5	77
89.60		**38**	1280	7.3	70	**36**	1670	8.5	74	**31**	2210	9.4	77
78.26		**43**	920	6.4	65	**41**	1040	6.7	67	**36**	1770	8.8	75
65.45		**52**	675	5.9	63	**49**	775	6.2	64	**43**	1030	6.8	68
80.85		**42**	3150	15.5	89	**40**	3150	14.6	89	**35**	3150	12.8	89
71.43		**48**	3090	17.2	90	**45**	3150	16.5	89	**39**	3150	14.5	89
60.59		**56**	2910	19	90	**53**	2970	18.3	90	**46**	3120	16.9	90
55.79		**61**	2820	20	90	**57**	2880	19	90	**50**	3030	17.8	90
49.87		**68**	2710	22	90	**64**	2760	21	90	**56**	2910	19	90
44.89	37/3	**76**	2430	21	90	**71**	2630	22	90	**62**	2790	20	90
40.65		**84**	2170	21	90	**79**	2350	22	90	**69**	2680	21	90
36.05		**94**	1830	20	89	**89**	2020	21	89	**78**	2400	22	90
32.60		**104**	1560	19	89	**98**	1760	20	89	**86**	2150	22	90
27.63		**123**	1010	15.2	86	**116**	1320	18.2	88	**101**	1740	21	89
24.13		**141**	725	12.9	83	**133**	820	13.6	84	**116**	1390	19	88
26.39		**129**	1750	25 *	93	**121**	1750	24 *	93	**106**	1750	21	93
23.59		**144**	1750	28 *	93	**136**	1750	27 *	93	**119**	1750	23 *	93
21.23		**160**	1750	32 *	93	**151**	1750	30 *	93	**132**	1750	26 *	93
19.23		**177**	1550	31 *	93	**166**	1680	31 *	93	**146**	1750	29 *	93
17.05	35/6	**199**	1320	30 *	93	**188**	1450	31 *	93	**164**	1730	32 *	93
15.42		**220**	1110	28 *	92	**208**	1260	30 *	93	**182**	1540	31 *	93
13.07		**260**	725	22	90	**245**	940	26 *	92	**214**	1240	30 *	93
11.41		**298**	515	18.3	88	**280**	585	19	89	**245**	1000	28 *	92
9.55		**356**	375	16.2	87	**335**	435	17.5	87	**293**	580	20	89
8.26		**412**	290	14.7	85	**387**	335	15.8	86	**339**	455	18.4	88

* P_{emax} = 22 kW

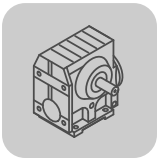

2200 - 1400 1/min 02 967 097

		n_e = 2200 1/min				n_e = 1700 1/min				n_e = 1400 1/min			
i_{ges}	i_{sch}	n_a [1/min]	M_{amax} [Nm]	P_e [kW]	η [%]	n_a [1/min]	M_{amax} [Nm]	P_e [kW]	η [%]	n_a [1/min]	M_{amax} [Nm]	P_e [kW]	η [%]
286.40		**7.7**	3920	4.2	74	**5.9**	4000	3.4	73	**4.9**	4000	2.9	72
262.22		**8.4**	3840	4.5	75	**6.5**	4000	3.7	73	**5.3**	4000	3.1	72
231.67		**9.5**	3770	5.0	75	**7.3**	3960	4.1	74	**6.0**	4000	3.5	73
196.52		**11**	3580	5.5	76	**8.7**	3840	4.7	75	**7.1**	4000	4.0	74
180.95		**12**	3510	5.9	76	**9.4**	3770	4.9	75	**7.7**	3920	4.3	74
161.74		**14**	3410	6.4	76	**11**	3650	5.3	76	**8.7**	3840	4.7	75
145.60	40/1	**15**	3270	6.8	77	**12**	3550	5.7	76	**9.6**	3730	5.0	75
131.85		**17**	3170	7.2	77	**13**	3440	6.1	76	**11**	3650	5.4	76
116.92		**19**	3020	7.7	77	**15**	3340	6.6	77	**12**	3510	5.8	76
105.71		**21**	2930	8.3	77	**16**	3210	7.0	77	**13**	3440	6.2	76
89.60		**25**	2730	9.1	77	**19**	3020	7.8	77	**16**	3240	6.9	77
78.26		**28**	2540	9.6	78	**22**	2870	8.4	78	**18**	3080	7.5	77
65.45		**34**	2120	9.7	77	**26**	2650	9.2	78	**21**	2900	8.3	78
80.85		**27**	3300	10.6	89	**21**	3270	8.2	88	**17**	3230	6.7	88
71.43		**31**	3300	12.0	89	**24**	3300	9.3	88	**20**	3300	7.7	88
60.59		**36**	3300	14.1	89	**28**	3300	10.9	89	**23**	3300	9.0	88
55.79		**39**	3270	15.1	89	**30**	3300	11.8	89	**25**	3300	9.8	88
49.87		**44**	3170	16.3	90	**34**	3300	13.2	89	**28**	3300	10.9	89
44.89	37/3	**49**	3050	17.5	90	**38**	3300	14.6	89	**31**	3300	12.1	89
40.65		**54**	2950	19	90	**42**	3230	15.8	90	**34**	3300	13.3	89
36.05		**61**	2810	20	90	**47**	3110	17.1	90	**39**	3300	15.0	89
32.60		**67**	2700	21	90	**52**	2980	18.1	90	**43**	3200	16.0	90
27.63		**80**	2390	22	90	**62**	2810	20	90	**51**	3010	17.8	90
24.13		**91**	2060	22	90	**70**	2670	22	90	**58**	2870	19	90
26.39		**83**	2550	24 *	93	**64**	2600	19	93	**53**	2600	15.6	92
23.59		**93**	2450	26 *	93	**72**	2600	21	93	**59**	2600	17.5	93
21.23		**104**	2380	28 *	93	**80**	2570	23 *	93	**66**	2600	19	93
19.23		**114**	2280	29 *	93	**88**	2500	25 *	93	**73**	2600	21	93
17.05	35/6	**129**	2170	31 *	93	**100**	2400	27 *	93	**82**	2570	24 *	93
15.42		**143**	2040	33 *	93	**110**	2300	28 *	93	**91**	2470	25 *	93
13.07		**168**	1720	32 *	93	**130**	2170	32 *	93	**107**	2330	28 *	93
11.41		**193**	1480	32 *	93	**149**	2000	33 *	93	**123**	2210	30 *	93
9.55		**230**	1200	31 *	93	**178**	1670	33 *	93	**147**	2040	33 *	94
8.26		**266**	980	30 *	93	**206**	1440	33 *	93	**169**	1770	34 *	94

* P_{emax} = 22 kW

1100 - 700 1/min

02 968 097

i_{ges}	i_{sch}	n_e = 1100 1/min				n_e = 900 1/min				n_e = 700 1/min			
		n_a [1/min]	M_{amax} [Nm]	P_e [kW]	η [%]	n_a [1/min]	M_{amax} [Nm]	P_e [kW]	η [%]	n_a [1/min]	M_{amax} [Nm]	P_e [kW]	η [%]
286.40		**3.8**	4200	2.4	70	**3.1**	4200	2.0	69	**2.4**	4200	1.6	68
262.22		**4.2**	4200	2.6	71	**3.4**	4200	2.2	70	**2.7**	4200	1.7	68
231.67		**4.7**	4200	2.9	72	**3.9**	4200	2.4	70	**3.0**	4200	1.9	69
196.52		**5.6**	4160	3.4	73	**4.6**	4200	2.8	71	**3.6**	4200	2.2	70
180.95		**6.1**	4120	3.6	73	**5.0**	4200	3.0	72	**3.9**	4200	2.4	70
161.74		**6.8**	4030	3.9	74	**5.6**	4160	3.3	73	**4.3**	4200	2.7	71
145.60	40/1	**7.6**	3950	4.2	74	**6.2**	4080	3.6	73	**4.8**	4200	2.9	72
131.85		**8.3**	3880	4.5	75	**6.8**	4030	3.9	74	**5.3**	4200	3.2	72
116.92		**9.4**	3760	4.9	75	**7.7**	3910	4.2	74	**6.0**	4120	3.5	73
105.71		**10**	3650	5.3	76	**8.5**	3840	4.6	75	**6.6**	4030	3.8	74
89.60		**12**	3500	5.9	76	**10**	3690	5.1	76	**7.8**	3910	4.3	75
78.26		**14**	3370	6.5	77	**12**	3580	5.7	76	**8.9**	3800	4.7	75
65.45		**17**	3170	7.2	77	**14**	3400	6.4	77	**11**	3650	5.4	76
80.85		**14**	3230	5.3	87	**11**	3200	4.3	86	**8.7**	3170	3.4	85
71.43		**15**	3600	6.7	87	**13**	3600	5.5	87	**9.8**	3600	4.3	86
60.59		**18**	3600	7.8	88	**15**	3600	6.4	87	**12**	3600	5.0	86
55.79		**20**	3600	8.5	88	**16**	3600	7.0	87	**13**	3600	5.5	87
49.87		**22**	3600	9.4	88	**18**	3600	7.8	88	**14**	3600	6.1	87
44.89	37/3	**25**	3600	10.4	88	**20**	3600	8.6	88	**16**	3600	6.7	87
40.65		**27**	3600	11.5	89	**22**	3600	9.5	88	**17**	3600	7.4	88
36.05		**31**	3530	12.7	89	**25**	3600	10.6	89	**19**	3600	8.3	88
32.60		**34**	3420	13.5	89	**28**	3600	11.7	89	**21**	3600	9.2	88
27.63		**40**	3260	15.2	90	**33**	3460	13.2	89	**25**	3600	10.8	89
24.13		**46**	3130	16.6	90	**37**	3320	14.5	89	**29**	3560	12.2	89
26.39		**42**	2650	12.6	92	**34**	2620	10.2	92	**27**	2620	8.0	91
23.59		**47**	2650	14.0	92	**38**	2650	11.5	92	**30**	2620	8.9	91
21.23		**52**	2650	15.6	92	**42**	2650	12.8	92	**33**	2620	9.9	92
19.23		**57**	2650	17.2	93	**47**	2650	14.1	92	**36**	2620	10.9	92
17.05	35/6	**65**	2670	19	93	**53**	2650	15.9	92	**41**	2650	12.4	92
15.42		**71**	2670	21	93	**58**	2650	17.5	93	**45**	2650	13.7	92
13.07		**84**	2540	24 *	93	**69**	2670	21	93	**54**	2650	16.1	92
11.41		**96**	2420	26 *	93	**79**	2590	23 *	93	**61**	2650	18.4	93
9.55		**115**	2280	29 *	93	**94**	2440	26 *	93	**73**	2650	22	93
8.26		**133**	2140	32 *	94	**109**	2320	28 *	93	**85**	2540	24 *	93

* P_{emax} = 22 kW

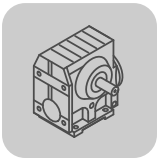

500 - 10 1/min

02 968 097

		n_e = 500 1/min				n_e = 250 1/min				n_e = 10 1/min			
i_{ges}	i_{sch}	n_a [1/min]	M_{amax} [Nm]	P_e [kW]	η [%]	n_a [1/min]	M_{amax} [Nm]	P_e [kW]	η [%]	n_a [1/min]	M_{amax} [Nm]	P_e [kW]	η [%]
286.40		**1.7**	4200	1.2	65	**0.87**	4200	0.62	62	**0.03**	4200	< 0.05	60
262.22		**1.9**	4200	1.3	66	**0.95**	4200	0.68	62	**0.04**	4200	< 0.05	60
231.67		**2.2**	4200	1.4	67	**1.1**	4200	0.76	63	**0.04**	4200	< 0.05	60
196.52		**2.5**	4200	1.6	68	**1.3**	4200	0.88	64	**0.05**	4200	< 0.05	60
180.95		**2.8**	4200	1.8	68	**1.4**	4200	0.95	64	**0.06**	4200	< 0.05	60
161.74		**3.1**	4200	2.0	69	**1.5**	4200	1.1	65	**0.06**	4200	< 0.05	60
145.60	40/1	**3.4**	4200	2.2	70	**1.7**	4200	1.2	65	**0.07**	4200	0.05	60
131.85		**3.8**	4200	2.4	70	**1.9**	4200	1.3	66	**0.08**	4200	0.06	60
116.92		**4.3**	4200	2.6	71	**2.1**	4200	1.4	67	**0.09**	4200	0.06	60
105.71		**4.7**	4200	2.9	72	**2.4**	4200	1.5	67	**0.09**	4200	0.07	60
89.60		**5.6**	4160	3.3	73	**2.8**	4200	1.8	69	**0.11**	4200	0.08	60
78.26		**6.4**	4080	3.7	74	**3.2**	4200	2.0	69	**0.13**	4200	0.09	60
65.45		**7.6**	3910	4.2	75	**3.8**	4200	2.4	70	**0.15**	4200	0.11	60
80.85		**6.2**	3110	2.4	84	**3.1**	3010	1.2	82	**0.12**	3010	< 0.05	80
71.43		**7.0**	4200	3.6	85	**3.5**	4160	1.9	82	**0.14**	4160	0.08	81
60.59		**8.3**	4200	4.3	85	**4.1**	4080	2.1	83	**0.17**	4080	0.09	81
55.79		**9.0**	4200	4.6	86	**4.5**	4200	2.4	83	**0.18**	4200	0.10	81
49.87		**10**	4200	5.1	86	**5.0**	4200	2.6	83	**0.20**	4200	0.11	81
44.89	37/3	**11**	4160	5.6	86	**5.6**	4200	2.9	84	**0.22**	4200	0.12	81
40.65		**12**	4120	6.1	87	**6.2**	4200	3.2	84	**0.25**	4200	0.13	81
36.05		**14**	4080	6.8	87	**6.9**	4200	3.6	85	**0.28**	4200	0.15	81
32.60		**15**	3990	7.3	87	**7.7**	4200	4.0	85	**0.31**	4200	0.17	81
27.63		**18**	3910	8.4	88	**9.0**	4200	4.7	86	**0.36**	4200	0.20	81
24.13		**21**	3800	9.3	88	**10**	4200	5.3	86	**0.41**	4200	0.23	81
26.39		**19**	2590	5.7	90	**9.5**	2540	2.8	89	**0.38**	2540	0.12	87
23.59		**21**	2590	6.3	91	**11**	2540	3.2	89	**0.42**	2540	0.13	87
21.23		**24**	2590	7.0	91	**12**	2570	3.6	89	**0.47**	2570	0.15	87
19.23		**26**	2620	7.8	91	**13**	2570	3.9	89	**0.52**	2570	0.16	87
17.05	35/6	**29**	2620	8.8	91	**15**	2570	4.4	90	**0.59**	2570	0.18	87
15.42		**32**	2620	9.7	92	**16**	2570	4.8	90	**0.65**	2570	0.20	87
13.07		**38**	2650	11.6	92	**19**	2590	5.7	90	**0.77**	2590	0.24	87
11.41		**44**	2650	13.2	92	**22**	2590	6.6	91	**0.88**	2590	0.27	87
9.55		**52**	2650	15.7	92	**26**	2620	7.9	91	**1.0**	2620	0.33	87
8.26		**61**	2650	18.1	93	**30**	2620	9.1	91	**1.2**	2620	0.38	87

12 W..

12.1 W.. AM.. [Nm]

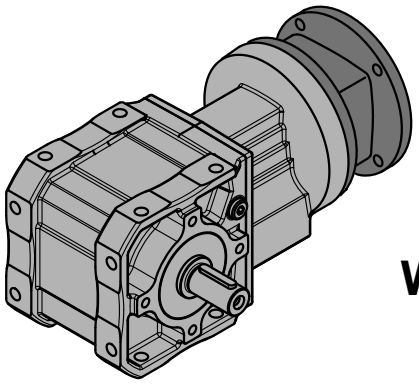

W.7/AM..

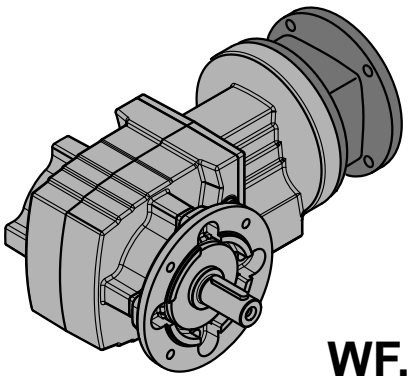

WF.7/AM..

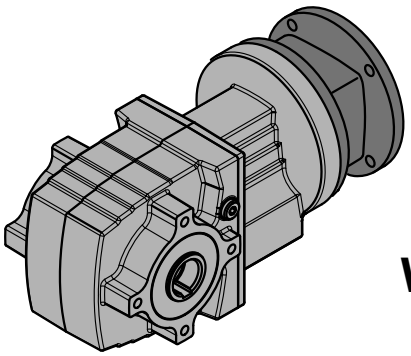

WA.7/AM..

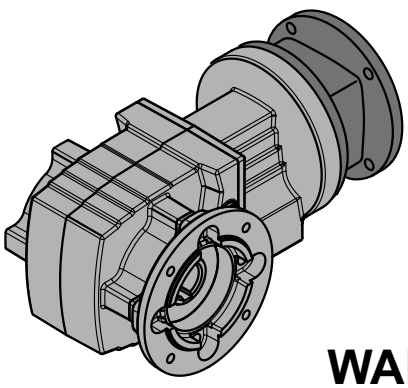

WAF.7/AM..

68395AXX

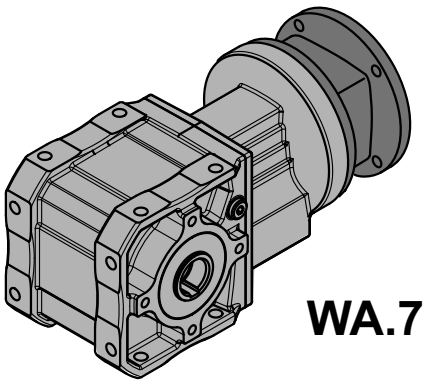

WA.7B/AM..

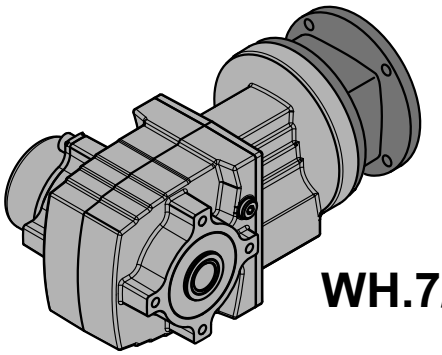

WH.7/AM..

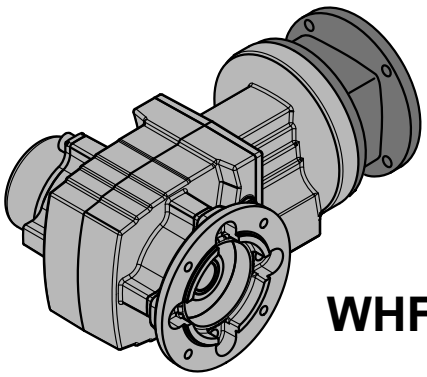

WHF.7/AM..

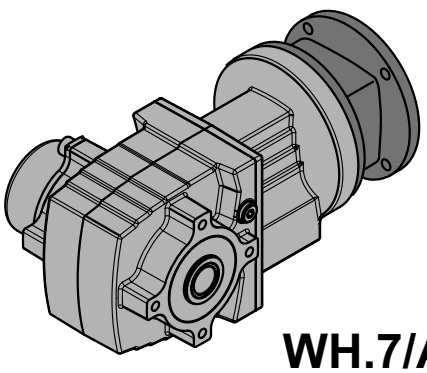

WH.7/AM..

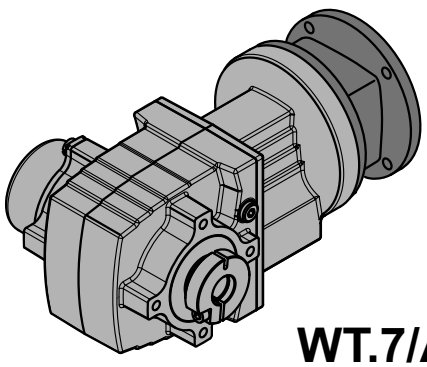

WT.7/AM..

68394AXX

12.1.1 W37

n_e = 1400 1/min									110 Nm
	i	n_a [1/min]	$M_{a\,max}$ [Nm]	F_{Ra} [N]	φ (/R) [']	AM 63	AM 71	AM 80	AM 90
W37 2	**3.20**	438	70	2220	-				
	3.93	356	70	2410	-				
	5.11	274	70	2680	-				
	5.77	243	70	2810	-				
	6.97	201	70	3020	-				
	8.55	164	70	3270	-				
	9.92	141	70	3460	-				
	10.67	131	90	2880	-				
	11.65	120	70	3680	-				
	12.70	110	70	3800	-				
	13.89	101	90	3250	-				
	15.67	89	90	3430	-				
	18.94	74	90	3610	-				
	21.33	66	110	3320	-				
	23.25	60	90	3610	-				
	26.96	52	90	3610	-				
	27.78	50	110	3320	-				
	31.33	45	110	3320	-				
	31.67	44	90	3610	-				
	34.52	41	90	3610	-				
	37.88	37	110	3320	-				
	46.49	30	110	3320	-				
	53.92	26	110	3320	-				
	63.33	22	110	3320	-				
	69.05	20	110	3320	-				

m [kg]		AM			
IEC	**s**	**63**	**71**	**80**	**90**
W37	2	8.2	8.5	11	11
NEMA		-	56	143	145
W37	2	-	8.8	11	11
WF: + 0.0 kg / WA: + 0.0 kg / WAF: + 0.0 kg					

12.1.2 W47

n_e = 1400 1/min										180 Nm
	i	n_a [1/min]	$M_{a\,max}$ [Nm]	F_{Ra} [N]	φ (/R) [']	AM 63	AM 71	AM 80	AM 90
W47 2	**3.27**	428	110	2690	-				
	3.89	360	110	2900	-				
	4.40	318	110	3050	-				
	5.23	268	110	3270	-				
	5.58	251	110	3360	-				
	6.53	214	110	3580	-				
	7.32	191	110	3750	-				
	8.61	163	110	4000	-				
	9.96	141	110	4240	-				
	10.66	131	110	4350	-				
	11.32	124	160	3500	-				
	12.30	114	110	4600	-				
	13.44	104	160	3810	-				
	14.35	98	160	3930	-				
	16.80	83	160	4230	-				
	18.82	74	160	4460	-				
	22.15	63	160	4800	-				
	25.07	56	180	4490	-				
	25.62	55	160	5130	-				
	26.76	52	180	4640	-				
	27.41	51	160	5280	-				
	31.33	45	180	5010	-				
	31.62	44	160	5620	-				
	35.09	40	180	5290	-				
	41.30	34	180	5720	-				
	47.78	29	180	6110	-				
	51.12	27	180	6300	-				
	58.98	24	180	6500	-				
	68.93	20	180	6500	-				
	74.98	19	180	6500	-				

m [kg]		AM						
IEC	**s**	**63**	**71**	**80**	**90**	**100**	**112**	**132S/M**
W47	2	14	15	17	17	22	22	29
NEMA		-	56	143	145	182	184	213/215
W47	2	-	15	17	17	21	21	26
WF: + 0.5 kg / WA: + -1.5 kg / WAF: + -0.7 kg								

12.2 W.. AD.. [kW]

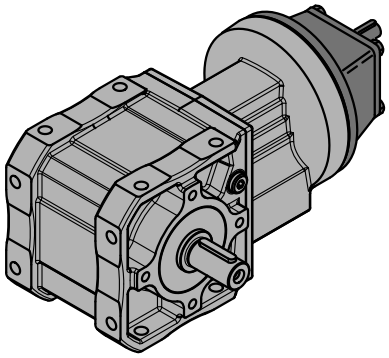

W.7/AD..

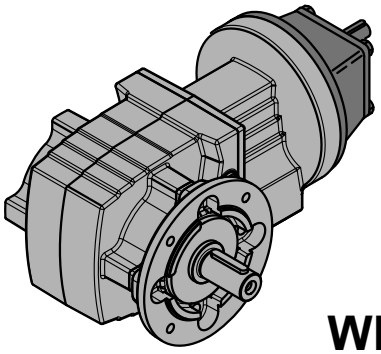

WF.7/AD..

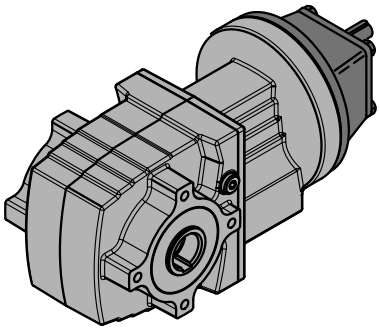

WA.7/AD..

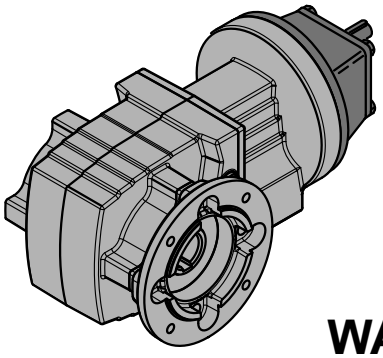

WAF.7/AD..

68396AXX

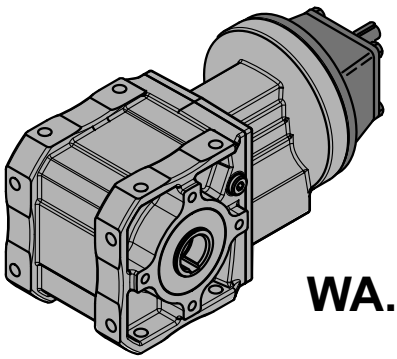

WA.7B/AD..

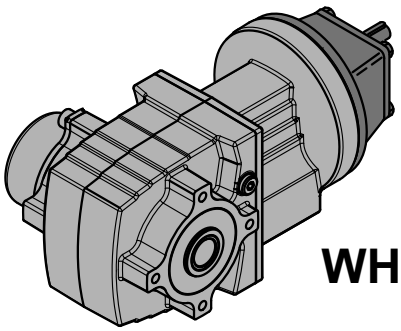

WH.7/AD..

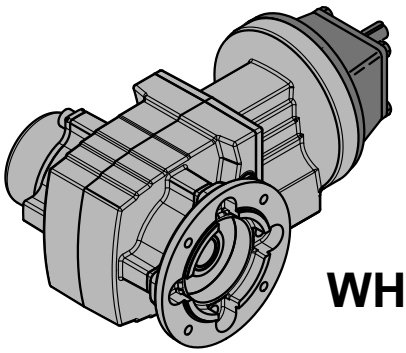

WHF.7/AD..

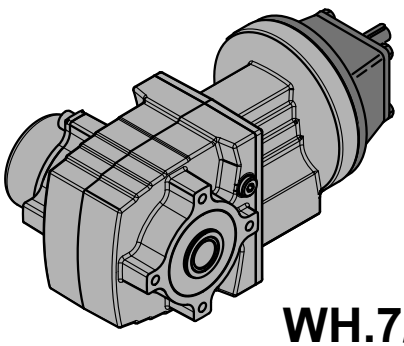

WH.7/AD..

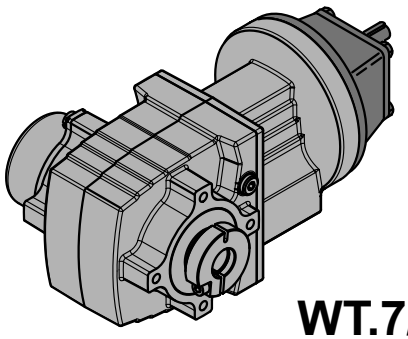

WT.7/AD..

68397AXX

i	n_a [1/min]	M_{amax}	P_e [kW]	F_{Ra} [N] 1)	F_{Re} [N]	φ (/R)	⚠				m [kg]	
W37 AD.. , n_e = 1400 1/min												**110 Nm**
69.05	20	110	0.36	3320	555	-	-					
63.33	22	110	0.39	3320	550	-	-					
53.92	26	110	0.45	3320	545	-	-					
46.49	30	110	0.51	3320	540	-	-					
37.88	37	110	0.61	3320	525	-	-					
34.52	41	90	0.48	3610	400	-	-					
31.67	44	90	0.52	3610	395	-	-	**W**	**37**	**AD1**	**7.7**	
31.33	45	110	0.72	3320	505	-	-	**WF**	**37**	**AD1**	**7.7**	→ 📖 531
27.78	50	110	0.80	3320	490	-	-	**WA**	**37**	**AD1**	**7.7**	
26.96	52	90	0.60	3610	380	-	-	**WAF**	**37**	**AD1**	**7.7**	
23.25	60	90	0.69	3610	365	-	-					
21.33	66	110	1.0	3320	445	-	-					
18.94	74	90	0.84	3610	335	-	-					
15.67	89	90	1.0	3430	305	-	-					
13.89	101	90	1.1	3250	280	-	-					
12.70	110	70	0.91	3800	860	-	-					
11.65	120	70	0.99	3680	830	-	-					
10.67	131	90	1.4	2880	1670	-	-					
9.92	141	70	1.2	3460	1540	-	-	**W**	**37**	**AD2**	**8.9**	
8.55	164	70	1.3	3270	1530	-	-	**WF**	**37**	**AD2**	**8.9**	→ 📖 531
6.97	201	70	1.6	3020	1510	-	-	**WA**	**37**	**AD2**	**8.9**	
5.77	243	70	2.0	2810	1490	-	-	**WAF**	**37**	**AD2**	**8.9**	
5.11	274	70	2.2	2680	1480	-	-					
3.93	357	70	2.8	2410	1430	-	-					
3.20*	438	70	3.5	2220	1380	-	-					
W47 AD.. , n_e = 1400 1/min												**180 Nm**
74.98	19	180	0.52	6400	1490	-	-					
68.93	20	180	0.56	6400	1480	-	-					
58.98	24	180	0.63	6400	1690	-	-					
51.12	27	180	0.72	6230	1680	-	-					
47.78	29	180	0.76	6040	1680	-	-					
41.30	34	180	0.87	5650	1680	-	-					
35.09	40	180	1.0	5230	1670	-	-					
31.62	44	160	0.91	5560	1590	-	-					
31.33	45	180	1.1	4950	1670	-	-					
27.41	51	160	1.0	5220	1580	-	-					
26.76	52	180	1.3	4580	1660	-	-					
25.62	55	160	1.1	5070	1580	-	-					
25.07	56	180	1.4	4430	1650	-	-					
22.15	63	160	1.3	4750	1560	-	-	**W**	**47**	**AD2**	**15**	
18.82	74	160	1.5	4410	1560	-	-	**WF**	**47**	**AD2**	**15**	→ 📖 531
16.80	83	160	1.6	4180	1550	-	-	**WA**	**47**	**AD2**	**13**	
14.35	98	160	1.9	3880	1530	-	-	**WAF**	**47**	**AD2**	**14**	
13.44	104	160	2.0	3760	1530	-	-					
12.30	114	110	1.4	4550	1400	-	-					
11.32	124	160	2.4	3460	1500	-	-					
10.66	131	110	1.6	4300	1390	-	-					
9.96	141	110	1.8	4190	1380	-	-					
8.61	163	110	2.0	3960	1360	-	-					
7.32	191	110	2.4	3710	1340	-	-					
6.53	214	110	2.6	3540	1320	-	-					
5.58	251	110	3.1	3320	1300	-	-					
5.23	268	110	3.3	3240	1280	-	-					
4.40	318	110	3.9	3020	1240	-	-					
3.89	360	110	4.4	2860	1200	-	-					
3.27	429	110	5.2	2660	1140	-	-					

12.3 W.. AM.. (IEC) [mm]

20 004 00 07

W37..

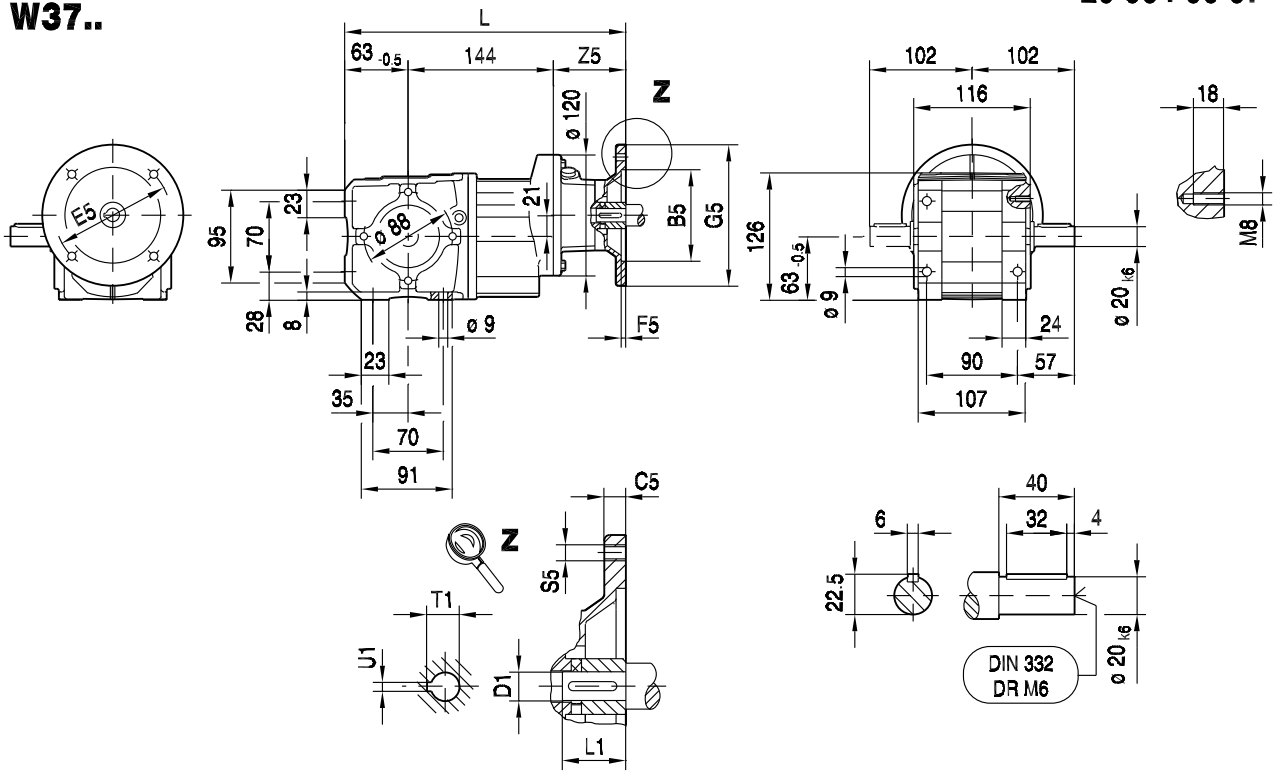

WA37B..

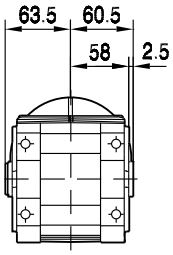

WH37B..

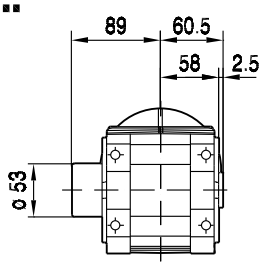

ø 25 H7
DIN 6885-3

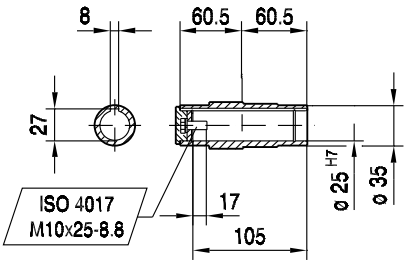

ø 20 H7

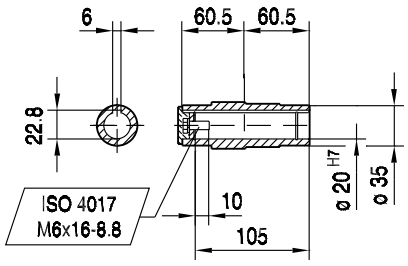

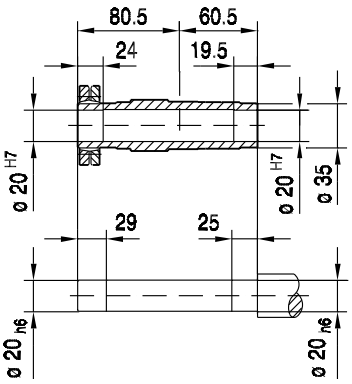

(→ 130)	B5	C5	E5	F5	G5	L	S5	Z5	D1	L1	T1	U1	
AM63	95	10	115	3.5	140	279	M8	72	11	23	12.8	4	
AM71	110	10	130	4.0	160	279	M8	72	14	30	16.3	5	
AM80	130	12	165	4.5	200	313	M10	106	19	40	21.8	6	
AM90	130	12	165	4.5	200	313	M10	106	24	50	27.3	8	

WF37..

20 006 00 07

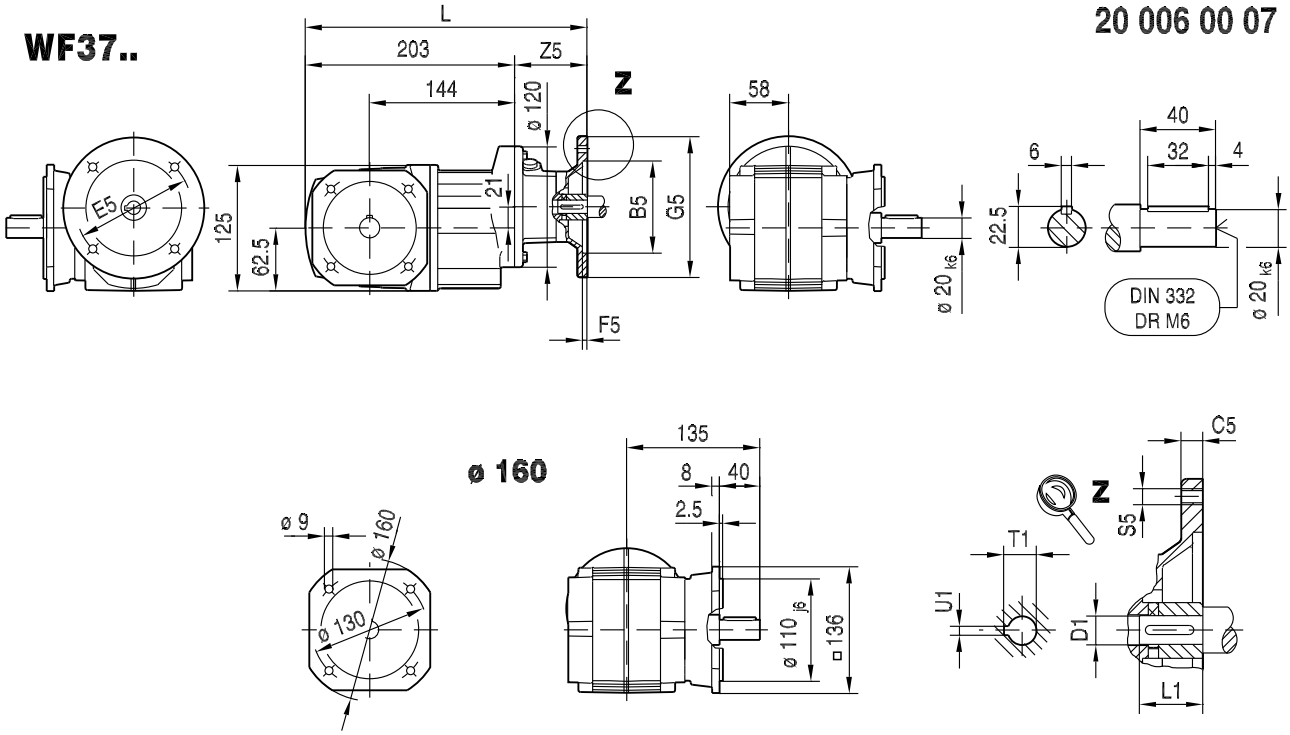

WAF37..

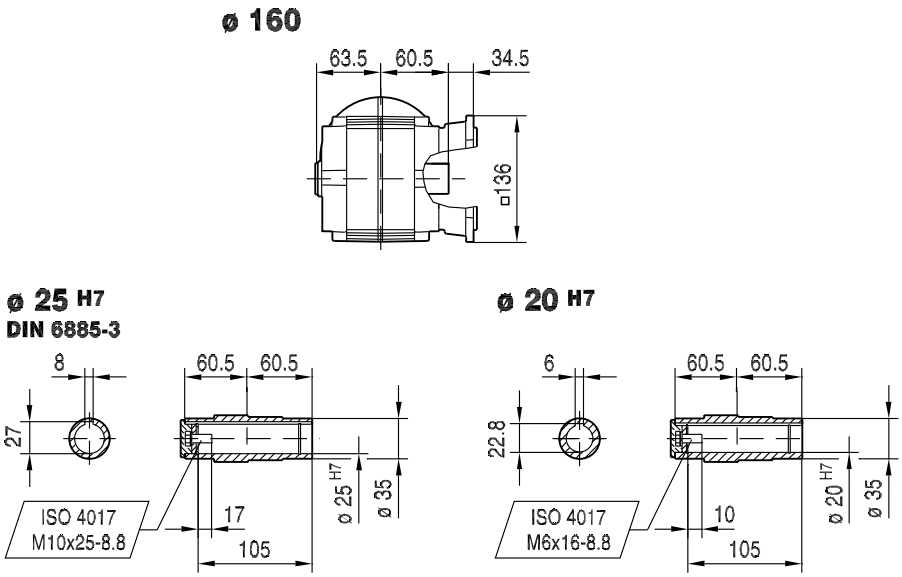

(→ 130)	B5	C5	E5	F5	G5	L	S5	Z5	D1	L1	T1	U1	
AM63	95	10	115	3.5	140	275	M8	72	11	23	12.8	4	
AM71	110	10	130	4.0	160	275	M8	72	14	30	16.3	5	
AM80	130	12	165	4.5	200	309	M10	106	19	40	21.8	6	
AM90	130	12	165	4.5	200	309	M10	106	24	50	27.3	8	

20 019 00 07

WHF37..

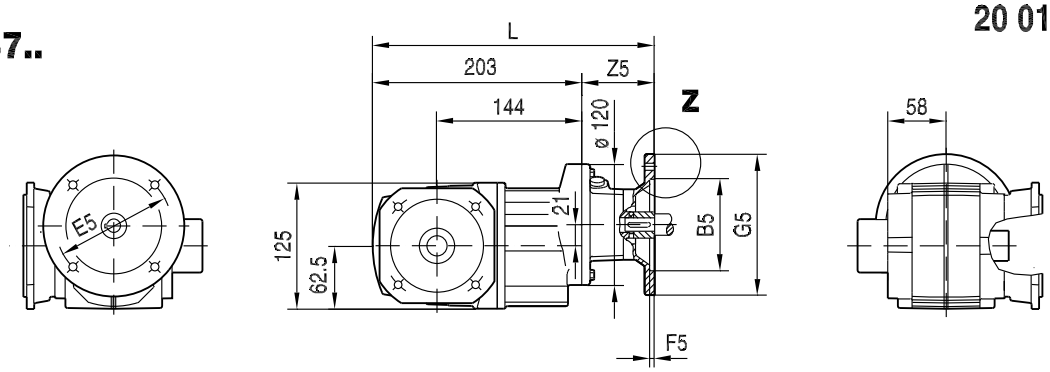

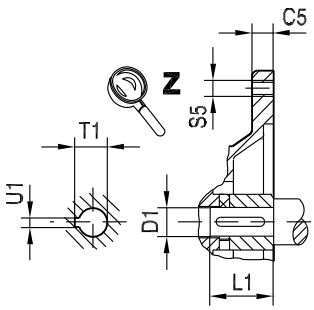

ø 160

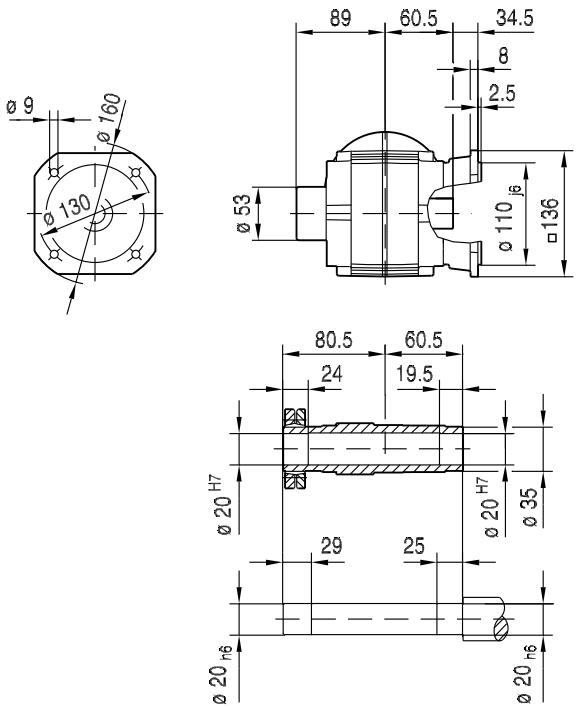

(→ 130)	B5	C5	E5	F5	G5	L	S5	Z5	D1	L1	T1	U1	
AM63	95	10	115	3.5	140	275	M8	72	11	23	12.8	4	
AM71	110	10	130	4.0	160	275	M8	72	14	30	16.3	5	
AM80	130	12	165	4.5	200	309	M10	106	19	40	21.8	6	
AM90	130	12	165	4.5	200	309	M10	106	24	50	27.3	8	

WA37..

20 005 00 07

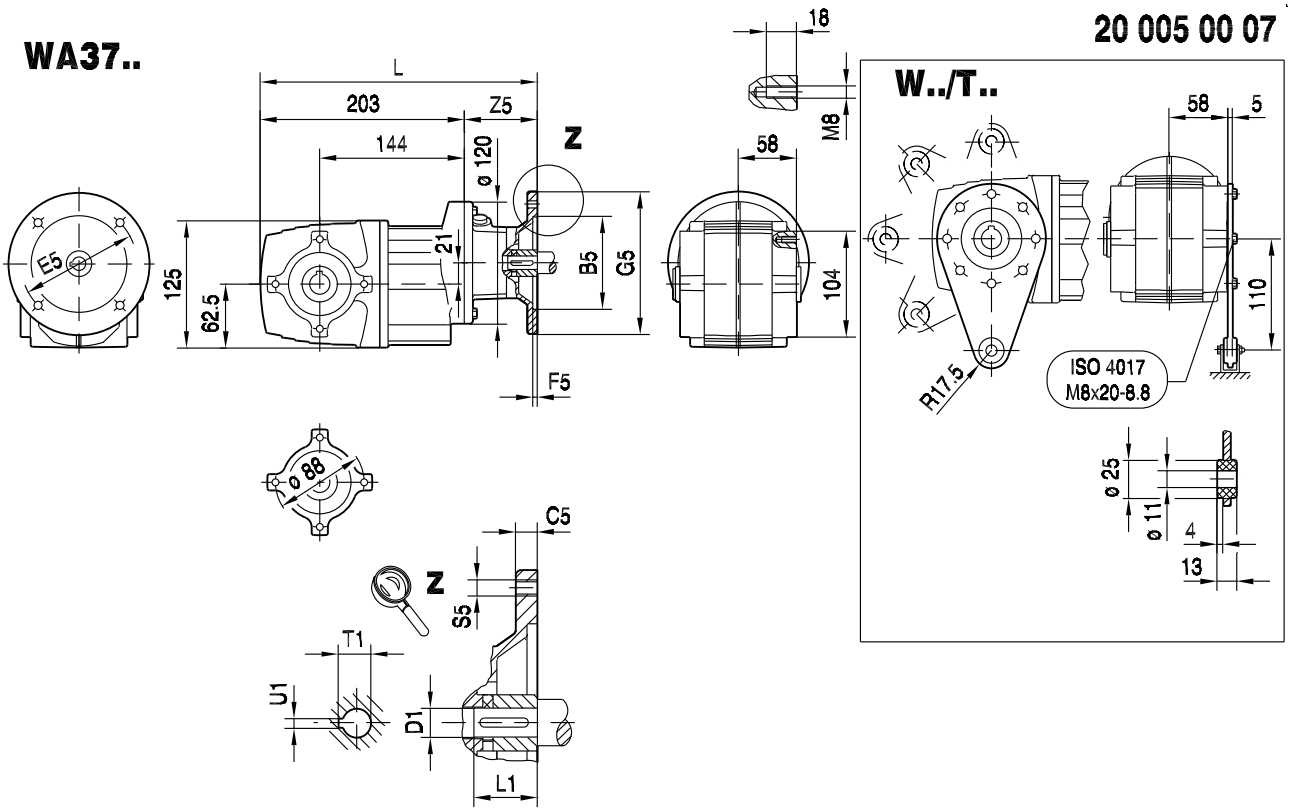

WA37..

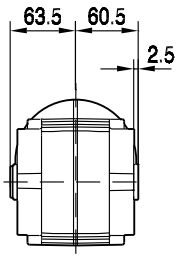

WH37..

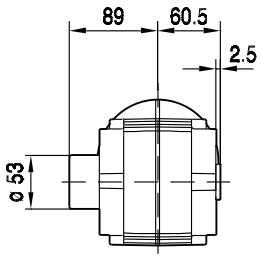

ø 25 H7
DIN 6885-3

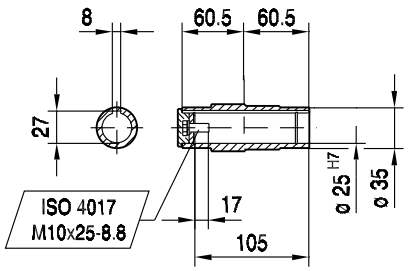

ø 20 H7

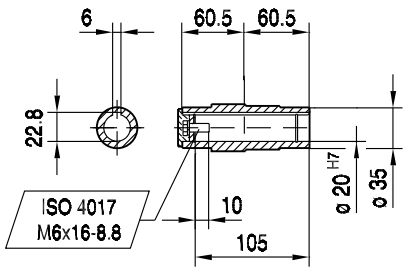

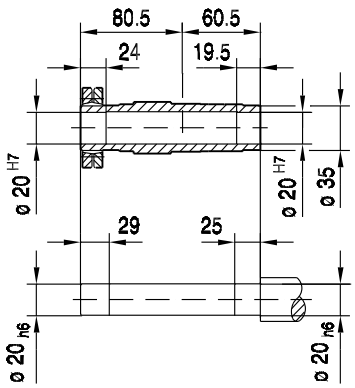

(→ 130)	B5	C5	E5	F5	G5	L	S5	Z5	D1	L1	T1	U1	
AM63	95	10	115	3.5	140	275	M8	72	11	23	12.8	4	
AM71	110	10	130	4.0	160	275	M8	72	14	30	16.3	5	
AM80	130	12	165	4.5	200	309	M10	106	19	40	21.8	6	
AM90	130	12	165	4.5	200	309	M10	106	24	50	27.3	8	

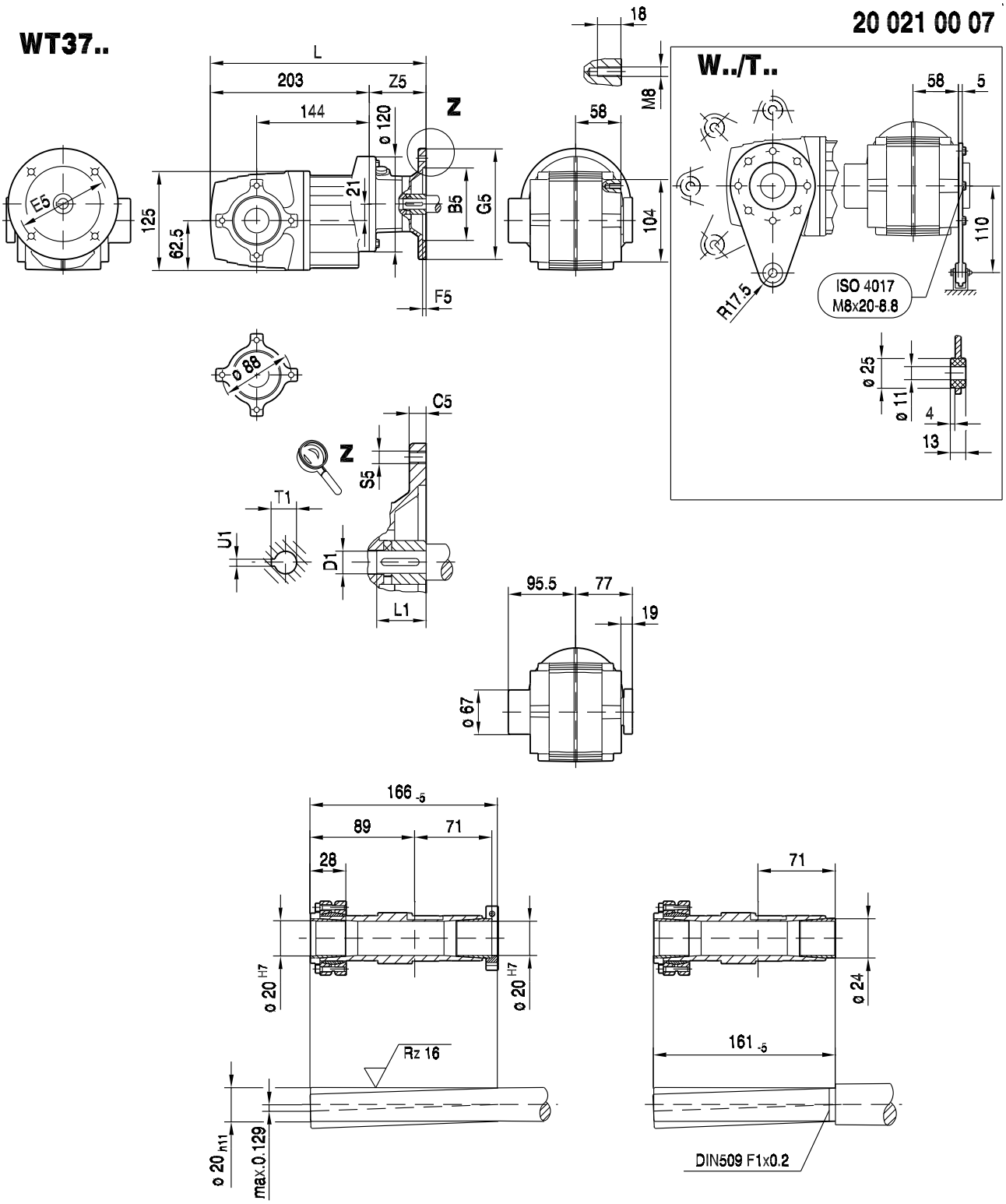

(→ 130)	B5	C5	E5	F5	G5	L	S5	Z5	D1	L1	T1	U1	
AM63	95	10	115	3.5	140	275	M8	72	11	23	12.8	4	
AM71	110	10	130	4.0	160	275	M8	72	14	30	16.3	5	
AM80	130	12	165	4.5	200	309	M10	106	19	40	21.8	6	
AM90	130	12	165	4.5	200	309	M10	106	24	50	27.3	8	

20 077 00 08

W47..

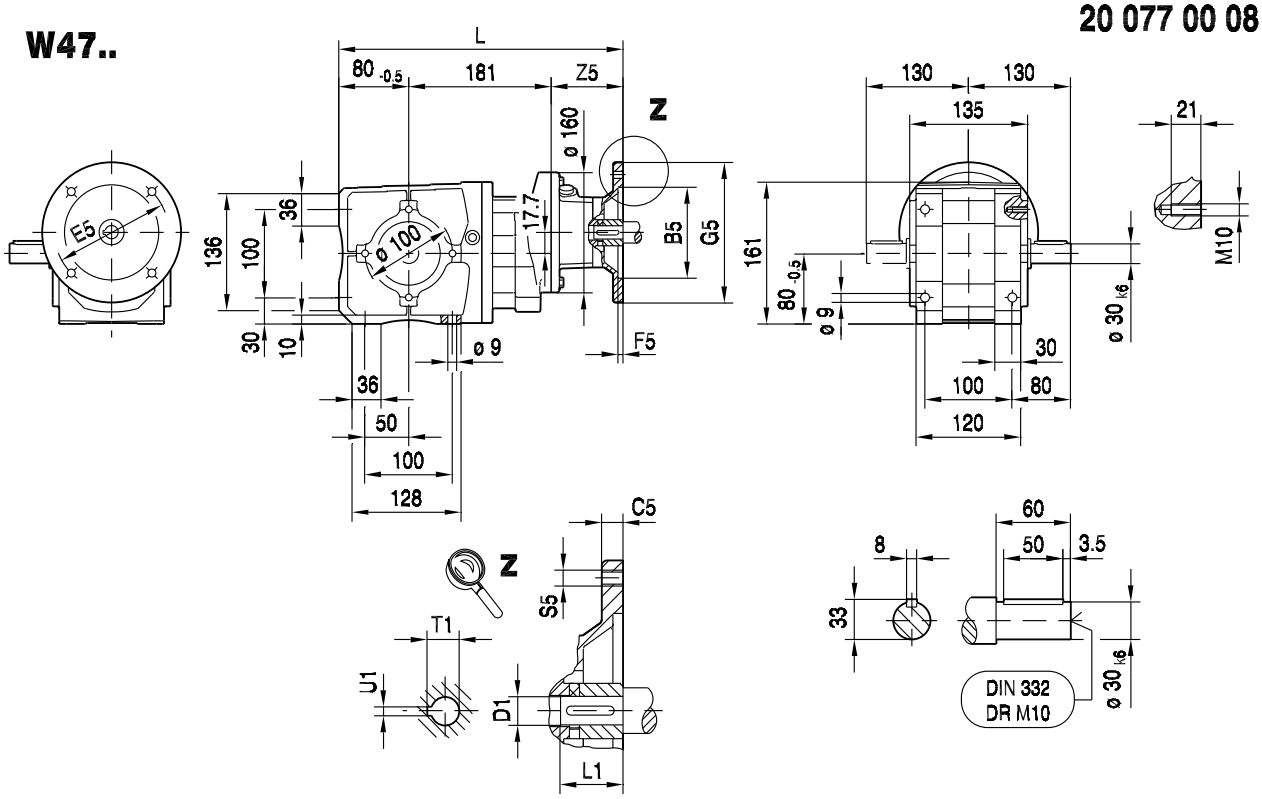

WA47B..

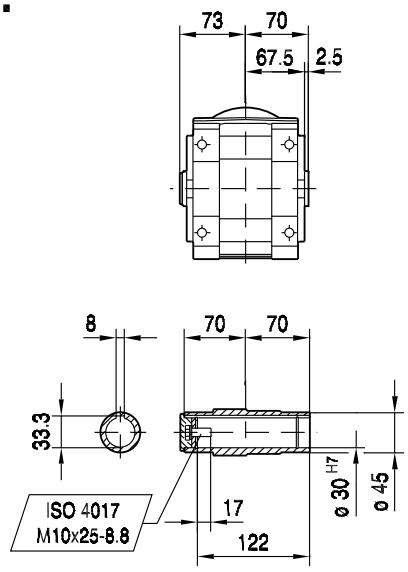

WH47B..

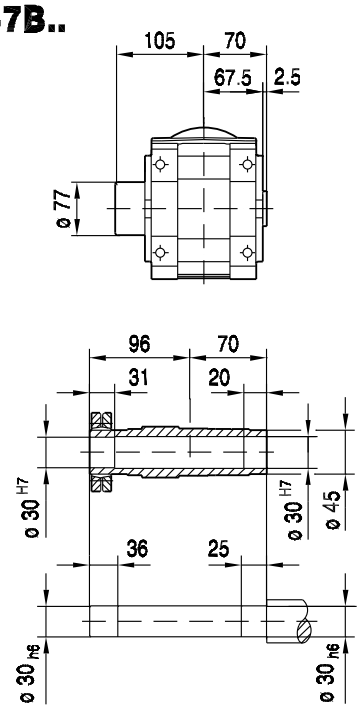

(→ 130)	B5	C5	E5	F5	G5	L	S5	Z5	D1	L1	T1	U1	
AM63	95	10	115	3.5	140	279	M8	72	11	23	12.8	4	
AM71	110	10	130	4.0	160	279	M8	72	14	30	16.3	5	
AM80	130	12	165	4.5	200	313	M10	106	19	40	21.8	6	
AM90	130	12	165	4.5	200	313	M10	106	24	50	27.3	8	

20 078 00 08

WF47..

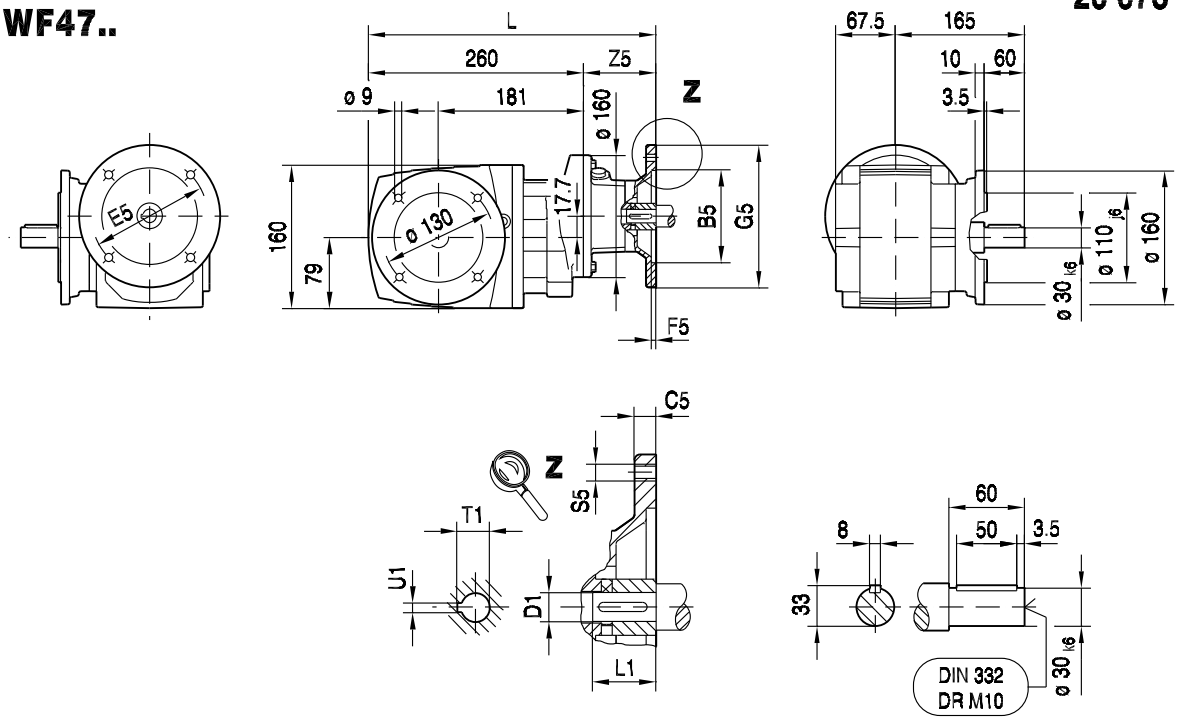

WAF47..

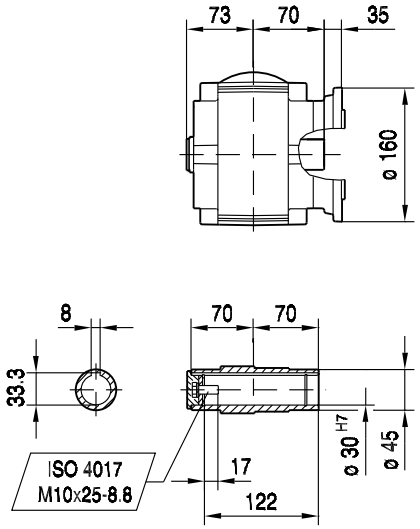

WHF47..

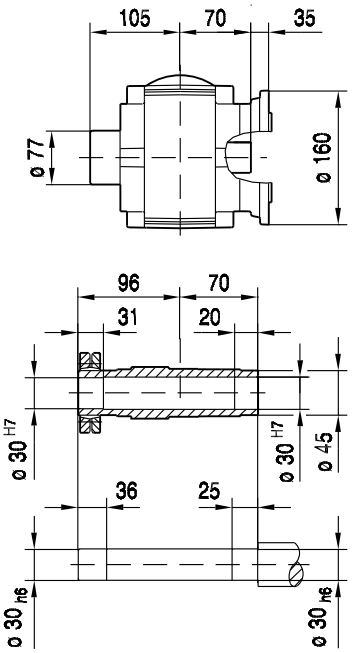

(→ 130)	B5	C5	E5	F5	G5	L	S5	Z5	D1	L1	T1	U1	
AM63	95	10	115	3.5	140	275	M8	72	11	23	12.8	4	
AM71	110	10	130	4.0	160	275	M8	72	14	30	16.3	5	
AM80	130	12	165	4.5	200	309	M10	106	19	40	21.8	6	
AM90	130	12	165	4.5	200	309	M10	106	24	50	27.3	8	

20 079 00 08

WA47..

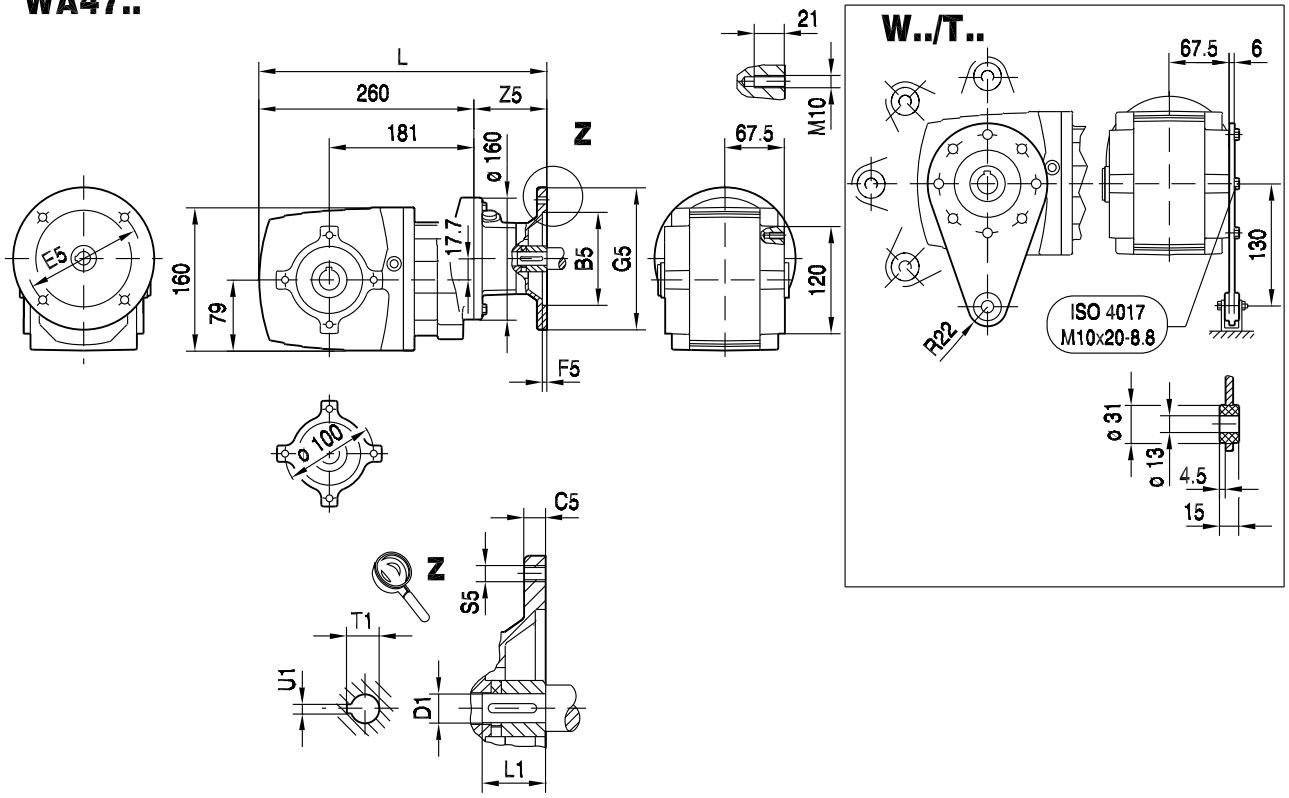

WA47..

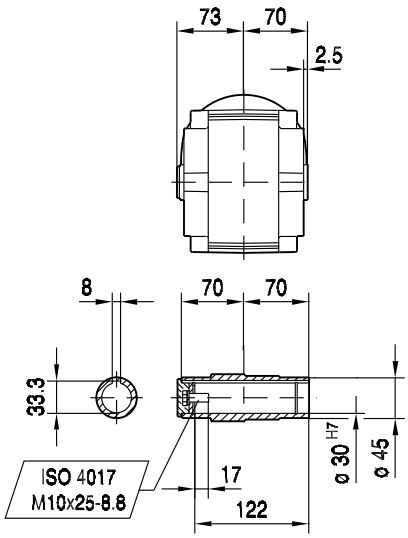

WH47..

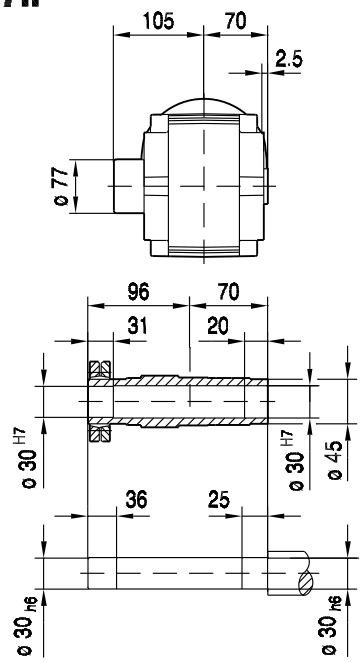

(→ 130)	B5	C5	E5	F5	G5	L	S5	Z5	D1	L1	T1	U1	
AM63	95	10	115	3.5	140	275	M8	72	11	23	12.8	4	
AM71	110	10	130	4.0	160	275	M8	72	14	30	16.3	5	
AM80	130	12	165	4.5	200	309	M10	106	19	40	21.8	6	
AM90	130	12	165	4.5	200	309	M10	106	24	50	27.3	8	

20 080 00 08

WT47..

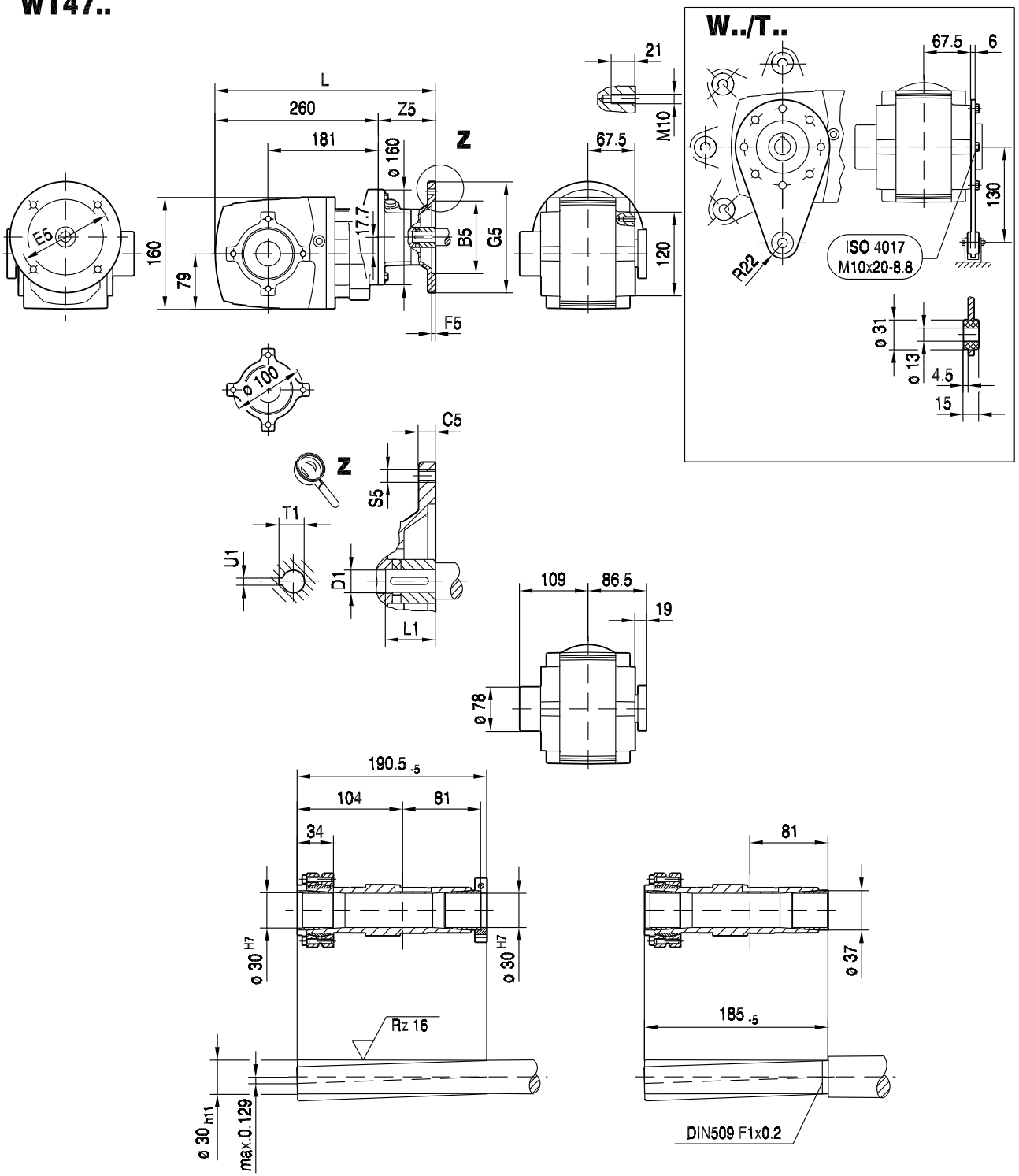

(→ 📖 130)	B5	C5	E5	F5	G5	L	S5	Z5	D1	L1	T1	U1	
AM63	95	10	115	3.5	140	275	M8	72	11	23	12.8	4	
AM71	110	10	130	4.0	160	275	M8	72	14	30	16.3	5	
AM80	130	12	165	4.5	200	309	M10	106	19	40	21.8	6	
AM90	130	12	165	4.5	200	309	M10	106	24	50	27.3	8	

12.4 W.. AM.. (NEMA) [mm]

20 007 00 07

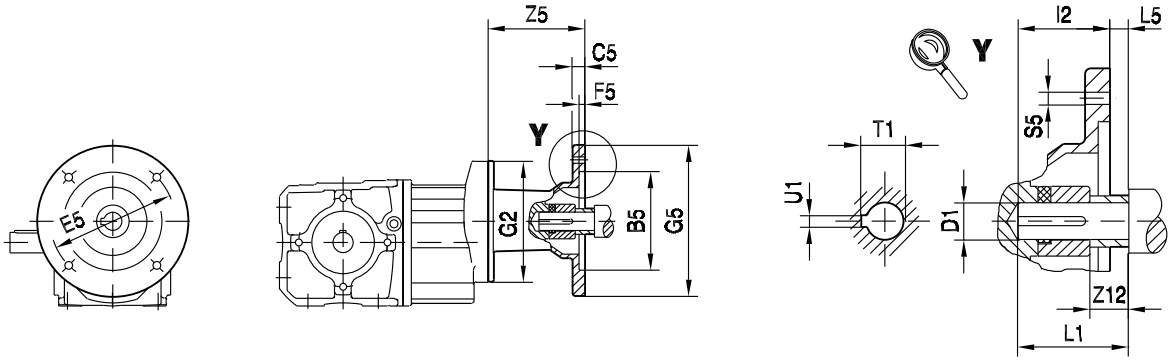

		B5	C5	E5	F5	G2	G5	I2	L5	S5	Z5	Z12	D1	L1	T1	U1
W..37	**AM56**	114.3	11	149.2	4.5	120	170	52.55	-4.8	10.5	93.5	16.5	15.875	47.75	18.1	4.76
	AM143		12					54.1	3.05		117	14.5	22.225	57.15	24.7	
	AM145															
W..47	**AM56**	114.3	11	149.2	4.5	160	170	52.55	-4.8	10.5	87	16.5	15.875	47.75	18.1	4.76
	AM143		12					54.1	3.05		110.5	14.5	22.225	57.15	24.7	
	AM145															

12.5 W.. AR.. [mm]

W.. AR..

20 009 00 07

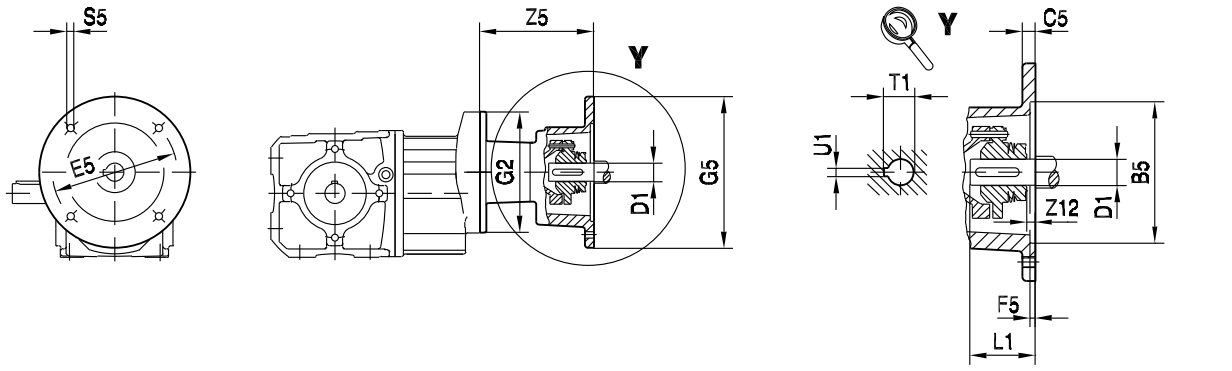

W.. AR../W

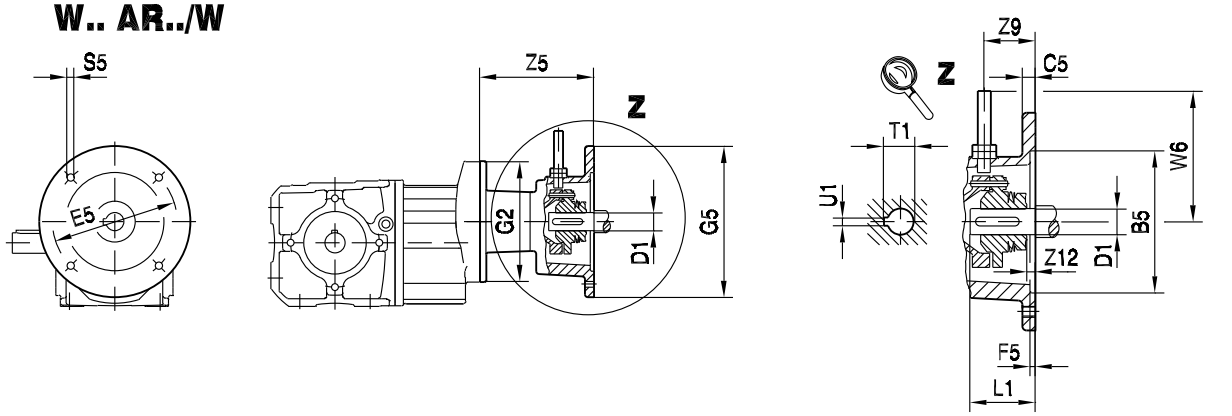

		B5	C5	E5	F5	G2	G5	S5	W6	Z5	Z9	Z12	D1	L1	T1	U1
W..37	**AR71**	110	10	130	3.5	120	160	M8	120	104	37	0	14	30	16.3	5
	AR80	130	12	165	4.5		200	M10		140.5			19	40	21.8	6
	AR90												24	50	27.3	8
W..47	**AR71**	110	10	130	3.5	160	160	M8	120	104	37	0	14	30	16.3	5
	AR80	130	12	165	4.5		200	M10		134			19	40	21.8	6
	AR90												24	50	27.3	8

12.6 W.. AD.. [mm]

20 010 01 07

W.. AD..

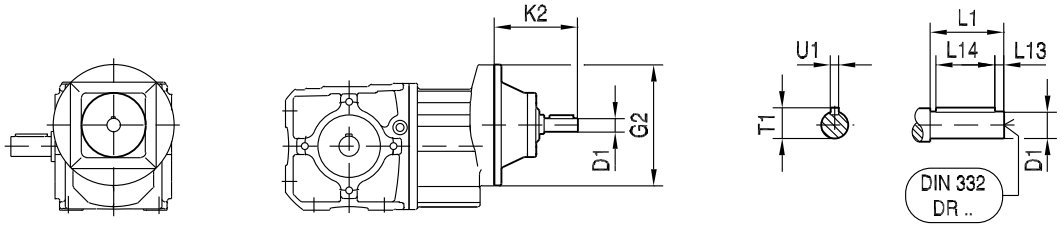

12

		G2	K2	D1	L1	L13	L14	T1	U1
W..37	**AD1**	120	102	16	40	4	32	18	5
	AD2		130	19	40	4	32	21.5	6
W..47	**AD2**	160	123	19	40	4	32	21.5	6

13 Abbreviation Key

For a detailed list of abbreviations used, refer to chapter 4 "Project Planning Information".

14 Address Directory

Germany			
Headquarters **Production** **Sales**	**Bruchsal**	SEW-EURODRIVE GmbH & Co KG Ernst-Blickle-Straße 42 D-76646 Bruchsal P.O. Box Postfach 3023 • D-76642 Bruchsal	Tel. +49 7251 75-0 Fax +49 7251 75-1970 http://www.sew-eurodrive.de sew@sew-eurodrive.de
Production / Industrial Gears	**Bruchsal**	SEW-EURODRIVE GmbH & Co KG Christian-Pähr-Str.10 D-76646 Bruchsal	Tel. +49 7251 75-0 Fax +49 7251 75-2970
Production	**Graben**	SEW-EURODRIVE GmbH & Co KG Ernst-Blickle-Straße 1 D-76676 Graben-Neudorf P.O. Box Postfach 1220 • D-76671 Graben-Neudorf	Tel. +49 7251 75-0 Fax +49 7251 75-2970
	Östringen	SEW-EURODRIVE Östringen GmbH Franz-Gurk-Straße 2 D-76684 Östringen P.O. Box Postfach 1174 • D-76677 Östringen	Tel. +49 7253 92540 Fax +49 7253 925490 oestringen@sew-eurodrive.de
Service Competence Center	**Central**	SEW-EURODRIVE GmbH & Co KG Ernst-Blickle-Straße 1 D-76676 Graben-Neudorf	Tel. +49 7251 75-1710 Fax +49 7251 75-1711 sc-mitte@sew-eurodrive.de
	North	SEW-EURODRIVE GmbH & Co KG Alte Ricklinger Straße 40-42 D-30823 Garbsen (near Hannover)	Tel. +49 5137 8798-30 Fax +49 5137 8798-55 sc-nord@sew-eurodrive.de
	East	SEW-EURODRIVE GmbH & Co KG Dänkritzer Weg 1 D-08393 Meerane (near Zwickau)	Tel. +49 3764 7606-0 Fax +49 3764 7606-30 sc-ost@sew-eurodrive.de
	South	SEW-EURODRIVE GmbH & Co KG Domagkstraße 5 D-85551 Kirchheim (near München)	Tel. +49 89 909552-10 Fax +49 89 909552-50 sc-sued@sew-eurodrive.de
	West	SEW-EURODRIVE GmbH & Co KG Siemensstraße 1 D-40764 Langenfeld (near Düsseldorf)	Tel. +49 2173 8507-30 Fax +49 2173 8507-55 sc-west@sew-eurodrive.de
	Electronics	SEW-EURODRIVE GmbH & Co KG Ernst-Blickle-Straße 42 D-76646 Bruchsal	Tel. +49 7251 75-1780 Fax +49 7251 75-1769 sc-elektronik@sew-eurodrive.de
	Drive Service Hotline / 24 Hour Service		+49 180 5 SEWHELP +49 180 5 7394357
Technical Offices	**Augsburg**	SEW-EURODRIVE GmbH & Co KG August-Wessels-Straße 27 D-86156 Augsburg	Tel. +49 821 22779-10 Fax +49 821 22779-50 tb-augsburg@sew-eurodrive.de
	Berlin	SEW-EURODRIVE GmbH & Co KG Lilienthalstraße 3a D-12529 Schönefeld	Tel. +49 306331131-30 Fax +49 306331131-36 tb-berlin@sew-eurodrive.de
	Bodensee	SEW-EURODRIVE GmbH & Co KG Burgbergring 91 D-88662 Überlingen	Tel. +49 7551 9226-30 Fax +49 7551 9226-56 tb-bodensee@sew-eurodrive.de
	Bremen	SEW-EURODRIVE GmbH & Co KG Bornstr.19 ... 22 D-28195 Bremen	Tel. +49 421 33918-10 Fax +49 421 33918-22 tb-bremen@sew-eurodrive.de
	Dortmund	SEW-EURODRIVE GmbH & Co KG Hildastraße 10 D-44145 Dortmund	Tel. +49 231 912050-10 Fax +49 231 912050-20 tb-dortmund@sew-eurodrive.de

Germany			
	Dresden	SEW-EURODRIVE GmbH & Co KG Hauptstraße 32 D-01445 Radebeul	Tel. +49 351 26338-0 Fax +49 351 26338-38 tb-dresden@sew-eurodrive.de
	Erfurt	SEW-EURODRIVE GmbH & Co KG Dubliner Straße 12 D-99091 Erfurt	Tel. +49 361 21709-70 Fax +49 361 21709-79 tb-erfurt@sew-eurodrive.de
	Güstrow	SEW-EURODRIVE GmbH & Co KG Am Gewerbegrund 3 D-18273 Güstrow P.O. Box Postfach 1216 • D-18262 Güstrow	Tel. +49 3843 8557-80 Fax +49 3843 8557-88 tb-guestrow@sew-eurodrive.de
	Hamburg	SEW-EURODRIVE GmbH & Co KG Bramfelder Straße 119 D-22305 Hamburg	Tel. +49 40 298109-60 Fax +49 40 298109-70 tb-hamburg@sew-eurodrive.de
	Hannover/ Garbsen	SEW-EURODRIVE GmbH & Co KG Alte Ricklinger Str.40-42 D-30823 Garbsen P.O. Box Postfach 1104 53 • D-30804 Garbsen	Tel. +49 5137 8798-10 Fax +49 5137 8798-50 tb-hannover@sew-eurodrive.de
	Heilbronn	SEW-EURODRIVE GmbH & Co KG Zeppelinstraße 7 D-74357 Bönnigheim	Tel. +49 7143 8738-0 Fax +49 7143 8738-25 tb-heilbronn@sew-eurodrive.de
	Herford	SEW-EURODRIVE GmbH & Co KG Radewiger Straße 21 D-32052 Herford P.O. Box Postfach 4108 • D-32025 Herford	Tel. +49 5221 9141-0 Fax +49 5221 9141-20 tb-herford@sew-eurodrive.de
	Karlsruhe	SEW-EURODRIVE GmbH & Co KG Ettlinger Weg 2 D-76467 Bietigheim P.O. Box Postfach 43 • D-76463 Bietigheim	Tel. +49 7245 9190-10 Fax +49 7245 9190-20 tb-karlsruhe@sew-eurodrive.de
	Kassel	SEW-EURODRIVE GmbH & Co KG Lange Straße 14 D-34253 Lohfelden	Tel. +49 561 95144-80 Fax +49 561 95144-90 tb-kassel@sew-eurodrive.de
	Koblenz	SEW-EURODRIVE GmbH & Co KG Bahnstraße 17a D-56743 Mendig	Tel. +49 2652 9713-30 Fax +49 2652 9713-40 tb-koblenz@sew-eurodrive.de
	Lahr	SEW-EURODRIVE GmbH & Co KG Europastraße 3/1 D-77933 Lahr / Schwarzwald	Tel. +49 7821 90999-60 Fax +49 7821 90999-79 tb-lahr@sew-eurodrive.de
	Langenfeld	SEW-EURODRIVE GmbH & Co KG Siemensstraße 1 D-40764 Langenfeld	Tel. +49 2173 8507-10 Fax +49 2173 8507-50 tb-langenfeld@sew-eurodrive.de
	Magdeburg	SEW-EURODRIVE GmbH & Co KG Breiteweg 53 D-39179 Barleben	Tel. +49 39203 7577-1 Fax +49 39203 7577-9 tb-magdeburg@sew-eurodrive.de
	Mannheim	SEW-EURODRIVE GmbH & Co KG Besselstraße 26 D-68219 Mannheim	Tel. +49 621 71683-10 Fax +49 621 71683-22 tb-mannheim@sew-eurodrive.de
	München	SEW-EURODRIVE GmbH & Co KG Domagkstraße 5 D-85551 Kirchheim	Tel. +49 89 90955-110 Fax +49 89 90955-150 tb-muenchen@sew-eurodrive.de
	Münster	SEW-EURODRIVE GmbH & Co KG Hafenplatz 4 D-48155 Münster	Tel. +49 251 41475-11 Fax +49 251 41475-50 tb-muenster@sew-eurodrive.de

Germany			
	Nürnberg	SEW-EURODRIVE GmbH & Co KG Plattenäckerweg 6 D-90455 Nürnberg	Tel. +49 911 98884-50 Fax +49 911 98884-60 tb-nuernberg@sew-eurodrive.de
	Regensburg	SEW-EURODRIVE GmbH & Co KG Im Gewerbepark A15 D-93059 Regensburg	Tel. +49 941 46668-68 Fax +49 941 46668-66 tb-regensburg@sew-eurodrive.de
	Rhein-Main	SEW-EURODRIVE GmbH & Co KG Niederstedter Weg 5 D-61348 Bad Homburg	Tel. +49 6172 9617-0 Fax +49 6172 9617-50 tb-rheinmain@sew-eurodrive.de
	Stuttgart	SEW-EURODRIVE GmbH & Co KG Friedrich-List-Straße 46 D-70771 Leinfelden-Echterdingen	Tel. +49 711 16072-0 Fax +49 711 16072-72 tb-stuttgart@sew-eurodrive.de
	Ulm	SEW-EURODRIVE GmbH & Co KG Dieselstraße 14 D-89160 Dornstadt	Tel. +49 7348 9885-0 Fax +49 7348 9885-90 tb-ulm@sew-eurodrive.de
	Würzburg	SEW-EURODRIVE GmbH & Co KG Nürnbergerstraße 118 D-97076 Würzburg-Lengfeld	Tel. +49 931 27886-60 Fax +49 931 27886-66 tb-wuerzburg@sew-eurodrive.de
	Zwickau / Meerane	SEW-EURODRIVE GmbH & Co KG Dänkritzer Weg1 D-08393 Meerane	Tel. +49 3764 7606-0 Fax +49 3764 7606-20 tb-zwickau@sew-eurodrive.de

France			
Production **Sales** **Service**	**Haguenau**	SEW-USOCOME 48-54 route de Soufflenheim B. P. 20185 F-67506 Haguenau Cedex	Tel. +33 3 88 73 67 00 Fax +33 3 88 73 66 00 http://www.usocome.com sew@usocome.com
Production	**Forbach**	SEW-USOCOME Zone industrielle Technopôle Forbach Sud B. P. 30269 F-57604 Forbach Cedex	Tel. +33 3 87 29 38 00
Assembly **Sales** **Service**	**Bordeaux**	SEW-USOCOME Parc d'activités de Magellan 62 avenue de Magellan - B. P. 182 F-33607 Pessac Cedex	Tel. +33 5 57 26 39 00 Fax +33 5 57 26 39 09
	Lyon	SEW-USOCOME Parc d'affaires Roosevelt Rue Jacques Tati F-69120 Vaulx en Velin	Tel. +33 4 72 15 37 00 Fax +33 4 72 15 37 15
	Nantes	SEW-USOCOME Parc d'activités de la forêt 4 rue des Fontenelles F-44140 Le Bignon	Tel. +33 2 40 78 42 00 Fax +33 2 40 78 42 20
	Paris	SEW-USOCOME Zone industrielle 2 rue Denis Papin F-77390 Verneuil l'Etang	Tel. +33 1 64 42 40 80 Fax +33 1 64 42 40 88
Technical Offices	**Alsace**	SEW-USOCOME 1 rue Auguste Gasser F-68360 Soultz	Tel. +33 3 89 74 51 62 Fax +33 3 89 76 58 71
	Aquitaine / Charentes	SEW-USOCOME Parc d'activités de Magellan 62 avenue de Magellan B. P. 182 F-33607 Pessac Cedex	Tel. +33 5 57 26 39 00 Fax +33 5 57 26 39 09

France			
	Auvergne / Limousin	SEW-USOCOME Farges F-19600 Chasteaux	Tel. +33 5 55 20 12 10 Fax +33 5 55 20 12 11
	Lower Normandy	SEW-USOCOME 5 rue de la Limare F-14250 Brouay	Tel. +33 2 31 37 92 86 Fax +33 2 31 74 68 15
	Bourgogne	SEW-USOCOME 10 rue de la poste F-71350 Saint Loup Géanges	Tel. +33 3 85 49 92 18 Fax +33 3 85 49 92 19
	Brittany	SEW-USOCOME Parc d'activités de la forêt 4 rue des Fontenelles F-44140 Le Bignon	Tel. +33 2 28 21 12 52 Fax +33 2 28 21 12 84
	Centre / Poitou	SEW-USOCOME Parc d'activités de la forêt 4 rue des Fontenelles F-44140 Le Bignon	Tel. +33 2 40 78 42 11 Fax +33 2 40 78 42 20
	Champagne-Ardenne	SEW-USOCOME Impasse des Ouises F-10120 Saint André les Vergers	Tel. +33 3 25 79 63 24 Fax +33 3 25 79 63 25
	Franche-Comté	SEW-USOCOME 5 route de Besançon Maison B F-25870 Devecey	Tel. +33 3 81 60 20 47 Fax +33 3 81 87 75 93
	Île-de-France East / Aisne	SEW-USOCOME 45 rue des Cinelles F-77700 Bailly Romainvilliers	Tel. +33 1 64 17 02 47 Fax +33 1 64 17 66 49
	Île-de-France North / Picardy	SEW-USOCOME 25bis rue Kléber F-92300 Levallois Perret	Tel. +33 1 41 05 92 74 Fax +33 1 41 05 92 75
	Île-de-France South	SEW-USOCOME 6 chemin des bergers Lieu-dit Marchais F-91410 Roinville sous Dourdan	Tel. +33 1 60 81 10 56 Fax +33 1 60 81 10 57
	Lorraine / Alsace North	SEW-USOCOME 1 rue de la forêt F-54250 Champigneulles	Tel. +33 3 83 96 28 04 Fax +33 3 83 96 28 07
	Midi-Pyrénées / Roussillon	SEW-USOCOME 179 route de Grazac F-31190 Caujac	Tel. +33 5 61 08 15 85 Fax +33 5 61 08 16 44
	Nord-Pas-de-Calais	SEW-USOCOME 209 route d'Hesdigneul F-62360 Hesdin l'Abbé	Tel. +33 3 21 10 86 86 Fax +33 3 21 10 86 87
	Paris / Île-de-France West	SEW-USOCOME 42 avenue Jean Jaurès F-78580 Maule	Tel. +33 1 30 90 89 86 Fax +33 1 30 90 93 15
	Pays de la Loire	SEW-USOCOME Parc d'activités de la forêt 4 rue des Fontenelles F-44140 Le Bignon	Tel. +33 2 51 70 54 04 Fax +33 2 51 70 54 05
	Provence-Alpes-Côte d'Azur	SEW-USOCOME Résidence Les Hespérides Bât. B2 67 boulevard des Alpes F-13012 Marseille	Tel. +33 4 91 18 00 11 Fax +33 4 91 18 00 12

France			
	Rhône-Alpes East	SEW-USOCOME Montée de la Garenne F-26750 Génissieux	Tel. +33 4 75 05 65 95 Fax +33 4 75 05 65 96
	Rhône-Alpes North	SEW-USOCOME Parc d'affaires Roosevelt Rue Jacques Tati F-69120 Vaulx en Velin	Tel. +33 4 72 15 37 03 Fax +33 4 72 15 37 15
	Rhône-Alpes West	SEW-USOCOME Parc d'affaires Roosevelt Rue Jacques Tati F-69120 Vaulx en Velin	Tel. +33 4 72 15 37 04 Fax +33 4 72 15 37 15

Algeria			
Sales	**Alger**	REDUCOM Sarl 16, rue des Frères Zaghnoune Bellevue 16200 El Harrach Alger	Tel. +213 21 8214-91 Fax +213 21 8222-84 info@reducom-dz.com http://www.reducom-dz.com

Argentina			
Assembly **Sales** **Service**	**Buenos Aires**	SEW EURODRIVE ARGENTINA S.A. Centro Industrial Garin, Lote 35 Ruta Panamericana Km 37,5 1619 Garin	Tel. +54 3327 4572-84 Fax +54 3327 4572-21 sewar@sew-eurodrive.com.ar http://www.sew-eurodrive.com.ar

Australia			
Assembly **Sales** **Service**	**Melbourne**	SEW-EURODRIVE PTY. LTD. 27 Beverage Drive Tullamarine, Victoria 3043	Tel. +61 3 9933-1000 Fax +61 3 9933-1003 http://www.sew-eurodrive.com.au enquires@sew-eurodrive.com.au
	Sydney	SEW-EURODRIVE PTY. LTD. 9, Sleigh Place, Wetherill Park New South Wales, 2164	Tel. +61 2 9725-9900 Fax +61 2 9725-9905 enquires@sew-eurodrive.com.au
Sales **Service**	**Adelaide**	SEW-EURODRIVE PTY. LTD. 9C Park Way Mawson Lakes, SA 5095	Tel. +61 8 8161 4000 Fax +61 8 8161 4002 enquires@sew-eurodrive.com.au
	Brisbane	SEW-EURODRIVE PTY.LTD. 1 /34 Collinsvale St Rocklea, Queensland, 4106	Tel. +61 7 3276 5100 Fax +61 7 3276 5102 enquires@sew-eurodrive.com.au
	Perth	SEW-EURODRIVE PTY. LTD. 10 Colin Jamieson Drive Welshpool, WA 6106	Tel. +61 8 9251-4900 Fax +61 8 9251-4903 enquires@sew-eurodrive.com.au
Technical Office	**Townsville**	SEW-EURODRIVE PTY. LTD. 12 Leyland Street Garbutt, QLD 4814	Tel. +61 7 4779 4333 Fax +61 7 4779 5333 enquires@sew-eurodrive.com.au

Austria			
Assembly **Sales** **Service**	**Wien**	SEW-EURODRIVE Ges.m.b.H. Richard-Strauss-Strasse 24 A-1230 Wien	Tel. +43 1 617 55 00-0 Fax +43 1 617 55 00-30 http://www.sew-eurodrive.at sew@sew-eurodrive.at
Technical Offices	**Linz**	SEW-EURODRIVE Ges.m.b.H. Reuchlinstr. 6/3 A-4020 Linz	Tel. +43 732 655 109-0 Fax +43 732 655 109-20 tb-linz@sew-eurodrive.at
	Graz	SEW-EURODRIVE Ges.m.b.H. Grabenstraße 231 A-8045 Graz	Tel. +43 316 685 756-0 Fax +43 316 685 755 tb-graz@sew-eurodrive.at

Austria			
	Dornbirn	SEW-EURODRIVE Ges.m.b.H. Lustenauerstraße 27/1 A-6850 Dornbirn	Tel. +43 5572 3725 99-0 Fax +43 5572 3725 99-20 tb-dornbirn@sew-eurodrive.at

Bangladesh			
Sales	**Dhaka**	Jainex Industrial and Engineering Ltd B 12 Apon Nibash East Nasirabad Bangladesh	Tel. +880 1713103502 Fax +880 31 613041 jainexbd@onlinectg.net

Belarus			
Sales	**Minsk**	SEW-EURODRIVE BY RybalkoStr. 26 BY-220033 Minsk	Tel.+375 (17) 298 38 50 Fax +375 (17) 29838 50 sales@sew.by

Belgium			
Assembly **Sales** **Service**	**Brussels**	**SEW Caron-Vector** Research park Haasrode Evenementenlaan 7 BE-3001 Leuven	Tel. +32 16 386-311 Fax +32 16 386-336 http://www.sew-eurodrive.be info@sew-eurodrive.be
Service Competence Center	**Industrial Gears**	**SEW Caron-Vector** Rue de Parc Industriel, 31 BE-6900 Marche-en-Famenne	Tel. +32 84 219-878 Fax +32 84 219-879 http://www.sew-eurodrive.be service-wallonie@sew-eurodrive.be
	Antwerp	**SEW Caron-Vector** Glasstraat, 19 BE-2170 Merksem	Tel. +32 3 64 19 333 Fax +32 3 64 19 336 http://www.sew-eurodrive.be service-antwerpen@sew-eurodrive.be

Brazil			
Production **Sales** **Service**	**Sao Paulo**	SEW-EURODRIVE Brasil Ltda. Avenida Amâncio Gaiolli, 152 - Rodovia Presidente Dutra Km 208 Guarulhos - 07251-250 - SP SAT - SEW ATENDE - 0800 7700496	Tel. +55 11 2489-9133 Fax +55 11 2480-3328 http://www.sew-eurodrive.com.br sew@sew.com.br

Bulgaria			
Sales	**Sofia**	BEVER-DRIVE GmbH Bogdanovetz Str.1 BG-1606 Sofia	Tel. +359 2 9151160 Fax +359 2 9151166 bever@mail.bg

Cameroon			
Sales	**Douala**	Electro-Services Rue Drouot Akwa B.P. 2024 Douala	Tel. +237 33 431137 Fax +237 33 431137 electrojemba@yahoo.fr

Canada			
Assembly **Sales** **Service**	**Toronto**	SEW-EURODRIVE CO. OF CANADA LTD. 210 Walker Drive Bramalea, ON L6T 3W1	Tel. +1 905 791-1553 Fax +1 905 791-2999 http://www.sew-eurodrive.ca l.watson@sew-eurodrive.ca
	Vancouver	SEW-EURODRIVE CO. OF CANADA LTD. Tilbury Industrial Park 7188 Honeyman Street Delta, BC V4G 1G1	Tel. +1 604 946-5535 Fax +1 604 946-2513 b.wake@sew-eurodrive.ca
	Montreal	SEW-EURODRIVE CO. OF CANADA LTD. 2555 Rue Leger Lasalle, PQ H8N 2V9	Tel. +1 514 367-1124 Fax +1 514 367-3677 a.peluso@sew-eurodrive.ca

Canada			
	Additional addresses for service in Canada provided on request!		

Chile			
Assembly **Sales** **Service**	**Santiago de Chile**	SEW-EURODRIVE CHILE LTDA. Las Encinas 1295 Parque Industrial Valle Grande LAMPA RCH-Santiago de Chile P.O. Box Casilla 23 Correo Quilicura - Santiago - Chile	Tel. +56 2 75770-00 Fax +56 2 75770-01 http://www.sew-eurodrive.cl ventas@sew-eurodrive.cl

China			
Production **Assembly** **Sales** **Service**	**Tianjin**	SEW-EURODRIVE (Tianjin) Co., Ltd. No. 46, 7th Avenue, TEDA Tianjin 300457	Tel. +86 22 25322612 Fax +86 22 25323273 info@sew-eurodrive.cn http://www.sew-eurodrive.com.cn
Assembly **Sales** **Service**	**Suzhou**	SEW-EURODRIVE (Suzhou) Co., Ltd. 333, Suhong Middle Road Suzhou Industrial Park Jiangsu Province, 215021	Tel. +86 512 62581781 Fax +86 512 62581783 suzhou@sew-eurodrive.cn
	Guangzhou	SEW-EURODRIVE (Guangzhou) Co., Ltd. No. 9, JunDa Road East Section of GETDD Guangzhou 510530	Tel. +86 20 82267890 Fax +86 20 82267922 guangzhou@sew-eurodrive.cn
	Shenyang	SEW-EURODRIVE (Shenyang) Co., Ltd. 10A-2, 6th Road Shenyang Economic Technological Development Area Shenyang, 110141	Tel. +86 24 25382538 Fax +86 24 25382580 shenyang@sew-eurodrive.cn
	Wuhan	SEW-EURODRIVE (Wuhan) Co., Ltd. 10A-2, 6th Road No. 59, the 4th Quanli Road, WEDA 430056 Wuhan	Tel. +86 27 84478388 Fax +86 27 84478389 wuhan@sew-eurodrive.cn
	Xi'An	SEW-EURODRIVE (Xi'An) Co., Ltd. No. 12 Jinye 2nd Road Xi'An High-Technology Industrial Development Zone Xi'An 710065	Tel. +86 29 68686262 Fax +86 29 68686311 xian@sew-eurodrive.cn

Colombia			
Assembly **Sales** **Service**	**Bogotá**	SEW-EURODRIVE COLOMBIA LTDA. Calle 22 No. 132-60 Bodega 6, Manzana B Santafé de Bogotá	Tel. +57 1 54750-50 Fax +57 1 54750-44 http://www.sew-eurodrive.com.co sewcol@sew-eurodrive.com.co

Croatia			
Sales **Service**	**Zagreb**	KOMPEKS d. o. o. Zeleni dol 10 HR 10 000 Zagreb	Tel. +385 1 4613-158 Fax +385 1 4613-158 kompeks@inet.hr

Czech Republic			
Sales	**Prague**	SEW-EURODRIVE CZ S.R.O. Business Centrum Praha Lužná 591 CZ-16000 Praha 6 - Vokovice	Tel. +420 255 709 601 Fax +420 220 121 237 http://www.sew-eurodrive.cz sew@sew-eurodrive.cz
Technical Offices	**Brno**	SEW-EURODRIVE CZ S.R.O. Křenová 52 CZ -60200 Brno	Tel. +420 543 256 151 +420 543 256 163 Fax +420 543 256 845

Czech Republic			
	Hradec Králové	SEW-EURODRIVE CZ S.R.O. Čechova 498 CZ-50202 Hradec Králové	Tel. +420 495 510 141 Fax +420 495 521 313
	Plzeň	SEW-EURODRIVE CZ S.R.O. Areal KRPA a.s. Zahradni 173/2 CZ-32600 Plzeň	Tel. +420 378 775 300 Fax +420 377 970 710
	Ostrava	SEW-EURODRIVE CZ S.R.O. Studentská 6202/17 CZ-708 00 Ostrava-Poruba	Tel. +420 597 329 044 Mobile +420 724 889 965
	Klatovy	SEW-EURODRIVE CZ S.R.O. Technická kancelář Klatovy Domažlická 800 CZ-33901 Klatovy	Tel. +420 376 310 729 Fax +420 376 310 725

Denmark			
Assembly **Sales** **Service**	**Copenhagen**	SEW-EURODRIVEA/S Geminivej 28-30 DK-2670 Greve	Tel. +45 43 9585-00 Fax +45 43 9585-09 http://www.sew-eurodrive.dk sew@sew-eurodrive.dk

Egypt			
Sales **Service**	**Cairo**	Copam Egypt for Engineering & Agencies 33 El Hegaz ST, Heliopolis, Cairo	Tel. +20 2 22566-299 + 1 23143088 Fax +20 2 22594-757 http://www.copam-egypt.com/ copam@datum.com.eg

Estonia			
Sales	**Tallin**	ALAS-KUUL AS Reti tee 4 EE-75301 Peetri küla, Rae vald, Harjumaa	Tel. +372 6593230 Fax +372 6593231 veiko.soots@alas-kuul.ee

Finland			
Assembly **Sales** **Service**	**Lahti**	SEW-EURODRIVE OY Vesimäentie 4 FIN-15860 Hollola 2	Tel. +358 201 589-300 Fax +358 3 780-6211 http://www.sew-eurodrive.fi sew@sew.fi
Technical Offices	**Helsinki**	SEW-EURODRIVE OY Luutnantintie 5 FIN-00410 Helsinki	Tel. +358 201 589-300 Fax + 358 9 5666-311 sew@sew.fi
	Vaasa	SEW-EURODRIVE OY Hietasaarenkatu 18 FIN-65100 Vaasa	Tel. +358 201 589-300 Fax +358 6 3127-470 sew@sew.fi
	Rovaniemi	SEW-EURODRIVE OY Valtakatu 4 A FIN-96100 Rovaniemi	Tel. +358 201 589-300 Fax +358 201 589-239 sew@sew.fi
Production **Assembly**	**Karkkila**	SEW Industrial Gears Oy Valurinkatu 6, PL 8 FI-03600 Karkkila, 03601 Karkkila	Tel. +358 201 589-300 Fax +358 201 589-310 sew@sew.fi http://www.sew-eurodrive.fi

Gabon			
Sales	**Libreville**	ESG Electro Services Gabun Feu Rouge Lalala 1889 Libreville Gabun	Tel. +241 741059 Fax +241 741059 esg_services@yahoo.fr

Great Britain			
Assembly **Sales** **Service**	**Normanton**	SEW-EURODRIVE Ltd. Beckbridge Industrial Estate P.O. Box No.1 Normanton, West-Yorkshire WF6 1QR	Tel. +44 1924 893-855 Fax +44 1924 893-702 http://www.sew-eurodrive.co.uk info@sew-eurodrive.co.uk
Technical Offices	**London**	SEW-EURODRIVE Ltd. 764 Finchely Road, Temple Fortune London N.W.11 7TH	Tel. +44 20 8458-8949 Fax +44 20 8458-7417
	Midlands	SEW-EURODRIVE Ltd. 5 Sugar Brook court, Aston Road, Bromsgrove, Worcs B60 3EX	Tel. +44 1527 877-319 Fax +44 1527 575-245
	Scotland	SEW-EURODRIVE Ltd. Scottish Office No 37 Enterprise House Springkerse Business Park Stirling FK7 7UF Scotland	Tel. +44 17 8647-8730 Fax +44 17 8645-0223

Greece			
Sales **Service**	**Athens**	Christ. Boznos & Son S.A. 12, K. Mavromichali Street P.O. Box 80136 GR-18545 Piraeus	Tel. +30 2 1042 251-34 Fax +30 2 1042 251-59 http://www.boznos.gr info@boznos.gr
Technical Office	**Thessaloniki**	Christ. Boznos & Son S.A. Asklipiou 26 562 24 Evosmos, Thessaloniki	Tel. +30 2 310 7054-00 Fax +30 2 310 7055-15 info@boznos.gr

Hong Kong			
Assembly **Sales** **Service**	**Hong Kong**	SEW-EURODRIVE LTD. Unit No. 801-806, 8th Floor Hong Leong Industrial Complex No. 4, Wang Kwong Road Kowloon, Hong Kong	Tel. +852 36902200 Fax +852 36902211 contact@sew-eurodrive.hk

Hungary			
Sales **Service**	**Budapest**	SEW-EURODRIVE Kft. H-1037 Budapest Kunigunda u. 18	Tel. +36 1 437 06-58 Fax +36 1 437 06-50 office@sew-eurodrive.hu

Iceland			
Sales	**Reykjavik**	Vélaverk ehf. Bolholti 8, 3h. IS - 105 Reykjavik	Tel. +354 568 3536 Fax +354 568 3537 velaverk@velaverk.is

India			
Registered Office **Assembly** **Sales** **Service**	**Vadodara**	SEW-EURODRIVE India Private Limited Plot No. 4, GIDC POR Ramangamdi • Vadodara - 391 243 Gujarat	Tel. +91 265 3045200, +91 265 2831086 Fax +91 265 3045300, +91 265 2831087 http://www.seweurodriveindia.com sales@seweurodriveindia.com subodh.ladwa@seweurodriveindia.com



India			
Assembly **Sales** **Service**	**Chennai**	SEW-EURODRIVE India Private Limited Plot No. K3/1, Sipcot Industrial Park Phase II Mambakkam Village Sriperumbudur - 602105 Kancheepuram Dist, Tamil Nadu	Tel. +91 44 37188888 Fax +91 44 37188811 c.v.shivkumar@seweurodriveindia.com
Technical Offices	**Ahmedabad**	SEW-EURODRIVE India Private Limited 306, Shaan office complex, Behind Sakar-IV, Ellisebridge, Ashram Road Ahmedabad – Gujarat	Tel. +91 79 40072067/68 Fax +91 79 40072069 subodh.ladwa@seweurodriveindia.com
	Bengaluru	SEW-EURODRIVE India Private Limited 308, Prestige Centre Point 7, Edward Road Bengaluru - 560052 - Karnataka	Tel. +91 80 22266565 Fax +91 80 22266569 salesbang@seweurodriveindia.com ganesh@seweurodriveindia.com
	Chennai	SEW-EURODRIVE India Private Limited 2nd Floor, Josmans Complex, No. 5, McNichols Road, Chetpet Chennai - 600031 - Tamil Nadu	Tel. +91 44 42849813 Fax +91 44 42849816 saleschen@seweurodriveindia.com c.v.shivkumar@seweurodriveindia.com
	Coimbatore	SEW-EURODRIVE India Private Limited Office No 60 Arpee Centre (Opp Annapoorna Hotel) 420 N, NSR Road, Saibaba Colony Coimbatore 641 0111 - Tamil Nadu	Tel. +91 422 2455420 Fax +91 422 2443988 salescmb@seweurodriveindia.com p.selvakumar@seweurodriveindia.com
	Cuttack	SEW-EURODRIVE India Private Limited Plot No.- 1764, Nuasahi, Nayapalli Bhubaneswar-12 Orissa	Tel. +91 9937446333 manoranjan.sahoo@seweurodriveindia.com
	Hyderabad	SEW-EURODRIVE India Private Limited 408, 4th Floor, Meridian Place Green Park Road Amerpeet Hyderabad - 500016 - Andhra Pradesh	Tel. +91 40 23414698 Fax +91 40 23413884 saleshyd@seweurodriveindia.com ma.choudary@seweurodriveindia.com
	Jamshedpur	SEW-EURODRIVE India Private Limited Flat No.: B/2, B.S. Apartment Road No.: 4, Contractor's area, Bistupur Jamshedpur 831 001 - Chhattisgarh	Tel. +91 9934123671 siddaratha.mishra@seweurodriveindia.com
	Kolkata	SEW EURODRIVE India Private Limited 2nd floor, Room No. 35 Chowringhee Court 55, Chowringhee Road Kolkata - 700 071 - West Bengal	Tel. +91 33 22827457 Fax +91 33 22894204 saleskal@seweurodriveindia.com a.j.biswas@seweurodriveindia.com
	Lucknow	SEW-EURODRIVE India Private Limited 69, Shiv Vihar Colony Vikas Nagar-5 Lucknow 226022 - Uttar Pradesh	Tel. +91 9793627333 amit.nigam@seweurodriveindia.com
	Mumbai	SEW-EURODRIVE India Private Limited 312 A, 3rd Floor, Acme Plaza, J.B. Nagar, Andheri Kurla Road, Andheri (E) Mumbai - 400059 - Maharashtra	Tel. +91 22 28348440 Fax +91 22 28217858 salesmumbai@seweurodriveindia.com p.s.ray@seweurodriveindia.com
	Nagpur	SEW-EURODRIVE India Private Limited Piyush S .Kudawale Ganga Residency, 204, Shahu Nagar, Manewada-Besa Road, Post- Mhalgi Nagar, Nagpur - 440034	Tel. +91 9561089525 -piyush.kudawale@seweurodriveindia.com

India			
	New Delhi	SEW-EURODRIVE India Private Limited 418-419, Suneja Tower-1 District Centre, Janak Puri New Delhi 110 058	Tel. +91 11 25544111 Fax +91 11 25544113 salesdelhi@seweurodriveindia.com vikram.juneja@seweurodriveindia.com
	Pune	SEW-EURODRIVE India Private Limited Lunawat Prism 4th floor, S. No. 148, Neena Co-Operative Housing Society, Paud Road, Pune 411038 - Maharashtra	Tel. +91 20 25380730 / 735 Fax +91 20 25380721 salespune@seweurodriveindia.com praveen.hosur@seweurodriveindia.com
	Raipur	SEW-EURODRIVE India Private Limited A-42, Ashoka Millenium Complex, Ring Road-1, Raipur 492 001 - Chhattisgarh	Tel. +91 771 4090765 Fax +91 771 4090765 sutanu.sarkar@seweurodriveindia.com

Indonesia			
Sales	**Medan II**	PT. Serumpun Indah Lestari Jl. Pulau Solor NO. 8 Kawasan Industri Medan II	Tel. +62 61 687 1221 Fax +62 61 687 1429 serumpunindah@yahoo.com

Ireland			
Sales **Service**	**Dublin**	Alperton Engineering Ltd. 48 Moyle Road Dublin Industrial Estate Glasnevin, Dublin 11	Tel. +353 1 830-6277 Fax +353 1 830-6458 info@alperton.ie http://www.alperton.ie

Israel			
Sales	**Tel-Aviv**	Liraz Handasa Ltd. Ahofer Str 34B / 228 58858 Holon	Tel. +972 3 5599511 Fax +972 3 5599512 http://www.liraz-handasa.co.il office@liraz-handasa.co.il

Italy			
Assembly **Sales** **Service**	**Solaro**	SEW-EURODRIVE di R. Blickle & Co.s.a.s. Via Bernini,14 I-20020 Solaro (Milano)	Tel. +39 02 96 9801 Fax +39 02 96 799781 http://www.sew-eurodrive.it sewit@sew-eurodrive.it
Technical Offices	**Bologna**	SEW-EURODRIVE di R. Blickle & Co.s.a.s. Via della Grafica, 47 I-40064 Ozzano dell'Emilia (Bo)	Tel. +39 051 65-23-801 Fax +39 051 796-595
	Caserta	SEW-EURODRIVE di R. Blickle & Co.s.a.s. Viale Carlo III Km. 23,300 I-81020 S. Nicola la Strada (Caserta)	Tel. +39 0823 219011 Fax +39 0823 421414
	Milan	SEW-EURODRIVE di R. Blickle & Co.s.a.s. Via Bernini,14 I-20020 Solaro (Milano)	Tel. +39 02 96 980229 Fax +39 02 96 799781
	Pescara	SEW-EURODRIVE di R. Blickle & Co.s.a.s. Viale Europa,132 I-65010 Villa Raspa di Spoltore (PE)	Tel. +39 085 41-59-427 Fax +39 085 41-59-643
	Torino	SEW-EURODRIVE di R. Blickle & Co.s.a.s. Filiale Torino c.so Unione Sovietica 612/15 - int. C I-10135 Torino	Tel. +39 011 3473780 Fax +39 011 3473783
	Verona	SEW-EURODRIVE di R. Blickle & Co.s.a.s. Via P. Sgulmero, 27/A I-37132 Verona	Tel. +39 045 89-239-11 Fax +39 045 97-6079



Ivory Coast			
Sales	**Abidjan**	SICA Société industrielle & commerciale pour l'Afrique 165, Boulevard de Marseille 26 BP 1115 Abidjan 26	Tel. +225 21 25 79 44 Fax +225 21 25 88 28 sicamot@aviso.ci

Japan			
Assembly **Sales** **Service**	**Iwata**	SEW-EURODRIVE JAPAN CO., LTD 250-1, Shimoman-no, Iwata Shizuoka 438-0818	Tel. +81 538 373811 Fax +81 538 373855 http://www.sew-eurodrive.co.jp sewjapan@sew-eurodrive.co.jp
Technical Offices	**Fukuoka**	SEW-EURODRIVE JAPAN CO., LTD. C-go, 5th-floor, Yakuin-Hiruzu-Bldg. 1-5-11, Yakuin, Chuo-ku Fukuoka, 810-0022	Tel. +81 92 713-6955 Fax +81 92 713-6860 sewkyushu@jasmine.ocn.ne.jp
	Osaka	SEW-EURODRIVE JAPAN CO., LTD. Higobashi Shimizu Bldg. 10th flor 1-3-7 Tosabori, Nishi-ku Osaka, 550-0001	Tel. +81 6 6444--8330 Fax +81 6 6444--8338 sewosaka@crocus.ocn.ne.jp
	Tokyo	SEW-EURODRIVE JAPAN CO., LTD. Omarimon Yusen Bldg. 13th floor 3-23-5 Nishinbashi, Minato-ku Tokyo 105-0003	Tel. +81 3 3239-0469 Fax +81 3 3239-0943 sewtokyo@basil.ocn.ne.jp

Kazakhstan			
Sales	**Almaty**	ТОО "СЕВ-ЕВРОДРАЙВ" 050061, Республика Казахстан г.Алматы, пр.Райымбека, 348	Тел. +7 (727) 334 1880 Факс +7 (727) 334 1881 http://www.sew-eurodrive.kz sew@sew-eurodrive.kz

Latvia			
Sales	**Riga**	SIA Alas-Kuul Katlakalna 11C LV-1073 Riga	Tel. +371 6 7139253 Fax +371 6 7139386 http://www.alas-kuul.com info@alas-kuul.com

Lebanon			
Sales	**Beirut**	Gabriel Acar & Fils sarl B. P. 80484 Bourj Hammoud, Beirut	Tel. +961 1 510 532 Fax +961 1 494 971 ssacar@info.com.lb
Jordan Kuwait Saudi Arabia Syria	**Beirut**	Middle East Drives S.A.L. (offshore) Sin El Fil. B. P. 55-378 Beirut	Tel. +961 1 494 786 Fax +961 1 494 971 info@medrives.com http://www.medrives.com

Lithuania			
Sales	**Alytus**	UAB Irseva Statybininku 106C LT-63431 Alytus	Tel. +370 315 79204 Fax +370 315 56175 info@irseva.lt http://www.sew-eurodrive.lt

Luxembourg			
Assembly **Sales** **Service**	**Brüssel**	CARON-VECTOR S.A. Avenue Eiffel 5 B-1300 Wavre	Tel. +32 10 231-311 Fax +32 10 231-336 http://www.sew-eurodrive.lu info@caron-vector.be

Malaysia			
Assembly **Sales** **Service**	**Johore**	SEW-EURODRIVE SDN BHD No. 95, Jalan Seroja 39, Taman Johor Jaya 81000 Johor Bahru, Johor West Malaysia	Tel. +60 7 3549409 Fax +60 7 3541404 sales@sew-eurodrive.com.my
Technical Offices	**Kota Kinabalu**	SEW-EURODRIVE Sdn Bhd (Kota Kinabalu Branch) Lot No. 2,1st Floor, Inanam Baru Phase III, Miles 5.1 /2, Jalan Tuaran, Inanam 89350 Kota Kinabalu Sabah, Malaysia	Tel. +60 88 424792 Fax +60 88 424807
	Kuala Lumpur	SEW-EURODRIVE Sdn. Bhd. No. 2, Jalan Anggerik Mokara 31/46 Kota Kemuning Seksyen 31 40460 Shah Alam Selangor Darul Ehsan	Tel. +60 3 5229633 Fax +60 3 5229622 sewpjy@po.jaring.my
	Kuching	SEW-EURODRIVE Sdn. Bhd. Lot 268, Section 9 KTLD Lorong 9, Jalan Satok 93400 Kuching, Sarawak East Malaysia	Tel. +60 82 232380 Fax +60 82 242380
	Penang	SEW-EURODRIVE Sdn. Bhd. No. 38, Jalan Bawal Kimsar Garden 13700 Prai, Penang	Tel. +60 4 3999349 Fax +60 4 3999348 seweurodrive@po.jaring.my
Mauritania			
Sales	**Zouérate**	AFRICOM - SARL En Face Marché Dumez P.B. 88 Zouérate	Tel. +222 544 0 314 Fax +222 544 0 538 cybertiris@mauritel.mr
Mexico			
Assembly **Sales** **Service**	**Quéretaro**	SEW-EURODRIVE MEXICO SA DE CV SEM-981118-M93 Tequisquiapan No. 102 Parque Industrial Quéretaro C.P. 76220 Quéretaro, México	Tel. +52 442 1030-300 Fax +52 442 1030-301 http://www.sew-eurodrive.com.mx scmexico@seweurodrive.com.mx
Morocco			
Sales	**Casablanca**	Afit Route D'El Jadida KM 14 RP8 Province de Nouaceur Commune Rurale de Bouskoura MA 20300 Casablanca	Tel. +212 522633700 Fax +212 522621588 fatima.haquiq@premium.net.ma http://www.groupe-premium.com
Netherlands			
Assembly **Sales** **Service**	**Rotterdam**	VECTOR Aandrijftechniek B.V. Industrieweg 175 NL-3044 AS Rotterdam Postbus 10085 NL-3004 AB Rotterdam	Tel. +31 10 4463-700 Fax +31 10 4155-552 http://www.vector.nu info@vector.nu
New Zealand			
Assembly **Sales** **Service**	**Auckland**	SEW-EURODRIVE NEW ZEALAND LTD. P.O. Box 58-428 82 Greenmount drive East Tamaki Auckland	Tel. +64 9 2745627 Fax +64 9 2740165 http://www.sew-eurodrive.co.nz sales@sew-eurodrive.co.nz



New Zealand			
	Christchurch	SEW-EURODRIVE NEW ZEALAND LTD. 10 Settlers Crescent, Ferrymead Christchurch	Tel. +64 3 384-6251 Fax +64 3 384-6455 sales@sew-eurodrive.co.nz
Technical Office	**Palmerston North**	SEW-EURODRIVE NEW ZEALAND LTD. C/-Grant Shearman, RD 5, Aronui Road Palmerston North	Tel. +64 6 355-2165 Fax +64 6 355-2316 sales@sew-eurodrive.co.nz

Norway			
Assembly **Sales** **Service**	**Moss**	SEW-EURODRIVE A/S Solgaard skog 71 N-1599 Moss	Tel. +47 69 24 10 20 Fax +47 69 24 10 40 http://www.sew-eurodrive.no sew@sew-eurodrive.no

Pakistan			
Sales	**Karachi**	Industrial Power Drives Al-Fatah Chamber A/3, 1st Floor Central Commercial Area, Sultan Ahmed Shah Road, Block 7/8, Karachi	Tel. +92 21 452 9369 Fax +92-21-454 7365 seweurodrive@cyber.net.pk

Peru			
Assembly **Sales** **Service**	**Lima**	SEW DEL PERU MOTORES REDUCTORES S.A.C. Los Calderos, 120-124 Urbanizacion Industrial Vulcano, ATE, Lima	Tel. +51 1 3495280 Fax +51 1 3493002 http://www.sew-eurodrive.com.pe sewperu@sew-eurodrive.com.pe

Poland			
Assembly **Sales** **Service**	**Lodz**	SEW-EURODRIVE Polska Sp.z.o.o. ul. Techniczna 5 PL-92-518 Łódź	Tel. +48 42 676 53 00 Fax +48 42 676 53 45 http://www.sew-eurodrive.pl sew@sew-eurodrive.pl
	24 Hour Service		Tel. +48 602 739 739 (+48 602 SEW SEW) serwis@sew-eurodrive.pl
Technical Office	**Tychy**	SEW-EURODRIVE Polska Sp.z.o.o. ul. Fabryczna 5 PL-43-100 Tychy	Tel. +48 32 32 32 610 Fax +48 32 32 32 647
	Bydgoszcz	SEW-EURODRIVE Polska Sp.z.o.o. ul. Fordońska 246 PL-85-959 Bydgoszcz	Tel. +48 52 3606590 Fax +48 52 3606591
	Poznan	SEW-EURODRIVE Polska Sp.z.o.o. ul. Romana Maya 1 PL-61-371 Poznań	Tel. +48 61 8741640 Fax +48 61 8741641
	Radom	SEW-EURODRIVE Polska Sp.z.o.o. ul. Słowackiego 84 PL-26-600 Radom	Tel. +48 48 365 40 50 Fax +48 48 365 40 51

Portugal			
Assembly **Sales** **Service**	**Coimbra**	SEW-EURODRIVE, LDA. Apartado 15 P-3050-901 Mealhada	Tel. +351 231 20 9670 Fax +351 231 20 3685 http://www.sew-eurodrive.pt infosew@sew-eurodrive.pt
Technical Offices	**Lisboa**	SEW-EURODRIVE, LDA. Núcleo Empresarial I de São Julião do Tojal Rua de Entremuros, 54 Fracção I P-2660-533 São Julião do Tojal	Tel. +351 21 958-0198 Fax +351 21 958-0245 esc.lisboa@sew-eurodrive.pt

Portugal			
	Porto	SEW-EURODRIVE, LDA. Av. 25 de Abril, 68 4440-502 Valongo	Tel. +351 229 350 383 Fax +351 229 350 384 MobilTel. +351 9 32559110 esc.porto@sew-eurodrive.pt

Romania			
Sales **Service**	**Bucharest**	Sialco Trading SRL str. Madrid nr.4 011785 Bucuresti	Tel. +40 21 230-1328 Fax +40 21 230-7170 sialco@sialco.ro

Russia			
Assembly **Sales** **Service**	**St. Petersburg**	ZAO SEW-EURODRIVE P.O. Box 36 195220 St. Petersburg Russia	Tel. +7 812 3332522 +7 812 5357142 Fax +7 812 3332523 http://www.sew-eurodrive.ru sew@sew-eurodrive.ru
Technical Office	**Yekaterinburg**	ZAO SEW-EURODRIVE Kominterna Str. 16 Office 614 RUS-620078 Ekaterinburg	Tel. +7 343 310 3977 Fax +7 343 310 3978 eso@sew-eurodrive.ru
	Irkutsk	ZAO SEW-EURODRIVE 5-Armii Str., 31 RUS-664011 Irkutsk	Tel. +7 3952 25 5880 Fax +7 3952 25 5881 iso@sew-eurodrive.ru
	Moskau	ZAO SEW-EURODRIVE RUS-107023 Moskau	Tel. +7 495 9337090 Fax +7 495 9337094 mso@sew-eurodrive.ru
	Novosibirsk	ZAO SEW-EURODRIVE pr. K Marksa, d.30 RUS-630087 Novosibirsk	Tel. +7 383 3350200 Fax +7 383 3462544 nso@sew-eurodrive.ru
	Togliatti	ZAO SEW-EURODRIVE Sportivnaya Str. 4B, office 2 Samarskaya obl. RUS-445057 Togliatti	Tel. +7 8482 710529 Fax +7 8482 810590

Senegal			
Sales	**Dakar**	SENEMECA Mécanique Générale Km 8, Route de Rufisque B.P. 3251, Dakar	Tel. +221 338 494 770 Fax +221 338 494 771 senemeca@sentoo.sn http://www.senemeca.com

Serbia			
Sales	**Beograd**	DIPAR d.o.o. Ustanicka 128a PC Košum, IV floor SCG-11000 Beograd	Tel. +381 11 347 3244 / +381 11 288 0393 Fax +381 11 347 1337 office@dipar.rs

Singapore			
Assembly **Sales** **Service**	**Singapore**	SEW-EURODRIVE PTE. LTD. No 9, Tuas Drive 2 Jurong Industrial Estate Singapore 638644	Tel. +65 68621701 Fax +65 68612827 http://www.sew-eurodrive.com.sg sewsingapore@sew-eurodrive.com

Slovakia			
Sales	**Bratislava**	SEW-Eurodrive SK s.r.o. Rybničná 40 SK-831 06 Bratislava	Tel. +421 2 33595 202 Fax +421 2 33595 200 sew@sew-eurodrive.sk http://www.sew-eurodrive.sk



Slovakia			
	Žilina	SEW-Eurodrive SK s.r.o. Industry Park - PChZ ulica M.R.Štefánika 71 SK-010 01 Žilina	Tel. +421 41 700 2513 Fax +421 41 700 2514 sew@sew-eurodrive.sk
	Banská Bystrica	SEW-Eurodrive SK s.r.o. Rudlovská cesta 85 SK-974 11 Banská Bystrica	Tel. +421 48 414 6564 Fax +421 48 414 6566 sew@sew-eurodrive.sk
	Košice	SEW-Eurodrive SK s.r.o. Slovenská ulica 26 SK-040 01 Košice	Tel. +421 55 671 2245 Fax +421 55 671 2254 sew@sew-eurodrive.sk

Slovenia			
Sales **Service**	**Celje**	Pakman - Pogonska Tehnika d.o.o. UI. XIV. divizije 14 SLO - 3000 Celje	Tel. +386 3 490 83-20 Fax +386 3 490 83-21 pakman@siol.net

South Africa			
Assembly **Sales** **Service**	**Johannesburg**	SEW-EURODRIVE (PROPRIETARY) LIMITED Eurodrive House Cnr. Adcock Ingram and Aerodrome Roads Aeroton Ext. 2 Johannesburg 2013 P.O.Box 90004 Bertsham 2013	Tel. +27 11 248-7000 Fax +27 11 494-3104 http://www.sew.co.za info@sew.co.za
	Cape Town	SEW-EURODRIVE (PROPRIETARY) LIMITED Rainbow Park Cnr. Racecourse & Omuramba Road Montague Gardens Cape Town P.O.Box 36556 Chempet 7442 Cape Town	Tel. +27 21 552-9820 Fax +27 21 552-9830 Telex 576 062 cfoster@sew.co.za
	Durban	SEW-EURODRIVE (PROPRIETARY) LIMITED 2 Monaco Place Pinetown Durban P.O. Box 10433, Ashwood 3605	Tel. +27 31 700-3451 Fax +27 31 700-3847 cdejager@sew.co.za
	Nelspruit	SEW-EURODRIVE (PTY) LTD. 7 Christie Crescent Vintonia P.O.Box 1942 Nelspruit 1200	Tel. +27 13 752-8007 Fax +27 13 752-8008 robermeyer@sew.co.za
Technical Offices	**Port Elizabeth**	SEW-EURODRIVE PTY LTD. 8 Ruan Access Park Old Cape Road Greenbushes 6000 Port Elizabeth	Tel. +27 41 3722246 Fax +27 41 3722247 dtait@sew.co.za
	Richards Bay	SEW-EURODRIVE PTY LTD. 103 Bulion Blvd Richards Bay P.O. Box 458 Richards Bay, 3900	Tel. +27 35 797-3805 Fax +27 35 797-3819 jswart@sew.co.za

South Korea			
Assembly **Sales** **Service**	**Ansan-City**	SEW-EURODRIVE KOREA CO., LTD. B 601-4, Banweol Industrial Estate 1048-4, Shingil-Dong Ansan 425-120	Tel. +82 31 492-8051 Fax +82 31 492-8056 http://www.sew-korea.co.kr master.korea@sew-eurodrive.com

South Korea			
	Busan	SEW-EURODRIVE KOREA Co., Ltd. No. 1720 - 11, Songjeong - dong Gangseo-ku Busan 618-270	Tel. +82 51 832-0204 Fax +82 51 832-0230 master@sew-korea.co.kr
Technical Offices	**Daegu**	SEW-EURODRIVE KOREA Co., Ltd. No.1108 Sungan officetel 87-36, Duryu 2-dong, Dalseo-ku Daegu 704-712	Tel. +82 53 650-7111 Fax +82 53 650-7112
	DaeJeon	SEW-EURODRIVE KOREA Co., Ltd. No. 1502, Hongin officetel 536-9, Bongmyung-dong, Yusung-ku Daejeon 305-301	Tel. +82 42 828-6461 Fax +82 42 828-6463
	Kwangju	SEW-EURODRIVE KOREA Co., Ltd. 4fl., Dae-Myeong B/D 96-16 Unam-dong, Buk-ku Kwangju 500-170	Tel. +82 62 511-9172 Fax +82 62 511-9174
	Seoul	SEW-EURODRIVE KOREA Co., Ltd. No.504 Sunkyung officetel 106-4 Kuro 6-dong, Kuro-ku Seoul 152-054	Tel. +82 2 862-8051 Fax +82 2 862-8199

Spain			
Assembly **Sales** **Service**	**Bilbao**	SEW-EURODRIVE ESPAÑA, S.L. Parque Tecnológico, Edificio, 302 E-48170 Zamudio (Vizcaya)	Tel. +34 94 43184-70 Fax +34 94 43184-71 http://www.sew-eurodrive.es sew.spain@sew-eurodrive.es
Technical Offices	**Barcelona**	Delegación Barcelona Avenida Francesc Maciá 40-44 Oficina 4.2 E-08208 Sabadell (Barcelona)	Tel. +34 93 7162200 Fax +34 93 7233007
	Lugo	Delegación Noroeste Apartado, 1003 E-27080 Lugo	Tel. +34 639 403348 Fax +34 982 202934
	Madrid	Delegación Madrid Gran Via. 48-2° A-D E-28220 Majadahonda (Madrid)	Tel. +34 91 6342250 Fax +34 91 6340899
	Seville	MEB Pólogono Calonge, C/A Nave 2 - C E-41.077 Sevilla	Tel. +34 954 356 361 Fax +34 954 356 274 mebsa.sevilla@mebsa.com
	Valencia	MEB Músico Andreu i Piqueres, 4 E-46.900 Torrente (Valencia)	Tel. +34 961 565 493 Fax +34 961 566 688 mebsa.valencia@mebsa.com

Sri Lanka			
Sales	**Colombo**	SM International (Pte) Ltd 254, Galle Raod Colombo 4, Sri Lanka	Tel. +94 1 2584887 Fax +94 1 2582981

Sweden			
Assembly **Sales** **Service**	**Jönköping**	SEW-EURODRIVE AB Gnejsvägen 6-8 S-55303 Jönköping Box 3100 S-55003 Jönköping	Tel. +46 36 3442 00 Fax +46 36 3442 80 http://www.sew-eurodrive.se jonkoping@sew.se
Sales	**Göteborg**	SEW-EURODRIVE AB Gustaf Werners gata 8 S-42132 Västra Frölunda	Tel. +46 31 70968 80 Fax +46 31 70968 93 goteborg@sew.se



Sweden			
	Stockholm	SEW-EURODRIVE AB Björkholmsvägen 10 S-14146 Huddinge	Tel. +46 8 44986 80 Fax +46 8 44986 93 stockholm@sew.se
	Malmö	SEW-EURODRIVE AB Borrgatan 5 S-21124 Malmö	Tel. +46 40 68064 80 Fax +46 40 68064 93 malmo@sew.se
	Skellefteå	SEW-EURODRIVE AB Trädgårdsgatan 8 S-93131 Skellefteå	Tel. +46 910 7153 80 Fax +46 910 7153 93 skelleftea@sew.se

Switzerland			
Assembly **Sales** **Service**	**Basel**	Alfred Imhof A.G. Jurastrasse 10 CH-4142 Münchenstein bei Basel	Tel. +41 61 417 1717 Fax +41 61 417 1700 http://www.imhof-sew.ch info@imhof-sew.ch
Technical Offices	**Rhaetian Switzerland**	André Gerber Es Perreyres CH-1436 Chamblon	Tel. +41 24 445 3850 Fax +41 24 445 4887
	Bern / Solothurn	Rudolf Bühler Muntersweg 5 CH-2540 Grenchen	Tel. +41 32 652 2339 Fax +41 32 652 2331
	Central Switzerland, Aargau	Armin Pfister Stierenweid CH-4950 Huttwill, BE	Tel. +41 62 962 54 55 Fax +41 62 962 54 56
	Zürich, Ticino	Gian-Michele Muletta Fischerstrasse 61 CH-8132 Egg bei Zürich	Tel. +41 44 994 81 15 Fax +41 44 994 81 16
	Bodensee and East Switzerland	Markus Künzle Eichweg 4 CH-9403 Goldach	Tel. +41 71 845 2808 Fax +41 71 845 2809

Taiwan (R.O.C.)			
Sales	**Nan Tou**	Ting Shou Trading Co., Ltd. No. 55 Kung Yeh N. Road Industrial District Nan Tou 540	Tel. +886 49 255353 Fax +886 49 257878
	Taipei	Ting Shou Trading Co., Ltd. 6F-3, No. 267, Sec. 2 Tung Hwa South Road, Taipei	Tel. +886 2 27383535 Fax +886 2 27368268 Telex 27 245 sewtwn@ms63.hinet.net

Thailand			
Assembly **Sales** **Service**	**Chonburi**	SEW-EURODRIVE (Thailand) Ltd. 700/456, Moo.7, Donhuaroh Muang Chonburi 20000	Tel. +66 38 454281 Fax +66 38 454288 sewthailand@sew-eurodrive.com
Technical Offices	**Bangkok**	SEW-EURODRIVE (Thailand) Ltd. 6th floor, TPS Building 1023, Phattanakarn Road Suanluang Bangkok,10250	Tel. +66 2 7178149 Fax +66 2 7178152 sewthailand@sew-eurodrive.com
	Hadyai	SEW-EURODRIVE (Thailand) Ltd. Hadyai Country Home Condominium 59/101 Soi.17/1 Rachas-Utid Road. Hadyai, Songkhla 90110	Tel. +66 74 359441 Fax +66 74 359442 sewthailand@sew-eurodrive.com

Thailand			
	Khonkaen	SEW-EURODRIVE (Thailand) Ltd. 4th Floor, Kaow-U-HA MOTOR Bldg, 359/2, Mitraphab Road. Muang District Khonkaen 40000	Tel. +66 43 225745 Fax +66 43 324871 sew-thailand@sew-eurodrive.com

Tunisia			
Sales	**Tunis**	T. M.S. Technic Marketing Service Zone Industrielle Mghira 2 Lot No. 39 2082 Fouchana	Tel. +216 79 40 88 77 Fax +216 79 40 88 66 tms@tms.com.tn

Turkey			
Assembly **Sales** **Service**	**Istanbul**	SEW-EURODRIVE Hareket Sistemleri San. ve Tic. Ltd. Sti. Bagdat Cad. Koruma Cikmazi No. 3 TR-34846 Maltepe ISTANBUL	Tel. +90 216 4419163 / 4419164 Fax +90 216 3055867 http://www.sew-eurodrive.com.tr sew@sew-eurodrive.com.tr
Technical Offices	**Adana**	SEW-EURODRIVE Hareket Sistemleri San. ve Tic. Ltd. Sti. Kizilay Caddesi 8 Sokak No 6 Daðtekin Is Merkezi Kat 4 Daire 2 TR-01170 SEYHAN / ADANA	Tel. +90 322 359 94 15 Fax +90 322 359 94 16
	Ankara	SEW-EURODRIVE Hareket Sistemleri San. ve Tic. Ltd. Sti. Özcelik Is Merkezi, 14. Sok, No. 4/42 TR-06370 Ostim/Ankara	Tel. +90 312 385 33 90 Fax +90 312 385 32 58
	Bursa	SEW-EURODRIVE Hareket Sistemleri San. ve Tic. Ltd. Sti. Üçevler Mah. Bayraktepe Sok. Akay İş Merkezi Kat:3 No: 7/6 TR Nilüfer/Bursa	Tel. +90 224 443 45 60 Fax +90 224 443 45 58
	Izmir	SEW-EURODRIVE Hareket Sistemleri San. ve Tic. Ltd. Sti. 1203/11 Sok. No. 4/613 Hasan Atli Is Merkezi TR-35110 Yenisehir-İzmir	Tel. +90 232 469 62 64 Fax +90 232 433 61 05

Ukraine			
Sales **Service**	**Dnepropetrovsk**	SEW-EURODRIVE Str. Rabochaja 23-B, Office 409 49008 Dnepropetrovsk	Tel. +380 56 370 3211 Fax +380 56 372 2078 http://www.sew-eurodrive.ua sew@sew-eurodrive.ua
Sales	**Kiev**	SEW-EURODRIVE GmbH S. Oleynika str. 21 02068 Kiev	Tel. +380 44 503 95 77 Fax +380 44 503 95 78 kso@sew-eurodrive.ua
	Donetsk	SEW-EURODRIVE GmbH 25th anniversary of RKKA av. 1-B, of. 805 Donetsk 83000	Tel. +380 62 38 80 545 Fax +380 62 38 80 533 dso@sew-eurodrive.ua

United Arab Emirates			
Sales **Service**	**Sharjah**	Copam Middle East (FZC) Sharjah Airport International Free Zone P.O. Box 120709 Sharjah	Tel. +971 6 5578-488 Fax +971 6 5578-499 copam_me@eim.ae

Uruguay			
Sales	**Montevideo**	SEW-EURODRIVE Uruguay, S. A. Jose Serrato 3569 Esqina Corumbe CP 12000 Montevideo	Tel. +598 2 21181-89 Fax +598 2 21181-89 sewuy@sew-eurodrive.com.uy

USA			
Production **Assembly** **Sales** **Service** **Corporate Offices**	**Southeast Region**	SEW-EURODRIVE INC. 1295 Old Spartanburg Highway P.O. Box 518 Lyman, S.C. 29365	Tel. +1 864 439-7537 Fax Sales +1 864 439-7830 Fax Manufacturing +1 864 439-9948 Fax Assembly +1 864 439-0566 Fax Confidential/HR +1 864 949-5557 http://www.seweurodrive.com cslyman@seweurodrive.com
Assembly **Sales** **Service**	**Northeast Region**	SEW-EURODRIVE INC. Pureland Ind. Complex 2107 High Hill Road, P.O. Box 481 Bridgeport, New Jersey 08014	Tel. +1 856 467-2277 Fax +1 856 845-3179 csbridgeport@seweurodrive.com
	Midwest Region	SEW-EURODRIVE INC. 2001 West Main Street Troy, Ohio 45373	Tel. +1 937 335-0036 Fax +1 937 332-0038 cstroy@seweurodrive.com
	Southwest Region	SEW-EURODRIVE INC. 3950 Platinum Way Dallas, Texas 75237	Tel. +1 214 330-4824 Fax +1 214 330-4724 csdallas@seweurodrive.com
	Western Region	SEW-EURODRIVE INC. 30599 San Antonio St. Hayward, CA 94544	Tel. +1 510 487-3560 Fax +1 510 487-6433 cshayward@seweurodrive.com
	Additional addresses for service in the USA provided on request!		

Venezuela			
Assembly **Sales** **Service**	**Valencia**	SEW-EURODRIVE Venezuela S.A. Av. Norte Sur No. 3, Galpon 84-319 Zona Industrial Municipal Norte Valencia, Estado Carabobo	Tel. +58 241 832-9804 Fax +58 241 838-6275 http://www.sew-eurodrive.com.ve ventas@sew-eurodrive.com.ve sewfinanzas@cantv.net

Vietnam			
Sales	**Ho Chi Minh City**	Nam Trung Co., Ltd 91 - 93 Tran Minh Quyen Street, District 10, HCMC	Tel. +84 8 8301026 Fax +84 8 8392223 namtrungco@hcm.vnn.vn

15 Index

A

AD 417
Additional 70
Additional documentation 10
AM 353, 407
Ambient temperature
R, F, K, S, W gear units 12
AR 409
AT 411
ATEX, explosion protection 18

B

Breather valves 128

C

Churning losses 46, 75
Coating 13
Condition monitoring
Technical data 121
Content of this publication 10
Covers, fixed 119

D

Diagnostic unit
DUV10A/30A vibration sensor 123
Oil aging sensor DUO10A 121
Dimension sheets 125
Direction of rotation of output shaft 72
Documentation, additional 10

E

Explosion protection according to ATEX 18
Extended storage 16
Eyebolts, suspension eye lugs 128

F

Fastening the gear unit 115
Fill quantities
R, F, K, S, W gear units 98
Fill quantities for R, F, K, S, W gear units 101
Flange contours
FAF.., KAF.., SAF.. and WAF.. 118
FF.., KF.., SF.. and WF.. 117
RF.. and R..F 116
Force application, definition 51

G

Gear units
Extended storage 16
Gearmotor dimensions 130
Motor dimensions 130

H

Helical 49
Helical gear units
Mounting positions 76
Type designation 25
Helical-bevel gear units
Type designation 26
Helical-bevel gearmotors
Mounting positions 84
Helical-worm gear units
Mounting positions 89
Technical data 485
Type designation 26
Higher 51
Hydraulic centrifugal coupling 23

I

Information on selection tables 125
Installation of gear units with hollow shaft and key
Supplied fastening parts 107
Use the SEW installation/removal kit 109

L

Lubricants
General information 98
Lubricant table 100

M

Mounting positions 71
Helical gear units 76
Helical-bevel gearmotors 84
Helical-worm gear units 89
Parallel shaft helical gear units 81
SPIROPLAN® 95

N

Notes on the dimension sheets 127

O

Oil aging sensor
Technical data and part numbers 121
Options
Type designation 27
Order information
R, F, K, S, W servo gear units 72
Order key for PSF.. planetary servo gear units with EPH.. adapter 39
OS surface protection 14
Overhung 50
Overhung load conversion
Gear unit constants
R, F, K, S, W gear units 53
Overview of types and type designation 25
Helical gear units 30
Helical-bevel gear units 33
Helical-worm gear units 35
Parallel shaft helical gear units 31
R, F, K, S, W gear units 25
SPIROPLAN® 37

P

Parallel shaft helical gear units
Mounting positions 81
Type designation 25
Permitted 50, 51
Position
Output end in right-angle gear units 73
Output shaft and output flange 72
Position of the torque arm 129
Product groups 8
Product variants 35
Product variants 30, 31, 33
Helical gear units 30
Helical-bevel gear units 33
Helical-worm gear units 35
Parallel shaft helical gear units 31
SPIROPLAN® 37
Project planning for gear units
RM gear units 67
Service factor 47
Project planning for RM gear units 67
Project planning of gear units
Off-center force application, overhung load conversion 52

R

Reduced backlash gear units 13
Removal of gear units with hollow shaft and key
using the SEW installation/removal set 111
Rolling bearing greases 99
Rubber buffer for FA/FH/FV/FT 128

S

Service factor
Determining the service factor 47
SEW service factor fB 48
SEW-EURODRIVE
Group of companies 7
Products 8
Systems 8
Shaft heights 127
Shrink disk connection 128
SPIROPLAN® gear unist 27
SPIROPLAN® gear units 95
SPIROPLAN® variants 37
Splined hollow shaft 128
Storage conditions 17
Swing base 23

T

Technical data
Helical-worm gear units 485
Tolerances 127
Flanges 127
Hollow shafts 127
Multiple-spline shafts 127
Shaft ends 127
TorqLOC® 113
TorqLOC® hollow shaft mounting system 113
Torque arm 129
Torque arms 115
Type designation
Condition monitoring 27, 28
Helical gear units 25
Helical-bevel gear units 26
Helical-worm gear units 26
Options 27
Parallel shaft helical gear units 25
SPRIOPLAN® gear units 27
Type designation of servo gear units
PSF gear units 39

V

Variants, possible
Reduced backlash 13
Vibration sensor
Part numbers 123
Technical data 123



Inquiry/Order

Customer data:

Company: _____ Customer no.: _____
Department: _____
Name: _____ Phone: _____
Street/P.O. Box: _____ Fax: _____
_____ Email: _____
ZIP code/city: _____

Your contact partner at SEW:

Name: _____ Phone: _____
Technical Office: _____ Fax: _____

Technical data:

Quantity: _____ Requested delivery date: _____
Catalog designation: _____

Gear unit type:

☐ Helical ☐ Parallel shaft helical ☐ Helical-bevel ☐ Helical-worm ☐ Spiroplan®
☐ Multi-stage ☐ Servo ☐ Variable speed ☐ EMS ☐ Other: _____

Power: _____ kW **Output speed:** _____ rpm **Output torque:** _____ Nm

Cycles/h: _____ c/h **Cyclic duration factor:** S _____ / _____ % cdf

☐ 1-shift operation ☐ 2-shift operation ☐ 3-shift operation
☐ Uniform ☐ Non-uniform ☐ Extremely non-uniform

Mounting position:

M1	M2	M3	M4	M5	M6	Pivoting
☐	☐	☐	☐	☐	☐	☐

Housing type:

☐ Foot-mounted ☐ Flange (bore) ☐ Flange (thread)
☐ Torque arm ☐ Other: _____

Shaft type:

☐ Solid shaft with key ☐ Shrink disk Shaft/hollow shaft ∅: _____ mm
☐ Hollow shaft with key ☐ TorqLOC® Flange ∅: _____ mm

Shaft position (right-angle units): ☐ A | ☐ B | ☐ AB

Terminal box position: ☐ 0°(R) ☐ 90°(B) | ☐ 180°(L) | ☐ 270°(T)

Cable entry: ☐X ☐1 | ☐2 | ☐3

Degree of protection:

IP54	IP55	IP56	IP65	IP66	IP69K
☐	☐	☐	☐	☐	☐

Thermal class:

130(B)	155(F)	180(H)
☐	☐	☐

Surface/corrosion protection:

KS	OS1	OS2	OS3	OS4
☐	☐	☐	☐	☐

Mains voltage: _____ V
Mains frequency: ☐ 50Hz ☐ 60Hz

Connection type: ☐ Δ ☐ Y ☐ YY ☐ Y/Y

☐ For inverter operation: Max. frequency: _____ Hz | **Control range:** _____

Required options:

☐ Brake: voltage _____ V Braking torque: _____ Nm
☐ Manual brake release: ☐ HR or ☐ HF
☐ Forced cooling fan: Forced cooling fan voltage: _____ V
☐ Motor protection: ☐ TF or ☐ TH
☐ Encoder: _____
☐ Plug connection: _____
☐ Inverter: _____
☐ RAL 7031 or ☐ RAL _____

Other options:

Special ambient conditions:

Temperature from _____ °C to _____ °C | ☐ Outdoor use | ☐ Installation >1000m above msl
Other ambient conditions: _____
Other: _____

Place, date _____ **Signature:** _____








SEW-EURODRIVE
Driving the world

SEW-EURODRIVE GmbH & Co KG
P.O. Box 3023
D-76642 Bruchsal/Germany
Phone +49 7251 75-0
Fax +49 7251 75-1970
sew@sew-eurodrive.com
→ www.sew-eurodrive.com