SEW EURODRIVE

Manual

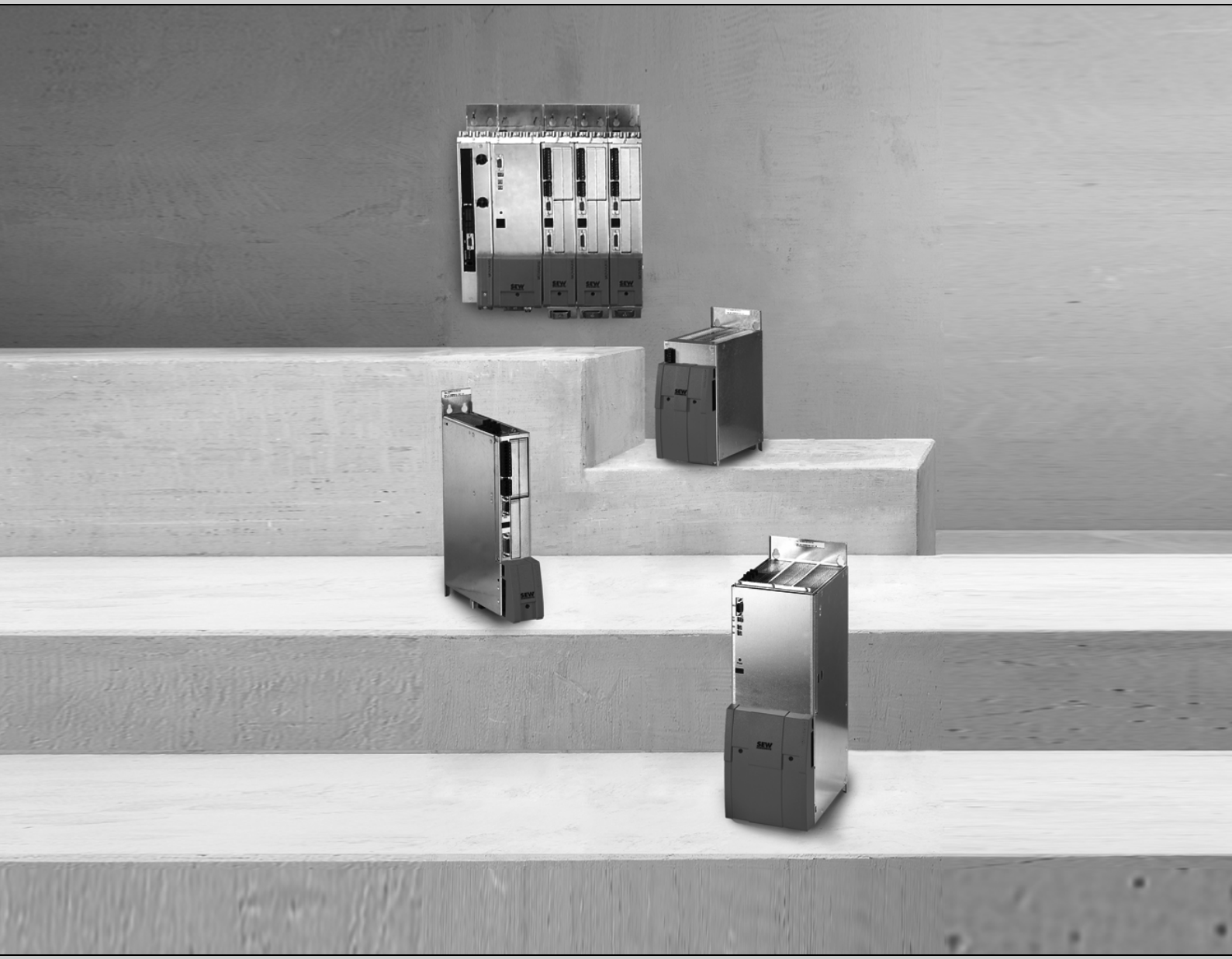

MOVIAXIS® Multi-Axis Servo Inverter

MXR Regenerative Power Module

Edition 07/2009

16782011 / EN

KKFU 144794 3
42G1

1 General Information 5
1.1 Other applicable documentation 5
1.2 Structure of the safety notes 5
1.3 Right to claim under warranty 6
1.4 Exclusion of liability 6

2 Safety Notes 7
2.1 General 7
2.2 Target group 7
2.3 Designated use 7
2.4 Shipping, putting into storage 8
2.5 Installation 8
2.6 Electrical connection 9
2.7 Safe disconnection 9
2.8 Operation 9

3 Unit Design 10
3.1 Important information 10
3.2 Nameplates, unit designations 10
3.3 Unit structure of the MXR regenerative power module 12
3.4 Combinations of MXR regenerative power modules with other units 13
3.5 Standard accessories 14

4 Installation 16
4.1 Mechanical Installation 16
4.2 UL-compliant installation 17
4.3 Installation and removal of the regenerative power module 19
4.4 Electrical installation 19
4.5 Wiring diagrams 22
4.6 Terminal assignment 25

5 Startup 28
5.1 General information 28
5.2 Settings on regenerative power module for CAN-based system bus 29
5.3 Settings on regenerative power module for EtherCAT-based system bus XSE24A 31
5.4 Settings on regenerative power module for EtherCAT XFE24A interface 32
5.5 Switch-on sequence of MXR regenerative power module 33
5.6 Process data assignment for fieldbus operation 35
5.7 Startup of the MXR using MOVITOOLS® MotionStudio 38
5.8 Parameter description 41

6 Operation 46
6.1 General information 46
6.2 Operating displays and errors of the MXR regenerative power module 47

7 Technical Data 62
7.1 Technical data of the MXR regenerative power module 62
7.2 Dimension sheet of the MXR.. regenerative power module 66
7.3 Drilling template of the MXR regenerative power module 67
7.4 Technical data of additional components 68

8 Project Planning ... 76
8.1 General information ... 76
8.2 Components for EMC-compliant installation ... 76
8.3 Line contactor and line fuses ... 77
8.4 Projecting the power supply ... 77
8.5 Configuration of the supply system considering simultaneities ... 79
8.6 Projecting the cable cross sections ... 83
8.7 Selecting the 24 V power supply ... 84
8.8 Projecting the emergency braking resistor ... 86
8.9 Dimensioning the MXR regenerative power module ... 91
8.10 Output in case of a lower supply system voltage ... 91
8.11 Overload capacity ... 92
8.12 Integrating a regenerative power module in a unit network ... 92
8.13 Power supply ... 93
8.14 Check list for project planning ... 94

9 Index ... 95

1 General Information

1.1 Other applicable documentation

This manual describes the special characteristics of the MXR regenerative power module.

For all other information and functionalities of MOVIAXIS®, refer to the following documents:

- "MOVIAXIS®Multi-Axis Servo Inverter" operating instructions
- "MOVIAXIS® Multi-Axis Servo Inverter" project planning manual

1.2 Structure of the safety notes

The safety notes in this manual are designed as follows:

Pictogram	SIGNAL WORD
	Type and source of danger. Possible consequence(s) if disregarded. • Measure(s) to prevent the danger.

Pictogram	Signal word	Meaning	Consequences if disregarded
Example: General danger Specific danger, e.g. electric shock	DANGER	Imminent danger	Severe or fatal injuries
	WARNING	Possible dangerous situation	Severe or fatal injuries
	CAUTION	Possible dangerous situation	Minor injuries
STOP	STOP	Possible damage to property	Damage to the drive system or its environment
	INFORMA-TION	Useful information or tip. Simplifies the handling of the drive system.	

1.3 Right to claim under warranty

A **requirement of fault-free operation** and fulfillment of any rights to claim under limited warranty is that you adhere to the information in **this manual** and the **"MOVIAXIS® Multi-Axis Servo Inverter" operating instructions**. **Read the operating instructions** before you start operating the unit!

Make sure that the operating instructions are available to persons responsible for the system and its operation as well as to persons who work independently on the unit. You must also ensure that the documentation is legible.

1.4 Exclusion of liability

You must comply with the information contained in the manual at hand and in the "MOVIAXIS® Multi-Axis Servo Inverter" operating instructions to ensure safe operation of the MXR regenerative power module in conjunction with the MOVIAXIS® multi-axis servo inverter and to achieve the specified product characteristics and performance requirements. SEW-EURODRIVE assumes no liability for injury to persons or damage to equipment or property resulting from non-observance of the operating instructions. In such cases, any liability for defects is excluded.

2 Safety Notes

The following basic safety notes must be read carefully to prevent injury to persons and damage to property. The operator must make sure that the basic safety notes are read and observed. Make sure that persons responsible for the plant and its operation, as well as persons who work independently on the unit, have read through the operating instructions carefully and understood them. If you are unclear about any of the information in this documentation, or if you require further information, please contact SEW-EURODRIVE.

	INFORMATION
	Observe the information about the other modules of a MOVIAXIS® axis system in the "MOVIAXIS® MX Multi-Axis Servo Inverter" operating instructions when installing, starting up, and operating the MXR regenerative power module.

2.1 General

Never install damaged products and put them into operation. Submit a complaint to the shipping company immediately in the event of damage.

During operation, multi-axis servo inverters can have live, bare and movable or rotating parts as well as hot surfaces, depending on their enclosure.

Removing covers without authorization, improper use as well as incorrect installation or operation may result in severe injuries to persons or damage to property.

Consult the documentation for further information.

2.2 Target group

Only qualified personnel are authorized to install, startup or service the units or correct unit faults (observing IEC 60364 or CENELEC HD 384 or DIN VDE 0100 and IEC 60664 or DIN VDE 0110 as well as national accident prevention guidelines).

Qualified personnel in the context of these basic safety notes are persons familiar with installation, assembly, startup and operation of the product who possess the necessary qualifications.

All persons involved in any other work, such as transportation, storage, operation and disposal, must be trained appropriately.

2.3 Designated use

The MXR regenerative power module is designed for integration in the unit network of the MOVIAXIS® MX multi-axis servo inverter.

The MOVIAXIS® MX multi-axis servo drives are units for use in industrial and commercial systems to operate permanent-field synchronous AC motors and asynchronous AC motors with encoder feedback. These motors must be suitable for operation with servo drives. Connect other loads to the units only after you have consulted the manufacturer.

The MOVIAXIS® MX multi-axis servo drives are intended for use in metal control cabinets. These metal control cabinets represent the necessary enclosure for the application as well as the grounding over a large area required for EMC purposes.

For installation in machines, startup of the multi-axis servo inverter (meaning the start of designated use) is prohibited until it is determined that the machine meets the requirements stipulated in the EC Directive 98/37/EC (machine directive); observe EN 60204.

Startup (i.e. start of designated operation) is only permitted with adherence to the EMC guideline (2004/108/EC).

The multi-axis servo inverters meet the requirements stipulated in the low voltage guideline 200695EC. The harmonized standards of the EN 61800-5-1 DIN VDE/T105 series in connection with EN 60439-1 VDE 0660 part 500 and EN 60146 VDE/0558 are applied to the multi-axis servo inverters.

You must observe the technical data and information on the connection requirements as provided on the nameplate and in the documentation.

2.3.1 Safety functions

MOVIAXIS® multi-axis servo inverters may not take on safety functions without a higher-level safety system. Use higher-level safety systems to ensure protection of equipment and personnel.

For safety applications, refer to the information in the following publications:

- Safe Disconnection for MOVIAXIS® –Conditions.
- Safe Disconnection for MOVIAXIS® – Applications.

2.4 Shipping, putting into storage

Observe the notes on transportation, storage and proper handling. Observe the climatic conditions as stated in the "MOVIAXIS® Multi-Axis Servo Inverter" operating instructions in the "General technical data" chapter.

2.5 Installation

The units must be installed and cooled according to the regulations and specifications in the corresponding documentation.

Protect the multi-axis servo inverters from excessive strain. Especially during transportation and handling, do not allow the components to be deformed and/or insulation spaces altered. Avoid contact with electronic components and contacts.

Multi-axis servo inverters contain components that can be damaged by electrostatic energy and could be destroyed in case of improper handling. Prevent mechanical damage or destruction of electric components (may pose health risk).

The following applications are prohibited unless the unit is explicitly designed for such use:

- Use in potentially explosive areas.
- Use in areas exposed to harmful oils, acids, gases, vapors, dust, radiation, etc.
- Use in non-stationary applications that are subject to mechanical vibration and shock loads in excess of the requirements in EN 61800.

2.6 Electrical connection

Observe the applicable national accident prevention guidelines when working on live multi-axis servo inverters (for example, BGV A3).

Perform electrical installation according to the pertinent regulations (e.g. cable cross sections, fusing, protective conductor connection). Additional information is contained in the documentation.

You will find notes on EMC-compliant installation, such as shielding, grounding, arrangement of filters and routing of lines, in the documentation of the multi-axis servo inverter. Always observe these notes even with multi-axis servo inverters bearing the CE marking. The manufacturer of the system or machine is responsible for maintaining the limits established by EMC legislation.

Protective measures and protection devices must comply with the regulations in force (e.g. EN 60204 or EN 61800-5-1).

Required preventive measure: Grounding the unit.

2.7 Safe disconnection

MOVIAXIS® meets all requirements for safe disconnection of power and electronic connections in accordance with EN 61800-5-1. All connected circuits must also satisfy the requirements for safe disconnection.

2.8 Operation

Systems with multi-axis servo inverters must be equipped with additional monitoring and protection devices, as applicable, according to the relevant safety guidelines and regulations, such as legislation governing technical equipment, accident prevention regulations, etc. Changes to the multi-axis servo inverter using the software are permitted.

Do not touch live components or power connections immediately after disconnecting the multi-axis servo inverters from the supply voltage because there may still be some charged capacitors. Note the respective labels on the multi-axis servo inverter.

Keep all covers and doors closed during operation.

The fact that the status LED and other display elements are no longer illuminated does not indicate that the unit has been disconnected from the supply system and no longer carries any voltage.

Mechanical blocking or internal safety functions of the unit can cause a motor standstill. Eliminating the cause of the problem or performing a reset may result in the drive restarting automatically. If, for safety reasons, this is not permitted for the driven machine, disconnect the unit from the supply system before correcting the error.

3 Unit Design

3.1 Important information

Protective measures and **protective equipment** have to meet the respective national **regulations in force**.

	INFORMATION
	Follow the specific operating instructions during installation and startup of the motor and the brake!

	WARNING
	The following "Unit design" illustrations represent the units without the provided protection cover (touch guard). The protection cover protects the area of the line and braking resistor connections. Uncovered power connections. Severe or fatal injuries from electric shock. • Install the touch guard according to the regulations. • Never start the unit if the touch guard is not installed.

3.2 Nameplates, unit designations

3.2.1 Nameplate of MXR regenerative power module

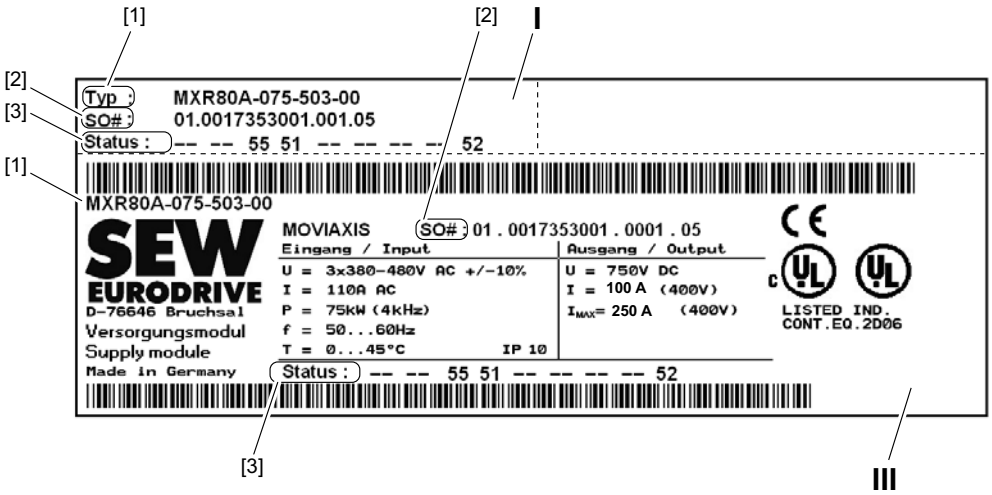

62919AXX

Figure 1: Sample nameplate of a MOVIAXIS® MXR regenerative power module

I	Part "I" of the nameplate: Located on the upper fastening plate of the module	[1]	Unit designation, see page 11
III	Part "III" of the nameplate: Located at the side of the module housing	[2]	Serial number
		[3]	Status

3.2.2 Unit designation of MXR regenerative power module

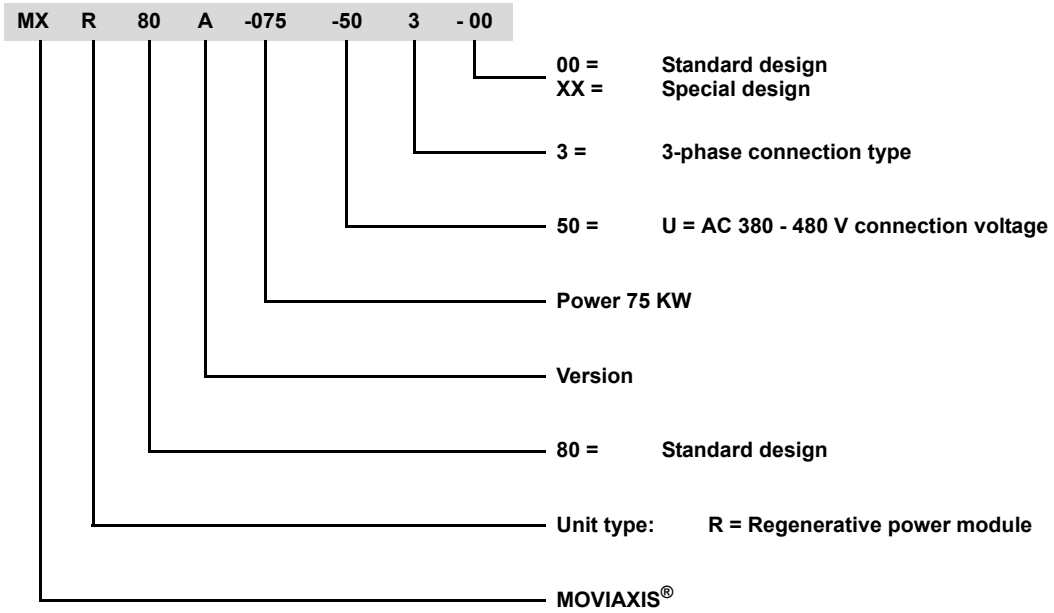

3.3 Unit structure of the MXR regenerative power module

The following illustration shows the unit without protective cover.

3.3.1 MXR regenerative power module

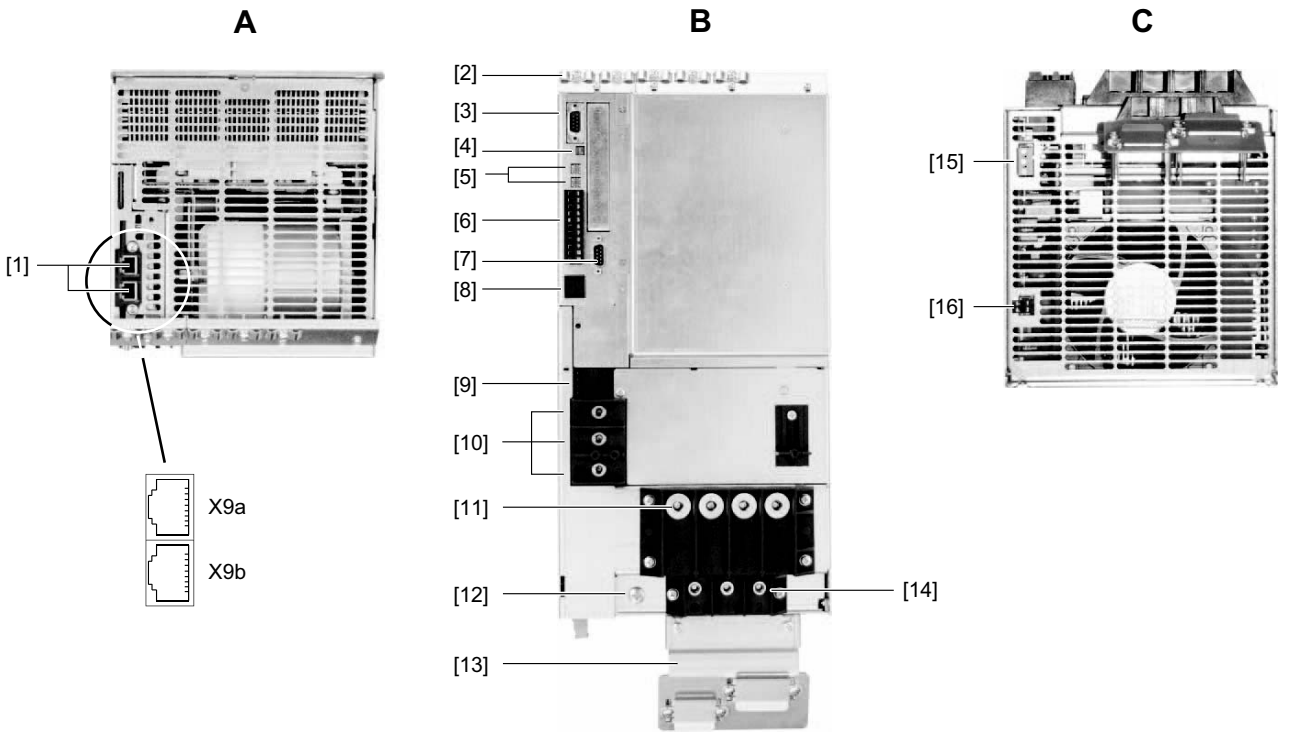

Figure 2: Unit structure of MXR regenerative power module

A	View from top
[1]	Signaling bus X9a: Input, green plug on cable X9b: Output, red plug on cable

B	View from front
[2]	Electronics shield clamps
[3]	X12: System bus CAN
[4]	S1, S2: DIP switch
[5]	S3, S4: Address switches
[6]	X10: Binary inputs (pins 1 - 6) X11: Binary outputs (pins 7 - 11)
[7]	X17: CAN2 bus
[8]	2 x 7-segment display
[9]	X5a, X5b: 24 V voltage supply
[10]	X4: DC link connection
[11]	X1: Supply system connection
[12]	Housing grounding point
[13]	Power shield clamp
[14]	X3: Braking resistor connection

C	View from bottom
[15]	X18: Line voltage measurement
[16]	X19: Enable contact for line contactor

3.4 Combinations of MXR regenerative power modules with other units

Unit	Combination possible?	Number
MXP	-	-
MXA	X	8
MXC	-	-
MXB	-	-
MXD	X	1
MXS	-	-
MXZ	-	-
MXM	X	1

3.5 Standard accessories

Standard accessories are included with the basic unit at delivery.

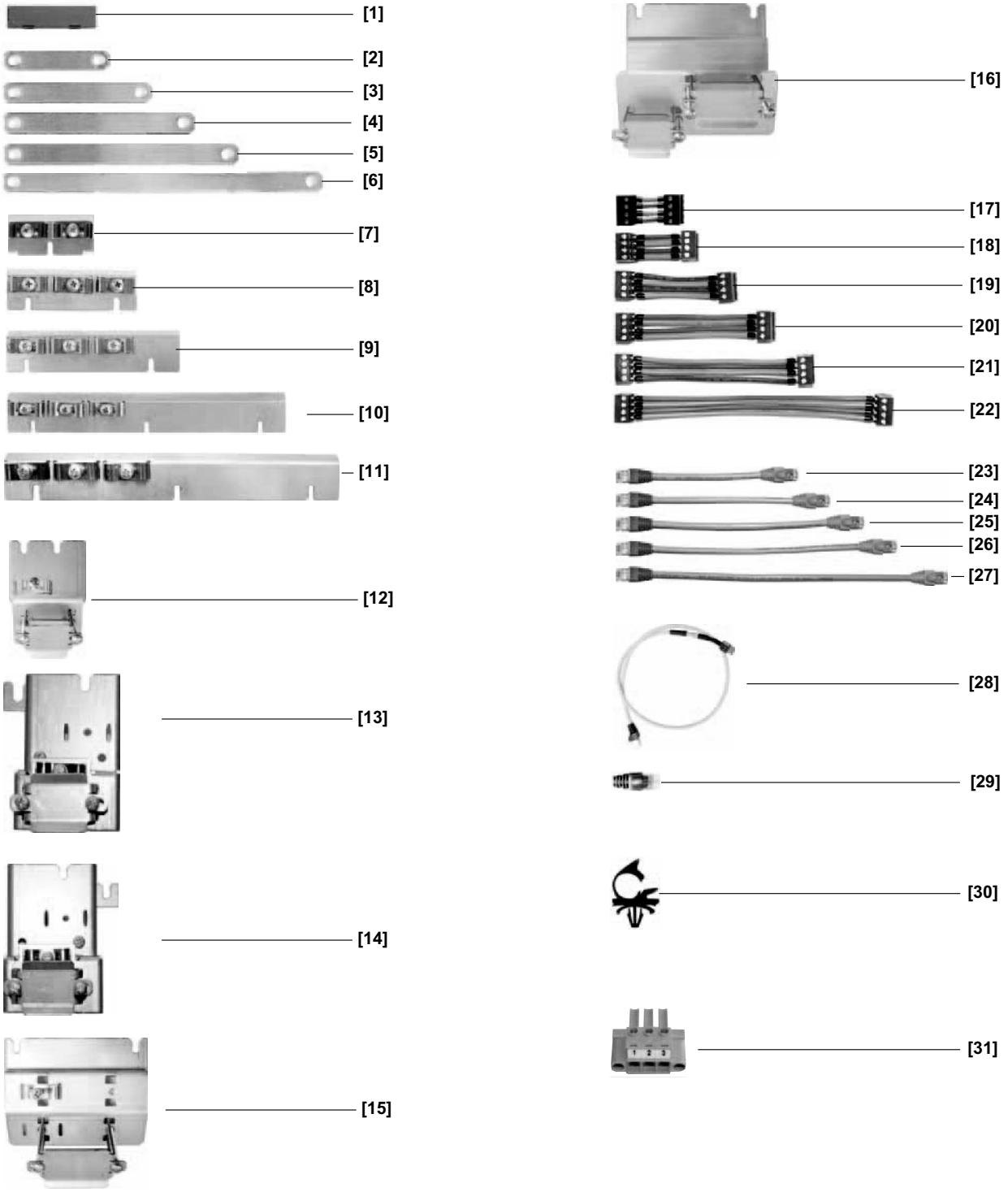

Figure 3: Standard accessories

The corresponding mating connectors for all connectors are installed at the factory. An **exception** are the D-sub connectors; they are supplied without mating connector.

3.5.1 Standard accessory assignment table

No.	Dimensions[1)]	MXR
Touch guard		
[1]		-
DC link connection		
[2]	76 mm	-
[3]	106 mm	-
[4]	136 mm	-
[5]	160 mm	-
[6]	226 mm	**3x**
Electronics shield clamp		
[7]	60 mm	**1x**
[8]	90 mm	-
[9]	120 mm	-
[10]	150 mm	**1x**
[11]	210 mm	-
Power shield clamp		
[12]	60 mm	-
[13]	60 mm[2)]	-
[14]	60 mm[3)]	-
[15]	105 mm	-
[16]	105 mm	**1x**
24 V supply cable		
[17]	40 mm	-
[18]	50 mm	-
[19]	80 mm	-
[20]	110 mm	-
[21]	140 mm	-
[22]	200 mm	**1x**
Signal bus connection cable (suitable for CAN-/ EtherCAT-based system bus)		
[23]	200 mm	-
[24]	230 mm	-
[25]	260 mm	-
[26]	290 mm	-
[27]	350 mm	**1x**
Connection cable CAN - master module		
[28]	520 mm	-
CAN terminating resistor		
[29]		-
Cable lugs		
[30]		-
Measurement cable connector		
[31]		**1x**

1) Length of the cables: Length of the bulk cable without connector
2) Clamp with short support, 60 mm wide
3) Clamp with long support, 60 mm wide

4 Installation

4.1 Mechanical Installation

	CAUTION Do not install defective or damaged modules; they can possibly result in injuries or damage parts of the production system. • Check the unit network of the MOVIAXIS® MX multi-axis servo inverter and the regenerative power module prior to installation for external damage and replace any damaged modules.

	CAUTION Danger of burns on the surface of line chokes. • Do not touch the hot surface of line chokes. The surface temperatures can exceed 100 °C during and after operation. • Let the chokes cool down before touching them.

- Check to make sure that the delivery is complete.

	STOP The mounting plate in the control cabinet must be conductive over a large area for the mounting surface of the servo inverter system (metallically pure, good conductivity). An EMC compliant installation of the MOVIAXIS® MX multi-axis servo inverter can only be accomplished with a mounting plate that is conductive over a large area.

4.2 UL-compliant installation

	INFORMATION
	UL certification is in preparation.

Note the following points for UL-compliant installation:

- Use only copper cables with the temperature range 60/75 °C as connection cables.
- The permitted tightening torques for MOVIAXIS® power terminals are:

	Tightening torque	
Regenerative power module	**Line connection X1**	**Emergency braking resistor terminals**
One size	6.0 - 10.0 Nm	3.0 - 4.0 Nm

Permitted tightening torques

The permitted tightening torque

– of the **signal terminals** X10, X11 for all units is 0.5 - 0.6 Nm.
– for all **DC link connections** X4 is 3.0 - 4.0 Nm.
– of the **terminals for 24 V voltage supply** is 0.5 - 0.6 Nm.

STOP

Regenerative power module can possibly be damaged!.

- Only use the stipulated connection elements and observe the prescribed tightening torques. Otherwise, excessive heat can develop which would damage the regenerative power module.

- MOVIAXIS® MX multi-axis servo inverters are suitable for operation in voltage networks with earthed star point (TN and TT networks), a maximum line current of 42,000 A and a maximum line voltage of AC 480 V.
- The maximum permitted value of the line fuse is:

MXR regenerative power module	"Maximum Power" variant	"Clean Power" variant
P_N	75 kW	50 kW
I_N	110 A	73 A
Input fuse	125 A	80 A

- Only use melting fuses as input fuses.
- If you use cable cross sections that are dimensioned for a smaller current than the rated current of the unit, make sure that the fuse is dimensioned for the used cable cross section.
- For information on selecting cable cross sections, refer to the project planning manual.
- Comply with the country-specific installation regulations in addition to the above notes.
- The plug-in connections of the 24 V supply are limited to 10 A.

STOP

We recommend protection of the emergency braking resistor with a thermal overload relay to implement an UL approved application design.

INFORMATION

Observe the technical data for operation of the required line filters (page 68) and line chokes (page 71).

The cross section of the measuring cable X18 of the line filter must be AWG12, see wiring diagram on page 23.

4.3 Installation and removal of the regenerative power module

Refer to the "MOVIAXIS® MX Multi-Axis Servo Inverter" operation instructions for a description how to install a module in an axis system and how to remove it. Adhere to the instructions for installing/removing a module.

4.4 Electrical installation

This chapter specifically describes the electrical installation of the MXR regenerative power module.

For detailed information on the electrical installation of the MOVIAXIS® axis system, refer to the 'MOVIAXIS® MX Multi-Axis Servo Inverter' operating instructions.

⚠ DANGER

Dangerous voltage levels may still be present inside the unit and at the terminal strips up to 10 minutes after the complete axis system has been disconnected from the supply system.

Severe or fatal injuries from electric shock.

To prevent electric shocks:

- Disconnect the axis system from the supply system and wait ten minutes before removing the protective covers.
- Secure the motor against unintended power-up.
- After maintenance work, do not operate the axis system unless you have replaced the protective cover because the unit only has degree of protection IP00 without protective cover.

⚠ DANGER

A leakage current > 3.5 mA can occur during operation of the MOVIAXIS® MX multi-axis servo inverter.

Severe or fatal injuries from electric shock.

To prevent electric shock:

- With a supply system lead < 10 mm^2, route a second PE conductor with the same cross section as the supply system lead via separate terminals. Alternatively, you can use a PE conductor with a copper cross section ≥10 mm^2 or aluminum ≥16 mm^2.
- With an incoming supply line ≥10 mm^2, it is sufficient to install a PE conductor with a copper cross section ≥10 mm^2 or aluminum ≥10 mm^2.
- If an earth leakage circuit breaker can be used for protection against direct and indirect contact, it must be universal current sensitive (RCD type B).

	INFORMATION
	Installation with reliable isolation. The unit meets all requirements for reliable isolation between power and electronic connections according to EN 61800. The connected signal circuits have to meet the requirements according to SELV (**S**afe **E**xtremly **L**ow **V**oltage) or PELV (**P**rotective **E**xtra **L**ow **V**oltage) to ensure reliable isolation. The installation must meet the requirements for reliable isolation.

4.4.1 Line contactor and cable cross sections

	STOP
	• Use a line contactor in **utilization category AC-3** (IEC 158-1) or better. **For information on the current carrying capacity, refer to chapter "MXR regenerative power module"** (page 64).

- Supply system lead: **Cross section according to nominal input current** I_{line} at rated load.

4.4.2 Emergency braking resistor connection

	STOP
	When using an emergency braking resistor, observe the notes in chapter "Project planning" (page 76).

- Protect the emergency braking resistor with an **overload relay.** Set the **trip current** according to the **technical data of the emergency braking resistor**, see "MOVIAXIS® MX Multi-Axis Servo Inverter" operating instructions.
- SEW-EURODRIVE recommends to connect the emergency braking resistor as shown in the "MOVIAXIS® MX Multi-Axis Servo Inverter" operating instructions. Install switch F16 close to the unit network. If an unshielded cable is used for connecting switch F16 with the regenerative power module, keep the length as short as possible. Preferably use a shielded line cable or drilled individual lines as connection cable to the emergency braking resistor. The cross section must be selected depending on the rated current of the emergency braking resistor.

4.4.3 Operation of the emergency braking resistor

- The connection lead to the emergency braking resistor carries a **high DC voltage of about 970 V** during rated operation.

	WARNING
	The surfaces of the emergency braking resistor will reach temperatures of up to 250 °C when the braking resistor is loaded with P_N. Risk of burns and fire. • Choose a suitable installation location. Emergency braking resistors are usually mounted on top of the control cabinet. • Do not touch any emergency braking resistor.

4.4.4 Permitted voltage supply systems

- MOVIAXIS® is intended for operation on voltage supply systems with a directly grounded star point (TN and TT power systems).
- Operation on voltage supply systems with a non-grounded star point (for example IT power systems) is not permitted.
- Autonomous power systems are not permitted.

  An autonomous power system has no connection to the public grid.

4.5 Wiring diagrams

4.5.1 General notes on the wiring diagrams

	INFORMATION
	The technical data of the power and control electronics connections are described in chapter "Technical Data" in this manual and in the "MOVIAXIS® MX Multi-Axis Servo Inverter" operating instructions.

- All units within the axis group will have to be connected to each other via the DC link bus connection (PE, + U_Z, -U_Z), the 24 V bus (X5a, X5b) and the signaling bus (X9a, X9b).
- The line contactor "K11" must be installed between the supply system and the line filter.

4.5.2 Sample connection of MXR regenerative power module

Wiring of the control electronics

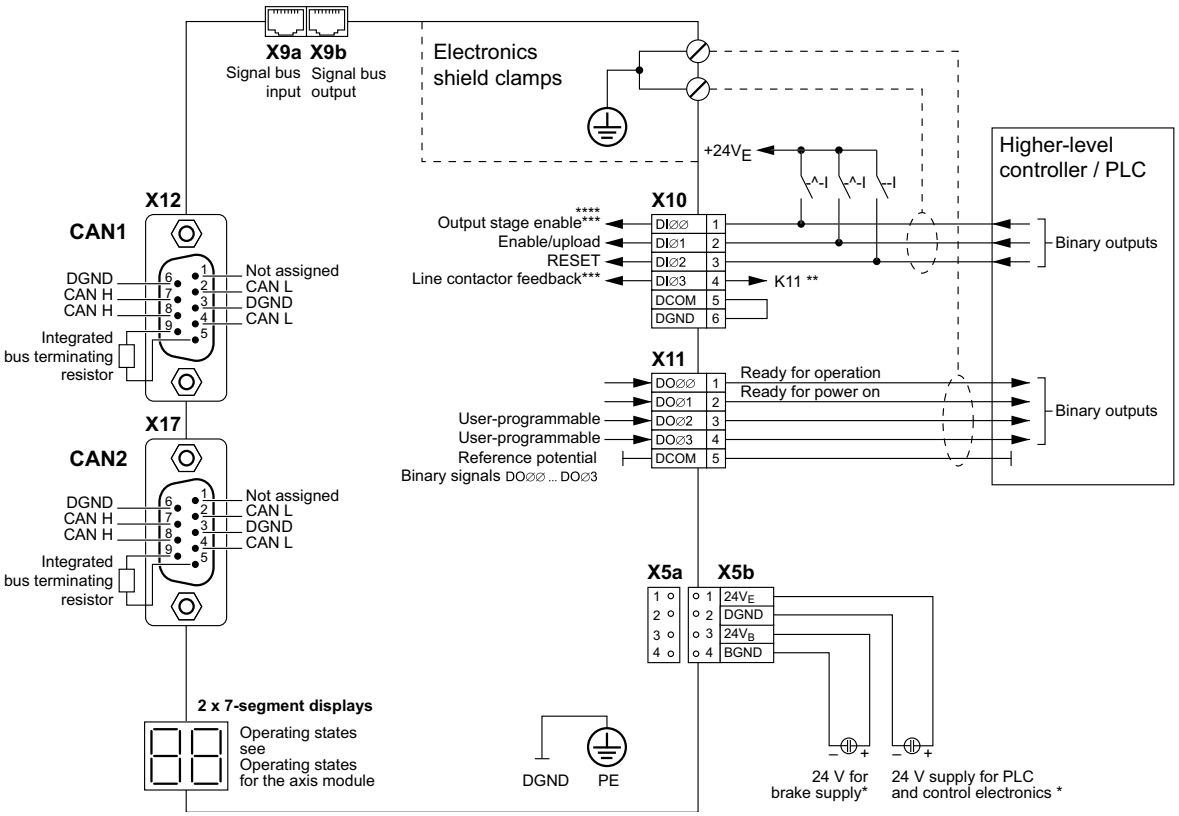

Figure 4: Wiring diagram of the MOVIAXIS® MXP regenerative power module control electronics

* Connection via supplied pre-fabricated cables

** See page 23.

*** The signal must also be connected to the hardware if control is realized via fieldbus.

**** Output stage enable only for service purposes or switching operation (output stage enable when several MXR are operated simultaneously on the same supply system, see page 79). In normal operation, the signal must be set to "High". This also applies for control via fieldbus.

Wiring of power terminals

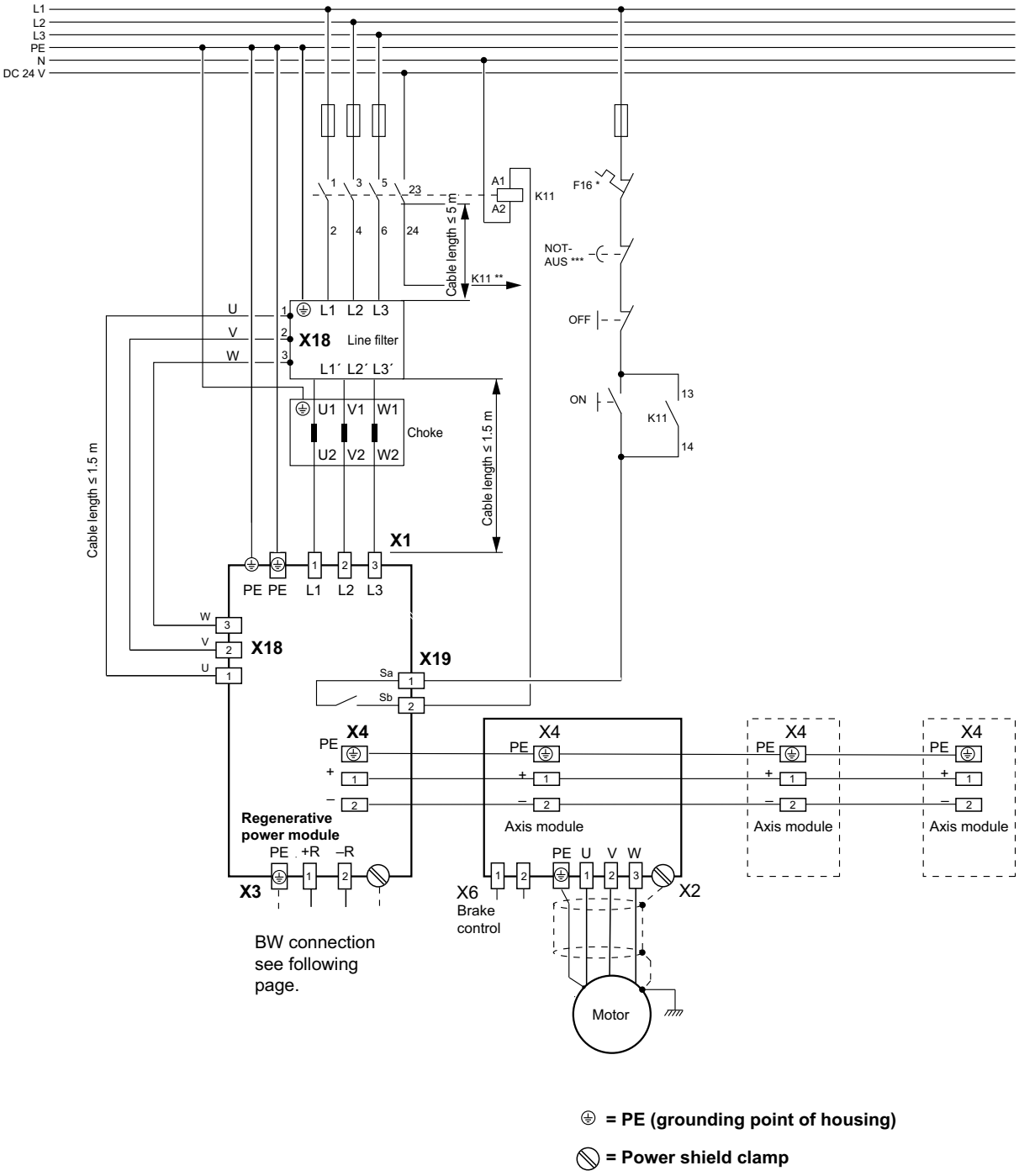

Figure 5: Wiring diagram of the MOVIAXIS® MXP regenerative power module

* When F16 (trip contact at overload relay) triggers, K11 must be opened and "Output stage enable" must receive a "0" signal. F16 is a signal contact, which means the resistor circuit must not be interrupted.

** See page 22.

*** Emergency stop release delay only in line with applicable system- and country-specific safety regulations and customer specifications.

For the switch-on sequence of MXR, go to page 33.

Braking resistor connection

STOP	**STOP** If the entire system is disconnected from the supply system (e.g. via main switch), control of the line contactor K11 at the MXR regenerative power module must be interrupted or the DI00 enable must be revoked. This can be achieved, for example, with a leading (≥ 10 ms) auxiliary switch contact of the supply system control.

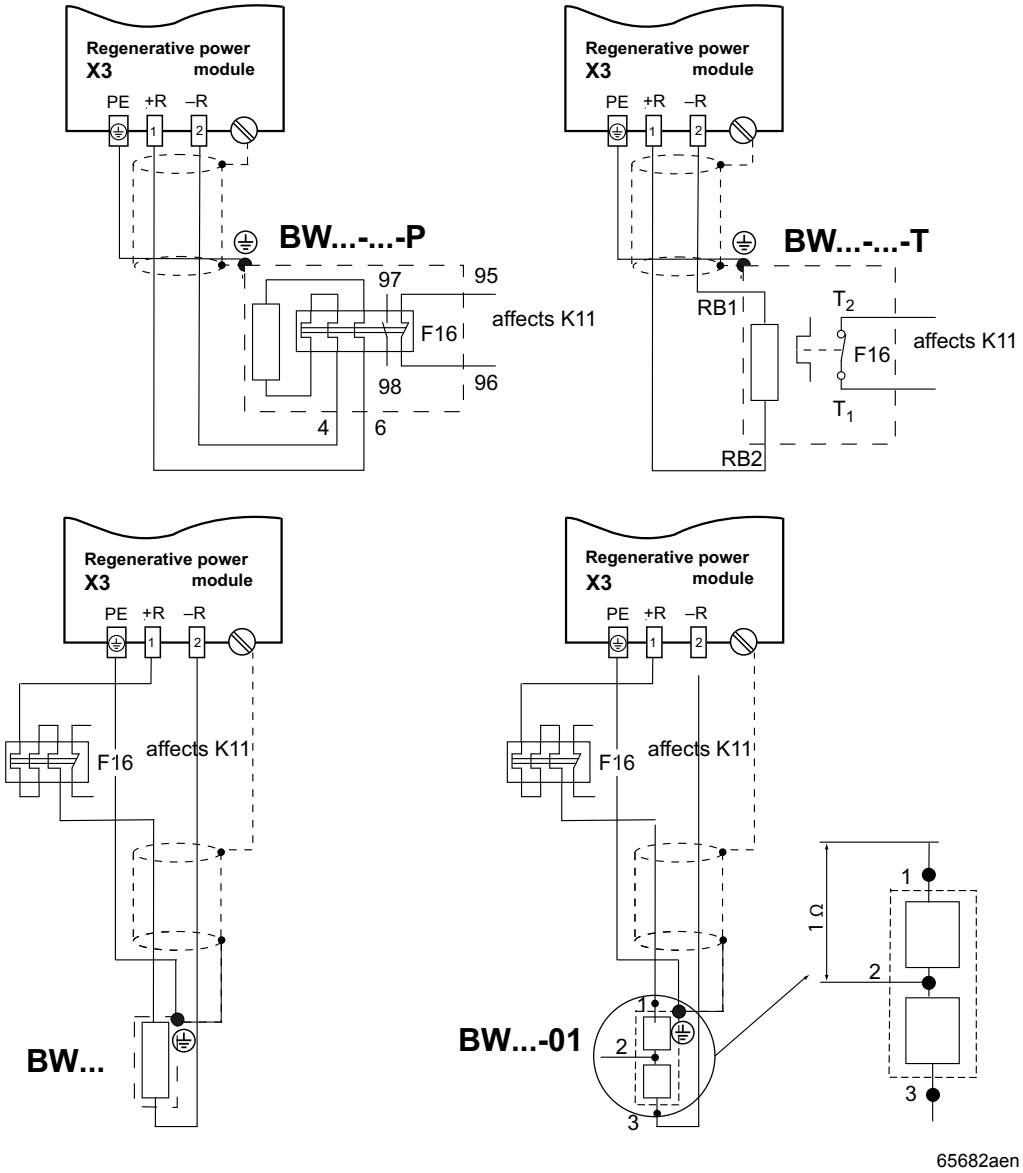

Figure 6: Braking resistors BW..-..-P, BW..-..-T, BW.., BW...-01

BW...-...-P	BW...-...-T	BW... , BW...-01
If the signal contact F16 trips, K11 must open. When F16 (trip contact at overload relay or temperature switch) triggers, K11 must open and 'Output stage enable' must receive a '0' signal. F16 is a signal contact, which means the resistor circuit must not be interrupted.	When the internal temperature switch trips, K11 must open. When F16 (trip contact at overload relay or temperature switch) triggers, K11 must open and 'Output stage enable' must receive a '0' signal. F16 is a signal contact, which means the resistor circuit must not be interrupted.	When the external bimetallic relay (F16) trips, K11 must open. When F16 (trip contact at overload relay or temperature switch) triggers, K11 must open and 'Output stage enable' must receive a '0' signal. F16 is a signal contact, which means the resistor circuit must not be interrupted.

Braking resistor type	Overload protection
BW..	External bimetallic relay F16
BW...-01	External bimetallic relay F16
BW..-..-T	• Internal temperature switch or • External bimetallic relay F16
BW..-..-P	Internal bimetallic relay F16

4.6 Terminal assignment

INFORMATION

Reference potentials inside the unit:

The designation of the reference potentials is listed in the following table:

Designation	Meaning
DGND PE	General reference potential of control electronics. There is a metallic connection to PE.
BGND	Reference potential for brake connection
RGND	Reference potential for safety relay
DCOM	Reference potential for binary inputs

INFORMATION

Connection elements:

All connection elements are represented in the following tables as viewed from top.

4.6.1 Terminal assignment of the MXR regenerative power module

	INFORMATION
	The technical data of the power and control electronics connections are described in chapter "Technical Data" in this manual and in the "MOVIAXIS® MX Multi-Axis Servo Inverter" operating instructions.

	Terminal	Assignment	Brief description	
	X1:PE **X1:1** **X1:2** **X1:3**	**PE** **L1** **L2** **L3**	Supply system connection (MXR)	
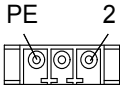	**X3:PE** **X3:1** **X3:2**	**PE** **+R** **-R**	Braking resistor connection	
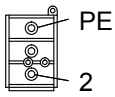	**X4:PE** **X4:1** **X4:2**	**PE** **+U_Z** **- U_Z**	DC link bus connection	
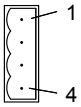	**X5a:1** **X5a:2**	**+24 V_E** **DGND**	Voltage supply for electronics	
	X5a:3 **X5a:4**	**+24 V_B** **BGND**	Voltage supply for brake supply	
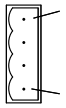	**X5b:1** **X5b:2**	**+24 V_E** **DGND**	Voltage supply for electronics	
	X5b:3 **X5b:4**	**+24 V_B** **BGND**	Voltage supply for brake supply	
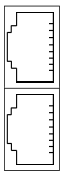	**X9a** **X9b**		a = Input: Signal bus, with green plug b = Output: Signal bus, with red plug	
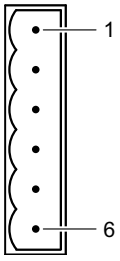	**X10:1** **X10:2** **X10:3** **X10:4** **X10:5** **X10:6**	**DIØØ** **DIØ1** **DIØ2** **DIØ3** **DCOM** **DGND**	Binary input 1, with fixed assignment"Output stage enable" Binary input 2, with fixed assignment "Enable / upload" Binary input 3, with fixed assignment"Reset" Binary input 4, with fixed assignment"Line contactor feedback" Reference potential for the binary inputs DIØØ - DIØ3 General reference potential of control electronics	Electrically isolated via optocoupler with reference to DCOM (X10:5).
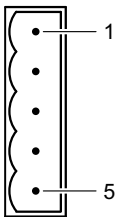	**X11:1** **X11:2** **X11:3** **X11:4** **X11:5**	**DOØØ** **DOØ1** **DOØ2** **DOØ3** **DGND**	Binary output 1, with fixed assignment "Ready for operation" Binary output 2, with fixed assignment "Ready for power on" Binary output 3, freely programmable Binary output 4, freely programmable Reference potential for binary outputs DOØØ - DOØ3	

	Terminal	Assignment	Brief description
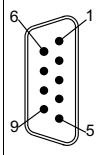 1)	**X12:1** **X12:2** **X12:3** **X12:4** **X12:5** **X12:6** **X12:7** **X12:8** **X12:9**	**n.c.** **CAN_L** **DGND** **CAN_L** **$R_{termination}$** **DGND** **CAN_H** **CAN_H** **$R_{termination}$**	- CAN1 Bus Low Reference potential CAN1 bus CAN1 Bus Low Unit internal SBus terminating resistor Reference potential CAN bus CAN1 Bus High CAN1 Bus High Unit internal SBus terminating resistor
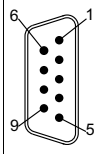 1)	**X17:1** **X17:2** **X17:3** **X17:4** **X17:5** **X17:6** **X17:7** **X17:8** **X17:9**	**n.c.** **CAN_L** **DGND** **CAN_L** **$R_{termination}$** **DGND** **CAN_H** **CAN_H** **$R_{termination}$**	- CAN2 Bus Low Reference potential CAN2 bus CAN2 Bus Low Unit internal SBus terminating resistor Reference potential CAN2 bus CAN2 Bus High CAN2 Bus High Unit internal SBus terminating resistor
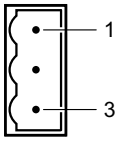	**X18:1** **X18:2** **X18:3**	**U** **V** **star**	Line voltage measurement
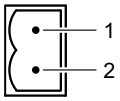	**X19:1** **X19:2**	**Sa** **Sb**	Enable contact for line contactor

1) Only for CAN-based system bus. No function for EtherCAT-based system bus.

5 Startup

This chapter specifically describes the startup of the MXR regenerative power module.

For detailed information on the startup of the MOVIAXIS® axis system, refer to the 'MOVIAXIS® MX Multi-Axis Servo Inverter' operating instructions.

5.1 General information

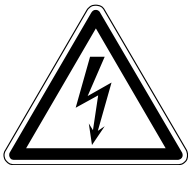	**DANGER** Uncovered power connections. Severe or fatal injuries from electric shock. • Install the touch guard according to the regulations. • Never start the unit if the touch guard is not installed.

Prerequisite

The drive must be configured correctly to ensure that startup is successful. Refer to the "MOVIAXIS® MX Multi-Axis Servo Inverter" project planning manual for detailed project planning notes and an explanation of the parameters.

For starting up the entire axis system, observe chapter "Startup" in the "MOVIAXIS® MX Multi-Axis Servo Inverter" operating instructions.

	INFORMATION In addition to the requirements specified in the operating instructions and the project planning manual for MOVIAXIS® MX, the MXA8... axis modules must be equipped with firmware .24 or higher.

5.2 Settings on regenerative power module for CAN-based system bus

The following settings are necessary:

- The CAN baud rate is set using the two DIP switches S1 and S2 on the regenerative power module, see chapter "Assigning the CAN baud rate" in the "MOVIAXIS® Multi-Axis Servo Inverter" operating instructions.
- The address of the regenerative power module is set using the address switches S3 and S4 on the regenerative power module. The other axis addresses will be set automatically based on the first unit address.

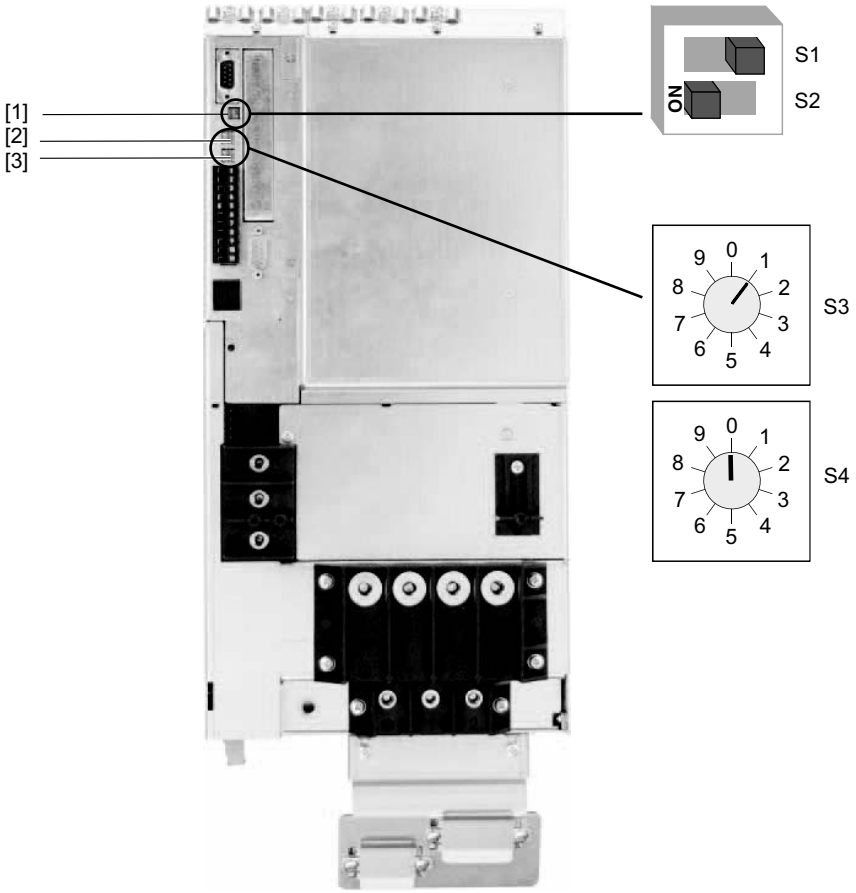

Figure 7: DIP switches and axis address switches on the regenerative power module

[1] S1, S2: DIP switch for CAN1 baud rate

[2] S3: Axis address switch 10^0 (delivery state: 1×10^0)

[3] S4: Axis address switch 10^1 (delivery state: 0×10^1)

5.2.1 Example

The axis address "1" is set at the MXR regenerative power module, see Figure 8.
The axis addresses of all other modules are based on this setting.
The following figure shows the setting of the axis addresses.

Example

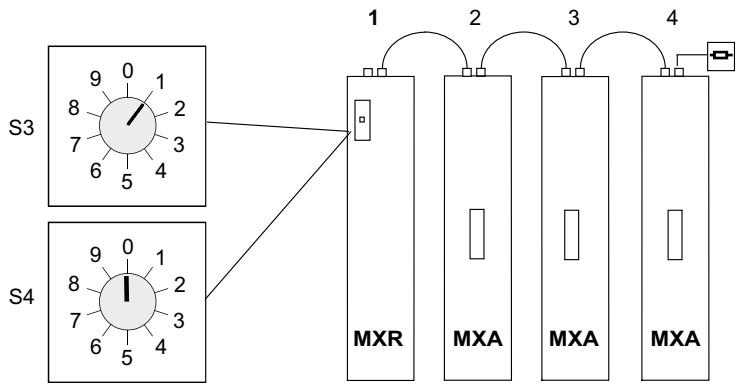

Figure 8: Axis address setting

MXR	Regenerative power module
MXA	MOVIAXIS® axis module

5.3 Settings on regenerative power module for EtherCAT-based system bus XSE24A

For information on the EtherCAT-based system bus XSE24A, refer to the "MOVIAXIS® MX Multi-Axis Servo Inverter" operating instructions, chapter 3.21.

Modules that are supplied with EtherCAT-based system bus XSE24A are pre-configured at the factory.

When using an EtherCAT-based system bus, the DIP switches [1] and the axis address switches [2, 3] are not active.

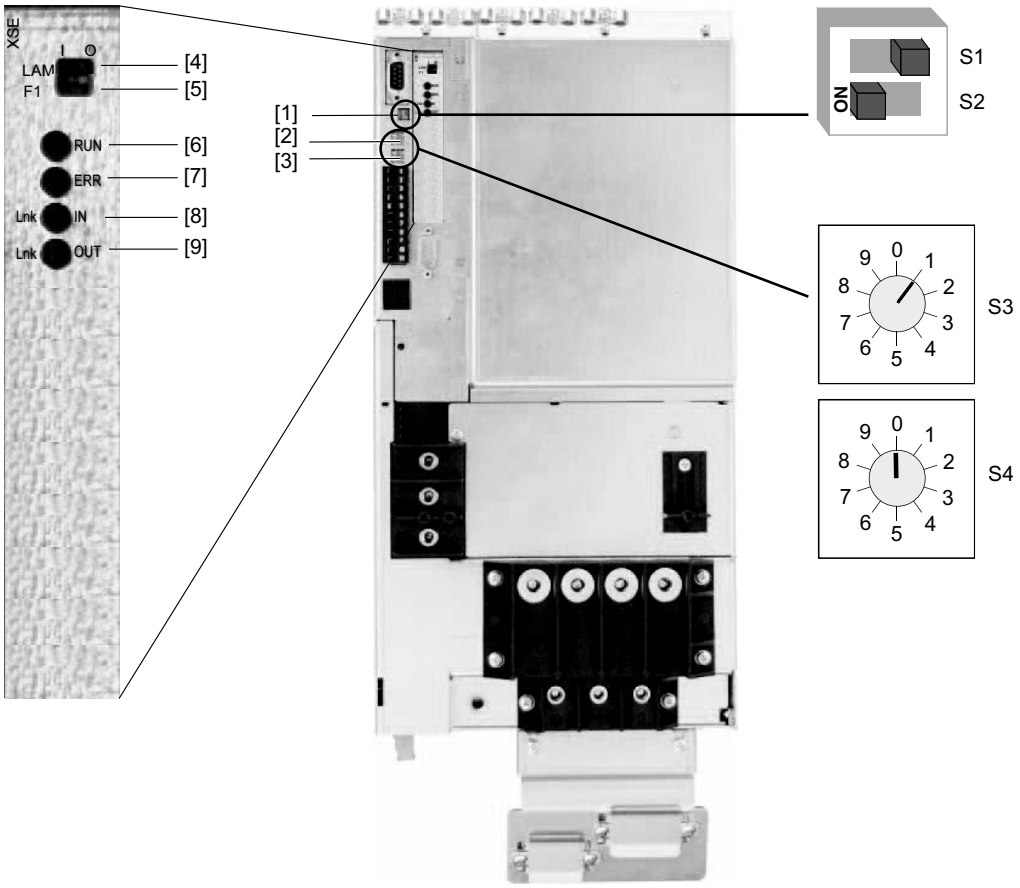

Figure 9: Settings for EtherCAT-based system bus XSE24A

[1] S1, S2: DIP switch for CAN baud rate: **Not active**

[2] S3: Axis address switch 10^0: **Not active**

[3] S4: Axis address switch 10^1: **Not active**

[4] LAM switch
- Switch setting 0

[5] Switch F1
- Switch setting 0: Delivery state
- Switch setting 1: Reserved for added functions

[6] LED RUN; color: Green / orange

[7] LED ERR; color: Red

[8] LED link IN; color: Green

[9] LED link OUT; color: Green

5.4 Settings on regenerative power module for EtherCAT XFE24A interface

For information on the EtherCAT XFE24A fieldbus interface, refer to the "MOVIAXIS® MX Multi-Axis Servo Inverter" operating instructions, chapter 3.20.

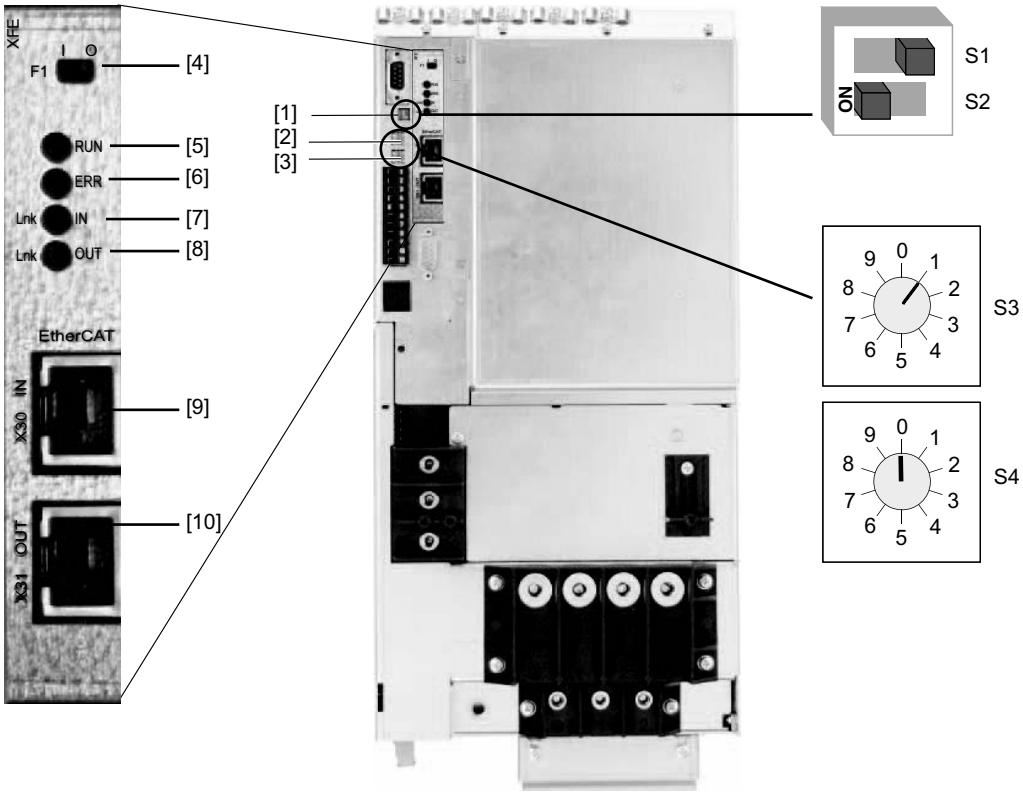

Figure 10: EtherCAT XFE24A fieldbus interface settings

[1] S1, S2: DIP switch for CAN baud rate

[2] S3: Axis address switch 10^0

[3] S4: Axis address switch 10^1

[4] LAM switch
- Switch setting 0

Switch F1
- Switch setting 0: Delivery state
- Switch setting 1: Reserved for added functions

[5] LED RUN; color: Green / orange

[6] LED ERR; color: Red

[7] LED link IN; color: Green

[8] LED link OUT; color: Green

[9] Bus input

[10] Bus output

	INFORMATION
	Axis address setting: see page 29.

5.5 Switch-on sequence of MXR regenerative power module

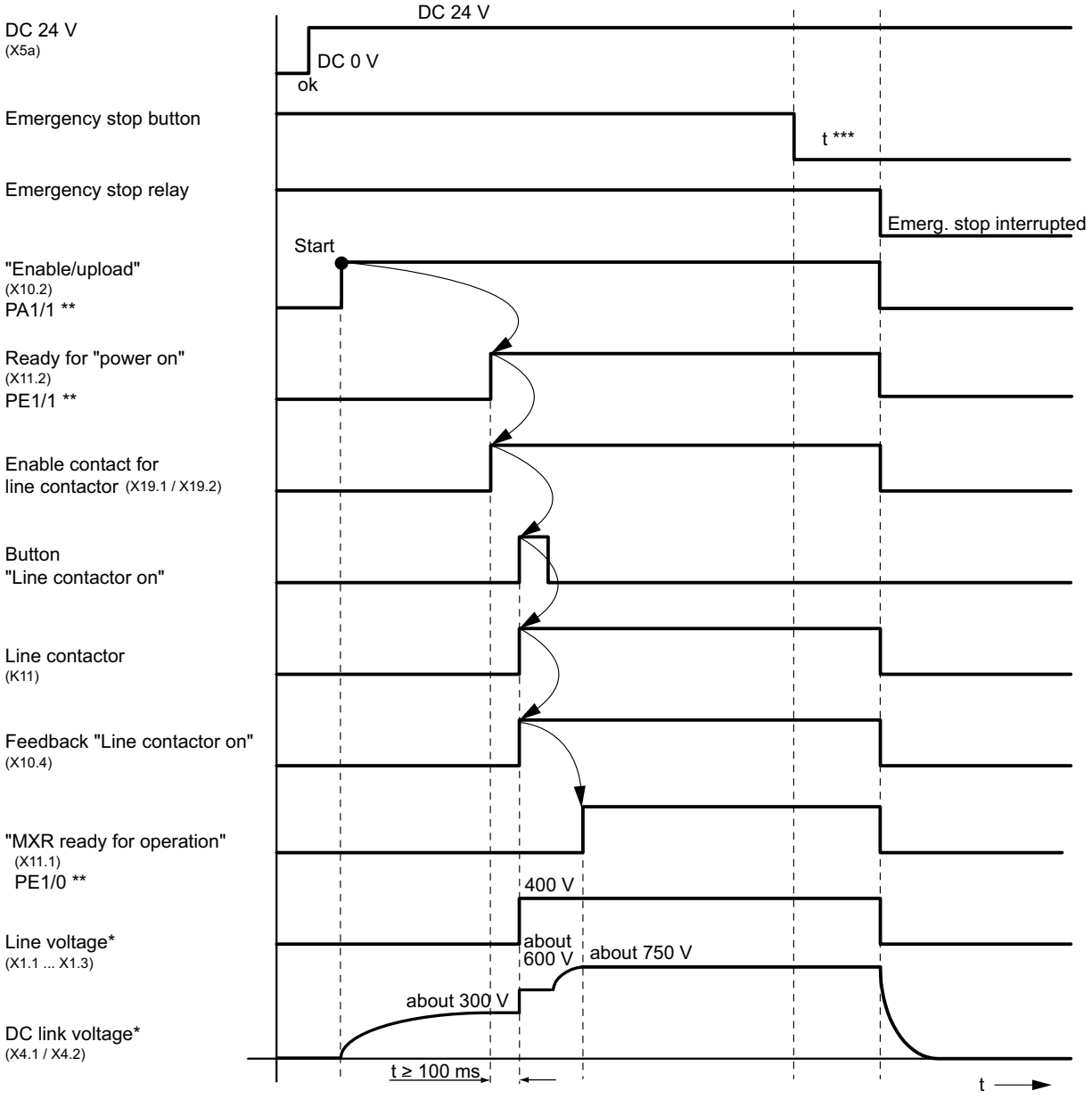

Figure 11: Switch-on sequence of the MXR regenerative power module

* For supply voltage AC 400 V

** For control via fieldbus

*** Emergency stop release delay only in line with applicable system- and country-specific safety regulations and customer specifications.

For the wiring diagram of MXR, go to page 23.

Addendum to the diagram

Enable / upload

The enable signal is required for operation of the MXR module. It pre-charges the DC link to about 300 V, see diagram page 33.

The in-phase wiring of the components on the line end and the line voltage measurement are checked when the DC link voltage drops below 300 V. See fault list on page 48 ff, Fault 107.

After the "Ready for power on" signal is received, the line contactor is energized.

Switching off the MXR module:

In normal operation, the MXR module is switched off by withdrawing the "Enable / upload" signal. This means that the "Internal power on enable" is revoked, which causes the line contactor to drop out.

Ready for power on

The MXR module sets this signal as soon as the line contactor can be energized.

Enable contact for line contactor

Enable contact for X19 line contactor.

The time after which the "Line contactor on" control switch may be activated must be longer than 100 ms.

MXR ready for operation

As soon as the DC link voltage reaches 750 V and no error occurs, the MXR module signals "Ready for operation". This signal means that the axes can be enabled.

Troubleshooting

If an error occurs according to chapter 6.2.2 "Table of faults", the "MXR ready for operation" signal (X11.1 / PE1/0[1)]) is withdrawn.

In this case, the system must be brought to a standstill in an application-specific emergency mode.

If the emergency braking resistor option is installed, the axes can be decelerated in a controlled way. Otherwise the "Output stage enable" of the axes must be revoked.

The error responses of the axis modules are listed in the "MOVIAXIS® MX Multi-Axis Servo Inverter" operating instructions.

1) Fieldbus operation

5.6 *Process data assignment for fieldbus operation*

5.6.1 Regenerative power supply control

The servo inverter is controlled via up to 16 process data input words and process data output words.

Example:

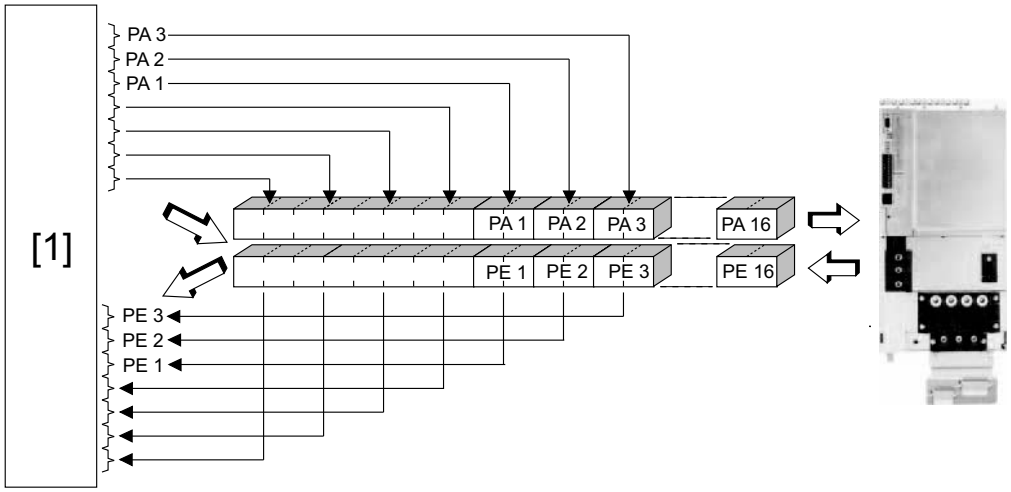

Figure 12: Controlling the servo inverter

[1]	Process image of the controller (master)
PE1 - PE16	Process input data
PA1 - PA16	Process output data

5.6.2 Process output data PA

Number of process data words: 1 - 16

Process data assignment PA1 (control word)

Bit no.	Meaning
0	Reserved
1	Enable/upload (1' = enable/upload) *
2	Fault reset *
3	Reserved
4	Not assigned
5	Not assigned
6	Not assigned
7	Not assigned
8	Not assigned
9	Not assigned
10	Not assigned
11	Not assigned
12	Not assigned
13	Not assigned
14	Not assigned
15	Not assigned

* Fixed assignment

Process data assignment PA2 - PA16

Process data words PA2 - PA16 are not assigned.

5.6.3 Process input data PE

Process data assignment PE1 (status word)

Bit no.	Meaning
0	Ready for operation (1' = ready for operation) *
1	Ready for power on *
2	Not assigned
3	Not assigned
4	Not assigned
5	Not assigned
6	Not assigned
7	Not assigned
8	Not assigned
9	Not assigned
10	Not assigned
11	Not assigned
12	Not assigned
13	Not assigned
14	Not assigned
15	Not assigned

* Standard setting

Process data assignment PE2 - PE16

Process data words PE2 - PE16 are not assigned.

5.7 Startup of the MXR using MOVITOOLS® MotionStudio

Selection and setup of the communication between PC and MOVIAXIS® is described in the "MOVIAXIS® Multi-Axis Servo Inverter" operating instructions, chapter "Communication selection".

5.7.1 Unit selection / calling the parameter tree

Step 1 In the unit tree, select the MXR80A... regenerative power unit.

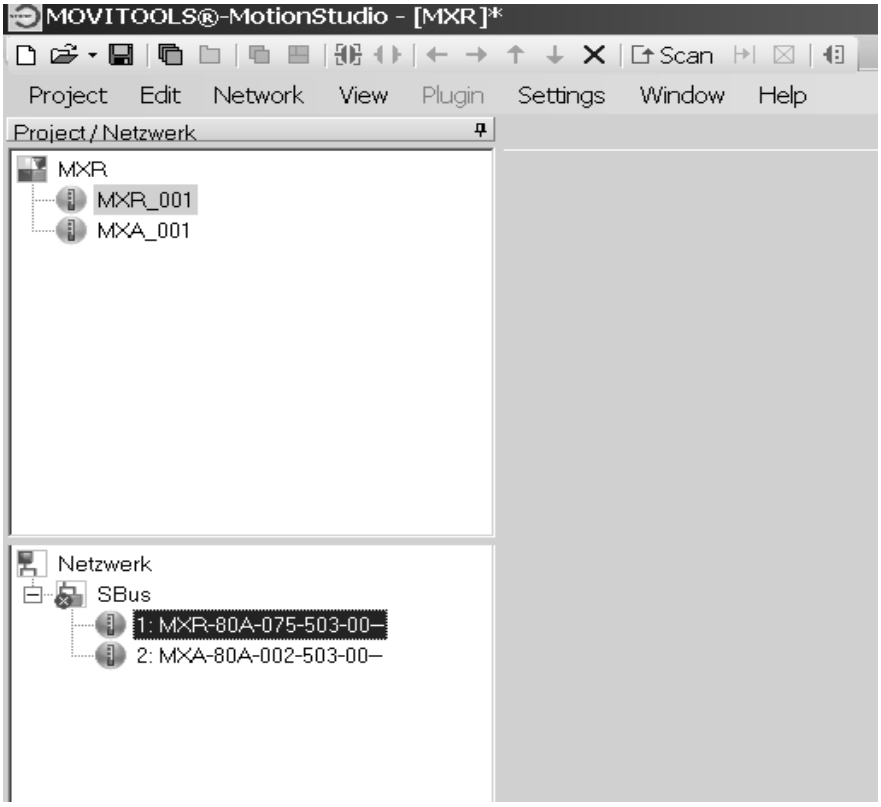

12063aen

Step 2

Open the context menu by clicking the right mouse button and select the menu item 'Startup' / 'Parameter tree (online)'.

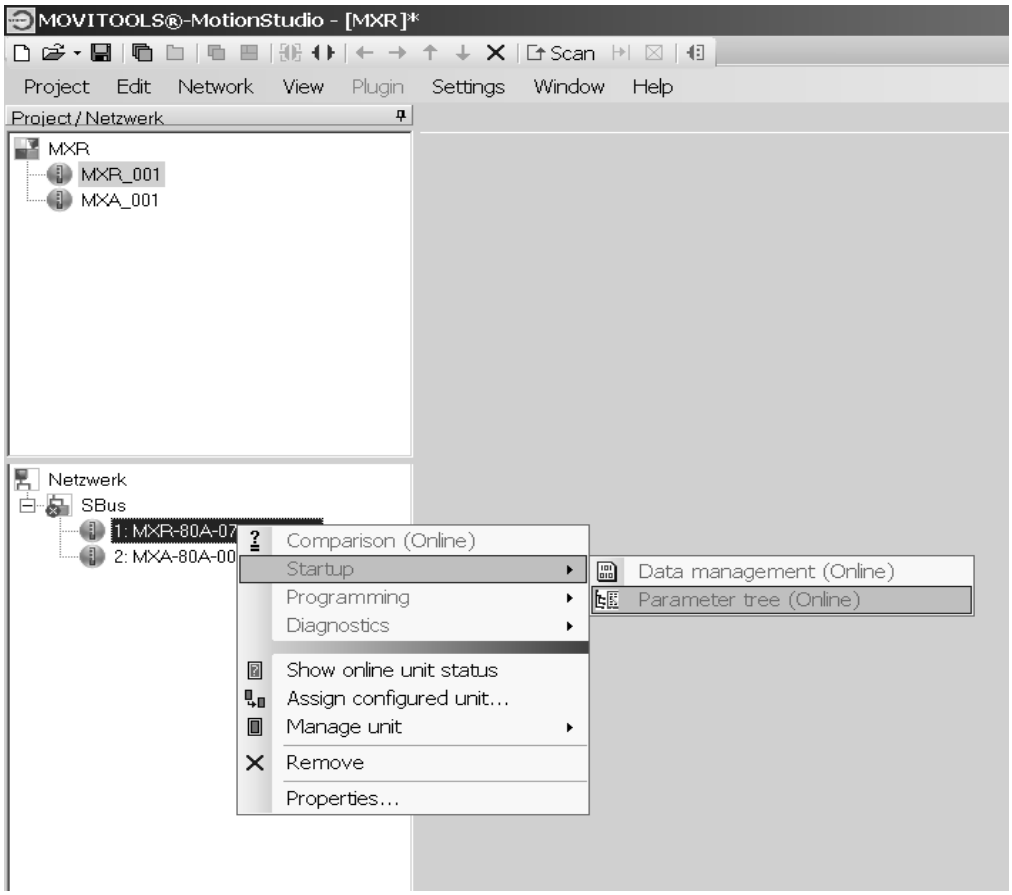

12064aen

5.7.2 Startup

Step 3 In the parameter tree, select the group "System data \ Startup" and check the settings of the startup parameters.

The following values are set as standard:

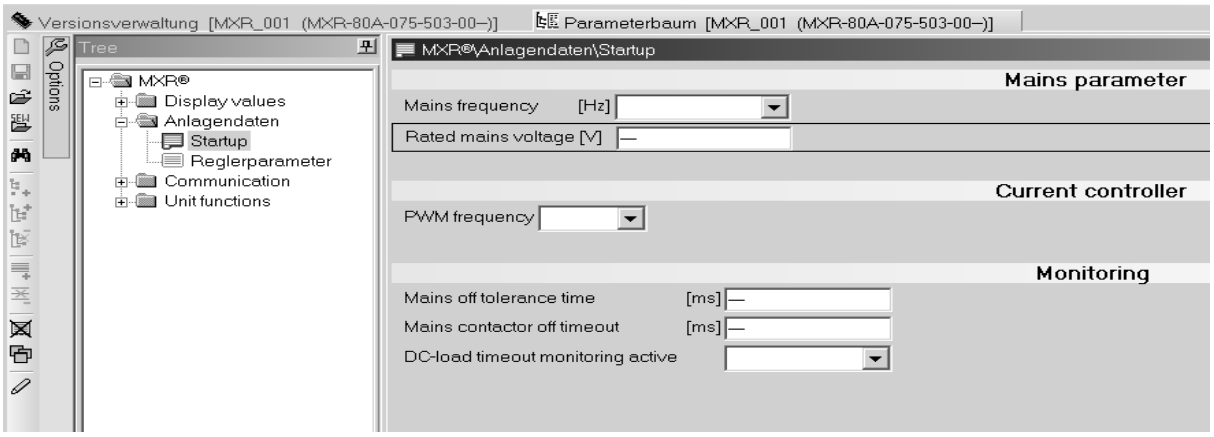

11972aen

- **Supply system frequency [Hz]**: Set the line frequency of the supply system: **50 Hz** / 60 Hz
- **Nominal supply system voltage [V]**: Set the nominal voltage of the supply system here: 380 - **400** - 480 V.
- **PWM frequency**: Set the PWM frequency [kHz] for the MXR regenerative power module.

	STOP Depending on the projected unit power of 50 or 75 kW, the "PWM frequency" parameter must be set to 8 or 4 kHz: • 4 kHz for 75 kW rated unit output • 8 kHz for 50 kW rated unit output See also section 'Parameter description' page 41 ff.

- **Power off tolerance time [ms]**: The power off tolerance time can be used to set when an error is triggered after a power failure. **0** - 20000 ms. A value above zero must be entered according to the application.
- **Timeout when opening the line contactor [ms]**: Monitors the time after the enable signal is revoked until the "Line contactor feedback" signal is no longer pending. When the monitoring time set here is exceeded, an error is triggered: 0 - **1000** ms.
- **Charging timeout monitoring [ms]**: After the enable signal is issued, this function monitors whether the DC link voltage reaches 300 V within the timeout time of 10 s. It is also monitored whether the DC link voltage reaches the setpoint value within a timeout time of 5 s after the controller has been enabled. **On** / off.

	INFORMATION Once you have checked and, if necessary, adapted the parameters described above, MXR is completely started up and ready for normal operation. Deviating parameter settings for applications with special requirements are listed in chapter 'Parameter description' page 41 ff. Please contact SEW-EURODRIVE if necessary.

5.8 Parameter description

Parameter group	Index	Parameters	Function/meaning
Display values	Process values output stage		
	8325.0	DC link voltage [V]	Current value of the DC link voltage V_{DC} [V]
	9786.1	Output current [%]	Current value of the output current of MXR [%] in relation to the rated unit current
	8326.0	Output current, filtered [A]	Current filtered value of the output current of MXR [A]
	10467.40	Effective power [kW]	Current active power of the MXR regenerative power module; negative values specify the regenerative power that is fed back into the supply system. Positive values specify the active power input from the supply system.
	10467.42	Filtered active power [kW]	Current filtered active power of the MXR regenerative power module; negative values specify the regenerative power that is fed back into the supply system. Positive values specify the active power input from the supply system.
	10467.41	Regenerated energy [kWh]	Displays the amount of energy regenerated since the last reset. The last parameter value will be stored in a non-volatile memory. The parameter can be reset by writing the value "0" to it. In the parameter tree of MotionStudio, the value is displayed with the resolution [kWh]. If the value is read directly from the unit, e.g. via fieldbus, the resolution is [Wh].
	10467.14	V_d setpoint [V]	Active voltage setpoint
	10467.15	$V_{q\ setpoint}$ [V]	Reactive voltage setpoint
	10467.8	$I_{d\ setpoint}$ [A]	Active current setpoint
	10467.9	$I_{q\ setpoint}$ [A]	Reactive current setpoint
	9859.1	Thermal current limit [%]	Displays the actual thermal current limit in % of the MXR regenerative power. The MXR module has a brief overload capacity up to this maximum limit (maximum operating point). The thermal current limit is dynamically adjusted according to the utilization of MXR. It starts at 250 % and becomes smaller according to utilization.
	9811.5	Total utilization [%]	Current unit utilization in [%] of the rated unit power
	9811.1	Dynamic utilization of chip hub [%]	Dynamic utilization of the chip hub in per cent (Ixt utilization). The parameter is unfiltered.
	9811.2	Absolute dynamic utilization of chip hub [%]	Absolute dynamic utilization of the chip in per cent (Ixt utilization). The parameter is unfiltered.
	9811.4	Heat sink utilization [%]	Current heat sink utilization
	9795.1	Heat sink temperature [°C]	Current heat sink temperature
	9811.3	Electromechanical utilization [%]	Current electromechanical utilization

Parameter group	Index	Parameters	Function/meaning
Display values		Unit status	In the 'Unit status' parameter group, you can read out all information about the current unit status.
		Unit data	In the 'Unit data' parameter group, you can read out all information about the unit variant and option cards. The unit status and the version number of the firmware are displayed here.
		Unit nameplate	In the "Unit nameplate" parameter group, you can read out information such as the serial number and status information of the hardware and software of MXR and the option subassembly.
		Error history	The error history consists of 6 error ring memories, in which the most recent errors are stored. In addition, each error ring memory saves process values and the statuses of the binary inputs and outputs at the time of the error.
	Line process values		
	10467.16	V_{alpha} [V]	Real part of voltage phasor
	10467.17	V_{beta} [V]	Imaginary part of voltage phasor
	10467.16	I_{alpha} [A]	Real part of current phasor
	10467.4	I_{beta} [A]	Imaginary part of current phasor
	10467.12	U_d [V]	Active voltage
	10467.13	U_q [V]	Reactive voltage
	10467.50	I_d [A]	Active current
	10467.51	I_q [A]	Reactive voltage

Parameter group	Index	Parameters	Function/meaning
System data	Startup		
	10470.10	Supply system frequency [Hz]	This parameter can be used to set the line frequency of the supply system: **50 Hz** / 60 Hz.
	10470.14	Supply system voltage [V]	This parameter can be used to set the nominal voltage of the supply system: 380 - **400** - 480 V.
	10470.2	PWM frequency[kHz]	This parameter sets the PWM frequency [kHz] for the MXR regenerative power module. Depending on the projected unit power of 50 or 70 kW, the parameter must be set: 50 kW: 8 kHz 75 kW: 4 kHz **Due to the upstream choke and the line filter, the PWM frequency cannot be selected freely, but is determined by the design.** See also page 40 ff. To change the PWM frequency, it is necessary to replace these upstream units and in some cases to adapt the installed cable cross sections, the fuses and the line contactor.
	10469.4	Power off tolerance [ms]	The power off tolerance time can be used to set when an error is triggered after a power failure. Note that during regenerative operation, an error can be triggered before the set power off tolerance time has elapsed, if • The DC link capacitors are fully charged, • No more regenerative power can be absorbed, • No optional braking resistor is connected. Setting range: **0** - 20000 ms
	10472.11	Timeout when opening the line contactor [ms]	Monitors the time after the "enable" signal is revoked until the "Line contactor feedback" signal is no longer pending. When the monitoring time set here is exceeded, an error is triggered. Setting range: 0 - **1000**ms
	10472.1	Timeout monitoring of charging procedure	Charging timeout monitoring [ms]: After the enable signal is issued, this function monitors whether the DC link voltage reaches 300 V within the timeout time of 10 s. It is also monitored whether the DC link voltage reaches the setpoint value within a timeout time of 5 s after the controller has been enabled. **On** / off
	Controller parameters		
	9813.1	Activate Ixt current reduction	A current limit is set using the parameter setting "**On**/Off" to ensure reliable operation of the axes even in the case of an overload. The changeover is only implemented in "Controller inhibit active" status.
	10467.2	V_z setpoint [V]	This parameter shows the setpoint for the controlled DC link voltage.

Parameter group	Index	Parameters	Function/meaning
Communica-tion		Basic settings	See "MOVIAXIS® Multi-Axis Servo Inverter" project planning manual, chapter "Communication parameter description"
	Control word CAN1 / CAN2 / communication options		
	CAN1: 9514.1 CAN2: 9515.1 Integrated option: 9516.1	Data source	Here, you can set the source of the control word information; Setting option: **None** / CAN1
	CAN1: 9514.3 CAN2: 9515.3 Integrated option: 9516.3	Data block start	See "MOVIAXIS® Multi-Axis Servo Inverter" project planning manual, parameter 9514.3
	CAN1: 9514.4 CAN2: 9515.4 Integrated option: 9516.4	Data block length [Number of words]	This parameter can be used to set the length of the data block: 0 - **4** - 16
	CAN1: 9514.19 CAN2: 9515.19 Integrated option: 9516.19	Timeout interval	Here, you can set the monitoring time after which an error is triggered if no telegrams are received any longer. The setting 0 deactivates the monitoring function. 0 - **20** - 10000 [ms]
	CAN1: 9514.5 CAN2: 9515.5 Integrated option: 9516.5	Update	See "MOVIAXIS® Multi-Axis Servo Inverter" project planning manual, parameter 9514.5
	CAN1: 9514.16 CAN2: 9515.16 Integrated option: 9516.16	Configuration error	See "MOVIAXIS® Multi-Axis Servo Inverter" project planning manual, parameter 9514.6
	CAN1: 9514.2 CAN2: 9515.2	Message ID	Here, you can set the ID of the received CAN message.
	CAN1: 9514.14 CAN2: 9515.14	Data acceptance with Sync	Here, you can set whether the data is accepted with a Sync message.
	CAN1: 9514.20 CAN2: 9515.20	nEndianess	Indicates which data format is set for the CAN messages: **Big Endian** (Motorola format) / Little Endian (Intel format)
	Status word CAN1 / CAN2 / communication options		
	CAN1: 9563.3 CAN2: 9564.3 Integrated option: 9565.3	Data sink	This parameter determines the communication channel that is used for transmitting status information: **None** / CAN1 system bus
	CAN1: 9563.5 CAN2: 9564.5 Integrated option: 9565.5	Data block start	See "MOVIAXIS® Multi-Axis Servo Inverter" project planning manual, parameter 9563.5
	CAN1: 9563.6 CAN2: 9564.6 Integrated option: 9565.6	Data block length [Number of words]	This parameter can be used to set the length of the data block: 0 - **4** - 16
	CAN1: 9563.16 CAN2: 9564.16 Integrated option: 9565.16	Configuration error	Indicates a configuration error.
	CAN1: 9563.4 CAN2: 9564.4	Message ID	Shows the ID of the sent CAN message.
	CAN1: 9563.1 CAN2: 9564.1	Send PDO after Sync	Indicates whether messages with status information are sent after the sync message.

Parameter group	Index	Parameters	Function/meaning
Communica-tion	CAN1: 9563.17 CAN2: 9564.17	Lock-out time	See "MOVIAXIS® Multi-Axis Servo Inverter" project planning manual, parameter 9563.17
	CAN1: 9563.21 CAN2: 9564.21	Endianess	Indicates which data format is set for the CAN messages: **Big Endian** (Motorola format) / Little Endian (Intel format)
	CAN1: 9563.2 CAN2: 9564.2	Send PDO cyclically [ms]	Indicates the intervals for sending the process data objects (PDOs).
	CAN1: 9563.22 CAN2: 9564.22	Send PDO after n Syncs	Indicates after how many Sync messages PDOs are sent
	CAN1: 9563.23 CAN2: 9564.23	Send PDO after change	Indicates whether PDOs are only sent after the data to be sent has been changed
	CAN1: 9563.19 CAN2: 9564.19	Send PDO following receipt of IN-PDO	Indicates whether Out PDOs are sent after PDOs have been received
	CAN1: 9856.2 CAN2: 9856.3	Layout	Determines the layout to be used for the status word: **Programmable layout:** The assignment of the individual status bits is determined by the user. Progr. layout/error code: Bits 0 - 7 are determined by the user Bits 8 - 15 transmit the error code
	See Function/mean-ing column	I / O basic unit	The assignments and statuses of the binary inputs/outputs are displayed. The function of the binary outputs DO-2 and DO-3 can also be set. The assignment of the following inputs/outputs is fixed: DI-0: Output stage enable DI-1: Enable (Index 8334.0,0) DI-3: Line contactor feedback (Index 8334.0,1) DO-0: Ready for operation (Index 8349.0,0) DO-1: Ready for power on (Index 8349.0,1) DO-2: N. fct. (default)/function can be set by the user (Index 9559.3) DO-3: N. fct. (default)/function can be set by the user (Index 9559.4)
Unit functions		Setup	See "MOVIAXIS® Multi-Axis Servo Inverter" project planning manual, chapter "Unit function parameter description"
		Reset behavior	See "MOVIAXIS® Multi-Axis Servo Inverter" project planning manual, chapter "Unit function parameter description"

6 Operation

6.1 General information

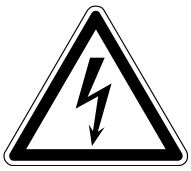	**DANGER** Dangerous voltages at cables and motor terminals Severe or fatal injuries from electric shock. • When the unit switch is in the ON position, dangerous voltages are present at the output terminals as well as any connected cables. This also applies even when the unit is inhibited and the motor is at standstill. • If the operation LED on a module is no longer illuminated, this does not indicate that the module has been disconnected from the power supply and no longer carries any voltage. • Before you touch the power terminals, check to see that the MXR regenerative power module is disconnected from the power supply. • Observe the general safety notes in chapter 2 as well as the safety notes in chapter "Electrical Installation" in the MOVIAXIS® Multi-Axis Servo Inverter operating instructions.

6.2 *Operating displays and errors of the MXR regenerative power module*

6.2.1 Table of displays

	Description	Status	Comment / action
Displays during boot process			
b0	Unit passes through several states when loading the firmware (boot) to get ready for operation.	• Status: not ready. • Output stage is blocked. • No communication possible.	• Waiting for boot process to finish. • Unit stays in this condition: Unit defective.
b2			
br			
Displays of different unit statuses			
00	No DC link voltage.	• Status: not ready. • Output stage is blocked. • Communication is possible.	Check supply system.
dC hI Flashing alternately	Dangerous voltage in the DC link (> 20 V).		No enable, line contactor open.
C2	24 V supply of the regenerative power module or internal switched-mode power supply unit not ready for operation.		24 V check or unit defective.
C3	Synchronization with bus is incorrect. Process data processing not available.		• Check bus connection. • Check synchronization setting at unit and control. • Check process data settings at unit and control. • Check missing of a PDO.
Ch	Regenerative power module not ready and DC link precharge active.		Waiting for charging to finish.
Co	Regenerative power module not ready, line contactor can be energized.		-
Ld	Regenerative power module not ready, line contactor energized and DC link charging active.		Output stage still inhibited.
rd	Regenerative power module ready.		-
Displays during initialization processes (parameters will be reset to default values)			
d0	Basic initialization.	• Status: not ready. • Output stage is blocked. • Communication is possible.	Waiting for initialization to finish.
d1	Initialization delivery status.		
d2	Initialization factory setting.		
d3	Initialization customer-specific set 1.		
d4	Initialization customer-specific set 2.		
Cd Flashing	Parameter download (via Vardata) active.		

6.2.2 Table of faults

A "P" in the column "Fault response" indicates that the response is programmable. The factory set fault response appears in the "Fault response" column.

Fault code	Fault message	Sub fault code	Possible reason for fault	Fault response (P = programmable, D = default response)	Final error status / Reset type	Save as History	Message binary outputs (valid for default response)
00	No fault (this display is actually an operation display -> see operation displays)	**---------**	---------	---------	---------		Ready = 1 (depending on system status) Malfunction = 1
01	'Overcurrent' fault		• Short-circuit output • Motor too large • Defective output stage	Output stage inhibit	System is waiting Warm start	yes	Ready = 1 Malfunction = 0
02	UCE monitoring error		The fault is an additional kind of overcurrent, measured at the collector-emitter voltage of the output stage. The possible reason behind this fault is identical to fault 01. The distinction is important for internal purposes only.	Output stage inhibit	System is waiting Warm start	yes	Ready = 1 Malfunction = 0
03	Ground fault error		Ground fault • in the motor lead • in the inverter • in the motor	Output stage inhibit	System is blocked System restart	yes	Ready = 0 Malfunction = 0
04	Brake chopper fault		Fault message by SM via signal bus. • Too much regenerative power • Braking resistor circuit interrupted • Short circuit in the braking resistor circuit • Brake resistance too high • Brake chopper defective	Output stage inhibit	System is waiting Warm start	yes	Ready = 1 Malfunction = 0
05	Signaling bus timeout error		The connection between supply module and axis module via signaling bus has been interrupted	Output stage inhibit	System is blocked System restart	yes	Ready = 0 Malfunction = 0
		01	Connection to signaling bus interrupted				
		02	Timeout flag signaling bus cannot be reset				
06	Supply system phase failure		Fault message by SM via signal bus. It was detected that a mains phase is missing.	Display only (D), (P)	---------	yes	Ready = 0 Malfunction = 0
07	U DC link error		Error message by SM via signaling bus when DC link voltage is too high	Output stage inhibit	System is waiting Warm start	yes	Ready = 1 Malfunction = 0

Fault code	Fault message	Sub fault code	Possible reason for fault	Fault response (P = programmable, D = default response)	Final error status / Reset type	Save as History	Message binary outputs (valid for default response)
08	Speed monitoring error		Active speed monitoring has detected an unacceptable deviation between setpoint and actual speed	Output stage inhibit (D), (P)	System is waiting Warm start	yes	Ready = 1 Malfunction = 0
		01	Motor speed monitoring				
		02	Regenerative speed monitoring				
		03	System limit actual speed exceeded				
11	Overtemperature in axis module fault		The temperature of the AM has reached or exceeded the shutdown limit. Possible reasons: • Ambient temperature too high • Unfavorable air convection - defective fan • Medium utilization too high	Shutdown with emergency stop delay (D), (P)	System is waiting Warm start	yes	Ready = 1 Malfunction = 0
		01	Limit heat sink temperature exceeded.				
12	Fault 'Brake output'		• No brake connected • Brake line separated in 'on' status • Overload through overcurrent > 2A (F13 has priority) • Overload due to excessive connection (approx. > 0,5 Hz) Monitoring is only active with parameter settings "Brake installed" and "Brake applied".	Output stage inhibit	System is blocked System restart	yes	Ready = 0 Malfunction = 0
		01	Brake output				
13	Brake supply fault		Brake supply voltage not within permitted range of +10/- 0%. Monitoring works with parameter setting "Brake installed" and "Brake applied" as well as with CMP and DS motors only.	Output stage inhibit	System is blocked System restart	yes	Ready = 0 Malfunction = 0
		01	Brake supply voltage				
14	Resolver fault		Error with resolver or resolver evaluation.	Output stage inhibit	System is blocked System restart	yes	Ready = 0 Malfunction = 0
		01	Open circuit detection resolver				
		02	Emulation error resolver (excessive speed)				
		19	Non-permissible angle during calibration				
15	Absolute encoder fault		An error has occurred in the checksum of the Hiperface signals.	Output stage inhibit	System is blocked System restart	yes	Ready = 0 Malfunction = 0
		01	Comparison of the absolute encoder position (via Hiperface parameter channel) with the incremental position of the axis every second.				
		02	Unknown encoder type				
		32	Encoder signals internal error. The error code is displayed as follows: [Displayed value] - 32. You can inquire about this error code at the encoder manufacturer.				

Fault code	Fault message	Sub fault code	Possible reason for fault	Fault response (P = programmable, D = default response)	Final error status / Reset type	Save as History	Message binary outputs (valid for default response)
16	"Startup" error		Fault during startup	Output stage inhibit	System is blocked System restart	yes	Ready = 0 Malfunction = 0
		01	Denominator of pole pair number of resolver not equal to 1				
		02	Numerator of pole pair number of resolver too great				
		03	Numerator of pole pair number of resolver too small, that means zero				
		04	Denominator of emulation PPR count for resolver not equal to 1				
		05	Numerator of emulation PPR count for resolver too small				
		06	Numerator of emulation PPR count for resolver too great				
		07	Numerator of emulation PPR count for resolver is not a power of two				
		08	Denominator of emulation PPR count for sine encoder not equal to 1				
		09	Numerator of emulation PPR count for sine encoder too small				
		10	Numerator of emulation PPR count for sine encoder too great				
		11	Numerator of emulation PPR count for sine encoder is not a power of two				
		512	Startup for invalid motor type				
		513	Set current limit exceeds maximum current of axis				
		514	Set current limit is less than rated magnetizing current of the motor				
		515	CFC: Factor for calculation of q-current cannot be displayed				
		516	Invalid PWM frequency parameterized				
		517	Parameter "Final speed flux table" not within permitted range				
		518	Parameter "Final flux Id table" not within permitted range				
		519	Output stage enable requested without valid motor startup				
		520	Motor startup not possible with enabled output stage				
		521	Factor for torque limit cannot be displayed (A)				
		522	Factor for torque limit cannot be displayed (B)				
		530	Max. motor current configured incorrectly				

Fault code	Fault message	Sub fault code	Possible reason for fault	Fault response (P = programmable, D = default response)	Final error status / Reset type	Save as History	Message binary outputs (valid for default response)
		1024	NV memory parameter of rated unit current is greater than NV memory parameter of current measuring range				
		1025	NV memory parameter of current measuring range is zero				
		1026	NV memory parameter of current measuring range is zero				
		1027	NV memory parameter of current measuring range is too large				
		1028	System limits for speed are greater than max. possible speed				
		1029	Application limits for speed are greater than max. possible speed				
		1032	CFC: No absolute encoder used as motor encoder in synchronous motors				
		1033	Position range in position detection mode "without overflow counter" exceeded				
		1034	FCB dual drive: Setpoint deviation window may not be smaller than "standard" setpoint deviation window				
		1035	FCB dual drive: Lag error window may not be smaller than adjustment threshold				
		1036	Modulo reference offset is not within Modulo limit				
		1037	Position values of software limit switch reversed, positive < negative				
17	Internal computer error (traps)		CPU has detected an internal error	Output stage inhibit	System locked / CPU reset	yes	Ready = 0 Malfunction = 0
18	Internal software error		The software has detected a non-permissible status.	Output stage inhibit	System is blocked System restart	yes	Ready = 0 Malfunction = 0
		66	FCB position control: Target preset in user-defined unit not within range permitted by user-defined unit				
		67	FCB position control: Target preset in user-defined unit results in target overflow in system units				
		68	FCB position control: ModuloMin ≥ ModuloMax				
		69	Time violation in task system				
		70-78	Error in Knet driver				

Fault code	Fault message	Sub fault code	Possible reason for fault	Fault response (P = programmable, D = default response)	Final error status / Reset type	Save as History	Message binary outputs (valid for default response)
19	Process data error		Process data are not valid	Output stage inhibit	System is blocked System restart	yes	Ready = 0 Malfunction = 0
		01	Process data: Negative maximum torque indicated				
		02	Process data: Positive minimum torque indicated				
		03	Process data: Negative motor torque limit indicated				
		04	Process data: Negative regenerative torque limit indicated				
		05	Process data: Torque limit for quadrant 1 is negative				
		06	Process data: Torque limit for quadrant 2 is negative				
		07	Process data: Torque limit for quadrant 3 is negative				
		08	Process data: Torque limit for quadrant 4 is negative				
		09	Torque control: Maximum speed < minimum speed				
		10	Position control: Maximum speed value < 0				
		11	Position control: Maximum speed < 0				
		12	Position control: Minimum speed > 0				
		13	Process data: Enter negative acceleration				
		14	Process data: Enter negative delay				
		15	Process data: Enter negative jerk				
		16	Combination of FCB number and FCB instance does not exist				
		17	Target position outside limit switch range				
20	Lag error electronic cam		The preset setpoint deviation limit in electronic cam mode was exceeded	Output stage inhibit	System is waiting Warm start	yes	Ready = 1 Malfunction = 0
		01	CAM: Lag error electronic cam				
21	Lag error dual drive		The preset setpoint deviation limit in dual drive mode "Engel" was exceeded	Output stage inhibit	System is waiting Warm start	yes	Ready = 1 Malfunction = 0
		01	FCB dual drive: Lag error in adjustment phase				
		02	FCB dual drive: Lag error in standard operation				

Fault code	Fault message	Sub fault code	Possible reason for fault	Fault response (P = programmable, D = default response)	Final error status / Reset type	Save as History	Message binary outputs (valid for default response)
25	Non-volatile parameter memory error		An error was detected during access to non-volatile parameter memory	Output stage inhibit	System is blocked System restart	yes	Ready = 0 Malfunction = 0
		03	Error during read-in of data from non-volatile memory. The data cannot be used due to a corrupt identification or checksum.				
		04	Initialization error of memory system.				
		05	The read-only memory contains invalid data.				
		06	The read-only memory contains incompatible data of another device (in case of exchangeable data memories)				
26	External terminal fault		An error has been reported by a binary input terminal.	Shutdown with emergency stop delay (D), (P)	System is waiting Warm start	yes	Ready = 1 Malfunction = 0
		01	Error external terminal				
27	Limit switch fault		One or both limit switches cannot be detected at the programmed input terminals or in the control word.	Shutdown with emergency stop delay	System is waiting Warm start	yes	Ready = 1 Malfunction = 0
		01	both limit switches missing or open circuit				
		02	Limit switch reversed				
28	Process data timeout error		Process data communication is interrupted.	Shutdown with application delay (D), (P)	System is waiting Warm start	yes	Ready = 1 Malfunction = 0
		01	Error fieldbus timeout				
29	Hardware limit switch reached fault		Travel to hardware limit switch during positioning	Shutdown with emergency stop delay (D), (P)	System is waiting Warm start	yes	Ready = 1 Malfunction = 0
		01	Travel to right limit switch				
		02	Travel to left limit switch				
30	Error 'Deceleration timeout'		The drive did not come to a standstill within the preset delay time.	Output stage inhibit	System is waiting Warm start	yes	Ready = 1 Malfunction = 0
		01	Stop ramp time violation				
		02	Time violation stop at application limit				
		03	Time violation stop at system limit				
		04	Emergency stop ramp time exceeded				
31	Motor temperature protection error		Overtemperature sensor (KTY/TF/TH) of the drive was triggered for motor protection	No response (D), (P)	No response	yes	Ready = 1 Malfunction = 1
		01	Open circuit motor temperature sensor detected				
		02	Short circuit motor temperature sensor detected				
		03	Motor overtemperature KTY				
		04	Motor overtemperature (synchronous motor model)				
		05	Motor overtemperature (TF/TH)				
		06	Motor overtemperature I2t model				
		07	AD conversion has not taken place				

Fault code	Fault message	Sub fault code	Possible reason for fault	Fault response (P = programmable, D = default response)	Final error status / Reset type	Save as History	Message binary outputs (valid for default response)
32	Any						
33	SM boot timeout error		The supply module (SM) is not or no longer ready for operation.	Output stage inhibit	System is blocked System restart	yes	Ready = 0 Malfunction = 0
34	Any						
35	Any						
36	Synchronous operation lag error		A preset, maximum permitted following error was exceeded during synchronous operation	Output stage inhibit	System is waiting Warm start	yes	Ready = 1 Malfunction = 0
		01	FCB synchronous operation: Lag error				
37	System watchdog error		Internal watchdog timer setting has been exceeded	Output stage inhibit	System locked / CPU reset	yes	Ready = 0 Malfunction = 0
38	Technology function error		Error in one technology function	Shutdown with application limits, programmable	System is waiting Warm start		Ready = 1 Malfunction = 0
		01	Cam function: Trip point with negative edge < positive edge has been entered			yes	
		02	Cam function: Command overflow trip-point processing			yes	
39	Reference travel error		An error has occurred during reference travel	Output stage inhibit (D), (P)	System is blocked System restart	Yes	Ready = 0 Malfunction = 0
		01	FCB reference travel: Timeout error during search for zero pulse				
		02	FCB reference travel: Hardware limit switch before reference cam				
		03	FCB reference travel: Hardware limit switch and reference cam not flush				
		04	FCB reference travel: Referencing for type0 must be set to TP				
		99	FCB reference travel: Reference type was changed during travel				
40	Boot synchronization error		Synchronization with an option card could not be executed appropriately	Output stage inhibit	System is blocked System restart	yes	Ready = 0 Malfunction = 0
41	Watchdog timer to option error		Connection between main computer and option card computer no longer exists	Output stage inhibit	System is blocked System restart	yes	Ready = 0 Malfunction = 0
		02	Too many options in total or too many options of one kind				
		07	Two options with the same address selection switch detected				
		08	CRC error XIA11A				
		09	Watchdog triggered at XIA11A				
		13	Watchdog error at CP923X				
		14	Timeout during option bus access				
		15	Error interrupt for which no cause could be determined				

Fault code	Fault message	Sub fault code	Possible reason for fault	Fault response (P = programmable, D = default response)	Final error status / Reset type	Save as History	Message binary outputs (valid for default response)
42	Positioning lag error		A preset, maximum permitted following error was exceeded during positioning • Encoder connected incorrectly • Acceleration ramps too short • P component of positioning controller too small • Incorrect speed controller parameters • Value of lag error tolerance too small	Output stage inhibit	System is waiting Warm start	yes	Ready = 1 Malfunction = 0
		01	FCB Positioning: Lag error				
43	Remote timeout error		An interruption has occurred during control via a serial interface	Shutdown with application limits	System is waiting Warm start	yes	Ready = 1 Malfunction = 0
		01	FCB Jog mode: Communication timeout at direction control				
44	Ixt utilization error		Overload in inverter	Output stage inhibit	System is waiting Warm start	yes	Ready = 1 Malfunction = 0
		01	Ixt current limit less than required D current				
		02	Limit chip temperature difference exceeded				
		03	Limit chip temperature exceeded				
		04	Limit electromechanical utilization exceeded				
		05	Short circuit of sensor detected				
		06	Motor current limit exceeded				
		07	AD conversion has not taken place				
45	System initialization fault error		Error during initialization of the system	Output stage inhibit	System locked / CPU reset	yes	Ready = 0 Malfunction = 0
		01	The measured current offsets are outside the permitted limit values				
		02	An error occurred during CRC generation for the firmware				
		03	Data bus error during RAM test				
		04	Address bus error during RAM test				
		05	Memory cell error during RAM test				
46	Error "Timeout SBUS#2"		Communication via SBUS #2 is interrupted	Shutdown with application limits [P]	System is waiting Warm start	yes	Ready = 1 Malfunction = 0
		01	Timeout CANopen CAN2				
50	24 V supply voltage error		Error in 24V supply voltage	Output stage inhibit	System is blocked System restart	yes, if system is ready	Ready = 0 Malfunction = 0
		01	24V signals incorrect or switched-mode power supply defective				
51	Software limit switch error		A software limit switch was approached during positioning	Shutdown with emergency stop delay (D), (P)	System is waiting Warm start	Yes	Ready = 1 Malfunction = 0
		01	The right software limit switch was approached				
		02	The left software limit switch was approached				

Fault code	Fault message	Sub fault code	Possible reason for fault	Fault response (P = programmable, D = default response)	Final error status / Reset type	Save as History	Message binary outputs (valid for default response)
53	CRC flash error		A CRC error occurred during check of the program code by Flash in Code RAM or Resolver DSP.	Output stage inhibit	System is blocked System restart	yes	Ready = 0 Malfunction = 0
		01	CRC error in Flash EEPROM section "Initial Boot Loader"				
54	Any						
55	FPGA configuration error		Internal error in logic component block (FPGA)	Output stage inhibit	System locked / CPU reset	yes	Ready = 0 Malfunction = 0
56	External RAM error		Internal error in external RAM block	Output stage inhibit	System locked / CPU reset	yes	Ready = 0 Malfunction = 0
		01	Asynchronous DRAM read&write check error				
57	TTL encoder error		Error in TTL encoder	Output stage inhibit	System is blocked System restart	yes	Ready = 0 Malfunction = 0
		01	TTL sensor: Broken wire				
		02	TTL sensor: Emulation error (excessive speed)				
		19	TTL sensor: Non-permissible angle during calibration				
		512	TTL sensor: Amplitude control has failed				
		513	TTL sensor: EPLD reports error				
58	Sine/cosine encoder error		Error in sine/cosine encoder evaluation	Output stage inhibit	System is blocked System restart	yes	Ready = 0 Malfunction = 0
		01	Sin/cos encoder: Open circuit detection				
		02	Sin/cos encoder: Emulation error (excessive speed)				
		19	Sin/cos encoder: Non-permissible angle during calibration				
		512	Sin/cos encoder: Amplitude control has failed				
		514	Sin/cos encoder: Quadrant control has failed				

Fault code	Fault message	Sub fault code	Possible reason for fault	Fault response (P = programmable, D = default response)	Final error status / Reset type	Save as History	Message binary outputs (valid for default response)
59	Encoder communication error		Error of Hiperface encoder or in Hiperface evaluation	Shutdown with emergency stop delay	System is waiting Warm start	yes	Ready = 1 Malfunction = 0
		01	Hiperface encoder: Quadrant control failed				
		02	Hiperface encoder: Incorrect track angle offset				
		16	Hiperface encoder: Encoder does not respond during communication				
		64	Hiperface encoder: Communication error with type read				
		128	Hiperface encoder: Communication error with status read				
		192	Hiperface encoder: Communication error with serial number read				
		256	Hiperface encoder: Communication error during initialization absolute position				
		320	Hiperface encoder: Communication error during re-initialization absolute position				
		384	Hiperface encoder: Communication error during check of absolute position				
		448	Hiperface encoder: Communication error during writing of position				
60	DSP communication error		Error during flash of the DSP	Output stage inhibit	System is blocked System restart	yes	Ready = 0 Malfunction = 0
		01	Error DSP JTAG Comm: No JTAG connection				
66	Error process data configuration		Error process data configuration	Shutdown with emergency stop delay	System is blocked System restart	1	Ready = 0 Malfunction = 0
		1	The process data configuration has been changed. The entire process data subsystem has to be restarted by means of an inverter reset.				
		10001	A PDO configured to CAN has an ID located in the area (0x200-0x3ff and 0x600-0x7ff) used for parameter setting by the SBUS.				
		10002	A PDO configured to CAN has an ID located in the area (0x580-0x67f) used for parameter setting by CANopen.				
		10003	A PDO configured to CAN is to transmit more than 4 PD. Only 0 - 4 PD are possible for CAN.				
		10004	Two or more PDOs configured to the same CAN bus use the same ID.				
		10005	Two PDOs configured to the same CAN bus use the same ID.				
		10008	An invalid transmission mode was entered for a PDO configured to CAN.				
		20001	Configuration conflict with the master				

Fault code	Fault message	Sub fault code	Possible reason for fault	Fault response (P = programmable, D = default response)	Final error status / Reset type	Save as History	Message binary outputs (valid for default response)
67	PDO timeout error		An input PDO whose timeout interval is not 0, that has not been set to 'Offline' and that has already been received once, has exceeded its timeout interval.	Shutdown with application delay (D), (P)	System is waiting Warm start	yes	Ready = 1 Malfunction = 0
		0	PDO 0				
		1	PDO 1				
		2	PDO 2				
		3	PDO 3				
		4	PDO 4				
		5	PDO 5				
		6	PDO 6				
		7	PDO 7				
		8	PDO 8				
		9	PDO 9				
		10	PDO 10				
		11	PDO 11				
		12	PDO 12				
		13	PDO 13				
		14	PDO 14				
		15	PDO 15				
68	External synchronization error			Shutdown with emergency stop delay	System is waiting Warm start	yes	Ready = 1 Malfunction = 0
		01	Time limit for expected synchronization signal has been exceeded				
		02	Synchronization lost, synchronization period outside tolerance range				
		03	Synchronization to synchronization signal not possible				
		04	Cycle duration of sync. signal is not a integer multiple of the PDO system duration				
		05	Time limit for synchronization signal exceeded				
		06	Synchronization lost, period of synchronization signal invalid				
		07	No synchronization of the synchronization signal possible				
		08	Duration of system interval too short				
		09	Duration of system interval too long				
		10	Duration of system interval is not a multiple of the base interval				

Fault code	Fault message	Sub fault code	Possible reason for fault	Fault response (P = programmable, D = default response)	Final error status / Reset type	Save as History	Message binary outputs (valid for default response)
69	Error "Prewarning motor overtemperature"		Motor temperature has exceeded the adjustable prewarning threshold	No response, display only	---------	yes	Ready = 1 Malfunction = 1
		01	Thermal motor protection: Prewarning triggered by KTY temperature				
		02	Thermal motor protection: Prewarning triggered by synchronous motor model temperature				
		03	Thermal motor protection: Warning threshold I2t model exceeded				
70	Error 'Error message word 0'		The error message of an unknown device was detected in the error message word	No response, display only	---------	yes	
		01	Message error control word 0				
71	Error 'Error message word 1'		The error message of an unknown device was detected in the error message word	No response, display only	---------	yes	
		01	Message error control word 1				
72	Error 'Error message word 2'		The error message of an unknown device was detected in the error message word	No response, display only	---------	yes	
		01	Message error control word 2				
73	Error 'Error message word 3'		The error message of an unknown device was detected in the error message word	No response, display only	---------	yes	
		01	Message error control word 3				
74	Error 'Error message word 4'		The error message of an unknown device was detected in the error message word	No response, display only	---------		
		01	Message error control word 4				
75	Error 'Error message word 5'		The error message of an unknown device was detected in the error message word	No response, display only	---------	yes	
		01	Message error control word 5				
76	Fault: "Intelligent option"		MOVI-PLC® error	No response, display only	---------	yes	
77	Any						
78	Any						
79	Any						
80	Any						
81	DC link overcurrent SM fault		The DC link current in the supply module has exceeded the maximum limit of 250% $I_{nominal}$.	Output stage inhibit	System is waiting Warm start	yes	Ready = 1 Malfunction = 0
		01	SM: DC link current too high				
82	I²xt monitoring SM prewarning		Utilization of the SM has reached the prewarning level	No response (D), (P)	--------	yes	Ready = 1 Malfunction = 1
		01	SM: Pre-warning Ixt utilization				
83	I²xt monitoring SM error		Utilization of the SM has reached or exceeded the cut-off threshold	Shutdown with emergency stop delay (D)	System is waiting Warm start	yes	Ready = 1 Malfunction = 0
		01	SM: Error Ixt utilization				

Fault code	Fault message	Sub fault code	Possible reason for fault	Fault response (P = programmable, D = default response)	Final error status / Reset type	Save as History	Message binary outputs (valid for default response)
84	Fault brake chopper at AM		Error message through supply module via hardware information system. The brake chopper in the supply module is not ready for operation, triggered by BRC short-circuit monitoring or driver voltage monitoring.	Output stage inhibit	System is waiting Warm start	yes	Ready = 1 Malfunction = 0
		01	SM: Brake chopper fault				
85	SM temperature monitoring prewarning		The temperature of the SM approaches the cut-off threshold	No response (D), (P)	---------	yes	Ready = 1 Malfunction = 1
		01	SM: Temperature prewarning				
86	Overtemperature SM fault		Temperature of the SM has reached or exceeded the cut-off threshold	Shutdown with emergency stop delay (D)	System is waiting Warm start	yes	Ready = 1 Malfunction = 0
		01	SM: Temperature fault				
87	Utilization of braking resistor in SM prewarning		The utilization of the braking resistor installed in the SM has reached the prewarning threshold (applies to 10 kW version only)	No response (D), (P)	---------	yes	Ready = 1 Malfunction = 1
		01	SM: Ixt prewarning braking resistor				
88	Utilization of braking resistor in SM fault		The utilization of the braking resistor installed in the SM has reached or exceeded the prewarning threshold (applies to 10 kW version only)	Shutdown with emergency stop delay (D)	System is waiting Warm start	yes	Ready = 1 Malfunction = 0
		01	Ixt utilization error braking resistor of the SM				
89	Error "Switched-mode power supply SM"		Error Switched-mode power supply SM	No response	---------	yes	Ready = 1 Malfunction = 1
		01	At least one of the supply voltages in the SM is not present				
91	SM 24 V voltage supply warning, displayed in supply module only		24 V electronics supply less than 17 V -> No error message for the axis !!	No response	---------	yes	Ready = 1 Malfunction = 1
		01	24 V electronics power supply too low				
92	Any						
93	Any						
94	Error "unit configuration data"		An error has occurred in the unit configuration data block during testing in reset phase	Output stage inhibit	System is blocked System restart	yes	Ready = 0 Malfunction = 0
		01	Unit configuration data: checksum error				
95	Any						
96	Any						
97	Error "Copy parameter set"		Parameter set could not be copied correctly	Output stage inhibit	System is blocked System restart	yes	Ready = 0 Malfunction = 0
		01	Cancellation of parameter set download to the unit				

Fault code	Fault message	Sub fault code	Possible reason for fault	Fault response (P = programmable, D = default response)	Final error status / Reset type	Save as History	Message binary outputs (valid for default response)
107	Supply system component error		The firmware has detected an error in one of the supply system components (choke, line filter, line contactor).	Inhibit output stage + open line contactor	Inhibited, software reset	yes	
		1	Line contactor feedback contact error				
		2	Timeout when opening the line contactor				
		3	Ground fault error				
		4	The supply cables are interchanged				
		5	A supply cable is missing or output stage is faulty				
115	Error "Safety functions"		Connections X7:1 (+24 V) / X7:2 (RGND) or X8:1 (+24 V) / X8:2 (RGND) are reversed. Check wiring.	Output stage inhibit	System is waiting Warm start	yes	Ready = 1 Malfunction = 0
		01	Safety relays: Switching delay between shutdown channels 1 and 2 is too large				
116	MOVI-PLC timeout error		Communication timeout via DPRAM or SBus between MOVI-PLC and unit	Emergency stop	System is waiting Warm start	yes	
197	"Power failure" error		The firmware has detected a power failure			yes	
		0	Power failure error	Inhibit output stage + open line contactor	Waiting		
		1	Supply system overvoltage fault at ≥ 528 V	Inhibit output stage immediately	Waiting		
		2	Supply system undervoltage fault at ≤ 325 V	Inhibit output stage immediately	Waiting		
		3	Supply system quality fault at V_N ± 10%	Display only	Auto reset		
199	DC link charging fault		An error has occurred in the sequence control for DC link charging	Inhibit output stage + open line contactor	Inhibited, software reset		
		1	Timeout during pre-charging of the DC link to voltage setpoint				
		2	Timeout upon reaching the voltage setpoint (energized line contactor)				
		3	Timeout during charging of the DC link to voltage setpoint				

7 Technical Data

7.1 Technical data of the MXR regenerative power module

7.1.1 General technical data

		Unit	Regenerative power module MXR
Environmental conditions			
Ambient temperature (MXR)		°C	0 - +45
Storage temperature		°C	-25 - +70
Climate class		-	EN 60721-3-3, class 3K3
Degree of protection EN 60529 (NEMA1)[1)]		-	IP10 to EN 60529
Duty cycle		-	Continuous duty (EN 60146-1-1 and 1-3)
Type of cooling		-	DIN 41751 forced cooling (temperature-controlled fan)
Overvoltage category		-	III according to IEC 60664-1 (VDE0110-1)
Pollution class		-	II according to IEC 60664-1 (VDE 0110-1)
Installation altitude		-	Up to h ≤1000 m, there are no restrictions. The following restrictions apply at heights ≥ 1 000 m: – From 1,000 m to max. 2000 m: I_N reduction by 1% per 100 m
Storage life		-	Up to 2 years without any special measures, after that see chapter "Service" in the "MOVIAXIS® MX Multi-Axis Servo Inverter operating instructions.
Operating conditions			
Interference immunity		-	Meets EN 61800-3
Interference emission with EMC-compliant installation		-	Category "C2" according to 61800-3
Power loss at nominal capacity		star	1000
No. of times power may be switched on/off		min^{-1}	< 1
Minimum switch-off time for "Power off"		s	> 10
Ready for operation after "Power on"		s	≤ 20
Weight		kg	22
Dimensions:	**B**	mm	210
	H	mm	400
	T	mm	254

1) The covers on the left and right end of the unit system must be equipped with touch guard covers. All cable lugs must be insulated.

INFORMATION

Note the minimum switch-off time for "Power off".

7.1.2 Power section of the MXR regenerative power module

		Name-plate infor-mation	Unit	Regenerative power module MXR
INPUT				
Supply voltage AC V_{supply}		U	V	3 × 400 V - 3 × 480 V ±10 %
Rated mains voltage		U	V	400
Nominal supply system current[1)]	75 kW	I	A	110 (@ 4 kHz PWM)
	50 kW	I	A	73 (@ 8 kHz PWM)
Rated power (motor/regenera-tive)	75 kW	P	kW	75 (@ 4 kHz PWM)
	50 kW	P	kW	50 (@ 8 kHz PWM)
Supply system frequency f_{supply}		f	Hz	50 - 60 ±5%
Permitted voltage systems		-	-	TT and TN
Cross-section and contacts on con-nections		-	mm^2	Screw bolt M8 max. 70
Cross section and contacts on shield clamp		-	mm^2	max. 4 × 50 shielded
Supply system voltage measurement				
Measurement			-	All 3 phases are picked off between line fil-ter and choke
Cross section and contacts			mm^2	Combicon 7.62 3-pole / one core max. 2.5 ;
OUTPUT (DC LINK)				
DC link V_{DLC}[1)]		V_{DCL}	V	• V_{supply} up to 400 V: V_{DCL} = 750 V con-trolled • 400 V < V_{supply} < 480 V: V_{DCL} increas-ing linearly from 750 V – 800 V
Rated DC link current[1)] DC I_{DCL}		I_{DCL}	A	100 at 4 kHz 67 at 8 kHz
Max. rated DC link current[1)] DC $I_{DCL\ max}$		I_{max}	A	250 at 4 kHz 168 at 8 kHz
Overload capacity for max. 1s[2)]		-	-	200 %
Braking resistor / emergency braking resistor				
Brake chopper power		-	kW	Peak power: 250 % × P_N Continuous power: 0.5 ×75 kW
Minimum permitted braking resistor value R (4-Q operation)		-	Ω	3.5
Cross section[3)] and contacts on the connections		-	mm^2	M6 screw bolts max. 16
Cross section[4)] and contacts on shield clamp		-	mm^2	max. 4 x 16

1) Applies when nominal supply system voltage is 400 V
2) See chapter "Project planning"
3) Material strength [mm] × Width [mm]
4) Material strength [mm] × Width [mm]

7.1.3 Control section of the MXR regenerative power module

MOVIAXIS® MX Regenerative power module	General electronics data		
INPUT			
DC 24 V voltage supply	DC 24 V ± 25 % (EN 61131)		
Cross section and contacts	COMBICON 5.08 One core per terminal: max. 1.5 mm² (with conductor end sleeve)		
Inputs/outputs			
4 binary inputs **Internal resistance**	Isolated (optocoupler), PLC compatible (EN 61131), sampling interval 1 ms $R_i \approx 3.0$ kΩ, $I_E \approx 10$ mA		
Signal level	+13 V - +30 V = "1" = Contact closed -3 V - +5 V = "0" = Contact open	according to EN 61131	
Function	DIØ1 - DIØ4: Fixed assignment		
2 binary outputs	PLC compatible (EN 61131-2), response time 1 ms, short-circuit proof, I_{max} = 50 mA		
Signal level	"0"=0 V, "1"=+24 V, **Caution: Do not apply external voltage.**		
Function	DOØØ and DOØ1: Fixed assignment DOØ2: User-programmable DOØ3: Not connected		
Cross section and contacts	COMBICON 5.08 One core per terminal: 0.20 - 2.5 mm² Two cores per terminal: 0.25 - 1 mm²		
Shield clamps	Shield clamps for control lines available		
Maximum cable cross section that can be connected to the shield clamp	10 mm (with sheath)		
Enable contact for line contactor (Line contactor control)	Relay		
	Relay contact (NO contact) AC 230 V (max. 300 VA pickup power of line contactor)		
	Pickup current:	At AC 230 V	2 A
		At DC 24 V	0.5 A
	Permitted continuous current:	At AC 230 V	0.5 A
		At DC 24 V	
	Number of switching cycles	200000	
Cross section and contacts	COMBICON 5.08 One core per terminal: max. 1.5 mm² (with conductor end sleeve)		

7.1.4 Bus communication

MOVIAXIS® MX Regenerative power module	General electronics data	
Signaling bus	CAN- or EtherCAT-based For the EtherCAT variant, an XSE24A or XFE24A option card is installed	
CAN 1 interface (system bus, not with XSE24A)	**CAN**: 9-pin D-sub connector	CAN bus to CAN specification 2.0, parts A and B, transmission technology to ISO 11898, max. 64 stations. Terminating resistor (120 Ω) has to be implemented externally, Baud rate can be set from 125 kBaud – 1 MBaud. Extended MOVILINK® protocol, see chapter "Communication via CAN adapter" in the "MOVIAXIS® MX Multi-Axis Servo Inverter" operating instructions.
CAN 2 interface	See chapter 5.3 in the "MOVIAXIS® MX Multi-Axis Servo Inverter" operating instructions.	

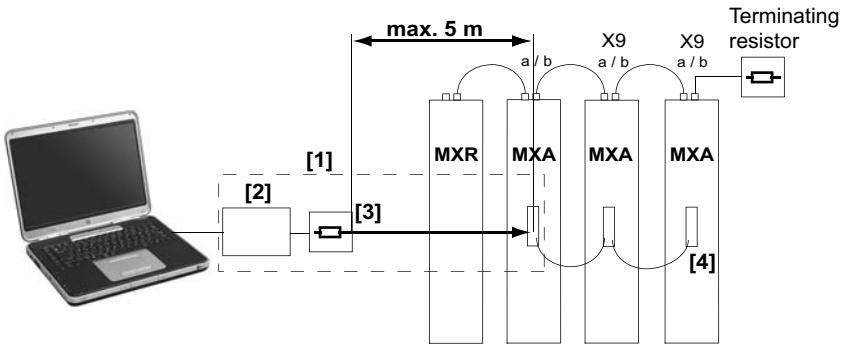

Figure 13: CAN2 cable length

[1] Connection cable between PC and CAN interface on the axis module. The connection cable consists of the USB-CAN interface [2] and the cable with integrated terminating resistor [3].

[2] USB-CAN interface

[3] Cable with integrated terminating resistor (120 Ω between CAN_H and CAN_L)

[4] Activate terminating resistor
(see "MOVIAXIS® MX Multi-Axis Servo Inverter" operating instructions)

7.2 Dimension sheet of the MXR.. regenerative power module

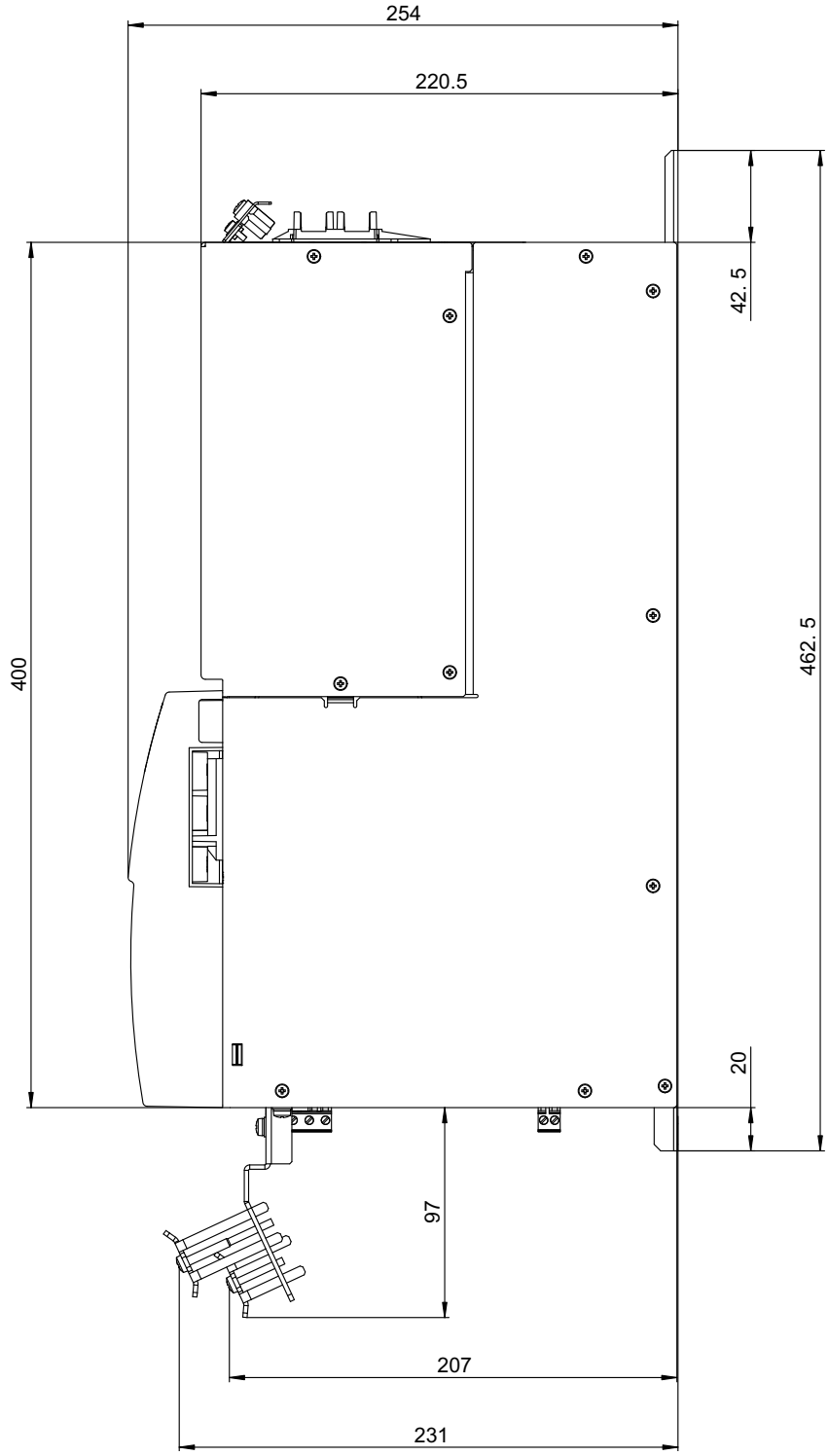

62981axx

Figure 14: MXR regenerative power module dimensions

7.3 Drilling template of the MXR regenerative power module

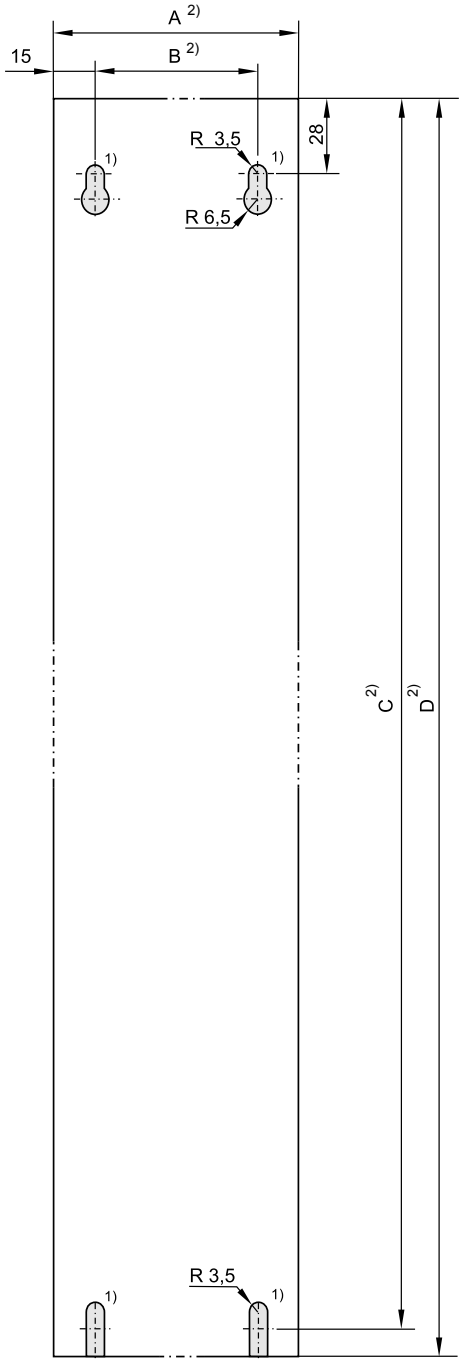

Figure 15: Drilling template of MXR regenerative power module

1) Position of tapped hole

2) The dimensions are listed in the following table

MOVIAXIS® MX	Dimensions for housing back views of MOVIAXIS® MX			
	A [mm]	B [mm]	C [mm]	D [mm]
MXR regenerative power module	210	180	453	462.5

7.4 Technical data of additional components

7.4.1 NFR.. line filter for 3-phase systems

UL certification is in preparation.

Structure	• 3 conductor filter • Metal housing
Features	• Design according to UL1283, IEC 60939, CSA 22.2 No. 8
Applications	• Frequency inverter for motor drives • Frequency inverter with regenerative operation
Connections	• Touch-safe connection terminals

Technical data

		Unit	Line filter	
			NFR 075-503 (50 kW)	**NFR 111-503 (75 kW)**
Supply voltage AC[1)]	**V_{supply}**	V_{AC}	3 × 380 V - 3 × 480 V ±10 %	
Rated mains voltage[2)]	**V_N**	V_{AC}	3 × 500 ±10 %	3 × 500 ±10 %
Nominal current I_N		A_{AC}	73	110
Power loss[3)]		star	60	105
Regenerative cycle frequency	**f**	kHz	8	4
Earth-leakage current	**I_{Abl}**	mA	<60 mA at AC 500 V 50 Hz in normal operation	<20 mA at AC 500 V 50 Hz in normal operation
Rated temperature		°C	+45	+45
Degree of protection		-	IP20	IP20
Connections L1 - L3 ; L1' - L3'		mm^2	Up to 50 (screw terminals)	Up to 50 (screw terminals)
Connections U, V, W (Supply system voltage measurement)	**PE**	mm^2	Screw terminals 0.2 - 4	Screw terminals 0.2 - 4
Weight		kg	31	39
Dimensions	**A**	mm	150	210
	B	mm	400	400
	C	mm	300	300
Connection dimensions	**a**	mm	120	180
	b	mm	422	422

1) Max. operating voltage in connection with MXR
2) Max. operating voltage of the filter
3) Rule of three applied for partial loads

Dimension drawing for NFR 075-503 (50 kW)

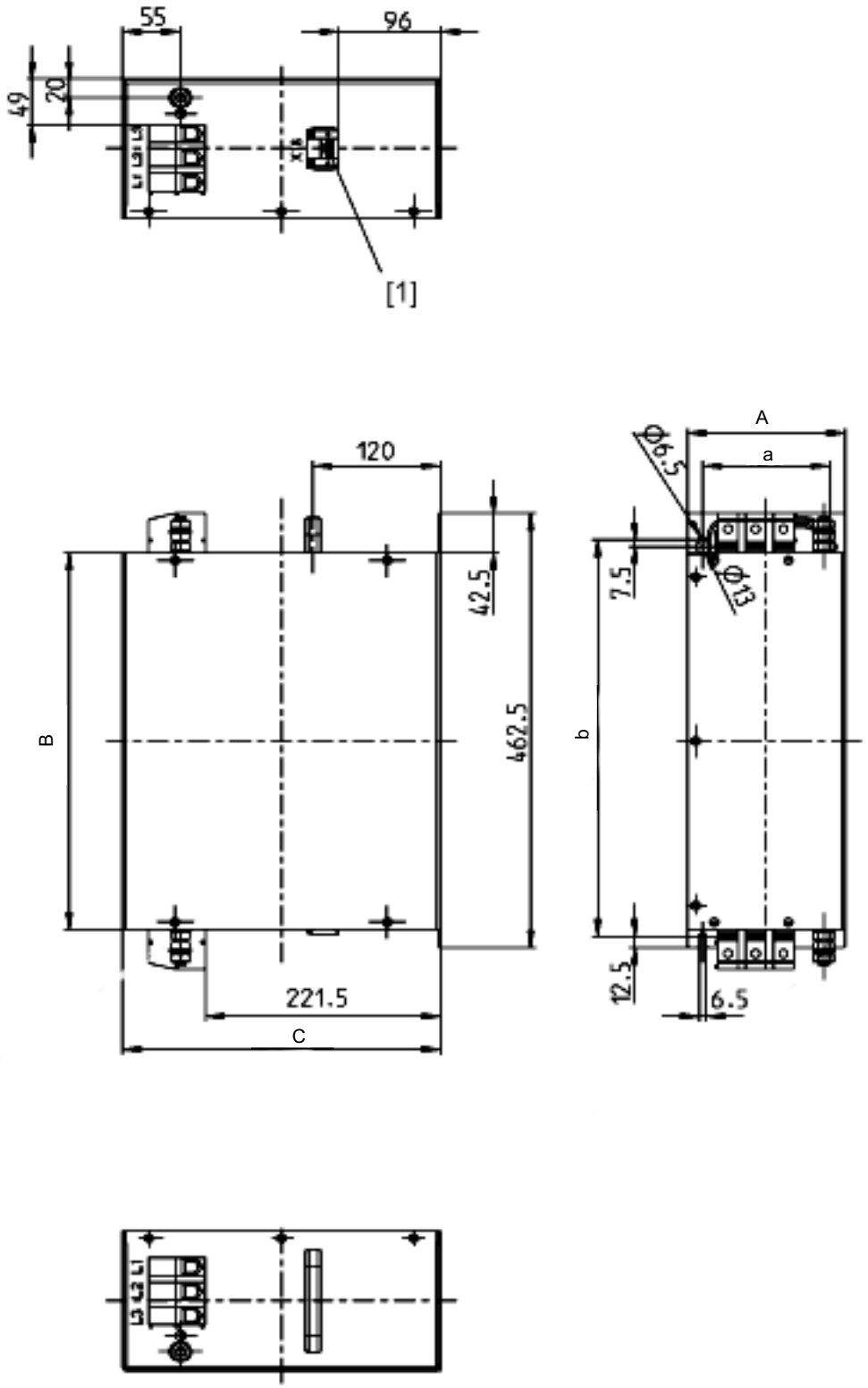

Figure 16: Dimension drawing of line filter for 3-phase systems

[1] Terminals for line phase measurement

Dimension drawing for NFR 111-503 (75 kW)

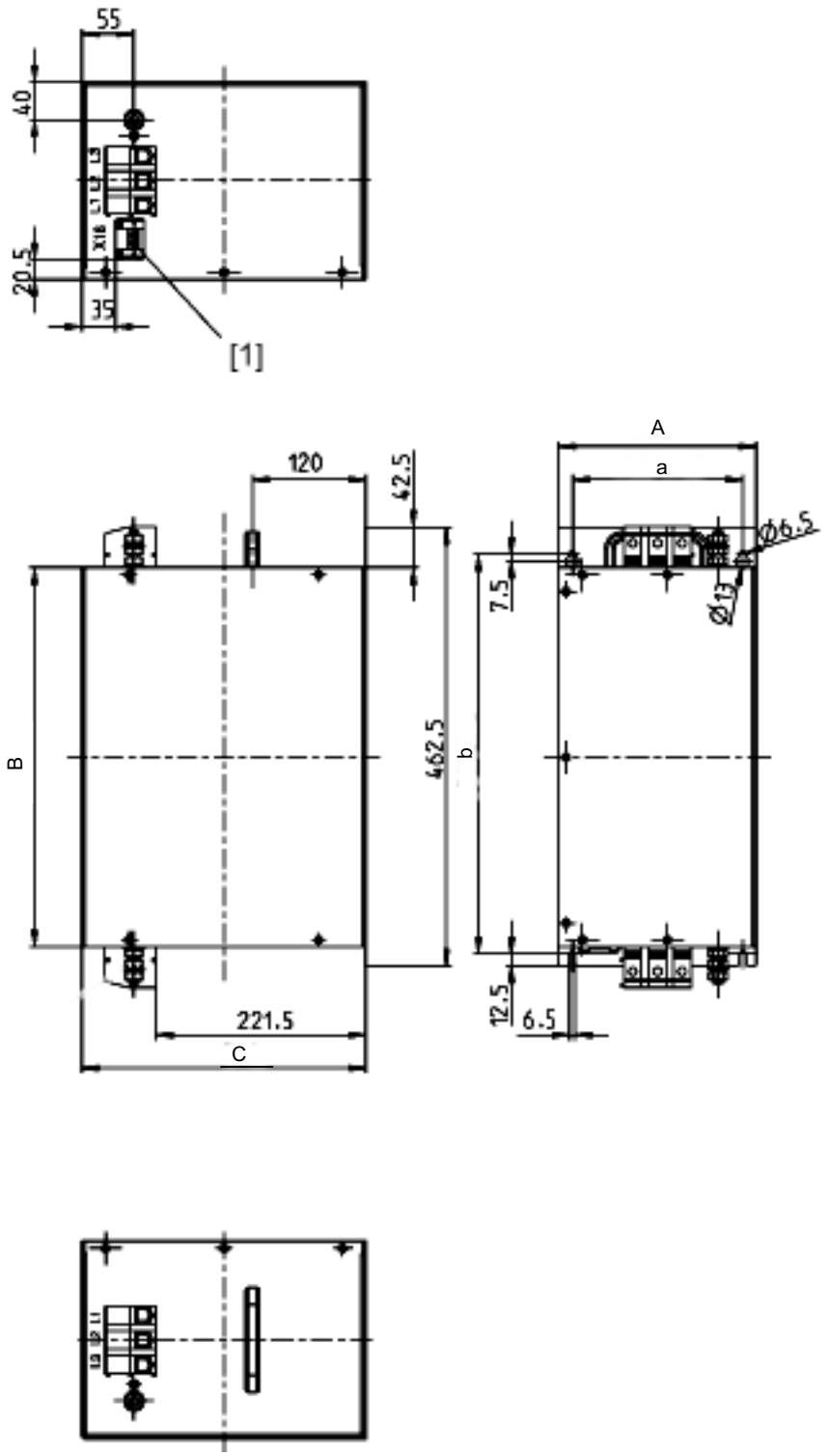

Figure 17: Dimension drawing of line filter for 3-phase systems

[1] Terminals for line phase measurement

7.4.2 NDR.. line choke

Wiring diagram

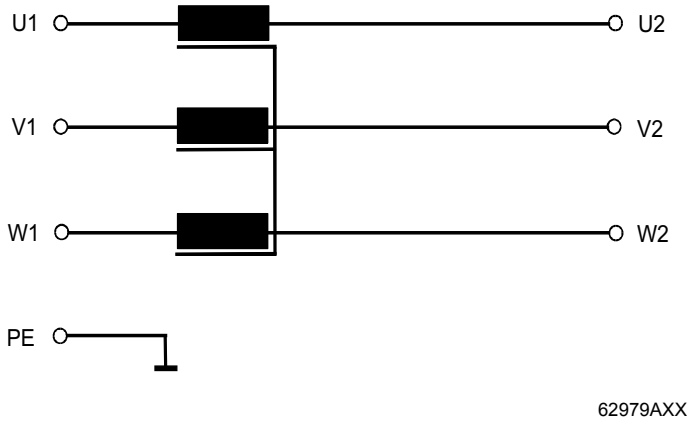

Figure 18: Wiring diagram of line choke

Technical data

		Unit	Line choke	
			NDR 075-083 (50 kW)	**NDR 110-063 (75 kW)**
Supply voltage AC[1)]	V_{supply}	V_{AC}	3 × 380 V - 3 × 480 V ±10 %	
Rated mains voltage[2)]	V_N	V_{AC}	3 x 500 V, 50 Hz	3 x 500 V, 50 Hz
Rated current	I_N	A	75	110
Power loss at • **0 % I_N** • **100 % I_N**		star	• 135 • 270	• 220 • 440
Operating temperature at • **0 % I_N** • **100 % I_N**		°C	• 85 • 140	• 85 • 140
Rated temperature		°C	+45	+45
Inductance		mH	3 x 0.8	3 x 0.55
Enclosures according to EN 60529		-	IP00	IP00
Weight		kg	40	47
Dimensions	**A**	mm	240	300
	B	mm	200	230
	C	mm	410	430
Mounting dimensions	**a**	mm	190	240
	b	mm	131	160

1) Max. operating voltage in connection with MXR
2) Max. operating voltage of the choke

Dimension drawing for NDR 075-083 (50 kW)

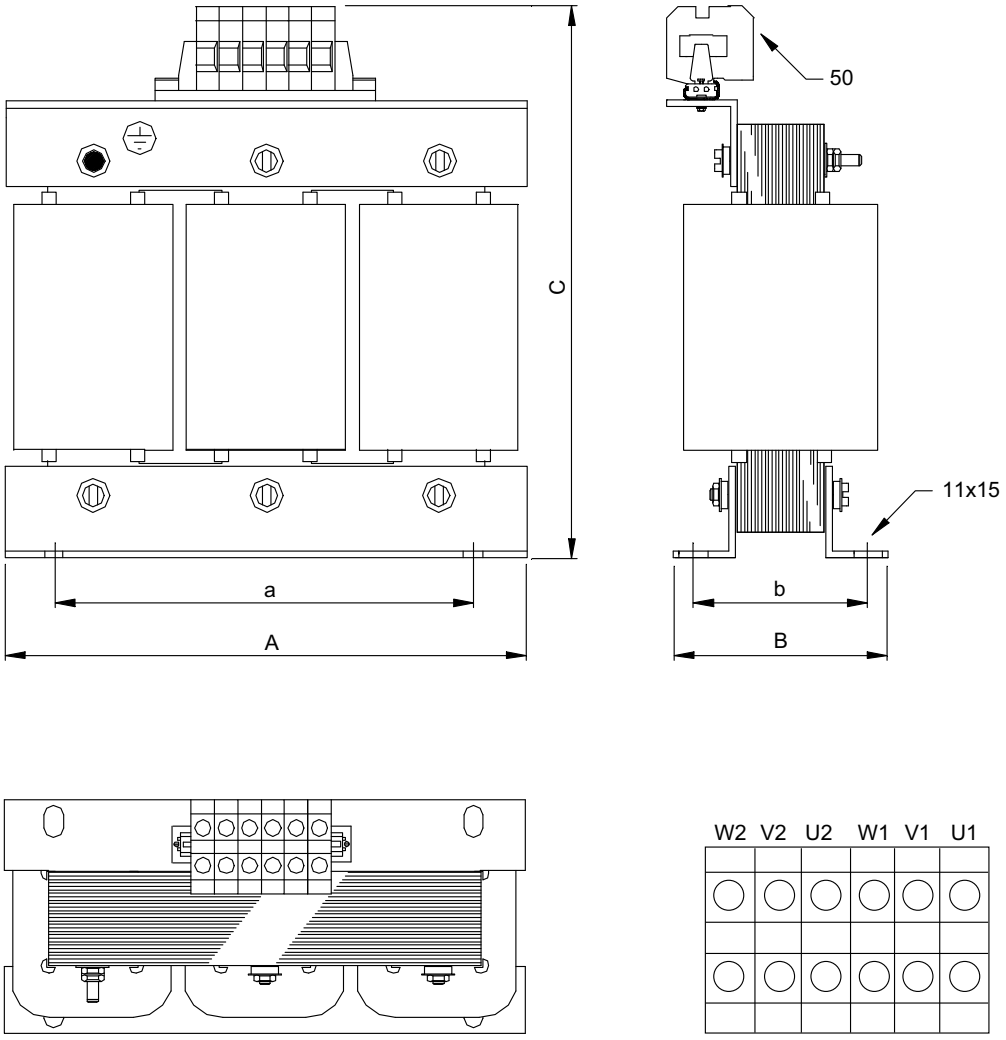

Figure 19: Dimension drawing of line choke

Dimension drawing for NDR 110-063 (75 kW)

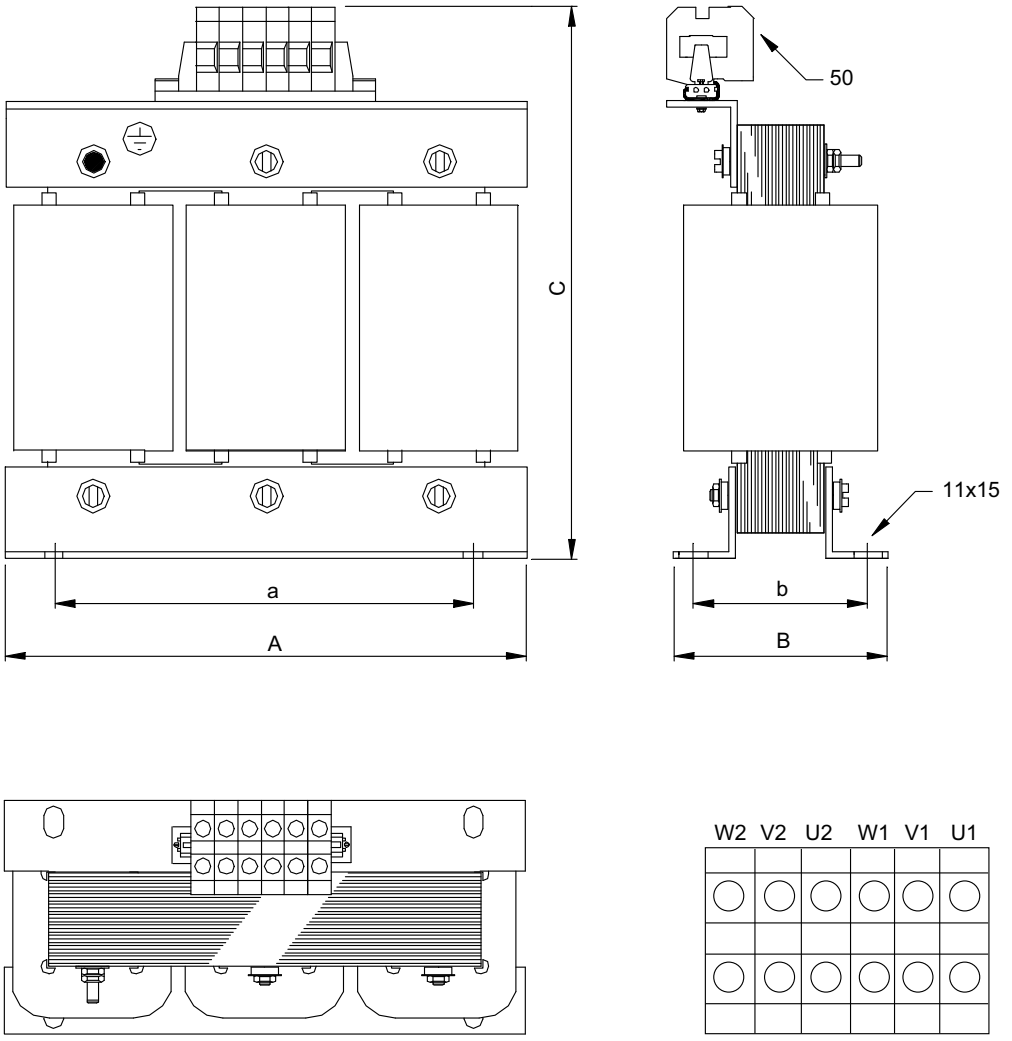

Figure 20: Dimension drawing of line choke

7.4.3 Braking resistors BW..., BW...-01, BW...-T, BW...-P

Technical data of BW..., W...-T, BW...-P

Type BW...	Mounting position	Main dimensions mm (in)			Fastening parts mm			Cable gland	Weight kg
BW..-T/ BW...-P		A/A'	B	C	a	b/c	d		
BW027-006	3	486	120	92	430	64	6.5	PG11	2.2
BW027-012	3	486	120	185	426	150	6.5	PG11	4.3
BW012-015	2	195	260	490	170	380	10.5		7
BW012-025-P	2	295/355	260	490	270	380	10.5	M12 + M25	8.0
BW012-050	2	395	260	490	370	380	10.5	-	12

Dimension sheets for BW..., W...-T, BW...-P

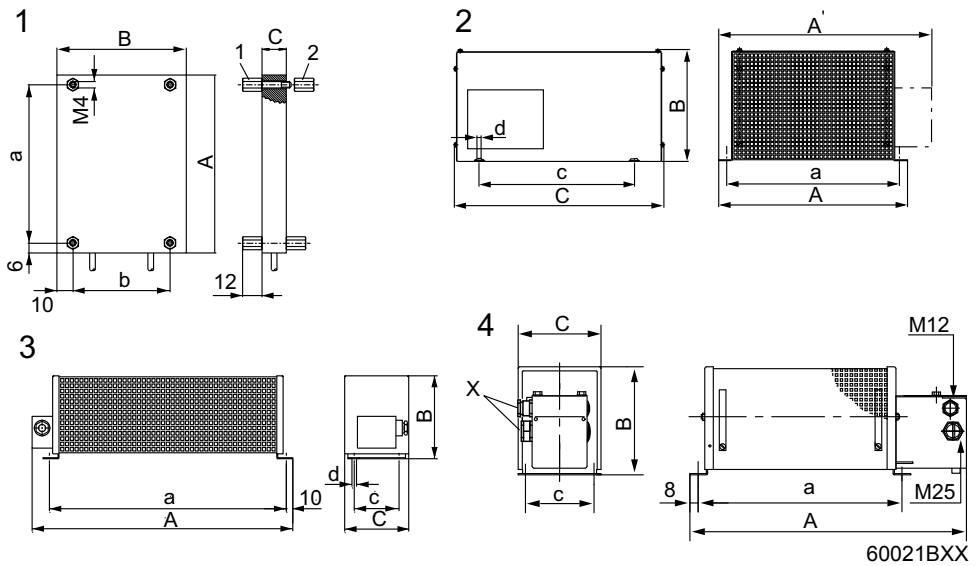

BW... :
- 1 = Flat design
  The connecting lead is 500 mm (19.7 in) long. The scope of delivery includes four M4 stud bolts each of type 1 and 2.
- 2 = Grid resistor
- 3 = Wire resistor
- 4 = Wire resistor with temperature switch (-T/-P)
  Cable entry (X) is possible from both sides.

Technical data of BW...-01

Type BW...	Main dimensions mm (in)			Fastening parts mm			Weight kg
BW..-T/ BW...-P	A	B	B’	a	b	c	
BW012-015-01	490	260	270	380	170	195	7
BW006-025-01	490	260	270	380	270	295	9.5
BW006-050-01	490	260	270	380	370	395	13
BW004-050-01	490	260	270	380	370	395	13

Dimension drawing for BW...-01

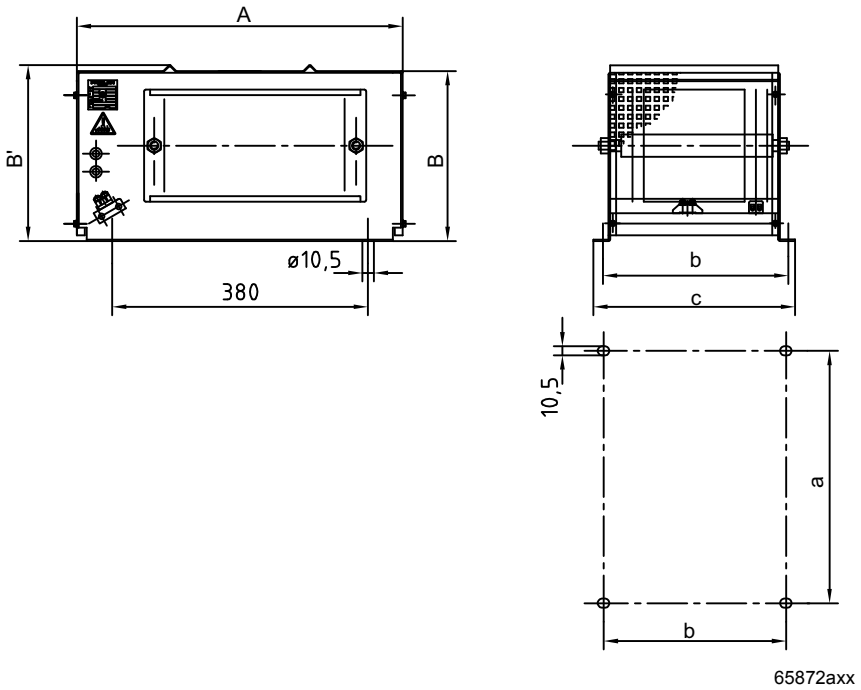

8 Project Planning

8.1 General information

	STOP The MXR regenerative power module may only be switched on when the drives are standing still.

Power levels of MXR

The MXR80A-075-503-00 regenerative power module has two power levels, 75 kW at 4 kHz and 50 kW at 8 kHz, depending on the pulse width modulation (PWM 4/8 kHz) and the appropriate upstream units.

8.2 Components for EMC-compliant installation

MOVIAXIS® servo inverters are designed for use as components for installation in machinery and systems. The components comply with the EMC product standard EN 61800-3 "Variable-speed electrical drives." Provided the information relating to EMC-compliant installation is observed, the devices satisfy the appropriate requirements for CE-marking of the entire machine/system in which they are fitted, on the basis of the EMC Directive 2004/108/EC.

Interference immunity

With regard to interference immunity, MOVIAXIS® meets all the requirements stipulated in EN 61000-6-2 and EN 61800-3.

Interference emission

Higher levels of interference are permitted in industrial environments than in residential environments. In industrial environments, it may be possible to dispense with the measures listed below depending on the situation of the supply system (grid) and the system configuration.

Interference emission category

Compliance with category "C2" according to EN 61800-3 has been tested on a specified test setup. SEW-EURODRIVE can provide detailed information on request.

	WARNING This product can cause high-frequency interferences in residential areas which can require measures for interference suppression.

8.3 Line contactor and line fuses

Input contactor

- Only use line contactors in utilization category AC-3 (IEC 158-1).
- The contactor K11 is designed for switching the MXR on and off only.

	STOP
STOP	• Observe a minimum switch-off time of 10 s for the K11 contactor! • Do not switch the power on or off **more than once per** minute! • The line contactor must always be positioned before the line filter.

Line fuse types

Line protection types in the operating classes gL, gG:

- Rated fusing voltage ≥ Rated supply voltage

Line protection switches with characteristics B, C and D:

- Line protection rated voltage ≥ rated supply voltage
- Rated line protection switch currents must be 10 % above the rated regenerative power module current.

8.4 Projecting the power supply

For information about the permitted voltage systems, go to page 21.

	STOP
STOP	Operation of one or several MXR regenerative power modules on supply systems with power factor correction equipment is not permitted **without** chokes.

Power supply requirements	**50 kW / 8 kHz**	**75 kW / 4 kHz**
Minimal short circuit power of the supply system at the regenerative power module input[1) 2)]	> 3.4 MVA	> 5.1 MVA
Permitted voltage distortion according to EN 61000-2-4, class 3	THD ≤ 10%	

1) Corresponds to Rsc > 67 and uk ≤ 1.5 %
2) Input means the input of the NFR.. line filter, impedance of the supply cable must be taken into account.

The supply system requirements listed in the table below are informative extracts from EN 61800-3.

Power supply requirements	**Unit**	
Permitted frequency change Df/t	Hz/s	$\pm 1\% \times f_{supply}/1s$
Permitted voltage asymmetry		3% of the negative-sequence component

8.4.1 Project planning example

The following example shows the configuration of an individual MXR regenerative power module with 75 kW.

Data

- Minimum required short-circuit power S_{Sc_MXR} of the supply system (transformer): ≥ 5.1 MVA
- Data of the supply transformer at the system operator:

Rated upper voltage V_{Pri}	kV	10
Rated lower voltage V_{Sec}	V	400
Rated frequency f_R	Hz	50
Rated power S_r	kVA	1000
Rated short-circuit voltage v_k	%	6

Calculation

Determining the short-circuit power S_{Sc} of the supply transformer:

$$S_{Sc} = \frac{S_r}{u_K} = \frac{1000kVA}{0.06} = 16.67MVA$$

Requirement: $S_{Sc_MXR} \leq S_{Sc}$

5.1 MVA ≤ 16.67 MVA

Requirement fulfilled.

8.5 Configuration of the supply system considering simultaneities

This chapter deals with the operation of several MXR regenerative power modules on one supply system in consideration of simultaneity aspects.

Introduction

The project planning notes listed in chapter "Supply system project planning" on page 77 are based on the assumption that each regenerative power module is operated independently of all others. This type of project planning allows for simultaneous operation of all regenerative power modules on one supply line.

	INFORMATION
	Please contact SEW-EURODRIVE before starting up several regenerative power modules on one supply system.

If simultaneities are taken into account, the following project planning regulations allow for installation of several regenerative power modules on an existing supply system (transformer) or the use of a smaller supply system (transformer).

The output stage enable DI00 of the connected regenerative power modules can be activated or deactivated to dimension the supply system as economical as possible. This means the minimum short-circuit power of the joint supply system must only be determined for the currently active (enabled) regenerative power modules.

When operating several regenerative power modules on one joint supply system (transformer), the supply system must fulfill the following minimum power and voltage level requirements.

Requirement 1

For the nominal supply system current (nominal transformer current) applies:

The sum of the nominal currents of all connected MXR regenerative power modules must be smaller than the nominal current of the supply system (nominal transformer current).

$$\sum I_{N\,MXR} < I_{N\,Tr}$$

For the minimum power of the supply system (transformer power) applies:

$$S_{Tr} = \sum I_{N\,MXR} \times U_{Netz} \times \sqrt{3}$$

$I_{N\,MXR}$	Nominal current of the regenerative power module
$I_{N\,Tr}$	Nominal current of the supply system (transformer)
V_{supply}	Nominal voltage of the supply system

Requirement 2

When several regenerative power modules are operated on a joint supply system (transformer), it makes a difference whether the output stages are enabled (DI00 = "high") or inhibited (DI00 = "low").

The minimum required short-circuit power of the joint supply system (transformer) is calculated from the output stages of the MXR regenerative power modules that are enabled at the same time. Inhibited regenerative power modules (DI00 = "low") are irrelevant for this calculation.

$$\sum S_{Sc_MXR} \leq S_{Sc}$$

Key:

S_{Sc_MXR}	Required short-circuit power of supply system per MXR
S_{Sc}	Short-circuit power of the supply system (transformer)

8.5.1 Project planning example

In a larger system, 5 MXR units (75 kW) are connected to and operated on a joint supply system (transformer).

A central controller ensures that **only 3 MXR units are enabled at the same time**. The remaining 2 MXR units are not enabled (DI00 = "low").

This results in a minimum required short-circuit power of the joint supply system (transformer) as described below.

Verification of requirement 1

Calculation of the nominal transformer current:

$$I_{N_Trafo} = \frac{S_r}{\sqrt{3} \times U_{sek}} = \frac{1000kVA}{\sqrt{3} \times 400V} = 1443A$$

Requirement:

$$\sum I_{N_MXR} < I_{N_Trafo}$$

5 × 110 A = 550 A < 1443 A

Requirement fulfilled.

Specification

- Minimum required short-circuit powerΣ S_{Sc_MXR} of the supply system (transformer) for 3 regenerative power modules with 75 kW: ≥ 3 × 5.1 MVA = 15.3 MVA
- Data of the supply transformer at the system operator:

Rated upper voltage V_{Pri}	kV	10
Rated lower voltage V_{Sec}	V	400
Rated frequency f_R	Hz	50
Rated power S_r	kVA	1000
Rated short-circuit voltage v_k	%	6

Calculation

Determining the short-circuit power S_{Sc} of the supply transformer:

$$S_{Sc} = \frac{S_r}{u_K} = \frac{1000kVA}{0.06} = 16.67MVA$$

Requirement: $\Sigma S_{Sc_MXR} \leq S_{Sc}$

15.3 MVA ≤ 16.67 MVA

Requirement fulfilled.

8.5.2 Switching sequence between enabled and inhibited output stage status

The input "DI00 output stage enable" is used to activate or deactivate the enabling of the regenerative power modules.

The following diagram shows the switching sequence:

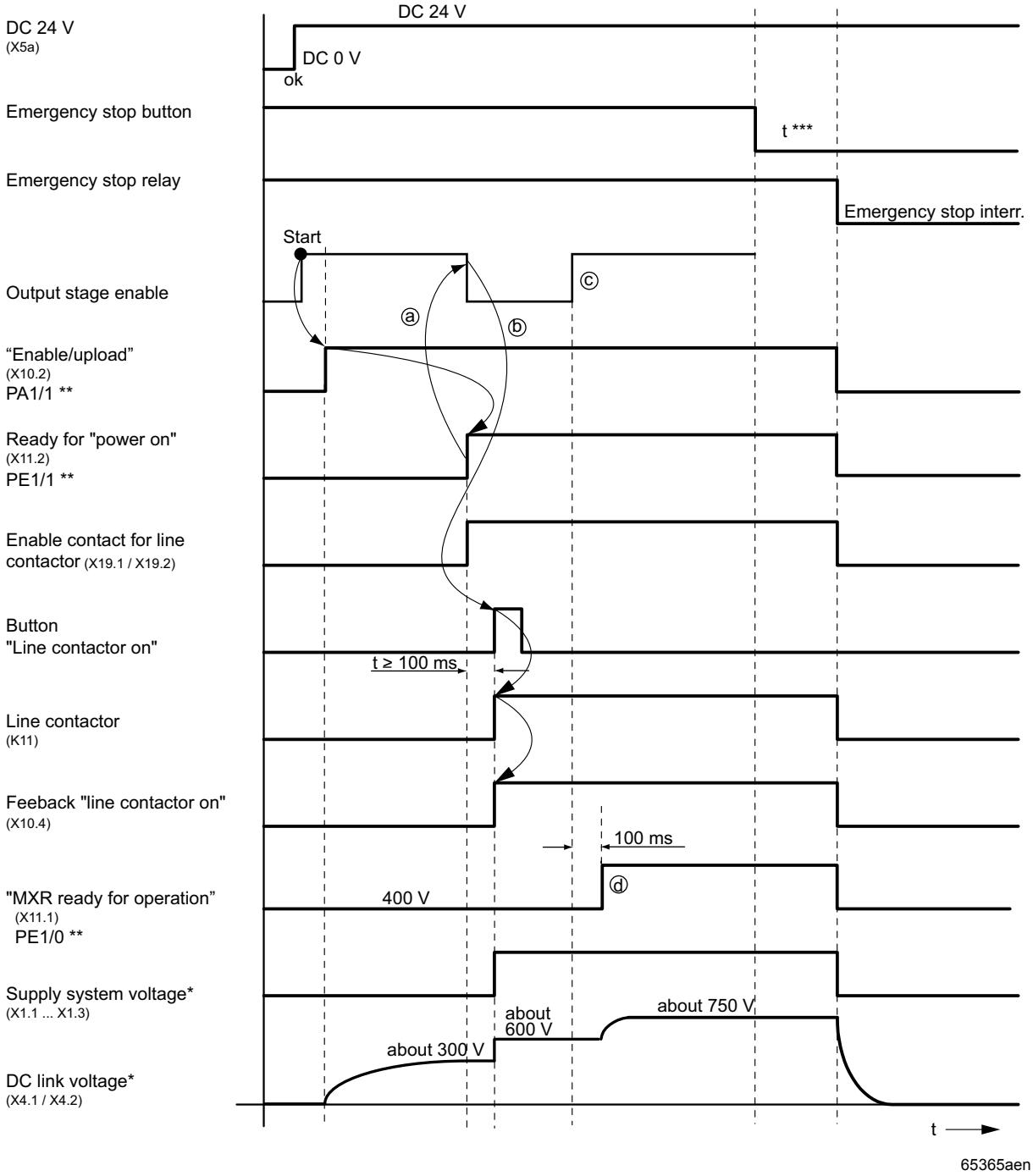

Figure 21: Switching sequence enabled / inhibited state

a The output stage enable signal can be withdrawn just after "Ready for power on".

b Right after withdrawing the output stage enable signal, the line contactor can be activated. The regenerative power module is now in "Standby" status and is not taken into account for the calculation of the relative short-circuit voltage v_k.

c The unit goes to 'ready for operation' status when the output stage is enabled.

d The signal "MXR ready for operation" is sent with a delay of 100 ms. It must be received before the drives are enabled.

* For supply voltage AC 400 V

** For control via fieldbus

*** Emergency stop release delay only in line with applicable system- and country-specific safety regulations and customer specifications.

	INFORMATION
	Make sure that the supply system (the transformer) is not overloaded by the instantaneous power (up to 200 %) or the total power of all enabled regenerative power modules.

8.6 Projecting the cable cross sections

Special regulations

Comply with the **regulations issued by specific countries and for specific machines** regarding fusing and the selection of cable cross sections. If required, also adhere to the notes on **UL compliant installation**.

Supply cable length

The cable length between the regenerative power module and the line filter may not exceed 1.5 m, see also wiring diagram on page 23.

The cable length between the line contactor and the line filter may not exceed 5 m, see also wiring diagram on page 23.

Cable cross sections and fuses

SEW-EURODRIVE recommends the following cable cross sections and fusing, assuming the use of single-core copper cables with PVC insulation laid in cable ducts, an ambient temperature of 40 °C and nominal system currents of 100% of the nominal unit current:

MOVIAXIS® MXR regenerative power modules

MOVIAXIS® MXR	**MXR80A-75...**	
Nominal power [kW]	50	75
Supply system connection		
Nominal supply system current AC [A]	see technical data page 63	
Fuses F11/F12/F13 I_N	Dimensioning according to nominal supply system current	
Cross-section and contacts of supply system connection	Screw bolts M8, max. 70 mm^2	
Cross section and contacts on shield clamp	max. 4 × 50 mm^2, shielded	
Connection of emergency braking resistor		
Brake line +R/-R	Dimensioning according to nominal current of braking resistor	
Cross-section and contacts on connections	Screw bolts M6, max. 16 mm^2	
Cross section and contacts on shield clamp	max. 4 × 16 mm^2	
Cross-section and contacts on braking resistor	→ Technical data of braking resistors	

Measuring line X18 of the line filter

For the measuring cable X18, we recommend a cross section of 2.5 mm^2.

The requirements for UL-compliant installation of the measuring cable X18 are listed on page 17 ff.

8.7 Selecting the 24 V power supply

The current path and power ratios present when switching on the 24 V voltage supply are shown in Figure 22 .

The current path is basically divided into 3 time ranges.

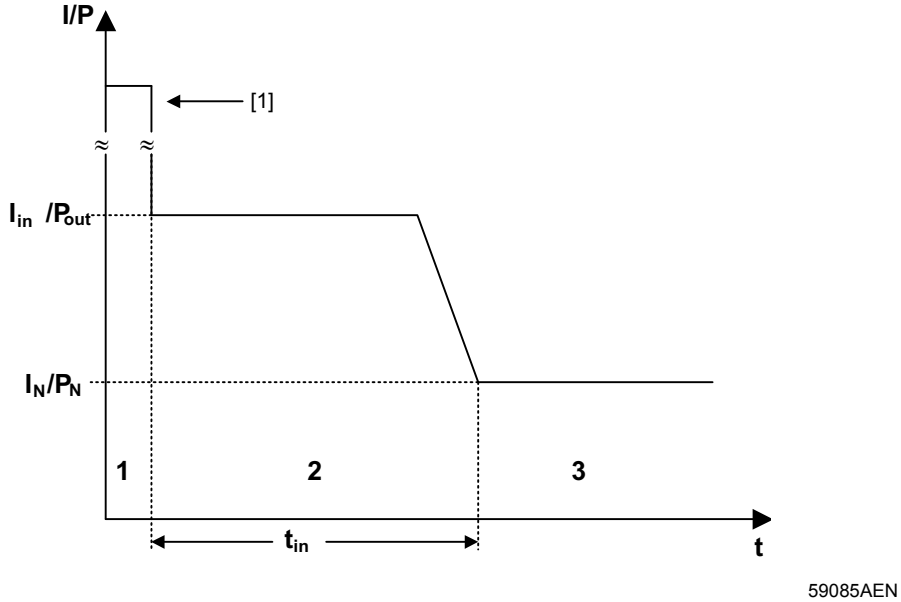

Figure 22: Current and power characteristics when switching on supply power

[1] Charging current due to internal input capacitance C_{on}

1. Describes the charging process of the input capacitors in each unit. A time period cannot be specified because the charging time is significantly influenced by the property of the power supply and the line dimensioning. You therefore have to calculate the total of all unit capacitances using the table below. Manufacturers of switched-mode power supplies usually specify technical data about the loadable capacitances. The charging time 1 is very short in comparison with time range 2. The voltage source must be capable of reliably activating the combination of units with the highest possible capacitance.
2. This is the time interval when the unit's internal switched-mode power supplies start up. The total of the maximum power consumption must be calculated for this time period. The power supply must be capable of providing this total power for at least 100 ms.
3. Rated power range. The required rated power of the supply source results from the total rated power of all connected devices.

Table for project planning according to points 1 - 3.

Unit type	Supply voltage Electronics [V]	Rated current I_N [A] / rated power P_N [W]	Max. input current [A] / power P_{on} [W]	Input pulse duration t_{on} [ms]	Input capacitance C_{on} [µF]
MXA BG1	18 - 30	0.7 / 17	2 / 48	60	600
MXA BG2		0.95 / 23	2.2 / 53	70	600
MXA BG3		1.3 / 23	2.1 / 50	90	600
MXA BG4		2.2 / 53	2 / 48	80	700
MXA BG5		2.3 / 55	2 / 48	80	700
MXA BG6		3.2 / 77	2.5 / 60	60	1000
MXP BG1	18 - 30	0.5 / 12	0.3 / 7	40	100
MXP BG3		0.8 / 19	0.6 / 14	60	500
MXR	18 - 30	3.8 / 91	3.5 / 84	90	1000
MXZ	18 - 30	0.1 / 2.5	0.3 / 7	60	50
MXC		1 / 24	2.7 / 65	400	300
MXM[1)]	18 - 30	0.1 / 2.5	0.2 / 5	30	50

		P [W]	
XFE	is part of the basic unit		
XFP	Power supply via basic unit	3	is taken into account in the specifications of the basic unit
XFA		2	
XIO		1	
XIA		1	
XGH[2)]		2	
XGS[2)]		2	

1) Valid in combination with DHP11B

2) Specifications without connected encoder. Maximum power that can be connected: 12 W

INFORMATION

For more information, refer to the "MOVIAXIS® MX Multi-Axis Servo Inverter" project planning manual.

8.8 Projecting the emergency braking resistor

8.8.1 Notes on the emergency braking resistor

	INFORMATION Under normal operating conditions, the MOVIAXIS® MXR regenerative power module feeds regenerative energy that exceeds the DC link buffer into the supply system. **In practice, however, operating states can occur which prevent the MXR regenerative power module from feeding back energy into the supply system**, e.g. in case of: • A power failure, • A failure of individual line phases (also momentary).

Without the supply voltage, motor operation of the drives is not possible and the DC link can absorb regenerative energy only to a limited extent. The operating states described above can therefore cause the drives to coast to a halt, or the motor brake to bring the drive to a stop, if installed.

To prevent an uncontrolled stop of the drives, an optional emergency braking resistor can be connected to MOVIAXIS® MXR which brings the axes to a controlled stop in the event of such an emergency. The kinetic energy in the drives is then dissipated via the braking resistor as heat.

	STOP Under normal operating conditions, this optional braking resistor is not cyclically loaded, but only in an emergency as described above. This braking resistor is therefore designed as emergency braking resistor.

The following describes the procedure for projecting an emergency braking resistor for MOVIAXIS® MXR.

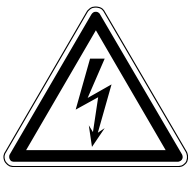	**DANGER** The supply cables to the emergency braking resistor carry a **high DC voltage (about DC 970 V)**. Severe or fatal injuries from electric shock. • The emergency braking resistor cables must be suitable for this high DC voltage. • Install the emergency braking resistor cables according to the regulations.

	WARNING The surfaces of the emergency braking resistors get very hot when the braking resistors are loaded with P_{rated}. Risk of burns and fire. • Choose a suitable installation location. Emergency braking resistors are usually mounted on top of the control cabinet. • Do not touch the emergency braking resistors.

	STOP • The data in this section applies to BW... braking resistors when used as emergency braking resistors. • The **maximum permitted cable length** between **MOVIAXIS®** and the emergency braking resistor is **100 m**.

8.8.2 Selecting the emergency braking resistor

Selection criteria

Selection of the emergency braking resistor is based on the following criteria:

- Peak braking power
- Thermal braking power

Peak braking power

The DC link voltage and the resistance value of the emergency braking resistor determine the maximum braking power P_{max} that can be dissipated from the DC link.

The peak braking power is determined as follows:

$$P_{max} = \frac{U^2_{DC}}{R}$$

60327AXX

V_{DC} is the maximum DC link voltage, which is DC 970 V for MOVIAXIS®.

The peak braking power P_{peak} for each braking resistor is listed in the table of emergency braking resistors on page 90.

Determining the maximum emergency braking resistor power

Condition 1

The maximum power of the emergency braking resistor P_{peak} is larger than the maximum regenerative power P_{max} that is generated during emergency braking.

$$P_{peak} \geq P_{max}$$

63174AXX

P_{peak} Max. power according to table (→ page 90)that the emergency braking resistor can convert to heat.

P_{max} Max. power that the emergency braking resistor has to dissipate from the DC link.

Condition 2

The previously determined amount of regenerative energy $W_{generatorisch}$ is the basis for checking whether the emergency braking resistor can dissipate this amount without thermal overload.

$$W_{max} \geq W_{generatorisch}$$

63175AXX

W_{max}	Max. amount of energy that the emergency braking resistor can absorb
$W_{generatorisch}$	Total amount of energy of the application regenerated during emergency braking.

Thermal emergency braking power

The thermal load on the emergency braking resistor must be taken into account when carrying out project planning for the emergency braking resistor.

The thermal load is calculated using the energy content of the emergency braking sequence.

This condition takes into account the heating of the emergency braking resistor over the entire emergency braking cycle.

- Calculating the maximum regenerative energy from the sum of the travel profiles of all connected axes (taking into account the set emergency stop ramps and time sequences).

Protection of the emergency braking resistor

STOP	**STOP**
	A thermal overload relay or a temperature circuit breaker (integrated in BW) is necessary to protect the emergency braking resistor against overload. These relay types offer a setting option for the trip current. Set the trip current to the rated current of the resistor (see page 90). No motor protection switches may be used. **Caution: Do not open** the power contacts of the braking resistors in case of thermal overload. The connection between braking resistor DC link **may not be interrupted**. Instead, the control contact of the overload relay opens relay K11 (see wiring diagram on page 22).

Unit temperature

	WARNING The surfaces of the emergency braking resistors get very hot when the braking resistors are loaded with P_{rated}. Risk of burns and fire. • Choose a suitable installation location. Emergency braking resistors are usually mounted on top of the control cabinet. • Do not touch the emergency braking resistor. • Adhere to the necessary cool down time of at least 5 minutes.

	INFORMATION Emergency braking resistors can become very hot during operation. The high temperatures can heat up the cage of the emergency braking resistor to over 100 °C. This means that the ventilation, size of the installation site and distance to components and parts at risk must be provided accordingly. The emergency braking resistor usually delivers its rated power for an extended period of time.

Operation of the regenerative power module in case of supply system faults

	STOP Supply system faults, e.g. power failures, can cause the brake chopper to respond and load the braking resistor. This happens if the DC link cannot buffer any more regenerative energy. The mean utilization of the connected resistor can be exceeded, which will trigger the bimetallic protective relay (protection of the braking resistor). The supply system quality can be a reason for this, for example. The supply system quality influences project planning for the braking resistor, especially if the resistor is designed as an emergency braking resistor. If the braking resistor is designed as an emergency braking resistor, this means that, depending on the amount of regenerative energy • The trip contact of the bimetallic protective relay trips in normal operation, • Due to this load, the emergency braking resistor is no longer capable of dissipating the regenerative energy in the event of an actual emergency. In this case, the bimetallic protective relay trips.

Selection table

Taking the max. regenerative braking power and regenerative energy generated in the machine or system into account, you can select an emergency braking resistor from the resistors listed in the table. Use the SEW Workbench software for project planning.

Type	Part number	Resistance [Ω]	Trip current I_F [A]	$P_{Duration}$ [kW]	P_{Peak} [kW]	W_{max} Energy capacity [kWs]
BW027-006[1)]	822 422 6	27	4.7	0.6	34.8	10
BW027-012	822 423 4	27	6.7	1.2	34.8	28
BW012-015	821 679 7	12	11.2	1.5	78.4	34
BW012-015-01	1 820 010 9	12	11.2	1.5	78.4	240
BW012-025-P	821 680 0	12	14.4	2.5	78.4	360
BW012-050	821 681 9	12	20.4	5	78.4	600
BW006-025-01	1 820 011 7	6	20.76	2.5	156	300
BW006-050-01	1 820 012 5	6	29.4	5	156	600
BW004-050-01	1 820 013 3	4	37.3	5	235	600

1) Tubular fixed resistor

STOP

The data listed in the table only applies to resistors used as emergency braking resistors, which may not be loaded cyclically.

STOP

Wait at least for 5 minutes following an emergency braking sequence before you can perform another emergency braking sequence.

8.9 Dimensioning the MXR regenerative power module

The size of a regenerative power module is determined by:

- The total actual power of all axis modules: $P_{eff} < P_N$, motor and regenerative.
- The sum rule. The sum of all rated currents of the axis modules may not exceed the double rated DC link voltage of the regenerative power module.

	INFORMATION
	Important: The total power (DC link power) results from the overlapping cycles of the individual connected axis modules. Changing the assignment of cycles with respect to time strongly influences the motor and regenerative load of the regenerative power module. It is necessary to take a worst-case scenario into account.

Due to the complexity, the calculation can only be made using software. The software is a tool of "SEW Workbench".

8.10 Output in case of a lower supply system voltage

If the supply system voltage drops below the nominal voltage of 400 V, the output power of MXR is reduced.

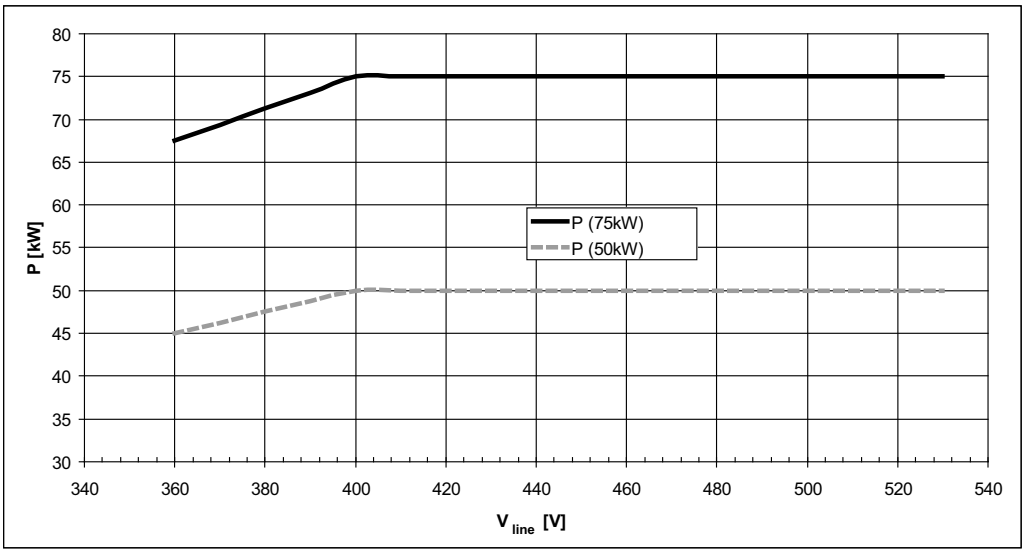

64265axx

Figure 23: Power characteristics in case of a supply system voltage drop

8.11 Overload capacity

The overload requirement of the application is based on the projected axis modules.

The following values are determined using Graphical Workbench:

- The required output power,
- The necessity to use a braking resistor.

SEW-EURODRIVE recommends the following braking resistors:

MXR 50 kW	MXR 75 kW
BW012-015	BW006-025-01

The following table shows the overload capacity:

Power rating	Voltage [V]	Overload [%]
MXR 50 kW	360 - 380	≤ 160
	380 - 480	≤ 200
MXR 75 kW	360 - 380	≤ 110
	380 - 480	≤ 200

8.12 Integrating a regenerative power module in a unit network

	STOP
STOP	Please note that no more than 8 axis modules can be used in a network.

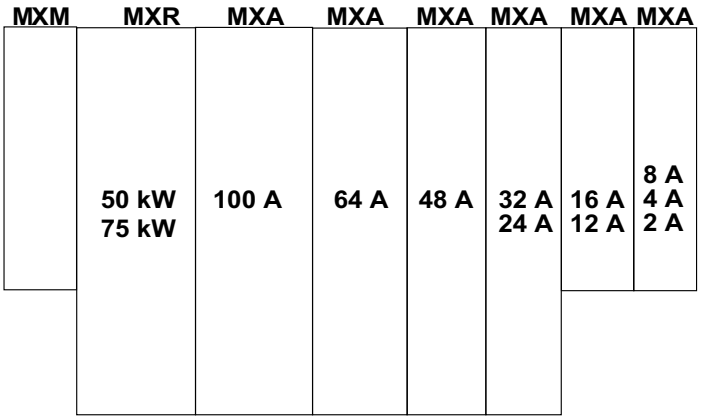

64256axx

Figure 24: Example of an axis arrangement

MXM	Master module, component	MXA	Axis modules, BG1-6
MXR	Regenerative power module		

MXR regenerative power module

Arrange the regenerative power module to the left of the axis modules in the axis system.

8.13 Power supply

The following schematic example illustration shows a typical arrangement of MOVIAXIS® modules in an axis system. It shows the connection of

- The DC link,
- The signaling bus
- And the DC 24 V voltage supply.

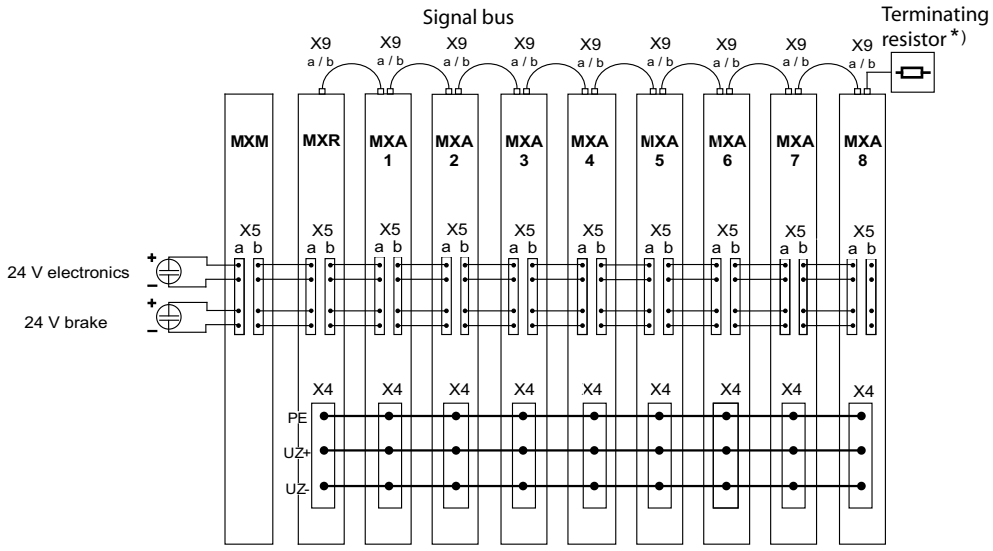

64257aen

Figure 25: Example: Arrangement sequence of MOVIAXIS® MX units

*) Terminating resistor: Only for CAN bus unit design.

Key:

MXM	Master module, component
MXR	Regenerative power module
MXA 1 - MXA 8	Axis modules unit 1 to unit 8

8.14 Check list for project planning

This check list supplements the product-specific documentation. Its objective is to verify two basic requirements for the operation of a MOVIAXIS® MXR regenerative power module.

This document offers additional information to the product-specific documentation. It does not replace any product-specific documentation. The information in the product-specific documentation must be observed irrespective of this document.

Checklist

Technical data of the supply system (the transformer) on which the regenerative power module is to be operated:

Supply system/transformer		
Rated power	kVA	:
Nominal supply system voltage	V	:
Nominal supply system frequency	Hz	:
Rated short-circuit voltage v_k	%	:
Network configuration, e.g. TT, TN		:
THD value (contact your utility company, if necessary)	%	:
Are other regenerative power modules operated on this supply system (transformer)?		:
If yes: • How many? • What is their total power?		:
Regenerative power percentage	kVA	:
Power percentage of additional consumers	kVA	:
Mean utilization of the supply	%	:
Peak load of the supply	%	:
Power factor correction equipment installed?		:
If yes: • Choking factor	%	:
Ambient conditions		
Installation location (city, country)		:
Ambient temperature	°C	:
Installation altitude (above sea level)	m	:
Relative humidity	%	:
Cable length to supply system (transformer)	m	:
Cable cross section to supply system (transformer)	mm^2	:
General information		
What experiences have been made with the operation of regenerative power modules?		:
Does the utility company allow power feedback into the supply system?		:
Is regenerative operation measured by the energy meters?		:
Is a generator (e.g. emergency diesel generator) or a UPS installed in the supply system?		:

9 Index

Numerics

24 V power supply, selection 84

A

Accessories 14
Accessory assignment table 15
Additional components 68

B

Braking resistors
Operation 21
Bus communication 65

C

Cable cross section 20
Cable cross sections and fuses 83
CAN system bus 29
Combining MXR with other units 13
Connection
Electrical 9
Connection of emergency braking resistor..... 20
Connection of MXR regenerative power module 22
Control electronics, wiring 22

D

Designated use 7
Dimension sheet of MXR 66
Drilling template of MXR 67

E

Electrical connection 9
Electrical installation 19
Electromagnetic compatibility
Interference emission categories 76
Emergency braking resistor 86
Connection 20
Selection 87
Emergency braking resistor, notes 86
EtherCAT
Fieldbus 32
System bus 31
Exclusion of liability 6

F

Fault table 48
Fieldbus
EtherCAT 32

I

Installation 8
Electrical 19
Mechanical 16
Installation of the regenerative power module 19
Integrating a MXR in a unit network 92
Interference emission 76
Interference immunity 76

L

Line choke NDR.. 71
Line contactor 20
Line filter for 3-phase system 68
Line fuses, fuse types 77

M

Mechanical installation 16

N

Nameplate 10
Notes on the emergency braking resistor..... 86
Notes on the wiring diagrams 22

O

Operating displays 47
Operating displays and errors of MXR 47
Operation 46
Operation of emergency braking resistor 21
Other applicable documentation 5

P

Parameter description 41
Permitted tightening torque
DC link connection 17
Permitted tightening torques 17
Power terminals 17
Signal terminals 17
Permitted voltage supply systems 21
Power terminal wiring 23
Process data assignment for fieldbus operation 35
Project planning
Notes on emergency braking resistor 86
Project planning for MXR
Dimensioning MXR 91
EMC-compliant installation 76
Emergency braking resistor 86
Integrating a MXR in a unit network 92
Line contactor and line fuses 77
Maximum emergency braking resistor power 87
Operation of MXR in case of supply system faults 89
Output in case of lower supply system voltage 91
Overload capacity 92
Peak braking power 87
Power supply 93

Projecting the cable cross sections 83
Projecting the power supply 77
Protection of the braking resistor 88
Selecting the 24 V power supply 84
Thermal emergency braking power 88
Project planning of MXR 76
Putting into storage 8

R

Reference potentials - Notes..... 25
Reference potentials inside the unit - Notes .. 25
Removal of the regenerative power module .. 19
Right to claim under warranty 6

S

Safe disconnection..... 9
Safety notes 7
Designated use..... 7
Electrical connection..... 9
General..... 7
Installation 8
Operation..... 9
Safe disconnection 9
Safety functions 8
Shipping..... 8
Structure 5
Target group 7
Selection of emergency braking resistor..... 87
Selection table for emergency
braking resistors..... 90
Standard accessories..... 14
Startup 28
Prerequisite 28
Startup of MXR..... 38
Supply cable length..... 83
Switch-on sequence MXR..... 33
Switch-on sequence of MXR
Addendum to the diagram 34
System bus
CAN 29
EtherCAT..... 31

T

Technical data
Bus communication 65
Control section..... 64
General..... 62
Power section 63
Terminal assignment..... 25
Terminal assignment of MXR..... 26

U

UL-compliant installation 17
Unit design 10
Unit designation 11
Unit installation..... 8
Unit structure of MXR..... 12
Unit temperatures..... 89

V

Voltage supply systems, permitted 21

W

Wiring
Control electronics 22
Power terminals 23
Wiring diagrams 22

SEW-EURODRIVE
Driving the world

SEW-EURODRIVE GmbH & Co KG
P.O. Box 3023
76642 Bruchsal/Germany
Phone +49 7251 75-0
Fax +49 7251 75-1970
sew@sew-eurodrive.com

→ **www.sew-eurodrive.com**