SEW EURODRIVE



Servo Gear Units

Edition 04/2009
16772415 / EN

Catalog















SEW
EURODRIVE

1 Introduction 6
1.1 The SEW-EURODRIVE group of companies 6
1.2 Products and systems from SEW-EURODRIVE 7
1.3 Additional documentation 9
1.4 Copyright 10

2 Product Description of the Gear Units 11
2.1 General information 11
2.2 Surface protection 11
2.3 Explosion protection according to ATEX 13
2.4 Extended storage of R, F, K, S, W gear units 14
2.5 General product description R, F, K, S, W gear units 16
2.6 General product description BS.F, PS.F, PS.C gear units 20

3 Overview of Types and Unit Designations 22
3.1 Variants and options of R, F, K, S, W gear units 22
3.2 Variants and options of BS.F, PS.F and PS.C gear units 34
3.3 Unit designation 38
3.4 Nameplate for servo gear units 39
3.5 Overview of servo gear units 40

4 Project Planning Information for Servo Gear Units 41
4.1 Drive and gear unit selection data 41
4.2 Project planning procedure 43
4.3 Project planning information for R, F, K, S, W gear units 46
4.4 Project planning information for BS.F, PS.F, PS.C gear units 51
4.5 Project planning example: Gantry with servo drives 55
4.6 Additional documentation 62

5 Mounting Positions of Gear Units 63
5.1 General information on the mounting positions of R, F, K, S, W gear units 63
5.2 Order information for R, F, K, S, W servo gear units 64
5.3 General information on the mounting positions of BS.F, PS.F, PS.C gear units 66
5.4 Order information for BS.F, PS.F, PS.C servo gear units 67
5.5 Key to the mounting position sheets 68
5.6 Mounting positions of helical gear units 70
5.7 Mounting positions of parallel shaft helical gear units 75
5.8 Mounting positions of helical-bevel gear units 78
5.9 Mounting positions of helical-worm gear units 83
5.10 Mounting positions of SPIROPLAN® gear units 89
5.11 Mounting positions of BS.F helical-bevel gear units 92
5.12 Mounting positions of PS.F, PS.C planetary gear units 101

6 Design and Operating Notes 103
6.1 Mounting/removing gear units with hollow shaft and key 103
6.2 Gear units with hollow shaft 107
6.3 TorqLOC® mounting system for gear units with hollow shaft 108
6.4 Gear unit with flange block shaft 109
6.5 Option, shouldered hollow shaft with shrink disk 110
6.6 Gear unit mounting 117
6.7 Torque arms 117
6.8 Flange contours of RF.. and R..F gear units 118

6.9 Flange contours of FF.., KF.., SF.. and WF.. gear units 119
6.10 Flange contours of FAF.., KAF.., SAF.. and WAF.. gear units 120
6.11 Fixed covers 121
6.12 Condition monitoring: Oil-aging and vibration sensor for R, F, K, S gear units 123
6.13 Lubricants and fill quantities for R, F, K, S, W gear units 126
6.14 Lubricants and fill quantities of BS.F, PS.F gear units 133
6.15 Restriction of permitted torques when using EBH / EPH with coupling sleeve 137

7 Important Information on Selection Tables and Dimension Sheets 138
7.1 Information on the selection tables for R, F, K, S, W gear units 138
7.2 Information on the selection tables for BS.F, PS.F, PS.C gear units 139
7.3 Information about the dimension sheets 141
7.4 Gearmotor dimensions 144

8 Helical Gear Units R.. 145
8.1 R.. AQ..types 145
8.2 RX.. AQ.. selection tables, dimension sheets 146
8.3 R.. AQ.. selection tables, dimension sheets 168
8.4 R.. AQ.. adapters 227

9 Parallel Shaft Helical Gear Units F 228
9.1 F.. AQ.. types 228
9.2 F.. AQ.. selection tab les, dimension sheets 230
9.3 F.. AQ.. adapters 307

10 Helical-Bevel Gear Units K.. 308
10.1 K.. AQ.. types 308
10.2 K.. AQ.. selection tables, dimension sheets 310
10.3 K.. AQ.. adapters 377

11 Helical-Worm Gear Units S.. 378
11.1 S.. AQ.. types 378
11.2 S.. AQ..selection tables, dimension sheets 380
11.3 S.. AQ.. adapters 407

12 SPIROPLAN® Gear Units W.7.. 408
12.1 W.7.. AQ.. types 408
12.2 W.. AQ.. selection tables, dimension sheets 410
12.3 W.. AQ.. adapters 425

13 Helical-Bevel Gear Units BS.F 426
13.1 BS.F.. EBH.. types 426
13.2 BS.. EBH.. selection tables, dimension sheets 428
13.3 BS.F EBH.. adapters 474

14 Planetary Gear Units PS.F.. 475
14.1 PS.F.. EPH.. types 475
14.2 PS.F.. EPH.. selection tables, dimension sheets 476
14.3 PS.F EPH.. adapters 533

15 Planetary Gear Units PS.C..... 534
15.1 PS.C.. ECH.. types 534
15.2 PS.C.. EPH.. types..... 535
15.3 PS.C.. ECH.. / EPH..selection tables, dimension sheets..... 536
15.4 PS.C ECH.. adapters 562
15.5 PS.C EPH.. adapters 563

16 Abbreviation Key..... 564
Abbreviation key 564

17 Index..... 564

Address Directory 565

1 Introduction

1.1 The SEW-EURODRIVE group of companies

Global presence

Driving the world with innovative drive solutions for all branches and for every application. Products and systems from SEW-EURODRIVE are used in a multitude of applications worldwide. Be it in the automotive, building materials, food and beverage or metal-processing industry the decision to use drive technology 'made by SEW-EURODRIVE' stands for reliability for both functionality and investment.

We are represented in the most important branches of industry all over the world: with 12 manufacturing plants, 67 assembly plants in 47 countries and our comprehensive range of services, which we consider an integrative service that continues our commitment to outstanding quality.

Always the right drive

The SEW-EURODRIVE modular concept offers millions of combinations. This wide selection enables you to choose the correct drive for all applications, each based on the required speed and torque range, space available and the ambient conditions. Gear units and gearmotors offering a unique and finely tuned performance range and the best economic prerequisites to face your drive challenges.

The gearmotors are powered by MOVITRAC® frequency inverters, MOVIDRIVE® inverters and MOVIAXIS® multi-axis servo inverters, a combination that blends perfectly with the existing SEW-EURODRIVE program. As in the case for mechanical systems, the development, production and assembly is also carried out completely by SEW-EURODRIVE. In combination with our drive electronics, these drives will provide the utmost in flexibility.

Products of the servo drive system, such as low backlash servo gear units, compact servomotors or MOVIAXIS® multi-axis servo inverters provide precision and dynamics. From single-axis or multi-axis applications all the way to synchronized process sequences, servo drive systems by SEW-EURODRIVE offer a flexible and customized implementation of your application.

For economical, decentralized installations, SEW-EURODRIVE offers components from its decentralized drive system, such as MOVIMOT®, the gearmotor with integrated frequency inverter or MOVI-SWITCH®, the gearmotor with integrated switching and protection function. SEW-EURODRIVE hybrid cables have been designed specifically to ensure cost-effective solutions, independent of the philosophy behind or the size of the system. The latest developments from SEW-EURODRIVE: MOVITRANS® system components for contactless energy transfer, MOVIPRO®, the decentralized drive control and MOVIFIT®, the new decentralized intelligence.

Power, quality and sturdy design combined in one standard product: With high torque levels, industrial gear units from SEW-EURODRIVE realize major movements. The modular concept will once again provide optimum adaptation of industrial gear units to meet a wide range of different applications.

Your ideal partner

Its global presence, extensive product range and broad spectrum of services make SEW-EURODRIVE the ideal partner for the machinery and plant construction industry when it comes to providing drive systems for demanding applications in all branches of industries and applications.



1.2 Products and systems from SEW-EURODRIVE

The products and systems from SEW-EURODRIVE are divided into four product groups. These 4 product groups are:

1. Gearmotors and frequency inverters
2. Servo drive systems
3. Decentralized drive systems
4. Industrial gear units

Products and systems used in several group applications are listed in a separate group "Products and systems covering several product groups". Consult the following tables to locate the products and systems included in the respective product group:

1. Gearmotors and frequency inverters		
Gear units/gearmotors	**Motors**	**Frequency inverters**
• Helical gear units/helical gearmotors • Parallel shaft helical gear units/parallel shaft helical gearmotors • Helical-bevel gear units/helical-bevel gearmotors • Helical-worm gear units/helical-worm gearmotors • SPIROPLAN® right-angle gearmotors • Drives for electrified monorail systems • Geared torque motors • Pole-changing gearmotors • Variable speed gear units/variable speed gearmotors • Aseptic gearmotors • ATEX compliant gear units/gearmotors • ATEX compliant variable speed gear units/variable speed gearmotors	• Asynchronous AC motors/AC brakemotors • Multi-speed AC motors/AC brakemotors • Energy-efficient motors • Explosion-proof AC motors/AC brakemotors • Torque motors • Single-phase motors/single-phase brakemotors • Asynchronous linear motors	• MOVITRAC® frequency inverters • MOVIDRIVE® inverters • Control, technology and communication options for inverters

2. Servo drive systems		
Servo gear units/servo gearmotors	**Servomotors**	**Servo drive inverters/servo inverters**
• Low backlash servo planetary gear units/planetary gearmotors • Low backlash helical-bevel servo gear units / helical-bevel gearmotors • R, F, K, S, W gear units/gearmotors • Explosion-proof servo gear units/servo gearmotors	• Asynchronous servomotors/servo brakemotors • Synchronous servo motors/servo brakemotors • Explosion-proof servomotors/servo brakemotors • Synchronous linear motors	• MOVIDRIVE® servo inverters • MOVIAXIS® multi-axis servo inverters • Control, technology and communication options for servo drive inverters and servo inverters

3. Decentralized drive systems		
Decentralized drives	**Communication and installation**	**Contactless energy transfer**
• MOVIMOT® gearmotors with integrated frequency inverter • MOVIMOT® motors/brakemotors with integrated frequency inverter • MOVI-SWITCH® gearmotors with integrated switching and protection function • MOVI-SWITCH® motors/brakemotors with integrated switching and protection function • Explosion-proof MOVIMOT® and MOVI-SWITCH® gearmotors	• Fieldbus interfaces • Field distributors for decentralized installation • MOVIFIT® product range – MOVIFIT®-MC to control MOVIMOT® drives – MOVIFIT®-SC with integrated electronic motor switch – MOVIFIT®-FC with integrated frequency inverter	• MOVITRANS® system – Stationary components for energy supply – Mobile components for energy consumption – Line cables and installation material

4. Industrial gear units
• Helical gear units • Bevel-helical gear units • Planetary gear units

Products and systems covering several product groups
• Operator terminals • MOVI-PLC® drive-based control system

In addition to products and systems, SEW-EURODRIVE offers a comprehensive range of services. These include:

- Technical consulting
- Application software
- Seminars and training
- Extensive technical documentation
- International customer service

Visit our homepage at

→ **www.sew-eurodrive.com**

The website provides comprehensive information and services.

1.3 Additional documentation

Contents of this publication

This "Servo Gear Units" catalog provides a detailed description of the following product groups from SEW-EURODRIVE:

- The following gear units in combination with the AQ adapter:
  - R, F, K, S, W gear units
- The following gear units in combination with the adapters:
  - BS.F gear units with EBH adapter
  - PS.F gear units with EPH adapter
  - PS.C gear units with ECH or EPH adapter

The descriptions include:

- Product descriptions
- Type overviews
- Project planning information
- Description of mounting positions
- Explanation on the order information
- Combination overviews and technical data
- Dimension sheets

For information on the motor options, refer to the "DT/DV/CT/CV Series AC Motors" and "DR, CMP Motors" catalogs/price catalogs.

For information on the options of R, F, K, S, W gear units, AM, AT and AR adapters, and AD input shaft assembly, refer to the "Gear Units" catalog/price catalog.

Additional documentation

The following price catalogs and catalogs are available from SEW-EURODRIVE in addition to this "Servo Gear Units" catalog:

- Gear units
- Synchronous servo gearmotors
- Asynchronous servo gearmotors
- DR, CMP motors

These price catalogs and catalogs offer the following information:

- Product descriptions
- Technical data and inverter assignments
- Important information about tables and dimension sheets
- Description of the different types
- Selection tables
- Dimension sheets
- Technical data
- Notes on adapter mounting

1.4 Copyright

© 2009 - SEW-EURODRIVE. All rights reserved.

Copyright law prohibits the unauthorized duplication, modification, distribution, and use of this document, in whole or in part.

2 Product Description of the Gear Units

2.1 General information

Paint

Gear units from SEW-EURODRIVE are painted as follows:

Gear units	Painted according to DIN 1843
BS.F / PS.F / PS.C gear units	RAL 9005 black
R, F, K, S, W gear units (with AQ adapters)	

Special paints are available on request.

2.2 Surface protection

General information

SEW-EURODRIVE offers the following optional protective measure for operating gear units under special environmental conditions.

- Surface protection OS for motors and gear units

In addition, special optional protective measures for the output shafts are also available.

OS surface protection

In addition to standard surface protection, motors and gear units also available with surface protection OS1 to OS4. The special procedure "Z" is also available. Special procedure "Z" means that large surface recesses are sprayed with a rubber filling prior to painting.

Surface protection	Layers		Regular coating thickness [µm]	Suitable for
	Variant 1[1]	Variant 2[1)]		
Standard	• 1 × dip primer • 1 x one-component top coat		70	• Normal ambient conditions • Relative humidity below 90% • Max. surface temperature 120 °C • Corrosivity category C1[2]
OS1	• 1 × dip primer • 1 × two-component base coat • 1 × two-component top coat	• 1 × dip primer • 1 × two-component high-solid top coat	120 - 180	• Low environmental impact • Relative humidity max. 95% • Max. surface temperature 120 °C • Corrosivity category C2[2)]
OS2	• 1 × dip primer • 1 × two-component high-solid base coat • 1 × two-component base coat • 1 × two-component top coat	• 1 × dip primer • 1 × two-component high-solid base coat • 1 × two-component high-solid top coat	160 - 250	• Medium environmental impact • Relative humidity up to 100% • Max. surface temperature 120 °C • Corrosivity category C3[2)]
OS3	• 1 × dip primer • 1 × two-component high-solid base coat • 2 × two-component base coat • 1 × two-component top coat	• 1 × dip primer • 1 × two-component high-solid base coat • 1 × two-component base coat • 1 × two-component high-solid top coat	210 - 320	• High environmental impact • Relative humidity up to 100% • Max. surface temperature 120 °C • Corrosivity category C4[2)]
OS4	• 1 × dip primer • 2 × two-component epoxy base coat • 2 × two-component top coat	• 1 × dip primer • 2 × two-component epoxy base coat • 1 × two-component high-solid top coat	260 - 380	• Very high environmental impact • Relative humidity up to 100% • Max. surface temperature 120 °C • Corrosivity category C5-1[2)]

1 The variant used currently depends on the color of the top coating.

2 In accordance with DIN EN ISO 12944-2

Special protective measures

Gearmotor output shafts can be treated with special optional protective measures for operation subject to severe environmental pollution or in particularly demanding applications.

Gear unit type	Measure	Protection principle	Suitable for
R, F, K, S, W	**FKM oil seal (Viton)**	High quality material	Drives subject to chemical contamination
	Surface coating of the contact surface of the oil seal	Protective layer	Severe environmental impact and in conjunction with FKM oil seal (Viton)
	Stainless steel output shaft	Surface protection with high-quality material	Particularly demanding applications in terms of surface protection

NOCO® fluid

As standard, SEW-EURODRIVE supplies NOCO® fluid corrosion protection and lubricant with every hollow shaft gear unit. Use NOCO® fluid when installing hollow shaft gear units. Using this fluid can help prevent contact corrosion and makes it easier to disassemble the drive at a later time.

NOCO® fluid is also suitable for protecting machined metal surfaces that do not have corrosion protection, such as parts of shaft ends or flanges. You can order larger quantities of NOCO® fluid from SEW-EURODRIVE.

NOCO® fluid is a food grade substance according to USDA-H1. You can tell that NOCO® fluid is a food grade oil by the USDA-H1 identification label on its packaging.

2.3 Explosion protection according to ATEX

Validity

EU directive 94/9/EC or ATEX specifies new regulations for explosion protection for all types of devices for the European market. This directive applies to gearmotors and motors as well. Since July 1, 2003, EU directive 94/9/EC has been applicable without restrictions to the use of gearmotors and motors within the European Union. Other European countries, such as Switzerland, have also adopted this regulation.

Scope

SEW-EURODRIVE now only supplies explosion-proof gear units in accordance with the corresponding ATEX directive. This also applies to options and accessories in explosion-proof design.

Depending on their features and dimensions, explosion-proof gear units are suitable for:

- Potentially explosive gas atmospheres, zone 1 or 2.
- Potentially explosive dust atmospheres, zone 21 or 22.

SEW-EURODRIVE offers gearmotors and motors of categories

- II2G
- II2D
- II3GD
- II3D

for use in zones 1, 21, 2 and 22.

Stand-alone gear units with components on the input side are available in the following categories:

- Gear units with adapters AQA, EBH, and EPH for use in zones 1, 21, 2 and 22
  - II2GD

Adapters AQH according to ATEX directive are not available.

Other documentation

The "Explosion-Proof Drives to EU Directive 94/9/EC" system description and the volume of the same name in the "Drive Engineering - Practical Implementation" series provide you with basic information about this topic.

Please refer to the "Explosion-Proof Drives" catalog and the "Variable Speed Gearmotors" catalog for detailed information on explosion-proof SEW-EURODRIVE products.

2.4 Extended storage of R, F, K, S, W gear units

Type

You can also order gear units prepared for "extended storage." SEW-EURODRIVE recommends the "extended storage" type for storage periods longer than 9 months.

In this case, a VCI corrosion inhibitor (**v**olatile **c**orrosion **i**nhibitor) is added to the lubricant in these gear units. Please note that this VCI corrosion inhibitor is only effective in a temperature range of -25 ûC to +50 ûC. The flange contact surfaces and shaft ends are also treated with an anti-corrosion agent. If not specified otherwise in your order, the gear unit with "extended storage" option will be supplied with OS1 surface protection. You can order OS2, OS3 or OS4 instead of OS1.

Surface protection	Suitable for
OS1	Low environmental impact
OS2	Medium environmental impact
OS3	High environmental impact
OS4	Very high environmental impact

INFORMATION

The gear units must remain tightly sealed until taken into operation to prevent the VCI corrosion protection agent from evaporating.

Gear units will be supplied with an oil fill according to the mounting position (M1 ... M6) and are ready for operation. Check the oil level before you start operating the gear unit for the first time!

Storage conditions

Observe the storage conditions specified in the following table for extended storage:

Climate zone	Packaging[1]	Storage location[2]	Storage duration
Temperate (Europe, USA, Canada, China and Russia, excluding tropical zones)	Packed in containers, with desiccant and moisture indicator sealed in the plastic wrap.	Under roof, protected against rain and snow, no shock loads.	Up to 3 years with regular checks of the packaging and moisture indicator (rel. humidity < 50%).
	Open	Under roof, enclosed at constant temperature and atmospheric humidity (5 °C < ϑ < 60 °C, < 50% relative humidity). No sudden temperature fluctuations. Controlled ventilation with filter (free from dust and dirt). Protected against aggressive vapors and shocks.	2 years or more with regular inspections. Check for cleanliness and mechanical damage during inspection. Check corrosion protection.
Tropical (Asia, Africa, Central and South America, Australia, New Zealand excluding temperate zones)	Packed in containers, with desiccant and moisture indicator sealed in the plastic wrap. Protected against insect damage and mildew by chemical treatment.	Under roof, protected against rain and shocks.	Up to 3 years with regular checks of the packaging and moisture indicator (rel. humidity < 50%).
	Open	Under roof, enclosed at constant temperature and atmospheric humidity (5 °C < ϑ < 50 °C, < 50% relative humidity). No sudden temperature fluctuations. Controlled ventilation with filter (free from dust and dirt). Protected against aggressive vapors and shocks. Protected against insect damage.	2 years or more with regular inspections. Check for cleanliness and mechanical damage during inspection. Check corrosion protection.

1 Packaging must be carried out by an experienced company using the packaging materials that have been explicitly specified for the particular application.

2 SEW-EURODRIVE recommends to store the gear units according to the mounting position.

2.5 General product description R, F, K, S, W gear units

Ambient temperature

Gear units and gearmotors from SEW-EURODRIVE can be operated in a wide ambient temperature range. The following standard temperature ranges are permitted for filling the gear units according to the lubricant table:

Gear unit	Filled with	Permitted standard temperature range
R, F, and K	CLP(CC) VG220	-10 °C ... +40 °C
S	CLP(CC) VG680	0 °C ... +40 °C
W	CLP(SEW-PG) VG460	-10 °C ... +40 °C

The rated data of the gear units and gearmotors specified in the catalog/price catalog refer to an ambient temperature of +25 °C.

Gear units and gearmotors from SEW-EURODRIVE can be operated outside the standard temperature range if project planning is adapted to ambient temperatures from as low as up to -40 °C in the intensive cooling range until up to +60 °C. Project planning must take special operating conditions into account and adapt the drive to the ambient conditions by selecting suitable lubricants and seals. This kind of project planning is generally recommended for increased ambient temperatures as of size 97 and for helical-worm gear units with small gear ratios. SEW-EURODRIVE will gladly perform this project planning for you.

If the drive is to be operated on a frequency inverter, you must also consider the project planning notes of the inverter and take into account the thermal effects of inverter operation.

Installation altitude

Due to the low air density at high installation altitudes, heat dissipation on the surface of motors and gear units decreases. The rated data listed in the catalog/price catalog applies to an installation altitude of maximum 1000 m above sea level. Installation altitudes of more than 100 m asl must be taken into account for project planning of gear units and gearmotors.

Power and torque

The power and torque ratings listed in the catalogs refer to mounting position M1 and similar mounting positions in which the input stage is not completely submerged in oil. In addition, the gearmotors are assumed to be standard versions with standard lubrication and under normal ambient conditions.

Please note that the motor power shown in the selection tables for gearmotors is subject to selection. However, the output torque and the desired output speed are essential for the application and need to be checked.

Speeds

The quoted output speeds of the gearmotors are recommended values. You can calculate the rated output speed based on the rated motor speed and the gear unit ratio. Please note that the actual output speed depends on the motor load and the supply system conditions.

Noise

The noise levels of all SEW-EURODRIVE gear units, motors and gearmotors are well within the maximum permitted noise levels set forth in the VDI guideline 2159 for gear units and IEC/EN 60034 for motors.

Weight

Please note that all weights shown in the catalogs exclude the oil fill for the gear units and gearmotors. The weights vary according to gear unit type and gear unit size. The lubricant fill depends on the mounting position which means no universally applicable information can be given. Please refer to "Lubricants" in the "Design and Operating Notes" section for recommended lubricant fill quantities depending on the mounting position. For the exact weight, refer to the order confirmation.

Air admission and accessibility

The gearmotors/brakemotors must be mounted on the driven machine in such a way that both axially and radially there is enough space left for unimpeded air admission, for maintenance work on the brake and, if required, for the MOVIMOT® inverter. Please also refer to the notes in the motor dimension sheets.

Multi-stage gearmotors

You can achieve particularly low output speeds by using multi-stage gear units or multi-stage gearmotors. Such a setup requires a helical gear unit or gearmotor on the input end as a second gear unit.

It may be necessary to limit the motor power to match the maximum permitted output torque of the gear unit.

Reduced backlash version

Helical, parallel shaft helical and helical-bevel gear units with reduced backlash are available as of gear unit size 37. The circumferential backlash of these gear units is considerably less than that of the standard versions so that positioning tasks can be solved with great precision. The circumferential backlash is specified in angular minutes [’] in the technical data. The circumferential backlash for the output shaft is specified without load (max. 1% of the rated output torque); the gear unit input end is blocked. The dimension sheets for standard versions are applicable.

RM gear units, RM gearmotors

RM gear units and RM gearmotors are a special type of helical gear units with an extended output bearing hub. They were designed especially for agitating applications and allow for high overhung and axial loads and bending moments. The other data are the same as for standard helical gear units and standard helical gearmotors.

SPIROPLAN® right-angle gear units

SPIROPLAN® right-angle gear units are robust, single- and two-stage right-angle gear units with SPIROPLAN® gearing. The difference to the helical-worm gear units is the material combination of the steel-on-steel gearing, the special tooth meshing relationships and the aluminum housing. As a result, SPIROPLAN® right-angle gear units are wear-free, very quiet-running and lightweight.

The particularly short design and the aluminum housing make for very compact and lightweight drive solutions.

The wear-free gearing and the life-long lubrication facilitate long periods of maintenance-free operation. The oil filling being independent of the mounting position, except for SPIROPLAN® W..37 and W..47 in mounting position M4 makes any position possible for SPIROPLAN® right-angle gear units without altering the quantity of oil. Identical hole spacing in the foot and face, as well as the equal shaft height to both, provides you with diverse mounting options.

Two different flange diameters are available. On request, SPIROPLAN® right-angle gearmotors can be equipped with a torque arm.

Components on the input side

The following components on the input side are available for the gear units from SEW-EURODRIVE:

- **Input covers with input shaft extension, optionally with**
  - Centering shoulder
  - Backstop
  - Motor mounting platform
- **Adapter**
  - For mounting IEC or NEMA motors with the option of a backstop
  - For mounting servomotors with a square flange
  - With torque limiting safety couplings and speed or slip monitor
  - With hydraulic centrifugal coupling, also with disk brake or backstop

2.5.1 AQ adapter for servomotors

The following figure shows a helical gear unit with AQ adapter:



04595AXX

An adapter with square flange is used for mounting servomotors to R, F, K, S, and W gear units.

The torque is transmitted via a dog clutch. Possible vibrations and shocks occurring during operation are effectively attenuated and dissipated by an inserted polyurethane ring gear.

Design versions

The clutch half on the motor side can be configured either with a clamping ring hub (non-positive, for smooth motor shafts) or a keyway (positive) as required.

Designation	
AQH	with clamping ring hub
AQA	with keyway

2.6 General product description BS.F, PS.F, PS.C gear units

Ambient temperature

Gear units/gearmotors can be used at ambient temperatures between - 20 °C and + 40 °C. It is essential that you contact SEW-EURODRIVE if ambient temperatures exceed this temperature range.

Installation altitude

Due to the low air density at high installation altitudes, heat dissipation on the surface of motors and gear units decreases. The rated data listed in the catalog/price catalog applies to an installation altitude of maximum 1000 m above sea level. Installation altitudes of more than 100 m asl must be taken into account for project planning of gear units and gearmotors.

Power and torque

The power and torque values listed in the catalogs apply to normal environmental conditions.

Please note that the motor torques in the selection tables for gear units and gearmotors are subject to selection. However, the output torque and the desired output speed are essential for the application and need to be checked.

Noise

The noise levels of all gear units and gearmotors are well within the maximum permitted noise levels set forth in the VDI guideline 2159 for gear units and EN 60034 for motors.

Heat dissipation and accessibility

Gear units/gearmotors and brakes can reach surface temperatures of > 100 °C during operation. Make sure to maintain adequate distance from heat-sensitive components when installing gear units/gearmotors and gear unit brakemotors to the driven machine.

Direct motor mounting

The gearmotors from SEW-EURODRIVE make it possible to mount gear units directly to the synchronous servomotors from SEW-EURODRIVE without an adapter. These integrated servo gearmotors offer shaft-hub connections that are all positive and free from backlash.

Motor mounting with adapter

Use the modular motor adapters to connect all other commercial servomotors in a simple and time-efficient manner to the gear units from SEW-EURODRIVE.

Low backlash and positioning accuracy

The optimum gearing geometry paired with precisely manufactured components and careful assembly make for low circumferential backlash.

The BS.F and PS.F gear units ensure low backlash already for standard designs. The circumferential backlash can be further reduced for all types and even minimized for PS.F gear units. Circumferential backlash will remain constantly low for the entire gear unit life due to the wear-free operating performance and high-endurance design of the running gears.

Extensive ratio range with fine graduation

All gear ratios from i = 3 to i = 100 are integers and finely graduated. This means that the gear units are especially suitable for use with controllers that require integer resolution ratios.

Reliable, long service life, and low maintenance

The high reliability of gear units from SEW-EURODRIVE in the system is ensured by the use of high-strength materials, high-quality anti-friction bearings, long-lived oil seals and synthetic lubricants.

High overload capacity

Exactly matched components as well as backlash-free and positively connected drive elements ensure that highest torques can be transferred and that large axial and radial forces can be absorbed.

Torsionally rigid

The special design of SEW-EURODRIVE gear units in conjunction with large shaft diameters ensures high torsional rigidity.

3 Overview of Types and Unit Designations

3.1 Variants and options of R, F, K, S, W gear units

Below an overview of unit designations for R, F, K, S, and W gear units and their options.

Helical gear units

Designation	
RX..	Single-stage foot-mounted design
RXF..	Single-stage B5 flange-mounted design
R..	Foot-mounted design
R..F	Foot and B5-flange mounted design
RF..	B5 flange-mounted design
RZ..	B14 flange-mounted design
RM..	B5 flange-mounted design with extended bearing hub

Parallel shaft helical gear units

Designation	
F..	Foot-mounted design
FA..B	Foot-mounted, hollow shaft
FH..B	Foot-mounted, hollow shaft with shrink disk
FV..B	Foot-mounted, hollow shaft with splined hollow shaft to DIN 5480
FF..	B5 flange-mounted design
FAF..	B5 flange-mounted design and hollow shaft
FHF..	B5 flange-mounted and hollow shaft with shrink disk
FVF..	B5 flange-mounted design and hollow shaft with splined hollow shaft to DIN 5480
FA..	Hollow shaft
FH..	Hollow shaft with shrink disk
FT..	Hollow shaft with TorqLOC® hollow shaft mounting system
FV..	Hollow shaft with splining to DIN 5480
FAZ..	B14 flange-mounted design and hollow shaft
FHZ..	B14 flange-mounted design and hollow shaft with shrink disk
FVZ..	B14 flange-mounted design and hollow shaft with splined hollow shaft to DIN 5480

Helical-bevel gear units

Designation	
K..	Foot-mounted design
KA..B	Foot-mounted, hollow shaft
KH..B	Foot-mounted, hollow shaft with shrink disk
KV..B	Foot-mounted, hollow shaft with splined hollow shaft to DIN 5480
KF..	B5 flange-mounted design
KAF..	B5 flange-mounted design and hollow shaft
KHF..	B5 flange-mounted design and hollow shaft with shrink disk
KVF..	B5 flange-mounted design and hollow shaft with splined hollow shaft to DIN 5480
KA..	Hollow shaft
KH..	Hollow shaft with shrink disk
KT..	Hollow shaft with TorqLOC® hollow shaft mounting system
KV..	Hollow shaft with splining to DIN 5480
KAZ..	B14 flange-mounted design and hollow shaft
KHZ..	B14 flange-mounted design and hollow shaft with shrink disk
KVZ..	B14 flange-mounted design and hollow shaft with splined hollow shaft to DIN 5480

Helical-worm gear units

Designation	
S..	Foot-mounted design
SF..	B5 flange-mounted design
SAF..	B5 flange-mounted design and hollow shaft
SHF..	B5 flange-mounted design and hollow shaft with shrink disk
SA..	Hollow shaft
SH..	Hollow shaft with shrink disk
ST..	Hollow shaft with TorqLOC® hollow shaft mounting system
SAZ..	B14 flange-mounted design and hollow shaft
SHZ..	B14 flange-mounted design and hollow shaft with shrink disk

SPIROPLAN® gear units

Designation	
W..	Foot-mounted design
WF..	Flange-mounted design
WAF..	Flange-mounted design and hollow shaft
WA..	Hollow shaft
WA..B	Foot-mounted, hollow shaft
WH..B	Foot-mounted, hollow shaft with shrink disk
WHF..	Flange-mounted, hollow shaft with shrink disk
WH..	Hollow shaft with shrink disk
WT..	Hollow shaft with TorqLOC® hollow shaft mounting system

Options

R, F and K gear units:

Designation	
/R	Reduced backlash

K, S and W gear units:

Designation	
/T	With torque arm

F gear units:

Designation	
/G	With rubber buffer

Condition monitoring

Designation	Option
/DUO	Diagnostic Unit Oil = Oil aging sensor
/DUV	Diagnostic Unit Vibration = Vibration sensor

Helical gear units

The following types of helical gear units are available:

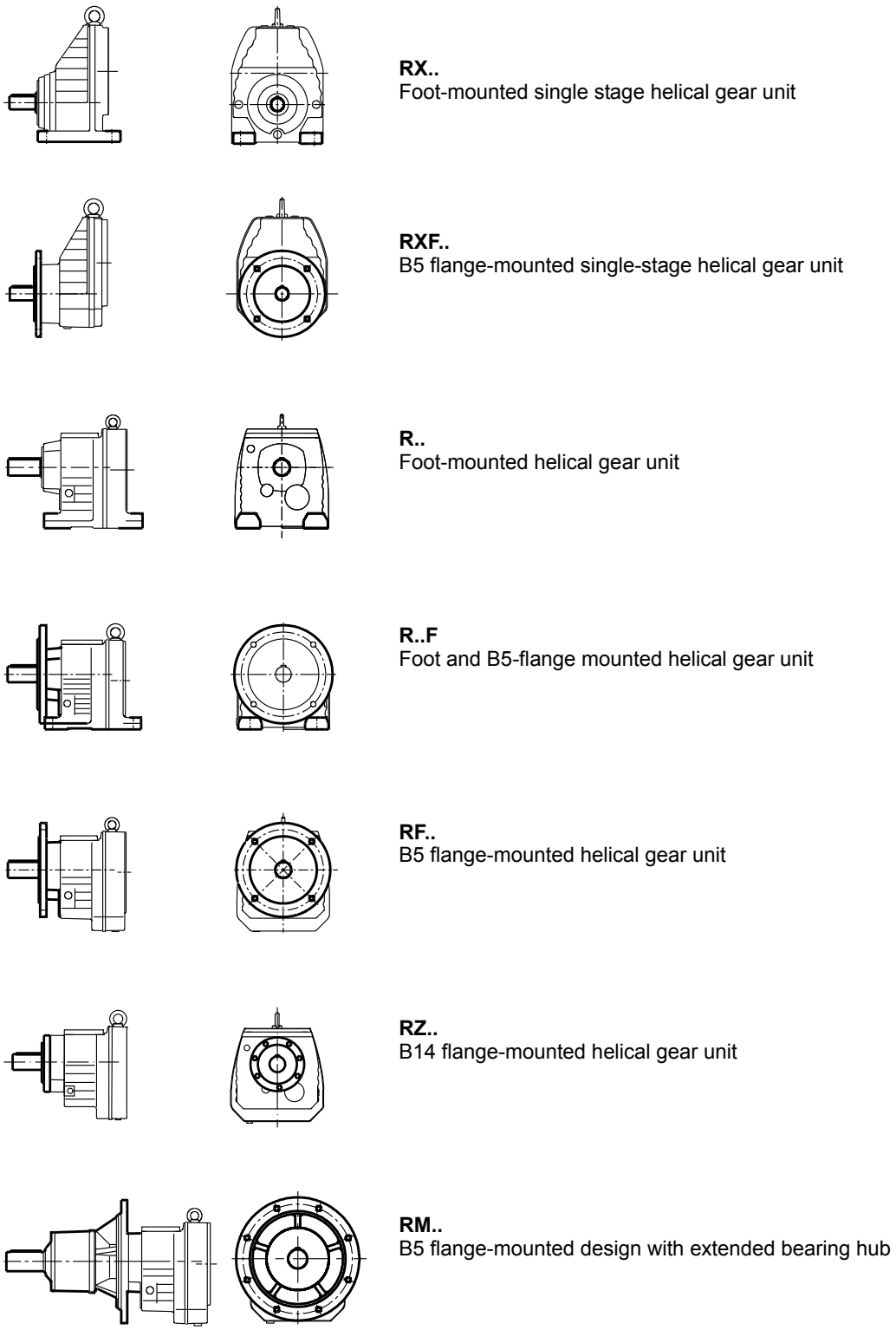

RX..
Foot-mounted single stage helical gear unit

RXF..
B5 flange-mounted single-stage helical gear unit

R..
Foot-mounted helical gear unit

R..F
Foot and B5-flange mounted helical gear unit

RF..
B5 flange-mounted helical gear unit

RZ..
B14 flange-mounted helical gear unit

RM..
B5 flange-mounted design with extended bearing hub

63665axx

Parallel shaft helical gear units

The following types of parallel shaft helical gear units are available:

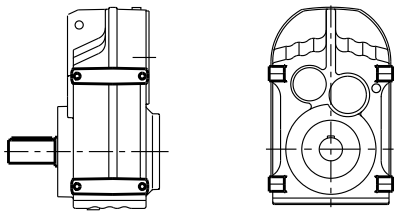

F..
Foot-mounted parallel shaft helical gear unit

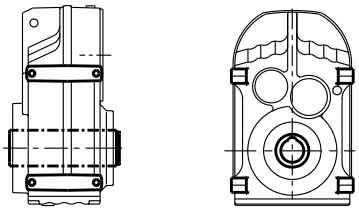

FA..B
Foot-mounted parallel shaft helical gear unit with hollow shaft

FV..B
Foot-mouinted parallel shaft gear unit with hollow shaft and splining according to DIN 5480

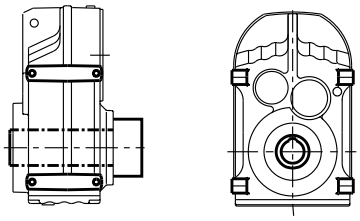

FH..B
Foot-mounted parallel shaft helical gear unit with hollow shaft and shrink disk

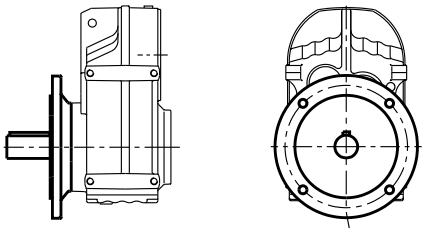

FF..
B5 flange-mounted parallel shaft helical gear unit

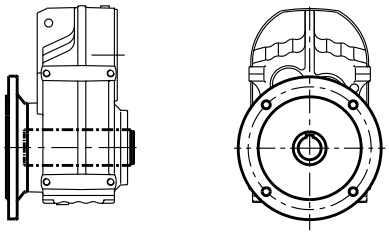

FAF..
B5 flange-mounted parallel shaft helical gear unit with hollow shaft

FVF..
B5 flange-mounted parallel shaft gear unit with hollow shaft and splining according to DIN 5480

52182axx

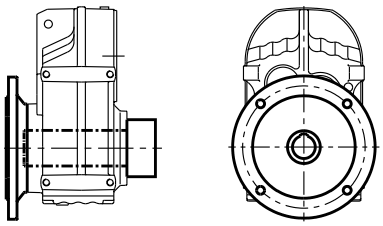

FHF..
B5 flange-mounted parallel shaft helical gear unit with hollow shaft and shrink disk

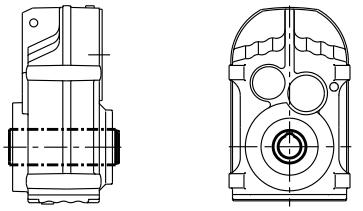

FA..
Parallel shaft helical gear unit with hollow shaft

FV..
Parallel shaft helical gear unit with hollow shaft and splining according to DIN 5480

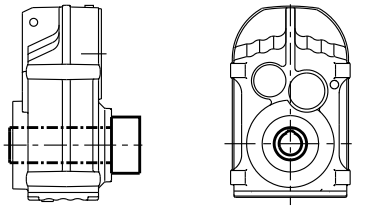

FH..
Parallel shaft helical gear unit with hollow shaft and shrink disk

FT..
Parallel shaft helical gear unit with hollow shaft and TorqLOC® hollow shaft mounting system

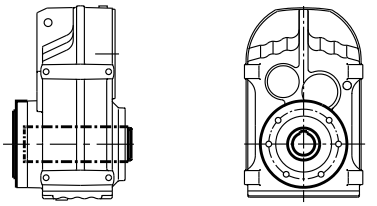

FAZ..
B14 flange-mounted parallel shaft helical gear unit with hollow shaft

FVZ..
B14 flange-mounted parallel shaft gear unit with hollow shaft and splining according to DIN 5480

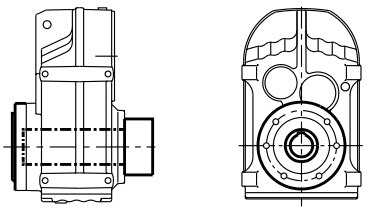

FHZ..
B14 flange-mounted parallel shaft helical gear unit with hollow shaft and shrink disk

52184axx

Helical-bevel gear units

The following types of helical-bevel gear units are available:

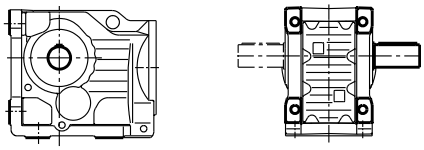

K..
Foot-mounted helical-bevel gear unit

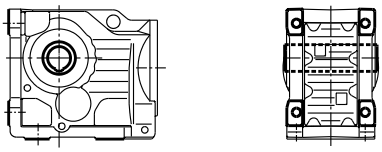

KA..B
Foot-mounted helical-bevel gear unit with hollow shaft

KV..B
Foot-mounted helical-bevel gear unit with hollow shaft and splining according to DIN 5480

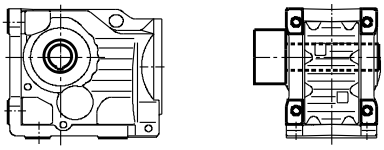

KH..B
Foot-mounted helical-bevel gear unit with hollow shaft and shrink disk

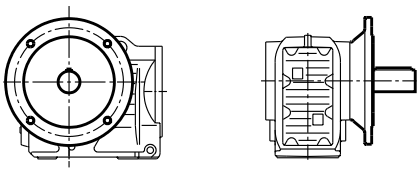

KF..
Helical-bevel gear unit in B5 flange-mounted version

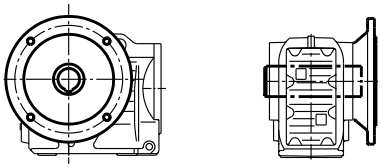

KAF..
B5 flange-mounted helical-bevel gear unit with hollow shaft

KVF..
B5 flange-mounted helical-bevel gear unit with hollow shaft and splining according to DIN 5480

52186axx

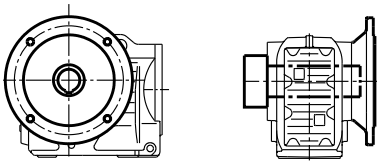

KHF..
B5 flange-mounted helical-bevel gear unit with hollow shaft and shrink disk

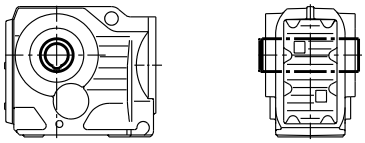

KA..
Helical-bevel gear unit with hollow shaft

KV..
Helical-bevel gear unit with hollow shaft and splining according to DIN 5480

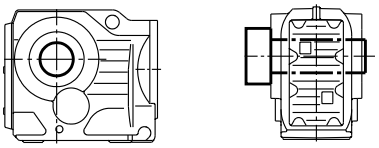

KH..
Helical-bevel gear unit with hollow shaft and shrink disk

KT..
Helical-bevel gearmotor with hollow shaft and TorqLOC® hollow shaft mounting system

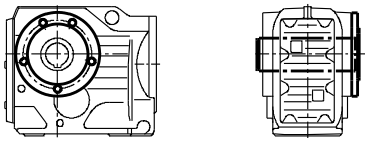

KAZ..
B14 flange-mounted helical-bevel gear unit with hollow shaft

KVZ..
B14 flange-mounted helical-bevel gear unit with hollow shaft and splining according to DIN 5480

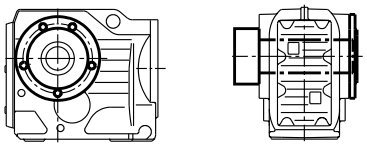

KHZ..
B14 flange-mounted helical-bevel gear unit with hollow shaft and shrink disk

52187axx

Helical-worm gear units

The following types of helical-worm gear units are available:

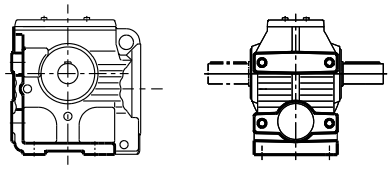

S..
Foot-mounted helical-worm gear unit

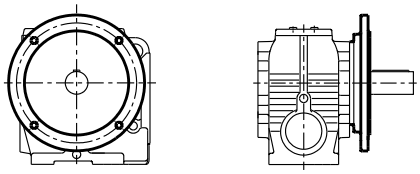

SF..
B5 flange-mounted helical-worm gear unit

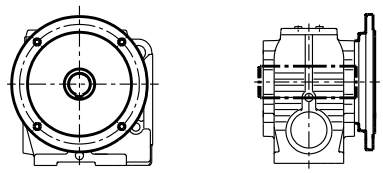

SAF..
B5 flange-mounted helical-worm gear unit with hollow shaft

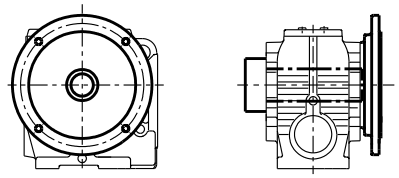

SHF..
B5 flange-mounted helical-worm gear unit with hollow shaft and shrink disk

52188axx

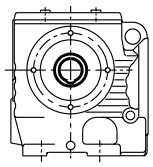
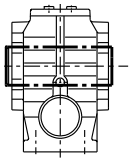

SA..
Helical-worm gear unit with hollow shaft

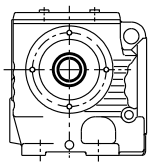
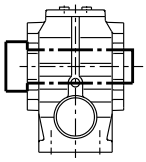

SH..
Helical-worm gear unit with hollow shaft and shrink disk

ST..
Helical-worm gear unit with hollow shaft and TorqLOC® hollow shaft mounting system

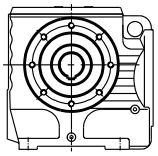
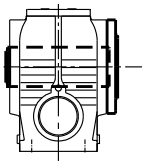

SAZ..
B14 flange-mounted helical-worm gear unit with hollow shaft

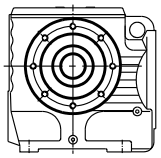
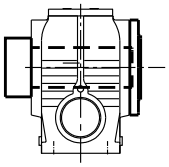

SHZ..
B14 flange-mounted helical-worm gear unit with hollow shaft and shrink disk

52189axx

SPIROPLAN® gear units

The following types of SPIROPLAN® gear units are available:

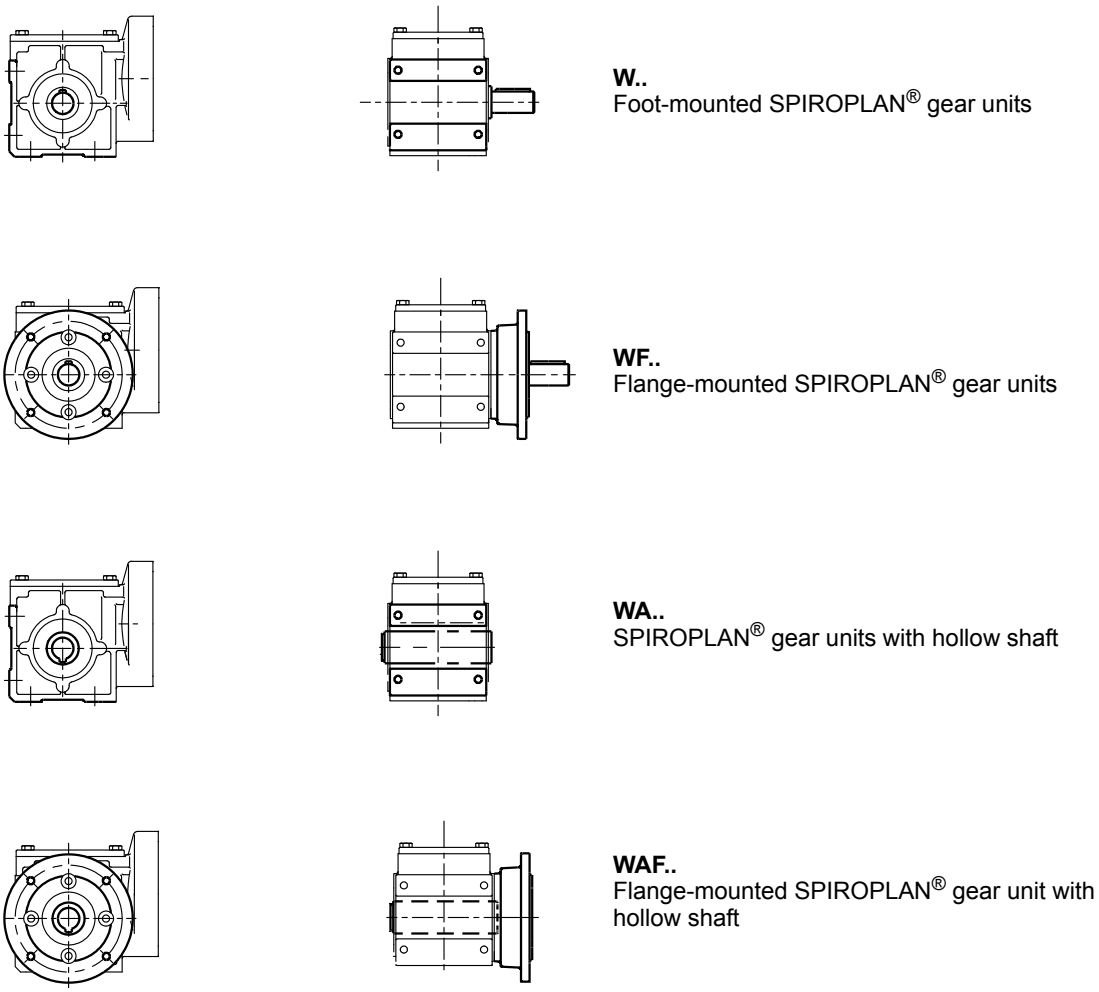

W..
Foot-mounted SPIROPLAN® gear units

WF..
Flange-mounted SPIROPLAN® gear units

WA..
SPIROPLAN® gear units with hollow shaft

WAF..
Flange-mounted SPIROPLAN® gear unit with hollow shaft

63666axx

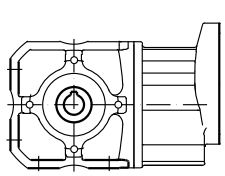

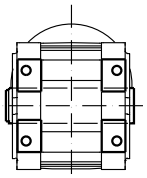

WA..B
Foot-mounted SPIROPLAN® gear unit with hollow shaft

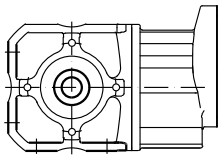

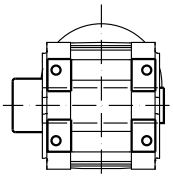

WH..B
Foot-mounted SPIROPLAN® gear unit with hollow shaft and shrink disk

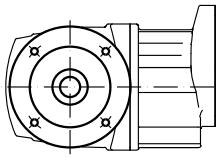

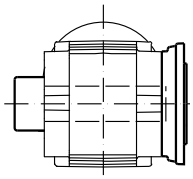

WHF..
Flange-mounted SPIROPLAN® gear unit with hollow shaft and shrink disk

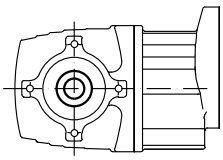

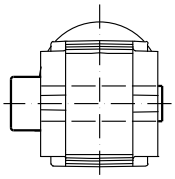

WH..
SPIROPLAN® gear unit with hollow shaft and shrink disk

WT..
SPIROPLAN® gear unit with hollow shaft and TorqLOC® hollow shaft mounting system

63667axx

3.2 Variants and options of BS.F, PS.F and PS.C gear units

Helical-bevel gear units BS.F

Designation	
BSF..	Solid shaft without key
BSKF..	Solid shaft with key
BSBF..	Solid shaft with flange block shaft
BSHF..	Hollow shaft with shrink disk
BSAF..	Hollow shaft with keyway
BSKF..B	Solid shaft with key and foot/front-end mounting
BSBF..B	Solid shaft with flange block shaft and foot/front-end mounting
BSHF..B	Hollow shaft with shrink disk and foot/front-end mounting
BSAF..B	Hollow shaft with key and foot/front-end mounting

PS..F planetary gear units

Designation	
PSF..	Solid shaft without key
PSKF..	Solid shaft with key
PSBF..	Solid shaft with flange block shaft

PS.C planetary gear units

Designation	
PSC..	Solid shaft without key
PSKC..	B5 output flange, solid shaft with key
PSCZ..	B14 output flange, solid shaft
PSKCZ..	B14 output flange, solid shaft with key

Options

BS.F gear units

Designation	
../R	Reduced backlash
../T	Torque arm
../I	Hollow shaft and shrink disk at the output end

PS.F gear units

Designation	
../R	Reduced backlash
../M	Minimized backlash

BS.F helical-bevel gear units

The following types of BS.F helical-bevel gear units are available:

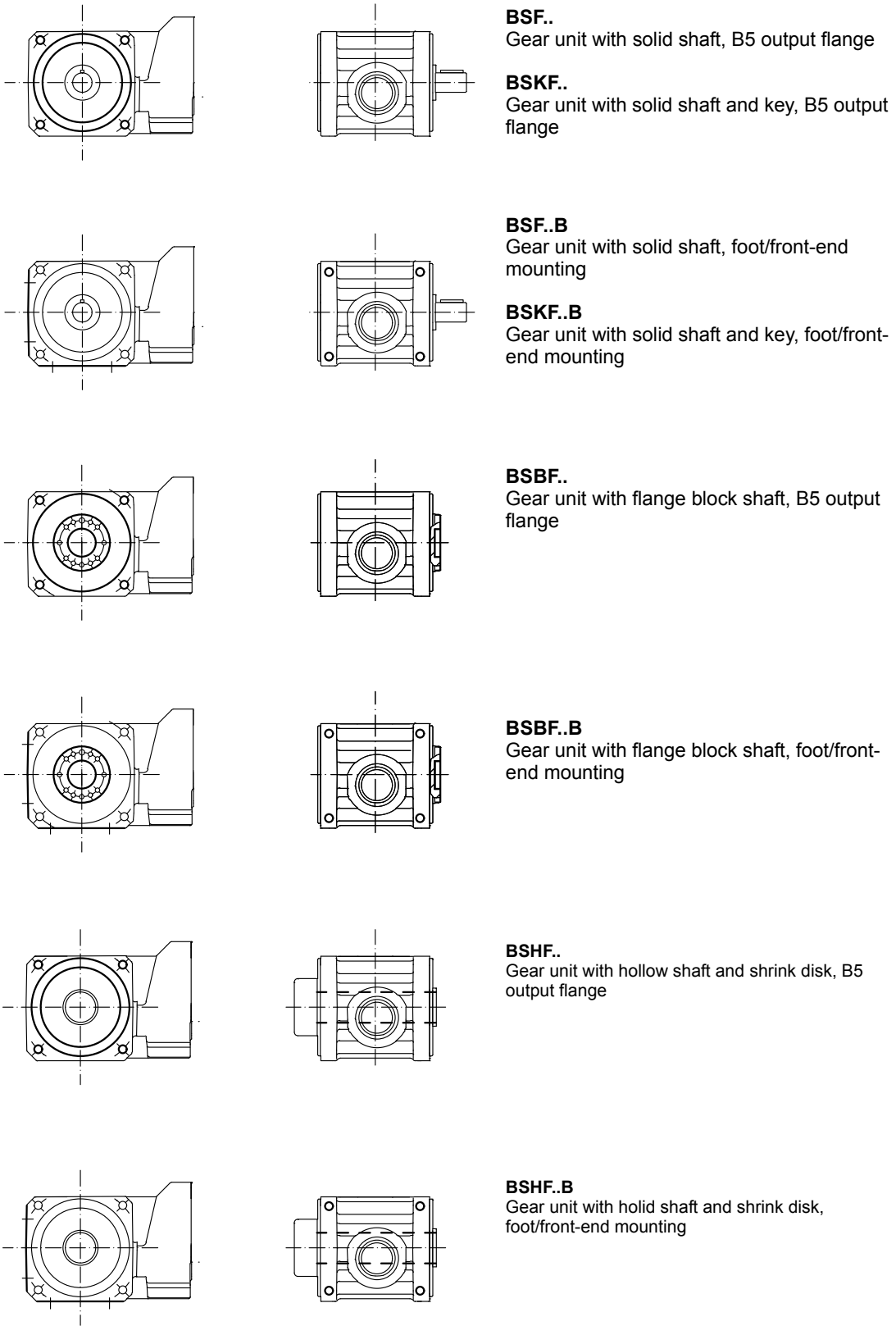

BSF..
Gear unit with solid shaft, B5 output flange

BSKF..
Gear unit with solid shaft and key, B5 output flange

BSF..B
Gear unit with solid shaft, foot/front-end mounting

BSKF..B
Gear unit with solid shaft and key, foot/front-end mounting

BSBF..
Gear unit with flange block shaft, B5 output flange

BSBF..B
Gear unit with flange block shaft, foot/front-end mounting

BSHF..
Gear unit with hollow shaft and shrink disk, B5 output flange

BSHF..B
Gear unit with holid shaft and shrink disk, foot/front-end mounting

63668axx

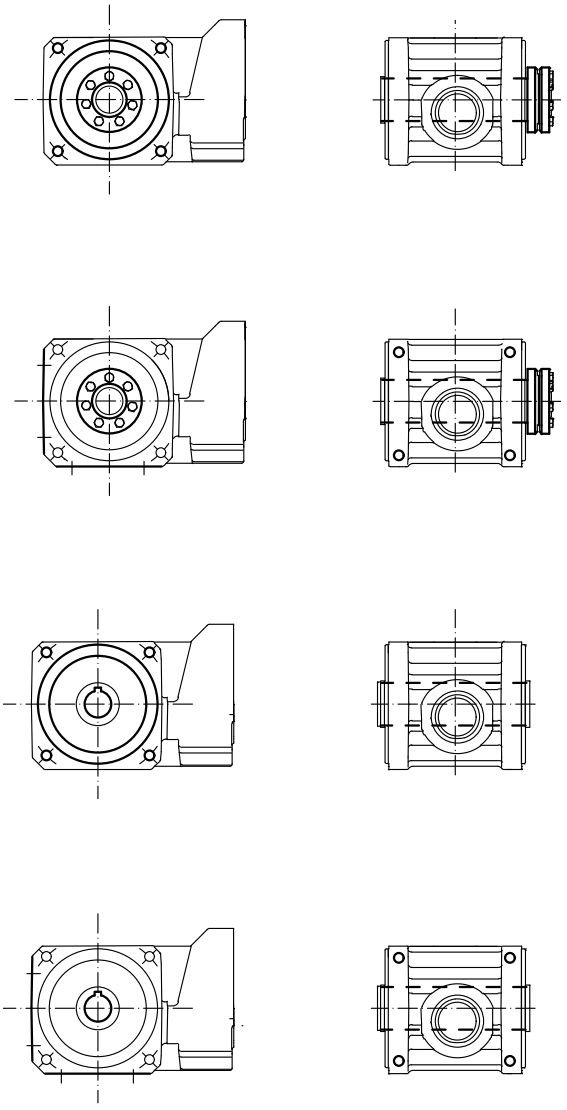

BSHF../I
Gear unit with hollow shaft and shrink disk at the output end

BSHF..B /I
Gear unit with holid shaft and shrink disk at the output end, foot/front-end mounting

BSAF..
Gear unit with hollow shaft and keyway, B5 output flange

BSAF..B
Gear unit with holid shaft and key, B5 output flange and foot/front-end mounting

63669axx

PS..F planetary gear units

The following variants of PS.F.. planetary gear units are available:

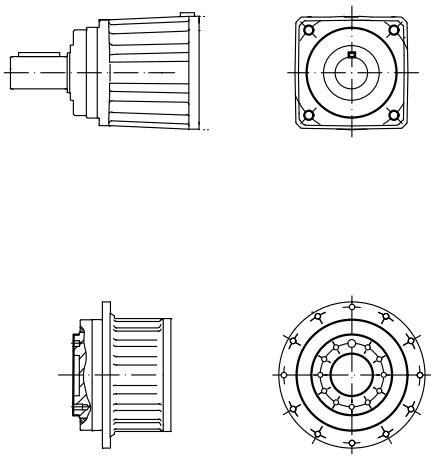

PSF
Gear unit with solid shaft, B5 output flange

PSKF
Gear unit with solid shaft
and key, B5 output flange

PSBF
Gear unit with flange block shaft, B5 output flange

63670axx

PS.C planetary gear units

The following types of PS.C.. planetary gear units are available:

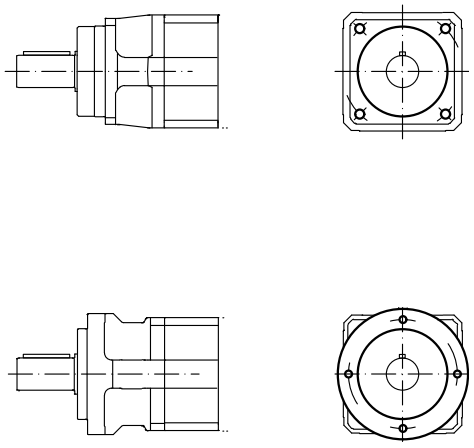

PSC
Gear unit with solid shaft, B5 output flange

PSKC
Gear unit with solid shaft and key, B5 output flange

PSCZ
Gear unit with solid shaft, B14 output flange

PSKCZ
Gear unit with solid shaft and key, B14 output flange

63671axx

3.3 Unit designation

Examples:

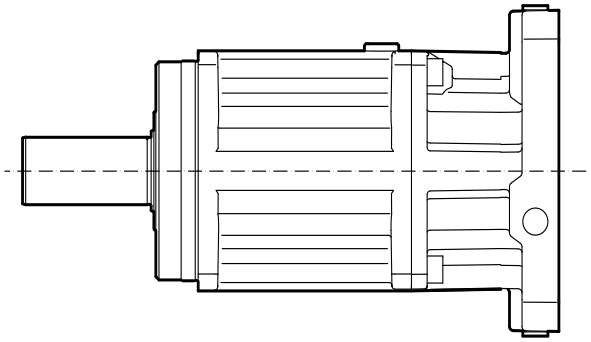

54011AXX

A planetary gear unit with adapter has, for example, the following unit designation:

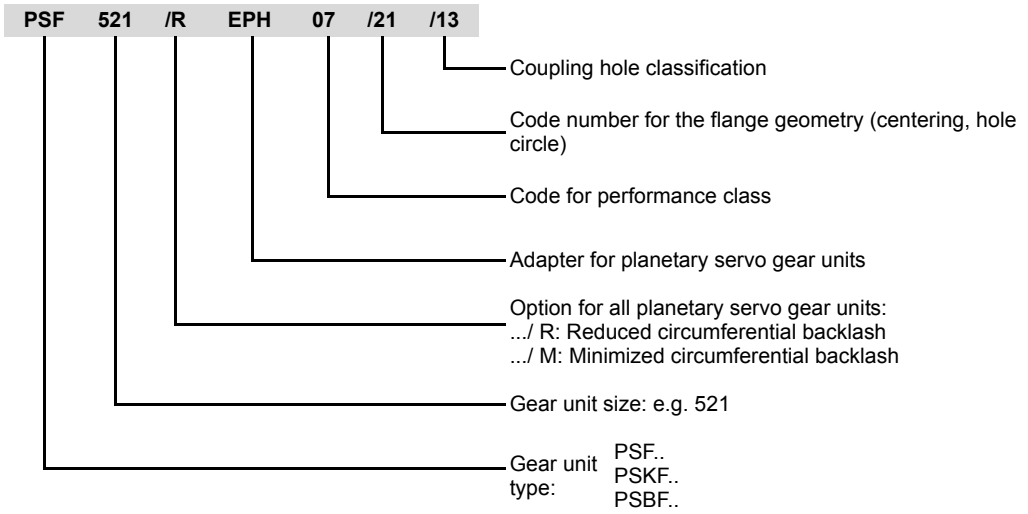

A helical-bevel gear unit with adapter has, for example, the following unit designation:

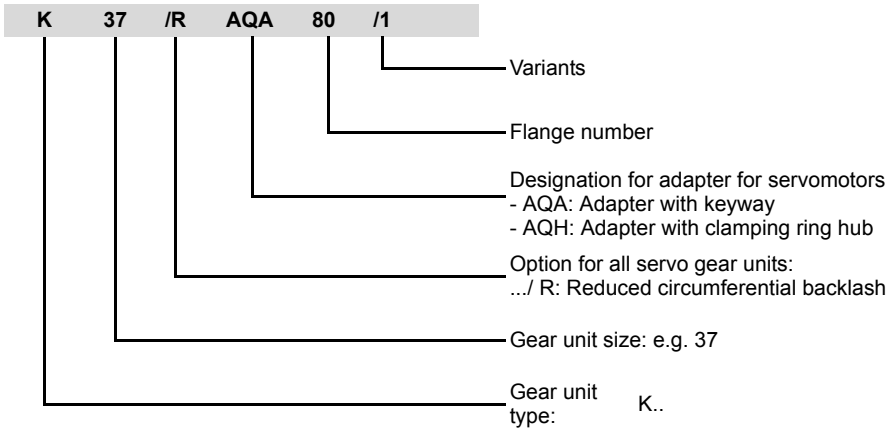

3.4 Nameplate for servo gear units

Example 1: Nameplate for a PS.C.. planetary gear unit with adapter

The following figure shows an example of a nameplate for a PS.C.. planetary gear unit with ECH adapter:

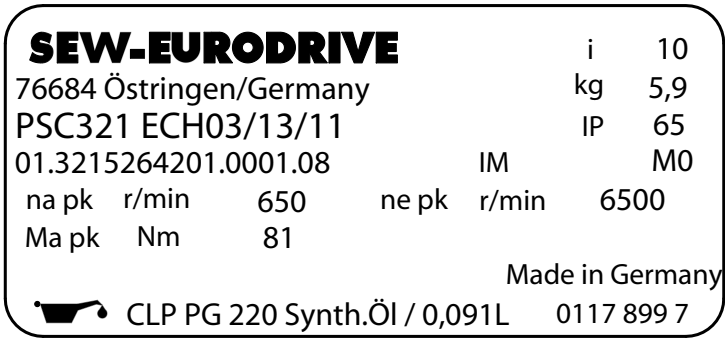

64338axx

i		Gear unit reduction ratio
IM		Mounting position
IP		Degree of protection
n_{epk}	[rpm]	Maximum permitted input speed
n_{apk}	[rpm]	Maximum permitted output speed
M_{apk}	[Nm]	Maximum permitted output torque

Example 2: Nameplate for a helical-bevel gear unit with adapter

The following figure shows an example of a nameplate for a helical-bevel gear unit with AQ adapter:

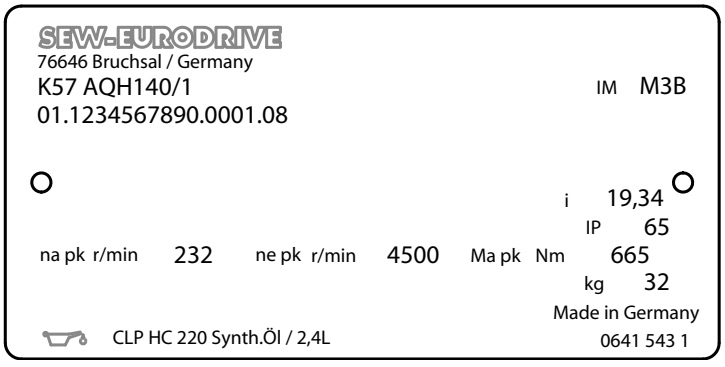

64339axx

i		Gear unit reduction ratio
IM		Mounting position
IP		Degree of protection
n_{epk}	[rpm]	Maximum permitted input speed
n_{apk}	[rpm]	Maximum permitted output speed
M_{apk}	[Nm]	Maximum permitted output torque

3.5 Overview of servo gear units

Axially parallel gear units

Gear unit type For details, refer to		RX.. page 145	R.. page 168	F.. page 228	PS.C.. page 538	PS.F.. page 477
Technical data						
Peak torque	M_{apk} [Nm]	54-1150	46-4360	130-8860	37-427	26-4200
Max. continuous torque	M_{amax} [Nm]	36-830	31-4300	87-7840	29-347	20-3000
Max. input speed	n_{epk} [rpm]	Up to 4500	Up to 4500	Up to 4500	Up to 7000	Up to 8000
Peak overhung load	F_{rapk} [N]	3970-30000	1220-32100	4500-65000	2000-11000	1900-83000
Gear ratio range	i	1.3-8.23	3.21-216.28	3.77-276.77	3-100	3-100
Option with reduced backlash	/R	x	x	x	-	x
Option with minimized backlash	/M	-	-	-	-	x
Mechanical data						
Hollow shaft		-	-	x	-	-
Flange-mounting		x	x	x	x	x
Foot-mounting		x	x	-	-	-
Flange block		-	-	-	-	x
B5 flange		x	x	x	x	x
B14 flange		-	x	x	x	-

Right-angle gear units

Gear unit type For details, refer to		K.. page 308	S.. page 378	W.7 page 408	BS.F.. page 426	
Technical data				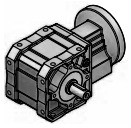	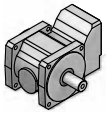	
Peak torque	M_{apk} [Nm]	187-9090	60-655	91-270	51-1910	
Max. continuous torque	M_{amax} [Nm]	125-8000	43-480	70-180	40-1500	
Max. input speed	n_{epk} [rpm]	4500	4500	4500	4500	
Peak overhung load	F_{rapk} [N]	5140-65000	300-12000	2950-7600	2380-36000	
Gear ratio range	i	3.98-176.05	6.8-75.06	3.2- 74.98	3-40	
Option with reduced backlash	/R	x	x	-	x	
Option with minimized back-lash	/M	-	-	-	-	
Mechanical data						
Hollow shaft		x	x	x	x	
Flange-mounting		x	x	x	x	
Foot-mounting		x	x	x	x	
Flange block		-	-	-	x	
B5 flange		x	x	x	x	
B14 flange		x	x	-	-	

For information on all available options and variants, see page 22 and subsequent.

4 Project Planning Information for Servo Gear Units

Project planning has to be carried out for all gear units. The data specified in this catalog only applies if project planning was carried out correctly. Project planning is particularly important for gear units with increased ambient temperatures as of size 97 and for helical-worm gear units with small gear ratios.

SEW-EURODRIVE will gladly perform this project planning for you.

4.1 Drive and gear unit selection data

Certain data of the application have to be provided to being able to precisely define the components for your drive. The abbreviations used for project planning are summarized in the following table:

Designation	Meaning	Unit
φ	Circumferential backlash	[`]
h	Gear unit efficiency for M_{apk}	
a, b, f	Gear unit constants as regards the overhung load conversion	[mm]
c	Gear unit constants as regards the overhung load conversion	[Nmm]
a_0, a_1, a_2	Gear unit constants as regards the rise in temperature in the gear unit	
F_A	Axial load (tension and compression) on the output shaft	[N]
f_k	Speed ratio	
F_R	Overhung load on the output shaft	[N]
F_{Rapk}	Maximum permitted overhung load at the output shaft for short-time duty (load application point is the middle of the shaft end)	[N]
F_{Ramax}	Maximum permitted overhung load at the output shaft for continuous duty (load application point is the middle of the shaft end)	[N]
F_{Repk}	Maximum permitted overhung load at the input shaft for short-time duty (load application point is the middle of the shaft end)	[N]
F_{Remax}	Maximum permitted overhung load at the input shaft for continuous duty (load application point is the middle of the shaft end)	[N]
H	Installation altitude	[m above sea level]
I_0	Current consumption of the motor at M_0	[A]
I_{max}	Maximum permitted motor current (root-mean-square value)	[A]
Ins.cl.	Thermal classification of the motor	
i	Gear unit reduction ratio	
IM	Mounting position of the gear unit (international mounting position) M1 - M6	
IP..	Degree of protection according to IEC60034-5	
J_A	Mass moment of inertia of the adapter	[kgm^2]
J_G	Mass moment of inertia of the gear unit with reference to the input shaft	[kgm^2]
J_{GA}	Mass moment of inertia of the gear unit including adapter with reference to the input shaft	[kgm^2]
J_{ext}	Mass moment of inertia (external) reduced on motor shaft	[kgm^2]
J_{Mot}	Mass moment of inertia of the motor	[kgm^2]
J_L	Mass moment of inertia of the load	[kgm^2]
k	Inertia ratio J_{ext} / J_{Mot}	
l	Length of output shaft	[mm]
M_1 M_n	Output torque in time period t_1 to t_n	[Nm]
M_0	Thermally permitted output torque of the motor in continuous duty at low speed (not to be confused with standstill torque)	[Nm]

Table continued on next page.

Designation	Meaning	Unit
M_a^{DYN}	Dynamic output torque assumed for the drive in project planning	[Nm]
M_{aeff}	Effective torque for component testing calculated in project planning	[Nm]
M_{akub}	Effective torque for bearing testing calculated in project planning	[Nm]
M_{amax}	Maximum permitted output torque for continuous duty	[Nm]
M_{apk}	Maximum permitted output torque for short-time duty	[Nm]
$M_{aNOTAUS}$	Maximum permitted output emergency stop torque, max. 1000 emergency stops	[Nm]
M_{ath}	Effective torque for thermal testing calculated in project planning	[Nm]
M_B	Rated brake torque	[Nm]
M_{pk}	Dynamic limit torque of the servomotor	[Nm]
M_{eff}	Effective torque requirement (in relation to the motor)	[Nm]
M_{max}	Maximum output torque assumed for the drive in project planning	[Nm]
ML	Mounting location (UL)	
n_{apk}	Maximum permitted output speed for short-time duty	[rpm]
n_{epk}	Maximum permitted input speed for short-time duty	[rpm]
n_{em}	Mean input speed	[rpm]
n_{am}	Mean output speed	[rpm]
n_{ak}	Breakpoint speed (output)	[rpm]
n_N	Rated speed	[rpm]
n_1... n_n	Output speed in time period t_1 to t_n	[rpm]
n_{etn_pk}	Maximum input speed in time period n	[rpm]
P_{Br}	Braking power	[W]
P_{Br_pk}	Peak braking power	[W]
P_{Br_eff}	Effective braking power	[W]
P_{Br_tn}	Braking power in time period t_n	[W]
S.., ..% cdf	Duty type and cyclic duration factor cdf in %; the exact load cycle can be entered instead.	
t_1...t_n	Time period 1 to n	[s]
t_z	Cycle time	[s]
T_{Amb}	Ambient temperature	[°C]
U_{sys}	System voltage, voltage of the supplying inverter	[V]
U_{Br}	Operating voltage of the brake	[V]
x	Distance between overhung load application point and shaft shoulder	[mm]
F_{Rmax}	Calculated auxiliary value	
F_{Rkub}	Calculated auxiliary value	

Determining the application data

It is necessary to have data on the machine to be driven (mass, speed, setting range, etc.) to project the drive correctly.

These data help determine the required power, torque and speed. Refer to the SEW publication "Drive Engineering - Practical Implementation / Drive Planning" or the SEW project planning tool SEW Workbench for assistance.

Selecting the proper drive

The appropriate drive can be selected once the power and speed of the drive have been calculated and with regard to mechanical requirements.

Required motor data

As the dimensions of servomotors are not standardized, the following motor data must be known to select the appropriate adapter:

- Shaft diameter and length
- Flange dimensions (edge length, diameter, centering shoulder and hole circle)
- Maximum torque

Do not hesitate to contact us if you have questions on selection and project planning.

4.2 Project planning procedure

The following flow diagrams illustrate the project planning procedure for a servo gear unit.

Project planning procedure part 1, servo gear units

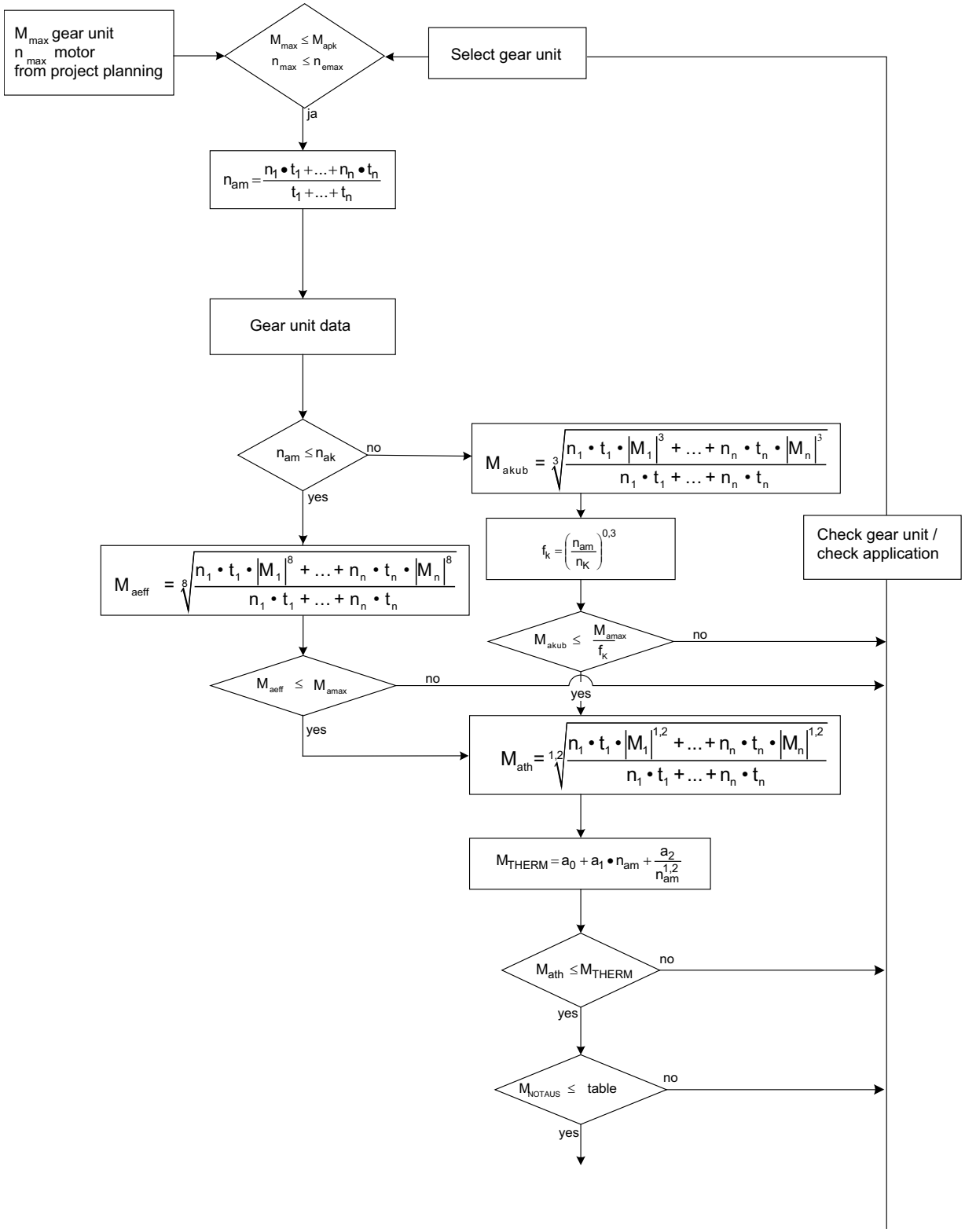

62893aen

* For thermal project planning of R, F, K, S, W gear units, please contact SEW-EURODRIVE.

Project planning procedure part 2, servo gear units

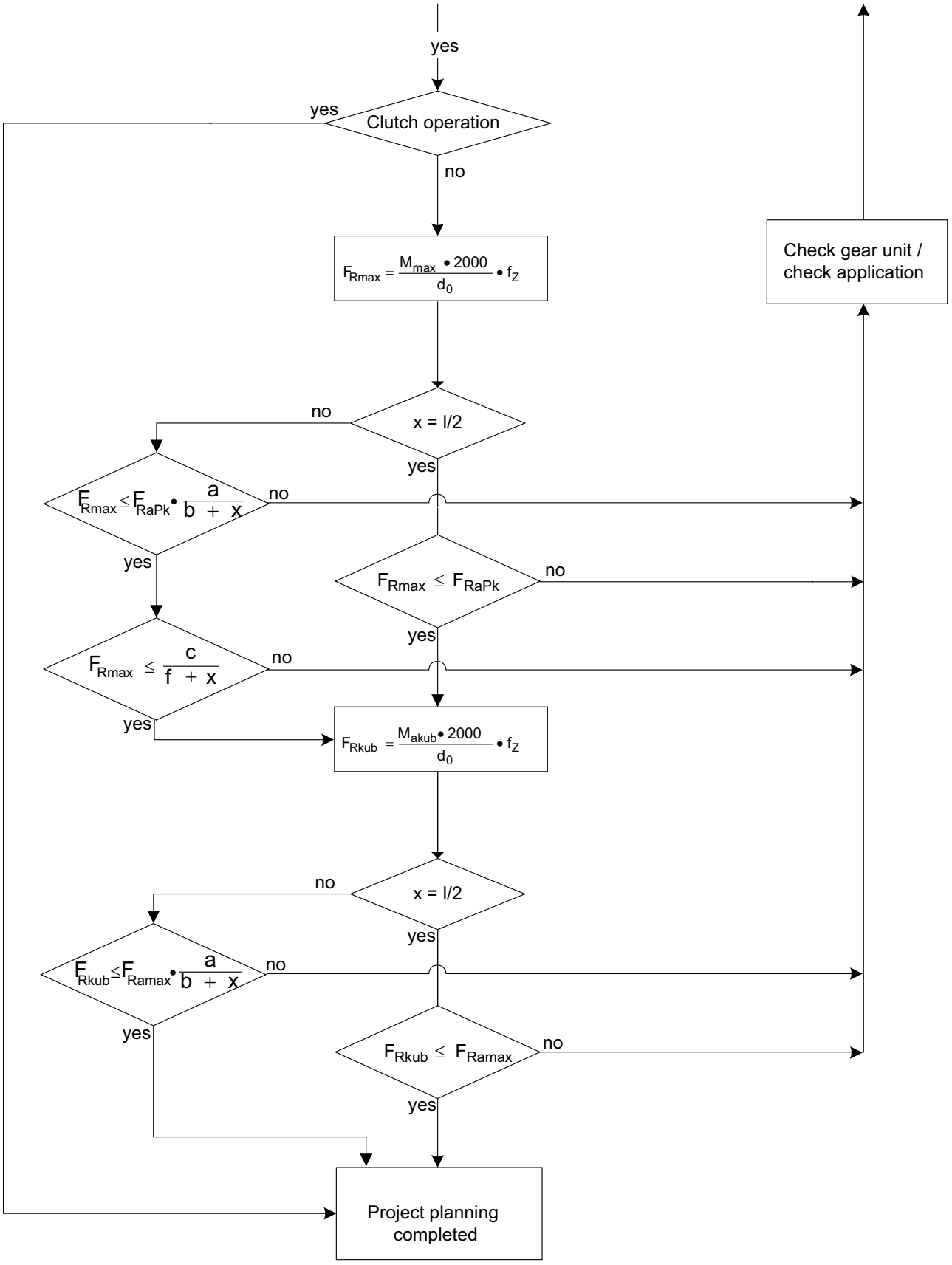

62783aen

4.3 Project planning information for R, F, K, S, W gear units

Efficiency of gear units

General information

The efficiency of gear units is mainly determined by the gearing and bearing friction. Keep in mind that the starting efficiency of a gear unit is always less than its efficiency at operating speed. This factor is particularly true for helical-worm and SPIROPLAN® right-angle gear units.

R, F, K gear units

The efficiency of helical, parallel shaft and helical-bevel gear units varies with the number of gear stages, between 96% (3-stage), 97% (2-stage) and 98% (1-stage).

S and W gear units

The gearing in helical-worm and SPIROPLAN® gear units produces a high proportion of sliding friction. As a result, these gear units have higher gearing losses than R, F or K gear units and therefore be less efficient.

The efficiency depends on the following factors:

- Gear ratio of the helical-worm or SPIROPLAN® stage
- Input speed
- Gear unit temperature

Helical-worm gear units from SEW-EURODRIVE are helical gear/worm combinations that are significantly more efficient than plain worm gear units.

The efficiency may reach $\eta < 0.5$ if the helical-worm gear stage has a very high gear ratio.

The SPIROPLAN® gear unit W37/W47 from SEW-EURODRIVE has an efficiency of more than 90%, which drops only slightly even for large gear unit ratios.

Self-locking

Retrodriving torques on helical-worm or SPIROPLAN® gear units produce an efficiency of $\eta' = 2 - 1/\eta$, which is significantly less favorable than the forward efficiency η. The helical-worm or SPIROPLAN® gear unit is self-locking if the forward efficiency $\eta \leq 0.5$. Some SPIROPLAN® gear units are dynamically self-locking. Contact SEW-EURODRIVE if you wish to make technical use of the braking effect of self-locking characteristics.

	INFORMATION
	Note that the self-locking effect of helical-worm and SPIROPLAN® gear units is not permitted as the sole safety function for hoists.

Run-in phase

The tooth flanks of new helical-worm and SPIROPLAN® gear units are not yet completely smooth. That fact makes for a greater friction angle and less efficiency than during later operation. This effect intensifies with increasing gear unit ratio. Subtract the following values from the listed efficiency during the running-in phase:

	Worm	
	i range	**η reduction**
1-start	approx. 50 ... 280	approx. 12 %
2-start	approx. 20 ... 75	approx. 6 %
3-start	approx. 20 ... 90	approx. 3%
5-start	approx. 6 ... 25	approx. 3%
6-start	approx. 7 ... 25	approx. 2 %

i range	**SPIROPLAN® W..** **η reduction**
approx. 30 ... 75	approx. 8 %
approx. 10 ... 30	approx. 5 %
approx. 3 ... 10	approx. 3%

The run-in phase usually lasts 48 hours. Helical-worm and SPRIOPLAN® gear units achieve their listed rated efficiency values when:

- the gear unit has been completely run-in,
- the gear unit has reached nominal operating temperature,
- the recommended lubricant has been filled in, and
- the gear unit is operating in the rated load range.

Churning losses

In certain gear unit mounting positions (see chapter "Gear Unit Mounting Positions"), the first gearing stage is completely immersed in the lubricant. When the circumferential velocity of the input stage is high, considerable churning losses occur in larger gear units that must be taken into account. Contact SEW-EURODRIVE if you wish to use gear units of this type.

To reduce churning losses to a minimum, use gear units in M1 mounting position.

Overhung and axial loads

Determining overhung load

An important factor for determining the resulting overhung load is the type of transmission element mounted to the shaft end. The following transmission element factors f_Z have to be considered for various transmission elements.

Transmission element	Transmission element factor f_Z	Comments
Gears	1.15	< 17 teeth
Chain sprockets	1.40	< 13 teeth
Chain sprockets	1.25	< 20 teeth
Narrow V-belt pulleys	1.75	Influence of the pre-tensioning
Flat belt pulleys	2.50	Influence of the pre-tensioning
Toothed belt pulleys	2.00 - 2.50	Influence of the pre-tensioning
Gear rack pinion, prestressed	2.00	Influence of the pre-tensioning

Permitted overhung load

The basis for determining the permitted overhung loads is the computation of the rated bearing service life L_{10h} of the anti-friction bearings (according to ISO 281).

For special operating conditions, the permitted overhung loads can be determined with regard to the modified service life on request.

INFORMATION

The values refer to force applied to the center of the shaft end (in right-angle gear units as viewed onto drive end). The values for the force application angle α and direction of rotation are based on the most unfavorable conditions.

INFORMATION

Reduction of overhung loads

- Only 50 % of the F_{Ramax} and F_{Rapk} values specified in the selection tables are permitted in mounting positions M1 and M3 with wall attachment on the front face for K and S gear units.
- Helical-bevel gearmotors K167 and K187 in mounting positions M1 to M4: A maximum of 50 % of the overhung load F_{Ramax} specified in the selection tables in the case of gear unit mounting other than as shown in the mounting position sheets.
- Foot and flange-mounted helical gearmotors (R..F): A maximum of 50 % of the overhung load F_{Ramax} specified in the selection tables in the case of torque transmission via the flange mounting.

Higher permitted overhung loads

Exactly considering the force application angle α and the direction of rotation makes it possible to achieve a higher overhung load than listed in the selection tables.

Higher output shaft loads are permitted if heavy duty bearings are installed, especially with R, F and K gear units.

Contact SEW-EURODRIVE in such cases.

Definition of force application point

The force application is defined according to the following figure:

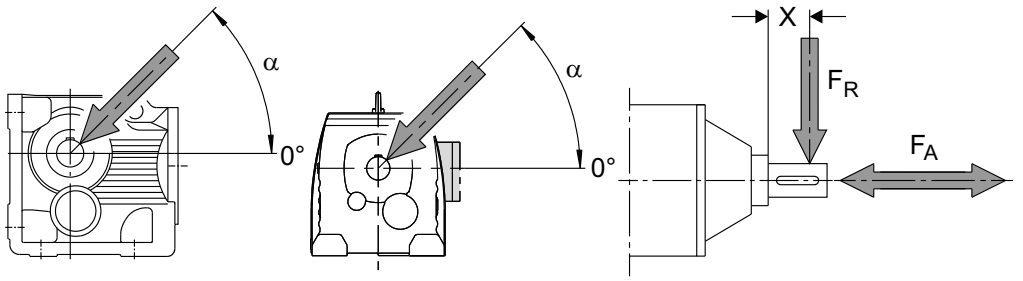

63214axx

Figure 1: Definition of the force application

Permitted axial loads

If there is no overhung load, then an axial load F_A (tension or compression) amounting to 50 % of the overhung load given in the selection tables is permitted. This condition applies to the following gearmotors:

- Helical gearmotors except for R..137... to R..167...
- Parallel shaft and helical-bevel gearmotors with solid shaft except for F97...
- Helical-worm gearmotors with solid shaft

	INFORMATION
	Contact SEW-EURODRIVE for all other types of gear units and in the event of significantly greater axial loads or combinations of overhung load and axial load.

On the output side: Overhung load conversion for off-center force application

The permitted overhung loads F_{Ramax} and F_{Rapk} listed in the data tables apply for force application at lß2 (solid shaft) or for force application at the shaft end face (hollow shaft). If the distance between the force application point an the gear unit is different, the overhung loads must be determined anew according to the project planning procedure, page 44. The following conditions must be met:

$$F_R \le F_{Ra\max} \cdot \frac{a}{b+x}\ [N] \qquad F_R \le \frac{c}{f+x}\ [N]$$

F_{Ramax} = Permitted overhung load [N]
x = Distance from the shaft shoulder to the force application point in [mm]
a, b, f = Gear unit constants for overhung load conversion [mm]
c = Gear unit constant for overhung load conversion [Nmm]

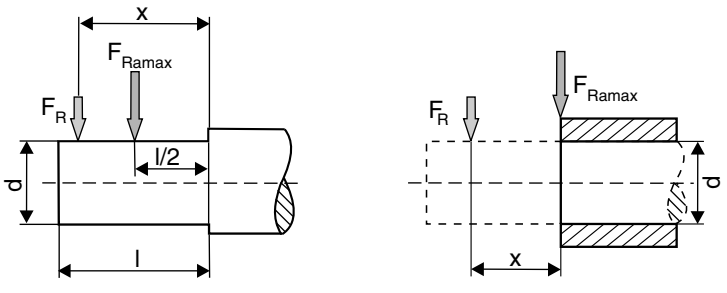

63215axx

Figure 2: Overhung load F_R with increased distance x to the gear unit

Gear unit constants for overhung load conversion

Gear unit type	a [mm]	b [mm]	c [Nmm]	f [mm]	d [mm]	l [mm]
RX57	43.5	23.5	1.51×10^5	34.2	20	40
RX67	52.5	27.5	2.42×10^5	39.7	25	50
RX77	60.5	30.5	1.95×10^5	0	30	60
RX87	73.5	33.5	7.69×10^5	48.9	40	80
RX97	86.5	36.5	1.43×10^6	53.9	50	100
RX107	102.5	42.5	2.47×10^6	62.3	60	120
R07	72.0	52.0	4.67×10^4	11	20	40
R17	88.5	68.5	6.527×10^4	17	20	40
R27	106.5	81.5	1.56×10^5	11.8	25	50
R37	118	93	1.24×10^5	0	25	50
R47	137	107	2.44×10^5	15	30	60
R57	147.5	112.5	3.77×10^5	18	35	70
R67	168.5	133.5	2.65×10^5	0	35	70
R77	173.7	133.7	3.97×10^5	0	40	80
R87	216.7	166.7	8.47×10^5	0	50	100
R97	255.5	195.5	1.06×10^6	0	60	120
R107	285.5	215.5	2.06×10^6	0	70	140
R137	343.5	258.5	4.58×10^6	0	90	170
R147	402	297	8.65×10^6	33	110	210
R167	450	345	1.26×10^7	0	120	210
F27	109.5	84.5	1.13×10^5	0	25	50
F37	123.5	98.5	1.07×10^5	0	25	50
F47	153.5	123.5	1.40×10^5	0	30	60
F57	170.7	135.7	2.70×10^5	0	35	70
F67	181.3	141.3	4.12×10^5	0	40	80
F77	215.8	165.8	7.87×10^5	0	50	100
F87	263	203	1.06×10^6	0	60	120
F97	350	280	2.09×10^6	0	70	140
F107	373.5	288.5	4.23×10^6	0	90	170
F127	442.5	337.5	9.45×10^6	0	110	210
F157	512	407	1.05×10^7	0	120	210
K37	123.5	98.5	1.30×10^5	0	25	50
K47	153.5	123.5	1.40×10^5	0	30	60
K57	169.7	134.7	2.70×10^5	0	35	70
K67	181.3	141.3	4.12×10^5	0	40	80
K77	215.8	165.8	7.69×10^5	0	50	100
K87	252	192	1.64×10^6	0	60	120
K97	319	249	2.80×10^6	0	70	140
K107	373.5	288.5	5.53×10^6	0	90	170
K127	443.5	338.5	8.31×10^6	0	110	210
K157	509	404	1.18×10^7	0	120	210
K167	621.5	496.5	1.88×10^7	0	160	250
K187	720.5	560.5	3.04×10^7	0	190	320
W10	84.8	64.8	3.6×10^4	0	16	40
W20	98.5	78.5	4.4×10^4	0	20	40
W30	109.5	89.5	6.0×10^4	0	20	40
W37	121.1	101.1	$6.95 \xi 10^4$	0	20	40
W47	145.5	115.5	$4.26 \text{ x } 10^5$	35.6	30	60
S37	118.5	98.5	6.0×10^4	0	20	40
S47	130	105	1.33×10^5	0	25	50
S57	150	120	2.14×10^5	0	30	60
S67	184	149	3.04×10^5	0	35	70
S77	224	179	5.26×10^5	0	45	90
S87	281.5	221.5	1.68×10^6	0	60	120
S97	326.3	256.3	2.54×10^6	0	70	140

Values for types not listed are available on request.

4.4 Project planning information for BS.F, PS.F, PS.C gear units

Efficiency of gear units

General information

The efficiency of gear units is mainly determined by the gearing and bearing friction. Keep in mind that the starting efficiency of a gear unit is always less than its efficiency at operating speed.

BS.F gear units

The efficiency of BS.F gear units is up to 94 % (2-stage).

PS.F, PS.C gear units

The efficiency of planetary gear units varies with the number of gear stages, between 98 % (2-stage) and 99 % (1-stage).

INFORMATION

For PS.F gear units with circumferential backlash option"M" used in S1 duty cycle, please contact SEW-EURODRIVE.

INFORMATION

When input and output elements are mounted on **servo gear units**, the **shaft shoulder can be used as a stop** for transmission elements (belt pulley, pinion gear, etc.).

Overhung and axial loads

Determining overhung load

An important factor for determining the resulting overhung load is the type of transmission element mounted to the shaft end. The following transmission element factors f_Z also have to be considered for various transmission elements according to the following formula:

$$f_Z = f_{Z1} \times f_{Z2}$$

Transmission element	Transm. eement factor f_{Z1}	Comments
Gears	1.15	< 17 teeth
Chain sprockets	1.40	< 13 teeth
Chain sprockets	1.25	< 20 teeth
Narrow V-belt pulleys	1.75	Influence of the pre-tensioning
Flat belt pulleys	2.50	Influence of the pre-tensioning
Toothed belt pulleys	2.00 - 2.50	Influence of the pre-tensioning
Gear rack pinion, prestressed	2.00	Influence of the pre-tensioning

INFORMATION

Factor f_{Z2} only applies to helical output elements.

Helical output elements		
Gear units	**Helix angle β [1) 2)]**	**f_{Z2}**
BS.F502-802 PS.F621-922, PSBF321-521 PS.C221 - PS.C622	≤ 11 °	1.00
	20 °	1.20

1) When 11 ° < β < 20 °, then f_Z must be interpolated linearly.

2) For helix angles > 20 °, please contact SEW-EURODRIVE.

Permitted overhung load

The basis for determining the permitted overhung loads is the computation of the rated bearing service life L_{H10} of the anti-friction bearings (according to ISO 281).

For special operating conditions, the permitted overhung loads can be determined with regard to the modified service life on request.

INFORMATION

The values refer to force applied to the center of the shaft end (in right-angle gear units as viewed onto drive end). The values for the force application angle α and direction of rotation are based on the most unfavorable conditions.

INFORMATION

Reduction of overhung loads

- Only 50 % of the F_{Ramax} and F_{Rapk} values specified in the selection tables are permitted in mounting positions M1 and M3 with wall attachment on the front face for BS.F gear units.

Higher permitted overhung loads

Exactly considering the force application angle α and the direction of rotation makes it possible to achieve a higher overhung load than listed in the selection tables.

Contact SEW-EURODRIVE in such cases.

Definition of force application point

The force application is defined according to the following figure:

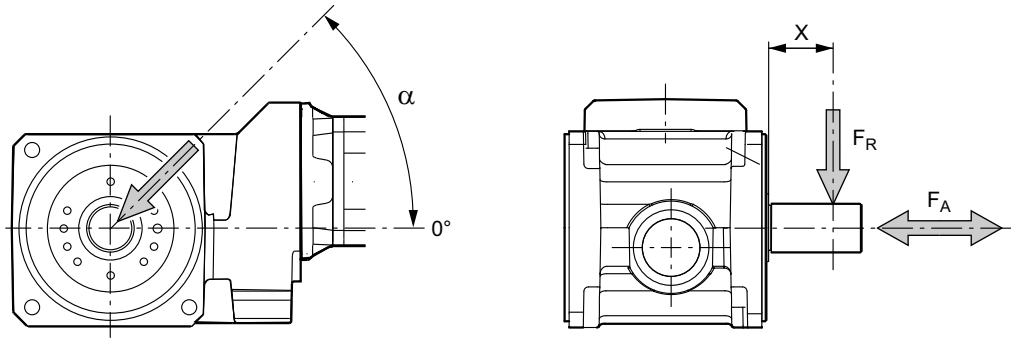

Figure 3: Definition of the force application

Permitted axial loads

If there is no overhung load, then an axial load F_A (tension or compression) amounting to 50 % of the overhung load given in the selection tables is permitted.

On the output side: Overhung load conversion for off-center force application

The permitted overhung loads F_{Ramax} and F_{Rapk} listed in the data tables apply for force application at lß2 (solid shaft) or for force application at the shaft end face (hollow shaft, flange block). If the distance between the force application point an the gear unit is different, the overhung loads must be determined anew according to the project planning procedure page 44 New . The following conditions must be met:

$$F_R \le F_{Ra\max} \cdot \frac{a}{b+x}\ [N] \qquad F_R \le \frac{c}{f+x}\ [N]$$

F_{Ramax} = Permitted overhung load [N]
x = Distance from the shaft shoulder to the force application point in [mm]
a, b, f = Gear unit constants for overhung load conversion [mm]
c = Gear unit constant for overhung load conversion [Nmm]

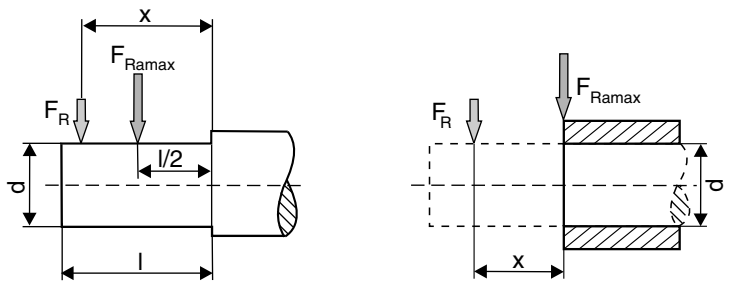

63215axx

Figure 4: Overhung load F_R with increased distance x to the gear unit

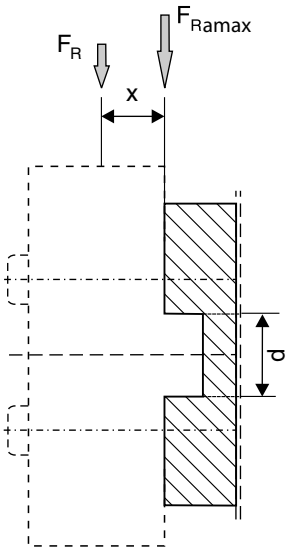

63102axx

Figure 5: Overhung load F_R with increased distance x to the gear unit

Gear unit constants for overhung load conversion

Gear unit	a [mm]	b [mm]	c [Nmm]	f [mm]	d [mm]	l [mm]
BSF / BSKF202	113.1	95.6	7.35×10^4	0	20	35
BSHF / BSAF202	116.6	116.6	--	--	--	--
BSBF202	101.5	101.5	--	--	--	--
BSF / BSKF302	122.6	104.6	8.61×10^4	0	22	36
BSHF / BSAF302	126.6	126.6	--	--	--	--
BSBF302	111.0	111.0	--	--	--	--
BSF / BSKF402	152.2	123.2	2.56×10^5	0	32	58
BSHF / BSAF402	143.7	143.7	--	--	--	--
BSBF402	132.0	132.0	--	--	--	--
BSF / BSKF502	175.4	134.4	4.92×10^5	0	40	82
BSHF / BSAF502	162.4	162.4	--	--	--	--
BSBF502	145.3	145.3	--	--	--	--
BSF / BSKF602	195.9	154.9	9.84×10^5	0	55	82
BSHF / BSAF602	189.9	189.9	--	--	--	--
BSBF602	170.8	170.8	--	--	--	--
BSF / BSKF802	242.7	190.2	1.89×10^6	0	75	105
BSHF / BSAF802	243.2	243.2	--	--	--	--
BSBF802	206.0	206.0	--	--	--	--

Gear unit	a [mm]	b [mm]	c [Nmm]	f [mm]	d [mm]	l [mm]
PSF / PSKF121/122	47.6	36.6	2.08×10^4	0	14	22
PSF / PSKF221/222	53.6	39.6	2.41×10^4	0	16	28
PSBF221/222	64.1	64.1	--	--	--	--
PSF / PSKF321/322	65.0	47.0	7.97×10^4	0	22	36
PSBF321/322	72.5	72.5	--	--	--	--
PSF / PSKF521/522	83.1	54.1	2.52×10^5	0	32	58
PSBF521/522	87.5	87.5	--	--	--	--
PSF / PSKF621/622	113.6	72.3	5.48×10^5	0	40	82
PSBF621/622	105.0	105.0	--	--	--	--
PSF / PSKF721/722	126.6	85.6	1.42×10^6	0	55	82
PSBF721/722	138.5	138.5	--	--	--	--
PSF / PSKF821/822	153.2	100.7	3.21×10^6	0	75	105
PSBF821/822	156.0	156.0	--	--	--	--
PSF / PSKF921/922	170.7	105.7	5.30×10^6	0	85	130

Gear unit	a [mm]	b [mm]	c [Nmm]	f [mm]	d [mm]	l [mm]
PS.C221/222	57	43	3.41×10^4	0	16	28
PS.C321/322	63.5	45.5	7.55×10^4	0	22	36
PS.C521/522	95.5	66.5	2.13×10^5	0	32	58
PS.C621/622	107.5	66.5	3.68×10^5	0	40	82

Values for types not listed are available on request.

4.5 Project planning example: Gantry with servo drives

X-axis planning (travel axis)

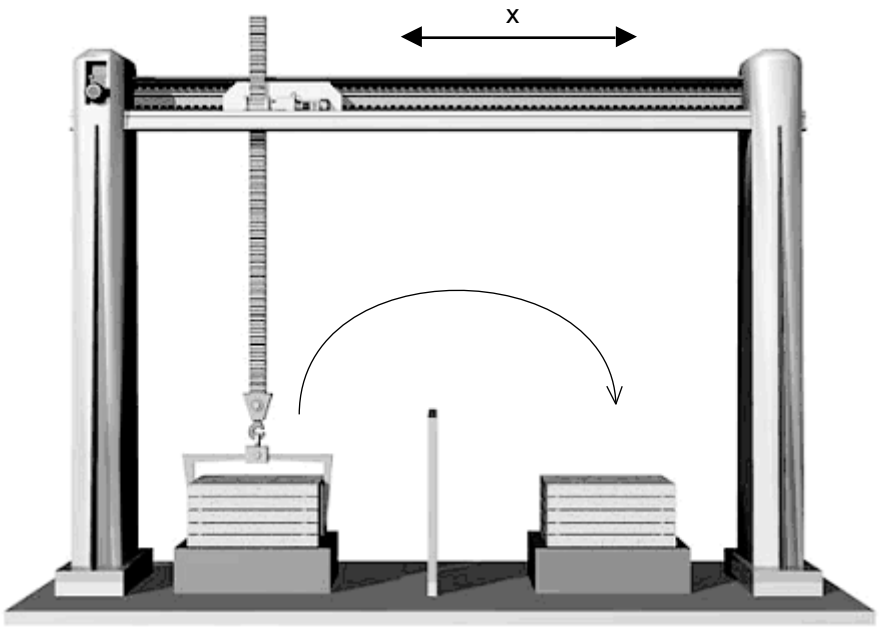

64655axx

Figure 6: Project planning example: Gantry with servo drives travel axis

Reference data:

- Total moved mass: m_L = 50 kg
- Diameter of the belt pulley: d_0 = 75 mm
- Friction coefficient of the axis: μ = 0.01
- Traveling velocity: v_{max} = 2 m/s
- Maximum occurring acceleration/deceleration: a_{max} = 10 m/s^2
- Cycle time: t_z = 3 s
- Rest period: t_p = 1.8 s
- Load efficiency: h_L = 0.9
- Mounting position of the gear unit: IM = M1

A PS.C gear unit with ECH adapter is provided for the drive.
The overhung load is to act on the shaft center.
Power is transmitted via belt and belt pulley.

Travel sections

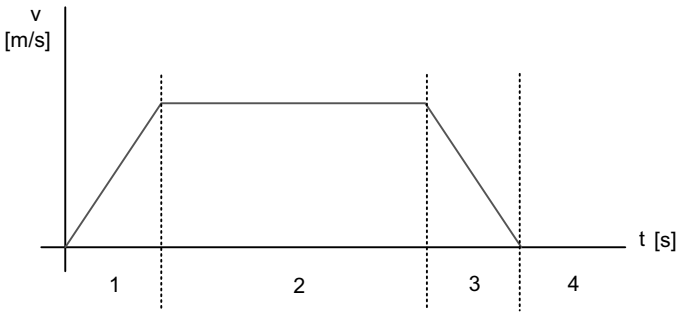

61222axx

Figure 7: Travel sections 1 - 4

Acceleration time in travel section 1, deceleration time in travel section 3

$$t_1 = t_3 = \frac{v_{max}}{a_{max}} = \frac{2\ m/s}{10\ m/s^2} = 0.2\,s$$

Travel time for constant travel in travel section 2

$$t_2 = t_z - t_p - t_1 - t_3$$
$$t_2 = 3\,s - 1.8\,s - 0.2\,s - 0.2\,s$$
$$t_2 = 0.8s$$

M_{stat} for all travel sections

$$M_{stat} = \frac{(m \cdot g \cdot \mu) \cdot \frac{d_0}{2}}{\eta_L}$$
$$M_{stat} = \frac{50kg \cdot 9.81\frac{m}{s^2} \cdot 0.01 \cdot \frac{0.075m}{2}}{0.9}$$
$$M_{stat} = 0.2043Nm$$

M_{dyn} during acceleration in travel section 1

$$M_{dyn} = \frac{(m \cdot a) \cdot \frac{d_0}{2}}{\eta_L}$$
$$M_{dyn} = \frac{50kg \cdot 10\frac{m}{s^2} \cdot \frac{0.075m}{2}}{0.9}$$
$$M_{dyn} = 20.83Nm$$

M_{dyn} during deceleration in travel section 3

$$M_{dyn} = m \cdot a \cdot \frac{d_0}{2} \cdot \eta_L$$

$$M_{dyn} = 50kg \cdot (-10\frac{m}{s^2}) \cdot \frac{0.075m}{2} \cdot 0.9$$

$$M_{dyn} = -16.875Nm$$

M_{max} during acceleration in travel section 1

$$M_{\max} = M_{stat} + M_{dyn1}$$

$$M_{\max} = 0.2043Nm + 20.8333Nm$$

$$M_{\max} = 21.04Nm$$

M_{max} during deceleration in travel section 3

$$M_{\max} = M_{stat} + M_{dyn3}$$

$$M_{\max} = 0.2043Nm + (-16.87Nm)$$

$$M_{\max} = -16.6657Nm$$

Output speed

$$n_{a\max} = \frac{v_{\max}}{d_0 \cdot \pi} \cdot 60$$

$$n_{a\max} = \frac{2\frac{m}{s}}{0.075m \cdot \pi} \cdot 60$$

$$n_{a\max} = 509.295\frac{1}{\min}$$

Gear ration including 10 % motor speed reserve

n_N = 4500 rpm is an assumption.

$$i = \frac{n_N \cdot 0.9}{n_{a\max}}$$

$$i = \frac{4500\frac{1}{\min} \cdot 0.9}{509.295\frac{1}{\min}}$$

$$i = 7.95$$

Gear ratio i = 7 is selected.

Maximum input speed

$$n_{max} = n_{a\,max} \cdot i$$

$$n_{max} = 509.295 \frac{1}{min} \cdot 7$$

$$n_{max} = 3565.065 \frac{1}{min}$$

Servo gear unit project planning

Project planning follows the project planning procedure on page 44 and subsequent pages.

Selection conditions:

$M_{max} \leq M_{apk}$

$n_{max} \leq n_{epk}$

ECH / EPH	i	n_{epk} [1/min]	? [%]	M1;M3;M5-6 a_0	a_1	a_2	M2 a_0	a_1	a_2	M4 a_0	a_1	a_2	φ [°]
PSC221 1	3	7000	98	104.00	-0.073	0	111.00	-0.084	0	114.00	-0.089	0	10
	5	7000	98	153.00	-0.121	0	159.00	-0.130	0	164.00	-0.139	0	10
	7	7000	98	170.00	-0.152	0	175.00	-0.160	0	180.00	-0.170	0	10
	10	7000	98	172.00	-0.182	0	175.00	-0.188	0	179.00	-0.198	0	10

ECH02	i	M_{amax} [Nm]	M_{apk} [Nm]	$M_{aNotaus}$ [Nm]	n_{ak} [1/min]	J_G 10^{-4} [kgm^2]	c_T PSC [Nm/°]	F_{Ramax} PSC [N]	F_{Rapk} PSC [N]
PSC221 1	3	29	40	60	1500	0.38	3.11	1170	2000
	5	34	42	63	720	0.27	3.42	1390	2000
	7	32	39	59	800	0.24	3.41	1550	2000
	10	30	37	56	700	0.22	3.0	1750	2000

Selection condition:

$M_{max} \leq M_{apk}$

$21.04 Nm \leq 39 Nm$

$n_{max} \leq n_{epk}$

$3565 \frac{1}{min} \leq 7000 \frac{1}{min}$

Condition is fulfilled.

Mean output speed

$$n_{am} = \frac{n_1 \cdot t_1 + ... + ...n_n \cdot t_n}{t_1 + ... + ..t_n}$$

$$n_{am} = \frac{\frac{509.295\frac{1}{\min}}{2} \cdot 0.2s + 509.295\frac{1}{\min} \cdot 0.8s + \frac{509.295\frac{1}{\min}}{2} \cdot 0.2s}{0.2s + 0.8s + 0.2s + 1.8s}$$

$$n_{am} = 169.765\frac{1}{\min}$$

Selection condition:

$$n_{am} \leq n_{ak}$$

ECH02	i	M_{amax} [Nm]	M_{apk} [Nm]	$M_{aNotaus}$ [Nm]	n_{ak} [1/min]	J_G 10^{-4} [kgm²]	c_T PSC [Nm/']	F_{Ramax} PSC [N]	F_{Rapk} PSC [N]
PSC221 1	3	29	40	60	1500	0.38	3.11	1170	2000
	5	34	42	63	720	0.27	3.42	1390	2000
	7	32	39	59	800	0.24	3.41	1550	2000
	10	30	37	56	700	0.22	3.0	1750	2000

$$169.765\frac{1}{\min} \leq 800\frac{1}{\min}$$

Condition is fulfilled.

Effective torque of servo gear unit

$$M_{aeff} = \sqrt[8]{\frac{n_1 \cdot t_1 \cdot |M_1|^8 + ... + ...n_n \cdot t_n \cdot |M_n|^8}{n_1 \cdot t_1 + ... + n_n \cdot t_n}}$$

$$M_{aeff} = \sqrt[8]{\frac{\frac{509.295\frac{1}{\min}}{2} \cdot 0.2s \cdot |21.04Nm|^8 + 509.295\frac{1}{\min} \cdot 0.8s \cdot |0.2043Nm|^8 + \frac{506.295\frac{1}{\min}}{2} \cdot 0.2s \cdot |-16.67Nm|^8}{0.2s \cdot 254.64\frac{1}{\min} + 0.8s \cdot 509.295\frac{1}{\min} + 0.2s \cdot 254.64\frac{1}{\min}}}$$

$$M_{aeff} = 16.065Nm$$

Selection condition:

$M_{aeff} \leq M_{amax}$

ECH02	i	M_{amax} [Nm]	M_{apk} [Nm]	$M_{aNotaus}$ [Nm]	n_{ak} [1/min]	J_G 10^{-4} [kgm²]	c_T PSC [Nm/']	F_{Ramax} PSC [N]	F_{Rapk} PSC [N]
PSC221 1	3	29	40	60	1500	0.38	3.11	1170	2000
	5	34	42	63	720	0.27	3.42	1390	2000
	7	32	39	59	800	0.24	3.41	1550	2000
	10	30	37	56	700	0.22	3.0	1750	2000

$$16.065Nm \le 32Nm$$

Condition is fulfilled.

Thermal torque of servo gear unit

$$M_{ath} = \sqrt[1,2]{\frac{n_1 \cdot t_1 \cdot |M_1|^{1.2} + ... + ...n_n \cdot t_n \cdot |M_n|^{1.2}}{n_1 \cdot t_1 + ... + n_n \cdot t_n}}$$

$$M_{ath} = \sqrt[1,2]{\frac{\frac{509.295\frac{1}{\min}}{2} \cdot 0.2s \cdot |21.04Nm|^{1.2} + 509.295\frac{1}{\min} \cdot 0.8s \cdot |0.2043Nm|^{1.2} + \frac{509.29\ \frac{1}{\min}}{2} \cdot 0.2s \cdot |-16.67Nm|^{1.2}}{0.2s \cdot 254.64\frac{1}{\min} + 0.8s \cdot 509.295\frac{1}{\min} + 0.2s \cdot 254.64\frac{1}{\min}}}$$

$$M_{ath} = 5.009Nm$$

Thermal factors for mounting position M1:

ECH / EPH		n_{epk}	?	M1;M3;M5-6			M2			M4			φ
	i	[1/min]	[%]	a_0	a_1	a_2	a_0	a_1	a_2	a_0	a_1	a_2	[']
PSC221 1	3	7000	98	104.00	-0.073	0	111.00	-0.084	0	114.00	-0.089	0	10
	5	7000	98	153.00	-0.121	0	159.00	-0.130	0	164.00	-0.139	0	10
	7	7000	98	170.00	-0.152	0	175.00	-0.160	0	180.00	-0.170	0	10
	10	7000	98	172.00	-0.182	0	175.00	-0.188	0	179.00	-0.198	0	10

$$M_{Therm} = a_0 + a_1 \cdot n_{am} + \frac{a_2}{n_{am}^{1.2}}$$

$$M_{Therm} = 172 + (-0.182 \cdot 169.765\frac{1}{\min}) + \frac{0}{169.765^{1,2}}$$

$$M_{Therm} = 141.102\ Nm$$

Selection condition:

$$M_{ath} \le M_{Therm}$$

$$5.009Nm \le 141.102\,Nm$$

Condition is fulfilled.

Overhung load calculation

For transmission element factors for overhung loads of different transmission elements at the output shaft, refer to page 48 and 50.

Without coupling operation:

$$F_{Rmax} = \frac{M_{max} \bullet 2000}{d_0} \bullet f_Z$$

$$F_{R\max} = \frac{M_{\max}}{\frac{d_0}{2}} \cdot f_z$$

$$F_{R\max} = \frac{21.04\,Nm}{\frac{0.075\,m}{2}} \cdot 2.5$$

$$F_{R\max} = 1402\,N$$

The force application point is the center of the output shaft.

Selection condition:

When x = l/2, then:

$F_{Rmax} \leq F_{Rapk}$

ECH02	i	M_{amax} [Nm]	M_{apk} [Nm]	$M_{aNotaus}$ [Nm]	n_{ak} [1/min]	J_G 10^{-4} [kgm^2]	c_T PSC [Nm/']	F_{Ramax} PSC [N]	F_{Rapk} PSC [N]
PSC221 1	3	29	40	60	1500	0.38	3.11	1170	2000
	5	34	42	63	720	0.27	3.42	1390	2000
	7	32	39	59	800	0.24	3.41	1550	2000
	10	30	37	56	700	0.22	3.0	1750	2000

1402 *N* ≤ 2000 *N*

Condition is fulfilled.

Calculating the bearing force

$$M_{akub} = \sqrt[3]{\frac{n_1 \cdot t_1 \cdot |M_1|^3 + \ldots + \ldots n_n \cdot t_n \cdot |M_n|^3}{n_1 \cdot t_1 + \ldots + n_n \cdot t_n}}$$

$$M_{akub} = \sqrt[3]{\frac{\frac{509.295\frac{1}{\min}}{2} \cdot 0.2s \cdot |21.04\,Nm|^3 + 509.295\frac{1}{\min} \cdot 0.8s \cdot |0.2043\,Nm|^3 + \frac{506.295\frac{1}{\min}}{2} \cdot 0.2s \cdot |-16.67\,Nm|^3}{0.2s \cdot 254.64\frac{1}{\min} + 0.8s \cdot 509.295\frac{1}{\min} + 0.2s \cdot 254.64\frac{1}{\min}}}$$

$$M_{akub} = 11.172\,Nm$$

$$F_{Rkub} = \frac{M_{akub}}{\frac{d_0}{2}} \cdot f_z$$

$$F_{Rkub} = \frac{11.12\,Nm}{\frac{0.075m}{2}} \cdot 2.5$$

$$F_{Rkub} = 744.8\,N$$

Selection conditions:

$F_{Rkub} \leq F_{Ramax}$

$x = l/2$

ECH02	i	M_{amax} [Nm]	M_{apk} [Nm]	$M_{aNotaus}$ [Nm]	n_{ak} [1/min]	$J_G\ 10^{-4}$ [kgm^2]	c_T PSC [Nm/']	F_{Ramax} PSC [N]	F_{Rapk} PSC [N]
PSC221 1	3	29	40	60	1500	0.38	3.11	1170	2000
	5	34	42	63	720	0.27	3.42	1390	2000
	7	32	39	59	800	0.24	3.41	1550	2000
	10	30	37	56	700	0.22	3.0	1750	2000

744.8 *N* ≤ 1550 *N*

Condition is fulfilled.

4.6 Additional documentation

In addition to the information in this manual, SEW-EURODRIVE offers extensive documentation covering the entire topic of electrical drive engineering. These are mainly the publications in the "Drive Engineering Ð Practical Implementation" series as well as the manuals and catalogs for gear units and electronically controlled drives.

You will find additional links to a wide selection of our documentation in many languages for download on the SEW-EURODRIVE homepage (http://www.sew-eurodrive.com). The list below includes other documents that are of interest in terms of project planning. You can order these publications from SEW-EURODRIVE.

Technical data for motors and gear units

The following price catalogs and catalogs are available from SEW-EURODRIVE in addition to this "Servo Gear Units" catalog:

- AC motors
- Gear unit catalog
- Synchronous servo gearmotors

Drive Engineering - Practical Implementation

- Drive Planning
- Servo Technology.
- Explosion-proof drives in accordance with EU Directive 94/9/EC.

5 Mounting Positions of Gear Units

5.1 General information on the mounting positions of R, F, K, S, W gear units

SEW-EURODRIVE distinguishes between the six gear unit mounting positions M1 to M6. The following figure shows the position of the gear unit in mounting positions M1 to M6:

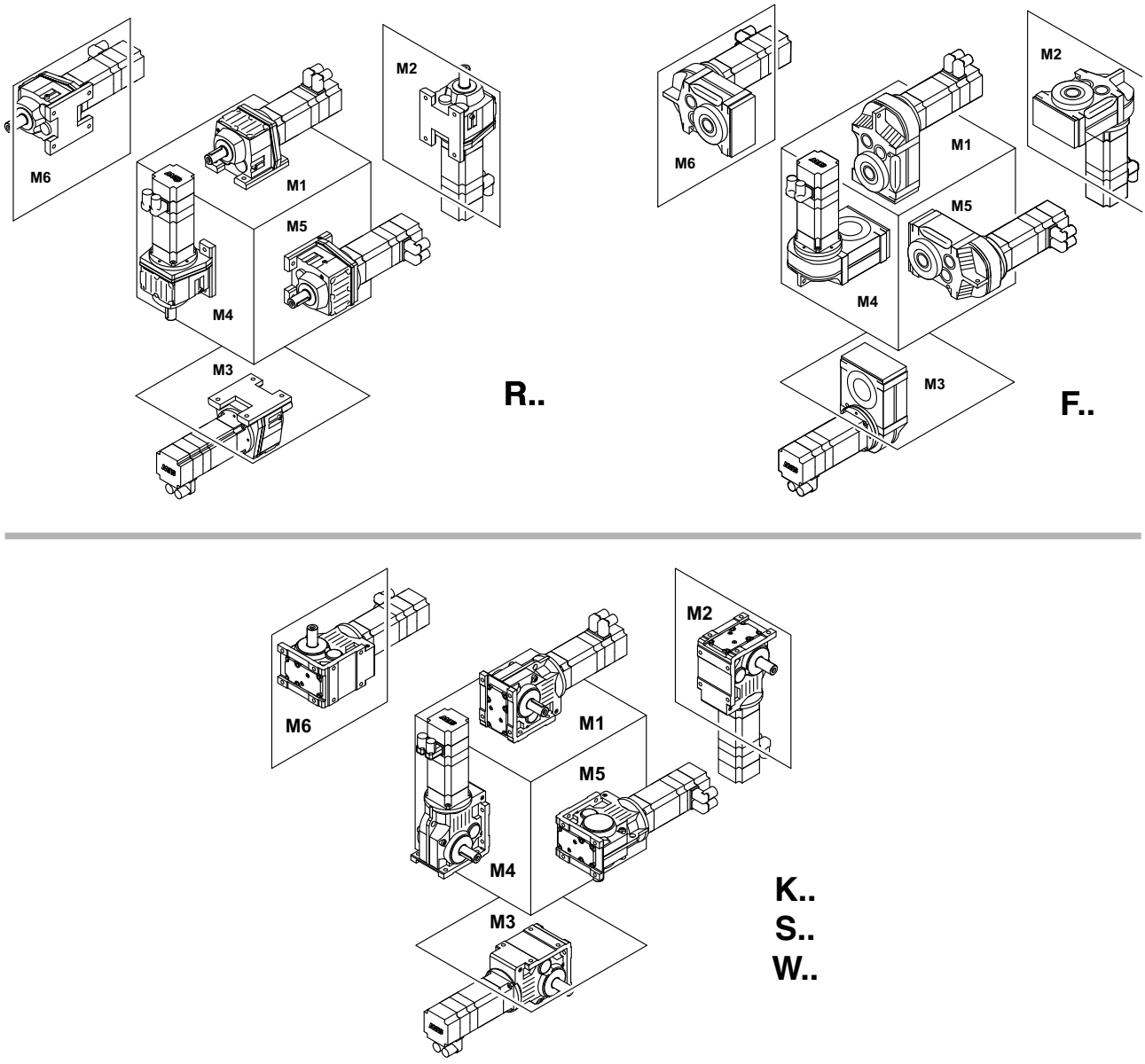

Figure 8: Depiction of mounting positions M1 - M6

5.2 Order information for R, F, K, S, W servo gear units

	INFORMATION
	The following order information is required in addition to the mounting position for R, F, K, S and W gear units to enable the configuration of the drive to be defined exactly.

Direction of rotation of the output shaft

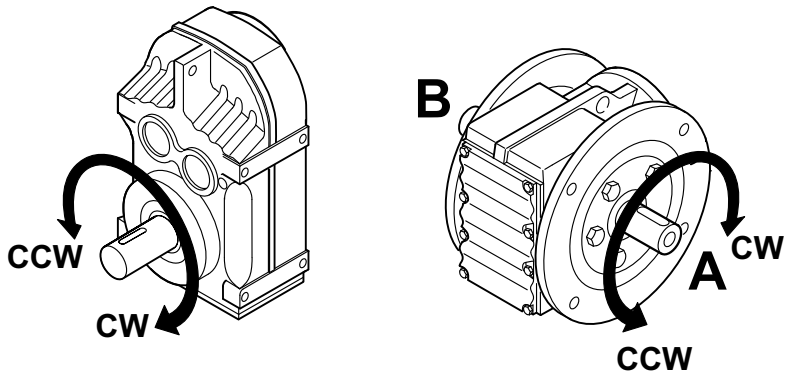

63650AXX

Figure 9: Output direction of rotation

As viewed at the output shaft: Clockwise (CW) = Rotating clockwise
Counterclockwise (CCW)= Rotating counterclockwise

Position of output shaft and output flange

In right-angle gear units, you also have to indicate the position of the output shaft and the output flange:

- A or B or AB

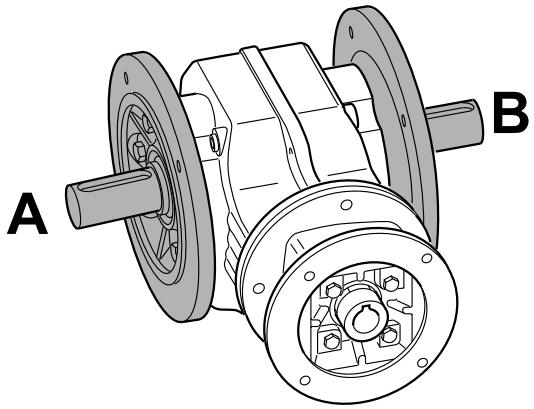

50296AXX

Figure 10: Position of the output shaft and output flange

Position of the output end in right-angle gear units

In shaft mounted right-angle gear units with a shrink disk, you also have to indicate whether the A or B end is the output end. In Figure 11 , the A end is the output end. The shrink disk is located opposite the output end, here on the B side.

In shaft mounted right-angle gear units, the "output end" is equivalent to the "shaft position" of right-angle gear units with solid shaft.

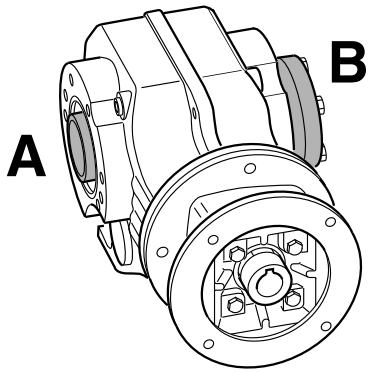

63855axx

Figure 11: Example: Position of the output end

	INFORMATION
	You will find the permitted mounting surfaces (= hatched area) in the mounting position sheets (page 70 and subsequent pages). **Example:** Only the mounting surface at the bottom is possible with helical-bevel gear units K167/K187 in mounting positions M5 and M6.

Changing the mounting position

Make sure to read the following information when you operate the gearmotor in a mounting position other than the one indicated in the order:

- Adjust lubricant fill quantity to match the new mounting position
- Adjust position of breather valve
- For helical-bevel gearmotors: Contact the SEW-EURODRIVE customer service prior to changing to mounting position M5 or M6 and when changing from M5 to M6 or vice versa.
- For helical-worm gear units: Contact the SEW-EURODRIVE customer service when changing to mounting position M2 or M3.

5.3 General information on the mounting positions of BS.F, PS.F, PS.C gear units

Mounting position deisgnations of BS.F helical-bevel gear units

SEW-EURODRIVE distinguishes between the gear unit mounting positions M1 to M6. The following figure shows the spatial orientation of the gear unit in mounting positions M1 to M6 with the output end A.

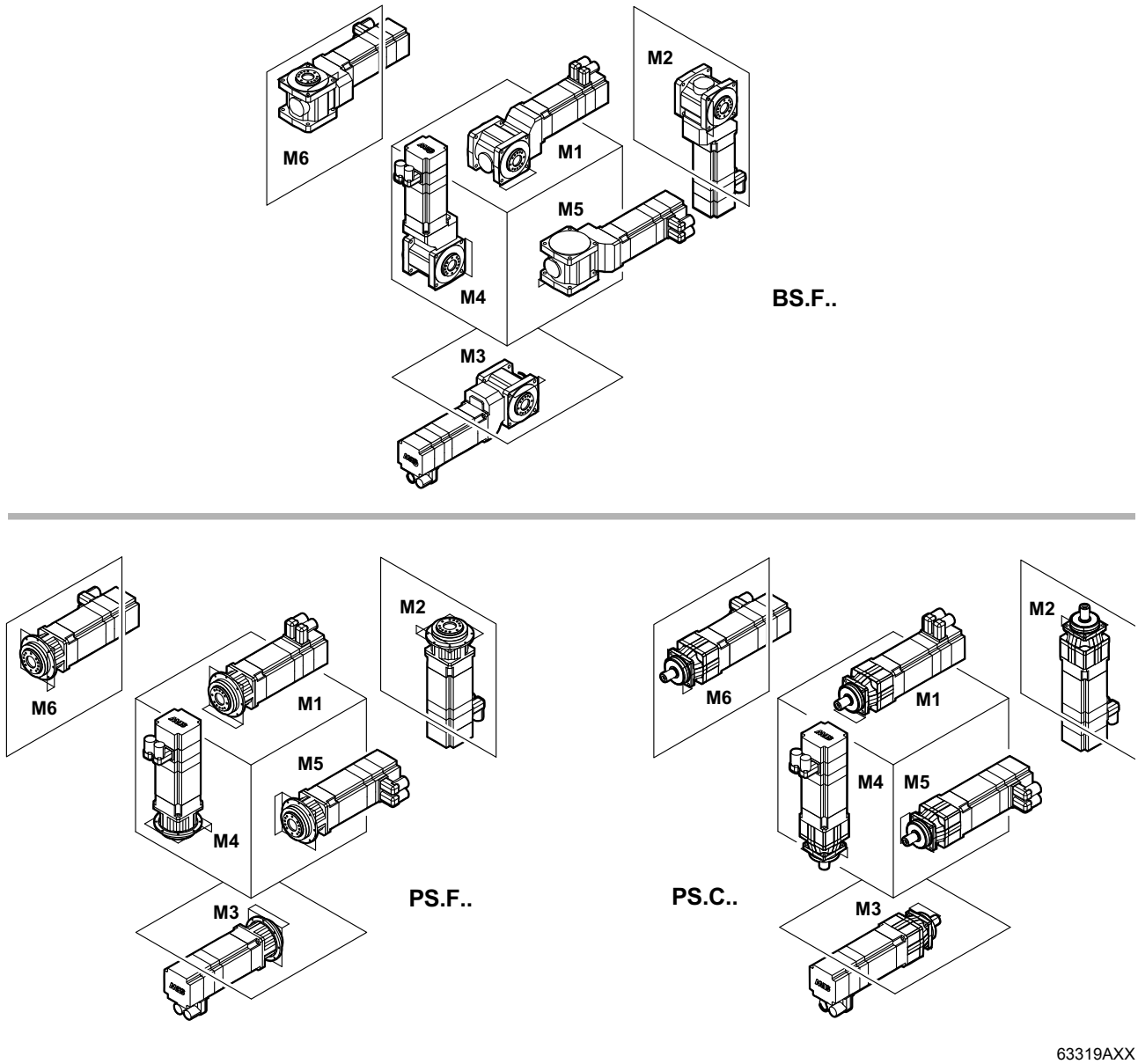

Figure 12: Description of mounting positions

5.4 Order information for BS.F, PS.F, PS.C servo gear units

Definition of A and B ends of output shafts

When installing the gear unit via one of the output flanges, the gear unit must be attached to the shaft output side via the B5 output flange.

Gear unit type	Position		Mounting
	of the output shaft	of the shrink disk	
BSF.. / BSKF.. / BSBF	A end	-	Mounting via B5 flange on the A end
	B end	-	Mounting via B5 flange on the B end
BSHF..	-	B end	Mounting via B5 flange on the A end
	-	A end	Mounting via B5 flange on the B end
BSHF.. /I	-	A end	Mounting via B5 flange on the A end
	-	B end	Mounting via B5 flange on the B end
BSAF..	A end		Mounting via B5 flange on the A end
	B end		Mounting via B5 flange on the B end
BSF../BSKF..	AB	-	Mounting via B5 flange on the A end and/or B end

For BS.F. gear units, the position of the output shaft A, B or AB must be specified:

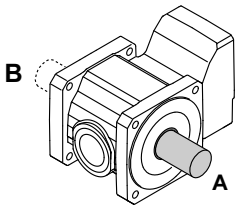

64345AXX

Figure 13: Position of the output shaft of BSF.., BSKF.., BSAF.., BSBF.. helical-bevel gear units

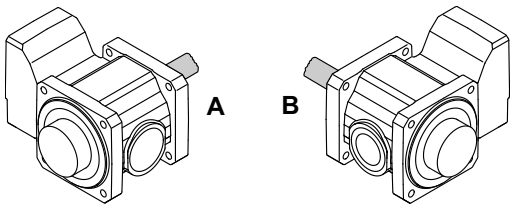

643461AXX

Figure 14: Position of the output shaft and output flange of BSHF.. helical-bevel gear units

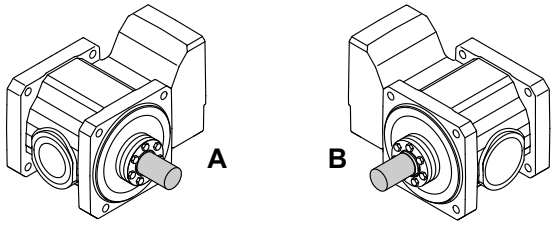

64347AXX

Figure 15: Position of the output shaft and output flange of BSHF../I helical-bevel gear units

Direction of rotation of the output shaft

For a definition of the output shaft, see page 64.

5.5 Key to the mounting position sheets

Symbols used

The following table shows the symbols used in the mounting position sheets and their meaning:

Symbol	Meaning
	Breather valve
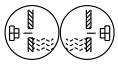	Oil level plug[1)]
	Oil drain plug
③	Cable entry position "3"

1) Does not apply to the first gear unit (larger gear unit) of multi-stage gear units

	INFORMATION
	Notes on the shafts displayed in the mounting position sheets Note the following information regarding the way in which shafts are depicted in the mounting position sheets: • **For gear units with solid shaft:** The displayed shaft is always on the A end. • **For shaft mounted gear units:** The shaft with dashed lines represents the customer shaft. The output end (= shaft position) is always shown on the A end.

	INFORMATION
	SPRIOPLAN® gear units are not dependant on the mounting position, except for W..37 and W47 in mounting position M4. However, mounting positions M1 to M6 are also shown for SPIROPLAN® gear units to assist you in working with this documentation. **Important! Please note:** SPIROPLAN® gear units W..10 to W..30 cannot be equipped with breather valves, oil level plugs or drain plugs. SPIROPLAN® gear units W..37 and W..47 can be equipped with breather valves in mounting position M4 and with oil drain plugs in mounting position M2.

	INFORMATION
	Notes on the displayed motors. Motors are only represented symbolically in the mounting position sheets.

Churning losses

* → Page XX

Churning losses may occur in some mounting positions. Contact SEW-EURODRIVE in case of the following combinations:

Mounting position	Gear unit type	Gear unit size	Input speed [rpm]
M2, M4	R	97 ... 107	> 2500
		> 107	>1500
M2, M3, M4, M5, M6	F	97 ... 107	> 2500
		> 107	> 1500
	K	77 ... 107	> 2500
		> 107	> 1500
	S	77 ... 97	> 2500

5.6 Mounting positions of helical gear units

RX57...RX107

04 043 02 00

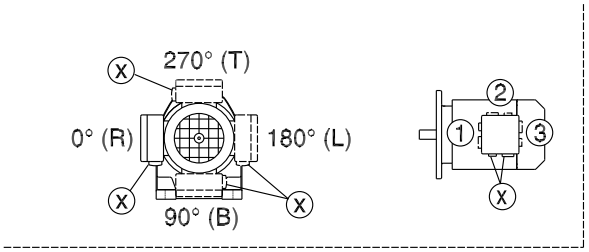

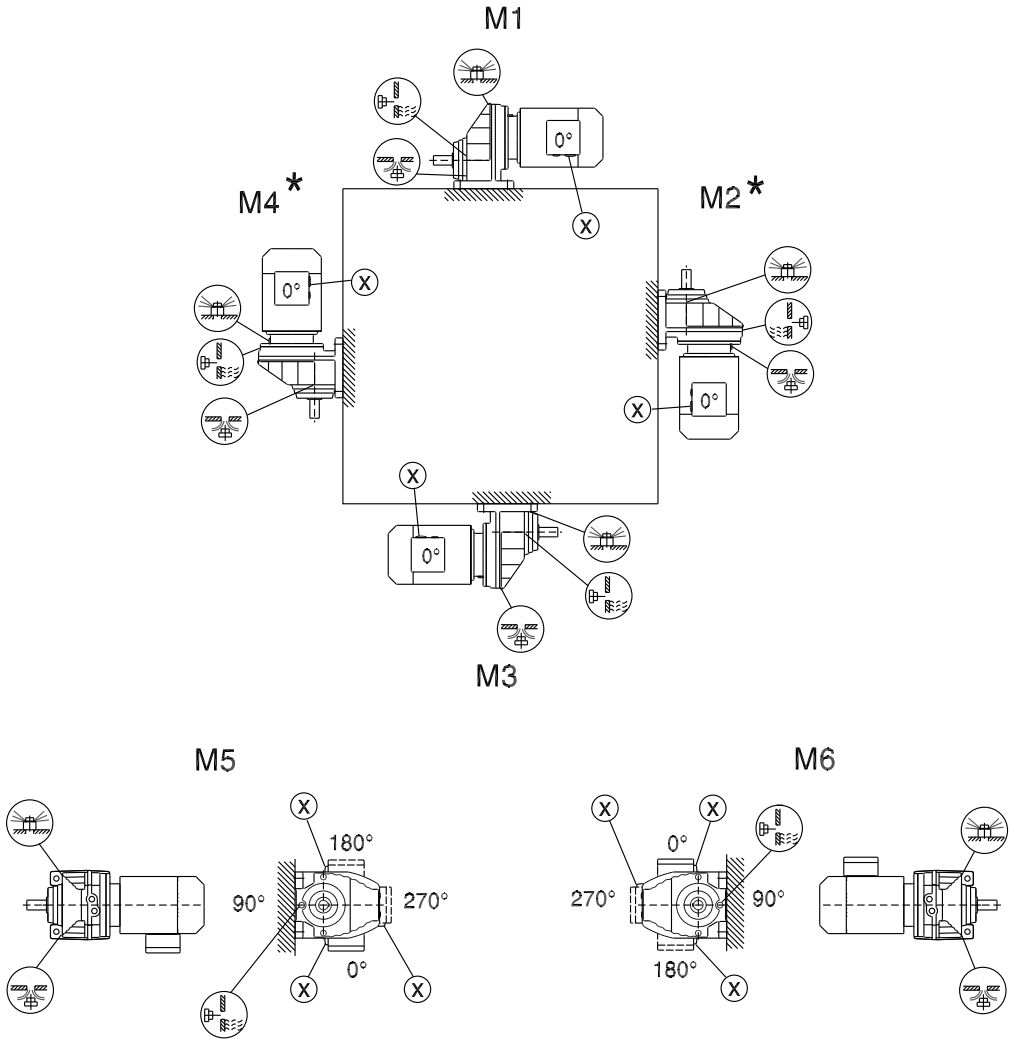

* → page 69

RXF57...RXF107

04 044 02 00

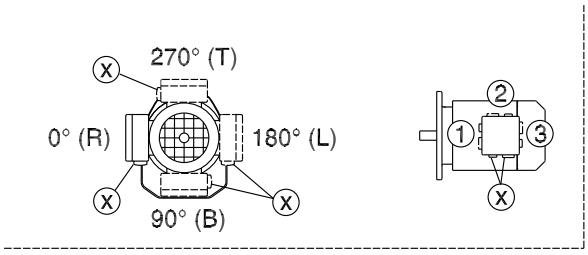

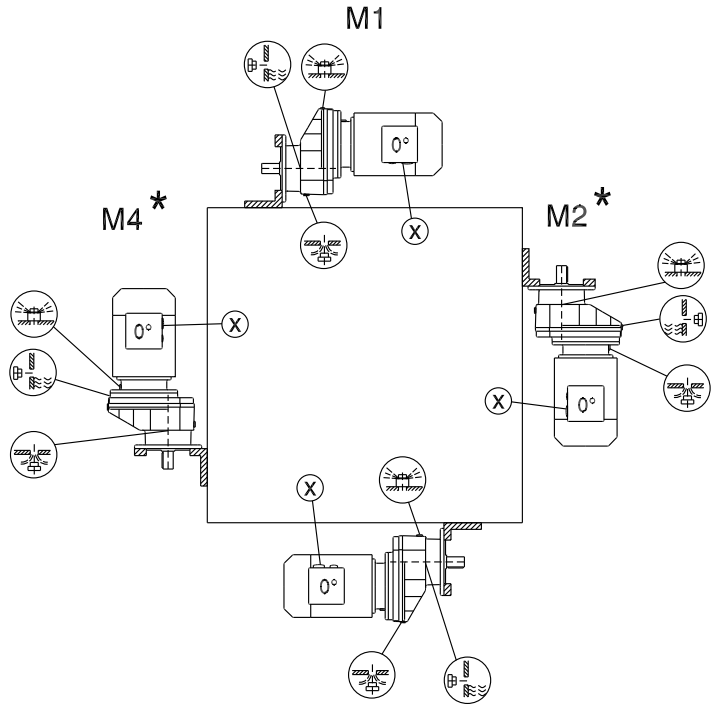

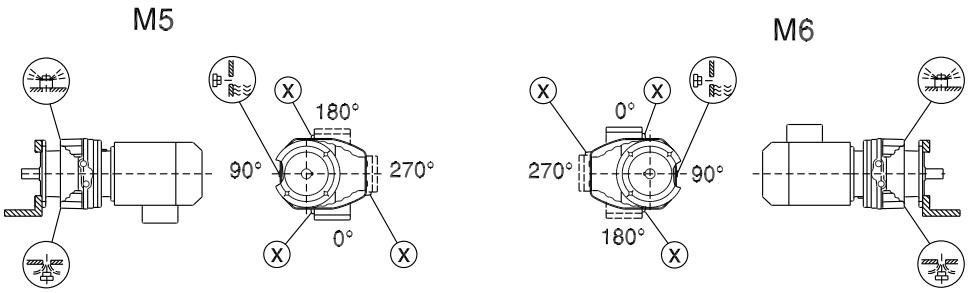

* → page 69

R07...R167

04 040 03 00

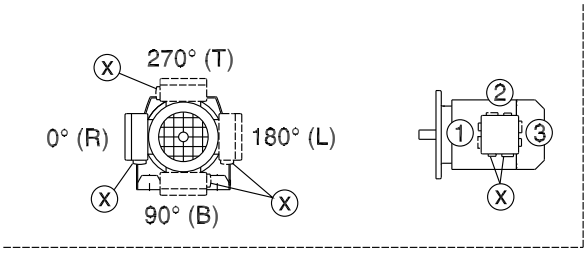

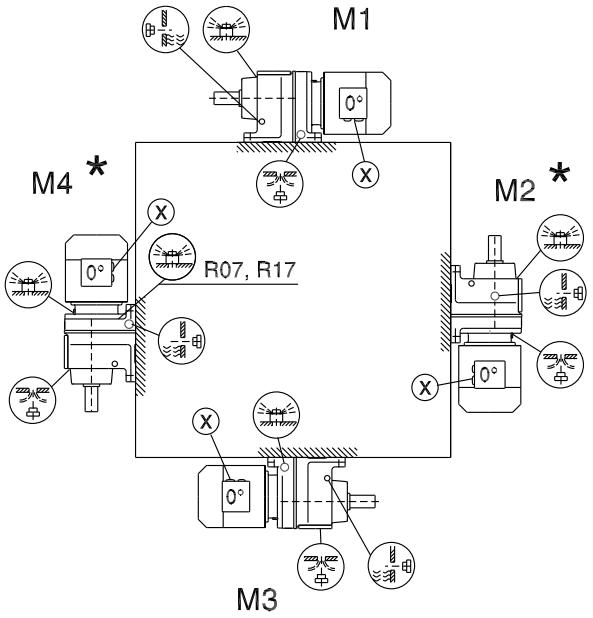

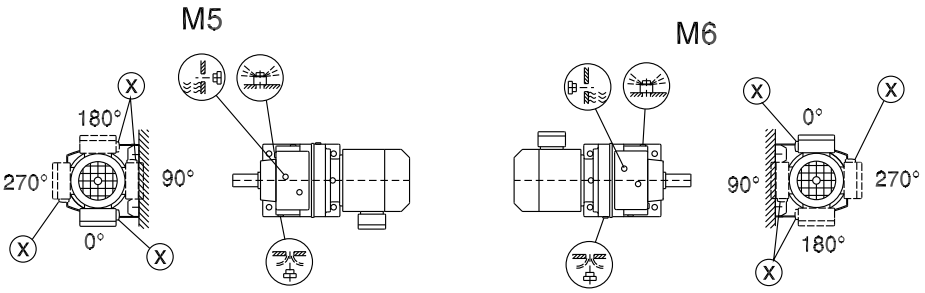

R07		M1, M2 , M3 , M5 , M6
R17, R27		M1, M3 , M5 , M6
R07, R17, R27		
R47, R57		M5

* → page 69

RF07...RF167, RZ07...RZ87

04 041 03 00

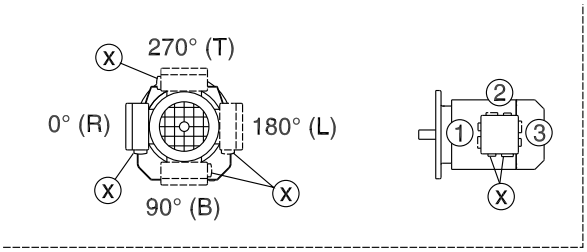

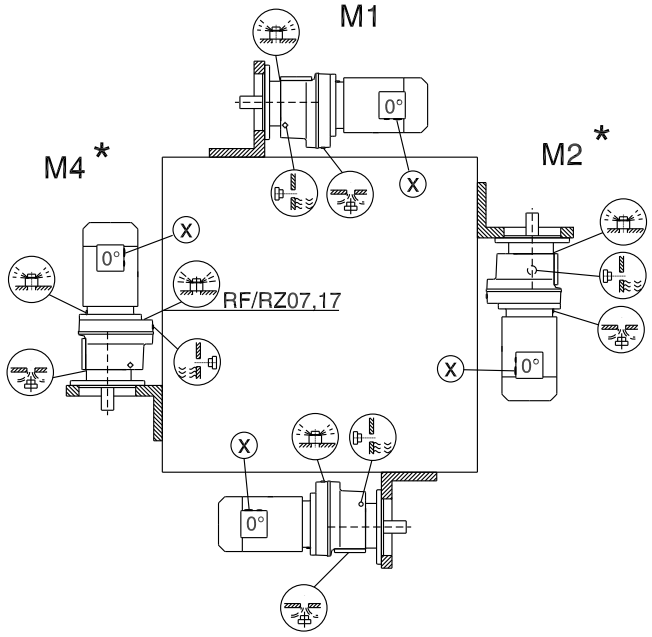

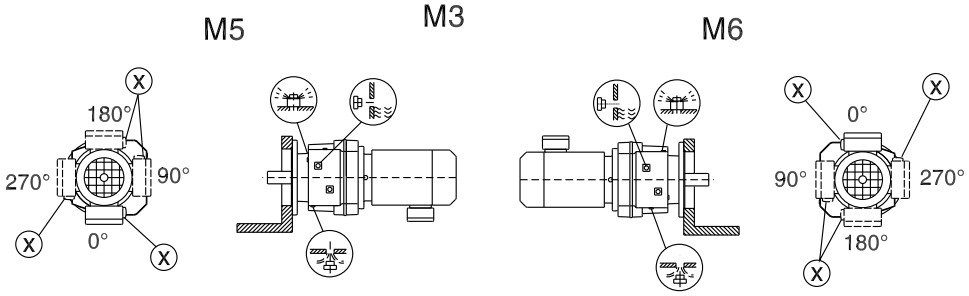

RF/RZ07		M1, M2 , M3 , M5 , M6
RF/RZ17,27		M1, M3 , M5 , M6
RF/RZ07, 17, 27		
RF/RZ47, 57		M5

* → page 69

R07F...R87F

04 042 03 00

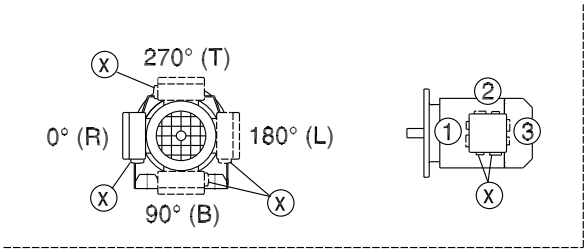

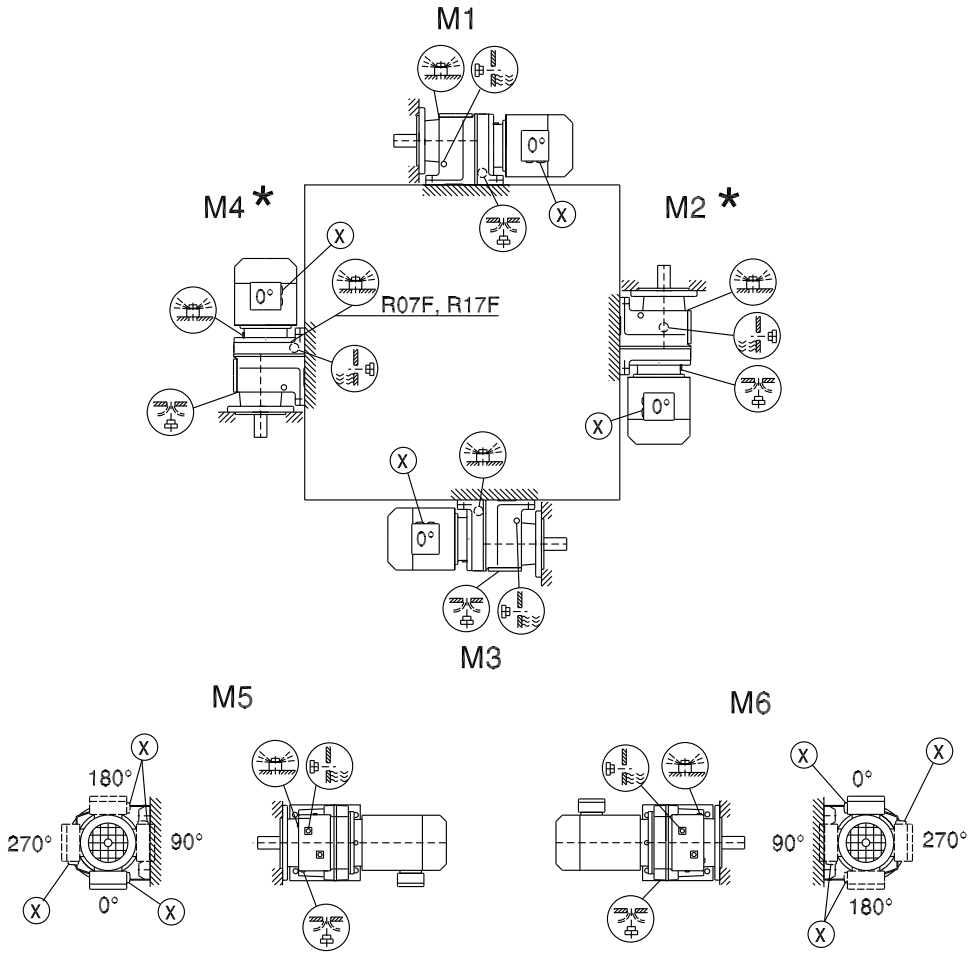

R07F		M1, M2 , M3 , M5 , M6
R17F, R27F		M1, M3 , M5 , M6
R07F, R17F, R27F		
R47F, R57F		M5

* → page 69

Important: See the (i) notes in the "Project planning / Overhung and axial loads" chapter (page 48).

5.7 Mounting positions of parallel shaft helical gear units

F/FA..B/FH27B...157B, FV27B...107B

42 042 03 00

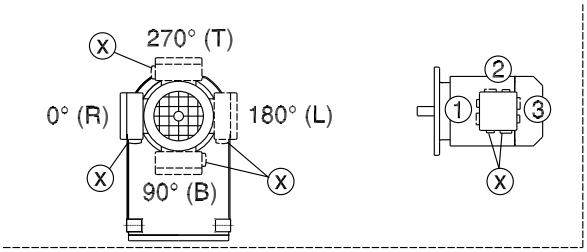

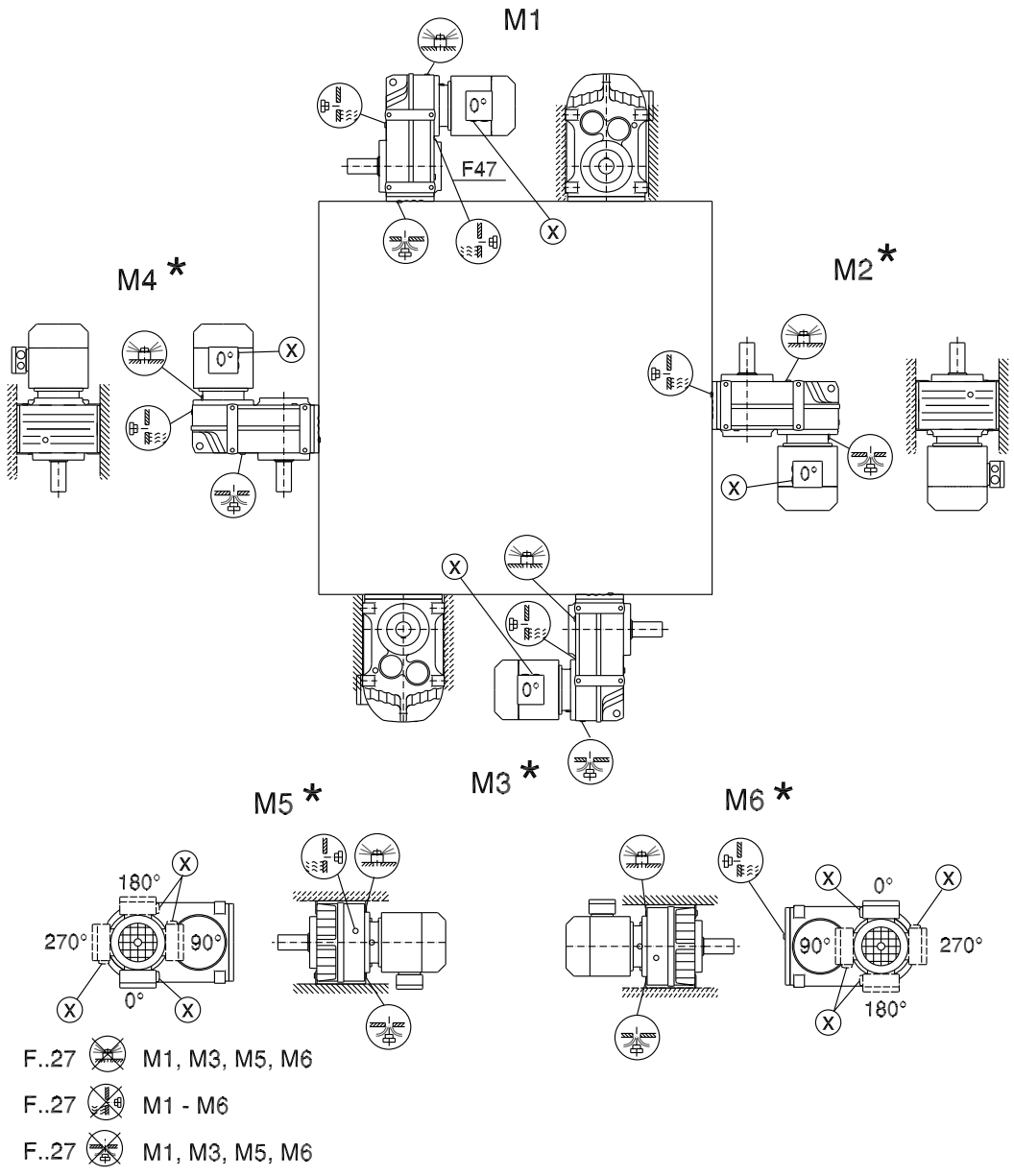

F..27 M1, M3, M5, M6

F..27 M1 - M6

F..27 M1, M3, M5, M6

* → page 69

FF/FAF/FHF/FAZ/FHZ27...157, FVF/FVZ27...107

42 043 03 00

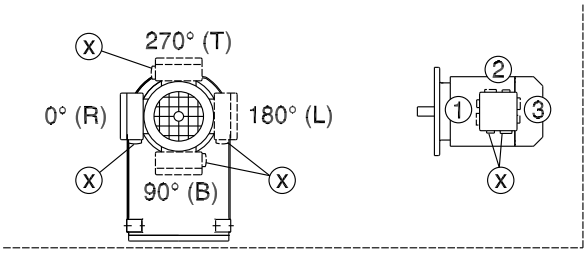

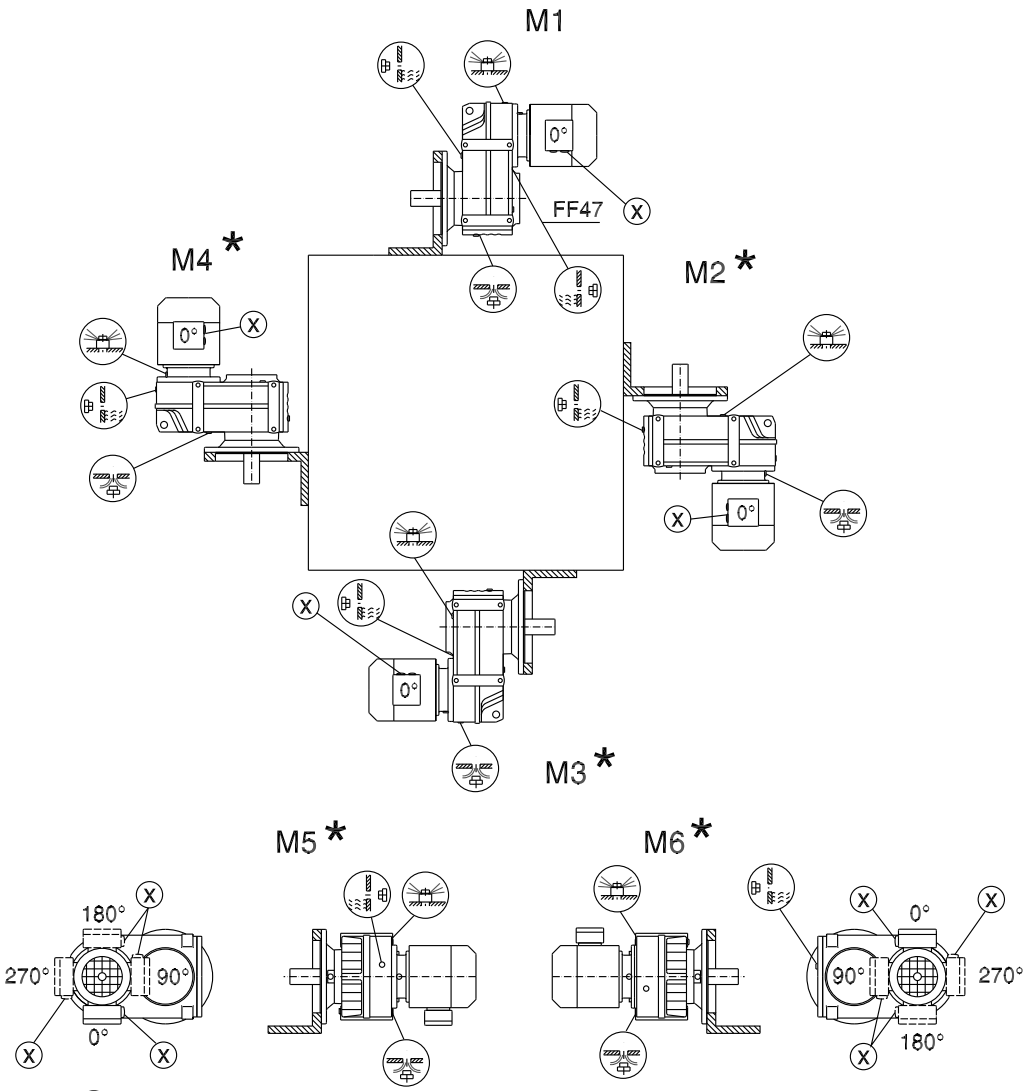

F..27 M1, M3, M5, M6

F..27 M1 - M6

F..27 M1, M3, M5, M6

* → page 69

FA/FH27...157, FV27...107, FT37...97

42 044 03 00

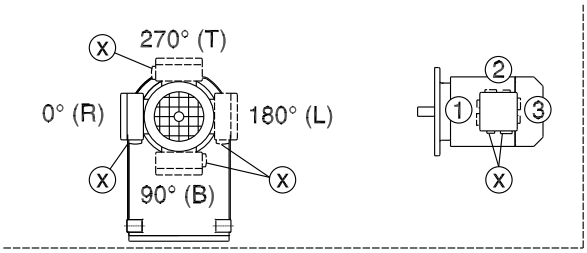

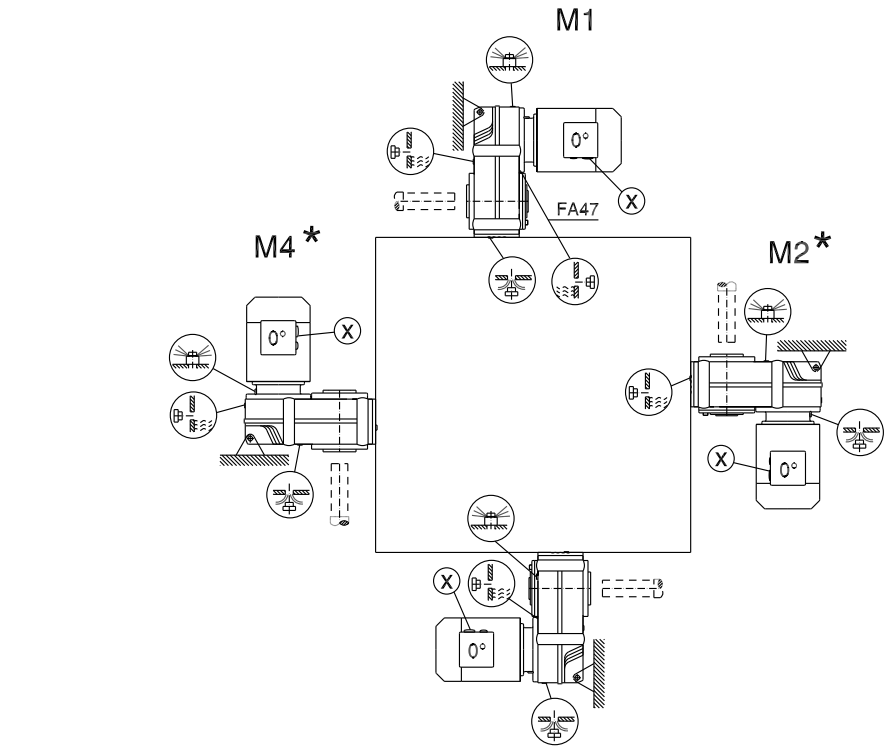

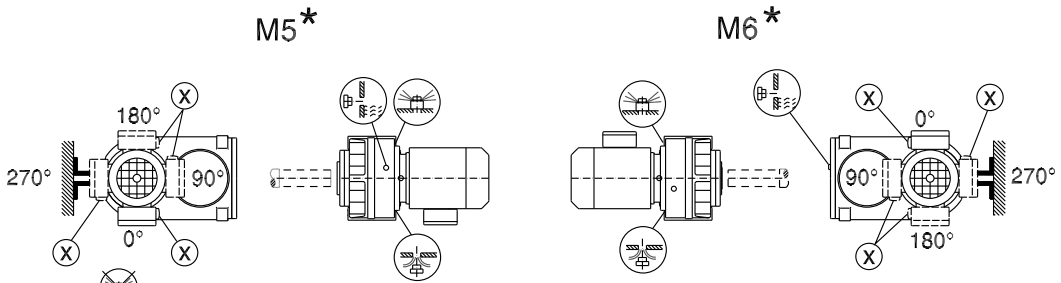

F..27 M1, M3, M5, M6

F..27 M1 - M6

F..27 M1, M3, M5, M6

* → page 69

5.8 Mounting positions of helical-bevel gear units

K/KA..B/KH37B...157B, KV37B...107B

34 025 03 00

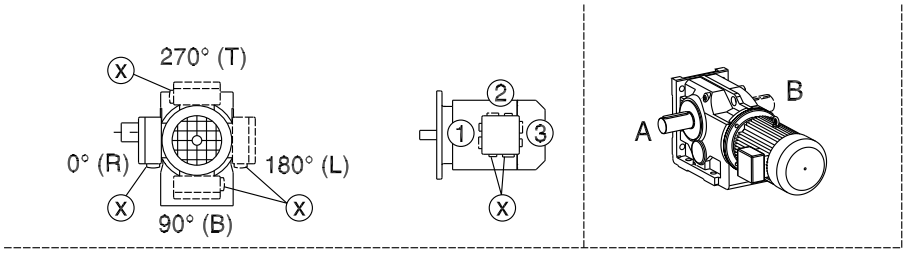

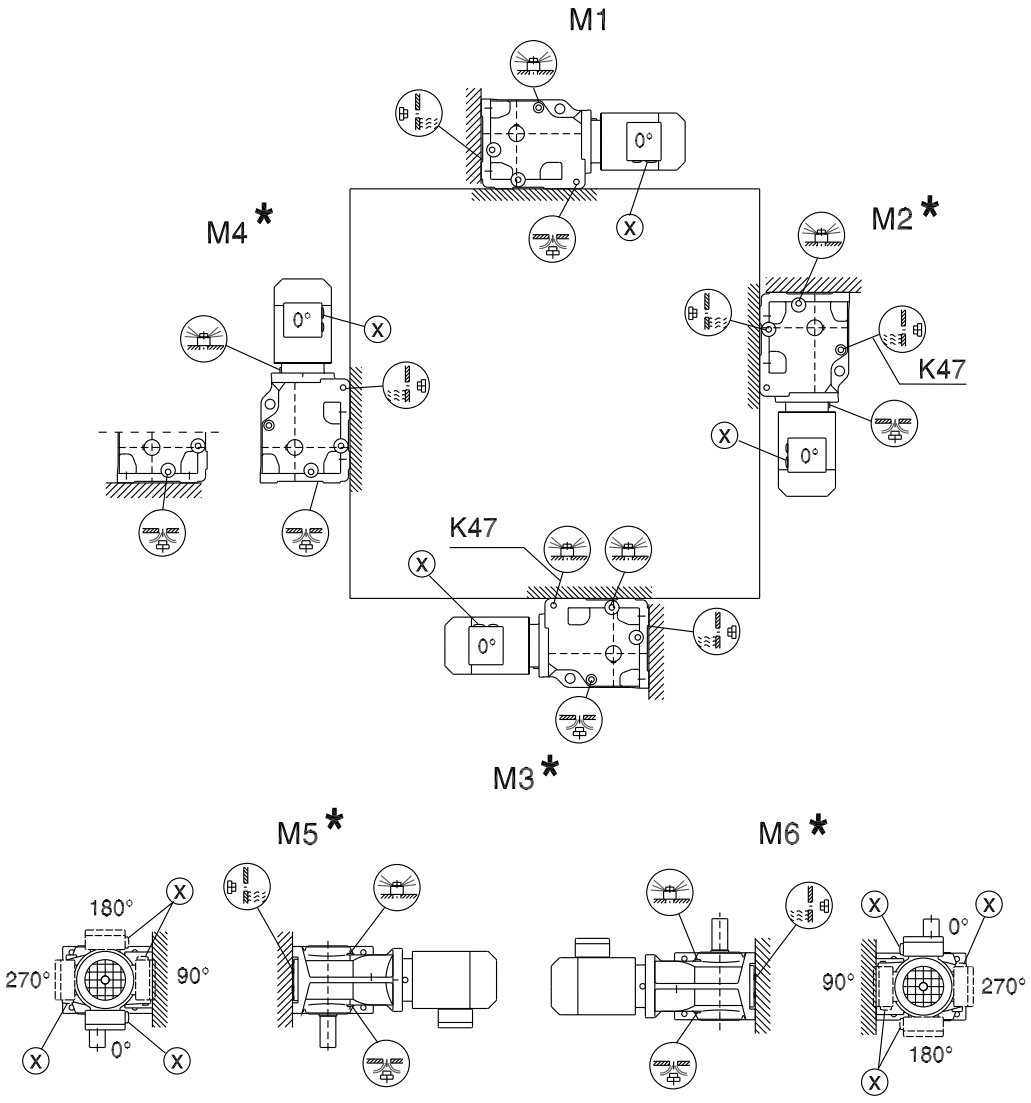

* → page 69

Important: See the (i) notes in the "Project planning / Overhung and axial loads" chapter (page 48).

K167...187, KH167B...187B

34 026 03 00

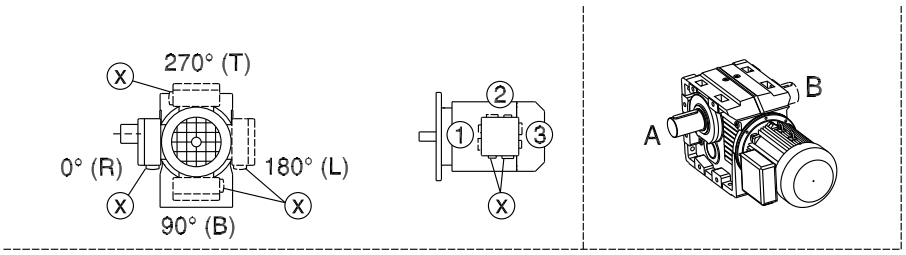

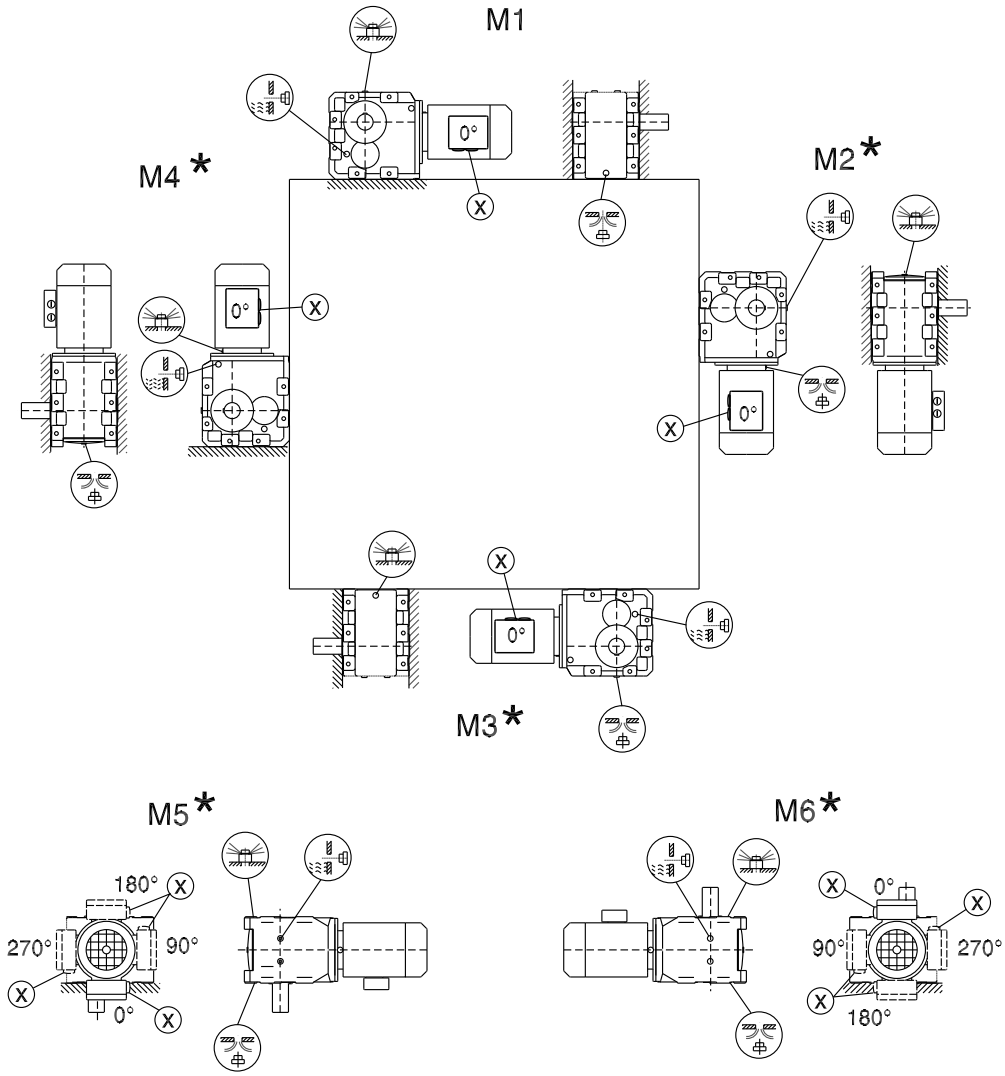

* → page 69

Important: See the (i) notes in the "Project planning / Overhung and axial loads" chapter (page 48).

KF/KAF/KHF/KAZ/KHZ37...157, KVF/KVZ37...107

34 027 03 00

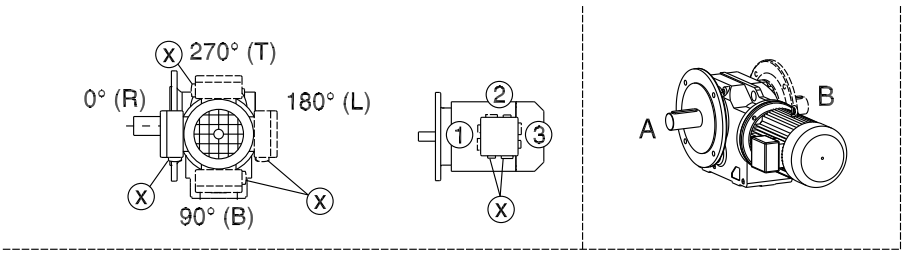

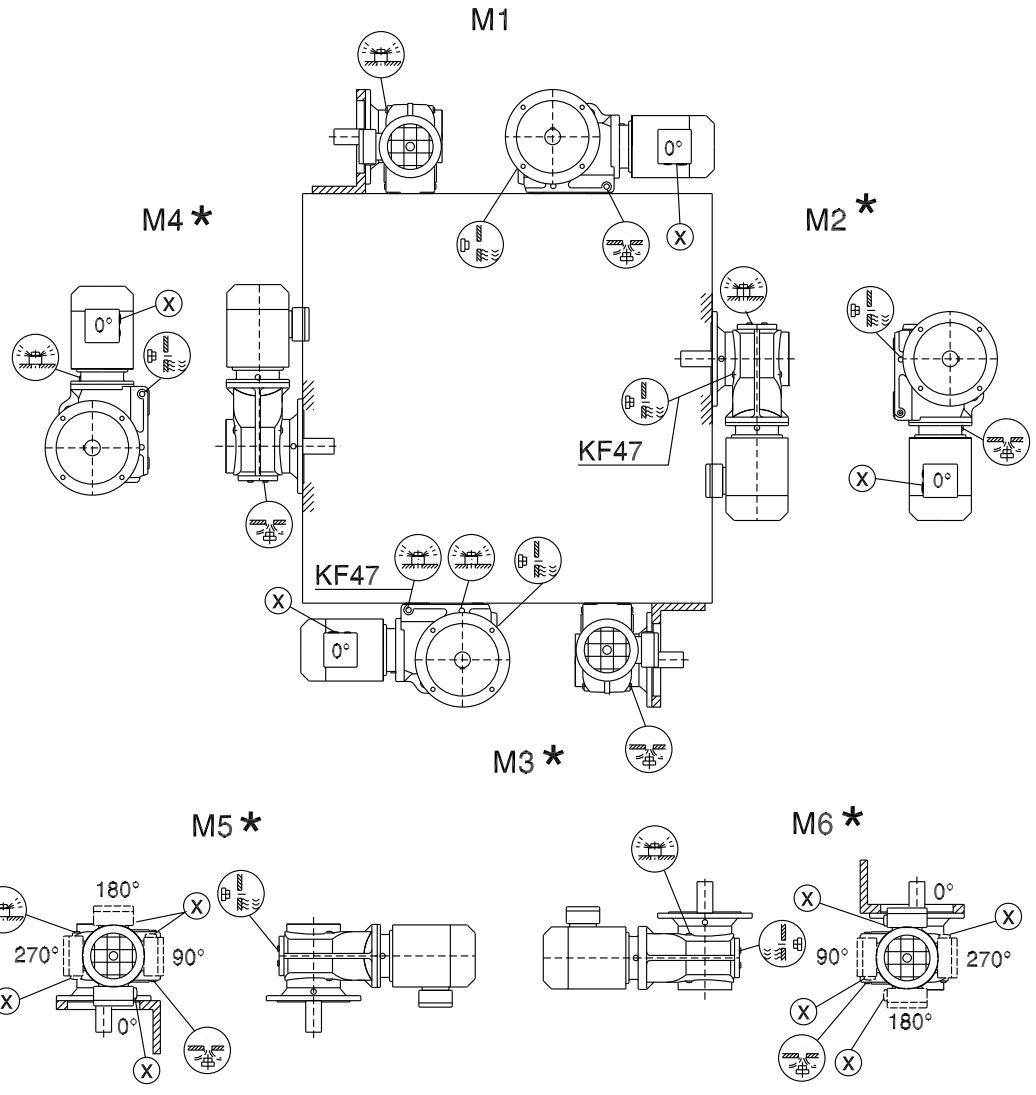

* → page 69

KA/KH37...157, KV37...107, KT37...97

39 025 04 00

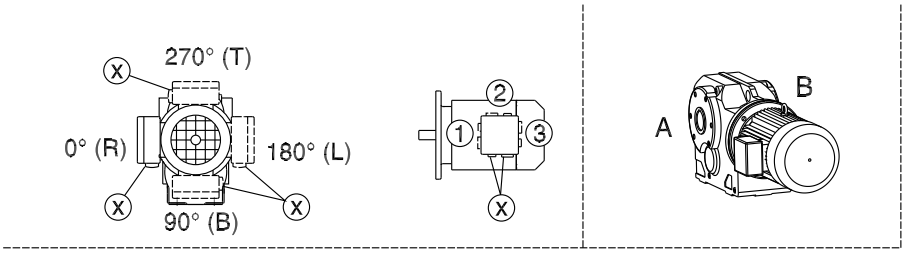

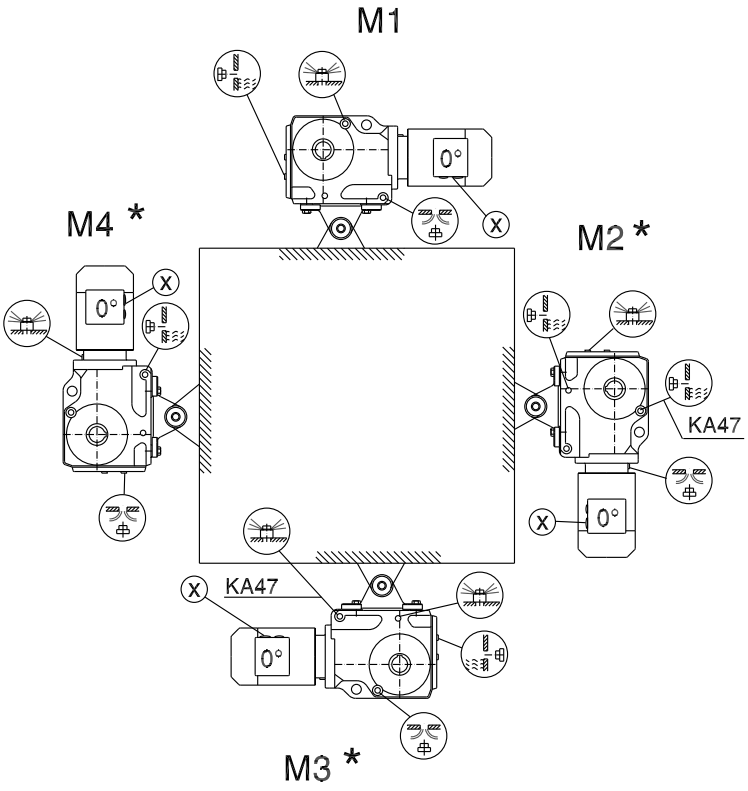

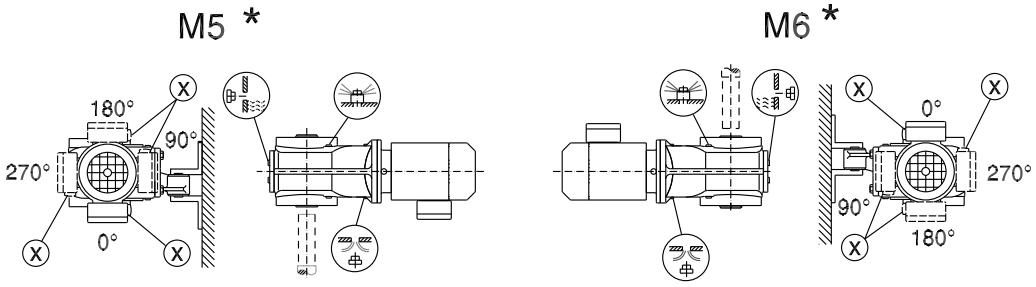

* → page 69

KH167...187

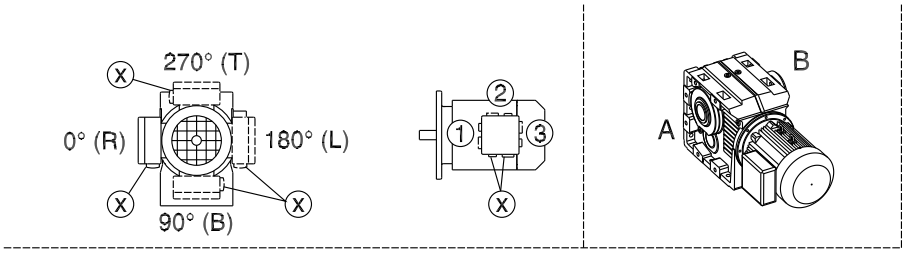

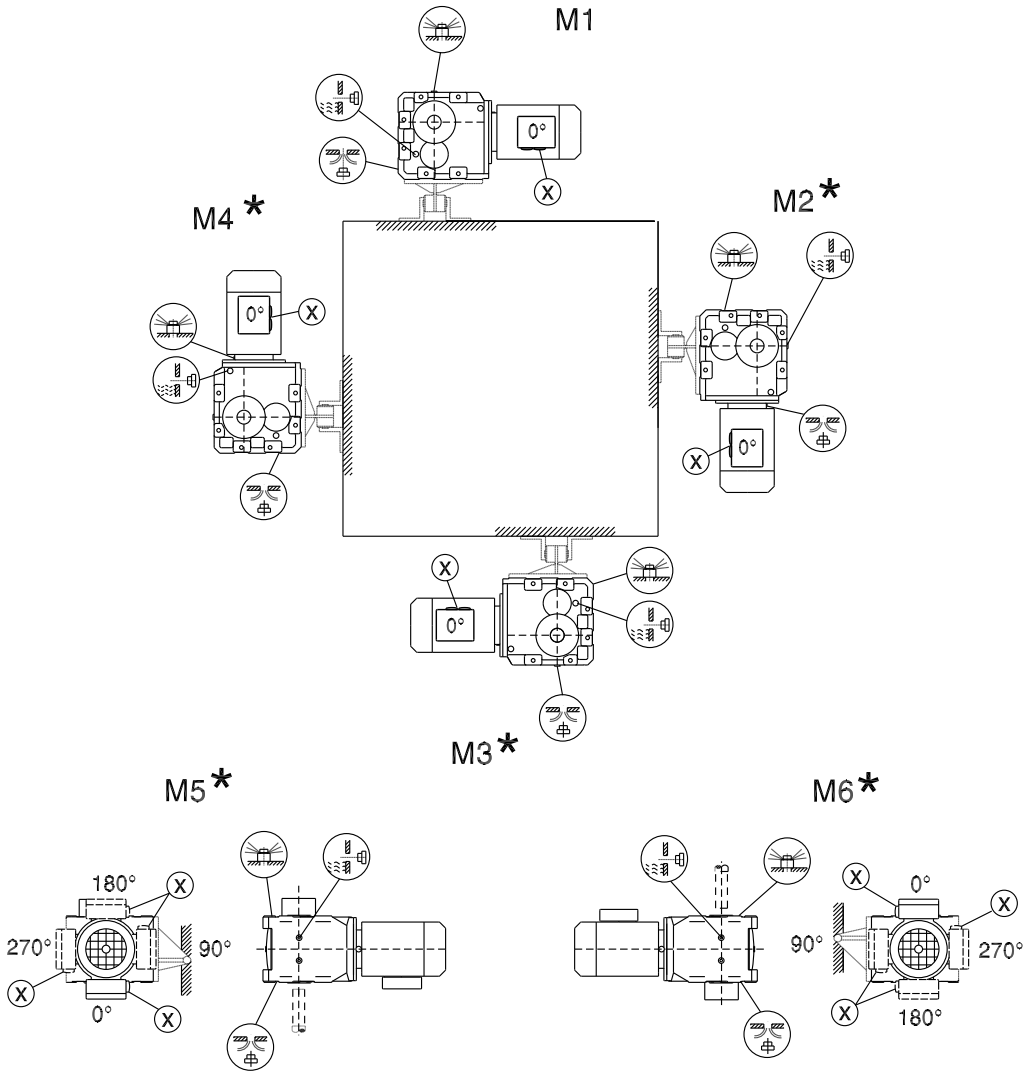

* → page 69

5.9 Mounting positions of helical-worm gear units

S37

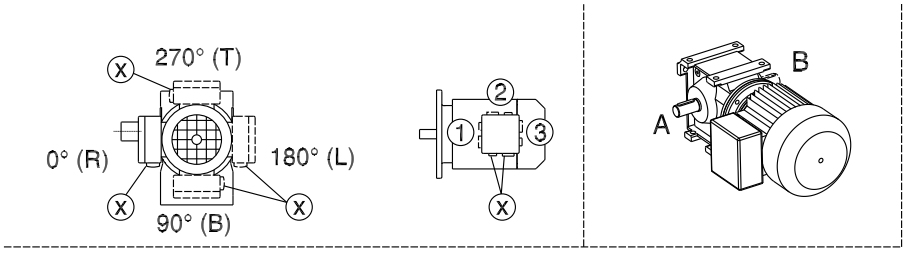

05 025 03 00

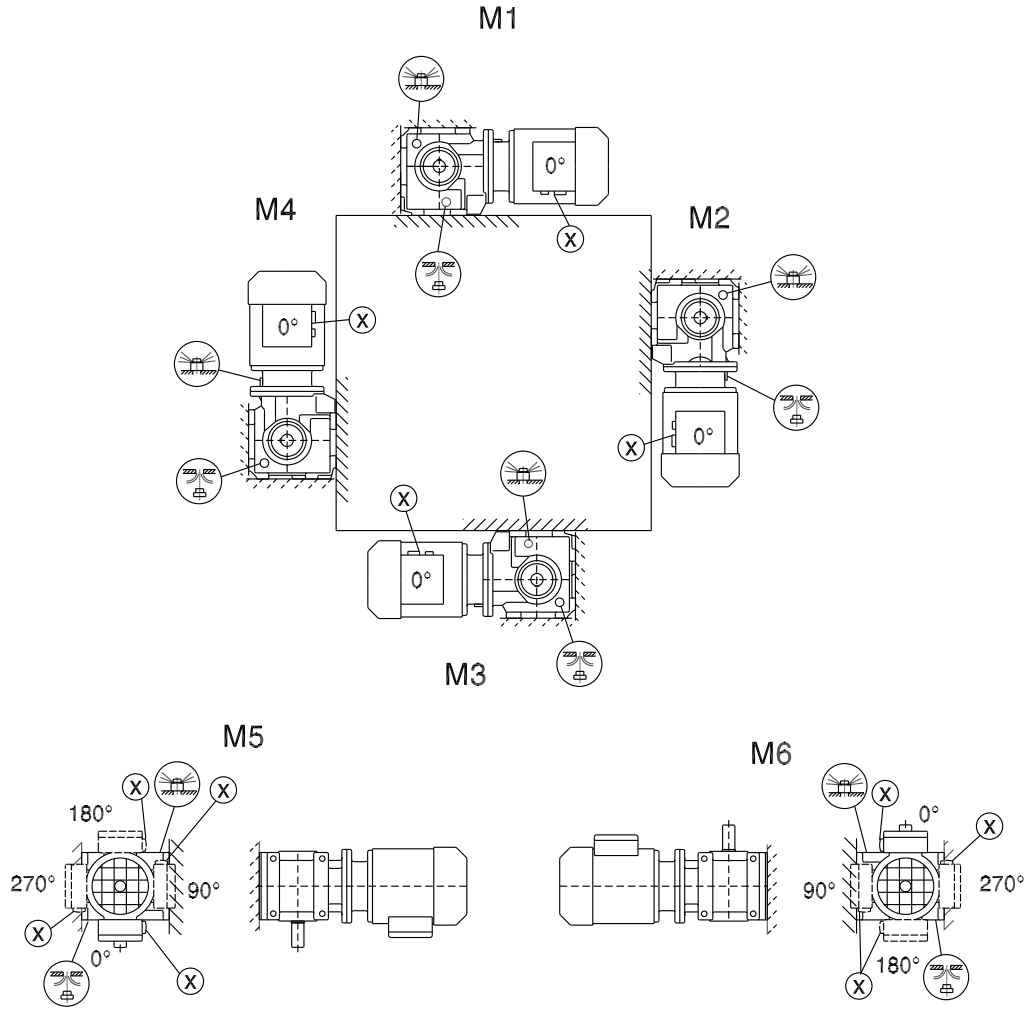

* → page 69

Important: See the (i) notes in the "Project planning / Overhung and axial loads" chapter (page 48).

S47...S97

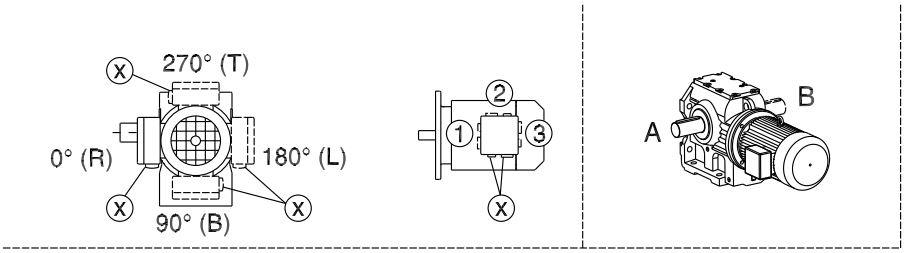

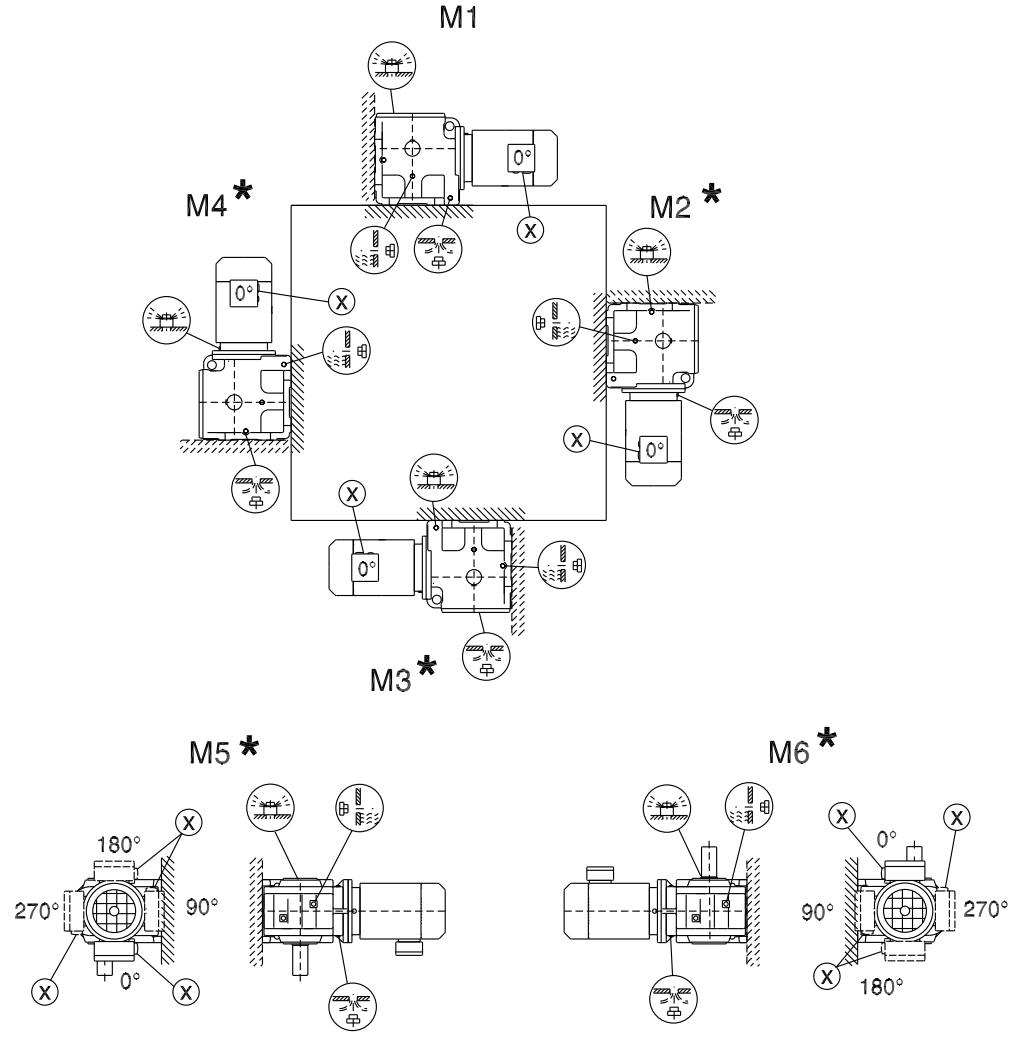

* → page 69

Important: See the (i) notes in the "Project planning / Overhung and axial loads" chapter (page 48).

SF/SAF/SHF37

05 027 03 00

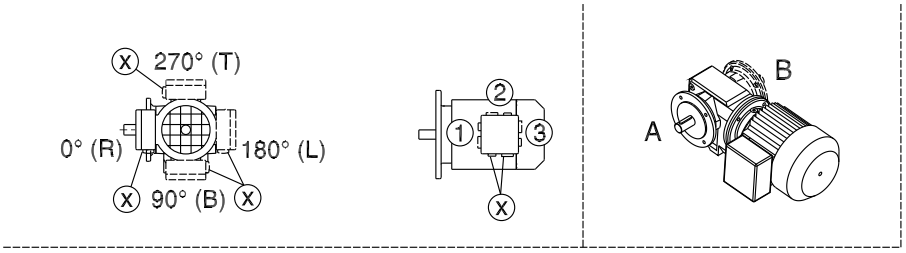

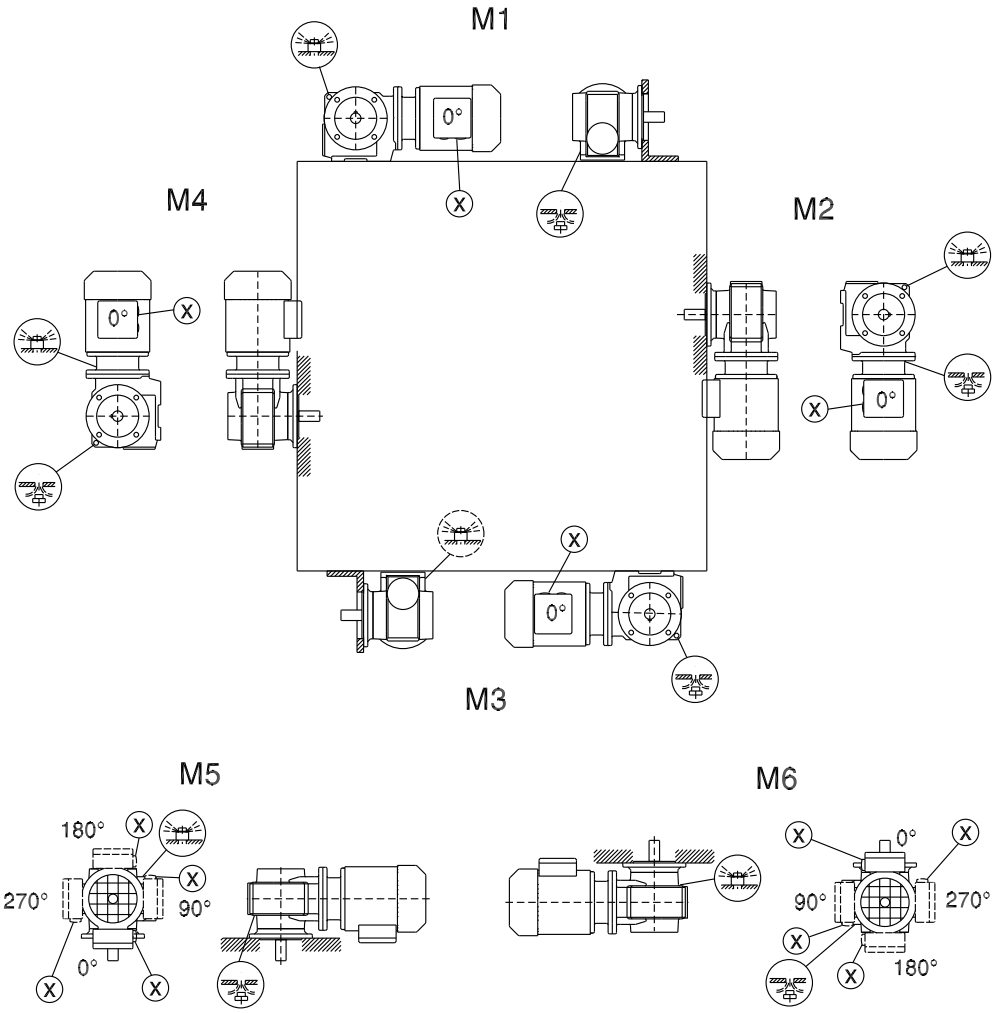

* → page 69

SF/SAF/SHF/SAZ/SHZ47...97

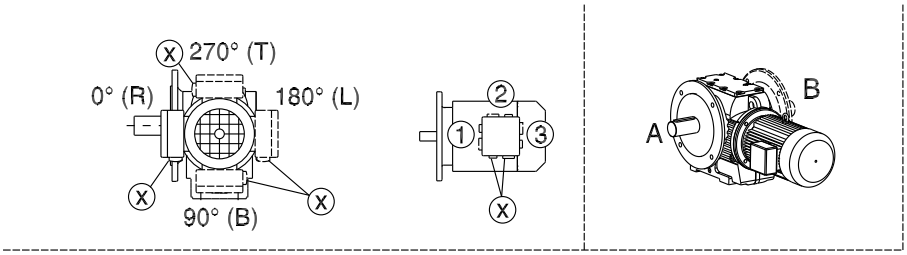

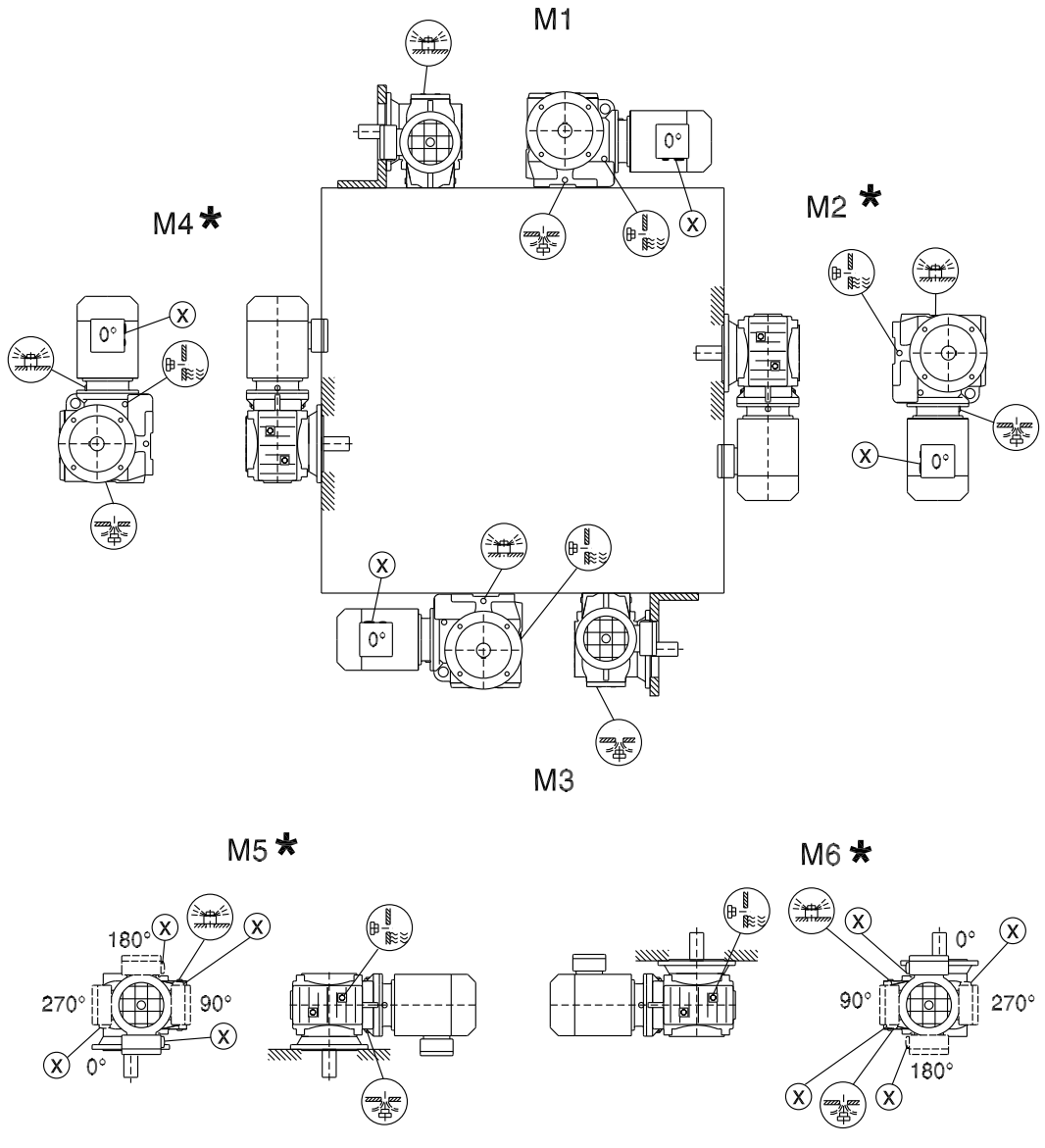

* → page 69

SA/SH/ST37

28 020 04 00

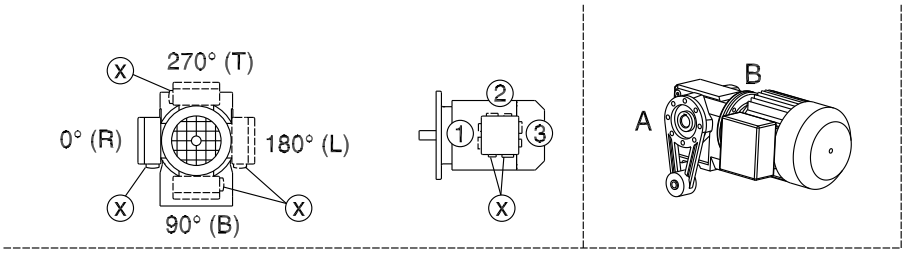

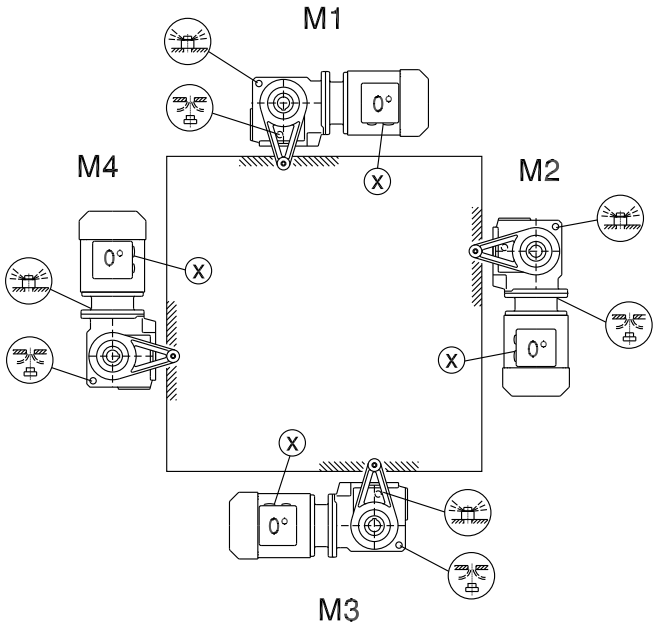

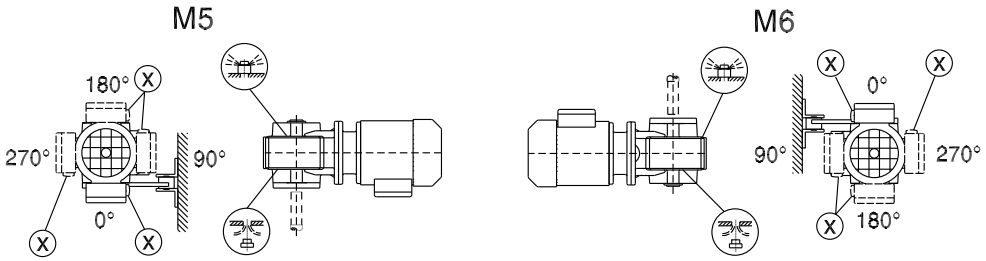

* → page 69

SA/SH/ST47...97

28 021 03 00

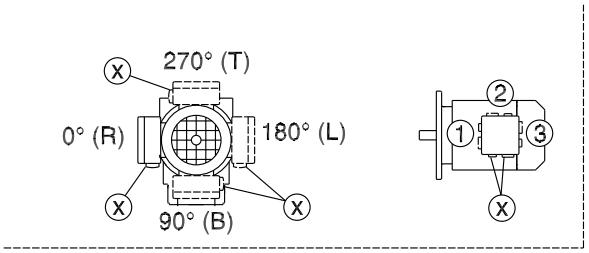

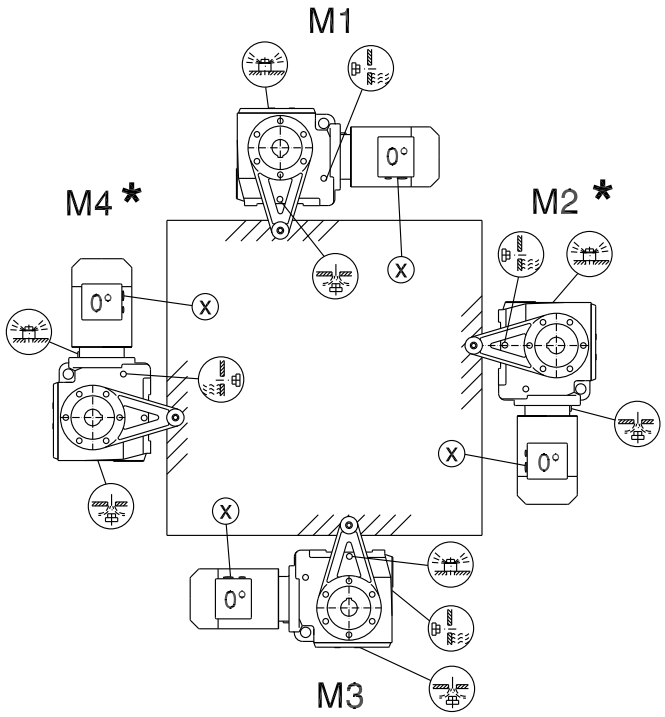

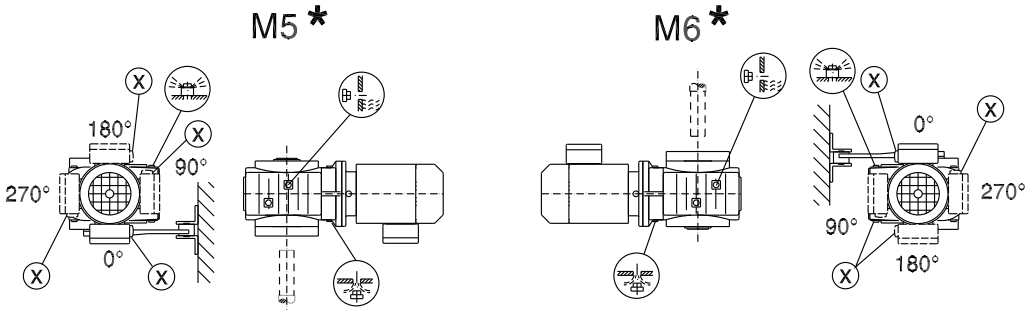

* → page 69

5.10 Mounting positions of SPIROPLAN® gear units

W/WA.7B/WH.7B

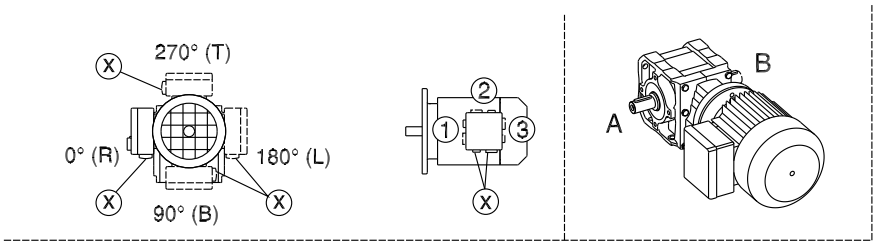

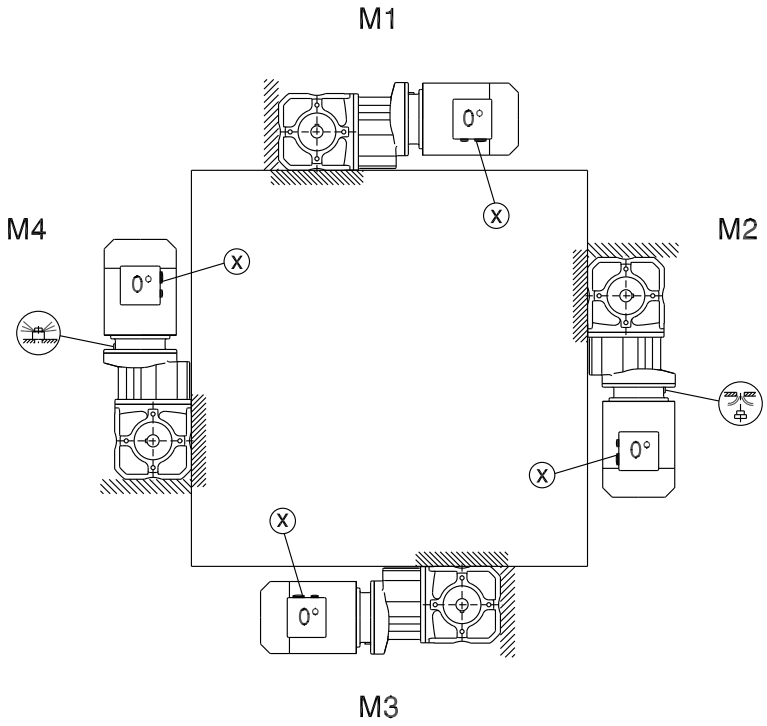

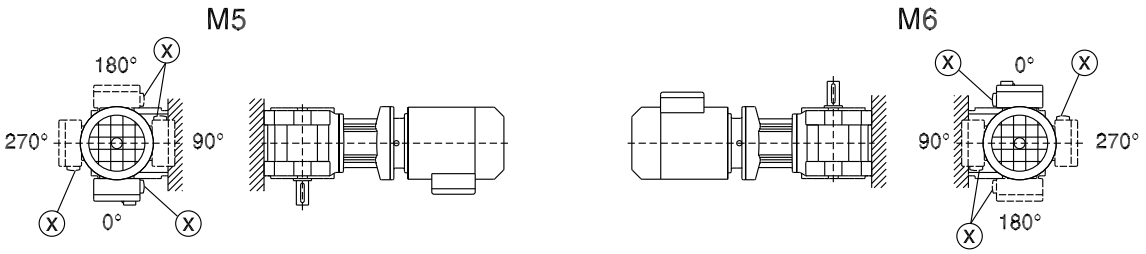

→ page 69

WF/WAF/WHF.7

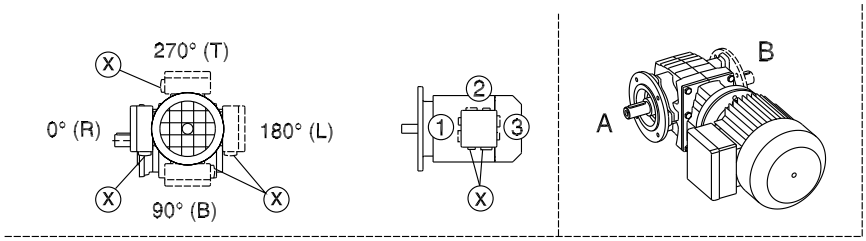

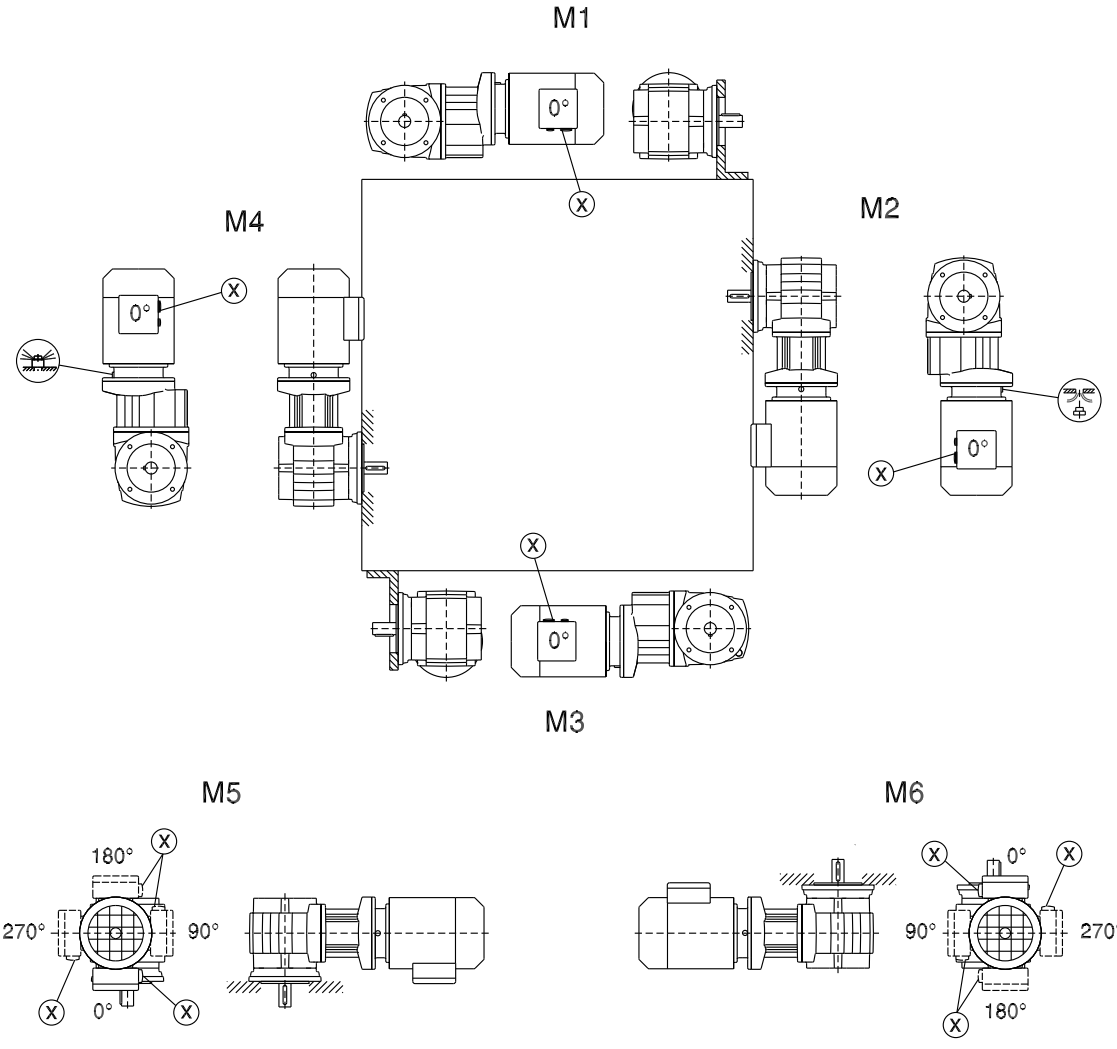

→ page 69

WA/WH/WT.7

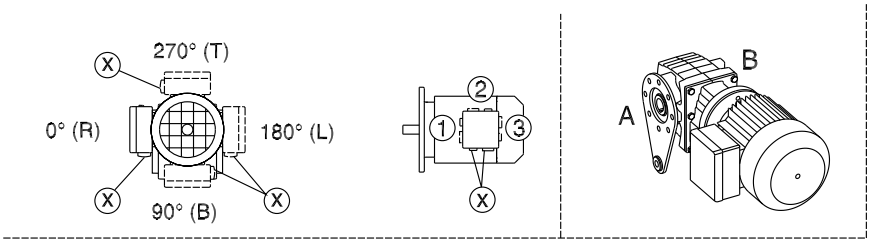

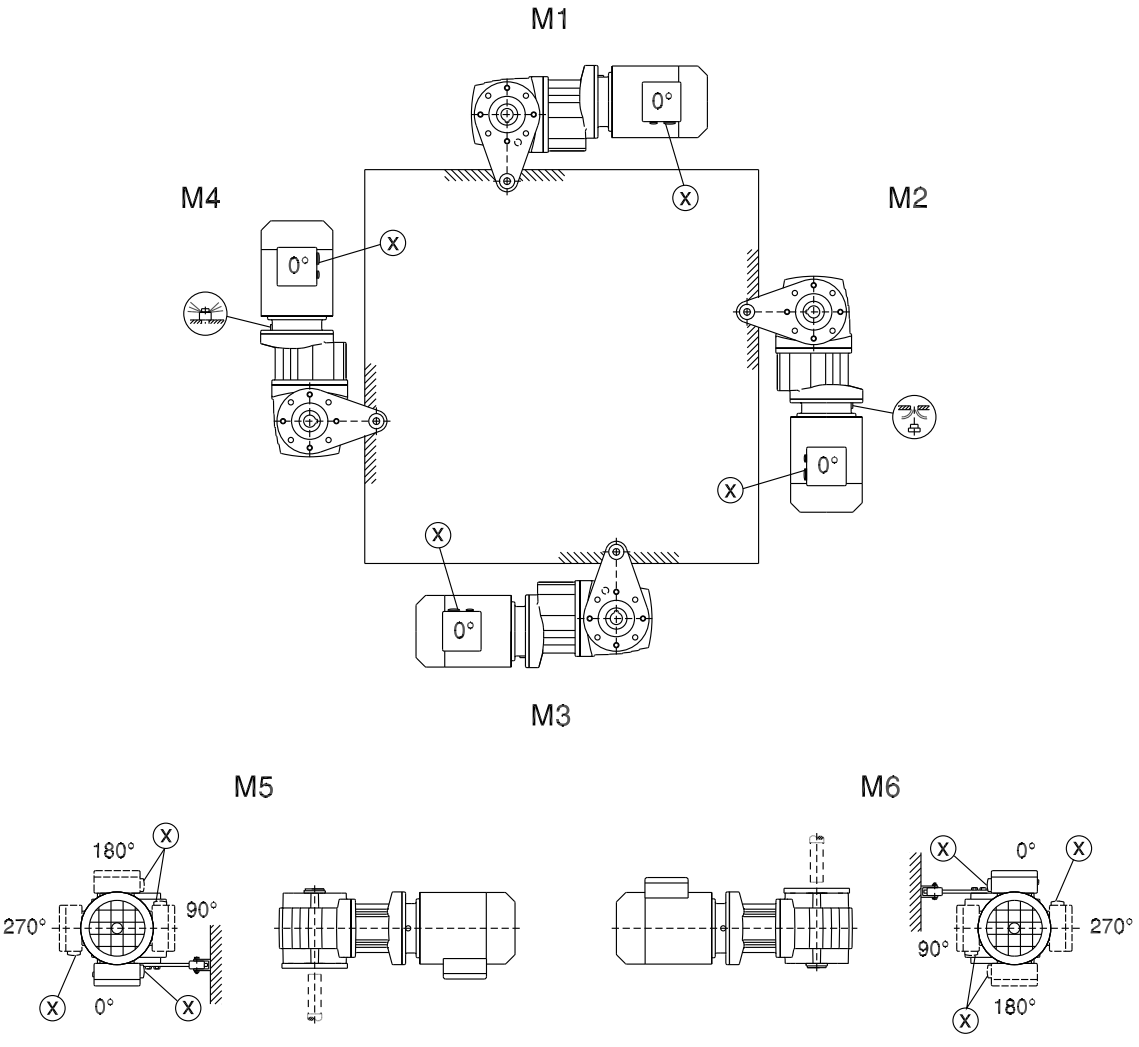

→ page 69

5.11 Mounting positions of BS.F helical-bevel gear units

BS.F202...802

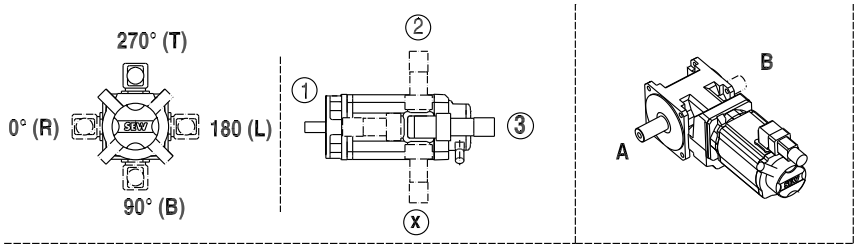

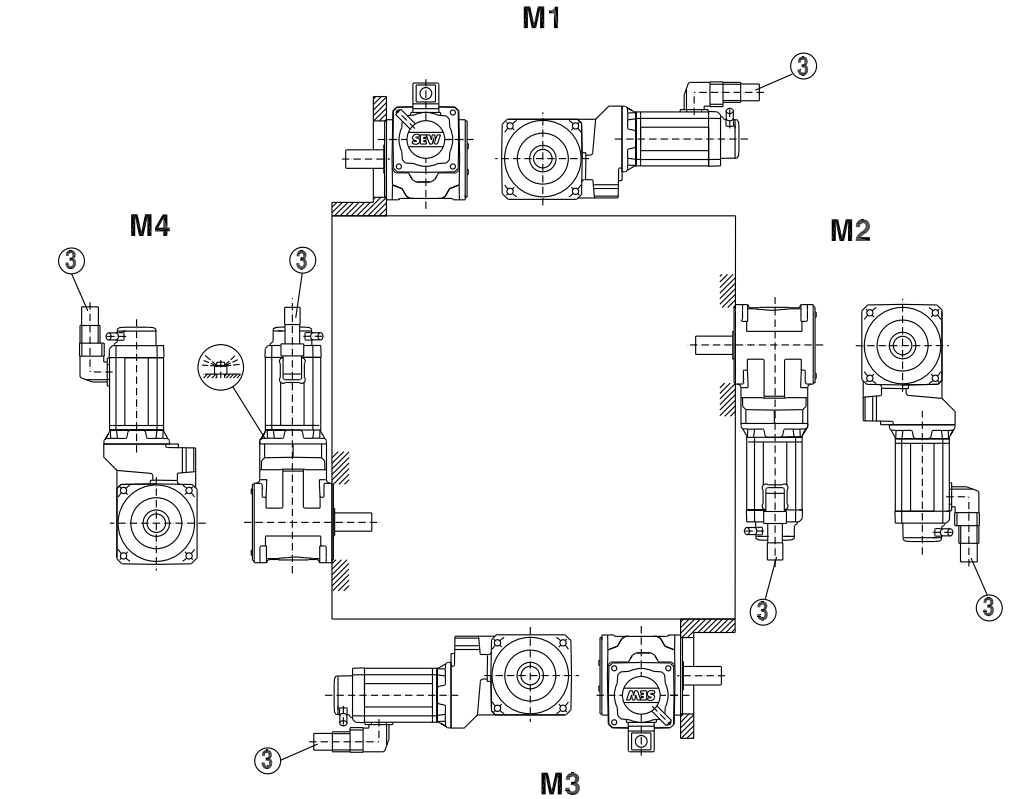

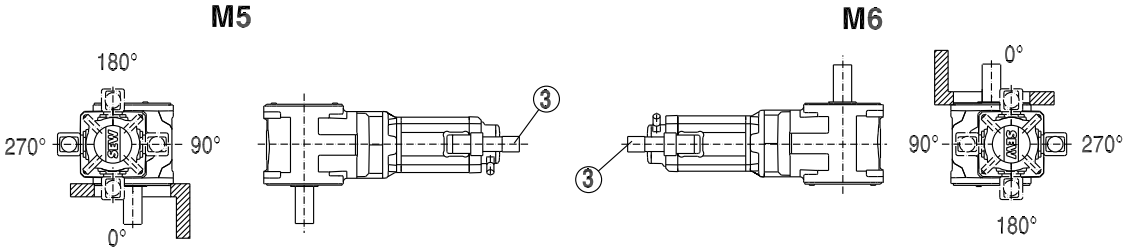

3 → page 68

BSBF202...802

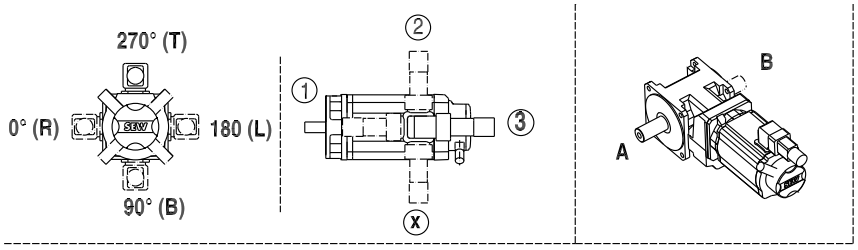

56 038 00 03

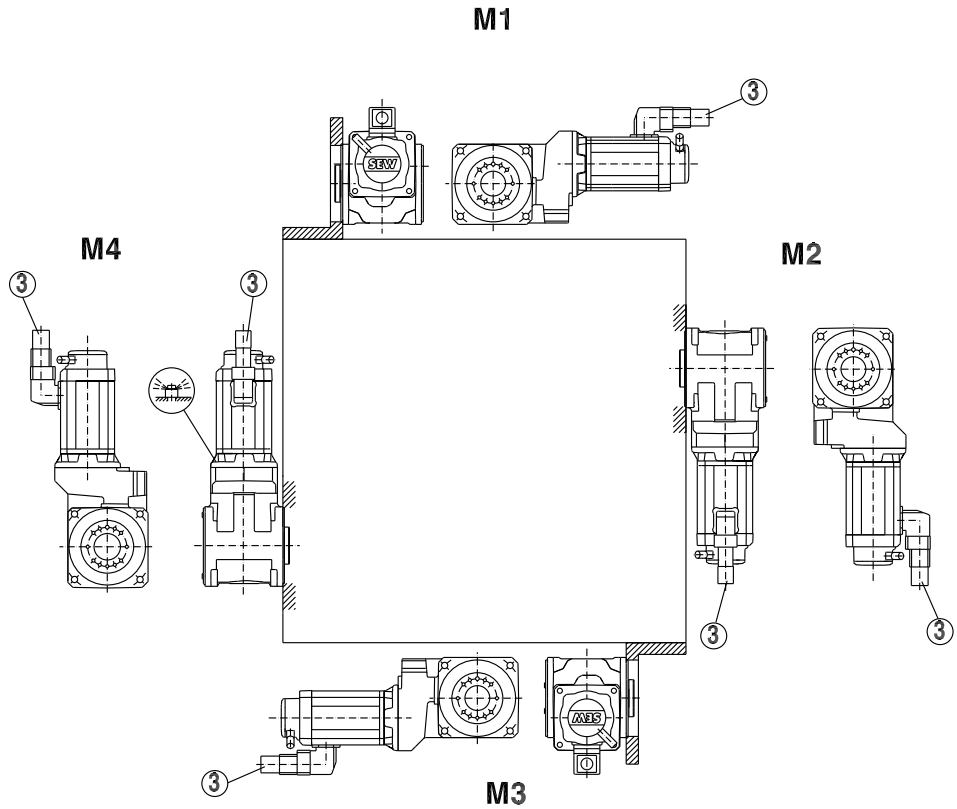

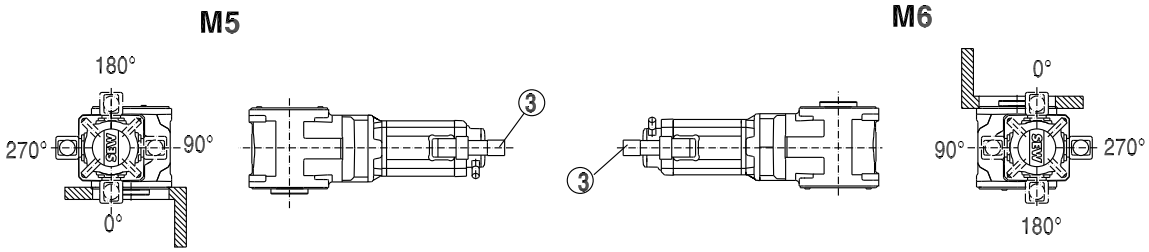

3 → page 68

BSHF202...802

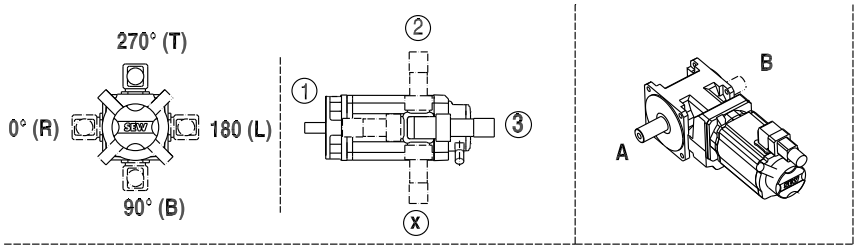

56 056 00 03

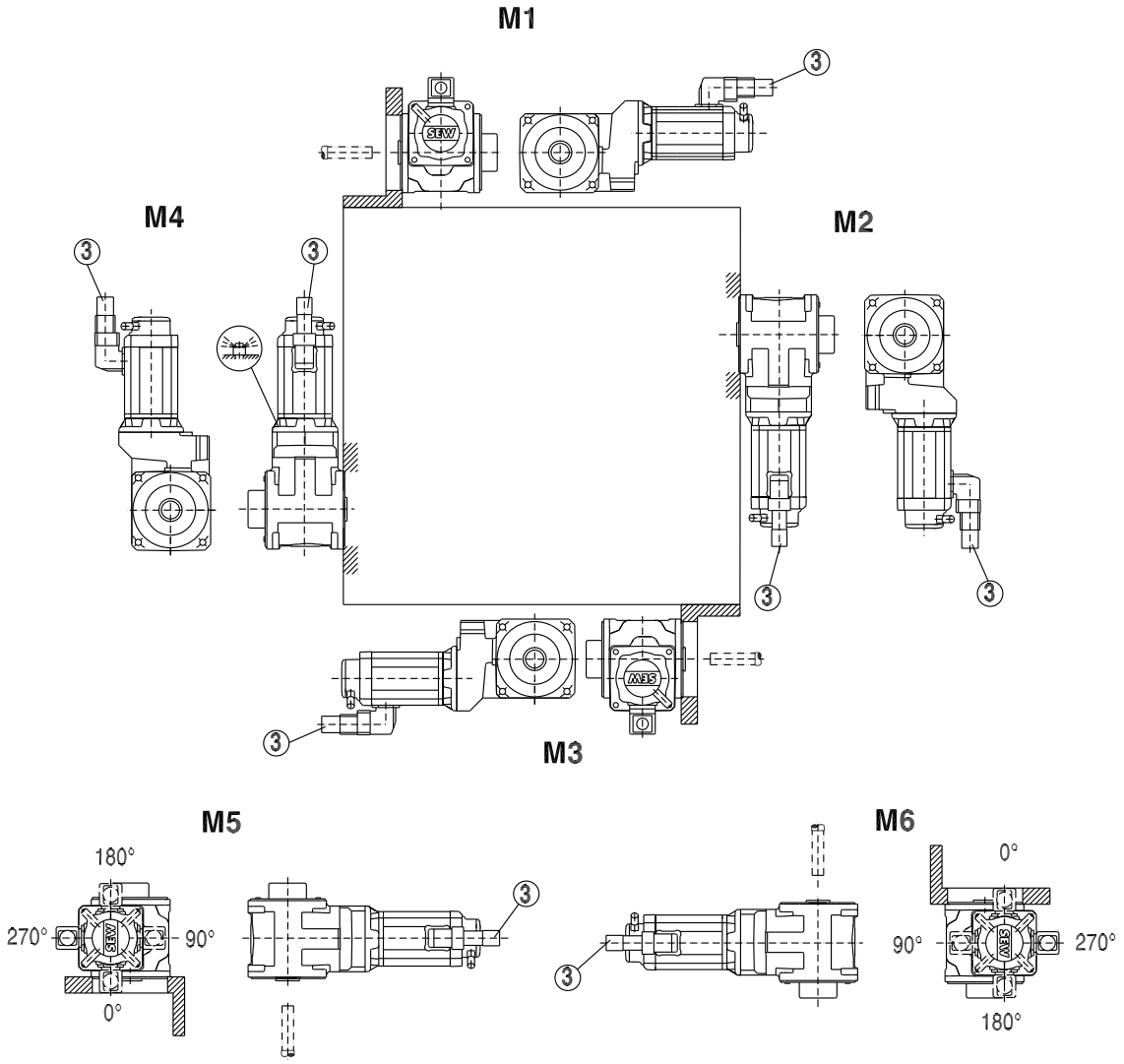

3 → page 68

BSHF202...802 /I

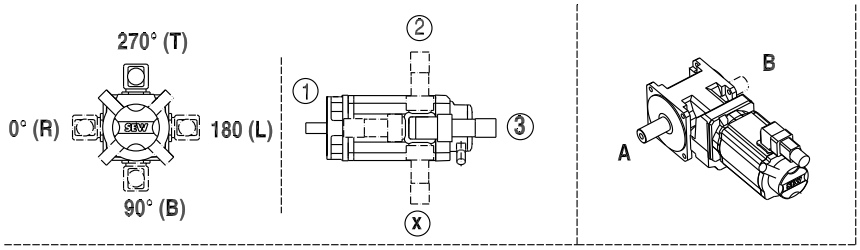

56 039 00 03

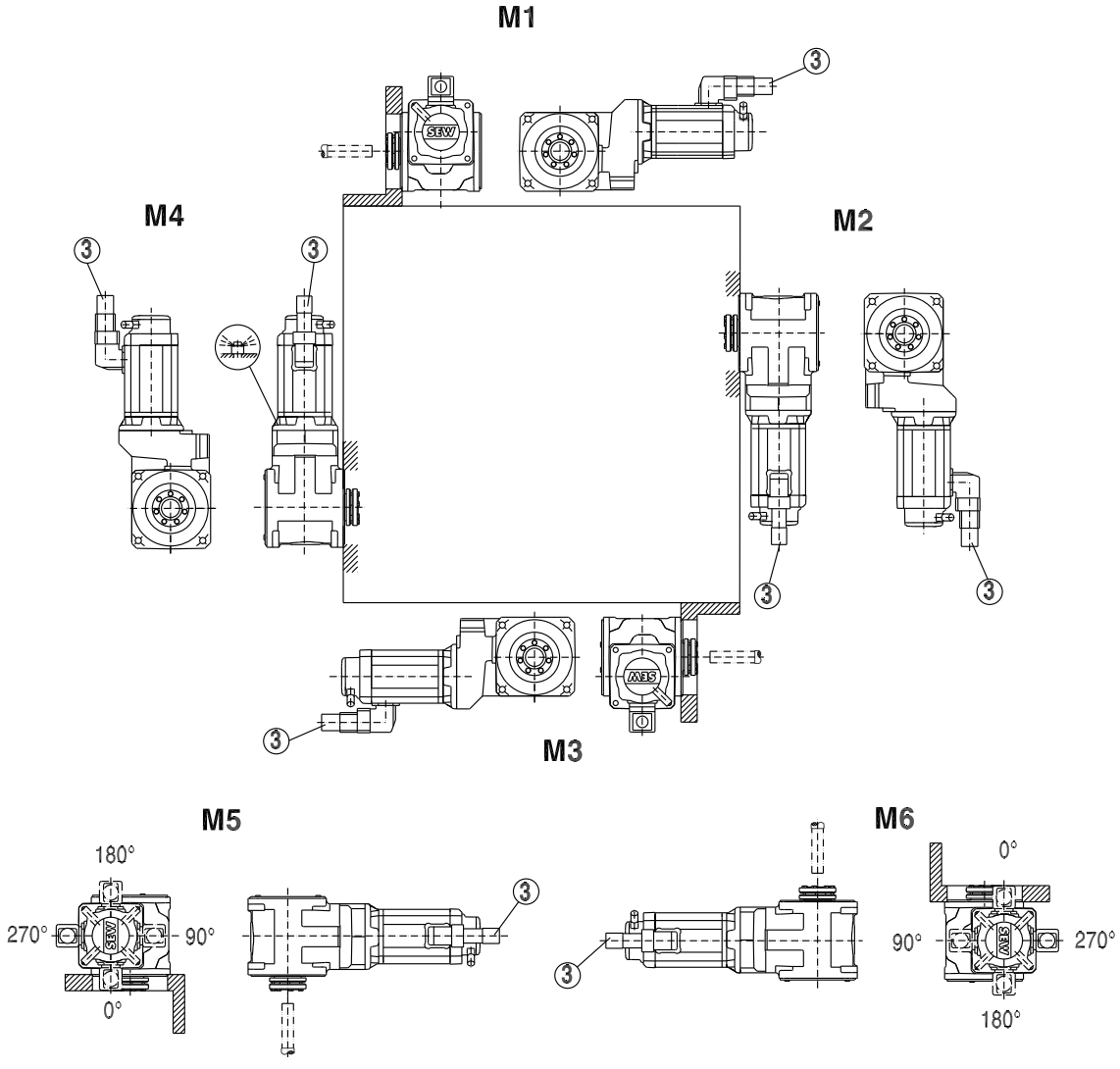

3 → page 68

BSHF202...802 /T

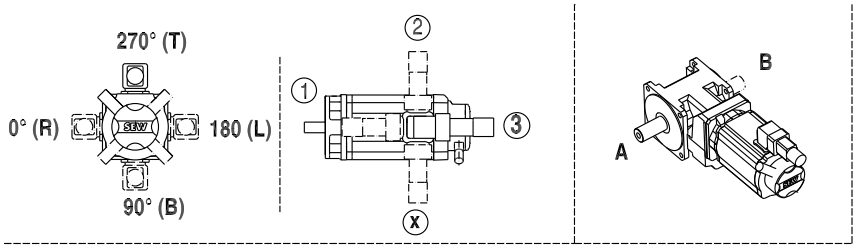

56 043 00 03

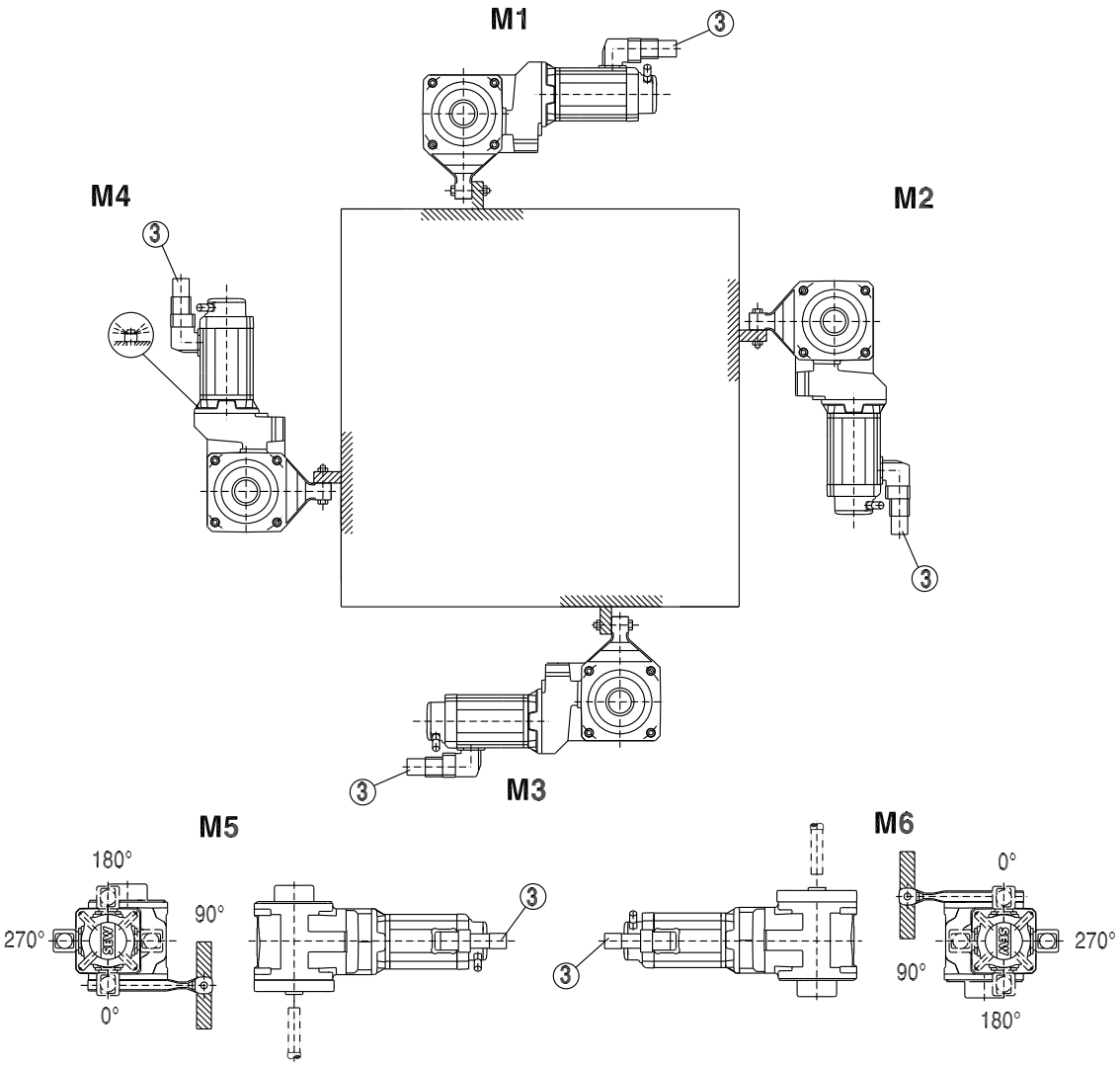

3 → page 68

BS.F202...802B

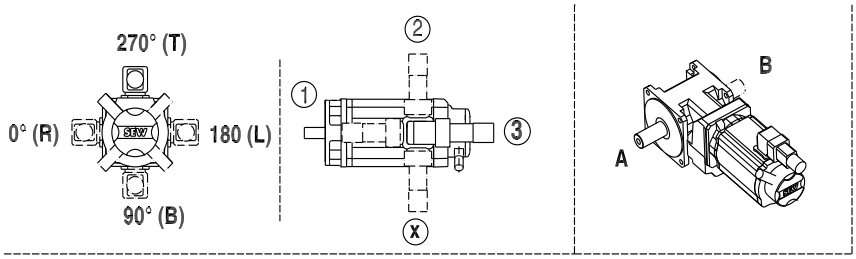

56 040 00 03

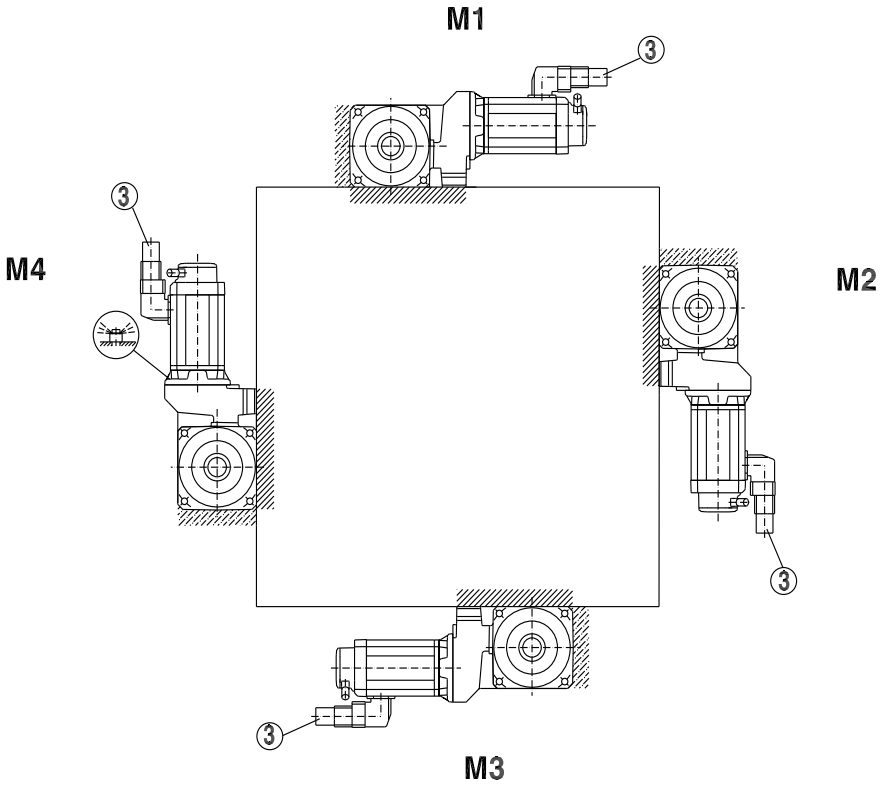

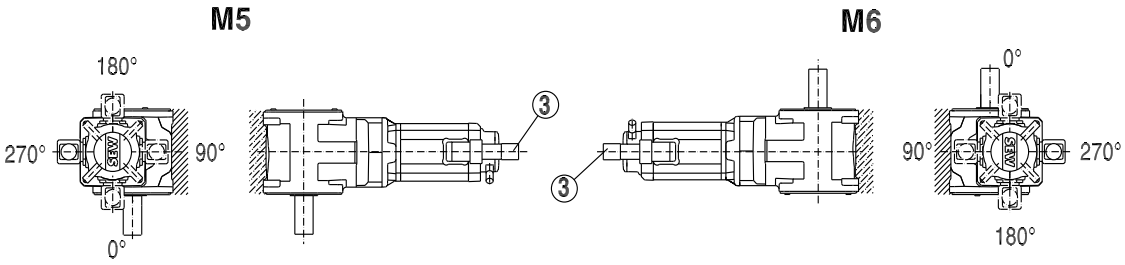

3 → page 68

BSBF202...802B

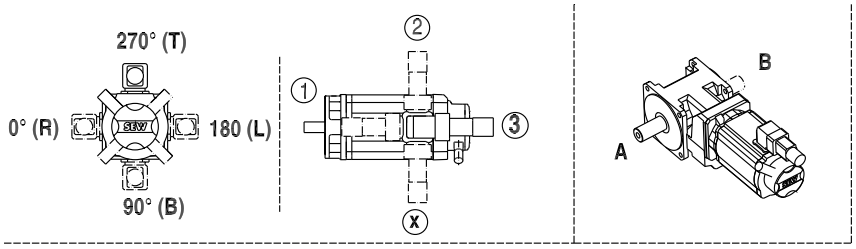

56 041 00 03

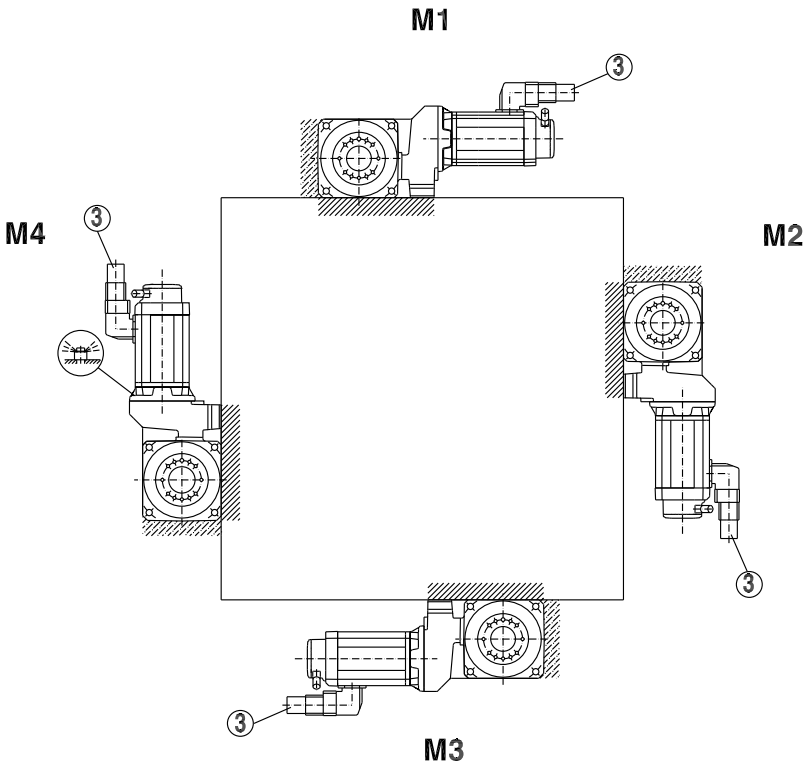

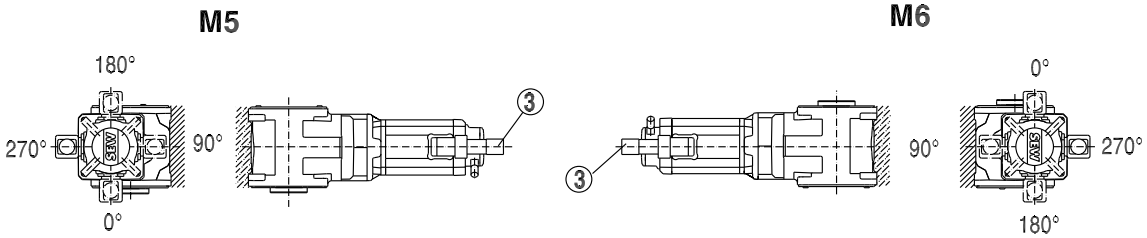

3 → page 68

BSHF202...802B

56 057 00 03

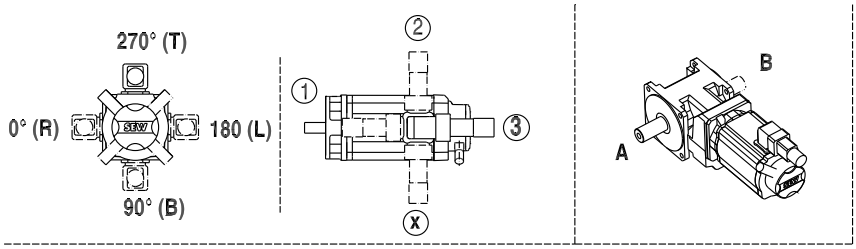

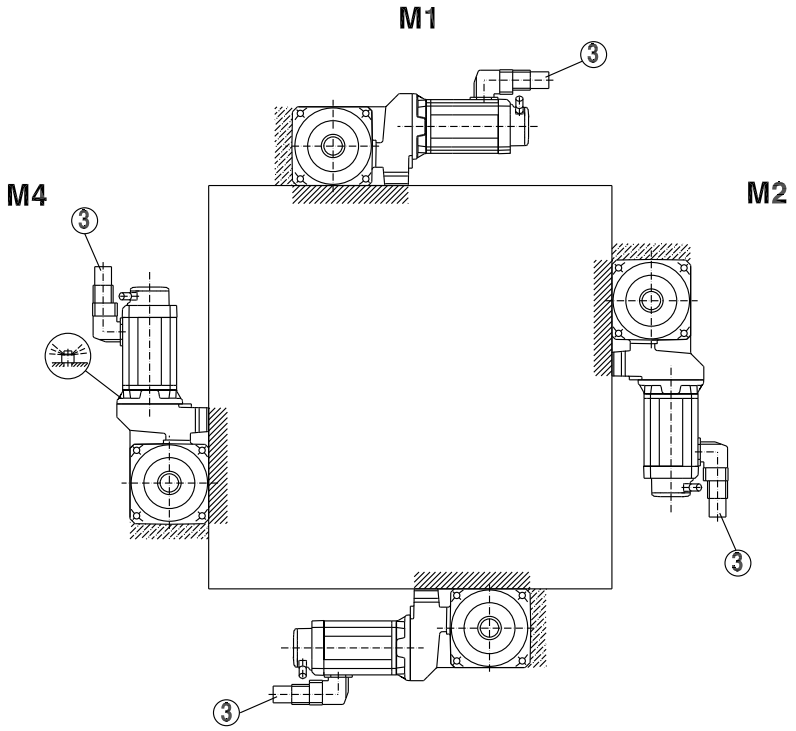

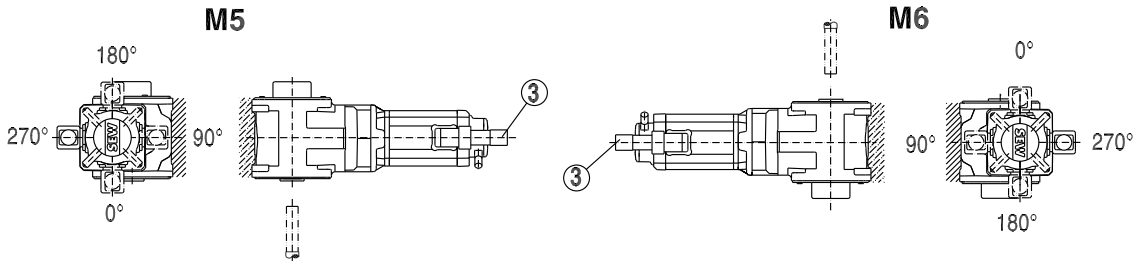

3 → page 68

BSHF202...802B /I

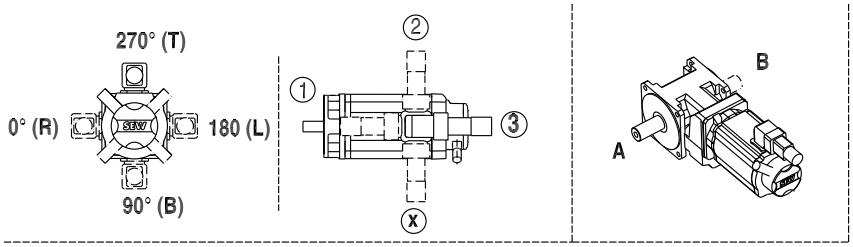

56 042 00 03

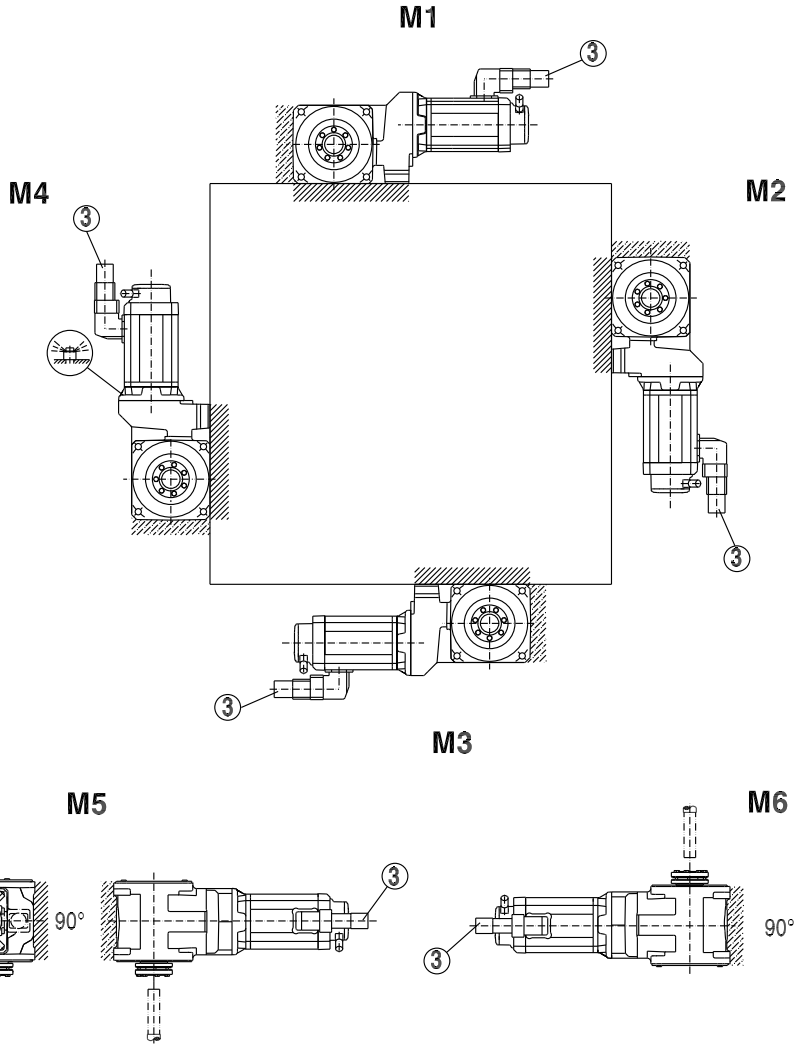

3 → page 68

5.12 Mounting positions of PS.F, PS.C planetary gear units

PS.F121...922,
PS.C221...622

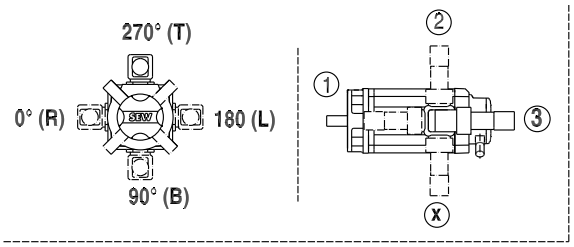

58 001 00 03

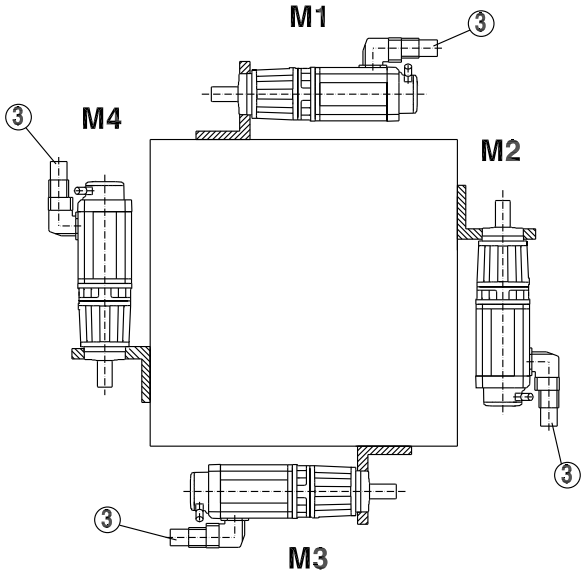

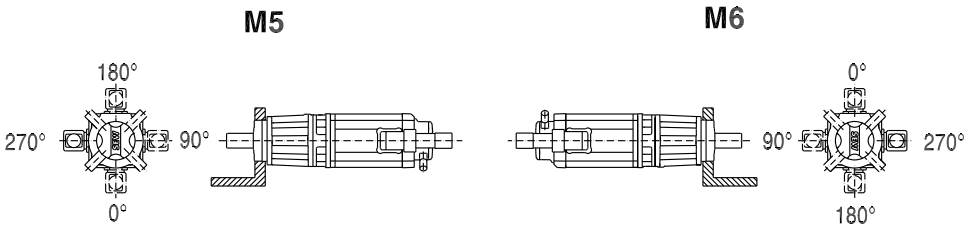

3 → page 68

PSBF221-822

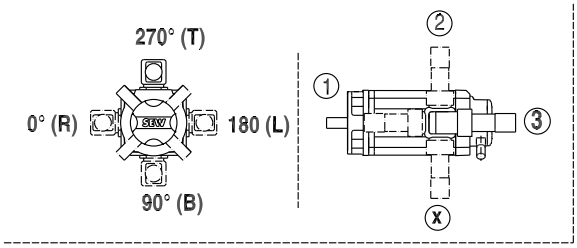

58 002 00 03

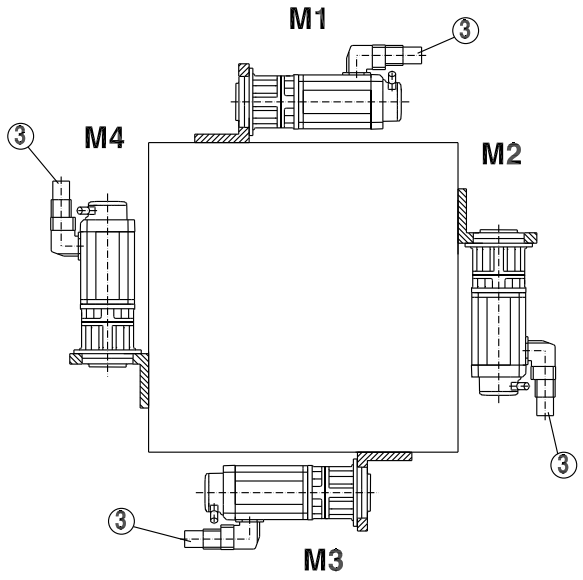

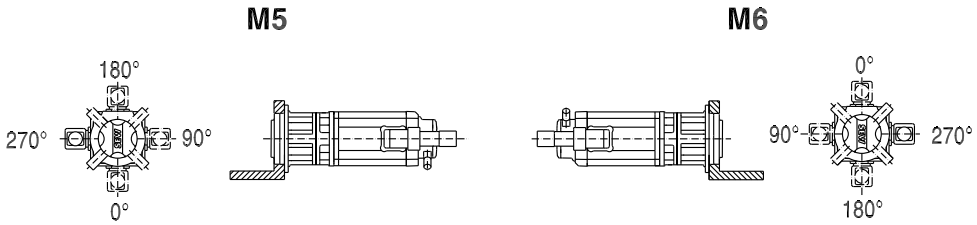

3 → page 68

6 Design and Operating Notes

6.1 Mounting/removing gear units with hollow shaft and key

	INFORMATION
	• Always use the supplied NOCO® fluid for assembly. The fluid prevents contact corrosion and facilitates subsequent disassembly. • The key dimension X is specified by the customers, but X > DK must apply, see Figure 16.

Assembly

SEW-EURODRIVE recommends 2 variants for installing gear units with hollow shaft and key onto the input shaft of the driven machine (= customer shaft):

1. Use the provided fastening parts for installation.
2. Use the optional installation/removal kit for installation.

1. Supplied fastening parts

The following fastening parts are supplied as standard:

- Retaining screw with washer (2)
- Retaining ring (3)

Note the following points concerning the customer shaft:

- The installation length of the customer shaft with contact shoulder (A) must be L8 - 1 mm.
- The installation length of the customer shaft without contact shoulder (B) must equal L8.

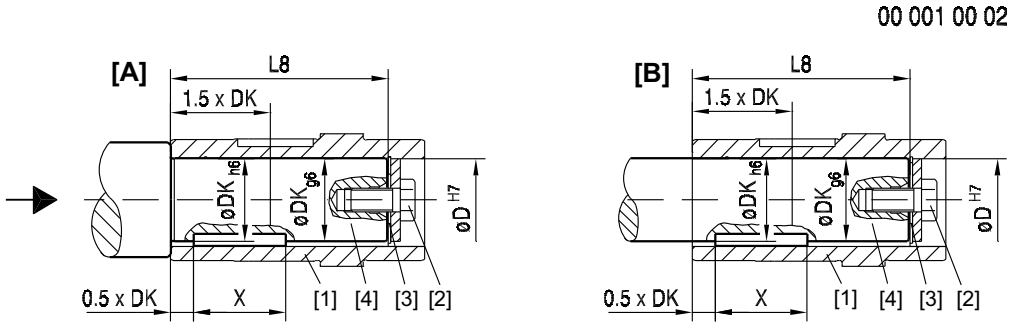

Figure 16: Customer shaft with contact shoulder (A) and without contact shoulder (B)

[1]	Hollow shaft	[3]	Retaining ring
[2]	Retaining screw with washer	[4]	Customer shaft

Dimensions and tightening torque:

The retaining screw (2) must be tightened to the tightening torque MS given in the following table:

Gear unit type	D^{H7} [mm]	DK [mm]	L8 [mm]	MS [Nm]
WA..10	16	16	69	8
WA..20	18	18	8484	
WA..20	20	20		
FA..27	25	25	88	20
WA..30, WA..37	20	20	105	8
SA..37, BSAF202			104	
FA..37, KA..37, SA..47	30	30	105	20
BSAF302	25	25	118	
SA..47, WA..37			105	
SAF402	30	30	138	
FA..47, KA..47, SA..57	35	35	132	
WA..47	30	30	122	
SA..57			132	
FA..57, KA..57	40	40	142	40
BSAF502			158	
FA..67, KA..67			156	
SA..67			144	
SA..67	45	45	144	
BSAF602	55	55	179	80
FA..77, KA..77, SA..77	50	50	183	40
SA..77	60	60	180	80
FA..87, KA..87			210	
SA..87			220	
SA..87	70	70	220	
BSAF802	60	60	222	
FA..97, KA..97	70	70	270	
SA..97			260	
SA..97	90	90	255	200
FA..107			313	
KA..107			313	
FA..127, KA..127	100	100	373	
FA..157, KA..157	120	120	460	

2. Installation/ removal kit

You can also use the optional installation/removal kit for installation. You can order the kit for the specific gear unit type(s) by quoting the part numbers in the table below. The delivery includes:

- Spacer tube for installation without contact shoulder (5)
- Retaining screw for installation (2)
- Forcing washer for removal (7)
- Locked nut for removal (8)

The short retaining screw delivered as standard is not required.

Note the following points concerning the customer shaft:

- The installation length of the customer shaft must be LK2. Do not use the spacer if the customer shaft **has a contact shoulder (A)**.
- The installation length of the customer shaft must be LK2. Use the spacer if the customer shaft **has a contact shoulder (B)**.

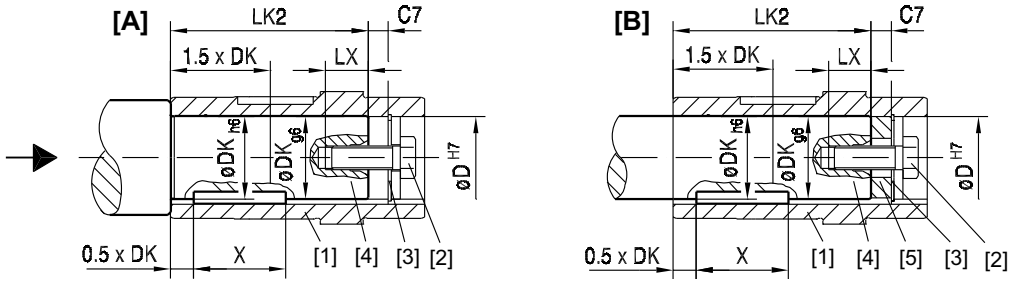

Figure 17: Customer shaft with contact shoulder (A) and without contact shoulder (B)

[1]	Hollow shaft	[4]	Customer shaft
[2]	Retaining screw with washer	[5]	Spacer tube
[3]	Retaining ring		

Dimensions, tightening torque and part numbers:

The retaining screw (2) must be tightened to the tightening torque MS given in the following table.

Type	D^{H7} [mm]	DK [mm]	LK2 [mm]	LX^{+2} [mm]	C7 [mm]	MS [Nm]	Part number of installation/removal kit
WA..10	16	16	57	12.5	11	8	643 712 5
WA..20	18	18	72	16	12		643 682 X
WA..20, WA..30, WA..37	20	20	72, 93				643 683 8
SA..37	20	20	92	16	12	8	643 683 8
FA..27	25	25	72	22	16	20	643 684 6
SA..47			89				
WA..47	30	30	106				643 685 4
FA..37, KA..37			89				643 685 4
SA..47			89				
SA..57			116				
FA..47, KA..47, SA..57	35	35	114	28	18		643 686 2
FA..57, KA..57	40	40	124	36		40	643 687 0
FA..67			138				
KA..67			138				
SA..67			126				
SA..67	45	45	126				643 688 9
FA..77, KA..77, SA..77	50	50	165				643 689 7
FA..87, KA..87	60	60	188	42	22	80	643 690 0
SA..77			158				
SA..87			198				
FA..97, KA..97	70	70	248				643 691 9
SA..87			198				
SA..97			238				
FA..107, KA..107	90	90	287	50	26	200	643 692 7
SA..97			229				
FA..127, KA..127	100	100	347				643 693 5
FA..157, KA..157	120	120	434				643 694 3

Removal

Applies only if installation/removal kit was previously used for installation (see Figure 17).

Proceed as follows to remove the gear unit:

1. Loosen the retaining screw (6).
2. Remove the circlip (3) and, if used, the spacer tube (5).
3. According to Figure 18 place the forcing washer (7) and the locked nut (8) between the customer shaft (4) and circlip (3).
4. Re-install the circlip (3).
5. Re-install the retaining screw (6). Now you can force the gear unit off the shaft.

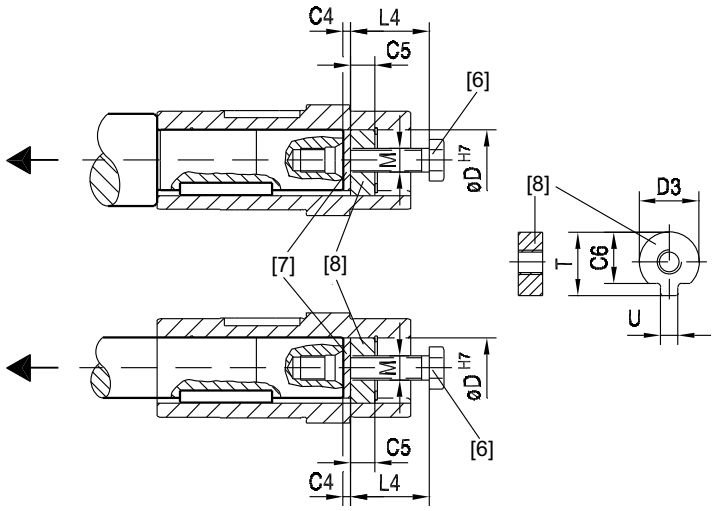

Figure 18: Removal

[6]	Retaining screw	[8]	Locked nut for removal
[7]	Forcing washer		

Dimensions and part numbers:

Type	D^{H7} [mm]	M	C4 [mm]	C5 [mm]	C6 [mm]	$U^{-0.5}$ [mm]	$T^{-0.5}$ [mm]	$D3^{-0.5}$ [mm]	L4 [mm]	Part number of installation/removal kit
WA..10	16	M5	5	5	12	4.5	18	15.7	50	643 712 5
WA..20	18	M6		6	13.5	5.5	20.5	17.7	25	643 682 X
WA..20, WA..30, WA..37, SA..37	20				15.5	5.5	22.5	19.7		643 683 8
FA27.., SA..47	25	M10		10	20	7.5	28	24.7	35	643 684 6
FA..37, KA..37, SA..47, SA..57, WA..47	30				25	7.5	33	29.7		643 685 4
FA..47, KA..47, SA..57	35	M12		12	29	9.5	38	34.7	45	643 686 2
FA..57, KA..57, FA..67, KA..67, SA..67	40	M16			34	11.5	41.9	39.7	50	643 687 0
SA..67	45				38.5	13.5	48.5	44.7		643 688 9
FA..77, KA..77, SA..77	50				43.5	13.5	53.5	49.7		643 689 7
FA..87, KA..87, SA..77, SA..87	60	M20		16	56	17.5	64	59.7	60	643 690 0
FA..97, KA..97, SA..87, SA..97	70				65.5	19.5	74.5	69.7		643 691 9
FA..107, KA..107, SA..97	90	M24		20	80	24.5	95	89.7	70	643 692 7
FA..127, KA..127	100				89	27.5	106	99.7		643 693 5
FA..157, KA..157	120				107	31	127	119.7		643 694 3

6.2 Gear units with hollow shaft

Chamfers on hollow shafts

The following illustration shows the chamfers on parallel shaft helical, helical-bevel, helical-worm and SPIROPLAN® gear units with hollow shaft:

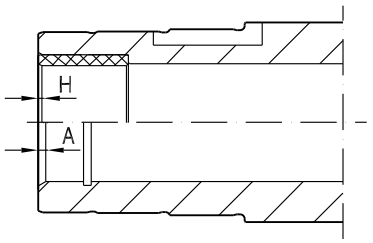

59845AXX

Figure 19: Chamfers on hollow shafts

Gear units	Type	
	with hollow shaft (A)	with hollow shaft and shrink disk (H)
W..10 - W..30	2 × 30û	-
F..27	2 × 30û	0.5 × 45û
BS.F202	2 × 30û	0.5 × 45û
F../K../S../W..37	2 × 30û	0.5 × 45û
BS.F302	2 × 30û	0.5 × 45û
F../K../S../ W..47	2 × 30û	0.5 × 45û
BS.F402	2 × 30û	0.5 × 45û
S..57	2 × 30û	0.5 × 45û
F../K..57	2 × 30û	3 × 2û
BS.F502	2 × 30û	3 × 2û
F../K../S..67	2 × 30û	3 × 2û
BS.F602	2 × 30û	3 × 2û
F../K../S..77	2 × 30û	3 × 2û
BS.F702	2 × 30û	3 × 2û
F../K../S..87	3 × 30û	3 × 2û
BS.F802	2 × 30û	3 × 2û
F../K../S..97	3 × 30û	3 × 2û
F../K..107	3 × 30û	3 × 2û
F../K..127	5 × 30û	1.5 × 30û
F../K..157	5 × 30û	1.5 × 30û
KH167	-	1.5 × 30û
KH187	-	1.5 × 30û

Special motor/gear unit combinations

Please note for parallel shaft helical gearmotors with hollow shaft (FA..B, FV..B, FH..B, FAF, FVF, FHF, FA, FV, FH, FT, FAZ, FVZ, FHZ):

- If you are using a customer shaft pushed through on the motor end, there may be a collision when a "small gear unit" is used in combination with a "large motor".
- Check the motor dimension AC to decide whether there will be a collision wtih a pushed-through customer shaft.

6.3 TorqLOC® mounting system for gear units with hollow shaft

Description of TorqLOC®

The TorqLOC® hollow shaft mounting system is used for achieving a non-positive connection between customer shaft and the hollow shaft in the gear unit. As a result, the TorqLOC® hollow shaft mounting system is an alternative to the hollow shaft with shrink disk, the hollow shaft with key and the splined hollow shaft.

The TorqLOC® hollow shaft mounting system consists of the following components:

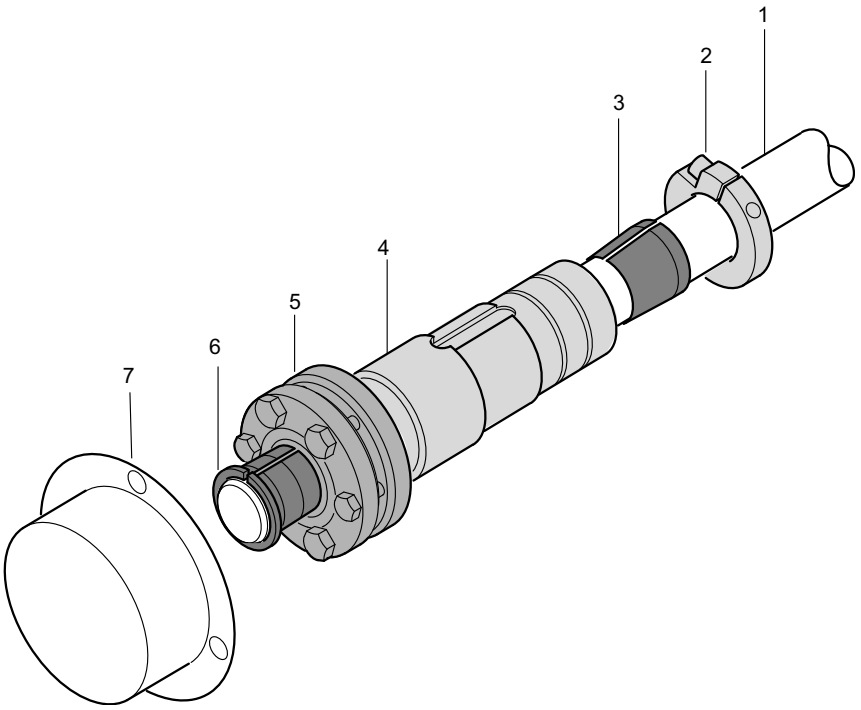

Figure 20: Components of the TorqLOC® hollow shaft mounting system

[1]	Customer shaft	[5]	shrink disk
[2]	Clamping ring	[6]	Conical steel bushing
[3]	Conical bronze bushing	[7]	Fixed cover
[4]	Hollow shaft in gear unit		

Advantages of TorqLOC®

The TorqLOC® hollow shaft mounting system provides the following advantages:

- Cost saving as the customer shaft can be made from drawn material up to quality h11.
- Cost saving as different customer shaft diameters can be realized with one hollow shaft diameter and different bushings.
- Simple installation as there is no need to accommodate any shaft connections.
- Simple removal even after many hours of operation as the formation of contact corrosion has been reduced and the conical connections can easily be released.

Technical data

The TorqLOC® hollow shaft mounting system is approved for input torques of 92 Nm to 18000 Nm.

The following gear units are available with TorqLOC® hollow shaft mounting system:

- Parallel shaft helical gear units in gear unit sizes 37 to 157 (FT37 ... FT157)
- Helical-bevel gear units in gear unit sizes 37 to 157 (KT37 ... KT157)
- Helical-worm gear units in gear unit sizes 37 to 97 (ST37 ... ST97)
- SPIROPLAN® gear unit sizes 37 and 47 (WT.7)

Available options

The following options are available for gear units with a TorqLOC® hollow shaft mounting system:

- Helical-bevel, helical-worm and SPIROPLAN® gear units with TorqLOC® (KT.., ST.., WT.7..): The "torque arm" (../T) option is available.
- Parallel shaft helical gear units with TorqLOC® (FT..): The "rubber buffer" (../G) option is available.

6.4 Gear unit with flange block shaft

	INFORMATION
	Only use screws in **strength class 12.9** to fasten the output elements onto the flange block shaft of the gear unit.

6.5 Option, shouldered hollow shaft with shrink disk

As an option, gear units with a hollow shaft and shrink disk (parallel shaft helical gear units FH/FHF/FHZ37-157, helical-bevel gear units KH/KHF/KHZ37-157 and helical-worm gear units SH/SHF47-97) can be supplied with a larger bore diameter D'.

D' = D as standard.

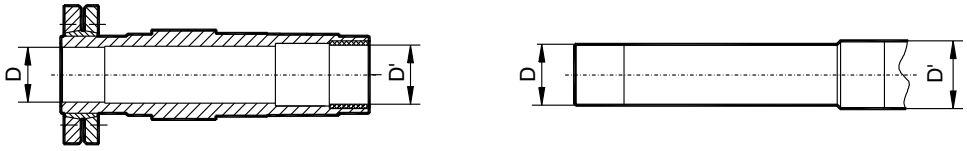

03389AXX

Figure 21: Optional hole diameter D'

Gear unit	Bore diameter D / optional D' [mm]
FH/FHF/FHZ37, KH/KHF/KHZ37, SH/SHF/SHZ47	30 / 32
FH/FHF/FHZ47, KH/KHF/KHZ47, SH/SHF/SHZ57	35 / 36
FH/FHF/FHZ57, KH/KHF/KHZ57	40 / 42
FH/FHF/FHZ67, KH/KHF/KHZ67, SH/SHF/SHZ67	40 / 42
FH/FHF/FHZ77, KH/KHF/KHZ77, SH/SHF/SHZ77	50 / 52
FH/FHF/FHZ87, KH/KHF/KHZ87, SH/SHF/SHZ87	65 / 66
FH/FHF/FHZ97, KH/KHF/KHZ97, SH/SHF/SHZ97	75 / 76
FH/FHF/FHZ107, KH/KHF/KHZ107	95 / 96
FH/FHF/FHZ127, KH/KHF/KHZ127	105 / 106
FH/FHF/FHZ157, KH/KHF/KHZ157	125 / 126

Diameter D / D' must be specified when ordering gear units with a shouldered hollow shaft (optional bore diameter D').

Sample order FH37 DRS80M4 with hollow shaft 30/32 mm

Parallel shaft helical gear units with shouldered hollow shaft (dimensions in mm):

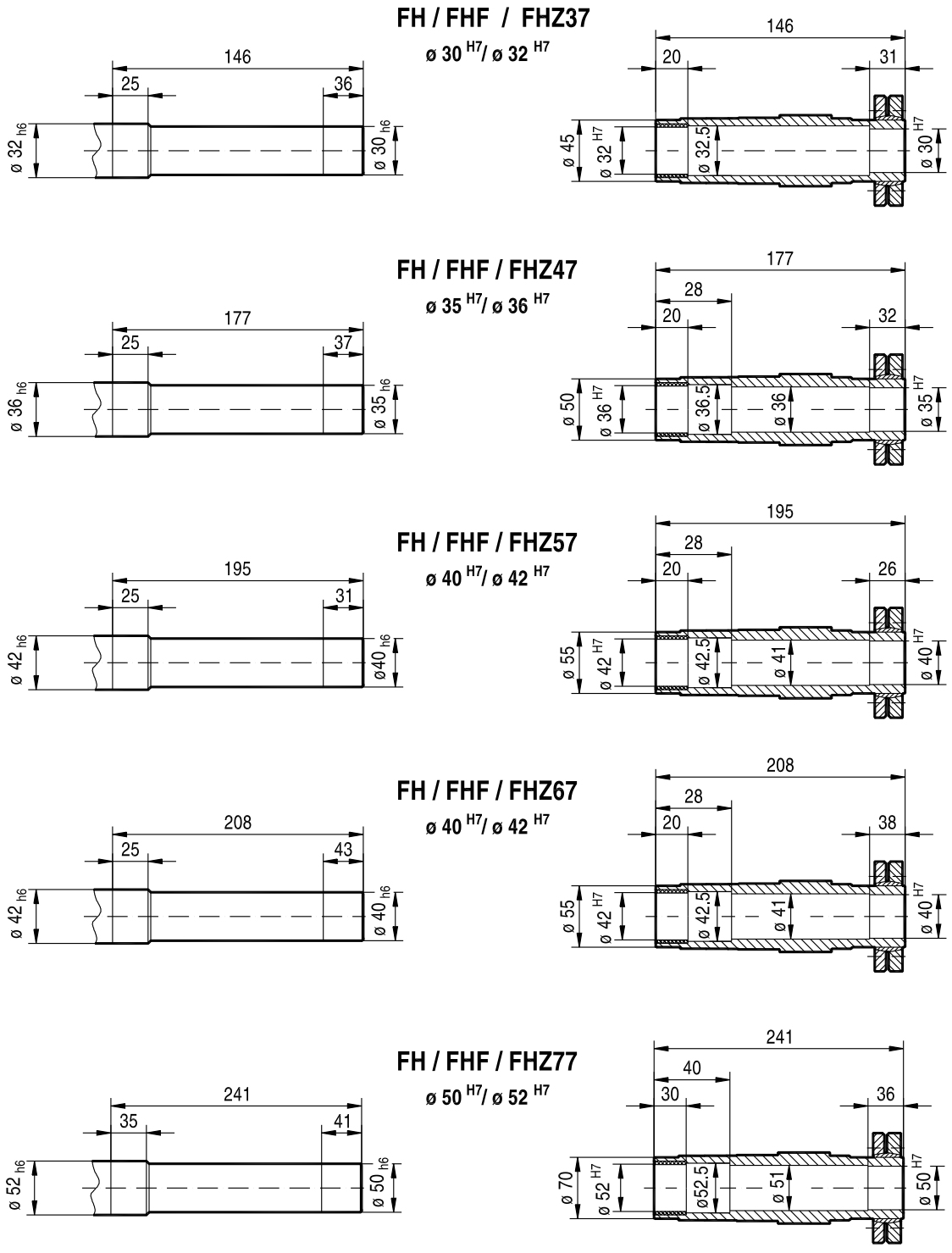

04341AXX

Figure 22: Shouldered hollow shaft FH/FHF/FHZ37...77

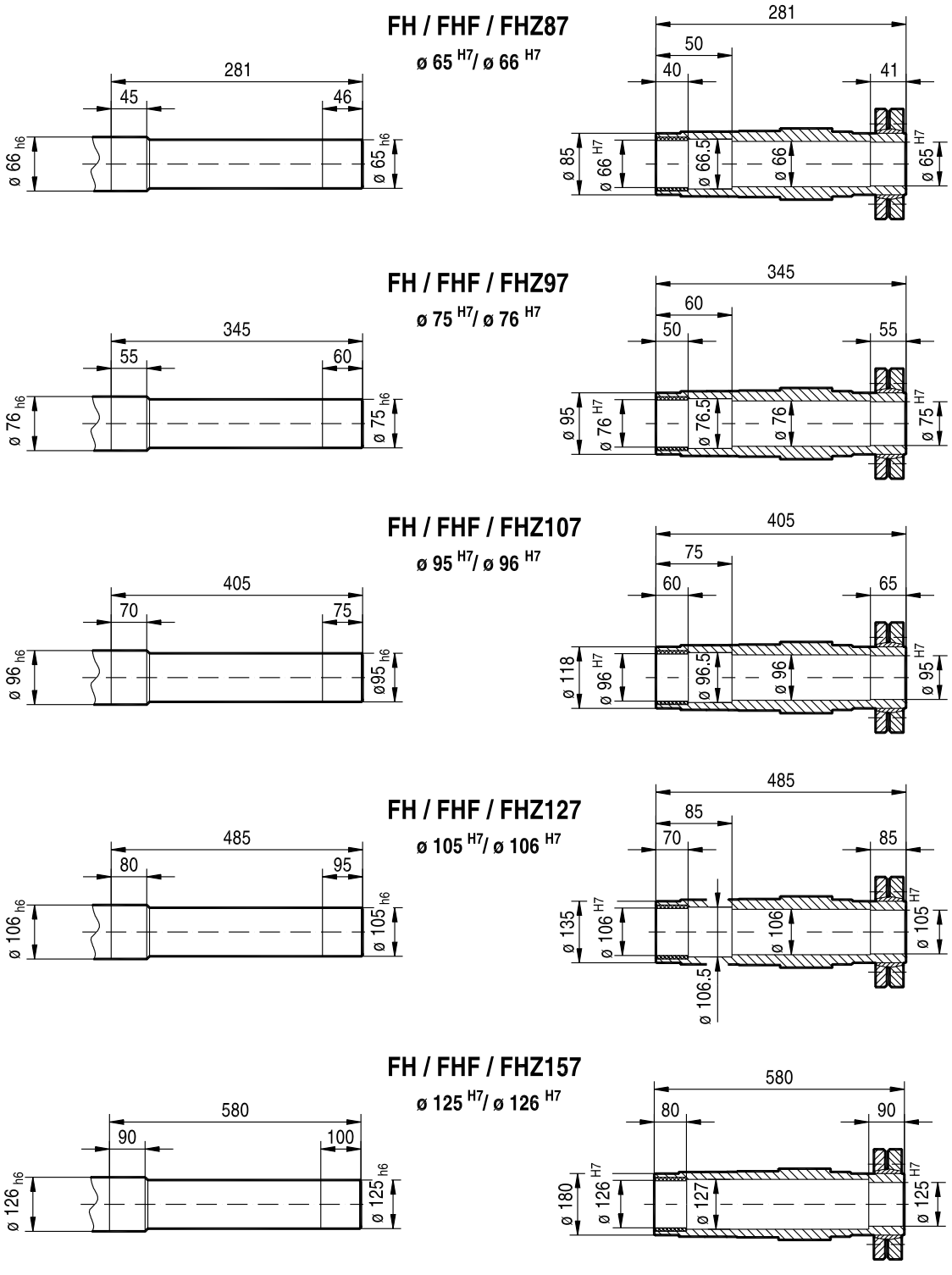

04342AXX

Figure 23: Shouldered hollow shaft FH/FHF/FHZ87...157

Helical-bevel gear units with shouldered hollow shaft (dimensions in mm):

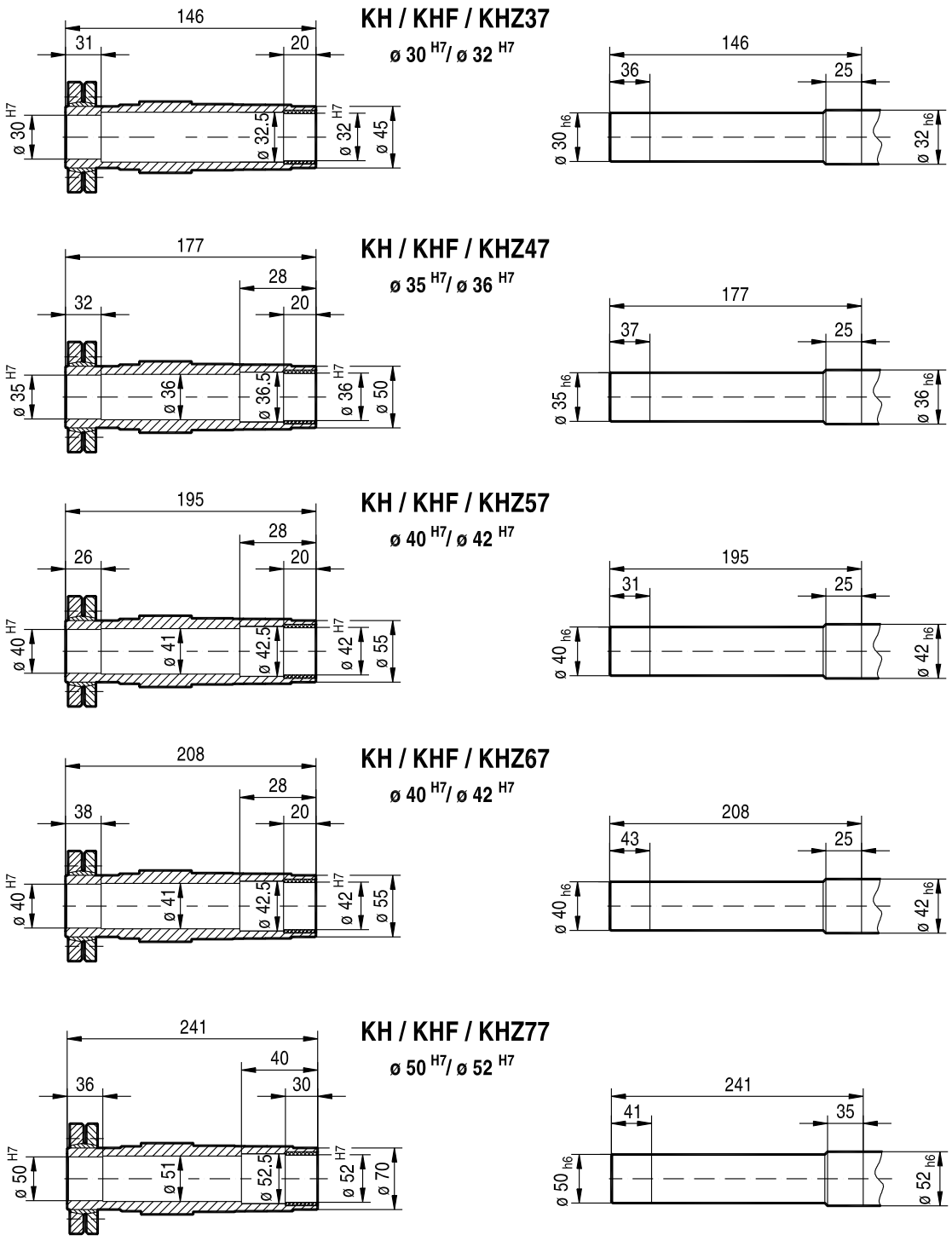

Figure 24: Shouldered hollow shaft KH/KHF/KHZ37...77

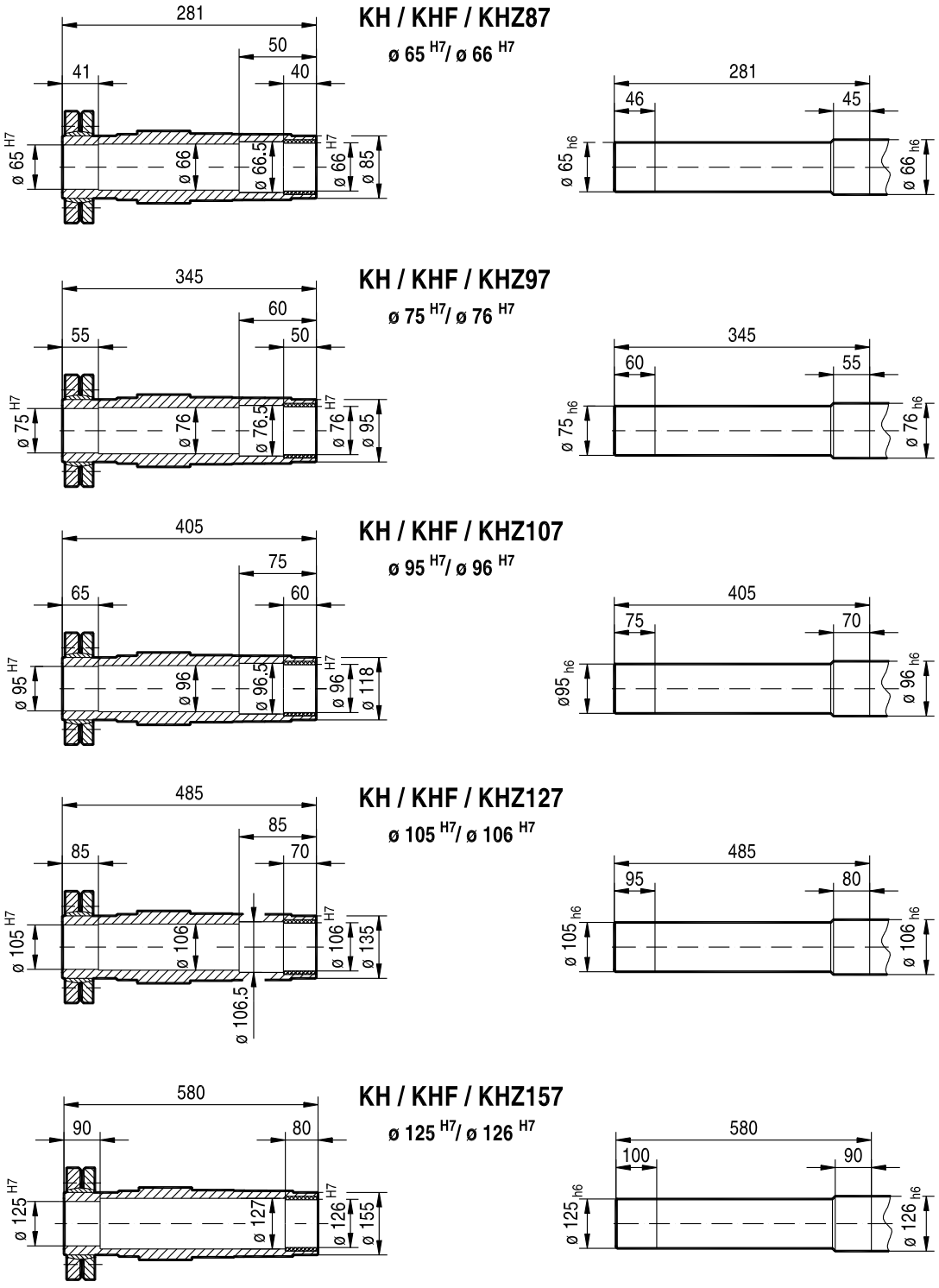

04344AXX

Figure 25: Shouldered hollow shaft KH/KHF/KHZ87...157

Helical-worm gear units with shouldered hollow shaft (dimensions in mm):

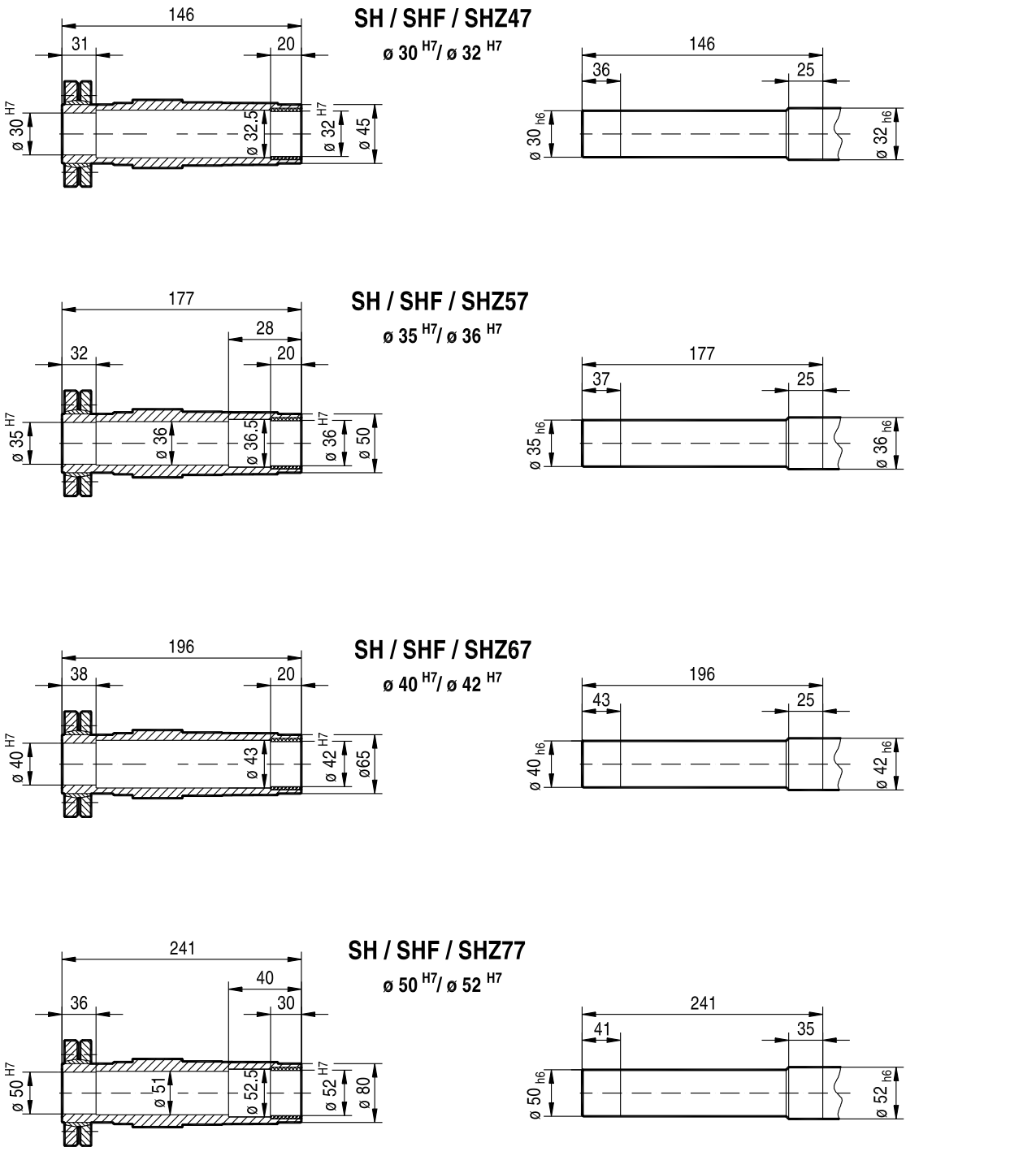

04345AXX

Figure 26: Shouldered hollow shaft SH/SHF/SHZ47...77

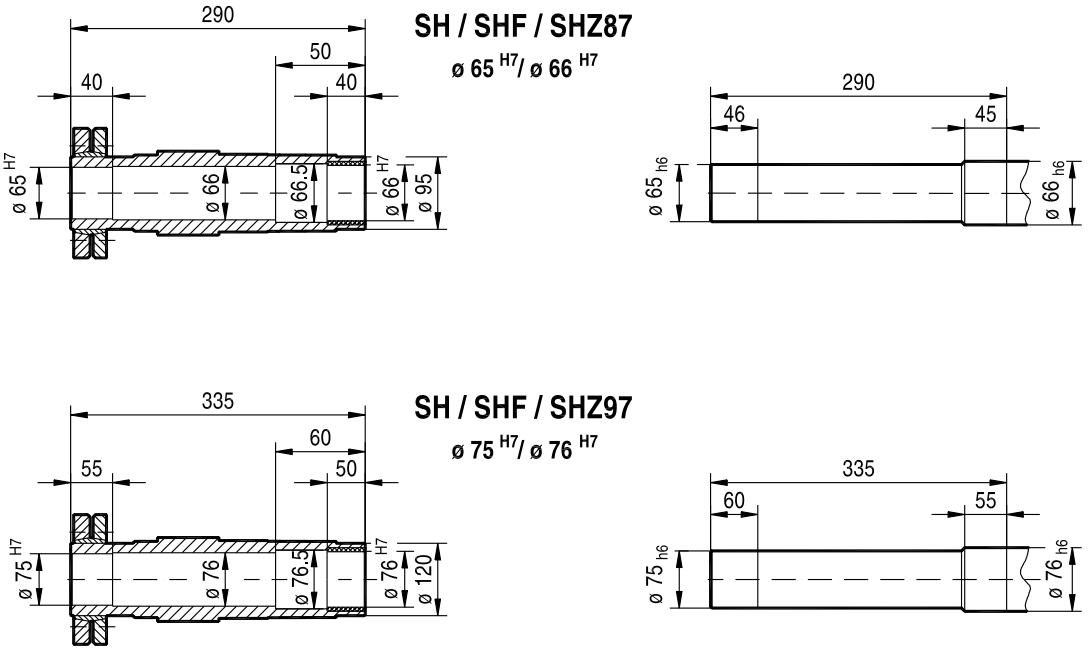

04346AXX

Figure 27: Shouldered hollow shaft SH/SHF/SHZ87...97

6.6 Gear unit mounting

Use bolts of quality 8.8 to fasten gear units.

Exception

Use bolts of **quality 10.9** to fasten the customer flange to transmit the rated torques for the following flange-mounted gear units (RF ../RZ..) and foot/flange-mounted versions (R..F, BS.F..B):

- RF37, R37F with flange ∅ 120 mm
- RF47, R47F with flange ∅ 140 mm
- RF57, R57F with flange ∅ 160 mm
- RZ37 ... RZ87
- BS.F502B ... BS.F802B

6.7 Torque arms

Available torque arms

Gear unit	Size					
	27	37	47	57	67	77
KA, KH, KV, KT	-	643 425 8	643 428 2	643 431 2	643 431 2	643 434 7
SA, SH, ST	-	126 994 1	644 237 4	644 240 4	644 243 9	644 246 3
FA, FH, FV, FT Rubber buffer (2 pieces)	013 348 5	013 348 5	013 348 5	013 348 5	013 348 5	013 349 3

Gear unit	Size				
	87	97	107	127	157
KA, KH, KV, KT	643 437 1	643 440 1	643 443 6	643 294 8	-
SA, SH, ST	644 249 8	644 252 8	-	-	-
FA, FH, FV, FT Rubber buffer (2 pieces)	013 349 3	013 350 7	013 350 7	013 351 5	013 347 7

Gear unit	Size				
	10	20	30	37	47
WA	1 061 021 9	1 68 073 0	1 68 011 0	1 061 129 0	1 061 187 8

Gear unit	Size					
	202	302	402	502	602	802
BSHF, BSAF	1 063 098 8	1 063 100 3	1 063 103 8	1 063 105 4	1 063 107 0	1 063 109 7

Torque arms for KH167.., KH187..

As standard, torque arms are not available for gear unit sizes KH167.. and KH187... Consult SEW-EURODRIVE for design proposals if you require torque arms for these gear units.

6.8 Flange contours of RF.. and R..F gear units

04355AXX

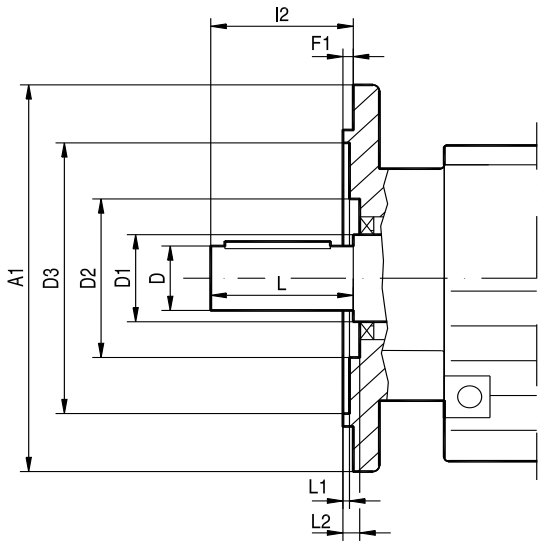

Check dimensions L1 and L2 for selection and installation of output elements.

Type	Dimensions in mm											
	A1	D	D1	D2		D3	F1	l2	L	L1		L2
				RF	R..F					RF	R..F	
RF07, R07F	120	20	22	38	38	72	3	40	40	2	2	6
	140[1)]				-	85	3			2	-	6
	160[1)]				-	100	3.5			2.5	-	6.5
RF17, R17F	120	20	25	46	46	65	3	40	40	1	1	5
	140				-	78	3			1	-	5
	160[1)]				-	95	3.5			1	-	6
RF27, R27F	120	25	30	54	54	66	3	50	50	1	1	6
	140				-	79	3			3	-	7
	160				-	92	3.5			3	-	7
RF37, R37F	120	25	35	60	63	70	3	50	50	5	4	7
	160				-	96	3.5			1	-	7.5
	200[1)]				-	119	3.5			1	-	7.5
RF47, R47F	140	30	35	72	64	82	3	60	60	4	1	6
	160				-	96	3.5			0.5	-	6.5
	200				-	116	3.5			0.5	-	6.5
RF57, R57F	160	35	40	76	75	96	3.5	70	70	4	2.5	5
	200				-	116	3.5			0	-	5
	250[1)]				-	160	4			0.5	-	5.5
RF67, R67F	200	35	50	90	90	118	3.5	70	70	2	4	7
	250				-	160	4			1	-	7.5
RF77, R77F	250	40	52	112	100	160	4	80	80	0.5	2.5	7
	300[1)]				-	210	4			0.5	-	7
RF87, R87F	300	50	62	123	122	210	4	100	100	0	1.5	8
	350				-	226	5			1	-	9
RF97	350	60	72	136		236	5	120	120	0		9
	450					320						
RF107	350	70	82	157		232	5	140	140	0		11
	450			186		316						
RF137	450	90	108	180		316	5	170	170	0		10
	550					416						
RF147	450	110	125	210		316	5	210	210	0		10
	550					416						
RF167	550	120	145	290		416	5	210	210	1		10
	660					517	6			2		11

1) The flange contour protrudes from under the base surface.

6.9 Flange contours of FF.., KF.., SF.. and WF.. gear units

64353AXX

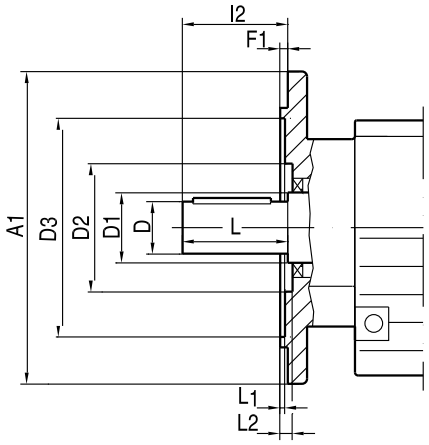

Check dimensions L1 and L2 for selection and installation of output elements.

Type	Dimensions in mm									
	A1	D	D1	D2	D3	F1	I2	L	L1	L2
FF27	160	25	40	66	96	3.5	50	50	3	18.5
FF37	160	25	30	70	94	3.5	50	50	2	6
FF47	200	30	40	72	115	3.5	60	60	3.5	7.5
FF57	250	35	40	84	155	4	70	70	4	9
FF67	250	40	50	84	155	4	80	80	4	9
FF77	300	50	55	82	205	4	100	100	5	9
FF87	350	60	65	115	220	5	120	120	5	9
FF97	450	70	75	112	320	5	140	140	8	10
FF107	450	90	100	159	318	5	170	170	16	9
FF127	550	110	118	-	420	5	210	210	10	-
FF157	660	120	135	190	520	6	210	210	8	14
KF37	160	25	30	70	94	3.5	50	50	2	6
KF47	200	30	40	72	115	3.5	60	60	3.5	7.5
KF57	250	35	40	84	155	4	70	70	4	9
KF67	250	40	50	84	155	4	80	80	4	9
KF77	300	50	55	82	205	4	100	100	5	9
KF87	350	60	65	115	220	5	120	120	5	9
KF97	450	70	75	112	320	5	140	140	8	10
KF107	450	90	100	159	318	5	170	170	16	9
KF127	550	110	118	-	420	5	210	210	10	-
KF157	660	120	135	190	520	6	210	210	8	14
SF37	120	20	25	-	68	3	40	40	6	-
SF37	160	20	25	-	96	3.5	40	40	5.5	-
SF47	160	25	30	70	94	3.5	50	50	2	6
SF57	200	30	40	72	115	3.5	60	60	3.5	7.5
SF67	200	35	45	-	115	3.5	70	70	8.5	-
SF77	250	45	55	108	160	4	90	90	8	9
SF87	350	60	65	130	220	5	120	120	6	10
SF97	450	70	75	150	320	5	140	140	8.5	10
WF10	80	16	25	-	39	2.5	40	40	30	-
WF10	120	16	25	39	74	3	40	40	5	30
WF20	110	20	30	44	53	-4	40	40	27	35
WF20	120	20	30	-	45	2.5	40	40	37.5	-
WF30	120	20	30	48	63	2.5	40	40	18	27
WF30	160	20	30	48	63	2.5	40	40	33	42
WF37	120	20	30	-	70	2.5	40	40	-	10.5
WF37	160	20	30	-	70	2.5	40	40	-	25.5
WF47	160	30	35	-	92	3.5	10	60	6	-

6.10 Flange contours of FAF.., KAF.., SAF.. and WAF.. gear units

64355AXX

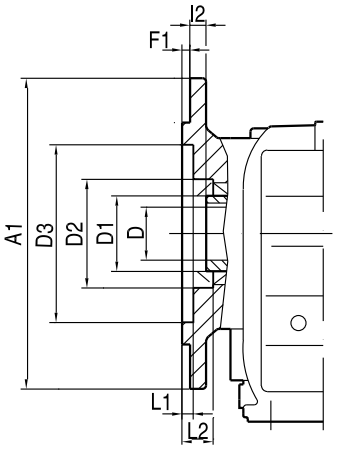

Check dimensions L1 and L2 for selection and installation of output elements.

Type	Dimensions in mm								
	A1	D	D1	D2	D3	F1	I2	L1	L2
FAF27	160	40	25	66	96	3.5	20	3	18.5
FAF37	160	45	30	62	94	3.5	24	2	30
FAF47	200	50	35	70	115	3.5	25	3.5	31.5
FAF57	250	55	40	76	155	4	23.5	4	31
FAF67	250	55	40	76	155	4	23	4	31
FAF77	300	70	50	95	205	4	37	5	45
FAF87	350	85	60	120	220	5	30	5	39
FAF97	450	95	70	135	320	5	41.5	5.5	51
FAF107	450	118	90	224	320	5	41	16	52
FAF127	550	135	100	185	420	5	51	6	63
FAF157	660	155	120	200	520	6	60	10	74
KAF37	160	45	30	62	94	3.5	24	2	30
KAF47	200	50	35	70	115	3.5	25	3.5	8.5
KAF57	250	55	40	76	155	4	23.5	4	31
KAF67	250	55	40	76	155	4	23	4	31
KAF77	300	70	50	95	205	4	37	5	45
KAF87	350	85	60	120	220	5	30	5	39
KAF97	450	95	70	135	320	5	41.5	5.5	51
KAF107	450	118	90	224	320	5	41	16	52
KAF127	550	135	100	185	420	5	51	6	63
KAF157	660	155	120	200	520	6	60	10	74
SAF37	120	35	20	-	68	3	15	6	-
SAF37	160	35	20	-	96	3.5	15	5.5	-
SAF47	160	45	30 / 25	62	94	3.5	24	2	30
SAF57	200	50	35 / 30	70	115	3.5	25	3.5	31.5
SAF67	200	65	45 / 40	91	115	3.5	42.5	4	48.5
SAF77	250	80	60 / 50	112	164	4	45.5	5	53.5
SAF87	350	95	70 / 60	131	220	5	52.5	6	62.5
SAF97	450	120	90 / 70	160	320	5	60	6.5	69
WAF10	80	25	16	-	39	2.5	23	30	-
WAF10	120	25	16	39	74	3	23	5	30
WAF20	110	30	18 / 20	44	53	-4	30	27	35
WAF20	120	30	18 / 20	-	45	2.5	30	37.5	-
WAF30	120	30	20	48	63	2.5	19.5	18	27
WAF30	160	30	20	48	63	2.5	34.5	33	42
WAF37	120	35	20 / 25	54	70	2.5	19.5	10.5	27
WAF37	160	35	20 / 25	54	70	2.5	34.5	25.5	42
WAF47	160	45	25 / 30	72	92	3.5	10	6	45

6.11 Fixed covers

Parallel shaft helical gear units, helical-bevel gear units, helical-worm and SPIROPLAN® gear units with hollow shafts and shrink disks of size 37 up to size 97 come equipped with a rotating cover as standard. If, for safety reasons, fixed covers are required for these gear units, you can order them for the respective gear unit types by quoting the part numbers in the following tables. As standard, size 107 parallel shaft helical gear units and helical-bevel gear units with hollow shafts and shrink disks and sizeß27 parallel shaft helical gear units come equipped with a fixed cover.

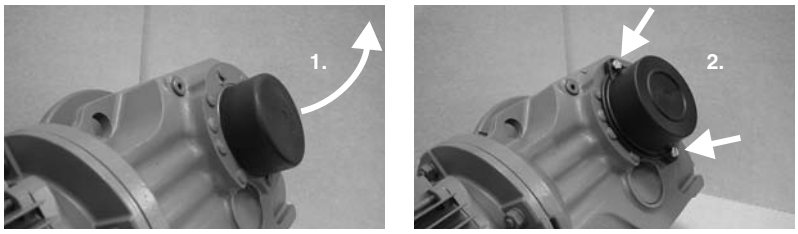

03190AXX

Figure 28: Replacing a rotating cover with a fixed cover

[1] Pull off the rotating cover

[2] Install and fasten fixed cover

Part numbers and dimensions

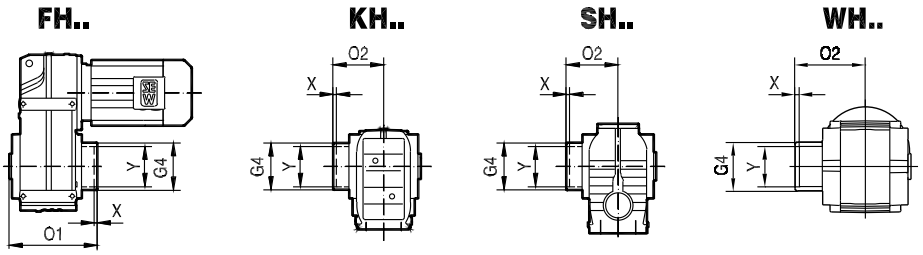

62664AXX

Parallel-shaft helical gearmotors	FH..37	FH..47	FH..57	FH..67	FH..77	FH..87	FH..97
Part number	643 513 0	643 514 9	643 515 7	643 515 7	643 516 5	643 517 3	643 518 1
G4	78	88	100	100	121	164	185
O1	157	188.5	207.5	221.5	255	295	363.5
X	2	4.5	7.5	6	6	4	6.5
Y	75	83	83	93	114	159	174

Helical-bevel gearmotors[1)]	KH..37	KH..47	KH..57	KH..67	KH..77	KH..87	KH..97
Part number	643 513 0	643 514 9	643 515 7	643 515 7	643 516 5	643 517 3	643 518 1
G4 [mm]	78	88	100	100	121	164	185
O2 [mm]	95	111.5	122.5	129	147	172	210.5
X [mm]	0	1.5	5.5	3	1	2	4.5
Y [mm]	75	83	83	93	114	159	174

1) Not possible in foot-mounted helical-bevel gear units with hollow shaft and shrink disk (KH..B).

Helical-worm gearmotors	SH..37	SH..47	SH..57	SH..67	SH..77	SH..87	SH..97
Part number	643 512 2	643 513 0	643 514 9	643 515 7	643 516 5	643 517 3	643 518 1
G4 [mm]	59	78	88	100	121	164	185
O2 [mm]	88	95	111.5	123	147	176	204.5
X [mm]	1	0	1.5	3	1	0	0.5
Y [mm]	53	75	83	93	114	159	174

SPIROPLAN® gearmotors	WH..37	WH..47
Part number	1 061 136 3	1 061 194 0
G4 [mm]	68	80.5
O2 [mm]	95.5	109.5
X [mm]	11	12.5
Y [mm]	50	72

6.12 Condition monitoring: Oil-aging and vibration sensor for R, F, K, S gear units

Technical data of oil aging sensor

DUO10A diagnostic unit

DUO10A	Technical data		
Preset oil grades	OIL1	CLP mineral oil.	T_{max} = 100 °C
		Bio oil	T_{max} = 100 °C
	OIL2	CLP HC synthetic oil:	T_{max} = 130 °C
		CLP PAO oil	T_{max} = 130 °C
	OIL3	CLP PG polyglycol	T_{max} = 130 °C
	OIL4	Food grade oil	T_{max} = 100 °C
Switch outputs	1: Early warning (time to next oil change can be set to between 2 and 100 days) 2: Main alarm (time to oil change 0 days) 3: Exceeded temperature T_{max} 4: DUO10A is ready for operation		
Permitted oil temperature	-40 °C to +130 °C		
Permitted temperature sensor	PT1000		
EMC	IEC1000-4-2/3/4/6		
Ambient temperature	-25 °C to +70 °C		
Operating voltage	DC 18-28 V		
Current consumption at DC 24 °C	< 90 mA		
Protection class	III		
Degree of protection	IP67 (optionally IP69K)		
Housing materials	Evaluation unit: V2A, EPDM/X, PBT, FPM Temperature sensor: V4A		
Electrical connection	Evaluation unit: M12 plug connector PT1000 temperature sensor: M12 plug connector		

Designations and part numbers

Designation	Description	Part number
DUO10A 	Evaluation unit (basic unit)	1 343 875 1
DUO10A-PUR-M12-5m	5 m PUR cable with 1 connector	1 343 877 8
DUO10A-PVC-M12-5m	5 m PVC cable with 1 connector	1 343 878 6
DUO10A	Angle bracket	1 343 880 8
DUO10A D = 34	Mounting clamp	1 343 879 4

Designation	Description	Part number
W4843 PT1000 	PT1000 temperature sensor	1 343 881 6
W4843_4x0,34-2m-PUR	2 m PUR cable for PT1000[1)]	1 343 882 4
W4843_4x0,34-2m-PVC	2 m PVC cable for PT1000[2)]	1 343 883 2
DUO10A 	Protection cap (for aseptic design, IP69K)	1 343 902 2

1) PUR cables are particularly suited for use in oil-contaminated environments.

2) PVC cables are particularly suited for use in wet environments.

Mounting on standard gear units (R, F, K, S)

Adapter for mounting the PT1000 temperature sensor in screw plug holes:

Complete adapter for PT1000 sensor	Part number
M10 × 1	1 343 903 0
M12 × 1.5	1 343 904 9
M22 × 1.5	1 343 905 7
M33 × 2	1 343 906 5
M42 × 2	1 343 907 3

Mounting base for installing the diagnostic unit at the gear unit with an angle bracket:

Mounting base with sealing ring	Part number
M10 × 1	1 343 441 1
M12 × 1.5	1 343 827 1
M22 × 1.5	1 343 829 8
M33 × 2	1 343 830 1
M42 × 2	1 343 832 8

Technical data of vibration sensor

The DUV10A and DUV30A vibration sensors are suited for early detection of gearmotor damage, which can be detected using vibration diagnostics, such as bearing damage or imbalance. The highest load of the drives at constant speed must be present to being able to use the full functionality of the diagnostic unit. Drives in which the maximum load is present during acceleration are suitable for monitoring using vibration sensors to a limited degree only.

Diagnostic unit DUV10A / DUV30A

	Technical data	
	DUV10A	**DUV30A**
Measuring range	± 20 g	± 20 g
Frequency range	0.125 to 500 Hz	0.125 to 500 Hz / 0.125 to 5000 Hz
Spectral resolution	0.125 Hz	0.125 Hz / 1.25 Hz
Diagnostic methods	FFT, envelope-FFT, trend analysis	
Minimum measuring period	8.0 s	8.0 s / 0.8 s
Speed range	12 to 3500 rpm	12 to 3500 rpm / 120 to 12000 rpm
Switch outputs	1: Early warning 2: Main alarm	
Operating voltage	DC 10-32 V	
Current consumption at DC 24 °C	100 mA	
Protection class	III	
EMC	IEC1000-4-2/3/4/6	
Overload capacity	100 g	
Ambient temperature	-30 °C to +60 °C	-30 °C to +70 °C
Degree of protection	IP67	
Housing materials	Zinc die-casting, coating based on epoxy finish, polyester membrane keypad	
Electrical connection for supply and switching output	M12 plug connector	
Electrical connection RS-232 for communication	M8 plug connector	
Certificates and standards	CE, UL	

Designations and part numbers

Designation	Description	Part number
DUV10A / DUV30A 	Diagnostic unit (basic unit)	DUV10A: 1 406 629 7 DUV30A: 1 328 969 1
DUV.0A-S	Configuration software	1 406 630 0
DUV.0A-K-RS232-M8	Communication cable	1 406 631 9
DUV.0A-N24DC	DC 24 V power supply unit	1 406 632 7
DUV.0A-I	Pulse tester	1 406 633 5

Designation	Description	Part number
DUV.0A-K-M12-2m PUR	2 m PUR cable with 1 connector[1)]	1 406 634 3
DUV.0A-K-M12-5m PUR	5 m PUR cable with 1 connector[1)]	1 406 635 1
DUV.0A-K-M12-2m PVC	2 m PVC cable with 1 connector[2)]	1 326 620 9
DUV.0A-K-M12-5m PVC	5 m PVC cable with 1 connector[2)]	1 326 621 7

1) PUR cables are particularly suited for use in oil-contaminated environments.

2) PVC cables are particularly suited for use in wet environments.

Mounting on standard gear units (R, F, K, S)

Mounting base for installing the diagnostic unit:

Mounting base with sealing ring for gear unit	Part number
M10 × 1	1 343 441 1
M12 × 1.5	1 343 827 1
M22 × 1.5	1 343 829 8
M33 × 2	1 343 830 1
M42 × 2	1 343 832 8
G $^3/_4$	1 343 833 6
G 1	1 343 834 4
G 1 ¼	1 343 835 2
G 1 $^1/_2$	1 343 836 0
Mounting base for motors	**Part number**
M 8	1 362 261 7
M 12	1 343 842 5
M 16	1 343 844 1
M 20	1 362 262 5

6.13 Lubricants and fill quantities for R, F, K, S, W gear units

General information

Unless a special arrangement is made, SEW-EURODRIVE supplies the drives with a lubricant fill adapted for the specific gear unit and mounting position. The decisive factor is the mounting position (M1 - M6, see chapter "Gear Unit Mounting Positions") specified when ordering the drive. You must adapt the lubricant fill in case of any subsequent changes made to the mounting position (→ Lubricant fill quantities).

INFORMATION

SEW-EURODRIVE fills the gear units with the amount of oil specified for the specific mounting positions. If the mounting position is changed, the amount of oil must be adapted as required. Consequently, a **mounting position** may only be **changed** after consultation with SEW-EURODRIVE, otherwise your right to claim under warranty **no longer applies**.

Lubricant table

The lubricant table on the following page shows the permitted lubricants for SEW-EURODRIVE gear units. Observe the following legend with regards to the lubricant table.

Key to the lubricant table

Abbreviations, meaning of shading and notes:

CLP	= Mineral oil
CLP PG	= Polyglycol (W gear units, conforms to USDA-H1)
CLP HC	= Synthetic hydrocarbons
E	= Ester oil (water hazard class 1 (German regulation))
HCE	= Synthetic hydrocarbons + ester oil (USDA - H1 certification)
HLP	= Hydraulic oil
	= Synthetic lubricant (= synthetic-based roller bearing grease)
	= Mineral lubricant (= mineral-based rolling bearing grease)
1)	Helical-worm gear units with PG oil: consult SEW-EURODRIVE.
2)	Special lubricant for SPIROPLAN®gear units only
3)	SEW-$f_B \geq 1.2$ required
4)	Pay attention to critical starting behavior at low temperatures!
5)	Low-viscosity grease
6)	Ambient temperature
	Lubricant for the food industry (food grade oil)
	Biodegradable oil (lubricant for agriculture, forestry, and fisheries)

Rolling bearing greases

The rolling bearings in gear units and motors are given a factory-fill with the greases listed below. SEW-EURODRIVE recommends regreasing rolling bearings with a grease fill at the same time as changing the oil and replacing the rolling bearings.

	Ambient temperature	Manufacturer	Type
Gear unit rolling bearings	-40 ûC ... +80 °C	Fuchs	Renolit CX-TOM15[1)]
Motor rolling bearings[2)]	-20 ûC ... +80 °C	Esso	Polyrex EM
	+20 ûC ... +100 °C	Klüber	Barrierta L55/2
	-40 ûC ... +60 °C	Kyodo Yushi	Multemp SRL[3)]
Special greases for gear unit rolling bearings:			
	-30 ûC ... +40 °C	Aral	Aral Eural Grease EP 2
	-20 ûC ... +40 °C	Aral	Aral Aralube BAB EP2

1) Rolling bearing grease based on semi-synthetic base oil.

2) The motor rolling bearings are covered on both sides and cannot be regreased.

3) Recommended for continuous operation at ambient temperatures below 0 °C, for example in a cold storage.



INFORMATION

The following grease quantities are required:

- For fast-running bearings (gear unit input end): Fill the cavities between the rolling elements one-third full with grease.
- For slow-running bearings (in gear units and at gear unit output end): Fill the cavities between the rolling elements two-thirds full with grease.

Lubricant table

The following table shows the assignment of lubricants to gear units:

01 805 12 92

	6) °C -50 0 +50 +100	DIN (ISO)	ISO,NLGI	Mobil®	Shell	Klüber	ARAL	bp	TEXACO	Castrol Tribol	Castrol Optimol	FUCHS	TOTAL
R...	Standard -10 +40	CLP(CC)	VG 220	Mobilgear 600 XP 220	Shell Omala 220	Klüberoil GEM 1-220 N	Aral Degol BG 220	BP Energol GR-XP 220	Meropa 220	Tribol 1100/220	Alpha SP 220 Optigear BM 220	Renolin CLP 220	Carter EP 220
	-25 +80	CLP PG	VG 220	Mobil Glygoyle 220	Shell Tivela S 220	Klübersynth GH 6-220	Aral Degol GS 220	BP Enersyn SG-XP 220	Synlube CLP 220	Tribol 800/220	Alphasyn PG 220 Optiflex A 220	Renolin PG 220	Carter SY 220
K...(HK...)	4) -40 +80	CLP HC	VG 220	Mobil SHC 630	Shell Omala HD 220	Klübersynth GEM 4-220 N	Aral Degol PAS 220		Pinnacle EP 220	Tribol 1510/220	Alphasyn T 220 Optigear Synthetic X 220	Renolin Unisyn CLP 220	
	4) -40 +40	CLP HC	VG 150	Mobil SHC 629	Shell Omala HD 150	Klübersynth GEM 4-150 N			Pinnacle EP 150		Alphasyn T 150 Optigear Synthetic X 150	Renolin Unisyn CLP 150	Carter SH 150
	-20 +25	CLP (CC)	VG 150 VG 100	Mobilgear 600 XP 100	Shell Omala 100	Klüberoil GEM 1-150 N	Aral Degol BG 100	BP Energol GR-XP 100	Meropa 150	Tribol 1100/100	Alpha SP/100/150 Optigear BM 100	Renolin CLP 150	Carter EP 100
F...	-30 +10	HLP (HM)	VG 68-46 VG 32	Mobil D.T.E. 13M	Shell Tellus T 32	Klüberoil GEM 1-68 N	Aral Degol BG 46		Rando EP Ashless 46	Tribol 1100/68	Hyspin AWS 32 Optigear 32	Renolin B 46 HVI	Equivis ZS 46
	4) -40 +20	CLP HC	VG 68	Mobil SHC 626								Renolin Unisyn CLP 68	
	4) -40 +10	CLP HC	VG 32	Mobil SHC 624		Klüber-Summit HySyn FG-32			Cetus PAO 46		Alphasyn T32 Optiflieb HY 32	Renolin Unisyn OL 32	Dacnis SH 32
	4) -40 -20	HLP (HM)	VG 22 VG 15	Mobil D.T.E. 11M	Shell Tellus T 15	Isoflex MT 30 ROT		BP Energol HLP-HM 15	Rando HDZ 15		Hyspin AWS 22	Renolin MR 310	Equivis ZS 15
	Standard 0 +40	CLP (CC)	VG 680	Mobilgear 600 XP 680	Shell Omala 680	Klüberoil GEM 1-680 N	Aral Degol BG 680	BP Energol GR-XP 680	Meropa 680	Tribol 1100/680	Alpha SP 680 Optigear BM 680	Renolin SEW 680	Carter EP 680
	-20 +60	CLP PG	VG 680 1)		Shell Tivela S 680	Klübersynth GH 6-680		BP Enersyn SG-XP 680	Synlube CLP 680	Tribol 800/680	Optiflex A 680	Renolin PG 680	
S...(HS...)	4) -30 +80	CLP HC	VG 460	Mobil SHC 634	Shell Omala HD 460	Klübersynth GEM 4-460 N			Pinnacle EP 460		Optigear Synthetic X 460	Renolin Unisyn CLP 460	
	4) -40 +10	CLP HC	VG 150	Mobil SHC 629	Shell Omala HD 150	Klübersynth GEM 4-150 N			Pinnacle EP 150		Optigear Synthetic X 150	Renolin Unisyn CLP 150	Carter SH 150
	-20 +10	CLP (CC)	VG 150 VG 100	Mobilgear 600 XP 100	Shell Omala 100	Klüberoil GEM 1-150 N	Aral Degol BG 100	BP Energol GR-XP 100	Meropa 150	Tribol 1100/100	Alpha SP/100/150 Optigear BM 100	Renolin CLP 150	Carter EP 100
	-25 +20	CLP PG	VG 220 1)	Mobil Glygoyle 220	Shell Tivela S 220	Klübersynth GH 6-220	Aral Degol GS 220	BP Enersyn SG-XP 220	Synlube CLP 220	Tribol 800/220	Alphasyn PG 220 Optiflex A 220	Renolin PG 220	Carter SY 220
	4) -40 +20	CLP HC	VG 68	Mobil SHC 626		Klüber-Summit HySyn FG-32						Renolin Unisyn CLP 68	
	4) -40 0	CLP HC	VG 32	Mobil SHC 624					Cetus PAO 46		Alphasyn T32	Renolin Unisyn OL 32	Dacnis SH 32
R...,K...(HK...), F...,S...(HS...)	4) 0 +40	CLPHC NSF H1	VG 460		Shell Cassida Fluid GL 460	Klüberoil 4UH1-460 N					Optileb GT 460	Geralyn SF 460	
	-25 +25		VG 220		Shell Cassida Fluid GL 220	Klüberoil 4UH1-220 N					Optileb GT 220		
	-40 0		VG 68		Shell Cassida Fluid HF 68	Klüberoil 4UH1-68 N					Optileb HY 68		
	-20 +40	E	VG 460			Klüberbio CA2-460	Aral Degol BAB 460			Tribol Bio Top 1418/460		Plantogear 460 S	
W...(HW...)	Standard -20 +40	SEW PG	VG 460 2)			Klüber SEW HT-460-5							
	4) -40 +10	API GL5	SAE 75W90 (–VG 100)	Mobil Synthetic Gear Oil 75 W90									
	-20 +40	H1 PG	VG 460 2) 3)			Klübersynth UH1 6-460							
R32 R302	-25 +60	DIN 51 818 5)	00	Glygoyle Grease 00	Shell Tivela GL 00	Klübersynth GE 46-1200			Multifak 6833 EP 00		Spheerol EPL 0		Marson SY 00
	Standard -15 +40		000 - 0	Mobilux EP 004	Shell Alvania GL 00		Aralub MFL 00	BP Energrease LS-EP 00	Multifak EP 000		CLS Grease Longtime PD 00	Renolin SF 7 - 041	Multis EP 00

Lubricant fill quantities

The specified fill quantities are **recommended values**. The precise values vary depending on the number of stages and gear ratio. When filling, it is essential to check the **oil level plug since it indicates the precise oil volume**.

The following tables show guide values for lubricant fill quantities in relation to the mounting position M1 - M6.

Helical (R) gear units

RX..

Gear unit	Fill quantity in liters					
	M1	M2	M3	M4	M5	M6
RX57	0.60	0.80	1.30	1.30	0.90	0.90
RX67	0.80	0.80	1.70	1.90	1.10	1.10
RX77	1.10	1.50	2.60	2.70	1.60	1.60
RX87	1.70	2.50	4.80	4.80	2.90	2.90
RX97	2.10	3.40	7.4	7.0	4.80	4.80
RX107	3.90	5.6	11.6	11.9	7.7	7.7

RXF..

Gear unit	Fill quantity in liters					
	M1	M2	M3	M4	M5	M6
RXF57	0.50	0.80	1.10	1.10	0.70	0.70
RXF67	0.70	0.80	1.50	1.40	1.00	1.00
RXF77	0.90	1.30	2.40	2.00	1.60	1.60
RXF87	1.60	1.95	4.90	3.95	2.90	2.90
RXF97	2.10	3.70	7.1	6.3	4.80	4.80
RXF107	3.10	5.7	11.2	9.3	7.2	7.2

R.., R..F

Gear unit	Fill quantity in liters					
	M1[1)]	M2	M3	M4	M5	M6
R07	0.12	0.20	0.20	0.20	0.20	0.20
R17	0.25	0.55	0.35	0.55	0.35	0.40
R27	0.25/0.40	0.70	0.50	0.70	0.50	0.50
R37	0.30/0.95	0.85	0.95	1.05	0.75	0.95
R47	0.70/1.50	1.60	1.50	1.65	1.50	1.50
R57	0.80/1.70	1.90	1.70	2.10	1.70	1.70
R67	1.10/2.30	2.40	2.80	2.90	1.80	2.00
R77	1.20/3.00	3.30	3.60	3.80	2.50	3.40
R87	2.30/6.0	6.4	7.2	7.2	6.3	6.5
R97	4.60/9.8	11.7	11.7	13.4	11.3	11.7
R107	6.0/13.7	16.3	16.9	19.2	13.2	15.9
R137	10.0/25.0	28.0	29.5	31.5	25.0	25.0
R147	15.4/40.0	46.5	48.0	52.0	39.5	41.0
R167	27.0/70.0	82.0	78.0	88.0	66.0	69.0

1) The larger gear unit of multi-stage gear units must be filled with the larger oil volume.

RF..

Gear unit	Fill quantity in liters					
	M1[1)]	M2	M3	M4	M5	M6
RF07	0.12	0.20	0.20	0.20	0.20	0.20
RF17	0.25	0.55	0.35	0.55	0.35	0.40
RF27	0.25/0.40	0.70	0.50	0.70	0.50	0.50
RF37	0.35/0.95	0.90	0.95	1.05	0.75	0.95
RF47	0.65/1.50	1.60	1.50	1.65	1.50	1.50
RF57	0.80/1.70	1.80	1.70	2.00	1.70	1.70
RF67	1.20/2.50	2.50	2.70	2.80	1.90	2.10
RF77	1.20/2.60	3.10	3.30	3.60	2.40	3.00
RF87	2.40/6.0	6.4	7.1	7.2	6.3	6.4
RF97	5.1/10.2	11.9	11.2	14.0	11.2	11.8
RF107	6.3/14.9	15.9	17.0	19.2	13.1	15.9
RF137	9.5/25.0	27.0	29.0	32.5	25.0	25.0
RF147	16.4/42.0	47.0	48.0	52.0	42.0	42.0
RF167	26.0/70.0	82.0	78.0	88.0	65.0	71.0

1) The larger gear unit of multi-stage gear units must be filled with the larger oil volume.

Parallel shaft helical (F) gear units

F.., FA..B, FH..B, FV..B

Gear unit	Fill quantity in liters					
	M1	M2	M3	M4	M5	M6
F..27	0.60	0.80	0.65	0.70	0.60	0.60
F..37	0.95	1.25	0.70	1.25	1.00	1.10
F..47	1.50	1.80	1.10	1.90	1.50	1.70
F..57	2.60	3.50	2.10	3.50	2.80	2.90
F..67	2.70	3.80	1.90	3.80	2.90	3.20
F..77	5.9	7.3	4.30	8.0	6.0	6.3
F..87	10.8	13.0	7.7	13.8	10.8	11.0
F..97	18.5	22.5	12.6	25.2	18.5	20.0
F..107	24.5	32.0	19.5	37.5	27.0	27.0
F..127	40.5	54.5	34.0	61.0	46.3	47.0
F..157	69.0	104.0	63.0	105.0	86.0	78.0

FF..

Gear unit	Fill quantity in liters					
	M1	M2	M3	M4	M5	M6
FF27	0.60	0.80	0.65	0.70	0.60	0.60
FF37	1.00	1.25	0.70	1.30	1.00	1.10
FF47	1.60	1.85	1.10	1.90	1.50	1.70
FF57	2.80	3.50	2.10	3.70	2.90	3.00
FF67	2.70	3.80	1.90	3.80	2.90	3.20
FF77	5.9	7.3	4.30	8.1	6.0	6.3
FF87	10.8	13.2	7.8	14.1	11.0	11.2
FF97	19.0	22.5	12.6	25.6	18.9	20.5
FF107	25.5	32.0	19.5	38.5	27.5	28.0
FF127	41.5	55.5	34.0	63.0	46.3	49.0
FF157	72.0	105.0	64.0	106.0	87.0	79.0

FA.., FH.., FV.., FAF.., FAZ.., FHF.., FHZ.., FVF.., FVZ.., FT..

Gear unit	Fill quantity in liters					
	M1	M2	M3	M4	M5	M6
F..27	0.60	0.80	0.65	0.70	0.60	0.60
F..37	0.95	1.25	0.70	1.25	1.00	1.10
F..47	1.50	1.80	1.10	1.90	1.50	1.70
F..57	2.70	3.50	2.10	3.40	2.90	3.00
F..67	2.70	3.80	1.90	3.80	2.90	3.20
F..77	5.9	7.3	4.30	8.0	6.0	6.3
F..87	10.8	13.0	7.7	13.8	10.8	11.0
F..97	18.5	22.5	12.6	25.2	18.5	20.0
F..107	24.5	32.0	19.5	37.5	27.0	27.0
F..127	39.0	54.5	34.0	61.0	45.0	46.5
F..157	68.0	103.0	62.0	104.0	85.0	77.0

Helical-bevel (K) gear units

K.., KA..B, KH..B, KV..B

Gear unit	Fill quantity in liters					
	M1	M2	M3	M4	M5	M6
K..37	0.50	1.00	1.00	1.25	0.95	0.95
K..47	0.80	1.30	1.50	2.00	1.60	1.60
K..57	1.10	2.20	2.20	2.80	2.30	2.10
K..67	1.10	2.40	2.60	3.45	2.60	2.60
K..77	2.20	4.10	4.40	5.8	4.20	4.40
K..87	3.70	8.0	8.7	10.9	8.0	8.0
K..97	7.0	14.0	15.7	20.0	15.7	15.5
K..107	10.0	21.0	25.5	33.5	24.0	24.0
K..127	21.0	41.5	44.0	54.0	40.0	41.0
K..157	31.0	62.0	65.0	90.0	58.0	62.0
K..167	33.0	95.0	105.0	123.0	85.0	84.0
K..187	53.0	152.0	167.0	200	143.0	143.0

KF..

Gear unit	Fill quantity in liters					
	M1	M2	M3	M4	M5	M6
KF37	0.50	1.10	1.10	1.50	1.00	1.00
KF47	0.80	1.30	1.70	2.20	1.60	1.60
KF57	1.20	2.20	2.40	3.15	2.50	2.30
KF67	1.10	2.40	2.80	3.70	2.70	2.70
KF77	2.10	4.10	4.40	5.9	4.50	4.50
KF87	3.70	8.2	9.0	11.9	8.4	8.4
KF97	7.0	14.7	17.3	21.5	15.7	16.5
KF107	10.0	21.8	25.8	35.1	25.2	25.2
KF127	21.0	41.5	46.0	55.0	41.0	41.0
KF157	31.0	66.0	69.0	92.0	62.0	62.0

KA.., KH.., KV.., KAF.., KHF.., KVF.., KAZ.., KHZ.., KVZ.., KT..

Gear unit	Fill quantity in liters					
	M1	M2	M3	M4	M5	M6
K..37	0.50	1.00	1.00	1.40	1.00	1.00
K..47	0.80	1.30	1.60	2.15	1.60	1.60
K..57	1.20	2.20	2.40	3.15	2.70	2.40
K..67	1.10	2.40	2.70	3.70	2.60	2.60
K..77	2.10	4.10	4.60	5.9	4.40	4.40
K..87	3.70	8.2	8.8	11.1	8.0	8.0
K..97	7.0	14.7	15.7	20.0	15.7	15.7
K..107	10.0	20.5	24.0	32.4	24.0	24.0
K..127	21.0	41.5	43.0	52.0	40.0	40.0
K..157	31.0	66.0	67.0	87.0	62.0	62.0

Helical-worm (S) gear units

S

Gear unit	Fill quantity in liters					
	M1	M2	M3[1)]	M4	M5	M6
S..37	0.25	0.40	0.50	0.55	0.40	0.40
S..47	0.35	0.80	0.70/0.90	1.00	0.80	0.80
S..57	0.50	1.20	1.00/1.20	1.45	1.30	1.30
S..67	1.00	2.00	2.20/3.10	3.10	2.60	2.60
S..77	1.90	4.20	3.70/5.4	5.9	4.40	4.40
S..87	3.30	8.1	6.9/10.4	11.3	8.4	8.4
S..97	6.8	15.0	13.4/18.0	21.8	17.0	17.0

1) The larger gear unit of multi-stage gear units must be filled with the larger oil volume.

SF..

Gear unit	Fill quantity in liters					
	M1	M2	M3[1)]	M4	M5	M6
SF37	0.25	0.40	0.50	0.55	0.40	0.40
SF47	0.40	0.90	0.90/1.05	1.05	1.00	1.00
SF57	0.50	1.20	1.00/1.50	1.55	1.40	1.40
SF67	1.00	2.20	2.30/3.00	3.20	2.70	2.70
SF77	1.90	4.10	3.90/5.8	6.5	4.90	4.90
SF87	3.80	8.0	7.1/10.1	12.0	9.1	9.1
SF97	7.4	15.0	13.8/18.8	22.6	18.0	18.0

1) The larger gear unit of multi-stage gear units must be filled with the larger oil volume.

SA.., SH.., SAF.., SHZ.., SAZ.., SHF.., ST..

Gear unit	Fill quantity in liters					
	M1	M2	M3[1)]	M4	M5	M6
S..37	0.25	0.40	0.50	0.50	0.40	0.40
S..47	0.40	0.80	0.70/0.90	1.00	0.80	0.80
S..57	0.50	1.10	1.00/1.50	1.50	1.20	1.20
S..67	1.00	2.00	1.80/2.60	2.90	2.50	2.50
S..77	1.80	3.90	3.60/5.0	5.8	4.50	4.50
S..87	3.80	7.4	6.0/8.7	10.8	8.0	8.0
S..97	7.0	14.0	11.4/16.0	20.5	15.7	15.7

1) The larger gear unit of multi-stage gear units must be filled with the larger oil volume.

SPIROPLAN® (W) gear units

The fill quantity of SPIROPLAN® gear units W..10 to W..30 does not vary, irrespective of their mounting position. Only the fill quantities of SPRIOPLAN® gear units W..37 and W..47 in mounting position M4 are different from that of other mounting positions.

W.., WF.., WA..B, WH..B

Gear unit	Fill quantity in liters					
	M1	M2	M3	M4	M5	M6
W..10	0.16					
W..20	0.24					
W..30	0.40					
W..37	0.50			0.70	0.50	
W..47	0.90			1,40	0.90	

WA.., WAF.., WT.., WH.., WHF..

Gear unit	Fill quantity in liters					
	M1	M2	M3	M4	M5	M6
W..10	0.16					
W..20	0.24					
W..30	0.40					
W..37	0.50			0.70	0.50	
W..47	0.80			1,25	0.80	

6.14 Lubricants and fill quantities of BS.F, PS.F gear units

General information

Unless a special arrangement is made, SEW-EURODRIVE supplies the gear units with a lubricant fill adapted for the specific mounting position. The decisive factor is the mounting position (M1 to M6) specified when ordering the drive. The standard synthetic lubricant has a service life of approximately 5 years under normal operating conditions.

INFORMATION

SEW-EURODRIVE fills the gear units with the amount of oil specified for the specific mounting positions. If the mounting position is changed, the amount of oil must be adapted as required. Consequently, a **mounting position** may only be **changed** after consultation with SEW-EURODRIVE, otherwise your right to claim under warranty **no longer applies**.

INFORMATION

BS.F helical-bevel and PS.F planetary gear units from SEW-EURODRIVE are supplied exclusively with synthetic lubricants.

Drives for the food industry are available from SEW-EURODRIVE on request.

The following lubricant tables show the permitted standard lubricants for BS.F.. helical-bevel gear units and PS.F planetary gear units from SEW-EURODRIVE.

Lubricant table for gear unit oil for BS.F helical-bevel gear units

BS.F..	Umgebungstemperatur	API-Klasse	ISO	Öl	Wälzlager-fett
		GL5	VG ~ 100	Mobil synthetic gear oil 75W-90	Fuchs Renolit CX TOM 15-OEM

65174ADE

Lubricant table for the food industry

BS.F..	Umgebungstemperatur	ISO	Öl	Wälzlager-fett
	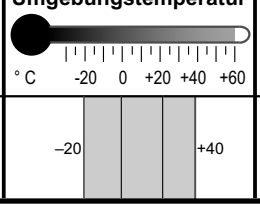	VG 460	Klübersynth UH1 6-460	Castrol Obeen FS2

65174ADE

Fill quantities dependent on mounting position

The following tables show guide values for lubricant fill quantities in relation to the mounting position M1 - M6.

Fill quantities of BS.F helical-bevel gear units

BSF.. helical-bevel gear units	Fill quantity in liters					
	M1	M2	M3	M4	M5	M6
BSF202	0.15	0.25	0.25	0.30	0.25	0.25
BSF302	0.25	0.50	0.50	0.55	0.35	0.35
BSF402	0.45	0.80	0.80	1.05	0.65	0.65
BSF502	1.00	1.80	1.80	2.50	1.50	1.50
BSF602	1.60	2.50	2.80	4.10	2.00	2.60
BSF802	3.30	5.30	5.70	7.90	4.50	4.50

Fill quantity tolerance for BSF..

Fill quantity in liters [l]	Tolerance
up to 1 l	0.01 l
> 1 l	1% of the fill quantity

Lubricant table for gear unit oil for PS.F planetary gear units

PS.F..	Umgebungstemperatur °C -20 0 +20 +40 +60	DIN ISO	ISO	Öl	Wälzlagerfett
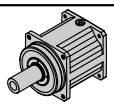	- 20 + 40	CLP PG 220[1)]	VG 220	Klübersynth GH6-220	Klüber Petamo GHY 133 N

57375ADE

1) CLP PG = Polyglycol

Lubricant table for the food industry

PS.F..	Umgebungstemperatur °C -20 0 +20 +40 +60	ISO	Öl	Wälzlager-fett
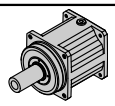	–20 +40	VG 460	Klübersynth UH1 6-460	Castrol Obeen FS2

65189ADE

Fill quantities dependent on mounting position

The following tables show guide values for lubricant fill quantities in relation to the mounting position M1 - M6.

Fill quantities of PS..F planetary gear units

PSF.. planetary gear units	Adapter mounting - Fill quantity in liters [l]		
	M1 (M3, M5, M6)	M2	M4
PSF121	0.023	0.025	0.023
PSF122	0.035	0.056	0.054
PSF221	0.035	0.052	0.035
PSF222	0.045	0.075	0.085
PSF321	0.070	0.100	0.070
PSF322	0.095	0.170	0.190
PSF521	0.140	0.215	0.150
PSF522	0.200	0.360	0.395
PSF621	0.300	0.465	0.320
PSF622	0.410	0.680	0.780
PSF721	0.600	0.930	0.650
PSF722	0.750	1.230	1.645
PSF821	1.000	1.750	1.350
PSF822	1.550	2.550	3.350
PSF921	1.400	2.450	1.900
PSF922	2.050	3.500	4.350

PSBF.. planetary gear unit	Adapter mounting - Fill quantity in liters [l]		
	M1 (M3, M5, M6)	M2	M4
PSBF221	0.025	0.040	0.025
PSBF222	0.035	0.061	0.060
PSBF321	0.045	0.068	0.050
PSBF322	0.070	0.135	0.130
PSBF521	0.093	0.143	0.103
PSBF522	0.143	0.288	0.273
PSBF621	0.198	0.318	0.188
PSBF622	0.298	0.538	0.498
PSBF721	0.474	0.684	0.314
PSBF722	0.564	0.884	1.004
PSBF821	0.495	0.995	0.695
PSBF822	0.995	1.795	1.995

*) Fill quantities for direct mounting of CFM90 servomotors

Fill quantity tolerance for PS.F

Planetary gear units	Fill quantity in liters [l]
PS.F121/122	± 0.001
PS.F221/222	± 0.001
PS.F321/322	± 0.002
PS.F521/522	± 0.005
PS.F621/622	± 0.005
PS.F721/722	± 0.010
PS.F821/822	± 0.010
PS.F921/922	± 0.010

6.15 Restriction of permitted torques when using EBH / EPH with coupling sleeve

Type	D1	M_{zul} 1)
EPH03	9	18
EPH02	8	14
EPH02	9	18
EPH02	10	24
EPH02	11	30
EPH02	12	37
EPH03 / EBH03	8	14
EPH03 / EBH03	9	18
EPH03 / EBH03	10	24
EPH03 / EBH03	11	30
EPH03 / EBH03	12	37
EPH04 / EBH04	11	30
EPH04 / EBH04	12	37
EPH04 / EBH04	14	54
EPH04 / EBH04	16	74
EPH05 / EBH05	14	54
EPH05 / EBH05	16	74
EPH05 / EBH05	17	86
EPH05 / EBH05	18	99
EPH05 / EBH05	19	113
EPH07 / EBH07	22	160
EPH07 / EBH07	24	198
EPH07 / EBH07	28	287
EPH08 / EBH08	32	396
EPH08 / EBH08	35	492
EPH09 / EBH09	32	396
EPH09 / EBH09	35	492
EPH09 / EBH09	38	501
EPH10 / EBH10	48	1053

1) Maximum permitted input torque

7 Important Information on Selection Tables and Dimension Sheets

7.1 Information on the selection tables for R, F, K, S, W gear units

Adapter sizes

[Nm]		AQ. M_{amax} | M_{apk} | $M_{aNotaus}$											
	i	80/1-3			100/1-4			115/1-2			115/3		
FA27 2	4.16	70	70	137	70	70	141	70	70	141	87	130	148
	4.93	83	83	162	83	83	163	83	83	163	96	144	163
	5.27	89	89	170	89	89	170	89	89	170	100	150	170

Gear unit reduction ratio

Gear unit size with number of gear unit stages

m [kg]		AQA			
	s	80/1-3	100/1-4	115/1-2	115/3
FA27	2	9.0	9.6	10	10
FA27	3	9.2	9.9	10	10
FAF: + 0.7 kg / F: + 0.5 kg / FF: + 1.3 kg					

m Mass of the drive

s Number of gear unit stages

		AQA			
		80/1-3	100/1-4	115/1-2	115/3
$J_A\ 10^{-4}$	[kgm^2]	0.77	1.4	1.4	3.1
c_{TA}	[Nm/']	0.25	0.25	0.25	0.625

J_A Mass moment of inertia of the adapter

c_{TA} Torsional rigidity of the adapter

FA27							F_{Ramax}				F_{Rapk}			
n_e = 1400	i	M_{amax} [Nm]	M_{apk} [Nm]	$M_{aNotaus}$ [Nm]	n_{ak} [1/min]	$J_G\ 10^{-4}$ [kgm^2]	FA [N]	FAF [N]	F [N]	FF [N]	FA [N]	FAF [N]	F [N]	FF [N]
FA27 2	4.16	87	130	148	361	1.4	1810	1810	1380	1180	4500	4500	4500	4500
	4.93	96	144	163	304	1.0	1860	1860	1420	1210	4500	4500	4500	4500
	5.27	100	150	170	266	0.90	1880	1880	1440	1220	4500	4500	4500	4500

n_e Reference speed at continuous duty

i Gear unit reduction ratio

M_{amax} Maximum permitted output torque for continuous duty

M_{apk} Maximum permitted output torque for short-time duty

$M_{aNotaus}$ Maximum permitted output emergency stop torque, max. 1000 emergency stops

n_{ak} Breakpoint speed (output)

J_G Mass moment of inertia of the gear unit with reference to the input shaft

F_{Ramax} Maximum permitted overhung load at the output shaft at M_{amax}, load application point at the center of the shaft end

F_{Rapk} Maximum permitted overhung load at the output shaft at M_{apk}, load application point at the center of the shaft end

AQ.	i	n_{epk} [1/min]	η [%]	c_{TG} FA [Nm/']	FAF [Nm/']	F [Nm/']	FF [Nm/']
FA27 2	4.16	4120	97	46	46	21	18
	4.93	4500	97	46	46	21	18
	5.27	4500	97	46	46	21	18

i Gear unit reduction ratio

n_{epk} Maximum permitted input speed for short-time duty

η Efficiency of the gear unit (at M_{amax}, n_e=1400 rpm, mounting position M1, continuous duty)

c_{TG} Torsional rigidity of the gear unit

7.2 Information on the selection tables for BS.F, PS.F, PS.C gear units

Adapter sizes

[Nm]	i	EBH M_{amax} | M_{apk} | $M_{aNotaus}$ 03			04		
BSF202 2	3.00	40	60	90	40	60	90
	4.00	40	60	90	40	60	90
	6.00	40	60	90	40	60	90

Gear unit reduction ratio

Gear unit size with number of gear unit stages

m [kg]	s	EBH 03	04
BSF202	2	5.3	5.3
BSBF: + 0.0 kg / BSHF: + 0.0 kg			

m Mass of the drive

s Number of gear unit stages



EBH03							c_T			F_{Ramax}			F_{Rapk}		
n_e = 1500	i	M_{amax} [Nm]	M_{apk} [Nm]	$M_{aNotaus}$ [Nm]	n_{ak} [1/min]	J_{GA} 10^{-4} [kgm^2]	BSF [Nm/']	BSBF [Nm/']	BSHF [Nm/']	BSF [N]	BSBF [N]	BSHF [N]	BSF [N]	BSBF [N]	BSHF [N]
BSF202 2	3.00	40	60	90	667	1.8	1.8	2.0	2.0	2680	2970	2600	4200	4200	4200
	4.00	40	60	90	650	1.5	2.1	2.3	2.2	3000	3330	2900	4200	4200	4200
	6.00	40	60	90	650	1.3	2.3	2.6	2.5	3500	3880	3390	4200	4200	4200

n_e	Reference speed at continuous duty
i	Gear unit reduction ratio
M_{amax}	Maximum permitted output torque for continuous duty
M_{apk}	Maximum permitted output torque for short-time duty
$M_{aNotaus}$	Maximum permitted output emergency stop torque, max. 1000 emergency stops
n_{ak}	Breakpoint speed (output)
J_{GA}	Mass moment of inertia of the gear unit including adapter with reference to the input shaft
c_T	Torsional rigidity of the gear unit / gear unit with adapter
F_{Ramax}	Maximum permitted overhung load at the output shaft at M_{amax}, load application point at the center of the shaft end
F_{Rapk}	Maximum permitted overhung load at the output shaft at M_{apk}, load application point at the center of the shaft end

EBH				M1			M2;M4			M3;M5-6			φ		
	i	n_{epk} [1/min]	η [%]	a_0	a_1	a_2	a_0	a_1	a_2	a_0	a_1	a_2	[']	/R [']	/M [']
BSF202 2	3.00	4500	93.7	4.10	-0.011	77457	14.47	-0.020	66498	6.12	-0.013	75323	6	3	-
	4.00	4500	93.7	4.26	-0.014	76815	20.11	-0.028	60846	7.52	-0.017	73532	6	3	-
	6.00	4500	93.7	4.50	-0.019	75905	30.66	-0.042	51203	10.05	-0.024	70662	6	3	-

i	Gear unit reduction ratio
n_{epk}	Maximum permitted input speed for short-time duty
η	Efficiency of the gear unit (at M_{amax}, n_e=1500 rpm, mounting position M1, continuous duty)
φ	Circumferential backlash
a_0, a_1, a_2	Gear unit constants as regards the rise in temperature in the gear unit

7.3 Information about the dimension sheets

Scope of delivery



= Standard parts supplied by SEW-EURODRIVE.



= Standard parts not supplied by SEW-EURODRIVE.

Tolerances

Shaft heights

The following tolerances apply to the indicated dimensions:

h	≤ 250 mm	→ -0.5 mm
h	> 250 mm	→ -1 mm

Foot-mounted gear units: Check the mounted motor because it may project below the mounting surface.

Shaft ends

Diameter tolerance:

∅	≤ 50 mm	→ ISO k6
∅	> 50 mm	→ ISO m6

Center bores according to DIN 332, shape DR:

∅	= 7...10 mm	→ M3	∅	> 30...38 mm	→ M12
∅	> 10...13 mm	→ M4	∅	> 38...50 mm	→ M16
∅	> 13...16 mm	→ M5	∅	> 50...85 mm	→ M20
∅	> 16...21 mm	→ M6	∅	> 85...130 mm	→ M24
∅	> 21...24 mm	→ M8	∅	> 130 mm	→ M30
∅	> 24...30 mm	→ M10			

Keys: according to DIN 6885 (domed type)

Hollow shafts

Diameter tolerance:

∅ → ISO H7 measured with plug gauge

Keys: according to DIN 6885 (domed type)

Exception: Key for WA37 with shaft ∅ 25 mm according to DIN 6885-3 (low form)

Multiple-spline shafts

Dm	= Measuring roller diameter
Me	= Check gauge

Flanges

Centering shoulder tolerance:

∅	≤ 230 mm (flange sizes A120...A300)	→ ISO j6
∅	> 230 mm (flange sizes A350...A660)	→ ISO h6

Up to 3 different flange dimensions are available for each size of helical gear unit, SPIROPLAN® gear unit, AC (brake) motor and explosion-proof AC (brake) motor. The dimension sheets show the possible flanges for the respective sizes.

Eyebolts, lifting eyes

R07...R27 helical gear units and SPIROPLAN® gearmotors W..10 to W..30 are delivered without special transportation fixtures. All other gear units and motors are equipped with cast-on suspension eye lugs, screw-on suspension eye lugs or screw-on lifting eyebolts.

Gear unit/motor type	screw-on,		cast-on eyebolts
	lifting eyebolts	eyebolts	
R..37-R..57	-	•	-
R..67-R..167	•	-	-
RX57-RX67	-	•	-
RX77-RX107	•	-	-
F..27-F..157	-	-	•
K..37-K..157	-	-	•
K..167-K..187	•	-	-
W..37, W..47	-	•	-
S..37-S..47	-	•	-
S..57-S..97	-	-	•
BS.F502..802	-	•	-
PS.F621..921	-	•	-
PS.F622..922	-	•	-

Breather valves

The gear unit dimension drawings always show the screw plugs. The corresponding screw plug is replaced by an activated breather valve at the factory depending on the ordered mounting position M1 to M6. Contour dimensions might be slightly different as a result.

Shrink disk connection

Hollow shaft gear unit with shrink disk connection: If required, please request a detailed data sheet on shrink disks, data sheet no. 33 753 ..95.

Splined hollow shaft

FV.. hollow shaft gear unit sizes 27 to 107 and KV.. sizes 37 to 107 are supplied with splining according to DIN 5480.

Rubber buffer for FA/FH/FV/FT

Preload rubber buffer by the indicated value mL. The characteristic curve of spring for the rubber buffers is available at SEW-EURODRIVE on request.

Torque arm position

The following illustration shows the possible torque arm positions for helical-worm gear units and SPIROPLAN® gear units (135û position not possible with SPIROPLAN® gear units) as well as the respective angles:

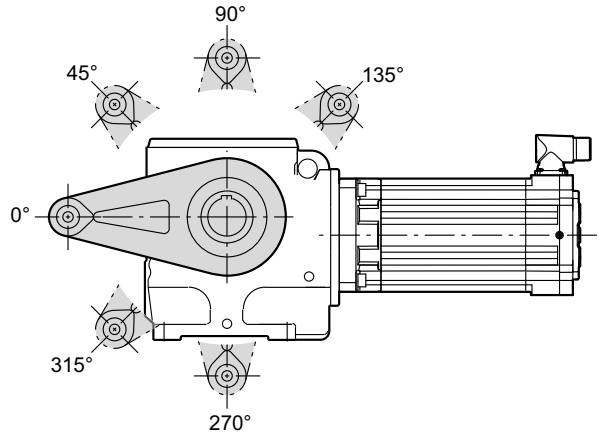

63237AXX

Figure 29: Position of the torque arm for S and W gear units

For information on torque arms for helical-worm gear units, refer to the dimension sheets from page 380, for specifications on torque arms for SPIROPLAN® gear units, refer to the dimension sheets from page 410.

The following illustration shows the possible torque arm positions for BS.F gear units:

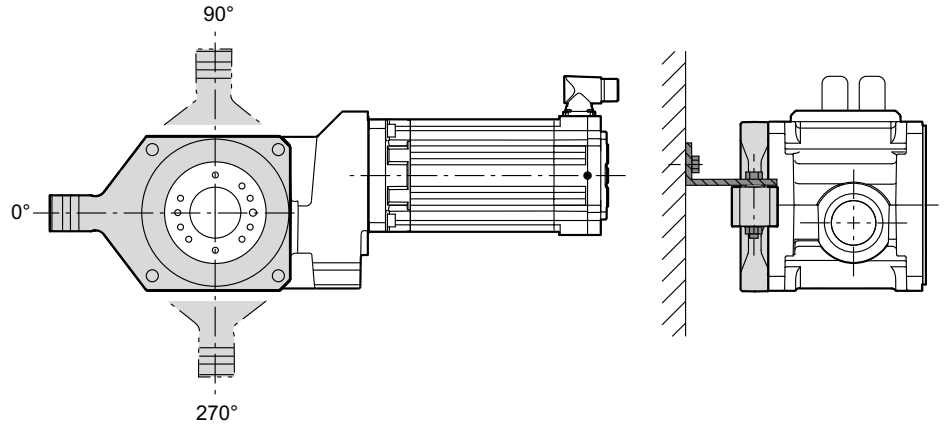

63240AXX

Figure 30: Position of the torque arm for BS.F gear units

For specifications regarding torque arms for helical-bevel gear units, refer to page 474.

Tolerances and chamfers for flange block gear units

For detailed information, refer to page 475 or page 536.

Front and foot end mounting of BS.F..B gear units

For detailed information, refer to page 473.

7.4 Gearmotor dimensions

Motor options

The motor dimensions may change due to motor options. Refer to the dimension drawings of the motor options.

Special designs

The terminal box dimensions in special designs might vary from the standard.

EN 50347

European standard EN 50347 became effective in August 2001. This standard adopts the dimension designations for three-phase AC motors of size 56 to 315M and flange size 65 to 740 from the IEC 72-1 standard.

The new dimension designations given in EN 50347 / IEC 72-1 are used for the relevant dimensions in the dimension sheet tables.

Dimension designations of gearmotors

Below an overview of dimension designations for gearmotors:

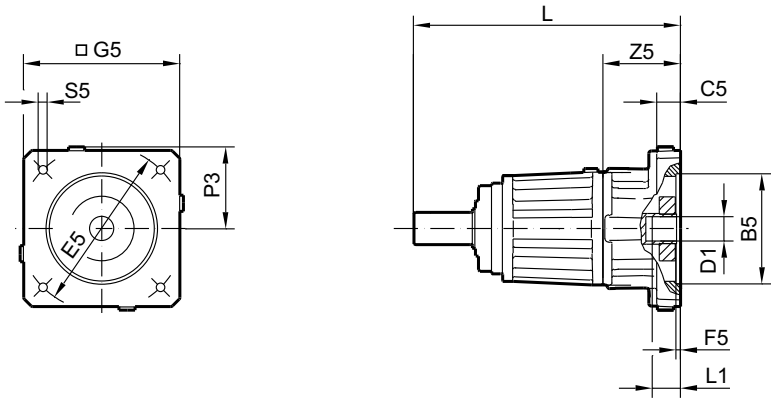

64749axx

G5	Square dimension	C5	Flange thickness
S5	Threaded hole	B5	Centering diameter
P3	Projecting length of closing plug	D1	Coupling bore diameter
E5	Hole circle diameter	F5	Centering depth
L	Total length of the gear unit with adapter	L1	Maximum insertion depth of motor shaft
Z5	Adapter length		

INFORMATION

For motors with other feedback systems than resolvers, possible additional lengths must be considered.

8 R..

8.1 R.. AQ..

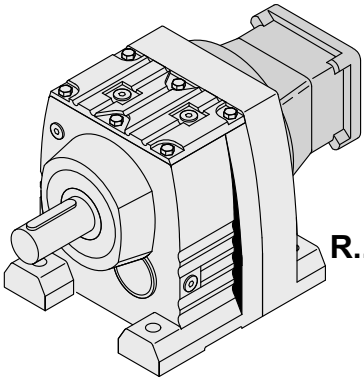

R.. AQ..

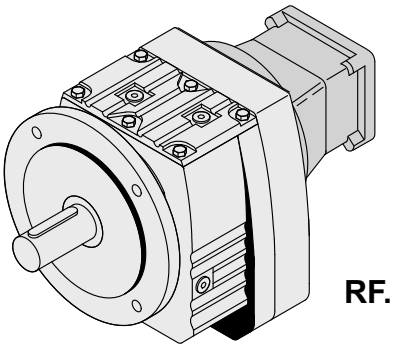

RF.. AQ..

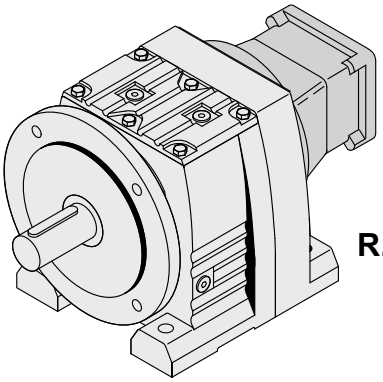

R..F AQ..

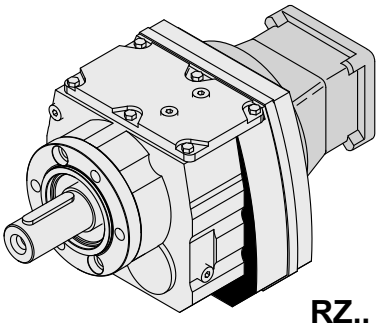

RZ.. AQ..

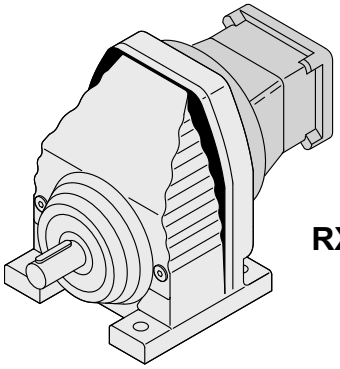

RX.. AQ..

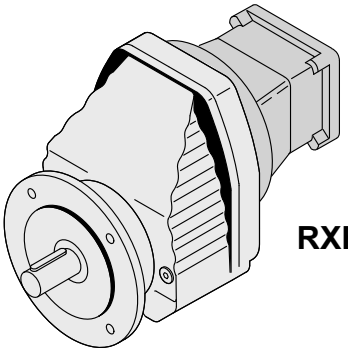

RXF.. AQ..

63937axx

8.2 RX.. AQ..

8.2.1 RX 57 AQ.. [Nm]

[Nm]		AQ. M_{amax} | M_{apk} | $M_{aNotaus}$																							
	i	80/1-3			100/1-4			115/1-2			115/3			140/1			140/2-4			160/1			190/1-3		
RX57 1	1.30	22	22	42	22	22	44	22	22	44	59	59	59	63	78	107	63	90	107	63	90	107	63	90	107
	1.48	25	25	48	25	25	50	25	25	50	68	68	68	68	88	116	68	90	116	68	90	116	68	90	116
	1.65	28	28	54	28	28	56	28	28	56	69	75	75	69	90	117	69	90	117	69	90	117	69	90	117
	1.92	32	32	63	32	32	65	32	32	65	69	88	88	69	90	117	69	90	117	69	90	117	69	90	117
	2.04	34	34	67	34	34	69	34	34	69	69	90	93	69	90	117	69	90	117	69	90	117	69	90	117
	2.37	40	40	78	40	40	80	40	40	80	69	90	109	69	90	117	69	90	117	69	90	117			
	2.64	44	44	87	44	44	89	44	44	89	69	90	117	69	90	117	69	90	117	69	90	117			
	2.91	49	49	96	49	49	98	49	49	98	67	90	114												
	3.14	53	53	103	53	53	106	53	53	106	65	90	111	65	90	111	65	90	111	65	90	111			
	3.55	60	60	117	60	60	117	60	60	117	69	90	117												
	3.79	64	64	117	64	64	117	64	64	117	69	90	117												
	4.35	68	73	116	68	73	116	68	73	116	68	90	116												
	5.07	36	54	61	36	54	61	36	54	61	36	54	61												
	5.50	39	58	66	39	58	66	39	58	66	39	58	66												

m [kg]		AQ.							
	s	80/1-3	100/1-4	115/1-2	115/3	140/1	140/2-4	160/1	190/1-3
RX57	1	14	14	15	15	19	19	19	28
RXF: + 1.9 kg									

		AQ.							
		80/1-3	100/1-4	115/1-2	115/3	140/1	140/2-4	160/1	190/1-3
J_A 10^{-4}	[kgm^2]	0.77	1.4	1.4	3.1	5.1	10.0	10.0	25.0
c_{TA}	[Nm/"]	0.25	0.25	0.25	0.625	0.625	1.0	1.0	2.08

RX57							F_{Ramax}		F_{Rapk}	
n_e = 1400	i	M_{amax} [Nm]	M_{apk} [Nm]	$M_{aNotaus}$ [Nm]	n_{ak} [1/min]	J_G 10^{-4} [kgm^2]	RX [N]	RXF [N]	RX [N]	RXF [N]
RX57 1	1.30	63	90	107	1154	1.9	132	132	3940	3940
	1.48	68	90	116	1014	1.4	112	112	3950	3950
	1.65	69	90	117	1091	1.2	430	430	3960	3960
	1.92	69	90	117	1250	0.94	880	880	3970	3970
	2.04	69	90	117	1324	0.85	1070	1070	3970	3970
	2.37	69	90	117	1477	0.64	1500	1500	3980	3980
	2.64	69	90	117	1629	0.55	1810	1810	3980	3980
	2.91	67	90	114	1856	0.44	2170	2170	3980	3980
	3.14	65	90	111	2197	0.42	2320	2320	3990	3990
	3.55	69	90	117	1972	0.35	2420	2420	3990	3990
	3.79	69	90	117	1847	0.32	2480	2480	3990	3990
	4.35	68	90	116	1609	0.26	2640	2640	4000	4000
	5.07	36	54	61	1381	0.21	3030	3030	4210	4210
	5.50	39	58	66	1273	0.18	3100	3100	4190	4190

AQ.	i	n_{epk} [1/min]	η [%]	c_{TG} RX [Nm/']	c_{TG} RXF [Nm/']
RX57 1	1.30	2483	98	4.2	4.2
	1.48	2827	98	4.2	4.2
	1.65	3151	98	4.2	4.2
	1.92	3667	98	4.2	4.2
	2.04	3896	98	4.2	4.2
	2.37	4500	98	4.2	4.2
	2.64	4500	98	4.2	4.2
	2.91	4500	98	4.2	4.2
	3.14	4500	98	4.2	4.2
	3.55	4500	98	4.2	4.2
	3.79	4500	98	4.2	4.2
	4.35	4500	98	4.2	4.2
	5.07	4500	98	4.2	4.2
	5.50	4500	98	4.2	4.2

8.2.2 RX 57 AQ.. [mm]

01 064 00 08

RX57..

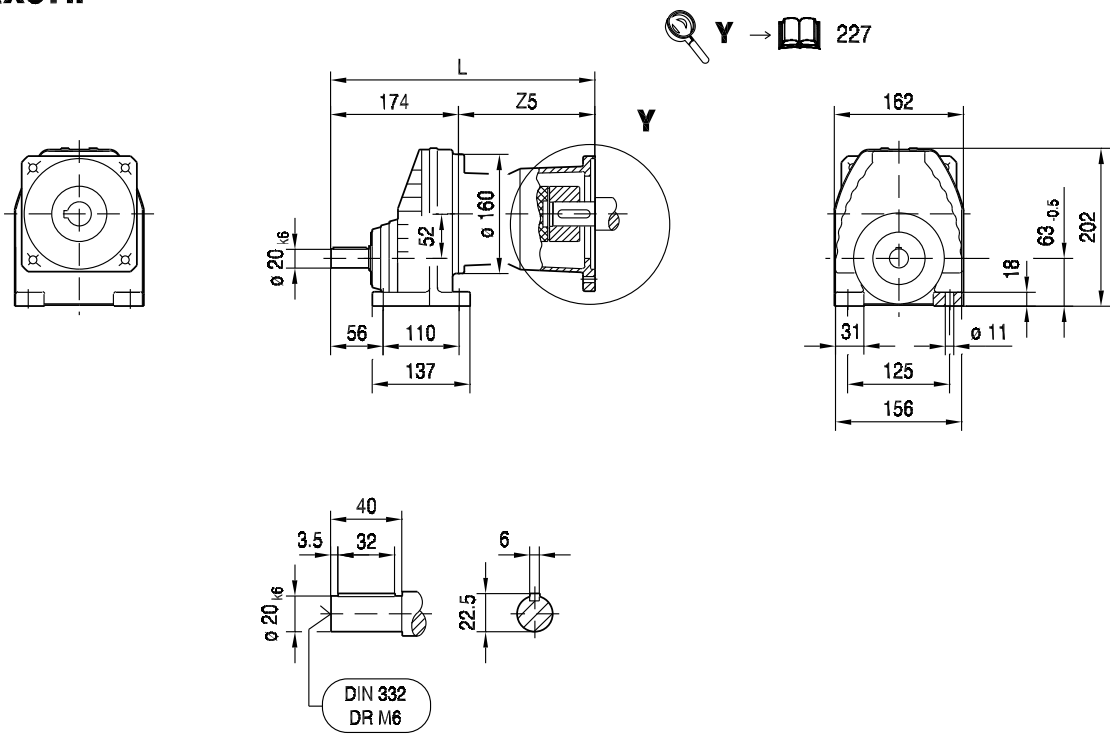

(→ 144)	AQ80/1-3	AQ100/1-2	AQ100/3-4	AQ115/1-3	AQ140/1-2	AQ140/3-4	AQ160/1	AQ190/1-2	AQ190/3
L	272	297	311	320	349	362	362	412	436
Z5	98	123	137	146	175	188	188	237.5	261.5

01 065 00 08

RXF57..

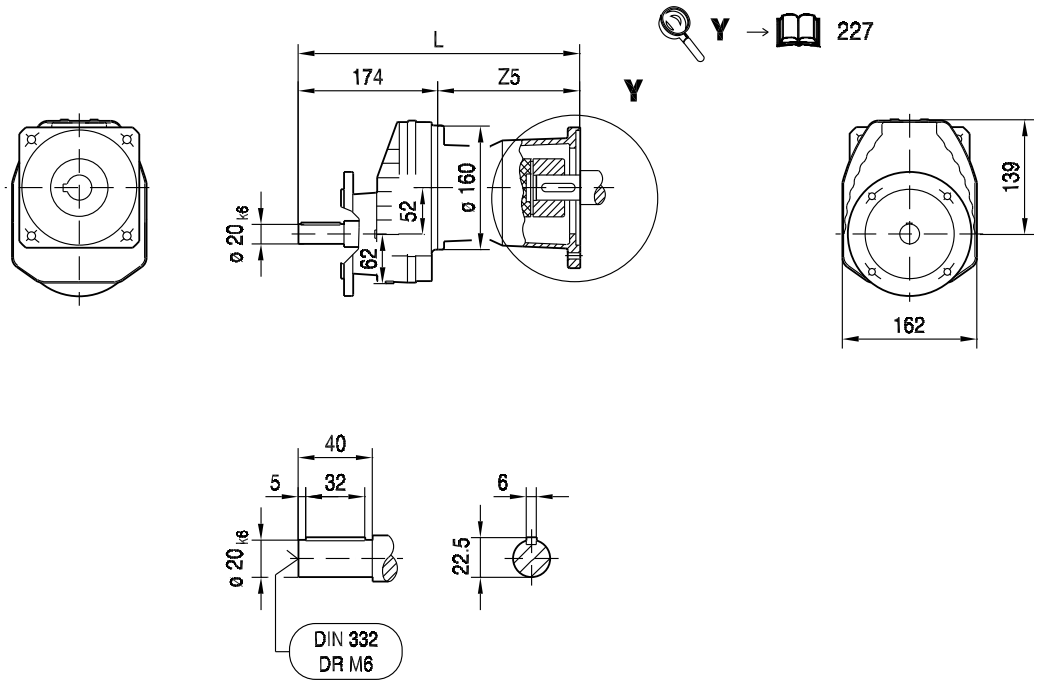

ø 140

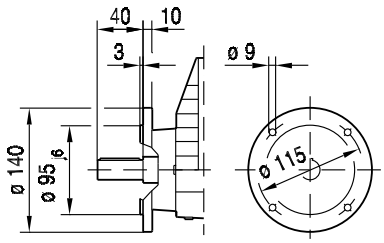

ø 160

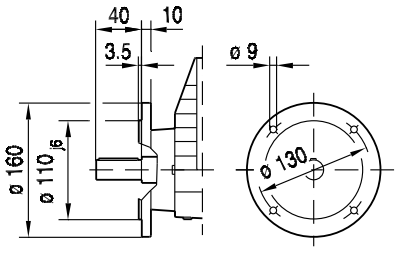

ø 200

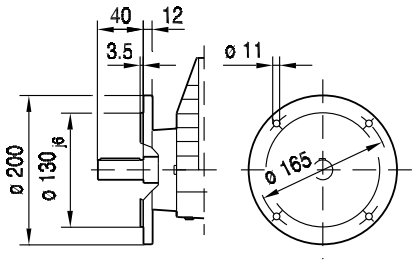

(→ 144)	AQ80/1-3	AQ100/1-2	AQ100/3-4	AQ115/1-3	AQ140/1-2	AQ140/3-4	AQ160/1	AQ190/1-2	AQ190/3
L	272	297	311	320	349	362	362	412	436
Z5	98	123	137	146	175	188	188	237.5	261.5

8.2.3 RX 67 AQ.. [Nm]

[Nm]		AQ. M_{amax} | M_{apk} | $M_{aNotaus}$																								
	i	80/1-3			100/1-4			115/1-2			115/3			140/1			140/2-4			160/1			190/1-3		
RX67 1	1.40	23	23	46	23	23	47	23	23	47	64	64	64	84	84	140	104	140	140	104	140	140	104	156	177
	1.61	27	27	53	27	27	54	27	27	54	74	74	74	96	96	161	114	161	161	114	161	161	114	171	194
	1.86	31	31	61	31	31	63	31	31	63	85	85	85	111	111	186	126	186	186	126	186	186	126	187	210
	2.04	34	34	67	34	34	69	34	34	69	93	93	93	122	122	200	134	186	200	134	186	200	134	186	225
	2.40	40	40	79	40	40	81	40	40	81	110	110	110	123	144	205	123	163	205	123	163	205	123	163	205
	2.54	43	43	83	43	43	86	43	43	86	116	116	116	118	152	200	118	162	200	118	162	200	118	162	200
	2.89	49	49	95	49	49	98	49	49	98	106	132	132	106	142	180	106	142	180	106	142	180			
	3.20	54	54	105	54	54	108	54	54	108	100	142	147	100	142	170	100	142	170	100	142	170			
	3.77	64	64	124	64	64	128	64	64	128	87	130	148	87	130	148	87	130	148	87	130	148			
	4.30	73	73	136	73	73	136	73	73	136	80	109	136												
	4.53	77	77	139	77	77	139	77	77	139	82	110	139												
	5.18	75	88	128	75	88	128	75	88	128	75	110	128												
	6.07	43	64	73	43	64	73	43	64	73	43	64	73												

m [kg]		AQ.							
	s	80/1-3	100/1-4	115/1-2	115/3	140/1	140/2-4	160/1	190/1-3
RX67	1	16	17	17	17	22	22	22	31
RXF: + 4.0 kg									

		AQ.							
		80/1-3	100/1-4	115/1-2	115/3	140/1	140/2-4	160/1	190/1-3
$J_A\ 10^{-4}$	[kgm²]	0.77	1.4	1.4	3.1	5.1	10.0	10.0	25.0
c_{TA}	[Nm/']	0.25	0.25	0.25	0.625	0.625	1.0	1.0	2.08

RX67 n_e = 1400	i	M_{amax} [Nm]	M_{apk} [Nm]	$M_{aNotaus}$ [Nm]	n_{ak} [1/min]	$J_G\ 10^{-4}$ [kgm²]	F_{Ramax} RX [N]	F_{Ramax} RXF [N]	F_{Rapk} RX [N]	F_{Rapk} RXF [N]
RX67 1	1.40	104	156	177	1071	3.2	205	205	5450	5450
	1.61	114	171	194	932	2.6	245	245	5380	5380
	1.86	126	187	214	806	2.1	225	225	5300	5300
	2.04	134	186	228	735	1.8	230	230	5310	5310
	2.40	123	163	209	1125	1.4	1530	1530	5460	5460
	2.54	118	162	201	1339	1.3	2000	2000	5470	5470
	2.89	106	142	180	1972	1.0	2640	2640	5590	5590
	3.20	100	142	170	2188	0.88	2800	2800	5590	5590
	3.77	87	130	148	1857	0.69	3090	3090	5660	5660
	4.30	80	109	136	1628	0.47	3300	3300	5770	5770
	4.53	82	110	139	1545	0.42	3350	3350	5760	5760
	5.18	75	110	128	1351	0.34	3580	3580	5760	5760
	6.07	43	64	73	1153	0.28	4000	4000	5970	5970

AQ.	i	n_{epk} [1/min]	η [%]	c_{TG} RX [Nm/']	c_{TG} RXF [Nm/']
RX67 1	1.40	2507	99	8.1	8.1
	1.61	2883	99	8.1	8.1
	1.86	3330	99	8.1	8.1
	2.04	3653	99	8.1	8.1
	2.40	4297	99	8.1	8.1
	2.54	4500	99	8.1	8.1
	2.89	4500	98	8.1	8.1
	3.20	4500	98	8.1	8.1
	3.77	4500	98	8.1	8.1
	4.30	4500	98	8.1	8.1
	4.53	4500	98	8.1	8.1
	5.18	4500	98	8.1	8.1
	6.07	4500	98	8.1	8.1

8.2.4 RX 67 AQ.. [mm]

01 066 00 08

RX67..

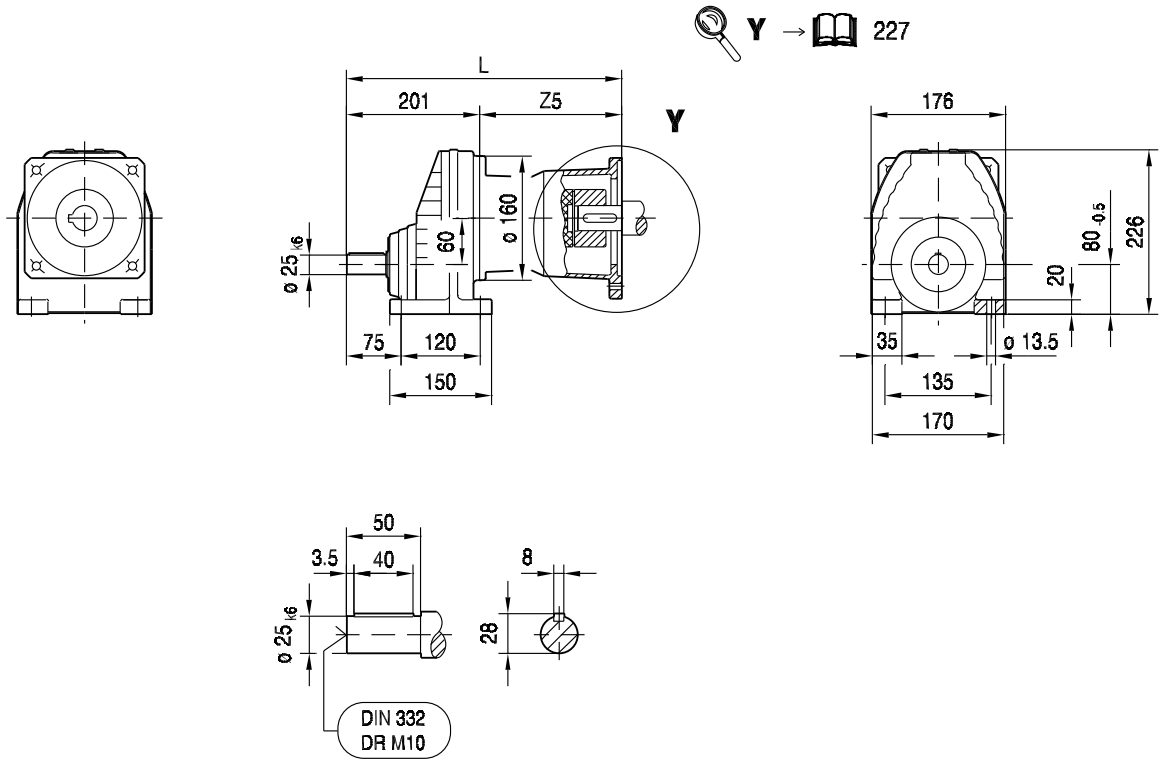

(→ 144)	AQ80/1-3	AQ100/1-2	AQ100/3-4	AQ115/1-3	AQ140/1-2	AQ140/3-4	AQ160/1	AQ190/1-2	AQ190/3
L	299	324	338	347	376	389	389	439	463
Z5	98	123	137	146	175	188	188	237.5	261.5

01 067 00 08

RXF67..

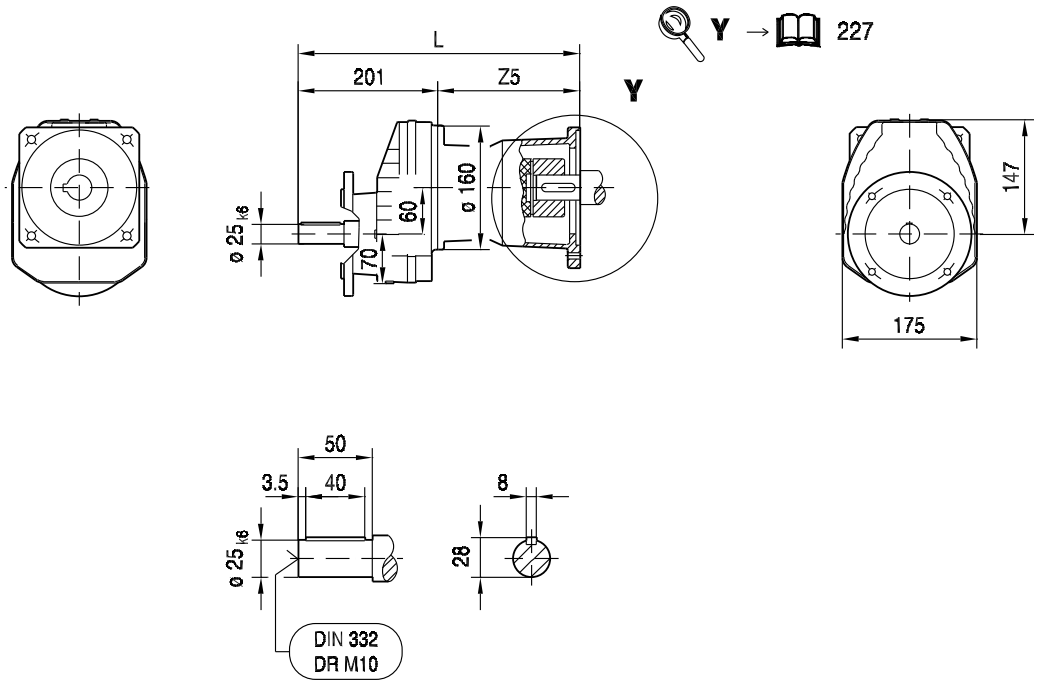

ø 160

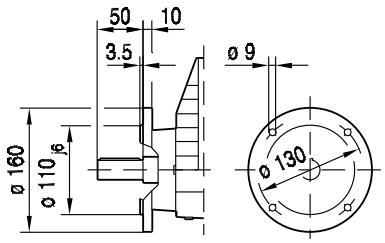

ø 200

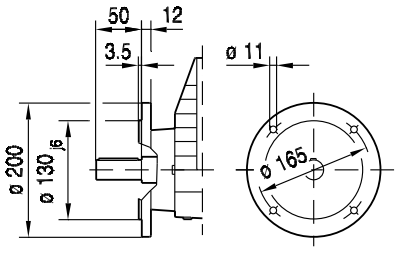

ø 250

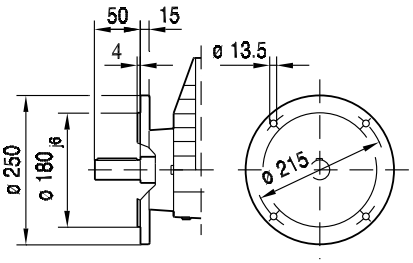

(→ 144)	AQ80/1-3	AQ100/1-2	AQ100/3-4	AQ115/1-3	AQ140/1-2	AQ140/3-4	AQ160/1	AQ190/1-2	AQ190/3
L	299	324	338	347	376	389	389	439	463
Z5	98	123	137	146	175	188	188	237.5	261.5

8.2.5 RX 77 AQ.. [Nm]

[Nm]		AQ. M_{amax} | M_{apk} | $M_{aNotaus}$																								
	i	80/1-3			100/1-4			115/1-2			115/3			140/1			140/2-4			160/1			190/1-3		
RX77 1	1.42	24	24	46	24	24	48	24	24	48	65	65	65	85	85	142	142	142	142	142	142	142	155	225	225
	1.67	28	28	55	28	28	56	28	28	56	76	76	76	100	100	167	167	167	167	167	167	167	173	255	265
	1.88	31	31	62	31	31	63	31	31	63	86	86	86	112	112	188	187	188	188	187	188	188	187	280	300
	2.13	36	36	70	36	36	72	36	36	72	97	97	97	127	127	210	200	210	210	200	210	210	200	300	340
	2.43	41	41	80	41	41	82	41	41	82	111	111	111	145	145	240	215	240	240	215	240	240	215	305	365
	2.70	45	45	89	45	45	91	45	45	91	124	124	124	162	162	270	215	270	270	215	270	270	215	285	365
	3.08	52	52	101	52	52	104	52	52	104	141	141	141	184	184	305	193	260	305	193	260	305	193	260	325
	3.25	55	55	107	55	55	110	55	55	110	149	149	149	182	195	305	182	260	305	182	260	305	182	260	305
	3.70	62	62	122	62	62	125	62	62	125	153	170	170	153	215	260	153	215	260	153	215	260			
	4.04	68	68	133	68	68	137	68	68	137	143	185	185	143	210	240	143	210	240	143	210	240			
	4.73	80	80	156	80	80	160	80	80	160	123	184	205	123	184	205	123	184	205	123	184	205			
	5.35	90	90	175	90	90	175	90	90	175	103	154	175												
	5.63	95	95	185	95	95	187	95	95	187	110	165	187												
	6.41	103	108	175	103	108	175	103	108	175	103	154	175												
	7.47	53	79	90	53	79	90	53	79	90	53	79	90												
	8.00	57	85	97	57	85	97	57	85	97	57	85	97												

m [kg]		AQ.							
	s	80/1-3	100/1-4	115/1-2	115/3	140/1	140/2-4	160/1	190/1-3
RX77	1	26	26	27	27	31	31	31	40
RXF: + 2.3 kg									

		AQ.							
		80/1-3	100/1-4	115/1-2	115/3	140/1	140/2-4	160/1	190/1-3
$J_A\ 10^{-4}$	[kgm^2]	0.77	1.4	1.4	3.1	5.1	10.0	10.0	25.0
c_{TA}	[Nm/']	0.25	0.25	0.25	0.625	0.625	1.0	1.0	2.08

RX77 n_e = 1400	i	M_{amax} [Nm]	M_{apk} [Nm]	$M_{aNotaus}$ [Nm]	n_{ak} [1/min]	$J_G\ 10^{-4}$ [kgm^2]	F_{Ramax} RX [N]	F_{Ramax} RXF [N]	F_{Rapk} RX [N]	F_{Rapk} RXF [N]
RX77 1	1.42	155	232	264	1056	7.6	315	315	10000	10000
	1.67	173	259	294	898	6.0	315	315	10000	10000
	1.88	187	280	318	798	5.0	335	335	10000	10000
	2.13	200	300	340	704	4.1	435	435	10000	10000
	2.43	215	305	366	658	3.4	510	510	10000	10000
	2.70	215	285	366	741	3.0	1110	1110	10000	10000
	3.08	193	260	328	1104	2.5	2560	2560	10000	10000
	3.25	182	260	309	1385	2.3	3200	3200	10000	10000
	3.70	153	215	260	1892	1.9	4290	4290	10000	10000
	4.04	143	214	243	1733	1.6	4500	4500	10000	10000
	4.73	123	184	209	1480	1.3	4900	4900	10000	10000
	5.35	103	154	175	1308	0.90	5240	5240	10000	10000
	5.63	110	165	187	1243	0.81	5300	5300	10000	10000
	6.41	103	154	175	1092	0.66	5600	5600	10000	10000
	7.47	53	79	90	937	0.53	6200	6200	10000	10000
	8.00	57	85	97	875	0.46	6330	6330	10000	10000

AQ.	i	n_{epk} [1/min]	η [%]	c_{TG} RX [Nm/']	c_{TG} RXF [Nm/']
RX77 1	1.42	2164	98	17	17
	1.67	2545	99	17	17
	1.88	2865	99	17	17
	2.13	3246	99	17	17
	2.43	3703	99	17	17
	2.70	4114	99	17	17
	3.08	4500	99	17	17
	3.25	4500	98	17	17
	3.70	4500	98	17	17
	4.04	4500	98	17	17
	4.73	4500	98	17	17
	5.35	4500	98	17	17
	5.63	4500	98	17	17
	6.41	4500	98	17	17
	7.47	4500	97	17	17
	8.00	4500	97	17	17

8.2.6 RX 77 AQ.. [mm]

01 068 00 08

RX77..

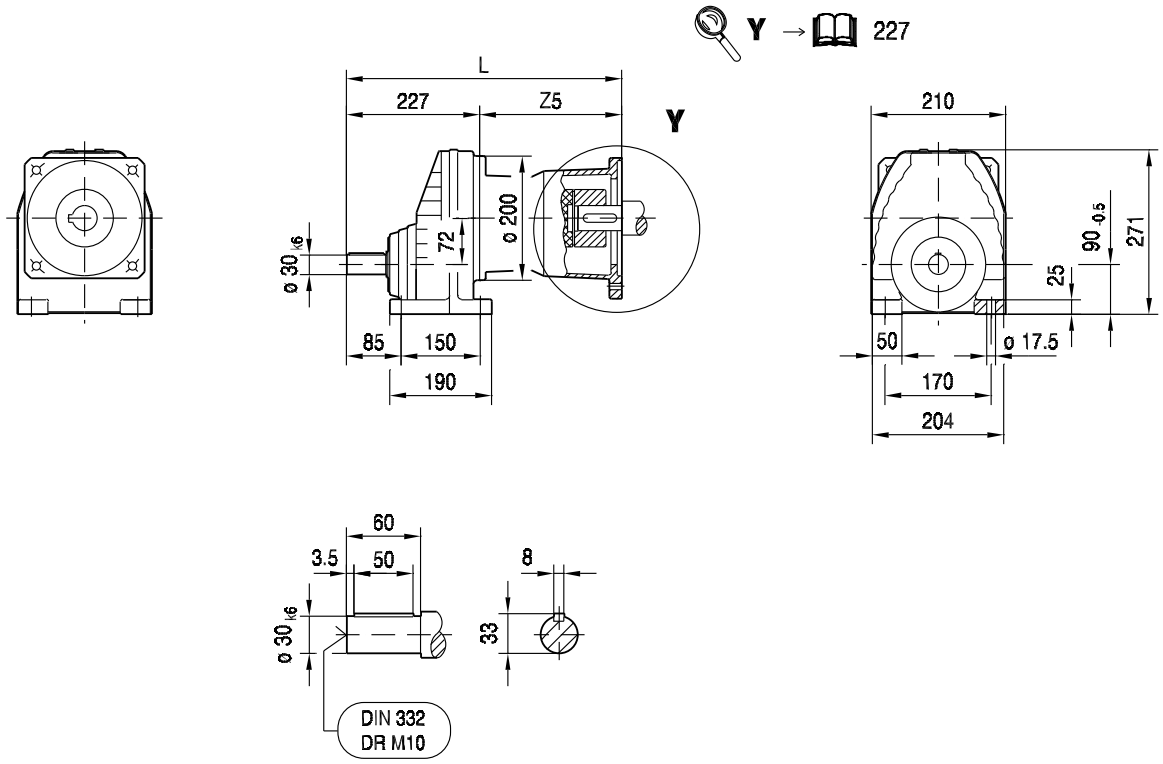

(→ 144)	AQ80/1-3	AQ100/1-2	AQ100/3-4	AQ115/1-3	AQ140/1-2	AQ140/3-4	AQ160/1	AQ190/1-2	AQ190/3
L	319	343	357	366	394	407	407	453	477
Z5	92	116	130	139	167	180	180	225.5	249.5

01 069 00 08

RXF77..

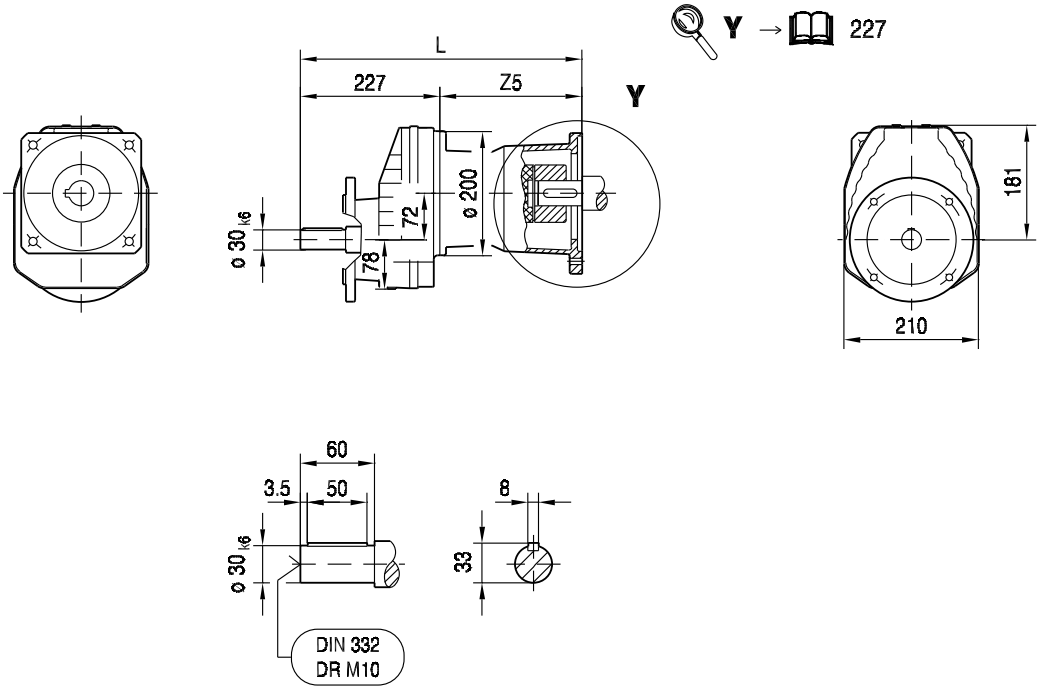

ø 200

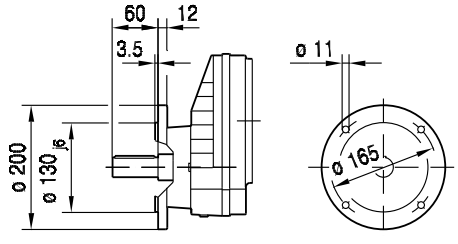

ø 250

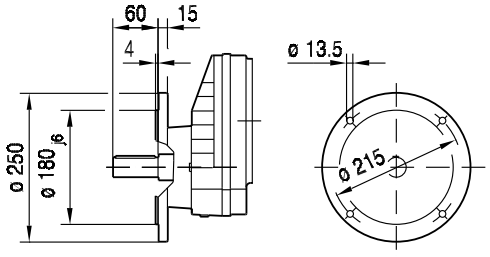

(→ 144)	AQ80/1-3	AQ100/1-2	AQ100/3-4	AQ115/1-3	AQ140/1-2	AQ140/3-4	AQ160/1	AQ190/1-2	AQ190/3
L	319	343	357	366	394	407	407	453	477
Z5	92	116	130	139	167	180	180	225.5	249.5

8.2.7 RX 87 AQ.. [Nm]

[Nm]		AQ. M_{amax} | M_{apk} | $M_{aNotaus}$																				
	i	100/1-4			115/1-2			115/3			140/1			140/2-4			160/1			190/1-3		
RX87 1	1.39										83	83	139	139	139	139	139	139	139	220	220	220
	1.60	27	27	54	27	27	54	73	73	73	96	96	160	160	160	160	160	160	160	255	255	255
	1.93	32	32	65	32	32	65	88	88	88	115	115	193	193	193	193	193	193	193	305	305	305
	2.15	36	36	73	36	36	73	98	98	98	129	129	215	215	215	215	215	215	215	340	340	340
	2.48	42	42	84	42	42	84	114	114	114	148	148	245	245	245	245	245	245	245	395	395	395
	2.76	46	46	93	46	46	93	126	126	126	165	165	275	275	275	275	275	275	275	405	440	440
	3.09	52	52	105	52	52	105	142	142	142	185	185	305	305	305	305	305	305	305	405	490	490
	3.48	59	59	118	59	59	118	160	160	160	205	205	345	345	345	345	345	345	345	405	540	555
	3.78	64	64	128	64	64	128	173	173	173	225	225	375	305	375	375	305	375	375	305	455	515
	4.50	76	76	153	76	76	153	205	205	205	270	270	450	290	435	450	290	435	450	290	435	490
	5.07	86	86	172	86	86	172	230	230	230	250	300	425	250	375	425	250	375	425			
	5.56	94	94	189	94	94	189	225	255	255	225	330	380	225	335	380	225	335	380			
	6.45	109	109	215	109	109	215	192	285	295	192	285	325	192	285	325	192	285	325			
	7.20	122	122	235	122	122	235	140	210	235												
	7.63	129	129	250	129	129	250	149	220	250												
	8.65	139	147	235	139	147	235	139	205	235												

m [kg]		AQ.						
	s	100/1-4	115/1-2	115/3	140/1	140/2-4	160/1	190/1-3
RX87	1	42	43	43	48	48	48	57
RXF: + 5.0 kg								

		AQ.						
		100/1-4	115/1-2	115/3	140/1	140/2-4	160/1	190/1-3
$J_A\ 10^{-4}$	[kgm^2]	1.4	1.4	3.1	5.1	10.0	10.0	25.0
c_{TA}	[Nm/']	0.25	0.25	0.625	0.625	1.0	1.0	2.08

RX87 n_e = 1400	i	M_{amax} [Nm]	M_{apk} [Nm]	$M_{aNotaus}$ [Nm]	n_{ak} [1/min]	$J_G\ 10^{-4}$ [kgm^2]	F_{Ramax} RX [N]	F_{Ramax} RXF [N]	F_{Rapk} RX [N]	F_{Rapk} RXF [N]
RX87 1	1.39	290	435	493	1007	25	74	74	12700	12700
	1.60	315	472	536	875	19	74	74	12500	12500
	1.93	355	532	604	725	15	185	185	12300	12300
	2.15	385	540	655	651	13	42	42	12300	12300
	2.48	405	540	689	605	11	470	470	12300	12300
	2.76	405	535	689	652	9.4	1200	1200	12400	12400
	3.09	405	540	689	744	8.1	1950	1950	12400	12400
	3.48	405	540	689	805	6.9	2730	2730	12400	12400
	3.78	305	457	519	1852	6.2	5030	5030	12700	12700
	4.50	290	435	493	1556	4.8	5500	5500	12800	12800
	5.07	250	375	425	1381	3.9	5980	5980	13000	13000
	5.56	225	337	383	1259	3.4	6320	6320	13000	13000
	6.45	192	288	326	1085	2.7	6850	6850	13000	13000
	7.20	140	210	238	972	1.8	7380	7380	13000	13000
	7.63	149	223	253	917	1.6	7490	7490	13000	13000
	8.65	139	208	236	809	1.3	7890	7890	13000	13000

AQ.	i	n_{epk} [1/min]	η [%]	c_{TG} RX [Nm/']	c_{TG} RXF [Nm/']
RX87 1	1.39	2170	99	34	34
	1.60	2498	99	34	34
	1.93	3013	99	34	34
	2.15	3356	99	34	34
	2.48	3871	99	34	34
	2.76	4308	99	34	34
	3.09	4500	99	34	34
	3.48	4500	99	34	34
	3.78	4500	99	34	34
	4.50	4500	98	34	34
	5.07	4500	98	34	34
	5.56	4500	98	34	34
	6.45	4500	98	34	34
	7.20	4500	98	34	34
	7.63	4500	98	34	34
	8.65	4500	98	34	34

8.2.8 RX 87 AQ.. [mm]

01 070 00 08

RX87..

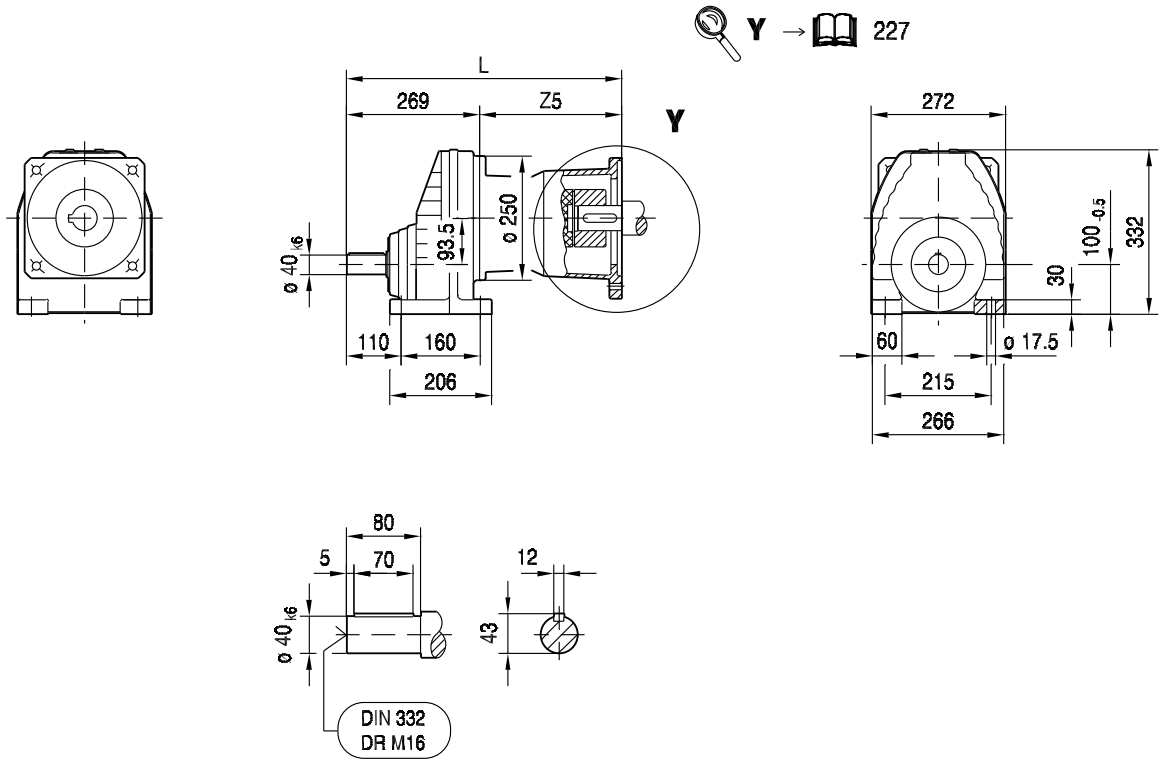

(→ 144)	AQ100/1-2	AQ100/3-4	AQ115/1-3	AQ140/1-2	AQ140/3-4	AQ160/1	AQ190/1-2	AQ190/3
L	380	394	403	431	444	444	490	514
Z5	111	125	134	162	175	175	220.5	244.5

01 071 00 08

RXF87..

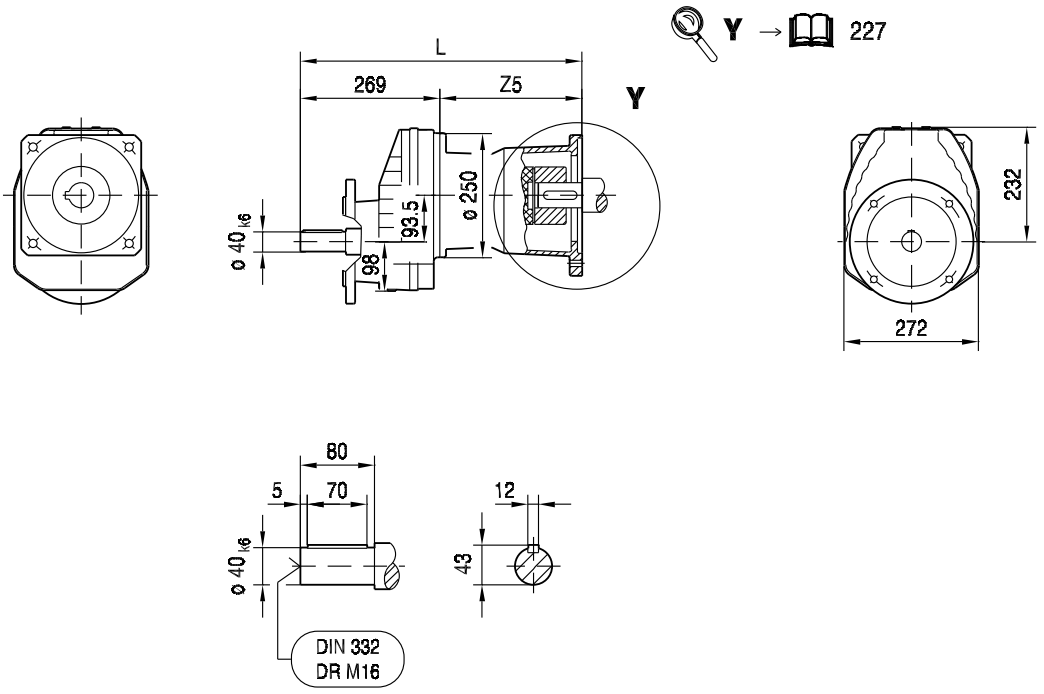

ø 250

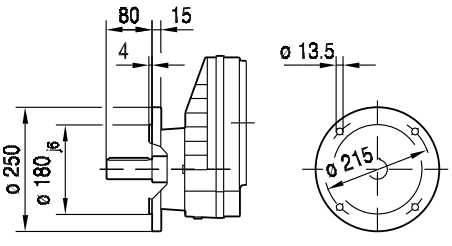

ø 300

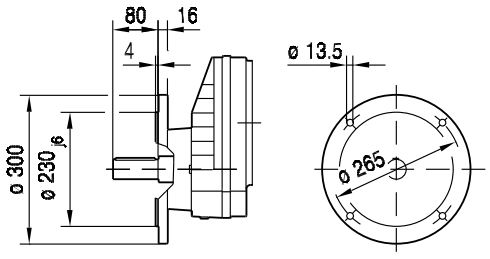

(→ 144)	AQ100/1-2	AQ100/3-4	AQ115/1-3	AQ140/1-2	AQ140/3-4	AQ160/1	AQ190/1-2	AQ190/3
L	380	394	403	431	444	444	490	514
Z5	111	125	134	162	175	175	220.5	244.5

8.2.9 RX 97 AQ.. [Nm]

[Nm]		AQ. M_{amax} | M_{apk} | $M_{aNotaus}$											
	i	140/1			140/2-4			160/1			190/1-3		
RX97 1	1.42	85	85	142	142	142	142	142	142	142	225	225	225
	1.64	98	98	164	164	164	164	164	164	164	260	260	260
	1.96	117	117	196	196	196	196	196	196	196	310	310	310
	2.24	134	134	220	220	220	220	220	220	220	355	355	355
	2.64	158	158	260	260	260	260	260	260	260	420	420	420
	2.92	175	175	290	290	290	290	290	290	290	465	465	465
	3.30	198	198	330	330	330	330	330	330	330	525	525	525
	3.64	215	215	360	360	360	360	360	360	360	580	580	580
	4.04	240	240	400	400	400	400	400	400	400	595	645	645
	4.52	270	270	450	450	450	450	450	450	450	595	720	720
	4.91	290	290	490	395	490	490	395	490	490	395	590	670
	5.79	345	345	575	420	575	575	420	575	575	420	630	710
	6.56	300	390	510	300	450	510	300	450	510			
	7.16	260	390	440	260	390	440	260	390	440			
	8.23	225	335	380	225	335	380	225	335	380			

m [kg]		AQ.			
	s	140/1	140/2-4	160/1	190/1-3
RX97	1	73	73	73	81
RXF: + 8.6 kg					

		AQ.			
		140/1	140/2-4	160/1	190/1-3
$J_A\ 10^{-4}$	[kgm^2]	5.1	10.0	10.0	25.0
c_{TA}	[Nm/']	0.625	1.0	1.0	2.08

RX97 n_e = 1400	i	M_{amax} [Nm]	M_{apk} [Nm]	$M_{aNotaus}$ [Nm]	n_{ak} [1/min]	$J_G\ 10^{-4}$ [kgm^2]	F_{Ramax} RX [N]	F_{Ramax} RXF [N]	F_{Rapk} RX [N]	F_{Rapk} RXF [N]
RX97 1	1.42	455	682	774	986	61	132	132	20000	20000
	1.64	505	757	859	854	51	51	51	20000	20000
	1.96	570	800	969	714	41	19	19	20000	20000
	2.24	595	800	1012	670	33	495	495	20000	20000
	2.64	595	800	1012	795	28	1980	1980	20000	20000
	2.92	595	800	1012	856	24	2810	2810	20000	20000
	3.30	595	800	1012	909	20	3730	3730	20000	20000
	3.64	595	800	1012	962	18	4530	4530	20000	20000
	4.04	595	800	1012	1015	15	5380	5380	20000	20000
	4.52	595	800	1012	1062	13	6180	6180	20000	20000
	4.91	395	592	672	1426	12	7220	7220	20000	20000
	5.79	420	630	714	1209	9.2	7630	7630	20000	20000
	6.56	300	450	510	1067	5.8	8500	8500	20000	20000
	7.16	260	390	442	978	5.1	8950	8950	20000	20000
	8.23	225	337	383	851	4.0	9560	9560	20000	20000

AQ.	i	n_{epk} [1/min]	η [%]	c_{TG} RX [Nm/']	c_{TG} RXF [Nm/']
RX97 1	1.42	2187	98	58	58
	1.64	2526	98	58	58
	1.96	3019	98	58	58
	2.24	3450	99	58	58
	2.64	4066	99	58	58
	2.92	4497	99	58	58
	3.30	4500	99	58	58
	3.64	4500	99	58	58
	4.04	4500	99	58	58
	4.52	4500	99	58	58
	4.91	4500	98	58	58
	5.79	4500	98	58	58
	6.56	4500	98	58	58
	7.16	4500	98	58	58
	8.23	4500	98	58	58

8.2.10 RX 97 AQ.. [mm]

01 072 00 08

RX97..

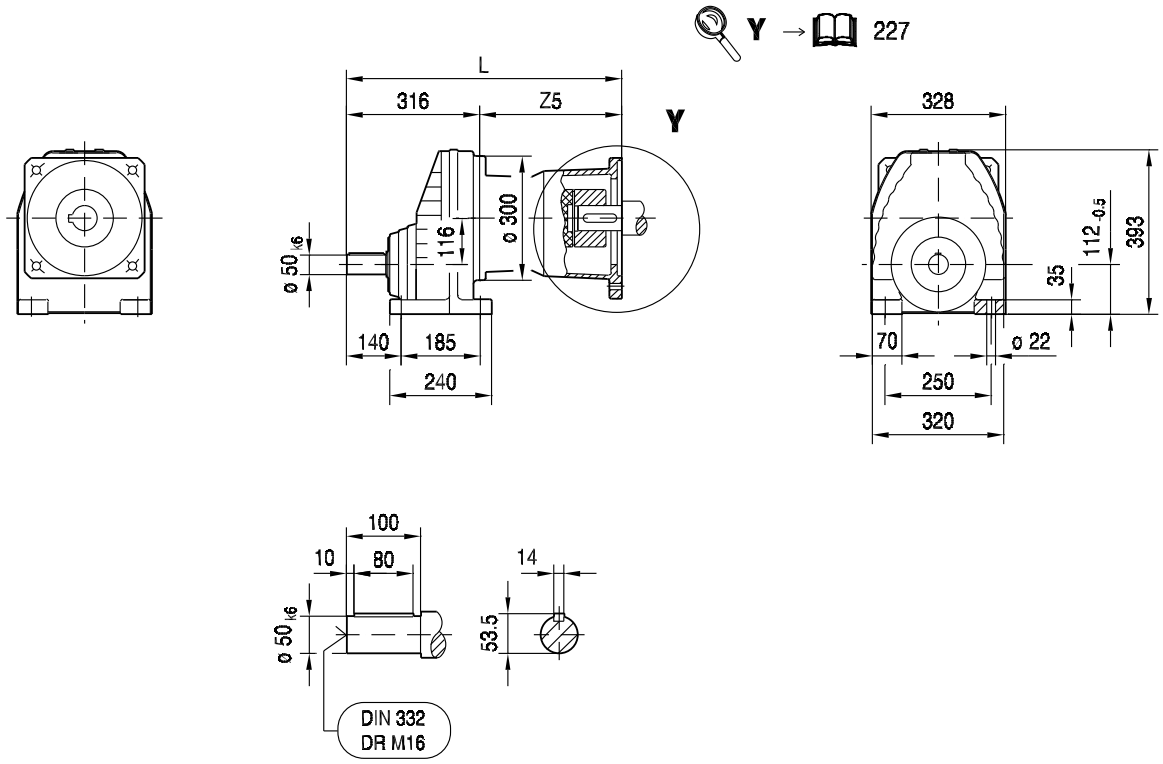

(→ 144)	AQ140/1-2	AQ140/3-4	AQ160/1	AQ190/1-2	AQ190/3			
L	473	486	486	532	556			
Z5	157	170	170	215.5	239.5			

01 073 00 08

RXF97..

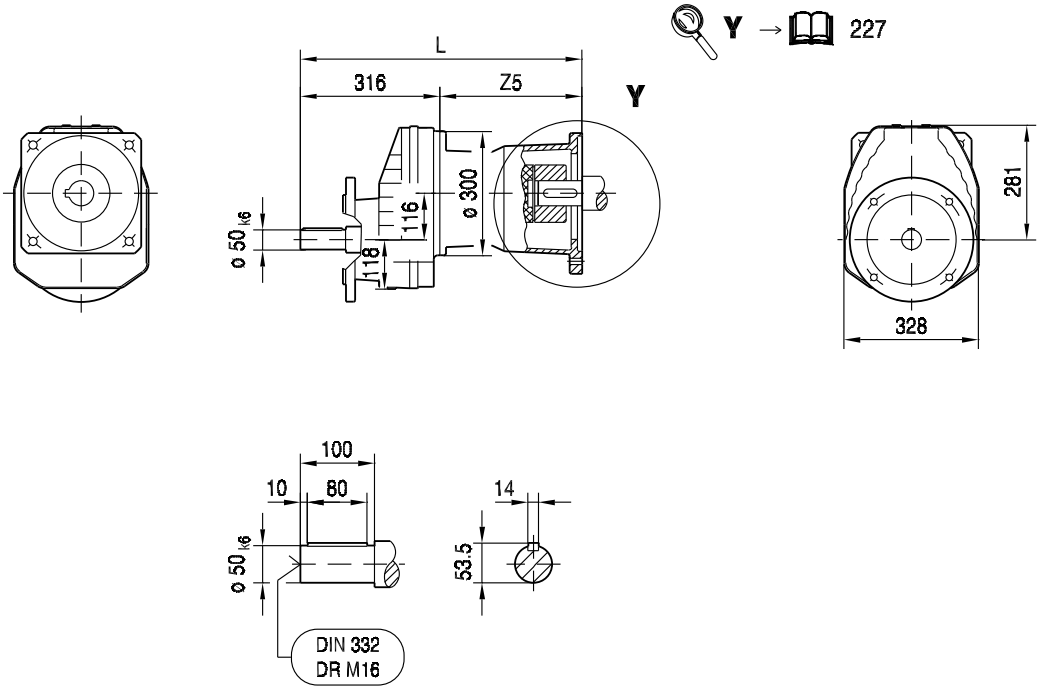

ø 300

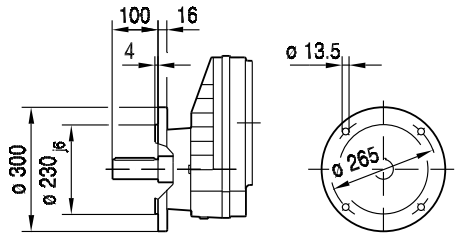

ø 350

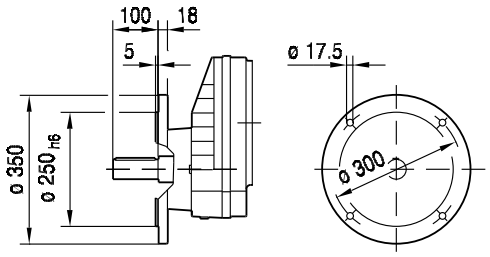

(→ 144)	AQ140/1-2	AQ140/3-4	AQ160/1	AQ190/1-2	AQ190/3			
L	473	486	486	532	556			
Z5	157	170	170	215.5	239.5			

8.2.11 RX 107 AQ.. [Nm]

[Nm]		AQ. M_{amax} | M_{apk} | $M_{aNotaus}$											
	i	140/1			140/2-4			160/1			190/1-3		
RX107 1	1.44										230	230	230
	1.71	102	102	171	171	171	171	171	171	171	270	270	270
	1.95	117	117	195	195	195	195	195	195	195	310	310	310
	2.30	138	138	230	230	230	230	230	230	230	365	365	365
	2.64	158	158	260	260	260	260	260	260	260	420	420	420
	3.07	184	184	305	305	305	305	305	305	305	490	490	490
	3.38	200	200	335	335	335	335	335	335	335	540	540	540
	3.81	225	225	380	380	380	380	380	380	380	605	605	605
	4.20	250	250	420	420	420	420	420	420	420	670	670	670
	4.65	275	275	465	465	465	465	465	465	465	695	740	740
	5.19	310	310	515	515	515	515	515	515	515	695	830	830
	5.61	335	335	560	455	560	560	455	560	560	455	680	770
	6.63	395	395	660	460	660	660	460	660	660	460	690	780

m [kg]		AQ.			
	s	140/1	140/2-4	160/1	190/1-3
RX107	1	105	105	105	115
RXF: + 16.8 kg					

		AQ.			
		140/1	140/2-4	160/1	190/1-3
J_A 10^{-4}	[kgm²]	5.1	10.0	10.0	25.0
c_{TA}	[Nm/']	0.625	1.0	1.0	2.08

RX107 n_e = 1400	i	M_{amax} [Nm]	M_{apk} [Nm]	$M_{aNotaus}$ [Nm]	n_{ak} [1/min]	J_G 10^{-4} [kgm²]	F_{Ramax} RX [N]	F_{Ramax} RXF [N]	F_{Rapk} RX [N]	F_{Rapk} RXF [N]
RX107 1	1.44	645	967	1097	972	111	315	315	30000	30000
	1.71	705	1057	1199	819	84	480	480	30000	30000
	1.95	765	1090	1301	769	70	555	555	30000	30000
	2.30	830	1110	1411	696	57	900	900	30000	30000
	2.64	830	1120	1411	720	47	2160	2160	30000	30000
	3.07	830	1130	1411	814	39	3600	3600	30000	30000
	3.38	830	1130	1411	858	34	4490	4490	30000	30000
	3.81	830	1140	1411	919	29	5550	5550	30000	30000
	4.20	830	1150	1411	952	25	6420	6420	30000	30000
	4.65	695	1042	1182	1505	19	7450	7450	30000	30000
	5.19	695	1042	1182	1349	17	7850	7850	30000	30000
	5.61	455	682	774	1248	15	9080	9080	30000	30000
	6.63	460	690	782	1056	12	9700	9700	30000	30000

AQ.	i	n_{epk} [1/min]	η [%]	c_{TG} RX [Nm/']	c_{TG} RXF [Nm/']
RX107 1	1.44	2101	98	93	93
	1.71	2495	98	93	93
	1.95	2845	98	93	93
	2.30	3356	98	93	93
	2.64	3852	99	93	93
	3.07	4479	99	93	93
	3.38	4500	99	93	93
	3.81	4500	99	93	93
	4.20	4500	99	93	93
	4.65	4500	99	93	93
	5.19	4500	99	93	93
	5.61	4500	98	93	93
	6.63	4500	98	93	93

8.2.12 RX 107 AQ.. [mm]

01 074 00 08

RX107..

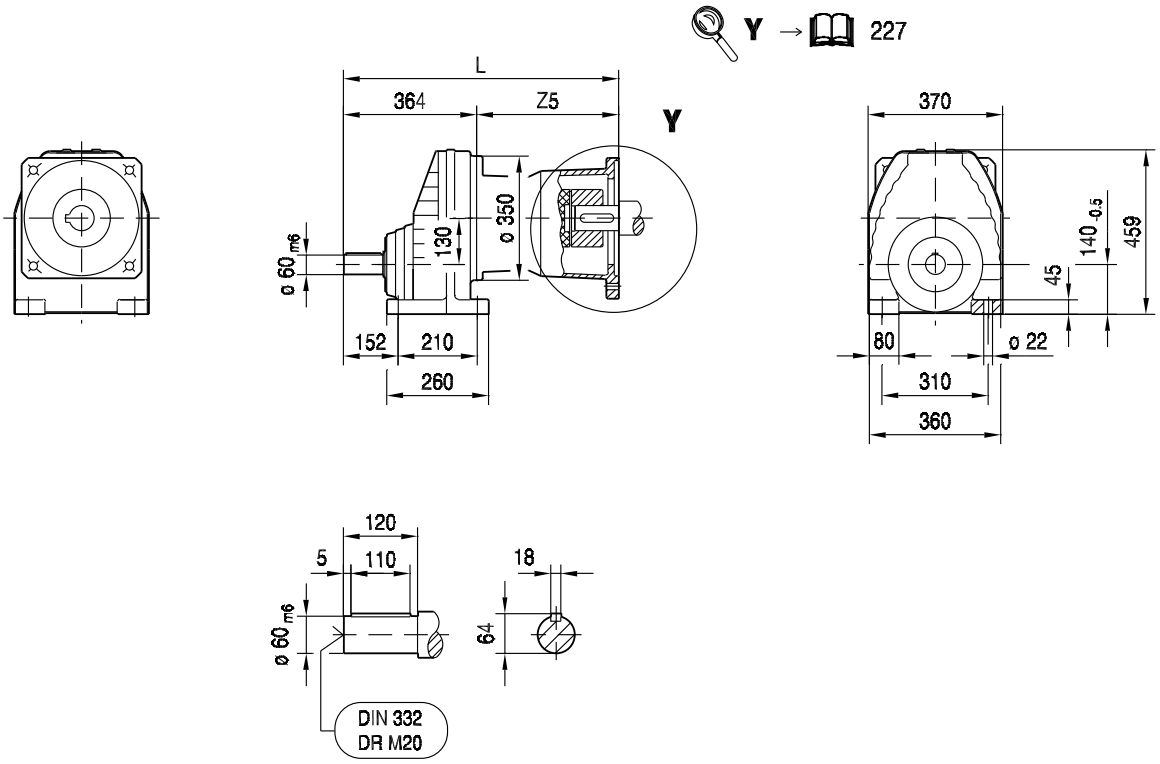

(→ 144)	AQ140/1-2	AQ140/3-4	AQ160/1	AQ190/1-2	AQ190/3			
L	515	528	528	574	598			
Z5	151	164	164	209.5	233.5			

01 075 00 08

RXF107..

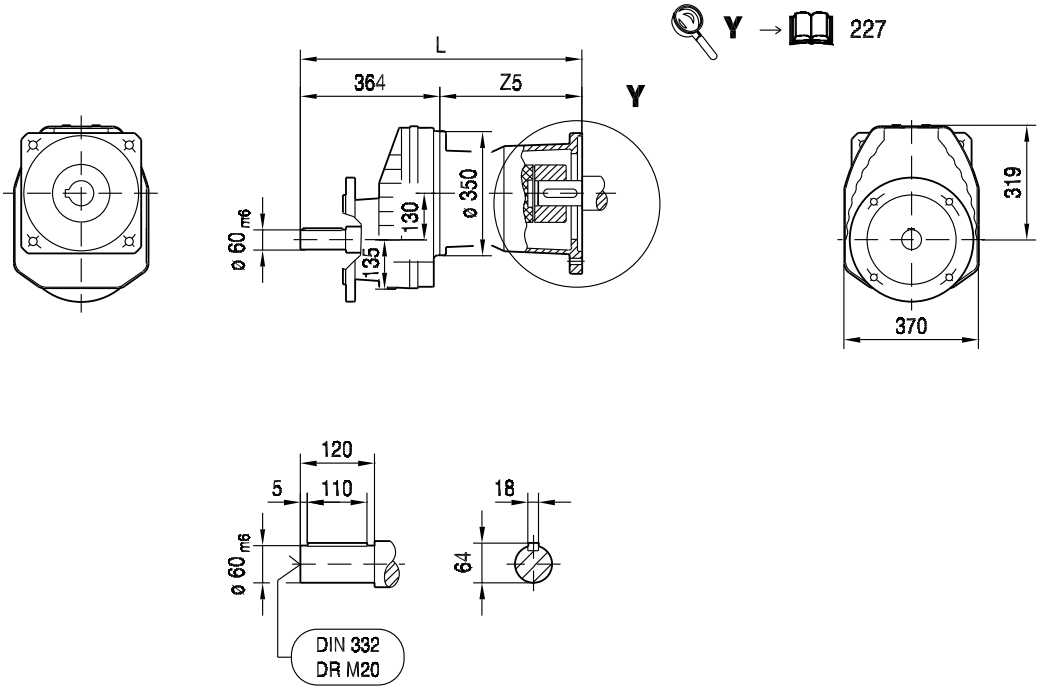

ø 350

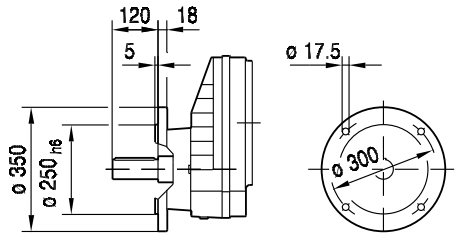

ø 450

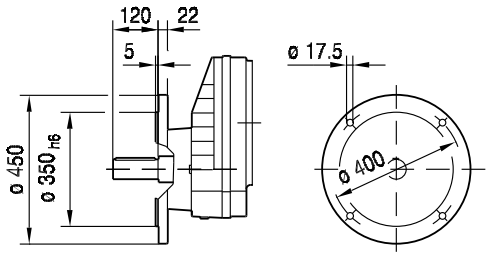

(→ 144)	AQ140/1-2	AQ140/3-4	AQ160/1	AQ190/1-2	AQ190/3			
L	515	528	528	574	598			
Z5	151	164	164	209.5	233.5			

8.3 R.. AQ..

8.3.1 R 27 AQ.. [Nm]

[Nm]		AQ. M_{amax} | M_{apk} | $M_{aNotaus}$											
	i	80/1-3			100/1-4			115/1-2			115/3		
R27 2	3.37	57	57	111	57	57	114	57	57	114	79	118	134
	4.00	68	68	132	68	68	136	68	68	136	85	127	145
	4.27	72	72	140	72	72	145	72	72	145	87	130	148
	5.00	85	85	162	85	85	162	85	85	162	95	142	162
	5.60	95	95	168	95	95	168	95	95	168	99	144	168
	6.59	106	112	180	106	112	180	106	112	180	106	145	180
	7.63	112	129	190	112	129	190	112	129	190	112	148	190
	8.16	116	138	197	116	138	197	116	138	197	116	148	197
	9.41	122	149	205	122	149	205	122	149	205	122	149	205
	10.13	122	136	205	122	136	205	122	136	205	122	136	205
	11.86	129	136	215	129	136	215	129	136	215	129	136	215
	13.28	130	136	220	130	136	220	130	136	220	130	136	220
	15.63	130	136	220	130	136	220	130	136	220	130	136	220
	18.08	130	136	220	130	136	220	130	136	220	130	136	220
	19.35	130	136	220	130	136	220	130	136	220	130	136	220
	22.32	130	136	220	130	136	220	130	136	220	130	136	220
	26.09	130	136	220	130	136	220	130	136	220	130	136	220
	28.37	130	136	220	130	136	220	130	136	220	130	136	220
R27 3	24.47	130	136	220	130	136	220	130	136	220	130	136	220
	28.78	130	136	220	130	136	220	130	136	220	130	136	220
	32.47	130	136	220	130	136	220	130	136	220	130	136	220
	36.79	130	136	220	130	136	220	130	136	220	130	136	220
	39.25	130	136	220	130	136	220	130	136	220	130	136	220
	44.90	130	136	220	130	136	220	130	136	220	130	136	220
	48.17	130	136	220	130	136	220	130	136	220	130	136	220
	55.87	130	136	220	130	136	220	130	136	220	130	136	220
	61.30	130	136	220	130	136	220	130	136	220	130	136	220
	69.47	130	136	220	130	136	220	130	136	220	130	136	220
	74.11	130	136	220	130	136	220	130	136	220	130	136	220
	84.78	130	136	220	130	136	220	130	136	220	130	136	220
	90.96	130	136	220	130	136	220	130	136	220	130	136	220
	105.49	130	136	220	130	136	220	130	136	220	130	136	220
	123.91	130	136	220	130	136	220	130	136	220	130	136	220
	135.09	130	136	220	130	136	220	130	136	220	130	136	220

m [kg]		AQ.			
	s	80/1-3	100/1-4	115/1-2	115/3
R27	2	7.3	8.0	8.5	8.5
R27	3	7.6	8.3	8.8	8.8
RF: + -0.1 kg					

		AQ.			
		80/1-3	100/1-4	115/1-2	115/3
$J_A\ 10^{-4}$	[kgm^2]	0.77	1.4	1.4	3.1
c_{TA}	[Nm/']	0.25	0.25	0.25	0.625

R27 n_e = 1400	i	M_{amax} [Nm]	M_{apk} [Nm]	$M_{aNotaus}$ [Nm]	n_{ak} [1/min]	J_G 10^{-4} [kgm^2]	F_{Ramax} R [N]	F_{Ramax} RF [N]	F_{Rapk} R [N]	F_{Rapk} RF [N]
R27 2	3.37	79	118	134	415	1.1	900	790	4290	3690
	4.00	85	127	145	350	0.85	900	800	4250	3660
	4.27	87	130	148	328	0.76	920	810	4230	3640
	5.00	95	142	162	280	0.58	860	760	4180	3590
	5.60	99	144	168	250	0.48	880	775	4170	3580
	6.59	106	145	180	212	0.36	880	775	4160	3580
	7.63	112	148	190	183	0.29	900	795	4150	3570
	8.16	116	148	197	172	0.26	870	770	4150	3570
	9.41	122	149	207	149	0.21	900	795	4140	3560
	10.13	122	136	207	138	0.61	1890	1670	4210	3620
	11.86	129	136	219	118	0.47	1980	1750	4210	3620
	13.28	130	136	221	120	0.39	2140	1910	4210	3620
	15.63	130	136	221	122	0.29	2290	2170	4210	3620
	18.08	130	136	221	122	0.24	2440	2310	4210	3620
	19.35	130	136	221	124	0.22	2510	2380	4210	3620
	22.32	130	136	221	125	0.18	2660	2520	4210	3620
	26.09	130	136	221	126	0.14	2840	2690	4210	3620
	28.37	130	136	221	130	0.12	2940	2780	4210	3620
R27 3	24.47	130	136	221	98	0.49	2760	2620	4210	3620
	28.78	130	136	221	97	0.37	2950	2800	4210	3620
	32.47	130	136	221	99	0.31	3100	2940	4210	3620
	36.79	130	136	221	98	0.25	3260	3090	4210	3620
	39.25	130	136	221	97	0.22	3350	3170	4210	3620
	44.90	130	136	221	98	0.18	3530	3340	4210	3620
	48.17	130	136	221	98	0.16	3630	3430	4210	3620
	55.87	130	136	221	98	0.13	3840	3640	4210	3620
	61.30	130	136	221	106	0.26	3980	3640	4210	3620
	69.47	130	136	221	101	0.22	4180	3640	4210	3620
	74.11	130	136	221	94	0.20	4230	3640	4210	3620
	84.78	130	136	221	83	0.16	4230	3640	4210	3620
	90.96	130	136	221	77	0.15	4230	3640	4210	3620
	105.49	130	136	221	66	0.12	4230	3640	4210	3620
	123.91	130	136	221	56	0.090	4230	3640	4210	3620
	135.09	130	136	221	52	0.080	4230	3640	4210	3620

AQ.	i	n_{epk} [1/min]	η [%]	c_{TG} R [Nm/']	c_{TG} RF [Nm/']
R27 2	3.37	4500	97	7.2	7.1
	4.00	4500	97	7.2	7.1
	4.27	4500	97	7.2	7.1
	5.00	4500	97	7.2	7.1
	5.60	4500	97	7.2	7.1
	6.59	4500	97	7.2	7.1
	7.63	4500	97	7.2	7.1
	8.16	4500	97	7.2	7.1
	9.41	4500	97	7.2	7.1
	10.13	4500	97	9.0	8.8
	11.86	4500	97	9.0	8.8
	13.28	4500	97	9.0	8.8
	15.63	4500	97	9.0	8.8
	18.08	4500	97	9.0	8.8
	19.35	4500	97	9.0	8.8
	22.32	4500	97	9.0	8.8
	26.09	4500	96	9.0	8.8
	28.37	4500	96	9.0	8.8

AQ.	i	n_{epk} [1/min]	η [%]	c_{TG} R [Nm/']	c_{TG} RF [Nm/']
R27 3	24.47	4500	94	9.0	8.8
	28.78	4500	94	9.0	8.8
	32.47	4500	94	9.0	8.8
	36.79	4500	94	9.0	8.8
	39.25	4500	94	9.0	8.8
	44.90	4500	94	9.0	8.8
	48.17	4500	94	9.0	8.8
	55.87	4500	94	9.0	8.8
	61.30	4500	92	9.1	8.8
	69.47	4500	92	9.1	8.8
	74.11	4500	92	9.1	8.8
	84.78	4500	92	9.1	8.8
	90.96	4500	92	9.1	8.8
	105.49	4500	92	9.1	8.8
	123.91	4500	91	9.1	8.8
	135.09	4500	91	9.1	8.8

8.3.2 R 27 AQ.. [mm]

01 076 00 08

R27..

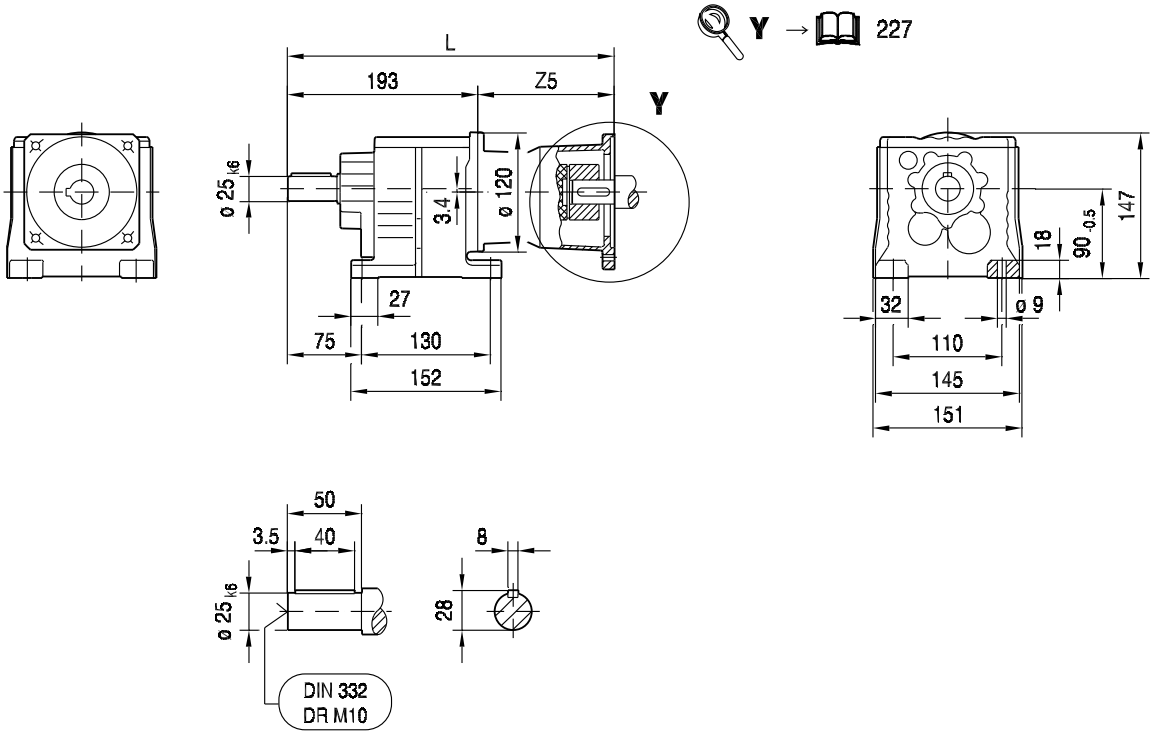

R27F..

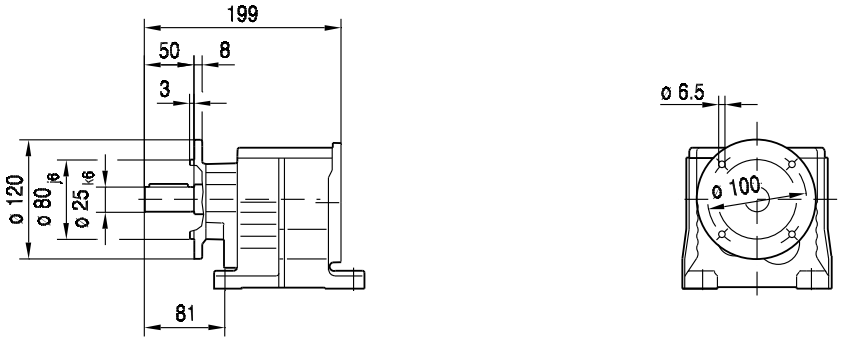

(→ 144)	AQ80/1-3	AQ100/1-2	AQ100/3-4	AQ115/1-3				
L	298	323	337	346				
Z5	104.5	129.5	143.5	152.5				

01 077 00 08

RF27..

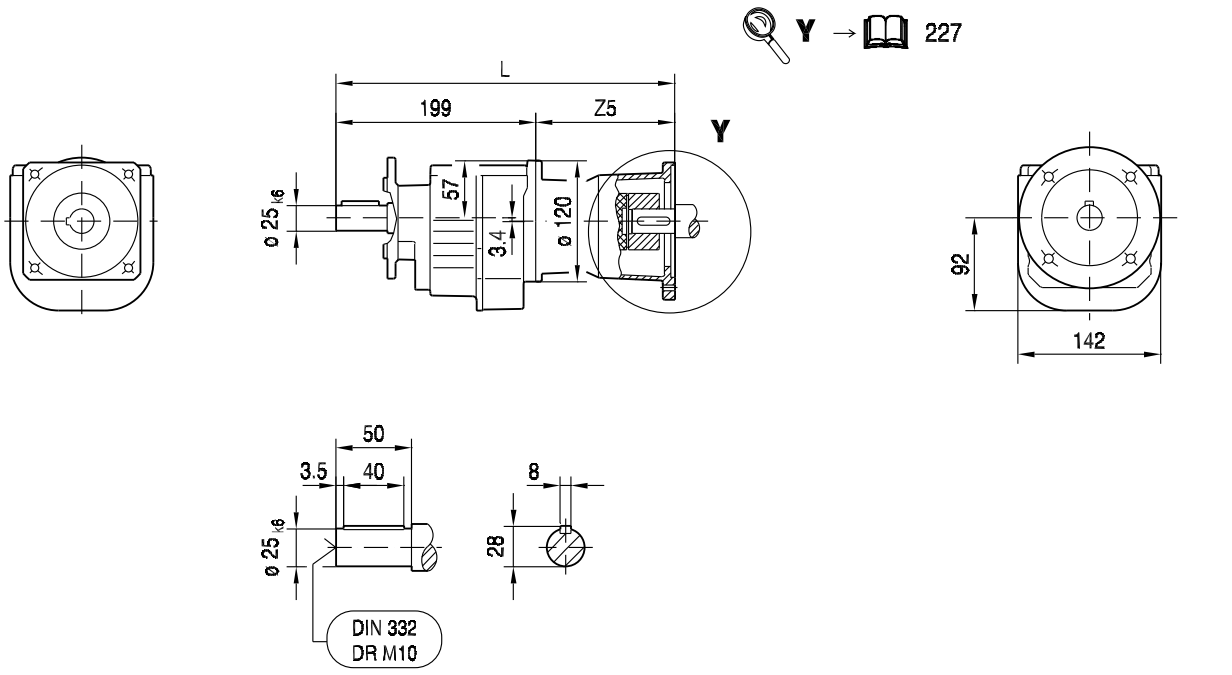

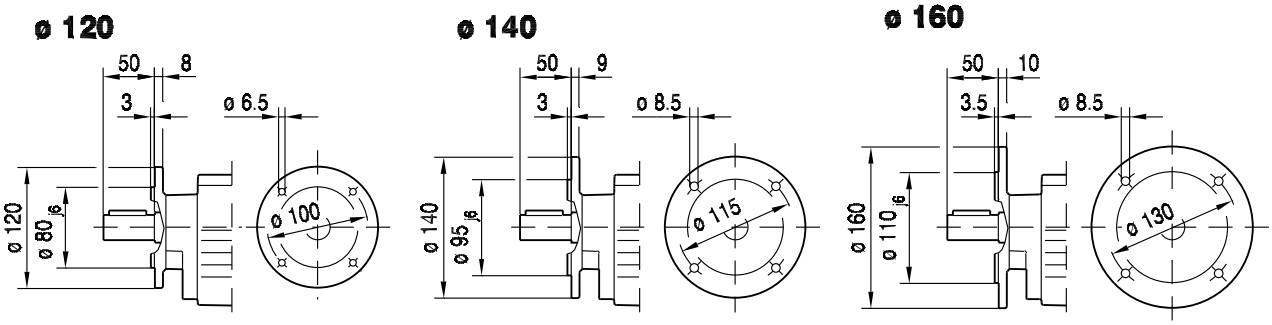

(→ 144)	AQ80/1-3	AQ100/1-2	AQ100/3-4	AQ115/1-3				
L	304	329	343	352				
Z5	104.5	129.5	143.5	152.5				

01 078 00 08

RZ27..

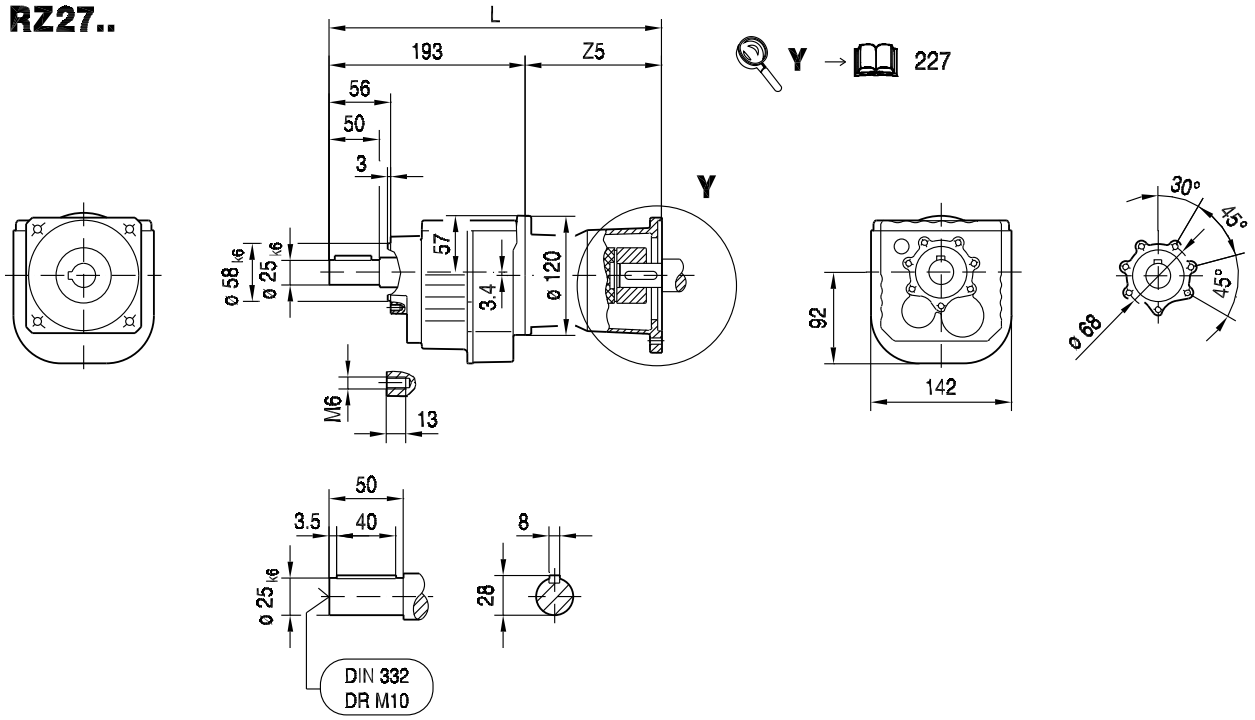

(→ 144)	AQ80/1-3	AQ100/1-2	AQ100/3-4	AQ115/1-3				
L	298	323	337	346				
Z5	104.5	129.5	143.5	152.5				

8.3.3 R 37 AQ.. [Nm]

[Nm]		AQ. M_{amax} | M_{apk} | $M_{aNotaus}$											
	i	80/1-3			100/1-4			115/1-2			115/3		
R37 2	3.41	57	57	112	57	57	115	57	57	115	112	147	156
	4.05	68	68	133	68	68	137	68	68	137	122	153	186
	4.32	73	73	142	73	73	146	73	73	146	126	155	198
	5.06	86	86	166	86	86	172	86	86	172	135	156	230
	5.67	96	96	187	96	96	192	96	96	192	142	156	240
	6.67	113	113	220	113	113	225	113	113	225	144	166	245
	7.97	135	135	260	135	135	265	135	135	265	156	205	265
	9.47	160	160	280	160	160	280	160	160	280	167	205	280
	10.11	170	171	285	170	171	285	170	171	285	170	205	285
	11.83	183	200	310	183	200	310	183	200	310	183	205	310
	13.25	190	205	320	190	205	320	190	205	320	190	205	320
	15.60	200	205	340	200	205	340	200	205	340	200	205	340
	18.05	200	205	340	200	205	340	200	205	340	200	205	340
	19.31	200	205	340	200	205	340	200	205	340	200	205	340
	22.27	200	205	340	200	205	340	200	205	340	200	205	340
	26.03	185	205	315	185	205	315	185	205	315	185	205	315
	28.32	200	205	340	200	205	340	200	205	340	200	205	340
R37 3	24.42	200	205	340	200	205	340	200	205	340	200	205	340
	28.73	200	205	340	200	205	340	200	205	340	200	205	340
	32.40	200	205	340	200	205	340	200	205	340	200	205	340
	36.72	200	205	340	200	205	340	200	205	340	200	205	340
	39.17	200	205	340	200	205	340	200	205	340	200	205	340
	44.81	200	205	340	200	205	340	200	205	340	200	205	340
	48.08	200	205	340	200	205	340	200	205	340	200	205	340
	55.76	200	205	340	200	205	340	200	205	340	200	205	340
	61.18	200	205	340	200	205	340	200	205	340	200	205	340
	69.33	200	205	340	200	205	340	200	205	340	200	205	340
	73.96	200	205	340	200	205	340	200	205	340	200	205	340
	84.61	200	205	340	200	205	340	200	205	340	200	205	340
	90.77	200	205	340	200	205	340	200	205	340	200	205	340
	105.28	200	205	340	200	205	340	200	205	340	200	205	340
	123.66	200	205	340	200	205	340	200	205	340	200	205	340
	134.82	200	205	340	200	205	340	200	205	340	200	205	340

m [kg]		AQ.			
	s	80/1-3	100/1-4	115/1-2	115/3
R37	2	13	14	14	14
R37	3	13	14	15	15
RF: + 1.5 kg					

		AQ.			
		80/1-3	100/1-4	115/1-2	115/3
J_A 10^{-4}	[kgm^2]	0.77	1.4	1.4	3.1
c_{TA}	[Nm/']	0.25	0.25	0.25	0.625

R37 n_e = 1400	i	M_{amax} [Nm]	M_{apk} [Nm]	$M_{aNotaus}$ [Nm]	n_{ak} [1/min]	J_G 10^{-4} [kgm^2]	F_{Ramax} R [N]	F_{Ramax} RF [N]	F_{Rapk} R [N]	F_{Rapk} RF [N]
R37 2	3.41	112	147	190	411	1.4	900	800	5500	5500
	4.05	122	153	207	346	1.1	840	750	5440	5440
	4.32	126	155	214	324	0.95	820	725	5430	5430
	5.06	135	156	230	277	0.72	790	700	5420	5420
	5.67	142	156	241	247	0.59	760	675	5420	5420
	6.67	144	166	245	210	0.43	1000	890	5320	5320
	7.97	156	205	265	176	0.96	1720	1520	4880	4880
	9.47	167	205	284	148	0.74	1760	1560	4880	4880
	10.11	170	205	289	138	0.66	1820	1620	4880	4880
	11.83	183	205	311	118	0.51	1810	1610	4880	4880
	13.25	190	205	323	106	0.43	1880	1670	4880	4880
	15.60	200	205	340	90	0.31	2010	1780	4880	4880
	18.05	200	205	340	94	0.26	2390	2120	4880	4880
	19.31	200	205	340	93	0.23	2570	2280	4880	4880
	22.27	200	205	340	99	0.19	2970	2640	4880	4880
	26.03	185	205	315	127	0.15	3860	3420	4880	4880
	28.32	200	205	340	99	0.13	3690	3270	4880	4880
R37 3	24.42	200	205	340	70	0.53	3240	2870	4880	4880
	28.73	200	205	340	70	0.39	3740	3310	4880	4880
	32.40	200	205	340	71	0.31	4120	3650	4880	4880
	36.72	200	205	340	71	0.25	4540	4020	4880	4880
	39.17	200	205	340	71	0.23	4760	4220	4880	4880
	44.81	200	205	340	71	0.19	4940	4640	4880	4880
	48.08	200	205	340	73	0.17	4940	4870	4880	4880
	55.76	200	205	340	74	0.13	4940	4940	4880	4880
	61.18	200	205	340	75	0.26	4940	4940	4880	4880
	69.33	200	205	340	75	0.22	4940	4940	4880	4880
	73.96	200	205	340	76	0.20	4940	4940	4880	4880
	84.61	200	205	340	76	0.16	4940	4940	4880	4880
	90.77	200	205	340	76	0.15	4940	4940	4880	4880
	105.28	200	205	340	66	0.12	4940	4940	4880	4880
	123.66	200	205	340	57	0.090	4940	4940	4880	4880
	134.82	200	205	340	52	0.080	4940	4940	4880	4880

AQ.	i	n_{epk} [1/min]	η [%]	c_{TG} R [Nm/']	c_{TG} RF [Nm/']	φ /R [']
R37 2	3.41	3587	97	9.7	9.5	14
	4.05	4261	97	9.7	9.5	13
	4.32	4500	97	9.7	9.5	13
	5.06	4500	97	9.7	9.5	13
	5.67	4500	97	9.7	9.5	12
	6.67	4500	97	9.7	9.5	12
	7.97	4500	97	13	12	8
	9.47	4500	97	13	12	8
	10.11	4500	97	13	12	8
	11.83	4500	97	13	12	8
	13.25	4500	97	13	12	8
	15.60	4500	97	13	12	8
	18.05	4500	97	13	12	8
	19.31	4500	97	13	12	7
	22.27	4500	97	13	12	7
	26.03	4500	97	13	12	7
	28.32	4500	97	13	12	7

AQ.	i	n_{epk} [1/min]	η [%]	c_{TG} R [Nm/']	c_{TG} RF [Nm/']	φ /R [']
R37  3	24.42	4500	95	13	12	9
	28.73	4500	95	13	12	9
	32.40	4500	95	13	12	9
	36.72	4500	95	13	12	9
	39.17	4500	95	13	12	9
	44.81	4500	95	13	12	9
	48.08	4500	95	13	12	9
	55.76	4500	95	13	12	9
	61.18	4500	94	13	13	8
	69.33	4500	94	13	13	8
	73.96	4500	94	13	13	8
	84.61	4500	93	13	13	8
	90.77	4500	93	13	13	8
	105.28	4500	93	13	13	8
	123.66	4500	93	13	13	8
	134.82	4500	93	13	13	8

8.3.4 R 37 AQ.. [mm]

R37..

01 079 00 08

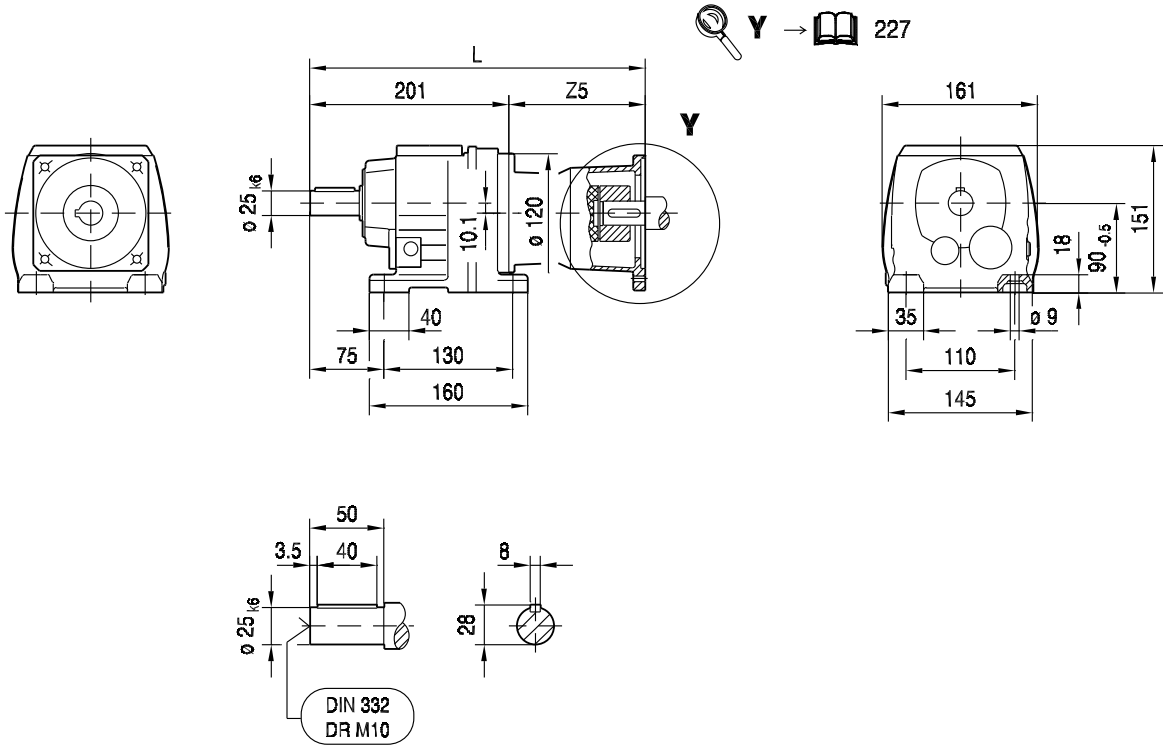

R37F..

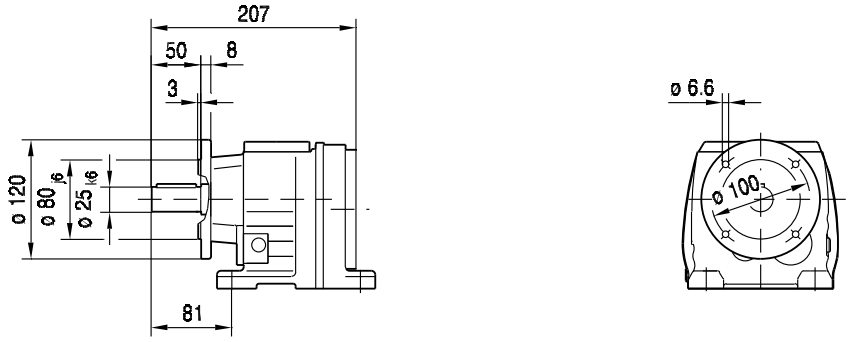

(→ 144)	AQ80/1-3	AQ100/1-2	AQ100/3-4	AQ115/1-3				
L	306	331	345	354				
Z5	104.5	129.5	143.5	152.5				

01 080 00 08

RF37..

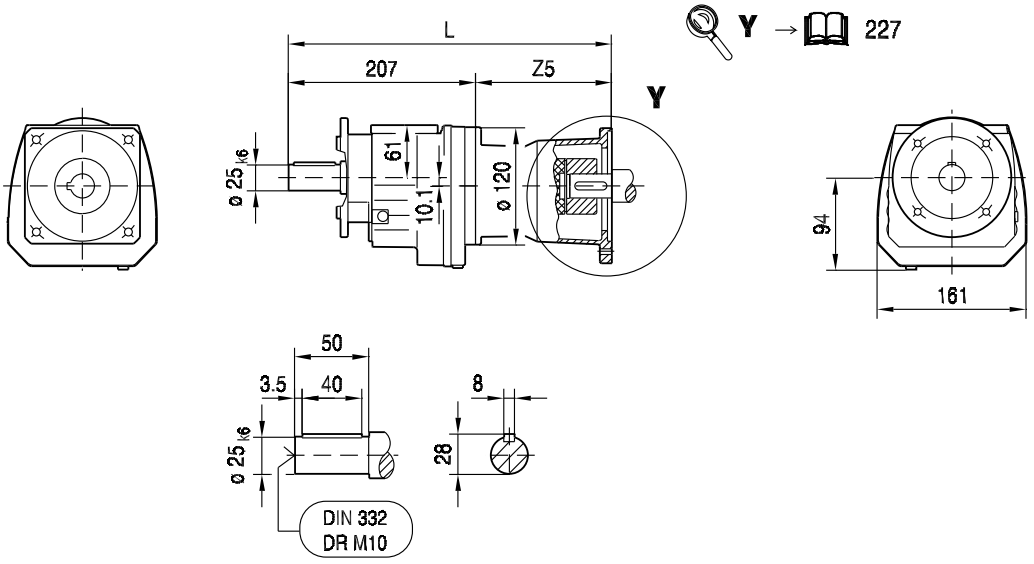

ø 120

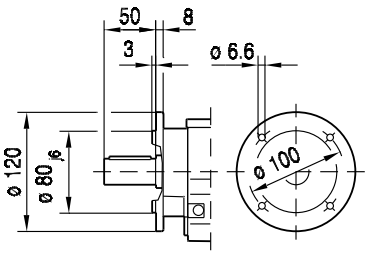

ø 160

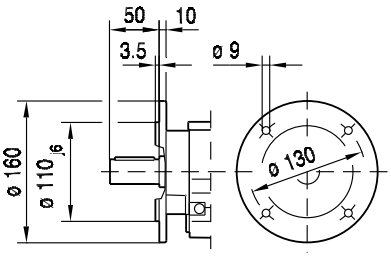

ø 200

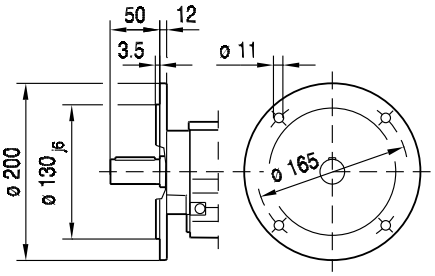

(→ 144)	AQ80/1-3	AQ100/1-2	AQ100/3-4	AQ115/1-3				
L	312	337	351	360				
Z5	104.5	129.5	143.5	152.5				

01 081 00 08

RZ37..

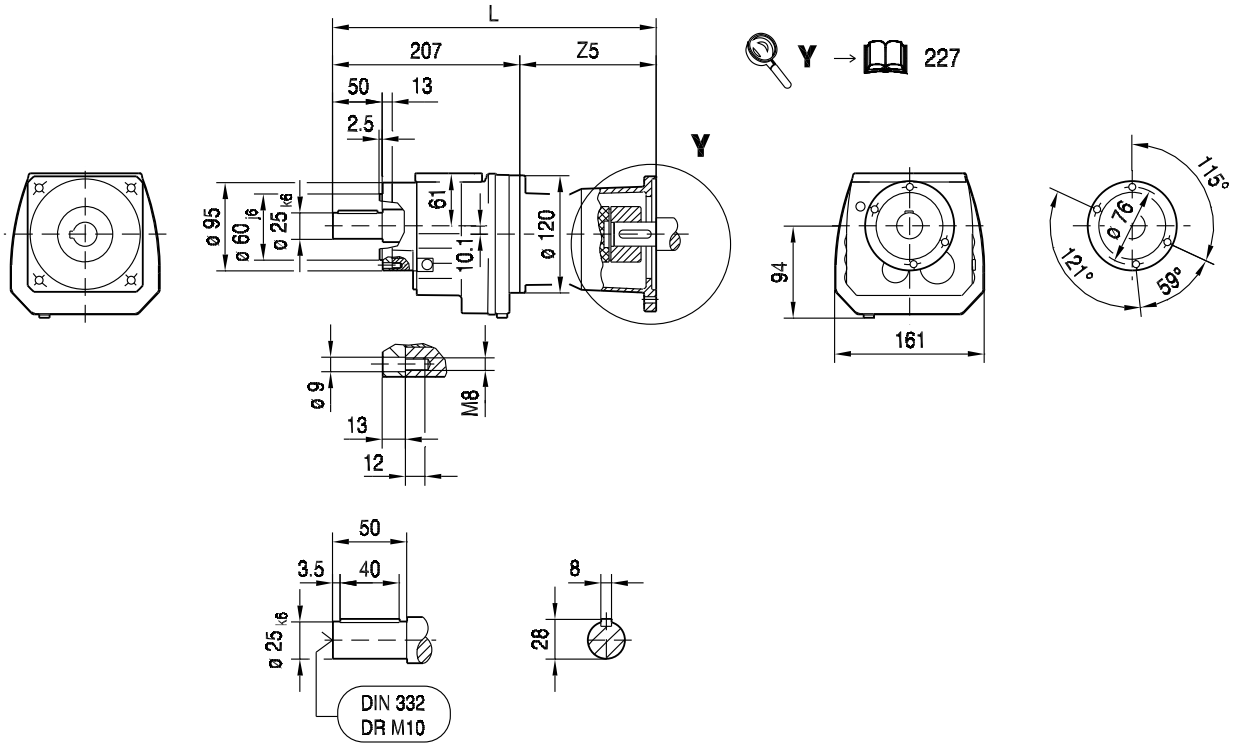

(→ 144)	AQ80/1-3	AQ100/1-2	AQ100/3-4	AQ115/1-3				
L	312	337	351	360				
Z5	104.5	129.5	143.5	152.5				

8.3.5 R 47 AQ.. [Nm]

[Nm]		AQ. M_{amax} | M_{apk} | $M_{aNotaus}$																								
	i	80/1-3			100/1-4			115/1-2			115/3			140/1			140/2-4			160/1			190/1-3		
R47 2	3.83	65	65	126	65	65	130	65	65	130	144	166	176	144	166	245	144	166	245	144	166	245	144	166	245
	4.34	73	73	143	73	73	147	73	73	147	146	170	199	146	170	245	146	170	245	146	170	245	146	170	245
	4.85	82	82	160	82	82	164	82	82	164	150	175	220	150	175	255	150	175	255	150	175	255	150	175	255
	5.64	95	95	186	95	95	191	95	95	191	155	180	255	155	180	260	155	180	260	155	180	260	155	180	260
	6.00	102	102	198	102	102	200	102	102	200	156	182	265	156	182	265	156	182	265	156	182	265	156	182	265
	6.96	118	118	225	118	118	235	118	118	235	159	187	270	159	187	270	159	187	270	159	187	270			
	7.76	131	131	255	131	131	260	131	131	260	163	190	275	163	190	275	163	190	275	163	190	275			
	8.01	136	136	260	136	136	270	136	136	270	205	300	345	205	300	345	205	300	345	205	300	345	205	300	345
	9.07	154	154	295	154	154	305	154	154	305	220	305	370	220	305	370	220	305	370	220	305	370	220	305	370
	10.15	172	172	330	172	172	345	172	172	345	230	305	390	230	305	390	230	305	390	230	305	390	230	305	390
	11.79	200	200	385	200	200	400	200	200	400	245	305	415	245	305	415	245	305	415	245	305	415	245	305	415
	12.54	210	210	410	210	210	425	210	210	425	250	305	425	250	305	425	250	305	425	250	305	425	250	305	425
	14.56	245	245	450	245	245	450	245	245	450	265	305	450	265	305	450	265	305	450	265	305	450			
	16.22	275	275	465	275	275	465	275	275	465	275	305	465	275	305	465	275	305	465	275	305	465			
	17.89	290	300	490	290	300	490	290	300	490	290	305	490												
	19.27	295	305	500	295	305	500	295	305	500	295	305	500	295	305	500	295	305	500	295	305	500			
	21.81	300	305	510	300	305	510	300	305	510	300	305	510												
	23.28	300	305	510	300	305	510	300	305	510	300	305	510												
	26.74	300	305	510	300	305	510	300	305	510	300	305	510												
	31.12	220	305	370	220	305	370	220	305	370	220	305	370												
	33.79	240	305	405	240	305	405	240	305	405	240	305	405												
R47 3	23.59	300	305	510	300	305	510	300	305	510	300	305	510	300	305	510	300	305	510	300	305	510			
	26.70	300	305	510	300	305	510	300	305	510	300	305	510	300	305	510	300	305	510	300	305	510			
	29.88	300	305	510	300	305	510	300	305	510	300	305	510	300	305	510	300	305	510	300	305	510			
	34.73	300	305	510	300	305	510	300	305	510	300	305	510	300	305	510	300	305	510	300	305	510			
	36.93	300	305	510	300	305	510	300	305	510	300	305	510	300	305	510	300	305	510	300	305	510			
	42.87	300	305	510	300	305	510	300	305	510	300	305	510	300	305	510	300	305	510	300	305	510			
	47.75	300	305	510	300	305	510	300	305	510	300	305	510	300	305	510	300	305	510	300	305	510			
	52.69	300	305	510	300	305	510	300	305	510	300	305	510												
	56.73	300	305	510	300	305	510	300	305	510	300	305	510	300	305	510	300	305	510	300	305	510			
	64.21	300	305	510	300	305	510	300	305	510	300	305	510												
	68.54	300	305	510	300	305	510	300	305	510	300	305	510												
	76.23	300	305	510	300	305	510	300	305	510	300	305	510												
	84.90	300	305	510	300	305	510	300	305	510	300	305	510												
	93.68	300	305	510	300	305	510	300	305	510	300	305	510												
	100.86	300	305	510	300	305	510	300	305	510	300	305	510												
	114.17	300	305	510	300	305	510	300	305	510	300	305	510												
	121.87	300	305	510	300	305	510	300	305	510	300	305	510												
	139.99	300	305	510	300	305	510	300	305	510	300	305	510												
	162.94	300	305	510	300	305	510	300	305	510	300	305	510												
	176.88	300	305	510	300	305	510	300	305	510	300	305	510												

m [kg]		AQ.							
	s	80/1-3	100/1-4	115/1-2	115/3	140/1	140/2-4	160/1	190/1-3
R47	2	17	18	18	18	23	23	23	32
R47	3	18	18	19	19	24	24	24	32
RF: + 0.1 kg									

		AQ.							
		80/1-3	100/1-4	115/1-2	115/3	140/1	140/2-4	160/1	190/1-3
J_A 10^{-4}	[kgm^2]	0.77	1.4	1.4	3.1	5.1	10.0	10.0	25.0
c_{TA}	[Nm/']	0.25	0.25	0.25	0.625	0.625	1.0	1.0	2.08

R47 n_e = 1400	i	M_{amax} [Nm]	M_{apk} [Nm]	$M_{aNotaus}$ [Nm]	n_{ak} [1/min]	J_G 10^{-4} [kgm^2]	F_{Ramax} R [N]	F_{Ramax} RF [N]	F_{Rapk} R [N]	F_{Rapk} RF [N]
	3.83	144	166	245	392	2.6	2080	2080	5960	5960
	4.34	146	170	248	415	2.0	2190	2190	5940	5940
	4.85	150	175	255	392	1.7	2280	2280	5930	5930
	5.64	155	180	264	372	1.3	2410	2410	5920	5920
	6.00	156	182	265	383	1.2	2470	2470	5910	5910
	6.96	159	187	270	374	0.93	2620	2620	5890	5890
	7.76	163	190	277	361	0.77	2720	2720	5880	5880
	8.01	205	300	349	200	2.0	2690	2690	5420	5420
	9.07	220	305	374	165	1.6	2780	2780	5390	5390
R47	10.15	230	305	391	158	1.3	2880	2880	5390	5390
 2	11.79	245	305	417	136	1.0	3020	3020	5390	5390
	12.54	250	305	425	128	0.95	3080	3080	5390	5390
	14.56	265	305	451	110	0.74	3230	3230	5390	5390
	16.22	275	305	468	99	0.63	3350	3350	5390	5390
	17.89	290	305	493	84	0.51	3390	3390	5390	5390
	19.27	295	305	502	83	0.48	3530	3530	5390	5390
	21.81	300	305	510	78	0.39	3710	3710	5390	5390
	23.28	300	305	510	82	0.36	3820	3820	5390	5390
	26.74	300	305	510	82	0.29	4050	4050	5390	5390
	31.12	220	305	374	212	0.23	4610	4610	5390	5390
	33.79	240	305	408	163	0.20	4680	4680	5390	5390
	23.59	300	305	510	85	1.7	3840	3840	5390	5390
	26.70	300	305	510	86	1.4	4050	4050	5390	5390
	29.88	300	305	510	84	1.2	4240	4240	5390	5390
	34.73	300	305	510	84	0.93	4520	4520	5390	5390
	36.93	300	305	510	84	0.85	4630	4630	5390	5390
	42.87	300	305	510	86	0.67	4930	4930	5390	5390
	47.75	300	305	510	86	0.56	5140	5140	5390	5390
	52.69	300	305	510	85	0.47	5350	5350	5390	5390
	56.73	300	305	510	85	0.44	5420	5420	5390	5390
R47	64.21	300	305	510	86	0.37	5420	5420	5390	5390
 3	68.54	300	305	510	86	0.33	5420	5420	5390	5390
	76.23	300	305	510	89	0.60	5420	5420	5390	5390
	84.90	300	305	510	82	0.52	5420	5420	5390	5390
	93.68	300	305	510	75	0.43	5420	5420	5390	5390
	100.86	300	305	510	69	0.41	5420	5420	5390	5390
	114.17	300	305	510	61	0.34	5420	5420	5390	5390
	121.87	300	305	510	57	0.31	5420	5420	5390	5390
	139.99	300	305	510	50	0.25	5420	5420	5390	5390
	162.94	300	305	510	43	0.20	5420	5420	5390	5390
	176.88	300	305	510	40	0.18	5420	5420	5390	5390

AQ.	i	n_{epk} [1/min]	η [%]	c_{TG} R [Nm/']	c_{TG} RF [Nm/']	φ /R [']
R47 2	3.83	3657	97	11	11	11
	4.34	4144	97	11	11	11
	4.85	4500	97	11	11	10
	5.64	4500	97	11	11	10
	6.00	4500	97	11	11	10
	6.96	4500	97	11	11	10
	7.76	4500	97	11	11	10
	8.01	4500	97	15	15	8
	9.07	4500	97	15	15	8
	10.15	4500	97	15	15	7
	11.79	4500	97	15	15	7
	12.54	4500	97	15	15	7
	14.56	4500	97	15	15	7
	16.22	4500	97	15	15	7
	17.89	4500	97	15	15	7
	19.27	4500	97	15	15	7
	21.81	4500	97	15	15	7
	23.28	4500	97	15	15	7
	26.74	4500	97	15	15	7
	31.12	4500	97	15	15	7
	33.79	4500	97	15	15	7
R47 3	23.59	4500	95	15	15	8
	26.70	4500	95	15	15	8
	29.88	4500	95	15	15	8
	34.73	4500	95	15	15	8
	36.93	4500	95	15	15	8
	42.87	4500	95	15	15	8
	47.75	4500	95	15	15	8
	52.69	4500	95	15	15	8
	56.73	4500	95	15	15	8
	64.21	4500	95	15	15	8
	68.54	4500	95	15	15	8
	76.23	4500	94	15	15	7
	84.90	4500	94	15	15	7
	93.68	4500	94	15	15	7
	100.86	4500	93	15	15	7
	114.17	4500	93	15	15	7
	121.87	4500	93	15	15	7
	139.99	4500	93	15	15	7
	162.94	4500	93	15	15	7
	176.88	4500	93	15	15	7

8.3.6 R 47 AQ.. [mm]

01 082 00 08

R47..

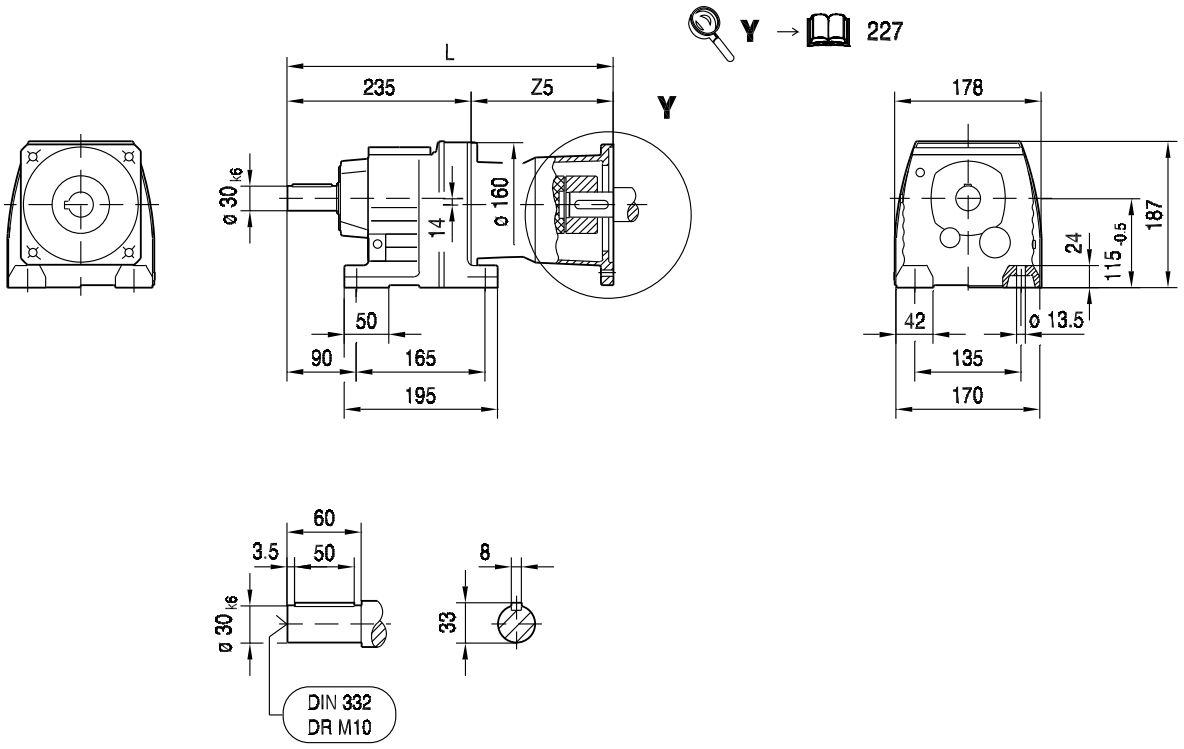

R47F..

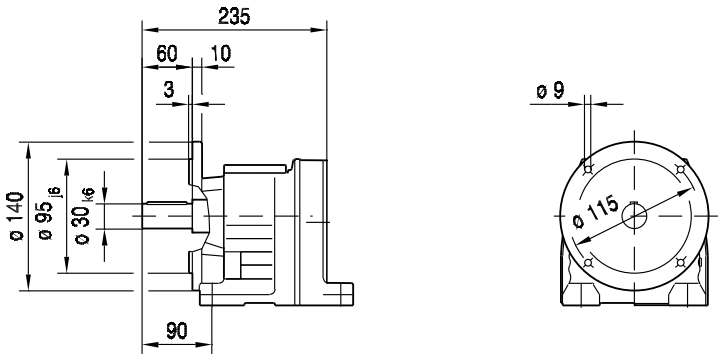

(→ 144)	AQ80/1-3	AQ100/1-2	AQ100/3-4	AQ115/1-3	AQ140/1-2	AQ140/3-4	AQ160/1	AQ190/1-2	AQ190/3
L	333	358	372	381	410	423	423	473	497
Z5	98	123	137	146	175	188	188	237.5	261.5

01 083 00 08

RF47..

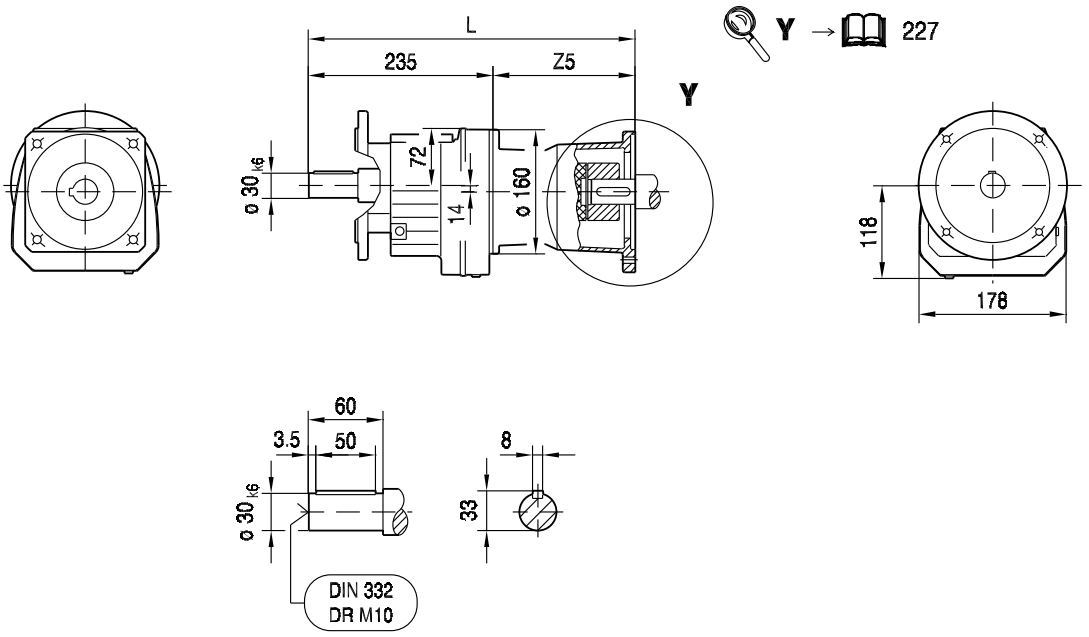

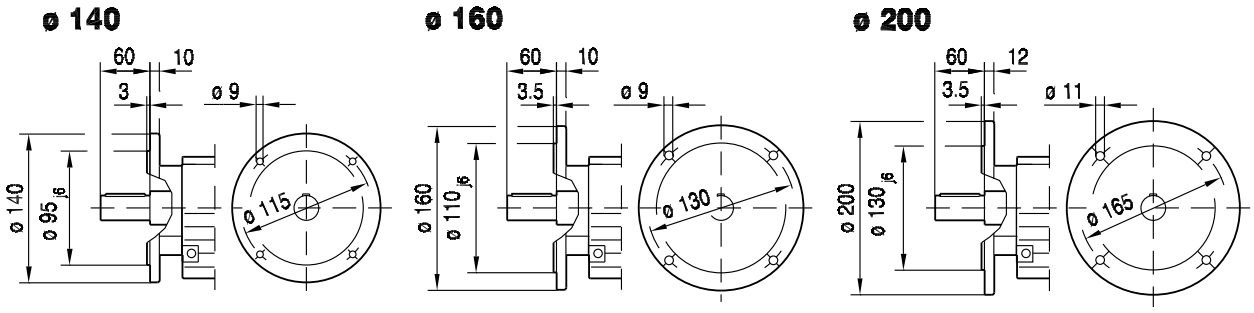

(→ 144)	AQ80/1-3	AQ100/1-2	AQ100/3-4	AQ115/1-3	AQ140/1-2	AQ140/3-4	AQ160/1	AQ190/1-2	AQ190/3
L	333	358	372	381	410	423	423	473	497
Z5	98	123	137	146	175	188	188	237.5	261.5

01 084 00 08

RZ47..

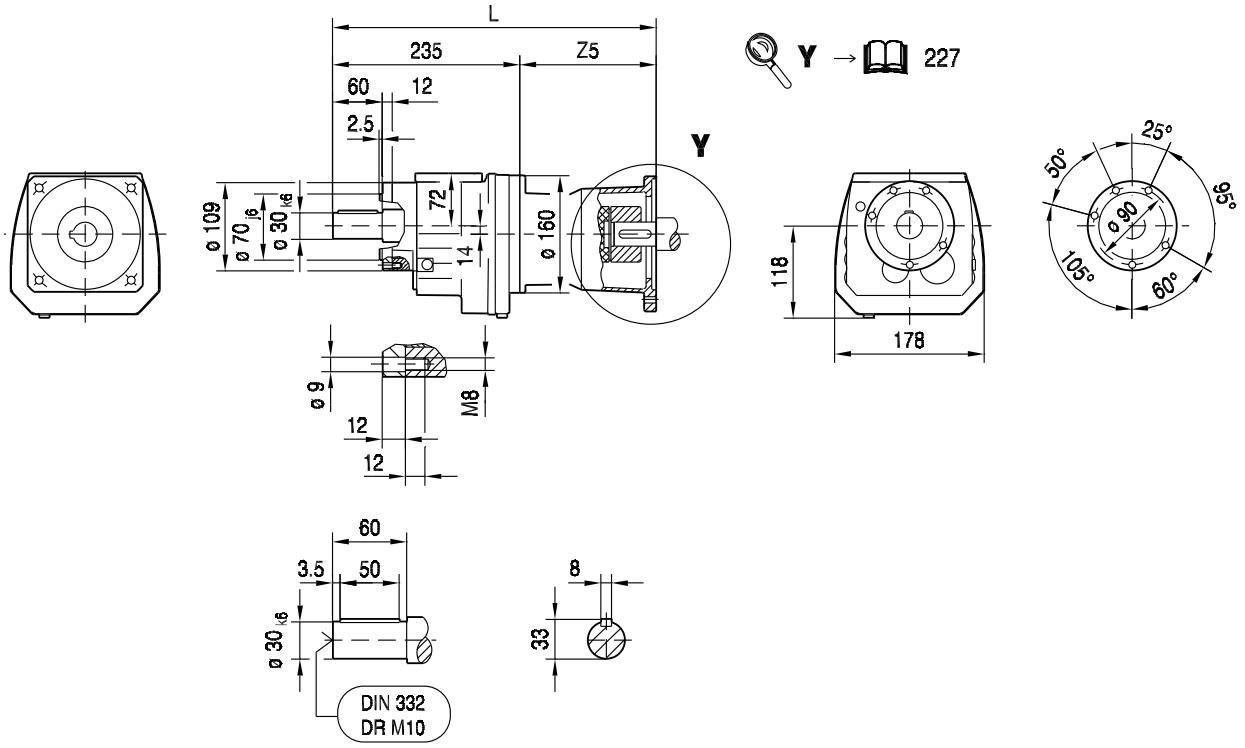

(→ 144)	AQ80/1-3	AQ100/1-2	AQ100/3-4	AQ115/1-3	AQ140/1-2	AQ140/3-4	AQ160/1	AQ190/1-2	AQ190/3
L	333	358	372	381	410	423	423	473	497
Z5	98	123	137	146	175	188	188	237.5	261.5

8.3.7 R 57 AQ.. [Nm]

[Nm]		AQ. M_{amax} | M_{apk} | $M_{aNotaus}$																								
	i	80/1-3			100/1-4			115/1-2			115/3			140/1			140/2-4			160/1			190/1-3		
R57 2	4.39	74	74	144	74	74	149	74	74	149	200	200	200	260	260	435	280	420	435	280	420	435	280	420	475
	5.05	85	85	166	85	85	171	85	85	171	230	230	230	300	300	505	305	425	505	305	425	505	305	425	515
	5.82	98	98	192	98	98	197	98	98	197	265	265	265	320	345	540	320	425	540	320	425	540	320	425	540
	6.41	108	108	210	108	108	215	108	108	215	290	290	290	335	380	570	335	425	570	335	425	570	335	425	570
	7.53	128	128	245	128	128	255	128	128	255	345	345	345	350	425	595	350	425	595	350	425	595	350	425	595
	7.97	135	135	260	135	135	270	135	135	270	355	365	365	355	425	600	355	425	600	355	425	600	355	425	600
	9.06	154	154	295	154	154	305	154	154	305	375	415	415	375	425	635	375	425	635	375	425	635			
	9.35	158	158	305	158	158	315	158	158	315	370	430	430	370	455	625	370	455	625	370	455	625	370	455	625
	10.79	183	183	355	183	183	365	183	183	365	390	455	495	390	455	660	390	455	660	390	455	660	390	455	660
	11.88	200	200	390	200	200	400	200	200	400	405	455	545	405	455	685	405	455	685	405	455	685	405	455	685
	13.95	235	235	460	235	235	470	235	235	470	430	455	640	430	455	730	430	455	730	430	455	730	430	455	730
	14.77	250	250	485	250	250	500	250	250	500	435	455	675	435	455	740	435	455	740	435	455	740	435	455	740
	16.79	285	285	550	285	285	570	285	285	570	450	455	765	450	455	765	450	455	765	450	455	765			
	18.60	315	315	610	315	315	630	315	315	630	450	455	765	450	455	765	450	455	765	450	455	765			
	21.93	370	370	720	370	370	745	370	370	745	450	455	765	450	455	765	450	455	765	450	455	765			
	24.99	420	420	765	420	420	765	420	420	765	450	455	765												
	26.31	445	445	765	445	445	765	445	445	765	450	455	765												
R57 3	26.97	450	455	765	450	455	765	450	455	765	450	455	765	450	455	765	450	455	765	450	455	765	450	455	765
	30.18	450	455	765	450	455	765	450	455	765	450	455	765	450	455	765	450	455	765	450	455	765	450	455	765
	35.07	450	455	765	450	455	765	450	455	765	450	455	765	450	455	765	450	455	765	450	455	765	450	455	765
	37.30	450	455	765	450	455	765	450	455	765	450	455	765	450	455	765	450	455	765	450	455	765	450	455	765
	43.30	450	455	765	450	455	765	450	455	765	450	455	765	450	455	765	450	455	765	450	455	765			
	48.23	450	455	765	450	455	765	450	455	765	450	455	765	450	455	765	450	455	765	450	455	765			
	53.22	450	455	765	450	455	765	450	455	765	450	455	765												
	57.29	450	455	765	450	455	765	450	455	765	450	455	765	450	455	765	450	455	765	450	455	765			
	64.85	450	455	765	450	455	765	450	455	765	450	455	765												
	69.23	450	455	765	450	455	765	450	455	765	450	455	765												
	80.55	450	455	765	450	455	765	450	455	765	450	455	765	450	455	765	450	455	765	450	455	765			
	89.71	450	455	765	450	455	765	450	455	765	450	455	765	450	455	765	450	455	765	450	455	765			
	98.99	450	455	765	450	455	765	450	455	765	450	455	765												
	106.58	450	455	765	450	455	765	450	455	765	450	455	765	450	455	765	450	455	765	450	455	765			
	120.63	450	455	765	450	455	765	450	455	765	450	455	765												
	128.77	450	455	765	450	455	765	450	455	765	450	455	765												
	147.92	450	455	765	450	455	765	450	455	765	450	455	765												
	172.17	450	455	765	450	455	765	450	455	765	450	455	765												
	186.89	450	455	765	450	455	765	450	455	765	450	455	765												

m [kg]		AQ.							
	s	80/1-3	100/1-4	115/1-2	115/3	140/1	140/2-4	160/1	190/1-3
R57	2	22	23	23	23	28	28	28	37
R57	3	23	24	24	24	29	29	29	38
RF: + 3.4 kg / RM: + 15.4 kg									

		AQ.							
		80/1-3	100/1-4	115/1-2	115/3	140/1	140/2-4	160/1	190/1-3
J_A 10^{-4}	[kgm^2]	0.77	1.4	1.4	3.1	5.1	10.0	10.0	25.0
c_{TA}	[Nm/']	0.25	0.25	0.25	0.625	0.625	1.0	1.0	2.08

R57							F_{Ramax}			F_{Rapk}		
n_e = 1400	i	M_{amax} [Nm]	M_{apk} [Nm]	$M_{aNotaus}$ [Nm]	n_{ak} [1/min]	J_G 10^{-4} [kgm^2]	R [N]	RF [N]	RM [N]	R [N]	RF [N]	RM [N]
R57 2	4.39	280	420	476	319	4.3	1900	1900	4000	7230	7230	4000
	5.05	305	425	519	277	3.4	1730	1730	4000	7210	7210	4000
	5.82	320	425	544	241	2.7	1820	1820	4000	7210	7210	4000
	6.41	335	425	570	218	2.3	1770	1770	4000	7210	7210	4000
	7.53	350	425	595	226	1.8	1950	1950	4000	7210	7210	4000
	7.97	355	425	604	213	1.6	2020	2020	4000	7210	7210	4000
	9.06	375	425	638	188	1.3	2010	2010	4000	7210	7210	4000
	9.35	370	455	629	193	2.8	3180	3180	4000	7080	7080	4000
	10.79	390	455	663	167	2.2	3330	3330	4000	7080	7080	4000
	11.88	405	455	689	143	1.9	3430	3430	4000	7080	7080	4000
	13.95	430	455	731	122	1.6	3610	3610	4000	7080	7080	4000
	14.77	435	455	740	115	1.4	3690	3690	4000	7080	7080	4000
	16.79	450	455	765	107	1.1	3860	3860	4000	7080	7080	4000
	18.60	450	455	765	108	0.94	4050	4050	4000	7080	7080	4000
	21.93	450	455	765	109	0.73	4370	4370	4000	7080	7080	4000
	24.99	450	455	765	108	0.51	4640	4640	4000	7080	7080	4000
	26.31	450	455	765	110	0.45	4750	4750	4000	7080	7080	4000
R57 3	26.97	450	455	765	63	1.5	4800	4800	4000	7080	7080	4000
	30.18	450	455	765	63	1.3	5040	5040	4000	7080	7080	4000
	35.07	450	455	765	66	0.97	5390	5390	4000	7080	7080	4000
	37.30	450	455	765	64	0.89	5530	5530	4000	7080	7080	4000
	43.30	450	455	765	65	0.70	5900	5900	4000	7080	7080	4000
	48.23	450	455	765	64	0.60	6170	6170	4000	7080	7080	4000
	53.22	450	455	765	66	0.49	6430	6430	4000	7080	7080	4000
	57.29	450	455	765	65	0.46	6630	6630	4000	7080	7080	4000
	64.85	450	455	765	65	0.38	6980	6980	4000	7080	7080	4000
	69.23	450	455	765	65	0.35	7100	7100	4000	7080	7080	4000
	80.55	450	455	765	56	0.62	7100	7100	4000	7080	7080	4000
	89.71	450	455	765	56	0.54	7100	7100	4000	7080	7080	4000
	98.99	450	455	765	56	0.45	7100	7100	4000	7080	7080	4000
	106.58	450	455	765	55	0.42	7100	7100	4000	7080	7080	4000
	120.63	450	455	765	56	0.35	7100	7100	4000	7080	7080	4000
	128.77	450	455	765	54	0.32	7100	7100	4000	7080	7080	4000
	147.92	450	455	765	47	0.26	7100	7100	4000	7080	7080	4000
	172.17	450	455	765	41	0.21	7100	7100	4000	7080	7080	4000
	186.89	450	455	765	37	0.18	7100	7100	4000	7080	7080	4000

AQ.				c_{TG}			φ
	i	n_{epk} [1/min]	η [%]	R [Nm/']	RF [Nm/']	RM [Nm/']	/R [']
R57 2	4.39	4500	97	21	21	17	10
	5.05	4500	97	21	21	17	10
	5.82	4500	97	21	21	17	10
	6.41	4500	97	21	21	17	9
	7.53	4500	97	21	21	17	9
	7.97	4500	97	21	21	17	9
	9.06	4500	97	21	21	17	9
	9.35	4500	97	25	25	20	7
	10.79	4500	97	25	25	20	7
	11.88	4500	97	25	25	20	7
	13.95	4500	97	25	25	20	7
	14.77	4500	97	25	25	20	7
	16.79	4500	97	25	25	20	7
	18.60	4500	97	25	25	20	7
	21.93	4500	97	25	25	20	7
	24.99	4500	97	25	25	20	6
	26.31	4500	97	25	25	20	6

AQ.	i	n_{epk} [1/min]	η [%]	c_{TG} R [Nm/']	c_{TG} RF [Nm/']	c_{TG} RM [Nm/']	φ /R [']
R57  3	26.97	4500	95	26	26	20	8
	30.18	4500	95	26	26	20	8
	35.07	4500	95	26	26	20	8
	37.30	4500	95	26	26	20	8
	43.30	4500	95	26	26	20	8
	48.23	4500	95	26	26	20	8
	53.22	4500	95	26	26	20	8
	57.29	4500	95	26	26	20	8
	64.85	4500	95	26	26	20	8
	69.23	4500	95	26	26	20	7
	80.55	4500	94	26	26	20	7
	89.71	4500	94	26	26	20	7
	98.99	4500	94	26	26	20	7
	106.58	4500	94	26	26	20	7
	120.63	4500	94	26	26	20	7
	128.77	4500	94	26	26	20	7
	147.92	4500	94	26	26	20	7
	172.17	4500	93	26	26	20	7
	186.89	4500	93	26	26	20	7

8.3.8 R 57 AQ.. [mm]

01 085 00 08

R57..

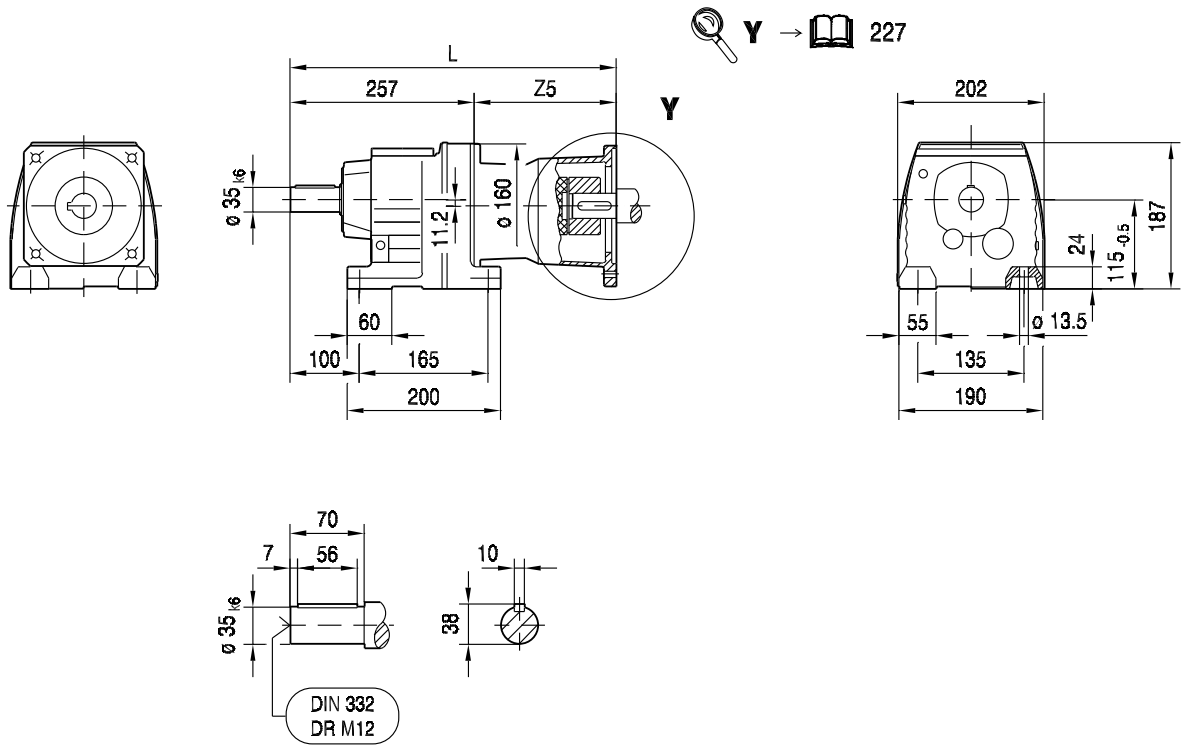

R57F..

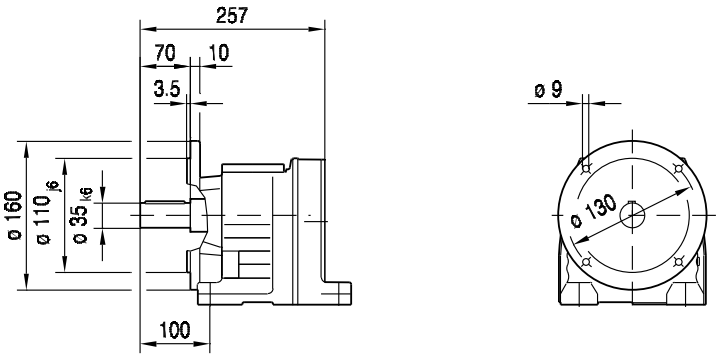

(→ 144)	AQ80/1-3	AQ100/1-2	AQ100/3-4	AQ115/1-3	AQ140/1-2	AQ140/3-4	AQ160/1	AQ190/1-2	AQ190/3
L	355	380	394	403	432	445	445	495	519
Z5	98	123	137	146	175	188	188	237.5	261.5

RF57..

01 086 00 08

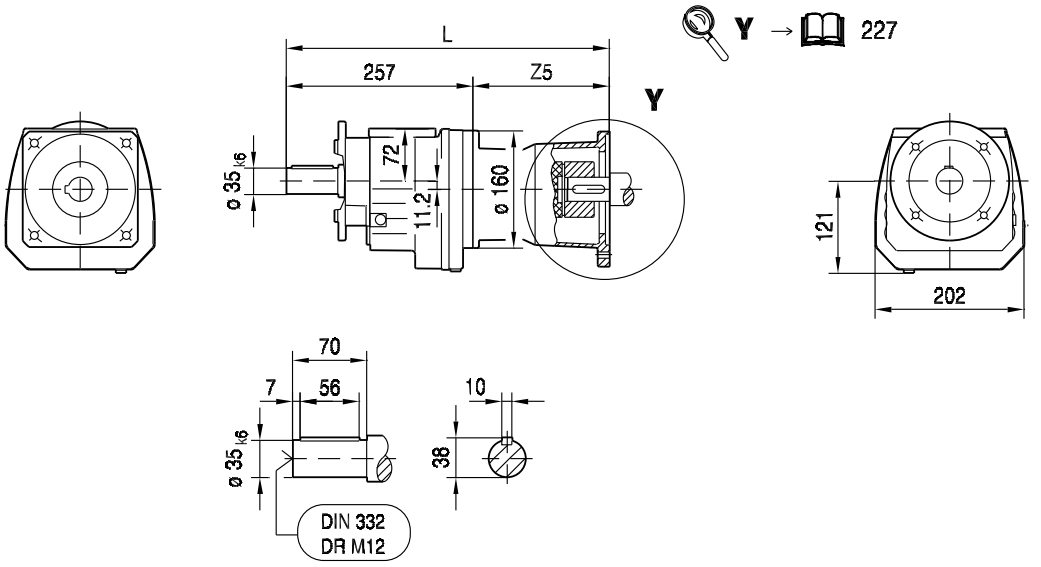

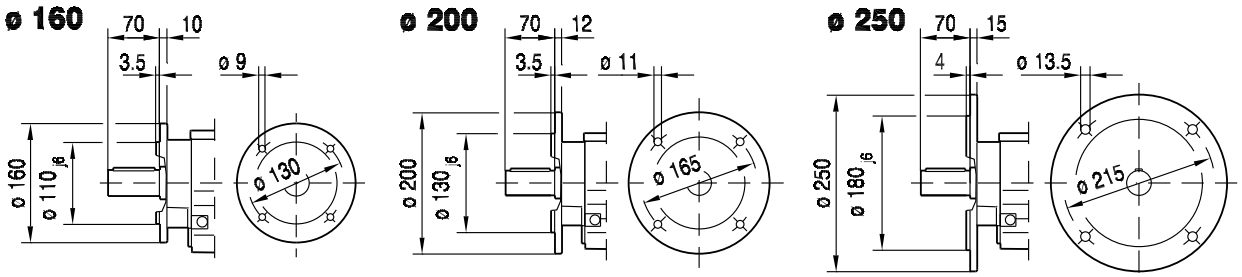

RM57..

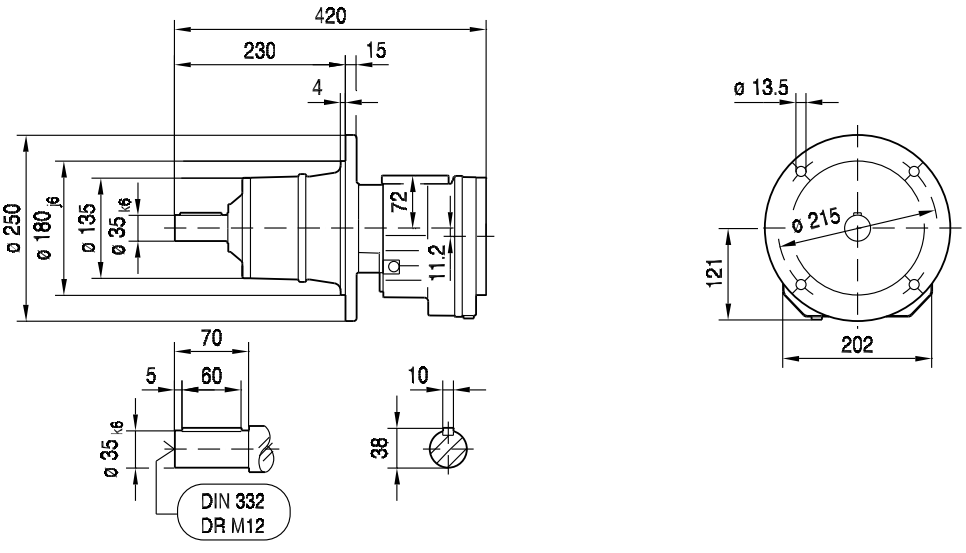

(→ 144)	AQ80/1-3	AQ100/1-2	AQ100/3-4	AQ115/1-3	AQ140/1-2	AQ140/3-4	AQ160/1	AQ190/1-2	AQ190/3
L	355	380	394	403	432	445	445	495	519
Z5	98	123	137	146	175	188	188	237.5	261.5

01 087 00 08

RZ57..

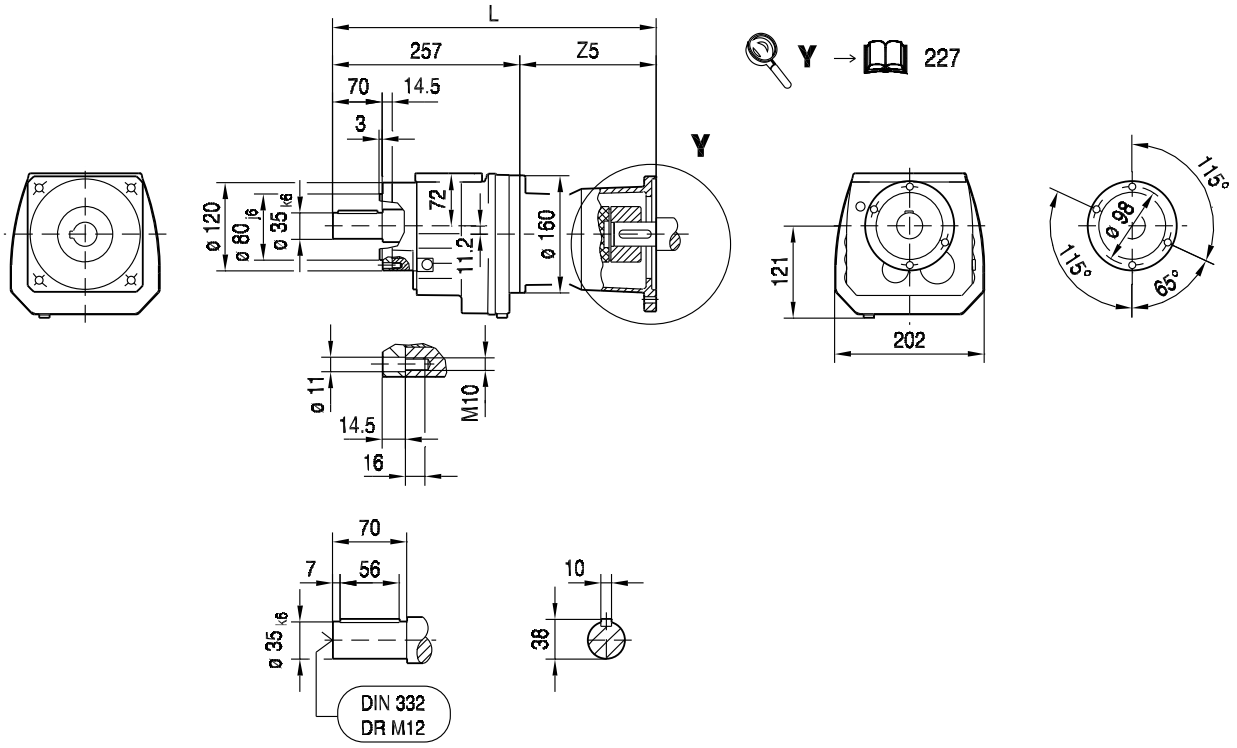

(→ 144)	AQ80/1-3	AQ100/1-2	AQ100/3-4	AQ115/1-3	AQ140/1-2	AQ140/3-4	AQ160/1	AQ190/1-2	AQ190/3
L	355	380	394	403	432	445	445	495	519
Z5	98	123	137	146	175	188	188	237.5	261.5

8.3.9 R 67 AQ.. [Nm]

[Nm]		AQ. M_{amax} | M_{apk} | $M_{aNotaus}$																								
	i	80/1-3			100/1-4			115/1-2			115/3			140/1			140/2-4			160/1			190/1-3		
R67 2	4.29	72	72	141	72	72	145	72	72	145	197	197	197	255	255	425	270	405	425	270	405	425	270	405	455
	4.93	83	83	162	83	83	167	83	83	167	225	225	225	290	295	490	290	435	490	290	435	490	290	435	490
	5.70	96	96	188	96	96	193	96	96	193	260	260	260	310	340	525	310	465	525	310	465	525	310	465	525
	6.27	106	106	205	106	106	210	106	106	210	285	285	285	330	375	560	330	485	560	330	485	560	330	485	560
	7.36	125	125	240	125	125	250	125	125	250	335	335	335	370	440	625	370	485	625	370	485	625	370	485	625
	7.79	132	132	255	132	132	260	132	132	260	355	355	355	380	465	645	380	485	645	380	485	645	380	485	645
	8.70	147	147	285	147	147	295	147	147	295	400	400	400	440	520	745	440	660	745	440	660	745	440	660	745
	10.00	170	170	330	170	170	340	170	170	340	460	460	460	470	600	795	470	665	795	470	665	795	470	665	795
	11.54	196	196	380	196	196	390	196	196	390	500	530	530	500	665	850	500	665	850	500	665	850	500	665	850
	12.70	215	215	415	215	215	430	215	215	430	520	580	580	520	665	880	520	665	880	520	665	880	520	665	880
	14.91	250	250	490	250	250	505	250	250	505	550	665	685	550	665	930	550	665	930	550	665	930	550	665	930
	15.79	265	265	520	265	265	535	265	265	535	560	665	725	560	665	950	560	665	950	560	665	950	560	665	950
	17.95	305	305	590	305	305	610	305	305	610	590	665	820	590	665	1000	590	665	1000	590	665	1000			
	19.89	335	335	655	335	335	675	335	335	675	600	665	910	600	665	1020	600	665	1020	600	665	1020			
	23.44	395	395	770	395	395	795	395	395	795	560	665	950	560	665	950	560	665	950	560	665	950			
	26.72	450	450	880	450	450	900	450	450	900	540	665	910												
	28.13	475	475	910	475	475	910	475	475	910	540	665	910												
R67 3	28.83	490	490	880	490	490	880	490	490	880	520	595	880	520	595	880	520	595	880	520	595	880	520	595	880
	32.27	540	545	910	540	545	910	540	545	910	540	595	910	540	595	910	540	595	910	540	595	910	540	595	910
	37.50	570	595	960	570	595	960	570	595	960	570	595	960	570	595	960	570	595	960	570	595	960	570	595	960
	39.88	580	595	980	580	595	980	580	595	980	580	595	980	580	595	980	580	595	980	580	595	980	580	595	980
	46.29	600	600	1020	600	600	1020	600	600	1020	600	600	1020	600	600	1020	600	600	1020	600	600	1020			
	51.56	600	600	1020	600	600	1020	600	600	1020	600	600	1020	600	600	1020	600	600	1020	600	600	1020			
	56.89	600	600	1020	600	600	1020	600	600	1020	600	600	1020												
	61.26	600	600	1020	600	600	1020	600	600	1020	600	600	1020	600	600	1020	600	600	1020	600	600	1020			
	69.75	600	660	1020	600	660	1020	600	660	1020	600	660	1020	600	660	1020	600	660	1020	600	660	1020	600	660	1020
	74.17	600	660	1020	600	660	1020	600	660	1020	600	660	1020	600	660	1020	600	660	1020	600	660	1020	600	660	1020
	86.11	600	660	1020	600	660	1020	600	660	1020	600	660	1020	600	660	1020	600	660	1020	600	660	1020			
	95.91	600	660	1020	600	660	1020	600	660	1020	600	660	1020	600	660	1020	600	660	1020	600	660	1020			
	105.83	600	660	1020	600	660	1020	600	660	1020	600	660	1020												
	113.94	600	660	1020	600	660	1020	600	660	1020	600	660	1020	600	660	1020	600	660	1020	600	660	1020			
	128.97	600	660	1020	600	660	1020	600	660	1020	600	660	1020												
	137.67	600	660	1020	600	660	1020	600	660	1020	600	660	1020												
	158.14	600	660	1020	600	660	1020	600	660	1020	600	660	1020												
	184.07	600	660	1020	600	660	1020	600	660	1020	600	660	1020												
	199.81	600	660	1020	600	660	1020	600	660	1020	600	660	1020												

m [kg]		AQ.							
	s	80/1-3	100/1-4	115/1-2	115/3	140/1	140/2-4	160/1	190/1-3
R67	2	29	29	30	30	35	35	35	43
R67	3	30	30	31	31	36	36	36	44
RF: + 3.2 kg / RM: + 19.0 kg									

		AQ.							
		80/1-3	100/1-4	115/1-2	115/3	140/1	140/2-4	160/1	190/1-3
$J_A\ 10^{-4}$	[kgm²]	0.77	1.4	1.4	3.1	5.1	10.0	10.0	25.0
c_{TA}	[Nm/']	0.25	0.25	0.25	0.625	0.625	1.0	1.0	2.08

R67							F_{Ramax}			F_{Rapk}		
n_e = 1400	i	M_{amax} [Nm]	M_{apk} [Nm]	$M_{aNotaus}$ [Nm]	n_{ak} [1/min]	J_G 10^{-4} [kgm^2]	R [N]	RF [N]	RM [N]	R [N]	RF [N]	RM [N]
	4.29	270	405	459	326	5.9	5000	5000	8720	9300	9300	9800
	4.93	290	435	493	284	4.6	5210	5210	9120	9100	9100	9760
	5.70	310	465	527	246	3.6	5450	5450	9560	8870	8870	9710
	6.27	330	485	561	223	3.0	5590	5590	9850	8710	8710	9680
	7.36	370	485	629	190	2.4	5790	5790	9850	8710	8710	9680
	7.79	380	485	646	180	2.1	5830	5830	9840	8710	8710	9680
	8.70	440	660	748	161	4.0	5960	5960	9750	5350	5350	9330
R67	10.00	470	665	799	140	3.2	6220	6220	9700	4700	4700	9320
 2	11.54	500	665	850	130	2.5	6500	6500	9660	4700	4700	9320
	12.70	520	665	884	118	2.2	6640	6640	9620	4700	4700	9320
	14.91	550	665	935	101	1.7	6980	6980	9560	4700	4700	9320
	15.79	560	665	952	95	1.6	7130	7130	9540	4700	4700	9320
	17.95	590	665	1003	84	1.2	7330	7330	9480	4700	4700	9320
	19.89	600	665	1020	75	1.0	7560	7560	9460	4700	4700	9320
	23.44	560	665	952	94	0.80	8010	8010	9540	4700	4700	9320
	26.72	540	665	918	105	0.56	8210	8210	9580	4700	4700	9320
	28.13	540	665	918	103	0.50	8210	8210	9580	4700	4700	9320
	28.83	520	595	884	49	1.5	8400	8400	9620	7620	7620	9470
	32.27	540	595	918	43	1.3	8210	8210	9580	7620	7620	9470
	37.50	570	595	969	37	1.0	7900	7900	9520	7620	7620	9470
	39.88	580	595	986	35	0.93	7790	7790	9500	7620	7620	9470
	46.29	600	600	1020	32	0.72	7560	7560	9460	7620	7620	9470
	51.56	600	600	1020	33	0.61	7560	7560	9460	7620	7620	9470
	56.89	600	600	1020	33	0.50	7560	7560	9460	7620	7620	9470
	61.26	600	600	1020	33	0.47	7560	7560	9460	7620	7620	9470
R67	69.75	600	660	1020	29	0.88	7560	7560	9460	5350	5350	9330
 3	74.17	600	660	1020	28	0.81	7560	7560	9460	5350	5350	9330
	86.11	600	660	1020	29	0.63	7560	7560	9460	5350	5350	9330
	95.91	600	660	1020	29	0.54	7560	7560	9460	5350	5350	9330
	105.83	600	660	1020	29	0.45	7560	7560	9460	5350	5350	9330
	113.94	600	660	1020	30	0.42	7560	7560	9460	5350	5350	9330
	128.97	600	660	1020	29	0.36	7560	7560	9460	5350	5350	9330
	137.67	600	660	1020	30	0.32	7560	7560	9460	5350	5350	9330
	158.14	600	660	1020	30	0.26	7560	7560	9460	5350	5350	9330
	184.07	600	660	1020	30	0.21	7560	7560	9460	5350	5350	9330
	199.81	600	660	1020	30	0.19	7560	7560	9460	5350	5350	9330

AQ.				c_{TG}			φ
	i	n_{epk} [1/min]	η [%]	R [Nm/']	RF [Nm/']	RM [Nm/']	/R [']
	4.29	3700	97	24	24	22	10
	4.93	4252	97	24	24	22	9
	5.70	4500	97	24	24	22	9
	6.27	4500	97	24	24	22	9
	7.36	4500	97	24	24	22	8
	7.79	4500	97	24	24	22	8
	8.70	4500	97	32	32	28	7
R67	10.00	4500	97	32	32	28	7
 2	11.54	4500	97	32	32	28	7
	12.70	4500	97	32	32	28	6
	14.91	4500	97	32	32	28	6
	15.79	4500	97	32	32	28	6
	17.95	4500	97	32	32	28	6
	19.89	4500	97	32	32	28	6
	23.44	4500	97	32	32	28	6
	26.72	4500	97	32	32	28	6
	28.13	4500	97	32	32	28	6

AQ.	i	n_{epk} [1/min]	η [%]	c_{TG} R [Nm/']	c_{TG} RF [Nm/']	c_{TG} RM [Nm/']	φ /R [']
R67 3	28.83	4500	95	33	33	29	7
	32.27	4500	95	33	33	29	7
	37.50	4500	95	33	33	29	7
	39.88	4500	95	33	33	29	7
	46.29	4500	95	33	33	29	7
	51.56	4500	95	33	33	29	7
	56.89	4500	95	33	33	29	7
	61.26	4500	95	33	33	29	7
	69.75	4500	95	33	33	29	7
	74.17	4500	95	33	33	29	7
	86.11	4500	95	33	33	29	6
	95.91	4500	95	33	33	29	6
	105.83	4500	95	33	33	29	6
	113.94	4500	95	33	33	29	6
	128.97	4500	95	33	33	29	6
	137.67	4500	94	33	33	29	6
	158.14	4500	94	33	33	29	6
	184.07	4500	94	33	33	29	6
	199.81	4500	93	33	33	29	6

8.3.10 R 67 AQ.. [mm]

01 088 00 08

R67..

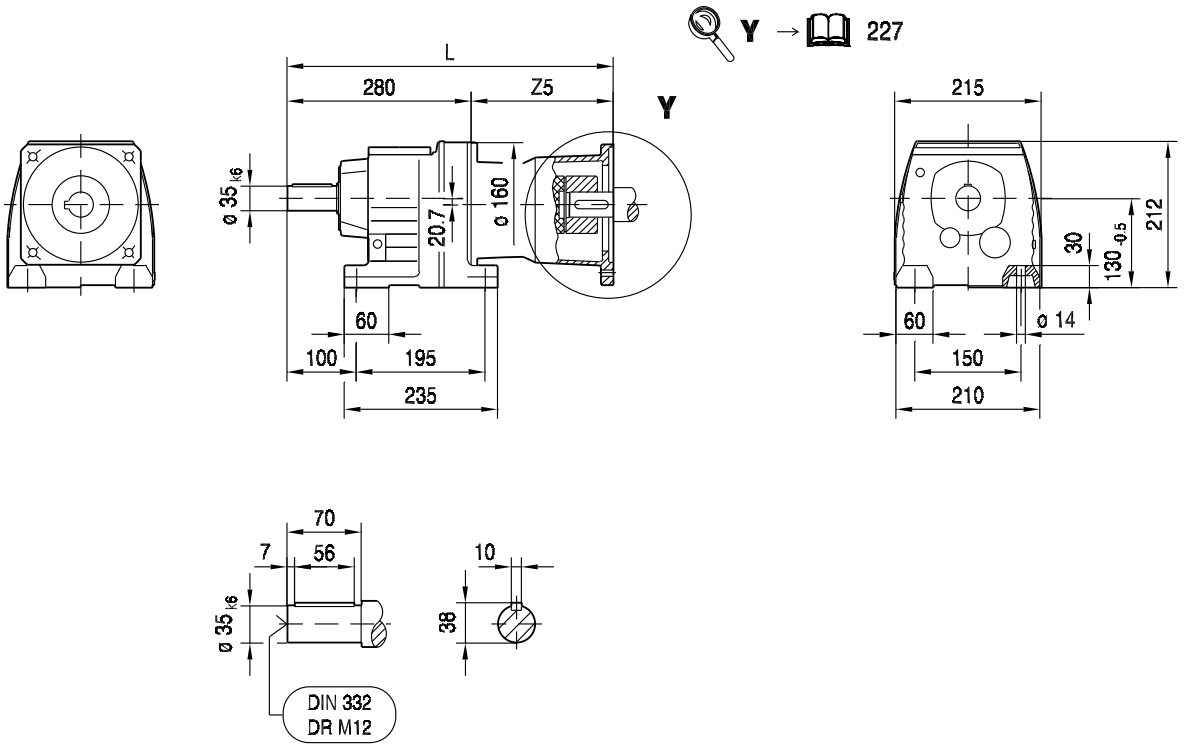

R67F..

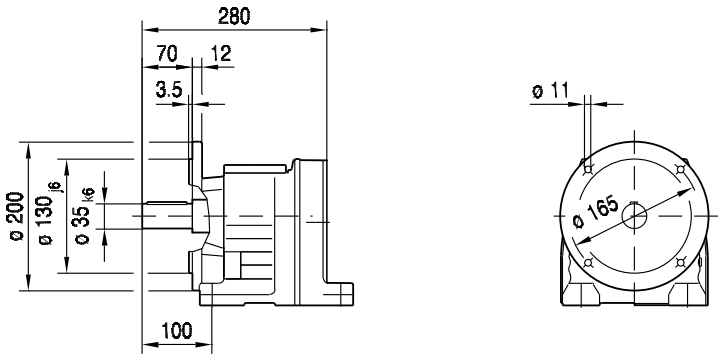

(→ 144)	AQ80/1-3	AQ100/1-2	AQ100/3-4	AQ115/1-3	AQ140/1-2	AQ140/3-4	AQ160/1	AQ190/1-2	AQ190/3
L	378	403	417	426	455	468	468	518	542
Z5	98	123	137	146	175	188	188	237.5	261.5

RF67..

01 089 00 08

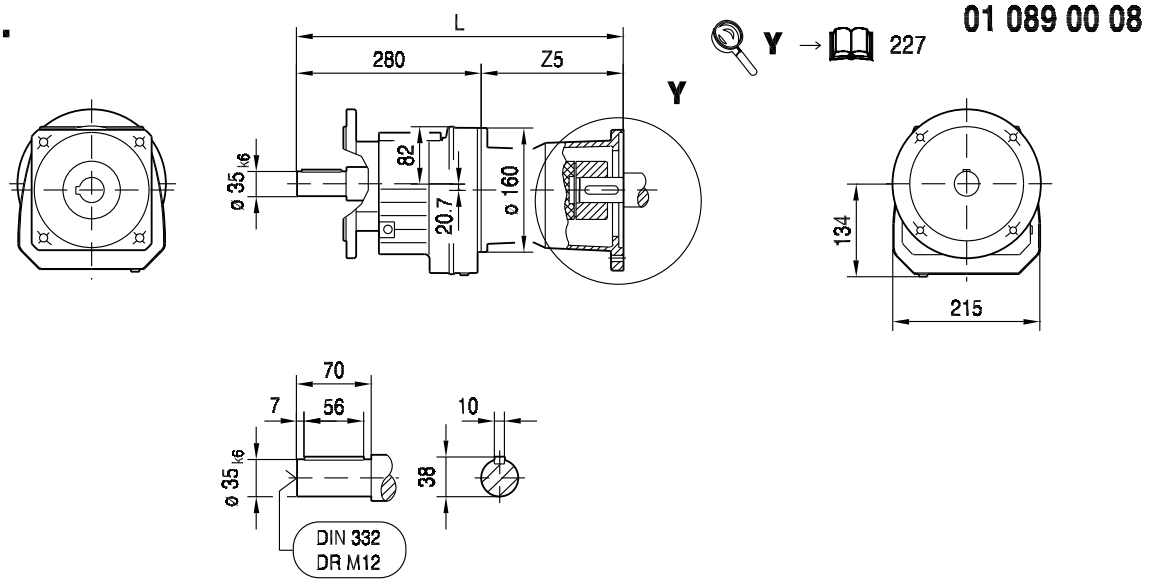

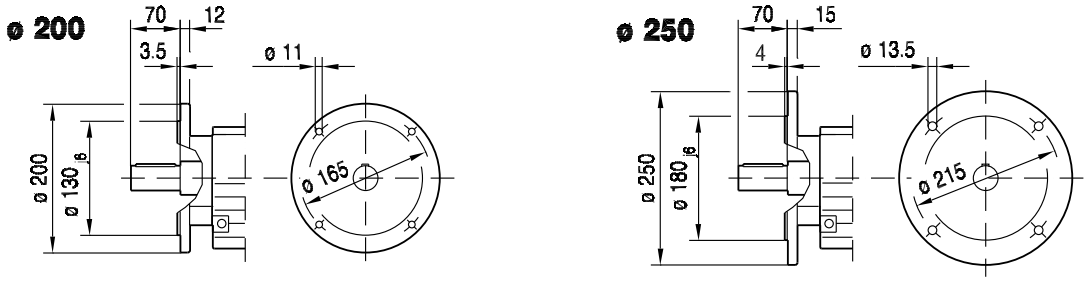

RM67..

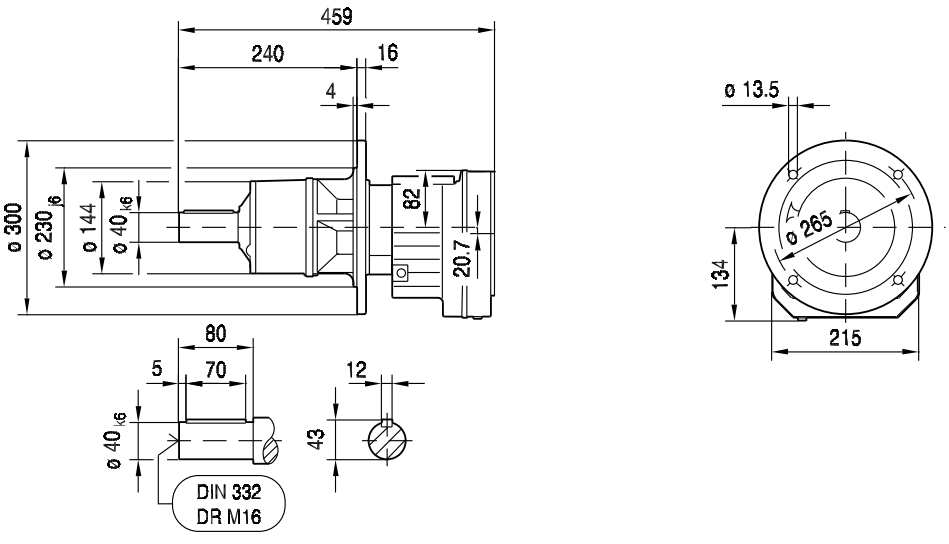

(→ 144)	AQ80/1-3	AQ100/1-2	AQ100/3-4	AQ115/1-3	AQ140/1-2	AQ140/3-4	AQ160/1	AQ190/1-2	AQ190/3
L	378	403	417	426	455	468	468	518	542
Z5	98	123	137	146	175	188	188	237.5	261.5

01 090 00 08

RZ67..

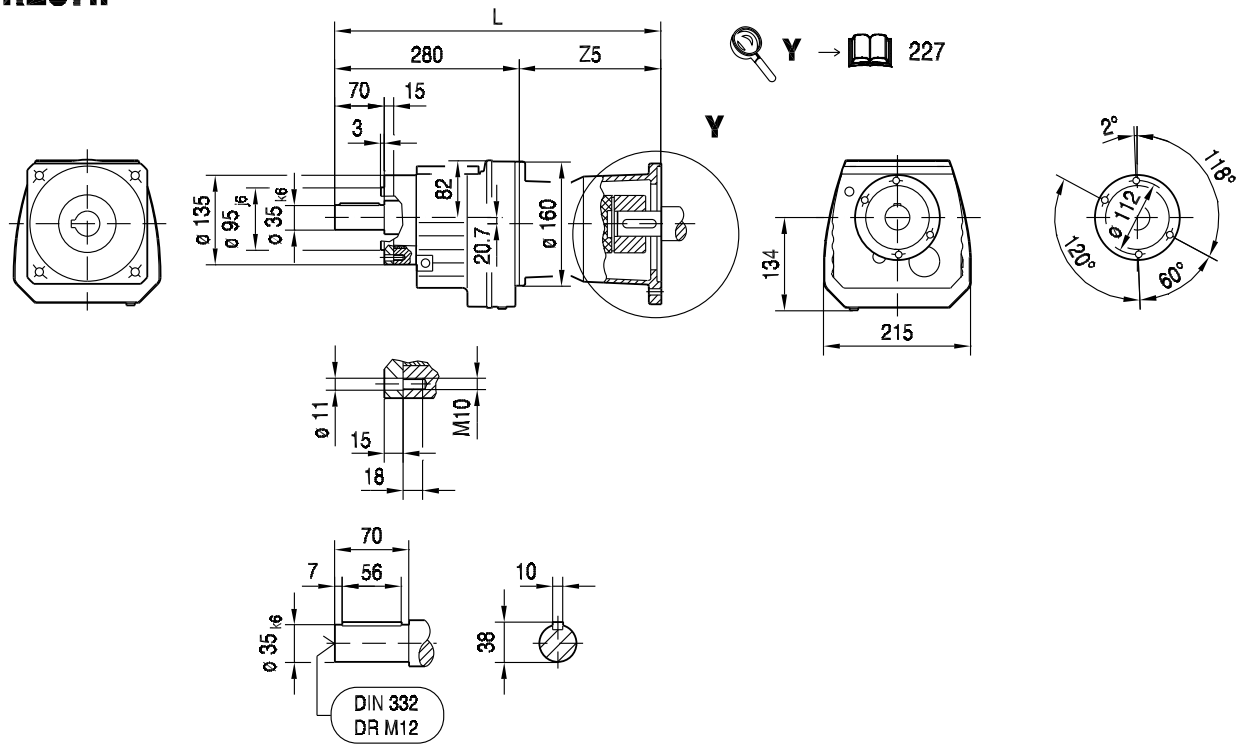

(→ 144)	AQ80/1-3	AQ100/1-2	AQ100/3-4	AQ115/1-3	AQ140/1-2	AQ140/3-4	AQ160/1	AQ190/1-2	AQ190/3
L	378	403	417	426	455	468	468	518	542
Z5	98	123	137	146	175	188	188	237.5	261.5

8.3.11 R 77 AQ.. [Nm]

[Nm]		AQ. M_{amax} | M_{apk} | $M_{aNotaus}$																							
	i	80/1-3			100/1-4			115/1-2			115/3			140/1			140/2-4			160/1			190/1-3		
R77 2	5.31	90	90	175	90	90	180	90	90	180	240	240	240	315	315	530	510	530	530	510	530	530	510	765	840
	5.99	101	101	197	101	101	200	101	101	200	275	275	275	355	355	595	540	595	595	540	595	595	540	810	910
	6.79	115	115	220	115	115	230	115	115	230	310	310	310	405	405	675	580	675	675	580	675	675	580	840	980
	7.74	131	131	255	131	131	260	131	131	260	355	355	355	460	460	770	610	770	770	610	770	770	610	840	1030
	8.59	146	146	280	146	146	290	146	146	290	395	395	395	515	515	850	630	840	850	630	840	850	630	840	1070
	9.64	163	163	315	163	163	325	163	163	325	440	440	440	575	575	960	630	900	960	630	900	960	630	900	1070
	10.88	184	184	355	184	184	365	184	184	365	500	500	500	650	650	1080	660	900	1080	660	900	1080	660	900	1120
	12.33	205	205	405	205	205	415	205	205	415	565	565	565	690	735	1170	690	900	1170	690	900	1170	690	900	1170
	14.05	235	235	460	235	235	475	235	235	475	645	645	645	720	840	1220	720	900	1220	720	900	1220	720	900	1220
	15.60	265	265	510	265	265	530	265	265	530	715	715	715	740	900	1250	740	900	1250	740	900	1250	740	900	1250
	17.82	300	300	585	300	300	605	300	300	605	780	810	810	780	900	1320	780	900	1320	780	900	1320	780	900	1320
	18.80	315	315	620	315	315	635	315	315	635	780	860	860	780	900	1320	780	900	1320	780	900	1320	780	900	1320
	21.43	360	360	705	360	360	725	360	360	725	820	900	980	820	900	1390	820	900	1390	820	900	1390			
	23.37	395	395	770	395	395	790	395	395	790	820	900	1070	820	900	1390	820	900	1390	820	900	1390			
R77 3	25.23	425	425	830	425	425	850	425	425	850	780	900	1160	780	900	1320	780	900	1320	780	900	1320	780	900	1320
	29.00	490	490	950	490	490	980	490	490	980	820	900	1330	820	900	1390	820	900	1390	820	900	1390	820	900	1390
	33.47	565	565	1100	565	565	1130	565	565	1130	820	900	1390	820	900	1390	820	900	1390	820	900	1390	820	900	1390
	36.83	625	625	1210	625	625	1250	625	625	1250	820	900	1390	820	900	1390	820	900	1390	820	900	1390	820	900	1390
	43.26	735	735	1390	735	735	1390	735	735	1390	820	900	1390	820	900	1390	820	900	1390	820	900	1390	820	900	1390
	45.81	775	775	1390	775	775	1390	775	775	1390	820	900	1390	820	900	1390	820	900	1390	820	900	1390	820	900	1390
	52.07	820	880	1390	820	880	1390	820	880	1390	820	900	1390	820	900	1390	820	900	1390	820	900	1390			
	57.68	820	900	1390	820	900	1390	820	900	1390	820	900	1390	820	900	1390	820	900	1390	820	900	1390			
	65.77	820	900	1390	820	900	1390	820	900	1390	820	900	1390	820	900	1390	820	900	1390	820	900	1390	820	900	1390
	77.24	820	900	1390	820	900	1390	820	900	1390	820	900	1390	820	900	1390	820	900	1390	820	900	1390	820	900	1390
	81.80	820	900	1390	820	900	1390	820	900	1390	820	900	1390	820	900	1390	820	900	1390	820	900	1390	820	900	1390
	92.97	820	900	1390	820	900	1390	820	900	1390	820	900	1390	820	900	1390	820	900	1390	820	900	1390			
	102.99	820	900	1390	820	900	1390	820	900	1390	820	900	1390	820	900	1390	820	900	1390	820	900	1390			
	121.42	820	900	1390	820	900	1390	820	900	1390	820	900	1390	820	900	1390	820	900	1390	820	900	1390			
	138.39	820	900	1390	820	900	1390	820	900	1390	820	900	1390												
	145.67	820	900	1390	820	900	1390	820	900	1390	820	900	1390												
	166.59	820	900	1390	820	900	1390	820	900	1390	820	900	1390												
	195.24	820	900	1390	820	900	1390	820	900	1390	820	900	1390												

m [kg]		AQ.							
	s	80/1-3	100/1-4	115/1-2	115/3	140/1	140/2-4	160/1	190/1-3
R77	2	34	35	35	35	40	40	40	49
R77	3	36	36	37	37	41	41	41	50
RF: + 5.7 kg / RM: + 30.7 kg									

		AQ.							
		80/1-3	100/1-4	115/1-2	115/3	140/1	140/2-4	160/1	190/1-3
J_A 10^{-4}	[kgm^2]	0.77	1.4	1.4	3.1	5.1	10.0	10.0	25.0
c_{TA}	[Nm/']	0.25	0.25	0.25	0.625	0.625	1.0	1.0	2.08

R77 n_e = 1400	i	M_{amax} [Nm]	M_{apk} [Nm]	$M_{aNotaus}$ [Nm]	n_{ak} [1/min]	J_G 10^{-4} [kgm^2]	F_{Ramax} R [N]	F_{Ramax} RF [N]	F_{Ramax} RM [N]	F_{Rapk} R [N]	F_{Rapk} RF [N]	F_{Rapk} RM [N]
R77 2	5.31	510	765	867	264	7.7	3990	3990	12700	10400	10400	13000
	5.99	540	810	918	234	6.4	3990	3990	13000	10000	10000	13000
	6.79	580	840	986	206	5.2	3850	3850	13000	9730	9730	13000
	7.74	610	840	1037	181	4.2	3940	3940	13000	9730	9730	13000
	8.59	630	840	1071	175	3.7	4110	4110	13000	9730	9730	13000
	9.64	630	900	1071	145	6.6	6300	6300	13000	9110	9110	13000
	10.88	660	900	1122	129	5.5	6490	6490	13000	9110	9110	13000
	12.33	690	900	1173	114	4.5	6740	6740	13000	9110	9110	13000
	14.05	720	900	1224	100	3.7	7050	7050	13000	9110	9110	13000
	15.60	740	900	1258	90	3.3	7390	7390	13000	9110	9110	13000
	17.82	780	900	1326	79	2.7	7620	7620	13000	9110	9110	13000
	18.80	780	900	1326	74	2.5	7980	7980	13000	9110	9110	13000
	21.43	820	900	1394	65	2.0	8250	8250	13000	9110	9110	13000
	23.37	820	900	1394	64	1.7	8870	8870	13000	9110	9110	13000

R77							F_{Ramax}			F_{Rapk}		
n_e = 1400	i	M_{amax} [Nm]	M_{apk} [Nm]	$M_{aNotaus}$ [Nm]	n_{ak} [1/min]	J_G 10^{-4} [kgm^2]	R [N]	RF [N]	RM [N]	R [N]	RF [N]	RM [N]
R77 3	25.23	780	900	1326	59	3.7	10100	10100	13000	9110	9110	13000
	29.00	820	900	1394	52	3.0	9920	9920	13000	9110	9110	13000
	33.47	820	900	1394	51	2.2	9920	9920	13000	9110	9110	13000
	36.83	820	900	1394	52	1.9	9920	9920	13000	9110	9110	13000
	43.26	820	900	1394	53	1.6	9920	9920	13000	9110	9110	13000
	45.81	820	900	1394	52	1.4	9920	9920	13000	9110	9110	13000
	52.07	820	900	1394	54	1.1	9920	9920	13000	9110	9110	13000
	57.68	820	900	1394	54	0.97	9920	9920	13000	9110	9110	13000
	65.77	820	900	1394	38	1.6	9920	9920	13000	9110	9110	13000
	77.24	820	900	1394	38	1.3	9920	9920	13000	9110	9110	13000
	81.80	820	900	1394	38	1.2	9920	9920	13000	9110	9110	13000
	92.97	820	900	1394	39	0.99	9920	9920	13000	9110	9110	13000
	102.99	820	900	1394	38	0.86	9920	9920	13000	9110	9110	13000
	121.42	820	900	1394	39	0.68	9920	9920	13000	9110	9110	13000
	138.39	820	900	1394	38	0.46	9920	9920	13000	9110	9110	13000
	145.67	820	900	1394	38	0.42	9920	9920	13000	9110	9110	13000
	166.59	820	900	1394	38	0.34	9920	9920	13000	9110	9110	13000
	195.24	820	900	1394	36	0.27	9920	9920	13000	9110	9110	13000

AQ.				c_{TG}			φ
	i	n_{epk} [1/min]	η [%]	R [Nm/']	RF [Nm/']	RM [Nm/']	/R [']
R77 2	5.31	4500	97	42	42	46	8
	5.99	4500	97	42	42	46	8
	6.79	4500	97	42	42	46	8
	7.74	4500	97	42	42	46	8
	8.59	4500	97	42	42	46	7
	9.64	4500	97	51	51	58	7
	10.88	4500	97	51	51	58	7
	12.33	4500	97	51	51	58	6
	14.05	4500	97	51	51	58	6
	15.60	4500	97	51	51	58	6
	17.82	4500	97	51	51	58	6
	18.80	4500	97	51	51	58	6
	21.43	4500	97	51	51	58	6
	23.37	4500	97	51	51	58	6
R77 3	25.23	4500	96	53	53	61	7
	29.00	4500	96	53	53	61	7
	33.47	4500	96	53	53	61	7
	36.83	4500	95	53	53	61	7
	43.26	4500	95	53	53	61	7
	45.81	4500	95	53	53	61	7
	52.07	4500	95	53	53	61	7
	57.68	4500	95	53	53	61	7
	65.77	4500	95	53	53	61	7
	77.24	4500	95	53	53	61	7
	81.80	4500	95	53	53	61	6
	92.97	4500	95	53	53	61	6
	102.99	4500	95	53	53	61	6
	121.42	4500	94	53	53	61	6
	138.39	4500	94	53	53	61	6
	145.67	4500	94	53	53	61	6
	166.59	4500	94	53	53	61	6
	195.24	4500	93	53	53	61	6

8.3.12 R 77 AQ.. [mm]

01 091 00 08

R77..

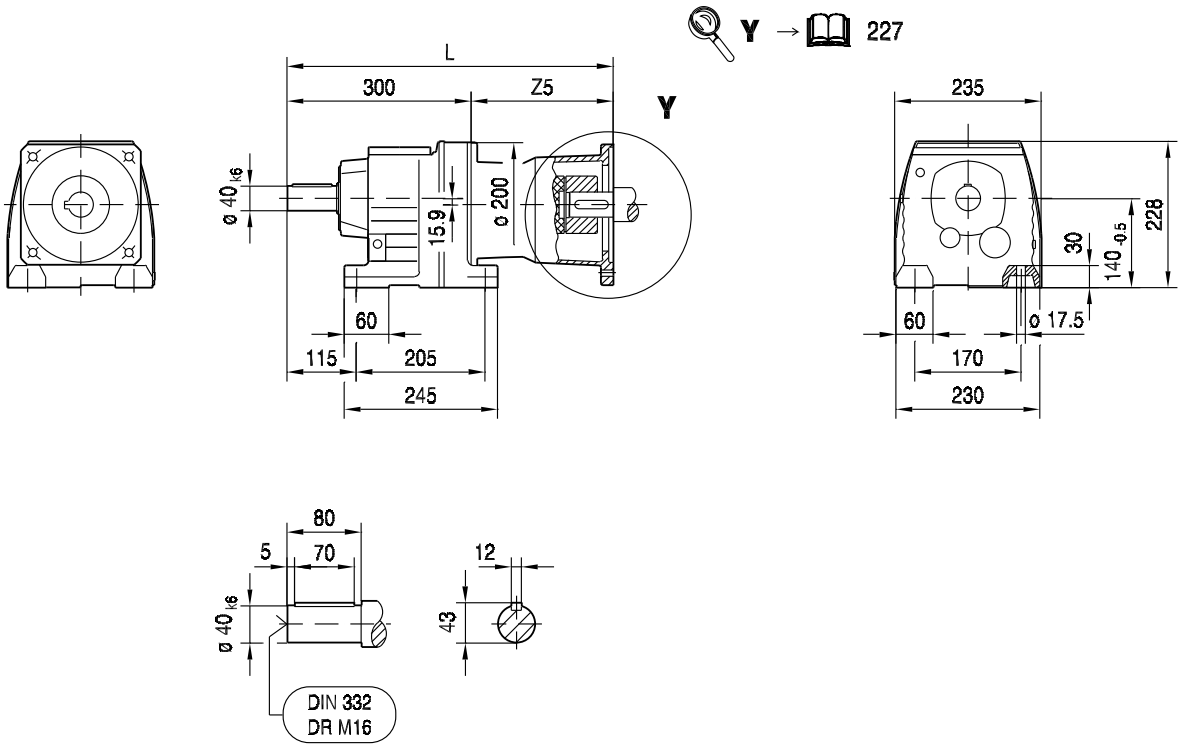

R77F..

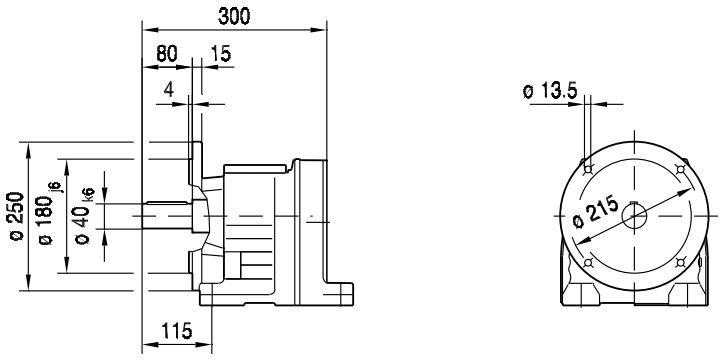

(→ 144)	AQ80/1-3	AQ100/1-2	AQ100/3-4	AQ115/1-3	AQ140/1-2	AQ140/3-4	AQ160/1	AQ190/1-2	AQ190/3
L	392	416	430	439	467	480	480	526	550
Z5	92	116	130	139	167	180	180	225.5	249.5

RF77..

01 092 00 08

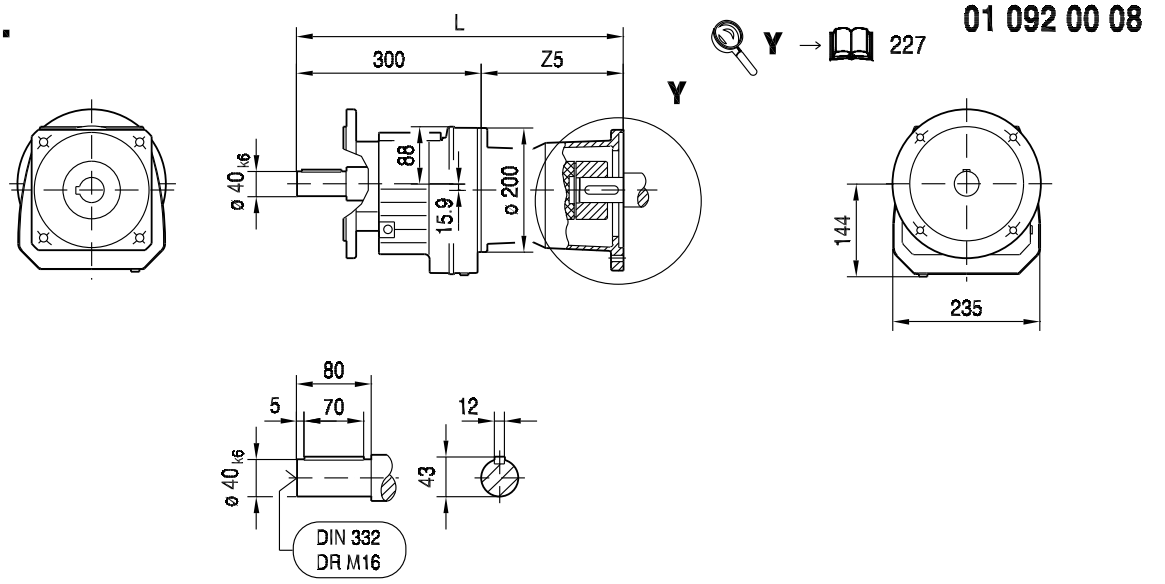

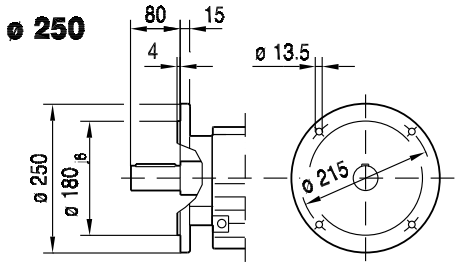

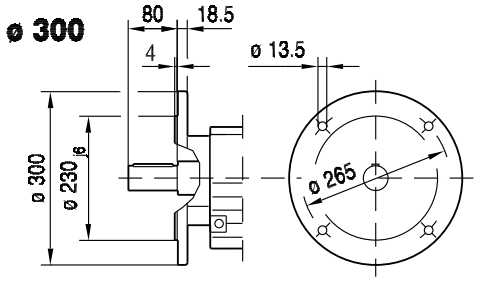

RM77..

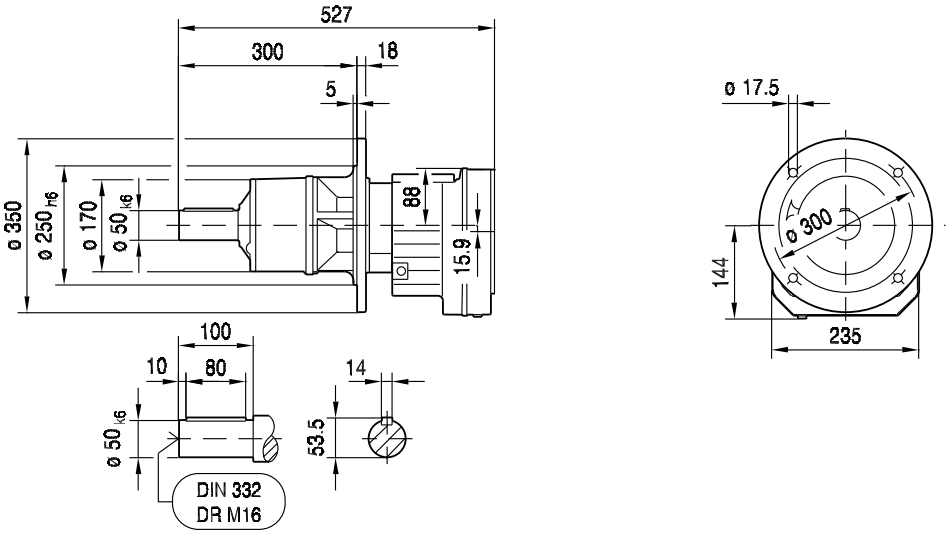

(→ 144)	AQ80/1-3	AQ100/1-2	AQ100/3-4	AQ115/1-3	AQ140/1-2	AQ140/3-4	AQ160/1	AQ190/1-2	AQ190/3
L	392	416	430	439	467	480	480	526	550
Z5	92	116	130	139	167	180	180	225.5	249.5

01 093 00 08

RZ77..

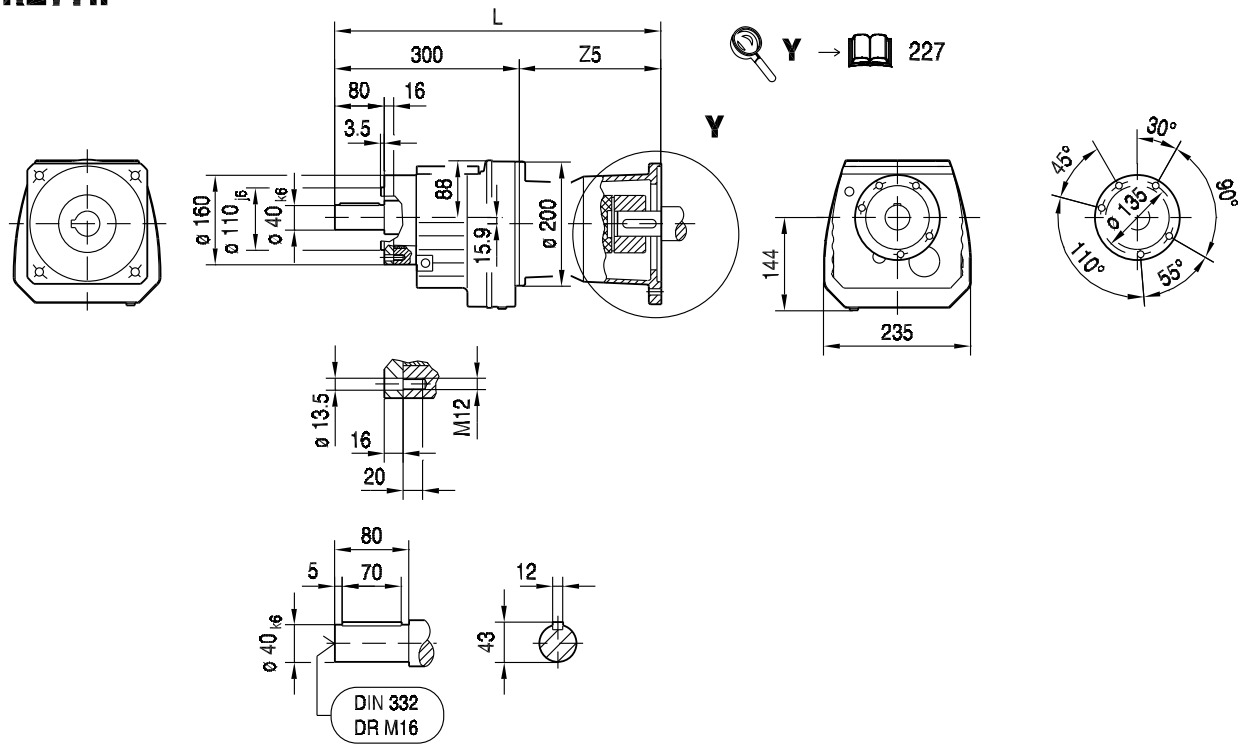

(→ 144)	AQ80/1-3	AQ100/1-2	AQ100/3-4	AQ115/1-3	AQ140/1-2	AQ140/3-4	AQ160/1	AQ190/1-2	AQ190/3
L	392	416	430	439	467	480	480	526	550
Z5	92	116	130	139	167	180	180	225.5	249.5

8.3.13 R 87 AQ.. [Nm]

[Nm]		AQ. M_{amax} | M_{apk} | $M_{aNotaus}$																				
	i	100/1-4			115/1-2			115/3			140/1			140/2-4			160/1			190/1-3		
R87 2	5.30	90	90	180	90	90	180	240	240	240	315	315	530	530	530	530	530	530	530	840	840	840
	6.39	108	108	215	108	108	215	290	290	290	380	380	635	635	635	635	635	635	635	1020	1020	1020
	7.13	121	121	240	121	121	240	325	325	325	425	425	710	710	710	710	710	710	710	1070	1140	1140
	8.22	139	139	275	139	139	275	375	375	375	490	490	820	820	820	820	820	820	820	1160	1270	1310
	9.14	155	155	310	155	155	310	420	420	420	545	545	910	910	910	910	910	910	910	1210	1270	1460
	9.90	168	168	335	168	168	335	455	455	455	590	590	990	990	990	990	990	990	990	1180	1550	1580
	11.93	200	200	405	200	200	405	545	545	545	715	715	1190	1190	1190	1190	1190	1190	1190	1230	1550	1900
	13.33	225	225	450	225	225	450	610	610	610	795	795	1330	1280	1330	1330	1280	1330	1330	1280	1550	2130
	15.35	260	260	520	260	260	520	705	705	705	920	920	1530	1340	1530	1530	1340	1530	1530	1340	1550	2270
	17.08	290	290	580	290	290	580	785	785	785	1020	1020	1700	1390	1550	1700	1390	1550	1700	1390	1550	2360
	19.10	320	320	645	320	320	645	870	870	870	1140	1140	1910	1440	1550	1910	1440	1550	1910	1440	1550	2440
	21.51	365	365	730	365	365	730	980	980	980	1290	1290	2150	1500	1550	2150	1500	1550	2150	1500	1550	2550
	23.40	395	395	795	395	395	795	1070	1070	1070	1400	1400	2340	1550	1550	2340	1550	1550	2340	1550	1550	2630
	27.84	470	470	940	470	470	940	1280	1280	1280	1550	1550	2630	1550	1550	2630	1550	1550	2630	1550	1550	2630
	31.40	530	530	1060	530	530	1060	1440	1440	1440	1550	1550	2630	1550	1550	2630	1550	1550	2630			
	34.40	580	580	1160	580	580	1160	1500	1550	1580	1500	1550	2550	1500	1550	2550	1500	1550	2550			
R87 3	27.88	470	470	940	470	470	940	1280	1280	1280	1500	1550	2550	1500	1550	2550	1500	1550	2550	1500	1550	2550
	32.66	555	555	1110	555	555	1110	1500	1500	1500	1550	1550	2630	1550	1550	2630	1550	1550	2630	1550	1550	2630
	36.84	625	625	1250	625	625	1250	1550	1550	1690	1550	1550	2630	1550	1550	2630	1550	1550	2630	1550	1550	2630
	41.74	705	705	1410	705	705	1410	1550	1550	1920	1550	1550	2630	1550	1550	2630	1550	1550	2630	1550	1550	2630
	47.58	800	800	1610	800	800	1610	1550	1550	2180	1550	1550	2630	1550	1550	2630	1550	1550	2630	1550	1550	2630
	52.82	890	890	1790	890	890	1790	1550	1550	2420	1550	1550	2630	1550	1550	2630	1550	1550	2630	1550	1550	2630
	60.35	1020	1020	2050	1020	1020	2050	1550	1550	2630	1550	1550	2630	1550	1550	2630	1550	1550	2630	1550	1550	2630
	63.68	1080	1080	2160	1080	1080	2160	1550	1550	2630	1550	1550	2630	1550	1550	2630	1550	1550	2630	1550	1550	2630
	72.57	1230	1230	2460	1230	1230	2460	1550	1550	2630	1550	1550	2630	1550	1550	2630	1550	1550	2630			
	81.92	1390	1390	2630	1390	1390	2630	1550	1550	2630	1550	1550	2630	1550	1550	2630	1550	1550	2630	1550	1550	2630
	93.38	1550	1550	2630	1550	1550	2630	1550	1550	2630	1550	1550	2630	1550	1550	2630	1550	1550	2630	1550	1550	2630
	103.65	1550	1550	2630	1550	1550	2630	1550	1550	2630	1550	1550	2630	1550	1550	2630	1550	1550	2630	1550	1550	2630
	118.43	1550	1550	2630	1550	1550	2630	1550	1550	2630	1550	1550	2630	1550	1550	2630	1550	1550	2630	1550	1550	2630
	124.97	1550	1550	2630	1550	1550	2630	1550	1550	2630	1550	1550	2630	1550	1550	2630	1550	1550	2630	1550	1550	2630
	142.41	1550	1550	2630	1550	1550	2630	1550	1550	2630	1550	1550	2630	1550	1550	2630	1550	1550	2630			
	155.34	1550	1550	2630	1550	1550	2630	1550	1550	2630	1550	1550	2630	1550	1550	2630	1550	1550	2630			
	181.77	1550	1550	2630	1550	1550	2630	1550	1550	2630	1550	1550	2630	1550	1550	2630	1550	1550	2630			
	205.71	1550	1550	2630	1550	1550	2630	1550	1550	2630												
	216.54	1550	1550	2630	1550	1550	2630	1550	1550	2630												
	246.54	1550	1550	2630	1550	1550	2630	1550	1550	2630												

m [kg]		AQ.						
	s	100/1-4	115/1-2	115/3	140/1	140/2-4	160/1	190/1-3
R87	2	61	61	61	67	67	67	76
R87	3	62	63	63	68	68	68	77
RF: + 7.1 kg / RM: + 36.8 kg								

		AQ.						
		100/1-4	115/1-2	115/3	140/1	140/2-4	160/1	190/1-3
J_A 10^{-4}	[kgm^2]	1.4	1.4	3.1	5.1	10.0	10.0	25.0
c_{TA}	[Nm/']	0.25	0.25	0.625	0.625	1.0	1.0	2.08

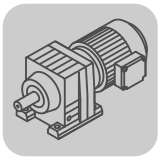

R87							F_{Ramax}			F_{Rapk}		
n_e = 1400	i	M_{amax} [Nm]	M_{apk} [Nm]	$M_{aNotaus}$ [Nm]	n_{ak} [1/min]	J_G 10^{-4} [kgm^2]	R [N]	RF [N]	RM [N]	R [N]	RF [N]	RM [N]
R87 2	5.30	910	1270	1547	264	25	8980	8980	16600	18600	18600	20000
	6.39	1020	1270	1734	219	19	9450	9450	17700	18600	18600	20000
	7.13	1070	1270	1819	196	16	9780	9780	18300	18600	18600	20000
	8.22	1160	1270	1972	170	13	10200	10200	19200	18600	18600	20000
	9.14	1210	1270	2057	153	11	10500	10500	19800	18600	18600	20000
	9.90	1180	1550	2006	141	21	10400	10400	20000	16900	16900	20000
	11.93	1230	1550	2091	117	17	11200	11200	20000	16900	16900	20000
	13.33	1280	1550	2176	105	14	11600	11600	20000	16900	16900	20000
	15.35	1340	1550	2278	91	12	12100	12100	20000	16900	16900	20000
	17.08	1390	1550	2363	82	10	12600	12600	19900	16900	16900	20000
	19.10	1440	1550	2448	79	8.7	13000	13000	19900	16900	16900	20000
	21.51	1500	1550	2550	70	7.3	13600	13600	19800	16900	16900	20000
	23.40	1550	1550	2635	60	6.6	13900	13900	19700	16900	16900	20000
	27.84	1550	1550	2635	61	5.1	15000	15000	19700	16900	16900	20000
	31.40	1550	1550	2635	61	4.1	7820	7820	19700	16900	16900	20000
	34.40	1500	1550	2550	70	3.6	9480	9480	19800	16900	16900	20000
R87 3	27.88	1500	1550	2550	54	9.8	15100	15100	19800	16900	16900	20000
	32.66	1550	1550	2635	49	7.6	16000	16000	19700	16900	16900	20000
	36.84	1550	1550	2635	49	6.2	16800	16800	19700	16900	16900	20000
	41.74	1550	1550	2635	50	5.1	16900	16900	19700	16900	16900	20000
	47.58	1550	1550	2635	50	4.1	16900	16900	19700	16900	16900	20000
	52.82	1550	1550	2635	51	3.6	13500	13500	19700	16900	16900	20000
	60.35	1550	1550	2635	51	2.9	15200	15200	19700	16900	16900	20000
	63.68	1550	1550	2635	50	2.7	15800	15800	19700	16900	16900	20000
	72.57	1550	1550	2635	51	2.2	16900	16900	19700	16900	16900	20000
	81.92	1550	1550	2635	51	4.0	16900	16900	19700	16900	16900	20000
	93.38	1550	1550	2635	51	3.3	16900	16900	19700	16900	16900	20000
	103.65	1550	1550	2635	52	3.0	16900	16900	19700	16900	16900	20000
	118.43	1550	1550	2635	52	2.4	16900	16900	19700	16900	16900	20000
	124.97	1550	1550	2635	52	2.3	16900	16900	19700	16900	16900	20000
	142.41	1550	1550	2635	49	1.9	16900	16900	19700	16900	16900	20000
	155.34	1550	1550	2635	45	1.6	16900	16900	19700	16900	16900	20000
	181.77	1550	1550	2635	39	1.3	16900	16900	19700	16900	16900	20000
	205.71	1550	1550	2635	34	0.90	16900	16900	19700	16900	16900	20000
	216.54	1550	1550	2635	32	0.81	16900	16900	19700	16900	16900	20000
	246.54	1550	1550	2635	28	0.66	16900	16900	19700	16900	16900	20000

AQ.				c_{TG}			φ
	i	n_{epk} [1/min]	η [%]	R [Nm/']	RF [Nm/']	RM [Nm/']	/R [']
R87 2	5.30	4500	97	76	76	78	7
	6.39	4500	97	76	76	78	7
	7.13	4500	97	76	76	78	7
	8.22	4500	97	76	76	78	7
	9.14	4500	97	76	76	78	6
	9.90	4500	97	93	93	96	6
	11.93	4500	97	93	93	96	6
	13.33	4500	97	93	93	96	6
	15.35	4500	97	93	93	96	6
	17.08	4500	97	93	93	96	6
	19.10	4500	97	93	93	96	6
	21.51	4500	97	93	93	96	6
	23.40	4500	97	93	93	96	6
	27.84	4500	97	93	93	96	6
	31.40	4500	97	93	93	96	5
	34.40	4500	97	93	93	96	5

AQ.	i	n_{epk} [1/min]	η [%]	c_{TG} R [Nm/']	c_{TG} RF [Nm/']	c_{TG} RM [Nm/']	φ /R [']
R87 3	27.88	4500	96	97	97	99	7
	32.66	4500	96	97	97	99	7
	36.84	4500	96	97	97	99	7
	41.74	4500	96	97	97	99	7
	47.58	4500	96	97	97	99	7
	52.82	4500	96	97	97	99	6
	60.35	4500	96	97	97	99	6
	63.68	4500	96	97	97	99	6
	72.57	4500	96	97	97	99	6
	81.92	4500	95	97	97	100	6
	93.38	4500	95	97	97	100	6
	103.65	4500	95	97	97	100	6
	118.43	4500	95	97	97	100	6
	124.97	4500	95	97	97	100	6
	142.41	4500	95	97	97	100	6
	155.34	4500	94	97	97	100	6
	181.77	4500	94	97	97	100	6
	205.71	4500	94	97	97	100	6
	216.54	4500	94	97	97	100	6
	246.54	4500	93	97	97	100	6

8.3.14 R 87 AQ.. [mm]

01 094 00 08

R87..

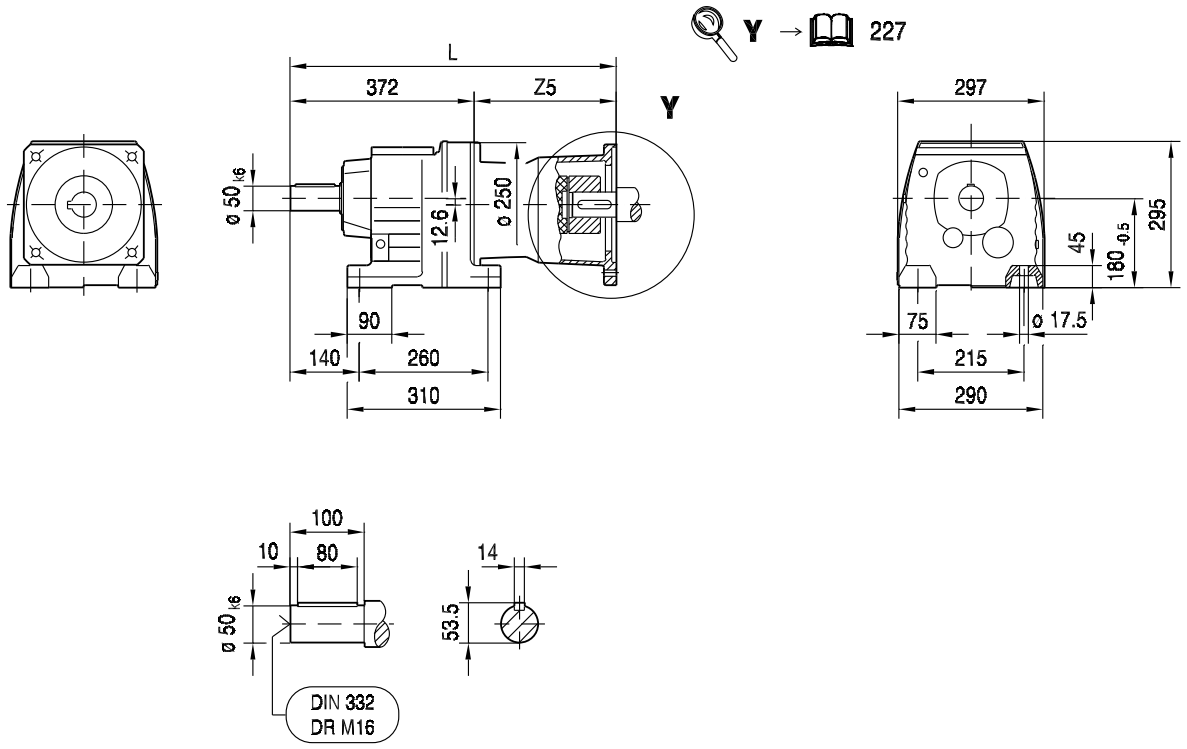

R87F..

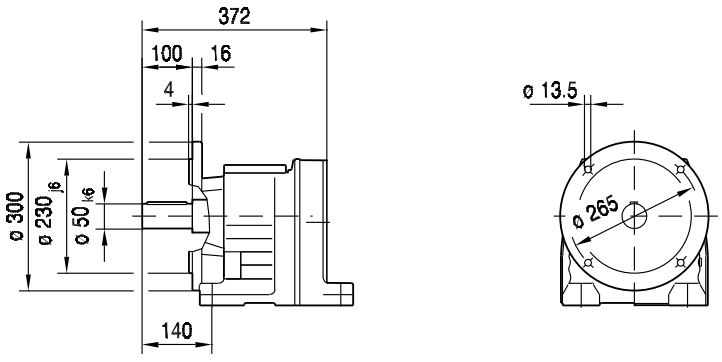

(→ 144)	AQ100/1-2	AQ100/3-4	AQ115/1-3	AQ140/1-2	AQ140/3-4	AQ160/1	AQ190/1-2	AQ190/3
L	483	497	506	534	547	547	593	617
Z5	111	125	134	162	175	175	220.5	244.5

RF87..

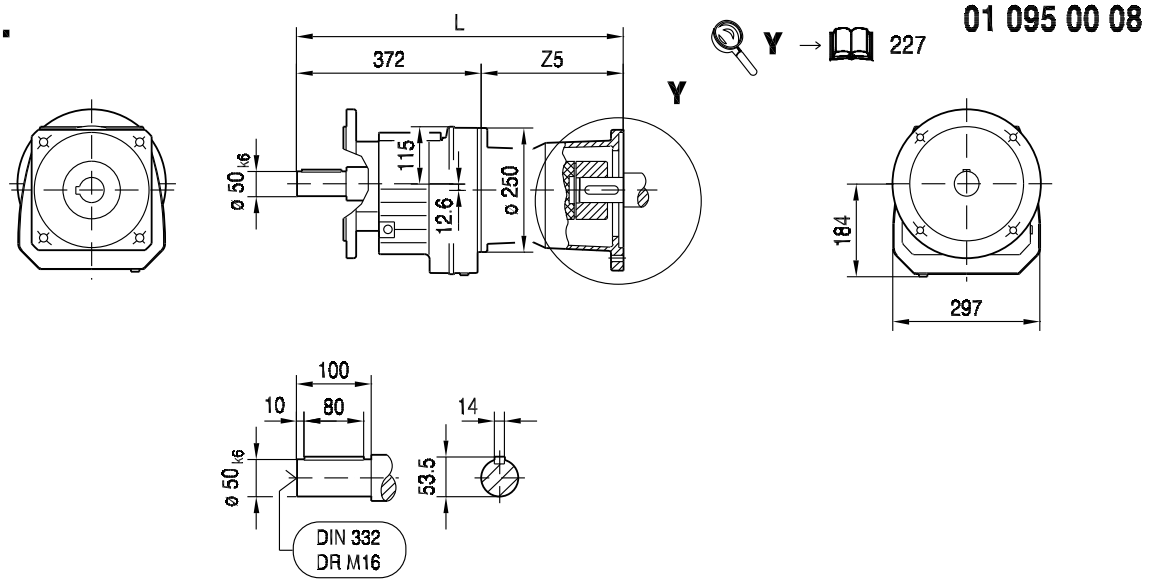

01 095 00 08

Y → 227

ø 300

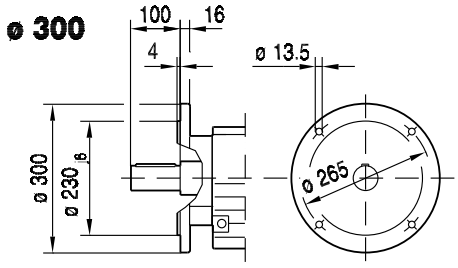

ø 350

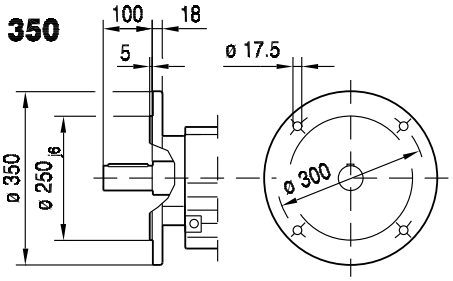

RM87..

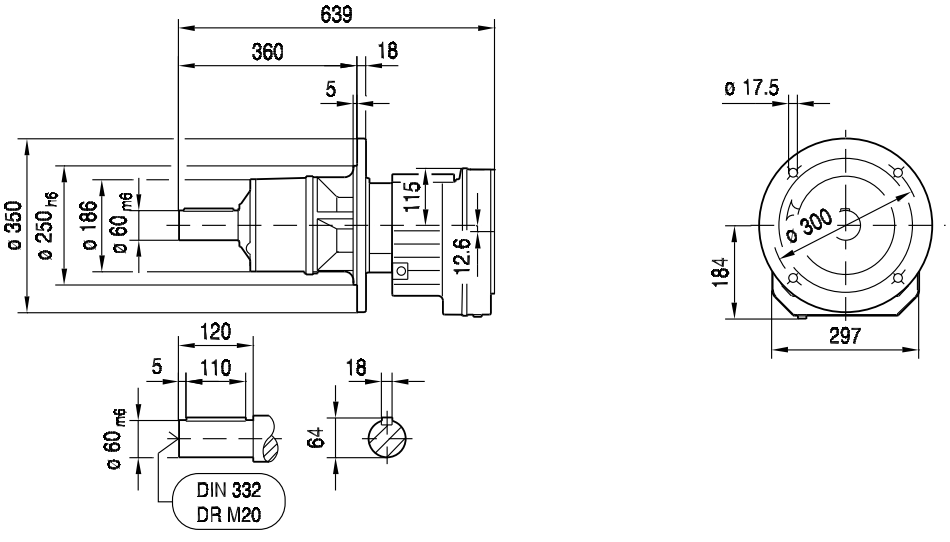

(→ 144)	AQ100/1-2	AQ100/3-4	AQ115/1-3	AQ140/1-2	AQ140/3-4	AQ160/1	AQ190/1-2	AQ190/3
L	483	497	506	534	547	547	593	617
Z5	111	125	134	162	175	175	220.5	244.5

01 096 00 08

RZ87..

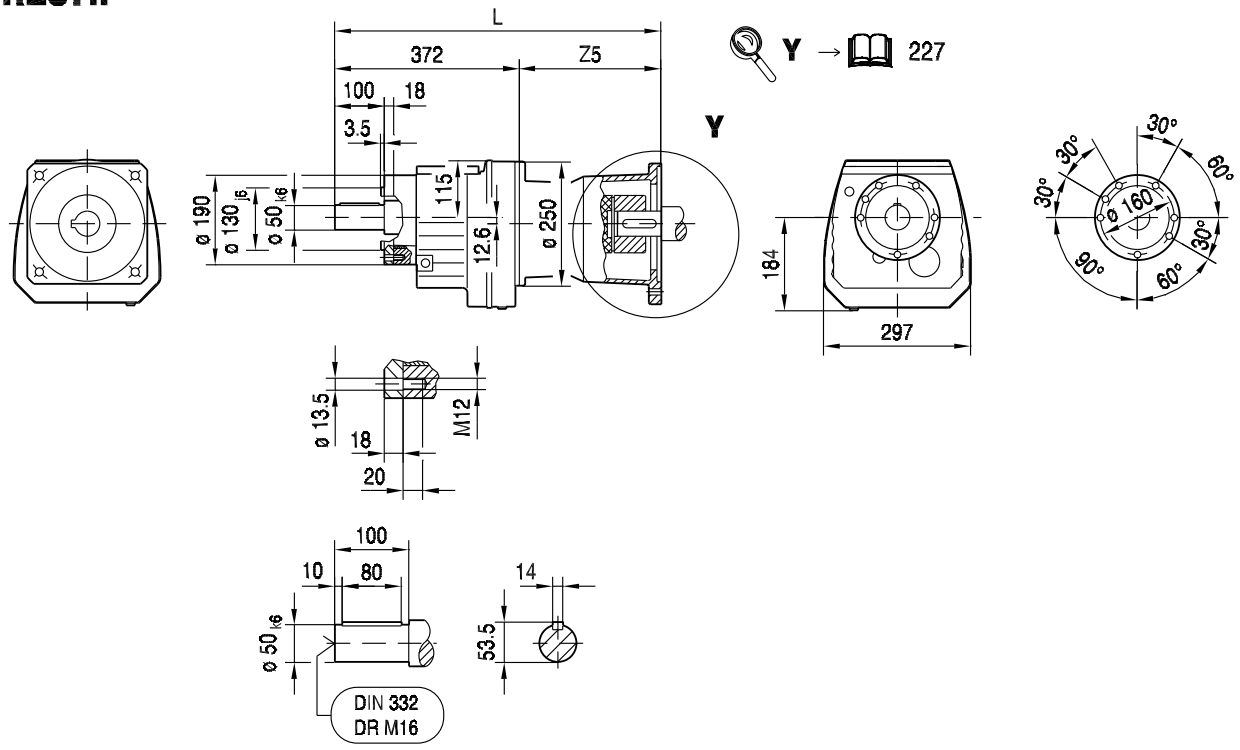

(→ 144)	AQ100/1-2	AQ100/3-4	AQ115/1-3	AQ140/1-2	AQ140/3-4	AQ160/1	AQ190/1-2	AQ190/3
L	483	497	506	534	547	547	593	617
Z5	111	125	134	162	175	175	220.5	244.5

8.3.15 R 97 AQ.. [Nm]

[Nm]		AQ. M_{amax} | M_{apk} | $M_{aNotaus}$											
	i	140/1			140/2-4			160/1			190/1-3		
R97 2	4.50	270	270	450	450	450	450	450	450	450	720	720	720
	5.20	310	310	520	520	520	520	520	520	520	830	830	830
	6.21	370	370	620	620	620	620	620	620	620	990	990	990
	7.12	425	425	710	710	710	710	710	710	710	1130	1130	1130
	8.39	500	500	830	830	830	830	830	830	830	1340	1340	1340
	9.29	555	555	920	920	920	920	920	920	920	1480	1480	1480
	10.83	645	645	1080	1080	1080	1080	1080	1080	1080	1730	1730	1730
	12.39	740	740	1230	1230	1230	1230	1230	1230	1230	1980	1980	1980
	14.62	870	870	1460	1460	1460	1460	1460	1460	1460	2300	2330	2330
	16.17	970	970	1610	1610	1610	1610	1610	1610	1610	2400	2580	2580
	18.24	1090	1090	1820	1820	1820	1820	1820	1820	1820	2500	2910	2910
	20.14	1200	1200	2010	2010	2010	2010	2010	2010	2010	2610	3090	3220
	22.37	1340	1340	2230	2230	2230	2230	2230	2230	2230	2720	3090	3570
	25.03	1500	1500	2500	2500	2500	2500	2500	2500	2500	2830	3090	4000
	27.19	1630	1630	2710	2560	2710	2710	2560	2710	2710	2560	3090	4350
	32.05	1920	1920	3200	2560	3090	3200	2560	3090	3200	2560	3090	4350
R97 3	27.58	1650	1650	2750	2670	2750	2750	2670	2750	2750	2670	3090	4410
	33.25	1990	1990	3320	2890	3090	3320	2890	3090	3320	2890	3090	4910
	37.13	2220	2220	3710	3000	3090	3710	3000	3090	3710	3000	3090	5100
	42.78	2560	2560	4270	3000	3090	4270	3000	3090	4270	3000	3090	5100
	47.58	2850	2850	4750	3000	3090	4750	3000	3090	4750	3000	3090	5100
	53.21	3000	3090	5100	3000	3090	5100	3000	3090	5100	3000	3090	5100
	59.92	3000	3090	5100	3000	3090	5100	3000	3090	5100	3000	3090	5100
	65.21	3000	3090	5100	3000	3090	5100	3000	3090	5100	3000	3090	5100
	72.17	3000	3090	5100	3000	3090	5100	3000	3090	5100	3000	3090	5100
	83.15	3000	3090	5100	3000	3090	5100	3000	3090	5100	3000	3090	5100
	92.48	3000	3090	5100	3000	3090	5100	3000	3090	5100	3000	3090	5100
	103.44	3000	3090	5100	3000	3090	5100	3000	3090	5100	3000	3090	5100
	116.48	3000	3090	5100	3000	3090	5100	3000	3090	5100	3000	3090	5100
	126.75	3000	3090	5100	3000	3090	5100	3000	3090	5100	3000	3090	5100
	150.78	3000	3090	5100	3000	3090	5100	3000	3090	5100	3000	3090	5100
	170.02	3000	3090	5100	3000	3090	5100	3000	3090	5100			
	186.30	3000	3090	5100	3000	3090	5100	3000	3090	5100			
	216.28	3000	3090	5100	3000	3090	5100	3000	3090	5100			
	241.25												
	255.71												
	289.74												

m [kg]		AQ.			
	s	140/1	140/2-4	160/1	190/1-3
R97	2	105	105	105	115
R97	3	110	110	110	120
RF: + 17.2 kg / RM: + 68.5 kg					

		AQ.			
		140/1	140/2-4	160/1	190/1-3
J_A 10^{-4}	[kgm^2]	5.1	10.0	10.0	25.0
c_{TA}	[Nm/']	0.625	1.0	1.0	2.08

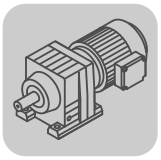

R97							F_{Ramax}			F_{Rapk}		
n_e = 1400	i	M_{amax} [Nm]	M_{apk} [Nm]	$M_{aNotaus}$ [Nm]	n_{ak} [1/min]	J_G 10^{-4} [kgm^2]	R [N]	RF [N]	RM [N]	R [N]	RF [N]	RM [N]
R97 2	4.50	1630	2445	2771	244	80	9500	9500	17900	24400	24400	26300
	5.20	1780	2560	3026	192	65	9850	9850	18700	23800	23800	26100
	6.21	1890	2560	3213	161	51	10500	10500	19900	23800	23800	26100
	7.12	2000	2560	3400	140	41	10900	10900	20800	23800	23800	26100
	8.39	2030	2560	3451	131	33	11700	11700	22000	23800	23800	26100
	9.29	2030	2560	3451	129	28	12200	12200	22800	23800	23800	26100
	10.83	2090	3090	3553	129	46	12100	12100	23700	16000	16000	24500
	12.39	2190	3090	3723	113	37	12700	12700	24800	16000	16000	24500
	14.62	2300	3090	3910	103	30	13400	13400	26200	16000	16000	24500
	16.17	2400	3090	4080	87	26	13800	13800	26200	16000	16000	24500
	18.24	2500	3090	4250	77	22	14400	14400	26100	16000	16000	24500
	20.14	2610	3090	4437	70	19	14800	14800	26000	16000	16000	24500
	22.37	2720	3090	4624	63	16	15300	15300	25800	16000	16000	24500
	25.03	2830	3090	4811	56	14	15900	15900	25700	16000	16000	24500
	27.19	2560	3090	4352	74	13	8380	8380	26000	16000	16000	24500
	32.05	2560	3090	4352	75	9.8	10600	10600	26000	16000	16000	24500
R97 3	27.58	2670	3090	4539	54	24	16900	16900	25900	16000	16000	24500
	33.25	2890	3090	4913	45	19	17900	17900	25600	16000	16000	24500
	37.13	3000	3090	5100	40	16	18600	18600	25400	16000	16000	24500
	42.78	3000	3090	5100	37	13	19800	19800	25400	16000	16000	24500
	47.58	3000	3090	5100	38	11	19800	19800	25400	16000	16000	24500
	53.21	3000	3090	5100	39	9.5	19800	19800	25400	16000	16000	24500
	59.92	3000	3090	5100	40	8.0	19800	19800	25400	16000	16000	24500
	65.21	3000	3090	5100	40	7.1	19800	19800	25400	16000	16000	24500
	72.17	3000	3090	5100	35	14	18000	18000	25400	16000	16000	24500
	83.15	3000	3090	5100	35	11	19800	19800	25400	16000	16000	24500
	92.48	3000	3090	5100	35	9.8	19800	19800	25400	16000	16000	24500
	103.44	3000	3090	5100	35	8.4	19800	19800	25400	16000	16000	24500
	116.48	3000	3090	5100	35	7.0	19800	19800	25400	16000	16000	24500
	126.75	3000	3090	5100	36	6.3	19800	19800	25400	16000	16000	24500
	150.78	3000	3090	5100	35	4.9	19800	19800	25400	16000	16000	24500
	170.02	3000	3090	5100	35	4.0	19800	19800	25400	16000	16000	24500
	186.30	3000	3090	5100	35	3.5	19800	19800	25400	16000	16000	24500
	216.28	3000	3090	5100	32	2.8	19800	19800	25400	16000	16000	24500
	241.25	3000	3090	5100	29	1.8	19800	19800	25400	16000	16000	24500
	255.71	3000	3090	5100	27	1.6	19800	19800	25400	16000	16000	24500
	289.74	3000	3090	5100	24	1.3	19800	19800	25400	16000	16000	24500

AQ.				c_{TG}			φ
	i	n_{epk} [1/min]	η [%]	R [Nm/']	RF [Nm/']	RM [Nm/']	/R [']
R97 2	4.50	3597	97	127	127	112	6
	5.20	3924	97	127	127	112	6
	6.21	4378	97	127	127	112	6
	7.12	4500	97	127	127	112	6
	8.39	4500	97	127	127	112	6
	9.29	4500	97	127	127	112	6
	10.83	4500	97	155	155	132	6
	12.39	4500	97	155	155	132	6
	14.62	4500	97	155	155	132	6
	16.17	4500	97	155	155	132	6
	18.24	4500	97	155	155	132	6
	20.14	4500	97	155	155	132	5
	22.37	4500	97	155	155	132	5
	25.03	4500	97	155	155	132	5
	27.19	4500	97	155	155	132	5
	32.05	4500	97	155	155	132	5

AQ.	i	n_{epk} [1/min]	η [%]	c_{TG} R [Nm/']	c_{TG} RF [Nm/']	c_{TG} RM [Nm/']	φ /R [']
	27.58	4500	96	163	163	138	6
	33.25	4500	96	163	163	138	6
	37.13	4500	96	163	163	138	6
	42.78	4500	96	163	163	138	6
	47.58	4500	96	163	163	138	6
	53.21	4500	96	163	163	138	6
	59.92	4500	96	163	163	138	6
	65.21	4500	96	163	163	138	6
	72.17	4500	95	164	164	139	6
R97	83.15	4500	95	164	164	139	6
3	92.48	4500	95	164	164	139	6
	103.44	4500	95	164	164	139	6
	116.48	4500	95	164	164	139	6
	126.75	4500	95	164	164	139	6
	150.78	4500	95	164	164	139	6
	170.02	4500	95	164	164	139	6
	186.30	4500	95	164	164	139	6
	216.28	4500	94	164	164	139	6
	241.25	4500	94	164	164	139	6
	255.71	4500	94	164	164	139	6
	289.74	4500	93	164	164	139	6

8.3.16 R 97 AQ.. [mm]

01 097 00 08

R97..

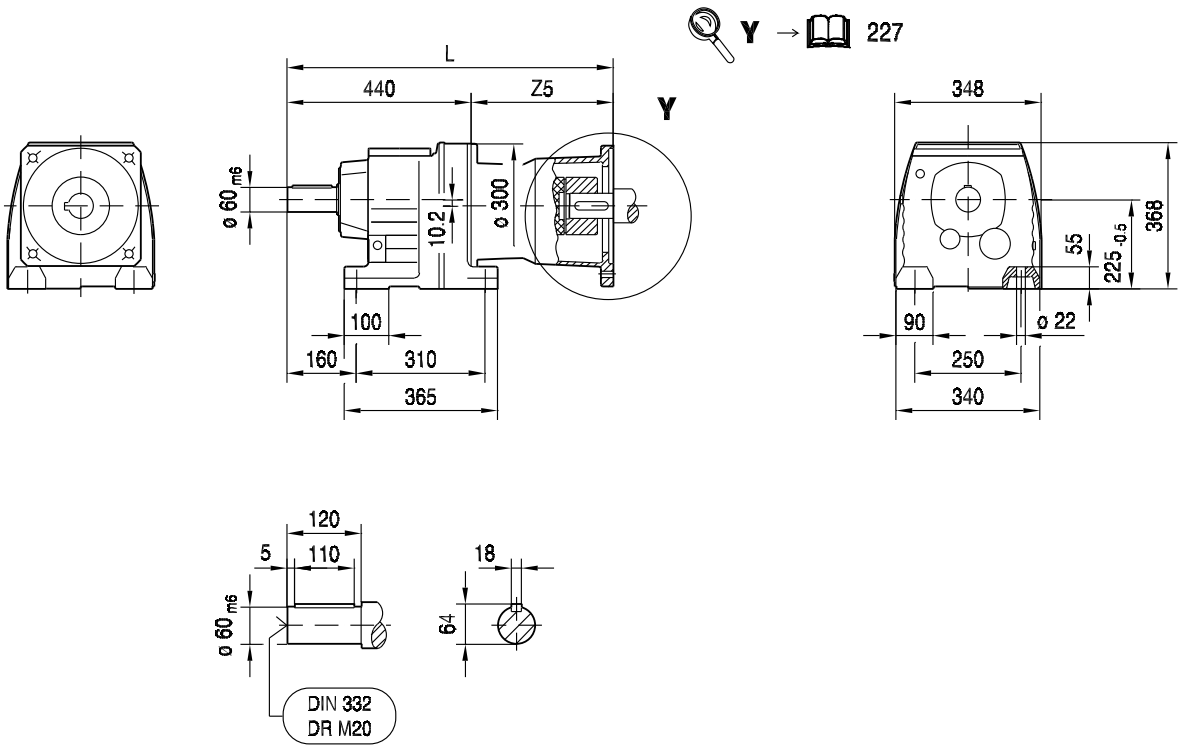

(→ 144)	AQ140/1-2	AQ140/3-4	AQ160/1	AQ190/1-2	AQ190/3			
L	597	610	610	656	680			
Z5	157	170	170	215.5	239.5			

RF97..

01 098 00 08

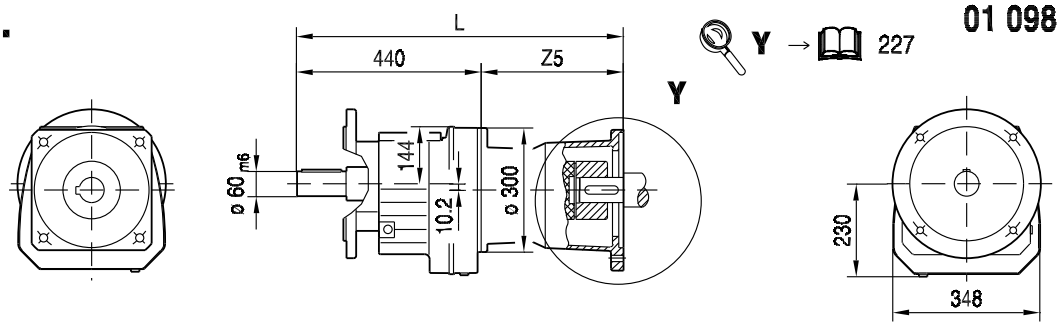

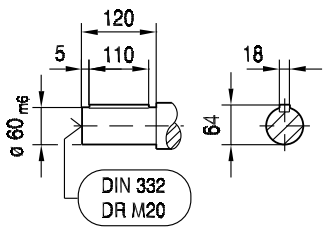

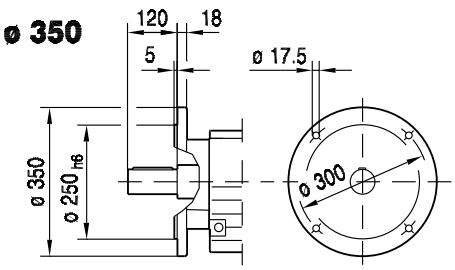

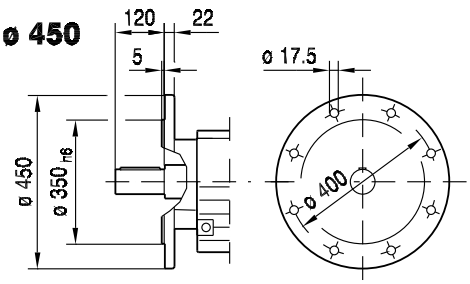

RM97..

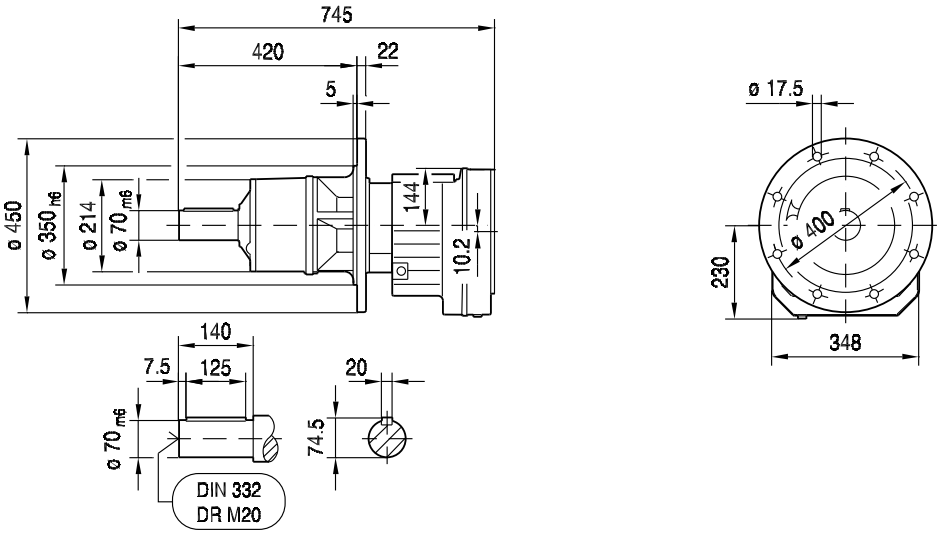

(→ 📖 144)	AQ140/1-2	AQ140/3-4	AQ160/1	AQ190/1-2	AQ190/3			
L	597	610	610	656	680			
Z5	157	170	170	215.5	239.5			

8.3.17 R 107 AQ.. [Nm]

[Nm]		AQ. M_{amax} | M_{apk} | $M_{aNotaus}$											
	i	140/1			140/2-4			160/1			190/1-3		
R107 2	4.92										785	785	785
	5.82	345	345	580	580	580	580	580	580	580	930	930	930
	6.66	395	395	665	665	665	665	665	665	665	1060	1060	1060
	7.86	470	470	785	785	785	785	785	785	785	1250	1250	1250
	8.56										1360	1360	1360
	10.13	605	605	1010	1010	1010	1010	1010	1010	1010	1620	1620	1620
	11.59	695	695	1150	1150	1150	1150	1150	1150	1150	1850	1850	1850
	13.66	810	810	1360	1360	1360	1360	1360	1360	1360	2180	2180	2180
	15.65	930	930	1560	1560	1560	1560	1560	1560	1560	2500	2500	2500
	18.21	1090	1090	1820	1820	1820	1820	1820	1820	1820	2910	2910	2910
	20.07	1200	1200	2000	2000	2000	2000	2000	2000	2000	3210	3210	3210
	22.62	1350	1350	2260	2260	2260	2260	2260	2260	2260	3610	3610	3610
	24.90	1490	1490	2490	2490	2490	2490	2490	2490	2490	3980	3980	3980
	27.58	1650	1650	2750	2750	2750	2750	2750	2750	2750	4300	4360	4410
	30.77	1840	1840	3070	3070	3070	3070	3070	3070	3070	4300	4360	4920
R107 3	29.49	1760	1760	2940	2940	2940	2940	2940	2940	2940	4300	4360	4710
	35.26	2110	2110	3520	3520	3520	3520	3520	3520	3520	4300	4360	5640
	40.37	2420	2420	4030	4030	4030	4030	4030	4030	4030	4300	4360	6450
	47.63	2850	2850	4760	4300	4360	4760	4300	4360	4760	4300	4360	7310
	52.68	3160	3160	5260	4300	4360	5260	4300	4360	5260	4300	4360	7310
	59.41	3560	3560	5940	4300	4360	5940	4300	4360	5940	4300	4360	7310
	65.60	3930	3930	6560	4300	4360	6560	4300	4360	6560	4300	4360	7310
	72.88	4300	4360	7280	4300	4360	7280	4300	4360	7280	4300	4360	7310
	78.57	4300	4360	7310	4300	4360	7310	4300	4360	7310	4300	4360	7310
	92.70	4300	4360	7310	4300	4360	7310	4300	4360	7310	4300	4360	7310
	102.53	4300	4360	7310	4300	4360	7310	4300	4360	7310	4300	4360	7310
	115.63	4300	4360	7310	4300	4360	7310	4300	4360	7310	4300	4360	7310
	127.68	4300	4360	7310	4300	4360	7310	4300	4360	7310	4300	4360	7310
	141.83	4300	4360	7310	4300	4360	7310	4300	4360	7310	4300	4360	7310
	158.68	4300	4360	7310	4300	4360	7310	4300	4360	7310	4300	4360	7310
	172.34	4300	4360	7310	4300	4360	7310	4300	4360	7310	4300	4360	7310
	203.16	4300	4360	7310	4300	4360	7310	4300	4360	7310	4300	4360	7310
	229.95	4300	4360	7310	4300	4360	7310	4300	4360	7310			
	251.15	4300	4360	7310	4300	4360	7310	4300	4360	7310			

m [kg]		AQ.			
	s	140/1	140/2-4	160/1	190/1-3
R107	2	160	160	160	170
R107	3	170	170	170	175
RF: + 6.0 kg / RM: + 94.0 kg					

		AQ.			
		140/1	140/2-4	160/1	190/1-3
J_A 10^{-4}	[kgm^2]	5.1	10.0	10.0	25.0
c_{TA}	[Nm/']	0.625	1.0	1.0	2.08

R107 n_e = 1400	i	M_{amax} [Nm]	M_{apk} [Nm]	$M_{aNotaus}$ [Nm]	n_{ak} [1/min]	J_G 10^{-4} [kgm^2]	F_{Ramax} R [N]	F_{Ramax} RF [N]	F_{Ramax} RM [N]	F_{Rapk} R [N]	F_{Rapk} RF [N]	F_{Rapk} RM [N]
R107 2	4.92	2900	3820	4930	467	144	11300	11300	21100	31800	31800	33500
	5.82	2970	3820	5049	515	108	12100	12100	22400	31800	31800	33500
	6.66	2970	3820	5049	586	88	12800	12800	23500	31800	31800	33500
	7.86	2970	3820	5049	700	70	13800	13800	24900	31800	31800	33500
	8.56	4300	4360	7310	245	129	11300	11300	24400	29100	29100	32100
	10.13	4300	4360	7310	237	97	12400	12400	26000	29100	29100	32100
	11.59	4300	4360	7310	242	80	13300	13300	27300	29100	29100	32100
	13.66	4300	4360	7310	242	64	14400	14400	29000	29100	29100	32100
	15.65	4300	4360	7310	236	52	15400	15400	30500	29100	29100	32100
	18.21	4300	4360	7310	236	43	16600	16600	32300	29100	29100	32100
	20.07	4300	4360	7310	234	37	17300	17300	32800	29100	29100	32100
	22.62	4300	4360	7310	234	31	18300	18300	32800	29100	29100	32100
	24.90	4300	4360	7310	237	27	19200	19200	32800	29100	29100	32100
	27.58	4300	4360	7310	232	21	20100	20100	32800	29100	29100	32100
	30.77	4300	4360	7310	227	18	21100	21100	32800	29100	29100	32100
R107 3	29.49	4300	4360	7310	85	60	20700	20700	32800	29100	29100	32100
	35.26	4300	4360	7310	88	47	22400	22400	32800	29100	29100	32100
	40.37	4300	4360	7310	87	38	23800	23800	32800	29100	29100	32100
	47.63	4300	4360	7310	88	31	25500	25500	32800	29100	29100	32100
	52.68	4300	4360	7310	89	27	26600	26600	32800	29100	29100	32100
	59.41	4300	4360	7310	89	22	28000	28000	32800	29100	29100	32100
	65.60	4300	4360	7310	90	19	29200	29200	32800	29100	29100	32100
	72.88	4300	4360	7310	89	17	29500	29500	32800	29100	29100	32100
	78.57	4300	4360	7310	46	34	29500	29500	32800	29100	29100	32100
	92.70	4300	4360	7310	47	28	29500	29500	32800	29100	29100	32100
	102.53	4300	4360	7310	48	25	29500	29500	32800	29100	29100	32100
	115.63	4300	4360	7310	48	20	29500	29500	32800	29100	29100	32100
	127.68	4300	4360	7310	49	18	29500	29500	32800	29100	29100	32100
	141.83	4300	4360	7310	49	15	29500	29500	32800	29100	29100	32100
	158.68	4300	4360	7310	44	13	29500	29500	32800	29100	29100	32100
	172.34	4300	4360	7310	41	12	29500	29500	32800	29100	29100	32100
	203.16	4300	4360	7310	34	9.2	29500	29500	32800	29100	29100	32100
	229.95	4300	4360	7310	30	5.9	29500	29500	32800	29100	29100	32100
	251.15	4300	4360	7310	28	5.1	29500	29500	32800	29100	29100	32100

AQ.	i	n_{epk} [1/min]	η [%]	c_{TG} R [Nm/']	c_{TG} RF [Nm/']	c_{TG} RM [Nm/']	φ /R [']
R107 2	4.92	3197	97	208	208	175	9
	5.82	3597	97	208	208	175	9
	6.66	3924	97	208	208	175	9
	7.86	4378	97	208	208	175	9
	8.56	4500	97	250	250	203	7
	10.13	4500	97	250	250	203	7
	11.59	4500	97	250	250	203	7
	13.66	4500	97	250	250	203	7
	15.65	4500	97	250	250	203	7
	18.21	4500	97	250	250	203	7
	20.07	4500	97	250	250	203	7
	22.62	4500	97	250	250	203	7
	24.90	4500	97	250	250	203	7
	27.58	4500	97	250	250	203	7
	30.77	4500	97	250	250	203	7

AQ.	i	n_{epk} [1/min]	η [%]	c_{TG} R [Nm/']	c_{TG} RF [Nm/']	c_{TG} RM [Nm/']	φ /R [']
R107 3	29.49	4500	95	259	259	210	7
	35.26	4500	96	259	259	210	7
	40.37	4500	96	259	259	210	7
	47.63	4500	96	259	259	210	7
	52.68	4500	96	259	259	210	7
	59.41	4500	96	259	259	210	7
	65.60	4500	96	259	259	210	7
	72.88	4500	96	259	259	210	7
	78.57	4500	95	260	260	210	7
	92.70	4500	95	260	260	210	7
	102.53	4500	95	260	260	210	7
	115.63	4500	95	260	260	210	7
	127.68	4500	95	260	260	210	7
	141.83	4500	95	260	260	210	7
	158.68	4500	95	260	260	210	7
	172.34	4500	95	260	260	210	7
	203.16	4500	94	260	260	210	7
	229.95	4500	94	260	260	210	7
	251.15	4500	94	260	260	210	7

8.3.18 R 107 AQ.. [mm]

01 099 00 08

R107..

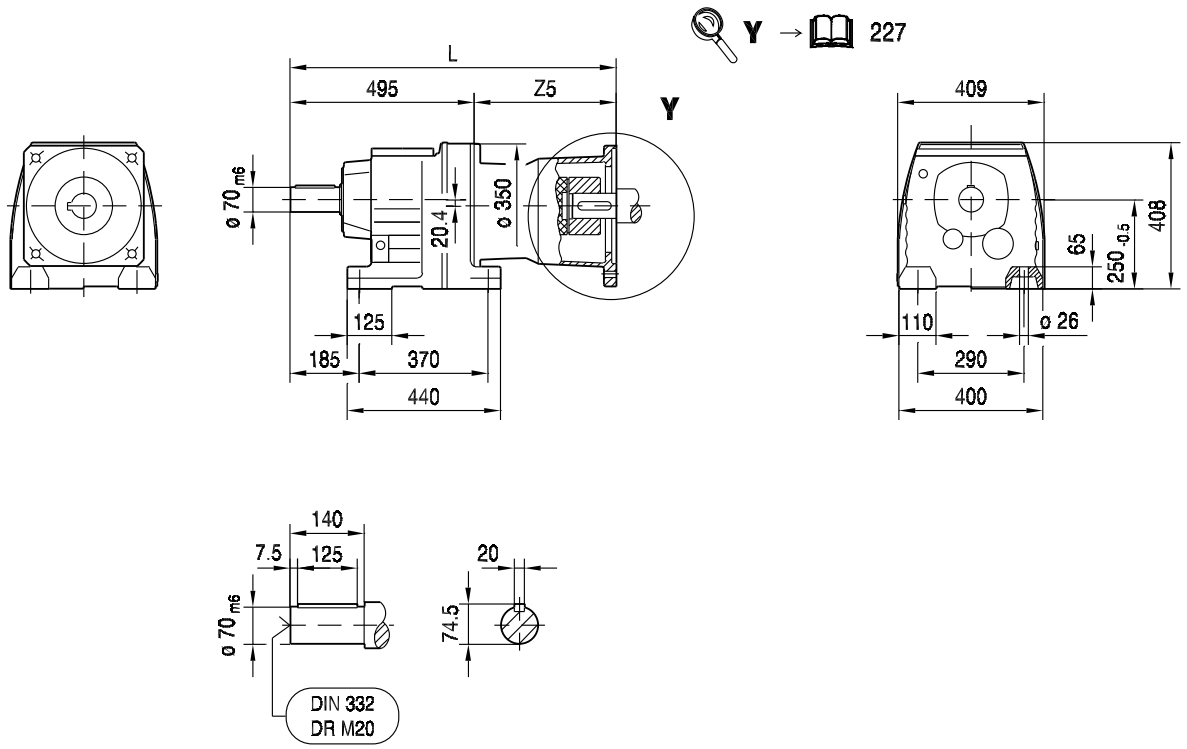

(→ 144)	AQ140/1-2	AQ140/3-4	AQ160/1	AQ190/1-2	AQ190/3			
L	646	659	659	705	729			
Z5	151	164	164	209.5	233.5			

RF107..

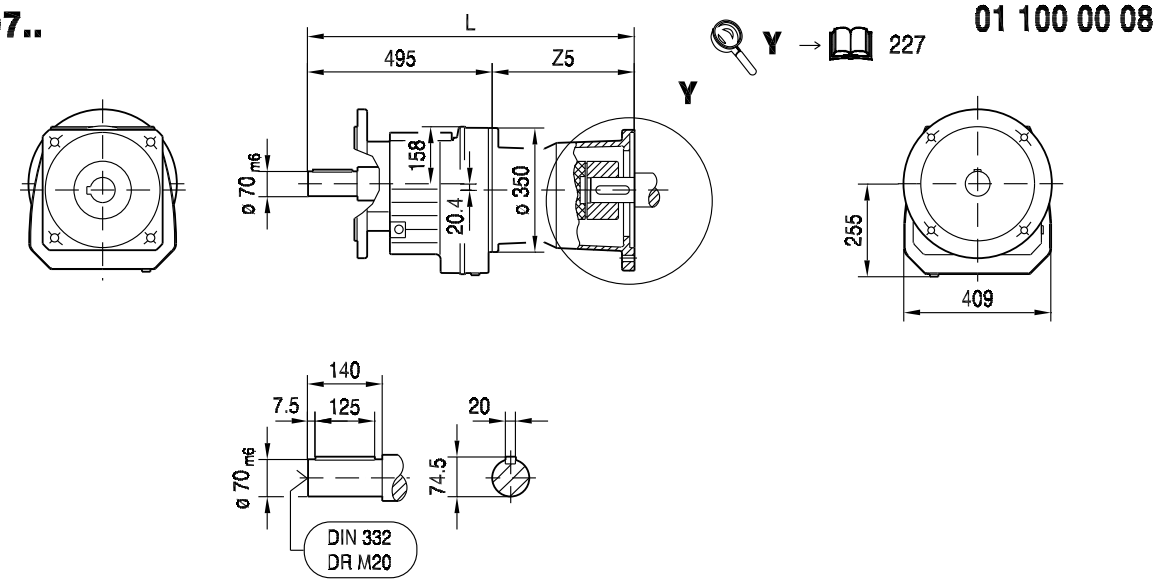

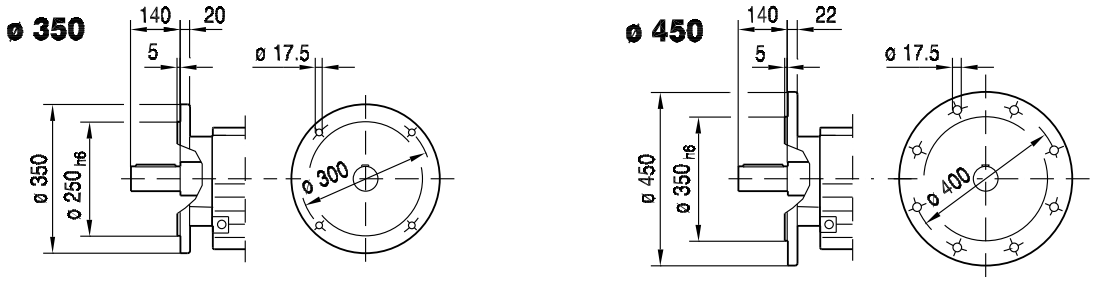

RM107..

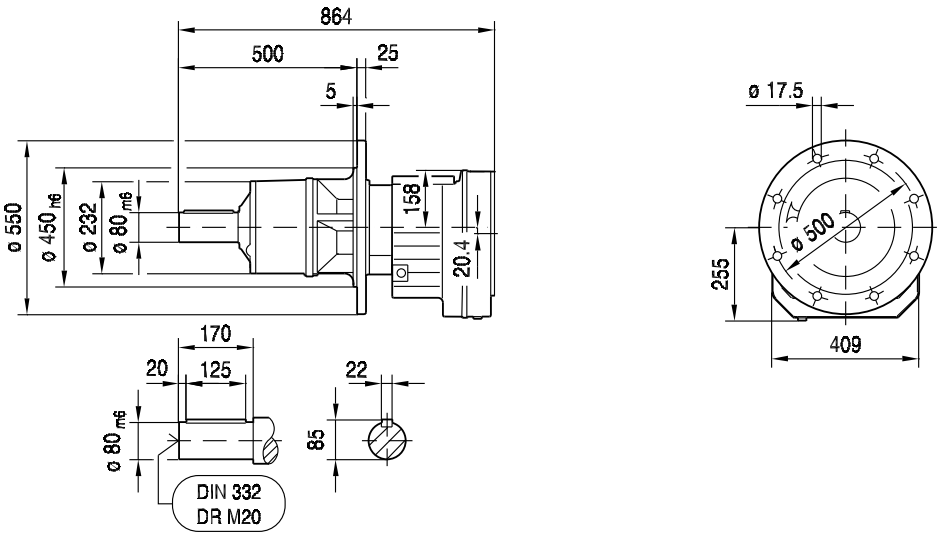

(→ 144)	AQ140/1-2	AQ140/3-4	AQ160/1	AQ190/1-2	AQ190/3			
L	646	659	659	705	729			
Z5	151	164	164	209.5	233.5			

8.3.19 R 137 AQ.. [Nm]

[Nm]		AQ. M_{amax} | M_{apk} | $M_{aNotaus}$		
	i	190/1-3		
R137 2	5.15			
	6.38	1020	1020	1020
	7.59	1210	1210	1210
	8.71			
	10.79	1720	1720	1720
	12.83	2050	2050	2050
	14.51	2320	2320	2320
	16.80	2680	2680	2680
	19.04	3040	3040	3040
	22.00	3520	3520	3520
	24.12	3850	3850	3850
	29.57	4730	4730	4730
R137 3	27.83	4450	4450	4450
	32.91	5260	5260	5260
	37.65	6020	6020	6020
	44.39	7100	7100	7100
	50.86	8000	8130	8130
	59.17	8000	8160	9460
	65.20	8000	8160	10400
	73.49	8000	8160	11700
	80.91	8000	8160	12900
	88.70	8000	8160	13600
	103.20	8000	8160	13600
	113.72	8000	8160	13600
	128.18	8000	8160	13600
	141.12	8000	8160	13600
	156.31	8000	8160	13600
	174.40	8000	8160	13600
	188.45	8000	8160	13600
	222.60	8000	8160	13600

m [kg]		AQ.
	s	190/1-3
R137	2	250
R137	3	260
RF: + 23.3 kg / RM: + 134.4 kg		

		AQ.
		190/1-3
J_A 10^{-4}	[kgm^2]	25.0
c_{TA}	[Nm/']	2.08

R137 n_e = 1400	i	M_{amax} [Nm]	M_{apk} [Nm]	$M_{aNotaus}$ [Nm]	n_{ak} [1/min]	J_G 10^{-4} [kgm^2]	F_{Ramax} R [N]	F_{Ramax} RF [N]	F_{Ramax} RM [N]	F_{Rapk} R [N]	F_{Rapk} RF [N]	F_{Rapk} RM [N]
R137 2	5.15	4600	6150	7820	1359	304	34500	34500	38800	56800	56800	56600
	6.38	5110	6150	8687	1097	223	35900	35900	41400	56800	56800	56600
	7.59	5110	6150	8687	922	173	39000	39000	44300	56800	56800	56600
	8.71	7840	8160	13328	161	289	27600	27600	42200	53000	53000	51000
	10.79	8000	8160	13600	148	213	31100	31100	45900	53000	53000	51000
	12.83	8000	8160	13600	140	161	34700	34700	49300	53000	53000	51000
	14.51	8000	8160	13600	138	136	37300	37300	51800	53000	53000	51000
	16.80	8000	8160	13600	131	110	40600	40600	54400	53000	53000	51000
	19.04	8000	8160	13600	126	91	43500	43500	54400	53000	53000	51000
	22.00	8000	8160	13600	123	75	47100	47100	54400	53000	53000	51000
	24.12	8000	8160	13600	124	66	49400	49400	54400	53000	53000	51000
	29.57	7780	8160	13226	132	42	53900	53900	55000	53000	53000	51000

R137 n_e = 1400	i	M_{amax} [Nm]	M_{apk} [Nm]	$M_{aNotaus}$ [Nm]	n_{ak} [1/min]	J_G 10^{-4} [kgm^2]	F_{Ramax} R [N]	F_{Ramax} RF [N]	F_{Ramax} RM [N]	F_{Rapk} R [N]	F_{Rapk} RF [N]	F_{Rapk} RM [N]
R137 3	27.83	7680	8160	13056	54	125	54100	54100	55100	53000	53000	51000
	32.91	8000	8160	13600	46	94	53400	53400	54400	53000	53000	51000
	37.65	8000	8160	13600	50	78	53400	53400	54400	53000	53000	51000
	44.39	8000	8160	13600	54	62	53400	53400	54400	53000	53000	51000
	50.86	8000	8160	13600	55	51	53400	53400	54400	53000	53000	51000
	59.17	8000	8160	13600	59	42	53400	53400	54400	53000	53000	51000
	65.20	8000	8160	13600	60	37	53400	53400	54400	53000	53000	51000
	73.49	8000	8160	13600	63	31	53400	53400	54400	53000	53000	51000
	80.91	8000	8160	13600	63	27	53400	53400	54400	53000	53000	51000
	88.70	8000	8160	13600	70	47	53400	53400	54400	53000	53000	51000
	103.20	8000	8160	13600	68	39	53400	53400	54400	53000	53000	51000
	113.72	8000	8160	13600	62	34	53400	53400	54400	53000	53000	51000
	128.18	8000	8160	13600	55	28	53400	53400	54400	53000	53000	51000
	141.12	8000	8160	13600	50	25	53400	53400	54400	53000	53000	51000
	156.31	8000	8160	13600	45	19	53400	53400	54400	53000	53000	51000
	174.40	8000	8160	13600	40	16	53400	53400	54400	53000	53000	51000
	188.45	8000	8160	13600	37	15	53400	53400	54400	53000	53000	51000
	222.60	8000	8160	13600	31	12	53400	53400	54400	53000	53000	51000

AQ.	i	n_{epk} [1/min]	η [%]	c_{TG} R [Nm/']	c_{TG} RF [Nm/']	c_{TG} RM [Nm/']	φ /R [']
R137 2	5.15	2797	97	433	433	351	8
	6.38	3197	97	433	433	351	8
	7.59	3597	97	433	433	351	8
	8.71	2797	97	524	524	409	6
	10.79	4500	97	524	524	409	6
	12.83	4500	97	524	524	409	6
	14.51	4500	97	524	524	409	6
	16.80	4500	97	524	524	409	6
	19.04	4500	97	524	524	409	6
	22.00	4500	97	524	524	409	6
	24.12	4500	97	524	524	409	6
	29.57	4500	97	524	524	409	6
R137 3	27.83	4500	96	546	546	422	7
	32.91	4500	96	546	546	422	6
	37.65	3924	96	546	546	422	6
	44.39	4378	96	546	546	422	6
	50.86	4500	96	546	546	422	6
	59.17	4500	96	546	546	422	6
	65.20	4500	96	546	546	422	6
	73.49	4500	96	546	546	422	6
	80.91	4500	96	546	546	422	6
	88.70	4500	95	548	548	423	6
	103.20	4500	95	548	548	423	6
	113.72	4500	95	548	548	423	6
	128.18	4500	95	548	548	423	6
	141.12	4500	95	548	548	423	6
	156.31	4500	95	548	548	423	6
	174.40	4500	95	548	548	423	6
	188.45	4500	95	548	548	423	6
	222.60	4500	95	548	548	423	6

8.3.20 R 137 AQ.. [mm]

01 101 00 08

R137..

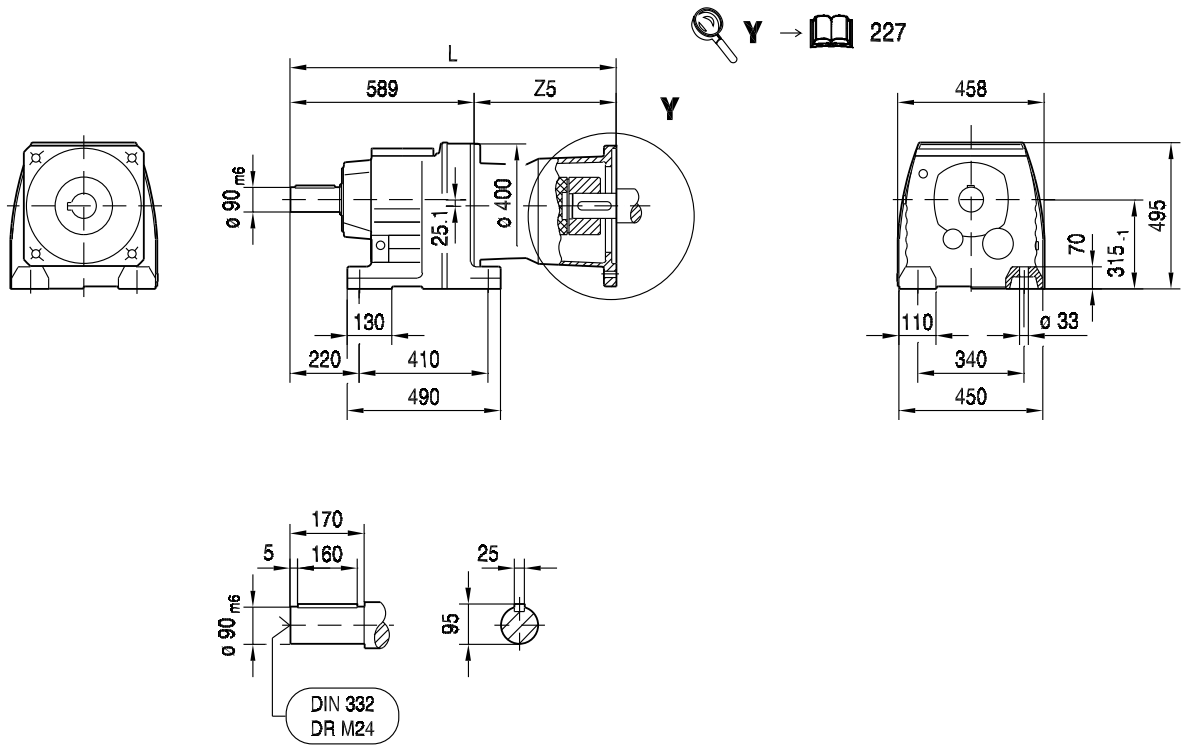

(→ 144)	AQ190/1-2	AQ190/3						
L	792	816						
Z5	202.5	226.5						

RF137..

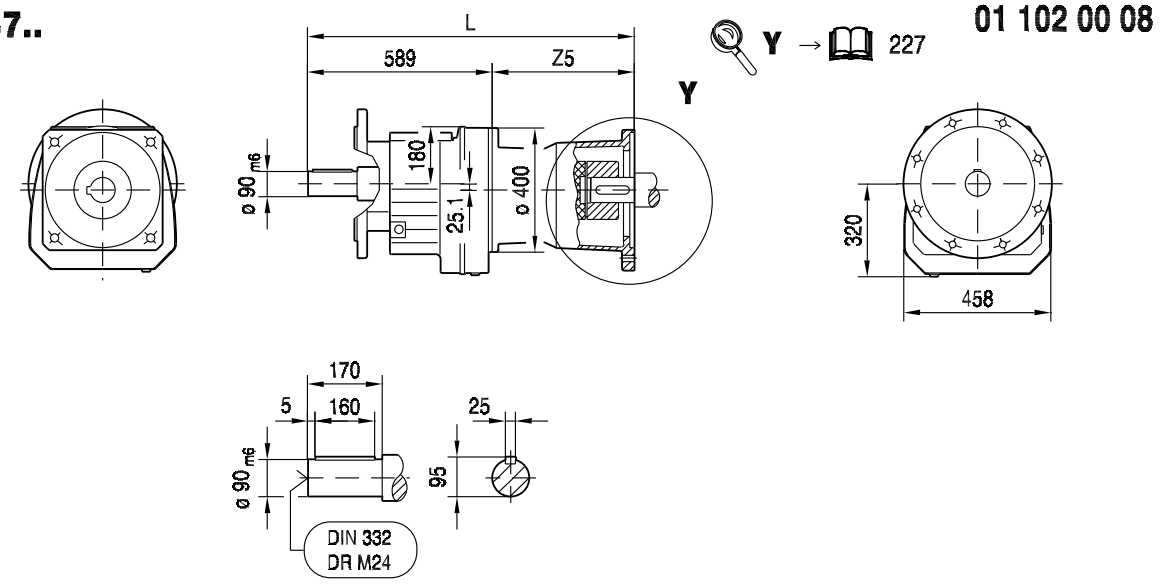

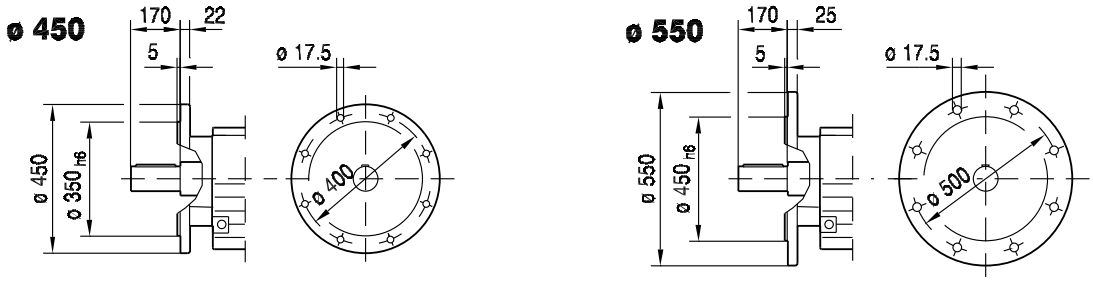

RM137..

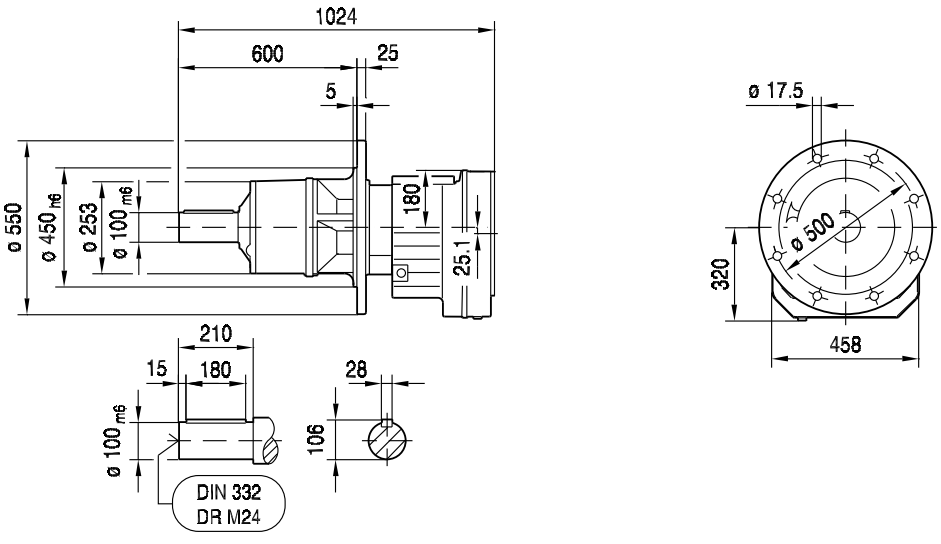

(→ 144)	AQ190/1-2	AQ190/3						
L	792	816						
Z5	202.5	226.5						

8.3.21 R 147 AQ.. [Nm]

[Nm]		AQ. M_{amax} | M_{apk} | $M_{aNotaus}$		
	i	190/1-3		
R147 2	5.00			
	5.89			
	7.25	1160	1160	1160
	8.26			
	9.74			
	11.99	1910	1910	1910
	13.91	2220	2220	2220
	15.64	2500	2500	2500
	18.04	2880	2880	2880
	20.44	3270	3270	3270
R147 3	24.19			
	29.95	4790	4790	4790
	35.64	5700	5700	5700
	40.29	6440	6440	6440
	46.65	7460	7460	7460
	52.87	8450	8450	8450
	61.09	9770	9770	9770
	66.99	10700	10700	10700
	72.09	11500	11500	11500
	83.47	13000	13000	13300
	94.60	13000	13000	15100
	109.31	13000	13000	17400
	119.86	13000	13000	19100
	146.91	13000	13000	22100
	163.31	13000	13000	22100

m [kg]		AQ.
	s	190/1-3
R147	2	380
R147	3	395
RF: + 8.3 kg / RM: + 175.7 kg		

		AQ.
		190/1-3
J_A 10^{-4}	[kgm^2]	25.0
c_{TA}	[Nm/']	2.08

R147 n_e = 1400	i	M_{amax} [Nm]	M_{apk} [Nm]	$M_{aNotaus}$ [Nm]	n_{ak} [1/min]	J_G 10^{-4} [kgm^2]	F_{Ramax} R [N]	F_{Ramax} RF [N]	F_{Ramax} RM [N]	F_{Rapk} R [N]	F_{Rapk} RF [N]	F_{Rapk} RM [N]
R147 2	5.00	8670	10500	14739	280	642	49300	49300	38300	67000	67000	73900
	5.89	8670	10500	14739	323	491	53200	53200	41000	67000	67000	73900
	7.25	8670	10500	14739	372	358	58400	58400	44600	67000	67000	73900
	8.26	13000	13000	22100	182	591	49900	49900	42700	62700	62700	64300
	9.74	13000	13000	22100	205	454	54400	54400	45900	62700	62700	64300
	11.99	13000	13000	22100	200	334	60400	60400	50200	62700	62700	64300
	13.91	12600	13000	21420	216	250	63400	63400	53800	62700	62700	64300
	15.64	13000	13000	22100	185	210	62700	62700	56000	62700	62700	64300
	18.04	10500	13000	17850	371	168	67000	67000	62100	62700	62700	64300
	20.44	12000	13000	20400	230	140	64600	64600	63600	62700	62700	64300

R147							F_{Ramax}			F_{Rapk}		
n_e = 1400	i	M_{amax} [Nm]	M_{apk} [Nm]	$M_{aNotaus}$ [Nm]	n_{ak} [1/min]	J_G 10^{-4} [kgm^2]	R [N]	RF [N]	RM [N]	R [N]	RF [N]	RM [N]
R147 3	24.19	11900	13000	20230	62	291	64700	64700	68100	62700	62700	64300
	29.95	13000	13000	22100	50	214	62700	62700	64300	62700	62700	64300
	35.64	13000	13000	22100	51	166	62700	62700	64300	62700	62700	64300
	40.29	13000	13000	22100	52	136	62700	62700	64300	62700	62700	64300
	46.65	13000	13000	22100	54	110	62700	62700	64300	62700	62700	64300
	52.87	13000	13000	22100	55	91	62700	62700	64300	62700	62700	64300
	61.09	13000	13000	22100	57	75	62700	62700	64300	62700	62700	64300
	66.99	13000	13000	22100	58	66	62700	62700	64300	62700	62700	64300
	72.09	13000	13000	22100	40	118	62700	62700	64300	62700	62700	64300
	83.47	13000	13000	22100	41	97	62700	62700	64300	62700	62700	64300
	94.60	13000	13000	22100	41	81	62700	62700	64300	62700	62700	64300
	109.31	13000	13000	22100	41	68	62700	62700	64300	62700	62700	64300
	119.86	13000	13000	22100	42	60	62700	62700	64300	62700	62700	64300
	146.91	13000	13000	22100	42	38	62700	62700	64300	62700	62700	64300
	163.31	13000	13000	22100	42	34	62700	62700	64300	62700	62700	64300

AQ.				c_{TG}			φ
	i	n_{epk} [1/min]	η [%]	R [Nm/']	RF [Nm/']	RM [Nm/']	/R [']
R147 2	5.00	2518	97	665	665	461	8
	5.89	2797	97	665	665	461	8
	7.25	3197	97	665	665	461	8
	8.26	2518	97	873	873	551	6
	9.74	2797	97	873	873	551	6
	11.99	4500	97	873	873	551	5
	13.91	4500	97	873	873	551	5
	15.64	4500	97	873	873	551	5
	18.04	4500	97	873	873	551	5
	20.44	4500	97	873	873	551	5
R147 3	24.19	4500	96	913	913	567	6
	29.95	4500	96	913	913	567	6
	35.64	4500	96	913	913	567	6
	40.29	4500	96	913	913	567	6
	46.65	4378	96	913	913	567	6
	52.87	4500	96	913	913	567	6
	61.09	4500	96	913	913	567	6
	66.99	4500	96	913	913	567	6
	72.09	3924	96	917	917	568	6
	83.47	4378	96	917	917	568	6
	94.60	4500	96	917	917	568	6
	109.31	4500	96	917	917	568	5
	119.86	4500	96	917	917	568	5
	146.91	4500	96	917	917	568	5
	163.31	4500	96	917	917	568	5

8.3.22 R 147 AQ.. [mm]

01 103 00 08

R147..

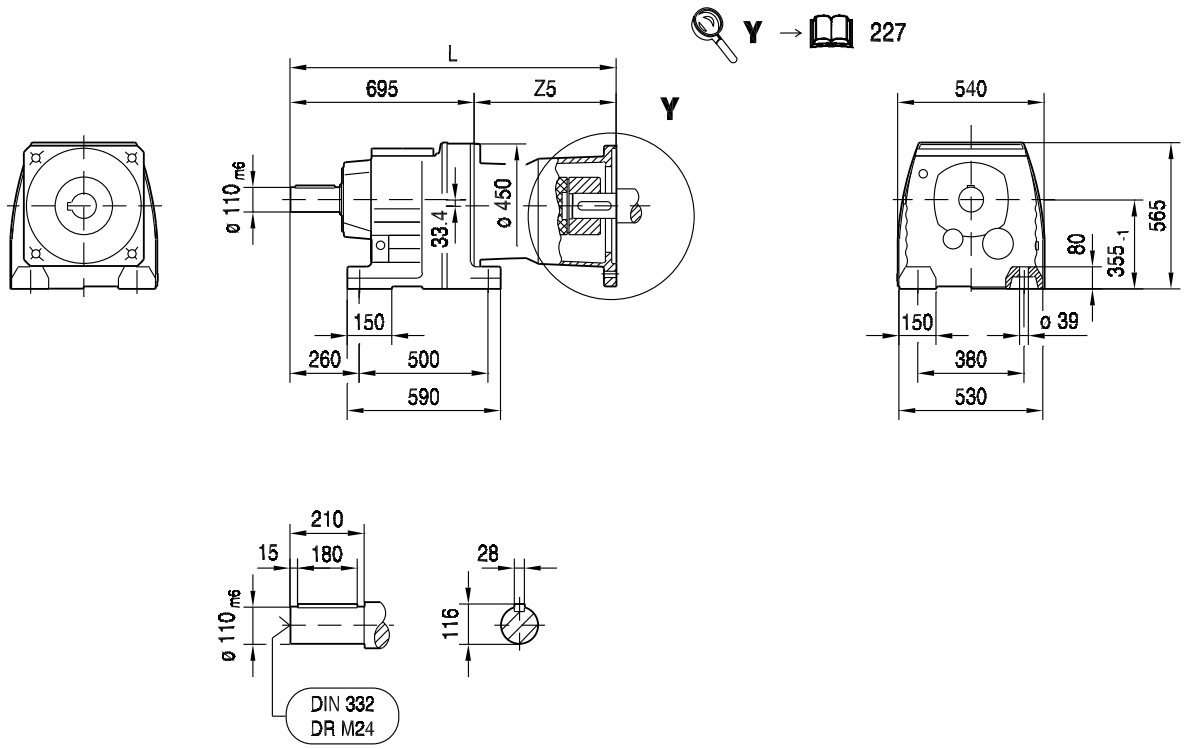

(→ 144)	AQ190/1-2	AQ190/3						
L	890	914						
Z5	194.5	218.5						

RF147..

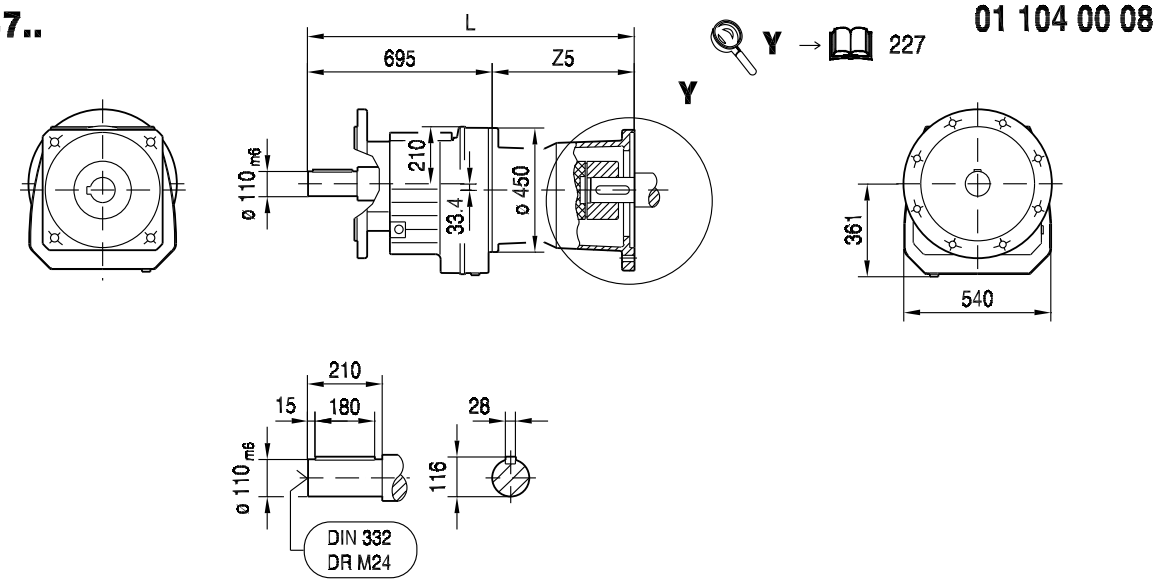

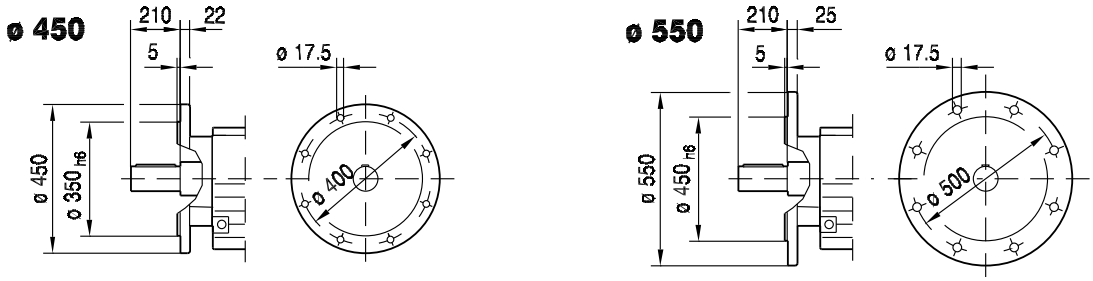

RM147..

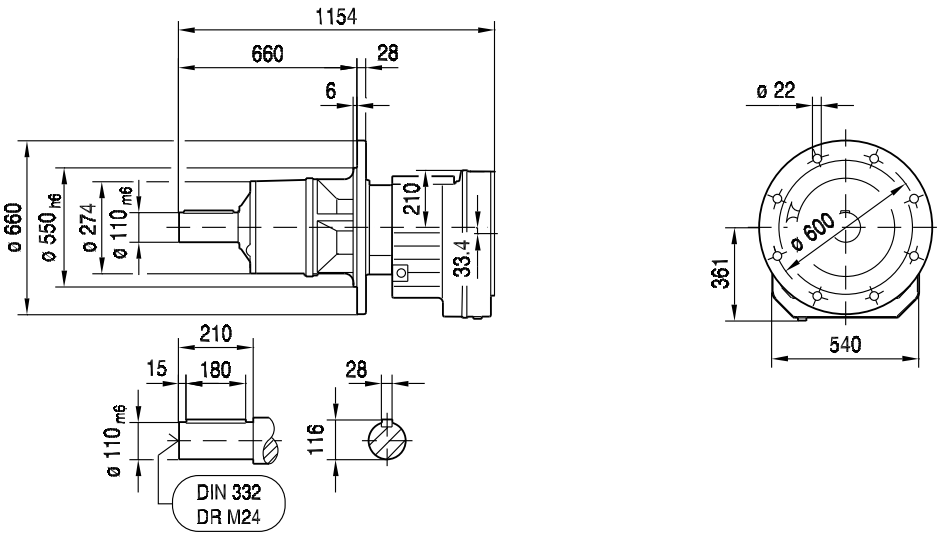

(→ 144)	AQ190/1-2	AQ190/3						
L	890	914						
Z5	194.5	218.5						

8.4 R.. AQ.. [mm]

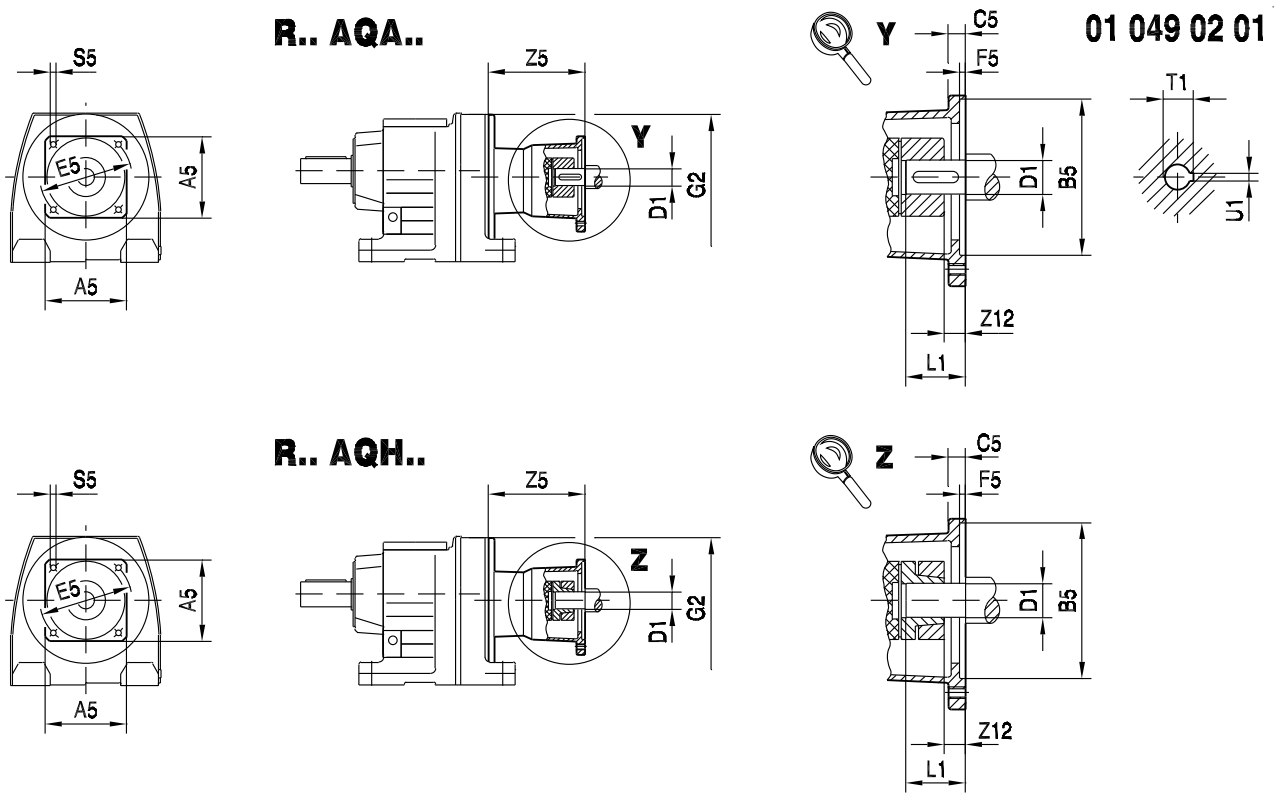

	Square dimension A5	Centering ∅ B5	Flange thicknesss C5	Hole circle ∅ E5	Centering depth F5	Threaded hole S5	Z12 (AQA)	Z12 (AQH)	Coupling bore ∅ D1	Max. motor shaft insertion depth L1	T1	U1
AQ_80/1	82	60	8	75	3.5	M5	5.5	5.5	11	23	12.8	4
AQ_80/2	82	60	8	75	3.5	M5	5.5	5.5	14	30	16.3	5
AQ_80/3	82	50	8	95	3	M6	5.5	5.5	14	30	16.3	5
AQ_100/1	100	80	10	100	4	M6	0	0	14	30	16.3	5
AQ_100/2	100	95	12	115	4	M8	0	0	14	30	16.3	5
AQ_100/3	100	80	10	100	4	M6	2	14	19	40	21.8	6
AQ_100/4	100	95	12	115	4	M8	2	14	19	40	21.8	6
AQ_115/1	115	95	12	130	5	M8	11	23	19	40	21.8	6
AQ_115/2	115	110	12	130	5	M8	11	23	19	40	21.8	6
AQ_115/3	115	110	12	130	5	M8	16	16	24	50	27.3	8
AQ_140/1	140	110	15	165	5	M10	16	16	24	50	27.3	8
AQ_140/2	140	130	15	165	5	M10	16	16	24	50	27.3	8
AQ_140/3	140	130	15	165	5	M10	22	22	32	60	35.3	10
AQ_140/4	140	130	15	165	5	M10	22	22	28	60	31,3	8
AQ_160/1	162	155	15	190	5	M10	22	22	32	60	35,3	10
AQ_190/1	190	130	16	215	5	M12	24	24	32	60	35.3	10
AQ_190/2	190	180	16	215	5	M12	24	24	32	60	35.3	10
AQ_190/3	190	180	16	215	5	M12	34	34	38	80	41.3	10

9 F..

9.1 F.. AQ..

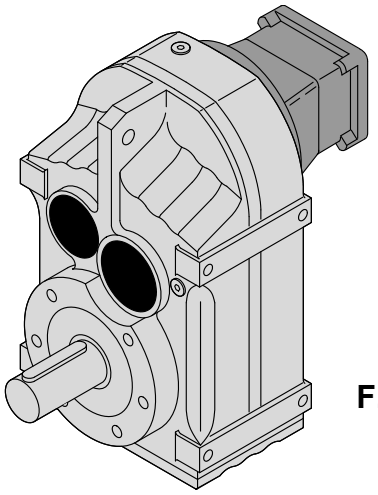

F.. AQ..

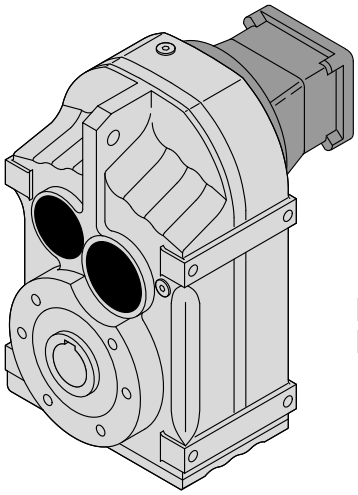

FA..B AQ..
FV..B AQ..

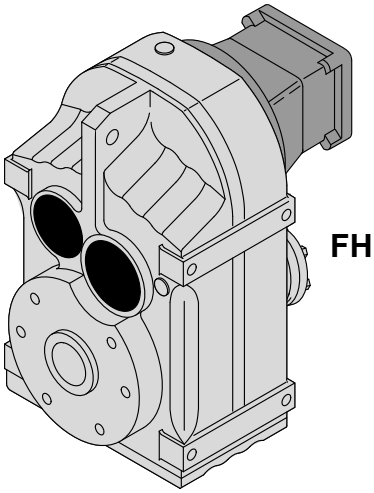

FH..B AQ..

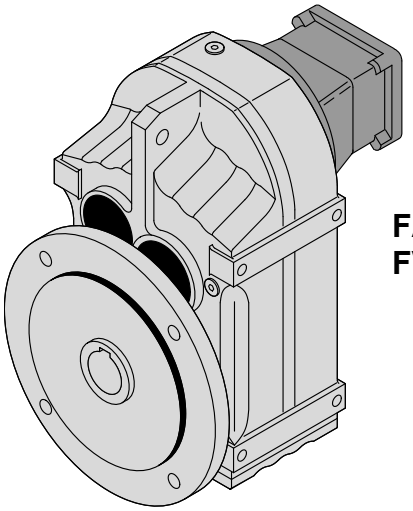

FAF.. AQ..
FVF.. AQ ..

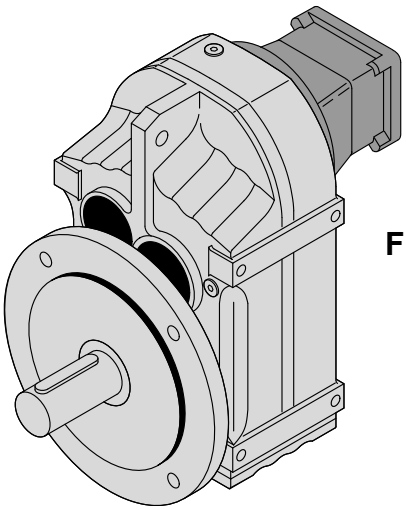

FF.. AQ..

50399AXX

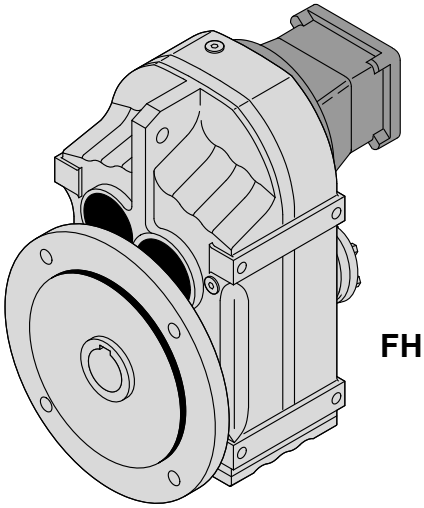

FHF .. AQ..

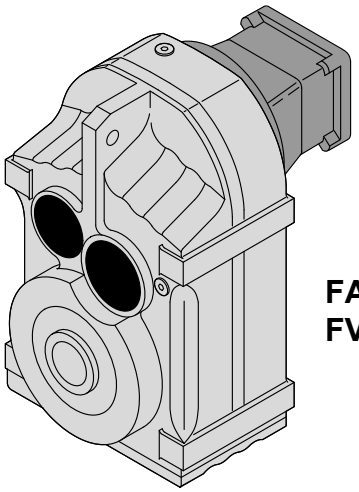

FA.. AQ..
FV.. AQ..

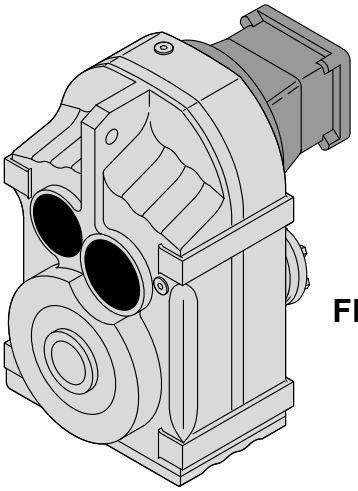

FH.. AQ..

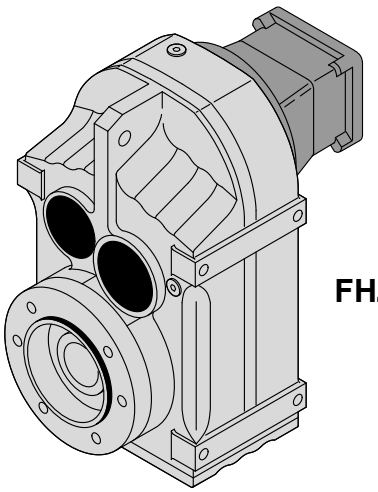

FHZ.. AQ..

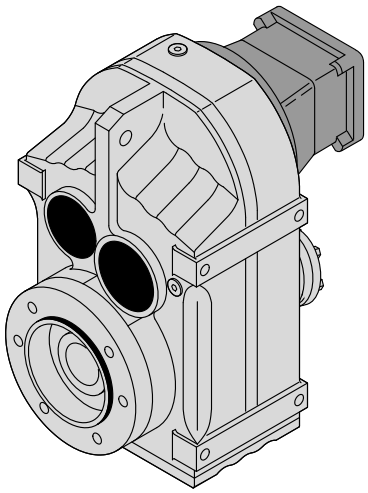

FAZ.. AQ..
FVZ.. AQ..

52495AXX

9.2 F.. AQ..

9.2.1 F 27 AQ.. [Nm]

[Nm]		AQ. M_{amax} | M_{apk} | $M_{aNotaus}$											
	i	80/1-3			100/1-4			115/1-2			115/3		
FA27 2	4.16	70	70	137	70	70	141	70	70	141	87	130	148
	4.93	83	83	162	83	83	163	83	83	163	96	144	163
	5.27	89	89	170	89	89	170	89	89	170	100	150	170
	6.17	104	104	185	104	104	185	104	104	185	109	163	185
	6.91	114	117	194	114	117	194	114	117	194	114	163	194
	8.13	123	138	205	123	138	205	123	138	205	123	163	205
	9.40	130	159	220	130	159	220	130	159	220	130	163	220
	9.88	130	157	220	130	157	220	130	157	220	130	157	220
	10.55	130	157	220	130	157	220	130	157	220	130	157	220
	12.35	130	157	220	130	157	220	130	157	220	130	157	220
	13.84	130	157	220	130	157	220	130	157	220	130	157	220
	16.28	130	157	220	130	157	220	130	157	220	130	157	220
	18.84	130	157	220	130	157	220	130	157	220	130	157	220
	20.15	130	157	220	130	157	220	130	157	220	130	157	220
	23.25	130	157	220	130	157	220	130	157	220	130	157	220
	27.18	130	157	220	130	157	220	130	157	220	130	157	220
	29.56	130	157	220	130	157	220	130	157	220	130	157	220
FA27 3	33.83	130	157	220	130	157	220	130	157	220	130	157	220
	38.33	130	157	220	130	157	220	130	157	220	130	157	220
	40.89	130	157	220	130	157	220	130	157	220	130	157	220
	46.78	130	157	220	130	157	220	130	157	220	130	157	220
	50.19	130	157	220	130	157	220	130	157	220	130	157	220
	56.62	130	157	220	130	157	220	130	157	220	130	157	220
	63.86	130	157	220	130	157	220	130	157	220	130	157	220
	72.37	130	157	220	130	157	220	130	157	220	130	157	220
	77.21	130	157	220	130	157	220	130	157	220	130	157	220
	88.32	130	157	220	130	157	220	130	157	220	130	157	220
	94.76	130	157	220	130	157	220	130	157	220	130	157	220
	109.90	130	157	220	130	157	220	130	157	220	130	157	220
	129.09	130	157	220	130	157	220	130	157	220	130	157	220
	140.74	130	157	220	130	157	220	130	157	220	130	157	220

m [kg]		AQ.			
	s	80/1-3	100/1-4	115/1-2	115/3
FA27	2	9.0	9.6	10	10
FA27	3	9.2	9.9	10	10
FAF: + 0.7 kg / F: + 0.5 kg / FF: + 1.3 kg					

		AQ.			
		80/1-3	100/1-4	115/1-2	115/3
$J_A\ 10^{-4}$	[kgm^2]	0.77	1.4	1.4	3.1
c_{TA}	[Nm/']	0.25	0.25	0.25	0.625

FA27							F_{Ramax}				F_{Rapk}			
n_e = 1400	i	M_{amax} [Nm]	M_{apk} [Nm]	$M_{aNotaus}$ [Nm]	n_{ak} [1/min]	J_G 10^{-4} [kgm^2]	FA [N]	FAF [N]	F [N]	FF [N]	FA [N]	FAF [N]	F [N]	FF [N]
FA27 2	4.16	87	130	148	361	1.4	1810	1810	1380	1180	4500	4500	4500	4500
	4.93	96	144	163	304	1.0	1860	1860	1420	1210	4500	4500	4500	4500
	5.27	100	150	170	266	0.90	1880	1880	1440	1220	4500	4500	4500	4500
	6.17	109	163	185	227	0.68	1940	1940	1480	1260	4500	4500	4500	4500
	6.91	114	163	194	217	0.56	2000	2000	1530	1300	4500	4500	4500	4500
	8.13	123	163	209	172	0.42	2080	2080	1580	1350	4500	4500	4500	4500
	9.40	130	163	221	160	0.33	2170	2170	1660	1410	4500	4500	4500	4500
	9.88	130	157	221	202	0.74	2400	2400	1830	1560	4500	4500	4500	4500
	10.55	130	157	221	209	0.67	2490	2490	1900	1620	4500	4500	4500	4500
	12.35	130	157	221	211	0.51	2700	2700	2060	1760	4500	4500	4500	4500
	13.84	130	157	221	210	0.43	2860	2860	2180	1860	4500	4500	4500	4500
	16.28	130	157	221	209	0.32	3110	3110	2370	2020	4500	4500	4500	4500
	18.84	130	157	221	212	0.26	3340	3340	2550	2170	4500	4500	4500	4500
	20.15	130	157	221	213	0.23	3450	3450	2630	2240	4500	4500	4500	4500
	23.25	130	157	221	215	0.19	3690	3690	2820	2400	4500	4500	4500	4500
	27.18	130	157	221	217	0.15	3970	3970	3030	2580	4500	4500	4500	4500
	29.56	130	157	221	220	0.13	4120	4120	3140	2680	4500	4500	4500	4500
FA27 3	33.83	130	157	221	166	0.31	4380	4380	3340	2850	4500	4500	4500	4500
	38.33	130	157	221	167	0.26	4500	4500	3530	3010	4500	4500	4500	4500
	40.89	130	157	221	166	0.23	4500	4500	3640	3100	4500	4500	4500	4500
	46.78	130	157	221	150	0.18	4500	4500	3860	3290	4500	4500	4500	4500
	50.19	130	157	221	139	0.17	4500	4500	3980	3390	4500	4500	4500	4500
	56.62	130	157	221	124	0.31	4500	4500	4180	3570	4500	4500	4500	4500
	63.86	130	157	221	110	0.26	4500	4500	4400	3750	4500	4500	4500	4500
	72.37	130	157	221	97	0.22	4500	4500	4500	3960	4500	4500	4500	4500
	77.21	130	157	221	91	0.20	4500	4500	4500	4060	4500	4500	4500	4500
	88.32	130	157	221	79	0.16	4500	4500	4500	4290	4500	4500	4500	4500
	94.76	130	157	221	74	0.15	4500	4500	4500	4420	4500	4500	4500	4500
	109.90	130	157	221	64	0.12	4500	4500	4500	4500	4500	4500	4500	4500
	129.09	130	157	221	54	0.090	4500	4500	4500	4500	4500	4500	4500	4500
	140.74	130	157	221	50	0.080	4500	4500	4500	4500	4500	4500	4500	4500

AQ.				c_{TG}			
	i	n_{epk} [1/min]	η [%]	FA [Nm/"]	FAF [Nm/"]	F [Nm/"]	FF [Nm/"]
FA27 2	4.16	4120	97	46	46	21	18
	4.93	4500	97	46	46	21	18
	5.27	4500	97	46	46	21	18
	6.17	4500	97	46	46	21	18
	6.91	4500	97	46	46	21	18
	8.13	4500	97	46	46	21	18
	9.40	4500	97	46	46	21	18
	9.88	4500	97	83	83	26	22
	10.55	4500	97	83	83	26	22
	12.35	4500	97	83	83	26	22
	13.84	4500	97	83	83	26	22
	16.28	4500	97	83	83	26	22
	18.84	4500	97	83	83	26	22
	20.15	4500	97	83	83	26	22
	23.25	4500	97	83	83	26	22
	27.18	4500	96	83	83	26	22
	29.56	4500	96	83	83	26	22

AQ.	i	n_{epk} [1/min]	η [%]	c_{TG} FA [Nm/°]	FAF [Nm/°]	F [Nm/°]	FF [Nm/°]
FA27 3	33.83	4500	95	95	95	27	23
	38.33	4500	95	95	95	27	23
	40.89	4500	95	95	95	27	23
	46.78	4500	94	95	95	27	23
	50.19	4500	94	95	95	27	23
	56.62	4500	94	99	99	27	23
	63.86	4500	94	99	99	27	23
	72.37	4500	93	99	99	27	23
	77.21	4500	93	99	99	27	23
	88.32	4500	93	99	99	27	23
	94.76	4500	92	99	99	27	23
	109.90	4500	92	99	99	27	23
	129.09	4500	91	99	99	27	23
	140.74	4500	90	99	99	27	23

9.2.2 F 27 AQ.. [mm]

42 075 00 08

F27..

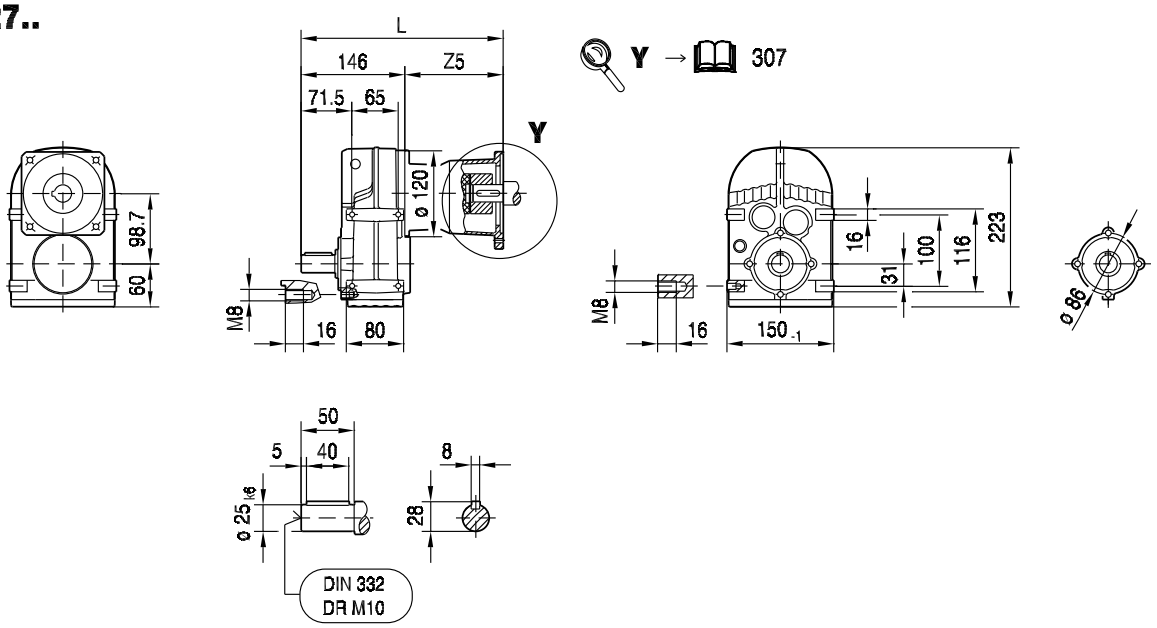

FA27B..

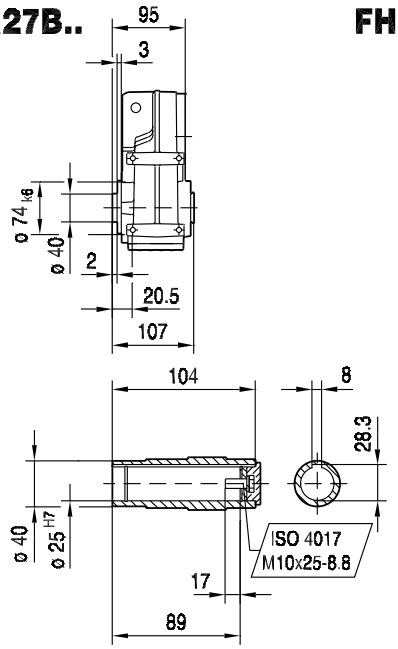

FH27B..

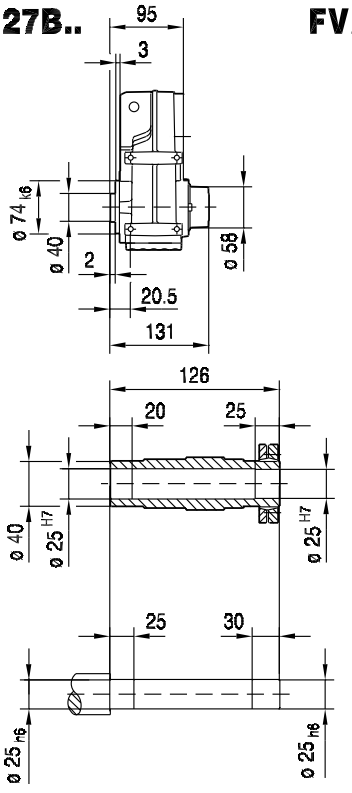

FV27B..

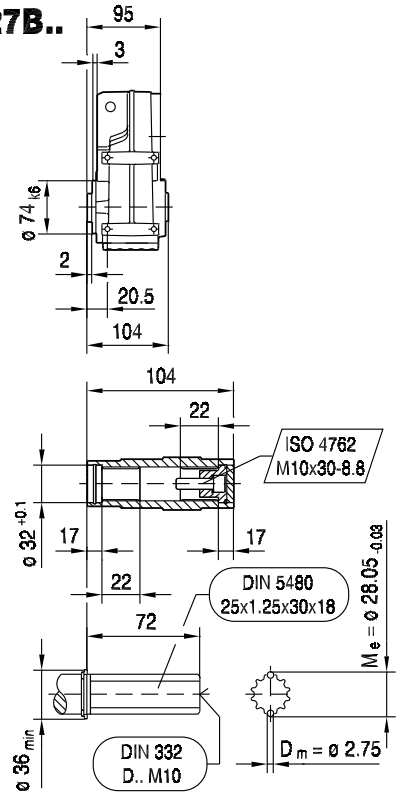

(→ 144)	AQ80/1-3	AQ100/1-2	AQ100/3-4	AQ115/1-3				
L	251	276	290	299				
Z5	104.5	129.5	143.5	152.5				

42 076 00 08

FF27..

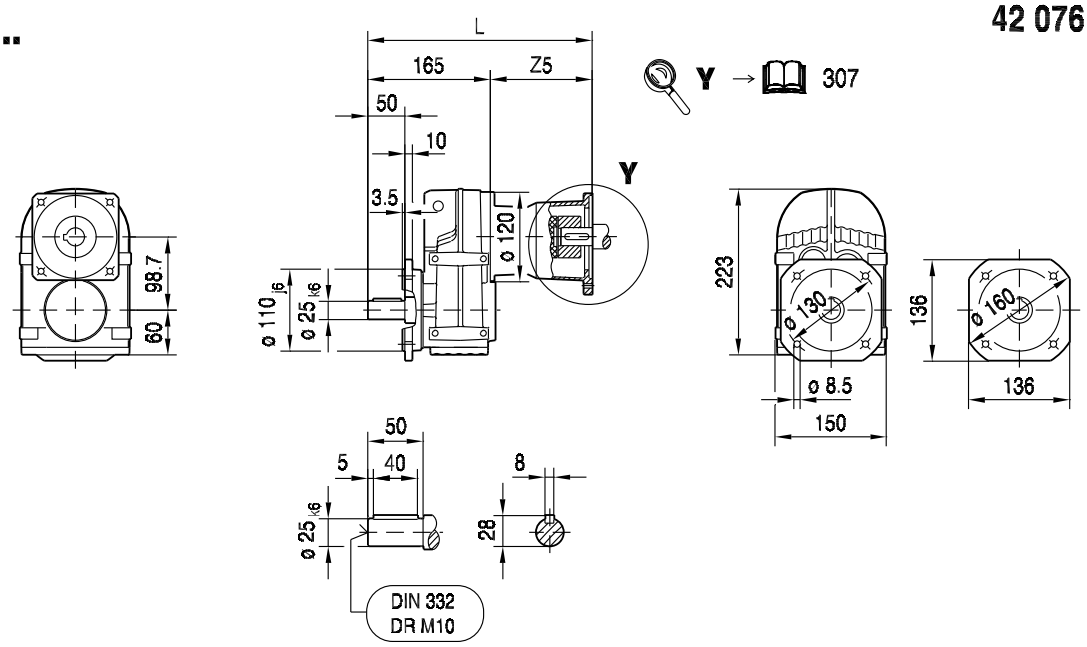

FAF27..

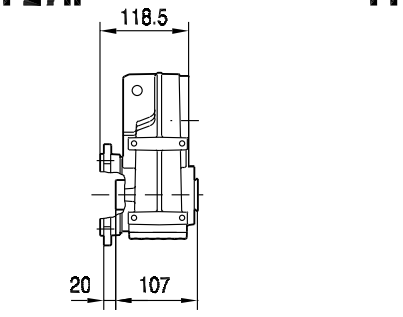

FHF27..

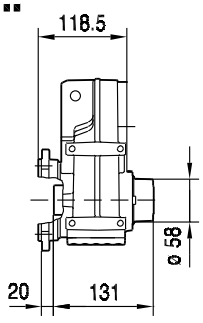

FVF27..

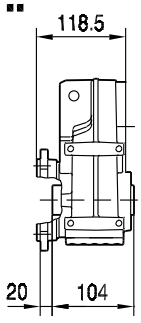

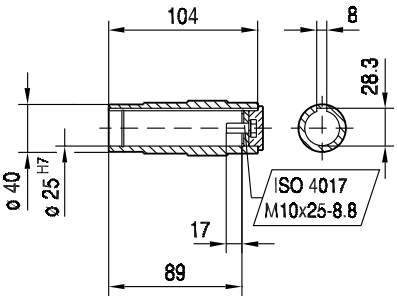

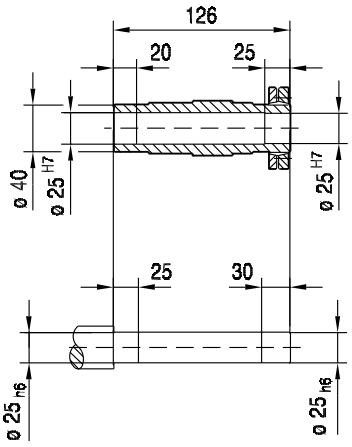

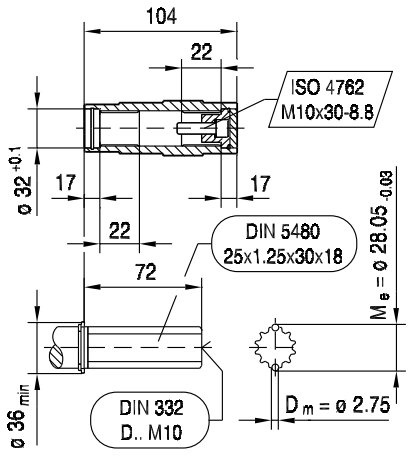

(→ 144)	AQ80/1-3	AQ100/1-2	AQ100/3-4	AQ115/1-3				
L	270	295	309	318				
Z5	104.5	129.5	143.5	152.5				

42 077 00 08

FA27..

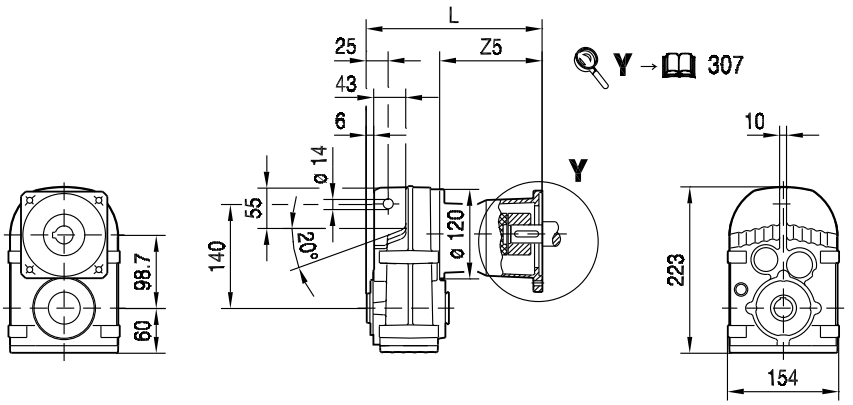

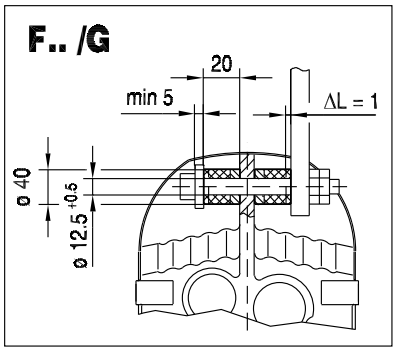

9

FA27..

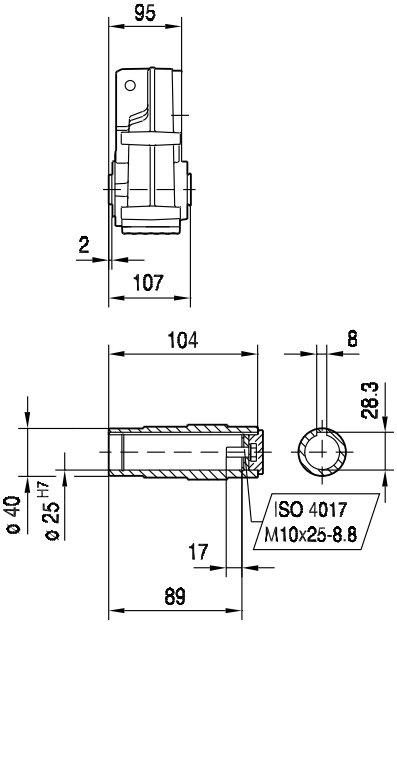

FH27..

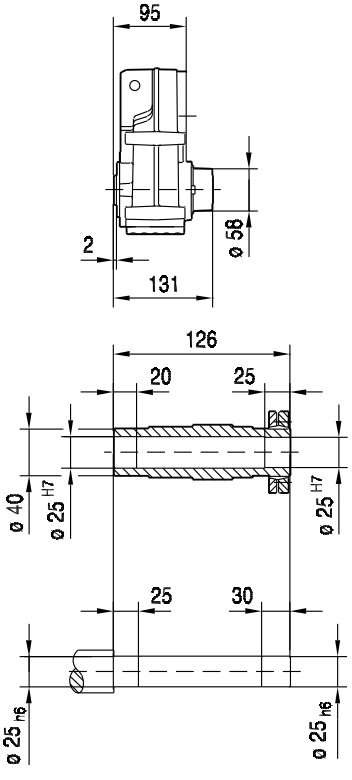

FV27..

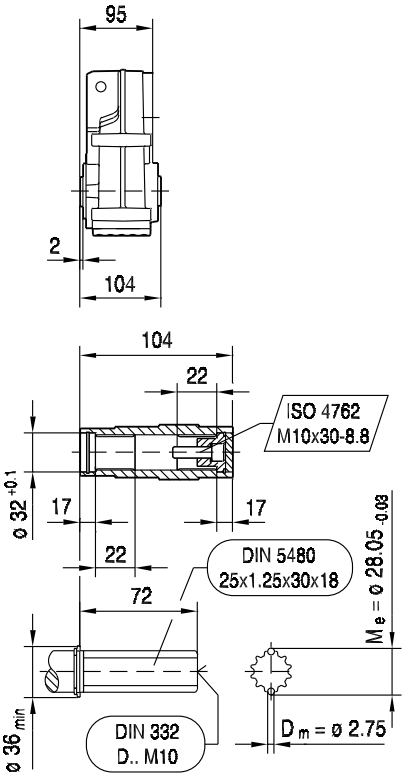

(→ 144)	AQ80/1-3	AQ100/1-2	AQ100/3-4	AQ115/1-3				
L	200	225	239	248				
Z5	104.5	129.5	143.5	152.5				

FAZ27..

42 078 00 08

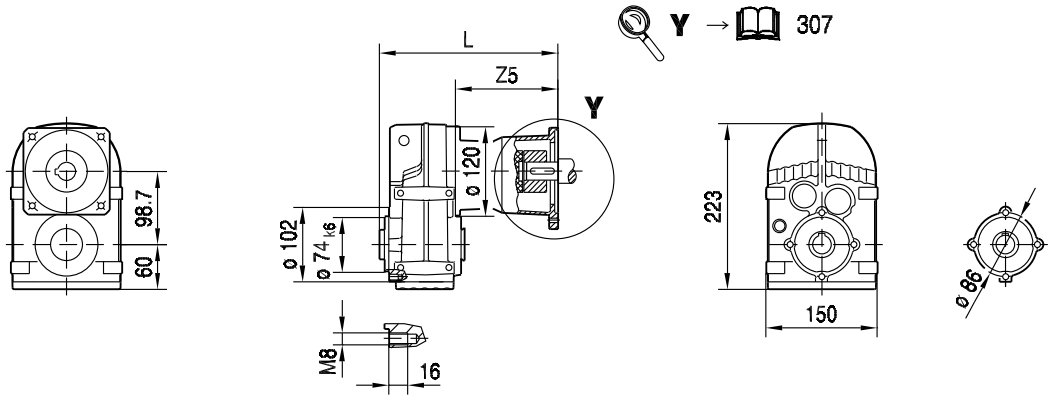

FAZ27..

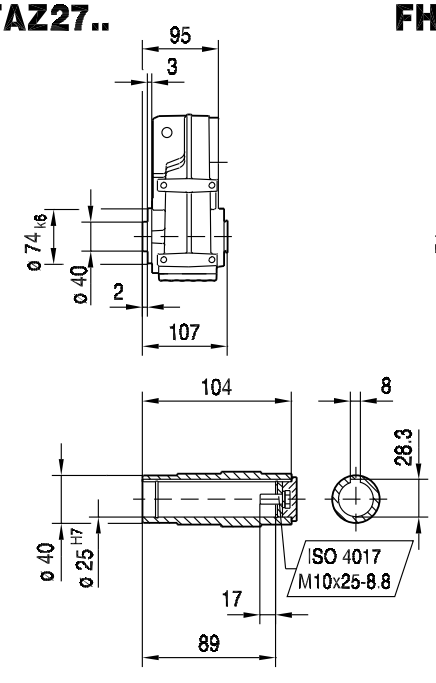

FHZ27..

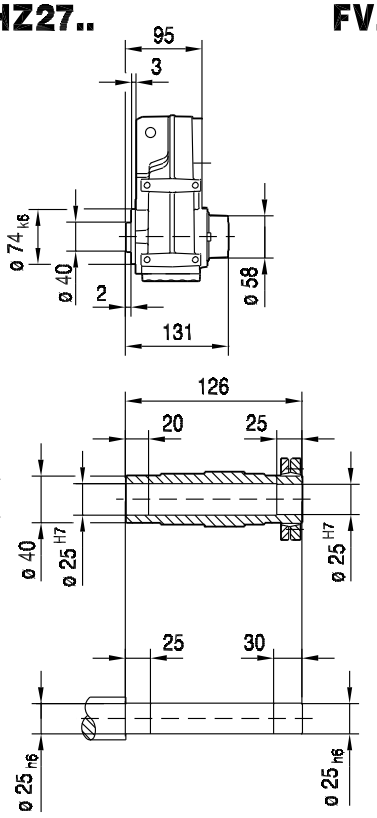

FVZ27..

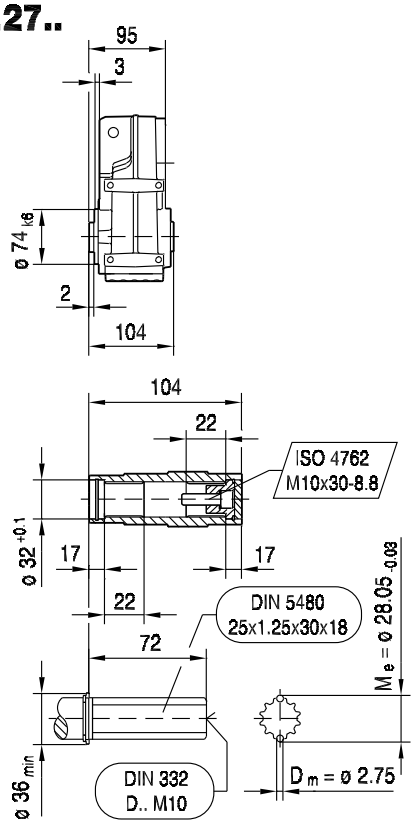

(→ 144)	AQ80/1-3	AQ100/1-2	AQ100/3-4	AQ115/1-3				
L	200	225	239	248				
Z5	104.5	129.5	143.5	152.5				

9.2.3 F 37 AQ.. [Nm]

[Nm]		AQ. M_{amax} | M_{apk} | $M_{aNotaus}$											
	i	80/1-3			100/1-4			115/1-2			115/3		
FA37 2	3.77	64	64	124	64	64	128	64	64	128	105	157	173
	4.22	71	71	139	71	71	143	71	71	143	110	165	187
	4.90	83	83	161	83	83	166	83	83	166	120	180	200
	5.21	88	88	171	88	88	177	88	88	177	125	187	210
	6.05	102	102	199	102	102	205	102	102	205	135	188	230
	6.74	114	114	220	114	114	225	114	114	225	140	188	235
	7.44	126	126	245	126	126	245	126	126	245	145	188	245
	8.01	136	136	260	136	136	270	136	136	270	170	240	285
	8.97	152	152	295	152	152	295	152	152	295	175	240	295
	10.42	177	177	315	177	177	315	177	177	315	185	240	315
	11.08	188	188	320	188	188	320	188	188	320	190	240	320
	12.87	200	215	340	200	215	340	200	215	340	200	240	340
	14.33	200	240	340	200	240	340	200	240	340	200	240	340
	15.81	200	240	340	200	240	340	200	240	340	200	240	340
	17.03	200	240	340	200	240	340	200	240	340	200	240	340
	19.27	200	240	340	200	240	340	200	240	340	200	240	340
	20.57	200	240	340	200	240	340	200	240	340	200	240	340
	23.63	200	240	340	200	240	340	200	240	340	200	240	340
FA37 3	23.88	200	240	340	200	240	340	200	240	340	200	240	340
	28.09	200	240	340	200	240	340	200	240	340	200	240	340
	31.69	200	240	340	200	240	340	200	240	340	200	240	340
	35.91	200	240	340	200	240	340	200	240	340	200	240	340
	38.31	200	240	340	200	240	340	200	240	340	200	240	340
	43.83	200	240	340	200	240	340	200	240	340	200	240	340
	47.02	200	240	340	200	240	340	200	240	340	200	240	340
	51.70	200	240	340	200	240	340	200	240	340	200	240	340
	54.54	200	240	340	200	240	340	200	240	340	200	240	340
	58.32	200	240	340	200	240	340	200	240	340	200	240	340
	66.09	200	240	340	200	240	340	200	240	340	200	240	340
	70.50	200	240	340	200	240	340	200	240	340	200	240	340
	80.65	200	240	340	200	240	340	200	240	340	200	240	340
	86.53	200	240	340	200	240	340	200	240	340	200	240	340
	100.36	200	240	340	200	240	340	200	240	340	200	240	340
	117.88	200	240	340	200	240	340	200	240	340	200	240	340
	128.51	200	240	340	200	240	340	200	240	340	200	240	340

m [kg]		AQ.			
	s	80/1-3	100/1-4	115/1-2	115/3
FA37	2	15	16	16	16
FA37	3	15	16	17	17
FAF: + 1.5 kg / F: + 0.5 kg / FF: + 2.3 kg					

		AQ.			
		80/1-3	100/1-4	115/1-2	115/3
J_A 10^{-4}	[kgm^2]	0.77	1.4	1.4	3.1
c_{TA}	[Nm/']	0.25	0.25	0.25	0.625



FA37							F_{Ramax}				F_{Rapk}			
n_e = 1400	i	M_{amax} [Nm]	M_{apk} [Nm]	$M_{aNotaus}$ [Nm]	n_{ak} [1/min]	J_G 10^{-4} [kgm^2]	FA [N]	FAF [N]	F [N]	FF [N]	FA [N]	FAF [N]	F [N]	FF [N]
FA37 2	3.77	105	157	179	451	2.8	2470	2470	1970	2220	7000	7000	4810	5860
	4.22	110	165	187	427	2.3	2550	2550	2030	2300	7000	7000	4730	5820
	4.90	120	180	204	367	1.8	2630	2630	2100	2380	7000	7000	4560	5740
	5.21	125	187	213	326	1.6	2660	2660	2120	2410	7000	7000	4470	5700
	6.05	135	188	230	281	1.2	2750	2750	2190	2510	7000	7000	4460	5700
	6.74	140	188	238	267	1.0	2850	2850	2270	2600	7000	7000	4460	5700
	7.44	145	188	247	242	0.83	2940	2940	2350	2680	7000	7000	4460	5700
	8.01	170	240	289	200	1.5	2960	2960	2360	2710	7000	7000	3610	4100
	8.97	175	240	298	190	1.3	3080	3080	2460	2820	7000	7000	3610	4100
	10.42	185	240	315	163	1.0	3230	3230	2580	2960	7000	7000	3610	4100
	11.08	190	240	323	144	0.94	3290	3290	2620	3020	7000	7000	3610	4100
	12.87	200	240	340	124	0.74	3450	3450	2750	3170	7000	7000	3610	4100
	14.33	200	240	340	126	0.63	3650	3650	2910	3330	7000	7000	3610	4100
	15.81	200	240	340	127	0.52	3840	3840	3070	3490	7000	7000	3610	4100
	17.03	200	240	340	129	0.48	3990	3990	3180	3610	7000	7000	3610	4100
	19.27	200	240	340	130	0.40	4250	4250	3390	3820	7000	7000	3610	4100
	20.57	200	240	340	131	0.36	4390	4390	3500	3940	7000	7000	3610	4100
	23.63	200	240	340	135	0.29	4690	4690	3740	4190	7000	7000	3610	4100
FA37 3	23.88	200	240	340	96	0.60	4720	4720	3760	4210	7000	7000	3610	4100
	28.09	200	240	340	96	0.45	5090	5090	4060	4520	7000	7000	3610	4100
	31.69	200	240	340	95	0.35	5380	5380	4290	4760	7000	7000	3610	4100
	35.91	200	240	340	97	0.29	5700	5700	4290	5020	7000	7000	3610	4100
	38.31	200	240	340	97	0.26	5870	5870	4290	5160	7000	7000	3610	4100
	43.83	200	240	340	96	0.21	6240	6240	4290	5460	7000	7000	3610	4100
	47.02	200	240	340	96	0.19	6430	6430	4290	5620	7000	7000	3610	4100
	51.70	200	240	340	95	0.34	6710	6710	4290	5670	7000	7000	3610	4100
	54.54	200	240	340	97	0.15	6860	6860	4290	5670	7000	7000	3610	4100
	58.32	200	240	340	96	0.27	7000	7000	4290	5670	7000	7000	3610	4100
	66.09	200	240	340	95	0.23	7000	7000	4290	5670	7000	7000	3610	4100
	70.50	200	240	340	95	0.21	7000	7000	4290	5670	7000	7000	3610	4100
	80.65	200	240	340	87	0.17	7000	7000	4290	5670	7000	7000	3610	4100
	86.53	200	240	340	81	0.15	7000	7000	4290	5670	7000	7000	3610	4100
	100.36	200	240	340	70	0.12	7000	7000	4290	5670	7000	7000	3610	4100
	117.88	200	240	340	59	0.10	7000	7000	4290	5670	7000	7000	3610	4100
	128.51	200	240	340	54	0.080	7000	7000	4290	5670	7000	7000	3610	4100

AQ.				c_{TG}				φ
	i	n_{epk} [1/min]	η [%]	FA [Nm/']	FAF [Nm/']	F [Nm/']	FF [Nm/']	/R [']
FA37 2	3.77	4500	97	41	41	20	15	12
	4.22	4500	97	41	41	20	15	11
	4.90	4500	97	41	41	20	15	11
	5.21	4500	97	41	41	20	15	10
	6.05	4500	97	41	41	20	15	10
	6.74	4500	97	41	41	20	15	10
	7.44	4500	97	41	41	20	15	10
	8.01	4500	97	84	84	26	19	7
	8.97	4500	97	84	84	26	19	7
	10.42	4500	97	84	84	26	19	7
	11.08	4500	97	84	84	26	19	7
	12.87	4500	97	84	84	26	19	7
	14.33	4500	97	84	84	26	19	7
	15.81	4500	97	84	84	26	19	6
	17.03	4500	97	84	84	26	19	6
	19.27	4500	97	84	84	26	19	6
	20.57	4500	97	84	84	26	19	6
	23.63	4500	97	84	84	26	19	6

AQ.	i	n_{epk} [1/min]	η [%]	c_{TG} FA [Nm/']	FAF [Nm/']	F [Nm/']	FF [Nm/']	φ /R [']
FA37  3	23.88	4500	96	94	94	27	19	8
	28.09	4500	96	94	94	27	19	8
	31.69	4500	96	94	94	27	19	8
	35.91	4500	95	94	94	27	19	8
	38.31	4500	95	94	94	27	19	8
	43.83	4500	95	94	94	27	19	8
	47.02	4500	95	94	94	27	19	8
	51.70	4500	95	97	97	27	19	7
	54.54	4500	95	94	94	27	19	8
	58.32	4500	95	97	97	27	19	7
	66.09	4500	95	97	97	27	19	7
	70.50	4500	94	97	97	27	19	7
	80.65	4500	94	97	97	27	19	7
	86.53	4500	94	97	97	27	19	7
	100.36	4500	94	97	97	27	19	7
	117.88	4500	93	97	97	27	19	7
	128.51	4500	93	97	97	27	19	7

9.2.4 F 37 AQ.. [mm]

F37..

42 079 00 08

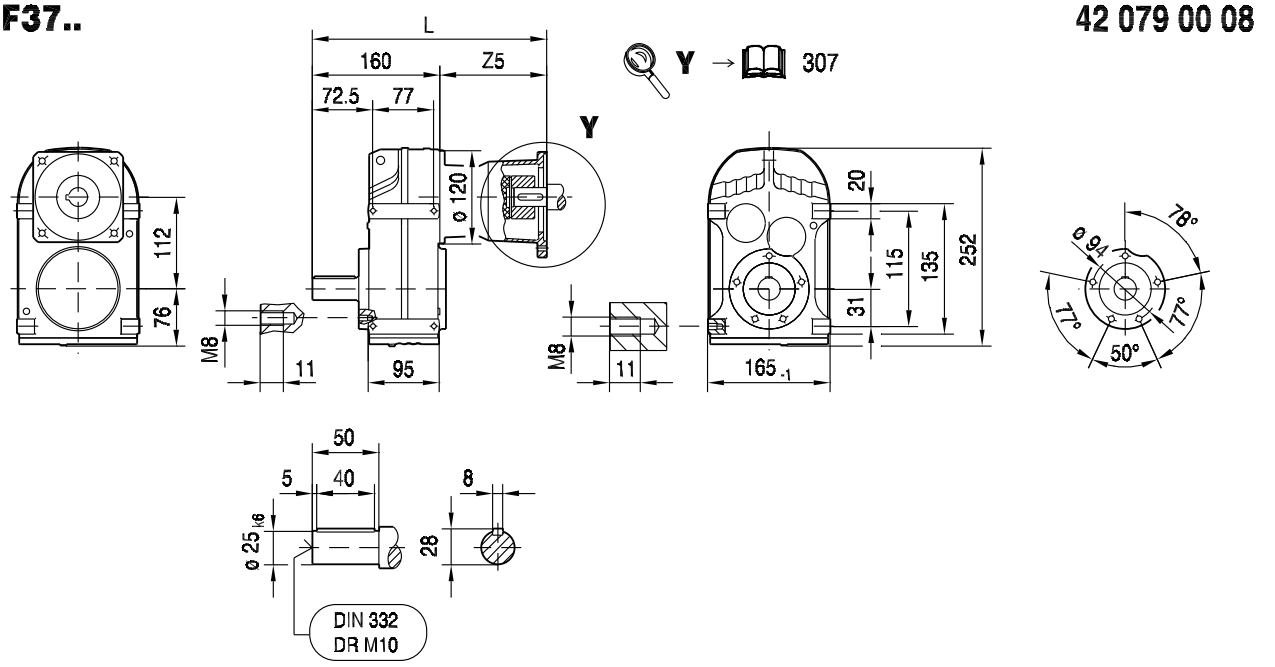

FA37B..

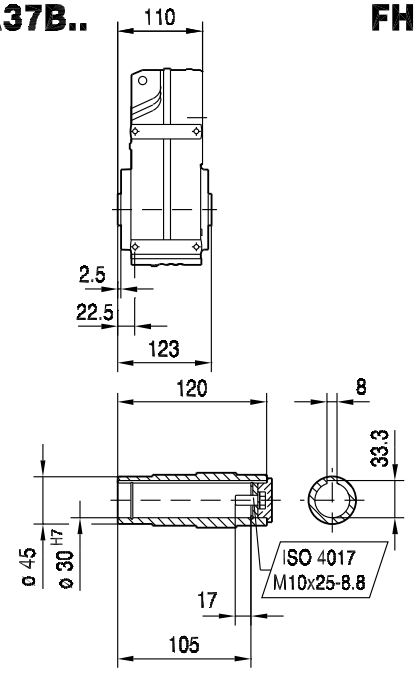

FH37B..

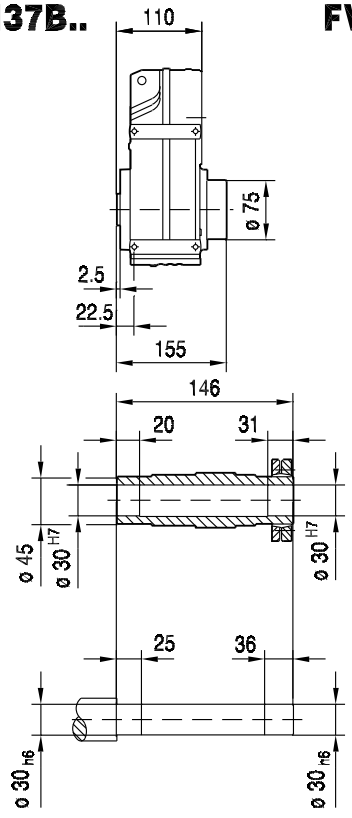

FV37B..

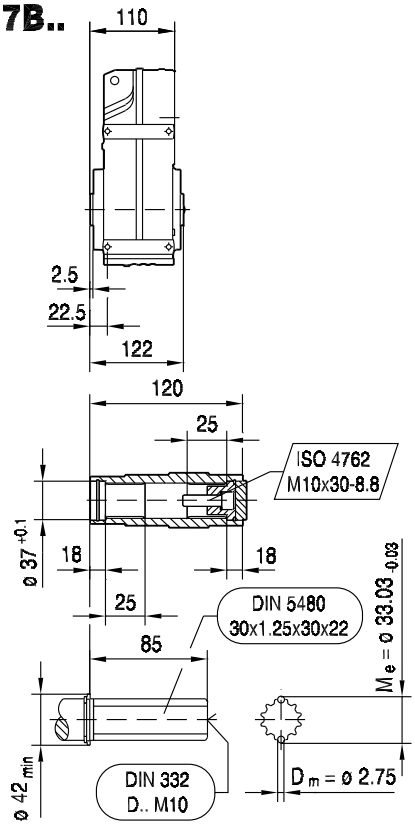

(→ 144)	AQ80/1-3	AQ100/1-2	AQ100/3-4	AQ115/1-3				
L	265	290	304	313				
Z5	104.5	129.5	143.5	152.5				

42 080 00 08

FF37..

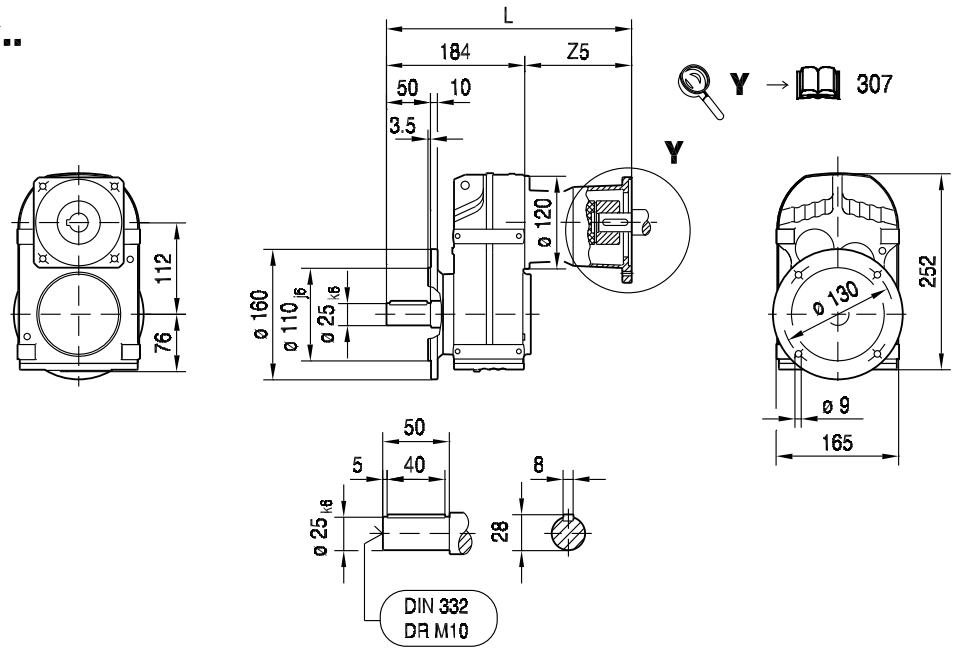

9

FAF37..

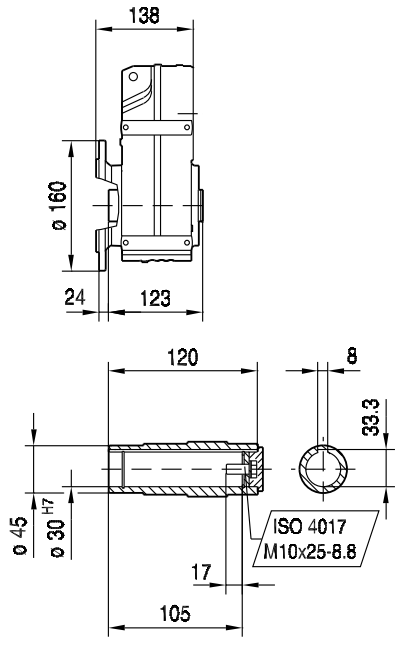

FHF37..

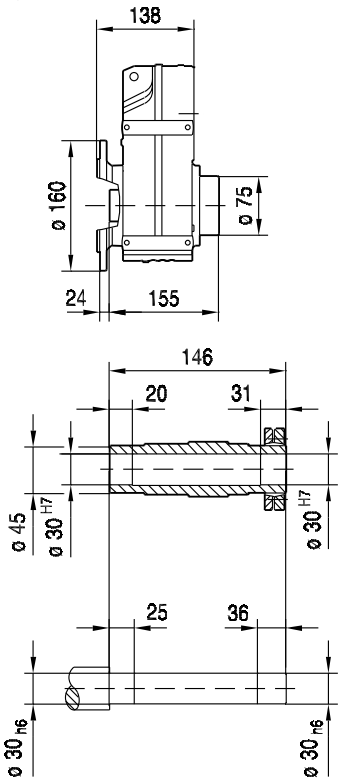

FVF37..

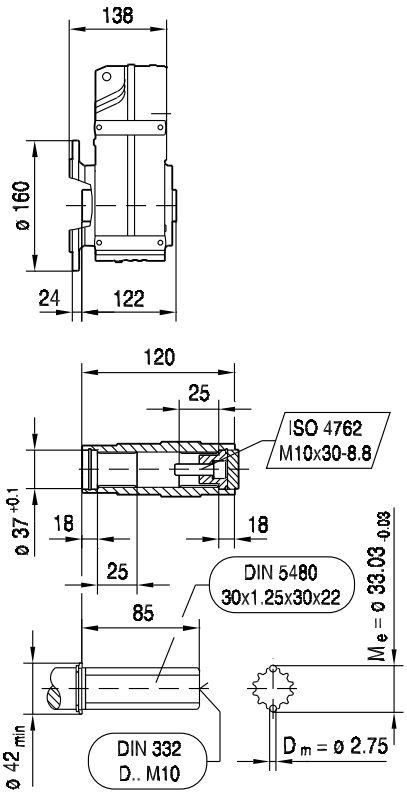

(→ 144)	AQ80/1-3	AQ100/1-2	AQ100/3-4	AQ115/1-3				
L	289	314	328	337				
Z5	104.5	129.5	143.5	152.5				

FA37..

42 081 00 08

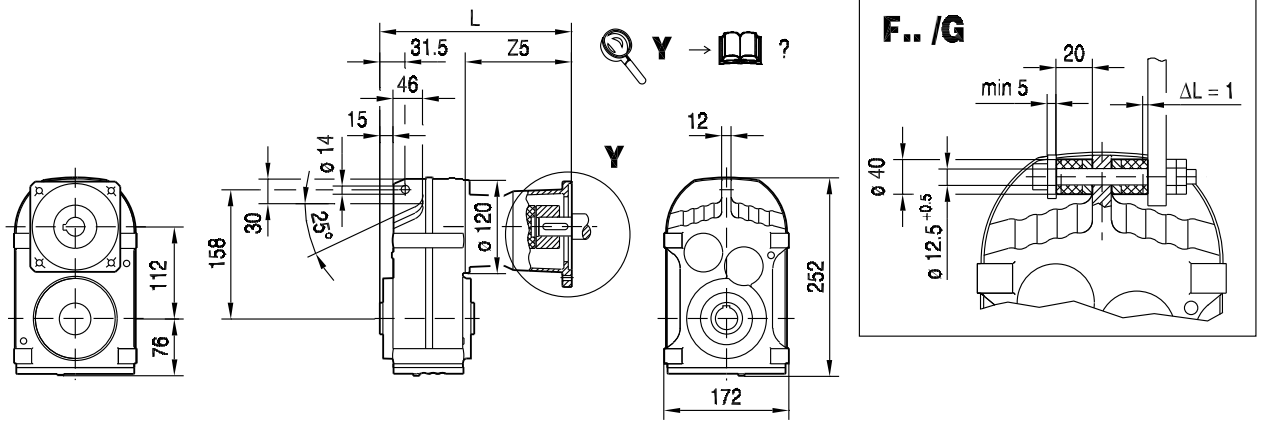

FA37..

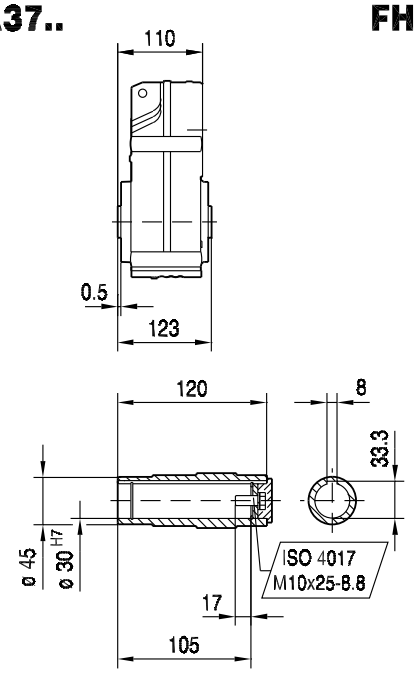

FH37..

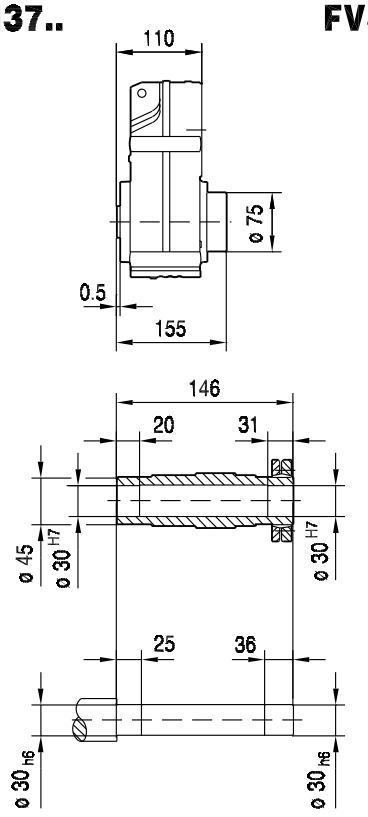

FV37..

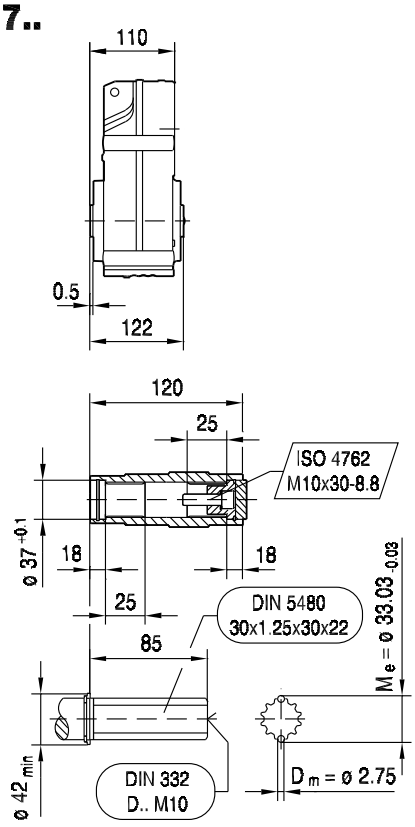

(→ 144)	AQ80/1-3	AQ100/1-2	AQ100/3-4	AQ115/1-3				
L	215	240	254	263				
Z5	104.5	129.5	143.5	152.5				

FAZ37..

42 083 00 08

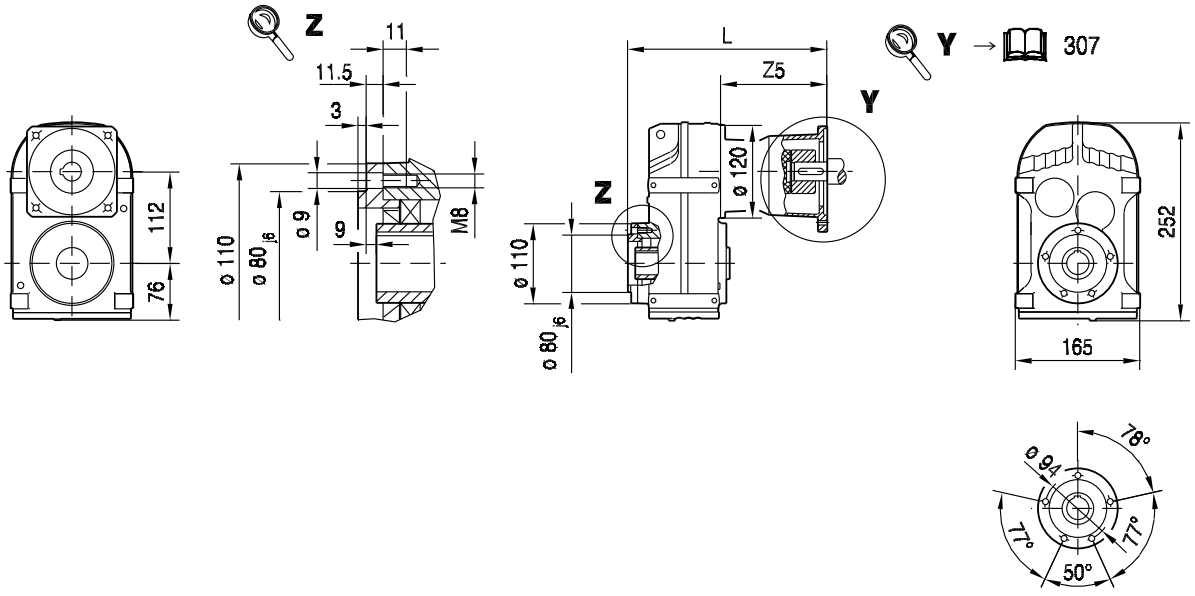

9

FAZ37..

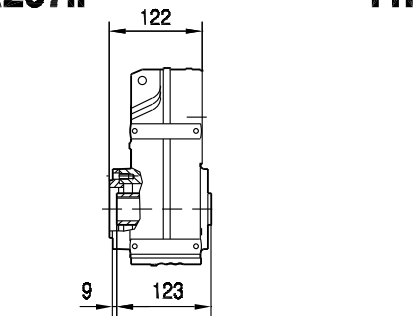

FHZ37..

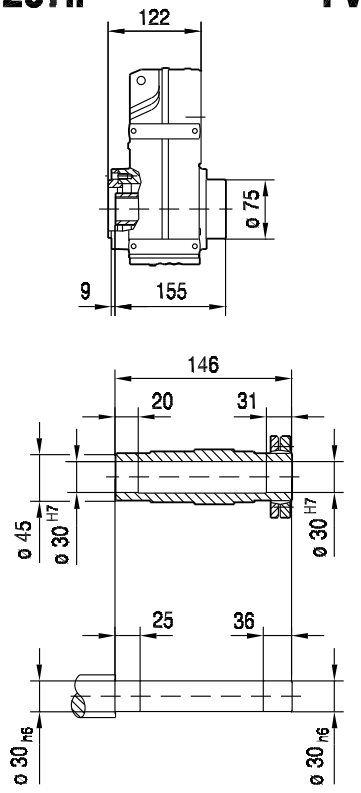

FVZ37..

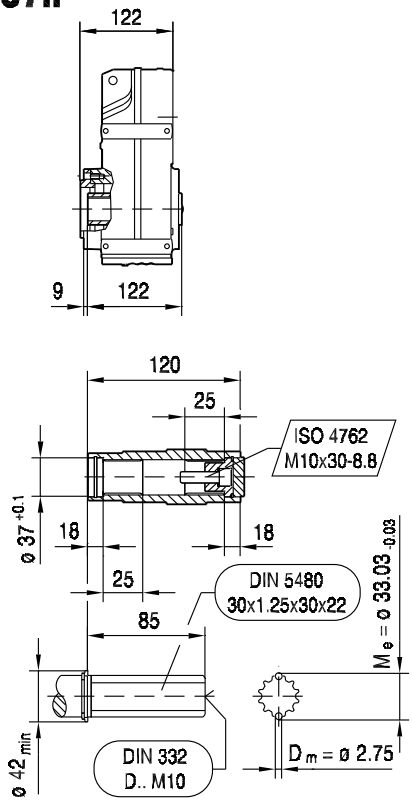

(→ 144)	AQ80/1-3	AQ100/1-2	AQ100/3-4	AQ115/1-3				
L	227	252	266	275				
Z5	104.5	129.5	143.5	152.5				

FT37..

42 082 00 08

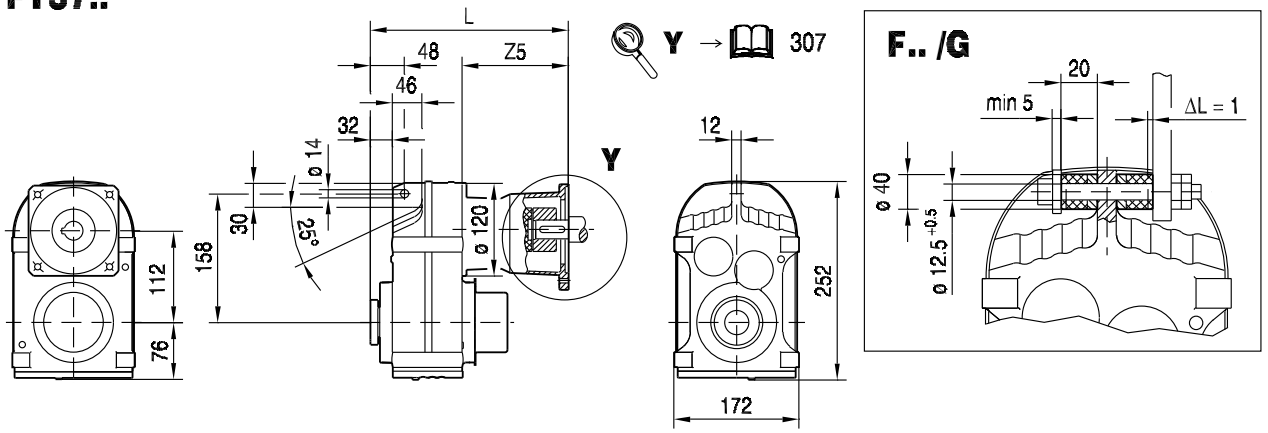

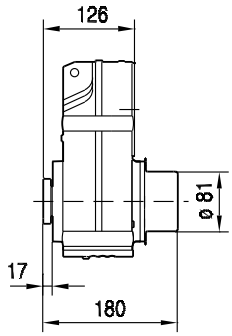

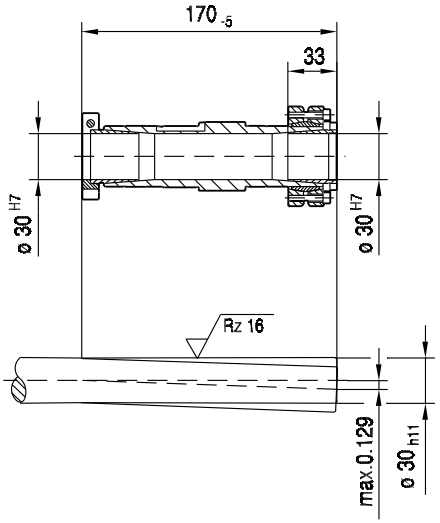

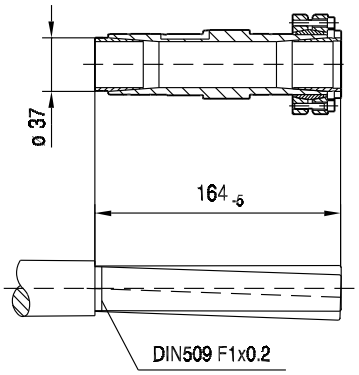

(→ 144)	AQ80/1-3	AQ100/1-2	AQ100/3-4	AQ115/1-3				
L	231	256	270	279				
Z5	104.5	129.5	143.5	152.5				

9.2.5 F 47 AQ.. [Nm]

[Nm]		AQ. M_{amax} | M_{apk} | $M_{aNotaus}$											
	i	80/1-3			100/1-4			115/1-2			115/3		
FA47 2	4.99	84	84	164	84	84	169	84	84	169	225	225	225
	5.76	97	97	190	97	97	195	97	97	195	260	260	260
	6.34	107	107	205	107	107	215	107	107	215	290	290	290
	7.44	126	126	245	126	126	250	126	126	250	340	340	340
	7.88	133	133	260	133	133	265	133	133	265	360	360	360
	8.96	152	152	295	152	152	300	152	152	300	330	410	410
	10.97	186	186	360	186	186	370	186	186	370	400	435	500
	12.66	215	215	415	215	215	430	215	215	430	400	435	580
	13.93	235	235	455	235	235	470	235	235	470	400	435	640
	16.36	275	275	535	275	275	555	275	275	555	400	435	680
	17.33	290	290	570	290	290	585	290	290	585	400	435	680
	19.70	330	330	650	330	330	665	330	330	665	400	435	680
	21.82	370	370	680	370	370	680	370	370	680	400	435	680
	25.72	400	435	680	400	435	680	400	435	680	400	435	680
	29.32	400	435	680	400	435	680	400	435	680	400	435	680
	30.86	400	435	680	400	435	680	400	435	680	400	435	680
FA47 3	28.88	400	435	680	400	435	680	400	435	680	400	435	680
	34.29	400	435	680	400	435	680	400	435	680	400	435	680
	36.61	400	435	680	400	435	680	400	435	680	400	435	680
	42.86	400	435	680	400	435	680	400	435	680	400	435	680
	48.00	400	435	680	400	435	680	400	435	680	400	435	680
	56.49	400	435	680	400	435	680	400	435	680	400	435	680
	65.36	400	435	680	400	435	680	400	435	680	400	435	680
	68.09	400	435	680	400	435	680	400	435	680	400	435	680
	79.72	400	435	680	400	435	680	400	435	680	400	435	680
	89.29	400	435	680	400	435	680	400	435	680	400	435	680
	105.09	400	435	680	400	435	680	400	435	680	400	435	680
	121.57	400	435	680	400	435	680	400	435	680	400	435	680
	130.07	400	435	680	400	435	680	400	435	680	400	435	680
	150.06	400	435	680	400	435	680	400	435	680	400	435	680
	175.38	400	435	680	400	435	680	400	435	680	400	435	680
	190.76	400	435	680	400	435	680	400	435	680	400	435	680

m [kg]		AQ.			
	s	80/1-3	100/1-4	115/1-2	115/3
FA47	2	19	20	21	21
FA47	3	20	21	21	21
FAF: + 2.7 kg / F: + 0.8 kg / FF: + 3.9 kg					

		AQ.			
		80/1-3	100/1-4	115/1-2	115/3
J_A 10^{-4}	[kgm²]	0.77	1.4	1.4	3.1
c_{TA}	[Nm/']	0.25	0.25	0.25	0.625

FA47							F_{Ramax}				F_{Rapk}			
n_e = 1400	i	M_{amax} [Nm]	M_{apk} [Nm]	$M_{aNotaus}$ [Nm]	n_{ak} [1/min]	J_G 10^{-4} [kgm^2]	FA [N]	FAF [N]	F [N]	FF [N]	FA [N]	FAF [N]	F [N]	FF [N]
FA47 2	4.99	320	435	544	341	4.4	1160	1160	2310	2410	10000	10000	900	900
	5.76	340	435	578	295	3.4	1180	1180	2390	2500	10000	10000	900	900
	6.34	350	435	595	284	2.9	1230	1230	2470	2580	10000	10000	900	900
	7.44	380	435	646	242	2.3	1190	1190	2530	2660	10000	10000	900	900
	7.88	380	435	646	254	2.1	1280	1280	2630	2750	10000	10000	900	900
	8.96	330	435	561	424	1.6	1970	1970	3250	3310	10000	10000	900	900
	10.97	400	435	680	346	2.6	2060	2060	3440	3510	10000	10000	900	900
	12.66	400	435	680	371	2.1	2320	2320	3740	3790	10000	10000	900	900
	13.93	400	435	680	388	1.8	2510	2510	3950	3990	10000	10000	900	900
	16.36	400	435	680	403	1.5	2840	2840	4320	4340	10000	10000	900	900
	17.33	400	435	680	398	1.4	2960	2960	4450	4470	10000	10000	900	900
	19.70	400	435	680	355	1.1	3230	3230	4770	4770	10000	10000	900	900
	21.82	400	435	680	321	0.96	3460	3460	5030	5020	10000	10000	900	900
	25.72	400	435	680	272	0.75	3850	3850	5460	5430	10000	10000	900	900
	29.32	400	435	680	239	0.52	4170	4170	5830	5780	10000	10000	900	900
	30.86	400	435	680	227	0.46	4300	4300	5920	5920	10000	10000	900	900
FA47 3	28.88	400	435	680	111	1.1	4130	4130	5790	5740	10000	10000	900	900
	34.29	400	435	680	111	0.85	4580	4580	5920	5920	10000	10000	900	900
	36.61	400	435	680	112	0.76	4750	4750	5920	5920	10000	10000	900	900
	42.86	400	435	680	112	0.58	5190	5190	5920	5920	10000	10000	900	900
	48.00	400	435	680	113	0.48	5520	5520	5920	5920	10000	10000	900	900
	56.49	400	435	680	113	0.36	6020	6020	5920	5920	10000	10000	900	900
	65.36	400	435	680	107	0.29	6490	6490	5920	5920	10000	10000	900	900
	68.09	400	435	680	103	0.61	6620	6620	5920	5920	10000	10000	900	900
	79.72	400	435	680	88	0.48	7160	7160	5920	5920	10000	10000	900	900
	89.29	400	435	680	78	0.40	7570	7570	5920	5920	10000	10000	900	900
	105.09	400	435	680	67	0.30	8180	8180	5920	5920	10000	10000	900	900
	121.57	400	435	680	58	0.25	8760	8760	5920	5920	10000	10000	900	900
	130.07	400	435	680	54	0.23	9040	9040	5920	5920	10000	10000	900	900
	150.06	400	435	680	47	0.18	9640	9640	5920	5920	10000	10000	900	900
	175.38	400	435	680	40	0.14	10000	10000	5920	5920	10000	10000	900	900
	190.76	400	435	680	37	0.13	10000	10000	5920	5920	10000	10000	900	900

AQ.				c_{TG}				φ
	i	n_{epk} [1/min]	η [%]	FA [Nm/']	FAF [Nm/']	F [Nm/']	FF [Nm/']	/R [']
FA47 2	4.99	4500	97	99	99	34	30	9
	5.76	4500	97	99	99	34	30	9
	6.34	4500	97	99	99	34	30	8
	7.44	4500	97	99	99	34	30	8
	7.88	4500	97	99	99	34	30	8
	8.96	4500	97	99	99	34	30	8
	10.97	4500	97	125	125	37	32	6
	12.66	4500	97	125	125	37	32	6
	13.93	4500	97	125	125	37	32	6
	16.36	4500	97	125	125	37	32	6
	17.33	4500	97	125	125	37	32	6
	19.70	4500	97	125	125	37	32	6
	21.82	4500	97	125	125	37	32	6
	25.72	4500	97	125	125	37	32	6
	29.32	4500	97	125	125	37	32	6
	30.86	4500	97	125	125	37	32	6

AQ.	i	n_{epk} [1/min]	η [%]	c_{TG} FA [Nm/']	FAF [Nm/']	F [Nm/']	FF [Nm/']	φ /R [']
FA47  3	28.88	4500	96	136	136	38	33	7
	34.29	4500	96	136	136	38	33	7
	36.61	4500	96	136	136	38	33	7
	42.86	4500	96	136	136	38	33	7
	48.00	4500	95	136	136	38	33	7
	56.49	4500	95	136	136	38	33	7
	65.36	4500	95	136	136	38	33	7
	68.09	4500	95	138	138	38	33	6
	79.72	4500	95	138	138	38	33	6
	89.29	4500	95	138	138	38	33	6
	105.09	4500	94	138	138	38	33	6
	121.57	4500	94	138	138	38	33	6
	130.07	4500	94	138	138	38	33	6
	150.06	4500	93	138	138	38	33	6
	175.38	4500	93	138	138	38	33	6
	190.76	4500	92	138	138	38	33	6

9.2.6 F 47 AQ.. [mm]

F47..

42 084 00 08

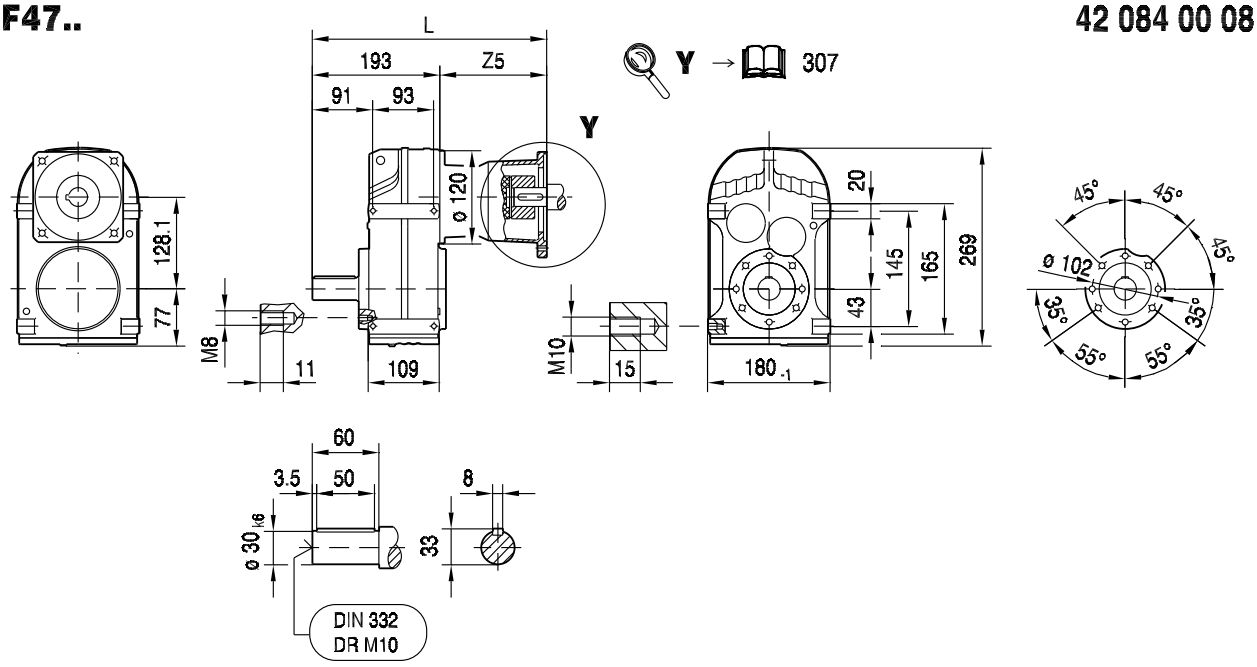

FA47B..

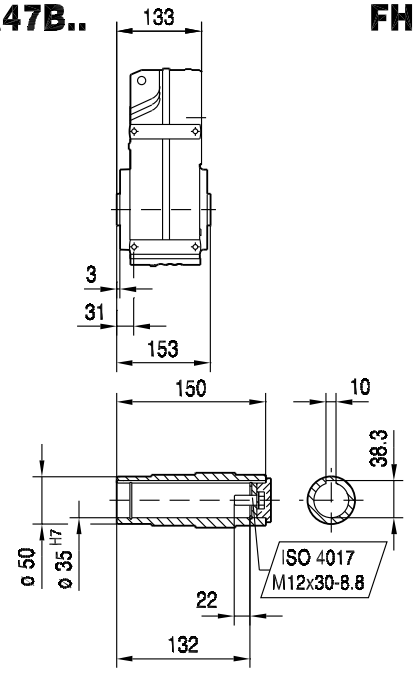

FH47B..

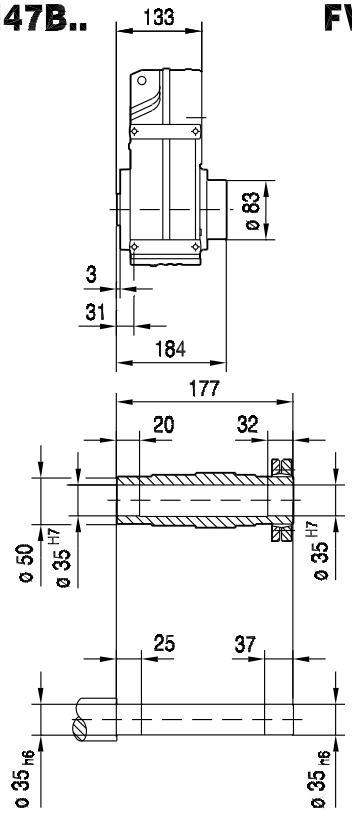

FV47B..

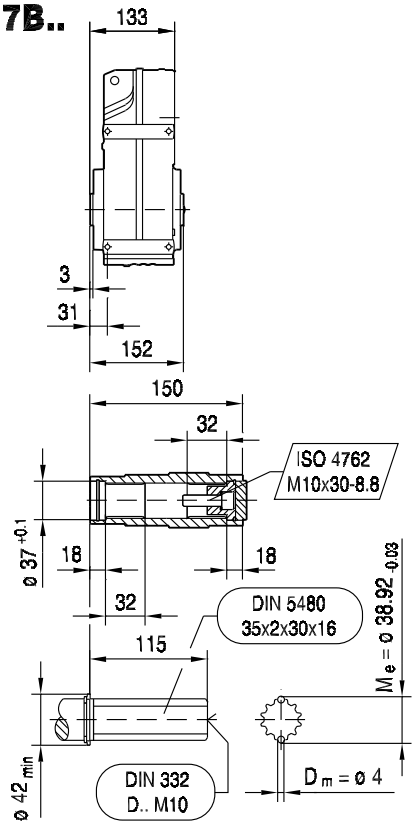

(→ 144)	AQ80/1-3	AQ100/1-2	AQ100/3-4	AQ115/1-3				
L	298	323	337	346				
Z5	104.5	129.5	143.5	152.5				

42 085 00 08

FF47..

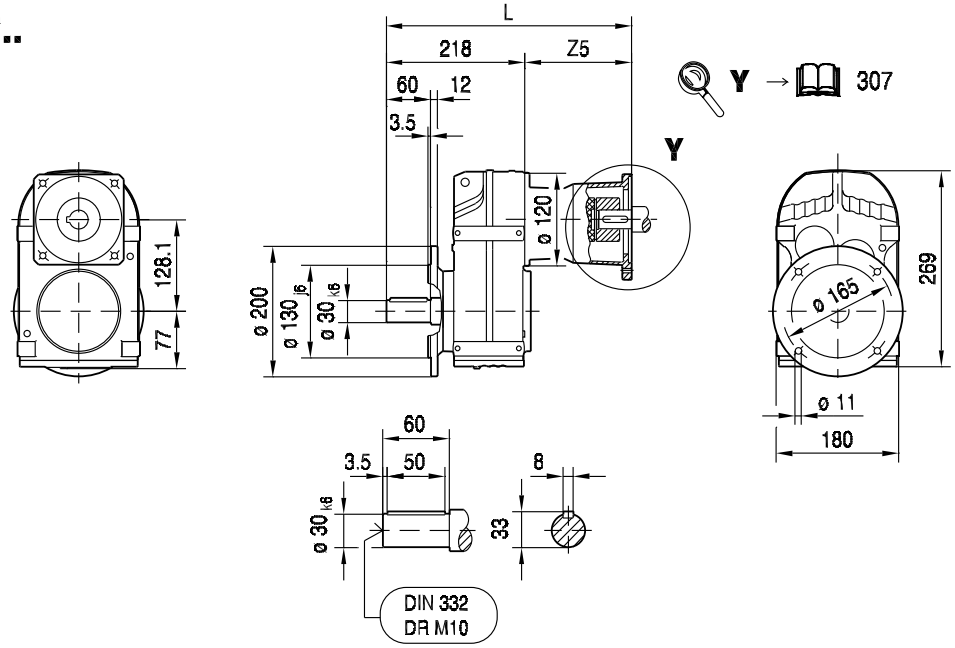

FAF47..

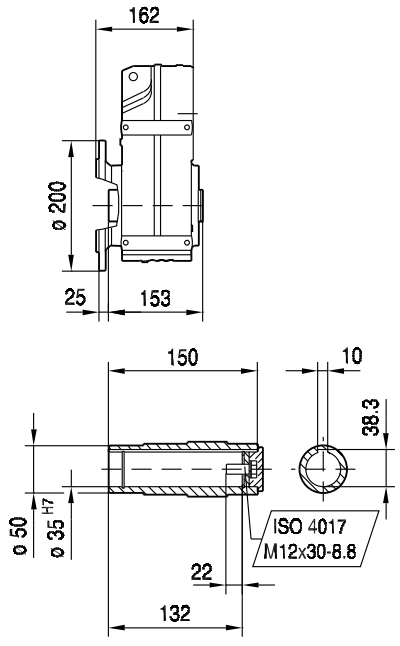

FHF47..

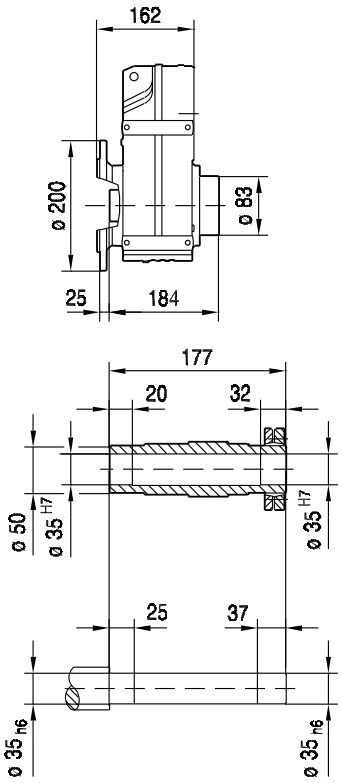

FVF47..

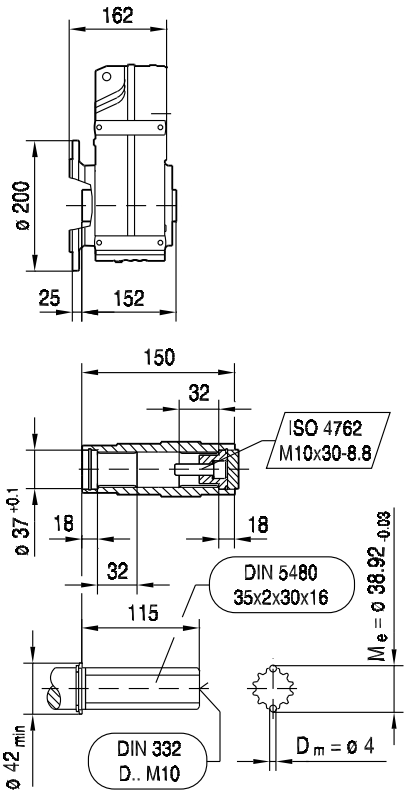

(→ 144)	AQ80/1-3	AQ100/1-2	AQ100/3-4	AQ115/1-3				
L	323	348	362	371				
Z5	104.5	129.5	143.5	152.5				

FA47..

42 086 00 08

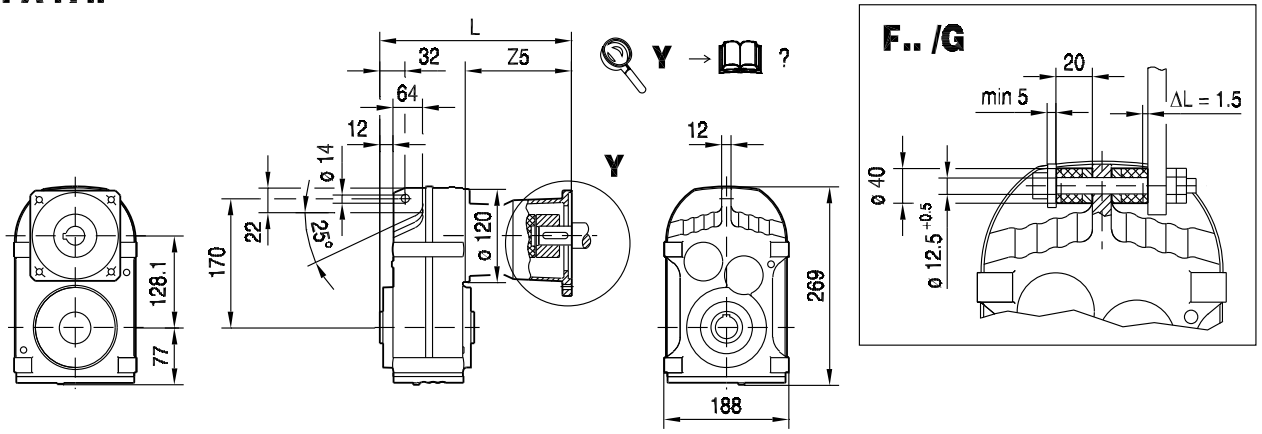

FA47..

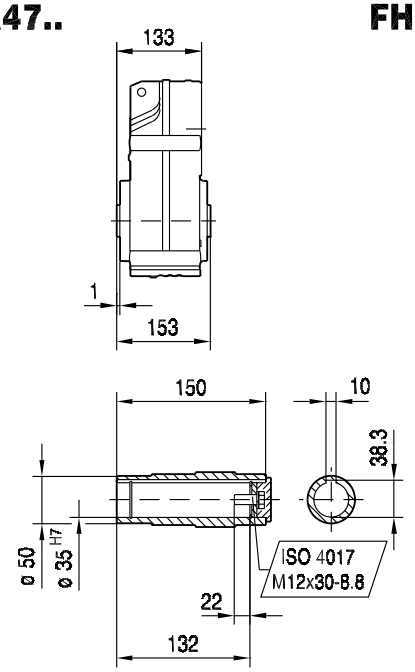

FH47..

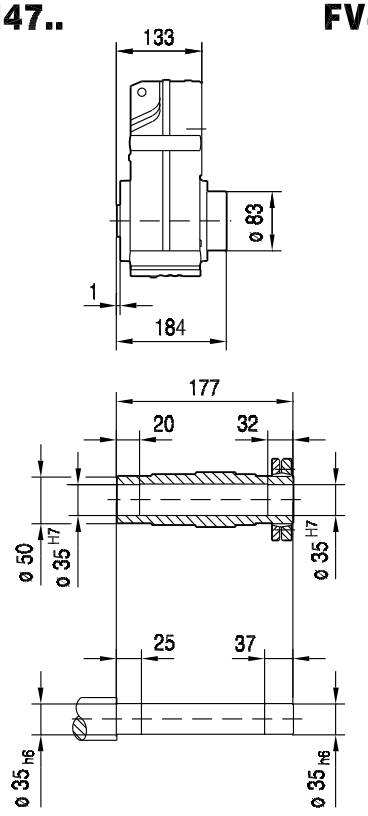

FV47..

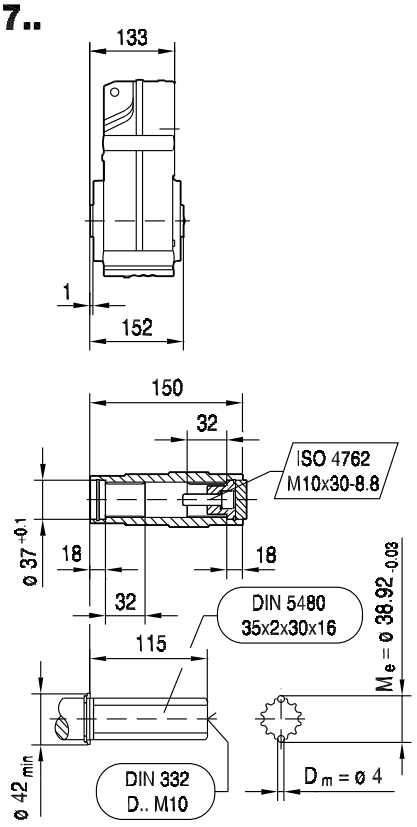

(→ 144)	AQ80/1-3	AQ100/1-2	AQ100/3-4	AQ115/1-3				
L	238	263	277	286				
Z5	104.5	129.5	143.5	152.5				

FAZ47..

42 088 00 08

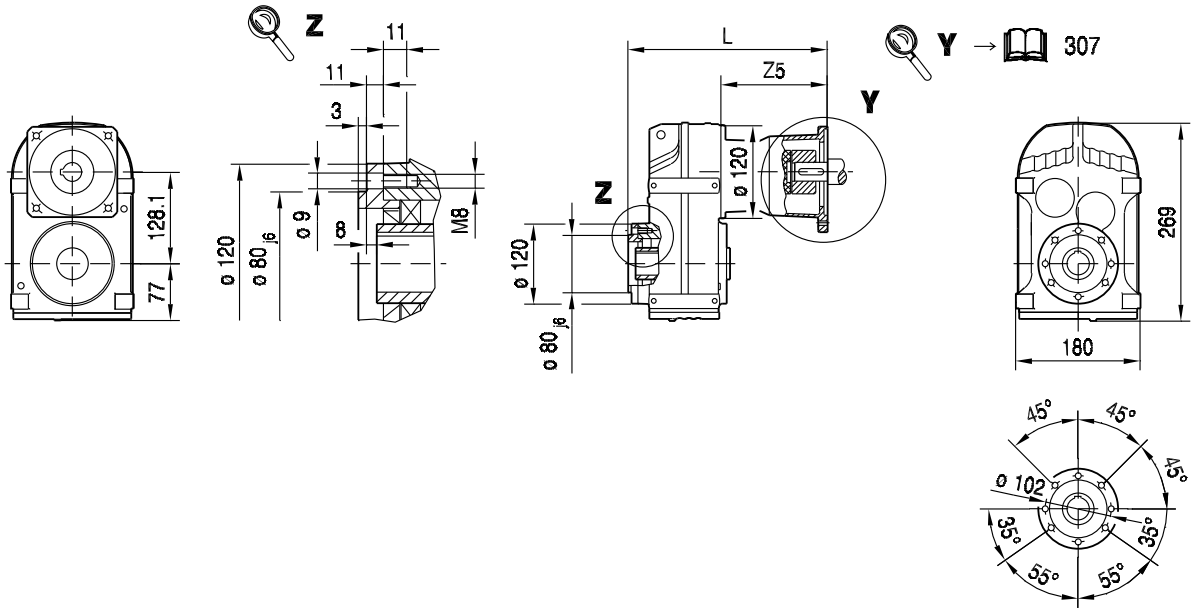

9

FAZ47..

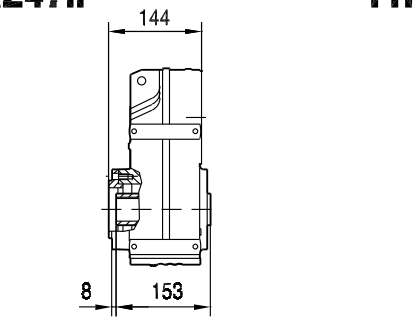

FHZ47..

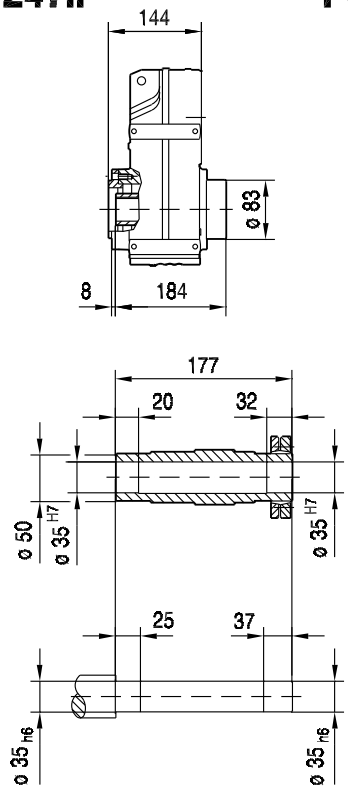

FVZ47..

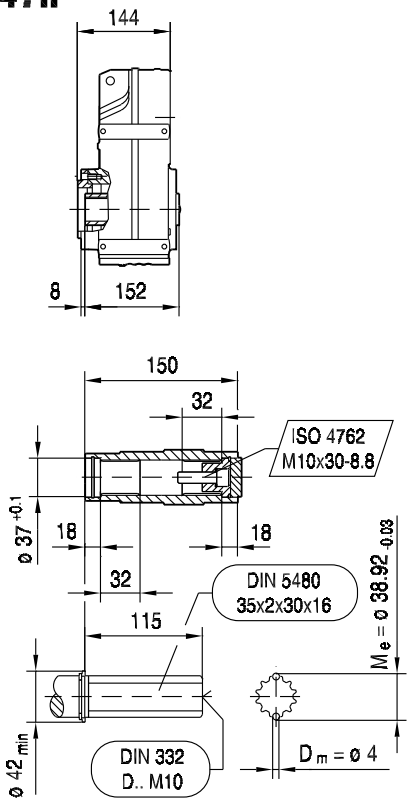

(→ 144)	AQ80/1-3	AQ100/1-2	AQ100/3-4	AQ115/1-3				
L	249	274	288	297				
Z5	104.5	129.5	143.5	152.5				

FT47..

42 087 00 08

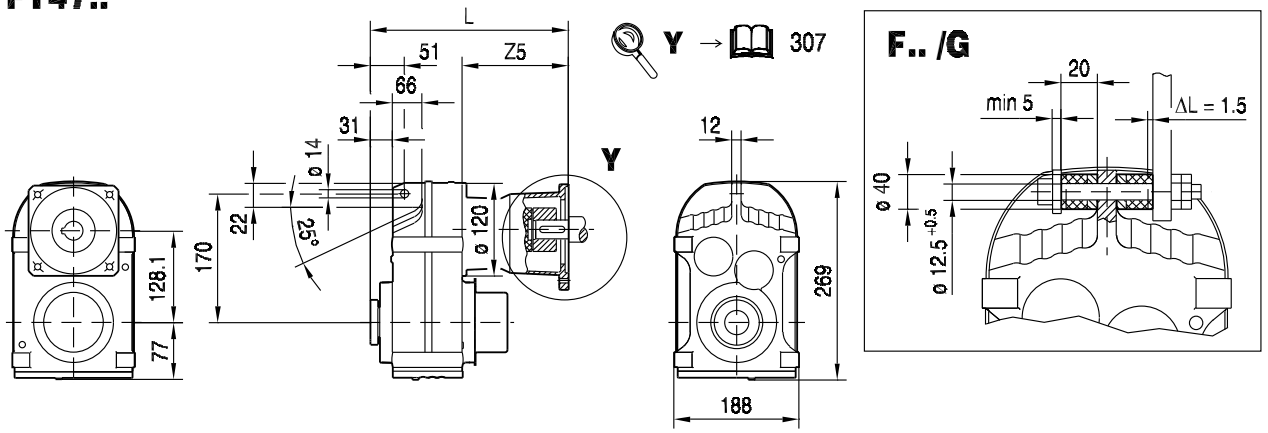

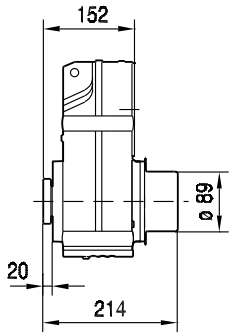

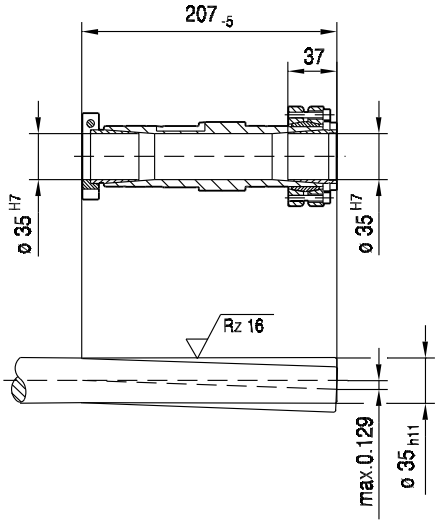

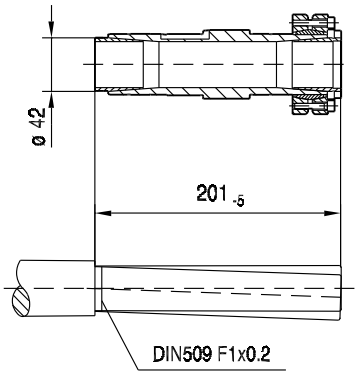

(→ 144)	AQ80/1-3	AQ100/1-2	AQ100/3-4	AQ115/1-3				
L	257	282	296	305				
Z5	104.5	129.5	143.5	152.5				

9.2.7 F 57 AQ.. [Nm]

[Nm]		AQ. M_{amax} | M_{apk} | $M_{aNotaus}$																								
	i	80/1-3			100/1-4			115/1-2			115/3			140/1			140/2-4			160/1			190/1-3		
FA57 2	5.18	88	88	170	88	88	176	88	88	176	235	235	235	310	310	515	415	475	515	415	475	515	415	475	705
	5.98	101	101	197	101	101	200	101	101	200	275	275	275	355	355	595	420	475	595	420	475	595	420	475	710
	6.58	111	111	215	111	111	220	111	111	220	300	300	300	390	390	655	420	480	655	420	480	655	420	480	710
	7.73	131	131	255	131	131	260	131	131	260	355	355	355	420	460	710	420	480	710	420	480	710	420	480	710
	8.19	139	139	270	139	139	275	139	139	275	375	375	375	420	485	710	420	485	710	420	485	710	420	485	710
	9.31	158	158	305	158	158	315	158	158	315	420	425	425	420	460	710	420	460	710	420	460	710			
	10.64	180	180	350	180	180	360	180	180	360	485	485	485	600	635	1020	600	645	1020	600	645	1020	600	645	1020
	12.29	205	205	405	205	205	415	205	205	415	565	565	565	600	645	1020	600	645	1020	600	645	1020	600	645	1020
	13.52	225	225	445	225	225	455	225	225	455	600	620	620	600	645	1020	600	645	1020	600	645	1020	600	645	1020
	15.88	265	265	520	265	265	535	265	265	535	600	645	730	600	645	1020	600	645	1020	600	645	1020	600	645	1020
	16.81	285	285	550	285	285	570	285	285	570	600	645	770	600	645	1020	600	645	1020	600	645	1020	600	645	1020
	19.11	320	320	630	320	320	645	320	320	645	600	645	870	600	645	1020	600	645	1020	600	645	1020			
	21.17	355	355	695	355	355	715	355	355	715	600	645	970	600	645	1020	600	645	1020	600	645	1020			
	24.96	420	420	820	420	420	840	420	420	840	575	645	970	575	645	970	575	645	970	575	645	970			
	28.45	480	480	910	480	480	910	480	480	910	535	645	910												
	29.94	505	505	920	505	505	920	505	505	920	545	645	920												
	34.24	500	580	850	500	580	850	500	580	850	500	645	850												
	40.13	290	435	490	290	435	490	290	435	490	290	435	490												
FA57 3	30.15	510	510	990	510	510	1000	510	510	1000	590	645	1000	590	645	1000	590	645	1000	590	645	1000	590	645	1000
	35.79	600	605	1020	600	605	1020	600	605	1020	600	645	1020	600	645	1020	600	645	1020	600	645	1020	600	645	1020
	38.21	600	645	1020	600	645	1020	600	645	1020	600	645	1020	600	645	1020	600	645	1020	600	645	1020	600	645	1020
	44.73	600	645	1020	600	645	1020	600	645	1020	600	645	1020	600	645	1020	600	645	1020	600	645	1020			
	50.10	600	645	1020	600	645	1020	600	645	1020	600	645	1020	600	645	1020	600	645	1020	600	645	1020			
	58.97	600	645	1020	600	645	1020	600	645	1020	600	645	1020	600	645	1020	600	645	1020	600	645	1020			
	68.22	600	645	1020	600	645	1020	600	645	1020	600	645	1020												
	72.98	600	645	1020	600	645	1020	600	645	1020	600	645	1020												
	83.46	600	645	1020	600	645	1020	600	645	1020	600	645	1020	600	645	1020	600	645	1020	600	645	1020			
	93.47	600	645	1020	600	645	1020	600	645	1020	600	645	1020	600	645	1020	600	645	1020	600	645	1020			
	110.01	600	645	1020	600	645	1020	600	645	1020	600	645	1020	600	645	1020	600	645	1020	600	645	1020			
	127.27	600	645	1020	600	645	1020	600	645	1020	600	645	1020												
	136.16	600	645	1020	600	645	1020	600	645	1020	600	645	1020												
	157.09	600	645	1020	600	645	1020	600	645	1020	600	645	1020												
	183.60	600	645	1020	600	645	1020	600	645	1020	600	645	1020												
	199.70	600	645	1020	600	645	1020	600	645	1020	600	645	1020												

m [kg]		AQ.							
	s	80/1-3	100/1-4	115/1-2	115/3	140/1	140/2-4	160/1	190/1-3
FA57	2	27	28	28	28	33	33	33	42
FA57	3	28	28	29	29	34	34	34	43
FAF: + 5.5 kg / F: + 0.2 kg / FF: + 6.6 kg									

		AQ.							
		80/1-3	100/1-4	115/1-2	115/3	140/1	140/2-4	160/1	190/1-3
J_A 10^{-4}	[kgm^2]	0.77	1.4	1.4	3.1	5.1	10.0	10.0	25.0
c_{TA}	[Nm/']	0.25	0.25	0.25	0.625	0.625	1.0	1.0	2.08



FA57							F_{Ramax}				F_{Rapk}			
n_e = 1400	i	M_{amax} [Nm]	M_{apk} [Nm]	$M_{aNotaus}$ [Nm]	n_{ak} [1/min]	J_G 10^{-4} [kgm^2]	FA [N]	FAF [N]	F [N]	FF [N]	FA [N]	FAF [N]	F [N]	FF [N]
FA57 2	5.18	415	475	706	405	5.8	2020	2020	3460	3670	11500	11500	9910	8490
	5.98	420	475	714	452	4.5	2240	2240	3730	3940	11500	11500	9910	8490
	6.58	420	480	714	502	3.8	2430	2430	3940	4140	11500	11500	9880	8460
	7.73	420	480	714	595	2.9	2760	2760	4310	4500	11500	11500	9880	8460
	8.19	420	485	714	623	2.6	2880	2880	4450	4640	11500	11500	9840	8440
	9.31	420	460	714	666	2.0	3170	3170	4760	4950	11500	11500	10000	8580
	10.64	600	645	1020	207	3.2	2470	2470	4320	4590	11500	11500	6930	6930
	12.29	600	645	1020	212	2.6	2810	2810	4710	4970	11500	11500	6930	6930
	13.52	600	645	1020	207	2.2	3050	3050	4980	5230	11500	11500	6930	6930
	15.88	600	645	1020	214	1.8	3470	3470	5450	5690	11500	11500	6930	6930
	16.81	600	645	1020	214	1.6	3630	3630	5620	5860	11500	11500	6930	6930
	19.11	600	645	1020	215	1.3	3980	3980	6020	6260	11500	11500	6930	6930
	21.17	600	645	1020	217	1.1	4280	4280	6350	6580	11500	11500	6930	6930
	24.96	575	645	978	252	0.84	4970	4970	7060	7260	11500	11500	6930	6930
	28.45	535	645	910	246	0.59	5690	5690	7760	7930	11500	11500	6930	6930
	29.94	545	645	927	234	0.53	5790	5790	7890	8060	11500	11500	6930	6930
	34.24	500	645	850	204	0.43	6580	6580	8670	8500	11500	11500	6930	6930
	40.13	290	435	493	174	0.34	8750	8750	10500	9550	11500	11500	10400	8850
FA57 3	30.15	590	645	1003	50	1.3	5460	5460	7650	7850	11500	11500	6930	6930
	35.79	600	645	1020	47	0.94	5980	5980	8250	7900	11500	11500	6930	6930
	38.21	600	645	1020	50	0.84	6210	6210	8510	7900	11500	11500	6930	6930
	44.73	600	645	1020	49	0.64	6790	6790	9160	7900	11500	11500	6930	6930
	50.10	600	645	1020	50	0.52	7230	7230	9200	7900	11500	11500	6930	6930
	58.97	600	645	1020	51	0.38	7890	7890	9200	7900	11500	11500	6930	6930
	68.22	600	645	1020	51	0.31	8510	8510	9200	7900	11500	11500	6930	6930
	72.98	600	645	1020	51	0.28	8810	8810	9200	7900	11500	11500	6930	6930
	83.46	600	645	1020	42	0.51	9420	9420	9200	7900	11500	11500	6930	6930
	93.47	600	645	1020	42	0.42	9960	9960	9200	7900	11500	11500	6930	6930
	110.01	600	645	1020	42	0.31	10800	10800	9200	7900	11500	11500	6930	6930
	127.27	600	645	1020	42	0.26	11500	11500	9200	7900	11500	11500	6930	6930
	136.16	600	645	1020	43	0.23	11500	11500	9200	7900	11500	11500	6930	6930
	157.09	600	645	1020	43	0.19	11500	11500	9200	7900	11500	11500	6930	6930
	183.60	600	645	1020	38	0.15	11500	11500	9200	7900	11500	11500	6930	6930
	199.70	600	645	1020	35	0.13	11500	11500	9200	7900	11500	11500	6930	6930

AQ.				c_{TG}				φ
	i	n_{epk} [1/min]	η [%]	FA [Nm/']	FAF [Nm/']	F [Nm/']	FF [Nm/']	/R [']
FA57 2	5.18	4468	97	120	120	43	38	9
	5.98	4500	97	120	120	43	38	9
	6.58	4500	97	120	120	43	38	8
	7.73	4500	97	120	120	43	38	8
	8.19	4500	97	120	120	43	38	8
	9.31	4500	97	120	120	43	38	8
	10.64	4500	97	150	150	47	40	6
	12.29	4500	97	150	150	47	40	6
	13.52	4500	97	150	150	47	40	6
	15.88	4500	97	150	150	47	40	6
	16.81	4500	97	150	150	47	40	6
	19.11	4500	97	150	150	47	40	6
	21.17	4500	97	150	150	47	40	6
	24.96	4500	97	150	150	47	40	6
	28.45	4500	97	150	150	47	40	6
	29.94	4500	97	150	150	47	40	6
	34.24	4500	97	150	150	47	40	6
	40.13	4500	96	150	150	47	40	6

AQ.	i	n_{epk} [1/min]	η [%]	c_{TG} FA [Nm/']	FAF [Nm/']	F [Nm/']	FF [Nm/']	φ /R [']
FA57 3	30.15	4500	96	169	169	49	41	7
	35.79	4500	96	169	169	49	41	7
	38.21	4500	96	169	169	49	41	7
	44.73	4500	96	169	169	49	41	7
	50.10	4500	96	169	169	49	41	7
	58.97	4500	95	169	169	49	41	7
	68.22	4500	95	169	169	49	41	6
	72.98	4500	95	169	169	49	41	6
	83.46	4500	95	171	171	49	42	6
	93.47	4500	95	171	171	49	42	6
	110.01	4500	94	171	171	49	42	6
	127.27	4500	94	171	171	49	42	6
	136.16	4500	94	171	171	49	42	6
	157.09	4500	94	171	171	49	42	6
	183.60	4500	93	171	171	49	42	6
	199.70	4500	93	171	171	49	42	6

9.2.8 F 57 AQ.. [mm]

F57..

42 089 00 08

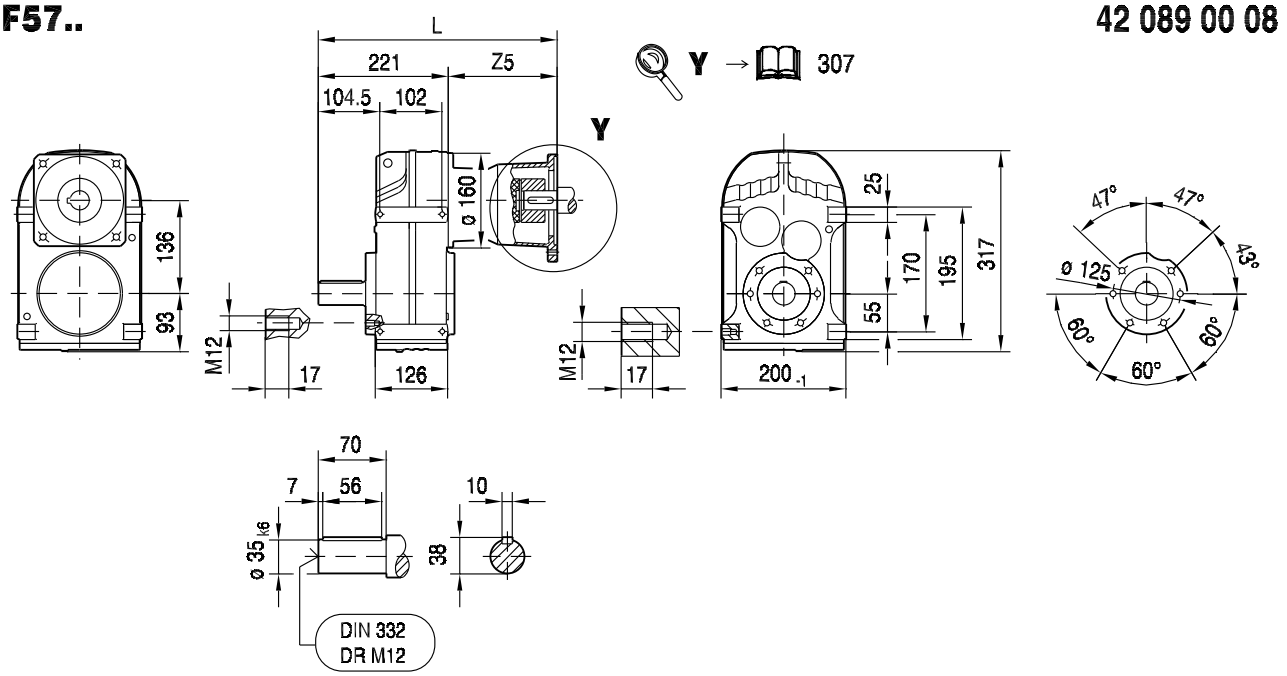

FA57B..

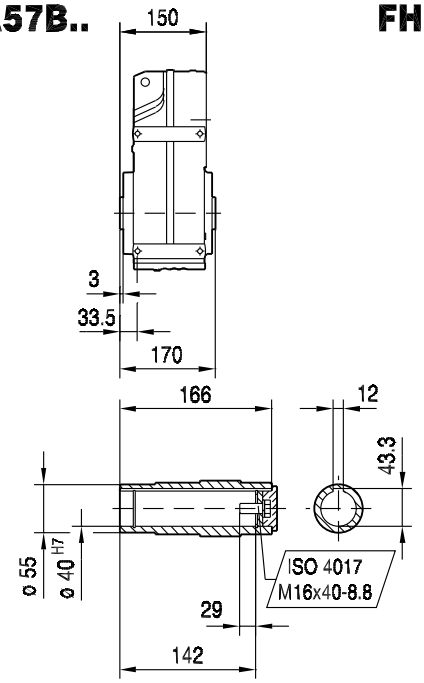

FH57B..

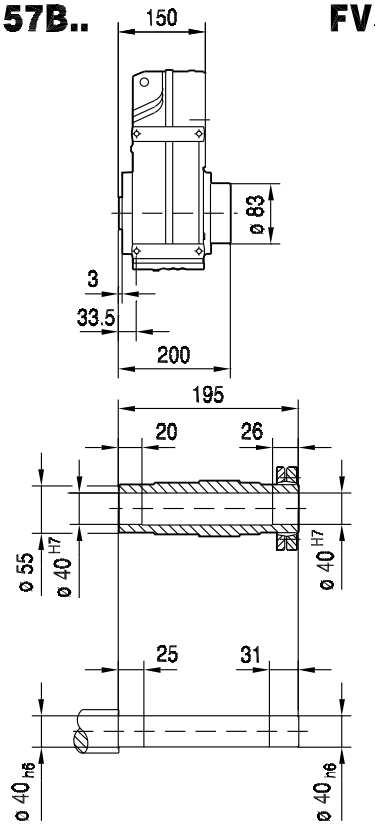

FV57B..

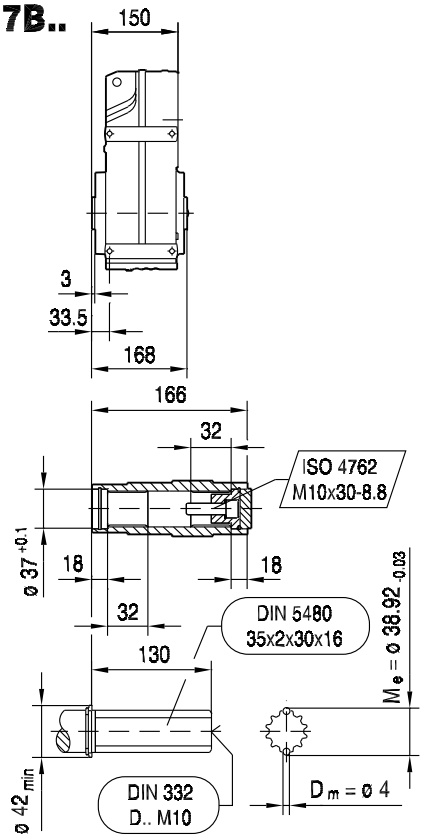

(→ 144)	AQ80/1-3	AQ100/1-2	AQ100/3-4	AQ115/1-3	AQ140/1-2	AQ140/3-4	AQ160/1	AQ190/1-2	AQ190/3
L	319	344	358	367	396	409	409	459	483
Z5	98	123	137	146	175	188	188	237.5	261.5

42 090 00 08

FF57..

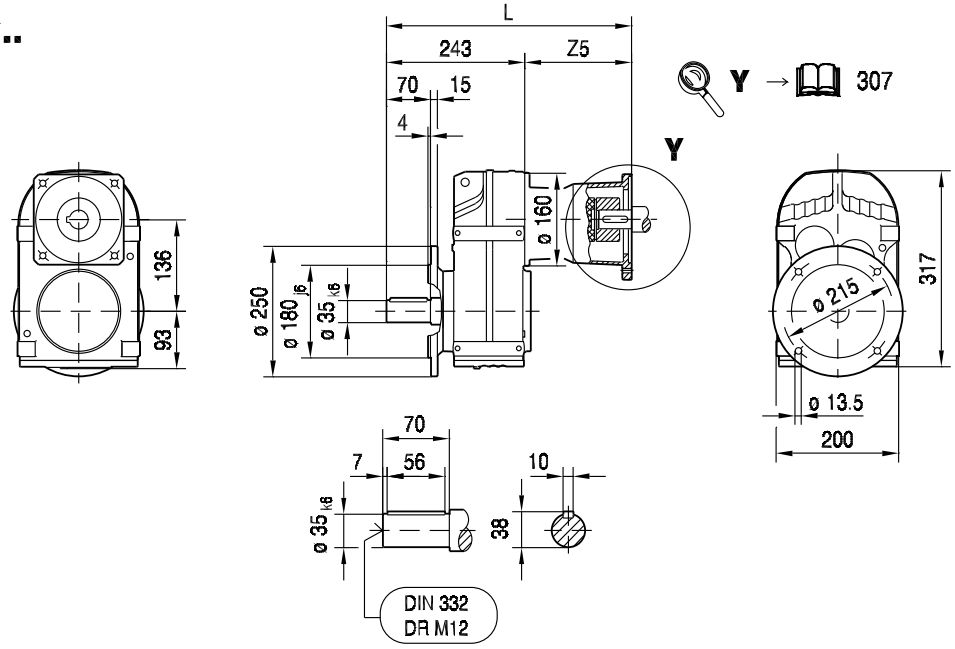

9

FAF57..

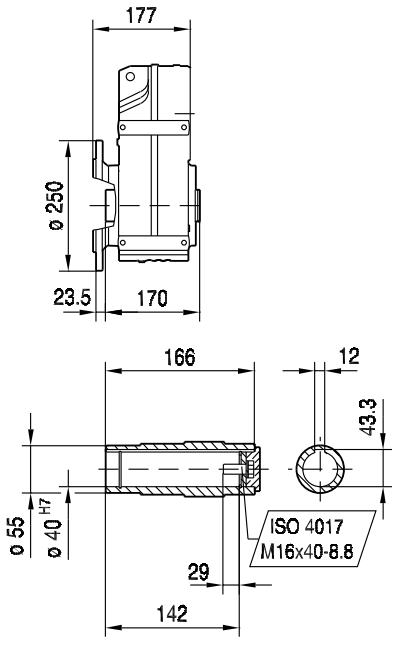

FHF57..

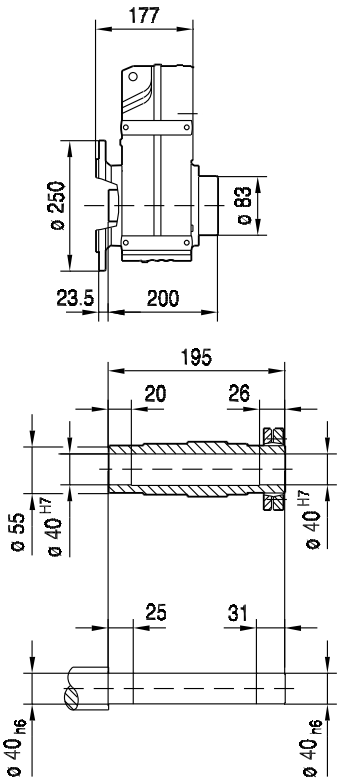

FVF57..

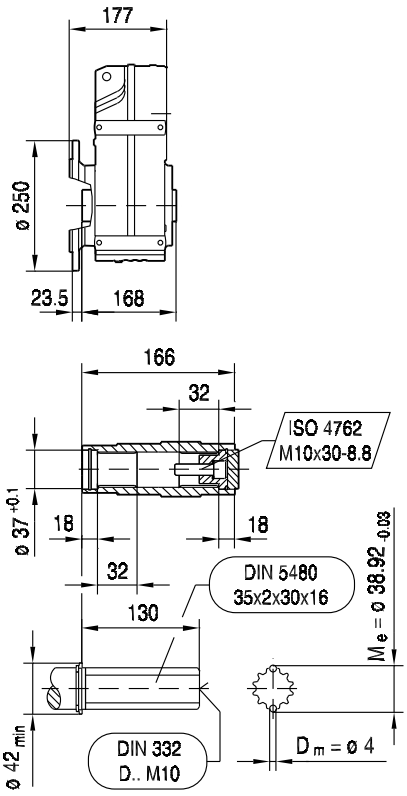

(→ 144)	AQ80/1-3	AQ100/1-2	AQ100/3-4	AQ115/1-3	AQ140/1-2	AQ140/3-4	AQ160/1	AQ190/1-2	AQ190/3
L	341	366	380	389	418	431	431	481	505
Z5	98	123	137	146	175	188	188	237.5	261.5

FA57..

42 091 00 08

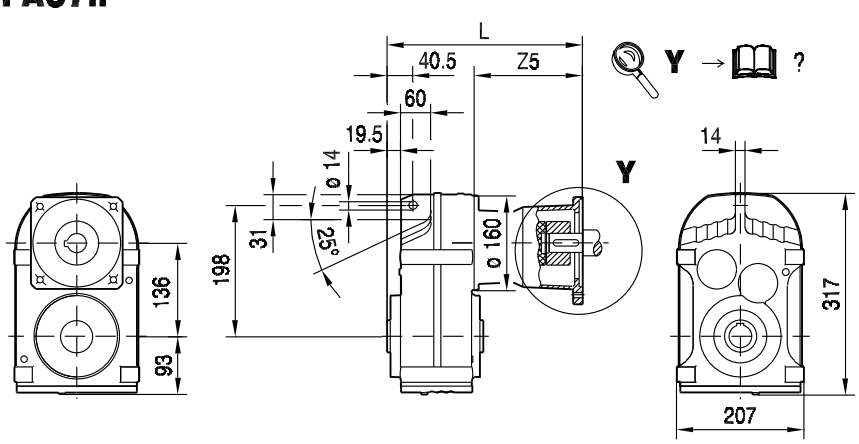

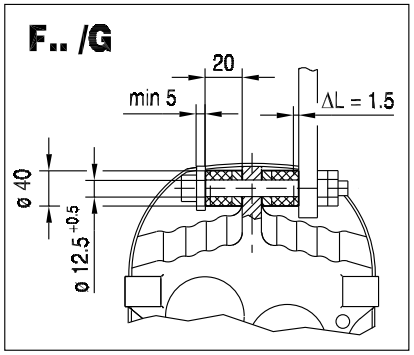

FA57..

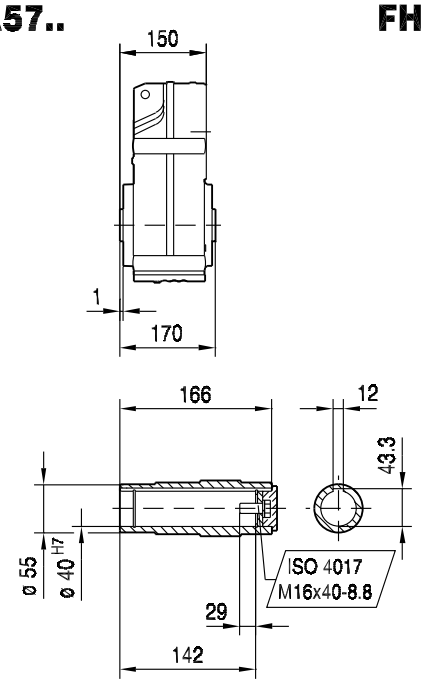

FH57..

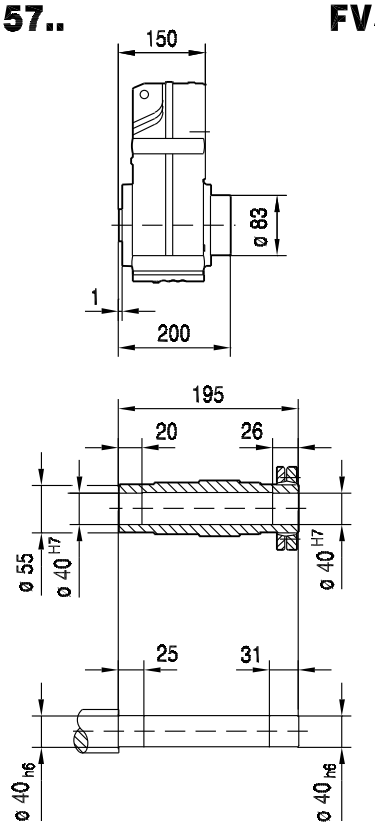

FV57..

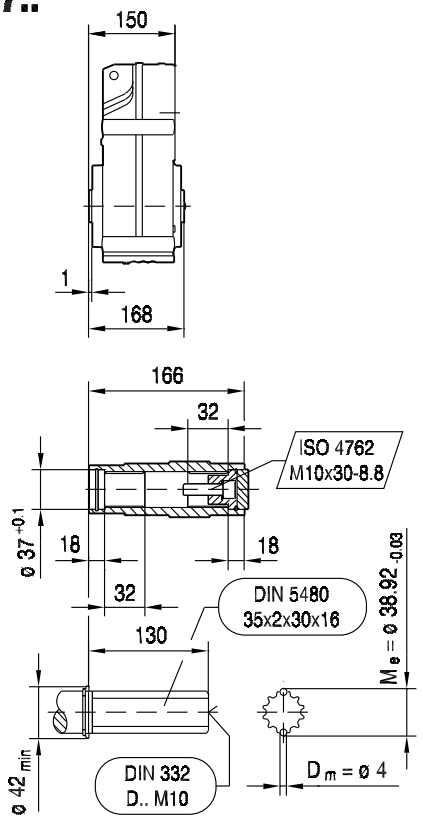

(→ 144)	AQ80/1-3	AQ100/1-2	AQ100/3-4	AQ115/1-3	AQ140/1-2	AQ140/3-4	AQ160/1	AQ190/1-2	AQ190/3
L	248	273	287	296	325	338	338	388	412
Z5	98	123	137	146	175	188	188	237.5	261.5

F67..

42 094 00 08

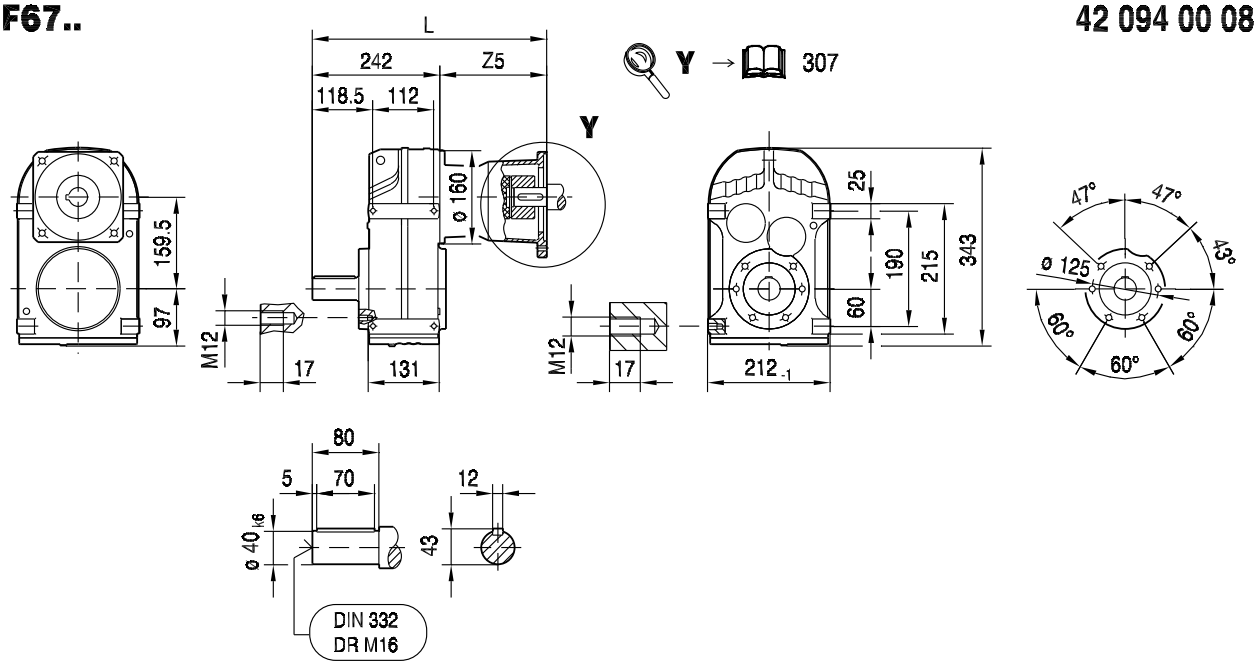

FA67B..

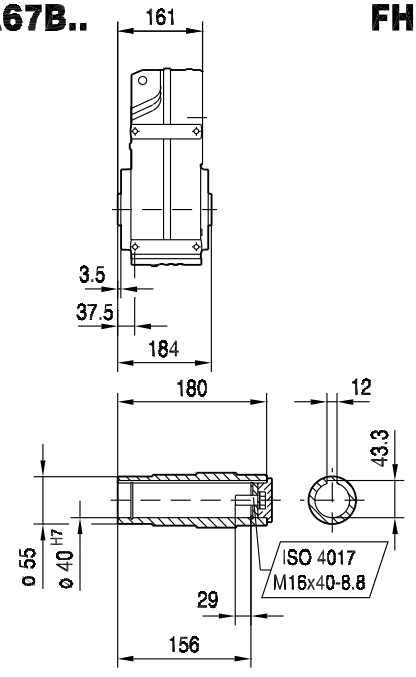

FH67B..

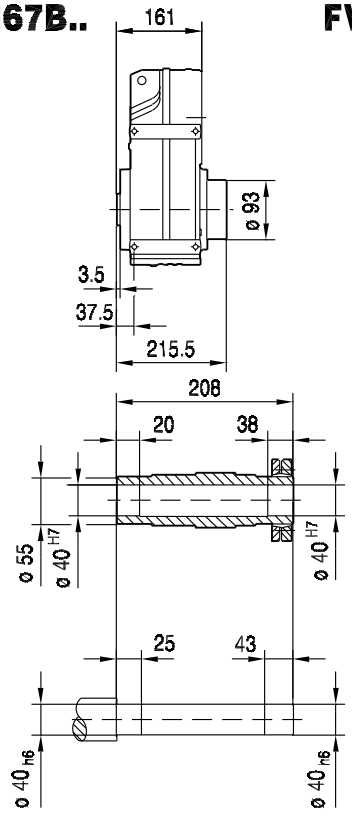

FV67B..

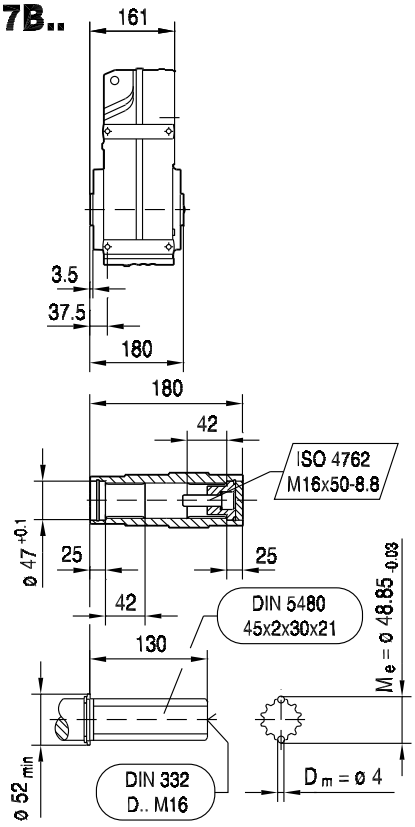

(→ 144)	AQ80/1-3	AQ100/1-2	AQ100/3-4	AQ115/1-3	AQ140/1-2	AQ140/3-4	AQ160/1	AQ190/1-2	AQ190/3
L	260	285	299	308	337	350	350	400	424
Z5	98	123	137	146	175	188	188	237.5	261.5

FT57..

42 092 00 08

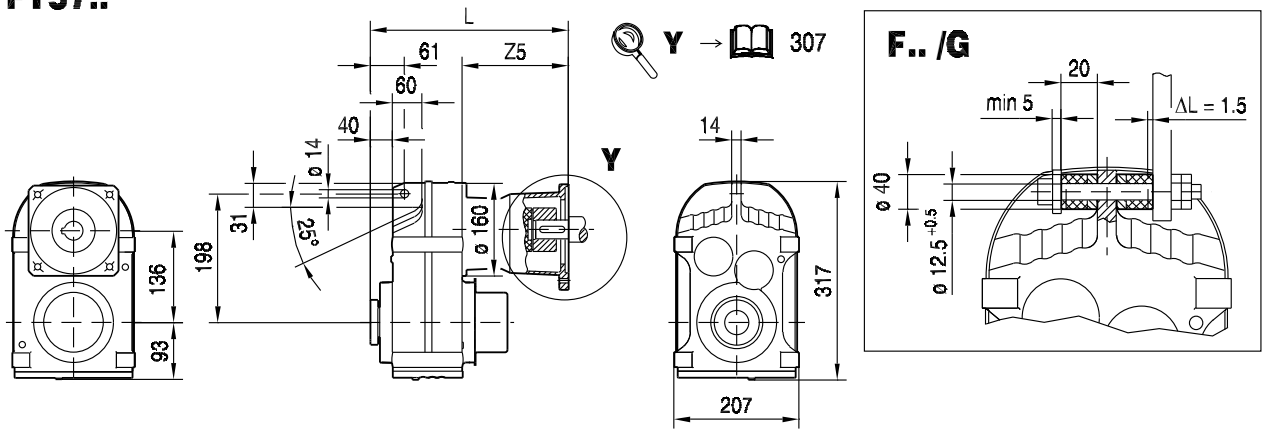

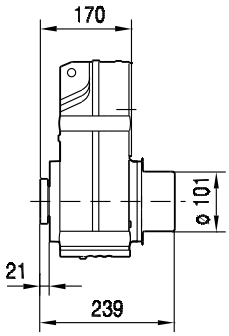

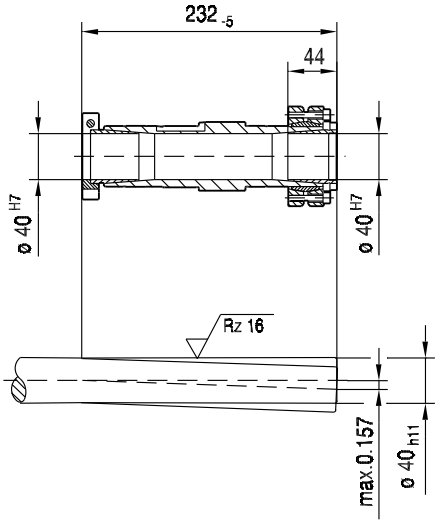

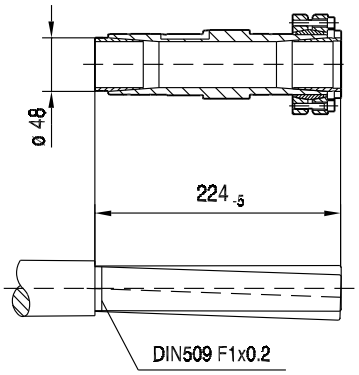

(→ 144)	AQ80/1-3	AQ100/1-2	AQ100/3-4	AQ115/1-3	AQ140/1-2	AQ140/3-4	AQ160/1	AQ190/1-2	AQ190/3
L	268	293	307	316	345	358	358	408	432
Z5	98	123	137	146	175	188	188	237.5	261.5

9.2.9 F 67 AQ.. [Nm]

[Nm]		AQ. M_{amax} | M_{apk} | $M_{aNotaus}$																								
	i	80/1-3			100/1-4			115/1-2			115/3			140/1			140/2-4			160/1			190/1-3		
FA67 2	3.97	67	67	131	67	67	134	67	67	134	182	182	182	235	235	395	395	395	395	395	395	395	500	635	635
	4.66	79	79	153	79	79	158	79	79	158	210	210	210	275	275	465	465	465	465	465	465	465	560	700	745
	5.25	89	89	173	89	89	178	89	89	178	240	240	240	315	315	525	525	525	525	525	525	525	590	705	840
	5.95	101	101	196	101	101	200	101	101	200	270	270	270	355	355	595	595	595	595	595	595	595	610	705	950
	6.78	115	115	220	115	115	230	115	115	230	310	310	310	405	405	675	620	675	675	620	675	675	620	710	1050
	7.53	128	128	245	128	128	255	128	128	255	345	345	345	450	450	750	610	715	750	610	715	750	610	715	1030
	8.60	146	146	280	146	146	290	146	146	290	395	395	395	515	515	860	570	715	860	570	715	860	570	715	960
	9.08	154	154	295	154	154	305	154	154	305	415	415	415	530	540	900	530	715	900	530	715	900	530	715	900
	9.66	164	164	315	164	164	325	164	164	325	440	440	440	575	575	960	820	920	960	820	920	960	820	920	1390
	11.31	192	192	370	192	192	380	192	192	380	520	520	520	675	675	1130	820	920	1130	820	920	1130	820	920	1390
	12.76	215	215	420	215	215	430	215	215	430	585	585	585	765	765	1270	820	920	1270	820	920	1270	820	920	1390
	14.46	245	245	475	245	245	490	245	245	490	665	665	665	820	860	1390	820	920	1390	820	920	1390	820	920	1390
	16.48	280	280	540	280	280	560	280	280	560	755	755	755	820	920	1390	820	920	1390	820	920	1390	820	920	1390
	18.29	310	310	600	310	310	620	310	310	620	820	840	840	820	920	1390	820	920	1390	820	920	1390	820	920	1390
	20.90	355	355	685	355	355	710	355	355	710	820	920	960	820	920	1390	820	920	1390	820	920	1390	820	920	1390
	22.05	370	370	725	370	370	745	370	370	745	820	920	1010	820	920	1390	820	920	1390	820	920	1390	820	920	1390
	25.13	425	425	820	425	425	850	425	425	850	820	920	1150	820	920	1390	820	920	1390	820	920	1390			
	27.41	465	465	900	465	465	930	465	465	930	820	920	1260	820	920	1390	820	920	1390	820	920	1390			
	32.08	545	545	1050	545	545	1090	545	545	1090	820	920	1390	820	920	1390	820	920	1390	820	920	1390			
	36.30	615	615	1190	615	615	1230	615	615	1230	820	920	1390												
FA67 3	34.01	575	575	1120	575	575	1150	575	575	1150	740	920	1250	740	920	1250	740	920	1250	740	920	1250	740	920	1250
	39.26	665	665	1290	665	665	1320	665	665	1320	780	920	1320	780	920	1320	780	920	1320	780	920	1320	780	920	1320
	43.20	730	730	1390	730	730	1390	730	730	1390	820	920	1390	820	920	1390	820	920	1390	820	920	1390	820	920	1390
	50.74	820	860	1390	820	860	1390	820	860	1390	820	920	1390	820	920	1390	820	920	1390	820	920	1390	820	920	1390
	53.73	820	910	1390	820	910	1390	820	910	1390	820	920	1390	820	920	1390	820	920	1390	820	920	1390	820	920	1390
	61.07	820	920	1390	820	920	1390	820	920	1390	820	920	1390	820	920	1390	820	920	1390	820	920	1390			
	67.65	820	920	1390	820	920	1390	820	920	1390	820	920	1390	820	920	1390	820	920	1390	820	920	1390			
	79.76	820	920	1390	820	920	1390	820	920	1390	820	920	1390	820	920	1390	820	920	1390	820	920	1390			
	90.59	820	920	1390	820	920	1390	820	920	1390	820	920	1390	820	920	1390	820	920	1390	820	920	1390	820	920	1390
	95.94	820	920	1390	820	920	1390	820	920	1390	820	920	1390	820	920	1390	820	920	1390	820	920	1390	820	920	1390
	109.04	820	920	1390	820	920	1390	820	920	1390	820	920	1390	820	920	1390	820	920	1390	820	920	1390			
	120.79	820	920	1390	820	920	1390	820	920	1390	820	920	1390	820	920	1390	820	920	1390	820	920	1390			
	142.40	820	920	1390	820	920	1390	820	920	1390	820	920	1390	820	920	1390	820	920	1390	820	920	1390			
	162.31	820	920	1390	820	920	1390	820	920	1390	820	920	1390												
	170.85	820	920	1390	820	920	1390	820	920	1390	820	920	1390												
	195.39	820	920	1390	820	920	1390	820	920	1390	820	920	1390												
	228.99	820	920	1390	820	920	1390	820	920	1390	820	920	1390												

m [kg]		AQ.							
	s	80/1-3	100/1-4	115/1-2	115/3	140/1	140/2-4	160/1	190/1-3
FA67	2	31	31	32	32	37	37	37	45
FA67	3	32	32	33	33	38	38	38	46
FAF: + 6.3 kg / F: + 2.8 kg / FF: + 8.9 kg									

		AQ.							
		80/1-3	100/1-4	115/1-2	115/3	140/1	140/2-4	160/1	190/1-3
$J_A\ 10^{-4}$	[kgm^2]	0.77	1.4	1.4	3.1	5.1	10.0	10.0	25.0
c_{TA}	[Nm/']	0.25	0.25	0.25	0.625	0.625	1.0	1.0	2.08



FA67							F_{Ramax}				F_{Rapk}			
n_e = 1400	i	M_{amax} [Nm]	M_{apk} [Nm]	$M_{aNotaus}$ [Nm]	n_{ak} [1/min]	J_G 10^{-4} [kgm^2]	FA [N]	FAF [N]	F [N]	FF [N]	FA [N]	FAF [N]	F [N]	FF [N]
	3.97	500	695	850	403	16	1220	1220	8390	8620	13000	13000	11300	11300
	4.66	560	700	952	322	12	1020	1020	8590	8860	13000	13000	11300	11300
	5.25	590	705	1003	286	10.0	1010	1010	8850	9140	13000	13000	11200	11200
	5.95	610	705	1037	286	8.0	1090	1090	9200	9500	13000	13000	11200	11200
	6.78	620	710	1054	295	6.3	1280	1280	9660	9950	13000	13000	11200	11200
	7.53	610	715	1037	332	5.5	1570	1570	10100	10400	13000	13000	11200	11200
	8.60	570	715	969	442	4.4	2180	2180	10900	11200	13000	13000	11200	11200
	9.08	530	715	901	573	4.0	2620	2620	11400	11600	13000	13000	11200	11200
	9.66	820	920	1394	186	8.5	1580	1580	10300	10300	13000	13000	9310	9310
FA67	11.31	820	920	1394	203	6.7	1960	1960	10300	10300	13000	13000	9310	9310
2	12.76	820	920	1394	212	5.6	2260	2260	10300	10300	13000	13000	9310	9310
	14.46	820	920	1394	228	4.6	2580	2580	10300	10300	13000	13000	9310	9310
	16.48	820	920	1394	237	3.8	2940	2940	10300	10300	13000	13000	9310	9310
	18.29	820	920	1394	252	3.4	3230	3230	10300	10300	13000	13000	9310	9310
	20.90	820	920	1394	263	2.7	3620	3620	10300	10300	13000	13000	9310	9310
	22.05	820	920	1394	268	2.5	3780	3780	10300	10300	13000	13000	9310	9310
	25.13	820	920	1394	275	2.0	4190	4190	10300	10300	13000	13000	9310	9310
	27.41	820	920	1394	255	1.7	4470	4470	10300	10300	13000	13000	9310	9310
	32.08	820	920	1394	218	1.4	5000	5000	10300	10300	13000	13000	9310	9310
	36.30	820	920	1394	193	0.98	5440	5440	10300	10300	13000	13000	9310	9310
	34.01	740	920	1258	44	2.8	5730	5730	11000	11000	13000	13000	9310	9310
	39.26	780	920	1326	38	2.2	5980	5980	10700	10700	13000	13000	9310	9310
	43.20	820	920	1394	35	1.9	6080	6080	10300	10300	13000	13000	9310	9310
	50.74	820	920	1394	34	1.6	6710	6710	10300	10300	13000	13000	9310	9310
	53.73	820	920	1394	34	1.4	6940	6940	10300	10300	13000	13000	9310	9310
	61.07	820	920	1394	34	1.1	7480	7480	10300	10300	13000	13000	9310	9310
	67.65	820	920	1394	35	0.97	7930	7930	10300	10300	13000	13000	9310	9310
FA67	79.76	820	920	1394	36	0.76	8680	8680	10300	10300	13000	13000	9310	9310
3	90.59	820	920	1394	56	1.4	9290	9290	10300	10300	13000	13000	9310	9310
	95.94	820	920	1394	56	1.2	9570	9570	10300	10300	13000	13000	9310	9310
	109.04	820	920	1394	57	0.98	10200	10200	10300	10300	13000	13000	9310	9310
	120.79	820	920	1394	57	0.85	10800	10800	10300	10300	13000	13000	9310	9310
	142.40	820	920	1394	49	0.68	11700	11700	10300	10300	13000	13000	9310	9310
	162.31	820	920	1394	43	0.47	12400	12400	10300	10300	13000	13000	9310	9310
	170.85	820	920	1394	41	0.42	12700	12700	10300	10300	13000	13000	9310	9310
	195.39	820	920	1394	36	0.34	13000	13000	10300	10300	13000	13000	9310	9310
	228.99	820	920	1394	31	0.27	13000	13000	10300	10300	13000	13000	9310	9310

AQ.	i	n_{epk} [1/min]	η [%]	c_{TG} FA [Nm/']	FAF [Nm/']	F [Nm/']	FF [Nm/']	φ /R [']
FA67 2	3.97	4500	97	129	129	68	62	10
	4.66	4500	97	129	129	68	62	9
	5.25	4500	97	129	129	68	62	9
	5.95	4500	98	129	129	68	62	9
	6.78	4500	97	129	129	68	62	9
	7.53	4500	97	129	129	68	62	8
	8.60	4500	97	129	129	68	62	8
	9.08	4500	97	129	129	68	62	8
	9.66	4500	97	173	173	79	71	6
	11.31	4500	97	173	173	79	71	6
	12.76	4500	97	173	173	79	71	6
	14.46	4500	97	173	173	79	71	6
	16.48	4500	97	173	173	79	71	6
	18.29	4500	97	173	173	79	71	6
	20.90	4500	97	173	173	79	71	5
	22.05	4500	97	173	173	79	71	5
	25.13	4500	97	173	173	79	71	5
	27.41	4500	97	173	173	79	71	5
	32.08	4500	97	173	173	79	71	5
	36.30	4500	97	173	173	79	71	5
FA67 3	34.01	4500	96	187	187	82	74	6
	39.26	4500	96	187	187	82	74	6
	43.20	4500	96	187	187	82	74	6
	50.74	4500	96	187	187	82	74	6
	53.73	4500	96	187	187	82	74	6
	61.07	4500	95	187	187	82	74	6
	67.65	4500	95	187	187	82	74	6
	79.76	4500	95	187	187	82	74	6
	90.59	4500	95	189	189	82	74	6
	95.94	4500	95	189	189	82	74	6
	109.04	4500	95	189	189	82	74	6
	120.79	4500	94	189	189	82	74	6
	142.40	4500	94	189	189	82	74	6
	162.31	4500	94	189	189	82	74	6
	170.85	4500	93	189	189	82	74	6
	195.39	4500	93	189	189	82	74	6
	228.99	4500	93	189	189	82	74	6

9.2.10 F 67 AQ.. [mm]

F67..

42 094 00 08

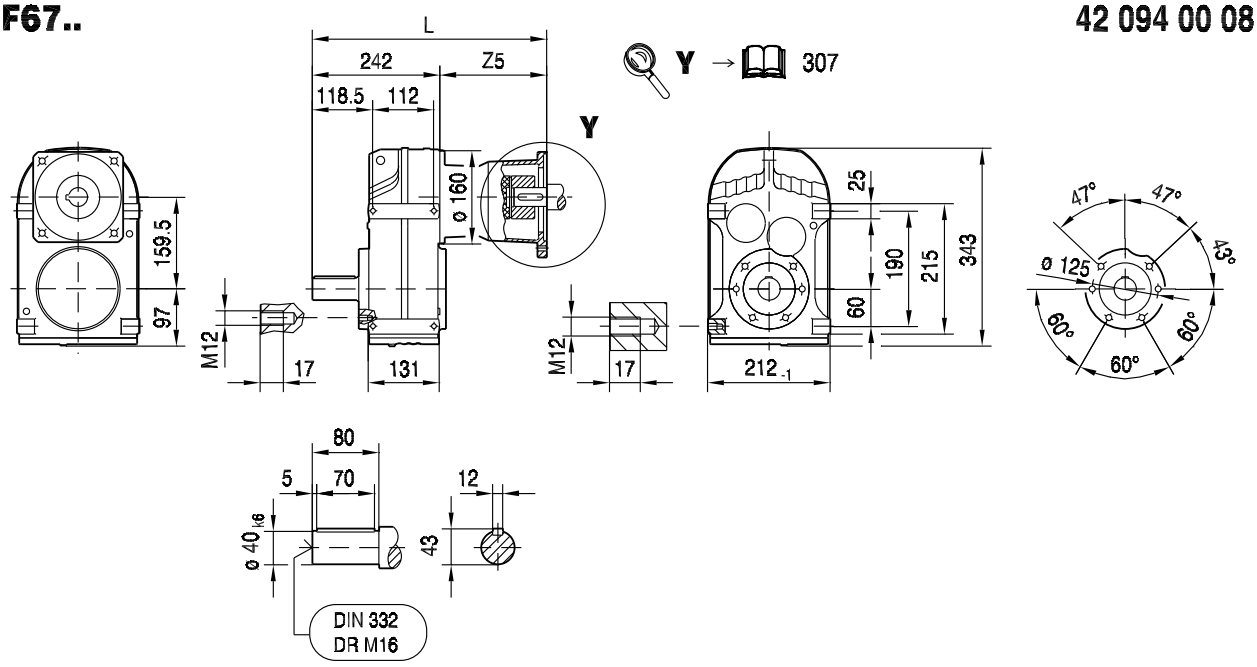

FA67B..

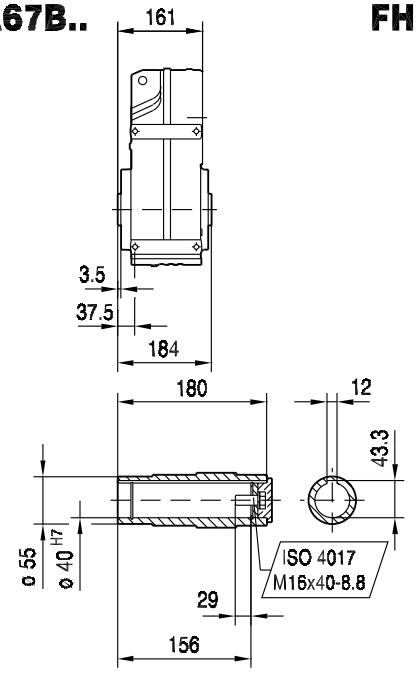

FH67B..

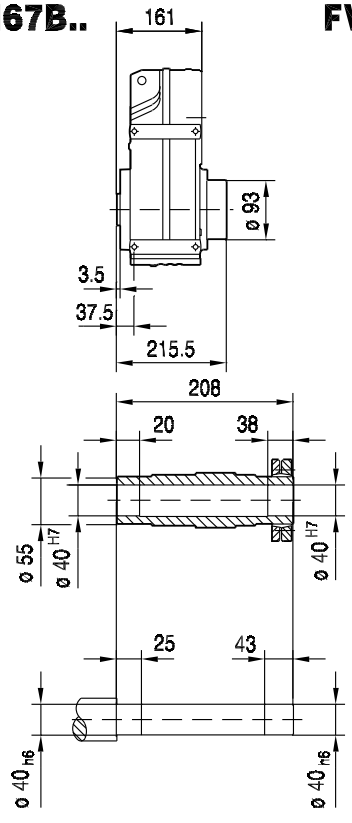

FV67B..

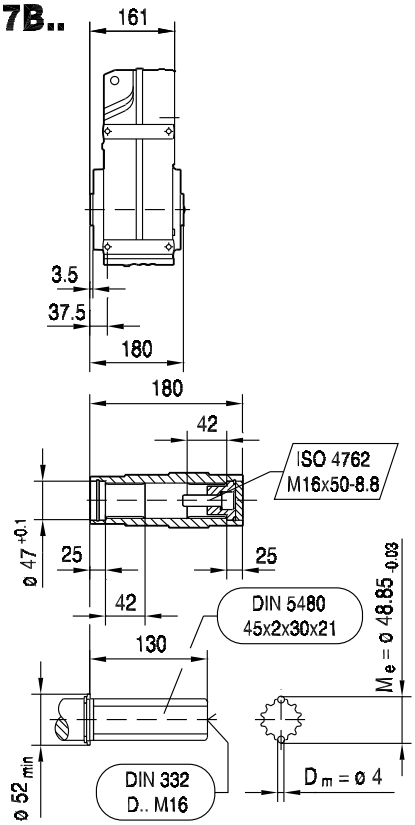

(→ 144)	AQ80/1-3	AQ100/1-2	AQ100/3-4	AQ115/1-3	AQ140/1-2	AQ140/3-4	AQ160/1	AQ190/1-2	AQ190/3
L	340	365	379	388	417	430	430	480	504
Z5	98	123	137	146	175	188	188	237.5	261.5

FF67..

42 095 00 08

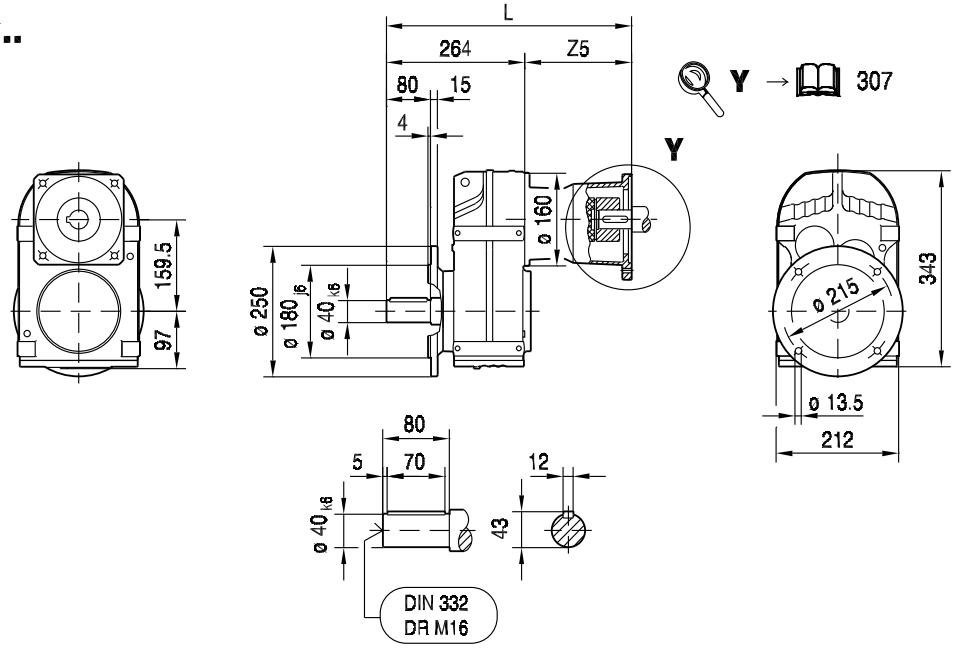

FAF67..

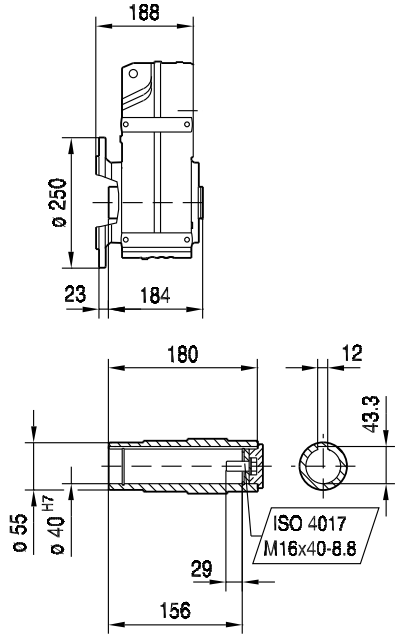

FHF67..

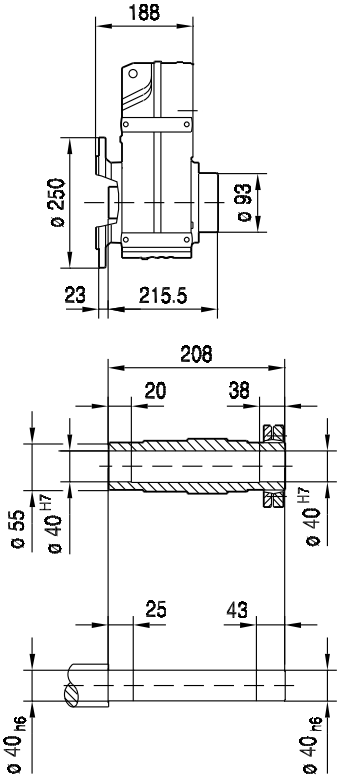

FVF67..

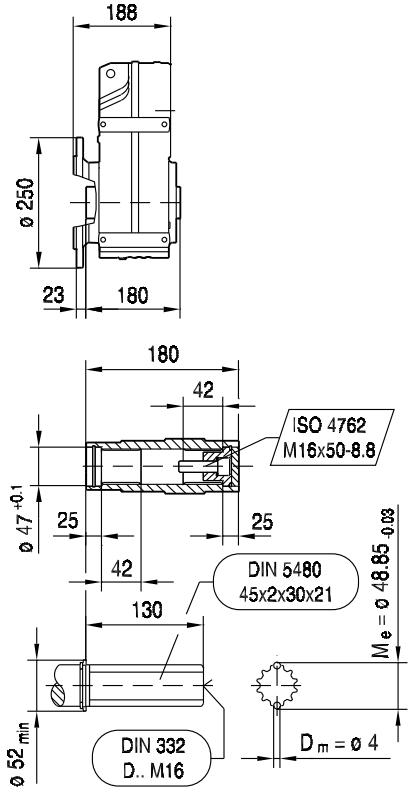

(→ 144)	AQ80/1-3	AQ100/1-2	AQ100/3-4	AQ115/1-3	AQ140/1-2	AQ140/3-4	AQ160/1	AQ190/1-2	AQ190/3
L	362	387	401	410	439	452	452	502	526
Z5	98	123	137	146	175	188	188	237.5	261.5

FA67..

42 096 00 08

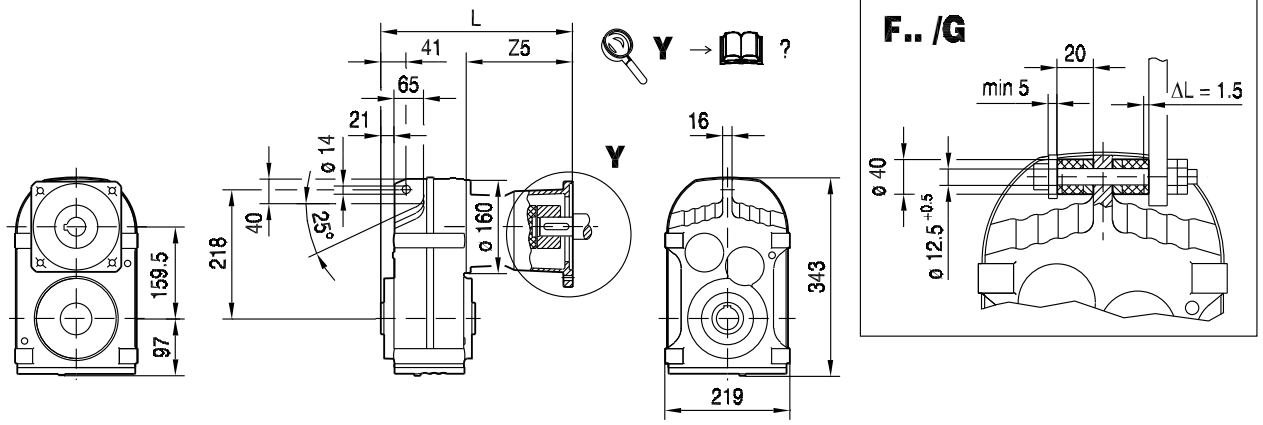

FA67..

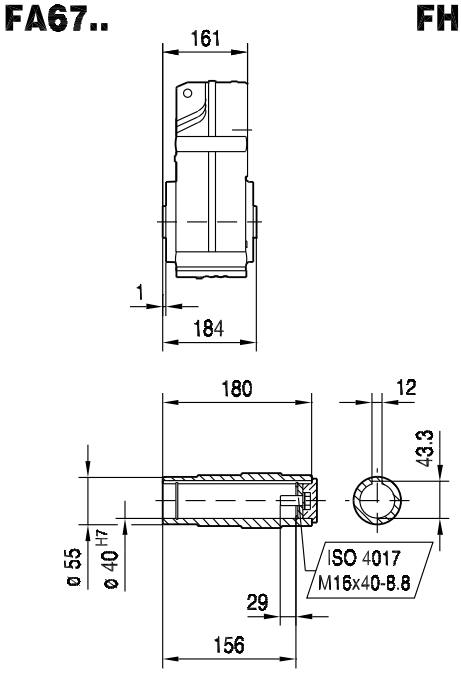

FH67..

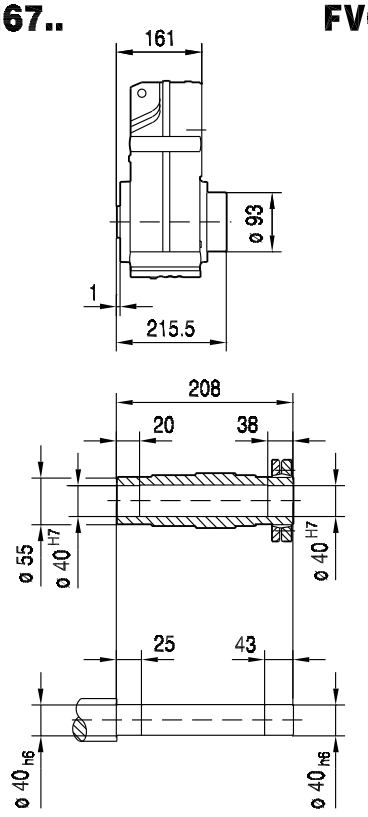

FV67..

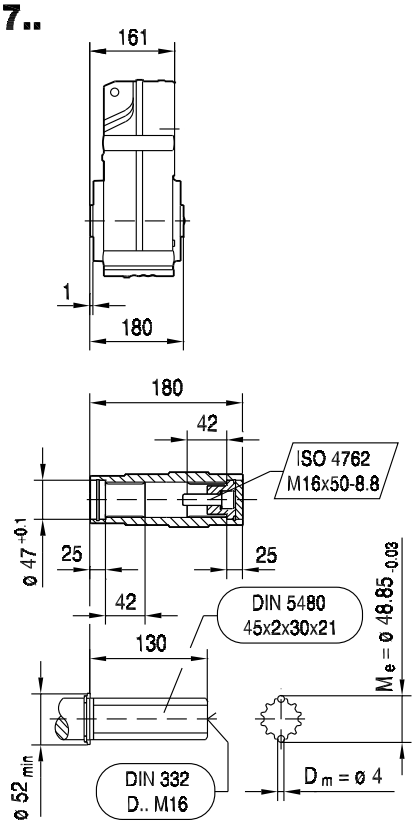

(→ 144)	AQ80/1-3	AQ100/1-2	AQ100/3-4	AQ115/1-3	AQ140/1-2	AQ140/3-4	AQ160/1	AQ190/1-2	AQ190/3
L	259	284	298	307	336	349	349	399	423
Z5	98	123	137	146	175	188	188	237.5	261.5

FAZ67..

42 098 00 08

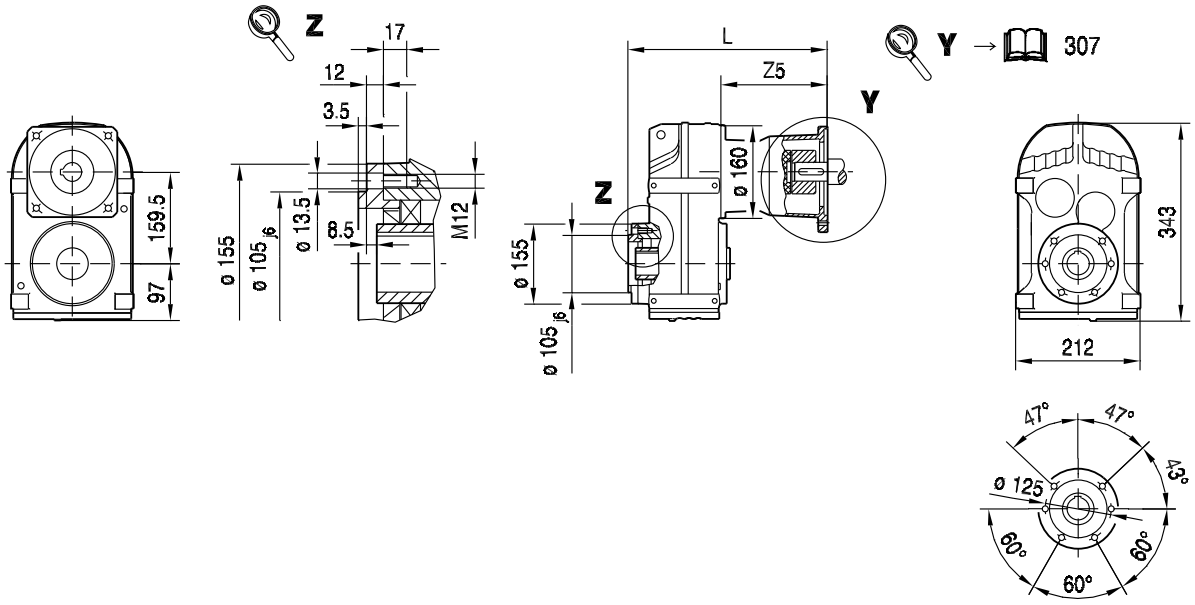

9

FAZ67..

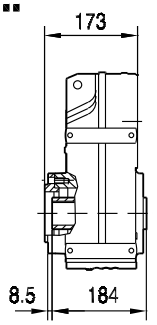

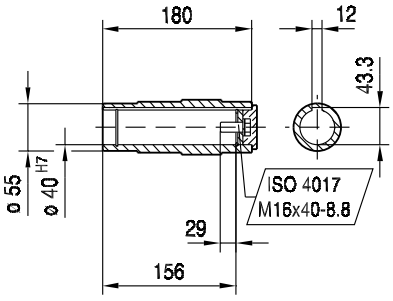

FHZ67..

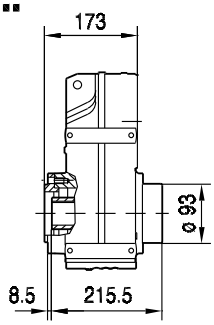

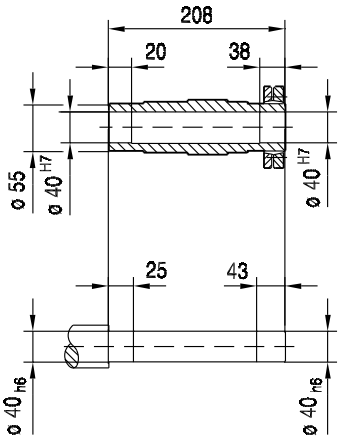

FVZ67..

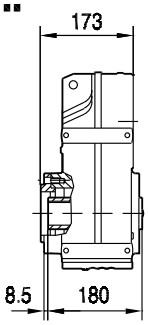

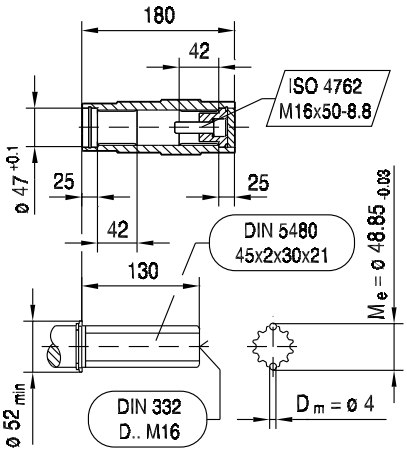

(→ 144)	AQ80/1-3	AQ100/1-2	AQ100/3-4	AQ115/1-3	AQ140/1-2	AQ140/3-4	AQ160/1	AQ190/1-2	AQ190/3
L	271	296	310	319	348	361	361	411	435
Z5	98	123	137	146	175	188	188	237.5	261.5

FT67..

42 097 00 08

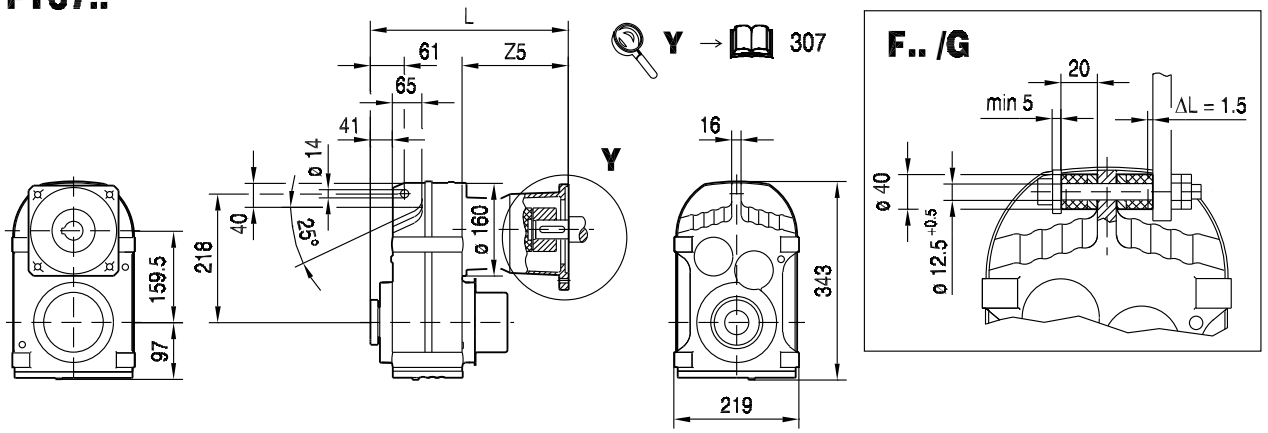

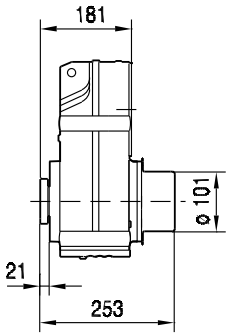

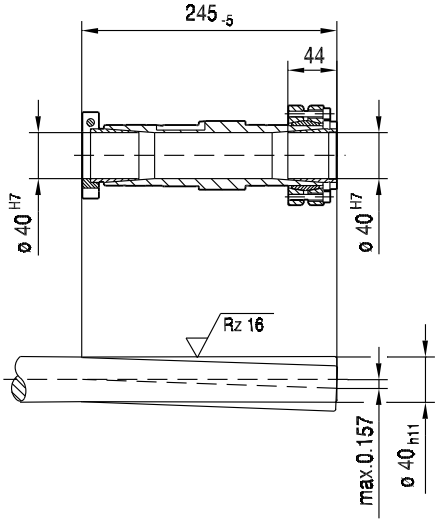

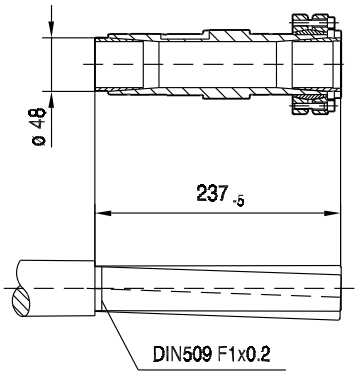

(→ 144)	AQ80/1-3	AQ100/1-2	AQ100/3-4	AQ115/1-3	AQ140/1-2	AQ140/3-4	AQ160/1	AQ190/1-2	AQ190/3
L	280	305	319	328	357	370	370	419	443
Z5	98	123	137	146	175	188	188	237.5	261.5

9.2.11 F 77 AQ.. [Nm]

[Nm]		AQ. M_{amax} | M_{apk} | $M_{aNotaus}$																								
	i	80/1-3			100/1-4			115/1-2			115/3			140/1			140/2-4			160/1			190/1-3		
FA77 2	4.28				72	72	145	72	72	145	196	196	196	255	255	425	425	425	425	425	425	425	680	680	680
	5.16				87	87	175	87	87	175	235	235	235	305	305	515	515	515	515	515	515	515	820	820	820
	5.76	97	97	190	97	97	195	97	97	195	260	260	260	345	345	575	575	575	575	575	575	575	920	920	920
	6.64	112	112	215	112	112	225	112	112	225	305	305	305	395	395	660	660	660	660	660	660	660	1060	1060	1060
	7.39	125	125	240	125	125	250	125	125	250	335	335	335	440	440	735	735	735	735	735	735	735	1080	1180	1180
	8.26	140	140	270	140	140	280	140	140	280	375	375	375	495	495	820	820	820	820	820	820	820	1080	1320	1320
	9.30	158	158	305	158	158	315	158	158	315	425	425	425	555	555	930	930	930	930	930	930	930	1080	1330	1480
	10.93				185	185	370	185	185	370	500	500	500	655	655	1090	1090	1090	1090	1090	1090	1090	1500	1530	1740
	12.20	205	205	400	205	205	410	205	205	410	560	560	560	730	730	1220	1220	1220	1220	1220	1220	1220	1500	1530	1950
	14.06	235	235	460	235	235	475	235	235	475	645	645	645	840	840	1400	1400	1400	1400	1400	1400	1400	1500	1530	2240
	15.64	265	265	515	265	265	530	265	265	530	715	715	715	930	930	1560	1500	1530	1560	1500	1530	1560	1500	1530	2500
	17.49	295	295	575	295	295	590	295	295	590	800	800	800	1040	1040	1740	1500	1530	1740	1500	1530	1740	1500	1530	2550
	19.70	330	330	650	330	330	665	330	330	665	900	900	900	1180	1180	1970	1500	1530	1970	1500	1530	1970	1500	1530	2550
	21.43	360	360	705	360	360	725	360	360	725	980	980	980	1280	1280	2140	1500	1530	2140	1500	1530	2140	1500	1530	2550
	25.50	430	430	840	430	430	860	430	430	860	1170	1170	1170	1500	1530	2550	1500	1530	2550	1500	1530	2550	1500	1530	2550
	28.75	485	485	940	485	485	970	485	485	970	1320	1320	1320	1430	1530	2430	1430	1530	2430	1430	1530	2430			
	31.51	535	535	1030	535	535	1070	535	535	1070	1380	1440	1440	1380	1530	2340	1380	1530	2340	1380	1530	2340			
	36.58	620	620	1200	620	620	1240	620	620	1240	1110	1530	1680	1110	1530	1880	1110	1530	1880	1110	1530	1880			
FA77 3	25.54	430	430	840	430	430	860	430	430	860	1170	1170	1170	1450	1530	2460	1450	1530	2460	1450	1530	2460	1450	1530	2460
	29.91	505	505	980	505	505	1010	505	505	1010	1370	1370	1370	1500	1530	2550	1500	1530	2550	1500	1530	2550	1500	1530	2550
	33.74	570	570	1110	570	570	1140	570	570	1140	1500	1530	1550	1500	1530	2550	1500	1530	2550	1500	1530	2550	1500	1530	2550
	38.23	645	645	1260	645	645	1290	645	645	1290	1500	1530	1750	1500	1530	2550	1500	1530	2550	1500	1530	2550	1500	1530	2550
	43.58	740	740	1430	740	740	1480	740	740	1480	1500	1530	2000	1500	1530	2550	1500	1530	2550	1500	1530	2550	1500	1530	2550
	48.37	820	820	1590	820	820	1640	820	820	1640	1500	1530	2220	1500	1530	2550	1500	1530	2550	1500	1530	2550	1500	1530	2550
	55.27	930	930	1820	930	930	1870	930	930	1870	1500	1530	2540	1500	1530	2550	1500	1530	2550	1500	1530	2550	1500	1530	2550
	58.32	990	990	1920	990	990	1980	990	990	1980	1500	1530	2550	1500	1530	2550	1500	1530	2550	1500	1530	2550	1500	1530	2550
	66.46	1120	1120	2190	1120	1120	2250	1120	1120	2250	1500	1530	2550	1500	1530	2550	1500	1530	2550	1500	1530	2550			
	72.50	1230	1230	2390	1230	1230	2460	1230	1230	2460	1500	1530	2550	1500	1530	2550	1500	1530	2550	1500	1530	2550			
	75.02	1270	1270	2470	1270	1270	2550	1270	1270	2550	1500	1530	2550	1500	1530	2550	1500	1530	2550	1500	1530	2550	1500	1530	2550
	85.52	1450	1450	2550	1450	1450	2550	1450	1450	2550	1500	1530	2550	1500	1530	2550	1500	1530	2550	1500	1530	2550	1500	1530	2550
	94.93	1500	1530	2550	1500	1530	2550	1500	1530	2550	1500	1530	2550	1500	1530	2550	1500	1530	2550	1500	1530	2550	1500	1530	2550
	108.46	1500	1530	2550	1500	1530	2550	1500	1530	2550	1500	1530	2550	1500	1530	2550	1500	1530	2550	1500	1530	2550	1500	1530	2550
	114.45	1500	1530	2550	1500	1530	2550	1500	1530	2550	1500	1530	2550	1500	1530	2550	1500	1530	2550	1500	1530	2550	1500	1530	2550
	130.42	1500	1530	2550	1500	1530	2550	1500	1530	2550	1500	1530	2550	1500	1530	2550	1500	1530	2550	1500	1530	2550			
	142.27	1500	1530	2550	1500	1530	2550	1500	1530	2550	1500	1530	2550	1500	1530	2550	1500	1530	2550	1500	1530	2550			
	166.47	1500	1530	2550	1500	1530	2550	1500	1530	2550	1500	1530	2550	1500	1530	2550	1500	1530	2550	1500	1530	2550			
	188.40	1500	1530	2550	1500	1530	2550	1500	1530	2550	1500	1530	2550												
	198.31	1500	1530	2550	1500	1530	2550	1500	1530	2550	1500	1530	2550												
	225.79	1500	1530	2550	1500	1530	2550	1500	1530	2550	1500	1530	2550												
	262.93	1500	1530	2550	1500	1530	2550	1500	1530	2550	1500	1530	2550												
	281.71	1500	1530	2550	1500	1530	2550	1500	1530	2550	1500	1530	2550												

m [kg]		AQ.							
	s	80/1-3	100/1-4	115/1-2	115/3	140/1	140/2-4	160/1	190/1-3
FA77	2	53	54	54	54	59	59	59	68
FA77	3	55	55	56	56	60	60	60	69
FAF: + 6.6 kg / F: + 3.8 kg / FF: + 14.4 kg									

		AQ.							
		80/1-3	100/1-4	115/1-2	115/3	140/1	140/2-4	160/1	190/1-3
$J_A\ 10^{-4}$	[kgm^2]	0.77	1.4	1.4	3.1	5.1	10.0	10.0	25.0
c_{TA}	[Nm/']	0.25	0.25	0.25	0.625	0.625	1.0	1.0	2.08



FA77							F_{Ramax}				F_{Rapk}			
n_e = 1400	i	M_{amax} [Nm]	M_{apk} [Nm]	$M_{aNotaus}$ [Nm]	n_{ak} [1/min]	J_G 10^{-4} [kgm^2]	FA [N]	FAF [N]	F [N]	FF [N]	FA [N]	FAF [N]	F [N]	FF [N]
FA77 2	4.28	1010	1310	1717	327	42	630	630	10200	10900	20000	20000	16900	17400
	5.16	1080	1320	1836	271	31	640	640	10700	11500	20000	20000	16800	17400
	5.76	1080	1320	1836	295	26	930	930	11300	12000	20000	20000	16800	17400
	6.64	1080	1320	1836	346	20	1310	1310	12000	12700	20000	20000	16800	17400
	7.39	1080	1330	1836	365	17	1610	1610	12500	13300	20000	20000	16800	17400
	8.26	1080	1330	1836	400	14	1940	1940	13100	13900	20000	20000	16800	17400
	9.30	1080	1330	1836	430	12	2300	2300	13800	14600	20000	20000	16800	17400
	10.93	1500	1530	2550	183	19	2080	2080	14200	15100	20000	20000	15500	17000
	12.20	1500	1530	2550	205	16	2450	2450	14900	15800	20000	20000	15500	17000
	14.06	1500	1530	2550	220	13	2940	2940	15700	16700	20000	20000	15500	17000
	15.64	1500	1530	2550	237	11	3330	3330	15700	17100	20000	20000	15500	17000
	17.49	1500	1530	2550	252	9.5	3750	3750	15700	17100	20000	20000	15500	17000
	19.70	1500	1530	2550	264	7.9	4220	4220	15700	17100	20000	20000	15500	17000
	21.43	1500	1530	2550	275	7.1	4560	4560	15700	17100	20000	20000	15500	17000
	25.50	1500	1530	2550	275	5.5	5300	5300	15700	17100	20000	20000	15500	17000
	28.75	1430	1530	2431	243	4.4	6190	6190	16200	17300	20000	20000	15500	17000
	31.51	1380	1530	2346	222	3.8	6870	6870	16500	17500	20000	20000	15500	17000
	36.58	1110	1530	1887	191	3.0	8990	8990	17900	18300	20000	20000	15500	17000
FA77 3	25.54	1450	1530	2465	59	10	5560	5560	16100	17300	20000	20000	15500	17000
	29.91	1500	1530	2550	50	7.8	6010	6010	15700	17100	20000	20000	15500	17000
	33.74	1500	1530	2550	50	6.4	6580	6580	15700	17100	20000	20000	15500	17000
	38.23	1500	1530	2550	50	5.2	7190	7190	15700	17100	20000	20000	15500	17000
	43.58	1500	1530	2550	50	4.3	7850	7850	15700	17100	20000	20000	15500	17000
	48.37	1500	1530	2550	52	3.8	8410	8410	15700	17100	20000	20000	15500	17000
	55.27	1500	1530	2550	52	3.0	9140	9140	15700	17100	20000	20000	15500	17000
	58.32	1500	1530	2550	51	2.8	9450	9450	15700	17100	20000	20000	15500	17000
	66.46	1500	1530	2550	53	2.2	10200	10200	15700	17100	20000	20000	15500	17000
	72.50	1500	1530	2550	52	1.9	10700	10700	15700	17100	20000	20000	15500	17000
	75.02	1500	1530	2550	53	4.0	11000	11000	15700	17100	20000	20000	15500	17000
	85.52	1500	1530	2550	53	3.3	11800	11800	15700	17100	20000	20000	15500	17000
	94.93	1500	1530	2550	54	3.0	12500	12500	15700	17100	20000	20000	15500	17000
	108.46	1500	1530	2550	53	2.5	13400	13400	15700	17100	20000	20000	15500	17000
	114.45	1500	1530	2550	54	2.3	13800	13800	15700	17100	20000	20000	15500	17000
	130.42	1500	1530	2550	54	1.9	14800	14800	15700	17100	20000	20000	15500	17000
	142.27	1500	1530	2550	49	1.6	15400	15400	15700	17100	20000	20000	15500	17000
	166.47	1500	1530	2550	42	1.3	16700	16700	15700	17100	20000	20000	15500	17000
	188.40	1500	1530	2550	37	0.91	17700	17700	15700	17100	20000	20000	15500	17000
	198.31	1500	1530	2550	35	0.82	18100	18100	15700	17100	20000	20000	15500	17000
	225.79	1500	1530	2550	31	0.67	19300	19300	15700	17100	20000	20000	15500	17000
	262.93	1500	1530	2550	27	0.54	20000	20000	15700	17100	20000	20000	15500	17000
	281.71	1500	1530	2550	25	0.47	20000	20000	15700	17100	20000	20000	15500	17000

AQ.	i	n_{epk} [1/min]	η [%]	c_{TG} FA [Nm/']	FAF [Nm/']	F [Nm/']	FF [Nm/']	φ /R [']
	4.28	4500	97	263	263	132	106	8
	5.16	4500	97	263	263	132	106	8
	5.76	4500	97	263	263	132	106	8
	6.64	4500	97	263	263	132	106	8
	7.39	4500	97	263	263	132	106	7
	8.26	4500	97	263	263	132	106	7
	9.30	4500	97	263	263	132	106	7
	10.93	4500	97	351	351	151	118	6
FA77	12.20	4500	97	351	351	151	118	5
2	14.06	4500	97	351	351	151	118	5
	15.64	4500	97	351	351	151	118	5
	17.49	4500	97	351	351	151	118	5
	19.70	4500	97	351	351	151	118	5
	21.43	4500	97	351	351	151	118	5
	25.50	4500	97	351	351	151	118	5
	28.75	4500	97	351	351	151	118	5
	31.51	4500	97	351	351	151	118	5
	36.58	4500	97	351	351	151	118	5
	25.54	4500	96	388	388	157	122	6
	29.91	4500	96	388	388	157	122	6
	33.74	4500	96	388	388	157	122	6
	38.23	4500	96	388	388	157	122	6
	43.58	4500	96	388	388	157	122	6
	48.37	4500	96	388	388	157	122	6
	55.27	4500	96	388	388	157	122	6
	58.32	4500	96	388	388	157	122	6
	66.46	4500	95	388	388	157	122	6
	72.50	4500	95	388	388	157	122	6
FA77	75.02	4500	95	394	394	158	123	6
3	85.52	4500	95	394	394	158	123	6
	94.93	4500	95	394	394	158	123	5
	108.46	4500	95	394	394	158	123	5
	114.45	4500	95	394	394	158	123	5
	130.42	4500	95	394	394	158	123	5
	142.27	4500	94	394	394	158	123	5
	166.47	4500	94	394	394	158	123	5
	188.40	4500	94	394	394	158	123	5
	198.31	4500	94	394	394	158	123	5
	225.79	4500	93	394	394	158	123	5
	262.93	4500	93	394	394	158	123	5
	281.71	4500	92	394	394	158	123	5

9.2.12 F 77 AQ.. [mm]

F77..

42 099 00 08

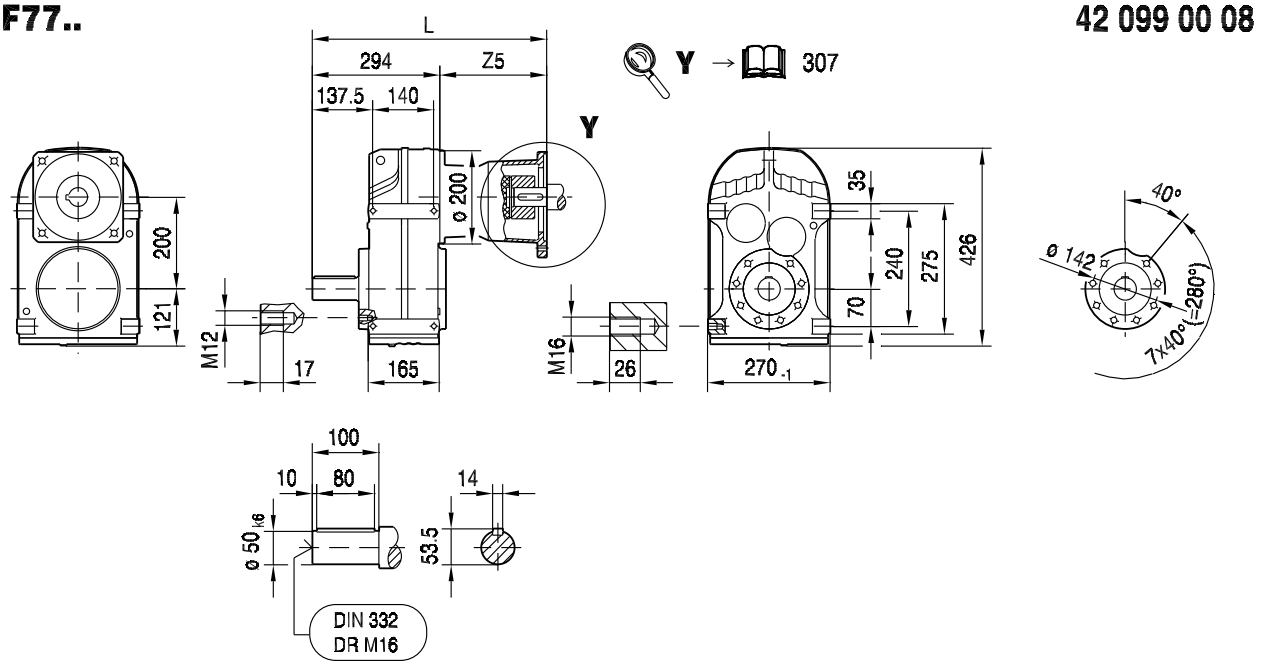

FA77B..

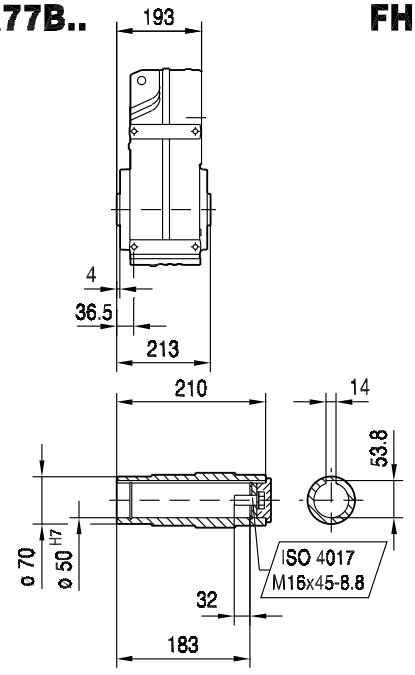

FH77B..

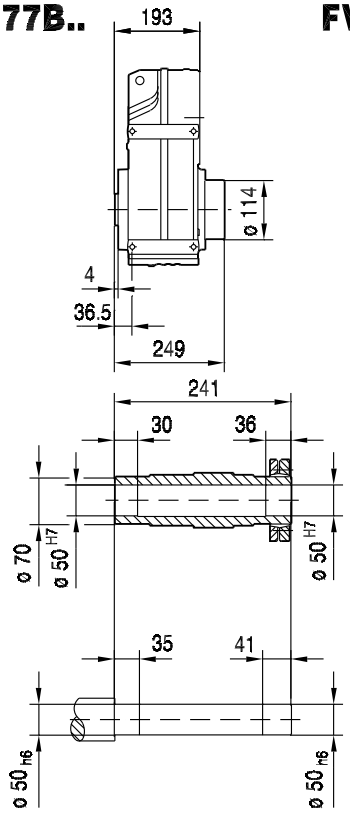

FV77B..

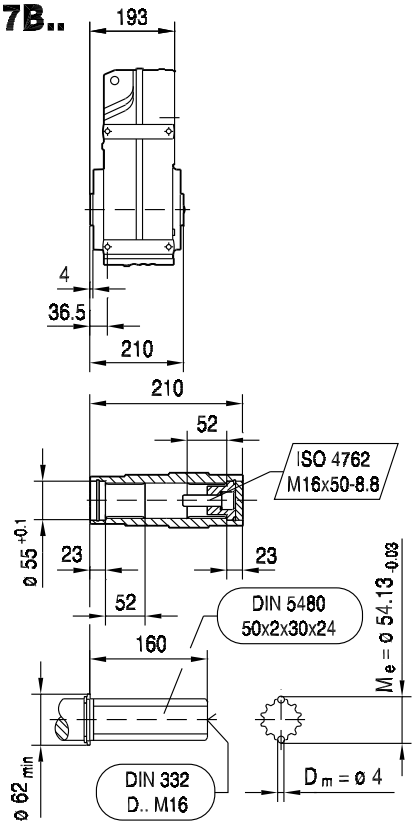

(→ 144)	AQ80/1-3	AQ100/1-2	AQ100/3-4	AQ115/1-3	AQ140/1-2	AQ140/3-4	AQ160/1	AQ190/1-2	AQ190/3
L	386	410	424	433	461	474	474	520	544
Z5	92	116	130	139	167	180	180	225.5	249.5

42 100 00 08

FF77..

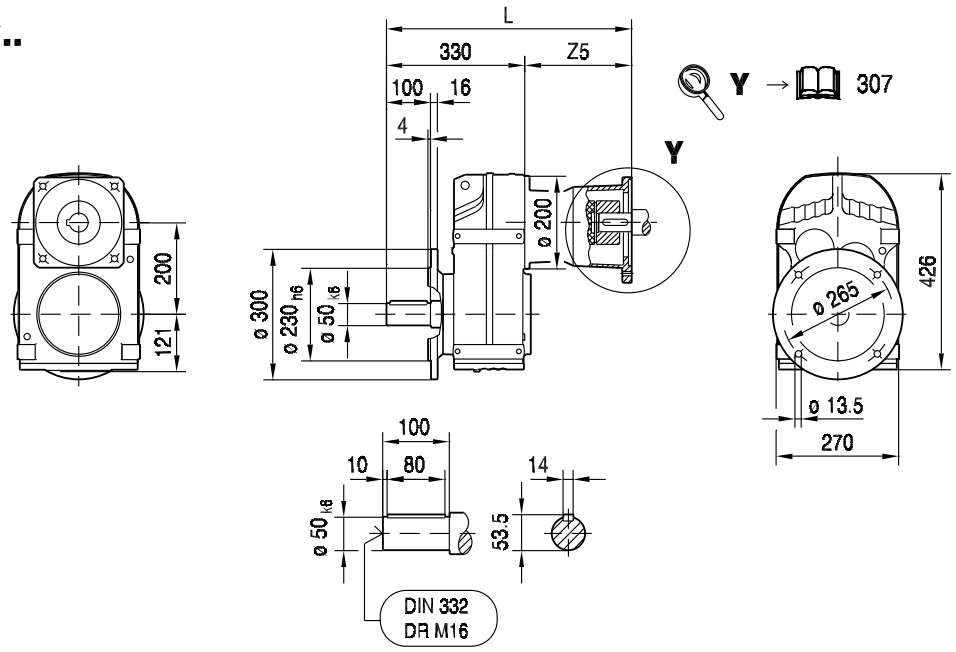

9

FAF77..

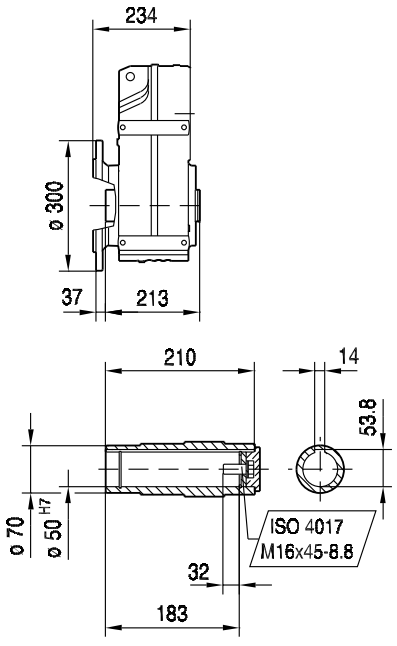

FHF77..

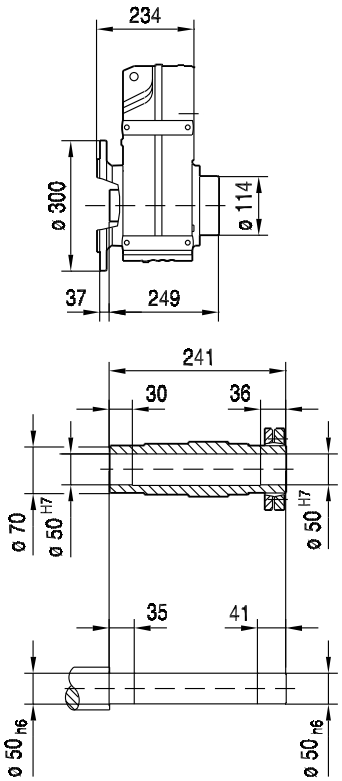

FVF77..

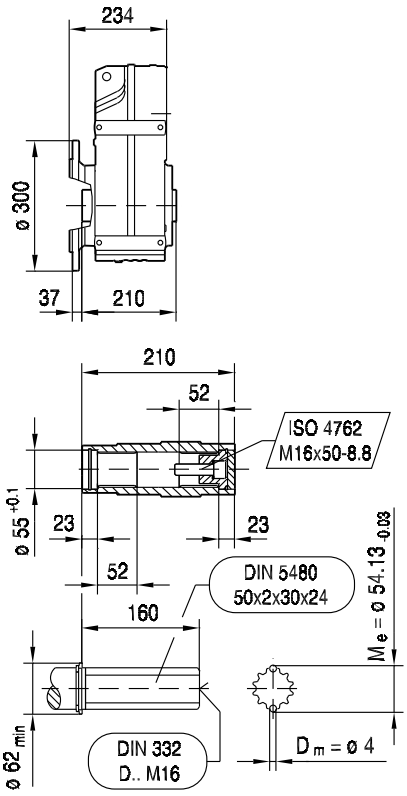

(→ 144)	AQ80/1-3	AQ100/1-2	AQ100/3-4	AQ115/1-3	AQ140/1-2	AQ140/3-4	AQ160/1	AQ190/1-2	AQ190/3
L	422	446	460	469	497	510	510	556	580
Z5	92	116	130	139	167	180	180	225.5	249.5

42 101 00 08

FA77..

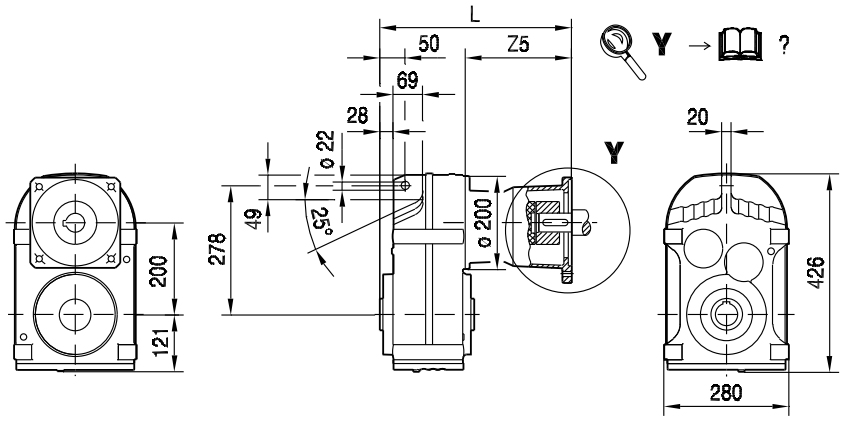

FA77..

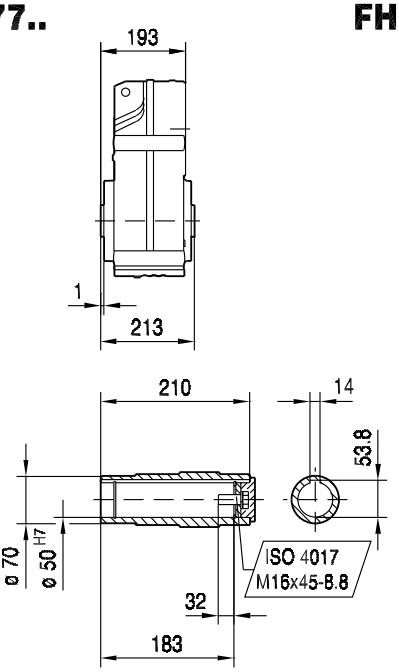

FH77..

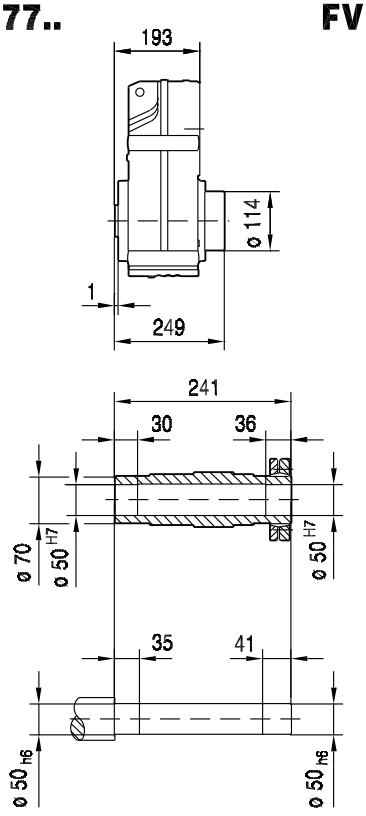

FV77..

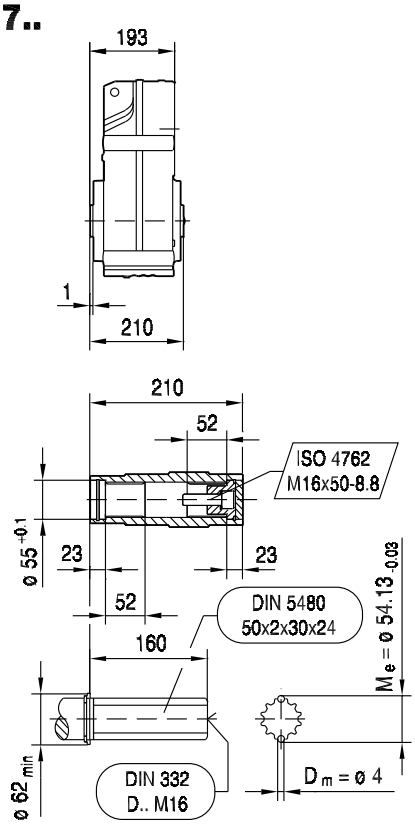

(→ 📖 144)	AQ80/1-3	AQ100/1-2	AQ100/3-4	AQ115/1-3	AQ140/1-2	AQ140/3-4	AQ160/1	AQ190/1-2	AQ190/3
L	285	309	323	332	360	373	373	419	443
Z5	92	116	130	139	167	180	180	225.5	249.5

FAZ77..

42 103 00 08

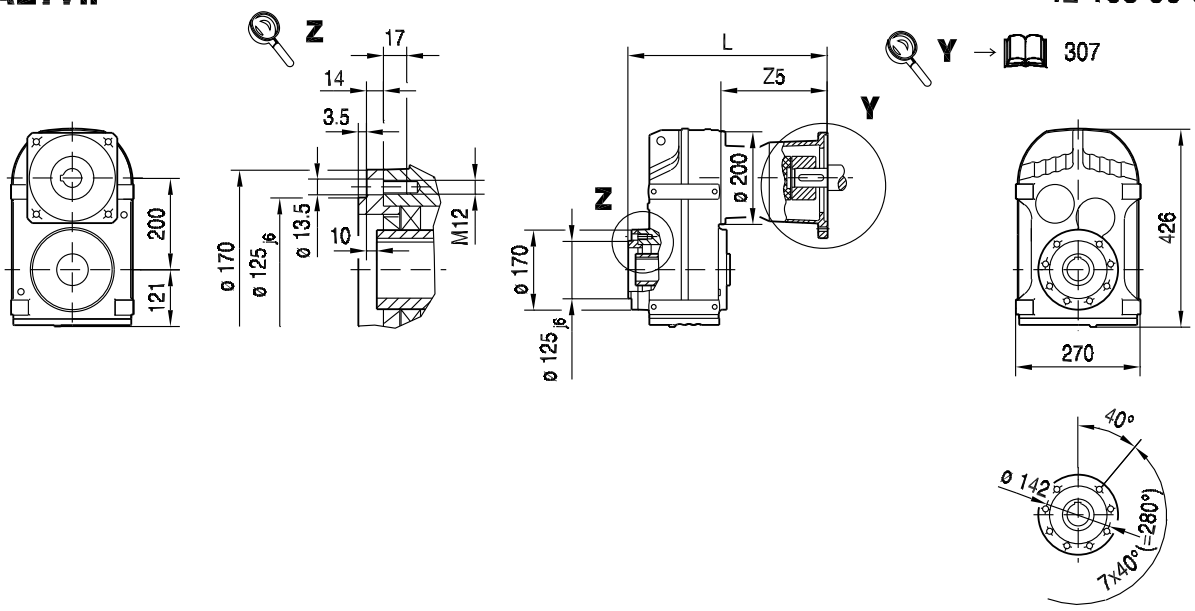

9

FAZ77..

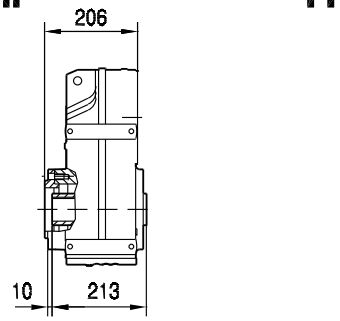

FHZ77..

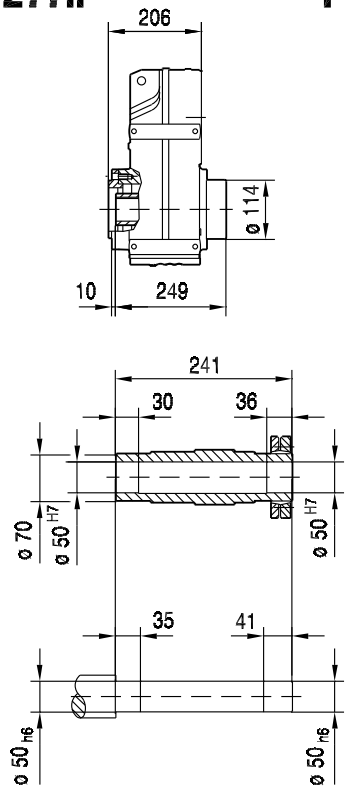

FVZ77..

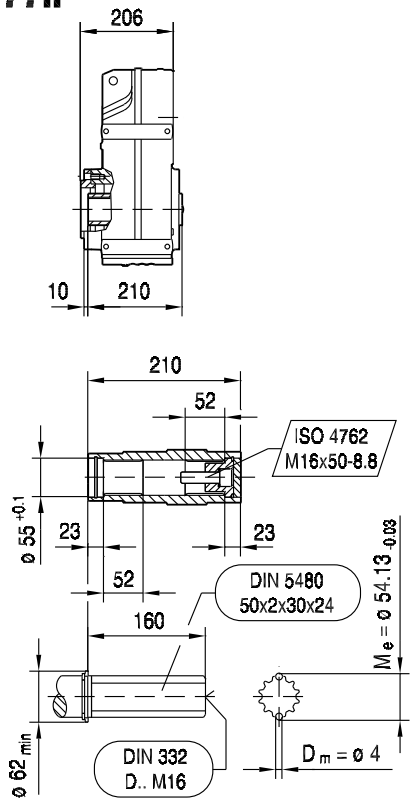

(→ 144)	AQ80/1-3	AQ100/1-2	AQ100/3-4	AQ115/1-3	AQ140/1-2	AQ140/3-4	AQ160/1	AQ190/1-2	AQ190/3
L	298	322	336	345	373	386	386	432	456
Z5	92	116	130	139	167	180	180	225.5	249.5

FT77..

42 102 00 08

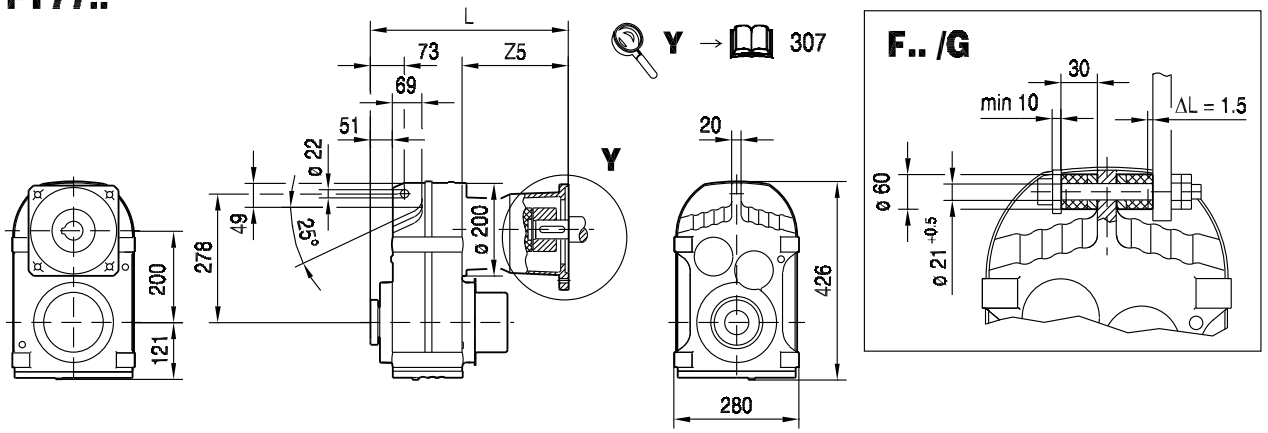

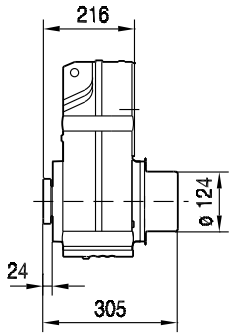

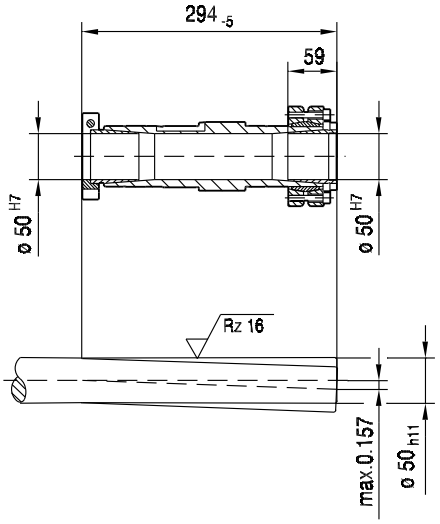

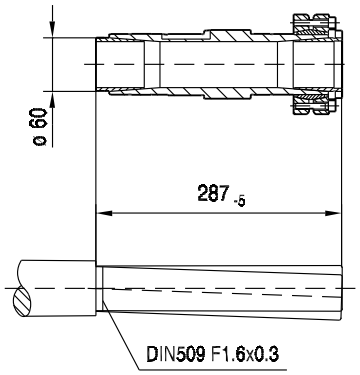

(→ 144)	AQ80/1-3	AQ100/1-2	AQ100/3-4	AQ115/1-3	AQ140/1-2	AQ140/3-4	AQ160/1	AQ190/1-2	AQ190/3
L	308	332	346	355	383	396	396	442	466
Z5	92	116	130	139	167	180	180	225.5	249.5

9.2.13 F 87 AQ.. [Nm]

[Nm]		AQ. M_{amax} | M_{apk} | $M_{aNotaus}$																				
	i	100/1-4			115/1-2			115/3			140/1			140/2-4			160/1			190/1-3		
FA87 2	4.12										245	245	410	410	410	410	410	410	410	655	655	655
	4.92										295	295	490	490	490	490	490	490	490	785	785	785
	5.63	95	95	191	95	95	191	255	255	255	335	335	560	560	560	560	560	560	560	900	900	900
	6.65	113	113	225	113	113	225	305	305	305	395	395	665	665	665	665	665	665	665	1060	1060	1060
	7.35	124	124	245	124	124	245	335	335	335	440	440	735	735	735	735	735	735	735	1170	1170	1170
	8.29	140	140	280	140	140	280	380	380	380	495	495	820	820	820	820	820	820	820	1320	1320	1320
	9.58										570	570	950	950	950	950	950	950	950	1530	1530	1530
	11.46										685	685	1140	1140	1140	1140	1140	1140	1140	1830	1830	1830
	13.12	220	220	445	220	220	445	600	600	600	785	785	1310	1310	1310	1310	1310	1310	1310	2090	2090	2090
	15.48	260	260	525	260	260	525	710	710	710	920	920	1540	1540	1540	1540	1540	1540	1540	2470	2470	2470
	17.12	290	290	580	290	290	580	785	785	785	1020	1020	1710	1710	1710	1710	1710	1710	1710	2730	2730	2730
	19.31	325	325	655	325	325	655	880	880	880	1150	1150	1930	1930	1930	1930	1930	1930	1930	3000	3080	3080
	21.32	360	360	720	360	360	720	980	980	980	1270	1270	2130	2130	2130	2130	2130	2130	2130	3000	3090	3410
	23.68	400	400	800	400	400	800	1080	1080	1080	1420	1420	2360	2360	2360	2360	2360	2360	2360	3000	3090	3780
	26.50	450	450	900	450	450	900	1210	1210	1210	1590	1590	2650	2650	2650	2650	2650	2650	2650	3000	3090	4240
	28.78	485	485	970	485	485	970	1320	1320	1320	1720	1720	2870	2450	2870	2870	2450	2870	2870	2450	3090	4160
	33.92	575	575	1150	575	575	1150	1560	1560	1560	2030	2030	3390	2610	3090	3390	2610	3090	3390	2610	3090	4430
FA87 3	29.20	495	495	990	495	495	990	1340	1340	1340	1750	1750	2920	2510	2920	2920	2510	2920	2920	2510	3090	4260
	35.19	595	595	1190	595	595	1190	1610	1610	1610	2110	2110	3510	2610	3090	3510	2610	3090	3510	2610	3090	4430
	39.30	665	665	1330	665	665	1330	1800	1800	1800	2350	2350	3930	2720	3090	3930	2720	3090	3930	2720	3090	4620
	45.28	765	765	1530	765	765	1530	2080	2080	2080	2710	2710	4520	2820	3090	4520	2820	3090	4520	2820	3090	4790
	50.36	850	850	1710	850	850	1710	2310	2310	2310	2940	3020	4990	2940	3090	4990	2940	3090	4990	2940	3090	4990
	56.75	960	960	1920	960	960	1920	2610	2610	2610	3000	3090	5100	3000	3090	5100	3000	3090	5100	3000	3090	5100
	68.40	1160	1160	2320	1160	1160	2320	3000	3090	3140	3000	3090	5100	3000	3090	5100	3000	3090	5100	3000	3090	5100
	76.39	1290	1290	2590	1290	1290	2590	3000	3090	3510	3000	3090	5100	3000	3090	5100	3000	3090	5100	3000	3090	5100
	88.01	1490	1490	2990	1490	1490	2990	3000	3090	4040	3000	3090	5100	3000	3090	5100	3000	3090	5100	3000	3090	5100
	97.89	1660	1660	3320	1660	1660	3320	3000	3090	4500	3000	3090	5100	3000	3090	5100	3000	3090	5100	3000	3090	5100
	109.49	1860	1860	3720	1860	1860	3720	3000	3090	5030	3000	3090	5100	3000	3090	5100	3000	3090	5100	3000	3090	5100
	123.29	2090	2090	4190	2090	2090	4190	3000	3090	5100	3000	3090	5100	3000	3090	5100	3000	3090	5100	3000	3090	5100
	134.16	2280	2280	4560	2280	2280	4560	3000	3090	5100	3000	3090	5100	3000	3090	5100	3000	3090	5100	3000	3090	5100
	159.61	2710	2710	5100	2710	2710	5100	3000	3090	5100	3000	3090	5100	3000	3090	5100	3000	3090	5100	3000	3090	5100
	179.97	3000	3050	5100	3000	3050	5100	3000	3090	5100	3000	3090	5100	3000	3090	5100	3000	3090	5100			
	197.20	3000	3090	5100	3000	3090	5100	3000	3090	5100	3000	3090	5100	3000	3090	5100	3000	3090	5100			
	228.93	3000	3090	5100	3000	3090	5100	3000	3090	5100	3000	3090	5100	3000	3090	5100	3000	3090	5100			
	255.37	3000	3090	5100	3000	3090	5100	3000	3090	5100												
	270.68	3000	3090	5100	3000	3090	5100	3000	3090	5100												

m [kg]		AQ.						
	s	100/1-4	115/1-2	115/3	140/1	140/2-4	160/1	190/1-3
FA87	2	91	92	92	97	97	97	105
FA87	3	94	95	95	100	100	100	110
FAF: + 12.7 kg / F: + 5.7 kg / FF: + 21.3 kg								

		AQ.						
		100/1-4	115/1-2	115/3	140/1	140/2-4	160/1	190/1-3
J_A 10^{-4}	[kgm^2]	1.4	1.4	3.1	5.1	10.0	10.0	25.0
c_{TA}	[Nm/']	0.25	0.25	0.625	0.625	1.0	1.0	2.08



FA87							F_{Ramax}				F_{Rapk}			
n_e = 1400	i	M_{amax} [Nm]	M_{apk} [Nm]	$M_{aNotaus}$ [Nm]	n_{ak} [1/min]	J_G 10^{-4} [kgm^2]	FA [N]	FAF [N]	F [N]	FF [N]	FA [N]	FAF [N]	F [N]	FF [N]
FA87 2	4.12	1460	1940	2482	340	114	3020	3020	5980	11800	30000	30000	26400	23400
	4.92	1530	1960	2601	346	85	3310	3310	6430	12600	30000	30000	26300	23400
	5.63	1530	1960	2601	391	67	3850	3850	7020	13400	30000	30000	26300	23400
	6.65	1530	1970	2601	466	52	4550	4550	7790	14400	30000	30000	26300	23400
	7.35	1530	1970	2601	490	44	5000	5000	8280	15000	30000	30000	26300	23400
	8.29	1530	1980	2601	531	36	5550	5550	8890	15800	30000	30000	26200	23300
	9.58	2880	3090	4896	146	63	275	275	5050	11000	30000	30000	16000	16000
	11.46	3000	3090	5100	122	49	575	575	5580	11800	30000	30000	16000	16000
	13.12	3000	3090	5100	114	40	1300	1300	6370	13100	30000	30000	16000	16000
	15.48	3000	3090	5100	110	32	2220	2220	7390	14700	30000	30000	16000	16000
	17.12	3000	3090	5100	105	28	2810	2810	8040	15800	30000	30000	16000	16000
	19.31	3000	3090	5100	104	23	3540	3540	8840	17000	30000	30000	16000	16000
	21.32	3000	3090	5100	98	20	4160	4160	9520	18000	30000	30000	16000	16000
	23.68	3000	3090	5100	97	17	4850	4850	10300	19100	30000	30000	16000	16000
	26.50	3000	3090	5100	98	15	5610	5610	11100	19800	30000	30000	16000	16000
	28.78	2450	3090	4165	191	13	8940	8940	13900	22500	30000	30000	16000	16000
	33.92	2610	3090	4437	150	10	9340	9340	14600	22200	30000	30000	16000	16000
FA87 3	29.20	2510	3090	4267	48	25	8740	8740	13800	22400	30000	30000	16000	16000
	35.19	2610	3090	4437	40	19	9610	9610	14900	22200	30000	30000	16000	16000
	39.30	2720	3090	4624	36	16	9910	9910	15400	22000	30000	30000	16000	16000
	45.28	2820	3090	4794	31	13	10500	10500	16200	21700	30000	30000	16000	16000
	50.36	2940	3090	4998	28	11	10800	10800	16800	21500	30000	30000	16000	16000
	56.75	3000	3090	5100	32	20	11600	11600	17700	19800	30000	30000	16000	16000
	68.40	3000	3090	5100	32	16	13300	13300	19600	19800	30000	30000	16000	16000
	76.39	3000	3090	5100	31	14	14300	14300	19800	19800	30000	30000	16000	16000
	88.01	3000	3090	5100	32	11	15800	15800	19800	19800	30000	30000	16000	16000
	97.89	3000	3090	5100	32	9.9	16900	16900	19800	19800	30000	30000	16000	16000
	109.49	3000	3090	5100	32	8.3	18100	18100	19800	19800	30000	30000	16000	16000
	123.29	3000	3090	5100	32	7.0	19400	19400	19800	19800	30000	30000	16000	16000
	134.16	3000	3090	5100	32	6.3	20400	20400	19800	19800	30000	30000	16000	16000
	159.61	3000	3090	5100	32	4.9	22500	22500	19800	19800	30000	30000	16000	16000
	179.97	3000	3090	5100	32	4.0	24100	24100	19800	19800	30000	30000	16000	16000
	197.20	3000	3090	5100	32	3.5	25300	25300	19800	19800	30000	30000	16000	16000
	228.93	3000	3090	5100	31	2.8	27300	27300	19800	19800	30000	30000	16000	16000
	255.37	3000	3090	5100	27	1.8	28900	28900	19800	19800	30000	30000	16000	16000
	270.68	3000	3090	5100	26	1.6	29800	29800	19800	19800	30000	30000	16000	16000

AQ.				c_{TG}				φ
	i	n_{epk} [1/min]	η [%]	FA [Nm/']	FAF [Nm/']	F [Nm/']	FF [Nm/']	/R [']
FA87 2	4.12	3924	97	465	465	197	186	7
	4.92	4378	97	465	465	197	186	7
	5.63	4500	97	465	465	197	186	7
	6.65	4500	97	465	465	197	186	7
	7.35	4500	97	465	465	197	186	7
	8.29	4500	97	465	465	197	186	7
	9.58	4500	97	711	711	230	216	7
	11.46	4500	97	711	711	230	216	7
	13.12	4500	97	711	711	230	216	7
	15.48	4500	97	711	711	230	216	7
	17.12	4500	97	711	711	230	216	7
	19.31	4500	97	711	711	230	216	7
	21.32	4500	97	711	711	230	216	7
	23.68	4500	97	711	711	230	216	7
	26.50	4500	97	711	711	230	216	7
	28.78	4500	97	711	711	230	216	7
	33.92	4500	97	711	711	230	216	7

AQ.	i	n_{epk} [1/min]	η [%]	c_{TG} FA [Nm/']	FAF [Nm/']	F [Nm/']	FF [Nm/']	φ /R [']
FA87 3	29.20	4500	96	833	833	242	226	8
	35.19	4500	96	833	833	242	226	8
	39.30	4500	96	833	833	242	226	8
	45.28	4500	96	833	833	242	226	8
	50.36	4500	96	833	833	242	226	7
	56.75	4500	95	846	846	243	227	7
	68.40	4500	95	846	846	243	227	7
	76.39	4500	95	846	846	243	227	7
	88.01	4500	95	846	846	243	227	7
	97.89	4500	95	846	846	243	227	7
	109.49	4500	95	846	846	243	227	7
	123.29	4500	95	846	846	243	227	7
	134.16	4500	95	846	846	243	227	7
	159.61	4500	95	846	846	243	227	7
	179.97	4500	94	846	846	243	227	7
	197.20	4500	94	846	846	243	227	7
	228.93	4500	94	846	846	243	227	7
	255.37	4500	94	846	846	243	227	7
	270.68	4500	93	846	846	243	227	7

9.2.14 F 87 AQ.. [mm]

F87..

42 104 00 08

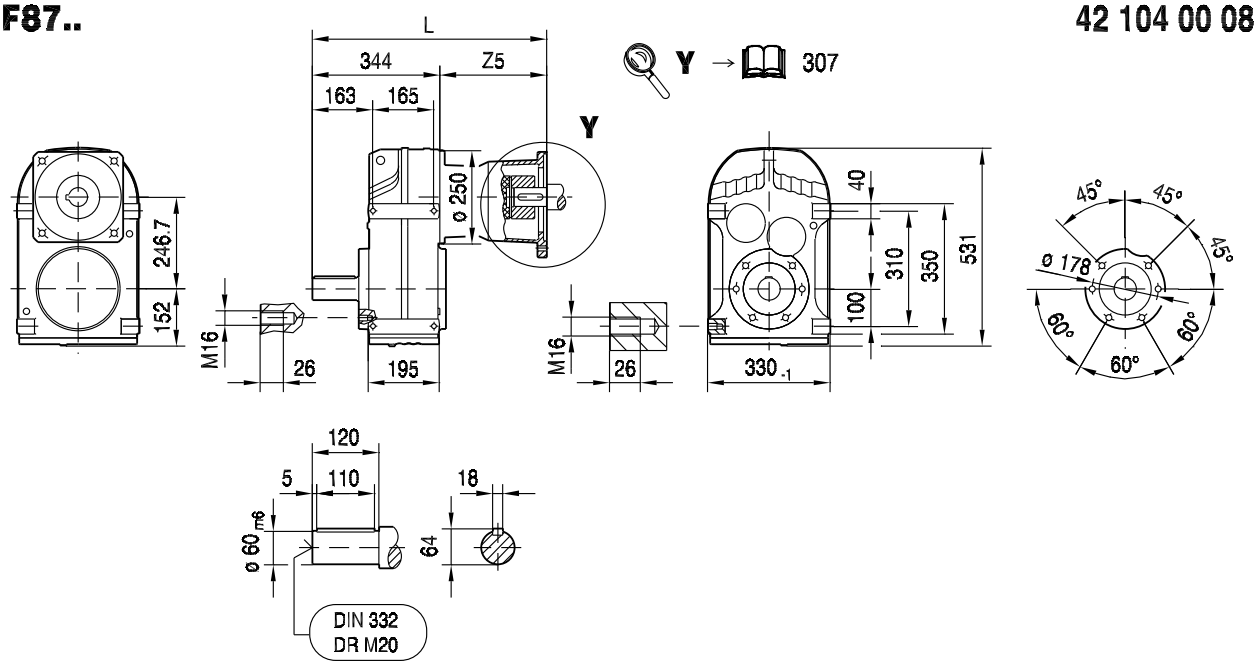

FA87B..

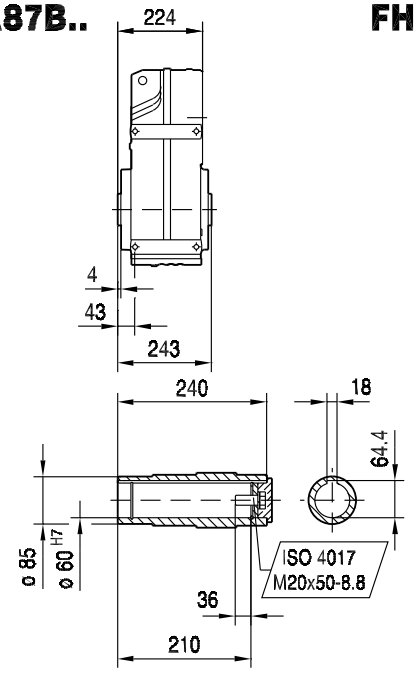

FH87B..

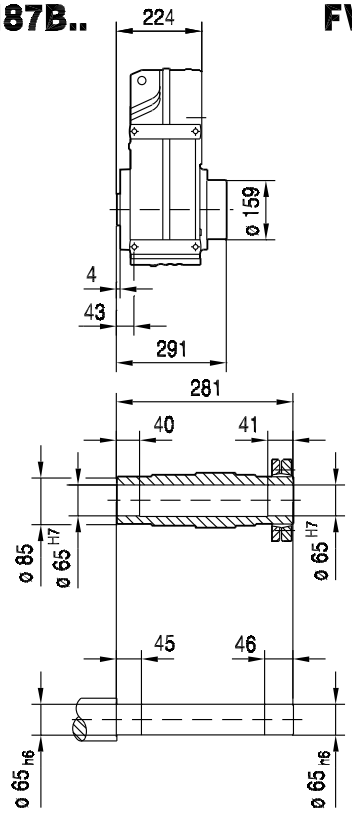

FV87B..

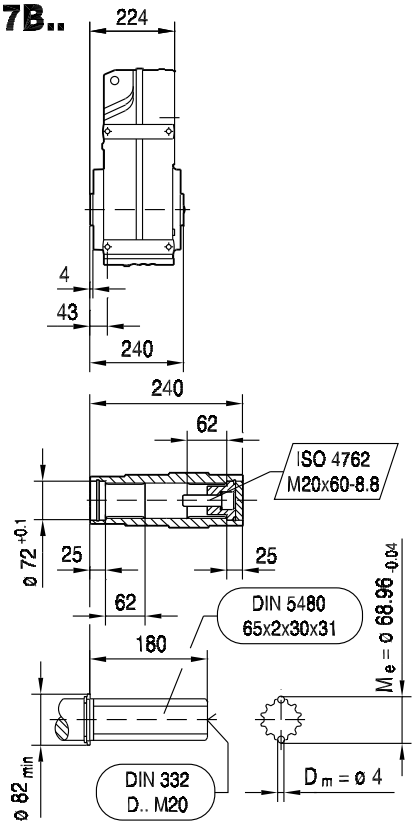

(→ 144)	AQ100/1-2	AQ100/3-4	AQ115/1-3	AQ140/1-2	AQ140/3-4	AQ160/1	AQ190/1-2	AQ190/3
L	455	469	478	506	519	519	565	589
Z5	111	125	134	162	175	175	220.5	244.5

42 105 00 08

FF87..

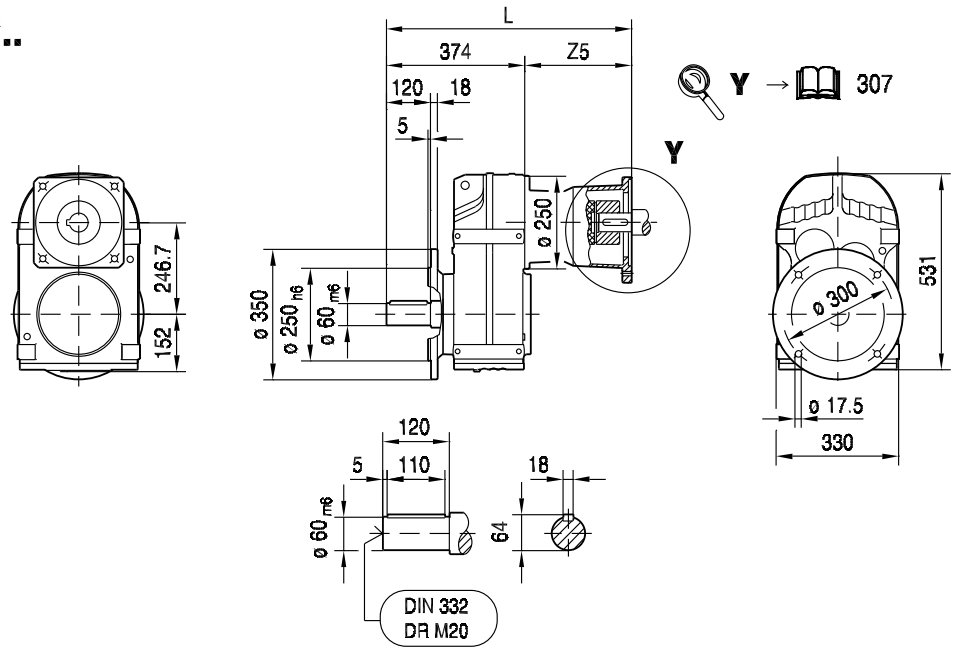

FAF87..

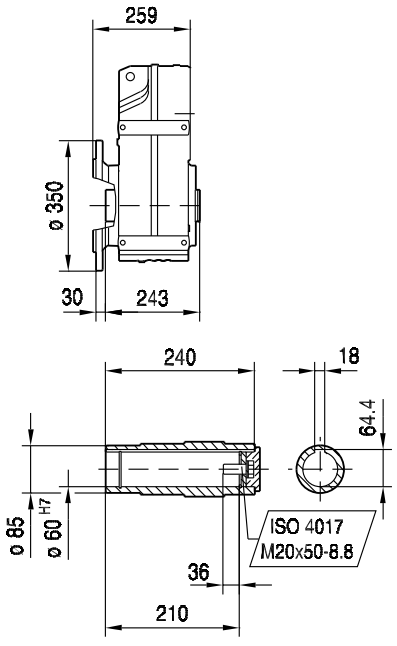

FHF87..

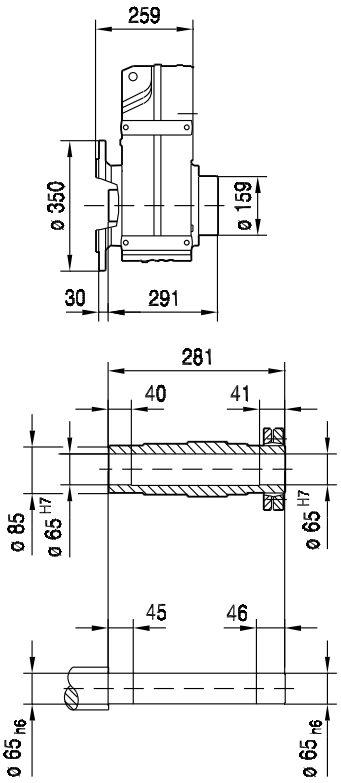

FVF87..

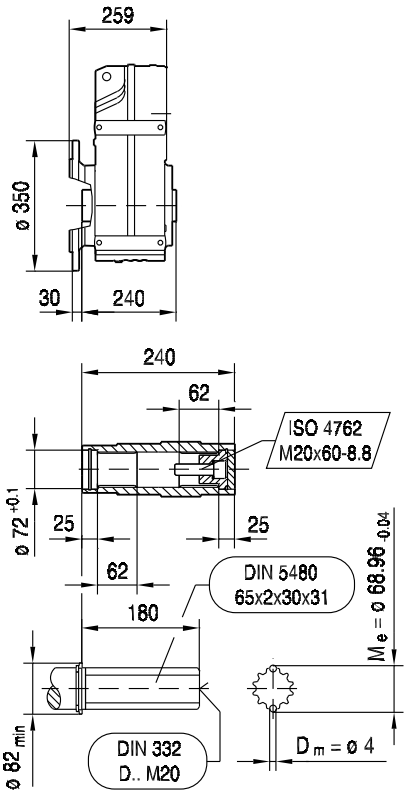

(→ 144)	AQ100/1-2	AQ100/3-4	AQ115/1-3	AQ140/1-2	AQ140/3-4	AQ160/1	AQ190/1-2	AQ190/3
L	485	499	508	536	549	549	595	619
Z5	111	125	134	162	175	175	220.5	244.5

FA87..

42 106 00 08

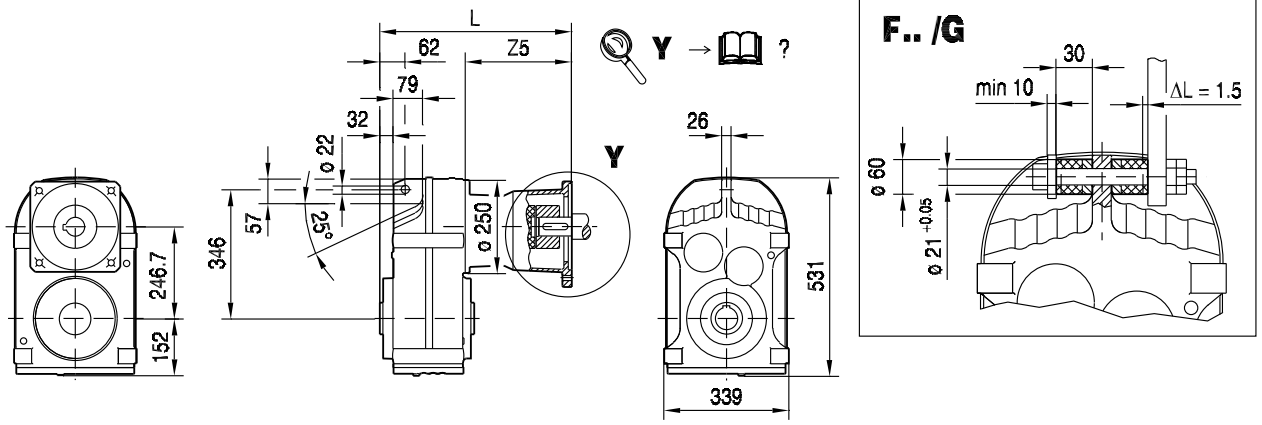

FA87..

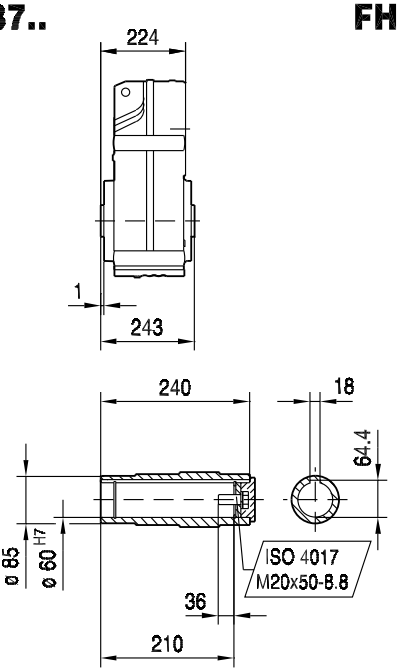

FH87..

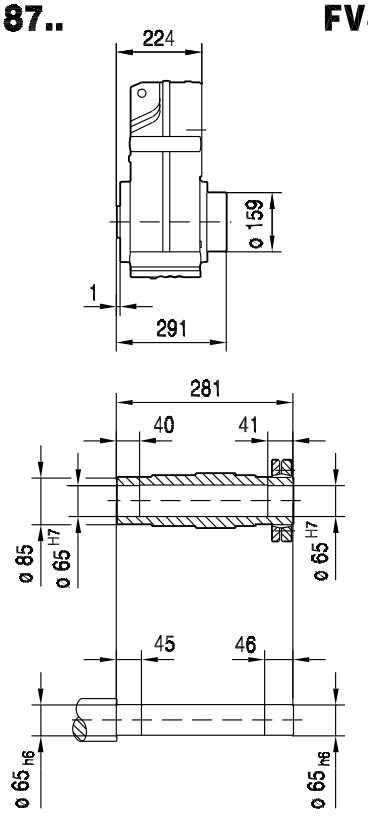

FV87..

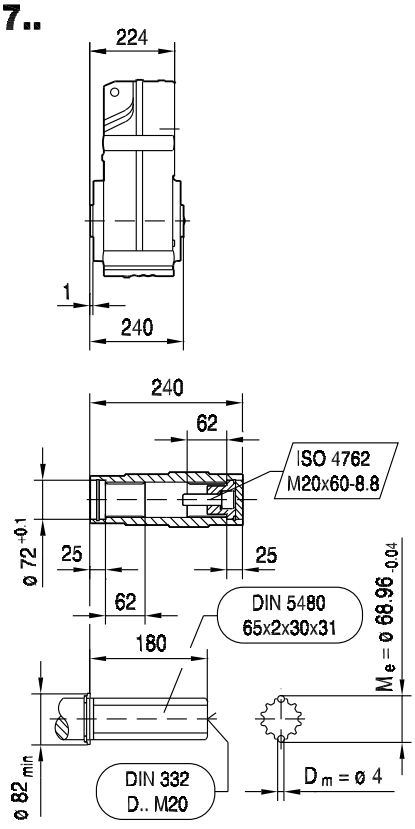

(→ 144)	AQ100/1-2	AQ100/3-4	AQ115/1-3	AQ140/1-2	AQ140/3-4	AQ160/1	AQ190/1-2	AQ190/3
L	335	349	358	386	399	399	445	469
Z5	111	125	134	162	175	175	220.5	244.5

FAZ87..

42 108 00 08

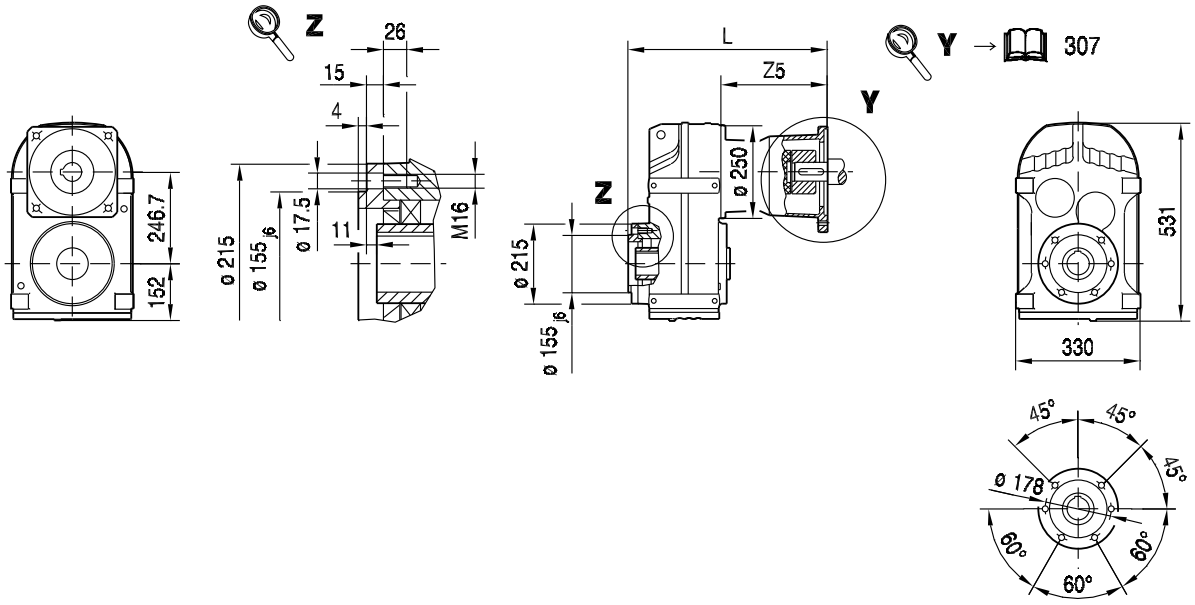

FAZ87..

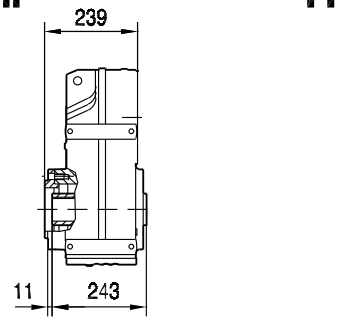

FHZ87..

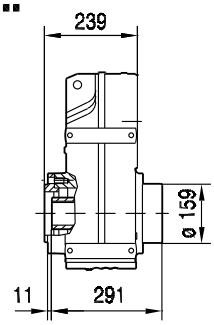

FVZ87..

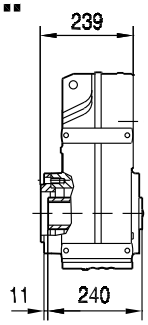

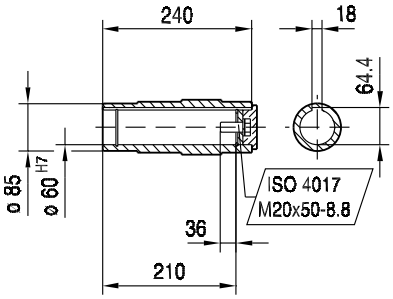

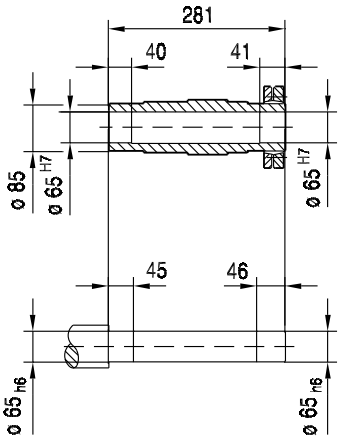

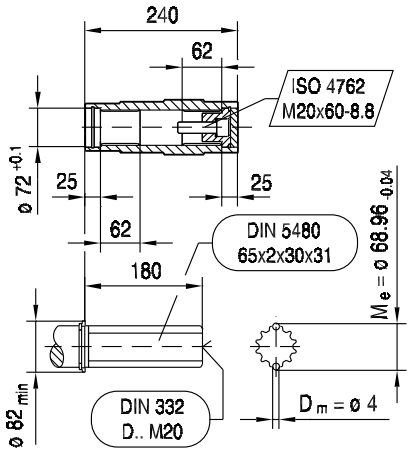

(→ 144)	AQ100/1-2	AQ100/3-4	AQ115/1-3	AQ140/1-2	AQ140/3-4	AQ160/1	AQ190/1-2	AQ190/3
L	350	364	373	401	414	414	460	484
Z5	111	125	134	162	175	175	220.5	244.5

FT87..

42 107 00 08

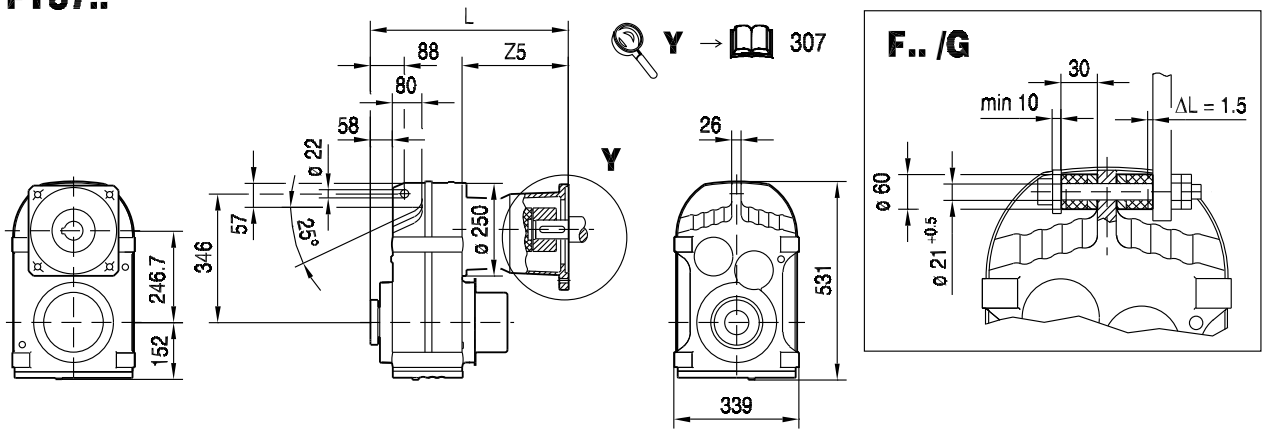

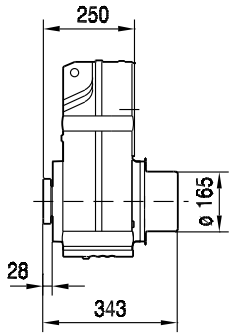

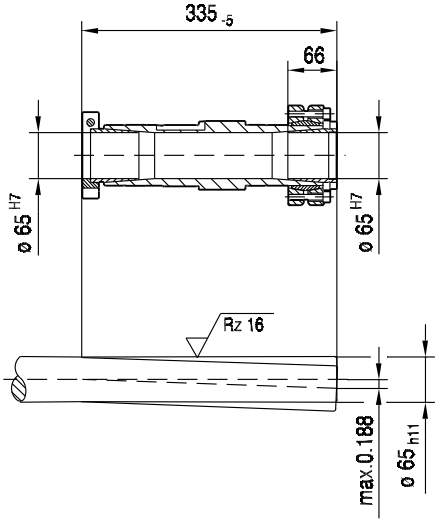

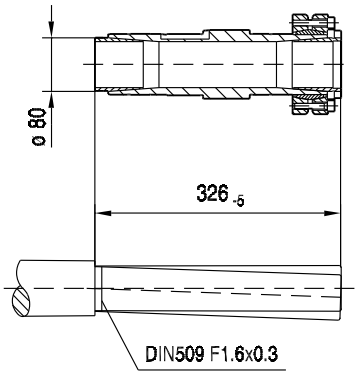

(→ 144)	AQ100/1-2	AQ100/3-4	AQ115/1-3	AQ140/1-2	AQ140/3-4	AQ160/1	AQ190/1-2	AQ190/3
L	361	375	384	412	425	425	471	495
Z5	111	125	134	162	175	175	220.5	244.5

9.2.15 F 97 AQ.. [Nm]

[Nm]		AQ. M_{amax} | M_{apk} | $M_{aNotaus}$											
	i	140/1			140/2-4			160/1			190/1-3		
FA97 2	3.87										615	615	615
	4.57	270	270	455	455	455	455	455	455	455	730	730	730
	5.23	310	310	520	520	520	520	520	520	520	830	830	830
	6.17	370	370	615	615	615	615	615	615	615	980	980	980
	7.07	420	420	705	705	705	705	705	705	705	1130	1130	1130
	8.22	490	490	820	820	820	820	820	820	820	1310	1310	1310
	9.06	540	540	900	900	900	900	900	900	900	1440	1440	1440
	11.16	665	665	1110	1110	1110	1110	1110	1110	1110	1780	1780	1780
	12.77	765	765	1270	1270	1270	1270	1270	1270	1270	2040	2040	2040
	15.06	900	900	1500	1500	1500	1500	1500	1500	1500	2400	2400	2400
	17.25	1030	1030	1720	1720	1720	1720	1720	1720	1720	2760	2760	2760
	20.07	1200	1200	2000	2000	2000	2000	2000	2000	2000	3210	3210	3210
	22.11	1320	1320	2210	2210	2210	2210	2210	2210	2210	3530	3530	3530
	24.92	1490	1490	2490	2490	2490	2490	2490	2490	2490	3980	3980	3980
	27.44	1640	1640	2740	2740	2740	2740	2740	2740	2740	4300	4360	4390
	30.39	1820	1820	3030	3030	3030	3030	3030	3030	3030	4300	4360	4860
	33.91	2030	2030	3390	3390	3390	3390	3390	3390	3390	4300	4360	5420
	36.64	2190	2190	3660	3070	3660	3660	3070	3660	3660	3070	4360	5210
	43.28	2590	2590	4320	3070	4320	4320	3070	4320	4320	3070	4360	5210
FA97 3	32.50	1950	1950	3250	3250	3250	3250	3250	3250	3250	4300	4360	5200
	38.86	2330	2330	3880	3880	3880	3880	3880	3880	3880	4300	4360	6210
	44.49	2660	2660	4440	4300	4360	4440	4300	4360	4440	4300	4360	7110
	52.49	3140	3140	5240	4300	4360	5240	4300	4360	5240	4300	4360	7310
	58.06	3480	3480	5800	4300	4360	5800	4300	4360	5800	4300	4360	7310
	65.47	3920	3920	6540	4300	4360	6540	4300	4360	6540	4300	4360	7310
	72.29	4300	4330	7220	4300	4360	7220	4300	4360	7220	4300	4360	7310
	75.63	4300	4360	7310	4300	4360	7310	4300	4360	7310	4300	4360	7310
	80.31	4300	4360	7310	4300	4360	7310	4300	4360	7310	4300	4360	7310
	86.59	4300	4360	7310	4300	4360	7310	4300	4360	7310	4300	4360	7310
	89.85	4300	4360	7310	4300	4360	7310	4300	4360	7310	4300	4360	7310
	97.58	4300	4360	7310	4300	4360	7310	4300	4360	7310	4300	4360	7310
	102.16	4300	4360	7310	4300	4360	7310	4300	4360	7310	4300	4360	7310
	112.99	4300	4360	7310	4300	4360	7310	4300	4360	7310	4300	4360	7310
	127.42	4300	4360	7310	4300	4360	7310	4300	4360	7310	4300	4360	7310
	140.71	4300	4360	7310	4300	4360	7310	4300	4360	7310	4300	4360	7310
	156.30	4300	4360	7310	4300	4360	7310	4300	4360	7310	4300	4360	7310
	174.87	4300	4360	7310	4300	4360	7310	4300	4360	7310	4300	4360	7310
	189.92	4300	4360	7310	4300	4360	7310	4300	4360	7310	4300	4360	7310
	223.88	4300	4360	7310	4300	4360	7310	4300	4360	7310	4300	4360	7310
	253.41	4300	4360	7310	4300	4360	7310	4300	4360	7310			
	276.77	4300	4360	7310	4300	4360	7310	4300	4360	7310			

m [kg]		AQ.			
	s	140/1	140/2-4	160/1	190/1-3
FA97	2	160	160	160	165
FA97	3	165	165	165	175
FAF: + 21.7 kg / F: + 7.5 kg / FF: + 40.3 kg					

		AQ.			
		140/1	140/2-4	160/1	190/1-3
J_A 10^{-4}	[kgm^2]	5.1	10.0	10.0	25.0
c_{TA}	[Nm/']	0.625	1.0	1.0	2.08

FA97							F_{Ramax}				F_{Rapk}			
n_e = 1400	i	M_{amax} [Nm]	M_{apk} [Nm]	$M_{aNotaus}$ [Nm]	n_{ak} [1/min]	J_G 10^{-4} [kgm^2]	FA [N]	FAF [N]	F [N]	FF [N]	FA [N]	FAF [N]	F [N]	FF [N]
	3.87	1800	2700	3060	465	266	10300	10300	9960	16500	40000	40000	33600	30600
	4.57	2050	3000	3485	328	193	10200	10200	9950	16800	40000	40000	32900	30300
	5.23	2150	3020	3655	325	153	10700	10700	10400	17400	40000	40000	32800	30300
	6.17	2250	3030	3825	324	116	11400	11400	11100	18300	40000	40000	32800	30200
	7.07	2360	3040	4012	297	92	11900	11900	11500	19000	40000	40000	32800	30200
	8.22	2360	3050	4012	328	72	13100	13100	12600	20300	40000	40000	32800	30200
	9.06	2360	3050	4012	353	61	13900	13900	13400	21100	40000	40000	32800	30200
	11.16	4100	4360	6970	143	104	9710	9710	10000	18700	40000	40000	29700	28200
FA97	12.77	4300	4360	7310	141	85	10100	10100	10500	19400	40000	40000	29700	28200
 2	15.06	4300	4360	7310	153	67	11700	11700	11900	21100	40000	40000	29700	28200
	17.25	4300	4360	7310	157	55	13100	13100	13200	22500	40000	40000	29700	28200
	20.07	4300	4360	7310	149	45	14700	14700	14600	24100	40000	40000	29700	28200
	22.11	4300	4360	7310	149	39	15700	15700	15600	25200	40000	40000	29700	28200
	24.92	4300	4360	7310	144	33	17100	17100	16800	26600	40000	40000	29700	28200
	27.44	4300	4360	7310	142	28	18200	18200	17900	27800	40000	40000	29700	28200
	30.39	4300	4360	7310	141	22	19500	19500	19000	28300	40000	40000	29700	28200
	33.91	4300	4360	7310	139	19	20900	20900	20300	28300	40000	40000	29700	28200
	36.64	3070	4360	5219	191	17	27000	27000	25500	30200	40000	40000	29700	28200
	43.28	3070	4360	5219	162	13	29300	29300	27600	30200	40000	40000	29700	28200
	32.50	4300	4360	7310	52	60	20300	20300	19800	28300	40000	40000	29700	28200
	38.86	4300	4360	7310	51	48	22700	22700	21900	28300	40000	40000	29700	28200
	44.49	4300	4360	7310	52	39	24500	24500	23600	28300	40000	40000	29700	28200
	52.49	4300	4360	7310	51	31	26900	26900	25800	28300	40000	40000	29700	28200
	58.06	4300	4360	7310	52	27	28500	28500	27200	28300	40000	40000	29700	28200
	65.47	4300	4360	7310	52	23	30400	30400	29000	28300	40000	40000	29700	28200
	72.29	4300	4360	7310	53	20	32000	32000	29900	28300	40000	40000	29700	28200
	75.63	4300	4360	7310	56	42	32800	32800	29900	28300	40000	40000	29700	28200
	80.31	4300	4360	7310	52	17	33800	33800	29900	28300	40000	40000	29700	28200
	86.59	4300	4360	7310	57	34	35100	35100	29900	28300	40000	40000	29700	28200
FA97	89.85	4300	4360	7310	52	14	35700	35700	29900	28300	40000	40000	29700	28200
 3	97.58	4300	4360	7310	52	13	37200	37200	29900	28300	40000	40000	29700	28200
	102.16	4300	4360	7310	58	28	38100	38100	29900	28300	40000	40000	29700	28200
	112.99	4300	4360	7310	58	25	40000	40000	29900	28300	40000	40000	29700	28200
	127.42	4300	4360	7310	55	20	40000	40000	29900	28300	40000	40000	29700	28200
	140.71	4300	4360	7310	50	18	40000	40000	29900	28300	40000	40000	29700	28200
	156.30	4300	4360	7310	45	15	40000	40000	29900	28300	40000	40000	29700	28200
	174.87	4300	4360	7310	40	13	40000	40000	29900	28300	40000	40000	29700	28200
	189.92	4300	4360	7310	37	12	40000	40000	29900	28300	40000	40000	29700	28200
	223.88	4300	4360	7310	31	9.2	40000	40000	29900	28300	40000	40000	29700	28200
	253.41	4300	4360	7310	28	5.9	40000	40000	29900	28300	40000	40000	29700	28200
	276.77	4300	4360	7310	25	5.1	40000	40000	29900	28300	40000	40000	29700	28200

AQ.	i	n_{epk} [1/min]	η [%]	c_{TG} FA [Nm/']	FAF [Nm/']	F [Nm/']	FF [Nm/']	φ /R [']
FA97 2	3.87	3197	97	627	627	324	283	9
	4.57	3597	97	627	627	324	283	9
	5.23	3924	97	627	627	324	283	9
	6.17	4378	97	627	627	324	283	9
	7.07	4500	97	627	627	324	283	9
	8.22	4500	97	627	627	324	283	9
	9.06	4500	97	627	627	324	283	9
	11.16	4500	97	873	873	380	325	6
	12.77	4500	97	873	873	380	325	6
	15.06	4500	97	873	873	380	325	6
	17.25	4500	97	873	873	380	325	6
	20.07	4500	97	873	873	380	325	6
	22.11	4500	97	873	873	380	325	6
	24.92	4500	97	873	873	380	325	6
	27.44	4500	97	873	873	380	325	6
	30.39	4500	97	873	873	380	325	6
	33.91	4500	97	873	873	380	325	6
	36.64	4500	97	873	873	380	325	6
	43.28	4500	97	873	873	380	325	6
FA97 3	32.50	4500	96	956	956	395	336	6
	38.86	4378	96	956	956	395	336	6
	44.49	4500	96	956	956	395	336	6
	52.49	4500	96	956	956	395	336	6
	58.06	4500	96	956	956	395	336	6
	65.47	4500	96	956	956	395	336	6
	72.29	4500	96	956	956	395	336	6
	75.63	4378	95	965	965	396	337	6
	80.31	4500	95	956	956	395	336	6
	86.59	4500	95	965	965	396	337	6
	89.85	4500	95	956	956	395	336	6
	97.58	4500	95	956	956	395	336	6
	102.16	4500	95	965	965	396	337	6
	112.99	4500	95	965	965	396	337	6
	127.42	4500	95	965	965	396	337	6
	140.71	4500	95	965	965	396	337	6
	156.30	4500	95	965	965	396	337	6
	174.87	4500	94	965	965	396	337	6
	189.92	4500	94	965	965	396	337	6
	223.88	4500	94	965	965	396	337	6
	253.41	4500	93	965	965	396	337	6
	276.77	4500	93	965	965	396	337	6

9.2.16 F 97 AQ.. [mm]

F97..

42 109 00 08

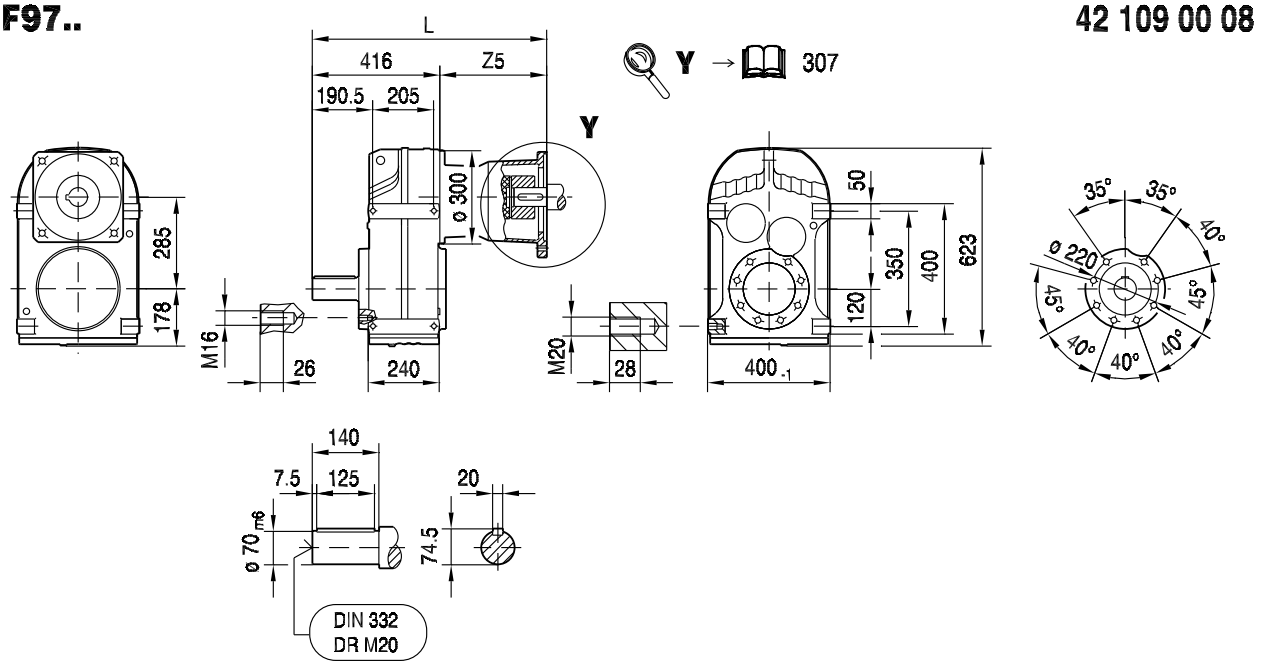

FA97B..

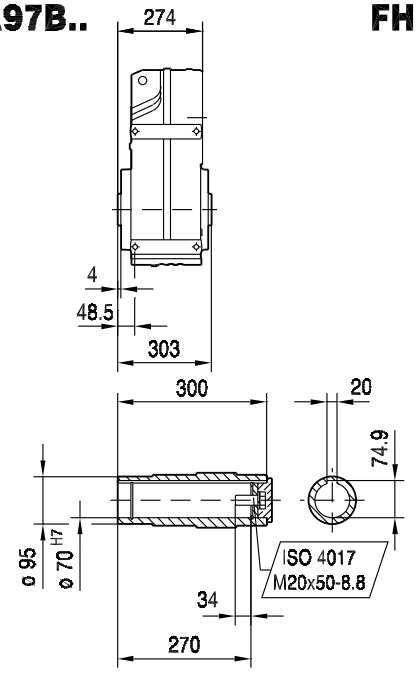

FH97B..

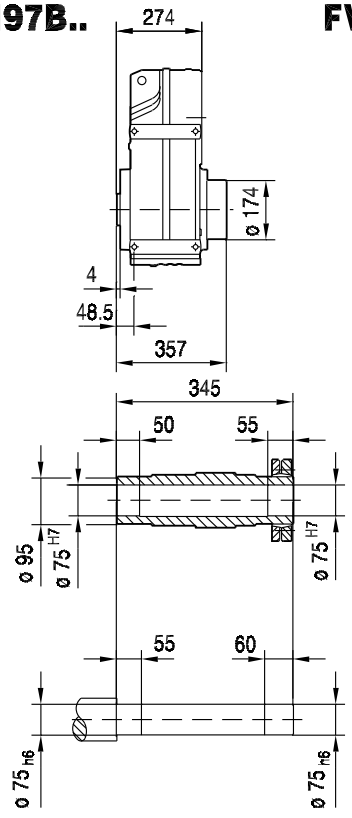

FV97B..

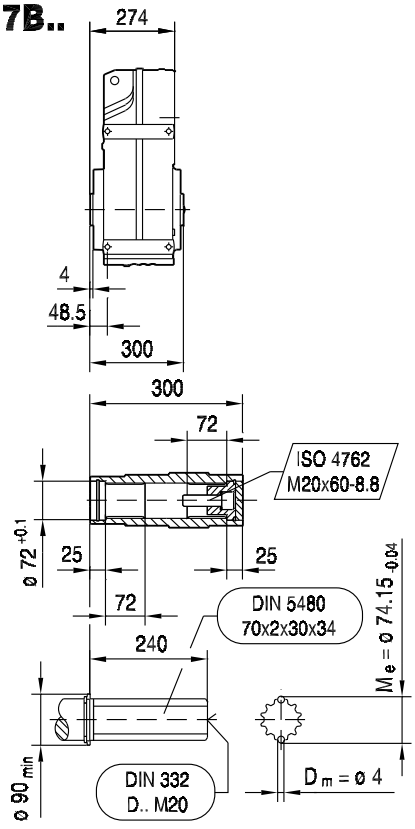

(→ 144)	AQ140/1-2	AQ140/3-4	AQ160/1	AQ190/1-2	AQ190/3			
L	573	586	586	632	656			
Z5	157	170	170	215.5	239.5			

FF97..

42 110 00 08

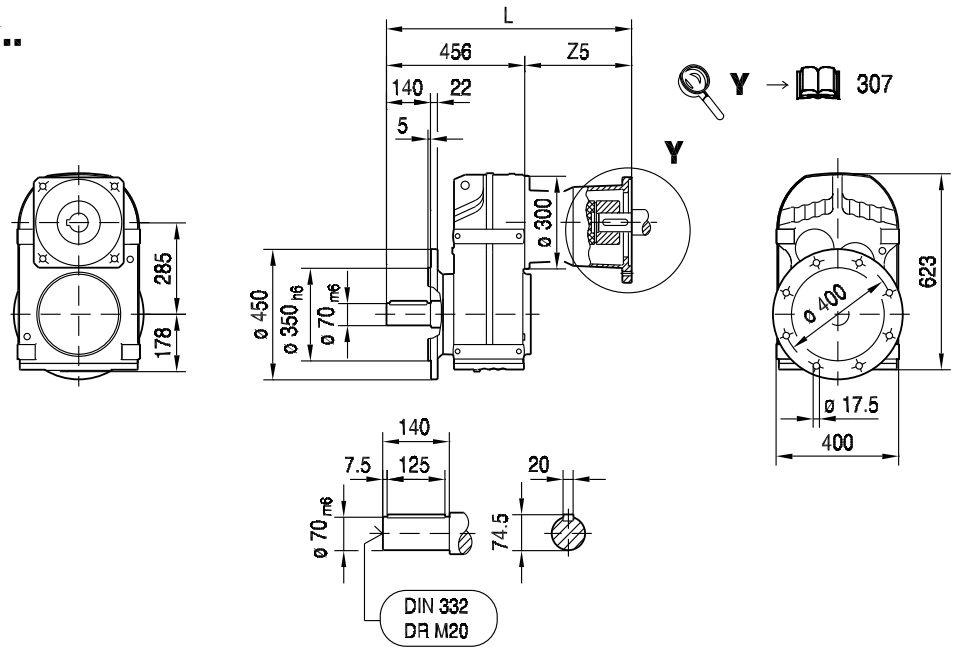

9

FAF97..

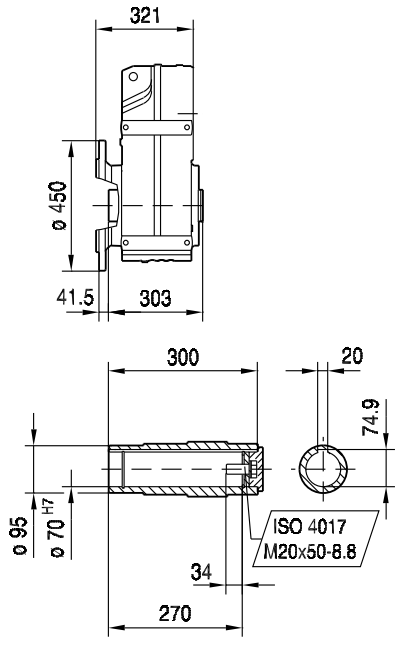

FHF97..

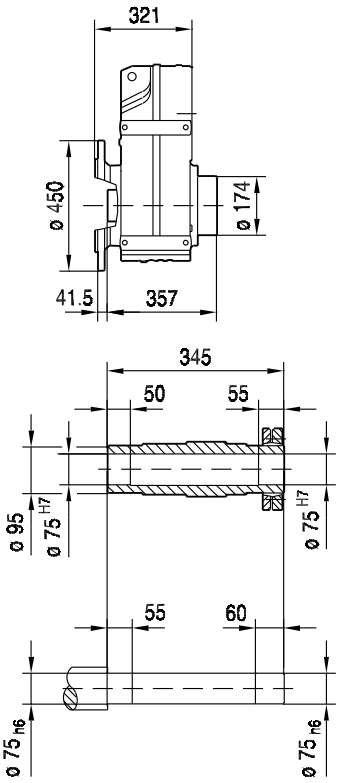

FVF97..

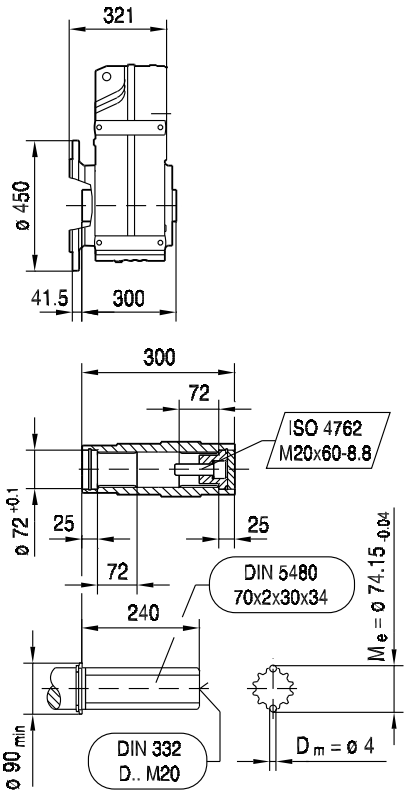

(→ 144)	AQ140/1-2	AQ140/3-4	AQ160/1	AQ190/1-2	AQ190/3			
L	613	626	626	672	696			
Z5	157	170	170	215.5	239.5			

FAZ97..

42 113 00 08

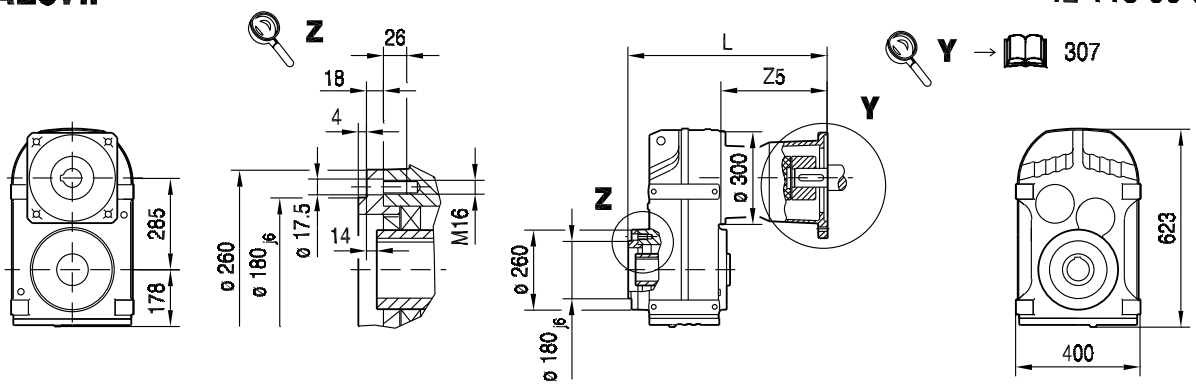

FAZ97..

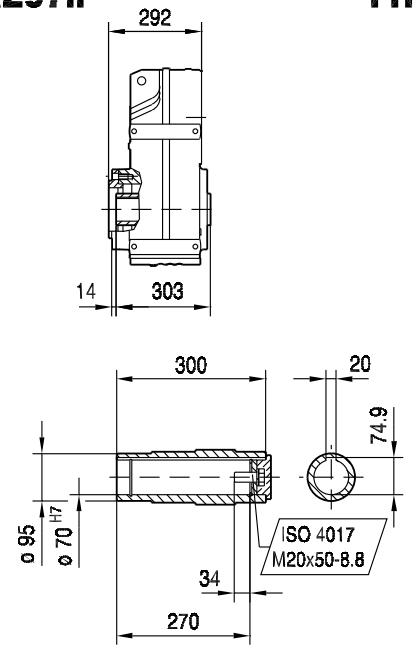

FHZ97..

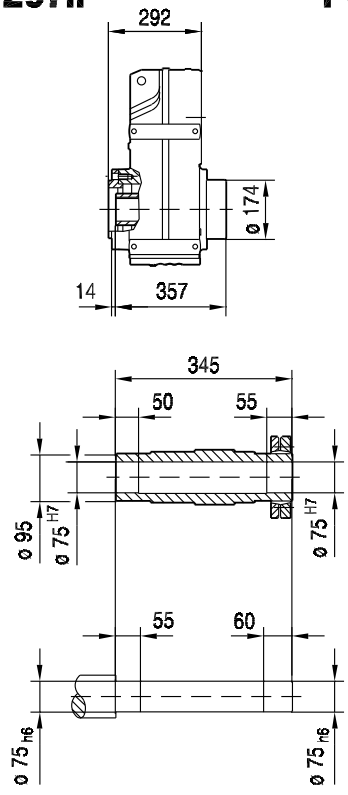

FVZ97..

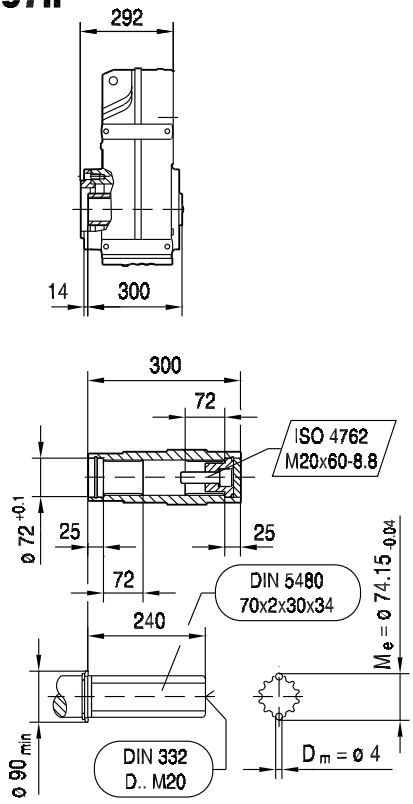

(→ 144)	AQ140/1-2	AQ140/3-4	AQ160/1	AQ190/1-2	AQ190/3			
L	449	462	462	508	532			
Z5	157	170	170	215.5	239.5			

FT97..

42 112 00 08

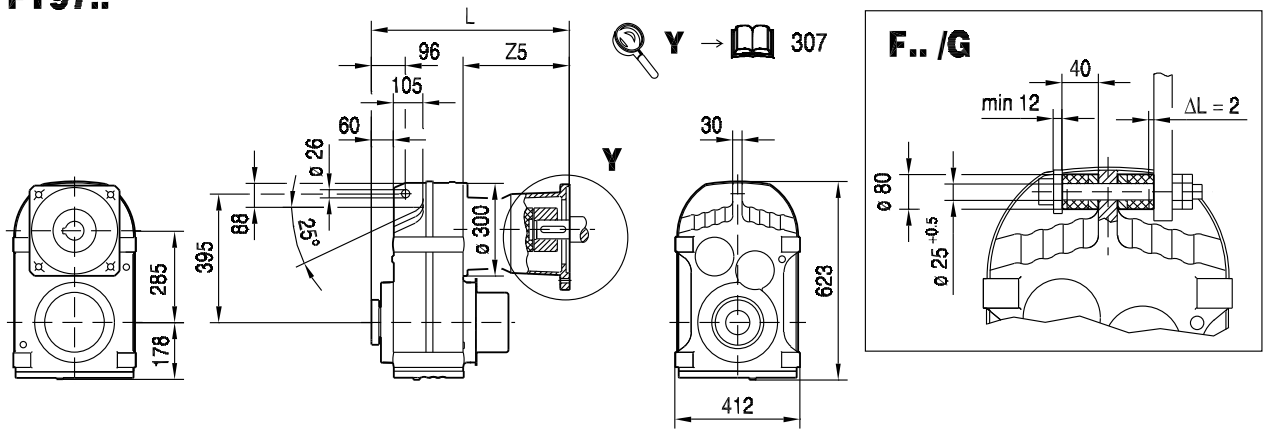

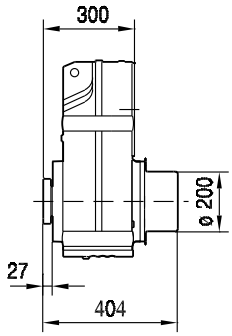

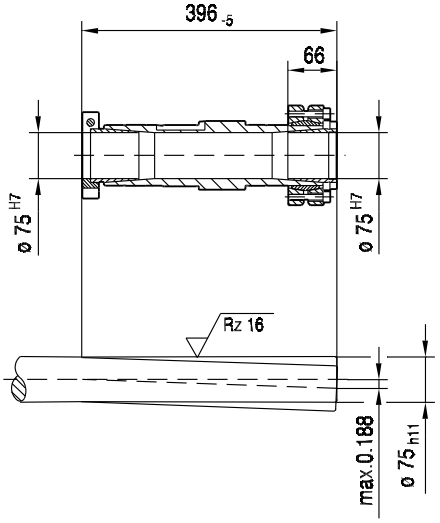

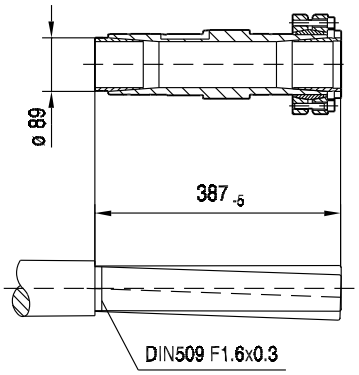

(→ 144)	AQ140/1-2	AQ140/3-4	AQ160/1	AQ190/1-2	AQ190/3			
L	457	470	470	516	540			
Z5	157	170	170	215.5	239.5			

9.2.17 F 107 AQ.. [Nm]

[Nm]		AQ. M_{amax} | M_{apk} | $M_{aNotaus}$											
	i	140/1			140/2-4			160/1			190/1-3		
FA107 2	5.03												
	6.22										990	990	990
	7.40	440	440	740	740	740	740	740	740	740	1180	1180	1180
	8.37	500	500	830	830	830	830	830	830	830	1330	1330	1330
	9.69	580	580	960	960	960	960	960	960	960	1550	1550	1550
	9.96												
	12.33										1970	1970	1970
	14.67	880	880	1460	1460	1460	1460	1460	1460	1460	2340	2340	2340
	16.58	990	990	1650	1650	1650	1650	1650	1650	1650	2650	2650	2650
	19.20	1150	1150	1920	1920	1920	1920	1920	1920	1920	3070	3070	3070
	21.76	1300	1300	2170	2170	2170	2170	2170	2170	2170	3480	3480	3480
	25.14	1500	1500	2510	2510	2510	2510	2510	2510	2510	4020	4020	4020
	27.57	1650	1650	2750	2750	2750	2750	2750	2750	2750	4410	4410	4410
	33.79	2020	2020	3370	3370	3370	3370	3370	3370	3370	5400	5400	5400
FA107 3	31.80										5080	5080	5080
	37.61	2250	2250	3760	3760	3760	3760	3760	3760	3760	6010	6010	6010
	43.03	2580	2580	4300	4300	4300	4300	4300	4300	4300	6880	6880	6880
	50.73	3040	3040	5070	5070	5070	5070	5070	5070	5070	7680	8110	8110
	58.12	3480	3480	5810	5810	5810	5810	5810	5810	5810	7680	8860	9290
	67.62	4050	4050	6760	6760	6760	6760	6760	6760	6760	7680	8860	10800
	74.52	4470	4470	7450	7450	7450	7450	7450	7450	7450	7680	8860	11900
	83.99	5030	5030	8390	7680	8390	8390	7680	8390	8390	7680	8860	13000
	88.49	5300	5300	8840	7680	8840	8840	7680	8840	8840	7680	8860	13000
	92.47	5540	5540	9240	7680	8860	9240	7680	8860	9240	7680	8860	13000
	101.38	6080	6080	10100	7680	8860	10100	7680	8860	10100	7680	8860	13000
	117.94	7070	7070	11700	7680	8860	11700	7680	8860	11700	7680	8860	13000
	129.97	7680	7790	12900	7680	8860	12900	7680	8860	12900	7680	8860	13000
	146.49	7680	8780	13000	7680	8860	13000	7680	8860	13000	7680	8860	13000
	161.28	7680	8860	13000	7680	8860	13000	7680	8860	13000	7680	8860	13000
	178.64	7680	8860	13000	7680	8860	13000	7680	8860	13000	7680	8860	13000
	199.31	7680	8860	13000	7680	8860	13000	7680	8860	13000	7680	8860	13000
	215.37	7680	8860	13000	7680	8860	13000	7680	8860	13000	7680	8860	13000
	254.40	7680	8860	13000	7680	8860	13000	7680	8860	13000	7680	8860	13000

m [kg]		AQ.			
	s	140/1	140/2-4	160/1	190/1-3
FA107	2	230	230	230	240
FA107	3	240	240	240	250
FAF: + 21.0 kg / F: + 16.6 kg / FF: + 43.9 kg					

		AQ.			
		140/1	140/2-4	160/1	190/1-3
J_A 10^{-4}	[kgm^2]	5.1	10.0	10.0	25.0
c_{TA}	[Nm/']	0.625	1.0	1.0	2.08

FA107							F_{Ramax}				F_{Rapk}			
n_e = 1400	i	M_{amax} [Nm]	M_{apk} [Nm]	$M_{aNotaus}$ [Nm]	n_{ak} [1/min]	J_G 10^{-4} [kgm^2]	FA [N]	FAF [N]	F [N]	FF [N]	FA [N]	FAF [N]	F [N]	FF [N]
FA107 2	5.03	4600	6240	7820	417	439	4520	39000	16400	19200	65000	65000	52500	55300
	6.22	4600	6240	7820	498	311	6920	42600	19000	22200	65000	65000	52500	55300
	7.40	4600	6240	7820	541	236	8400	45800	21300	24800	65000	65000	52500	55300
	8.37	4800	6240	8160	490	195	8720	47400	22000	25600	65000	65000	52500	55300
	9.69	4910	6240	8347	485	154	9670	50000	23500	27300	65000	65000	52500	55300
	9.96	6500	8860	11050	171	280	6200	47000	21500	25300	65000	65000	46500	45600
	12.33	7000	8860	11900	138	209	6580	49800	22600	26600	65000	65000	46500	45600
	14.67	7680	8860	13056	102	164	6050	51500	22400	26500	65000	65000	46500	45600
	16.58	7840	8860	13328	97	138	6870	53800	23900	28200	65000	65000	46500	45600
	19.20	7840	8860	13328	94	112	8600	57400	26500	31200	65000	65000	46500	45600
	21.76	7840	8860	13328	92	92	10100	60600	28800	33800	65000	65000	46500	45600
	25.14	7840	8860	13328	88	76	12000	64500	31500	36800	65000	65000	46500	45600
	27.57	7840	8860	13328	87	66	13200	65000	33300	38800	65000	65000	46500	45600
	33.79	7400	8860	12580	104	43	17700	65000	38300	44900	65000	65000	46500	45600
FA107 3	31.80	7680	8860	13056	69	125	15800	65000	36500	42700	65000	65000	46500	45600
	37.61	7680	8860	13056	74	94	18300	65000	39500	46300	65000	65000	46500	45600
	43.03	7680	8860	13056	79	77	20300	65000	42000	49000	65000	65000	46500	45600
	50.73	7680	8860	13056	85	62	23000	65000	45100	51100	65000	65000	46500	45600
	58.12	7680	8860	13056	88	51	25300	65000	47800	51100	65000	65000	46500	45600
	67.62	7680	8860	13056	92	42	28000	65000	49800	51100	65000	65000	46500	45600
	74.52	7680	8860	13056	94	37	29900	65000	49800	51100	65000	65000	46500	45600
	83.99	7680	8860	13056	83	31	32200	65000	49800	51100	65000	65000	46500	45600
	88.49	7680	8860	13056	79	56	33200	65000	49800	51100	65000	65000	46500	45600
	92.47	7680	8860	13056	76	27	34100	65000	49800	51100	65000	65000	46500	45600
	101.38	7680	8860	13056	69	47	36000	65000	49800	51100	65000	65000	46500	45600
	117.94	7680	8860	13056	59	39	39300	65000	49800	51100	65000	65000	46500	45600
	129.97	7680	8860	13056	54	34	41400	65000	49800	51100	65000	65000	46500	45600
	146.49	7680	8860	13056	48	29	44200	65000	49800	51100	65000	65000	46500	45600
	161.28	7680	8860	13056	43	25	46600	65000	49800	51100	65000	65000	46500	45600
	178.64	7680	8860	13056	39	19	49100	65000	49800	51100	65000	65000	46500	45600
	199.31	7680	8860	13056	35	16	52000	65000	49800	51100	65000	65000	46500	45600
	215.37	7680	8860	13056	33	15	54000	65000	49800	51100	65000	65000	46500	45600
	254.40	7680	8860	13056	28	12	58600	65000	49800	51100	65000	65000	46500	45600

AQ.				c_{TG}				φ
	i	n_{epk} [1/min]	η [%]	FA [Nm/']	FAF [Nm/']	F [Nm/']	FF [Nm/']	/R [']
FA107 2	5.03	2797	97	1359	1359	722	666	7
	6.22	3197	97	1359	1359	722	666	7
	7.40	3597	97	1359	1359	722	666	7
	8.37	3924	97	1359	1359	722	666	7
	9.69	4500	97	1359	1359	722	666	7
	9.96	4500	97	1612	1612	788	722	5
	12.33	4500	97	1612	1612	788	722	5
	14.67	4500	97	1612	1612	788	722	5
	16.58	4500	97	1612	1612	788	722	5
	19.20	4500	97	1612	1612	788	722	5
	21.76	4500	97	1612	1612	788	722	5
	25.14	4500	97	1612	1612	788	722	5
	27.57	4500	97	1612	1612	788	722	5
	33.79	4500	97	1612	1612	788	722	5



AQ.	i	n_{epk} [1/min]	η [%]	c_{TG} FA [Nm/']	FAF [Nm/']	F [Nm/']	FF [Nm/']	φ /R [']
	31.80	3197	95	1806	1806	832	758	6
	37.61	3597	95	1806	1806	832	758	6
	43.03	3924	95	1806	1806	832	758	6
	50.73	4378	95	1806	1806	832	758	6
	58.12	4500	96	1806	1806	832	758	6
	67.62	4500	96	1806	1806	832	758	6
	74.52	4500	96	1806	1806	832	758	6
	83.99	4500	96	1806	1806	832	758	6
FA107	88.49	4378	95	1823	1823	836	761	5
3	92.47	4500	96	1806	1806	832	758	6
	101.38	4500	95	1823	1823	836	761	5
	117.94	4500	95	1823	1823	836	761	5
	129.97	4500	95	1823	1823	836	761	5
	146.49	4500	95	1823	1823	836	761	5
	161.28	4500	95	1823	1823	836	761	5
	178.64	4500	95	1823	1823	836	761	5
	199.31	4500	95	1823	1823	836	761	5
	215.37	4500	94	1823	1823	836	761	5
	254.40	4500	94	1823	1823	836	761	5

9.2.18 F 107 AQ.. [mm]

42 114 00 08

F107..

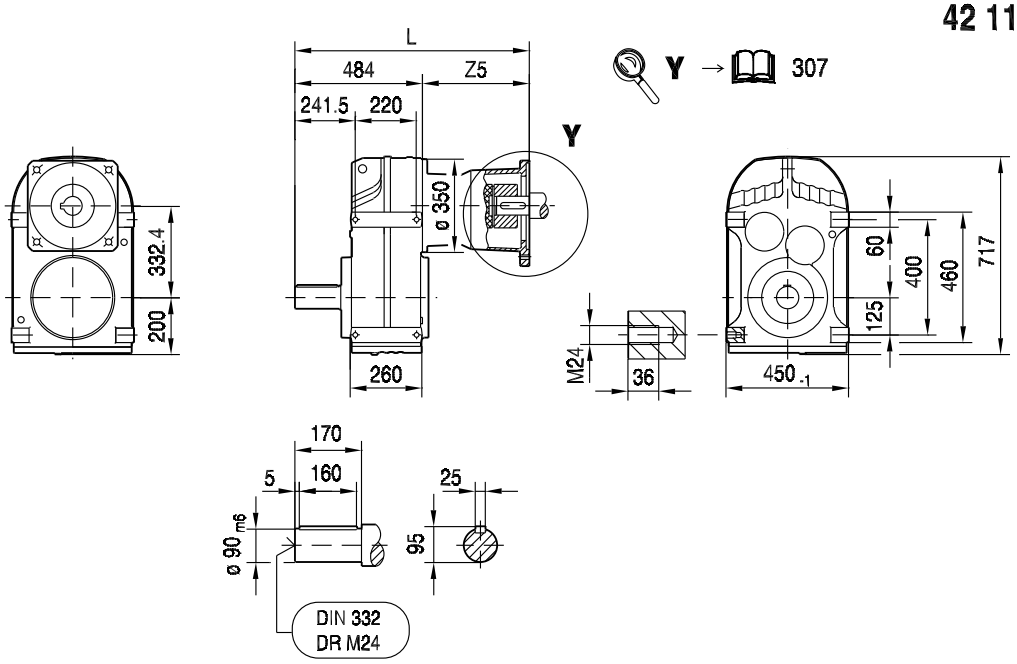

FA107B..

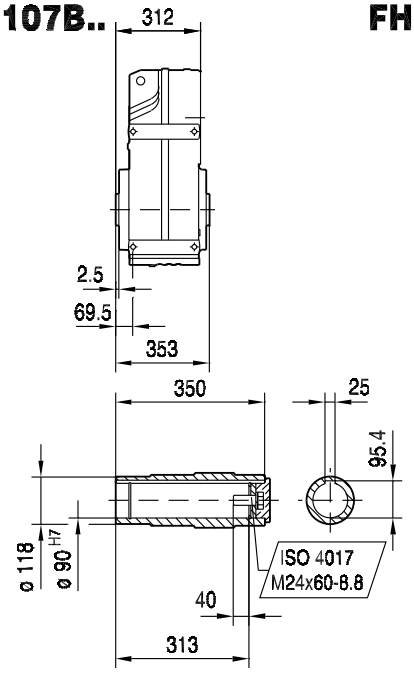

FH107B..

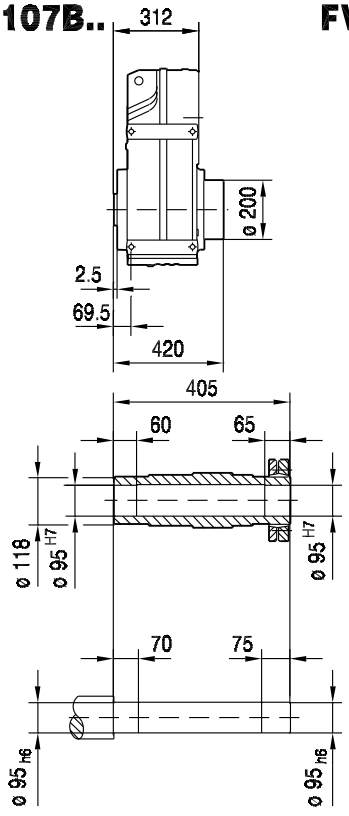

FV107B..

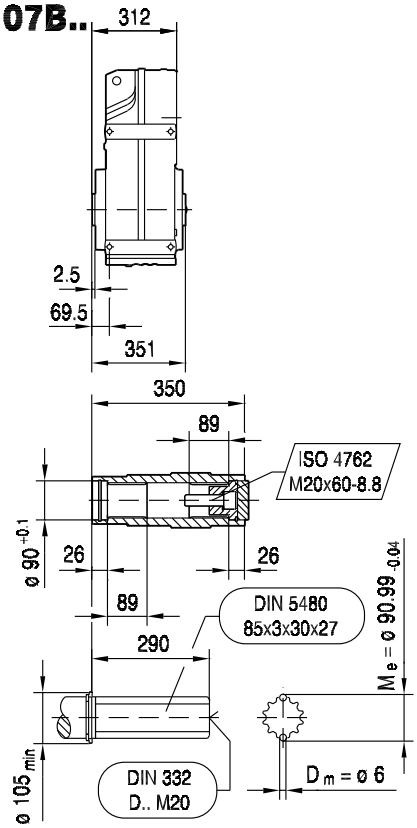

(→ 144)	AQ140/1-2	AQ140/3-4	AQ160/1	AQ190/1-2	AQ190/3			
L	635	648	648	694	718			
Z5	151	164	164	209.5	233.5			

FF107..

42 115 00 08

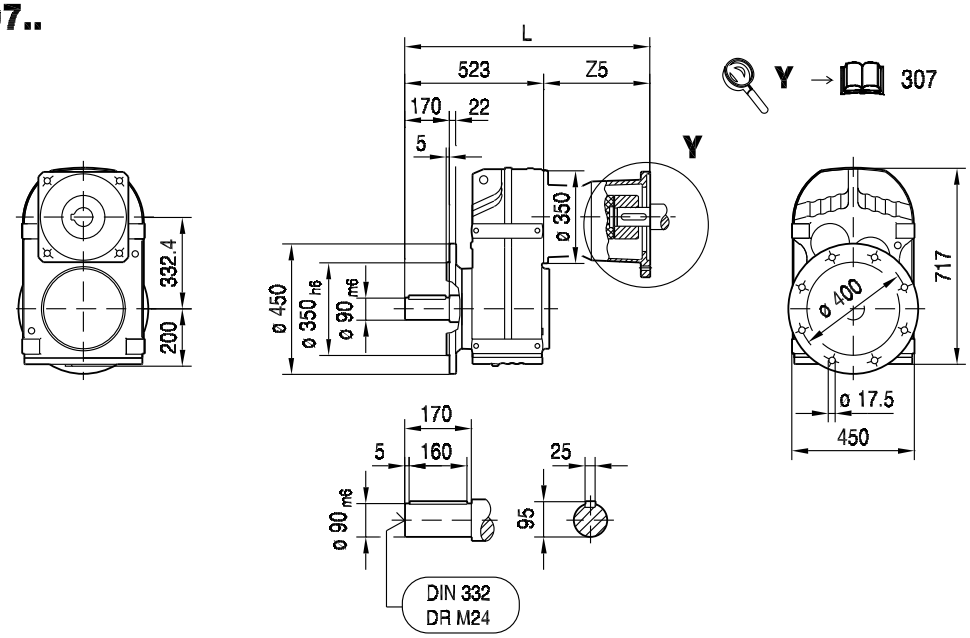

FAF107..

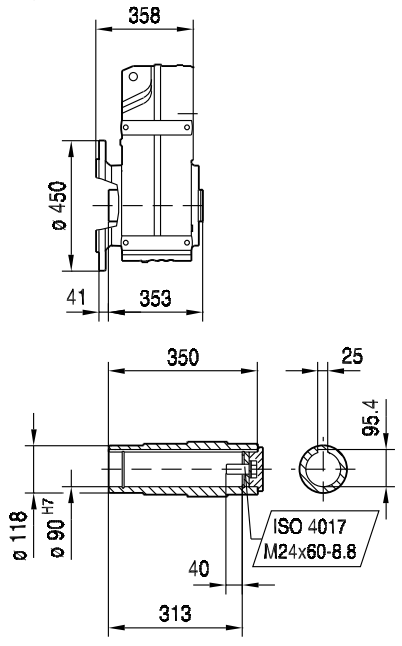

FHF107..

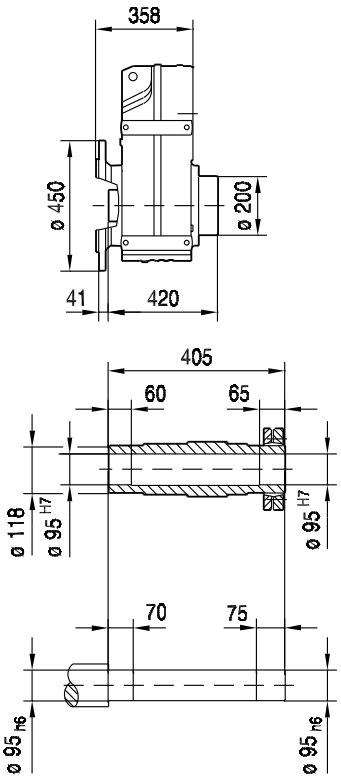

FVF107..

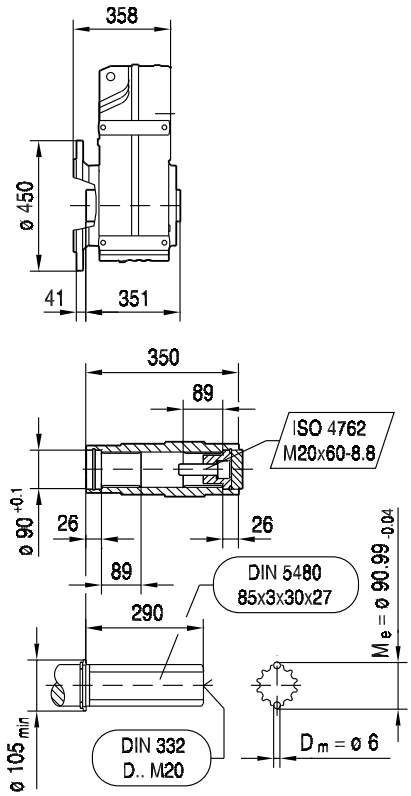

(→ 144)	AQ140/1-2	AQ140/3-4	AQ160/1	AQ190/1-2	AQ190/3			
L	674	687	687	733	757			
Z5	151	164	164	209.5	233.5			

FA107..

42 116 00 08

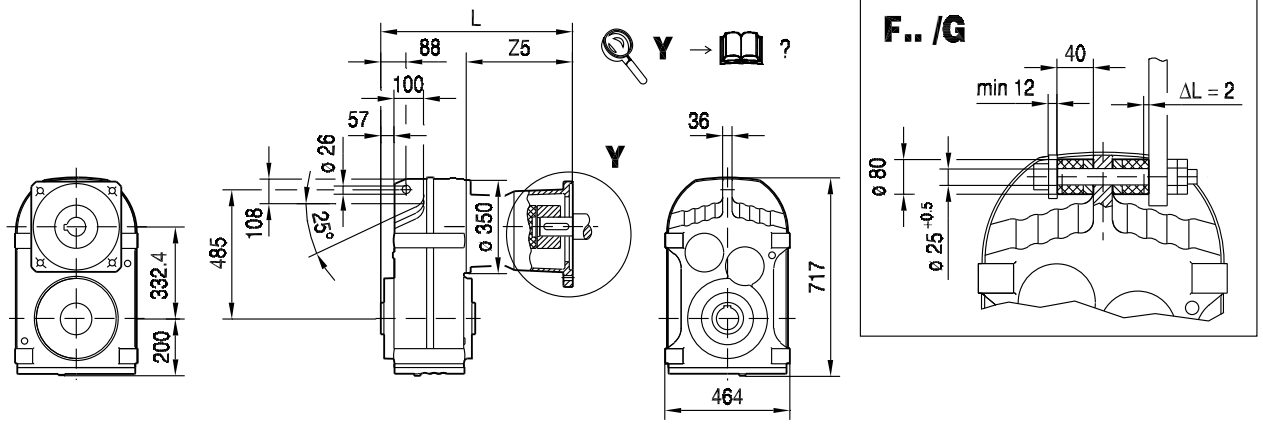

9

FA107..

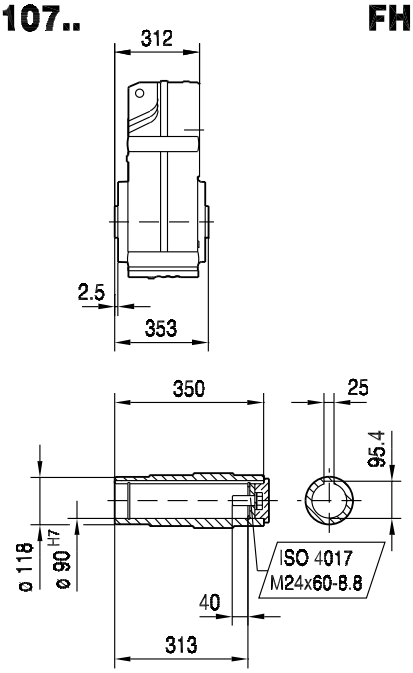

FH107..

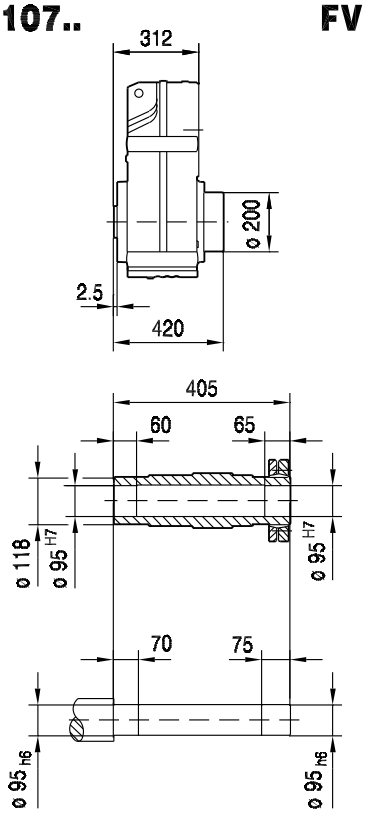

FV107..

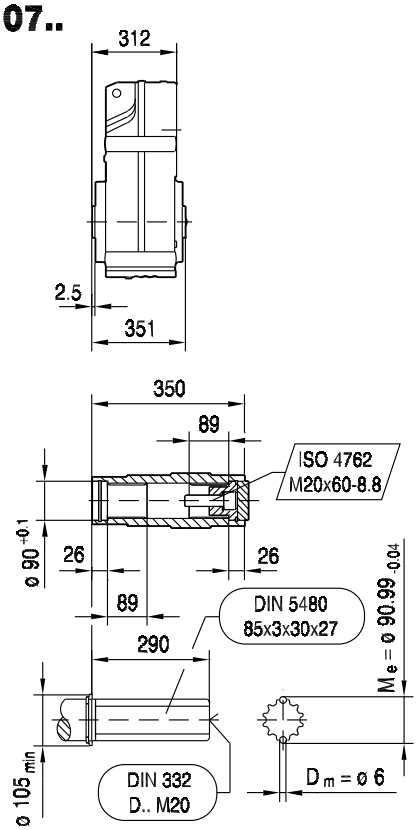

(→ 144)	AQ140/1-2	AQ140/3-4	AQ160/1	AQ190/1-2	AQ190/3			
L	463	476	476	522	546			
Z5	151	164	164	209.5	233.5			

FAZ107..

42 118 00 08

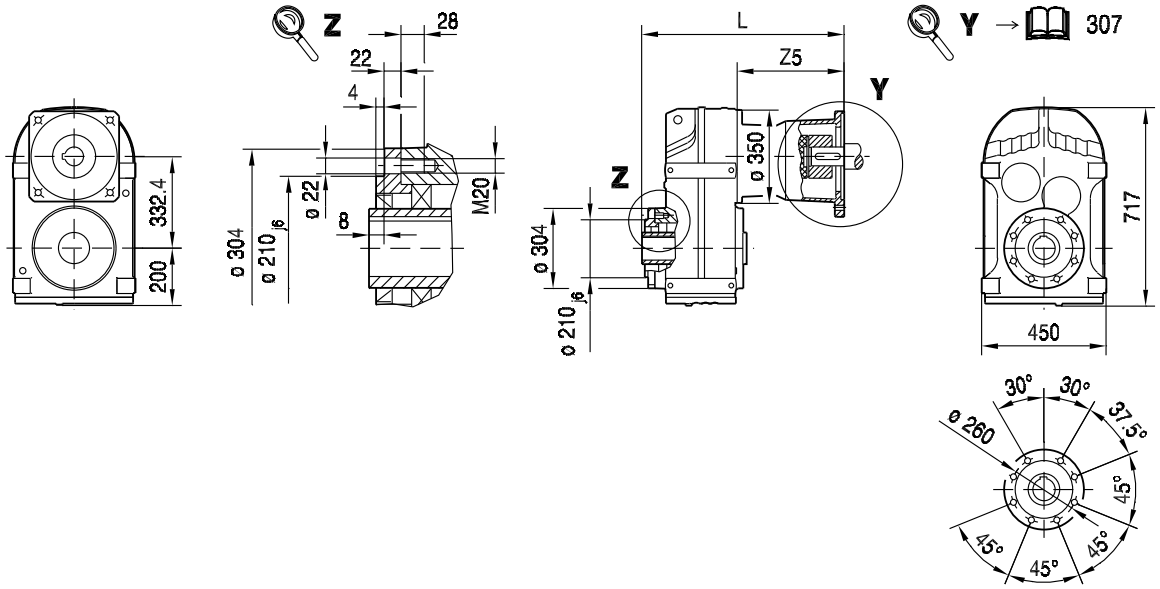

FAZ107..

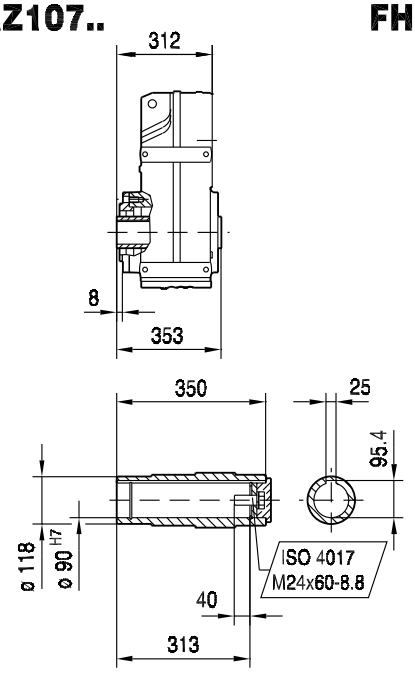

FHZ107..

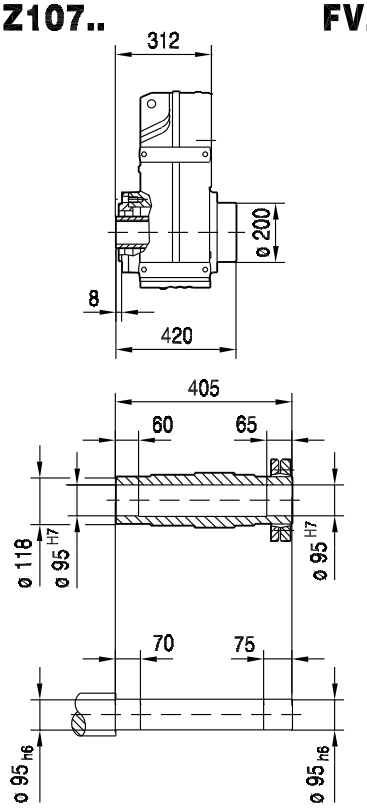

FVZ107..

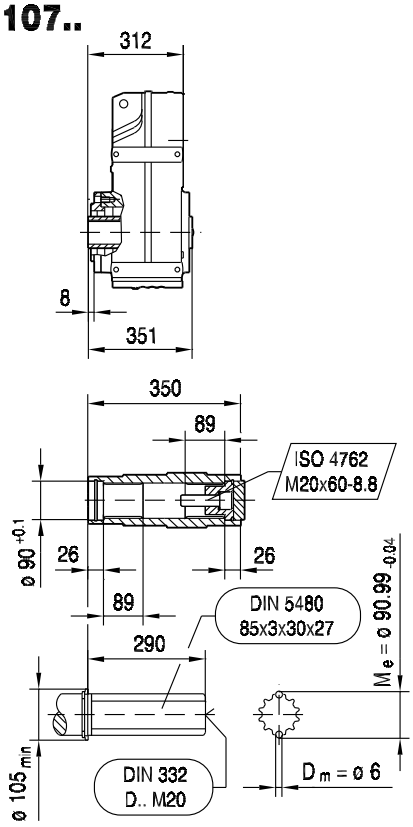

(→ 144)	AQ140/1-2	AQ140/3-4	AQ160/1	AQ190/1-2	AQ190/3			
L	463	476	476	522	546			
Z5	151	164	164	209.5	233.5			

FT107..

42 117 00 08

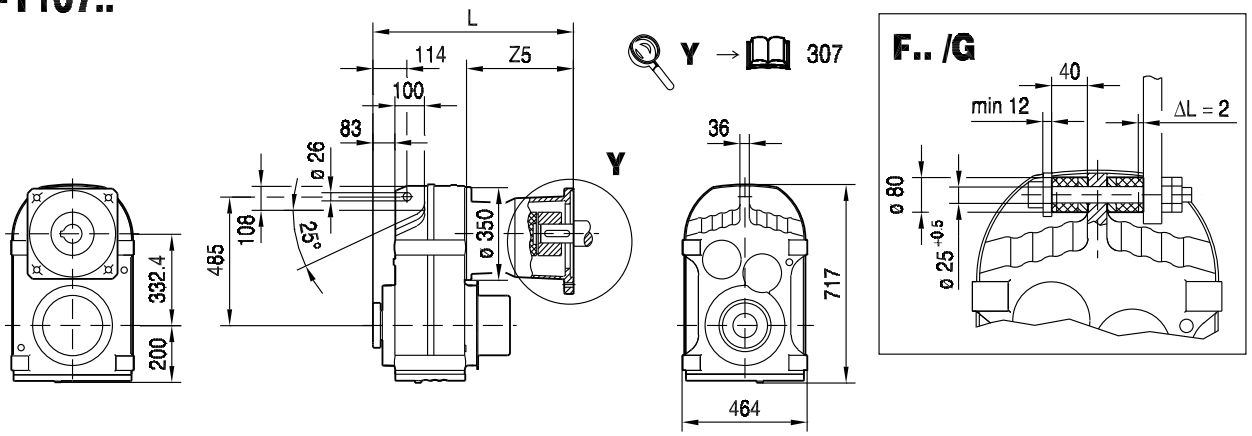

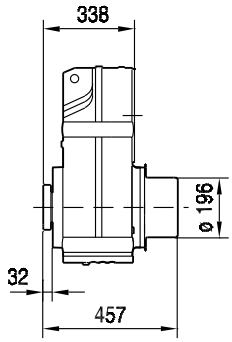

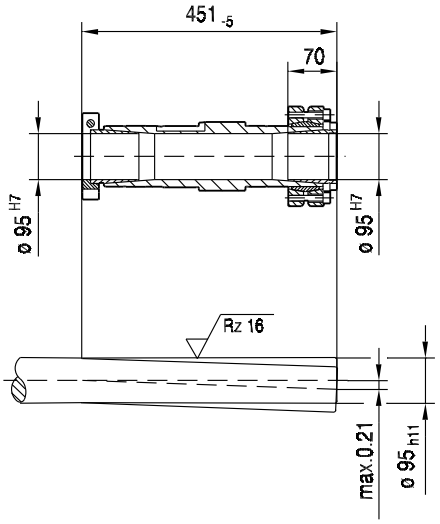

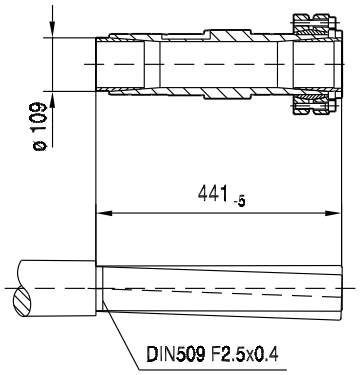

(→ 144)	AQ140/1-2	AQ140/3-4	AQ160/1	AQ190/1-2	AQ190/3			
L	489	502	502	548	572			
Z5	151	164	164	209.5	233.5			

9.2.19 F 127 AQ.. [Nm]

[Nm]		AQ. M_{amax} | M_{apk} | $M_{aNotaus}$		
	i	190/1-3		
FA127 2	4.68			
	5.52			
	6.80	1080	1080	1080
	7.88	1260	1260	1260
	8.86	1410	1410	1410
	10.19			
	12.54	2000	2000	2000
	14.55	2320	2320	2320
	16.36	2610	2610	2610
	18.87	3010	3010	3010
	21.38	3420	3420	3420
	24.57	3930	3930	3930
	26.86	4290	4290	4290
FA127 3	25.30			
	31.33	5010	5010	5010
	37.28	5960	5960	5960
	42.15	6740	6740	6740
	48.80	7800	7800	7800
	55.31	8840	8840	8840
	63.91	10200	10200	10200
	70.07	11200	11200	11200
	75.41	12000	12000	12000
	87.31	12000	13000	13900
	98.95	12000	13000	15800
	114.34	12000	13000	18200
	125.37	12000	13000	20000
	153.67	12000	13000	20400
	170.83	12000	13000	20400

m [kg]		AQ.
	s	190/1-3
FA127	2	385
FA127	3	400
FAF: + 37.4 kg / F: + 36.5 kg / FF: + 81.1 kg		

		AQ.
		190/1-3
J_A 10^{-4}	[kgm^2]	25.0
c_{TA}	[Nm/']	2.08

FA127 n_e = 1400	i	M_{amax} [Nm]	M_{apk} [Nm]	$M_{aNotaus}$ [Nm]	n_{ak} [1/min]	J_G 10^{-4} [kgm^2]	F_{Ramax} FA [N]	FAF [N]	F [N]	FF [N]	F_{Rapk} FA [N]	FAF [N]	F [N]	FF [N]
FA127 2	4.68	6000	9000	10200	299	971	5630	50000	29500	34700	90000	90000	90000	90000
	5.52	6000	9000	10200	344	733	7110	53500	31700	37100	90000	90000	90000	90000
	6.80	7000	9890	11900	235	524	5670	55000	32200	38100	90000	90000	90000	90000
	7.88	6000	9000	10200	419	400	10600	61800	37000	42800	90000	90000	90000	90000
	8.86	7000	9910	11900	271	329	8410	61400	36400	42600	90000	90000	90000	90000
	10.19	9500	13000	16150	157	483	1090	58900	30900	36300	90000	90000	88500	90000
	12.54	10000	13000	17000	120	359	2670	63000	33300	39100	90000	90000	88500	90000
	14.55	11000	13000	18700	96	278	475	64200	32600	38500	90000	90000	88500	90000
	16.36	11000	13000	18700	86	232	3190	67700	35400	41600	90000	90000	88500	90000
	18.87	11000	13000	18700	79	185	6620	72100	38800	45500	90000	90000	88500	90000
	21.38	12000	13000	20400	65	152	4380	73100	38000	44800	90000	90000	88500	90000
	24.57	8500	12750	14450	187	124	18400	88300	53300	61300	90000	90000	89000	90000
	26.86	8500	12600	14450	186	108	19800	90000	55300	63500	90000	90000	89300	90000

FA127							F_{Ramax}				F_{Rapk}			
n_e = 1400	i	M_{amax} [Nm]	M_{apk} [Nm]	$M_{aNotaus}$ [Nm]	n_{ak} [1/min]	J_G 10^{-4} [kgm^2]	FA [N]	FAF [N]	F [N]	FF [N]	FA [N]	FAF [N]	F [N]	FF [N]
FA127 3	25.30	12000	12900	20400	59	284	7720	78800	42400	49800	90000	90000	88700	90000
	31.33	12000	12900	20400	61	212	11100	86400	48300	56300	90000	90000	88700	90000
	37.28	12000	12900	20400	62	166	14000	90000	53200	61900	90000	90000	88700	90000
	42.15	12000	12900	20400	62	140	16200	90000	56800	66000	90000	90000	88700	90000
	48.80	12000	12900	20400	61	113	18900	90000	61300	71000	90000	90000	88700	90000
	55.31	12000	12900	20400	61	93	21400	90000	65200	75500	90000	90000	88700	90000
	63.91	12000	12900	20400	61	77	24300	90000	69400	80300	90000	90000	88700	90000
	70.07	12000	12900	20400	61	67	26300	90000	72100	83200	90000	90000	88700	90000
	75.41	12000	13000	20400	60	119	27900	90000	74300	85600	90000	90000	88500	90000
	87.31	12000	13000	20400	60	98	31200	90000	79000	90000	90000	90000	88500	90000
	98.95	12000	13000	20400	61	82	34100	90000	83000	90000	90000	90000	88500	90000
	114.34	12000	13000	20400	61	68	37700	90000	88000	90000	90000	90000	88500	90000
	125.37	12000	13000	20400	56	60	40000	90000	90000	90000	90000	90000	88500	90000
	153.67	12000	13000	20400	46	39	45500	90000	90000	90000	90000	90000	88500	90000
	170.83	12000	13000	20400	41	34	48500	90000	90000	90000	90000	90000	88500	90000

AQ.				c_{TG}				φ
	i	n_{epk} [1/min]	η [%]	FA [Nm/']	FAF [Nm/']	F [Nm/']	FF [Nm/']	/R [']
FA127 2	4.68	2518	97	1988	1988	1174	1092	7
	5.52	2797	97	1988	1988	1174	1092	7
	6.80	3197	97	1988	1988	1174	1092	7
	7.88	3597	97	1988	1988	1174	1092	6
	8.86	3924	97	1988	1988	1174	1092	6
	10.19	4500	97	2523	2523	1342	1236	5
	12.54	4500	97	2523	2523	1342	1236	5
	14.55	4500	97	2523	2523	1342	1236	5
	16.36	4500	97	2523	2523	1342	1236	5
	18.87	4500	97	2523	2523	1342	1236	5
	21.38	4500	97	2523	2523	1342	1236	5
	24.57	4500	97	2523	2523	1342	1236	5
	26.86	4500	97	2523	2523	1342	1236	5
FA127 3	25.30	4500	96	2861	2861	1432	1312	5
	31.33	4500	96	2861	2861	1432	1312	5
	37.28	3597	96	2861	2861	1432	1312	5
	42.15	3924	96	2861	2861	1432	1312	5
	48.80	4378	96	2861	2861	1432	1312	5
	55.31	4500	96	2861	2861	1432	1312	5
	63.91	4500	96	2861	2861	1432	1312	5
	70.07	4500	96	2861	2861	1432	1312	5
	75.41	3924	95	2898	2898	1442	1320	5
	87.31	4378	95	2898	2898	1442	1320	5
	98.95	4500	95	2898	2898	1442	1320	5
	114.34	4500	95	2898	2898	1442	1320	5
	125.37	4500	95	2898	2898	1442	1320	5
	153.67	4500	95	2898	2898	1442	1320	5
	170.83	4500	95	2898	2898	1442	1320	5

9.2.20 F 127 AQ.. [mm]

F127..

42 119 00 08

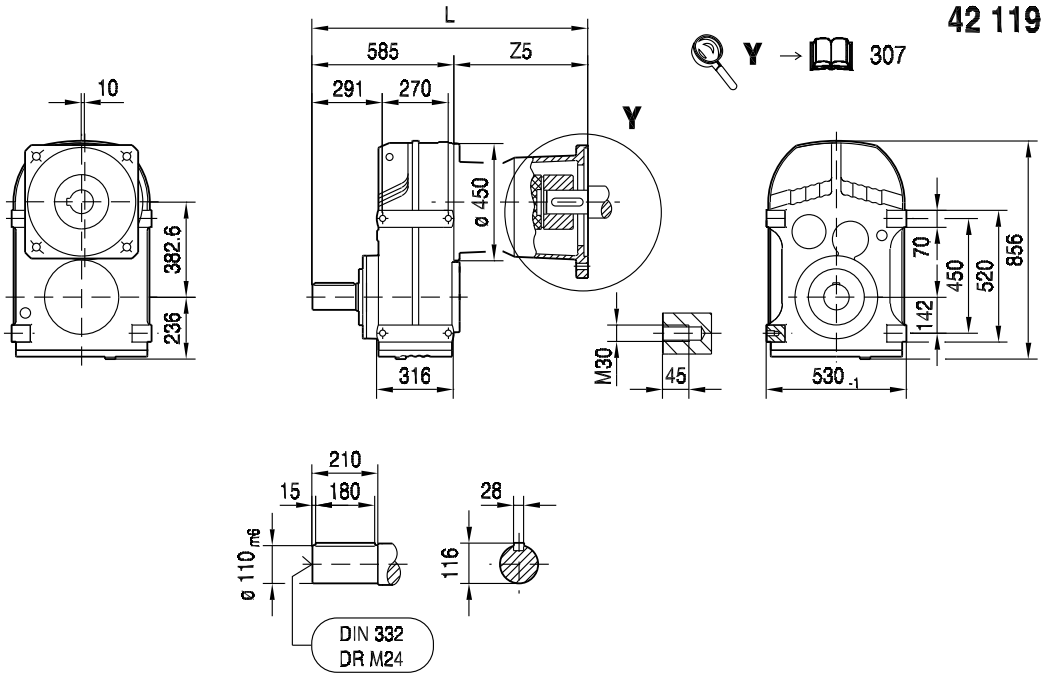

FA127B..

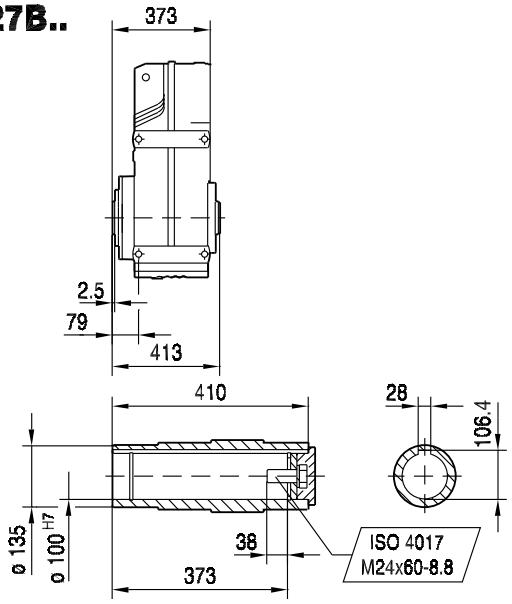

FH127B..

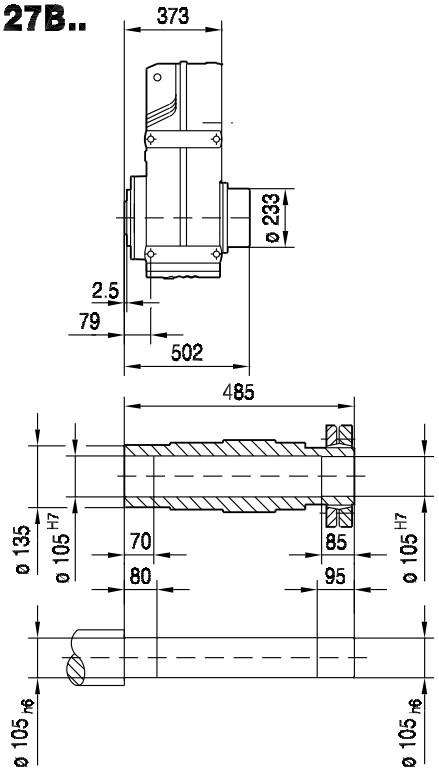

(→ 144)	AQ190/1-2	AQ190/3						
L	780	804						
Z5	194.5	218.5						

FF127..

42 120 00 08

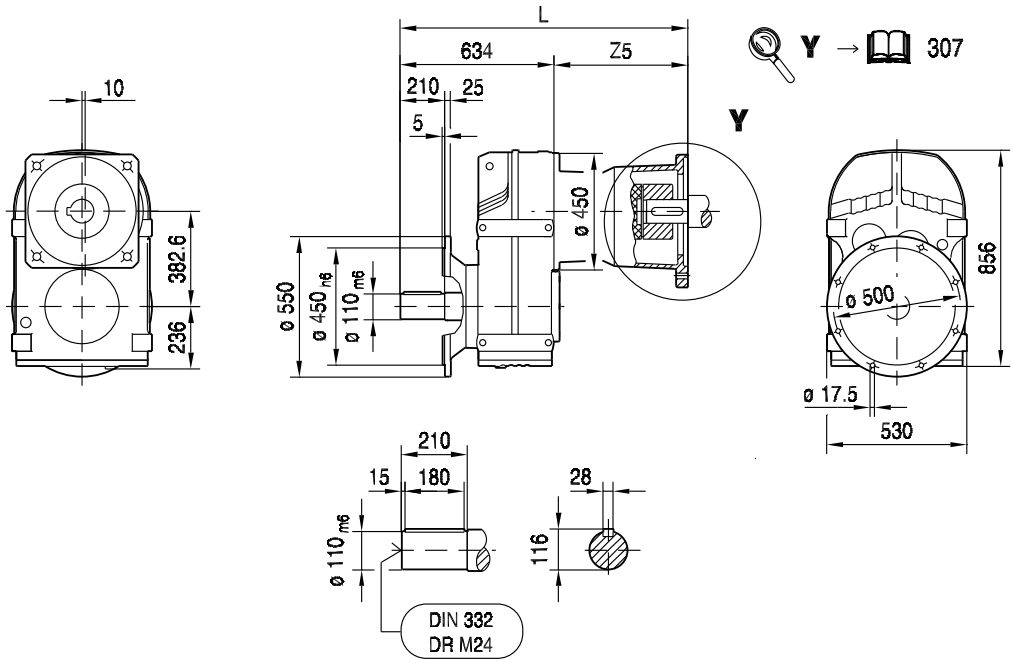

FAF127..

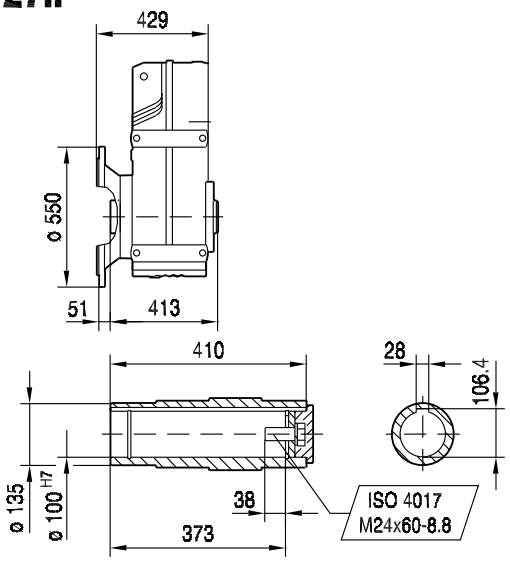

FHF127..

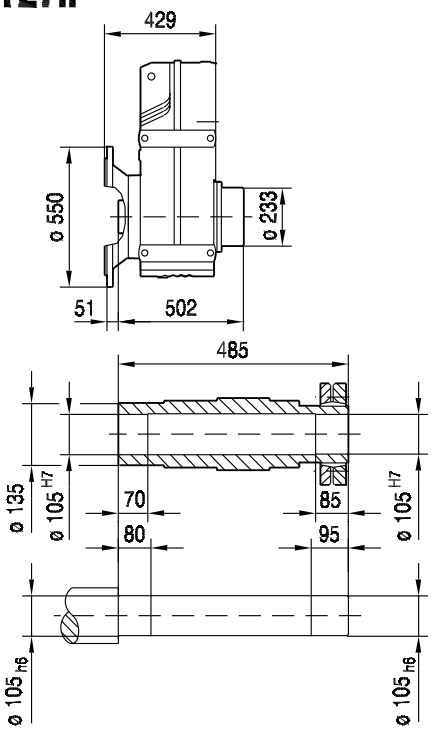

(→ 144)	AQ190/1-2	AQ190/3						
L	829	853						
Z5	194.5	218.5						

FA127..

42 121 00 08

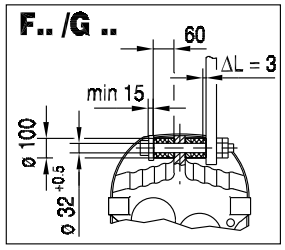

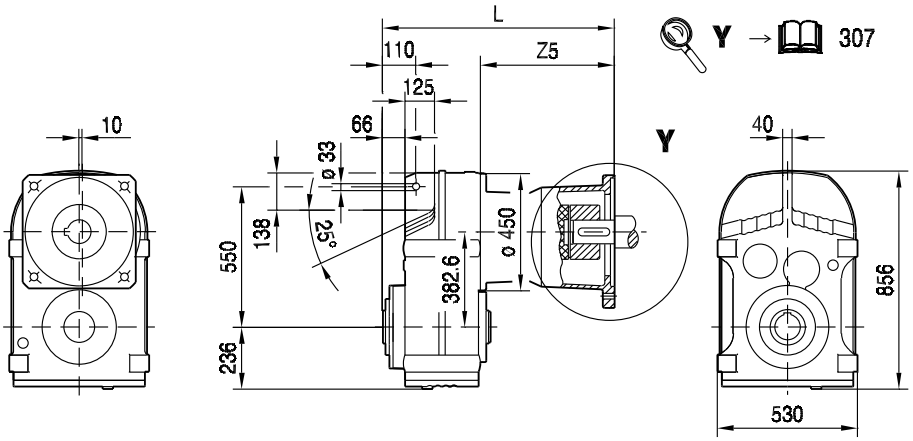

FA127..

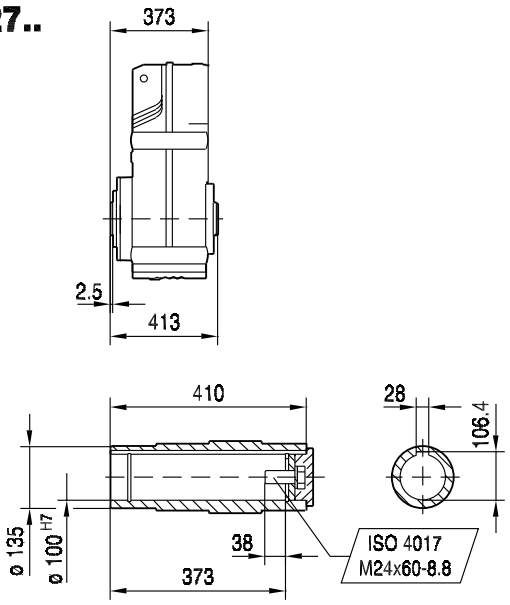

FH127..

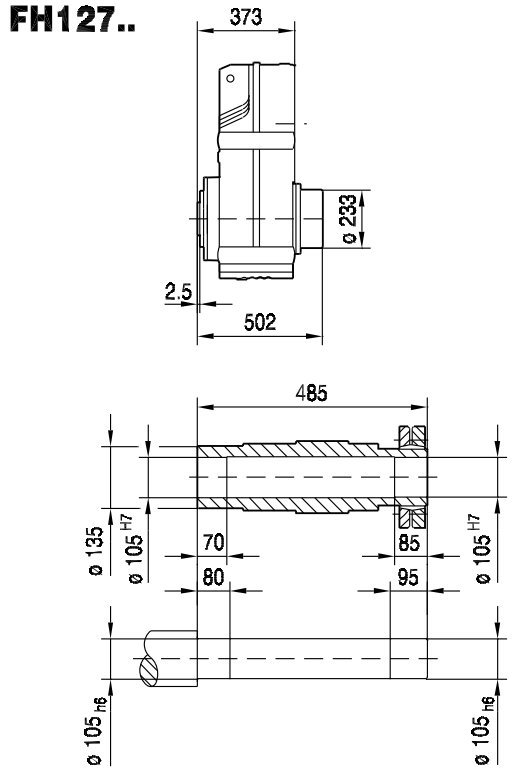

(→ 144)	AQ190/1-2	AQ190/3						
L	568	592						
Z5	194.5	218.5						

FAZ127..

42 123 00 08

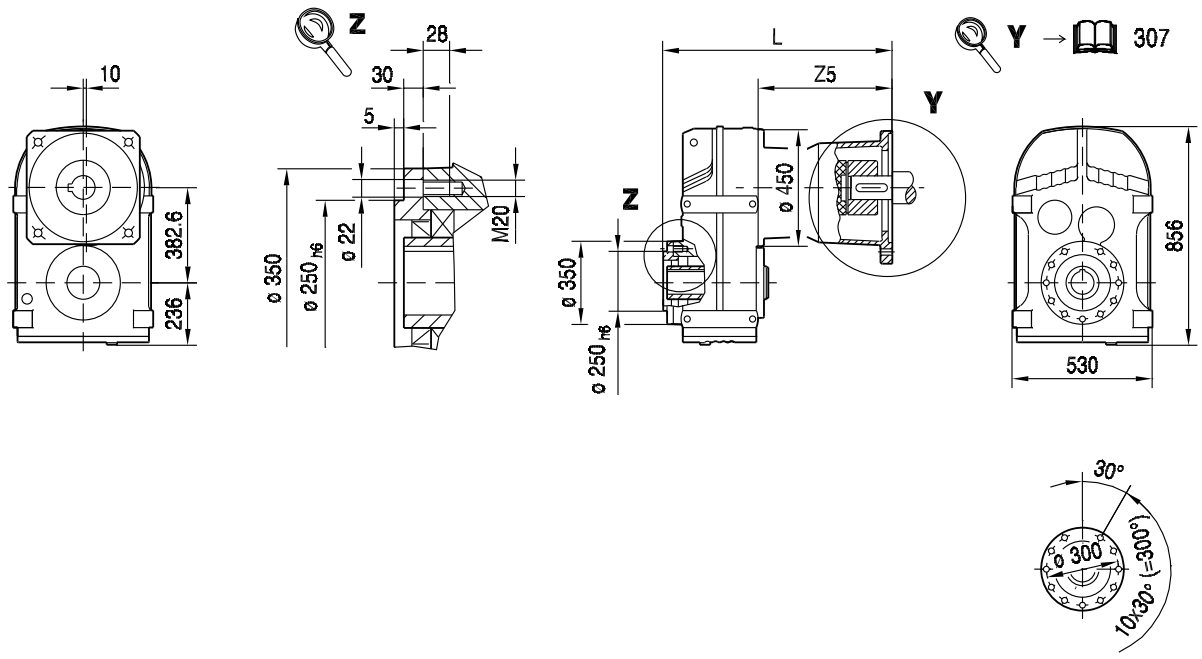

FAZ127..

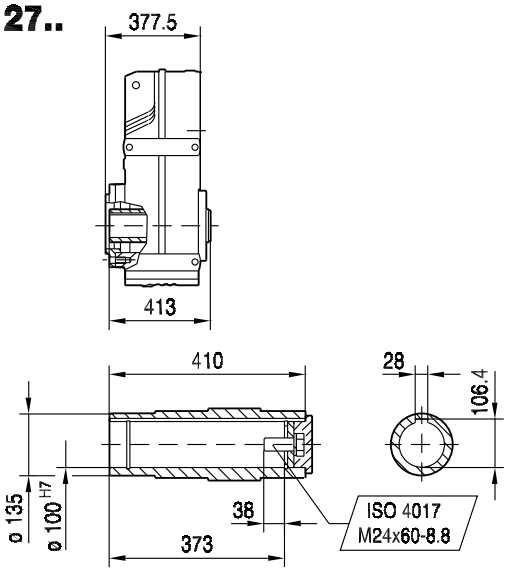

FHZ127..

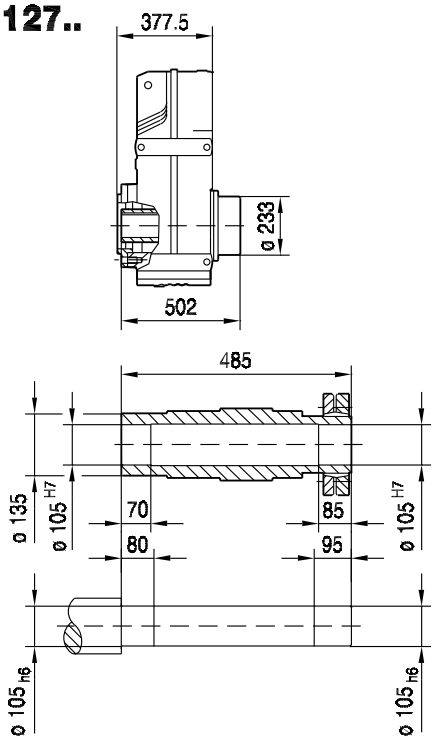

(→ 144)	AQ190/1-2	AQ190/3						
L	572	596						
Z5	194.5	218.5						

FT127..

42 122 00 08

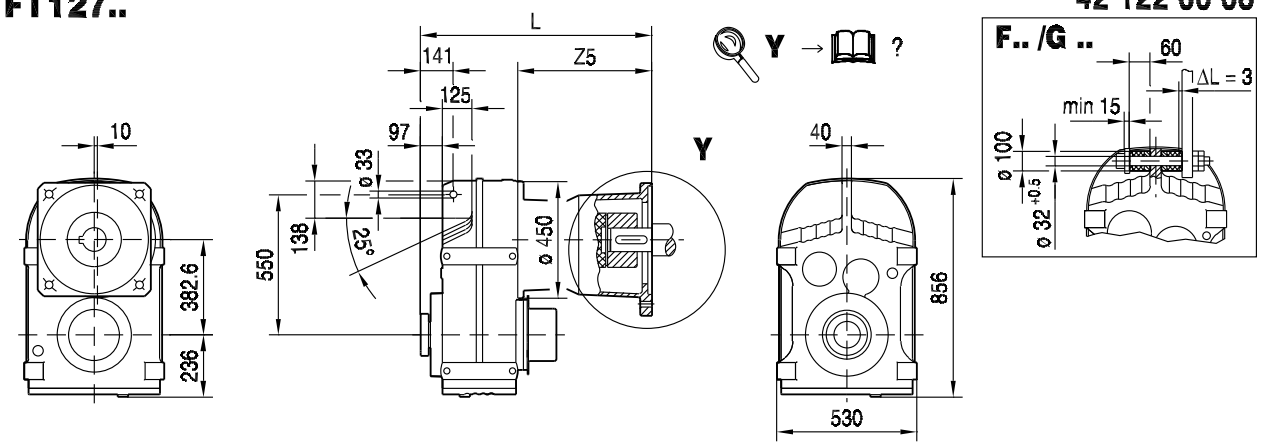

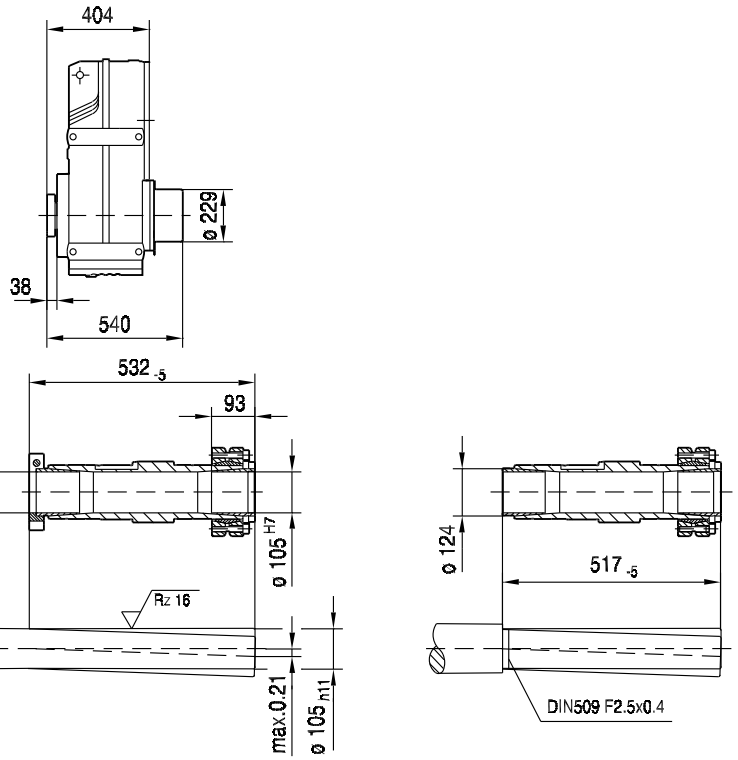

(→ 144)	AQ190/1-2	AQ190/3						
L	599	623						
Z5	194.5	218.5						

9.3 F.. AQ.. [mm]

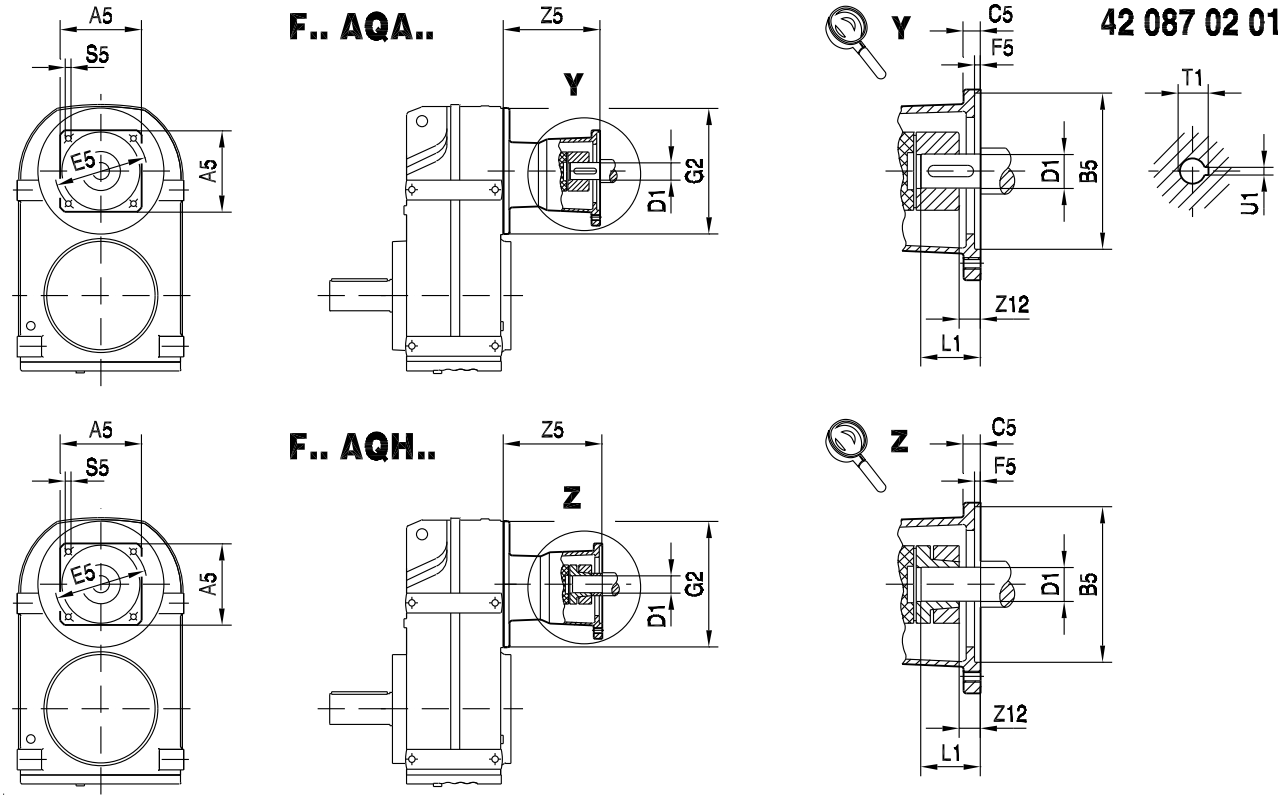

	Square dimension A5	Centering hole ∅ B5	Flange thickness C5	Hole circle ∅ E5	Centering depth F5	Threaded hole S5	Z12 (AQA)	Z12 (AQH)	Coupling bore ∅ D1	Max. motor shaft insertion depth L1	T1	U1
AQ_80/1	82	60	8	75	3.5	M5	5.5	5.5	11	23	12.8	4
AQ_80/2	82	60	8	75	3.5	M5	5.5	5.5	14	30	16.3	5
AQ_80/3	82	50	8	95	3	M6	5.5	5.5	14	30	16.3	5
AQ_100/1	100	80	10	100	4	M6	0	0	14	30	16.3	5
AQ_100/2	100	95	12	115	4	M8	0	0	14	30	16.3	5
AQ_100/3	100	80	10	100	4	M6	2	14	19	40	21.8	6
AQ_100/4	100	95	12	115	4	M8	2	14	19	40	21.8	6
AQ_115/1	115	95	12	130	5	M8	11	23	19	40	21.8	6
AQ_115/2	115	110	12	130	5	M8	11	23	19	40	21.8	6
AQ_115/3	115	110	12	130	5	M8	16	16	24	50	27.3	8
AQ_140/1	140	110	15	165	5	M10	16	16	24	50	27.3	8
AQ_140/2	140	130	15	165	5	M10	16	16	24	50	27.3	8
AQ_140/3	140	130	15	165	5	M10	22	22	32	60	35.3	10
AQ_140/4	140	130	15	165	5	M10	22	22	28	60	31,3	8
AQ_160/1	162	155	15	190	5	M10	22	22	32	60	35,3	10
AQ_190/1	190	130	16	215	5	M12	24	24	32	60	35.3	10
AQ_190/2	190	180	16	215	5	M12	24	24	32	60	35.3	10
AQ_190/3	190	180	16	215	5	M12	34	34	38	80	41.3	10

10 K..

10.1 K.. AQ..

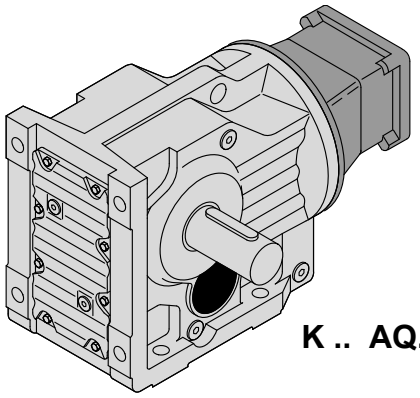

K .. AQ..

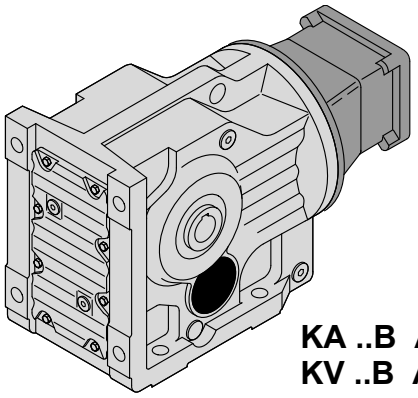

KA ..B AQ..
KV ..B AQ..

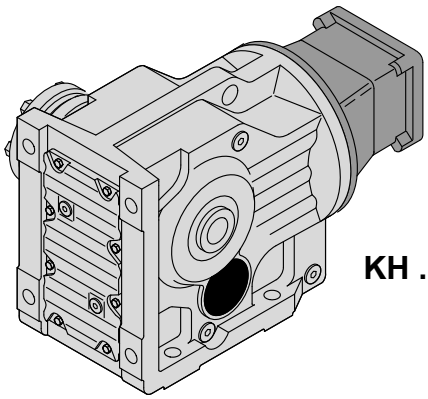

KH ..B AQ..

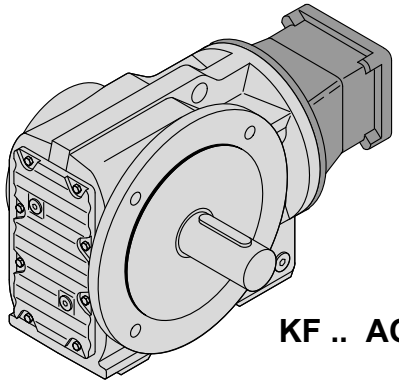

KF .. AQ..

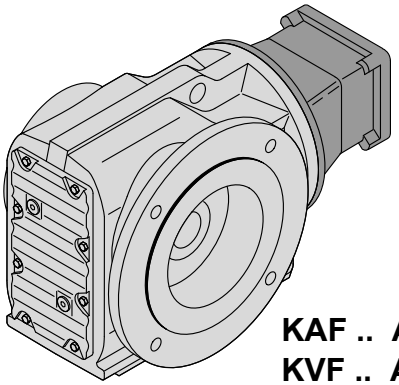

KAF .. AQ..
KVF .. AQ..

50407AXX

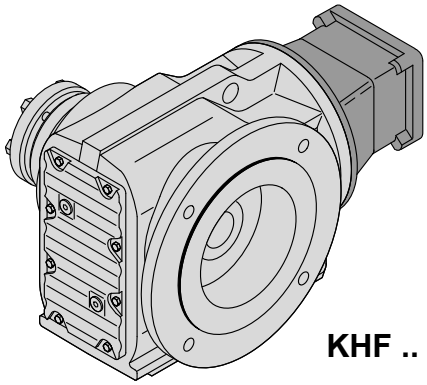

KHF .. AQ..

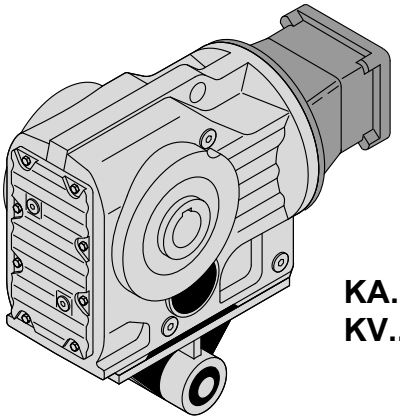

KA../T AQ..
KV../T AQ..

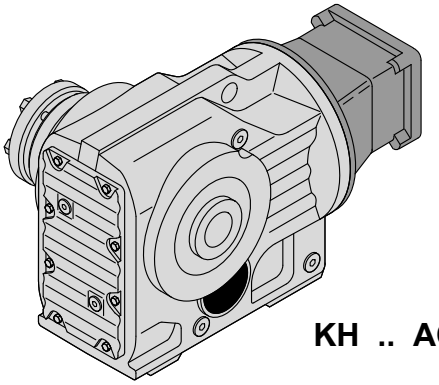

KH .. AQ..

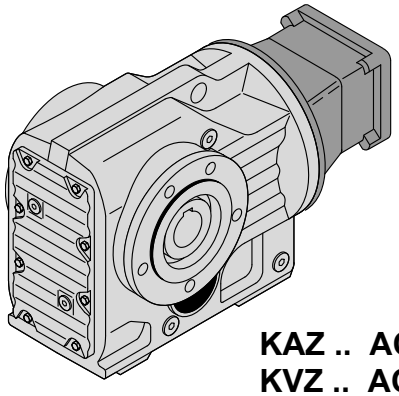

KAZ .. AQ..
KVZ .. AQ..

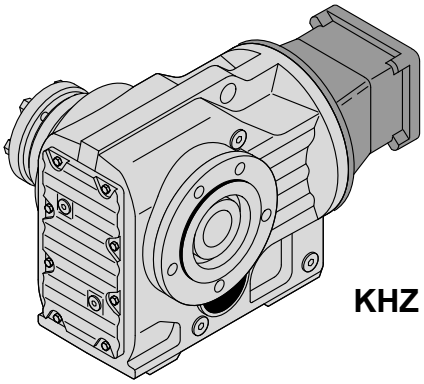

KHZ .. AQ..

50408AXX

10.2 K.. AQ..

10.2.1 K 37 AQ.. [Nm]

[Nm]		AQ. M_{amax} | M_{apk} | $M_{aNotaus}$											
	i	**80/1-3**			**100/1-4**			**115/1-2**			**115/3**		
	3.98	67	67	131	67	67	135	67	67	135	125	183	183
	5.36	91	91	176	91	91	182	91	91	182	140	199	235
	6.37	108	108	210	108	108	215	108	108	215	145	199	245
	6.80	115	115	220	115	115	230	115	115	230	150	199	255
	7.96	135	135	260	135	135	260	135	135	260	155	199	260
	8.91	151	151	270	151	151	270	151	151	270	160	199	270
	10.49	160	178	270	160	178	270	160	178	270	160	199	270
	12.14	160	199	270	160	199	270	160	199	270	160	199	270
	13.08	165	220	280	165	220	280	165	220	280	165	240	280
	15.31	175	240	295	175	240	295	175	240	295	175	240	295
	17.15	180	240	305	180	240	305	180	240	305	180	240	305
	20.19	185	240	315	185	240	315	185	240	315	185	240	315
K37	23.36	195	240	330	195	240	330	195	240	330	195	240	330
3	24.99	200	240	340	200	240	340	200	240	340	200	240	340
	28.83	200	240	340	200	240	340	200	240	340	200	240	340
	29.96	200	230	340	200	230	340	200	230	340	200	230	340
	35.57	200	230	340	200	230	340	200	230	340	200	230	340
	37.97	200	230	340	200	230	340	200	230	340	200	230	340
	44.46	200	230	340	200	230	340	200	230	340	200	230	340
	49.79	200	230	340	200	230	340	200	230	340	200	230	340
	58.60	200	230	340	200	230	340	200	230	340	200	230	340
	67.80	200	230	340	200	230	340	200	230	340	200	230	340
	72.54	200	230	340	200	230	340	200	230	340	200	230	340
	83.69	200	230	340	200	230	340	200	230	340	200	230	340
	97.81	200	230	340	200	230	340	200	230	340	200	230	340
	106.38	200	230	340	200	230	340	200	230	340	200	230	340

m [kg]		AQ.			
	s	**80/1-3**	**100/1-4**	**115/1-2**	**115/3**
K37	3	15	16	16	16
KF: + 2.3 kg / KA: + -0.2 kg / KAF: + 1.5 kg					

		AQ.			
		80/1-3	**100/1-4**	**115/1-2**	**115/3**
J_A 10^{-4}	**[kgm^2]**	0.77	1.4	1.4	3.1
c_{TA}	**[Nm/']**	0.25	0.25	0.25	0.625

K37 n_e = 1400	i	M_{amax} [Nm]	M_{apk} [Nm]	$M_{aNotaus}$ [Nm]	n_{ak} [1/min]	J_G 10^{-4} [kgm^2]	F_{Ramax} K [N]	KF [N]	KA [N]	KAF [N]	F_{Rapk} K [N]	KF [N]	KA [N]	KAF [N]
K37 3	3.98	125	187	213	377	2.6	1660	2130	2310	2310	5780	5710	7000	7000
	5.36	140	199	238	317	1.7	1810	2340	2530	2530	5650	5640	7000	7000
	6.37	145	199	247	314	1.3	1950	2500	2720	2720	5650	5640	7000	7000
	6.80	150	199	255	294	1.1	1980	2540	2760	2760	5650	5640	7000	7000
	7.96	155	199	264	276	0.85	2110	2700	2940	2940	5650	5640	7000	7000
	8.91	160	199	272	258	0.70	2200	2810	3070	3070	5650	5640	7000	7000
	10.49	160	199	272	276	0.51	2410	3030	3340	3340	5650	5640	7000	7000
	12.14	160	199	272	297	0.40	2600	3240	3600	3600	5650	5640	7000	7000
	13.08	165	240	281	420	1.0	2650	3310	3660	3660	4100	4100	7000	7000
	15.31	175	240	298	346	0.76	2780	3480	3850	3850	4100	4100	7000	7000
	17.15	180	240	306	315	0.62	2900	3630	4020	4020	4100	4100	7000	7000
	20.19	185	240	315	287	0.46	3110	3870	4300	4300	4100	4100	7000	7000
	23.36	195	240	332	240	0.37	3260	4060	4510	4510	4100	4100	7000	7000
	24.99	200	240	340	220	0.33	3330	4150	4600	4600	4100	4100	7000	7000
	28.83	200	240	340	222	0.26	3580	4420	4940	4940	4100	4100	7000	7000
	29.96	200	230	340	157	0.76	3650	4500	5030	5030	5140	5140	7000	7000
	35.57	200	230	340	157	0.60	3970	4860	5460	5460	5140	5140	7000	7000
	37.97	200	230	340	158	0.54	4100	5000	5630	5630	5140	5140	7000	7000
	44.46	200	230	340	157	0.42	4420	5350	6060	6060	5140	5140	7000	7000
	49.79	200	230	340	141	0.36	4660	5610	6380	6380	5140	5140	7000	7000
	58.60	200	230	340	119	0.27	5020	5630	6860	6860	5140	5140	7000	7000
	67.80	200	230	340	103	0.23	5360	5630	7000	7000	5140	5140	7000	7000
	72.54	200	230	340	96	0.21	5520	5630	7000	7000	5140	5140	7000	7000
	83.69	200	230	340	84	0.17	5640	5630	7000	7000	5140	5140	7000	7000
	97.81	200	230	340	72	0.13	5640	5630	7000	7000	5140	5140	7000	7000
	106.38	200	230	340	66	0.12	5640	5630	7000	7000	5140	5140	7000	7000

AQ.	i	n_{epk} [1/min]	η [%]	c_{TG} K [Nm/']	KF [Nm/']	KA [Nm/']	KAF [Nm/']	φ /R [']
K37 3	3.98	4500	96	13	13	29	29	13
	5.36	4500	96	13	13	29	29	13
	6.37	4500	96	13	13	29	29	13
	6.80	4500	96	13	13	29	29	13
	7.96	4500	96	13	13	29	29	13
	8.91	4500	96	13	13	29	29	12
	10.49	4500	96	13	13	29	29	12
	12.14	4500	96	13	13	29	29	12
	13.08	4500	96	17	17	63	63	9
	15.31	4500	96	17	17	63	63	9
	17.15	4500	96	17	17	63	63	8
	20.19	4500	96	17	17	63	63	8
	23.36	4500	96	17	17	63	63	8
	24.99	4500	96	17	17	63	63	8
	28.83	4500	96	17	17	63	63	8
	29.96	4500	94	18	19	85	85	7
	35.57	4500	94	18	19	85	85	7
	37.97	4500	94	18	19	85	85	7
	44.46	4500	94	18	19	85	85	7
	49.79	4500	94	18	19	85	85	7
	58.60	4500	94	18	19	85	85	7
	67.80	4500	94	18	19	85	85	7
	72.54	4500	94	18	19	85	85	7
	83.69	4500	93	18	19	85	85	7
	97.81	4500	93	18	19	85	85	7
	106.38	4500	93	18	19	85	85	7

10.2.2 K 37 AQ.. [mm]

33 099 00 08

K37..

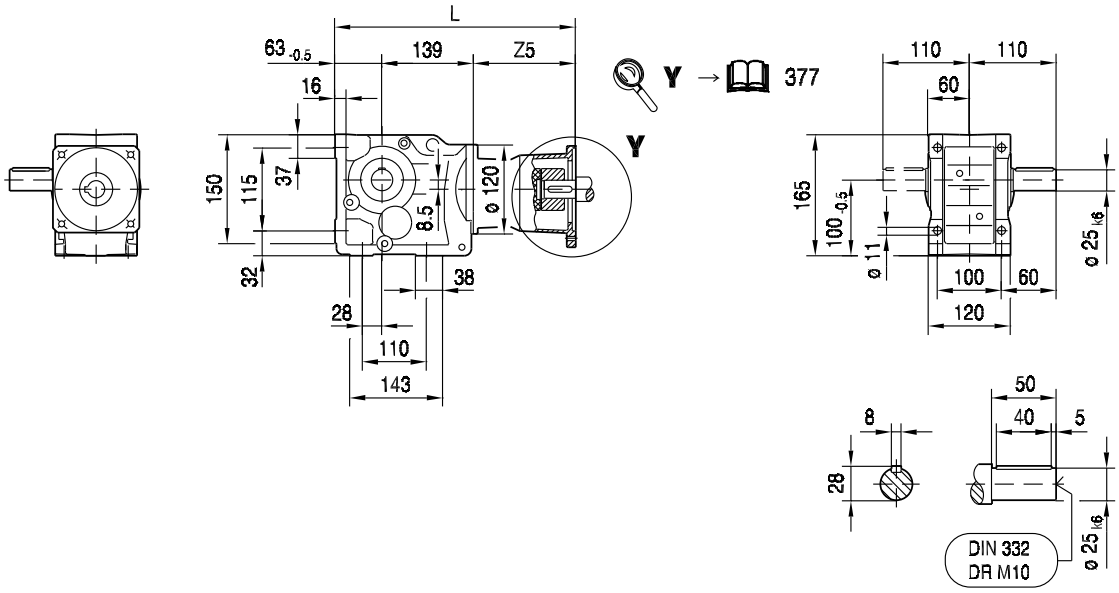

(→ 144)	AQ80/1-3	AQ100/1-2	AQ100/3-4	AQ115/1-3				
L	307	332	346	355				
Z5	104.5	129.5	143.5	152.5				

33 100 00 08

KF37..

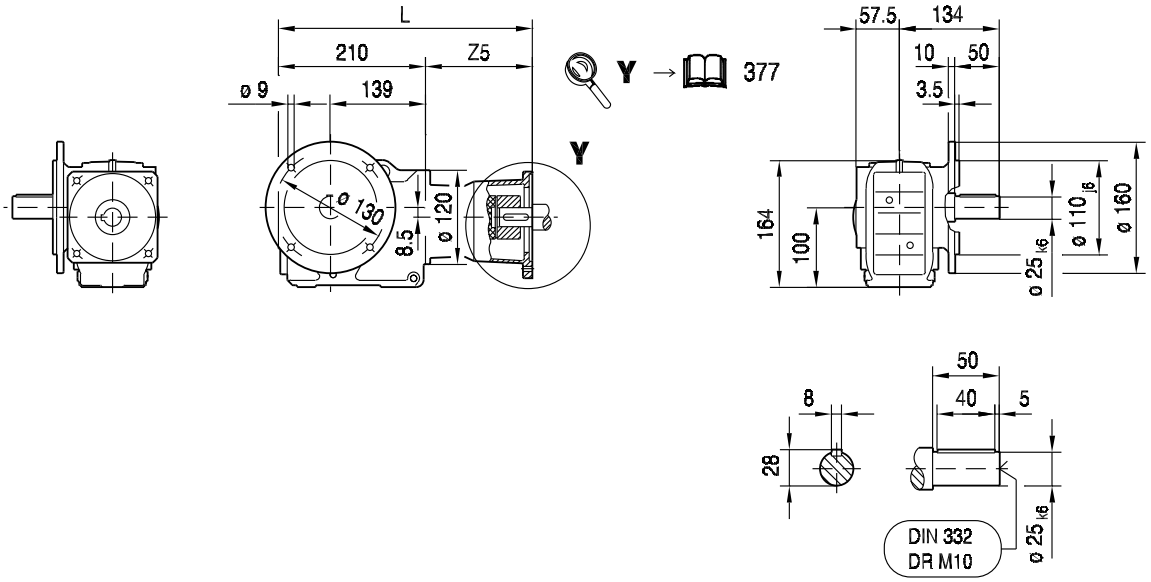

10

KAF37..

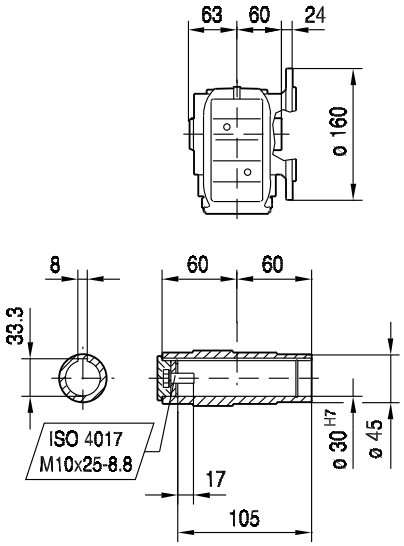

KHF37..

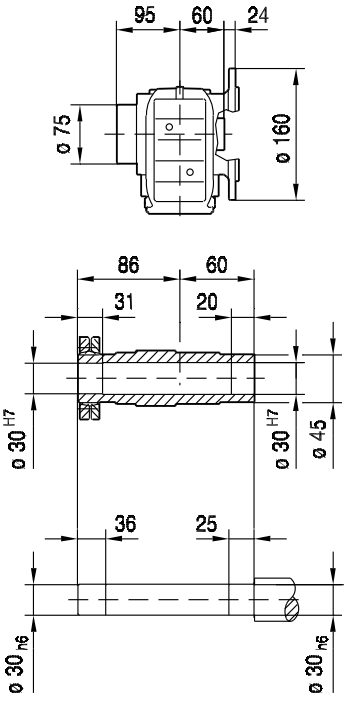

KVF37..

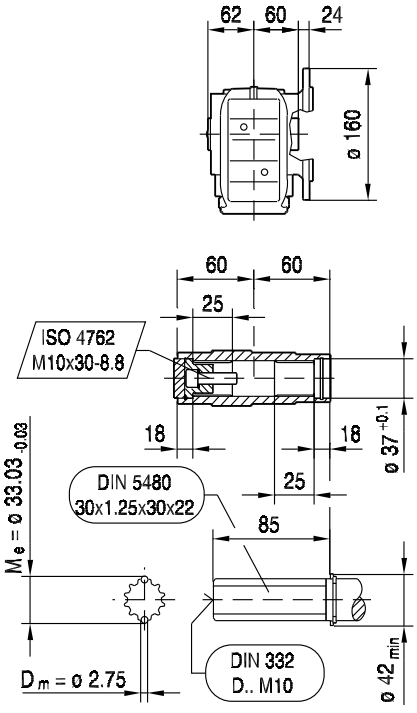

(→ 144)	AQ80/1-3	AQ100/1-2	AQ100/3-4	AQ115/1-3				
L	315	340	354	363				
Z5	104.5	129.5	143.5	152.5				

KA37..

33 101 00 08

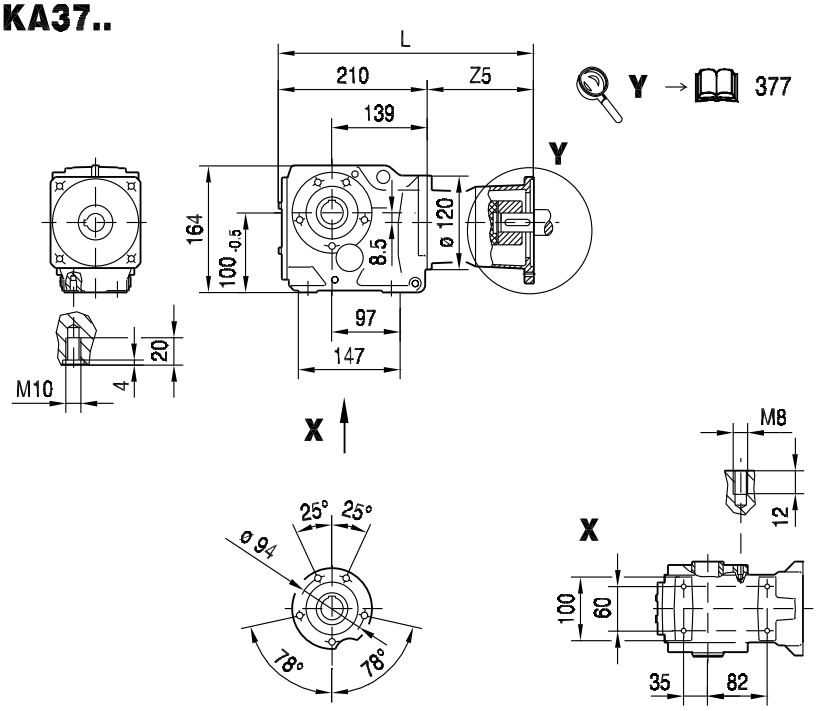

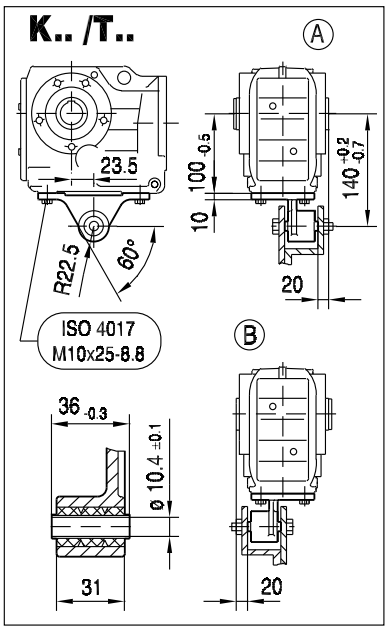

KA37..

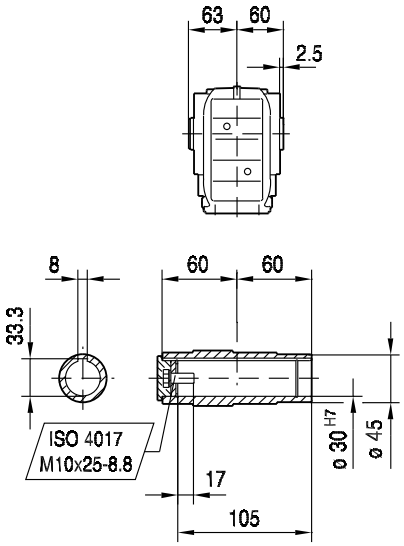

KH37..

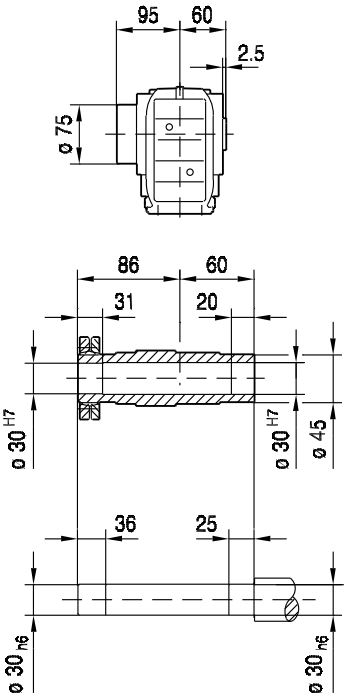

KV37..

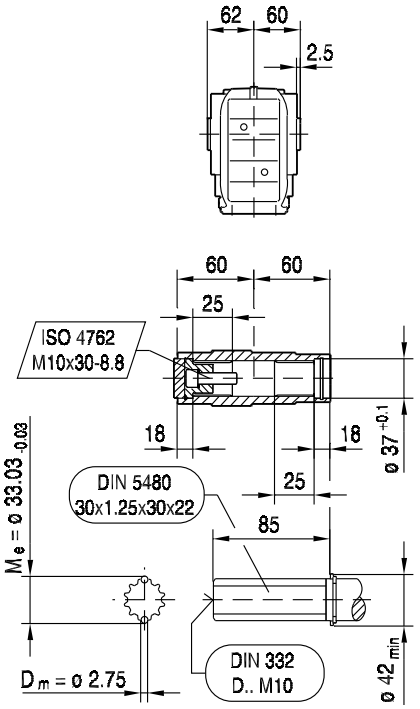

(→ 144)	AQ80/1-3	AQ100/1-2	AQ100/3-4	AQ115/1-3				
L	315	340	354	363				
Z5	104.5	129.5	143.5	152.5				

33 103 00 08

KAZ37..

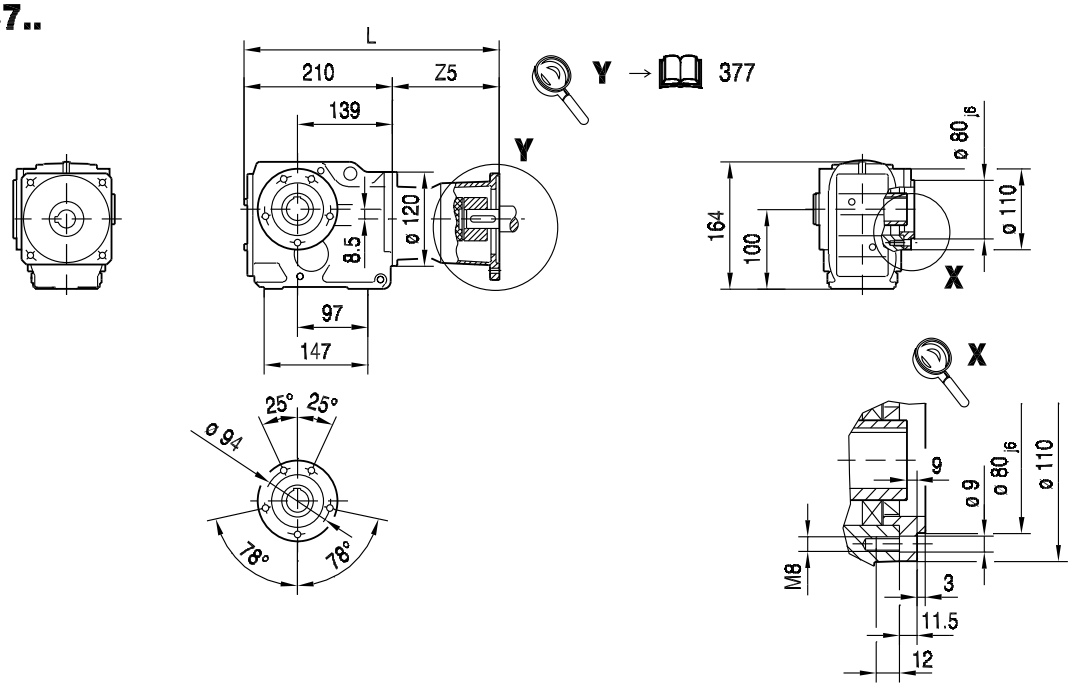

10

KAZ37..

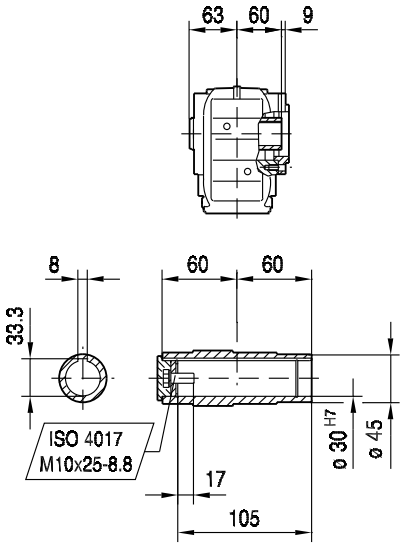

KHZ37..

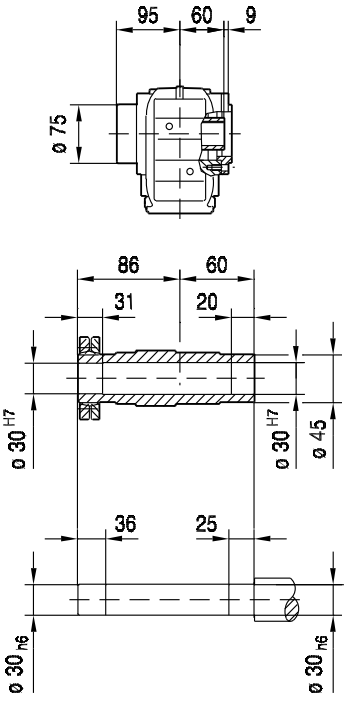

KVZ37..

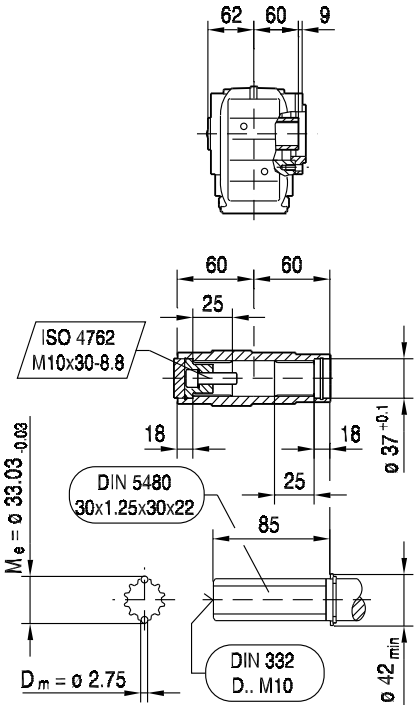

(→ 144)	AQ80/1-3	AQ100/1-2	AQ100/3-4	AQ115/1-3				
L	315	340	354	363				
Z5	104.5	129.5	143.5	152.5				

KT37..

33 102 00 08

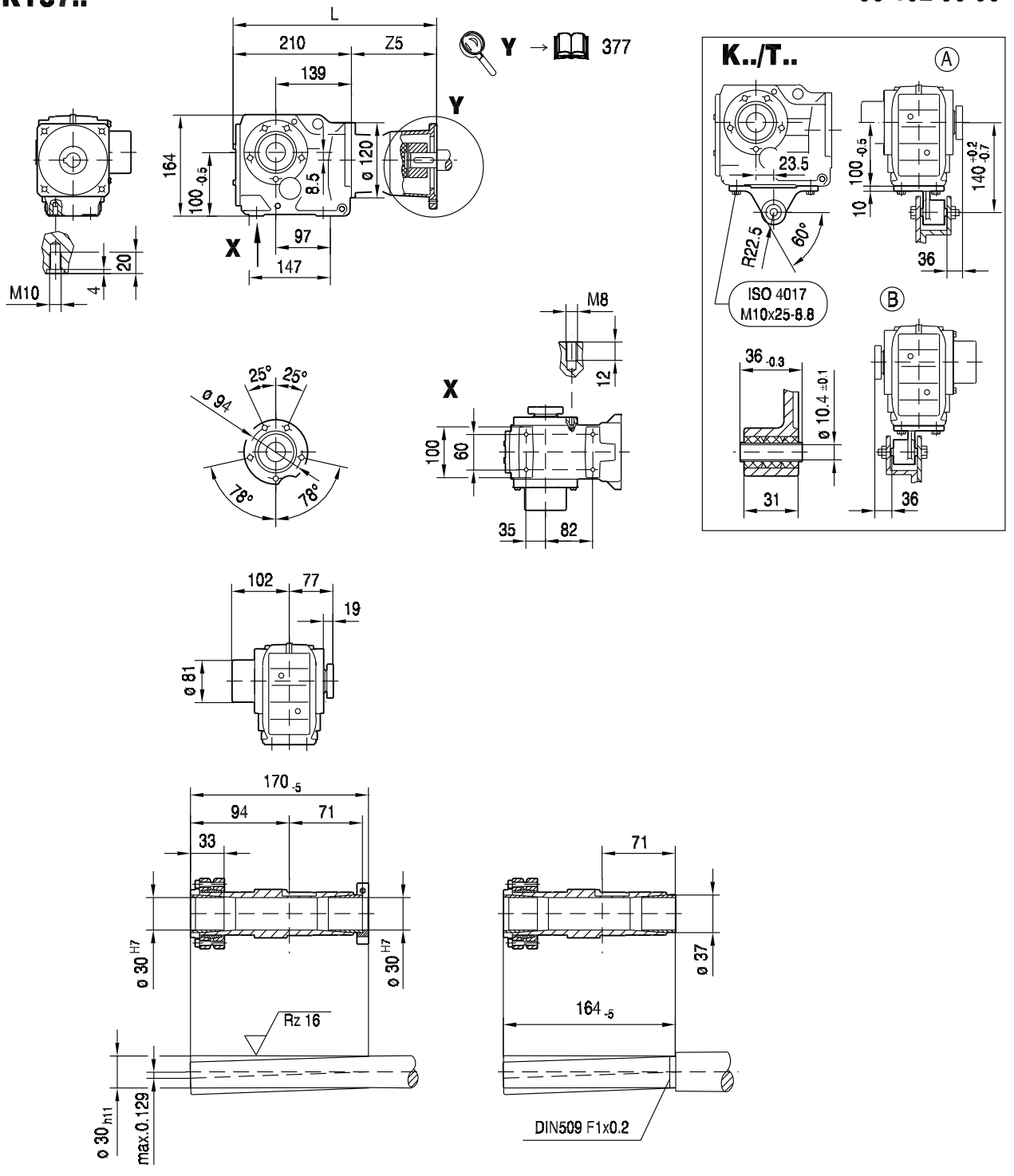

(→ 144)	AQ80/1-3	AQ100/1-2	AQ100/3-4	AQ115/1-3				
L	315	340	354	363				
Z5	104.5	129.5	143.5	152.5				

10.2.3 K 47 AQ.. [Nm]

[Nm]		AQ. M_{amax} | M_{apk} | $M_{aNotaus}$																				
	i	80/1-3			100/1-4			115/1-2			115/3			140/1			140/2-4			160/1		
	4.64	78	78	153	78	78	157	78	78	157	205	210	210	205	275	345	205	300	345	205	300	345
	5.81	98	98	191	98	98	197	98	98	197	230	265	265	230	305	390	230	305	390	230	305	390
	6.58	111	111	215	111	111	220	111	111	220	240	300	300	240	310	405	240	310	405	240	310	405
	7.36	125	125	240	125	125	250	125	125	250	250	310	335	250	310	425	250	310	425	250	310	425
	8.56	145	145	280	145	145	290	145	145	290	270	310	390	270	310	455	270	310	455	270	310	455
	9.10	154	154	300	154	154	305	154	154	305	280	310	415	280	310	475	280	310	475	280	310	475
	10.56	179	179	345	179	179	355	179	179	355	280	315	475	280	315	475	280	315	475	280	315	475
	11.77	200	200	385	200	200	400	200	200	400	280	315	475	280	315	475	280	315	475	280	315	475
	12.19	205	205	400	205	205	410	205	205	410	350	435	560	350	435	595	350	435	595	350	435	595
	13.65	230	230	450	230	230	460	230	230	460	360	435	610	360	435	610	360	435	610	360	435	610
	15.86	265	265	520	265	265	535	265	265	535	380	435	645	380	435	645	380	435	645	380	435	645
	16.86	285	285	555	285	285	570	285	285	570	380	435	645	380	435	645	380	435	645	380	435	645
	19.58	330	330	645	330	330	665	330	330	665	400	435	680	400	435	680	400	435	680	400	435	680
	21.81	370	370	680	370	370	680	370	370	680	400	435	680	400	435	680	400	435	680	400	435	680
K47	24.06	400	405	680	400	405	680	400	405	680	400	435	680									
 3	25.91	400	435	680	400	435	680	400	435	680	400	435	680	400	435	680	400	435	680	400	435	680
	29.32	400	435	680	400	435	680	400	435	680	400	435	680									
	31.30	400	435	680	400	435	680	400	435	680	400	435	680									
	35.39	400	435	680	400	435	680	400	435	680	400	435	680	400	435	680	400	435	680	400	435	680
	39.61	400	435	680	400	435	680	400	435	680	400	435	680	400	435	680	400	435	680	400	435	680
	46.03	400	435	680	400	435	680	400	435	680	400	435	680	400	435	680	400	435	680	400	435	680
	48.95	400	435	680	400	435	680	400	435	680	400	435	680	400	435	680	400	435	680	400	435	680
	56.83	400	435	680	400	435	680	400	435	680	400	435	680	400	435	680	400	435	680	400	435	680
	63.30	400	435	680	400	435	680	400	435	680	400	435	680	400	435	680	400	435	680	400	435	680
	69.84	400	435	680	400	435	680	400	435	680	400	435	680									
	75.20	400	435	680	400	435	680	400	435	680	400	435	680	400	435	680	400	435	680	400	435	680
	85.12	400	435	680	400	435	680	400	435	680	400	435	680									
	90.86	400	435	680	400	435	680	400	435	680	400	435	680									
	104.37	400	435	680	400	435	680	400	435	680	400	435	680									
	121.48	400	435	680	400	435	680	400	435	680	400	435	680									
	131.87	400	435	680	400	435	680	400	435	680	400	435	680									

m [kg]		AQ.						
	s	80/1-3	100/1-4	115/1-2	115/3	140/1	140/2-4	160/1
K47	3	22	23	23	23	28	28	28
KF: + 3.2 kg / KA: + -0.9 kg / KAF: + 2.0 kg								

		AQ.						
		80/1-3	100/1-4	115/1-2	115/3	140/1	140/2-4	160/1
$J_A\ 10^{-4}$	[kgm²]	0.77	1.4	1.4	3.1	5.1	10.0	10.0
c_{TA}	[Nm/']	0.25	0.25	0.25	0.625	0.625	1.0	1.0

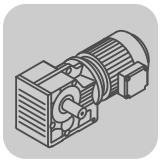

K47							F_{Ramax}				F_{Rapk}			
n_e = 1400	i	M_{amax} [Nm]	M_{apk} [Nm]	$M_{aNotaus}$ [Nm]	n_{ak} [1/min]	J_G 10^{-4} [kgm^2]	K [N]	KF [N]	KA [N]	KAF [N]	K [N]	KF [N]	KA [N]	KAF [N]
	4.64	205	300	349	302	4.4	2980	2970	2040	2040	7060	7060	10000	10000
	5.81	230	305	391	258	3.6	3140	3140	2100	2100	7020	7020	10000	10000
	6.58	240	310	408	228	2.8	3270	3270	2190	2190	6970	6970	10000	10000
	7.36	250	310	425	217	2.3	3380	3390	2270	2270	6970	6970	10000	10000
	8.56	270	310	459	175	1.8	3500	3520	2310	2310	6970	6970	10000	10000
	9.10	280	310	476	165	1.6	3540	3560	2310	2310	6970	6970	10000	10000
	10.56	280	315	476	170	1.2	3830	3840	2580	2580	6920	6920	10000	10000
	11.77	280	315	476	178	1.0	4060	4050	2770	2770	6920	6920	10000	10000
	12.19	350	435	595	279	2.4	3720	3770	2330	2330	900	900	10000	10000
	13.65	360	435	612	249	2.0	3890	3940	2450	2450	900	900	10000	10000
	15.86	380	435	646	208	1.6	4080	4130	2570	2570	900	900	10000	10000
	16.86	380	435	646	214	1.4	4220	4270	2690	2690	900	900	10000	10000
	19.58	400	435	680	179	1.1	4440	4480	2820	2820	900	900	10000	10000
	21.81	400	435	680	179	0.91	4710	4740	3070	3070	900	900	10000	10000
K47	24.06	400	435	680	179	0.75	4970	4990	3300	3300	900	900	10000	10000
 **3**	25.91	400	435	680	178	0.68	5170	5180	3470	3470	900	900	10000	10000
	29.32	400	435	680	177	0.55	5520	5500	3780	3780	900	900	10000	10000
	31.30	400	435	680	179	0.50	5700	5680	3940	3940	900	900	10000	10000
	35.39	400	435	680	93	1.3	5920	5920	4270	4270	900	900	10000	10000
	39.61	400	435	680	96	1.1	5920	5920	4580	4580	900	900	10000	10000
	46.03	400	435	680	100	0.88	5920	5920	5000	5000	900	900	10000	10000
	48.95	400	435	680	100	0.80	5920	5920	5190	5190	900	900	10000	10000
	56.83	400	435	680	104	0.64	5920	5920	5640	5640	900	900	10000	10000
	63.30	400	435	680	104	0.54	5920	5920	5990	5990	900	900	10000	10000
	69.84	400	435	680	100	0.45	5920	5920	6320	6320	900	900	10000	10000
	75.20	400	435	680	93	0.42	5920	5920	6570	6570	900	900	10000	10000
	85.12	400	435	680	82	0.35	5920	5920	7000	7000	900	900	10000	10000
	90.86	400	435	680	77	0.32	5920	5920	7240	7240	900	900	10000	10000
	104.37	400	435	680	67	0.26	5920	5920	7760	7760	900	900	10000	10000
	121.48	400	435	680	58	0.21	5920	5920	8360	8360	900	900	10000	10000
	131.87	400	435	680	53	0.18	5920	5920	8700	8700	900	900	10000	10000

AQ.	i	n_{epk} [1/min]	η [%]	c_{TG} K [Nm/']	KF [Nm/']	KA [Nm/']	KAF [Nm/']	φ /R [']
	4.64	4500	96	26	23	50	50	12
	5.81	4500	96	26	23	50	50	12
	6.58	4500	96	26	23	50	50	12
	7.36	4500	96	26	23	50	50	11
	8.56	4500	96	26	23	50	50	11
	9.10	4500	96	26	23	50	50	11
	10.56	4500	96	26	23	50	50	11
	11.77	4500	96	26	23	50	50	10
	12.19	4500	96	33	29	90	90	8
	13.65	4500	96	33	29	90	90	8
	15.86	4500	96	33	29	90	90	8
	16.86	4500	96	33	29	90	90	8
	19.58	4500	96	33	29	90	90	8
	21.81	4500	96	33	29	90	90	8
K47	24.06	4500	96	33	29	90	90	8
3	25.91	4500	96	33	29	90	90	8
	29.32	4500	96	33	29	90	90	8
	31.30	4500	96	33	29	90	90	7
	35.39	4500	94	36	32	117	117	7
	39.61	4500	94	36	32	117	117	7
	46.03	4500	94	36	32	117	117	7
	48.95	4500	94	36	32	117	117	7
	56.83	4500	94	36	32	117	117	7
	63.30	4500	94	36	32	117	117	7
	69.84	4500	94	36	32	117	117	6
	75.20	4500	94	36	32	117	117	6
	85.12	4500	94	36	32	117	117	6
	90.86	4500	94	36	32	117	117	6
	104.37	4500	93	36	32	117	117	6
	121.48	4500	93	36	32	117	117	6
	131.87	4500	93	36	32	117	117	6

10.2.4 K 47 AQ.. [mm]

33 104 00 08

K47..

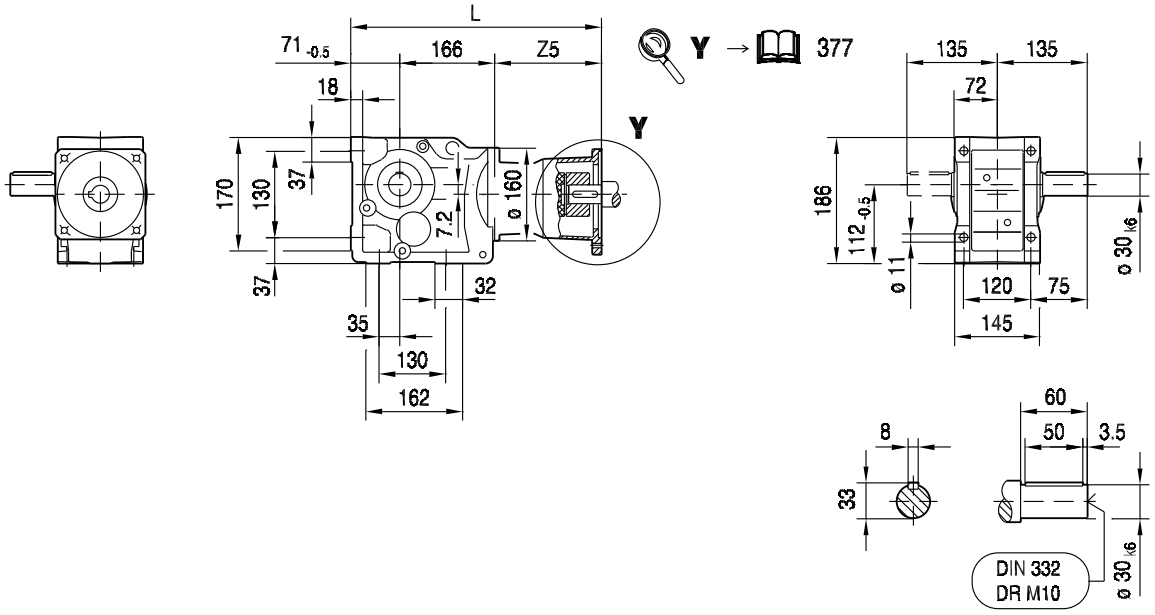

KA47B..

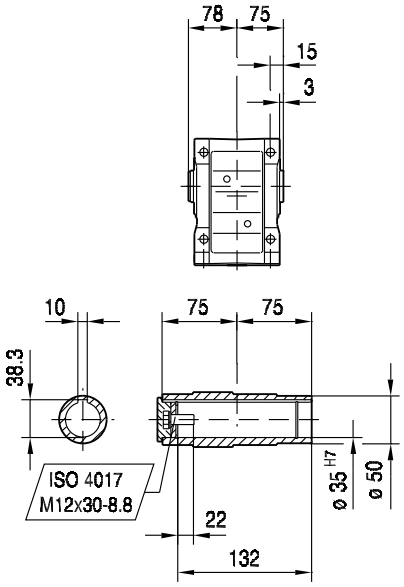

KH47B..

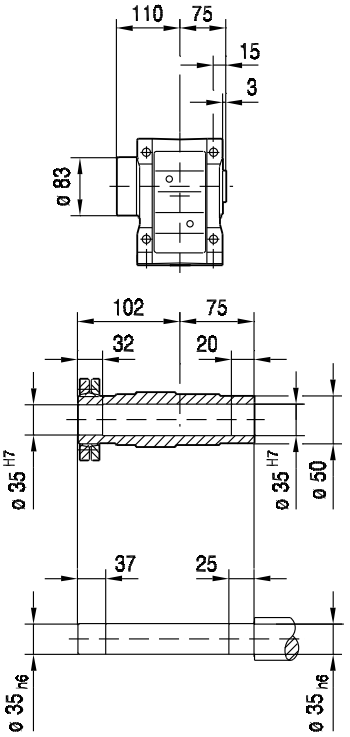

KV47B..

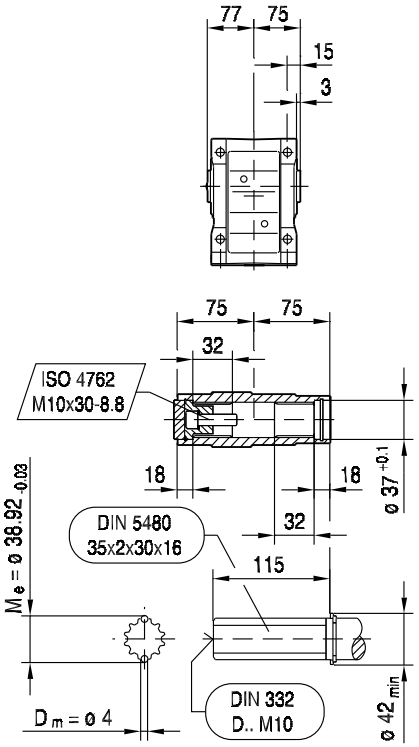

(→ 144)	AQ80/1-3	AQ100/1-2	AQ100/3-4	AQ115/1-3	AQ140/1-2	AQ140/3-4	AQ160/1	
L	335	360	374	383	412	425	425	
Z5	98	123	137	146	175	188	188	

33 105 00 08

KF47..

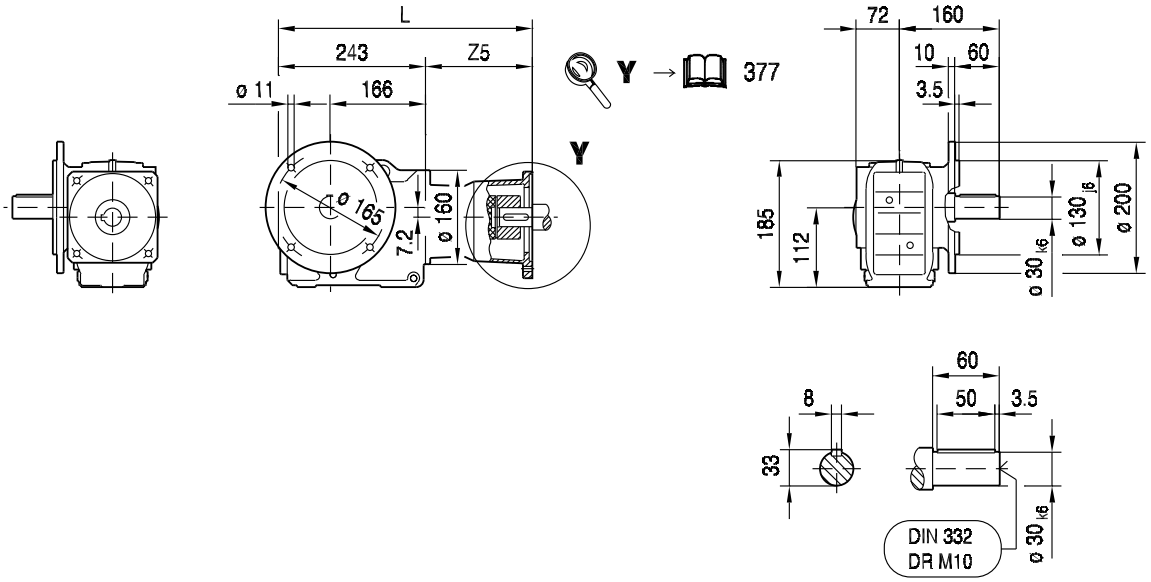

10

KAF47..

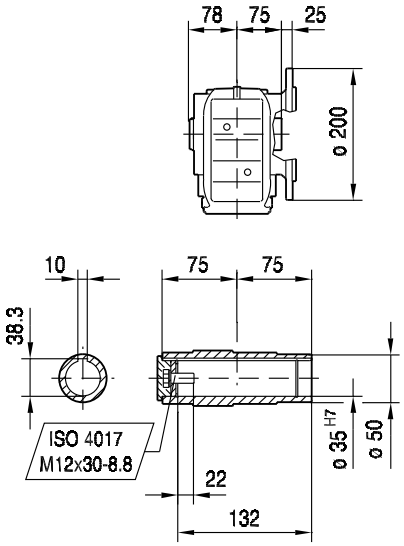

KHF47..

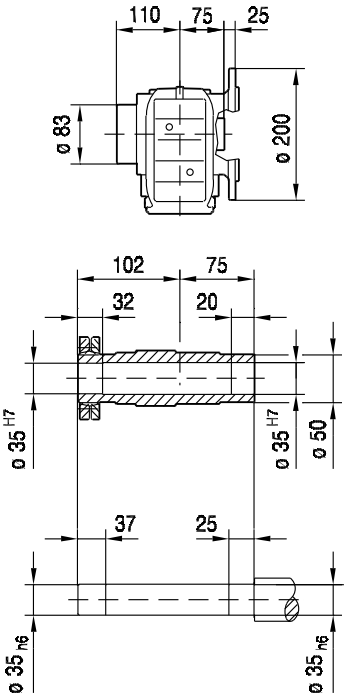

KVF47..

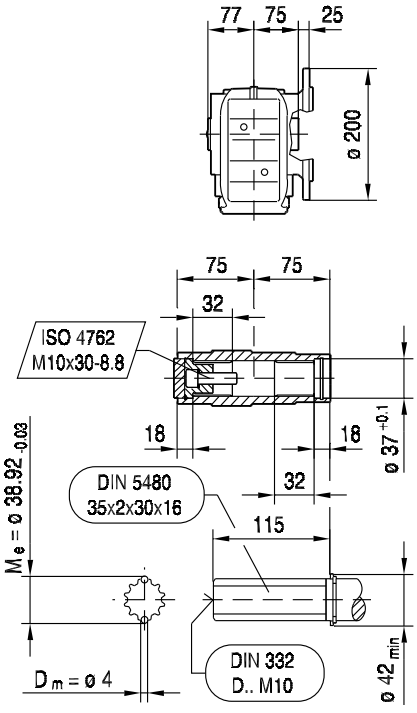

(→ 144)	AQ80/1-3	AQ100/1-2	AQ100/3-4	AQ115/1-3	AQ140/1-2	AQ140/3-4	AQ160/1	
L	341	366	380	389	418	431	431	
Z5	98	123	137	146	175	188	188	

KA47..

33 106 00 08

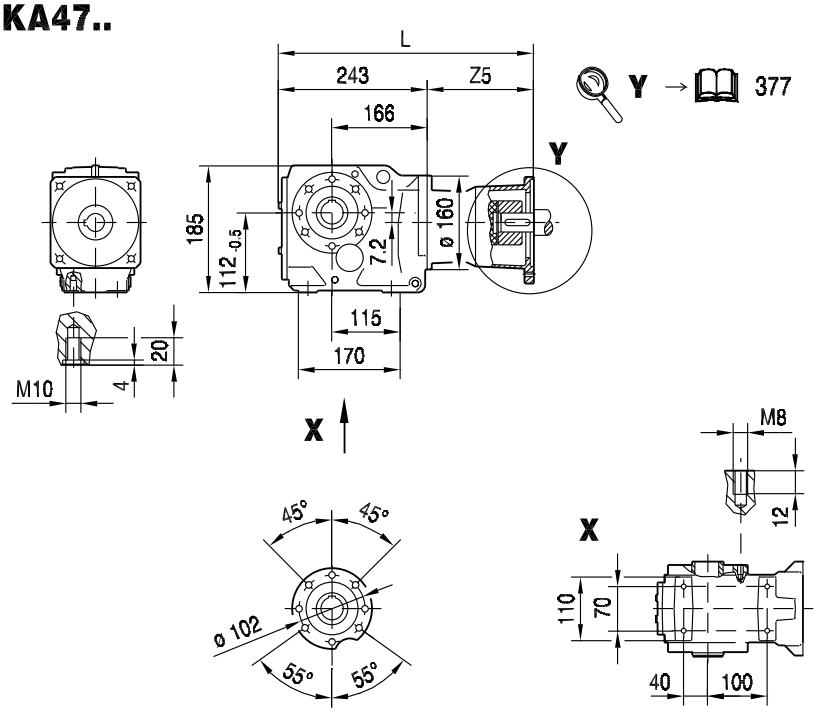

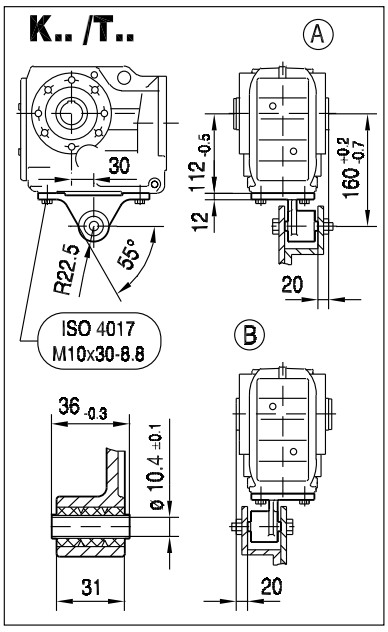

KA47..

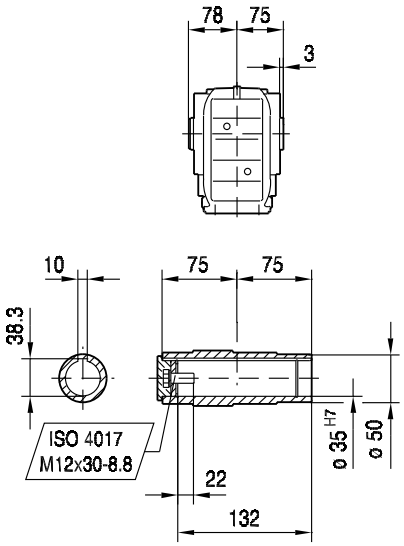

KH47..

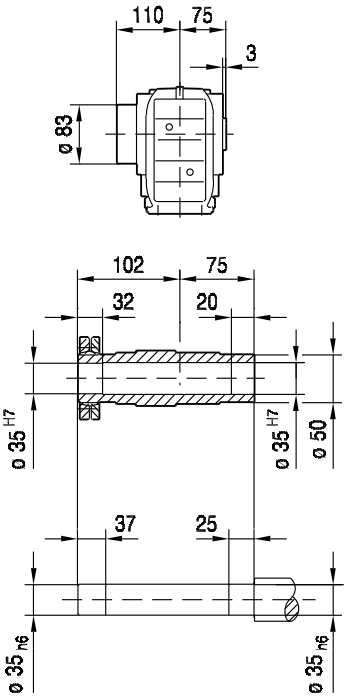

KV47..

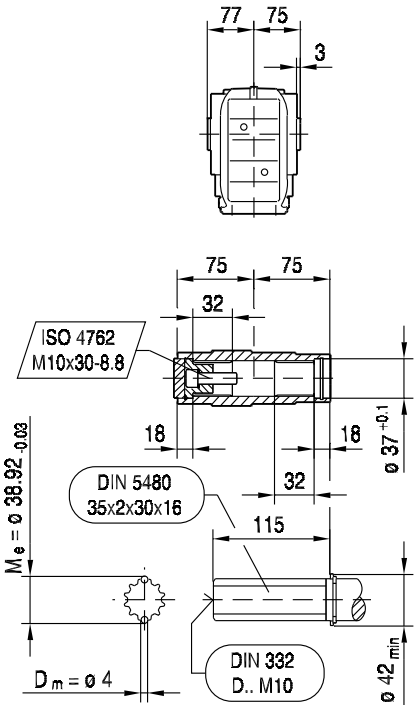

(→ 144)	AQ80/1-3	AQ100/1-2	AQ100/3-4	AQ115/1-3	AQ140/1-2	AQ140/3-4	AQ160/1	
L	341	366	380	389	418	431	431	
Z5	98	123	137	146	175	188	188	

33 108 00 08

KAZ47..

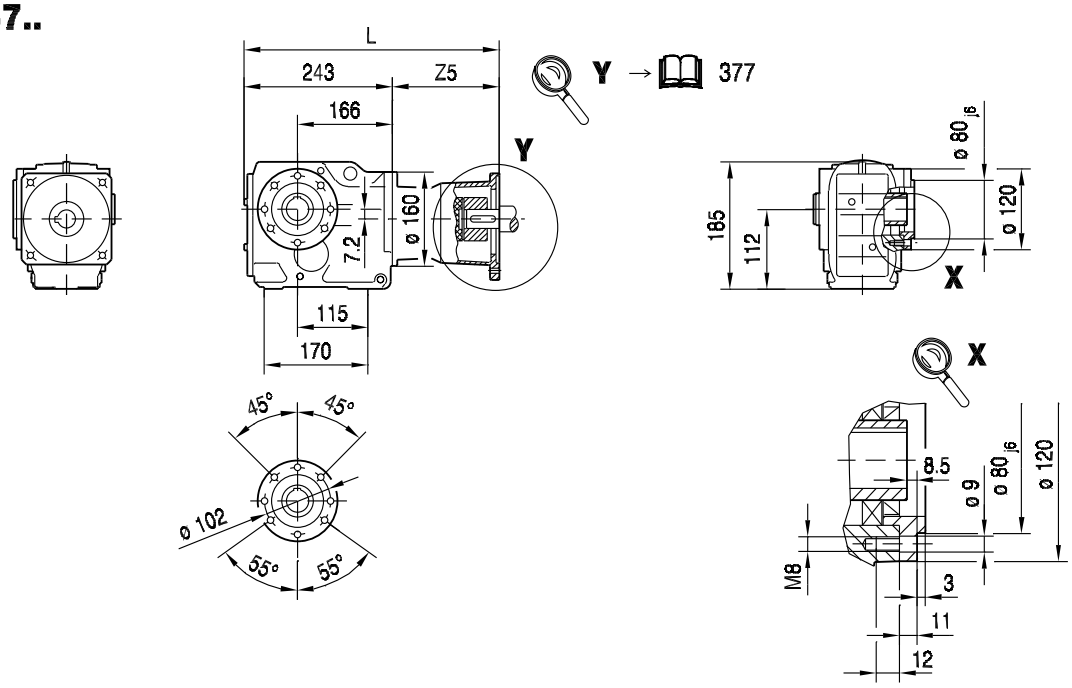

10

KAZ47..

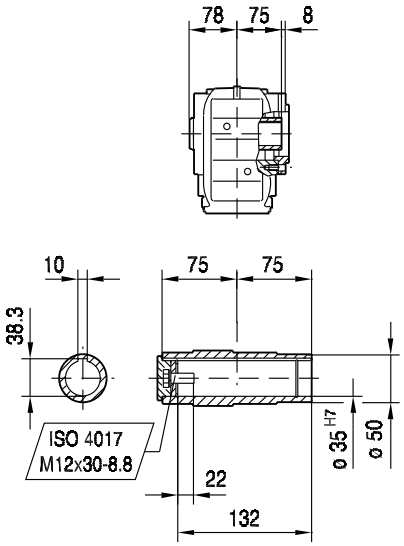

KHZ47..

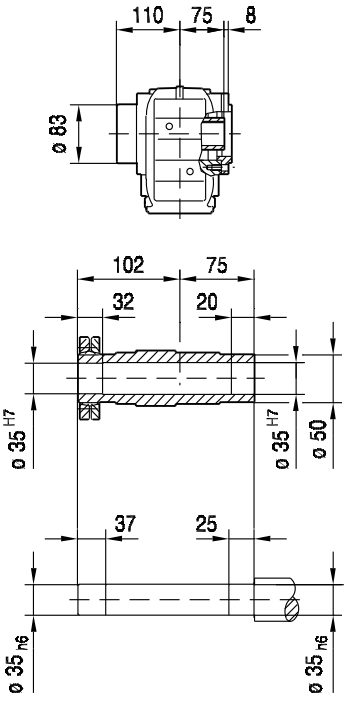

KVZ47..

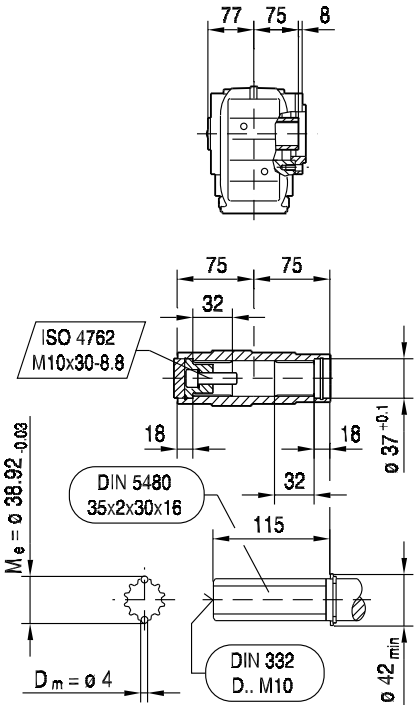

(→ 144)	AQ80/1-3	AQ100/1-2	AQ100/3-4	AQ115/1-3	AQ140/1-2	AQ140/3-4	AQ160/1	
L	341	366	380	389	418	431	431	
Z5	98	123	137	146	175	188	188	

KT47..

33 107 00 08

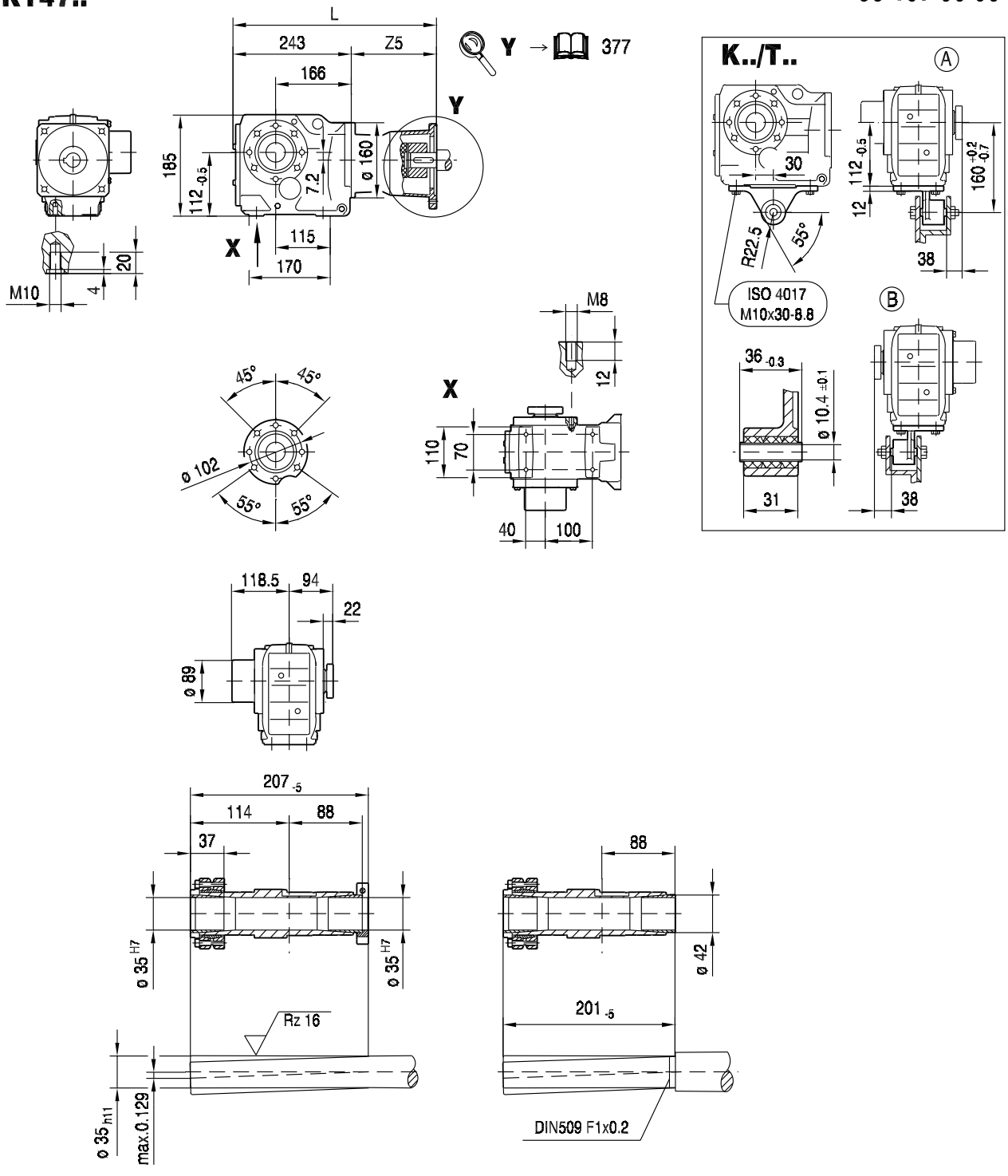

(→ 144)	AQ80/1-3	AQ100/1-2	AQ100/3-4	AQ115/1-3	AQ140/1-2	AQ140/3-4	AQ160/1	
L	341	366	380	389	418	431	431	
Z5	98	123	137	146	175	188	188	

10.2.5 K 57 AQ.. [Nm]

[Nm]		AQ. M_{amax} | M_{apk} | $M_{aNotaus}$																								
	i	80/1-3			100/1-4			115/1-2			115/3			140/1			140/2-4			160/1			190/1-3		
K57  3	4.69	79	79	154	79	79	159	79	79	159	215	215	215	280	280	465	300	450	465	300	450	465	300	450	510
	6.57	111	111	215	111	111	220	111	111	220	300	300	300	345	390	585	345	515	585	345	515	585	345	515	585
	7.55	128	128	245	128	128	255	128	128	255	345	345	345	365	450	620	365	545	620	365	545	620	365	545	620
	8.71	148	148	285	148	148	295	148	148	295	390	400	400	390	520	660	390	585	660	390	585	660	390	585	660
	9.59	163	163	315	163	163	325	163	163	325	405	440	440	405	575	685	405	585	685	405	585	685	405	585	685
	11.26	191	191	370	191	191	380	191	191	380	415	515	515	415	585	705	415	585	705	415	585	705	415	585	705
	11.92	200	200	390	200	200	405	200	200	405	415	545	545	415	585	705	415	585	705	415	585	705	415	585	705
	13.25	225	225	435	225	225	450	225	225	450	510	605	605	510	665	860	510	665	860	510	665	860	510	665	860
	15.22	255	255	500	255	255	515	255	255	515	535	665	700	535	665	910	535	665	910	535	665	910	535	665	910
	17.57	295	295	575	295	295	595	295	295	595	555	665	800	555	665	940	555	665	940	555	665	940	555	665	940
	19.34	325	325	635	325	325	655	325	325	655	575	665	880	575	665	970	575	665	970	575	665	970	575	665	970
	22.71	385	385	745	385	385	770	385	385	770	600	665	1020	600	665	1020	600	665	1020	600	665	1020	600	665	1020
	24.05	405	405	790	405	405	810	405	405	810	600	665	1020	600	665	1020	600	665	1020	600	665	1020	600	665	1020
	27.34	460	460	900	460	460	920	460	460	920	600	665	1020	600	665	1020	600	665	1020	600	665	1020			
	30.28	510	510	990	510	510	1020	510	510	1020	600	665	1020	600	665	1020	600	665	1020	600	665	1020			
	35.70	600	605	1020	600	605	1020	600	605	1020	600	665	1020	600	665	1020	600	665	1020	600	665	1020			
	38.49	600	650	1020	600	650	1020	600	650	1020	600	665	1020	600	665	1020	600	665	1020	600	665	1020	600	665	1020
	44.43	600	665	1020	600	665	1020	600	665	1020	600	665	1020	600	665	1020	600	665	1020	600	665	1020	600	665	1020
	48.89	600	665	1020	600	665	1020	600	665	1020	600	665	1020	600	665	1020	600	665	1020	600	665	1020	600	665	1020
	57.42	600	665	1020	600	665	1020	600	665	1020	600	665	1020	600	665	1020	600	665	1020	600	665	1020	600	665	1020
	60.81	600	665	1020	600	665	1020	600	665	1020	600	665	1020	600	665	1020	600	665	1020	600	665	1020	600	665	1020
	69.12	600	665	1020	600	665	1020	600	665	1020	600	665	1020	600	665	1020	600	665	1020	600	665	1020			
	76.56	600	665	1020	600	665	1020	600	665	1020	600	665	1020	600	665	1020	600	665	1020	600	665	1020			
	90.26	600	665	1020	600	665	1020	600	665	1020	600	665	1020	600	665	1020	600	665	1020	600	665	1020			
	102.88	600	665	1020	600	665	1020	600	665	1020	600	665	1020												
	108.29	600	665	1020	600	665	1020	600	665	1020	600	665	1020												
	123.85	600	665	1020	600	665	1020	600	665	1020	600	665	1020												
	145.14	600	665	1020	600	665	1020	600	665	1020	600	665	1020												

m [kg]		AQ.							
	s	80/1-3	100/1-4	115/1-2	115/3	140/1	140/2-4	160/1	190/1-3
K57	 3	28	28	29	29	34	34	34	43
KF: + 4.7 kg / KA: + -2.1 kg / KAF: + 3.6 kg									

		AQ.							
		80/1-3	100/1-4	115/1-2	115/3	140/1	140/2-4	160/1	190/1-3
J_A 10^{-4}	[kgm^2]	0.77	1.4	1.4	3.1	5.1	10.0	10.0	25.0
c_{TA}	[Nm/']	0.25	0.25	0.25	0.625	0.625	1.0	1.0	2.08

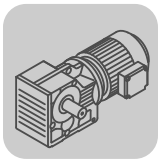

K57							F_{Ramax}				F_{Rapk}			
n_e = 1400	i	M_{amax} [Nm]	M_{apk} [Nm]	$M_{aNotaus}$ [Nm]	n_{ak} [1/min]	J_G 10^{-4} [kgm^2]	K [N]	KF [N]	KA [N]	KAF [N]	K [N]	KF [N]	KA [N]	KAF [N]
	4.69	300	450	510	320	9.0	3800	3980	2580	2580	8520	8520	11500	11500
	6.57	345	517	587	244	5.6	4180	4400	2800	2800	7990	8110	11500	11500
	7.55	365	547	621	225	4.4	4360	4580	2900	2900	7740	7920	11500	11500
	8.71	390	585	663	195	3.5	4520	4760	2980	2980	7420	7660	11500	11500
	9.59	405	585	689	177	3.0	4650	4900	3050	3050	7420	7660	11500	11500
	11.26	415	585	706	178	2.3	4990	5250	3340	3340	7420	7660	11500	11500
	11.92	415	585	706	176	2.1	5150	5400	3470	3470	7420	7660	11500	11500
	13.25	510	665	867	226	4.8	5190	5350	3240	3240	4700	4700	11500	11500
	15.22	535	665	910	197	3.8	5430	5600	3390	3390	4700	4700	11500	11500
	17.57	555	665	944	171	3.0	5740	5910	3610	3610	4700	4700	11500	11500
	19.34	575	665	978	155	2.6	5910	6080	3710	3710	4700	4700	11500	11500
	22.71	600	665	1020	132	2.0	6280	6460	3970	3970	4700	4700	11500	11500
	24.05	600	665	1020	133	1.9	6480	6650	4140	4140	4700	4700	11500	11500
K57	27.34	600	665	1020	132	1.5	6930	7090	4550	4550	4700	4700	11500	11500
3	30.28	600	665	1020	132	1.2	7300	7460	4880	4880	4700	4700	11500	11500
	35.70	600	665	1020	134	0.95	7630	7720	5440	5440	4700	4700	11500	11500
	38.49	600	665	1020	70	2.3	7630	7720	5710	5710	4700	4700	11500	11500
	44.43	600	665	1020	72	1.9	7630	7720	6240	6240	4700	4700	11500	11500
	48.89	600	665	1020	74	1.6	7630	7720	6610	6610	4700	4700	11500	11500
	57.42	600	665	1020	75	1.3	7630	7720	7260	7260	4700	4700	11500	11500
	60.81	600	665	1020	76	1.2	7630	7720	7490	7490	4700	4700	11500	11500
	69.12	600	665	1020	77	0.98	7630	7720	8040	8040	4700	4700	11500	11500
	76.56	600	665	1020	78	0.85	7630	7720	8500	8500	4700	4700	11500	11500
	90.26	600	665	1020	78	0.67	7630	7720	9260	9260	4700	4700	11500	11500
	102.88	600	665	1020	68	0.46	7630	7720	9900	9900	4700	4700	11500	11500
	108.29	600	665	1020	65	0.41	7630	7720	10200	10200	4700	4700	11500	11500
	123.85	600	665	1020	57	0.33	7630	7720	10900	10900	4700	4700	11500	11500
	145.14	600	665	1020	48	0.27	7630	7720	11500	11500	4700	4700	11500	11500

AQ.	i	n_{epk} [1/min]	η [%]	c_{TG} K [Nm/']	KF [Nm/']	KA [Nm/']	KAF [Nm/']	φ /R [']
	4.69	4045	96	34	33	81	81	11
	6.57	4500	96	34	33	81	81	10
	7.55	4500	96	34	33	81	81	10
	8.71	4500	96	34	33	81	81	10
	9.59	4500	96	34	33	81	81	10
	11.26	4500	96	34	33	81	81	9
	11.92	4500	96	34	33	81	81	9
	13.25	4500	96	41	39	135	135	7
	15.22	4500	96	41	39	135	135	7
	17.57	4500	96	41	39	135	135	7
	19.34	4500	96	41	39	135	135	7
	22.71	4500	96	41	39	135	135	7
	24.05	4500	96	41	39	135	135	7
K57	27.34	4500	96	41	39	135	135	7
 **3**	30.28	4500	96	41	39	135	135	7
	35.70	4500	96	41	39	135	135	7
	38.49	4500	94	43	40	150	150	6
	44.43	4500	94	43	40	150	150	6
	48.89	4500	94	43	40	150	150	6
	57.42	4500	94	43	40	150	150	6
	60.81	4500	94	43	40	150	150	6
	69.12	4500	94	43	40	150	150	6
	76.56	4500	94	43	40	150	150	6
	90.26	4500	94	43	40	150	150	6
	102.88	4500	94	43	40	150	150	6
	108.29	4500	94	43	40	150	150	6
	123.85	4500	93	43	40	150	150	6
	145.14	4500	93	43	40	150	150	6

10.2.6 K 57 AQ.. [mm]

33 109 00 08

K57..

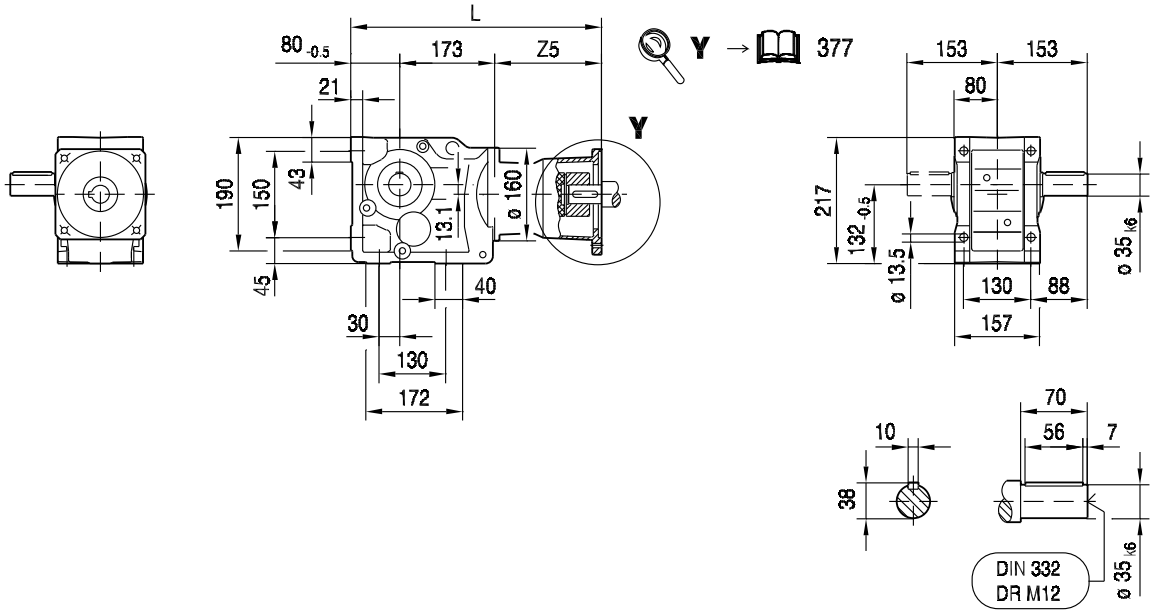

KA57B..

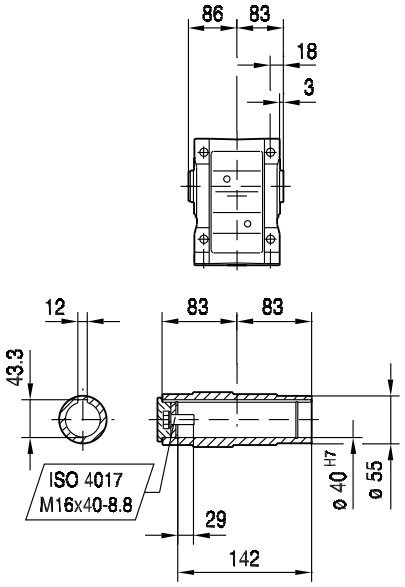

KH57B..

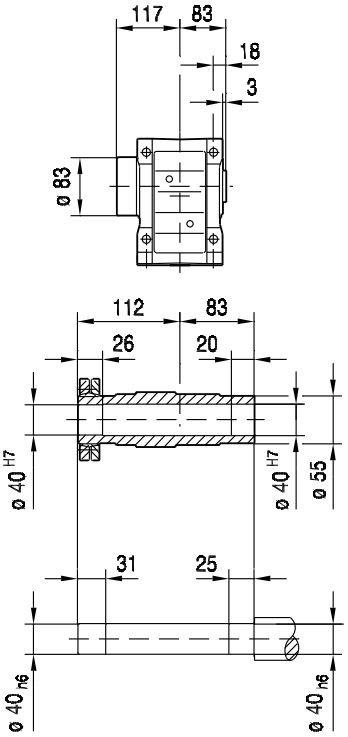

KV57B..

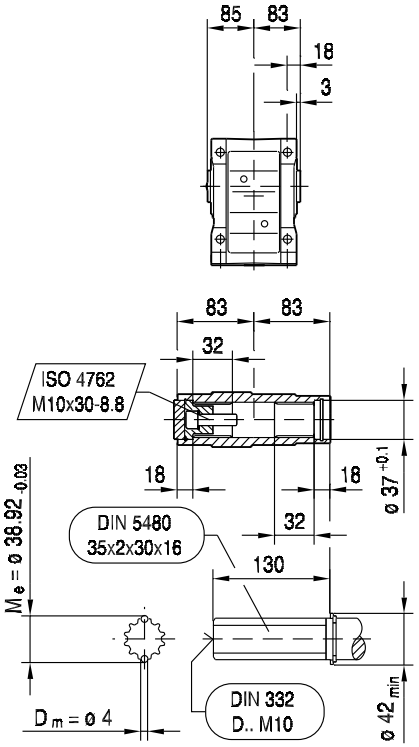

(→ 144)	AQ80/1-3	AQ100/1-2	AQ100/3-4	AQ115/1-3	AQ140/1-2	AQ140/3-4	AQ160/1	AQ190/1-2	AQ190/3
L	351	376	390	399	428	441	441	491	515
Z5	98	123	137	146	175	188	188	237.5	261.5

33 110 00 08

KF57..

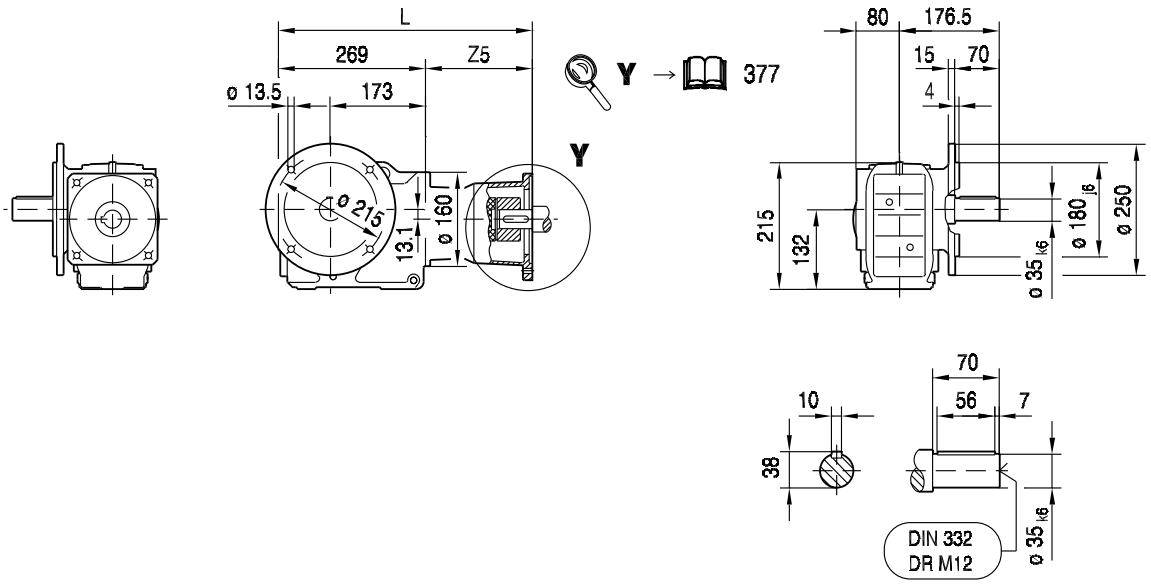

10

KAF57..

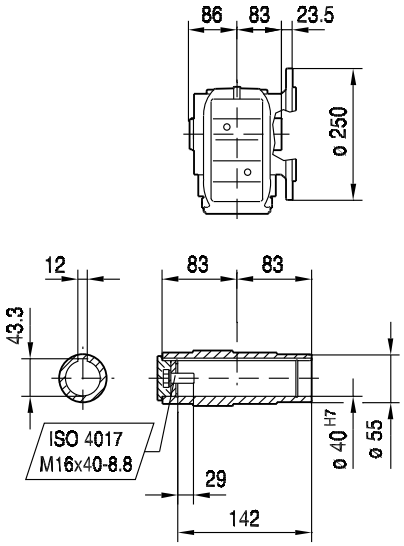

KHF57..

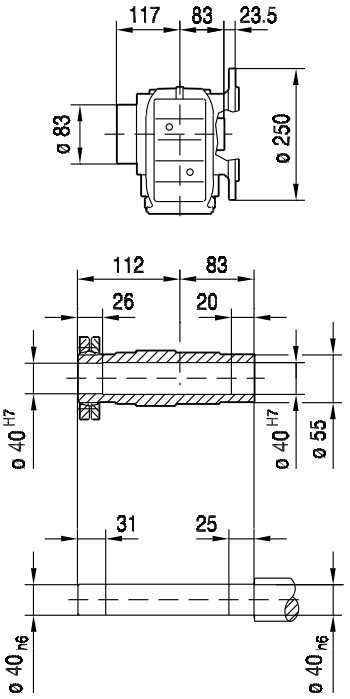

KVF57..

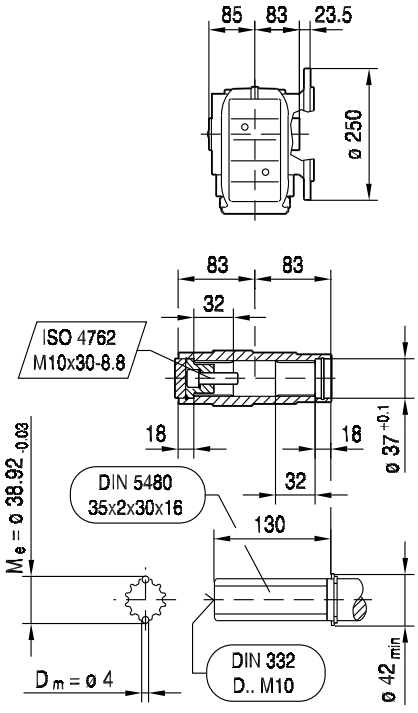

(→ 144)	AQ80/1-3	AQ100/1-2	AQ100/3-4	AQ115/1-3	AQ140/1-2	AQ140/3-4	AQ160/1	AQ190/1-2	AQ190/3
L	367	392	406	415	444	457	457	507	531
Z5	98	123	137	146	175	188	188	237.5	261.5

KA57..

33 111 00 08

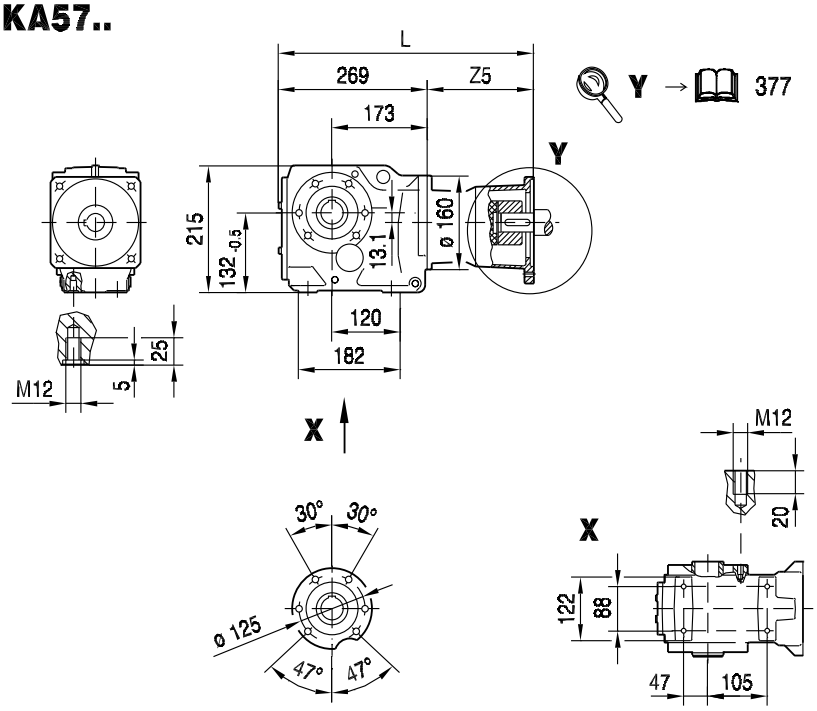

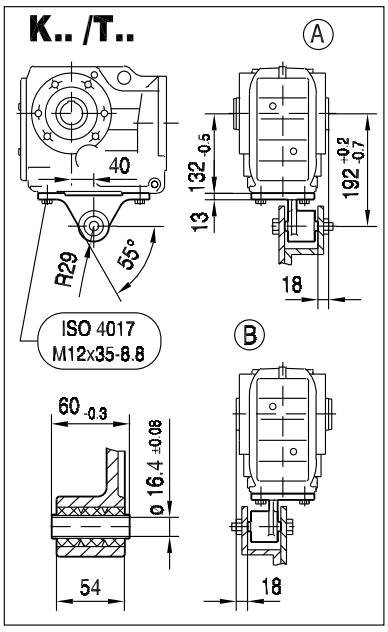

KA57..

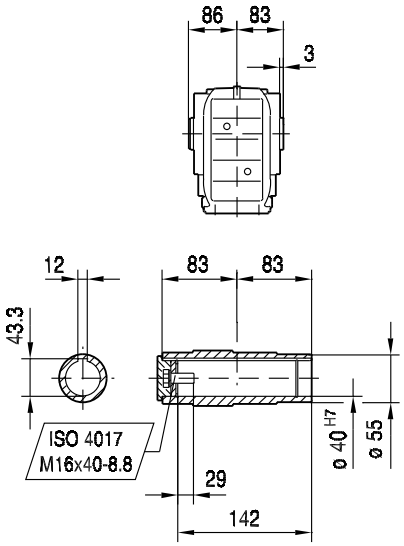

KH57..

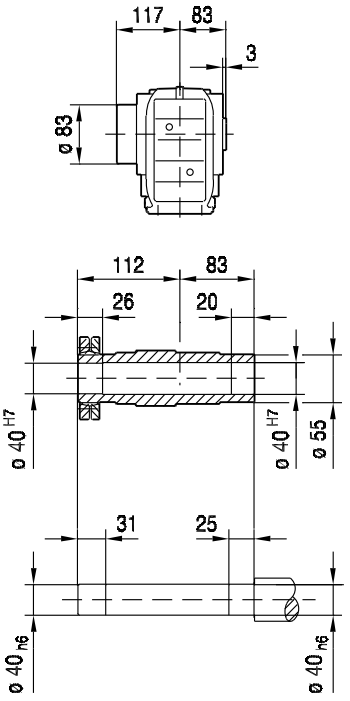

KV57..

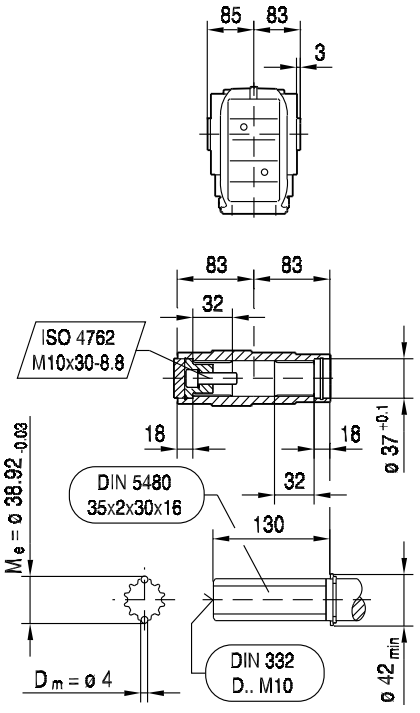

(→ 144)	AQ80/1-3	AQ100/1-2	AQ100/3-4	AQ115/1-3	AQ140/1-2	AQ140/3-4	AQ160/1	AQ190/1-2	AQ190/3
L	367	392	406	415	444	457	457	507	531
Z5	98	123	137	146	175	188	188	237.5	261.5

33 113 00 08

KAZ57..

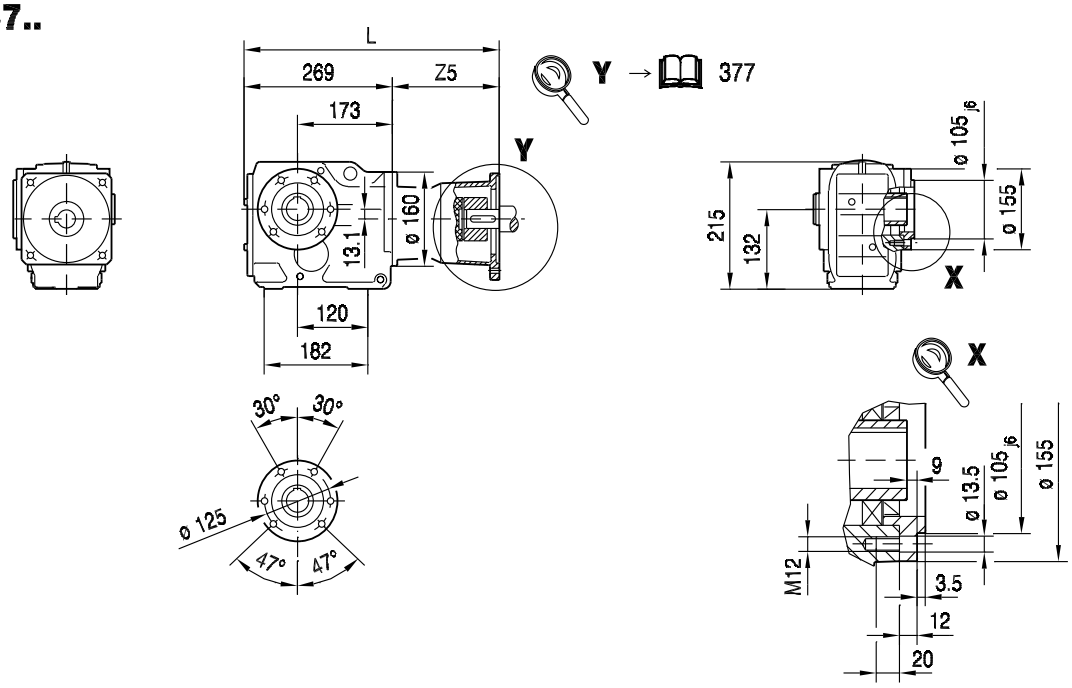

10

KAZ57..

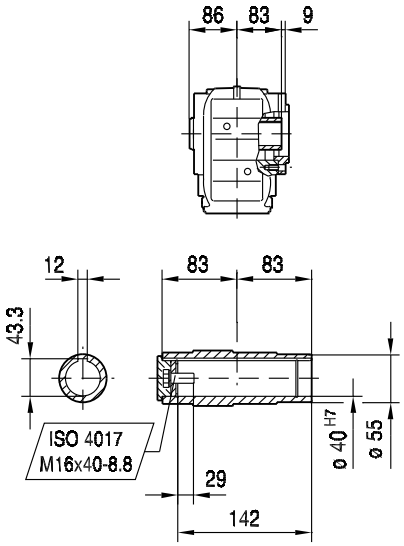

KHZ57..

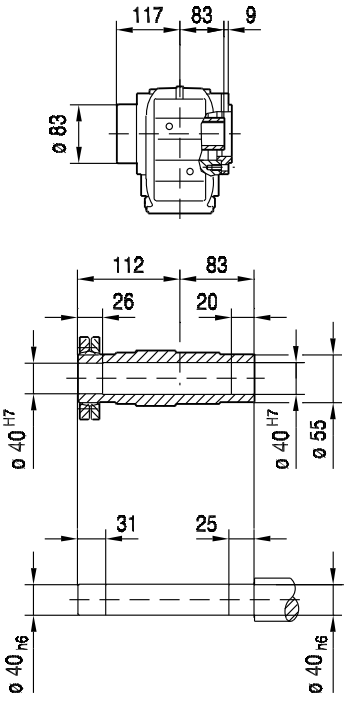

KVZ57..

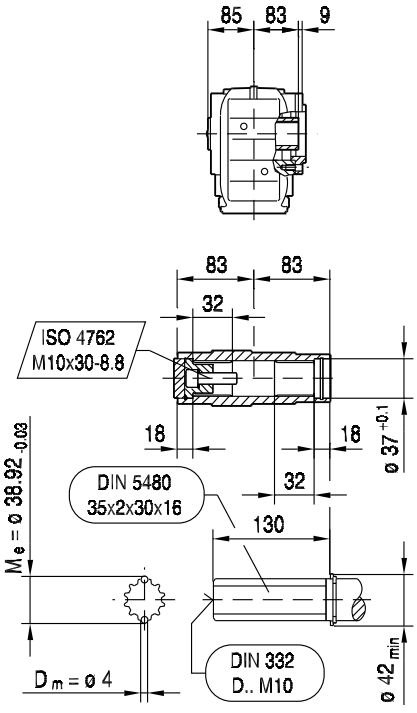

(→ 144)	AQ80/1-3	AQ100/1-2	AQ100/3-4	AQ115/1-3	AQ140/1-2	AQ140/3-4	AQ160/1	AQ190/1-2	AQ190/3
L	367	392	406	415	444	457	457	507	531
Z5	98	123	137	146	175	188	188	237.5	261.5

KT57..

33 112 00 08

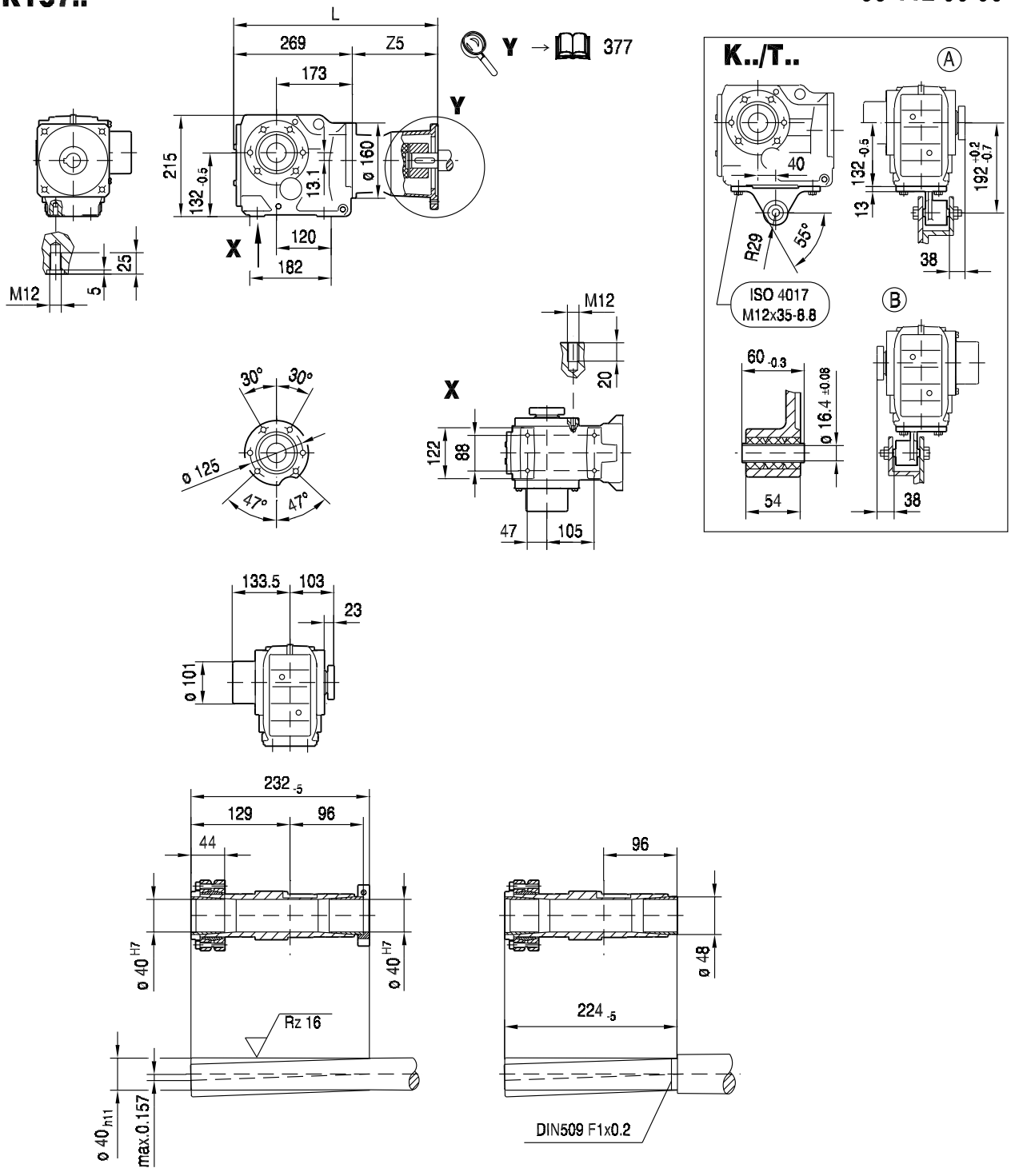

(→ 144)	AQ80/1-3	AQ100/1-2	AQ100/3-4	AQ115/1-3	AQ140/1-2	AQ140/3-4	AQ160/1	AQ190/1-2	AQ190/3
L	367	392	406	415	444	457	457	507	531
Z5	98	123	137	146	175	188	188	237.5	261.5

10.2.7 K 67 AQ.. [Nm]

[Nm]		AQ. M_{amax} | M_{apk} | $M_{aNotaus}$																								
	i	80/1-3			100/1-4			115/1-2			115/3			140/1			140/2-4			160/1			190/1-3		
	5.20	88	88	171	88	88	176	88	88	176	235	235	235	310	310	520	350	520	520	350	520	520	350	525	595
	7.28	123	123	240	123	123	245	123	123	245	330	330	330	420	435	710	420	630	710	420	630	710	420	630	710
	8.37	142	142	275	142	142	280	142	142	280	385	385	385	440	500	745	440	660	745	440	660	745	440	660	745
	9.66	164	164	315	164	164	325	164	164	325	440	440	440	480	575	810	480	685	810	480	685	810	480	685	810
	10.63	180	180	350	180	180	360	180	180	360	485	485	485	500	635	850	500	690	850	500	690	850	500	690	850
	12.48	210	210	410	210	210	420	210	210	420	530	570	570	530	695	900	530	695	900	530	695	900	530	695	900
	13.22	220	220	435	220	220	445	220	220	445	605	605	605	670	790	1130	670	920	1130	670	920	1130	670	920	1130
	15.19	255	255	500	255	255	515	255	255	515	695	695	695	700	910	1190	700	920	1190	700	920	1190	700	920	1190
	17.54	295	295	575	295	295	595	295	295	595	740	800	800	740	920	1250	740	920	1250	740	920	1250	740	920	1250
	19.30	325	325	635	325	325	655	325	325	655	760	880	880	760	920	1290	760	920	1290	760	920	1290	760	920	1290
	22.66	385	385	745	385	385	770	385	385	770	780	920	1040	780	920	1320	780	920	1320	780	920	1320	780	920	1320
	24.00	405	405	790	405	405	810	405	405	810	800	920	1100	800	920	1360	800	920	1360	800	920	1360	800	920	1360
K67	27.28	460	460	900	460	460	920	460	460	920	820	920	1250	820	920	1390	820	920	1390	820	920	1390			
3	30.22	510	510	990	510	510	1020	510	510	1020	820	920	1390	820	920	1390	820	920	1390	820	920	1390			
	35.62	605	605	1170	605	605	1210	605	605	1210	820	920	1390	820	920	1390	820	920	1390	820	920	1390			
	38.39	650	650	1260	650	650	1300	650	650	1300	800	920	1360	800	920	1360	800	920	1360	800	920	1360	800	920	1360
	44.32	750	750	1390	750	750	1390	750	750	1390	820	920	1390	820	920	1390	820	920	1390	820	920	1390	820	920	1390
	48.77	820	820	1390	820	820	1390	820	820	1390	820	920	1390	820	920	1390	820	920	1390	820	920	1390	820	920	1390
	57.28	820	920	1390	820	920	1390	820	920	1390	820	920	1390	820	920	1390	820	920	1390	820	920	1390	820	920	1390
	60.66	820	920	1390	820	920	1390	820	920	1390	820	920	1390	820	920	1390	820	920	1390	820	920	1390	820	920	1390
	68.95	820	920	1390	820	920	1390	820	920	1390	820	920	1390	820	920	1390	820	920	1390	820	920	1390			
	76.37	820	920	1390	820	920	1390	820	920	1390	820	920	1390	820	920	1390	820	920	1390	820	920	1390			
	90.04	820	920	1390	820	920	1390	820	920	1390	820	920	1390	820	920	1390	820	920	1390	820	920	1390			
	102.62	820	920	1390	820	920	1390	820	920	1390	820	920	1390												
	108.03	820	920	1390	820	920	1390	820	920	1390	820	920	1390												
	123.54	820	920	1390	820	920	1390	820	920	1390	820	920	1390												
	144.79	820	920	1390	820	920	1390	820	920	1390	820	920	1390												

m [kg]		AQ.							
	s	80/1-3	100/1-4	115/1-2	115/3	140/1	140/2-4	160/1	190/1-3
K67	3	34	34	35	35	40	40	40	48
KF: + 5.6 kg / KA: + -2.7 kg / KAF: + 3.0 kg									

		AQ.							
		80/1-3	100/1-4	115/1-2	115/3	140/1	140/2-4	160/1	190/1-3
$J_A\ 10^{-4}$	[kgm^2]	0.77	1.4	1.4	3.1	5.1	10.0	10.0	25.0
c_{TA}	[Nm/']	0.25	0.25	0.25	0.625	0.625	1.0	1.0	2.08

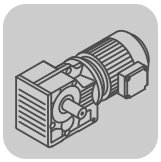

K67							F_{Ramax}				F_{Rapk}			
n_e = 1400	i	M_{amax} [Nm]	M_{apk} [Nm]	$M_{aNotaus}$ [Nm]	n_{ak} [1/min]	J_G 10^{-4} [kgm^2]	K [N]	KF [N]	KA [N]	KAF [N]	K [N]	KF [N]	KA [N]	KAF [N]
	5.20	350	525	595	192	11	9860	10000	2450	2450	12300	12300	13000	13000
	7.28	420	630	714	206	6.3	10700	10900	2480	2480	11700	11700	13000	13000
	8.37	440	660	748	179	4.9	11100	11400	2590	2590	11500	11500	13000	13000
	9.66	480	685	816	155	3.8	11500	11700	2550	2550	11400	11400	13000	13000
	10.63	500	690	850	141	3.2	11800	12000	2590	2590	11300	11300	13000	13000
	12.48	530	695	901	120	2.5	12300	12300	2710	2710	11300	11300	13000	13000
	13.22	670	920	1139	113	5.6	11500	11500	2420	2420	9310	9310	13000	13000
	15.19	700	920	1190	105	4.4	11300	11300	2550	2550	9310	9310	13000	13000
	17.54	740	920	1258	97	3.4	11000	11000	2630	2630	9310	9310	13000	13000
	19.30	760	920	1292	93	2.9	10800	10800	2740	2740	9310	9310	13000	13000
	22.66	780	920	1326	93	2.2	10700	10700	3070	3070	9310	9310	13000	13000
	24.00	800	920	1360	88	2.0	10500	10500	3090	3090	9310	9310	13000	13000
K67	27.28	820	920	1394	84	1.6	10300	10300	3340	3340	9310	9310	13000	13000
3	30.22	820	920	1394	86	1.3	10300	10300	3680	3680	9310	9310	13000	13000
	35.62	820	920	1394	90	1.0	10300	10300	4260	4260	9310	9310	13000	13000
	38.39	800	920	1360	52	2.4	10500	10500	4690	4690	9310	9310	13000	13000
	44.32	820	920	1394	50	1.9	10300	10300	5070	5070	9310	9310	13000	13000
	48.77	820	920	1394	49	1.7	10300	10300	5440	5440	9310	9310	13000	13000
	57.28	820	920	1394	52	1.4	10300	10300	6100	6100	9310	9310	13000	13000
	60.66	820	920	1394	53	1.2	10300	10300	6340	6340	9310	9310	13000	13000
	68.95	820	920	1394	52	1.0	10300	10300	6900	6900	9310	9310	13000	13000
	76.37	820	920	1394	54	0.87	10300	10300	7360	7360	9310	9310	13000	13000
	90.04	820	920	1394	54	0.68	10300	10300	8140	8140	9310	9310	13000	13000
	102.62	820	920	1394	56	0.47	10300	10300	8800	8800	9310	9310	13000	13000
	108.03	820	920	1394	56	0.42	10300	10300	9060	9060	9310	9310	13000	13000
	123.54	820	920	1394	56	0.34	10300	10300	9770	9770	9310	9310	13000	13000
	144.79	820	920	1394	48	0.28	10300	10300	10700	10700	9310	9310	13000	13000

AQ.				c_{TG}				φ
	i	n_{epk} [1/min]	η [%]	K [Nm/']	KF [Nm/']	KA [Nm/']	KAF [Nm/']	/R [']
	5.20	3862	96	58	54	96	96	10
	7.28	4500	96	58	54	96	96	9
	8.37	4500	96	58	54	96	96	9
	9.66	4500	96	58	54	96	96	9
	10.63	4500	96	58	54	96	96	9
	12.48	4500	96	58	54	96	96	9
	13.22	4500	96	73	66	146	146	8
	15.19	4500	96	73	66	146	146	8
	17.54	4500	96	73	66	146	146	7
	19.30	4500	96	73	66	146	146	7
	22.66	4500	96	73	66	146	146	7
	24.00	4500	96	73	66	146	146	7
K67	27.28	4500	96	73	66	146	146	7
3	30.22	4500	96	73	66	146	146	7
	35.62	4500	96	73	66	146	146	7
	38.39	4500	94	77	70	165	165	6
	44.32	4500	94	77	70	165	165	6
	48.77	4500	94	77	70	165	165	6
	57.28	4500	94	77	70	165	165	6
	60.66	4500	94	77	70	165	165	6
	68.95	4500	95	77	70	165	165	6
	76.37	4500	95	77	70	165	165	6
	90.04	4500	94	77	70	165	165	6
	102.62	4500	94	77	70	165	165	6
	108.03	4500	94	77	70	165	165	6
	123.54	4500	94	77	70	165	165	6
	144.79	4500	94	77	70	165	165	6

10.2.8 K 67 AQ.. [mm]

33 114 00 08

K67..

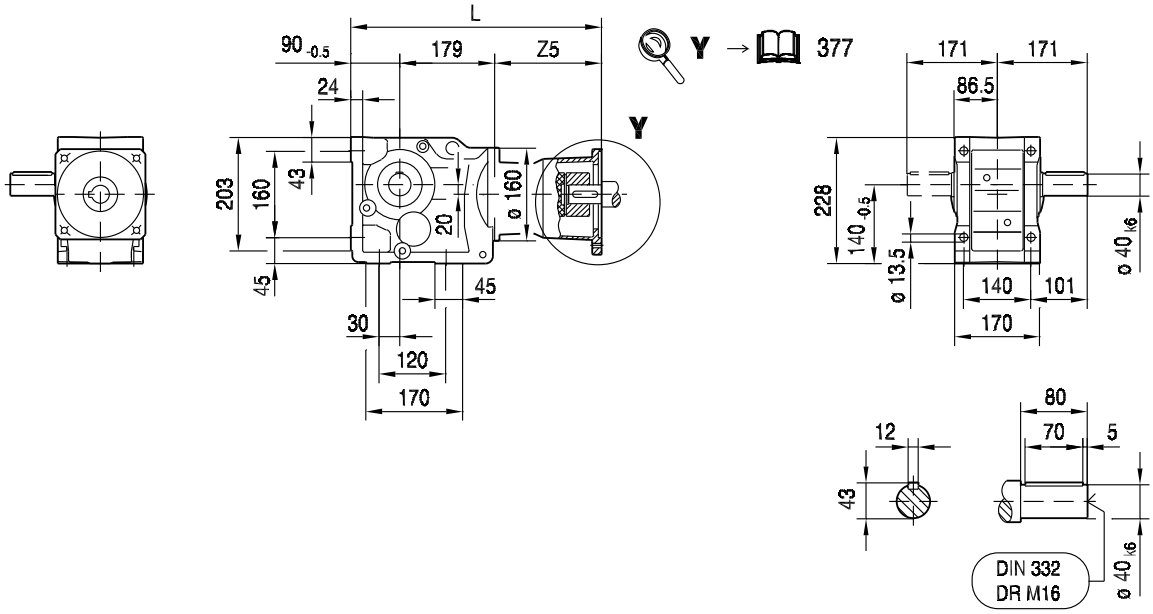

10

KA67B..

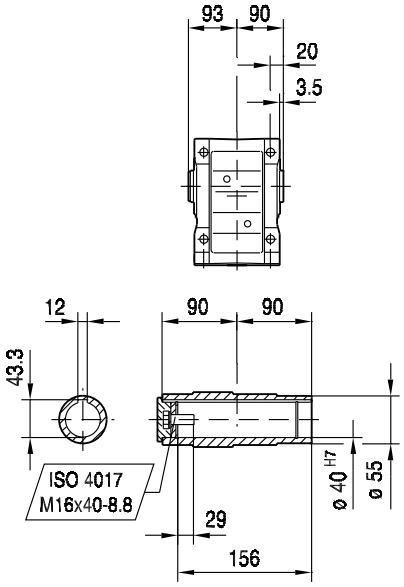

KH67B..

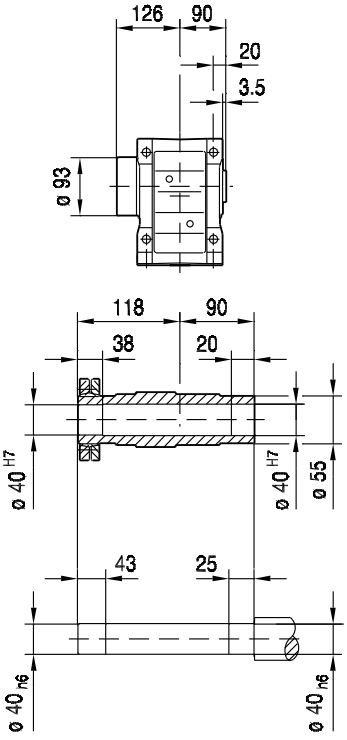

KV67B..

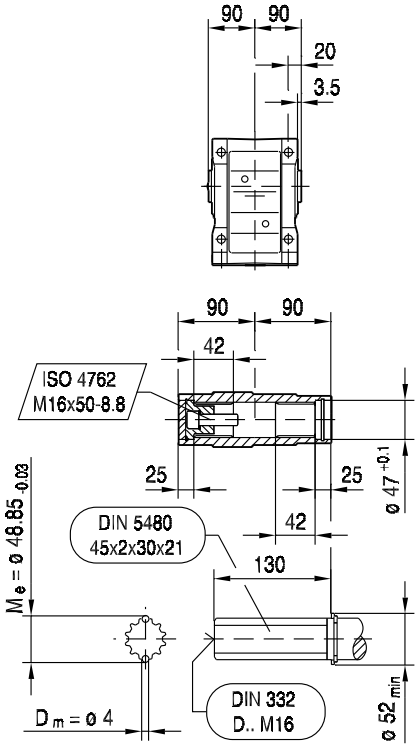

(→ 144)	AQ80/1-3	AQ100/1-2	AQ100/3-4	AQ115/1-3	AQ140/1-2	AQ140/3-4	AQ160/1	AQ190/1-2	AQ190/3
L	367	392	406	415	444	457	457	507	531
Z5	98	123	137	146	175	188	188	237.5	261.5

33 115 00 08

KF67..

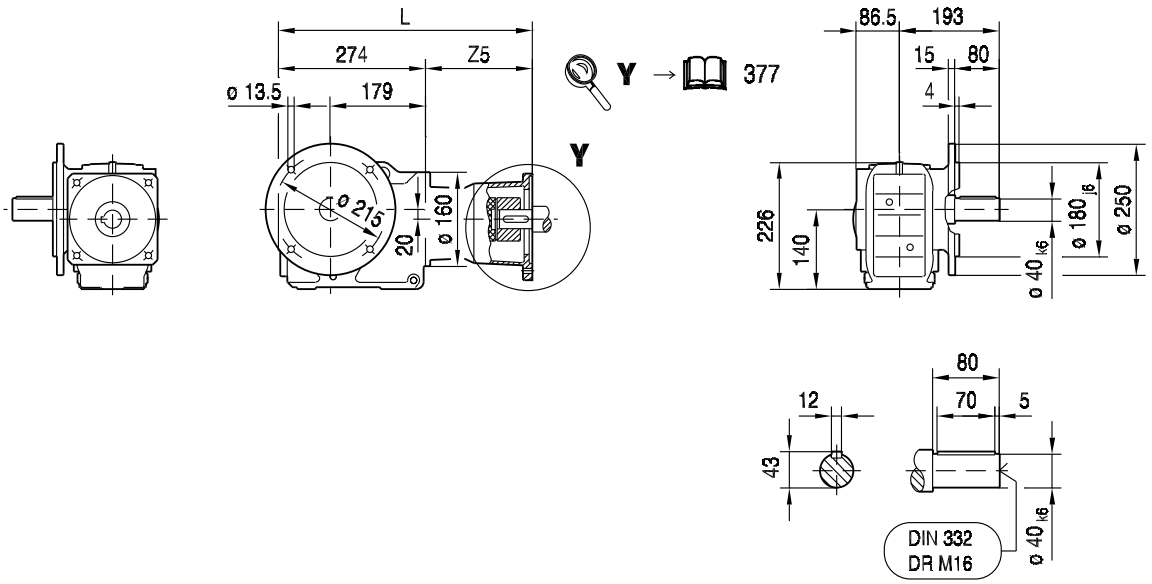

KAF67..

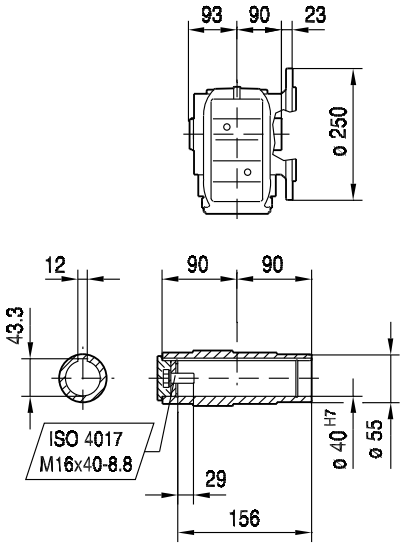

KHF67..

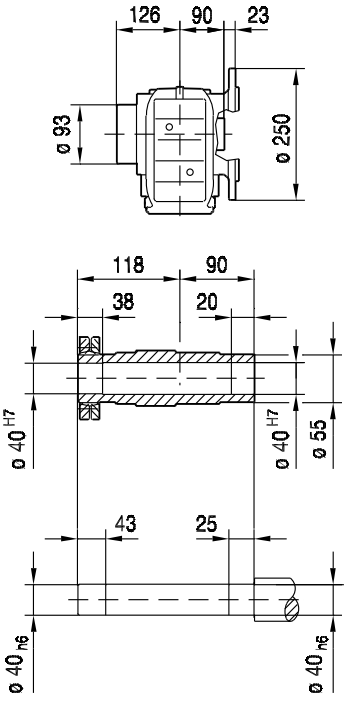

KVF67..

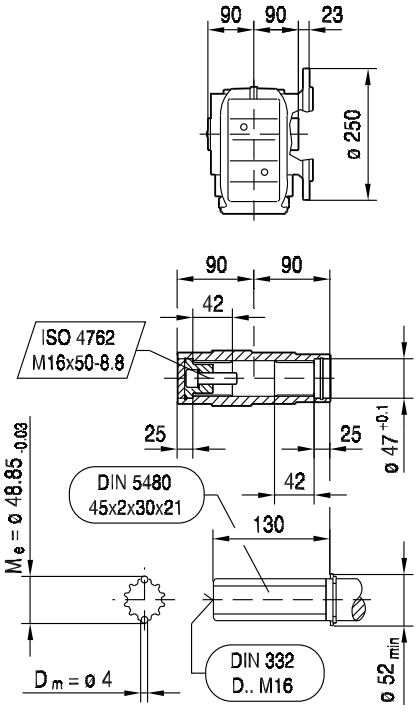

(→ 144)	AQ80/1-3	AQ100/1-2	AQ100/3-4	AQ115/1-3	AQ140/1-2	AQ140/3-4	AQ160/1	AQ190/1-2	AQ190/3
L	372	397	411	420	449	462	462	512	536
Z5	98	123	137	146	175	188	188	237.5	261.5

KA67..

33 116 00 08

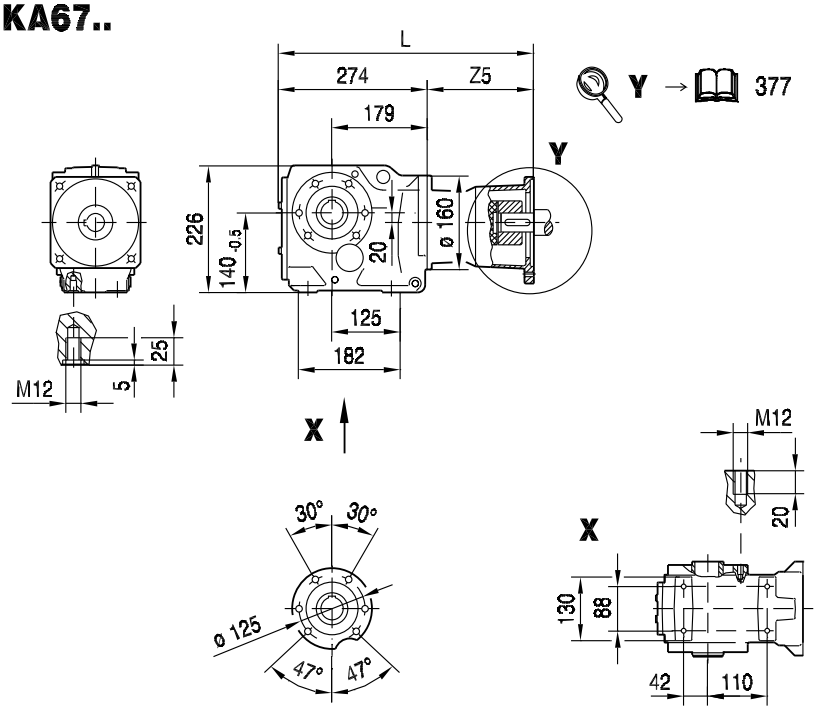

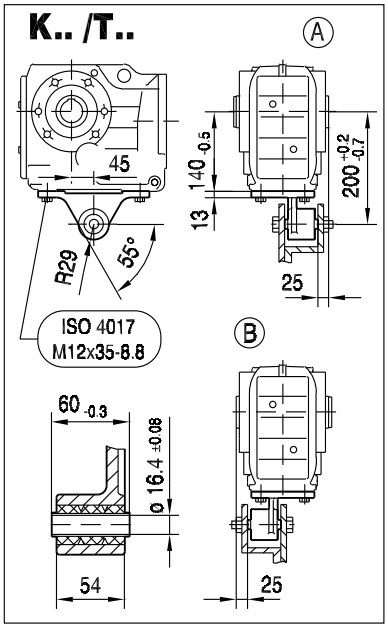

10

KA67..

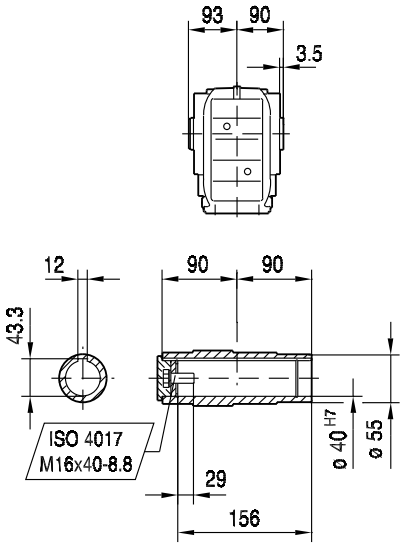

KH67..

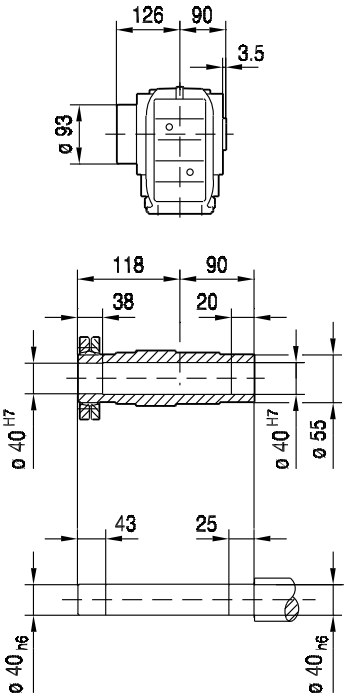

KV67..

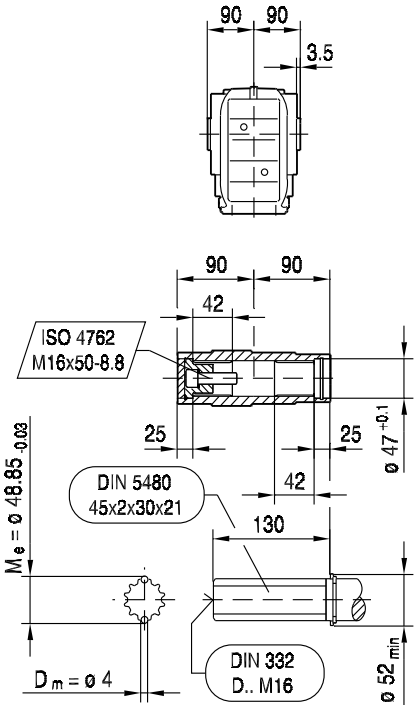

(→ 144)	AQ80/1-3	AQ100/1-2	AQ100/3-4	AQ115/1-3	AQ140/1-2	AQ140/3-4	AQ160/1	AQ190/1-2	AQ190/3
L	372	397	411	420	449	462	462	512	536
Z5	98	123	137	146	175	188	188	237.5	261.5

33 118 00 08

KAZ67..

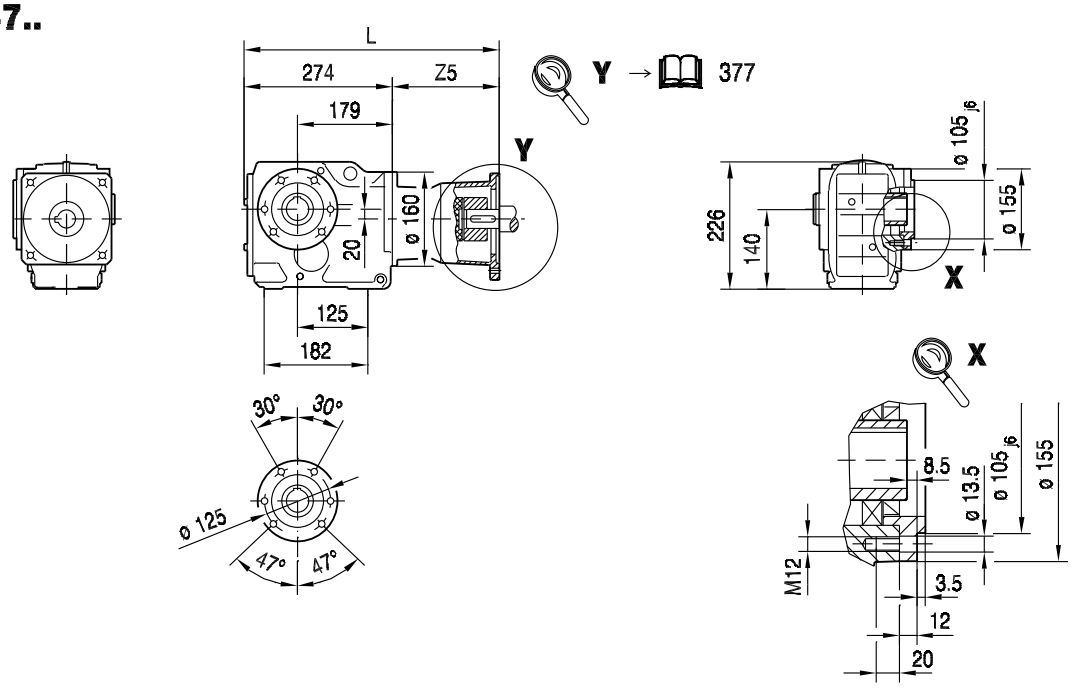

KAZ67..

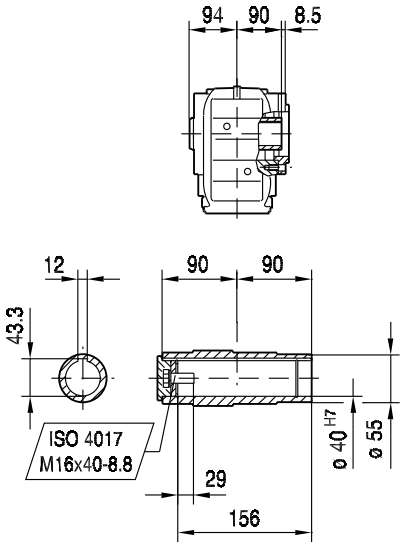

KHZ67..

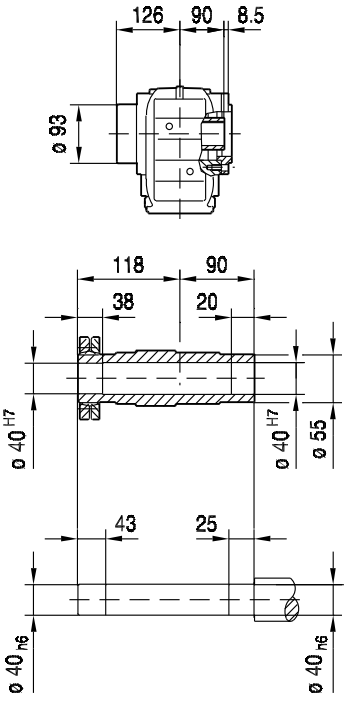

KVZ67..

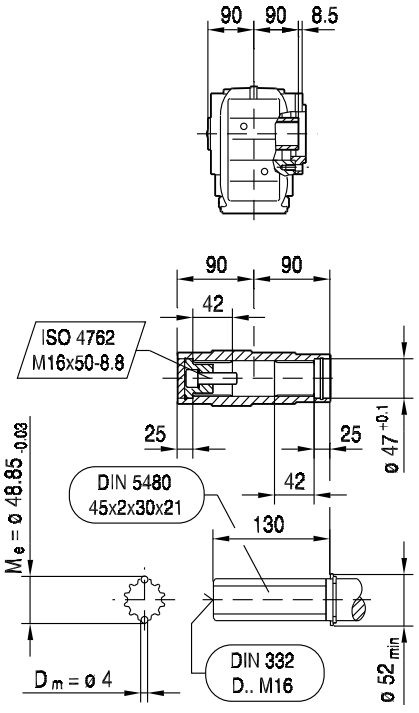

(→ 144)	AQ80/1-3	AQ100/1-2	AQ100/3-4	AQ115/1-3	AQ140/1-2	AQ140/3-4	AQ160/1	AQ190/1-2	AQ190/3
L	372	397	411	420	449	462	462	512	536
Z5	98	123	137	146	175	188	188	237.5	261.5

KT67..

33 117 00 08

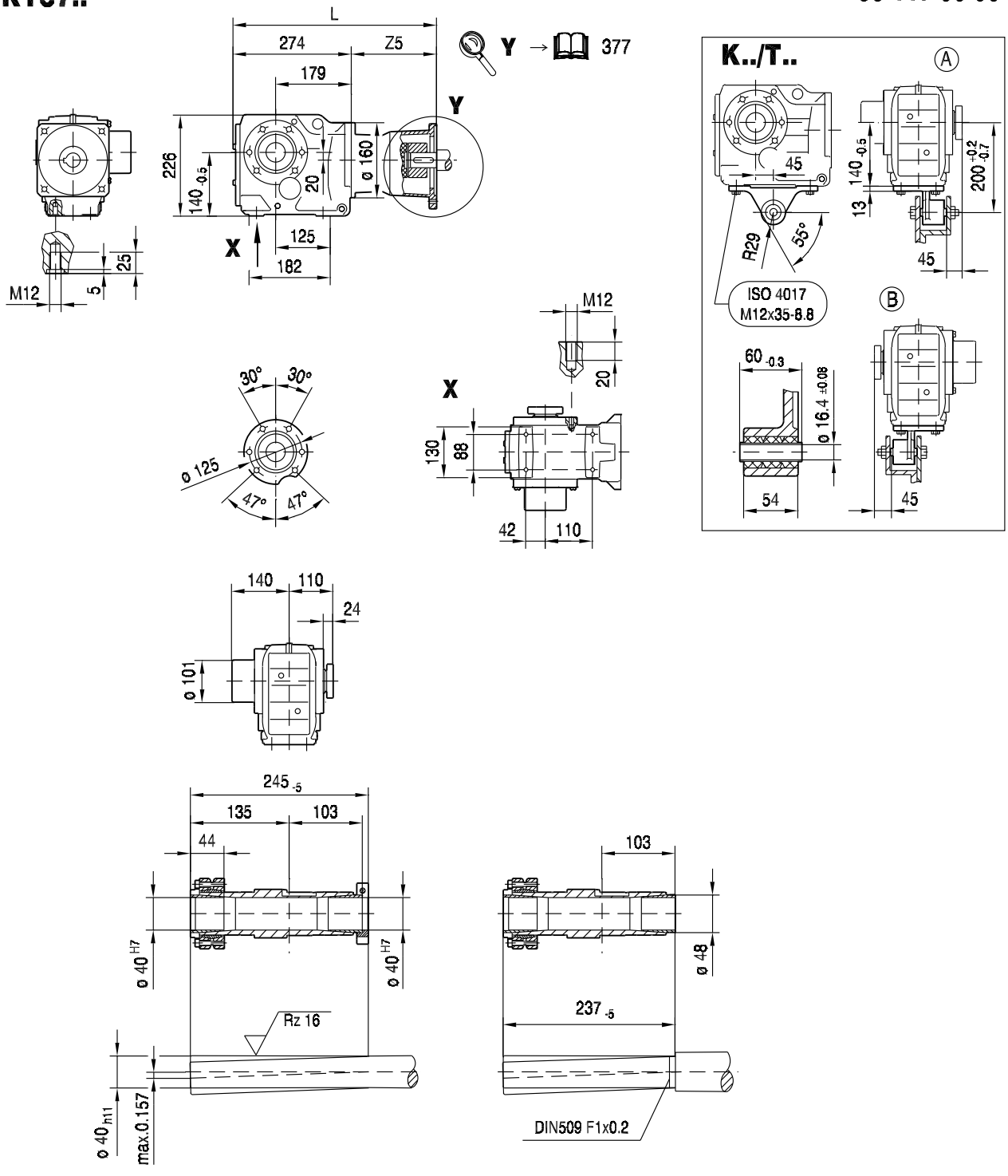

(→ 144)	AQ80/1-3	AQ100/1-2	AQ100/3-4	AQ115/1-3	AQ140/1-2	AQ140/3-4	AQ160/1	AQ190/1-2	AQ190/3
L	372	397	411	420	449	462	462	512	536
Z5	98	123	137	146	175	188	188	237.5	261.5

10.2.9 K 77 AQ.. [Nm]

[Nm]		AQ. M_{amax} | M_{apk} | $M_{aNotaus}$																								
	i	80/1-3			100/1-4			115/1-2			115/3			140/1			140/2-4			160/1			190/1-3		
K77 3	7.24	123	123	235	123	123	245	123	123	245	330	330	330	430	430	720	720	720	720	720	720	720	820	1150	1150
	8.48	144	144	275	144	144	285	144	144	285	390	390	390	505	505	840	840	840	840	840	840	840	890	1160	1350
	9.56	162	162	315	162	162	325	162	162	325	435	435	435	570	570	950	940	950	950	940	950	950	940	1160	1520
	10.84	184	184	355	184	184	365	184	184	365	495	495	495	650	650	1080	990	1080	1080	990	1080	1080	990	1170	1680
	12.36	210	210	405	210	210	420	210	210	420	565	565	565	740	740	1230	1000	1170	1230	1000	1170	1230	1000	1170	1700
	13.52	225	225	445	225	225	455	225	225	455	620	620	620	810	810	1350	1340	1350	1350	1340	1350	1350	1340	1550	2160
	15.84	265	265	520	265	265	535	265	265	535	725	725	725	950	950	1580	1400	1550	1580	1400	1550	1580	1400	1550	2380
	17.87	300	300	585	300	300	605	300	300	605	820	820	820	1070	1070	1780	1450	1550	1780	1450	1550	1780	1450	1550	2460
	20.25	340	340	665	340	340	685	340	340	685	930	930	930	1210	1210	2020	1500	1550	2020	1500	1550	2020	1500	1550	2550
	23.08	390	390	760	390	390	780	390	390	780	1060	1060	1060	1380	1380	2300	1550	1550	2300	1550	1550	2300	1550	1550	2630
	25.62	435	435	840	435	435	870	435	435	870	1170	1170	1170	1530	1530	2560	1550	1550	2560	1550	1550	2560	1550	1550	2630
	29.27	495	495	960	495	495	990	495	495	990	1340	1340	1340	1550	1550	2630	1550	1550	2630	1550	1550	2630	1550	1550	2630
	30.89	525	525	1010	525	525	1050	525	525	1050	1420	1420	1420	1550	1550	2630	1550	1550	2630	1550	1550	2630	1550	1550	2630
	35.20	595	595	1160	595	595	1190	595	595	1190	1550	1550	1610	1550	1550	2630	1550	1550	2630	1550	1550	2630			
	38.39	650	650	1260	650	650	1300	650	650	1300	1500	1550	1760	1500	1550	2550	1500	1550	2550	1500	1550	2550			
	40.04	680	680	1320	680	680	1360	680	680	1360	1550	1550	1840	1550	1550	2630	1550	1550	2630	1550	1550	2630	1550	1550	2630
	45.16	765	765	1490	765	765	1530	765	765	1530	1550	1550	2070	1550	1550	2630	1550	1550	2630	1550	1550	2630	1550	1550	2630
	51.18	870	870	1680	870	870	1740	870	870	1740	1550	1550	2350	1550	1550	2630	1550	1550	2630	1550	1550	2630	1550	1550	2630
	58.34	990	990	1920	990	990	1980	990	990	1980	1550	1550	2630	1550	1550	2630	1550	1550	2630	1550	1550	2630	1550	1550	2630
	64.75	1100	1100	2130	1100	1100	2200	1100	1100	2200	1550	1550	2630	1550	1550	2630	1550	1550	2630	1550	1550	2630	1550	1550	2630
	73.99	1250	1250	2440	1250	1250	2510	1250	1250	2510	1550	1550	2630	1550	1550	2630	1550	1550	2630	1550	1550	2630	1550	1550	2630
	78.07	1320	1320	2570	1320	1320	2630	1320	1320	2630	1550	1550	2630	1550	1550	2630	1550	1550	2630	1550	1550	2630	1550	1550	2630
	88.97	1510	1510	2630	1510	1510	2630	1510	1510	2630	1550	1550	2630	1550	1550	2630	1550	1550	2630	1550	1550	2630			
	97.05	1550	1550	2630	1550	1550	2630	1550	1550	2630	1550	1550	2630	1550	1550	2630	1550	1550	2630	1550	1550	2630			
	113.56	1550	1550	2630	1550	1550	2630	1550	1550	2630	1550	1550	2630	1550	1550	2630	1550	1550	2630	1550	1550	2630			
	128.52	1550	1550	2630	1550	1550	2630	1550	1550	2630	1550	1550	2630												
	135.28	1550	1550	2630	1550	1550	2630	1550	1550	2630	1550	1550	2630												
	154.02	1550	1550	2630	1550	1550	2630	1550	1550	2630	1550	1550	2630												
	179.37	1450	1550	2460	1450	1550	2460	1450	1550	2460	1450	1550	2460												
	192.18	1450	1550	2460	1450	1550	2460	1450	1550	2460	1450	1550	2460												

m [kg]		AQ.							
	s	80/1-3	100/1-4	115/1-2	115/3	140/1	140/2-4	160/1	190/1-3
K77	3	58	59	60	60	64	64	64	73
KF: + 8.3 kg / KA: + -7.5 kg / KAF: + 0.4 kg									

		AQ.							
		80/1-3	100/1-4	115/1-2	115/3	140/1	140/2-4	160/1	190/1-3
$J_A 10^{-4}$	[kgm^2]	0.77	1.4	1.4	3.1	5.1	10.0	10.0	25.0
c_{TA}	[Nm/']	0.25	0.25	0.25	0.625	0.625	1.0	1.0	2.08

K77							F_{Ramax}				F_{Rapk}			
n_e = 1400	i	M_{amax} [Nm]	M_{apk} [Nm]	$M_{aNotaus}$ [Nm]	n_{ak} [1/min]	J_G 10^{-4} [kgm^2]	K [N]	KF [N]	KA [N]	KAF [N]	K [N]	KF [N]	KA [N]	KAF [N]
	7.24	820	1150	1394	207	17	13100	13800	2490	2490	17700	17700	20000	20000
	8.48	890	1160	1513	177	13	13500	14300	2430	2430	17600	17700	20000	20000
	9.56	940	1160	1598	157	10	13900	14700	2430	2430	17600	17700	20000	20000
	10.84	990	1170	1683	138	8.2	14400	15200	2460	2460	17600	17700	20000	20000
	12.36	1000	1170	1700	121	6.5	15100	16000	2820	2820	17600	17700	20000	20000
	13.52	1340	1550	2278	155	15	14800	15800	1850	1850	15400	16600	20000	20000
	15.84	1400	1550	2380	145	11	15500	16600	2030	2030	15400	16600	20000	20000
	17.87	1450	1550	2465	140	9.0	16100	16900	2160	2160	15400	16600	20000	20000
	20.25	1500	1550	2550	128	7.2	15700	16800	2330	2330	15400	16600	20000	20000
	23.08	1550	1550	2635	126	5.8	15400	16600	2550	2550	15400	16600	20000	20000
	25.62	1550	1550	2635	133	5.0	15400	16600	2990	2990	15400	16600	20000	20000
	29.27	1550	1550	2635	137	4.0	15400	16600	3590	3590	15400	16600	20000	20000
	30.89	1550	1550	2635	142	3.6	15400	16600	3840	3840	15400	16600	20000	20000
	35.20	1550	1550	2635	142	2.9	15400	16600	4460	4460	15400	16600	20000	20000
K77	38.39	1500	1550	2550	159	2.5	15700	16800	5210	5210	15400	16600	20000	20000
 3	40.04	1550	1550	2635	37	6.0	15400	16600	5100	5100	15400	16600	20000	20000
	45.16	1550	1550	2635	33	4.9	15400	16600	5720	5720	15400	16600	20000	20000
	51.18	1550	1550	2635	29	4.1	15400	16600	6390	6390	15400	16600	20000	20000
	58.34	1550	1550	2635	31	3.3	15400	16600	7130	7130	15400	16600	20000	20000
	64.75	1550	1550	2635	31	3.0	15400	16600	7740	7740	15400	16600	20000	20000
	73.99	1550	1550	2635	31	2.4	15400	16600	8550	8550	15400	16600	20000	20000
	78.07	1550	1550	2635	32	2.3	15400	16600	8890	8890	15400	16600	20000	20000
	88.97	1550	1550	2635	33	1.9	15400	16600	9730	9730	15400	16600	20000	20000
	97.05	1550	1550	2635	32	1.6	15400	16600	10300	10300	15400	16600	20000	20000
	113.56	1550	1550	2635	33	1.3	15400	16600	11400	11400	15400	16600	20000	20000
	128.52	1550	1550	2635	33	0.90	15400	16600	12300	12300	15400	16600	20000	20000
	135.28	1550	1550	2635	33	0.81	15400	16600	12700	12700	15400	16600	20000	20000
	154.02	1550	1550	2635	33	0.66	15400	16600	13700	13700	15400	16600	20000	20000
	179.37	1450	1550	2465	39	0.53	16100	16900	15600	15600	15400	16600	20000	20000
	192.18	1450	1550	2465	36	0.46	16100	16900	16200	16200	15400	16600	20000	20000

AQ.	i	n_{epk} [1/min]	η [%]	c_{TG} K [Nm/']	KF [Nm/']	KA [Nm/']	KAF [Nm/']	φ /R [']
K77  3	7.24	4500	96	110	91	188	188	8
	8.48	4500	96	110	91	188	188	8
	9.56	4500	96	110	91	188	188	8
	10.84	4500	96	110	91	188	188	8
	12.36	4500	96	110	91	188	188	8
	13.52	4500	96	141	112	300	300	7
	15.84	4500	96	141	112	300	300	6
	17.87	4500	96	141	112	300	300	6
	20.25	4500	96	141	112	300	300	6
	23.08	4500	96	141	112	300	300	6
	25.62	4500	96	141	112	300	300	6
	29.27	4500	96	141	112	300	300	6
	30.89	4500	96	141	112	300	300	6
	35.20	4500	96	141	112	300	300	6
	38.39	4500	96	141	112	300	300	6
	40.04	4500	95	150	118	348	348	6
	45.16	4500	95	150	118	348	348	6
	51.18	4500	95	150	118	348	348	6
	58.34	4500	95	150	118	348	348	6
	64.75	4500	95	150	118	348	348	5
	73.99	4500	95	150	118	348	348	5
	78.07	4500	95	150	118	348	348	5
	88.97	4500	95	150	118	348	348	5
	97.05	4500	95	150	118	348	348	5
	113.56	4500	94	150	118	348	348	5
	128.52	4500	94	150	118	348	348	5
	135.28	4500	94	150	118	348	348	5
	154.02	4500	94	150	118	348	348	5
	179.37	4500	94	150	118	348	348	5
	192.18	4500	93	150	118	348	348	5

10.2.10 K 77 AQ.. [mm]

33 119 00 08

K77..

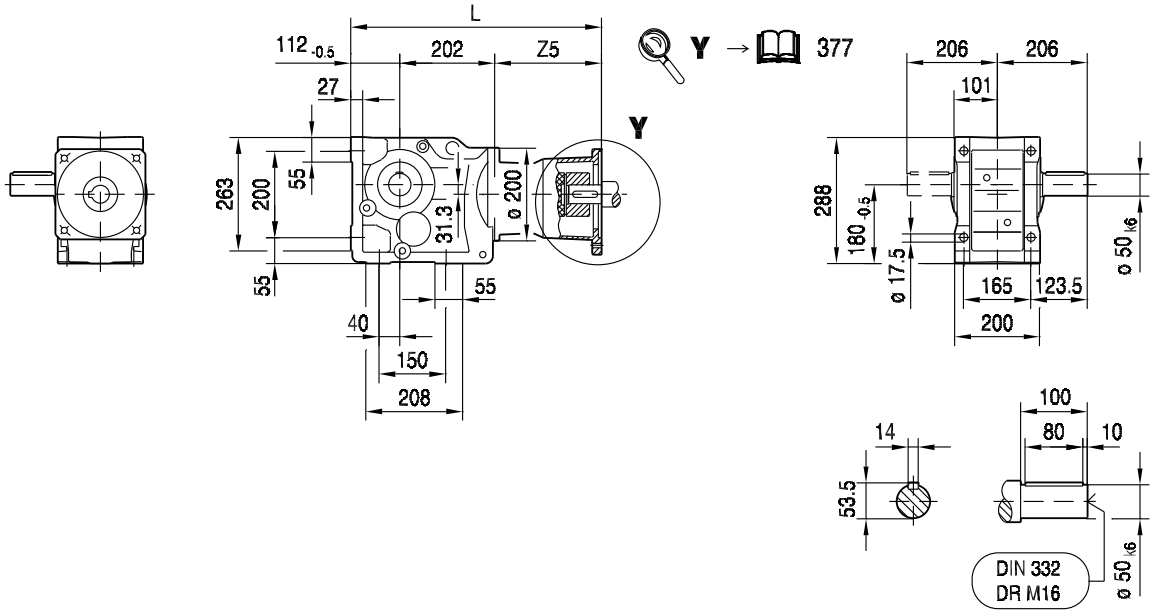

10

KA77B..

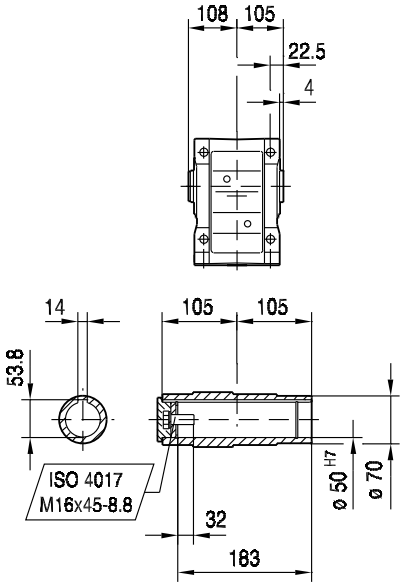

KH77B..

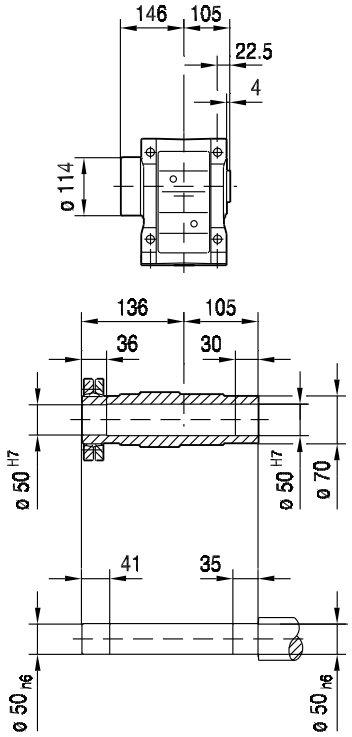

KV77B..

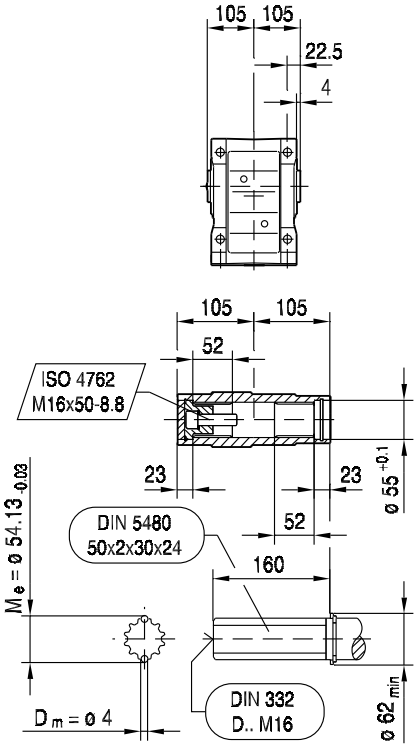

(→ 144)	AQ80/1-3	AQ100/1-2	AQ100/3-4	AQ115/1-3	AQ140/1-2	AQ140/3-4	AQ160/1	AQ190/1-2	AQ190/3
L	406	430	444	453	481	494	494	540	564
Z5	92	116	130	139	167	180	180	225.5	249.5

33 120 00 08

KF77..

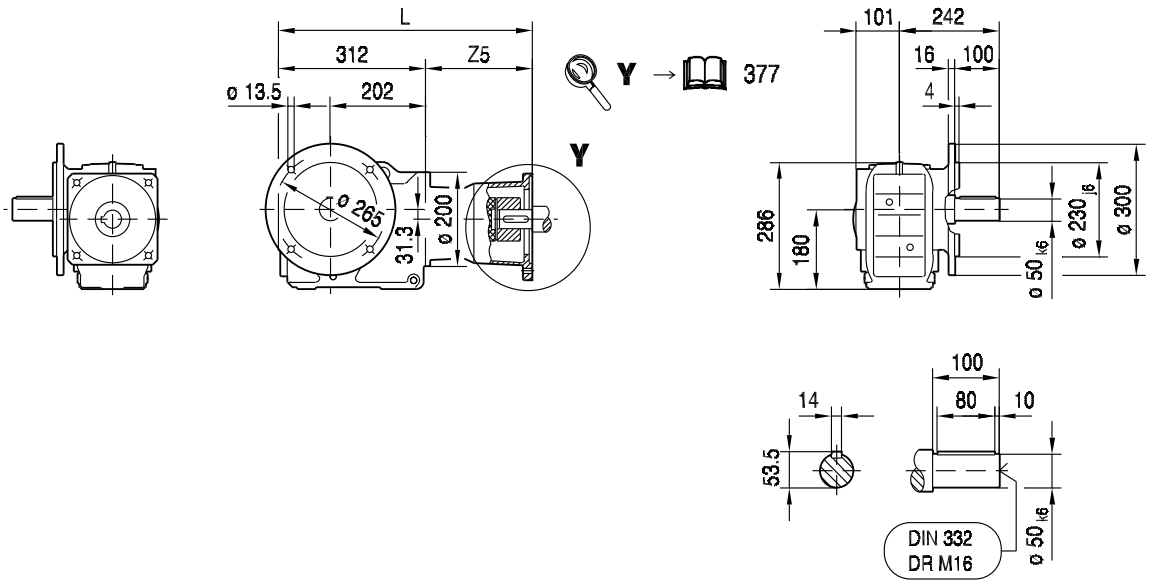

KAF77..

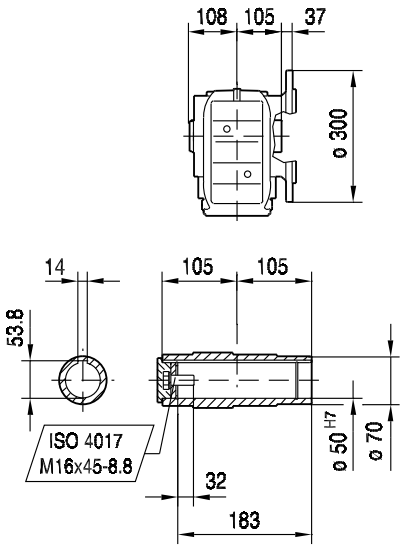

KHF77..

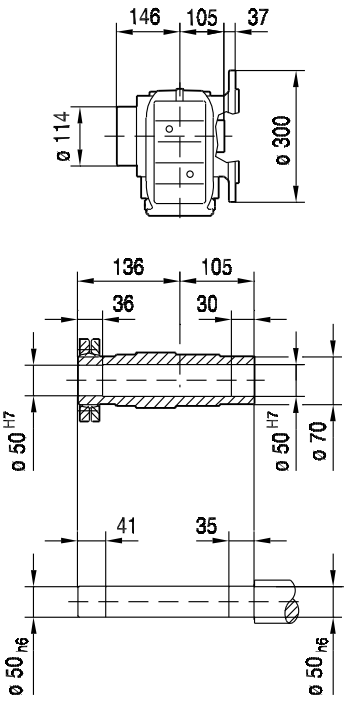

KVF77..

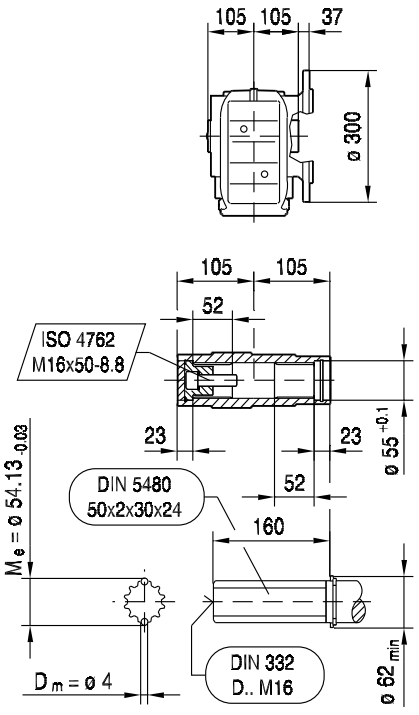

(→ 144)	AQ80/1-3	AQ100/1-2	AQ100/3-4	AQ115/1-3	AQ140/1-2	AQ140/3-4	AQ160/1	AQ190/1-2	AQ190/3
L	404	428	442	451	479	492	492	538	562
Z5	92	116	130	139	167	180	180	225.5	249.5

KA77..

33 121 00 08

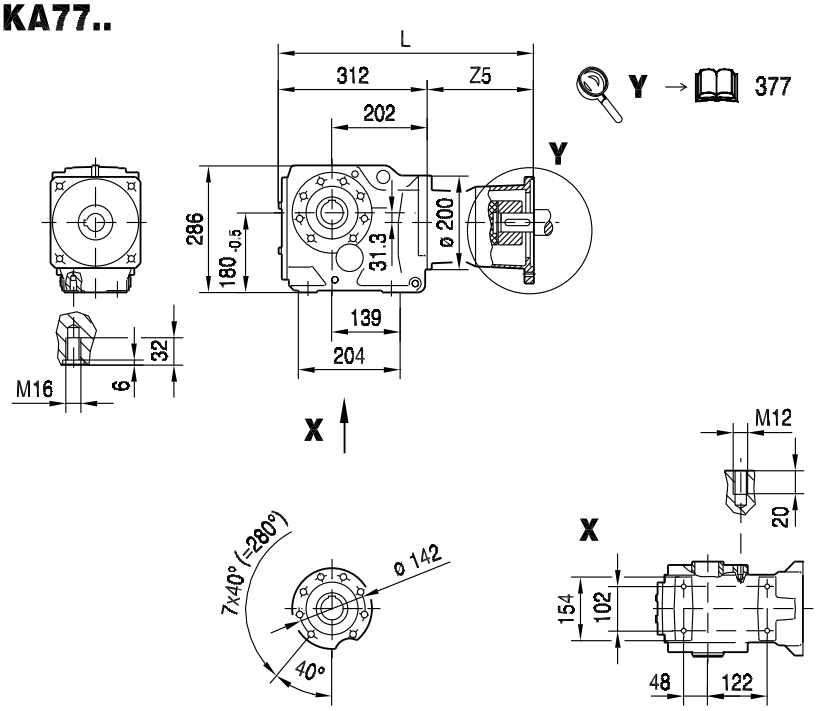

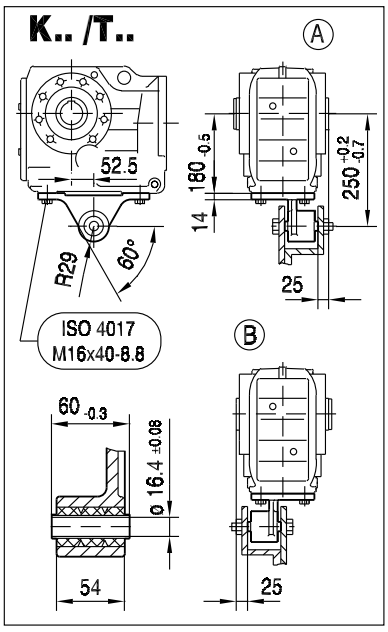

10

KA77..

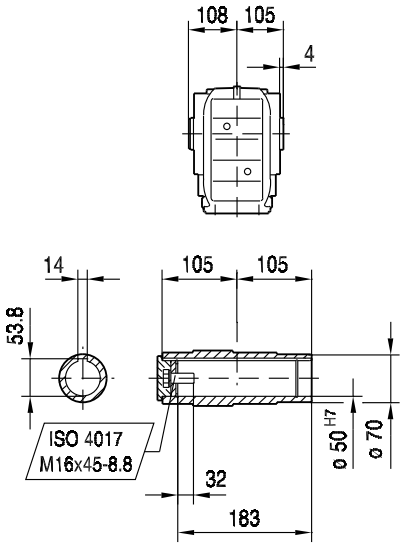

KH77..

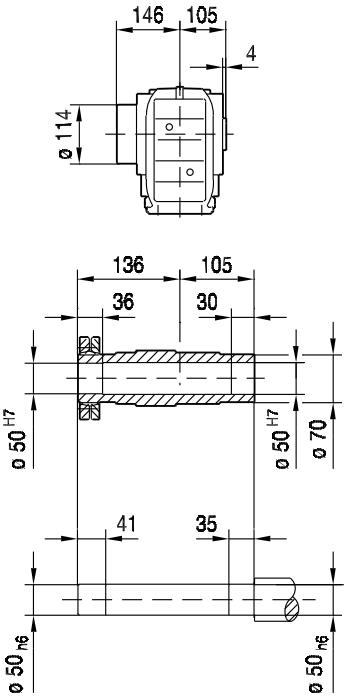

KV77..

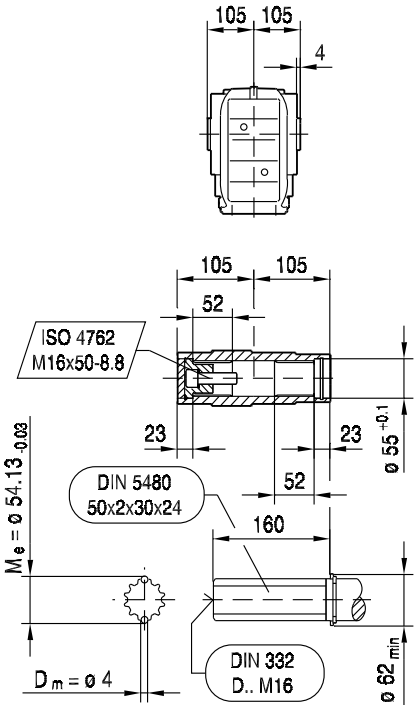

(→ 144)	AQ80/1-3	AQ100/1-2	AQ100/3-4	AQ115/1-3	AQ140/1-2	AQ140/3-4	AQ160/1	AQ190/1-2	AQ190/3
L	404	428	442	451	479	492	492	538	562
Z5	92	116	130	139	167	180	180	225.5	249.5

33 123 00 08

KAZ77..

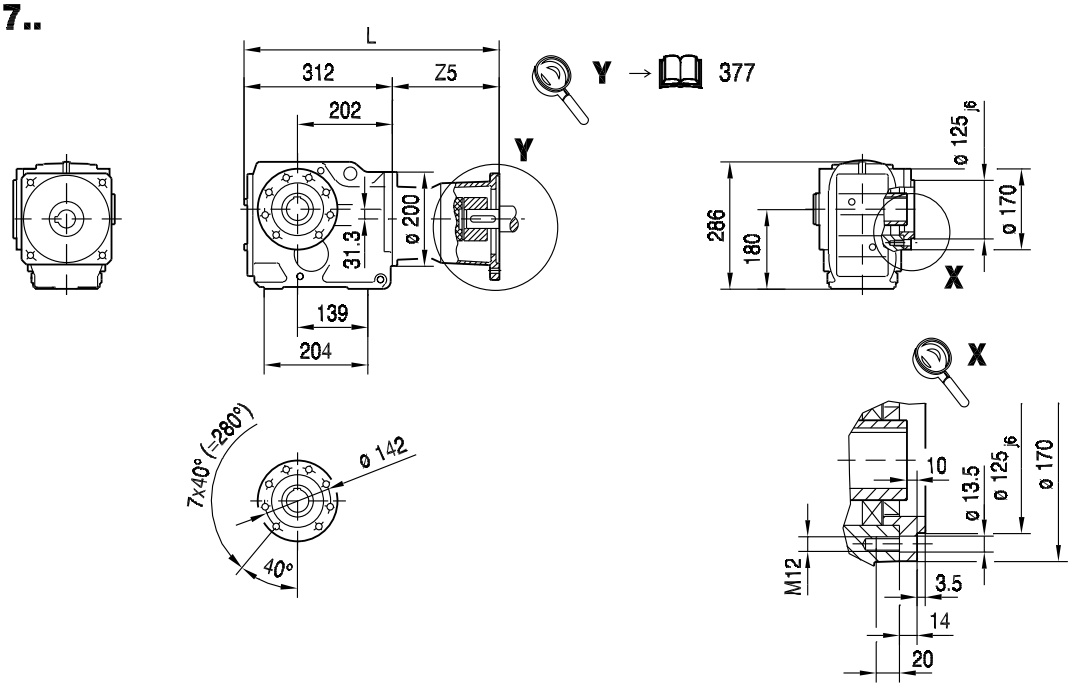

KAZ77..

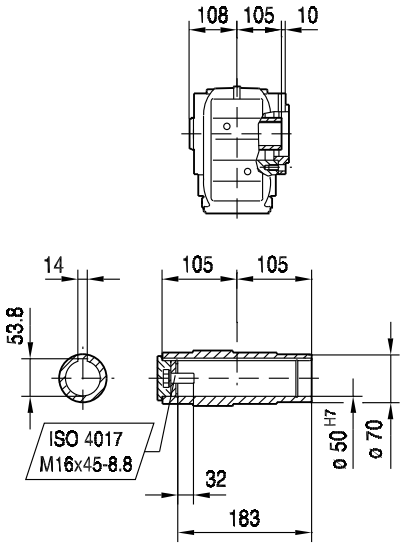

KHZ77..

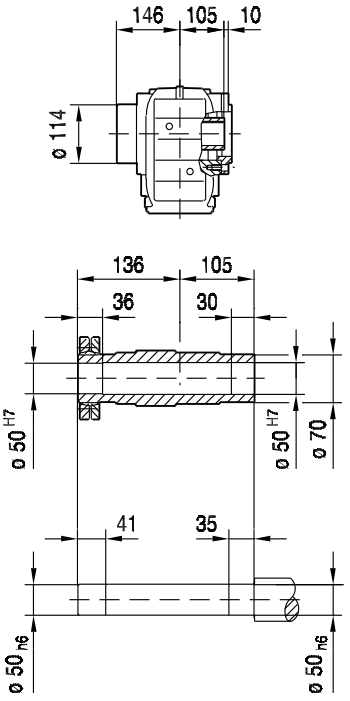

KVZ77..

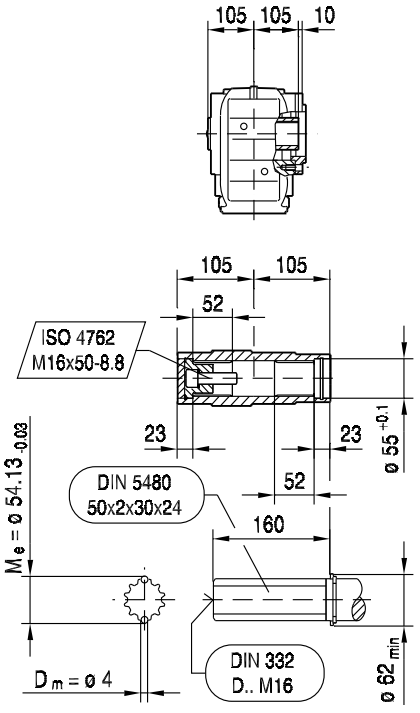

(→ 144)	AQ80/1-3	AQ100/1-2	AQ100/3-4	AQ115/1-3	AQ140/1-2	AQ140/3-4	AQ160/1	AQ190/1-2	AQ190/3
L	404	428	442	451	479	492	492	538	562
Z5	92	116	130	139	167	180	180	225.5	249.5

KT77..

33 122 00 08

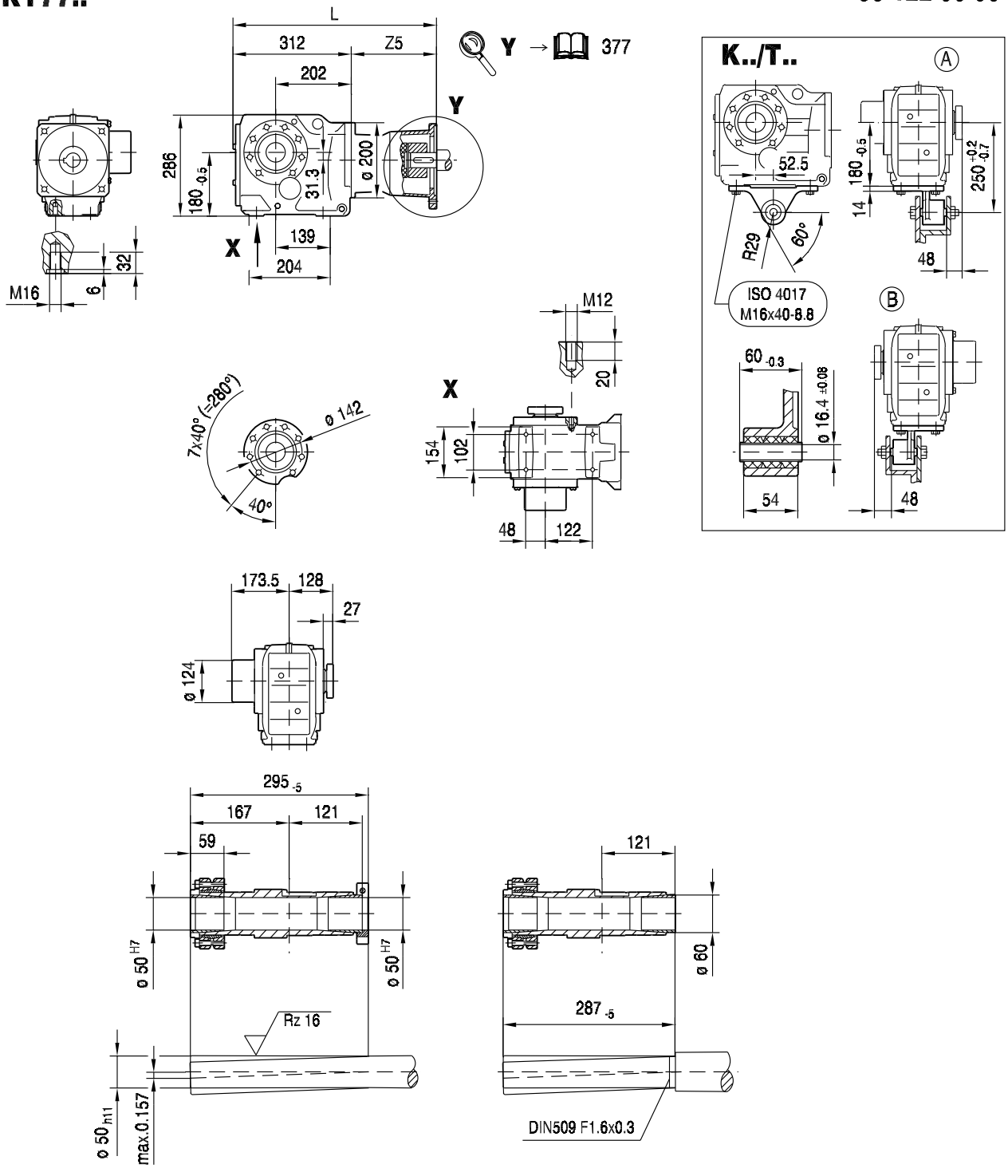

(→ 144)	AQ80/1-3	AQ100/1-2	AQ100/3-4	AQ115/1-3	AQ140/1-2	AQ140/3-4	AQ160/1	AQ190/1-2	AQ190/3
L	404	428	442	451	479	492	492	538	562
Z5	92	116	130	139	167	180	180	225.5	249.5

10.2.11 K 87 AQ.. [Nm]

[Nm]		AQ. M_{amax} | M_{apk} | $M_{aNotaus}$																				
	i	100/1-4			115/1-2			115/3			140/1			140/2-4			160/1			190/1-3		
K87 3	7.21										430	430	720	720	720	720	720	720	720	1150	1150	1150
	8.29	140	140	280	140	140	280	380	380	380	495	495	820	820	820	820	820	820	820	1320	1320	1320
	10.00	170	170	340	170	170	340	460	460	460	600	600	1000	1000	1000	1000	1000	1000	1000	1500	1600	1600
	11.17	189	189	375	189	189	375	510	510	510	670	670	1110	1110	1110	1110	1110	1110	1110	1500	1780	1780
	12.56										750	750	1250	1250	1250	1250	1250	1250	1250	2000	2000	2000
	14.45	245	245	490	245	245	490	660	660	660	860	860	1440	1440	1440	1440	1440	1440	1440	2100	2310	2310
	16.00	270	270	540	270	270	540	735	735	735	960	960	1600	1600	1600	1600	1600	1600	1600	1800	2270	2560
	17.42	295	295	590	295	295	590	800	800	800	1040	1040	1740	1740	1740	1740	1740	1740	1740	2200	2780	2780
	19.45	330	330	660	330	330	660	890	890	890	1160	1160	1940	1940	1940	1940	1940	1940	1940	2300	3110	3110
	22.41	380	380	760	380	380	760	1030	1030	1030	1340	1340	2240	2240	2240	2240	2240	2240	2240	2300	3240	3580
	24.92	420	420	840	420	420	840	1140	1140	1140	1490	1490	2490	2490	2490	2490	2490	2490	2490	2500	3240	3980
	27.88	470	470	940	470	470	940	1280	1280	1280	1670	1670	2780	2600	2780	2780	2600	2780	2780	2600	3240	4420
	31.39	530	530	1060	530	530	1060	1440	1440	1440	1880	1880	3130	2700	3130	3130	2700	3130	3130	2700	3240	4590
	36.52	620	620	1240	620	620	1240	1670	1670	1670	2190	2190	3650	2500	3240	3650	2500	3240	3650	2500	3240	4250
	44.02	745	745	1490	745	745	1490	2020	2020	2020	2600	2640	4400	2600	3240	4400	2600	3240	4400	2600	3240	4420
	49.16	830	830	1670	830	830	1670	2260	2260	2260	2700	2940	4590	2700	3240	4590	2700	3240	4590	2700	3240	4590
	56.64	960	960	1920	960	960	1920	2600	2600	2600	2700	3240	4590	2700	3240	4590	2700	3240	4590	2700	3240	4590
	63.00	1070	1070	2140	1070	1070	2140	2700	2890	2890	2700	3240	4590	2700	3240	4590	2700	3240	4590	2700	3240	4590
	70.46	1190	1190	2390	1190	1190	2390	2700	3240	3240	2700	3240	4590	2700	3240	4590	2700	3240	4590	2700	3240	4590
	79.34	1340	1340	2690	1340	1340	2690	2700	3240	3640	2700	3240	4590	2700	3240	4590	2700	3240	4590	2700	3240	4590
	86.34	1460	1460	2930	1460	1460	2930	2700	3240	3970	2700	3240	4590	2700	3240	4590	2700	3240	4590	2700	3240	4590
	102.71	1740	1740	3490	1740	1740	3490	2700	3240	4590	2700	3240	4590	2700	3240	4590	2700	3240	4590	2700	3240	4590
	115.82	1960	1960	3930	1960	1960	3930	2700	3240	4590	2700	3240	4590	2700	3240	4590	2700	3240	4590			
	126.91	2150	2150	4310	2150	2150	4310	2700	3240	4590	2700	3240	4590	2700	3240	4590	2700	3240	4590			
	147.32	2500	2500	4590	2500	2500	4590	2700	3240	4590	2700	3240	4590	2700	3240	4590	2700	3240	4590			
	164.34	2700	2790	4590	2700	2790	4590	2700	3240	4590												
	174.19	2700	2960	4590	2700	2960	4590	2700	3240	4590												
	197.37	2700	3240	4590	2700	3240	4590	2700	3240	4590												

m [kg]		AQ.						
	s	100/1-4	115/1-2	115/3	140/1	140/2-4	160/1	190/1-3
K87	3	95	95	95	100	100	100	110
KF: + 9.2 kg / KA: + -12.1 kg / KAF: + 1.1 kg								

		AQ.						
		100/1-4	115/1-2	115/3	140/1	140/2-4	160/1	190/1-3
J_A 10^{-4}	[kgm^2]	1.4	1.4	3.1	5.1	10.0	10.0	25.0
c_{TA}	[Nm/']	0.25	0.25	0.625	0.625	1.0	1.0	2.08

K87							F_{Ramax}				F_{Rapk}			
n_e = 1400	i	M_{amax} [Nm]	M_{apk} [Nm]	$M_{aNotaus}$ [Nm]	n_{ak} [1/min]	J_G 10^{-4} [kgm^2]	K [N]	KF [N]	KA [N]	KAF [N]	K [N]	KF [N]	KA [N]	KAF [N]
	7.21	1300	1950	2210	250	46	13200	15100	4970	4970	28100	27000	30000	30000
	8.29	1400	2100	2380	205	35	13500	15600	4960	4960	27900	26900	30000	30000
	10.00	1500	2240	2550	180	26	14200	16400	5210	5210	27800	26700	30000	30000
	11.17	1500	2250	2550	188	22	14900	17100	5770	5770	27800	26700	30000	30000
	12.56	2000	3000	3400	223	42	14800	17000	5030	5030	26900	25900	30000	30000
	14.45	2100	3150	3570	201	32	15300	17700	5240	5240	26700	25700	30000	30000
	16.00	1800	2270	3060	119	12	16000	18500	5810	5810	27700	26700	30000	30000
	17.42	2200	3240	3740	189	24	16300	18800	5770	5770	26500	25600	30000	30000
	19.45	2300	3240	3910	170	20	16800	19300	5890	5890	26500	25600	30000	30000
	22.41	2300	3240	3910	178	16	17900	20600	6790	6790	26500	25600	30000	30000
	24.92	2500	3240	4250	140	14	18000	20700	6390	6390	26500	25600	30000	30000
	27.88	2600	3240	4420	122	12	18500	21400	6600	6600	26500	25600	30000	30000
	31.39	2700	3240	4590	108	9.6	19200	22100	6900	6900	26500	25600	30000	30000
K87	36.52	2500	3240	4250	41	20	21400	24500	9140	9140	26500	25600	30000	30000
3	44.02	2600	3240	4420	39	16	22800	26000	10100	10100	26500	25600	30000	30000
	49.16	2700	3240	4590	35	14	23500	26300	10400	10400	26500	25600	30000	30000
	56.64	2700	3240	4590	35	11	25000	26300	11600	11600	26500	25600	30000	30000
	63.00	2700	3240	4590	35	9.8	26200	26300	12600	12600	26500	25600	30000	30000
	70.46	2700	3240	4590	35	8.4	27300	26300	13700	13700	26500	25600	30000	30000
	79.34	2700	3240	4590	37	7.1	27300	26300	14800	14800	26500	25600	30000	30000
	86.34	2700	3240	4590	37	6.3	27300	26300	15700	15700	26500	25600	30000	30000
	102.71	2700	3240	4590	38	4.9	27300	26300	17500	17500	26500	25600	30000	30000
	115.82	2700	3240	4590	38	4.0	27300	26300	18800	18800	26500	25600	30000	30000
	126.91	2700	3240	4590	39	3.5	27300	26300	19900	19900	26500	25600	30000	30000
	147.32	2700	3240	4590	39	2.8	27300	26300	21600	21600	26500	25600	30000	30000
	164.34	2700	3240	4590	39	1.8	27300	26300	23000	23000	26500	25600	30000	30000
	174.19	2700	3240	4590	39	1.6	27300	26300	23700	23700	26500	25600	30000	30000
	197.37	2700	3240	4590	35	1.3	27300	26300	25400	25400	26500	25600	30000	30000

AQ.	i	n_{epk} [1/min]	η [%]	c_{TG} K [Nm/']	KF [Nm/']	KA [Nm/']	KAF [Nm/']	φ /R [']
	7.21	4378	96	169	156	411	411	7
	8.29	4500	96	169	156	411	411	7
	10.00	4500	96	169	156	411	411	7
	11.17	4500	96	169	156	411	411	7
	12.56	4378	96	198	181	640	640	6
	14.45	4500	96	198	181	640	640	6
	16.00	4500	96	169	156	411	411	6
	17.42	4500	96	198	181	640	640	6
	19.45	4500	96	198	181	640	640	6
	22.41	4500	96	198	181	640	640	6
	24.92	4500	96	198	181	640	640	6
	27.88	4500	96	198	181	640	640	6
	31.39	4500	96	198	181	640	640	6
K87	36.52	4500	95	207	188	744	744	6
3	44.02	4500	95	207	188	744	744	6
	49.16	4500	95	207	188	744	744	5
	56.64	4500	95	207	188	744	744	5
	63.00	4500	95	207	188	744	744	5
	70.46	4500	95	207	188	744	744	5
	79.34	4500	95	207	188	744	744	5
	86.34	4500	95	207	188	744	744	5
	102.71	4500	95	207	188	744	744	5
	115.82	4500	95	207	188	744	744	5
	126.91	4500	95	207	188	744	744	5
	147.32	4500	94	207	188	744	744	5
	164.34	4500	94	207	188	744	744	5
	174.19	4500	94	207	188	744	744	5
	197.37	4500	94	207	188	744	744	5

10.2.12 K 87 AQ.. [mm]

33 124 00 08

K87..

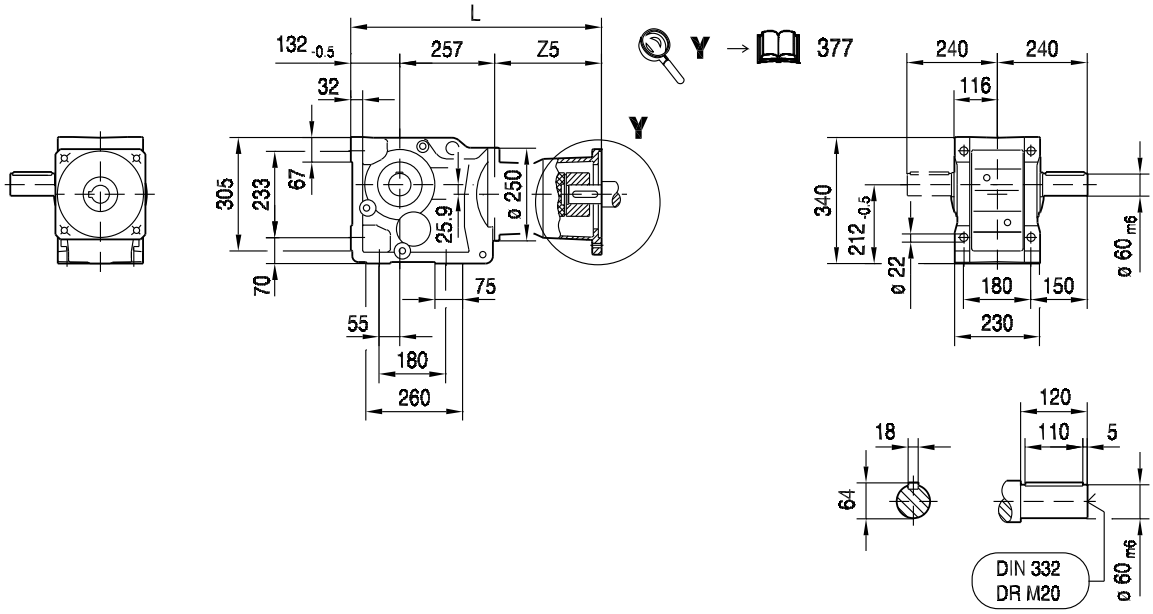

10

KA87B..

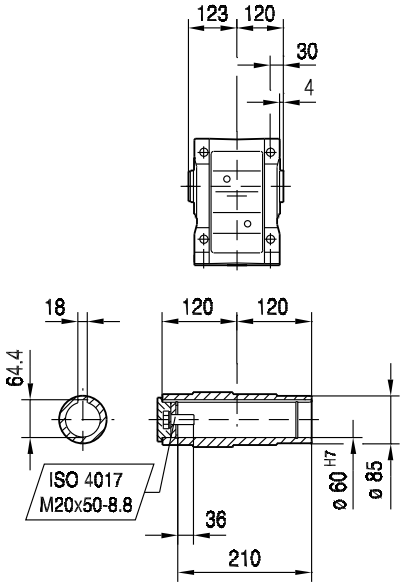

KH87B..

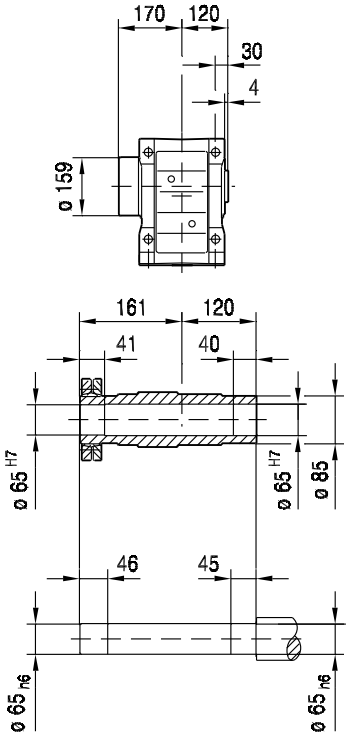

KV87B..

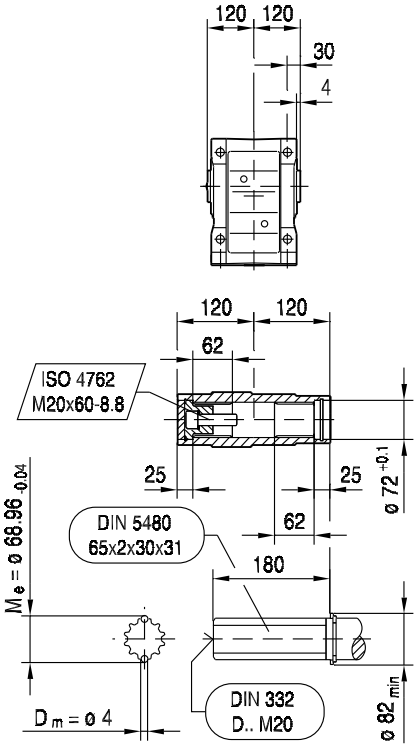

(→ 144)	AQ100/1-2	AQ100/3-4	AQ115/1-3	AQ140/1-2	AQ140/3-4	AQ160/1	AQ190/1-2	AQ190/3
L	500	514	523	551	564	564	610	634
Z5	111	125	134	162	175	175	220.5	244.5

33 125 00 08

KF87..

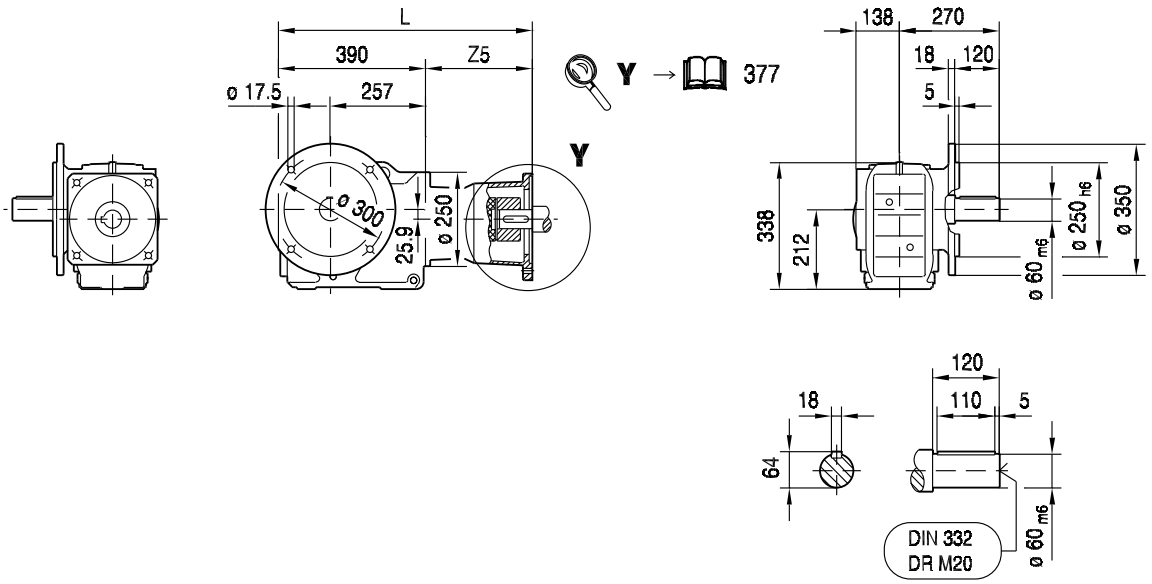

KAF87..

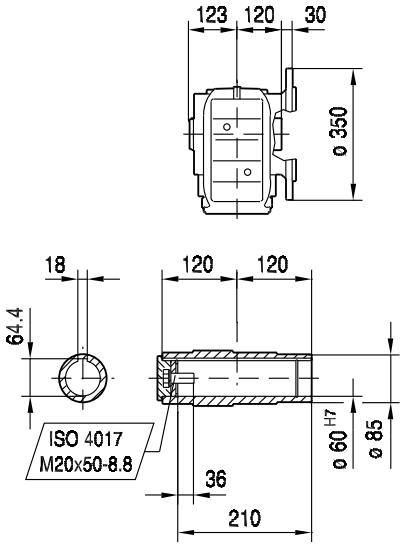

KHF87..

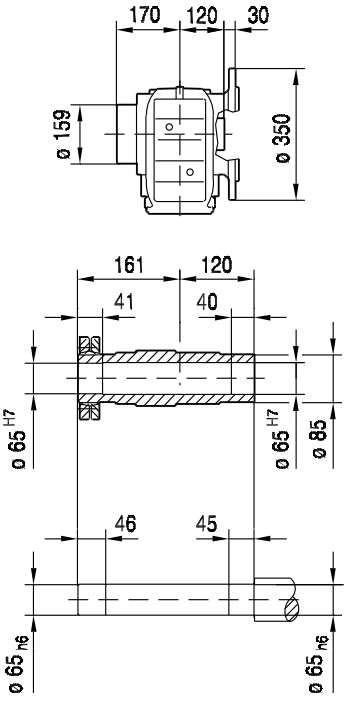

KVF87..

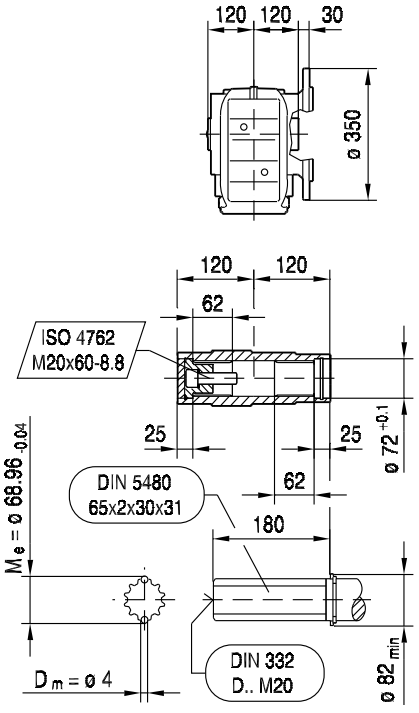

(→ 144)	AQ100/1-2	AQ100/3-4	AQ115/1-3	AQ140/1-2	AQ140/3-4	AQ160/1	AQ190/1-2	AQ190/3
L	501	515	524	552	565	565	611	635
Z5	111	125	134	162	175	175	220.5	244.5

KA87..

33 126 00 08

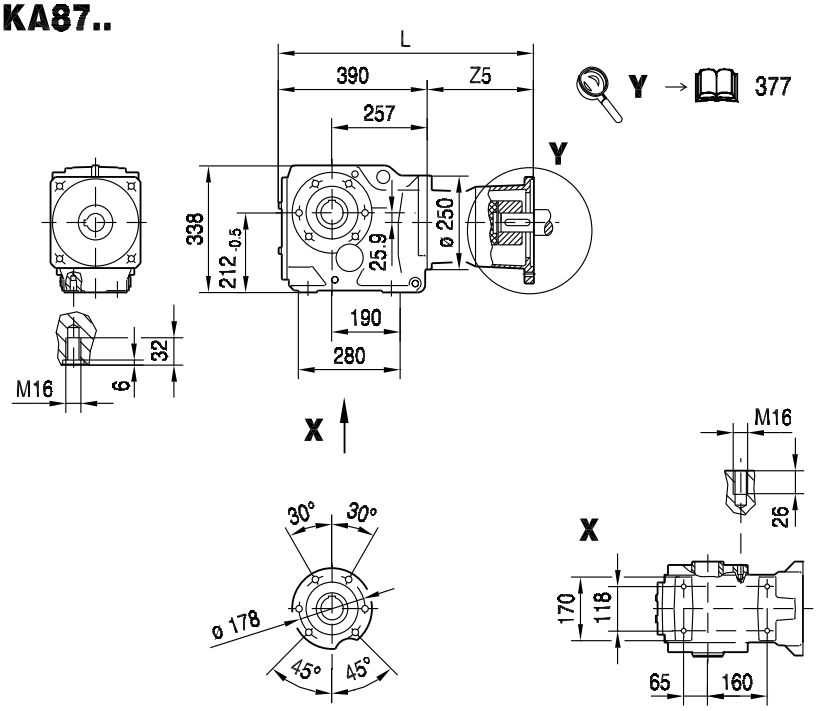

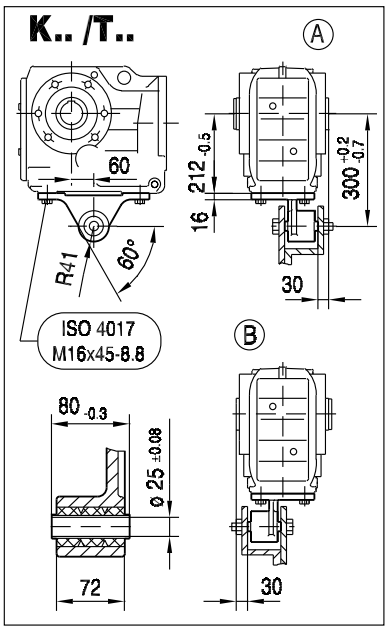

10

KA87..

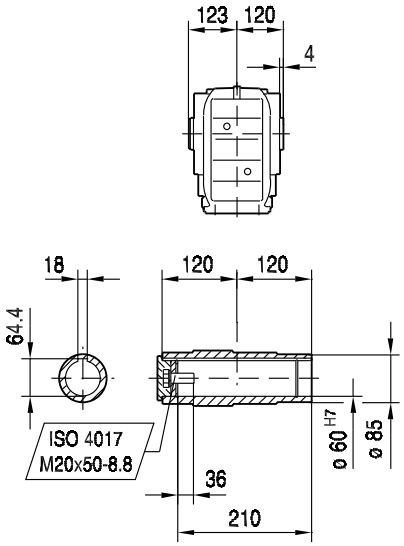

KH87..

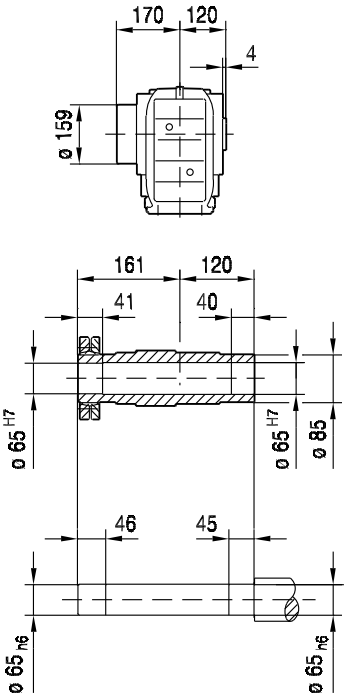

KV87..

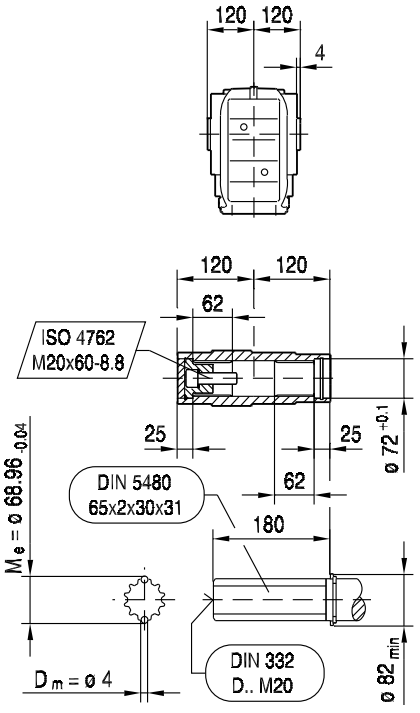

(→ 144)	AQ100/1-2	AQ100/3-4	AQ115/1-3	AQ140/1-2	AQ140/3-4	AQ160/1	AQ190/1-2	AQ190/3
L	501	515	524	552	565	565	611	635
Z5	111	125	134	162	175	175	220.5	244.5

33 128 00 08

KAZ87..

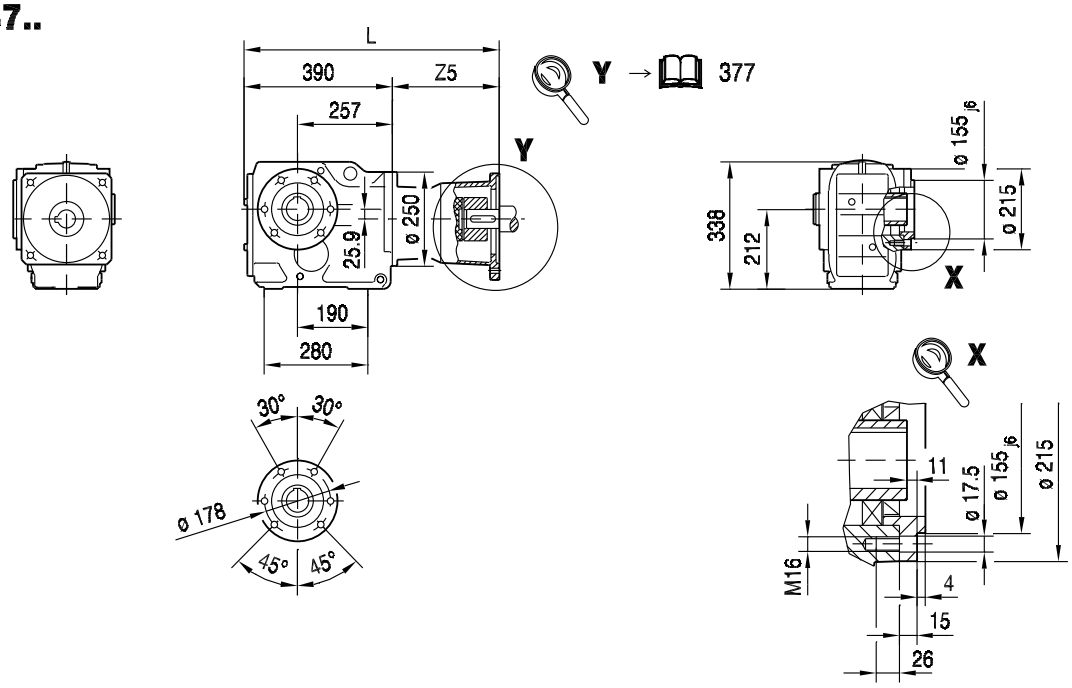

KAZ87..

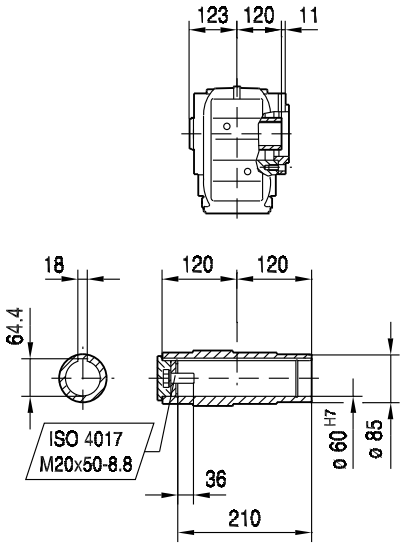

KHZ87..

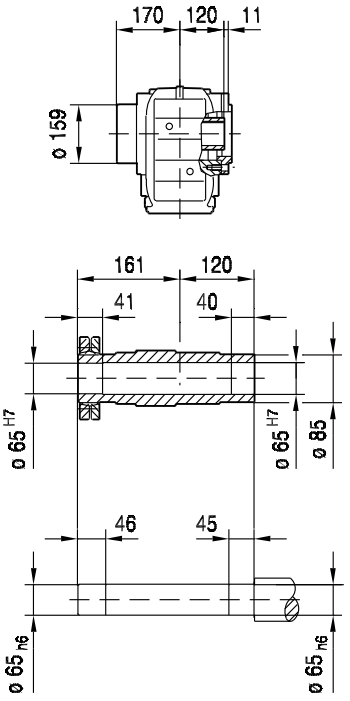

KVZ87..

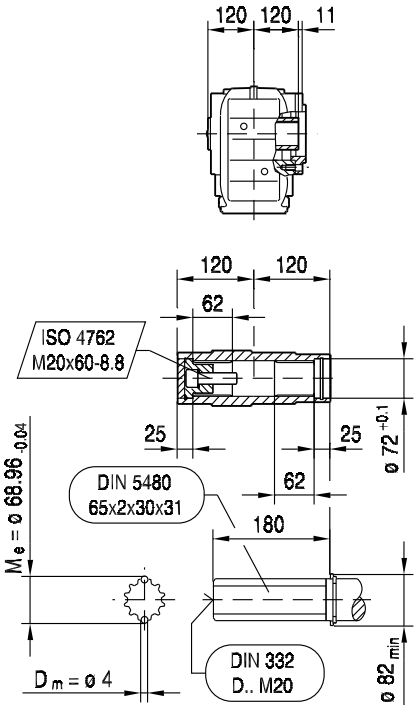

(→ 144)	AQ100/1-2	AQ100/3-4	AQ115/1-3	AQ140/1-2	AQ140/3-4	AQ160/1	AQ190/1-2	AQ190/3
L	501	515	524	552	565	565	611	635
Z5	111	125	134	162	175	175	220.5	244.5

KT87..

33 127 00 08

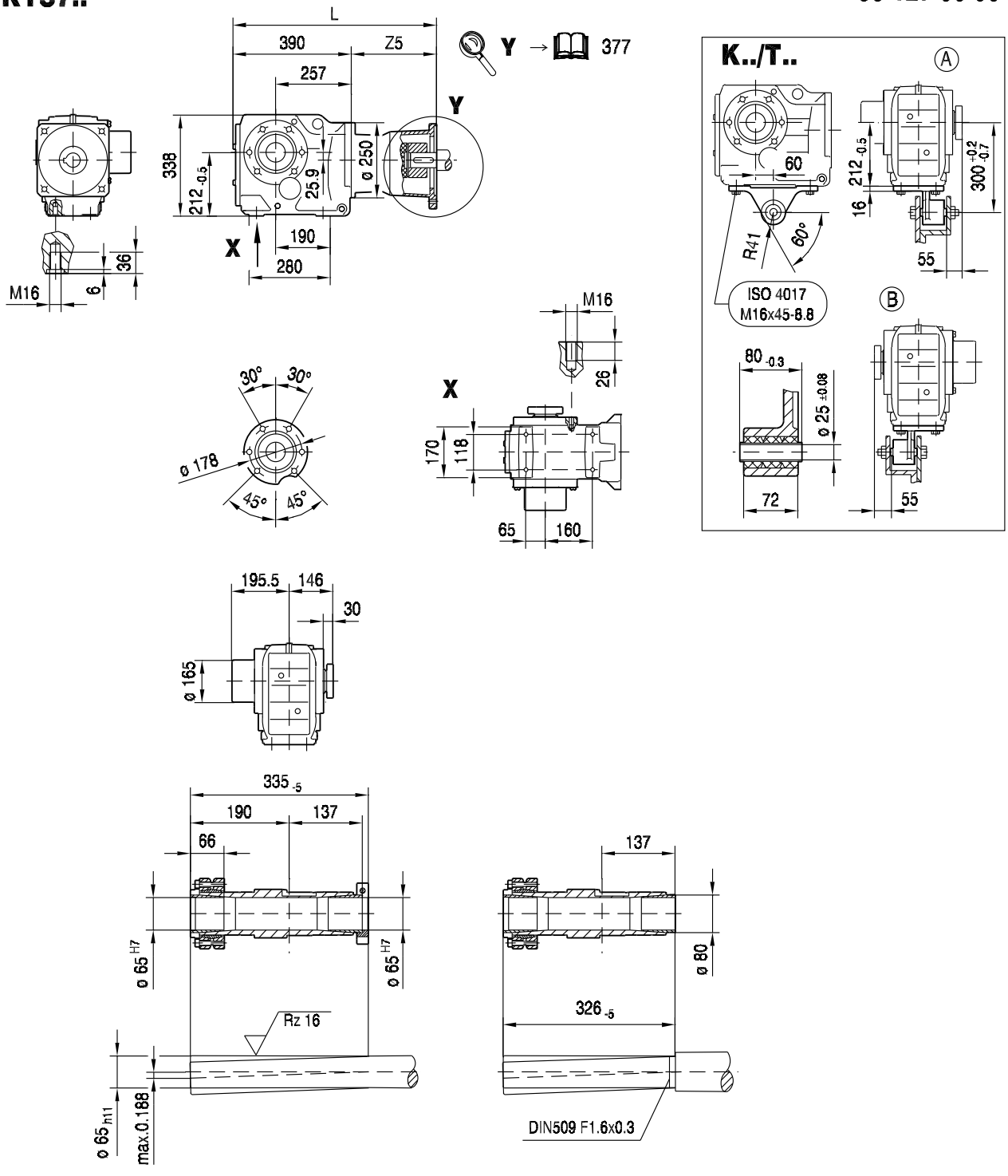

(→ 144)	AQ100/1-2	AQ100/3-4	AQ115/1-3	AQ140/1-2	AQ140/3-4	AQ160/1	AQ190/1-2	AQ190/3
L	501	515	524	552	565	565	611	635
Z5	111	125	134	162	175	175	220.5	244.5

10.2.13 K 97 AQ.. [Nm]

[Nm]		AQ. M_{amax} | M_{apk} | $M_{aNotaus}$											
	i	140/1			140/2-4			160/1			190/1-3		
K97 3	7.54	450	450	750	750	750	750	750	750	750	1200	1200	1200
	8.71	520	520	870	870	870	870	870	870	870	1390	1390	1390
	10.41	620	620	1040	1040	1040	1040	1040	1040	1040	1660	1660	1660
	11.99	715	715	1190	1190	1190	1190	1190	1190	1190	1910	1910	1910
	13.85	830	830	1380	1380	1380	1380	1380	1380	1380	2210	2210	2210
	16.56	990	990	1650	1650	1650	1650	1650	1650	1650	2640	2640	2640
	18.96	1130	1130	1890	1890	1890	1890	1890	1890	1890	3030	3030	3030
	22.37	1340	1340	2230	2230	2230	2230	2230	2230	2230	3570	3570	3570
	24.75	1480	1480	2470	2470	2470	2470	2470	2470	2470	3960	3960	3960
	27.91	1670	1670	2790	2790	2790	2790	2790	2790	2790	4300	4460	4460
	30.82	1840	1840	3080	3080	3080	3080	3080	3080	3080	4300	4710	4930
	34.23	2050	2050	3420	3420	3420	3420	3420	3420	3420	4300	4710	5470
	38.30	2290	2290	3830	3830	3830	3830	3830	3830	3830	4300	4710	6120
	41.87	2510	2510	4180	4180	4180	4180	4180	4180	4180	4300	4710	6690
	47.93	2870	2870	4790	4300	4710	4790	4300	4710	4790	4300	4710	7310
	56.55	3390	3390	5650	4300	4710	5650	4300	4710	5650	4300	4710	7310
	62.55	3750	3750	6250	4300	4710	6250	4300	4710	6250	4300	4710	7310
	70.54	4230	4230	7050	4300	4710	7050	4300	4710	7050	4300	4710	7310
	77.89	4300	4670	7310	4300	4710	7310	4300	4710	7310	4300	4710	7310
	86.52	4300	4710	7310	4300	4710	7310	4300	4710	7310	4300	4710	7310
	96.80	4300	4710	7310	4300	4710	7310	4300	4710	7310	4300	4710	7310
	105.13	4300	4710	7310	4300	4710	7310	4300	4710	7310	4300	4710	7310
	123.93	4300	4710	7310	4300	4710	7310	4300	4710	7310	4300	4710	7310
	140.28	4300	4710	7310	4300	4710	7310	4300	4710	7310			
	153.21	4300	4710	7310	4300	4710	7310	4300	4710	7310			
	176.05	4300	4710	7310	4300	4710	7310	4300	4710	7310			

m [kg]		AQ.			
	s	140/1	140/2-4	160/1	190/1-3
K97	3	160	160	160	170
KF: + 20.1 kg / KA: + -18.2 kg / KAF: + 6.7 kg					

		AQ.			
		140/1	140/2-4	160/1	190/1-3
$J_A\ 10^{-4}$	[kgm^2]	5.1	10.0	10.0	25.0
c_{TA}	[Nm/']	0.625	1.0	1.0	2.08

K97 n_e = 1400	i	M_{amax} [Nm]	M_{apk} [Nm]	$M_{aNotaus}$ [Nm]	n_{ak} [1/min]	J_G 10^{-4} [kgm^2]	F_{Ramax} K [N]	KF [N]	KA [N]	KAF [N]	F_{Rapk} K [N]	KF [N]	KA [N]	KAF [N]
K97 3	7.54	2400	3560	4080	279	120	15700	18100	10200	10200	40000	39300	40000	40000
	8.71	2660	3590	4522	218	94	15800	18200	9930	9930	40000	39300	40000	40000
	10.41	2870	3610	4879	183	71	16400	19000	10300	10300	40000	39300	40000	40000
	11.99	3890	4710	6613	167	115	16200	18800	9100	9100	40000	38300	40000	40000
	13.85	4300	4710	7310	130	91	16100	18900	8520	8520	40000	38300	40000	40000
	16.56	4300	4710	7310	139	69	17800	20700	10300	10300	40000	38300	40000	40000
	18.96	4300	4710	7310	148	55	19100	22100	11700	11700	40000	38300	40000	40000
	22.37	4300	4710	7310	156	43	20900	24000	13500	13500	40000	38300	40000	40000
	24.75	4300	4710	7310	166	37	22000	25200	14700	14700	40000	38300	40000	40000
	27.91	4300	4710	7310	168	30	23300	26600	16100	16100	40000	38300	40000	40000
	30.82	4300	4710	7310	172	26	24500	27800	17300	17300	40000	38300	40000	40000
	34.23	4300	4710	7310	178	22	25700	29200	18600	18600	40000	38300	40000	40000
	38.30	4300	4710	7310	183	18	27100	30700	20100	20100	40000	38300	40000	40000
	41.87	4300	4710	7310	36	42	28300	31900	21300	21300	40000	38300	40000	40000
	47.93	4300	4710	7310	31	35	30000	33800	23300	23300	40000	38300	40000	40000
	56.55	4300	4710	7310	30	28	32300	36300	25700	25700	40000	38300	40000	40000
	62.55	4300	4710	7310	30	25	33800	37800	27300	27300	40000	38300	40000	40000
	70.54	4300	4710	7310	31	21	35600	38700	29200	29200	40000	38300	40000	40000
	77.89	4300	4710	7310	32	18	37100	38700	30900	30900	40000	38300	40000	40000
	86.52	4300	4710	7310	32	16	38800	38700	32700	32700	40000	38300	40000	40000
	96.80	4300	4710	7310	33	13	40000	38700	34700	34700	40000	38300	40000	40000
	105.13	4300	4710	7310	33	12	40000	38700	36300	36300	40000	38300	40000	40000
	123.93	4300	4710	7310	33	9.3	40000	38700	39500	39500	40000	38300	40000	40000
	140.28	4300	4710	7310	34	5.9	40000	38700	40000	40000	40000	38300	40000	40000
	153.21	4300	4710	7310	34	5.2	40000	38700	40000	40000	40000	38300	40000	40000
	176.05	4300	4710	7310	34	4.0	40000	38700	40000	40000	40000	38300	40000	40000

AQ.	i	n_{epk} [1/min]	η [%]	c_{TG} K [Nm/']	KF [Nm/']	KA [Nm/']	KAF [Nm/']	φ /R [']
K97 3	7.54	3597	96	264	237	581	581	10
	8.71	4500	96	264	237	581	581	10
	10.41	4500	96	264	237	581	581	10
	11.99	4500	96	301	267	791	791	8
	13.85	4500	96	301	267	791	791	8
	16.56	4500	96	301	267	791	791	8
	18.96	4500	96	301	267	791	791	8
	22.37	4500	96	301	267	791	791	8
	24.75	4500	96	301	267	791	791	8
	27.91	4500	96	301	267	791	791	8
	30.82	4500	96	301	267	791	791	7
	34.23	4500	96	301	267	791	791	7
	38.30	4500	96	301	267	791	791	7
	41.87	4378	93	314	278	892	892	7
	47.93	4500	94	314	278	892	892	7
	56.55	4500	94	314	278	892	892	7
	62.55	4500	94	314	278	892	892	7
	70.54	4500	94	314	278	892	892	7
	77.89	4500	94	314	278	892	892	7
	86.52	4500	94	314	278	892	892	7
	96.80	4500	94	314	278	892	892	7
	105.13	4500	94	314	278	892	892	7
	123.93	4500	94	314	278	892	892	7
	140.28	4500	94	314	278	892	892	7
	153.21	4500	94	314	278	892	892	7
	176.05	4500	94	314	278	892	892	7

10.2.14 K 97 AQ.. [mm]

33 129 00 08

K97..

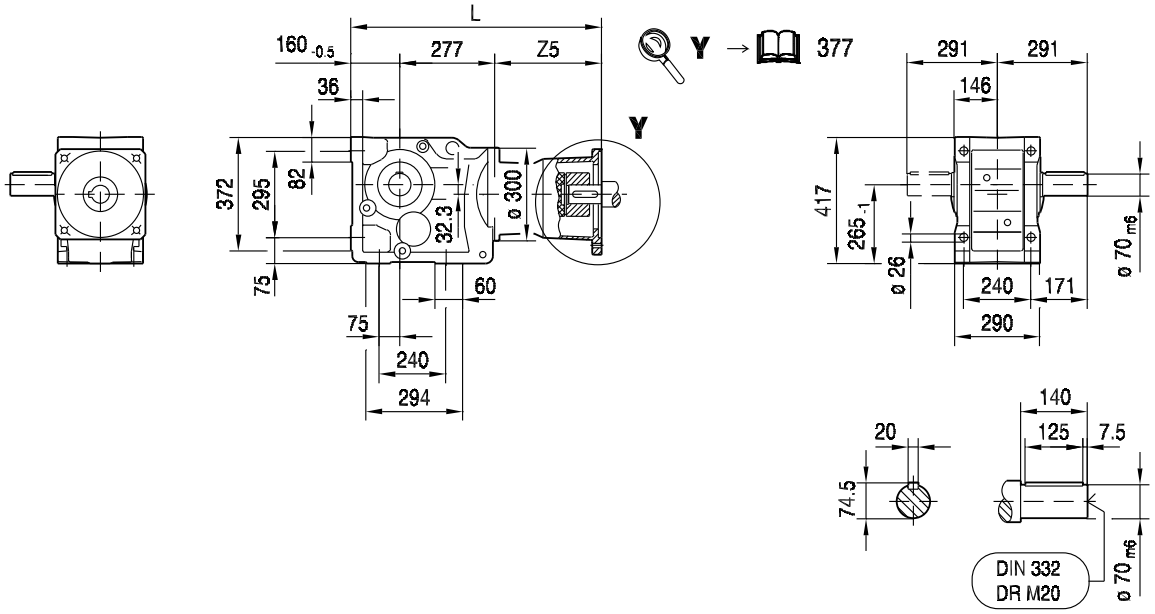

KA97B..

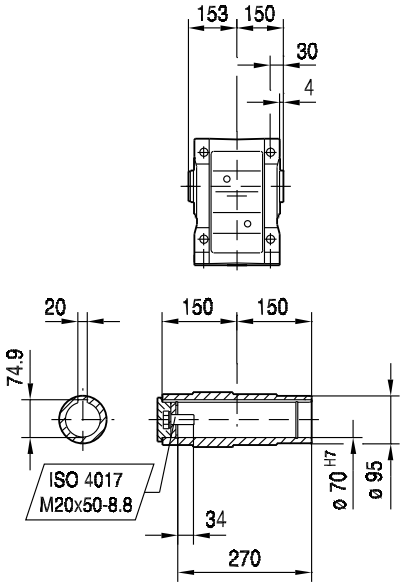

KH97B..

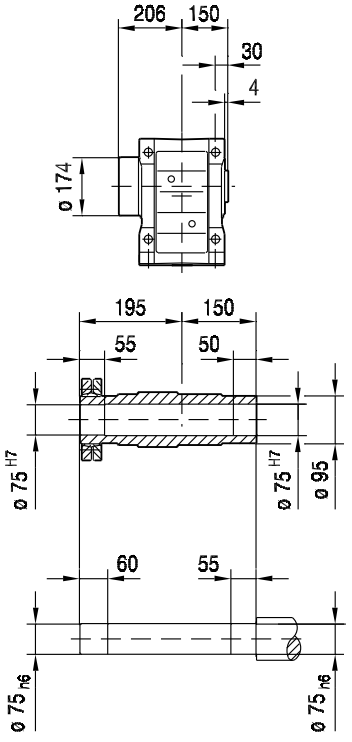

KV97B..

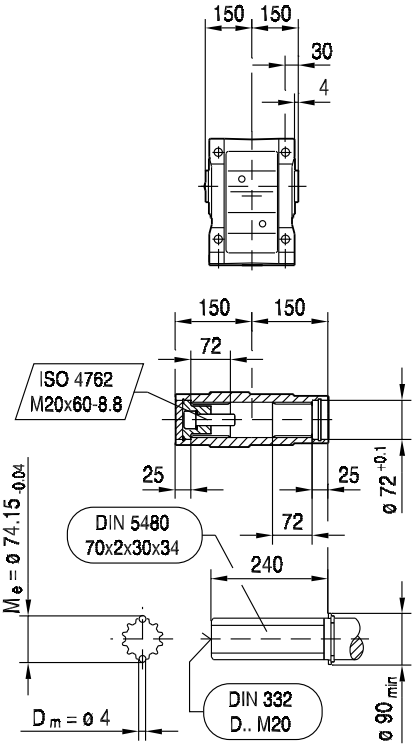

(→ 144)	AQ140/1-2	AQ140/3-4	AQ160/1	AQ190/1-2	AQ190/3			
L	594	607	607	653	677			
Z5	157	170	170	215.5	239.5			

33 130 00 08

KF97..

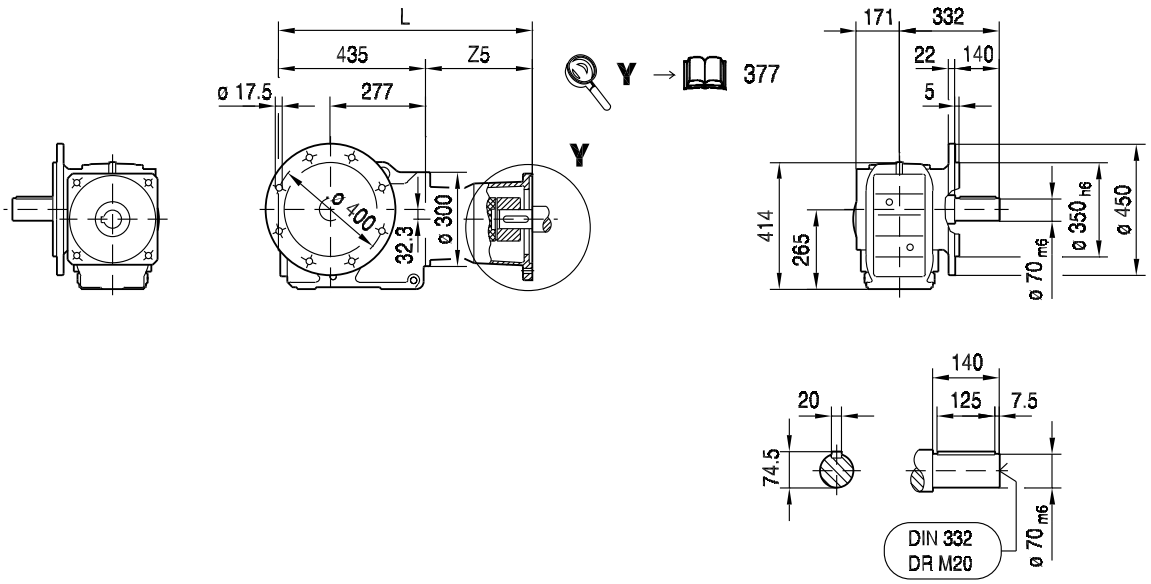

10

KAF97..

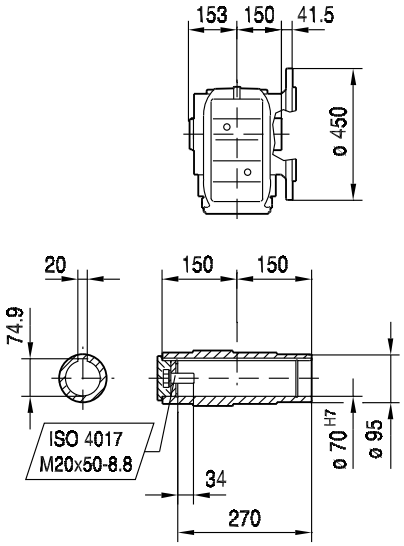

KHF97..

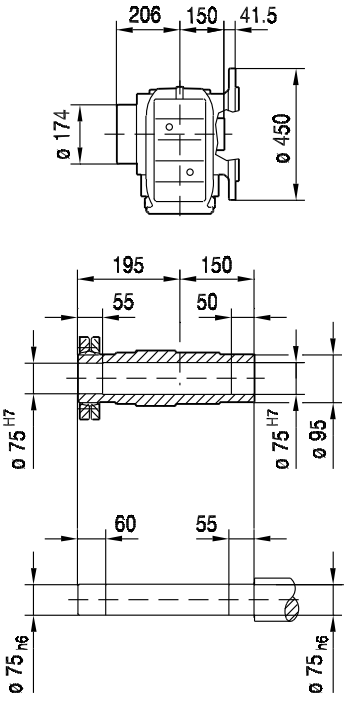

KVF97..

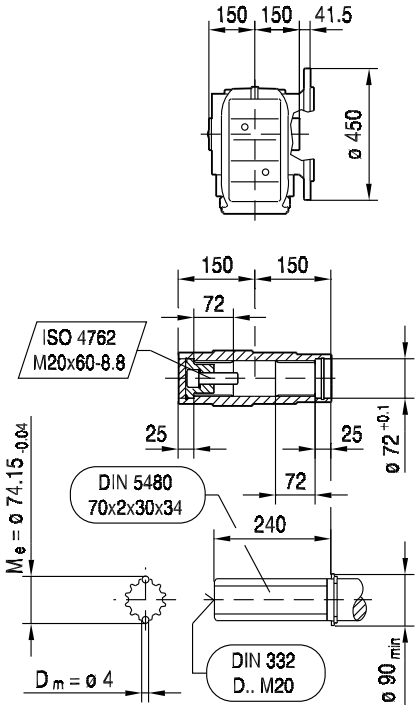

(→ 144)	AQ140/1-2	AQ140/3-4	AQ160/1	AQ190/1-2	AQ190/3			
L	592	605	605	651	675			
Z5	157	170	170	215.5	239.5			

KA97..

33 131 00 08

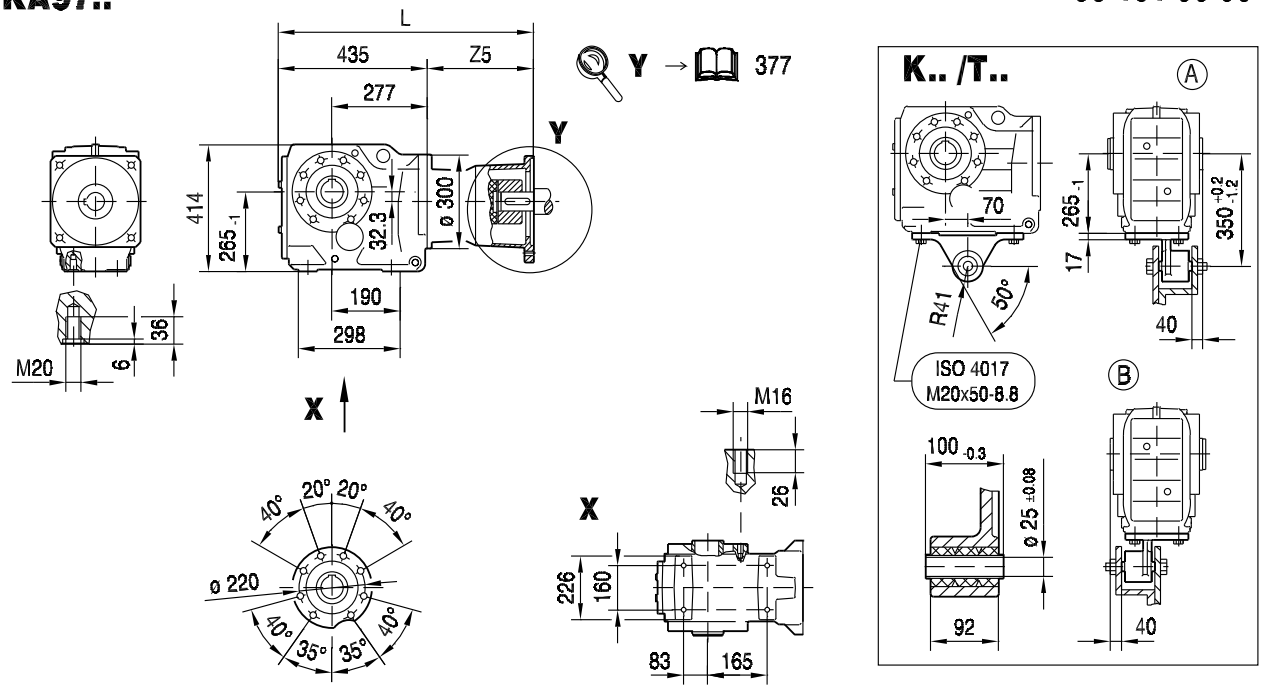

KA97..

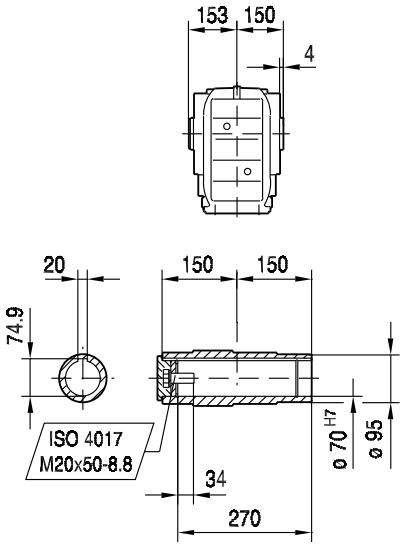

KH97..

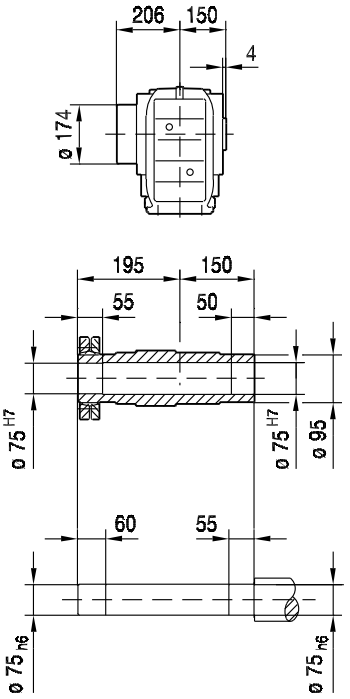

KV97..

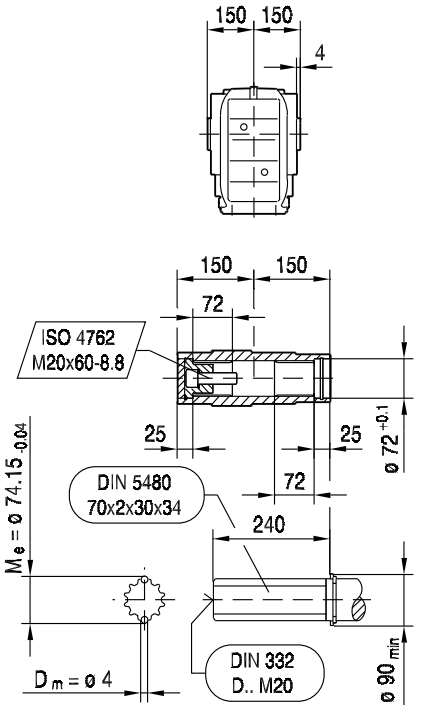

(→ 144)	AQ140/1-2	AQ140/3-4	AQ160/1	AQ190/1-2	AQ190/3			
L	592	605	605	651	675			
Z5	157	170	170	215.5	239.5			

33 133 00 08

KAZ97..

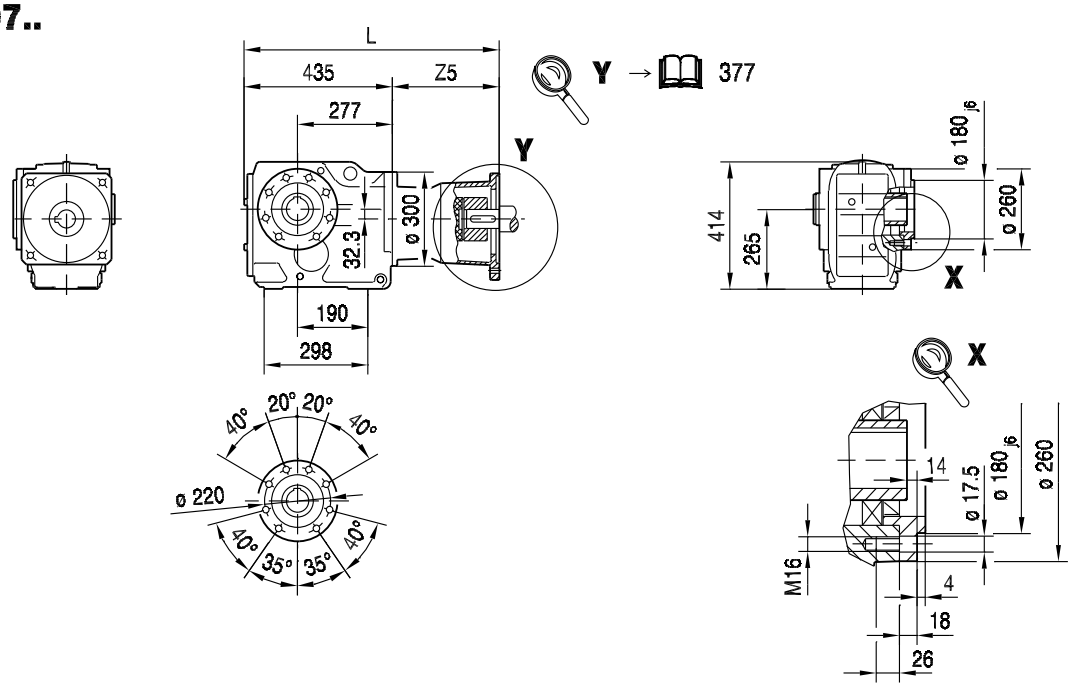

10

KAZ97..

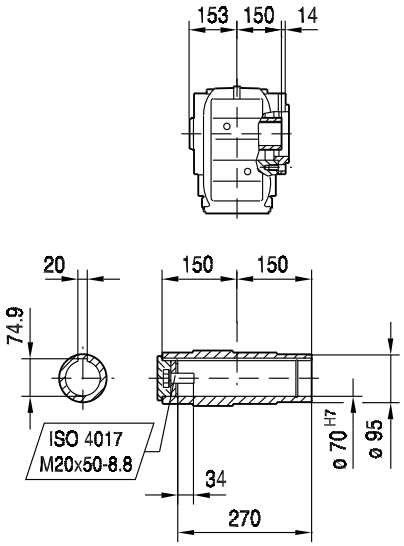

KHZ97..

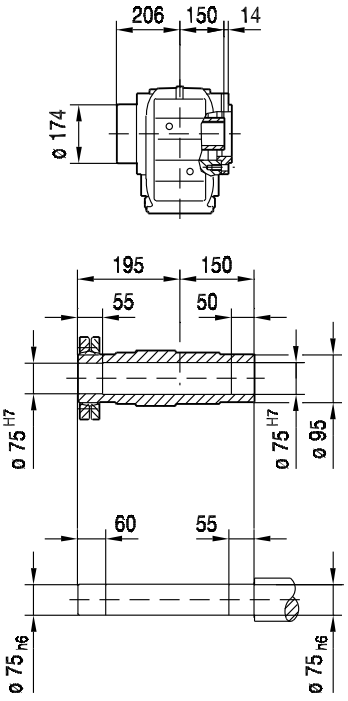

KVZ97..

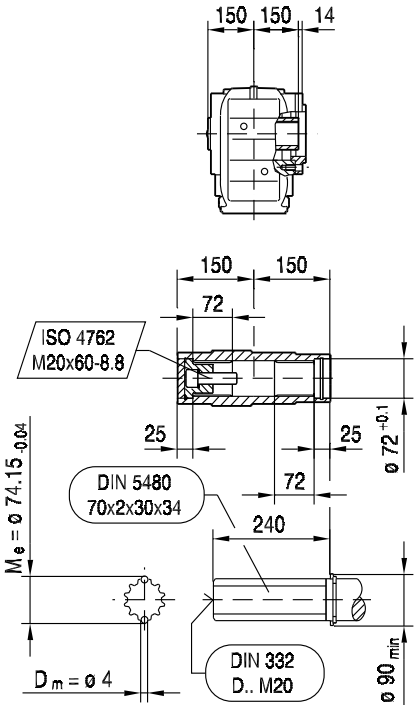

(→ 144)	AQ140/1-2	AQ140/3-4	AQ160/1	AQ190/1-2	AQ190/3			
L	592	605	605	651	675			
Z5	157	170	170	215.5	239.5			

KT97..

33 132 00 08

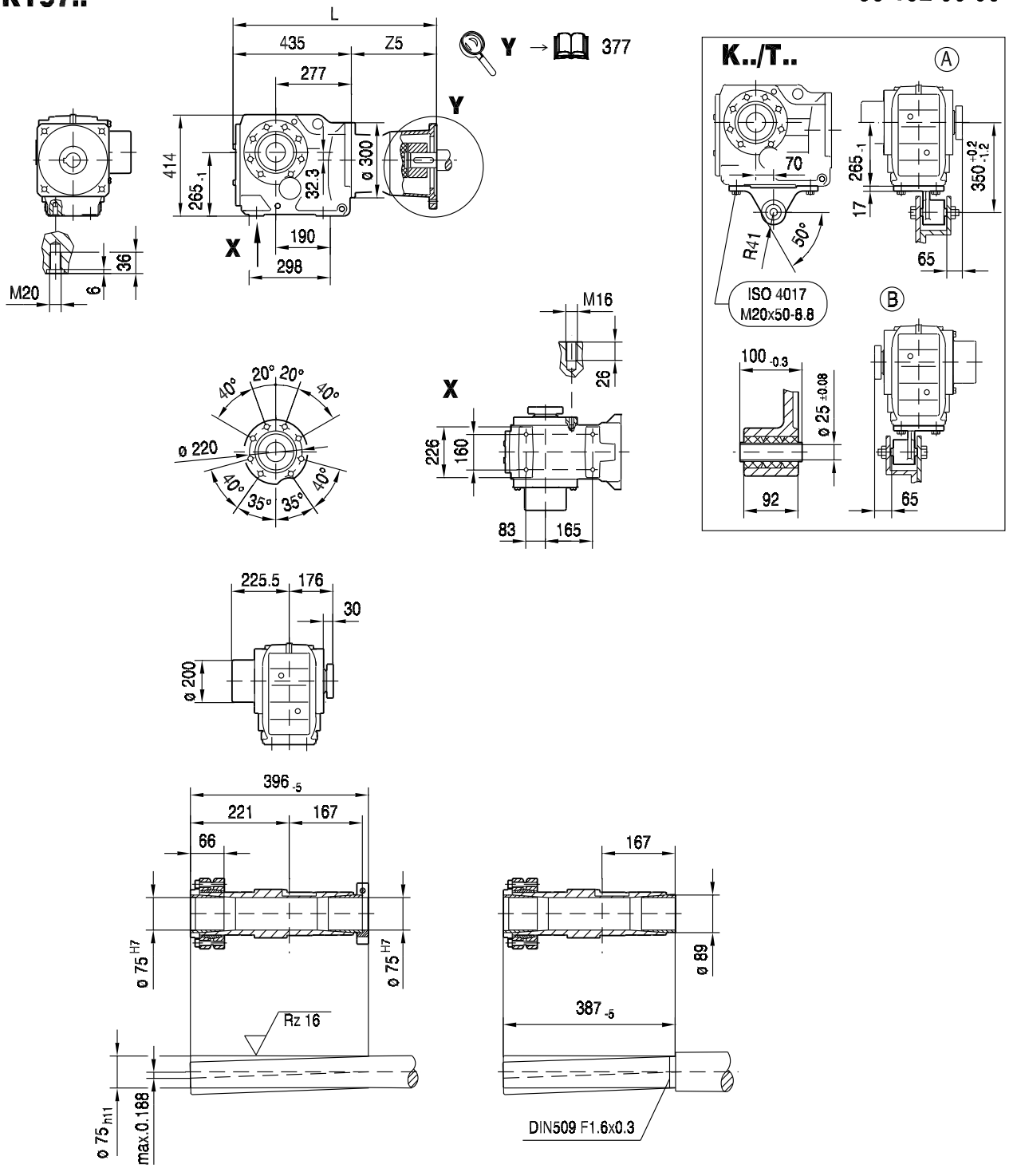

(→ 144)	AQ140/1-2	AQ140/3-4	AQ160/1	AQ190/1-2	AQ190/3			
L	592	605	605	651	675			
Z5	157	170	170	215.5	239.5			

10.2.15 K 107 AQ.. [Nm]

[Nm]		AQ. M_{amax} | M_{apk} | $M_{aNotaus}$											
	i	140/1			140/2-4			160/1			190/1-3		
K107  3	7.35										1170	1170	1170
	8.69	520	520	860	860	860	860	860	860	860	1390	1390	1390
	9.94	595	595	990	990	990	990	990	990	990	1590	1590	1590
	11.73	700	700	1170	1170	1170	1170	1170	1170	1170	1870	1870	1870
	13.43	800	800	1340	1340	1340	1340	1340	1340	1340	2140	2140	2140
	14.64	870	870	1460	1460	1460	1460	1460	1460	1460	2340	2340	2340
	16.75	1000	1000	1670	1670	1670	1670	1670	1670	1670	2680	2680	2680
	19.74	1180	1180	1970	1970	1970	1970	1970	1970	1970	3150	3150	3150
	22.62	1350	1350	2260	2260	2260	2260	2260	2260	2260	3610	3610	3610
	26.32	1570	1570	2630	2630	2630	2630	2630	2630	2630	4210	4210	4210
	29.00	1740	1740	2900	2900	2900	2900	2900	2900	2900	4640	4640	4640
	31.28										5000	5000	5000
	32.69	1960	1960	3260	3260	3260	3260	3260	3260	3260	5230	5230	5230
	37.00	2220	2220	3700	3700	3700	3700	3700	3700	3700	5920	5920	5920
	42.33	2530	2530	4230	4230	4230	4230	4230	4230	4230	6770	6770	6770
	49.90	2990	2990	4990	4990	4990	4990	4990	4990	4990	7840	7980	7980
	57.17	3430	3430	5710	5710	5710	5710	5710	5710	5710	8000	9090	9140
	66.52	3990	3990	6650	6650	6650	6650	6650	6650	6650	8000	9090	10600
	73.30	4390	4390	7330	7330	7330	7330	7330	7330	7330	8000	9090	11700
	82.61	4950	4950	8260	8000	8260	8260	8000	8260	8260	8000	9090	13200
	90.96	5450	5450	9090	8000	9090	9090	8000	9090	9090	8000	9090	13600
	100.75	6040	6040	10000	8000	9090	10000	8000	9090	10000	8000	9090	13600
	112.41	6740	6740	11200	8000	9090	11200	8000	9090	11200	8000	9090	13600
	121.46	7280	7280	12100	8000	9090	12100	8000	9090	12100	8000	9090	13600
	143.47	8000	8600	13600	8000	9090	13600	8000	9090	13600	8000	9090	13600

m [kg]		AQ.			
	s	140/1	140/2-4	160/1	190/1-3
K107	3	275	275	275	285
KF: + 12.1 kg / KA: + -27.2 kg / KAF: + -3.2 kg					

		AQ.			
		140/1	140/2-4	160/1	190/1-3
$J_A\ 10^{-4}$	[kgm^2]	5.1	10.0	10.0	25.0
c_{TA}	[Nm/']	0.625	1.0	1.0	2.08

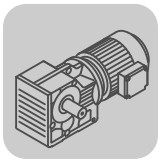

K107							F_{Ramax}				F_{Rapk}			
n_e = 1400	i	M_{amax} [Nm]	M_{apk} [Nm]	$M_{aNotaus}$ [Nm]	n_{ak} [1/min]	J_G 10^{-4} [kgm^2]	K [N]	KF [N]	KA [N]	KAF [N]	K [N]	KF [N]	KA [N]	KAF [N]
K107 3	7.35	3600	4720	6120	286	231	24400	28500	9900	47100	65000	65000	65000	65000
	8.69	4070	4780	6919	207	170	24600	29100	9270	48300	65000	65000	65000	65000
	9.94	4190	4840	7123	201	136	25800	30500	10000	50500	65000	65000	65000	65000
	11.73	4300	4910	7310	196	104	27500	32300	11100	53500	65000	65000	65000	65000
	13.43	4300	4940	7310	201	82	29200	34200	12600	56500	65000	65000	65000	65000
	14.64	6890	8060	11713	123	163	19500	23000	6180	51700	65000	65000	65000	65000
	16.75	7050	8160	11985	119	131	21000	24800	7080	54200	65000	65000	65000	65000
	19.74	7200	8270	12240	117	100	23200	27300	8440	57700	65000	65000	65000	65000
	22.62	7200	8320	12240	124	80	25800	30300	10100	61200	65000	65000	65000	65000
	26.32	7200	8370	12240	129	63	28800	33600	12100	65000	65000	65000	65000	65000
	29.00	7200	8400	12240	134	54	30700	35800	13400	65000	65000	65000	65000	65000
	31.28	6800	9090	11560	48	112	34200	39700	16100	65000	65000	65000	65000	65000
	32.69	7200	8430	12240	138	45	33200	38600	15100	65000	65000	65000	65000	65000
	37.00	7200	9090	12240	41	86	35800	41500	17000	65000	65000	65000	65000	65000
	42.33	7360	9090	12512	38	72	37900	44000	18400	65000	65000	65000	65000	65000
	49.90	7840	9090	13328	30	58	39300	45600	19200	65000	65000	65000	65000	65000
	57.17	8000	9090	13600	30	48	41700	48400	20900	65000	65000	65000	65000	65000
	66.52	8000	9090	13600	30	40	45400	52500	23600	65000	65000	65000	65000	65000
	73.30	8000	9090	13600	30	35	47900	55300	25400	65000	65000	65000	65000	65000
	82.61	8000	9090	13600	30	29	50900	58700	27700	65000	65000	65000	65000	65000
	90.96	8000	9090	13600	31	25	53500	61600	29600	65000	65000	65000	65000	65000
	100.75	8000	9090	13600	32	20	56200	64700	31700	65000	65000	65000	65000	65000
	112.41	8000	9090	13600	32	17	59300	65000	34000	65000	65000	65000	65000	65000
	121.46	8000	9090	13600	32	15	61500	65000	35700	65000	65000	65000	65000	65000
	143.47	8000	9090	13600	32	12	65000	65000	39600	65000	65000	65000	65000	65000

AQ.				c_{TG}				φ
	i	n_{epk} [1/min]	η [%]	K [Nm/']	KF [Nm/']	KA [Nm/']	KAF [Nm/']	/R [']
K107 3	7.35	3197	96	519	488	862	862	9
	8.69	3597	96	519	488	862	862	9
	9.94	4500	96	519	488	862	862	9
	11.73	4500	96	519	488	862	862	9
	13.43	4500	96	519	488	862	862	9
	14.64	4500	96	661	612	1341	1341	7
	16.75	4500	96	661	612	1341	1341	7
	19.74	4500	96	661	612	1341	1341	6
	22.62	4500	96	661	612	1341	1341	6
	26.32	4500	96	661	612	1341	1341	6
	29.00	4500	96	661	612	1341	1341	6
	31.28	3197	94	730	670	1660	1660	6
	32.69	4500	96	661	612	1341	1341	6
	37.00	3597	94	730	670	1660	1660	6
	42.33	3924	94	730	670	1660	1660	6
	49.90	4378	94	730	670	1660	1660	6
	57.17	4500	94	730	670	1660	1660	6
	66.52	4500	94	730	670	1660	1660	6
	73.30	4500	94	730	670	1660	1660	6
	82.61	4500	94	730	670	1660	1660	6
	90.96	4500	94	730	670	1660	1660	6
	100.75	4500	94	730	670	1660	1660	6
	112.41	4500	94	730	670	1660	1660	6
	121.46	4500	94	730	670	1660	1660	6
	143.47	4500	94	730	670	1660	1660	6

10.2.16 K 107 AQ.. [mm]

33 134 00 08

K107..

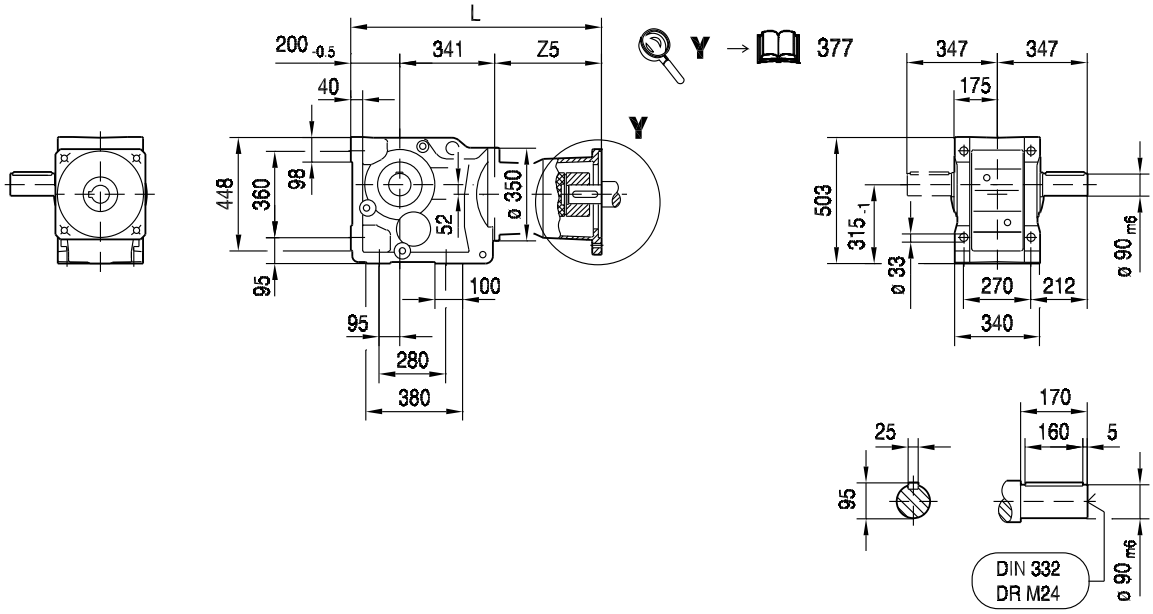

10

KA107B..

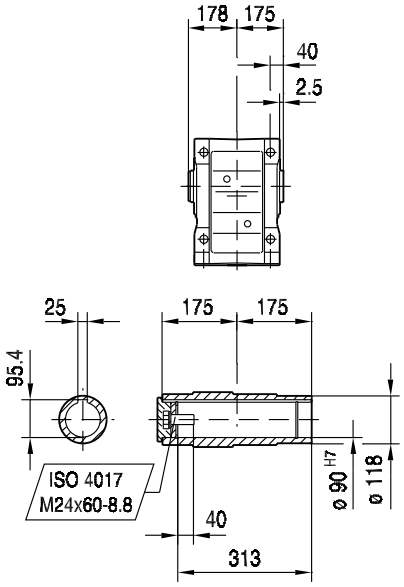

KH107B..

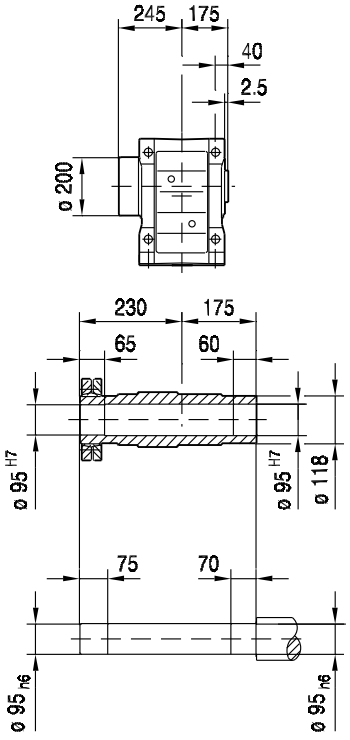

KV107B..

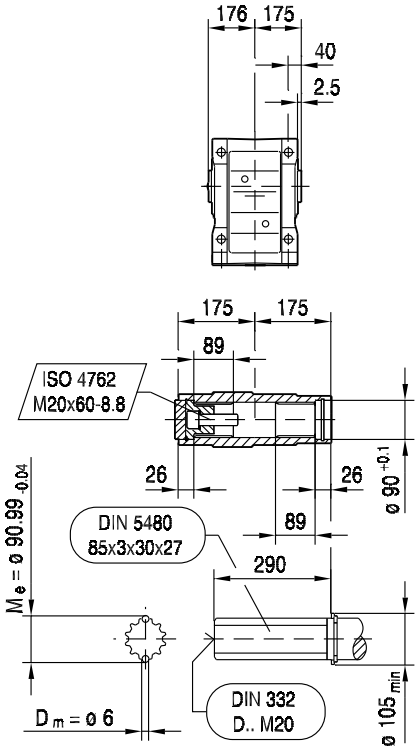

(→ 144)	AQ140/1-2	AQ140/3-4	AQ160/1	AQ190/1-2	AQ190/3			
L	692	705	705	751	775			
Z5	151	164	164	209.5	233.5			

33 135 00 08

KF107..

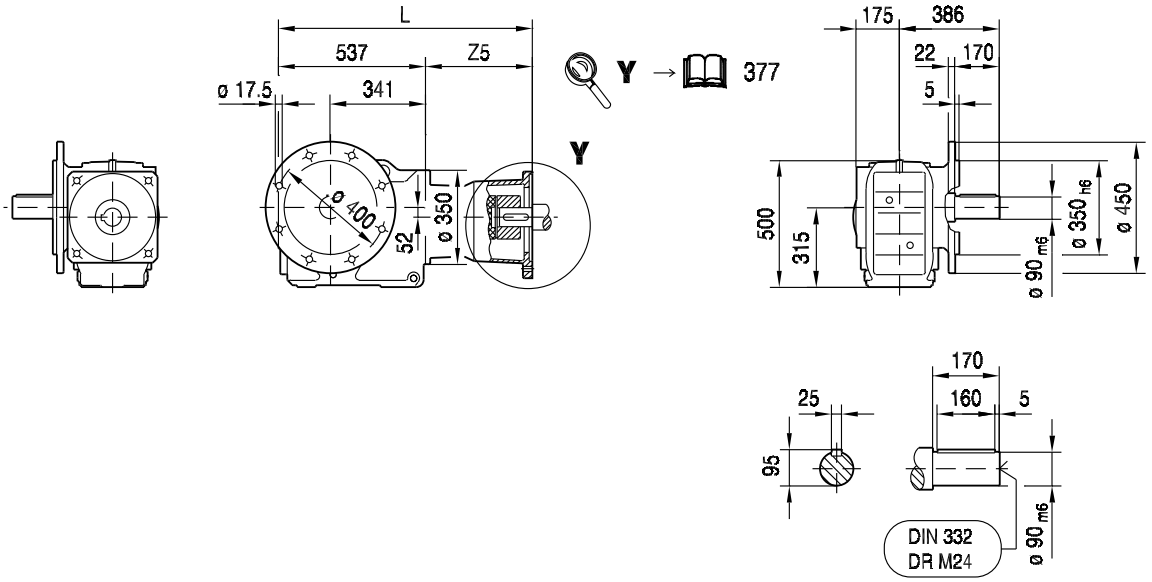

KAF107..

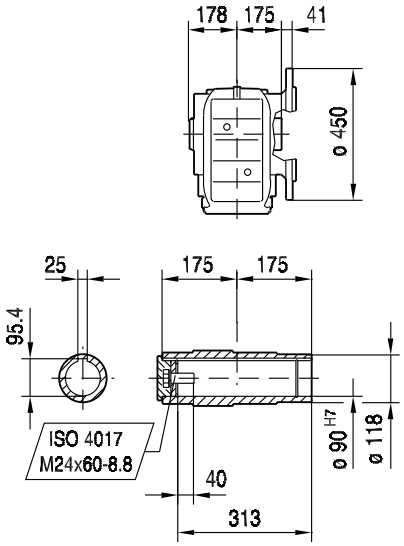

KHF107..

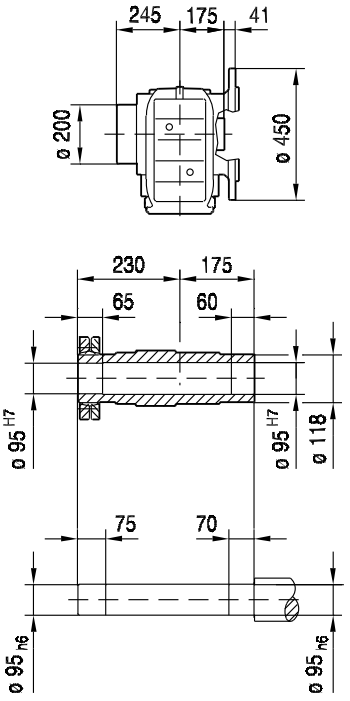

KVF107..

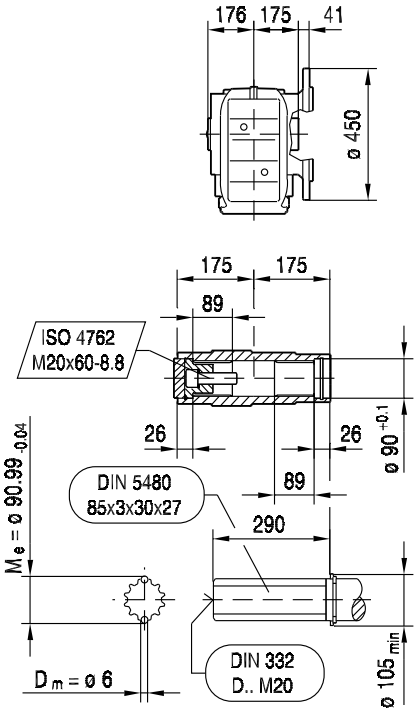

(→ 144)	AQ140/1-2	AQ140/3-4	AQ160/1	AQ190/1-2	AQ190/3			
L	688	701	701	747	771			
Z5	151	164	164	209.5	233.5			

33 136 00 08

KA107..

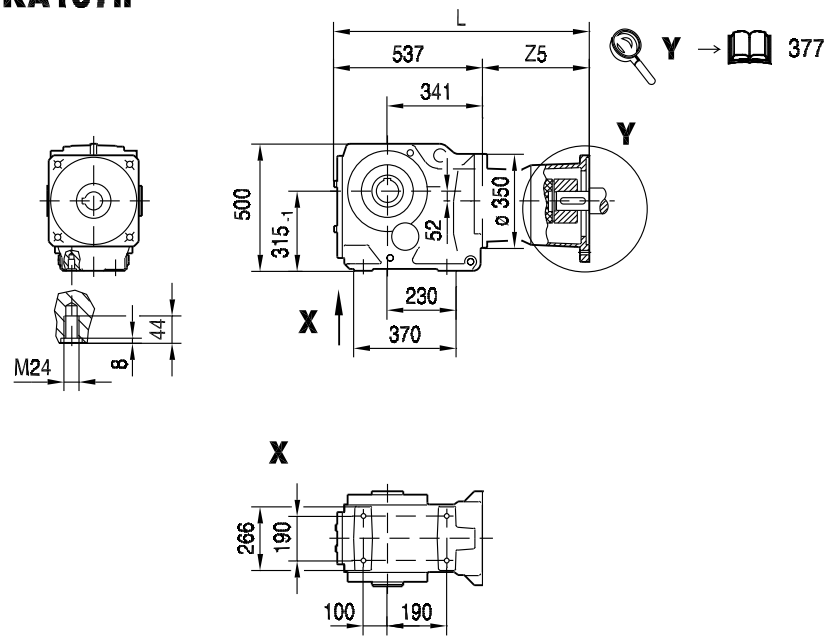

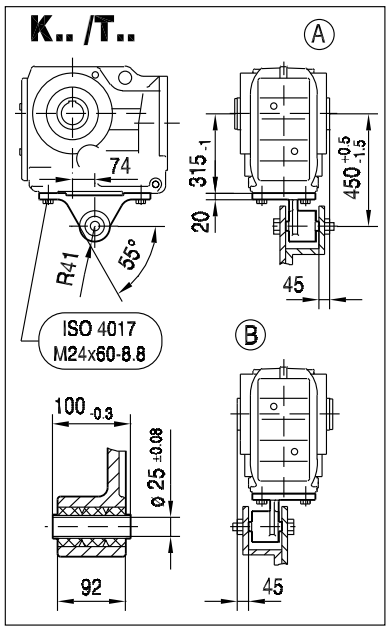

10

KA107..

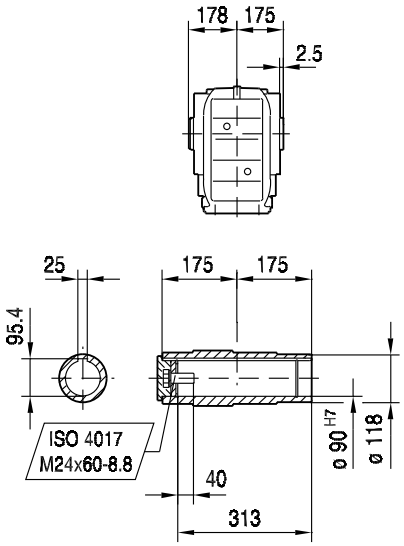

KH107..

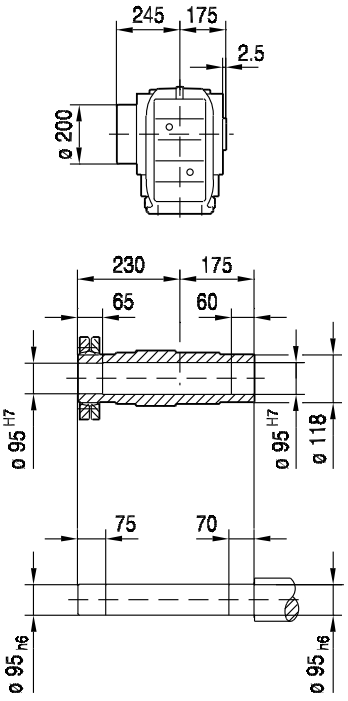

KV107..

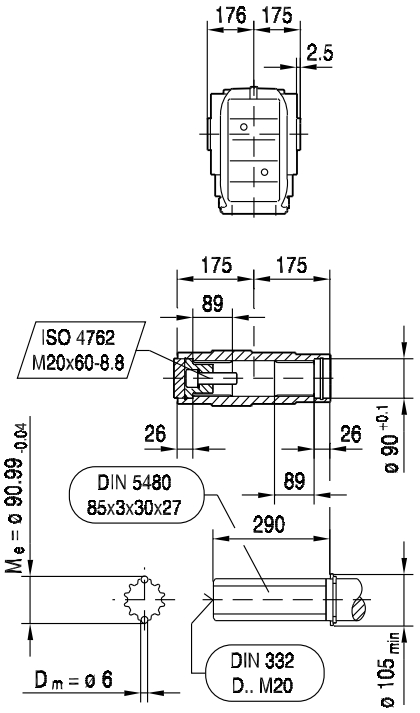

(→ 144)	AQ140/1-2	AQ140/3-4	AQ160/1	AQ190/1-2	AQ190/3			
L	688	701	701	747	771			
Z5	151	164	164	209.5	233.5			

33 137 00 08

KAZ107..

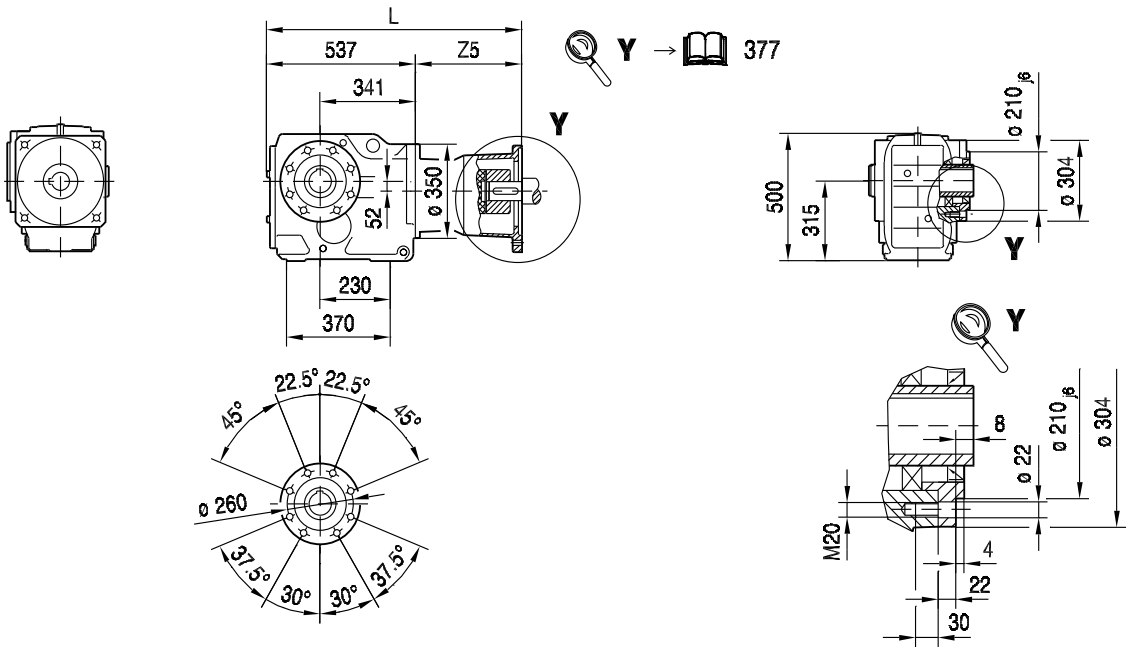

KAZ107..

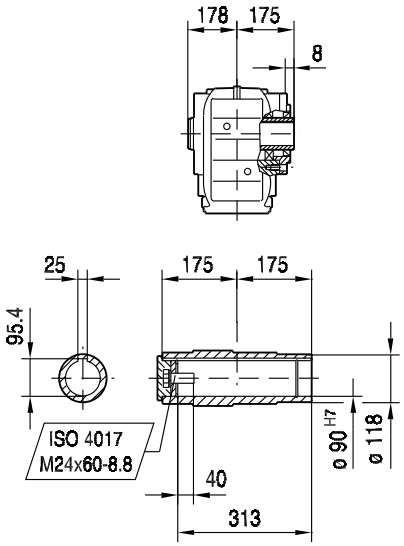

KHZ107..

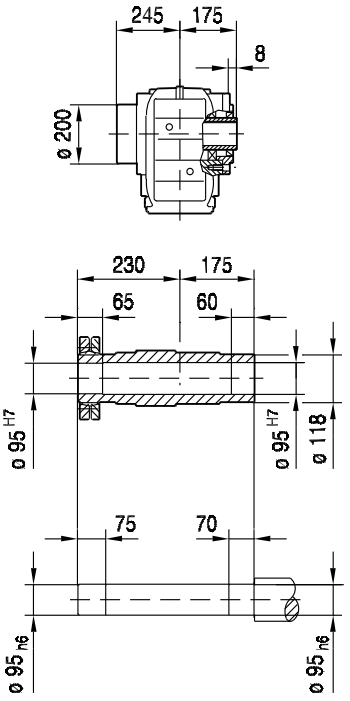

KVZ107..

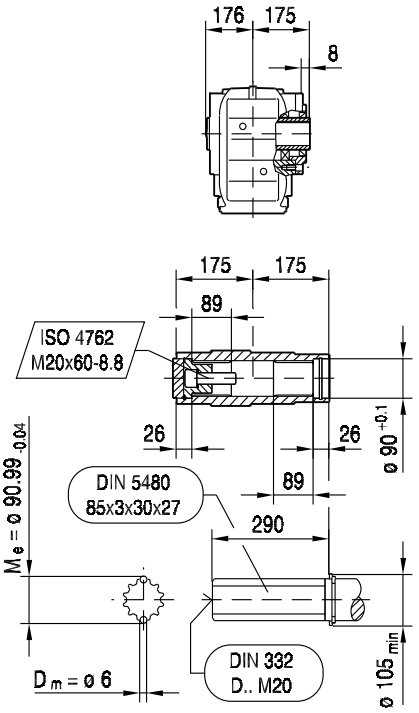

(→ 144)	AQ140/1-2	AQ140/3-4	AQ160/1	AQ190/1-2	AQ190/3			
L	688	701	701	747	771			
Z5	151	164	164	209.5	233.5			

33 150 00 08

KT107..

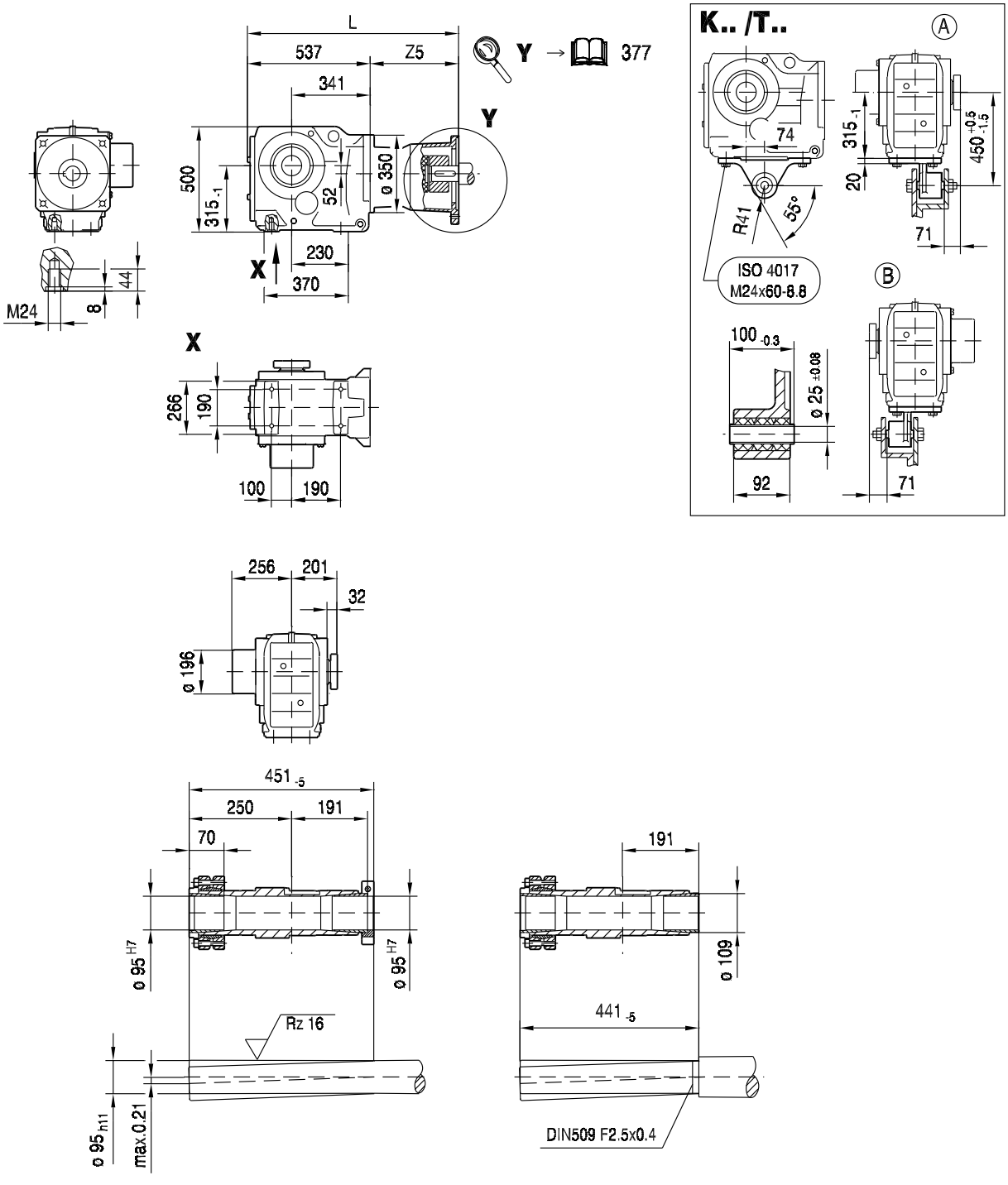

10.2.17 K 127 AQ.. [Nm]

[Nm]		AQ. M_{amax} | M_{apk} | $M_{aNotaus}$		
	i	190/1-3		
K127 3	8.68			
	10.74	1710	1710	1710
	12.79	2040	2040	2040
	14.35			
	17.77	2840	2840	2840
	21.15	3380	3380	3380
	23.91	3820	3820	3820
	27.68	4420	4420	4420
	31.37	5010	5010	5010
	36.25	5800	5800	5800
	40.19	6430	6430	6430
	47.82	7650	7650	7650
	54.07	8650	8650	8650
	62.60	10000	10000	10000
	70.95	11300	11300	11300
	81.98	13000	13100	13100
	89.89	13000	14300	14300
	110.18	13000	14800	17600
	122.48	13000	14800	19500
	136.14	13000	14800	21700
	146.07	13000	14800	22100

m [kg]		AQ.
	s	190/1-3
K127	3	440
KF: + 42.3 kg / KA: + -28.2 kg / KAF: + 9.2 kg		

		AQ.
		190/1-3
J_A 10^{-4}	[kgm^2]	25.0
c_{TA}	[Nm/']	2.08

K127							F_{Ramax}				F_{Rapk}			
n_e = 1400	i	M_{amax} [Nm]	M_{apk} [Nm]	$M_{aNotaus}$ [Nm]	n_{ak} [1/min]	J_G 10^{-4} [kgm^2]	K [N]	KF [N]	KA [N]	KAF [N]	K [N]	KF [N]	KA [N]	KAF [N]
K127 3	8.68	7230	9390	12291	230	450	32500	39100	3750	56600	80900	82700	90000	90000
	10.74	8000	9560	13600	177	318	33900	41000	3100	59300	80800	82600	90000	90000
	12.79	8530	9680	14501	149	240	35400	42900	3080	62100	80800	82600	90000	90000
	14.35	12100	14800	20570	132	431	31000	36700	35	58100	76400	75700	90000	90000
	17.77	13000	14800	22100	113	305	32600	38600	39	61600	76400	75700	90000	90000
	21.15	13000	14800	22100	123	226	37200	44000	39	67200	76400	75700	90000	90000
	23.91	13000	14800	22100	125	187	39800	47900	575	71300	76400	75700	90000	90000
	27.68	13000	14800	22100	130	148	43000	52600	2830	76300	76400	75700	90000	90000
	31.37	13000	14800	22100	137	120	45900	55800	4840	80900	76400	75700	90000	90000
	36.25	13000	14800	22100	141	97	49400	59600	7280	86300	76400	75700	90000	90000
	40.19	13000	14800	22100	55	184	52000	62400	9090	90000	76400	75700	90000	90000
	47.82	13000	14800	22100	56	146	56500	67300	12300	90000	76400	75700	90000	90000
	54.07	13000	14800	22100	57	124	59800	70900	14700	90000	76400	75700	90000	90000
	62.60	13000	14800	22100	58	101	64000	75500	17600	90000	76400	75700	90000	90000
	70.95	13000	14800	22100	59	84	67700	79500	20300	90000	76400	75700	90000	90000
	81.98	13000	14800	22100	60	70	72100	80900	23400	90000	76400	75700	90000	90000
	89.89	13000	14800	22100	61	61	75100	80900	25600	90000	76400	75700	90000	90000
	110.18	13000	14800	22100	62	40	79200	80900	30500	90000	76400	75700	90000	90000
	122.48	13000	14800	22100	57	35	79200	80900	33200	90000	76400	75700	90000	90000
	136.14	13000	14800	22100	51	29	79200	80900	36000	90000	76400	75700	90000	90000
	146.07	13000	14800	22100	48	26	79200	80900	37900	90000	76400	75700	90000	90000

AQ.	i	n_{epk} [1/min]	η [%]	c_{TG} K [Nm/']	KF [Nm/']	KA [Nm/']	KAF [Nm/']	φ /R [']
	8.68	2797	96	1033	967	1784	1784	8
	10.74	4500	96	1033	967	1784	1784	8
	12.79	4500	96	1033	967	1784	1784	8
	14.35	4500	96	1157	1075	2481	2481	6
	17.77	4500	96	1157	1075	2481	2481	6
	21.15	4500	96	1157	1075	2481	2481	6
	23.91	4500	96	1157	1075	2481	2481	6
	27.68	4500	96	1157	1075	2481	2481	6
	31.37	4500	96	1157	1075	2481	2481	6
K127	36.25	4500	96	1157	1075	2481	2481	6
3	40.19	3197	94	1223	1131	2803	2803	5
	47.82	3597	94	1223	1131	2803	2803	5
	54.07	3924	94	1223	1131	2803	2803	5
	62.60	4378	94	1223	1131	2803	2803	5
	70.95	4500	94	1223	1131	2803	2803	5
	81.98	4500	94	1223	1131	2803	2803	5
	89.89	4500	94	1223	1131	2803	2803	5
	110.18	4500	94	1223	1131	2803	2803	5
	122.48	4500	94	1223	1131	2803	2803	5
	136.14	4500	94	1223	1131	2803	2803	5
	146.07	4500	94	1223	1131	2803	2803	5

10.2.18 K 127 AQ.. [mm]

33 138 00 08

K127..

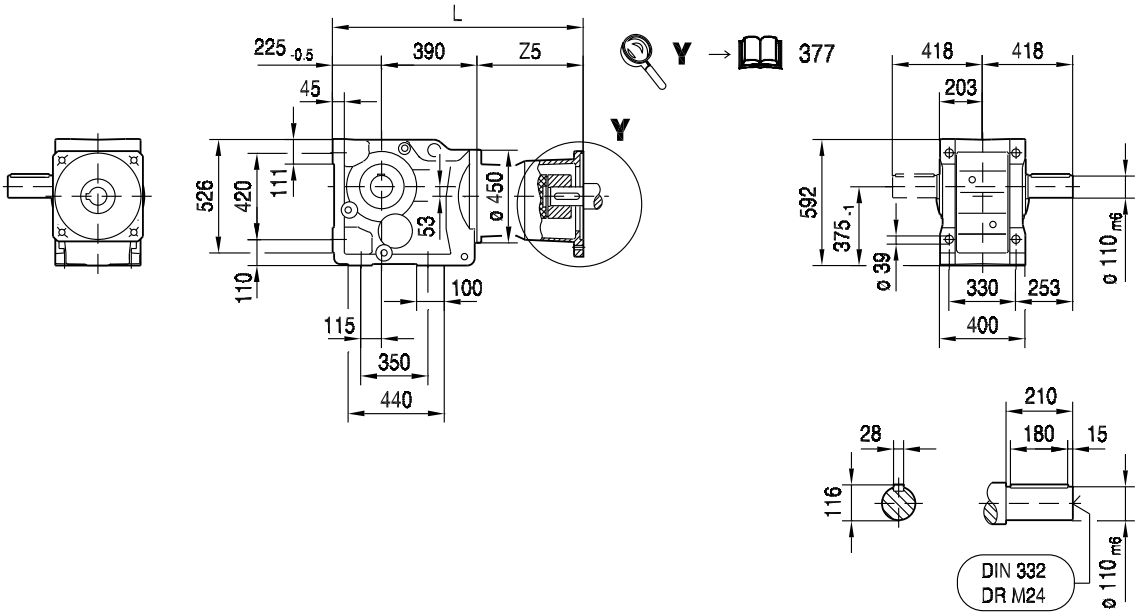

KA127B..

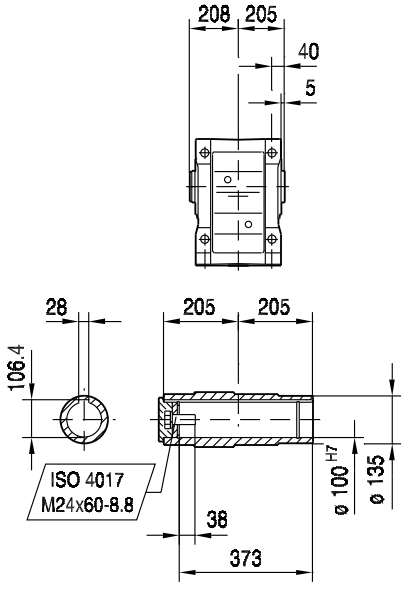

KH127B..

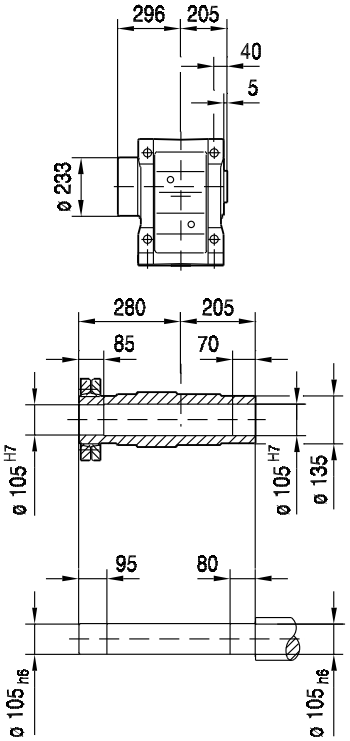

(→ 144)	AQ190/1-2	AQ190/3						
L	810	834						
Z5	194.5	218.5						

33 139 00 08

KF127..

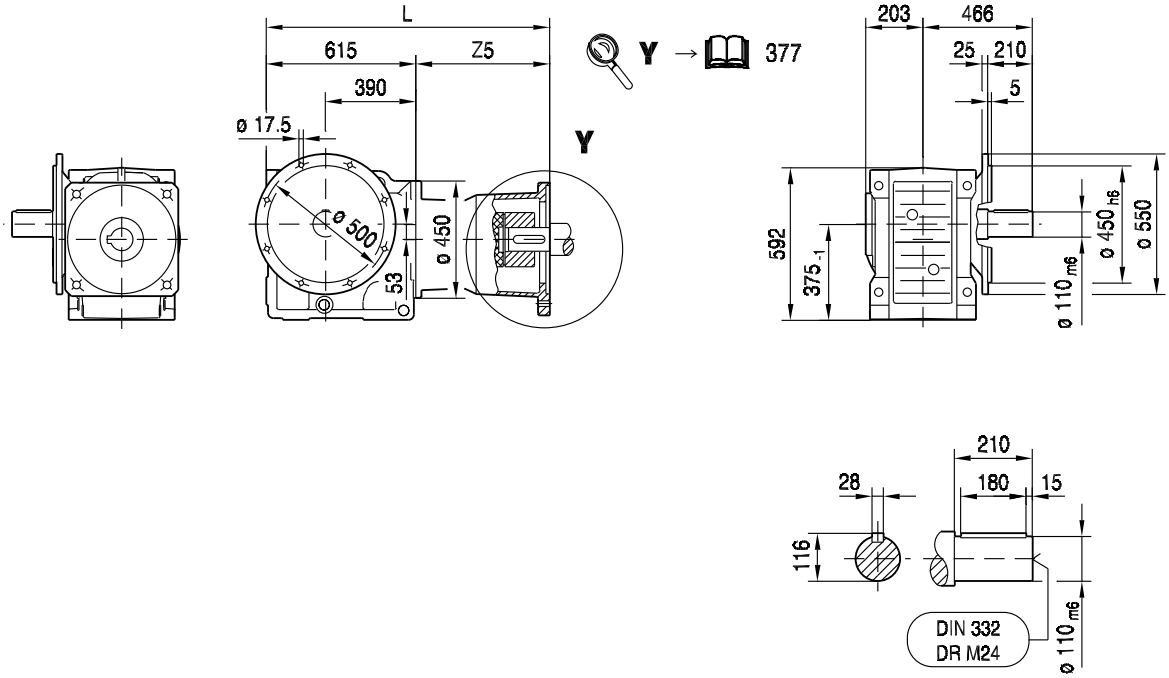

10

KAF127..

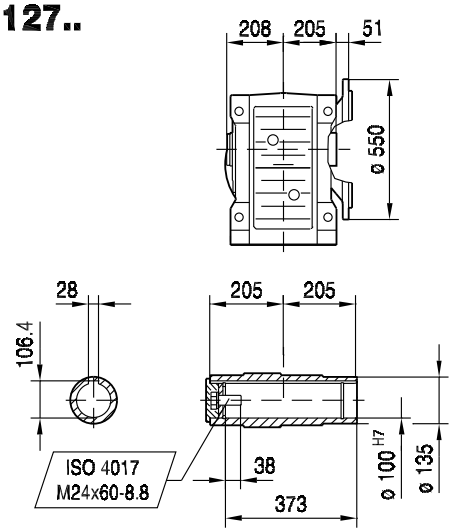

KHF127..

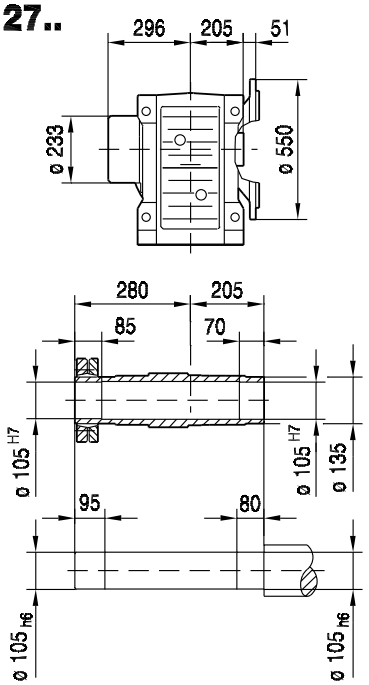

(→ 144)	AQ190/1-2	AQ190/3						
L	810	834						
Z5	194.5	218.5						

KA127..

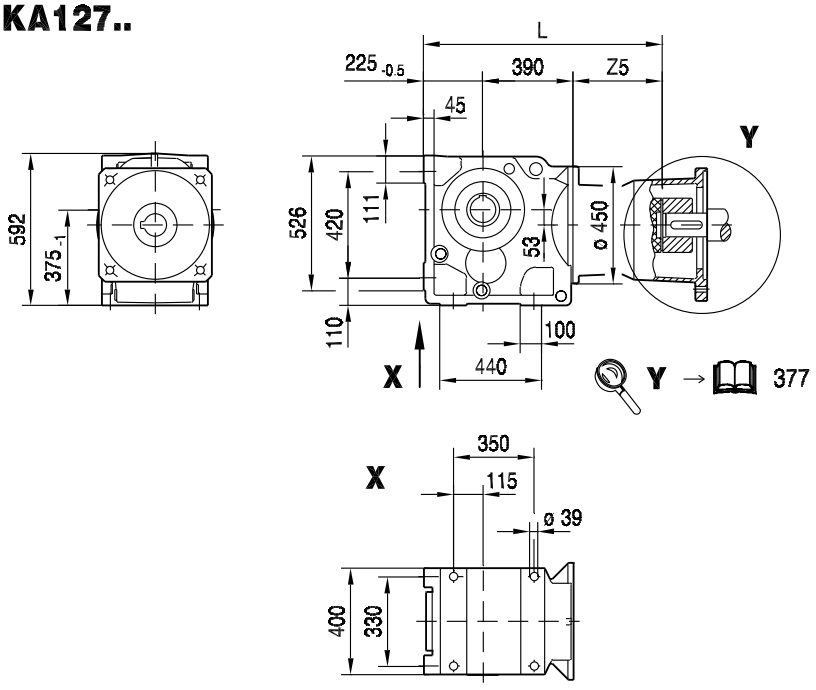

33 140 00 08

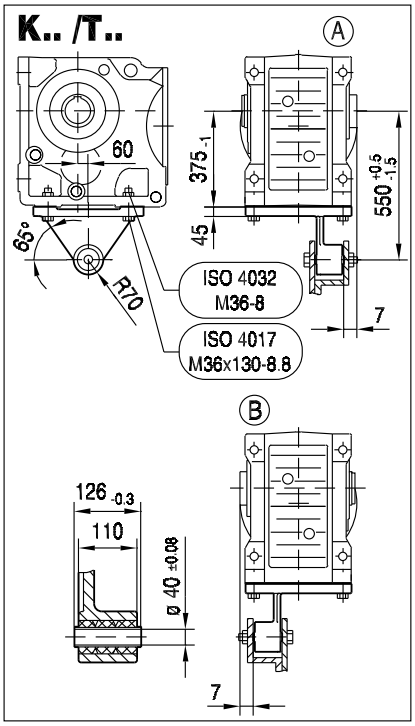

KA127..

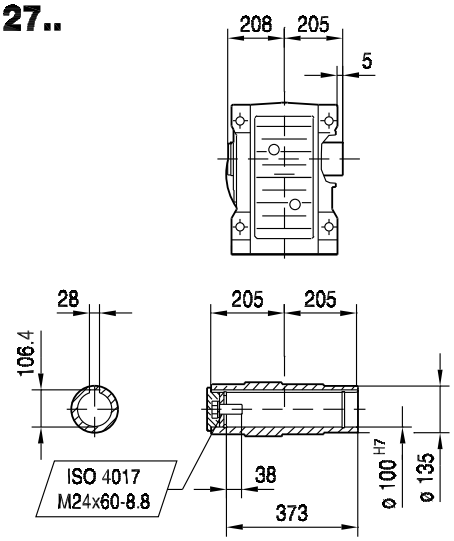

KH127..

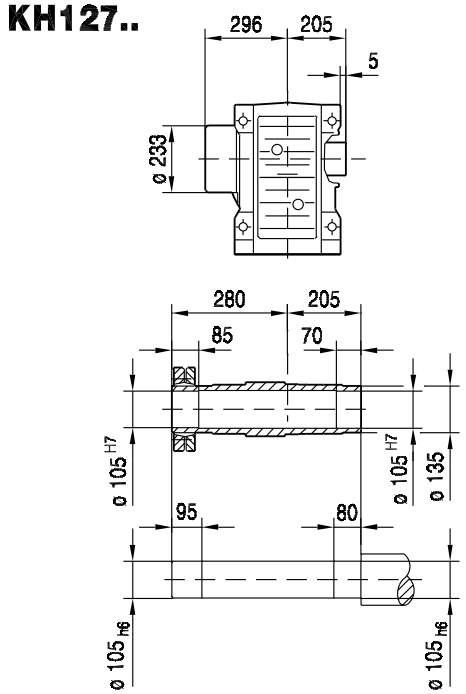

(→ 144)	AQ190/1-2	AQ190/3						
L	810	834						
Z5	194.5	218.5						

33 141 00 08

KAZ127..

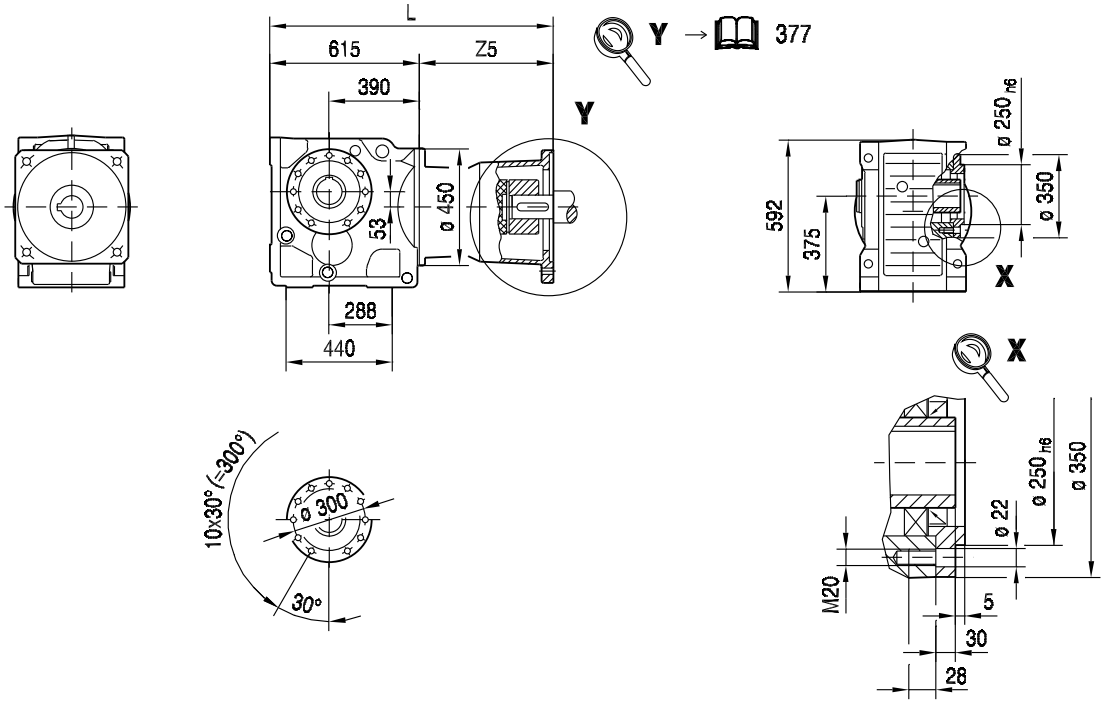

KAZ127..

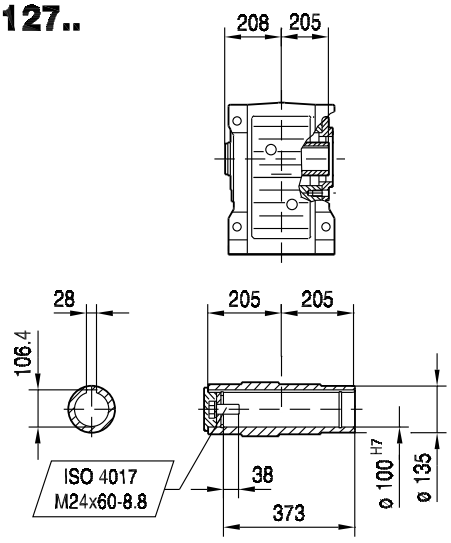

KHZ127..

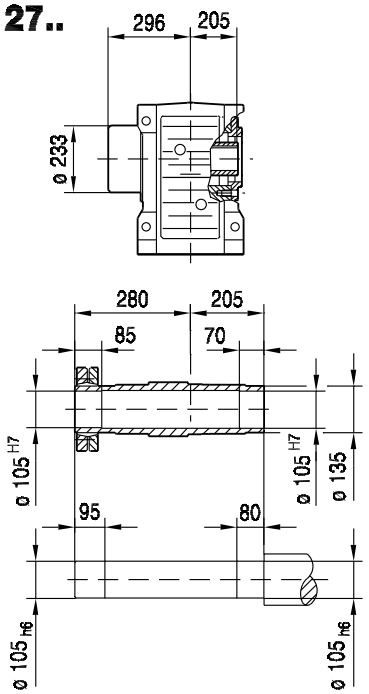

(→ 144)	AQ190/1-2	AQ190/3						
L	810	834						
Z5	194.5	218.5						

KT127..

33 151 00 08

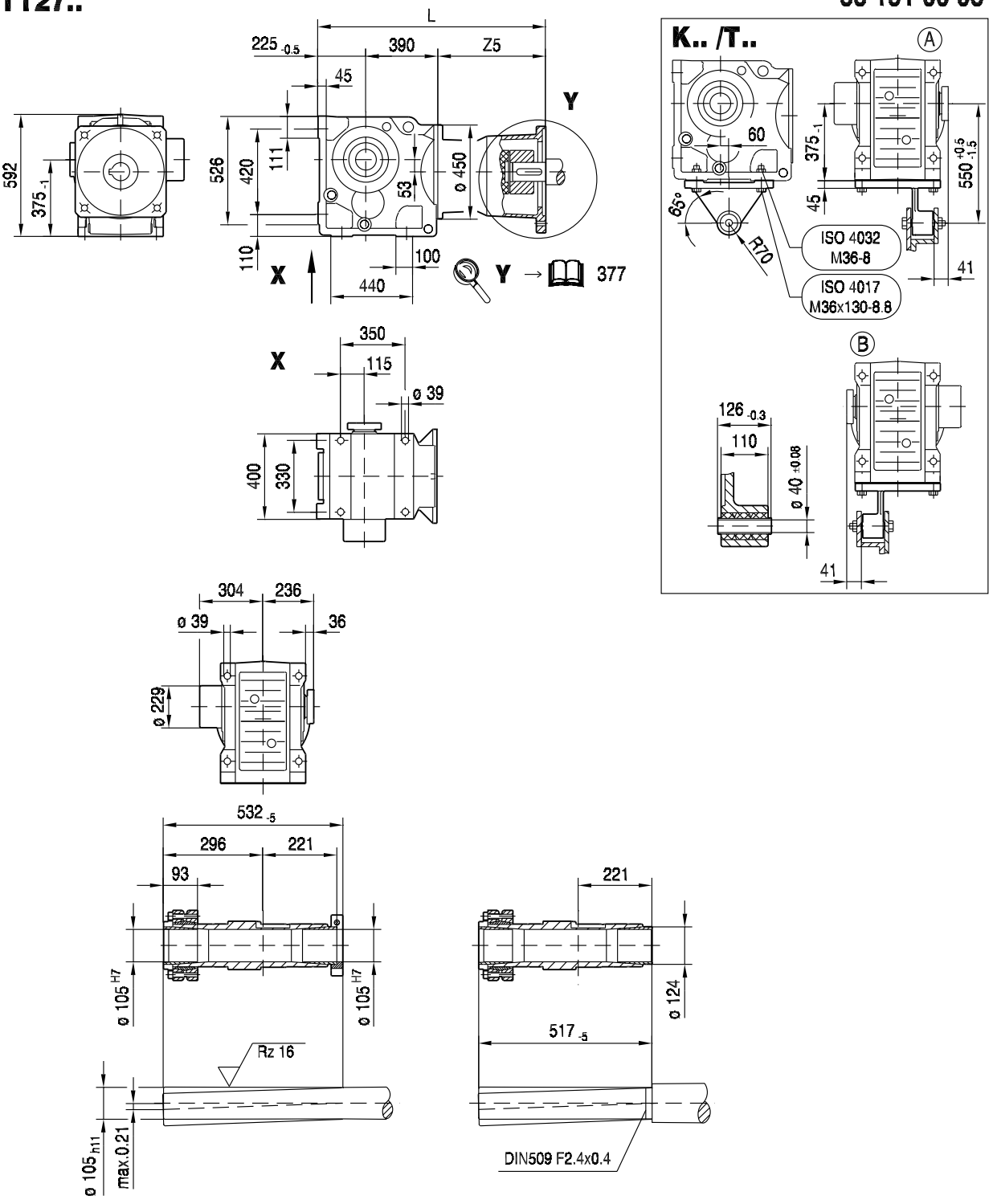

(→ 144)	AQ190/1-2	AQ190/3						
L	810	834						
Z5	194.5	218.5						

10.3 K.. AQ.. [mm]

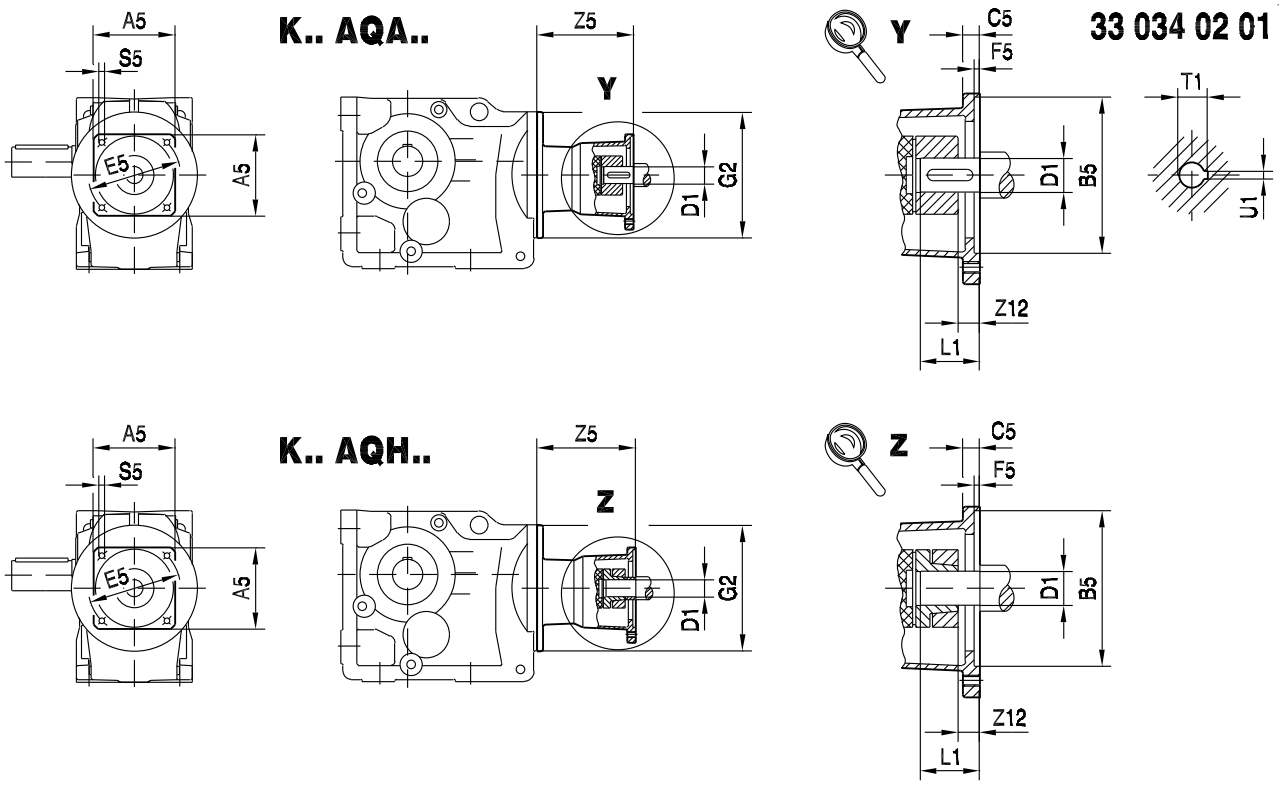

	Square dimension A5	Centering hole Ø B5	Flange thickness C5	Hole circle Ø E5	Centering depth F5	Threaded hole S5	Z12 (AQA)	Z12 (AQH)	Boupling bore Ø D1	Max. motor shaft insertion depth L1	T1	U1
AQ_80/1	82	60	8	75	3.5	M5	5.5	5.5	11	23	12.8	4
AQ_80/2	82	60	8	75	3.5	M5	5.5	5.5	14	30	16.3	5
AQ_80/3	82	50	8	95	3	M6	5.5	5.5	14	30	16.3	5
AQ_100/1	100	80	10	100	4	M6	0	0	14	30	16.3	5
AQ_100/2	100	95	12	115	4	M8	0	0	14	30	16.3	5
AQ_100/3	100	80	10	100	4	M6	2	14	19	40	21.8	6
AQ_100/4	100	95	12	115	4	M8	2	14	19	40	21.8	6
AQ_115/1	115	95	12	130	5	M8	11	23	19	40	21.8	6
AQ_115/2	115	110	12	130	5	M8	11	23	19	40	21.8	6
AQ_115/3	115	110	12	130	5	M8	16	16	24	50	27.3	8
AQ_140/1	140	110	15	165	5	M10	16	16	24	50	27.3	8
AQ_140/2	140	130	15	165	5	M10	16	16	24	50	27.3	8
AQ_140/3	140	130	15	165	5	M10	22	22	32	60	35.3	10
AQ_140/4	140	130	15	165	5	M10	22	22	28	60	31,3	8
AQ_160/1	162	155	15	190	5	M10	22	22	32	60	35,3	10
AQ_190/1	190	130	16	215	5	M12	24	24	32	60	35.3	10
AQ_190/2	190	180	16	215	5	M12	24	24	32	60	35.3	10
AQ_190/3	190	180	16	215	5	M12	34	34	38	80	41.3	10

11 S..

11.1 S.. AQ..

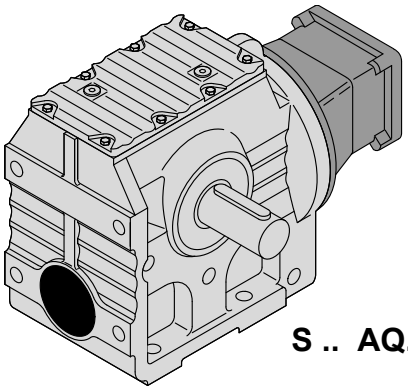

S .. AQ..

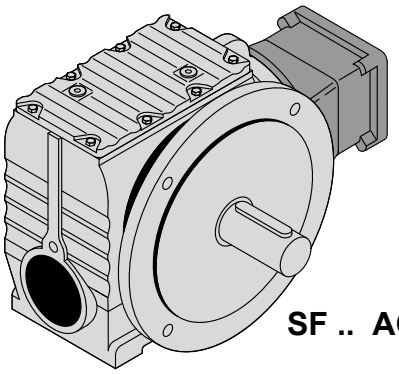

SF .. AQ..

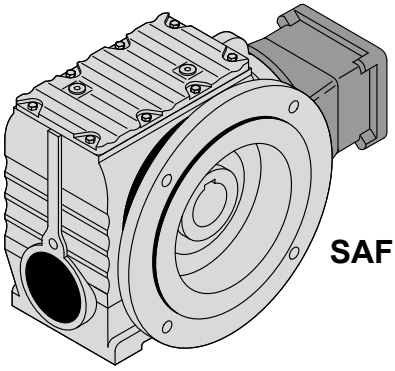

SAF .. AQ..

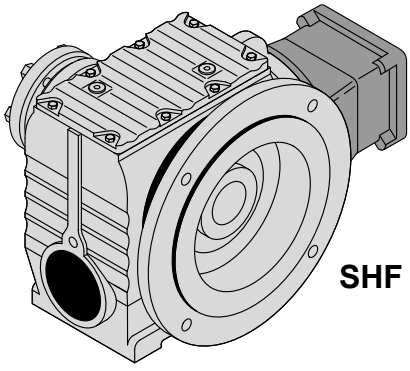

SHF .. AQ..

50415axx

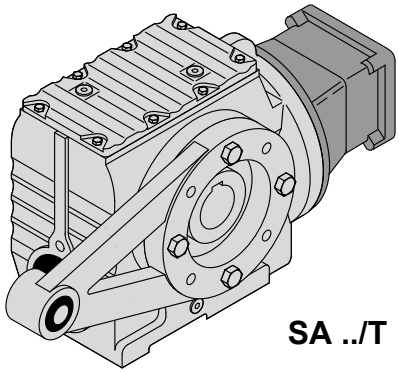

SA ../T AQ..

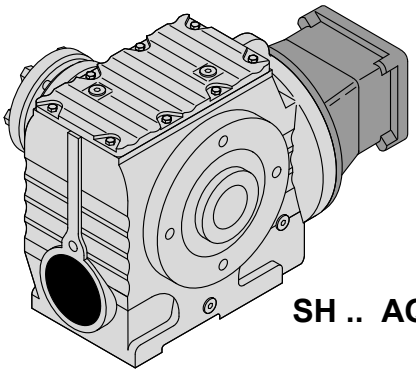

SH .. AQ..

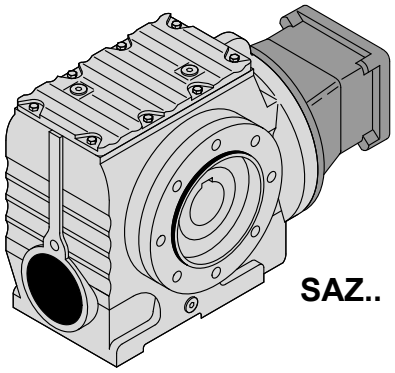

SAZ.. AQ..

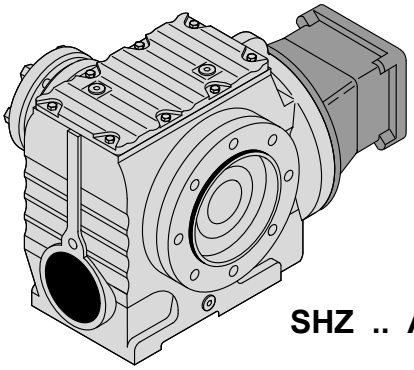

SHZ .. AQ..

50416axx

11.2 S.. AQ..

11.2.1 S 37 AQ.. [Nm]

[Nm]		AQ. M_{amax} | M_{apk} | $M_{aNotaus}$											
	i	80/1-3			100/1-4			115/1-2			115/3		
S37 2	3.97	32	43	64	32	42	63	32	42	63	32	42	63
	4.86	33	44	66	33	44	66	33	44	66	33	44	66
	5.38	34	45	68	34	44	66	34	44	66	34	44	66
	6.33	35	46	69	35	45	68	35	45	68	35	45	68
	6.80	43	48	72	43	47	70	43	47	70	43	47	70
	8.00	45	61	77	45	61	77	45	61	77	45	61	77
	9.02	46	62	78	46	62	78	46	62	78	46	62	78
	10.23	47	63	80	47	63	80	47	63	80	47	63	80
	10.91	48	64	82	48	64	82	48	64	82	48	64	82
	12.48	48	64	82	48	64	82	48	64	82	48	64	82
	13.39	49	65	83	49	65	83	49	65	83	49	65	83
	15.53	50	66	85	50	66	85	50	66	85	50	66	85
	18.24	52	67	88	52	67	88	52	67	88	52	67	88
	19.13	71	93	121	71	93	121	71	93	121	71	93	121
	19.89	52	68	88	52	68	88	52	68	88	52	68	88
	22.50	73	95	124	73	95	124	73	95	124	73	95	124
	25.38	74	96	126	74	96	126	74	96	126	74	96	126
	28.76	75	97	128	75	97	128	75	97	128	75	97	128
	30.68	76	98	129	76	98	129	76	98	129	76	98	129
	35.10	78	99	133	78	99	133	78	99	133	78	99	133
	37.66	79	100	134	79	100	134	79	100	134	79	100	134
	43.68	81	101	138	81	101	138	81	101	138	81	101	138
	51.30	81	103	138	81	103	138	81	103	138	81	103	138
	55.93	81	104	138	81	104	138	81	104	138	81	104	138

m [kg]		AQ.			
	s	80/1-3	100/1-4	115/1-2	115/3
S37	2	9.8	11	11	11
SF: + 1.3 kg / SA: + -0.3 kg / SAF: + 1.3 kg					

		AQ.			
		80/1-3	100/1-4	115/1-2	115/3
$J_A\ 10^{-4}$	[kgm^2]	0.77	1.4	1.4	3.1
c_{TA}	[Nm/']	0.25	0.25	0.25	0.625

S37							F_{Ramax}				F_{Rapk}			
n_e = 1400	i	M_{amax} [Nm]	M_{apk} [Nm]	$M_{aNotaus}$ [Nm]	n_{ak} [1/min]	J_G 10^{-4} [kgm^2]	S [N]	SF [N]	SA [N]	SAF [N]	S [N]	SF [N]	SA [N]	SAF [N]
S37 2	3.97	32	48	72	277	0.92	1400	1570	2010	2010	3000	3000	4000	4000
	4.86	33	49	74	226	0.67	1520	1700	2180	2180	3000	3000	4000	4000
	5.38	34	51	76	204	0.59	1570	1760	2260	2260	3000	3000	4000	4000
	6.33	35	52	78	174	0.44	1670	1870	2400	2400	3000	3000	4000	4000
	6.80	43	60	90	29	0.47	1630	1840	2360	2360	3000	3000	4000	4000
	8.00	45	61	77	25	0.36	1730	1950	2500	2500	3000	3000	4000	4000
	9.02	46	62	78	22	0.30	1810	2040	2610	2610	3000	3000	4000	4000
	10.23	47	63	80	20	0.24	1900	2140	2740	2740	3000	3000	4000	4000
	10.91	48	64	82	18	0.22	1940	2190	2800	2800	3000	3000	4000	4000
	12.48	48	64	82	16	0.18	2060	2320	2970	2970	3000	3000	4000	4000
	13.39	49	65	83	15	0.16	2110	2370	3040	3040	3000	3000	4000	4000
	15.53	50	66	85	13	0.13	2240	2510	3220	3220	3000	3000	4000	4000
	18.24	52	67	88	11	0.10	2380	2660	3410	3410	3000	3000	4000	4000
	19.13	71	93	121	10	0.43	2380	2670	3420	3420	3000	3000	4000	4000
	19.89	52	68	88	10	0.090	2470	2760	3540	3540	3000	3000	4000	4000
	22.50	73	95	124	9	0.32	2530	2840	3630	3630	3000	3000	4000	4000
	25.38	74	96	126	8	0.27	2660	2980	3810	3810	3000	3000	4000	4000
	28.76	75	97	128	7	0.22	2800	3000	4000	4000	3000	3000	4000	4000
	30.68	76	98	129	16	0.20	2860	3000	4000	4000	3000	3000	4000	4000
	35.10	78	99	133	14	0.16	3000	3000	4000	4000	3000	3000	4000	4000
	37.66	79	100	134	13	0.15	3000	3000	4000	4000	3000	3000	4000	4000
	43.68	81	101	138	16	0.12	3000	3000	4000	4000	3000	3000	4000	4000
	51.30	81	103	138	14	0.090	3000	3000	4000	4000	3000	3000	4000	4000
	55.93	81	104	138	13	0.080	3000	3000	4000	4000	3000	3000	4000	4000

AQ.				c_{TG}			
	i	n_{epk} [1/min]	η [%]	S [Nm/°]	SF [Nm/°]	SA [Nm/°]	SAF [Nm/°]
S37 2	3.97	4500	88	-	-	-	-
	4.86	4500	88	-	-	-	-
	5.38	4500	88	-	-	-	-
	6.33	4500	87	-	-	-	-
	6.80	4500	87	-	-	-	-
	8.00	4500	86	-	-	-	-
	9.02	4500	86	-	-	-	-
	10.23	4500	86	-	-	-	-
	10.91	4500	86	-	-	-	-
	12.48	4500	85	-	-	-	-
	13.39	4500	85	-	-	-	-
	15.53	4500	84	-	-	-	-
	18.24	4500	84	-	-	-	-
	19.13	4500	78	-	-	-	-
	19.89	4500	84	-	-	-	-
	22.50	4500	77	-	-	-	-
	25.38	4500	76	-	-	-	-
	28.76	4500	76	-	-	-	-
	30.68	4500	76	-	-	-	-
	35.10	4500	75	-	-	-	-
	37.66	4500	75	-	-	-	-
	43.68	4500	74	-	-	-	-
	51.30	4500	73	-	-	-	-
	55.93	4500	73	-	-	-	-

11.2.2 S 37 AQ.. [mm]

02 063 00 08

S37..

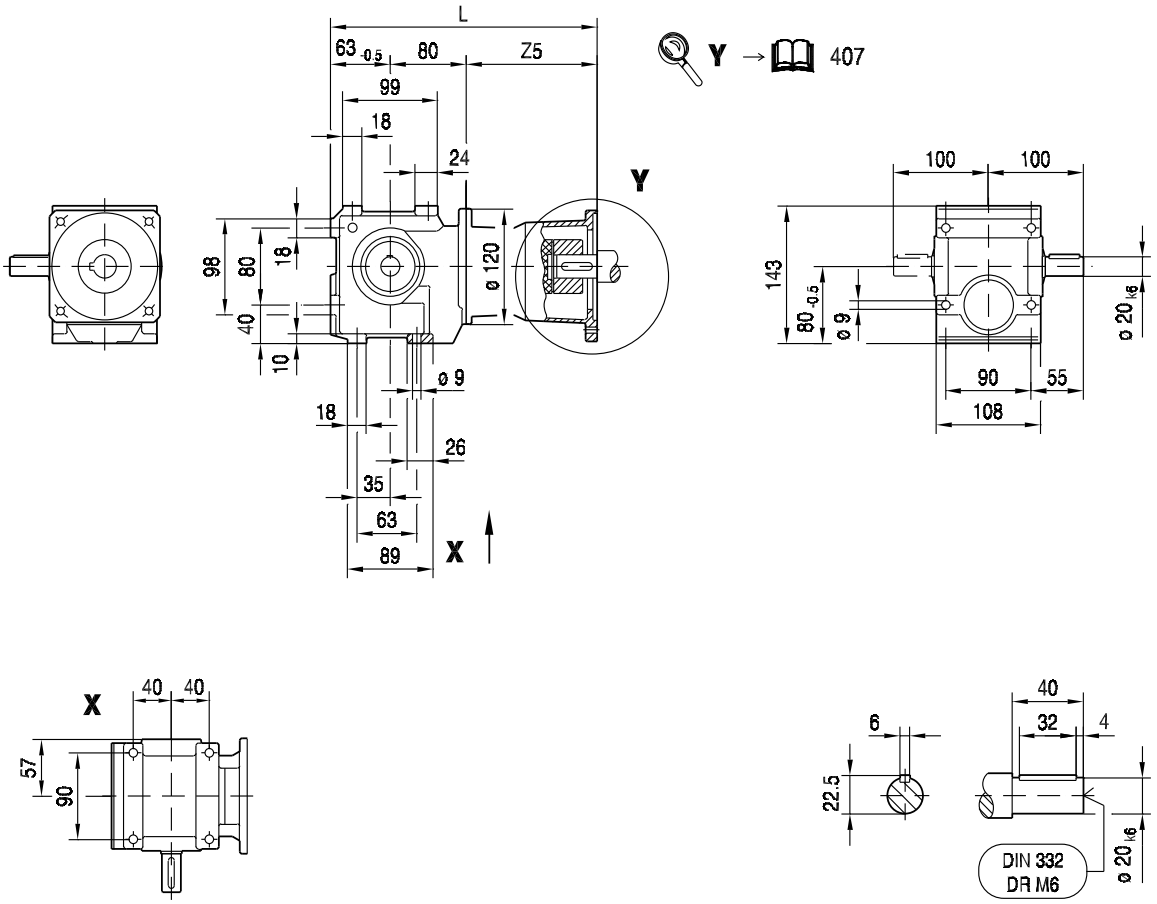

(→ 144)	AQ80/1-3	AQ100/1-2	AQ100/3-4	AQ115/1-3				
L	248	273	287	296				
Z5	104.5	129.5	143.5	152.5				

SF37..

02 064 00 08

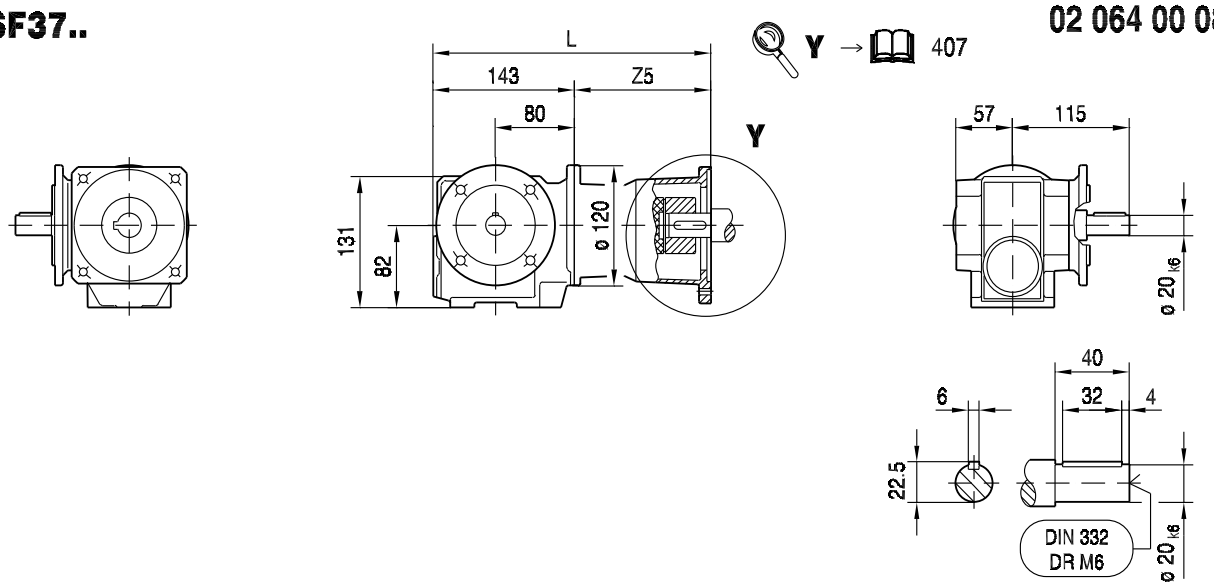

ø 120

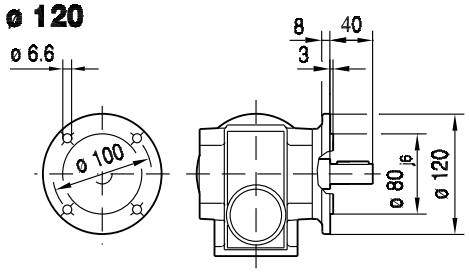

ø 160

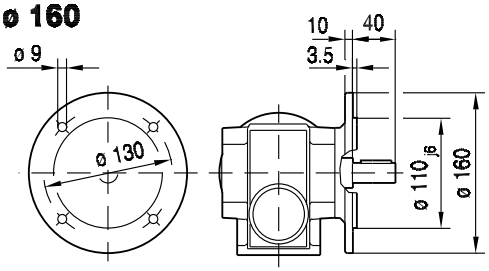

SAF37..

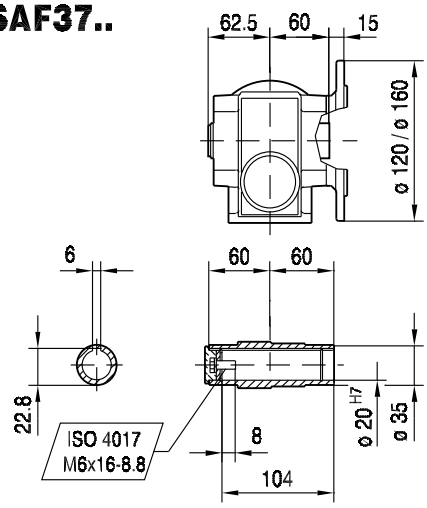

SHF37..

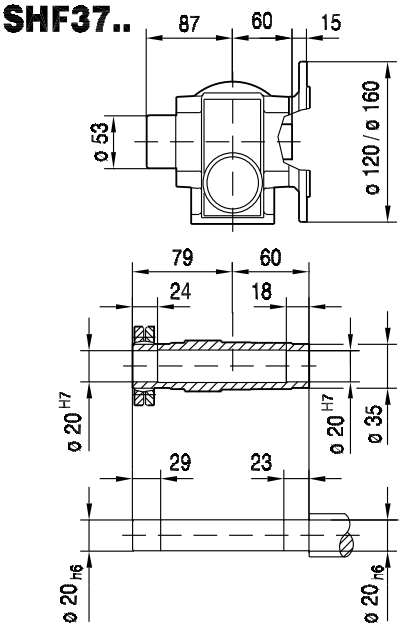

(→ 144)	AQ80/1-3	AQ100/1-2	AQ100/3-4	AQ115/1-3				
L	248	273	287	296				
Z5	104.5	129.5	143.5	152.5				

02 065 00 08

SA37..

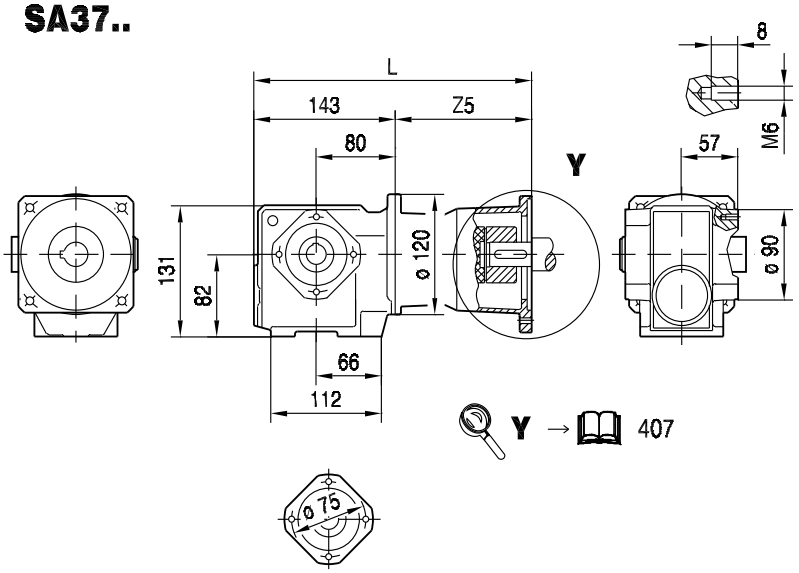

S.. /T..

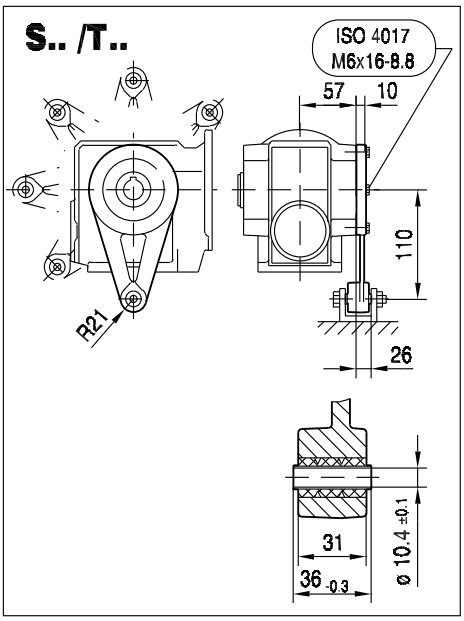

SA37..

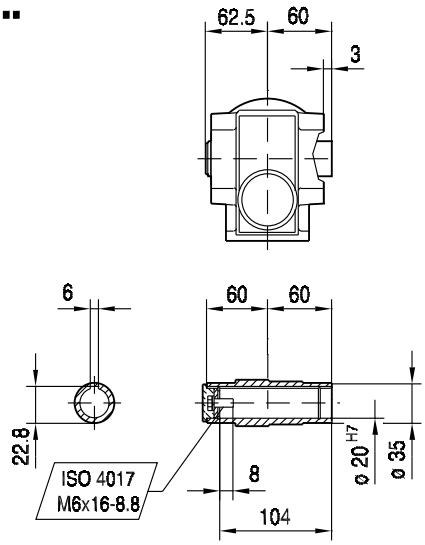

SH37..

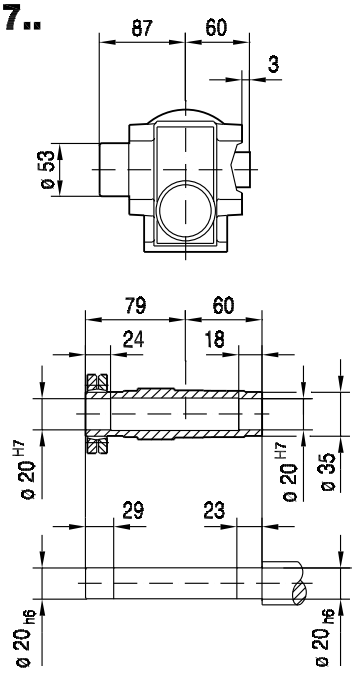

(→ 144)	AQ80/1-3	AQ100/1-2	AQ100/3-4	AQ115/1-3				
L	248	273	287	296				
Z5	104.5	129.5	143.5	152.5				

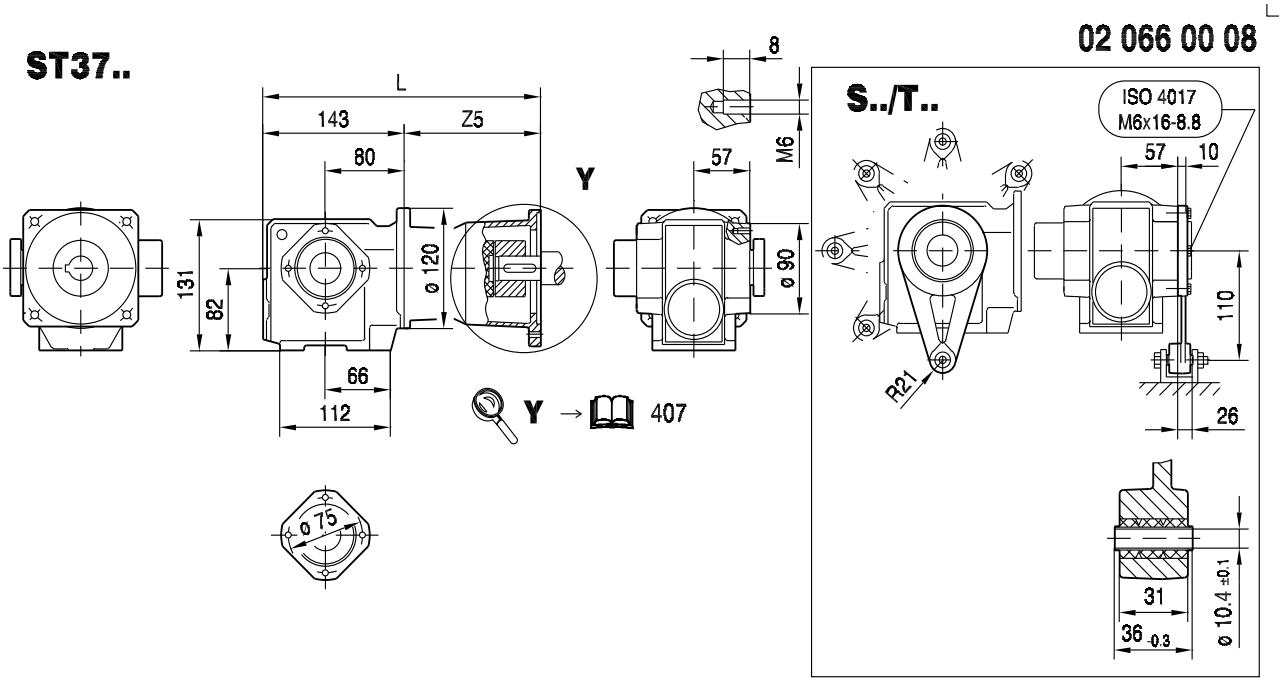

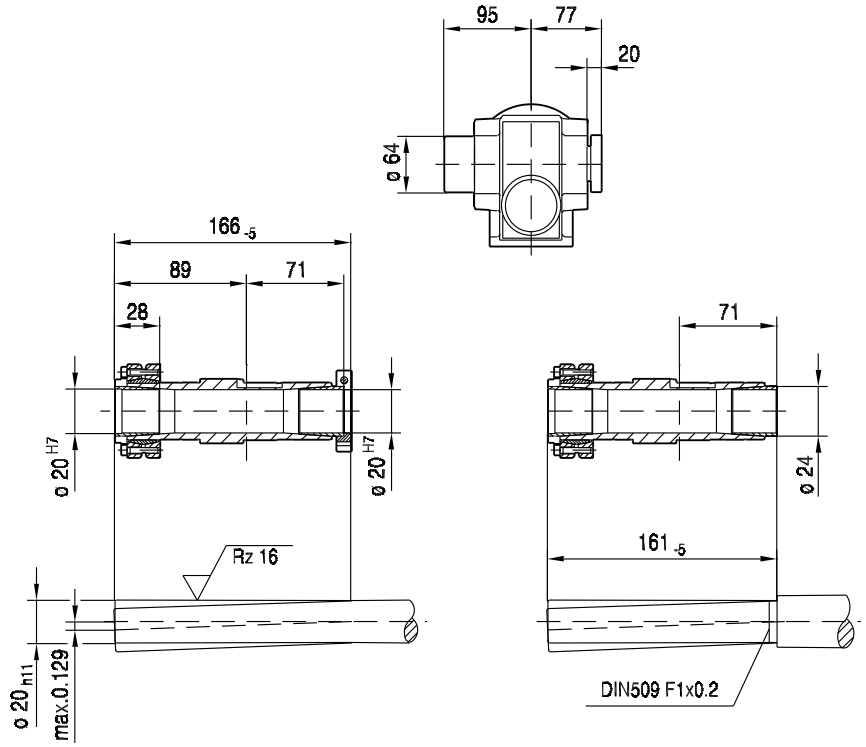

(→ 144)	AQ80/1-3	AQ100/1-2	AQ100/3-4	AQ115/1-3				
L	248	273	287	296				
Z5	104.5	129.5	143.5	152.5				

11.2.3 S 47 AQ.. [Nm]

[Nm]		AQ. M_{amax} | M_{apk} | $M_{aNotaus}$											
	i	80/1-3			100/1-4			115/1-2			115/3		
S47  2	4.00	61	69	104	61	72	108	61	72	108	61	72	108
	4.76	72	76	114	72	87	130	72	87	130	72	87	130
	5.39	74	81	122	74	97	146	74	97	146	74	97	146
	6.40	76	87	130	76	114	171	76	114	171	76	114	171
	6.83	78	90	135	78	117	176	78	117	176	78	117	176
	7.28	103	112	175	103	112	175	103	112	175	103	129	175
	8.64	109	132	185	109	132	185	109	132	185	109	146	185
	9.23	109	141	185	109	141	185	109	141	185	109	146	185
	10.80	109	145	185	109	145	185	109	145	185	109	145	185
	12.10	109	145	185	109	145	185	109	145	185	109	145	185
	14.24	110	144	187	110	144	187	110	144	187	110	144	187
	16.47	110	144	187	110	144	187	110	144	187	110	144	187
	17.62	110	144	187	110	144	187	110	144	187	110	144	187
	19.54	144	184	245	144	184	245	144	184	245	144	184	245
	20.33	110	143	187	110	143	187	110	143	187	110	143	187
	23.20	152	200	255	152	200	255	152	200	255	152	200	255
	24.77	155	205	260	155	205	260	155	205	260	155	205	260
	29.00	155	215	260	155	215	260	155	215	260	155	215	260
	32.48	155	215	260	155	215	260	155	215	260	155	215	260
	38.23	155	215	260	155	215	260	155	215	260	155	215	260
	44.22	155	210	260	155	210	260	155	210	260	155	210	260
	47.32	155	210	260	155	210	260	155	210	260	155	210	260
	54.59	155	210	260	155	210	260	155	210	260	155	210	260
	63.80	155	210	260	155	210	260	155	210	260	155	210	260
	69.39	155	210	260	155	210	260	155	210	260	155	210	260

m [kg]		AQ.			
	s	80/1-3	100/1-4	115/1-2	115/3
S47		13	14	14	14
SF: + 3.6 kg / SA: + 1.1 kg / SAF: + 2.8 kg					

		AQ.			
		80/1-3	100/1-4	115/1-2	115/3
$J_A\ 10^{-4}$	[kgm^2]	0.77	1.4	1.4	3.1
c_{TA}	[Nm/']	0.25	0.25	0.25	0.625

S47							F_{Ramax}				F_{Rapk}			
n_e = 1400	i	M_{amax} [Nm]	M_{apk} [Nm]	$M_{aNotaus}$ [Nm]	n_{ak} [1/min]	J_G 10^{-4} [kgm^2]	S [N]	SF [N]	SA [N]	SAF [N]	S [N]	SF [N]	SA [N]	SAF [N]
	4.00	61	72	108	225	2.5	1980	2420	2740	2740	5660	6140	7000	7000
	4.76	72	87	130	231	1.8	2010	2490	2780	2780	5580	6070	7000	7000
	5.39	74	97	146	204	1.5	2110	2600	2920	2920	5530	6030	7000	7000
	6.40	76	114	171	172	1.1	2260	2780	3120	3120	5440	5940	7000	7000
	6.83	78	117	176	161	1.0	2300	2840	3190	3190	5420	5930	7000	7000
	7.28	103	129	175	27	1.1	2110	2690	2940	2940	5360	5870	7000	7000
	8.64	109	146	185	23	0.83	2230	2840	3110	3110	5260	5780	7000	7000
	9.23	109	146	185	22	0.74	2310	2930	3210	3210	5260	5780	7000	7000
	10.80	109	145	185	19	0.57	2500	3150	3480	3480	5270	5790	7000	7000
	12.10	109	145	185	17	0.47	2650	3310	3670	3670	5270	5790	7000	7000
	14.24	110	144	187	14	0.35	2850	3540	3950	3950	5270	5790	7000	7000
S47	16.47	110	144	187	12	0.28	3060	3770	4230	4230	5270	5790	7000	7000
 2	17.62	110	144	187	11	0.26	3160	3880	4360	4360	5270	5790	7000	7000
	19.54	144	184	245	10	0.94	3370	4120	4660	4660	5200	5710	7000	7000
	20.33	110	143	187	10	0.20	3370	4130	4650	4650	5280	5800	7000	7000
	23.20	152	200	258	9	0.72	3570	4360	4940	4940	5110	5620	7000	7000
	24.77	155	205	264	8	0.65	3650	4460	5050	5050	5080	5590	7000	7000
	29.00	155	215	264	7	0.49	3920	4760	5420	5420	5020	5530	7000	7000
	32.48	155	215	264	6	0.41	4120	4990	5690	5690	5020	5530	7000	7000
	38.23	155	215	264	5	0.31	4420	5330	6100	6100	5020	5530	7000	7000
	44.22	155	210	264	5	0.25	4710	5660	6490	6490	5050	5560	7000	7000
	47.32	155	210	264	4	0.23	4850	5810	6680	6680	5050	5560	7000	7000
	54.59	155	210	264	9	0.18	5150	5870	7000	7000	5050	5560	7000	7000
	63.80	155	210	264	8	0.15	5370	5870	7000	7000	5050	5560	7000	7000
	69.39	155	210	264	7	0.13	5370	5870	7000	7000	5050	5560	7000	7000

AQ.				c_{TG}			
	i	n_{epk} [1/min]	η [%]	S [Nm/°]	SF [Nm/°]	SA [Nm/°]	SAF [Nm/°]
	4.00	4500	88	-	-	-	-
	4.76	4500	88	-	-	-	-
	5.39	4500	88	-	-	-	-
	6.40	4500	88	-	-	-	-
	6.83	4500	88	-	-	-	-
	7.28	4500	87	-	-	-	-
	8.64	4500	87	-	-	-	-
	9.23	4500	87	-	-	-	-
	10.80	4500	87	-	-	-	-
	12.10	4500	87	-	-	-	-
	14.24	4500	86	-	-	-	-
S47	16.47	4500	86	-	-	-	-
 2	17.62	4500	86	-	-	-	-
	19.54	4500	79	-	-	-	-
	20.33	4500	85	-	-	-	-
	23.20	4500	79	-	-	-	-
	24.77	4500	79	-	-	-	-
	29.00	4500	78	-	-	-	-
	32.48	4500	77	-	-	-	-
	38.23	4500	77	-	-	-	-
	44.22	4500	76	-	-	-	-
	47.32	4500	75	-	-	-	-
	54.59	4500	75	-	-	-	-
	63.80	4500	74	-	-	-	-
	69.39	4500	73	-	-	-	-

11.2.4 S 47 AQ.. [mm]

02 067 00 08

S47..

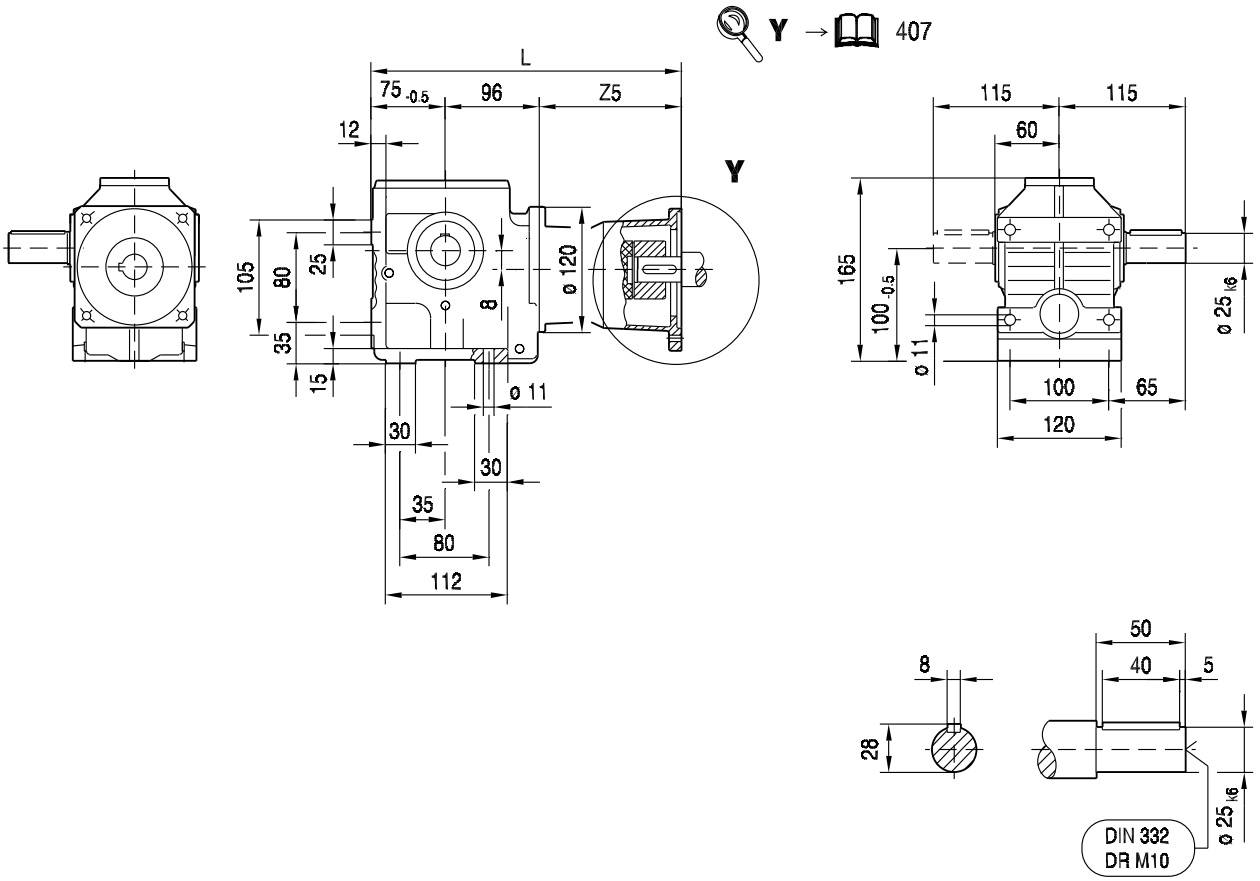

(→ 144)	AQ80/1-3	AQ100/1-2	AQ100/3-4	AQ115/1-3				
L	276	301	315	324				
Z5	104.5	129.5	143.5	152.5				

02 068 00 08

SF47..

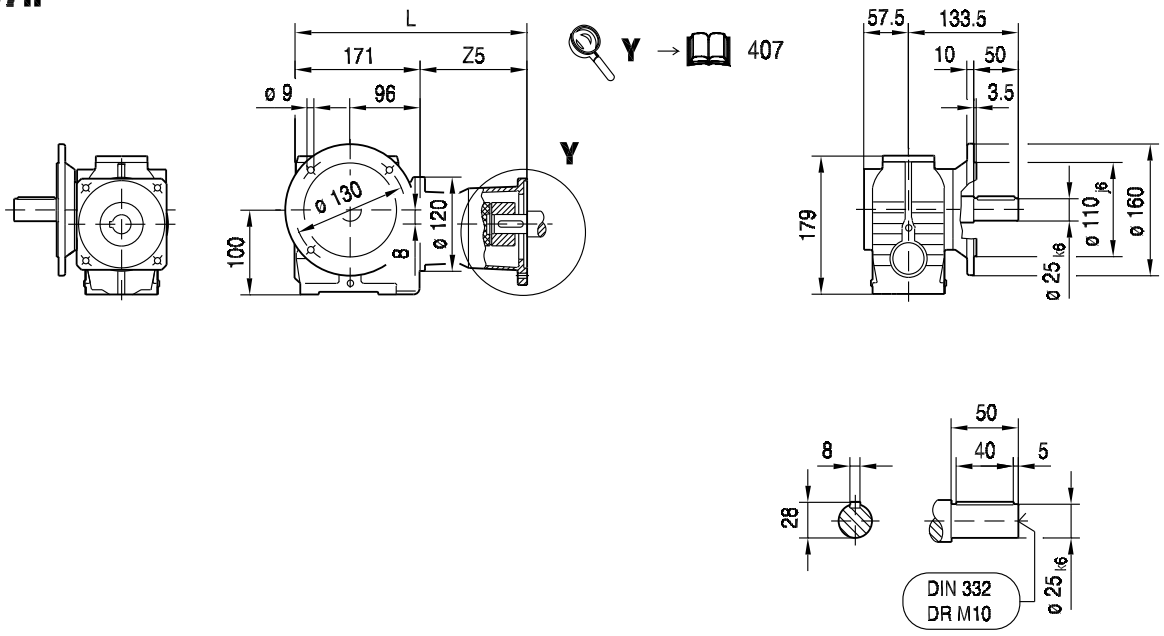

SAF47..

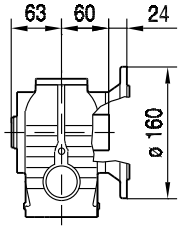

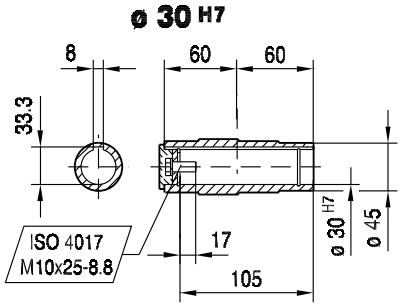

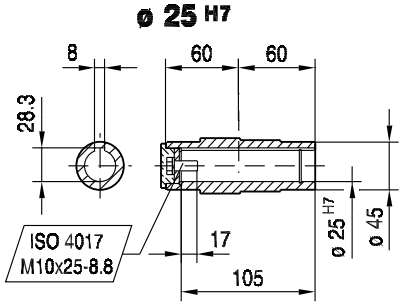

SHF47..

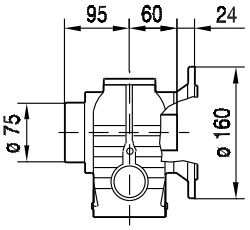

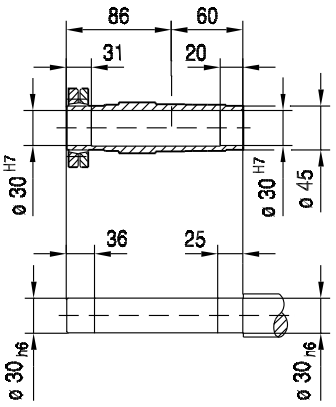

(→ 144)	AQ80/1-3	AQ100/1-2	AQ100/3-4	AQ115/1-3				
L	276	301	315	324				
Z5	104.5	129.5	143.5	152.5				

SA47..

02 069 00 08

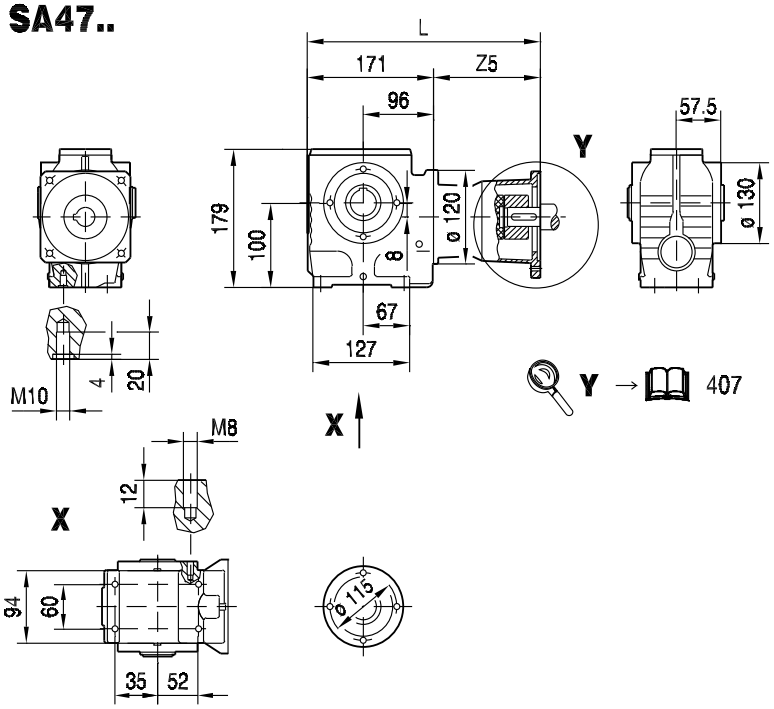

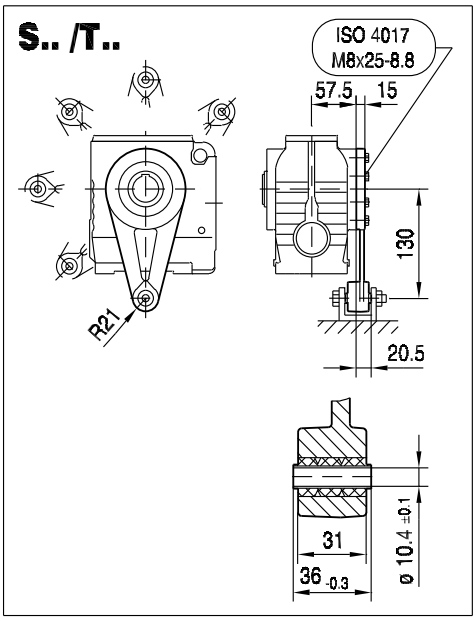

SA47..

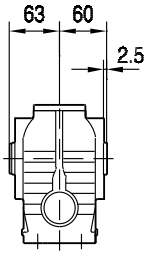

SH47..

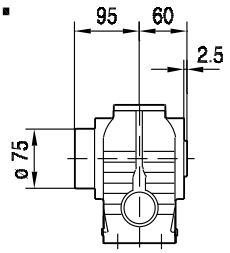

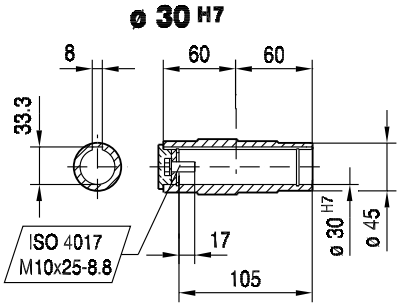

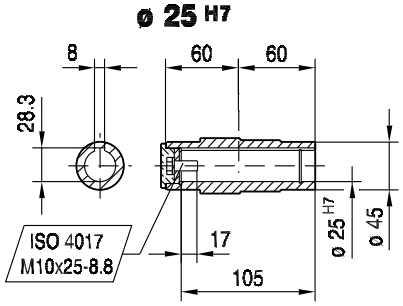

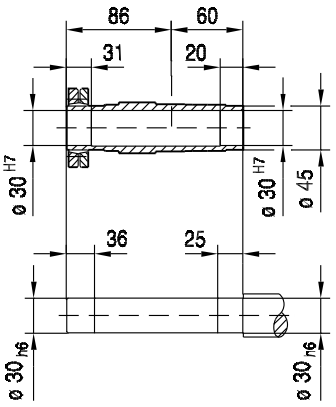

(→ 144)	AQ80/1-3	AQ100/1-2	AQ100/3-4	AQ115/1-3				
L	276	301	315	324				
Z5	104.5	129.5	143.5	152.5				

02 070 00 08

SAZ47..

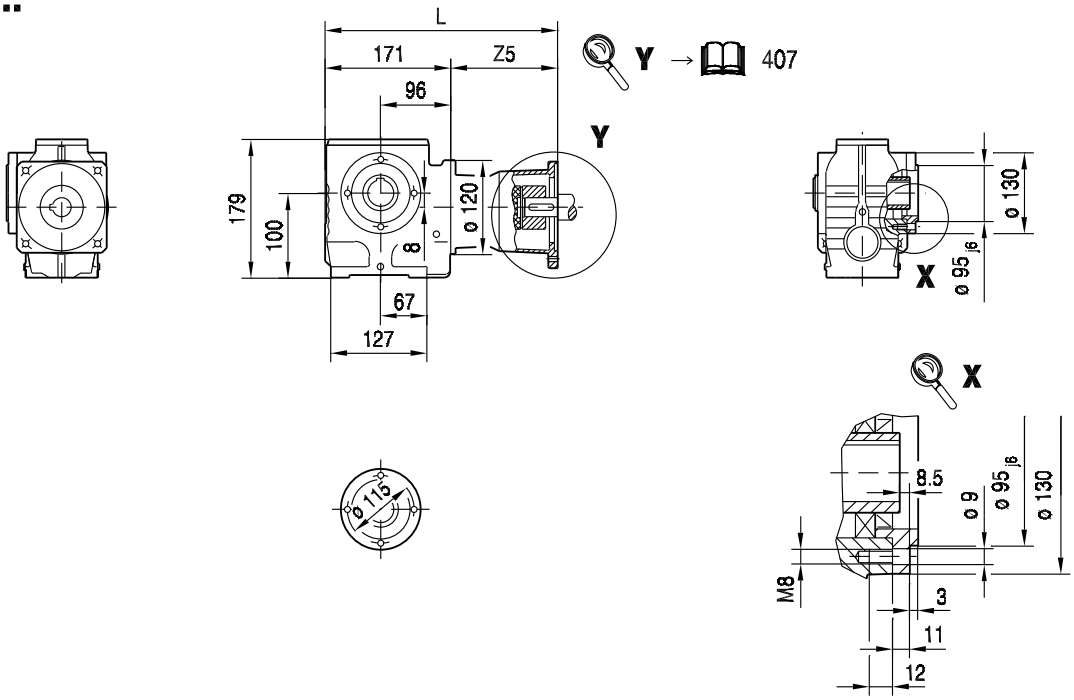

SAZ47..

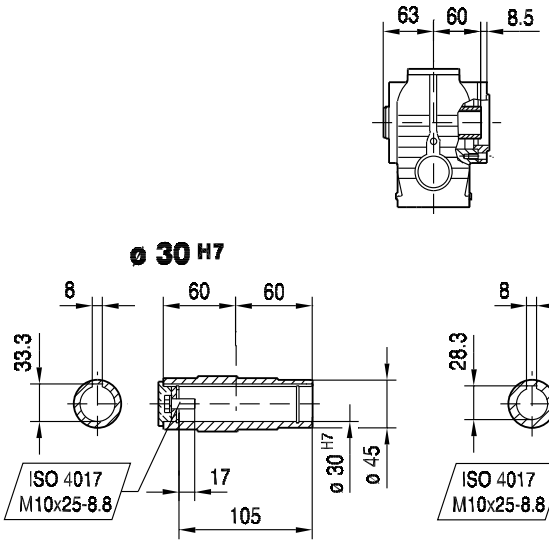

SHZ47..

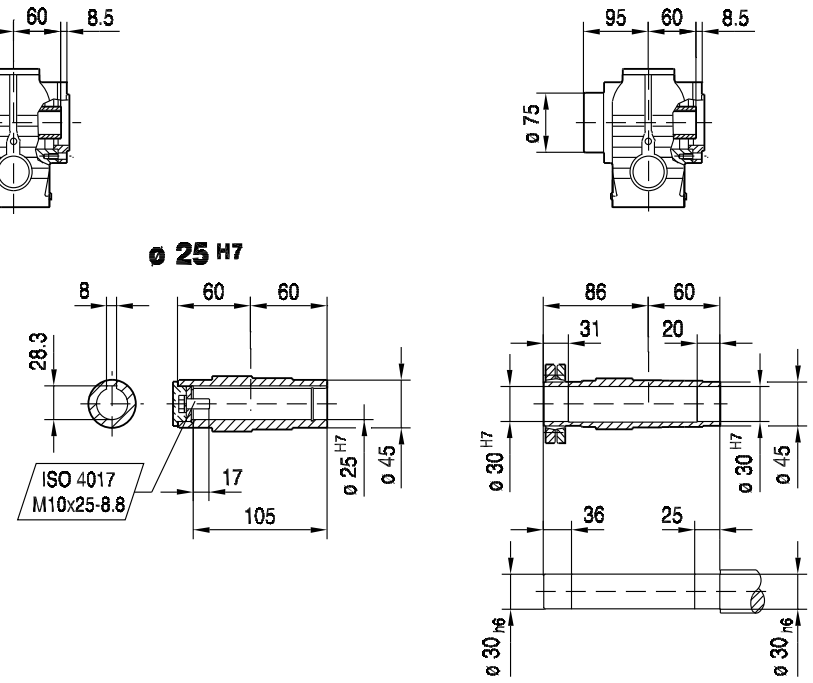

(→ 144)	AQ80/1-3	AQ100/1-2	AQ100/3-4	AQ115/1-3				
L	276	301	315	324				
Z5	104.5	129.5	143.5	152.5				

ST47..

02 071 00 08

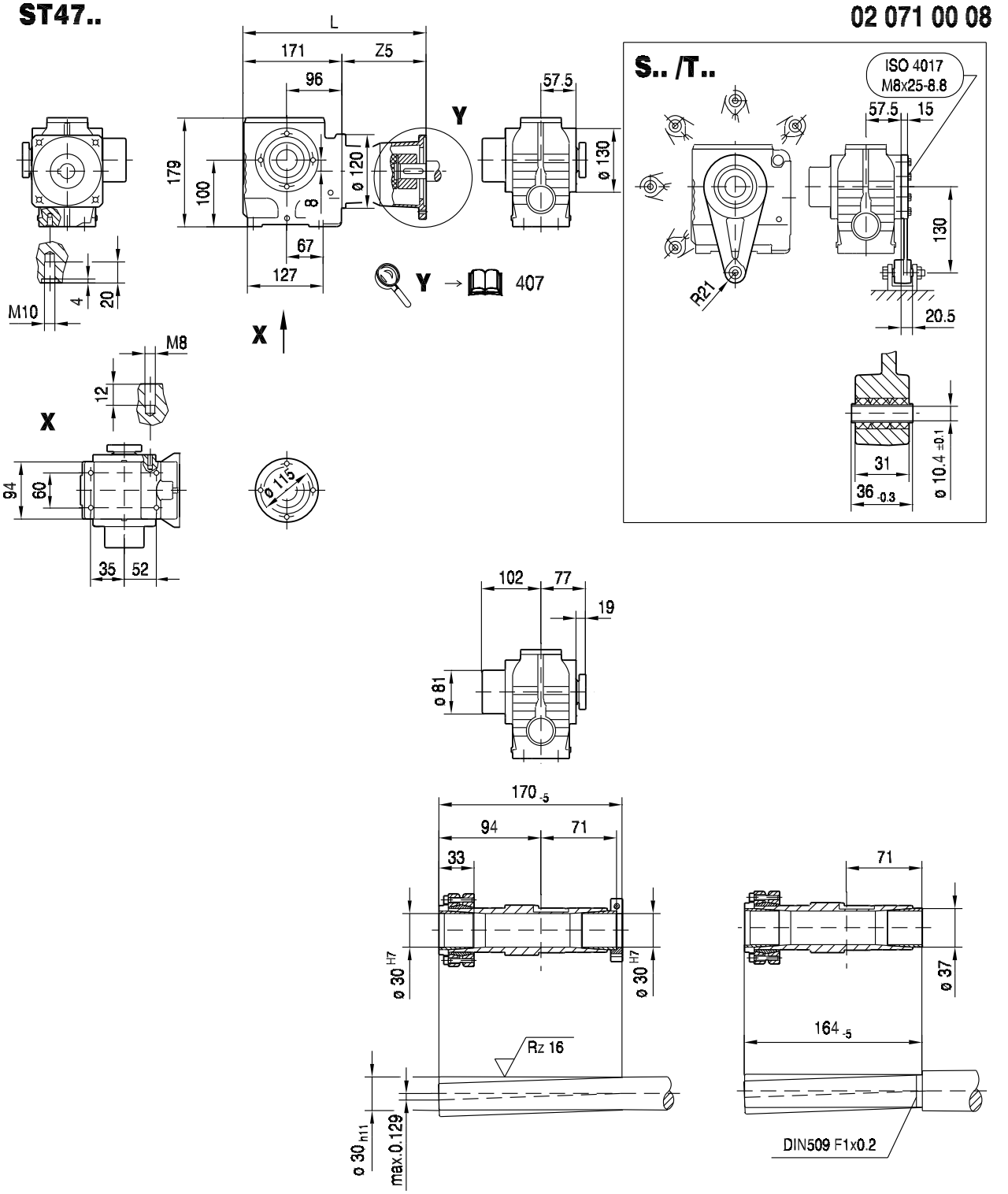

(→ 144)	AQ80/1-3	AQ100/1-2	AQ100/3-4	AQ115/1-3				
L	276	301	315	324				
Z5	104.5	129.5	143.5	152.5				

11.2.5 S 57 AQ.. [Nm]

[Nm]		AQ. M_{amax} | M_{apk} | $M_{aNotaus}$											
	i	80/1-3			100/1-4			115/1-2			115/3		
S57 2	4.00	63	68	102	63	106	159	63	106	159	88	106	159
	4.76	74	75	112	74	126	189	74	126	189	93	126	189
	5.39	84	80	120	84	142	210	84	142	210	95	142	210
	6.40	98	86	129	98	147	220	98	147	220	98	147	220
	6.83	100	88	132	100	150	225	100	150	225	100	150	225
	7.28	112	112	215	112	112	225	112	112	225	146	183	245
	8.64	133	133	255	133	133	265	133	133	265	166	210	280
	9.23	142	142	275	142	142	280	142	142	280	169	220	285
	10.80	165	165	285	165	165	285	165	165	285	169	220	285
	12.10	169	184	285	169	184	285	169	184	285	169	220	285
	14.24	169	215	285	169	215	285	169	215	285	169	220	285
	16.47	168	220	285	168	220	285	168	220	285	168	220	285
	17.62	168	215	285	168	215	285	168	215	285	168	215	285
	19.54	215	270	365	215	270	365	215	270	365	215	270	365
	20.33	168	215	285	168	215	285	168	215	285	168	215	285
	23.20	245	315	415	245	315	415	245	315	415	245	315	415
	24.77	245	330	415	245	330	415	245	330	415	245	330	415
	29.00	245	360	415	245	360	415	245	360	415	245	360	415
	32.48	245	365	415	245	365	415	245	365	415	245	365	415
	38.23	245	365	415	245	365	415	245	365	415	245	365	415
	44.22	245	365	415	245	365	415	245	365	415	245	365	415
	47.32	245	365	415	245	365	415	245	365	415	245	365	415
	54.59	245	365	415	245	365	415	245	365	415	245	365	415
	63.80	245	360	415	245	360	415	245	360	415	245	360	415
	69.39	245	360	415	245	360	415	245	360	415	245	360	415

m [kg]		AQ.			
	s	80/1-3	100/1-4	115/1-2	115/3
S57	2	17	17	18	18
SF: + 3.8 kg / SA: + -0.3 kg / SAF: + 2.6 kg					

		AQ.			
		80/1-3	100/1-4	115/1-2	115/3
$J_A\ 10^{-4}$	[kgm^2]	0.77	1.4	1.4	3.1
c_{TA}	[Nm/']	0.25	0.25	0.25	0.625

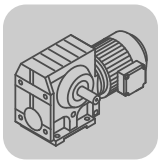

S57							F_{Ramax}				F_{Rapk}			
n_e = 1400	i	M_{amax} [Nm]	M_{apk} [Nm]	$M_{aNotaus}$ [Nm]	n_{ak} [1/min]	J_G 10^{-4} [kgm^2]	S [N]	SF [N]	SA [N]	SAF [N]	S [N]	SF [N]	SA [N]	SAF [N]
	4.00	88	106	159	275	4.5	3380	3320	2730	2730	8170	8170	10000	10000
	4.76	93	126	189	231	3.3	3590	3520	2900	2900	8110	8110	10000	10000
	5.39	95	142	210	204	2.6	3760	3690	3040	3040	8060	8060	10000	10000
	6.40	98	147	220	172	1.9	4010	3930	3250	3250	8040	8040	10000	10000
	6.83	100	150	225	161	1.7	4100	4010	3330	3330	8030	8030	10000	10000
	7.28	146	183	248	27	1.7	3790	3770	2620	2620	7880	7880	10000	10000
	8.64	166	211	282	23	1.3	3900	3890	2430	2430	7730	7730	10000	10000
	9.23	169	223	287	22	1.1	3990	3980	2530	2530	7660	7660	10000	10000
	10.80	169	220	287	19	0.85	4290	4270	3000	3000	7680	7680	10000	10000
	12.10	169	220	287	17	0.70	4520	4490	3360	3360	7680	7680	10000	10000
	14.24	169	220	287	14	0.51	4860	4820	3810	3810	7680	7680	10000	10000
S57	16.47	168	220	286	12	0.40	5200	5130	4120	4120	7680	7680	10000	10000
2	17.62	168	215	286	11	0.36	5350	5280	4260	4260	7710	7710	10000	10000
	19.54	215	274	366	26	1.3	5720	5620	4610	4610	7300	7300	10000	10000
	20.33	168	215	286	10	0.28	5690	5600	4560	4560	7710	7710	10000	10000
	23.20	245	315	417	9	0.95	5930	5840	4710	4710	6950	6950	10000	10000
	24.77	245	330	417	8	0.85	6100	6000	4870	4870	6800	6800	10000	10000
	29.00	245	360	417	7	0.65	6520	6410	5250	5250	6470	6470	10000	10000
	32.48	245	367	417	6	0.54	6840	6710	5540	5540	6380	6380	10000	10000
	38.23	245	367	417	5	0.39	7320	7170	5970	5970	6380	6380	10000	10000
	44.22	245	367	417	11	0.32	7520	7520	6380	6380	6380	6380	10000	10000
	47.32	245	367	417	11	0.28	7520	7520	6580	6580	6380	6380	10000	10000
	54.59	245	367	417	9	0.23	7520	7520	7000	7000	6380	6380	10000	10000
	63.80	245	360	417	8	0.18	7520	7520	7500	7500	6470	6470	10000	10000
	69.39	245	360	417	7	0.15	7520	7520	7770	7770	6470	6470	10000	10000

AQ.				c_{TG}			
	i	n_{epk} [1/min]	η [%]	S [Nm/']	SF [Nm/']	SA [Nm/']	SAF [Nm/']
	4.00	4500	90	-	-	-	-
	4.76	4500	90	-	-	-	-
	5.39	4500	90	-	-	-	-
	6.40	4500	89	-	-	-	-
	6.83	4500	89	-	-	-	-
	7.28	4500	89	-	-	-	-
	8.64	4500	88	-	-	-	-
	9.23	4500	88	-	-	-	-
	10.80	4500	88	-	-	-	-
	12.10	4500	88	-	-	-	-
	14.24	4500	87	-	-	-	-
S57	16.47	4500	87	-	-	-	-
2	17.62	4500	86	-	-	-	-
	19.54	4500	81	-	-	-	-
	20.33	4500	86	-	-	-	-
	23.20	4500	81	-	-	-	-
	24.77	4500	80	-	-	-	-
	29.00	4500	80	-	-	-	-
	32.48	4500	79	-	-	-	-
	38.23	4500	78	-	-	-	-
	44.22	4500	78	-	-	-	-
	47.32	4500	77	-	-	-	-
	54.59	4500	77	-	-	-	-
	63.80	4500	76	-	-	-	-
	69.39	4500	75	-	-	-	-

11.2.6 S 57 AQ.. [mm]

02 072 00 08

S57..

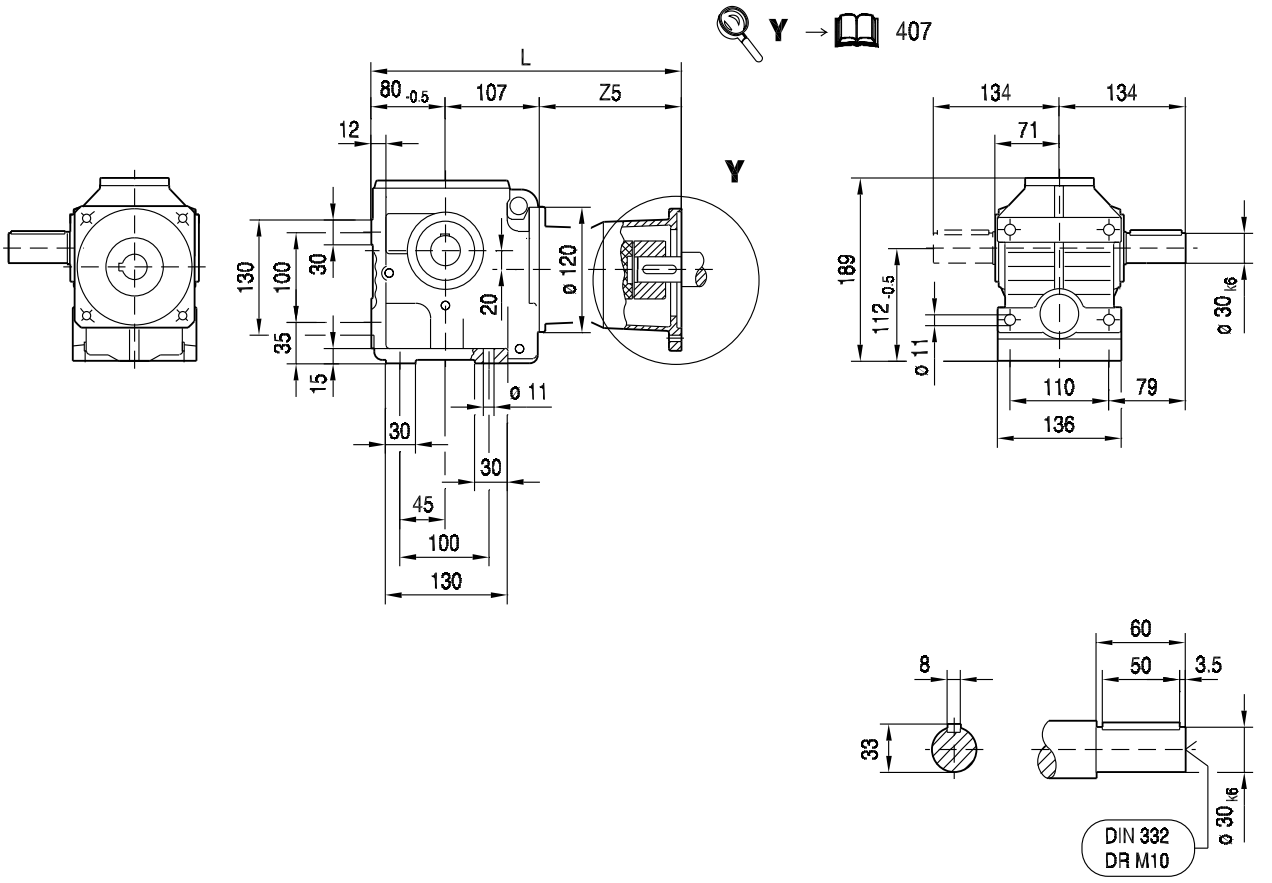

(→ 144)	AQ80/1-3	AQ100/1-2	AQ100/3-4	AQ115/1-3				
L	292	317	331	340				
Z5	104.5	129.5	143.5	152.5				

02 073 00 08

SF57..

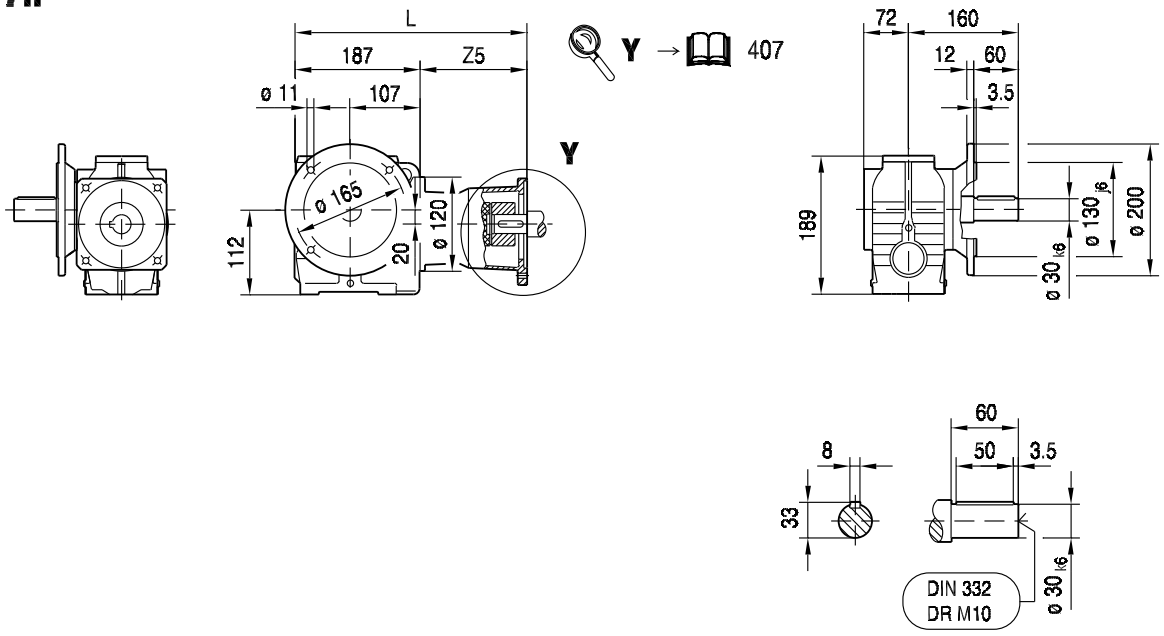

SAF57..

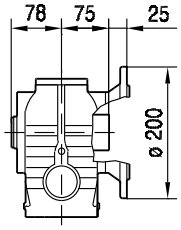

SHF57..

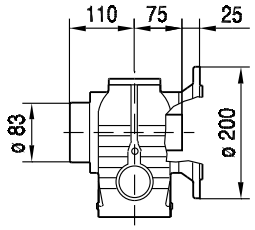

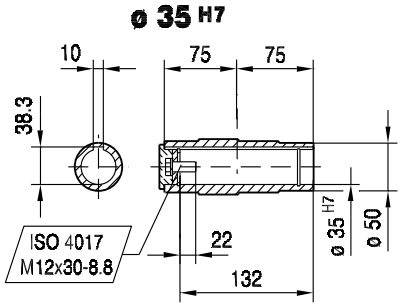

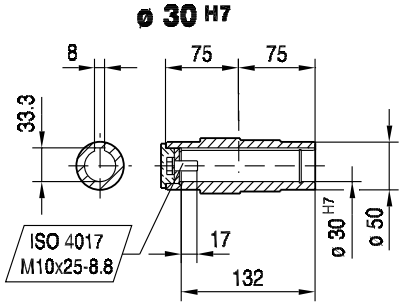

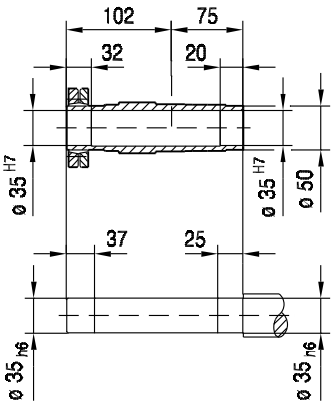

(→ 144)	AQ80/1-3	AQ100/1-2	AQ100/3-4	AQ115/1-3				
L	292	317	331	340				
Z5	104.5	129.5	143.5	152.5				

SA57..

02 074 00 08

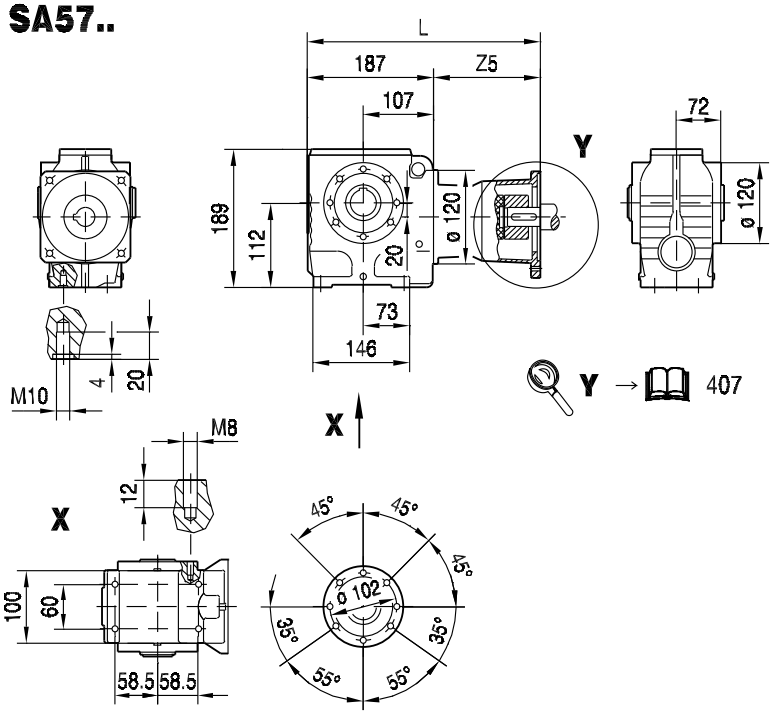

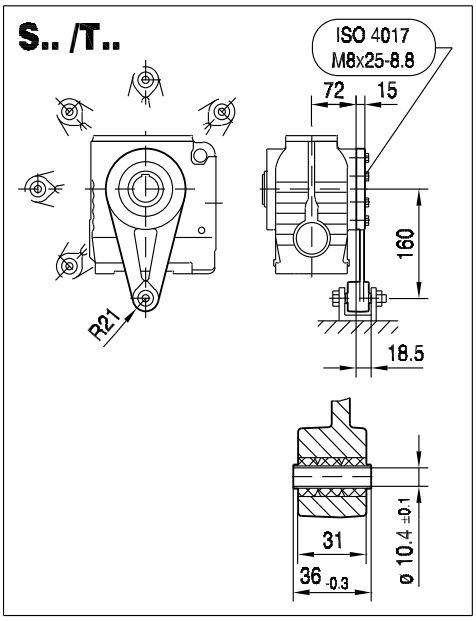

SA57..

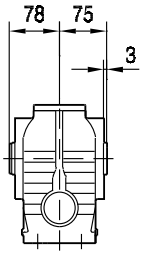

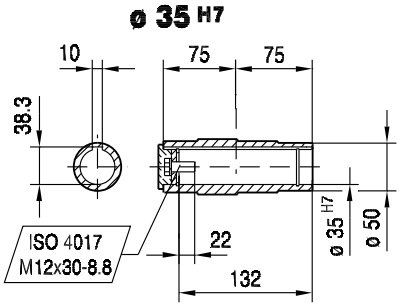

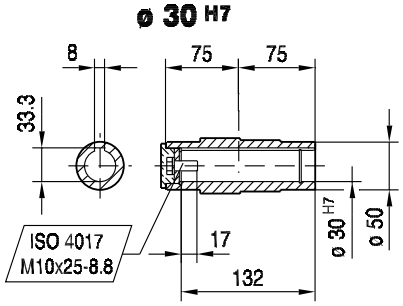

SH57..

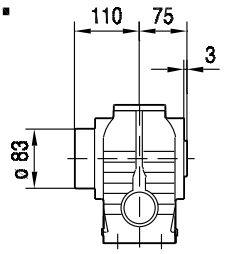

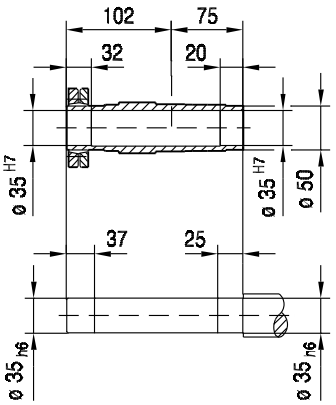

(→ 144)	AQ80/1-3	AQ100/1-2	AQ100/3-4	AQ115/1-3				
L	292	317	331	340				
Z5	104.5	129.5	143.5	152.5				

02 075 00 08

SAZ57..

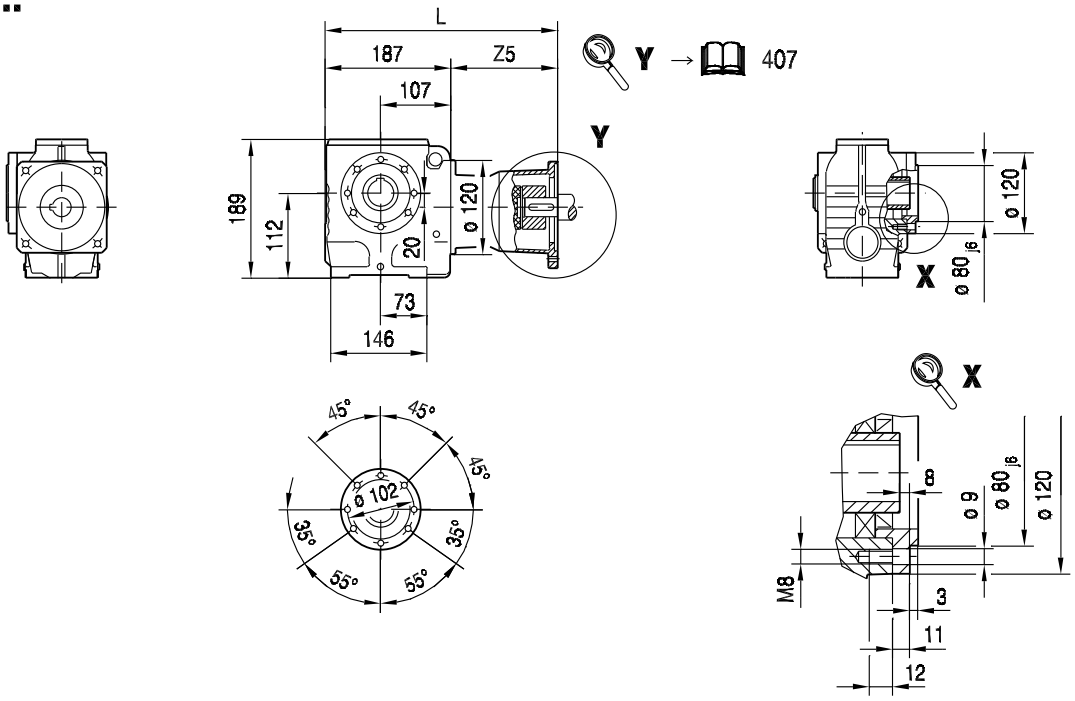

SAZ57..

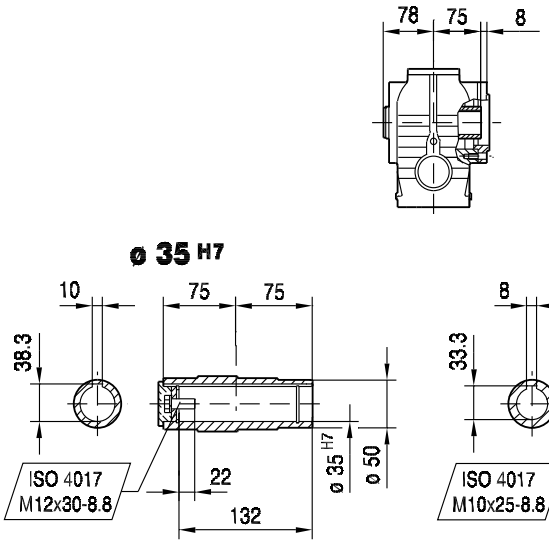

SHZ57..

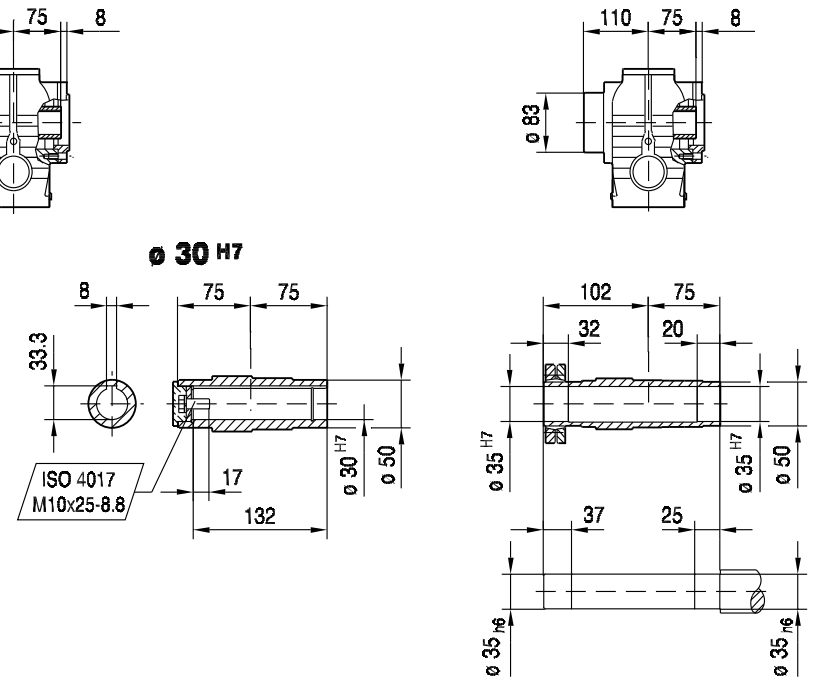

(→ 144)	AQ80/1-3	AQ100/1-2	AQ100/3-4	AQ115/1-3				
L	292	317	331	340				
Z5	104.5	129.5	143.5	152.5				

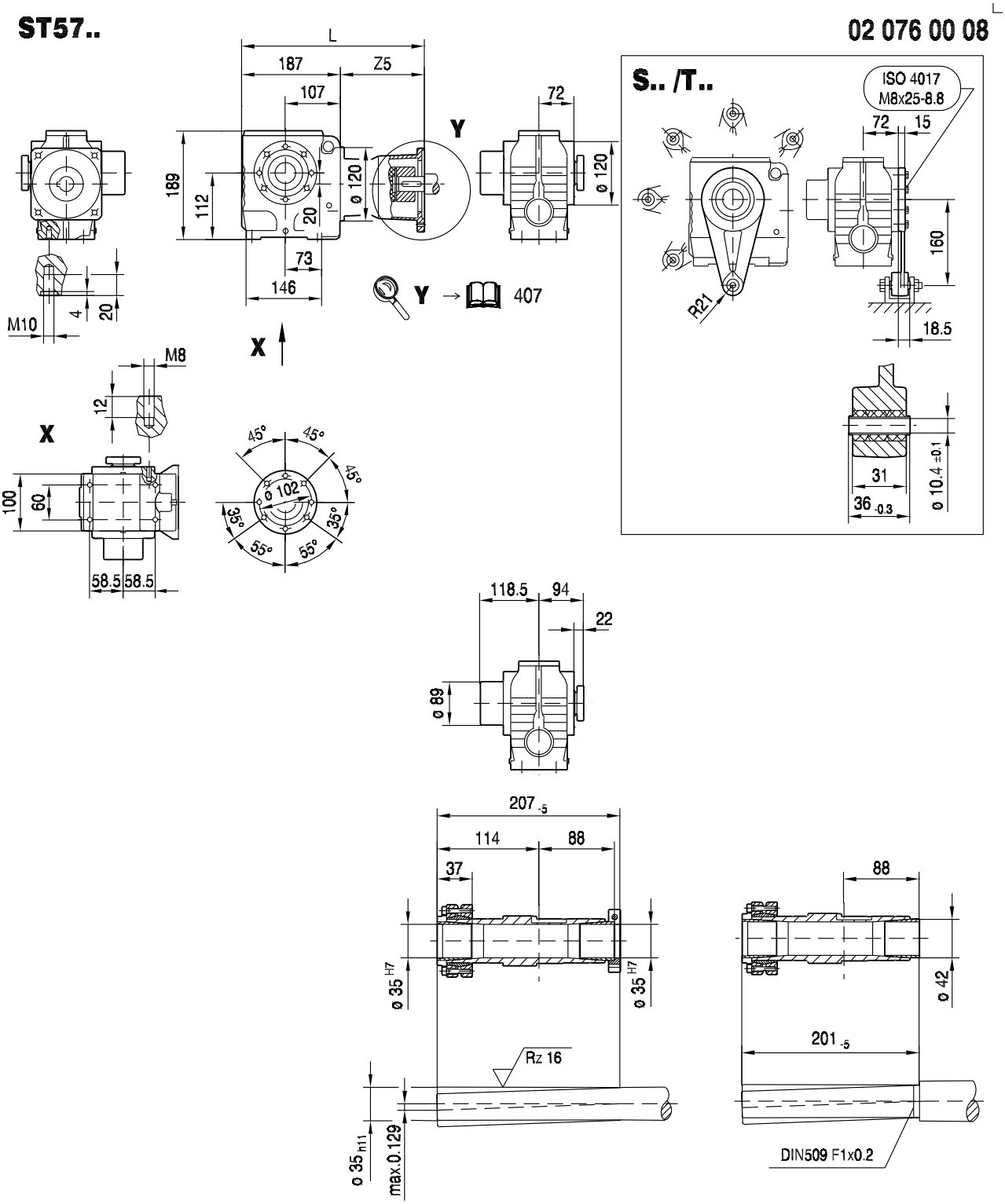

(→ 144)	AQ80/1-3	AQ100/1-2	AQ100/3-4	AQ115/1-3				
L	292	317	331	340				
Z5	104.5	129.5	143.5	152.5				

11.2.7 S 67 AQ.. [Nm]

[Nm]		AQ. M_{amax} | M_{apk} | $M_{aNotaus}$																							
	i	80/1-3			100/1-4			115/1-2			115/3			140/1			140/2-4			160/1			190/1-3		
S67  2	7.56	118	118	230	118	118	235	118	118	235	295	320	320	295	375	500	295	375	500	295	375	500	295	375	500
	8.69	135	135	260	135	135	270	135	135	270	335	365	365	335	420	570	335	420	570	335	420	570	335	420	570
	10.03	156	156	300	156	156	310	156	156	310	340	420	420	340	450	575	340	450	575	340	450	575	340	450	575
	11.03	171	171	330	171	171	340	171	171	340	340	455	460	340	455	575	340	455	575	340	455	575	340	455	575
	12.96	200	200	390	200	200	400	200	200	400	340	455	540	340	455	575	340	455	575	340	455	575	340	455	575
	13.73	210	210	410	210	210	420	210	210	420	340	455	570	340	455	575	340	455	575	340	455	575	340	455	575
	15.60	240	240	465	240	240	480	240	240	480	340	455	575	340	455	575	340	455	575	340	455	575			
	17.28	265	265	515	265	265	530	265	265	530	340	455	575	340	455	575	340	455	575	340	455	575			
	20.30													425	490	720	425	490	720	425	490	720	425	490	720
	20.37	310	310	575	310	310	575	310	310	575	340	450	575	340	450	575	340	450	575	340	450	575			
	23.22	340	350	575	340	350	575	340	350	575	340	450	575												
	23.33				335	335	670	335	335	670	480	515	810	480	515	810	480	515	810	480	515	810	480	515	810
	24.44	340	370	575	340	370	575	340	370	575	340	450	575												
	26.93	385	385	750	385	385	770	385	385	770	480	535	810	480	535	810	480	535	810	480	535	810	480	535	810
	29.63	420	420	810	420	420	810	420	420	810	480	550	810	480	550	810	480	550	810	480	550	810	480	550	810
	34.80	480	490	810	480	490	810	480	490	810	480	575	810	480	575	810	480	575	810	480	575	810	480	575	810
	36.85	480	520	810	480	520	810	480	520	810	480	580	810	480	580	810	480	580	810	480	580	810	480	580	810
	41.89	480	585	810	480	585	810	480	585	810	480	595	810	480	595	810	480	595	810	480	595	810			
	46.40	480	610	810	480	610	810	480	610	810	480	610	810	480	610	810	480	610	810	480	610	810			
	54.70	480	625	810	480	625	810	480	625	810	480	625	810	480	625	810	480	625	810	480	625	810			
	62.35	480	640	810	480	640	810	480	640	810	480	640	810												
	65.63	480	645	810	480	645	810	480	645	810	480	645	810												
	75.06	480	655	810	480	655	810	480	655	810	480	655	810												

m [kg]		AQ.							
	s	80/1-3	100/1-4	115/1-2	115/3	140/1	140/2-4	160/1	190/1-3
S67	 2	28	28	29	29	34	34	34	43
SF: + 6.5 kg / SA: + 1.0 kg / SAF: + 5.5 kg									

		AQ.							
		80/1-3	100/1-4	115/1-2	115/3	140/1	140/2-4	160/1	190/1-3
$J_A\ 10^{-4}$	[kgm^2]	0.77	1.4	1.4	3.1	5.1	10.0	10.0	25.0
c_{TA}	[Nm/']	0.25	0.25	0.25	0.625	0.625	1.0	1.0	2.08

S67							F_{Ramax}				F_{Rapk}			
n_e = 1400	i	M_{amax} [Nm]	M_{apk} [Nm]	$M_{aNotaus}$ [Nm]	n_{ak} [1/min]	J_G 10^{-4} [kgm^2]	S [N]	SF [N]	SA [N]	SAF [N]	S [N]	SF [N]	SA [N]	SAF [N]
	7.56	295	375	502	26	5.4	3220	3890	2540	2540	9740	9740	12000	12000
	8.69	335	420	570	23	4.3	2860	3590	2020	2020	9460	9460	12000	12000
	10.03	340	450	578	20	3.3	3290	4050	2480	2480	9250	9250	12000	12000
	11.03	340	455	578	18	2.8	3660	4430	2890	2890	9210	9210	12000	12000
	12.96	340	455	578	15	2.2	4310	5110	3610	3610	9210	9210	12000	12000
	13.73	340	455	578	15	2.0	4510	5310	3870	3870	9210	9210	12000	12000
	15.60	340	455	578	13	1.5	4820	5640	4480	4480	9210	9210	12000	12000
	17.28	340	455	578	12	1.3	5080	5910	4990	4990	9210	9210	12000	12000
	20.30	425	490	723	10	4.0	5760	6650	6090	6090	8940	8940	12000	12000
	20.37	340	450	578	34	0.99	5520	6360	5700	5700	9250	9250	12000	12000
S67	23.22	340	450	578	47	0.71	5890	6740	6110	6110	9250	9250	12000	12000
 2	23.33	480	515	816	9	3.2	5810	6800	6120	6120	8720	8720	12000	12000
	24.44	340	450	578	45	0.63	6040	6900	6270	6270	9250	9250	12000	12000
	26.93	480	535	816	7	2.6	6240	7240	6590	6590	8540	8540	12000	12000
	29.63	480	550	816	7	2.2	6540	7540	6920	6920	8390	8390	12000	12000
	34.80	480	575	816	14	1.8	7060	8080	7490	7490	8140	8140	12000	12000
	36.85	480	580	816	14	1.6	7250	8280	7710	7710	8080	8080	12000	12000
	41.89	480	595	816	12	1.3	7690	8740	8200	8200	7920	7920	12000	12000
	46.40	480	610	816	11	1.1	8060	9020	8600	8600	7740	7740	12000	12000
	54.70	480	625	816	9	0.84	8670	9020	9280	9280	7560	7560	12000	12000
	62.35	480	640	816	8	0.59	9020	9020	9850	9850	7370	7370	12000	12000
	65.63	480	645	816	8	0.53	9020	9020	10100	10100	6930	7300	12000	12000
	75.06	480	655	816	7	0.43	9020	9020	10700	10700	5930	7170	12000	12000

AQ.				c_{TG}			
	i	n_{epk} [1/min]	η [%]	S [Nm/']	SF [Nm/']	SA [Nm/']	SAF [Nm/']
	7.56	4500	89	-	-	-	-
	8.69	4500	89	-	-	-	-
	10.03	4500	89	-	-	-	-
	11.03	4500	89	-	-	-	-
	12.96	4500	89	-	-	-	-
	13.73	4500	89	-	-	-	-
	15.60	4500	88	-	-	-	-
	17.28	4500	88	-	-	-	-
	20.30	4500	82	-	-	-	-
	20.37	4500	87	-	-	-	-
S67	23.22	4500	87	-	-	-	-
 2	23.33	4500	82	-	-	-	-
	24.44	4500	87	-	-	-	-
	26.93	4500	81	-	-	-	-
	29.63	4500	81	-	-	-	-
	34.80	4500	80	-	-	-	-
	36.85	4500	80	-	-	-	-
	41.89	4500	80	-	-	-	-
	46.40	4500	79	-	-	-	-
	54.70	4500	78	-	-	-	-
	62.35	4500	78	-	-	-	-
	65.63	4500	78	-	-	-	-
	75.06	4500	77	-	-	-	-

11.2.8 S 67 AQ.. [mm]

02 077 00 08

S67..

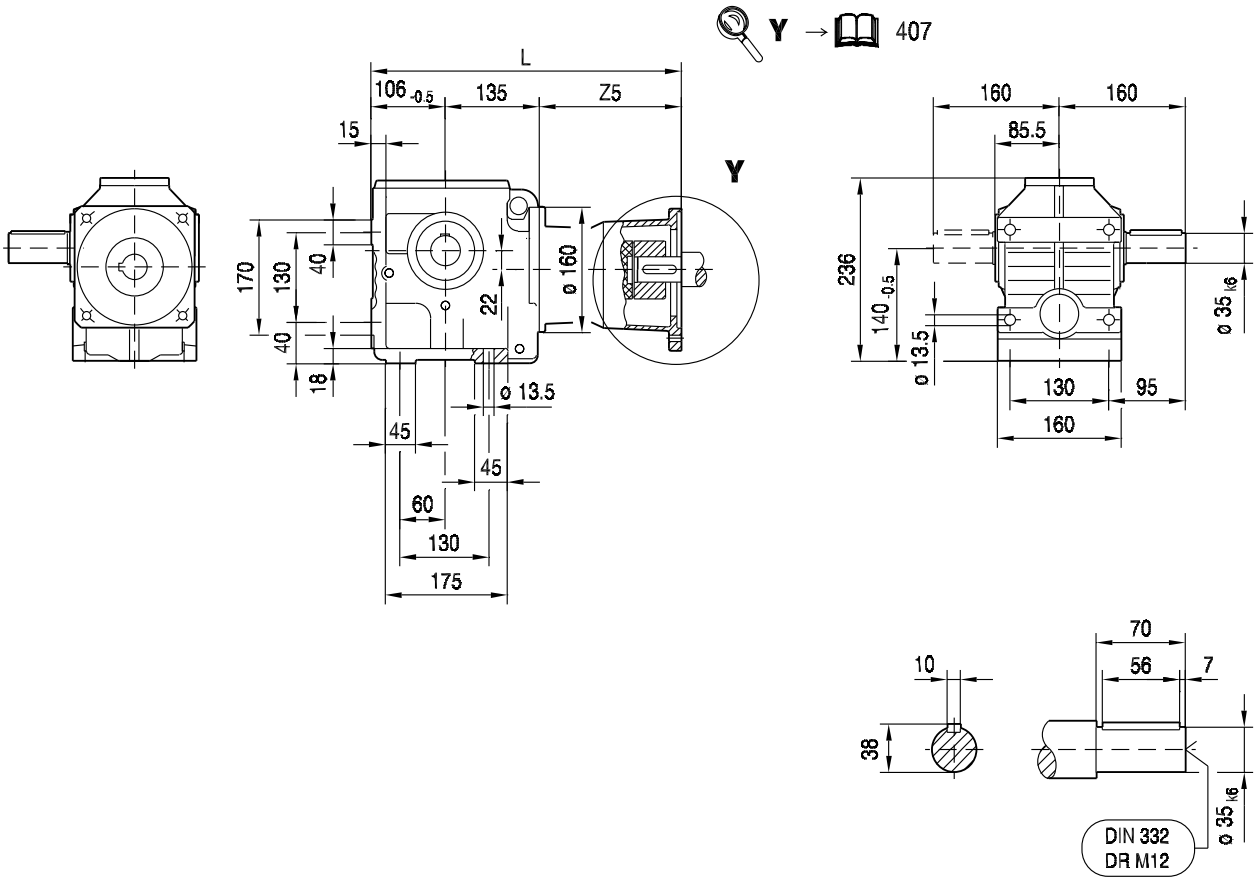

(→ 144)	AQ80/1-3	AQ100/1-2	AQ100/3-4	AQ115/1-3	AQ140/1-2	AQ140/3-4	AQ160/1	AQ190/1-2	AQ190/3
L	339	364	378	387	416	429	429	479	503
Z5	98	123	137	146	175	188	188	237.5	261.5

02 078 00 08

SF67..

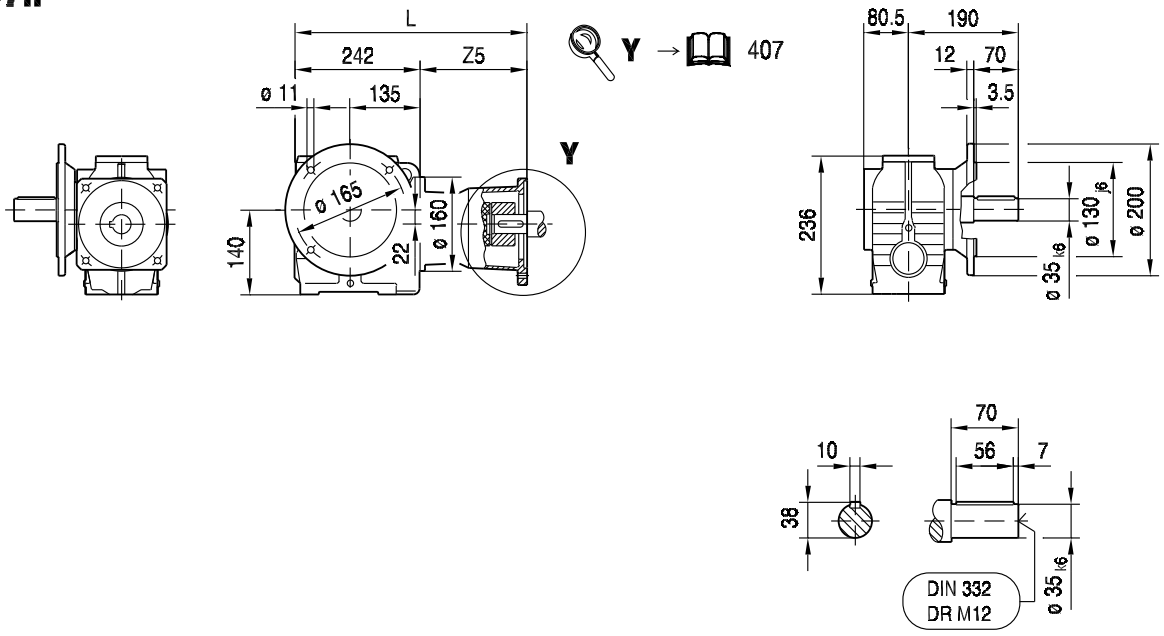

SAF67..

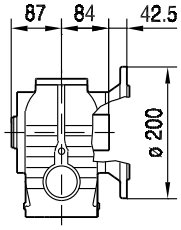

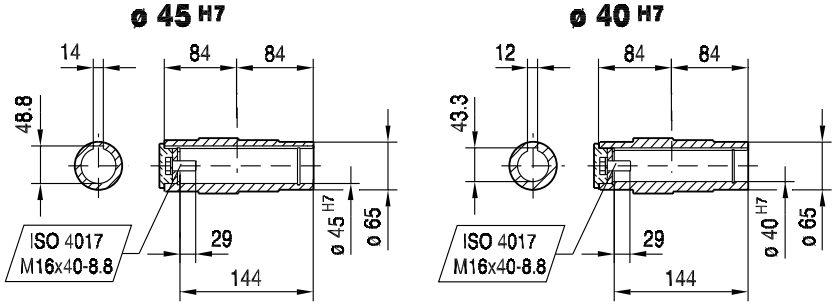

SHF67..

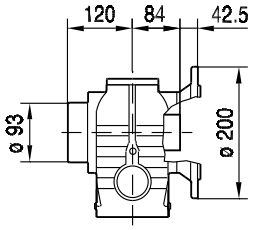

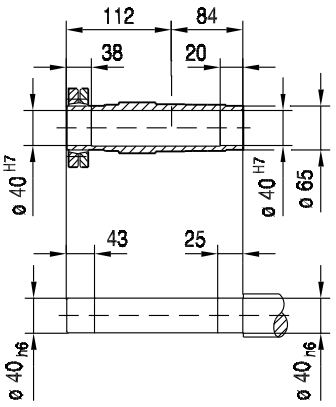

(→ 144)	AQ80/1-3	AQ100/1-2	AQ100/3-4	AQ115/1-3	AQ140/1-2	AQ140/3-4	AQ160/1	AQ190/1-2	AQ190/3
L	340	365	379	388	417	430	430	480	504
Z5	98	123	137	146	175	188	188	237.5	261.5

SA67..

02 079 00 08

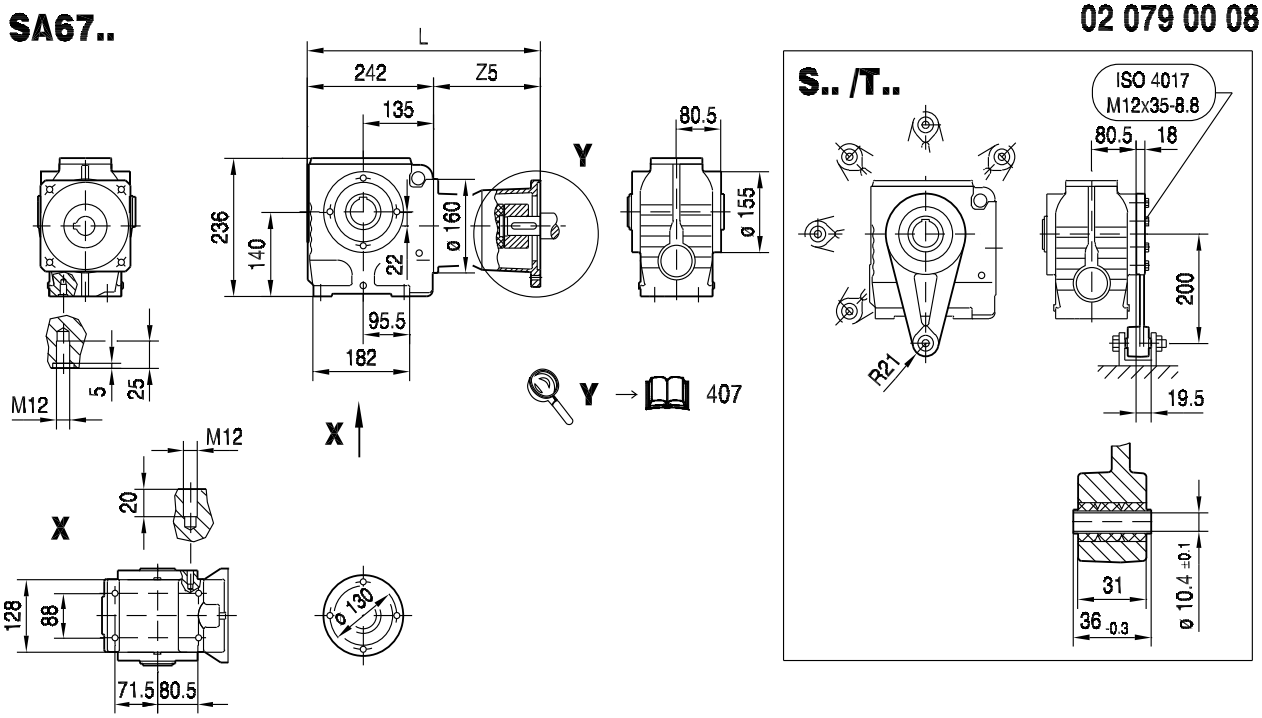

SA67..

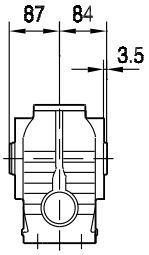

SH67..

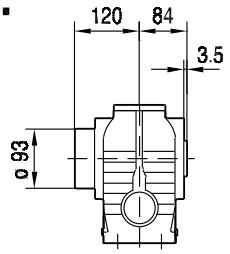

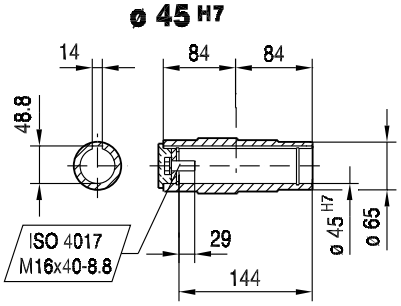

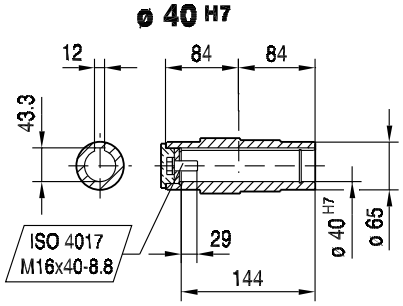

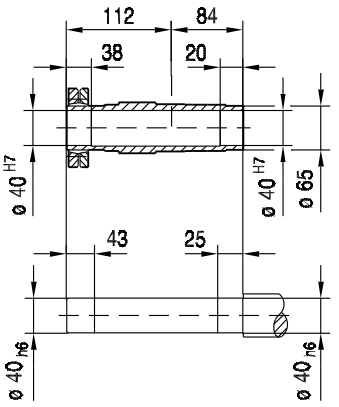

(→ 144)	AQ80/1-3	AQ100/1-2	AQ100/3-4	AQ115/1-3	AQ140/1-2	AQ140/3-4	AQ160/1	AQ190/1-2	AQ190/3
L	340	365	379	388	417	430	430	480	504
Z5	98	123	137	146	175	188	188	237.5	261.5

02 080 00 08

SAZ67..

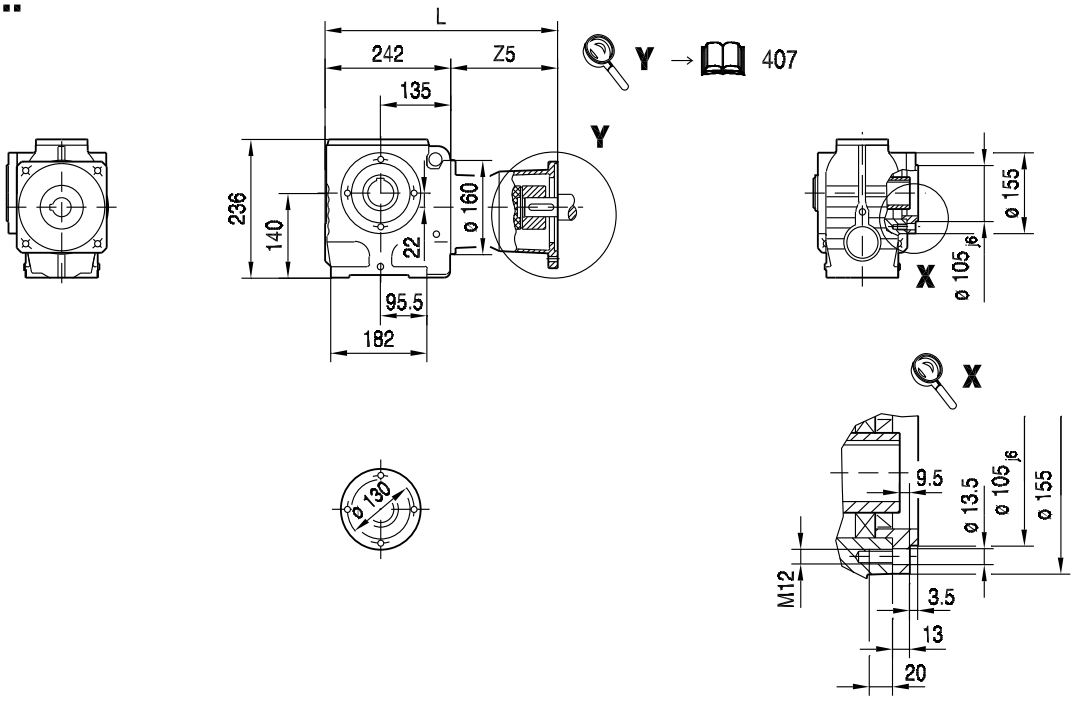

SAZ67..

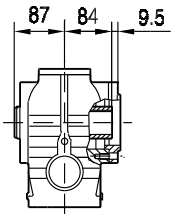

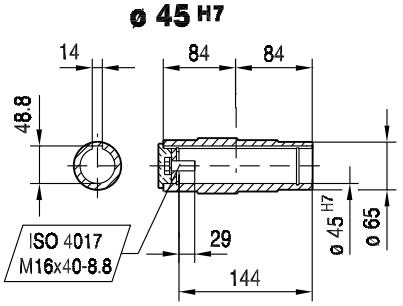

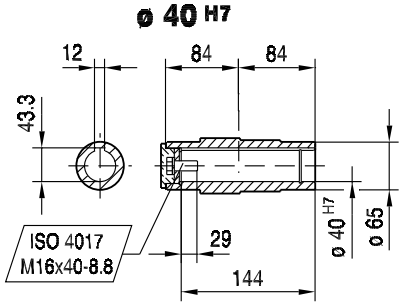

SHZ67..

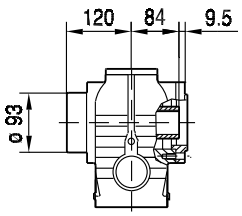

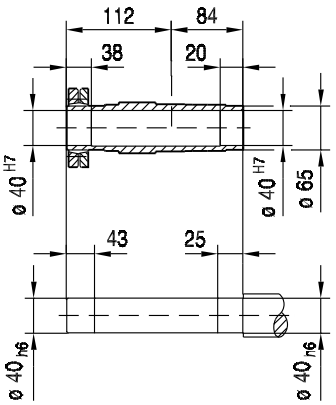

(→ 144)	AQ80/1-3	AQ100/1-2	AQ100/3-4	AQ115/1-3	AQ140/1-2	AQ140/3-4	AQ160/1	AQ190/1-2	AQ190/3
L	340	365	379	388	417	430	430	480	504
Z5	98	123	137	146	175	188	188	237.5	261.5

ST67..

02 081 00 08

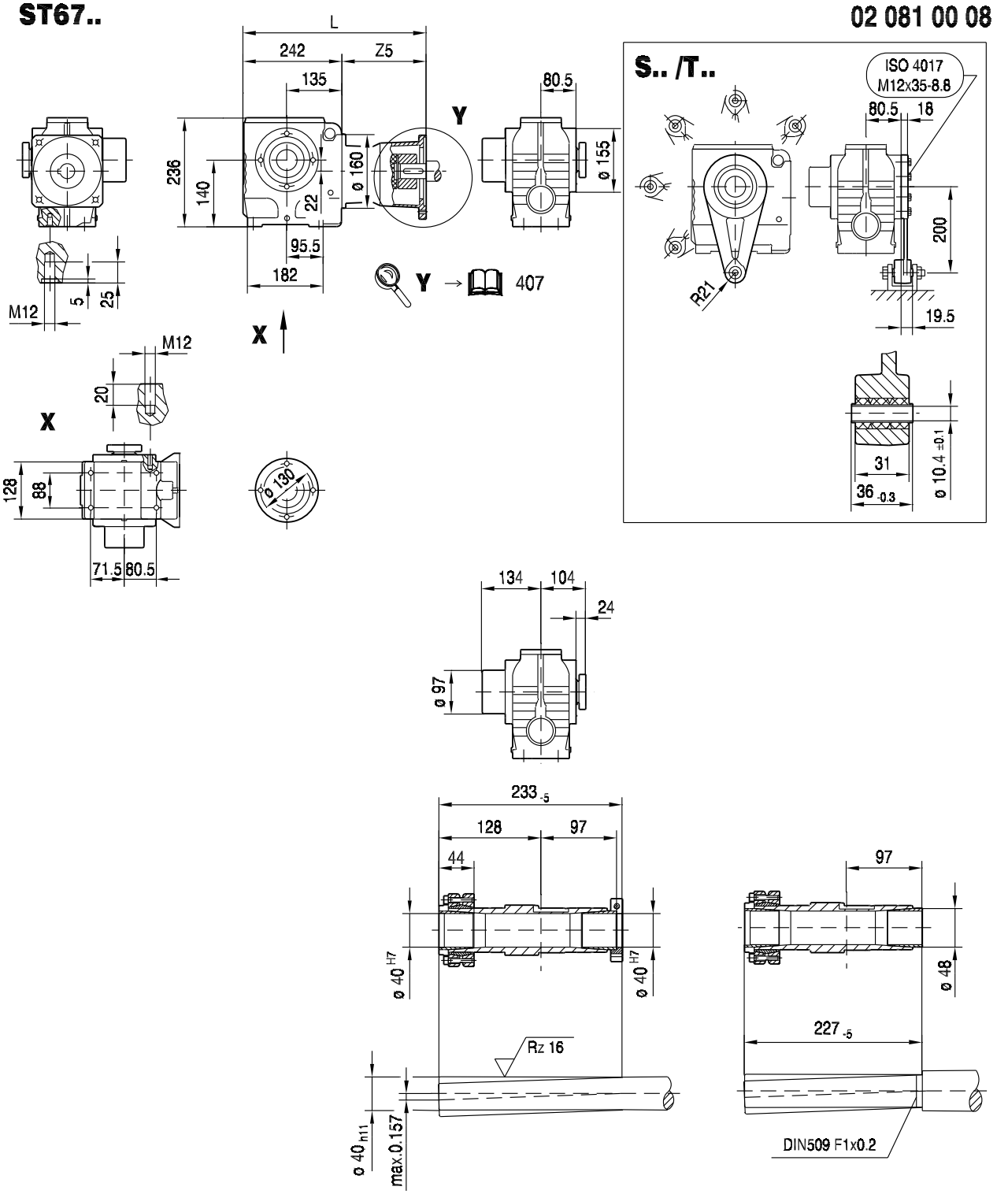

(→ 144)	AQ80/1-3	AQ100/1-2	AQ100/3-4	AQ115/1-3	AQ140/1-2	AQ140/3-4	AQ160/1	AQ190/1-2	AQ190/3
L	340	365	379	388	417	430	430	480	504
Z5	98	123	137	146	175	188	188	237.5	261.5

11.3 S.. AQ.. [mm]

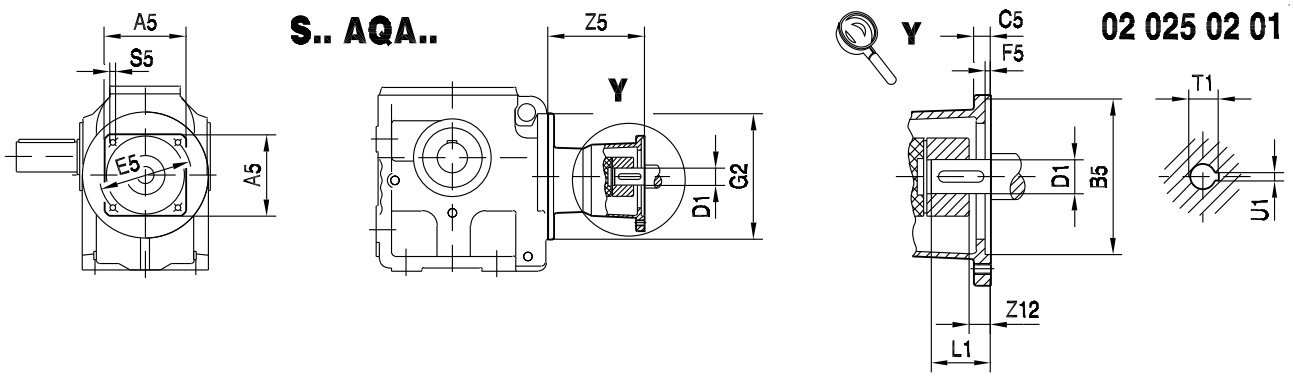

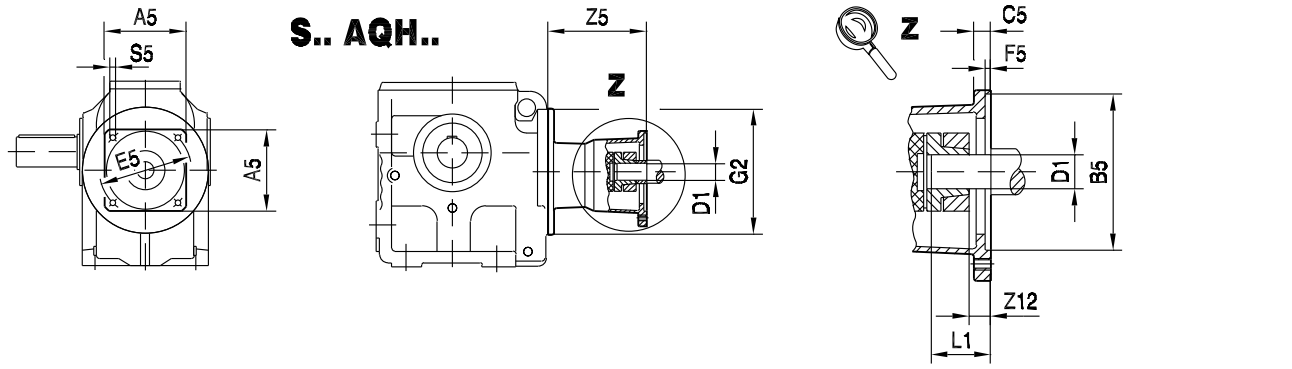

	Square dimension A5	Centering hole Ø B5	Flange thickness C5	Hole circle Ø E5	Centering depth F5	Threaded hole S5	Z12 (AQA)	Z12 (AQH)	Coupling bore Ø D1	Max. motor shaft insertion depth L1	T1	U1
AQ_80/1	82	60	8	75	3.5	M5	5.5	5.5	11	23	12.8	4
AQ_80/2	82	60	8	75	3.5	M5	5.5	5.5	14	30	16.3	5
AQ_80/3	82	50	8	95	3	M6	5.5	5.5	14	30	16.3	5
AQ_100/1	100	80	10	100	4	M6	0	0	14	30	16.3	5
AQ_100/2	100	95	12	115	4	M8	0	0	14	30	16.3	5
AQ_100/3	100	80	10	100	4	M6	2	14	19	40	21.8	6
AQ_100/4	100	95	12	115	4	M8	2	14	19	40	21.8	6
AQ_115/1	115	95	12	130	5	M8	11	23	19	40	21.8	6
AQ_115/2	115	110	12	130	5	M8	11	23	19	40	21.8	6
AQ_115/3	115	110	12	130	5	M8	16	16	24	50	27.3	8
AQ_140/1	140	110	15	165	5	M10	16	16	24	50	27.3	8
AQ_140/2	140	130	15	165	5	M10	16	16	24	50	27.3	8
AQ_140/3	140	130	15	165	5	M10	22	22	32	60	35.3	10
AQ_140/4	140	130	15	165	5	M10	22	22	28	60	31,3	8
AQ_160/1	162	155	15	190	5	M10	22	22	32	60	35,3	10
AQ_190/1	190	130	16	215	5	M12	24	24	32	60	35.3	10
AQ_190/2	190	180	16	215	5	M12	24	24	32	60	35.3	10
AQ_190/3	190	180	16	215	5	M12	34	34	38	80	41.3	10

12 W.7..

12.1 W.7.. AQ..

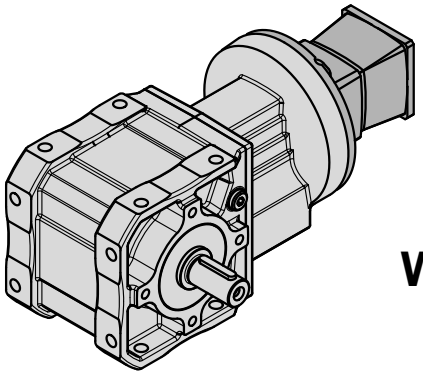

W.7/AQ..

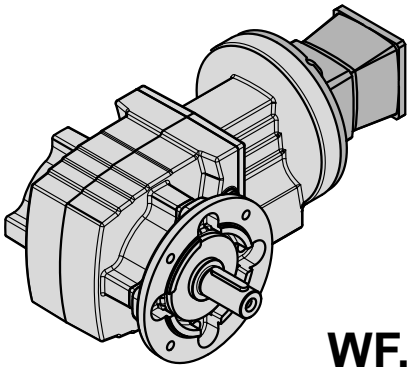

WF.7/AQ..

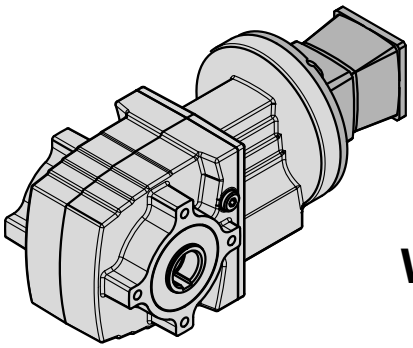

WA.7/AQ..

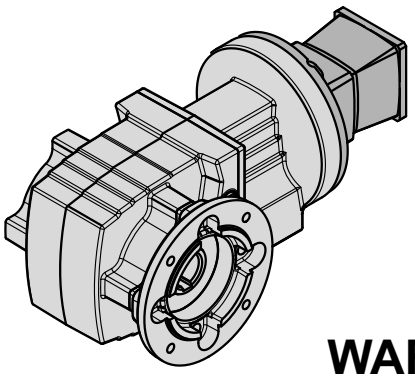

WAF.7/AQ..

63851axx

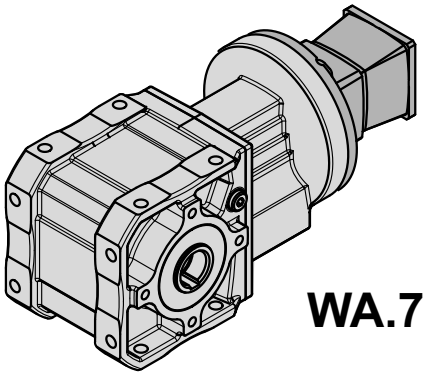

WA.7B/AQ..

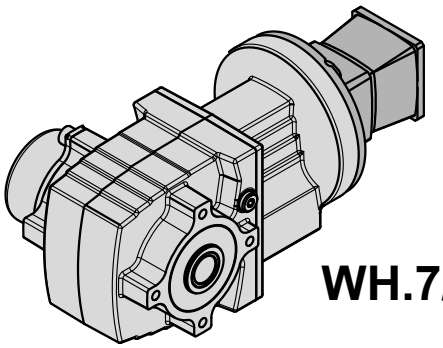

WH.7/AQ..

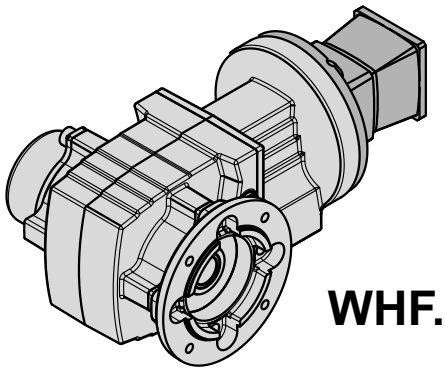

WHF.7/AQ..

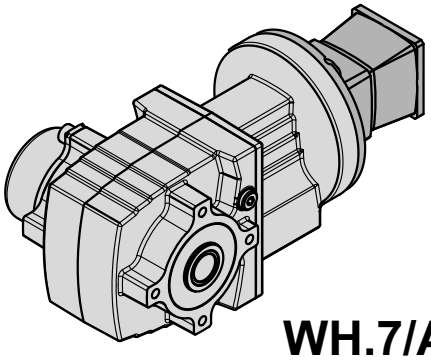

WH.7/AQ..

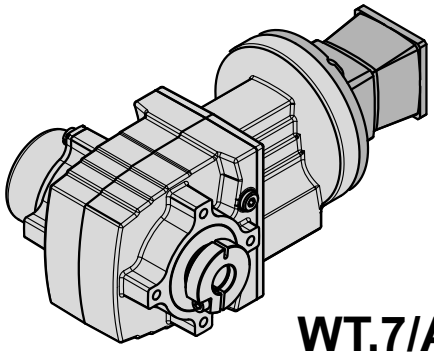

WT.7/AQ..

63850axx

12.2 W.. AQ..

12.2.1 W 37 AQ.. [Nm]

[Nm]		AQ. M_{amax} | M_{apk} | $M_{aNotaus}$											
	i	80/1-3			100/1-4			115/1-2			115/3		
W37 2	3.20	50	50	98	50	50	101	50	50	101	70	84	119
	3.93	62	62	119	62	62	119	62	62	119	70	84	119
	5.11	70	80	119	70	80	119	70	80	119	70	84	119
	5.77	70	84	119	70	84	119	70	84	119	70	84	119
	6.97	70	84	119	70	84	119	70	84	119	70	84	119
	8.55	70	84	119	70	84	119	70	84	119	70	84	119
	9.92	70	84	119	70	84	119	70	84	119	70	84	119
	10.67	90	108	153	90	108	153	90	108	153	90	108	153
	11.65	70	84	119	70	84	119	70	84	119	70	84	119
	12.70	70	84	119	70	84	119	70	84	119	70	84	119
	13.89	90	108	153	90	108	153	90	108	153	90	108	153
	15.67	90	108	153	90	108	153	90	108	153	90	108	153
	18.94	90	108	153	90	108	153	90	108	153	90	108	153
	21.33	110	102	144	110	102	144	110	102	144	110	102	144
	23.25	90	108	153	90	108	153	90	108	153	90	108	153
	26.96	90	108	153	90	108	153	90	108	153	90	108	153
	27.78	110	111	158	110	111	158	110	111	158	110	111	158
	31.33	110	117	166	110	117	166	110	117	166	110	117	166
	31.67	90	108	153	90	108	153	90	108	153	90	108	153
	34.52	90	108	153	90	108	153	90	108	153	90	108	153
	37.88	110	126	178	110	126	178	110	126	178	110	126	178
	46.49	110	130	187	110	130	187	110	130	187	110	130	187
	53.92	110	130	187	110	130	187	110	130	187	110	130	187
	63.33	110	126	178	110	126	178	110	126	178	110	126	178
	69.05	110	130	187	110	130	187	110	130	187	110	130	187

m [kg]		AQ.			
	s	80/1-3	100/1-4	115/1-2	115/3
W37	2	9.3	10	10	10
WF: + 0.0 kg / WA: + 0.0 kg / WAF: + 0.0 kg					

		AQ.			
		80/1-3	100/1-4	115/1-2	115/3
$J_A\ 10^{-4}$	[kgm^2]	0.77	1.4	1.4	3.1
c_{TA}	[Nm/']	0.25	0.25	0.25	0.625

W37 n_e = 1400	i	M_{amax} [Nm]	M_{apk} [Nm]	$M_{aNotaus}$ [Nm]	n_{ak} [1/min]	J_G 10^{-4} [kgm^2]	F_{Ramax} W [N]	WF [N]	WA [N]	WAF [N]	F_{Rapk} W [N]	WF [N]	WA [N]	WAF [N]
	3.20	70	84	119	2188	2.0	2220	2350	2050	2050	3690	3690	5000	5000
	3.93	70	84	119	1781	1.4	2410	2550	2240	2240	3690	3690	5000	5000
	5.11	70	84	119	1370	0.85	2680	2820	2490	2490	3690	3690	5000	5000
	5.77	70	84	119	1213	0.68	2810	2950	2620	2620	3690	3690	5000	5000
	6.97	70	84	119	1004	0.48	3020	3170	2830	2830	3690	3690	5000	5000
	8.55	70	84	119	819	0.33	3270	3420	3070	3070	3690	3690	5000	5000
	9.92	70	84	119	706	0.25	3460	3620	3250	3250	3690	3690	5000	5000
	10.67	90	108	153	150	0.78	2880	3140	2530	2530	3360	3360	5000	5000
	11.65	70	84	119	601	0.19	3680	3830	3460	3460	3690	3690	5000	5000
	12.70	70	84	119	551	0.16	3800	3830	3580	3580	3690	3690	5000	5000
	13.89	90	108	153	151	0.50	3250	3510	2890	2890	3360	3360	5000	5000
W37	15.67	90	108	153	147	0.41	3430	3610	3070	3070	3360	3360	5000	5000
 2	18.94	90	108	153	148	0.29	3610	3610	3360	3360	3360	3360	5000	5000
	21.33	110	102	144	66	0.71	3320	3320	2950	2950	3450	3450	5000	5000
	23.25	90	108	153	146	0.21	3610	3610	3690	3690	3360	3360	5000	5000
	26.96	90	108	153	145	0.16	3610	3610	3950	3950	3360	3360	5000	5000
	27.78	110	111	158	50	0.46	3320	3320	3400	3400	3300	3300	5000	5000
	31.33	110	117	166	45	0.38	3320	3320	3620	3620	2960	2960	5000	5000
	31.67	90	108	153	145	0.12	3610	3610	4240	4240	3360	3360	5000	5000
	34.52	90	108	153	145	0.11	3610	3610	4410	4410	3360	3360	5000	5000
	37.88	110	126	178	37	0.27	3320	3320	3990	3990	2080	2080	5000	5000
	46.49	110	130	187	32	0.19	3320	3320	4410	4410	1490	1490	5000	5000
	53.92	110	130	187	32	0.15	3320	3320	4730	4730	1490	1490	5000	5000
	63.33	110	126	178	36	0.12	3320	3320	5000	5000	2080	2080	5000	5000
	69.05	110	130	187	32	0.10	3320	3320	5000	5000	1490	1490	5000	5000

AQ.	i	n_{epk} [1/min]	η [%]	c_{TG} W [Nm/']	WF [Nm/']	WA [Nm/']	WAF [Nm/']
	3.20	4500	93	-	-	-	-
	3.93	4500	92	-	-	-	-
	5.11	4500	92	-	-	-	-
	5.77	4500	92	-	-	-	-
	6.97	4500	92	-	-	-	-
	8.55	4500	91	-	-	-	-
	9.92	4500	91	-	-	-	-
	10.67	4500	87	-	-	-	-
	11.65	4500	91	-	-	-	-
	12.70	4500	91	-	-	-	-
	13.89	4500	86	-	-	-	-
W37	15.67	4500	86	-	-	-	-
2	18.94	4500	85	-	-	-	-
	21.33	4500	76	-	-	-	-
	23.25	4500	84	-	-	-	-
	26.96	4500	83	-	-	-	-
	27.78	4500	74	-	-	-	-
	31.33	4500	73	-	-	-	-
	31.67	4500	82	-	-	-	-
	34.52	4500	81	-	-	-	-
	37.88	4500	72	-	-	-	-
	46.49	4500	70	-	-	-	-
	53.92	4500	69	-	-	-	-
	63.33	4500	67	-	-	-	-
	69.05	4500	67	-	-	-	-

12.2.2 W 37 *AQ.. [mm]*

W37..

20 040 00 08

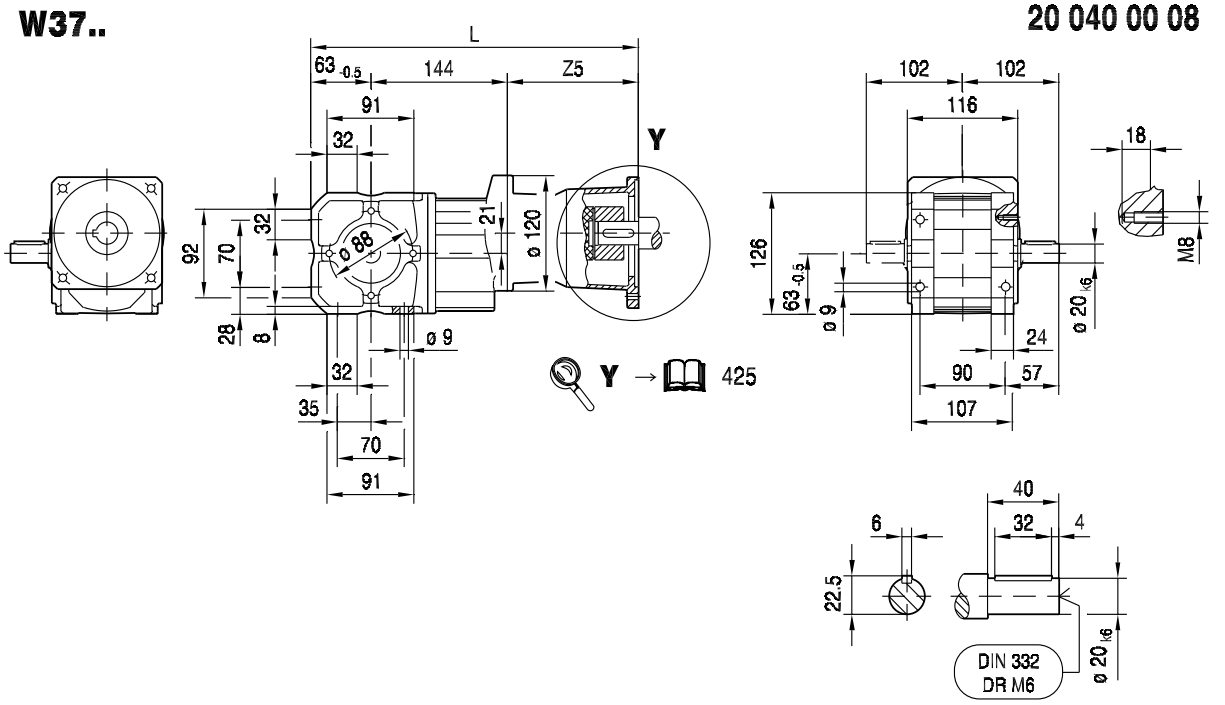

WA37B..

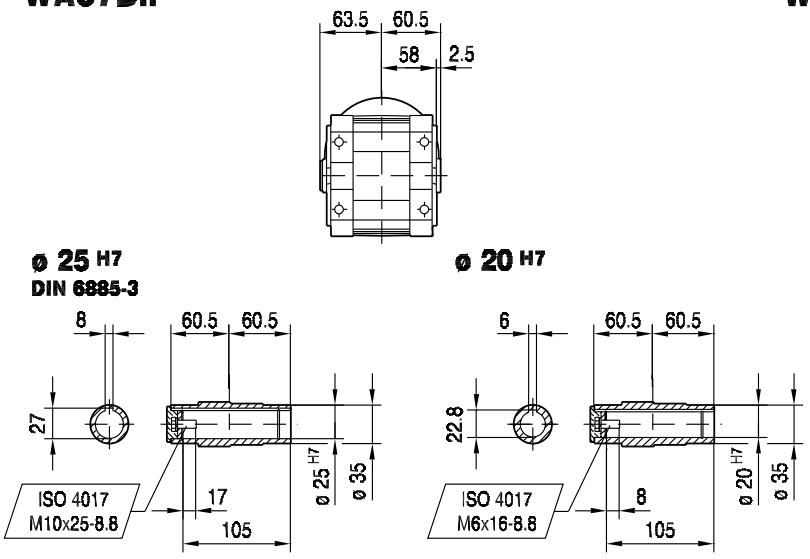

WH37B..

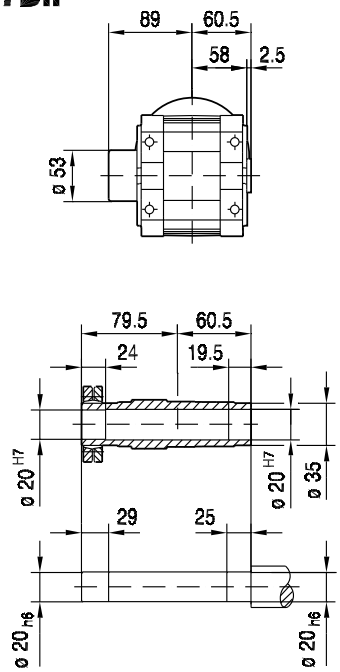

(→ 144)	AQ80/1-3	AQ100/1-2	AQ100/3-4	AQ115/1-3				
L	312	337	351	360				
Z5	104.5	129.5	143.5	152.5				

WF37..

20 041 00 08

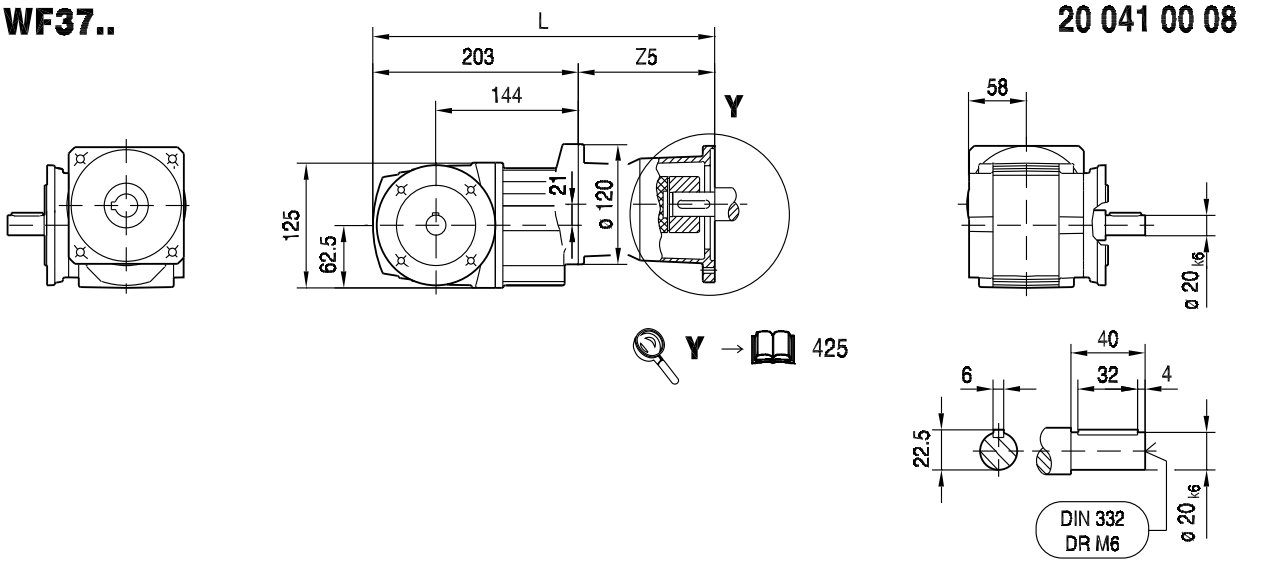

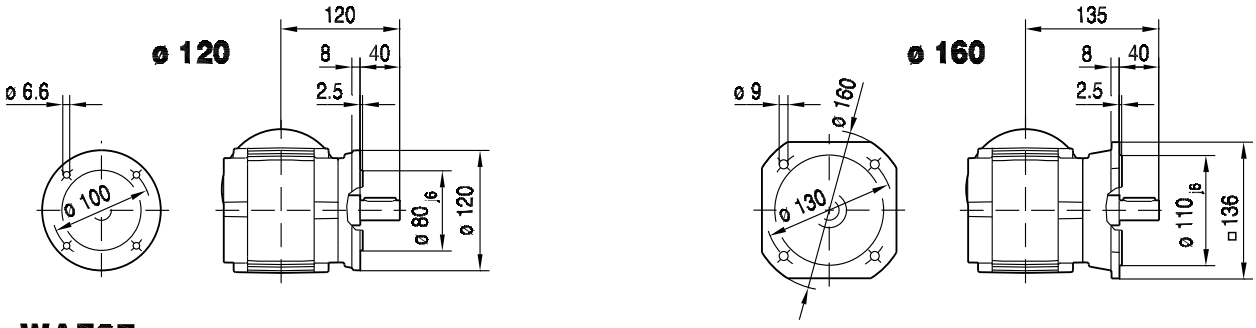

WAF37..

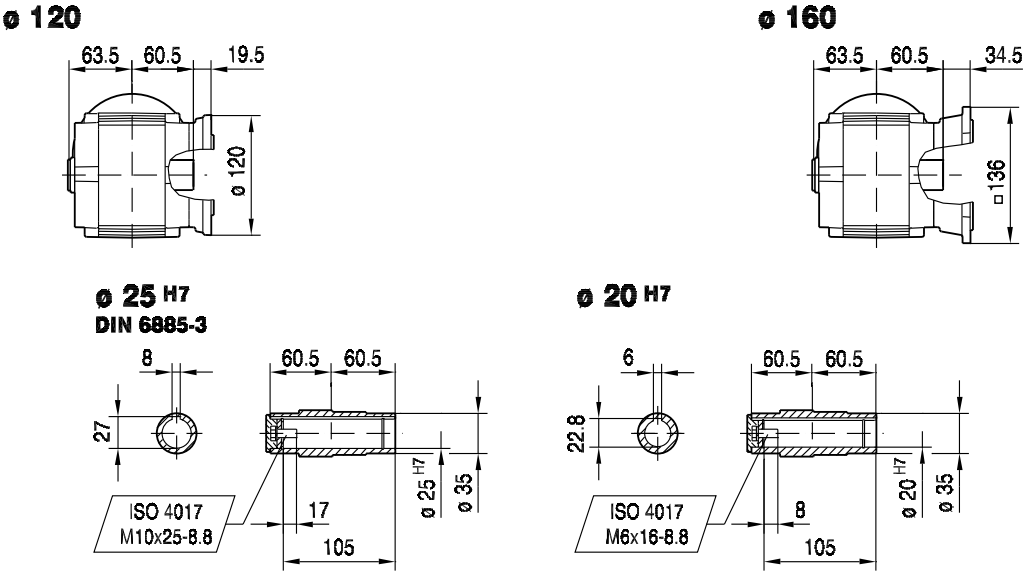

(→ 144)	AQ80/1-3	AQ100/1-2	AQ100/3-4	AQ115/1-3				
L	308	333	347	356				
Z5	104.5	129.5	143.5	152.5				

20 042 00 08

WHF37..

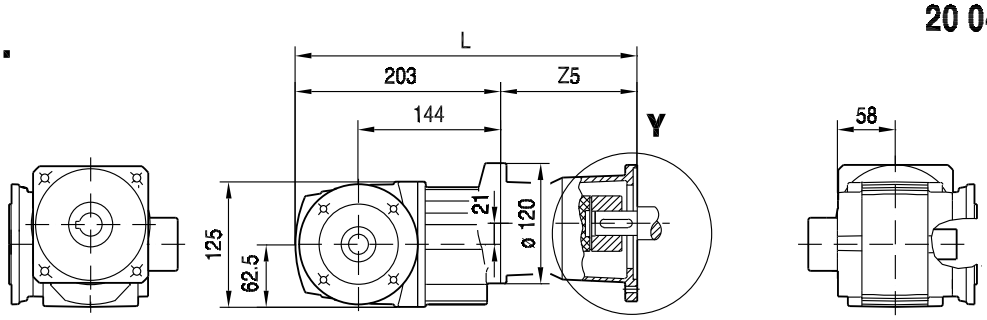

Y → 425

ø 120

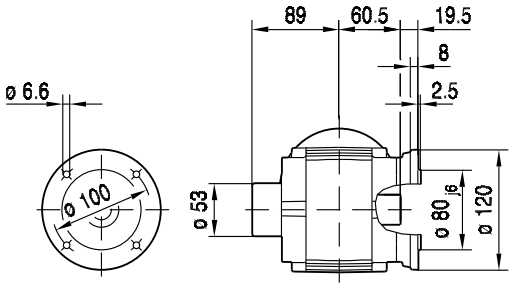

ø 160

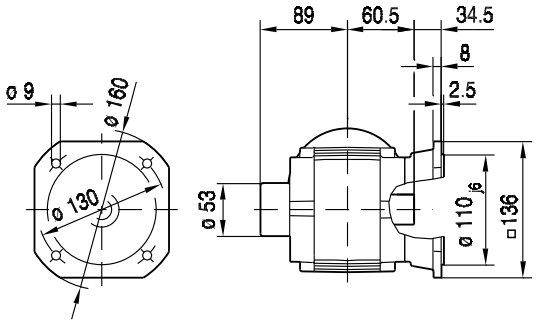

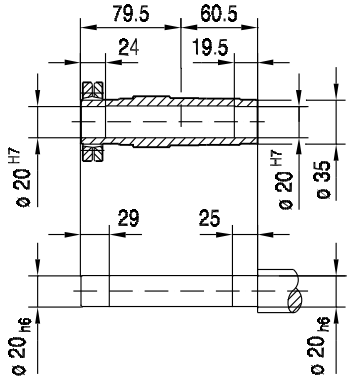

(→ 144)	AQ80/1-3	AQ100/1-2	AQ100/3-4	AQ115/1-3				
L	308	333	347	356				
Z5	104.5	129.5	143.5	152.5				

20 043 00 08

WA37..

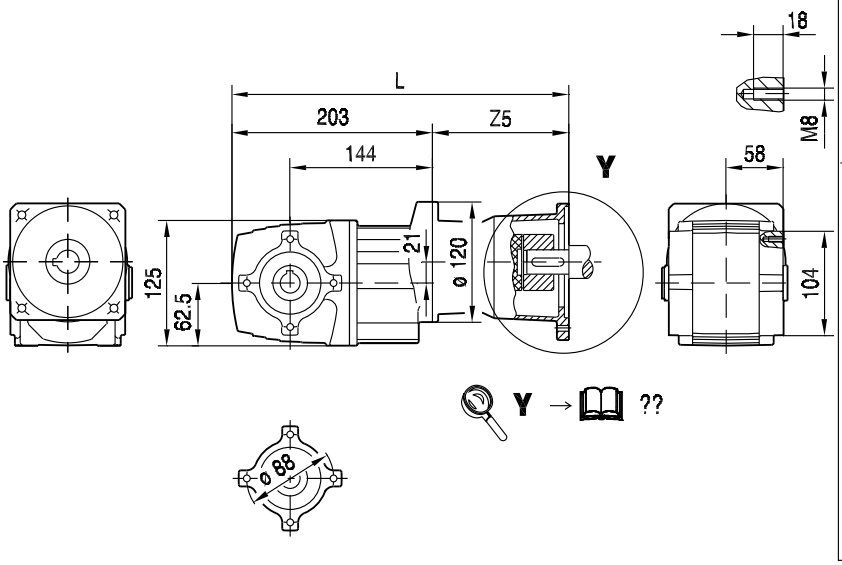

W../T..

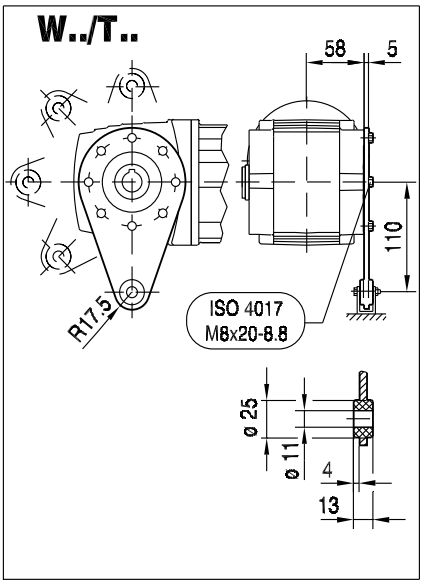

WA37..

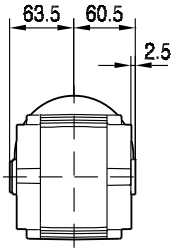

ø 25 H7
DIN 6885-3

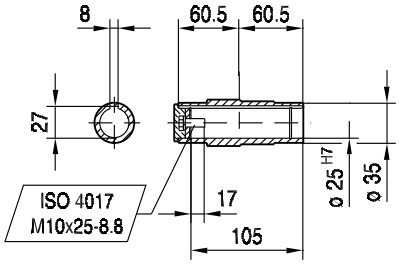

ø 20 H7

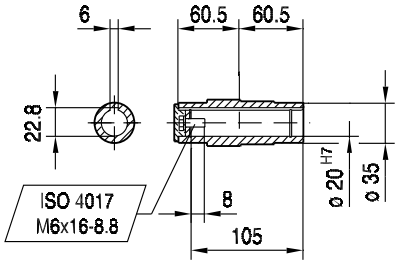

WH37..

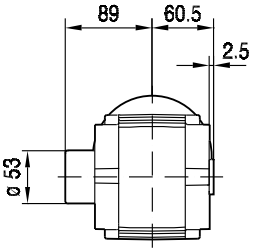

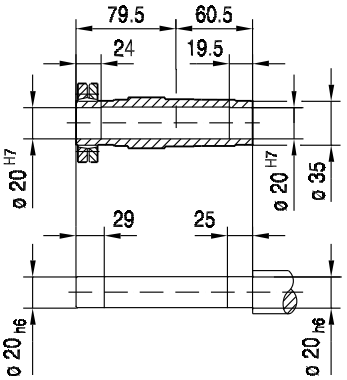

(→ 144)	AQ80/1-3	AQ100/1-2	AQ100/3-4	AQ115/1-3				
L	308	333	347	356				
Z5	104.5	129.5	143.5	152.5				

20 044 00 08

WT37..

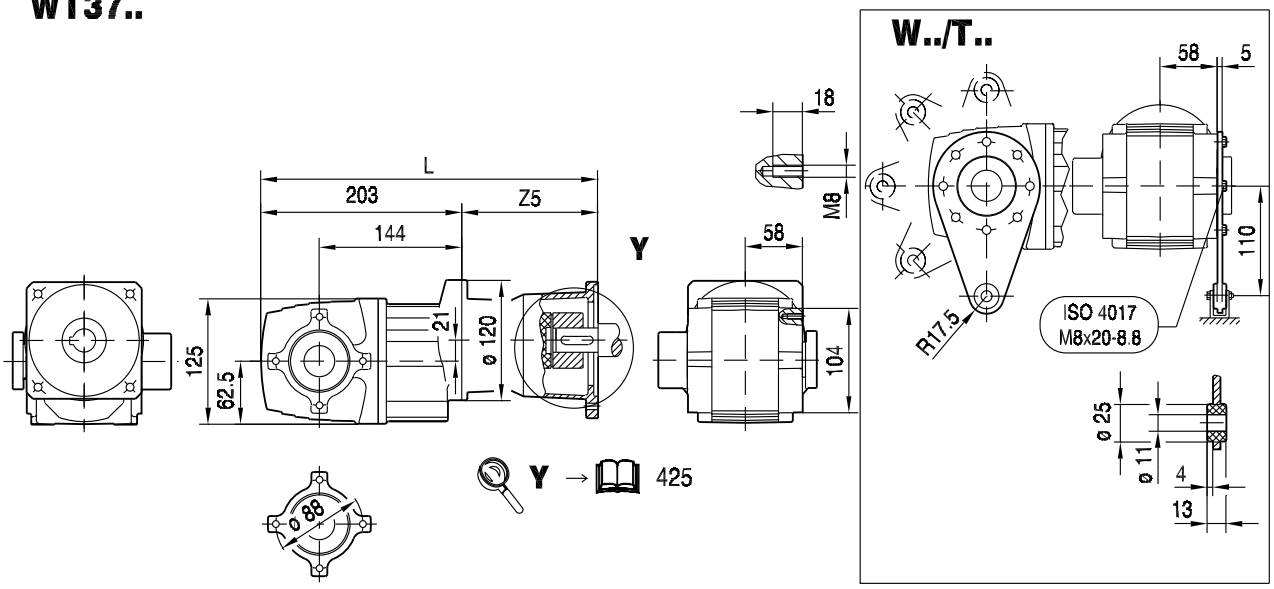

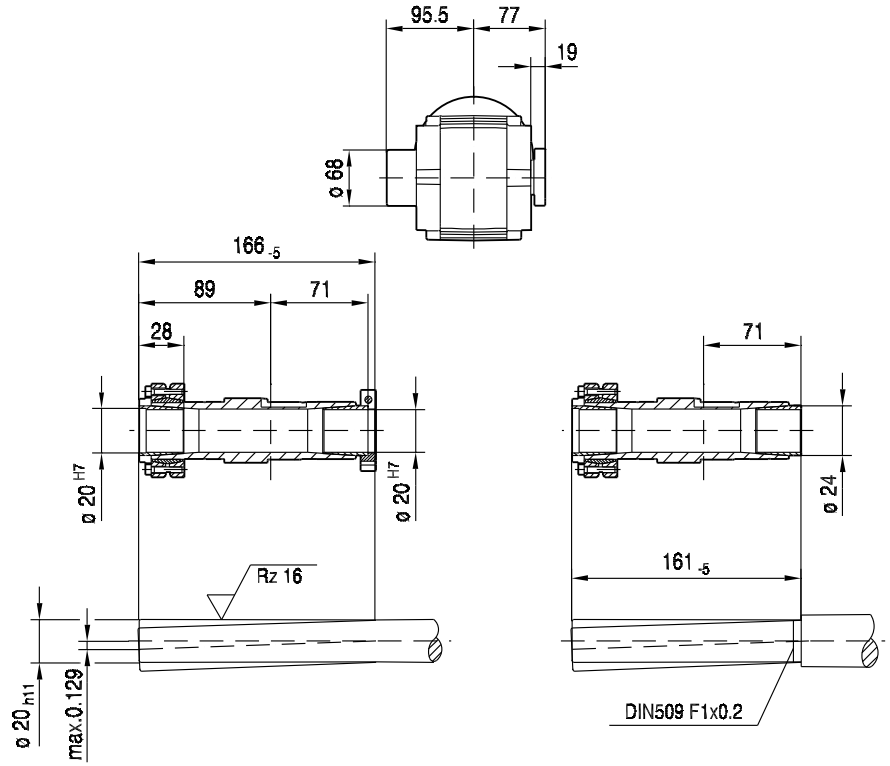

(→ 144)	AQ80/1-3	AQ100/1-2	AQ100/3-4	AQ115/1-3				
L	308	333	347	356				
Z5	104.5	129.5	143.5	152.5				

12.2.3 W 47 AQ.. [Nm]

[Nm]		AQ. M_{amax} | M_{apk} | $M_{aNotaus}$																								
	i	80/1-3			100/1-4			115/1-2			115/3			140/1			140/2-4			160/1			190/1-3		
W47 2	3.27	52	52	95	52	52	95	52	52	95	110	132	140	110	132	198	110	132	198	110	132	198	110	132	198
	3.89	62	62	111	62	62	111	62	62	111	110	132	165	110	132	198	110	132	198	110	132	198	110	132	198
	4.40	70	70	127	70	70	127	70	70	127	110	132	190	110	132	198	110	132	198	110	132	198	110	132	198
	5.23	84	84	151	83	83	151	83	83	151	110	132	198	110	132	198	110	132	198	110	132	198	110	132	198
	5.58	89	89	160	89	89	160	89	89	160	110	132	198	110	132	198	110	132	198	110	132	198	110	132	198
	6.53	104	104	187	104	104	187	104	104	187	110	132	198	110	132	198	110	132	198	110	132	198			
	7.32	110	116	198	110	116	198	110	116	198	110	132	198	110	132	198	110	132	198	110	132	198			
	8.61	110	132	198	110	132	198	110	132	198	110	132	198	110	132	198	110	132	198	110	132	198			
	9.96	110	132	198	110	132	198	110	132	198	110	132	198												
	10.66	61	73	109	110	132	198	110	132	198	110	132	198												
	11.32	160	169	285	160	169	285	160	169	285	160	192	285	160	192	285	160	192	285	160	192	285	160	192	285
	12.30	63	75	113	87	104	156	87	104	156	87	104	156												
	13.44	160	192	285	160	192	285	160	192	285	160	192	285	160	192	285	160	192	285	160	192	285	160	192	285
	14.35	160	192	285	160	192	285	160	192	285	160	192	285	160	192	285	160	192	285	160	192	285	160	192	285
	16.80	160	192	285	160	192	285	160	192	285	160	192	285	160	192	285	160	192	285	160	192	285			
	18.82	160	192	285	160	192	285	160	192	285	160	192	285	160	192	285	160	192	285	160	192	285			
	22.15	160	192	285	160	192	285	160	192	285	160	192	285	160	192	285	160	192	285	160	192	285			
	25.07	180	215	320	180	215	320	180	215	320	180	215	320	180	215	320	180	215	320	180	215	320	180	215	320
	25.62	160	192	285	160	192	285	160	192	285	160	192	285												
	26.76	180	215	320	180	215	320	180	215	320	180	215	320	180	215	320	180	215	320	180	215	320	180	215	320
	27.41	160	192	285	160	192	285	160	192	285	160	192	285												
	31.33	180	215	320	180	215	320	180	215	320	180	215	320	180	215	320	180	215	320	180	215	320			
	31.62	147	176	260	160	192	285	160	192	285	160	192	285												
	35.09	180	215	320	180	215	320	180	215	320	180	215	320	180	215	320	180	215	320	180	215	320			
	41.30	180	215	320	180	215	320	180	215	320	180	215	320	180	215	320	180	215	320	180	215	320			
	47.78	180	215	320	180	215	320	180	215	320	180	215	320												
	51.12	180	215	320	180	215	320	180	215	320	180	215	320												
	58.98	180	215	320	180	215	320	180	215	320	180	215	320												
	68.93	180	215	320	180	215	320	180	215	320	180	215	320												
	74.98	180	215	320	180	215	320	180	215	320	180	215	320												

m [kg]		AQ.							
	s	80/1-3	100/1-4	115/1-2	115/3	140/1	140/2-4	160/1	190/1-3
W47	2	16	16	16	16	21	21	21	30
WF: + 0.5 kg / WA: + -1.5 kg / WAF: + -0.7 kg									

		AQ.							
		80/1-3	100/1-4	115/1-2	115/3	140/1	140/2-4	160/1	190/1-3
$J_A\ 10^{-4}$	[kgm^2]	0.77	1.4	1.4	3.1	5.1	10.0	10.0	25.0
c_{TA}	[Nm/']	0.25	0.25	0.25	0.625	0.625	1.0	1.0	2.08

W47							F_{Ramax}				F_{Rapk}			
n_e = 1400	i	M_{amax} [Nm]	M_{apk} [Nm]	$M_{aNotaus}$ [Nm]	n_{ak} [1/min]	J_G 10^{-4} [kgm^2]	W [N]	WF [N]	WA [N]	WAF [N]	W [N]	WF [N]	WA [N]	WAF [N]
W47 2	3.27	110	132	198	2141	6.0	2690	3170	2440	2440	6990	7910	8000	8000
	3.89	110	132	198	1799	4.3	2900	3390	2640	2640	6990	7910	8000	8000
	4.40	110	132	198	1591	3.4	3050	3560	2790	2790	6990	7910	8000	8000
	5.23	110	132	198	1338	2.4	3270	3810	3010	3010	6990	7910	8000	8000
	5.58	110	132	198	1254	2.1	3360	3900	3090	3090	6990	7910	8000	8000
	6.53	110	132	198	1072	1.6	3580	4140	3310	3310	6990	7910	8000	8000
	7.32	110	132	198	956	1.2	3750	4330	3470	3470	6990	7910	8000	8000
	8.61	110	132	198	813	0.91	4000	4600	3720	3720	6990	7910	8000	8000
	9.96	110	132	198	703	0.70	4240	4860	3950	3950	6990	7910	8000	8000
	10.66	110	132	198	657	0.62	4350	4980	4060	4060	6990	7910	8000	8000
	11.32	160	192	285	292	1.4	3500	4350	2980	2980	6470	7600	8000	8000
	12.30	110	132	198	569	0.48	4600	5250	4300	4300	6990	7910	8000	8000
	13.44	160	192	285	171	1.1	3810	4680	3280	3280	6470	7600	8000	8000
	14.35	160	192	285	453	0.94	3930	4810	3400	3400	6470	7600	8000	8000
	16.80	160	192	285	286	0.68	4230	5140	3690	3690	6470	7600	8000	8000
	18.82	160	192	285	197	0.56	4460	5390	3920	3920	6470	7600	8000	8000
	22.15	160	192	285	307	0.41	4800	5770	4250	4250	6470	7600	8000	8000
	25.07	180	215	320	68	0.89	4490	5610	3800	3800	6160	7430	8000	8000
	25.62	160	192	285	195	0.33	5130	6120	4570	4570	6470	7600	8000	8000
	26.76	180	215	320	67	0.79	4640	5770	3940	3940	6160	7430	8000	8000
	27.41	160	192	285	157	0.29	5280	6290	4720	4720	6470	7600	8000	8000
	31.33	180	215	320	54	0.57	5010	6180	4310	4310	6160	7430	8000	8000
	31.62	160	192	285	221	0.23	5620	6660	5050	5050	6470	7600	8000	8000
	35.09	180	215	320	125	0.47	5290	6490	4580	4580	6160	7430	8000	8000
	41.30	180	215	320	77	0.34	5720	6950	4990	4990	6160	7430	8000	8000
	47.78	180	215	320	48	0.28	6110	7380	5380	5380	6160	7430	8000	8000
	51.12	180	215	320	102	0.25	6300	7580	5570	5570	6160	7430	8000	8000
	58.98	180	215	320	66	0.20	6500	7580	5980	5980	6160	7430	8000	8000
	68.93	180	215	320	41	0.16	6500	7580	6450	6450	6160	7430	8000	8000
	74.98	180	215	320	32	0.14	6500	7580	6710	6710	6160	7430	8000	8000

AQ.	i	n_{epk} [1/min]	η [%]	c_{TG} W [Nm/']	WF [Nm/']	WA [Nm/']	WAF [Nm/']
W47 2	3.27	4500	95	-	-	-	-
	3.89	4500	95	-	-	-	-
	4.40	4500	95	-	-	-	-
	5.23	4500	95	-	-	-	-
	5.58	4500	95	-	-	-	-
	6.53	4500	94	-	-	-	-
	7.32	4500	94	-	-	-	-
	8.61	4500	94	-	-	-	-
	9.96	4500	94	-	-	-	-
	10.66	4500	94	-	-	-	-
	11.32	4500	88	-	-	-	-
	12.30	4500	93	-	-	-	-
	13.44	4500	88	-	-	-	-
	14.35	4500	87	-	-	-	-
	16.80	4500	87	-	-	-	-
	18.82	4500	86	-	-	-	-
	22.15	4500	86	-	-	-	-
	25.07	4500	79	-	-	-	-
	25.62	4500	85	-	-	-	-
	26.76	4500	79	-	-	-	-
	27.41	4500	85	-	-	-	-
	31.33	4500	78	-	-	-	-
	31.62	4500	84	-	-	-	-
	35.09	4500	77	-	-	-	-
	41.30	4500	76	-	-	-	-
	47.78	4500	75	-	-	-	-
	51.12	4500	74	-	-	-	-
	58.98	4500	73	-	-	-	-
	68.93	4500	72	-	-	-	-
	74.98	4500	71	-	-	-	-

12.2.4 W47 AQ.. [mm]

20 081 00 08

W47..

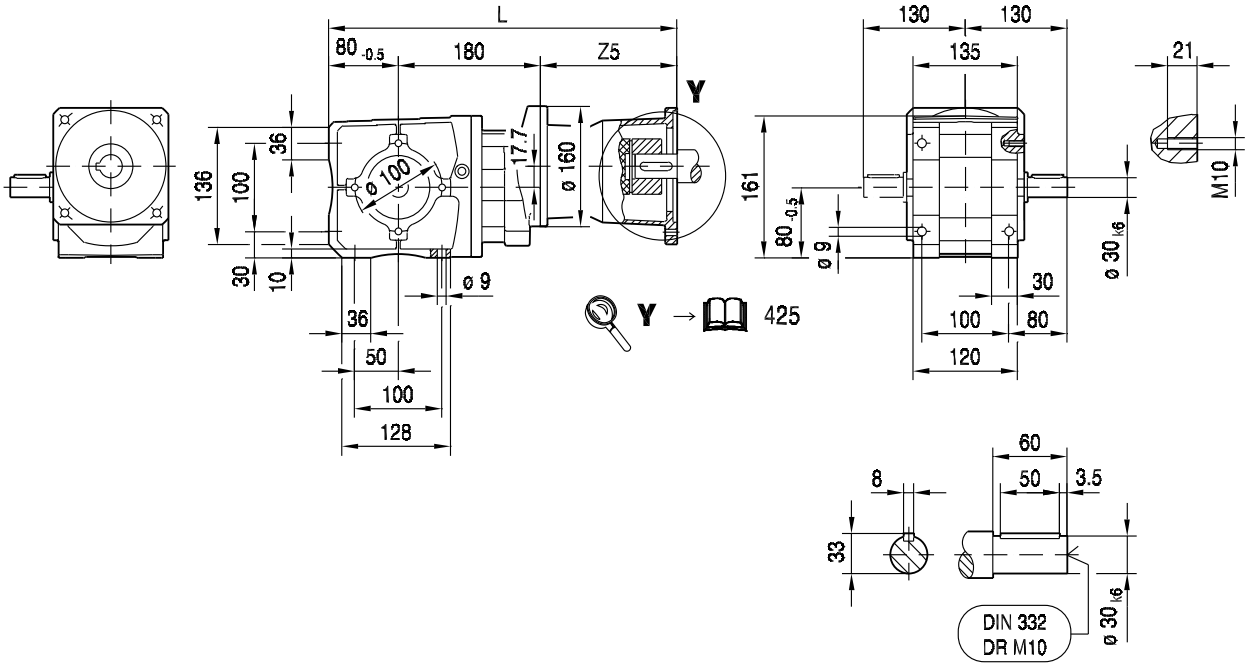

WA47B..

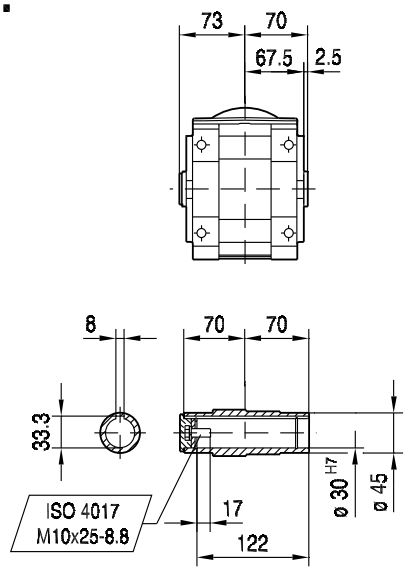

WH47B..

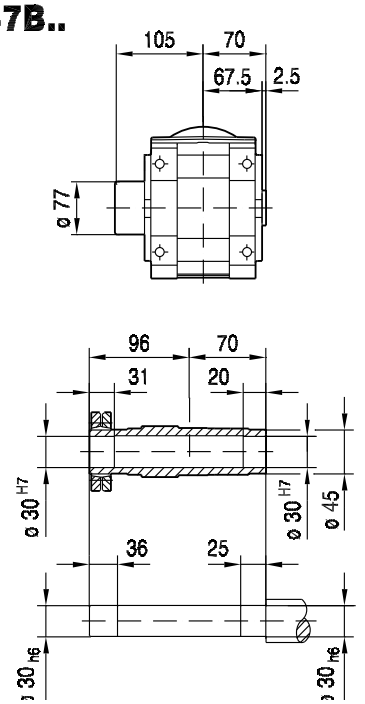

(→ 144)	AQ80/1-3	AQ100/1-2	AQ100/3-4	AQ115/1-3	AQ140/1-2	AQ140/3-4	AQ160/1	AQ190/1-2	AQ190/3
L	358	383	397	406	435	448	448	498	522
Z5	98	123	137	146	175	188	188	237.5	261.5

20 082 00 08

WF47..

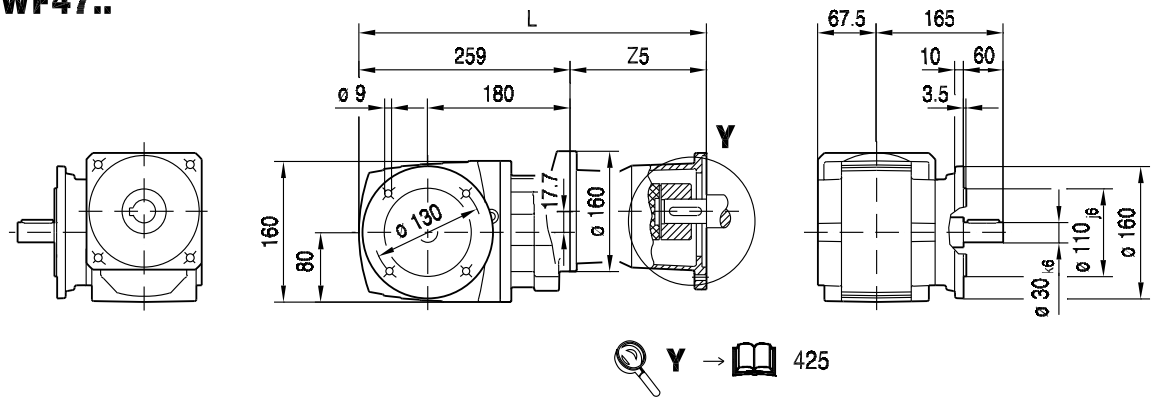

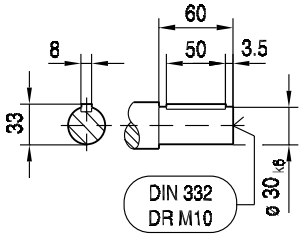

WAF47..

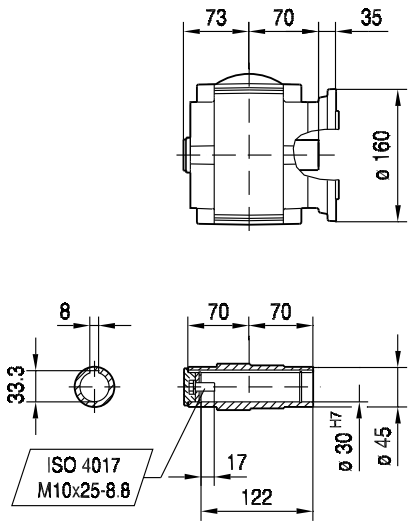

WHF47..

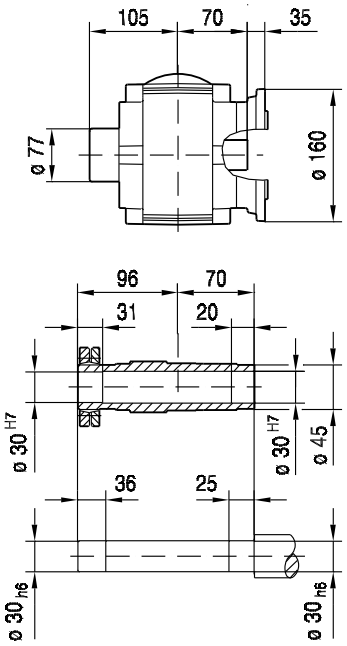

(→ 144)	AQ80/1-3	AQ100/1-2	AQ100/3-4	AQ115/1-3	AQ140/1-2	AQ140/3-4	AQ160/1	AQ190/1-2	AQ190/3
L	357	382	396	405	434	447	447	497	521
Z5	98	123	137	146	175	188	188	237.5	261.5

20 083 00 08

WA47..

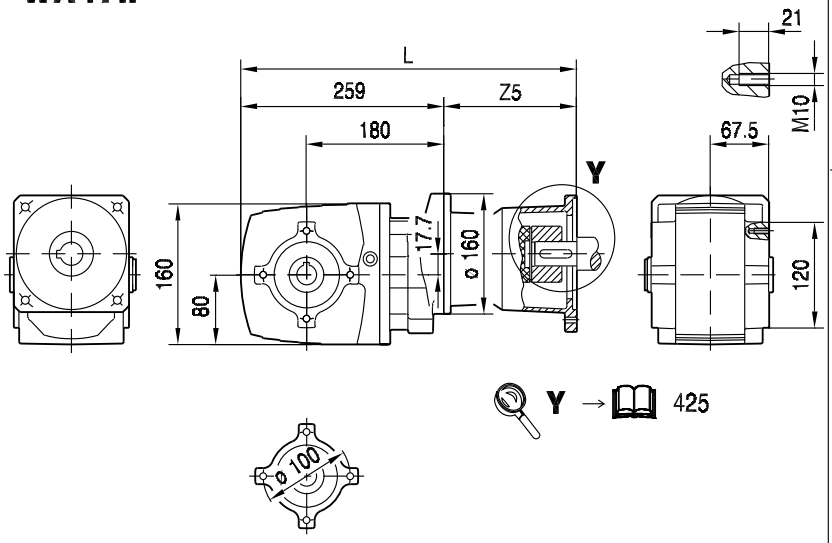

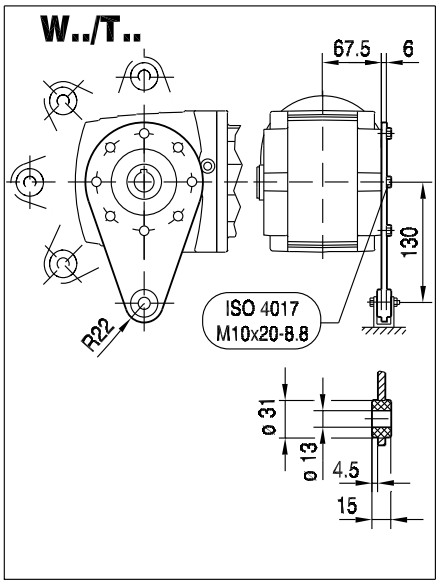

WA47..

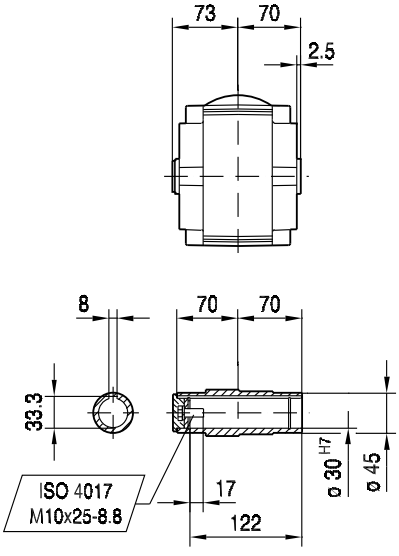

WH47..

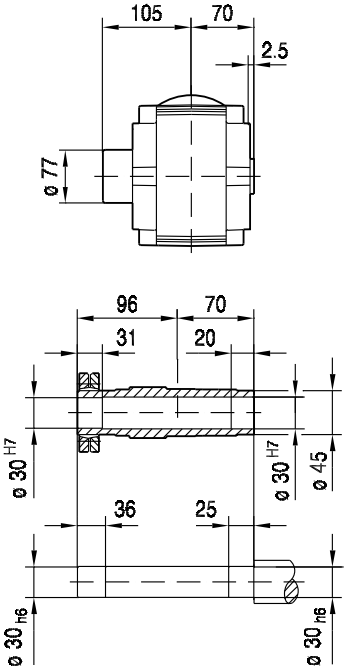

(→ 144)	AQ80/1-3	AQ100/1-2	AQ100/3-4	AQ115/1-3	AQ140/1-2	AQ140/3-4	AQ160/1	AQ190/1-2	AQ190/3
L	357	382	396	405	434	447	447	497	521
Z5	98	123	137	146	175	188	188	237.5	261.5

20 084 00 08

WT47..

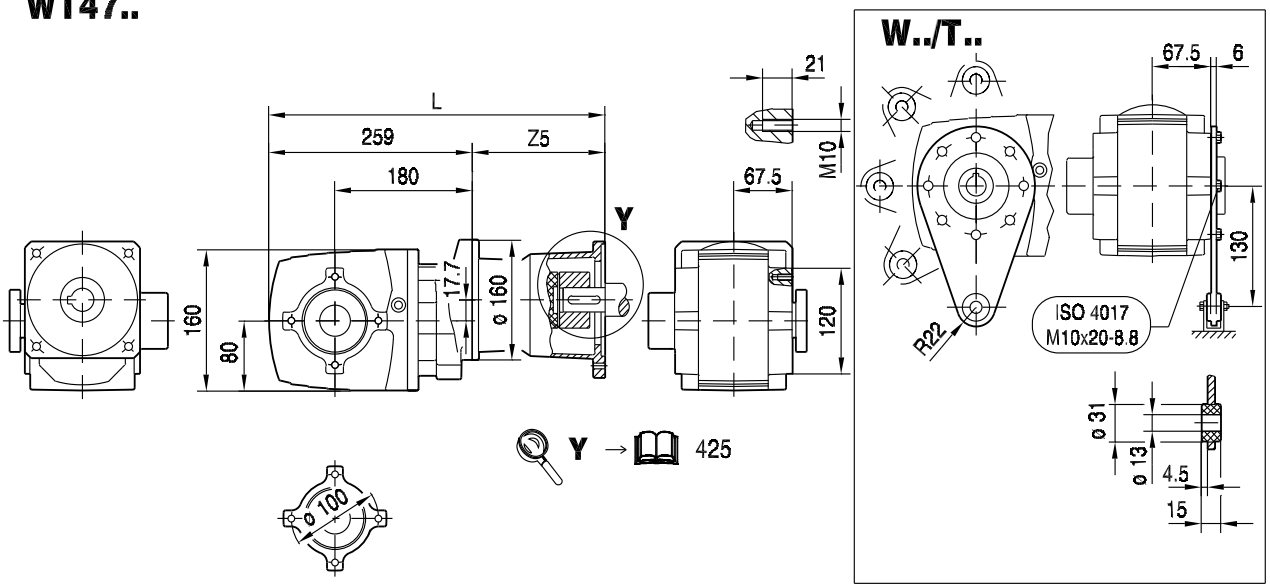

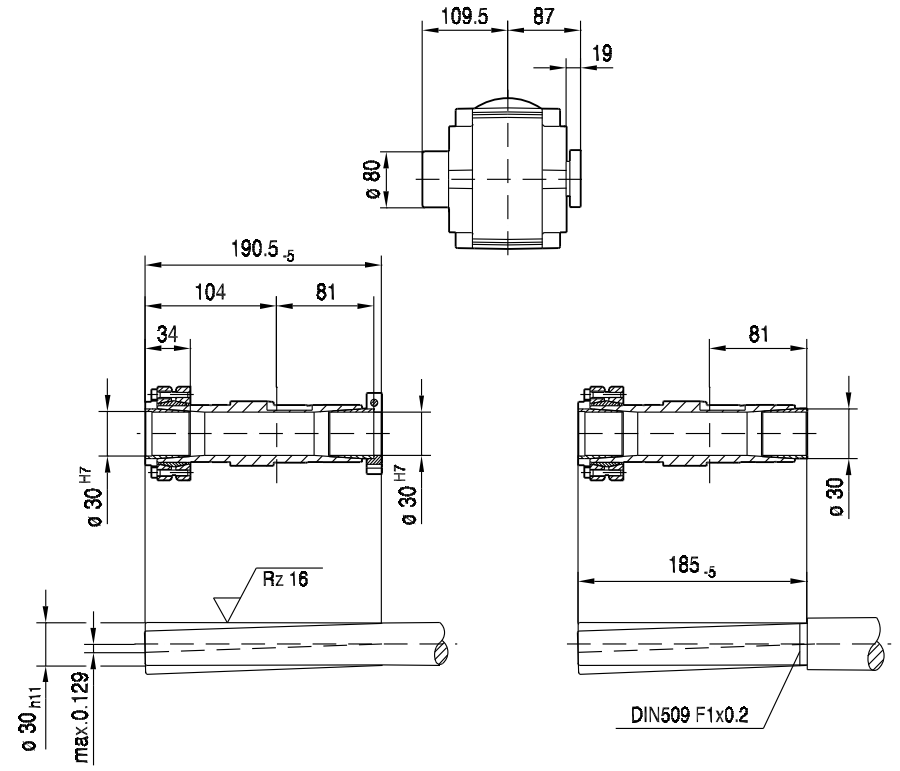

(→ 144)	AQ80/1-3	AQ100/1-2	AQ100/3-4	AQ115/1-3	AQ140/1-2	AQ140/3-4	AQ160/1	AQ190/1-2	AQ190/3
L	357	382	396	405	434	447	447	497	521
Z5	98	123	137	146	175	188	188	237.5	261.5

12.3 W.. AQ.. [mm]

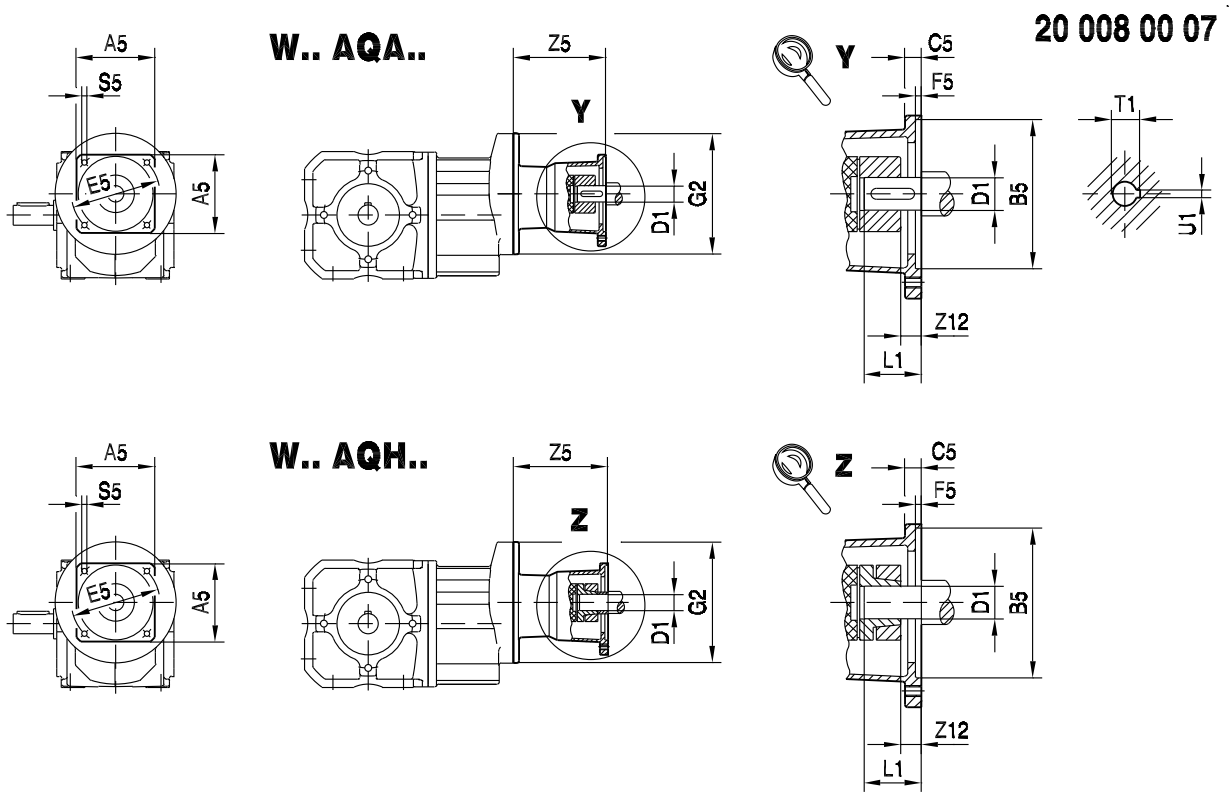

	Square dimension A5	Centering hole Ø B5	Flange thickness C5	Hole circle Ø E5	Centering depth F5	Threaded hole S5	Z12 (AQA)	Z12 (AQH)	Coupling bore Ø D1	Max. motor shaft insertion depth L1	T1	U1
AQ_80/1	82	60	8	75	3.5	M5	5.5	5.5	11	23	12.8	4
AQ_80/2	82	60	8	75	3.5	M5	5.5	5.5	14	30	16.3	5
AQ_80/3	82	50	8	95	3	M6	5.5	5.5	14	30	16.3	5
AQ_100/1	100	80	10	100	4	M6	0	0	14	30	16.3	5
AQ_100/2	100	95	12	115	4	M8	0	0	14	30	16.3	5
AQ_100/3	100	80	10	100	4	M6	2	14	19	40	21.8	6
AQ_100/4	100	95	12	115	4	M8	2	14	19	40	21.8	6
AQ_115/1	115	95	12	130	5	M8	11	23	19	40	21.8	6
AQ_115/2	115	110	12	130	5	M8	11	23	19	40	21.8	6
AQ_115/3	115	110	12	130	5	M8	16	16	24	50	27.3	8
AQ_140/1	140	110	15	165	5	M10	16	16	24	50	27.3	8
AQ_140/2	140	130	15	165	5	M10	16	16	24	50	27.3	8
AQ_140/3	140	130	15	165	5	M10	22	22	32	60	35.3	10
AQ_140/4	140	130	15	165	5	M10	22	22	28	60	31,3	8
AQ_160/1	162	155	15	190	5	M10	22	22	32	60	35,3	10
AQ_190/1	190	130	16	215	5	M12	24	24	32	60	35.3	10
AQ_190/2	190	180	16	215	5	M12	24	24	32	60	35.3	10
AQ_190/3	190	180	16	215	5	M12	34	34	38	80	41.3	10

13 BS.F..

13.1 BS.F.. EBH..

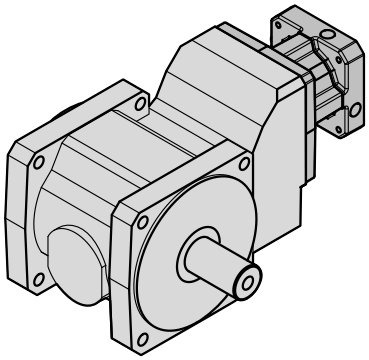

BSF../EBH..

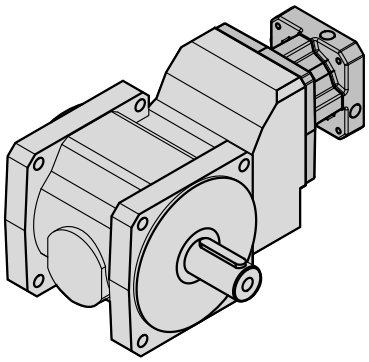

BSKF../EBH..

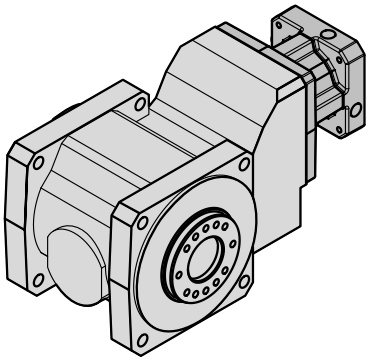

BSBF../EBH..

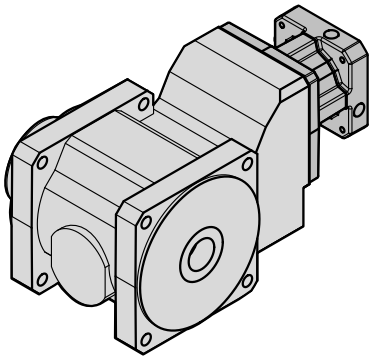

BSHF../EBH..

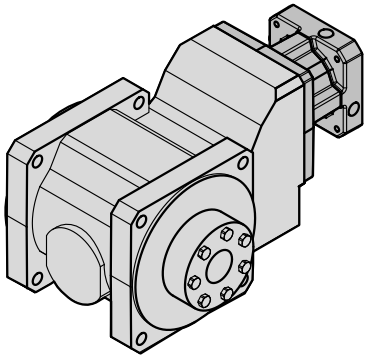

BSHF..I/EBH..

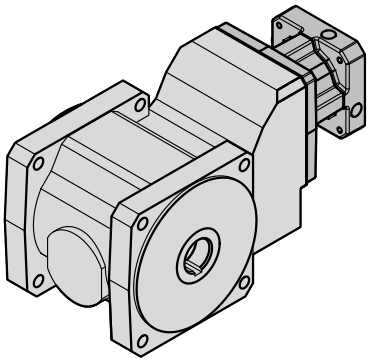

BSAF../EBH..

63930axx

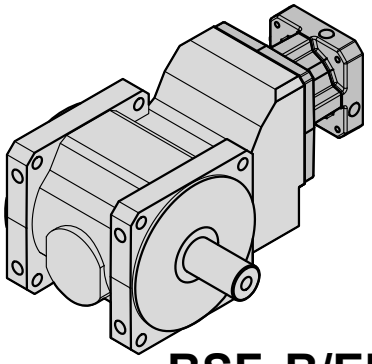

BSF..B/EBH..

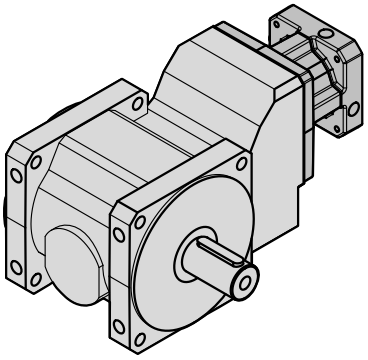

BSKF..B/EBH..

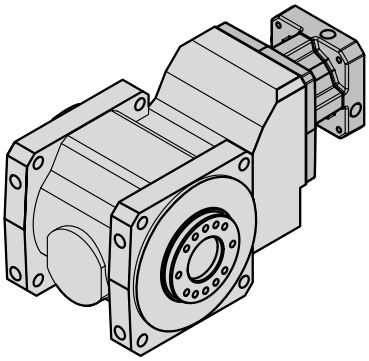

BSBF..B/EBH..

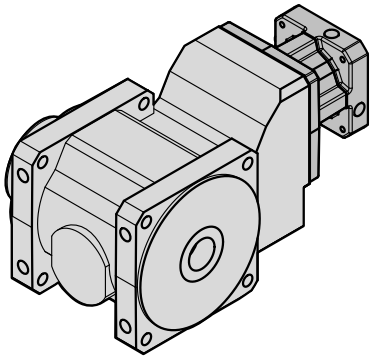

BSHF..B/EBH..

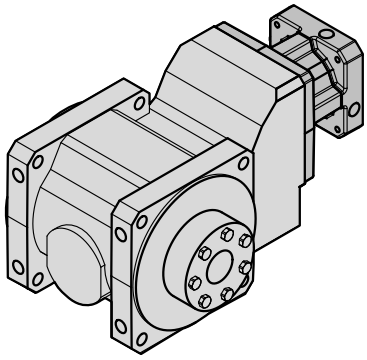

BSHF..B/I/EBH..

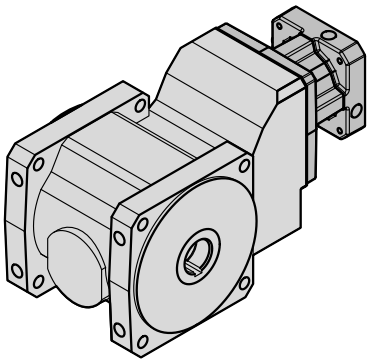

BSAF..B/EBH..

63929axx

13.2 BS.. EBH..

13.2.1 BS..202 EBH.. [Nm]

[Nm]		EBH M_{amax} | M_{apk} | $M_{aNotaus}$					
	i	03			04		
BSF202 2	3.00	40	60	90	40	60	90
	4.00	40	60	90	40	60	90
	6.00	40	60	90	40	60	90
	8.00	40	60	90	40	60	90
	10.00	40	51	76	40	51	76
	15.00	40	51	76	40	51	76
	20.00	40	51	76	40	51	76
	25.00	40	51	76	40	51	76

m [kg]		EBH	
	s	03	04
BSF202	2	5.3	5.3
BSBF: + 0.0 kg / BSHF: + 0.0 kg			

EBH03							c_T			F_{Ramax}			F_{Rapk}		
n_e = 1500	i	M_{amax} [Nm]	M_{apk} [Nm]	$M_{aNotaus}$ [Nm]	n_{ak} [1/min]	J_{GA} 10^{-4} [kgm^2]	BSF [Nm/']	BSBF [Nm/']	BSHF [Nm/']	BSF [N]	BSBF [N]	BSHF [N]	BSF [N]	BSBF [N]	BSHF [N]
BSF202 2	3.00	40	60	90	667	1.8	1.8	2.0	2.0	2680	2970	2600	4200	4200	4200
	4.00	40	60	90	650	1.5	2.1	2.3	2.2	3000	3330	2900	4200	4200	4200
	6.00	40	60	90	650	1.3	2.3	2.6	2.5	3500	3880	3390	4200	4200	4200
	8.00	40	60	90	713	1.2	2.4	2.7	2.6	3900	4200	3780	4200	4200	4200
	10.00	40	51	76	330	1.3	3.7	4.7	4.4	4150	4200	4020	4200	4200	4200
	15.00	40	51	76	333	1.2	3.9	4.9	4.6	4200	4200	4200	4200	4200	4200
	20.00	40	51	76	350	1.1	3.9	5.0	4.6	4200	4200	4200	4200	4200	4200
	25.00	40	51	76	280	1.1	4.0	5.0	4.7	4200	4200	4200	4200	4200	4200

EBH04							c_T			F_{Ramax}			F_{Rapk}		
n_e = 1500	i	M_{amax} [Nm]	M_{apk} [Nm]	$M_{aNotaus}$ [Nm]	n_{ak} [1/min]	J_{GA} 10^{-4} [kgm^2]	BSF [Nm/']	BSBF [Nm/']	BSHF [Nm/']	BSF [N]	BSBF [N]	BSHF [N]	BSF [N]	BSBF [N]	BSHF [N]
BSF202 2	3.00	40	60	90	667	1.8	1.9	2.1	2.0	2680	2970	2600	4200	4200	4200
	4.00	40	60	90	650	1.5	2.1	2.4	2.3	3000	3330	2900	4200	4200	4200
	6.00	40	60	90	650	1.3	2.3	2.7	2.6	3500	3880	3390	4200	4200	4200
	8.00	40	60	90	713	1.2	2.4	2.8	2.6	3900	4200	3780	4200	4200	4200
	10.00	40	51	76	330	1.3	3.8	4.7	4.4	4150	4200	4020	4200	4200	4200
	15.00	40	51	76	333	1.2	3.9	5.0	4.6	4200	4200	4200	4200	4200	4200
	20.00	40	51	76	350	1.1	3.9	5.0	4.6	4200	4200	4200	4200	4200	4200
	25.00	40	51	76	280	1.1	4.0	5.1	4.7	4200	4200	4200	4200	4200	4200

EBH				M1			M2;M4			M3;M5-6			φ		
	i	n_{epk} [1/min]	η [%]	a_0	a_1	a_2	a_0	a_1	a_2	a_0	a_1	a_2	[']	/R [']	/M [']
BSF202 2	3.00	4500	93.7	4.10	-0.011	77457	14.47	-0.020	66498	6.12	-0.013	75323	6	3	-
	4.00	4500	93.7	4.26	-0.014	76815	20.11	-0.028	60846	7.52	-0.017	73532	6	3	-
	6.00	4500	93.7	4.50	-0.019	75905	30.66	-0.042	51203	10.05	-0.024	70662	6	3	-
	8.00	4500	93.8	4.70	-0.022	75309	37.13	-0.052	46240	12.10	-0.029	68596	6	3	-
	10.00	4500	90.1	3.31	-0.057	47656	52.73	-0.146	26432	19.70	-0.083	39837	6	3	-
	15.00	4500	90.2	4.09	-0.076	46683	56.52	-0.189	28536	31.62	-0.125	34857	6	3	-
	20.00	4500	90.3	3.77	-0.089	46508	53.03	-0.210	32477	42.49	-0.161	30764	6	3	-
	25.00	4500	90.5	3.67	-0.098	46334	47.99	-0.221	36133	51.81	-0.191	27469	6	3	-

13.2.2 BS..202 EBH.. [mm]

55 003 00 03

BSF202..

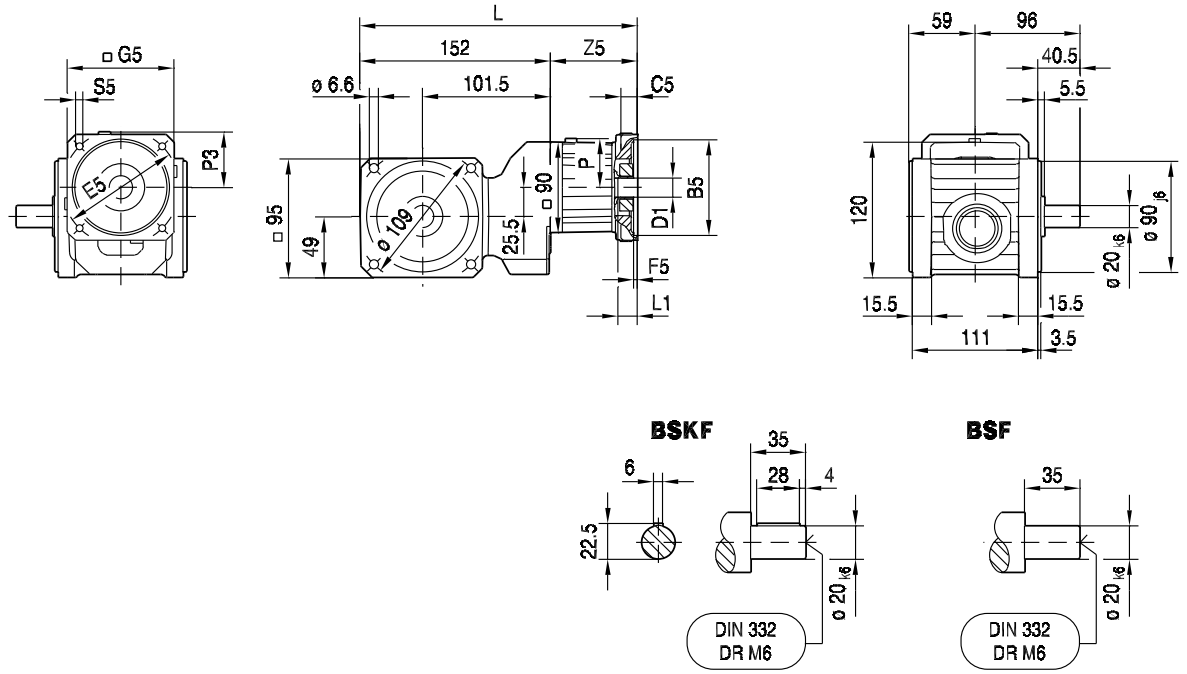

(→ 144)	L	B5	C5	E5	F5	G5	S5	Z5	L1	P	P3	D1 (→ 476)
EBH03/01/..	237	40	20	63	3.5	90	M4	86	42	45	47	8, 9, 10, 11, 12, 14
EBH03/03/..	237	50	20	60	3.5	90	M4	86	41	45	47	8, 9, 10, 11, 12, 14
EBH03/04/..	237	50	20	70	3.5	90	M5	86	41	45	47	8, 9, 10, 11, 12, 14
EBH03/05/..	237	50	20	80	3.5	90	M4	86	41	45	47	8, 9, 10, 11, 12, 14
EBH03/06/..	237	50	20	95	3.5	90	M6	86	41	45	47	8, 9, 10, 11, 12, 14
EBH03/07/..	237	50	20	100	3.5	90	M6	86	41	45	47	8, 9, 10, 11, 12, 14
EBH03/08/..	237	60	20	75	3.5	90	M5	86	41	45	47	8, 9, 10, 11, 12, 14
EBH03/09/..	237	60	20	90	3.5	90	M5	86	41	45	47	8, 9, 10, 11, 12, 14
EBH03/10/..	237	70	20	85	3.5	90	M6	86	41	45	47	8, 9, 10, 11, 12, 14
EBH03/11/..	237	70	20	90	3.5	90	M5	86	41	45	47	8, 9, 10, 11, 12, 14
EBH03/13/..	237	80	20	100	3.5	90	M6	86	41	45	47	8, 9, 10, 11, 12, 14
EBH03/14/..	237	95	16	115	4	105	M8	86	41	45	55	8, 9, 10, 11, 12, 14
EBH04/12/..	237	70	20	90	3.5	90	M6	86	41	45	47	11 ,12 ,14, 16, 19
EBH04/13/..	237	80	20	100	3.5	90	M6	86	41	45	47	11 ,12 ,14, 16, 19
EBH04/14/..	237	95	16	115	4	105	M8	86	41	45	55	11 ,12 ,14, 16, 19
EBH04/15/..	237	95	16	130	4	115	M8	86	41	45	60	11 ,12 ,14, 16, 19

BSBF202..

55 004 00 03

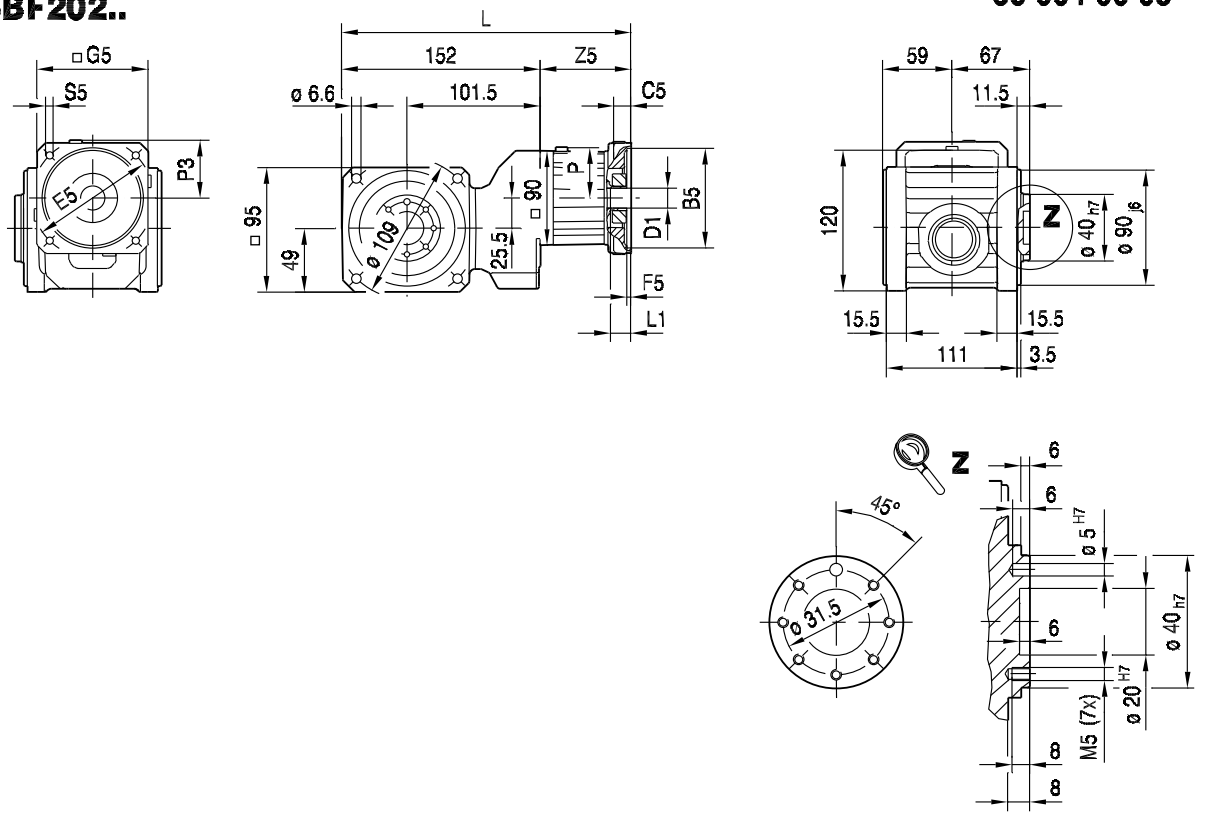

(→ 144)	L	B5	C5	E5	F5	G5	S5	Z5	L1	P	P3	D1 (→ 476)
EBH03/01/..	237	40	20	63	3.5	90	M4	86	42	45	47	8, 9, 10, 11, 12, 14
EBH03/03/..	237	50	20	60	3.5	90	M4	86	41	45	47	8, 9, 10, 11, 12, 14
EBH03/04/..	237	50	20	70	3.5	90	M5	86	41	45	47	8, 9, 10, 11, 12, 14
EBH03/05/..	237	50	20	80	3.5	90	M4	86	41	45	47	8, 9, 10, 11, 12, 14
EBH03/06/..	237	50	20	95	3.5	90	M6	86	41	45	47	8, 9, 10, 11, 12, 14
EBH03/07/..	237	50	20	100	3.5	90	M6	86	41	45	47	8, 9, 10, 11, 12, 14
EBH03/08/..	237	60	20	75	3.5	90	M5	86	41	45	47	8, 9, 10, 11, 12, 14
EBH03/09/..	237	60	20	90	3.5	90	M5	86	41	45	47	8, 9, 10, 11, 12, 14
EBH03/10/..	237	70	20	85	3.5	90	M6	86	41	45	47	8, 9, 10, 11, 12, 14
EBH03/11/..	237	70	20	90	3.5	90	M5	86	41	45	47	8, 9, 10, 11, 12, 14
EBH03/13/..	237	80	20	100	3.5	90	M6	86	41	45	47	8, 9, 10, 11, 12, 14
EBH03/14/..	237	95	16	115	4	105	M8	86	41	45	55	8, 9, 10, 11, 12, 14
EBH04/12/..	237	70	20	90	3.5	90	M6	86	41	45	47	11 ,12 ,14, 16, 19
EBH04/13/..	237	80	20	100	3.5	90	M6	86	41	45	47	11 ,12 ,14, 16, 19
EBH04/14/..	237	95	16	115	4	105	M8	86	41	45	55	11 ,12 ,14, 16, 19
EBH04/15/..	237	95	16	130	4	115	M8	86	41	45	60	11 ,12 ,14, 16, 19

BSHF202..

55 021 00 03

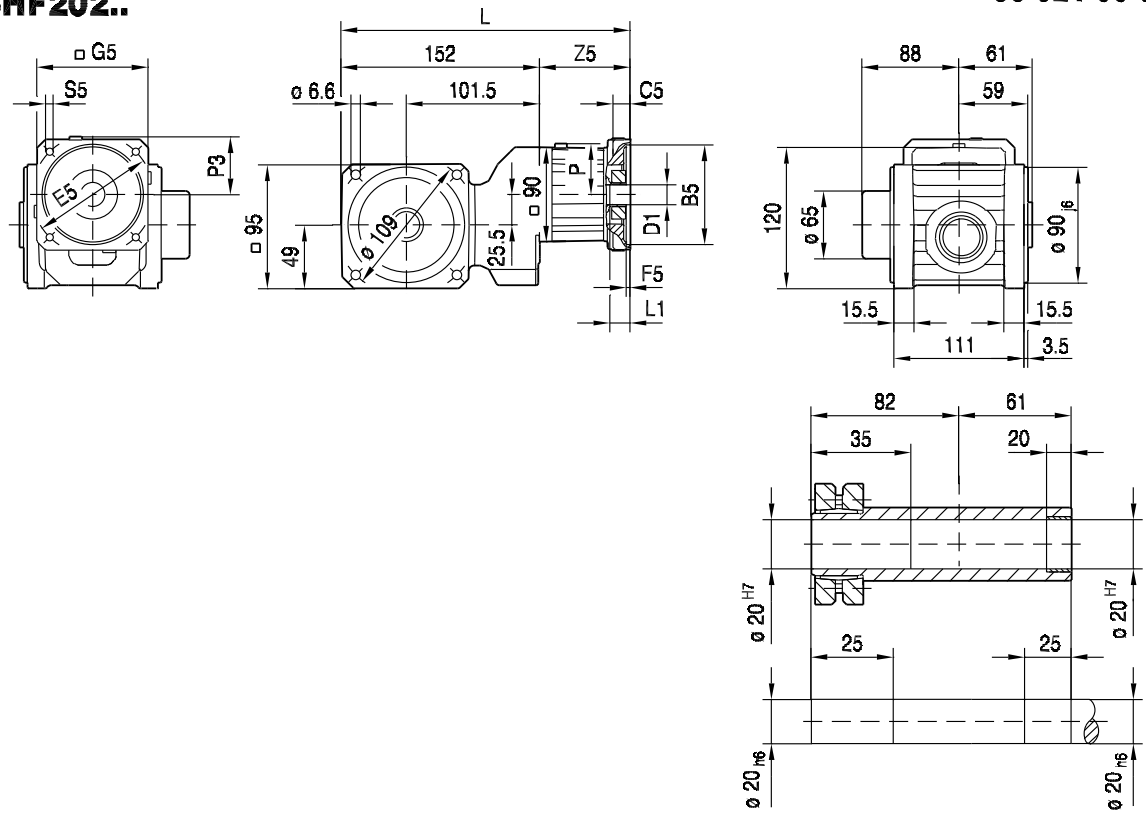

(→ 144)	L	B5	C5	E5	F5	G5	S5	Z5	L1	P	P3	D1 (→ 476)
EBH03/01/..	237	40	20	63	3.5	90	M4	86	42	45	47	8, 9, 10, 11, 12, 14
EBH03/03/..	237	50	20	60	3.5	90	M4	86	41	45	47	8, 9, 10, 11, 12, 14
EBH03/04/..	237	50	20	70	3.5	90	M5	86	41	45	47	8, 9, 10, 11, 12, 14
EBH03/05/..	237	50	20	80	3.5	90	M4	86	41	45	47	8, 9, 10, 11, 12, 14
EBH03/06/..	237	50	20	95	3.5	90	M6	86	41	45	47	8, 9, 10, 11, 12, 14
EBH03/07/..	237	50	20	100	3.5	90	M6	86	41	45	47	8, 9, 10, 11, 12, 14
EBH03/08/..	237	60	20	75	3.5	90	M5	86	41	45	47	8, 9, 10, 11, 12, 14
EBH03/09/..	237	60	20	90	3.5	90	M5	86	41	45	47	8, 9, 10, 11, 12, 14
EBH03/10/..	237	70	20	85	3.5	90	M6	86	41	45	47	8, 9, 10, 11, 12, 14
EBH03/11/..	237	70	20	90	3.5	90	M5	86	41	45	47	8, 9, 10, 11, 12, 14
EBH03/13/..	237	80	20	100	3.5	90	M6	86	41	45	47	8, 9, 10, 11, 12, 14
EBH03/14/..	237	95	16	115	4	105	M8	86	41	45	55	8, 9, 10, 11, 12, 14
EBH04/12/..	237	70	20	90	3.5	90	M6	86	41	45	47	11 ,12 ,14, 16, 19
EBH04/13/..	237	80	20	100	3.5	90	M6	86	41	45	47	11 ,12 ,14, 16, 19
EBH04/14/..	237	95	16	115	4	105	M8	86	41	45	55	11 ,12 ,14, 16, 19
EBH04/15/..	237	95	16	130	4	115	M8	86	41	45	60	11 ,12 ,14, 16, 19

BSHF202/I..

55 005 00 03

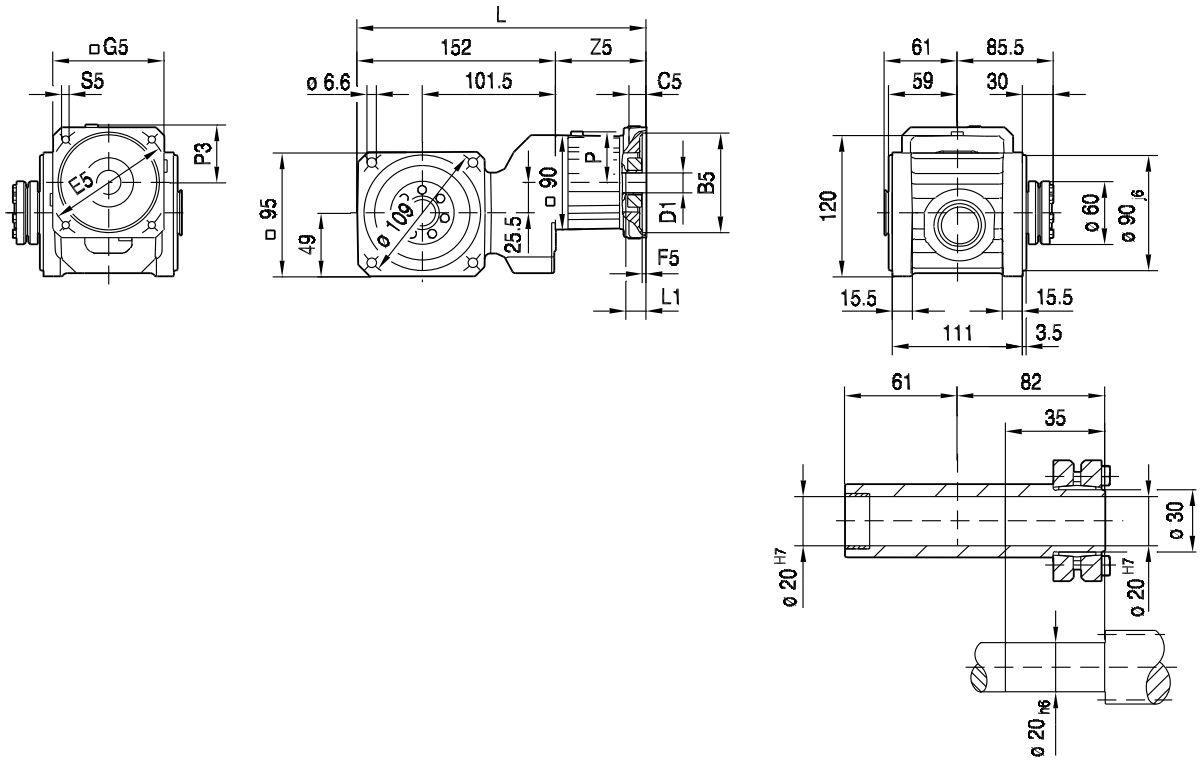

(→ 144)	L	B5	C5	E5	F5	G5	S5	Z5	L1	P	P3	D1 (→ 476)
EBH03/01/..	237	40	20	63	3.5	90	M4	86	42	45	47	8, 9, 10, 11, 12, 14
EBH03/03/..	237	50	20	60	3.5	90	M4	86	41	45	47	8, 9, 10, 11, 12, 14
EBH03/04/..	237	50	20	70	3.5	90	M5	86	41	45	47	8, 9, 10, 11, 12, 14
EBH03/05/..	237	50	20	80	3.5	90	M4	86	41	45	47	8, 9, 10, 11, 12, 14
EBH03/06/..	237	50	20	95	3.5	90	M6	86	41	45	47	8, 9, 10, 11, 12, 14
EBH03/07/..	237	50	20	100	3.5	90	M6	86	41	45	47	8, 9, 10, 11, 12, 14
EBH03/08/..	237	60	20	75	3.5	90	M5	86	41	45	47	8, 9, 10, 11, 12, 14
EBH03/09/..	237	60	20	90	3.5	90	M5	86	41	45	47	8, 9, 10, 11, 12, 14
EBH03/10/..	237	70	20	85	3.5	90	M6	86	41	45	47	8, 9, 10, 11, 12, 14
EBH03/11/..	237	70	20	90	3.5	90	M5	86	41	45	47	8, 9, 10, 11, 12, 14
EBH03/13/..	237	80	20	100	3.5	90	M6	86	41	45	47	8, 9, 10, 11, 12, 14
EBH03/14/..	237	95	16	115	4	105	M8	86	41	45	55	8, 9, 10, 11, 12, 14
EBH04/12/..	237	70	20	90	3.5	90	M6	86	41	45	47	11 ,12 ,14, 16, 19
EBH04/13/..	237	80	20	100	3.5	90	M6	86	41	45	47	11 ,12 ,14, 16, 19
EBH04/14/..	237	95	16	115	4	105	M8	86	41	45	55	11 ,12 ,14, 16, 19
EBH04/15/..	237	95	16	130	4	115	M8	86	41	45	60	11 ,12 ,14, 16, 19

55 009 00 07

BSAF202..

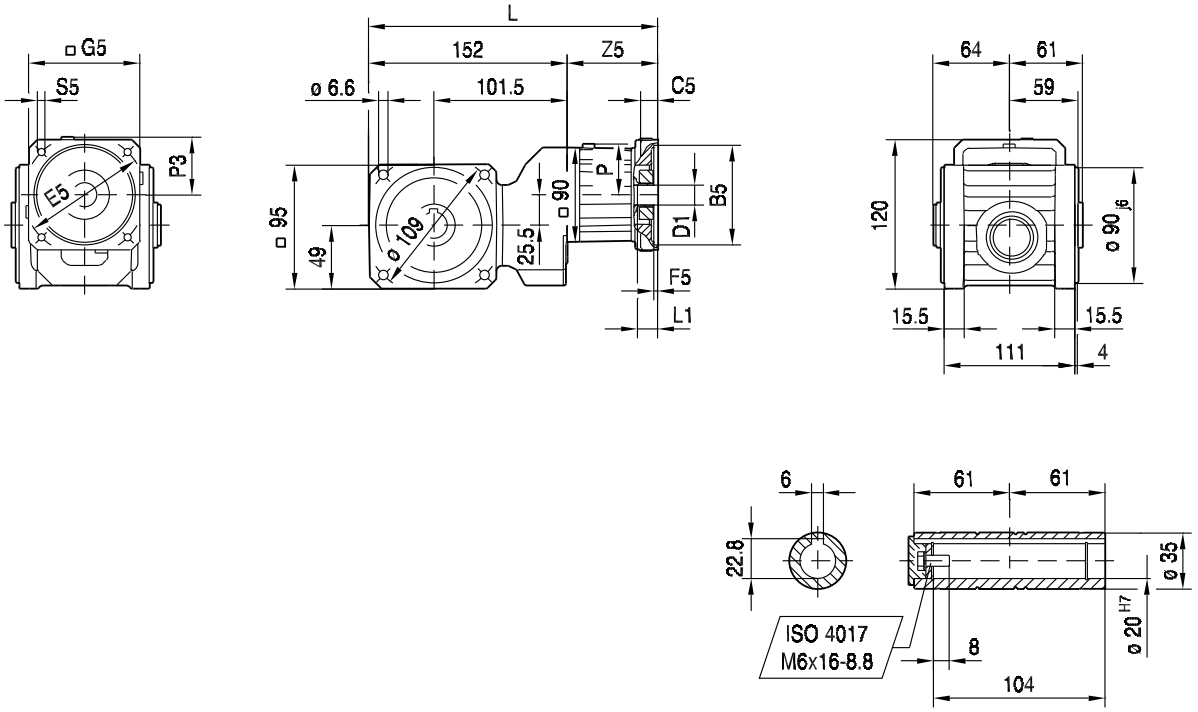

(→ 144)	L	B5	C5	E5	F5	G5	S5	Z5	L1	P	P3	D1 (→ 476)
EBH03/01/..	237	40	20	63	3.5	90	M4	86	42	45	47	8, 9, 10, 11, 12, 14
EBH03/03/..	237	50	20	60	3.5	90	M4	86	41	45	47	8, 9, 10, 11, 12, 14
EBH03/04/..	237	50	20	70	3.5	90	M5	86	41	45	47	8, 9, 10, 11, 12, 14
EBH03/05/..	237	50	20	80	3.5	90	M4	86	41	45	47	8, 9, 10, 11, 12, 14
EBH03/06/..	237	50	20	95	3.5	90	M6	86	41	45	47	8, 9, 10, 11, 12, 14
EBH03/07/..	237	50	20	100	3.5	90	M6	86	41	45	47	8, 9, 10, 11, 12, 14
EBH03/08/..	237	60	20	75	3.5	90	M5	86	41	45	47	8, 9, 10, 11, 12, 14
EBH03/09/..	237	60	20	90	3.5	90	M5	86	41	45	47	8, 9, 10, 11, 12, 14
EBH03/10/..	237	70	20	85	3.5	90	M6	86	41	45	47	8, 9, 10, 11, 12, 14
EBH03/11/..	237	70	20	90	3.5	90	M5	86	41	45	47	8, 9, 10, 11, 12, 14
EBH03/13/..	237	80	20	100	3.5	90	M6	86	41	45	47	8, 9, 10, 11, 12, 14
EBH03/14/..	237	95	16	115	4	105	M8	86	41	45	55	8, 9, 10, 11, 12, 14
EBH04/12/..	237	70	20	90	3.5	90	M6	86	41	45	47	11 ,12 ,14, 16, 19
EBH04/13/..	237	80	20	100	3.5	90	M6	86	41	45	47	11 ,12 ,14, 16, 19
EBH04/14/..	237	95	16	115	4	105	M8	86	41	45	55	11 ,12 ,14, 16, 19
EBH04/15/..	237	95	16	130	4	115	M8	86	41	45	60	11 ,12 ,14, 16, 19

13.2.3 BS.F302 EBH.. [Nm]

[Nm]		EBH M_{amax} | M_{apk} | $M_{aNotaus}$								
	i	03			04			05		
BSF302 2	3.00	56	82	123	56	82	123	68	82	123
	4.00	63	109	164	63	109	164	76	109	163
	6.00	74	111	166	74	111	166	80	120	180
	8.00	80	120	180	80	120	180	80	120	180
	10.00	72	108	162	72	108	162	72	108	162
	15.00	80	112	168	80	112	168	80	112	168
	20.00	80	112	168	80	112	168	80	112	168
	25.00	80	112	168	80	112	168			
	30.00	80	112	168	80	112	168			

m [kg]		EBH		
	s	03	04	05
BSF302	2	7.3	7.3	8.8
BSBF: + 0.3 kg / BSHF: + -0.1 kg				

EBH03							c_T			F_{Ramax}			F_{Rapk}		
n_e = 1500	i	M_{amax} [Nm]	M_{apk} [Nm]	$M_{aNotaus}$ [Nm]	n_{ak} [1/min]	J_{GA} 10^{-4} [kgm^2]	BSF [Nm/']	BSBF [Nm/']	BSHF [Nm/']	BSF [N]	BSBF [N]	BSHF [N]	BSF [N]	BSBF [N]	BSHF [N]
BSF302 2	3.00	56	82	123	900	2.7	3.3	3.7	3.5	4620	5090	4470	5140	6000	5640
	4.00	63	109	164	625	2.0	3.8	4.4	4.1	5070	5590	4910	4820	6000	5460
	6.00	74	111	166	250	1.5	4.4	5.3	4.9	5210	6000	5610	4800	6000	5440
	8.00	80	120	180	188	1.3	4.8	5.7	5.2	5160	6000	5660	4660	6000	5370
	10.00	72	108	162	150	1.6	7.4	10	8.8	5230	6000	5700	4840	6000	5470
	15.00	80	112	168	107	1.3	7.9	11	9.3	5160	6000	5660	4780	6000	5440
	20.00	80	112	168	110	1.2	8.0	11	9.6	5160	6000	5660	4780	6000	5440
	25.00	80	112	168	108	1.2	8.2	11	9.8	5160	6000	5660	4780	6000	5440
	30.00	80	112	168	117	1.1	8.2	11	9.7	5160	6000	5660	4780	6000	5440

EBH04							c_T			F_{Ramax}			F_{Rapk}		
n_e = 1500	i	M_{amax} [Nm]	M_{apk} [Nm]	$M_{aNotaus}$ [Nm]	n_{ak} [1/min]	J_{GA} 10^{-4} [kgm^2]	BSF [Nm/']	BSBF [Nm/']	BSHF [Nm/']	BSF [N]	BSBF [N]	BSHF [N]	BSF [N]	BSBF [N]	BSHF [N]
BSF302 2	3.00	56	82	123	900	2.7	3.4	3.8	3.6	4620	5090	4470	5140	6000	5640
	4.00	63	109	164	625	2.0	3.9	4.6	4.2	5070	5590	4910	4820	6000	5460
	6.00	74	111	166	250	1.5	4.5	5.4	5.0	5210	6000	5610	4800	6000	5440
	8.00	80	120	180	188	1.3	4.8	5.8	5.3	5160	6000	5660	4660	6000	5370
	10.00	72	108	162	150	1.6	7.5	10	8.8	5230	6000	5700	4840	6000	5470
	15.00	80	112	168	107	1.3	7.9	11	9.4	5160	6000	5660	4780	6000	5440
	20.00	80	112	168	110	1.2	8.1	11	9.6	5160	6000	5660	4780	6000	5440
	25.00	80	112	168	108	1.2	8.2	12	9.8	5160	6000	5660	4780	6000	5440
	30.00	80	112	168	117	1.1	8.2	12	9.8	5160	6000	5660	4780	6000	5440

EBH05							c_T			F_{Ramax}			F_{Rapk}		
n_e = 1500	i	M_{amax} [Nm]	M_{apk} [Nm]	$M_{aNotaus}$ [Nm]	n_{ak} [1/min]	J_{GA} 10^{-4} [kgm^2]	BSF [Nm/']	BSBF [Nm/']	BSHF [Nm/']	BSF [N]	BSBF [N]	BSHF [N]	BSF [N]	BSBF [N]	BSHF [N]
BSF302 2	3.00	68	82	123	500	6.5	3.8	4.4	4.1	4520	4980	4380	5140	6000	5640
	4.00	76	109	163	375	5.9	4.3	5.1	4.7	4960	5460	4810	4820	6000	5460
	6.00	80	120	180	333	5.4	4.8	5.9	5.4	5160	6000	5560	4660	6000	5370
	8.00	80	120	180	350	5.2	5.1	6.2	5.7	5160	6000	5660	4660	6000	5370
	10.00	72	108	162	150	5.5	7.8	11	9.3	5230	6000	5700	4840	6000	5470
	15.00	80	112	168	107	5.2	8.1	11	9.7	5160	6000	5660	4780	6000	5440
	20.00	80	112	168	110	5.1	8.2	12	9.9	5160	6000	5660	4780	6000	5440

EBH				M1			M2;M4			M3;M5-6			φ		
	i	n_{epk} [1/min]	η [%]	a_0	a_1	a_2	a_0	a_1	a_2	a_0	a_1	a_2	[']	/R [']	/M [']
BSF302 2	3.00	4500	93.8	10.61	-0.020	101982	29.34	-0.039	87407	16.53	-0.026	97370	6	3	-
	4.00	4500	94	11.44	-0.025	100944	39.04	-0.054	80239	20.24	-0.034	94323	6	3	-
	6.00	4500	94	12.77	-0.033	99436	48.54	-0.075	75064	26.76	-0.048	89388	6	3	-
	8.00	4500	94.1	13.72	-0.038	98463	54.94	-0.091	72074	31.93	-0.059	85770	6	3	-
	10.00	4500	90.7	17.47	-0.106	60873	82.08	-0.261	41142	61.94	-0.192	43856	6	3	-
	15.00	4500	91	23.30	-0.146	58348	101.6	-0.363	38252	94.43	-0.295	33419	6	3	-
	20.00	4500	91.1	28.02	-0.176	56577	122.0	-0.451	33554	108.9	-0.358	30285	6	3	-
	25.00	4500	91.1	30.93	-0.198	55589	137.5	-0.520	30171	119.7	-0.407	28099	6	3	-
	30.00	4500	91.2	33.58	-0.216	54719	149.6	-0.574	27671	128.0	-0.446	26539	6	3	-

13.2.4 BS..302 EBH.. [Nm]

55 006 00 03

BSF302..

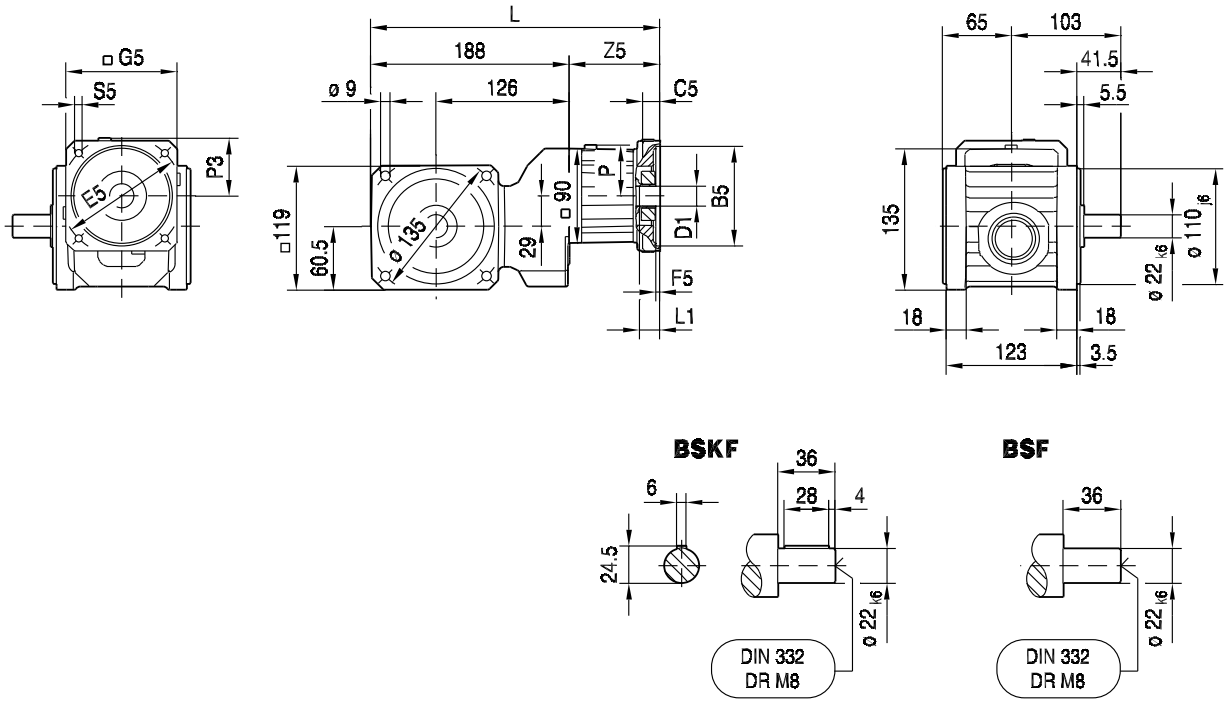

(→ 📖 144)	L	B5	C5	E5	F5	G5	S5	Z5	L1	P	P3	D1 (→ 📖 476)
EBH03/01/..	273	40	20	63	3.5	90	M4	86	42	45	47	8, 9, 10, 11, 12, 14
EBH03/03/..	273	50	20	60	3.5	90	M4	86	41	45	47	8, 9, 10, 11, 12, 14
EBH03/04/..	273	50	20	70	3.5	90	M5	86	41	45	47	8, 9, 10, 11, 12, 14
EBH03/05/..	273	50	20	80	3.5	90	M4	86	41	45	47	8, 9, 10, 11, 12, 14
EBH03/06/..	273	50	20	95	3.5	90	M6	86	41	45	47	8, 9, 10, 11, 12, 14
EBH03/07/..	273	50	20	100	3.5	90	M6	86	41	45	47	8, 9, 10, 11, 12, 14
EBH03/08/..	273	60	20	75	3.5	90	M5	86	41	45	47	8, 9, 10, 11, 12, 14
EBH03/09/..	273	60	20	90	3.5	90	M5	86	41	45	47	8, 9, 10, 11, 12, 14
EBH03/10/..	273	70	20	85	3.5	90	M6	86	41	45	47	8, 9, 10, 11, 12, 14
EBH03/11/..	273	70	20	90	3.5	90	M5	86	41	45	47	8, 9, 10, 11, 12, 14
EBH03/13/..	273	80	20	100	3.5	90	M6	86	41	45	47	8, 9, 10, 11, 12, 14
EBH03/14/..	273	95	16	115	4	105	M8	86	41	45	55	8, 9, 10, 11, 12, 14
EBH04/12/..	273	70	20	90	3.5	90	M6	86	41	45	47	11 ,12 ,14, 16, 19
EBH04/13/..	273	80	20	100	3.5	90	M6	86	41	45	47	11 ,12 ,14, 16, 19
EBH04/14/..	273	95	16	115	4	105	M8	86	41	45	55	11 ,12 ,14, 16, 19
EBH04/15/..	273	95	16	130	4	115	M8	86	41	45	60	11 ,12 ,14, 16, 19
EBH05/14/..	301	95	16	115	5	120	M8	114	56	56	62	14, 16, 17, 18, 19, 24
EBH05/15/..	301	95	16	130	5	120	M8	114	56	56	62	14, 16, 17, 18, 19, 24
EBH05/16/..	301	110	16	130	5	120	M8	114	56	56	62	14, 16, 17, 18, 19, 24
EBH05/17/..	301	110	16	145	7	120	M8	114	56	56	62	14, 16, 17, 18, 19, 24
EBH05/18/..	301	110	20	165	5	140	M10	114	56	56	72	14, 16, 17, 18, 19, 24
EBH05/20/..	301	130	20	165	5	140	M10	114	56	56	72	14, 16, 17, 18, 19, 24
EBH05/26/..	301	110	16	130	5	115	M8	114	56	56	61	14, 16, 17, 18, 19, 24

BSBF302..

55 007 00 03

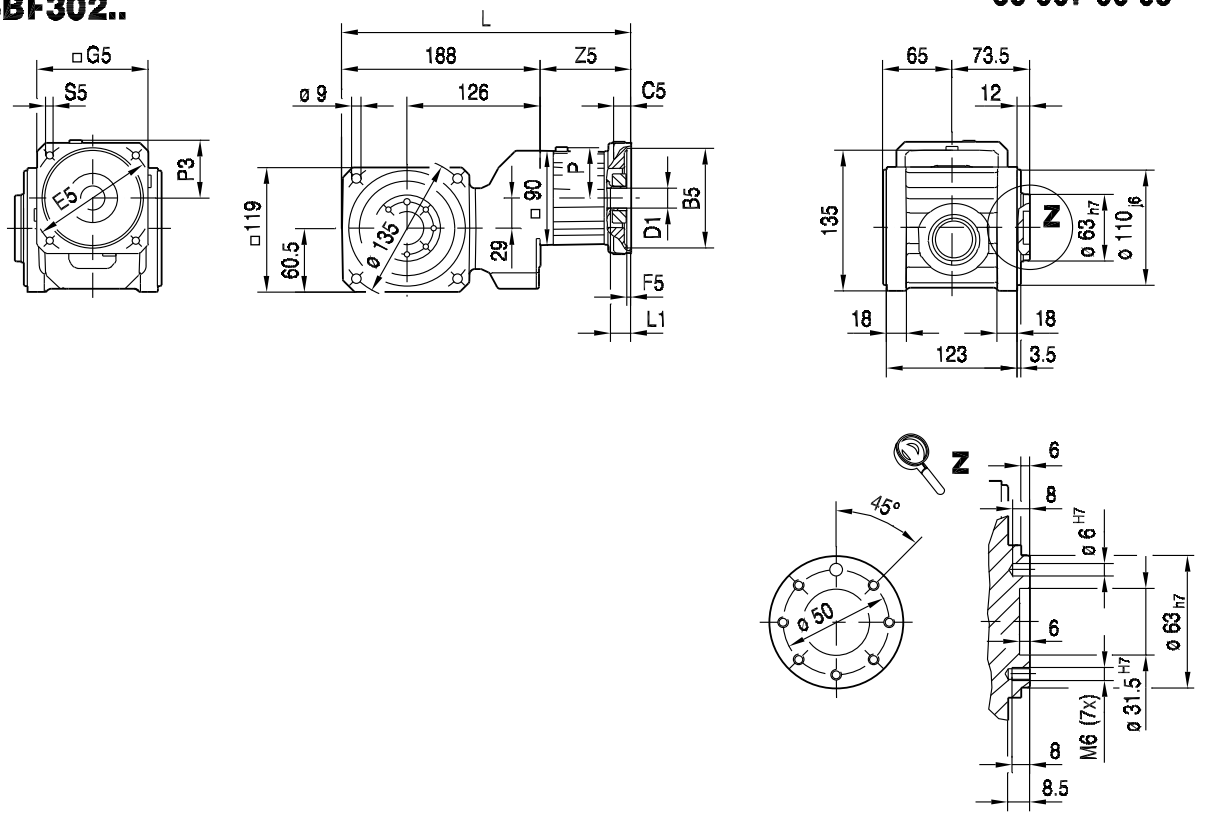

(→ 144)	L	B5	C5	E5	F5	G5	S5	Z5	L1	P	P3	D1 (→ 476)
EBH03/01/..	273	40	20	63	3.5	90	M4	86	42	45	47	8, 9, 10, 11, 12, 14
EBH03/03/..	273	50	20	60	3.5	90	M4	86	41	45	47	8, 9, 10, 11, 12, 14
EBH03/04/..	273	50	20	70	3.5	90	M5	86	41	45	47	8, 9, 10, 11, 12, 14
EBH03/05/..	273	50	20	80	3.5	90	M4	86	41	45	47	8, 9, 10, 11, 12, 14
EBH03/06/..	273	50	20	95	3.5	90	M6	86	41	45	47	8, 9, 10, 11, 12, 14
EBH03/07/..	273	50	20	100	3.5	90	M6	86	41	45	47	8, 9, 10, 11, 12, 14
EBH03/08/..	273	60	20	75	3.5	90	M5	86	41	45	47	8, 9, 10, 11, 12, 14
EBH03/09/..	273	60	20	90	3.5	90	M5	86	41	45	47	8, 9, 10, 11, 12, 14
EBH03/10/..	273	70	20	85	3.5	90	M6	86	41	45	47	8, 9, 10, 11, 12, 14
EBH03/11/..	273	70	20	90	3.5	90	M5	86	41	45	47	8, 9, 10, 11, 12, 14
EBH03/13/..	273	80	20	100	3.5	90	M6	86	41	45	47	8, 9, 10, 11, 12, 14
EBH03/14/..	273	95	16	115	4	105	M8	86	41	45	55	8, 9, 10, 11, 12, 14
EBH04/12/..	273	70	20	90	3.5	90	M6	86	41	45	47	11 ,12 ,14, 16, 19
EBH04/13/..	273	80	20	100	3.5	90	M6	86	41	45	47	11 ,12 ,14, 16, 19
EBH04/14/..	273	95	16	115	4	105	M8	86	41	45	55	11 ,12 ,14, 16, 19
EBH04/15/..	273	95	16	130	4	115	M8	86	41	45	60	11 ,12 ,14, 16, 19
EBH05/14/..	301	95	16	115	5	120	M8	114	56	56	62	14, 16, 17, 18, 19, 24
EBH05/15/..	301	95	16	130	5	120	M8	114	56	56	62	14, 16, 17, 18, 19, 24
EBH05/16/..	301	110	16	130	5	120	M8	114	56	56	62	14, 16, 17, 18, 19, 24
EBH05/17/..	301	110	16	145	7	120	M8	114	56	56	62	14, 16, 17, 18, 19, 24
EBH05/18/..	301	110	20	165	5	140	M10	114	56	56	72	14, 16, 17, 18, 19, 24
EBH05/20/..	301	130	20	165	5	140	M10	114	56	56	72	14, 16, 17, 18, 19, 24
EBH05/26/..	301	110	16	130	5	115	M8	114	56	56	61	14, 16, 17, 18, 19, 24

BSHF302..

55 023 00 03

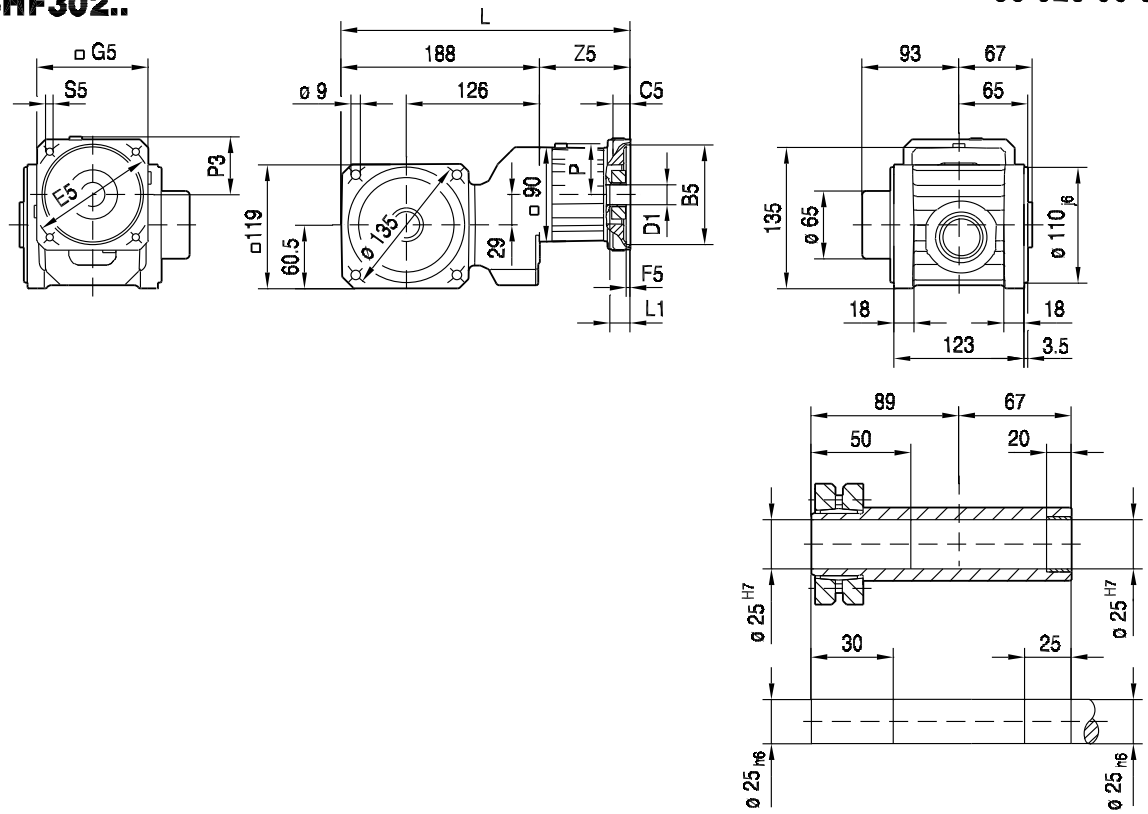

(→ 144)	L	B5	C5	E5	F5	G5	S5	Z5	L1	P	P3	D1 (→ 476)
EBH03/01/..	273	40	20	63	3.5	90	M4	86	42	45	47	8, 9, 10, 11, 12, 14
EBH03/03/..	273	50	20	60	3.5	90	M4	86	41	45	47	8, 9, 10, 11, 12, 14
EBH03/04/..	273	50	20	70	3.5	90	M5	86	41	45	47	8, 9, 10, 11, 12, 14
EBH03/05/..	273	50	20	80	3.5	90	M4	86	41	45	47	8, 9, 10, 11, 12, 14
EBH03/06/..	273	50	20	95	3.5	90	M6	86	41	45	47	8, 9, 10, 11, 12, 14
EBH03/07/..	273	50	20	100	3.5	90	M6	86	41	45	47	8, 9, 10, 11, 12, 14
EBH03/08/..	273	60	20	75	3.5	90	M5	86	41	45	47	8, 9, 10, 11, 12, 14
EBH03/09/..	273	60	20	90	3.5	90	M5	86	41	45	47	8, 9, 10, 11, 12, 14
EBH03/10/..	273	70	20	85	3.5	90	M6	86	41	45	47	8, 9, 10, 11, 12, 14
EBH03/11/..	273	70	20	90	3.5	90	M5	86	41	45	47	8, 9, 10, 11, 12, 14
EBH03/13/..	273	80	20	100	3.5	90	M6	86	41	45	47	8, 9, 10, 11, 12, 14
EBH03/14/..	273	95	16	115	4	105	M8	86	41	45	55	8, 9, 10, 11, 12, 14
EBH04/12/..	273	70	20	90	3.5	90	M6	86	41	45	47	11 ,12 ,14, 16, 19
EBH04/13/..	273	80	20	100	3.5	90	M6	86	41	45	47	11 ,12 ,14, 16, 19
EBH04/14/..	273	95	16	115	4	105	M8	86	41	45	55	11 ,12 ,14, 16, 19
EBH04/15/..	273	95	16	130	4	115	M8	86	41	45	60	11 ,12 ,14, 16, 19
EBH05/14/..	301	95	16	115	5	120	M8	114	56	56	62	14, 16, 17, 18, 19, 24
EBH05/15/..	301	95	16	130	5	120	M8	114	56	56	62	14, 16, 17, 18, 19, 24
EBH05/16/..	301	110	16	130	5	120	M8	114	56	56	62	14, 16, 17, 18, 19, 24
EBH05/17/..	301	110	16	145	7	120	M8	114	56	56	62	14, 16, 17, 18, 19, 24
EBH05/18/..	301	110	20	165	5	140	M10	114	56	56	72	14, 16, 17, 18, 19, 24
EBH05/20/..	301	130	20	165	5	140	M10	114	56	56	72	14, 16, 17, 18, 19, 24
EBH05/26/..	301	110	16	130	5	115	M8	114	56	56	61	14, 16, 17, 18, 19, 24

BSHF302/I..

55 008 00 03

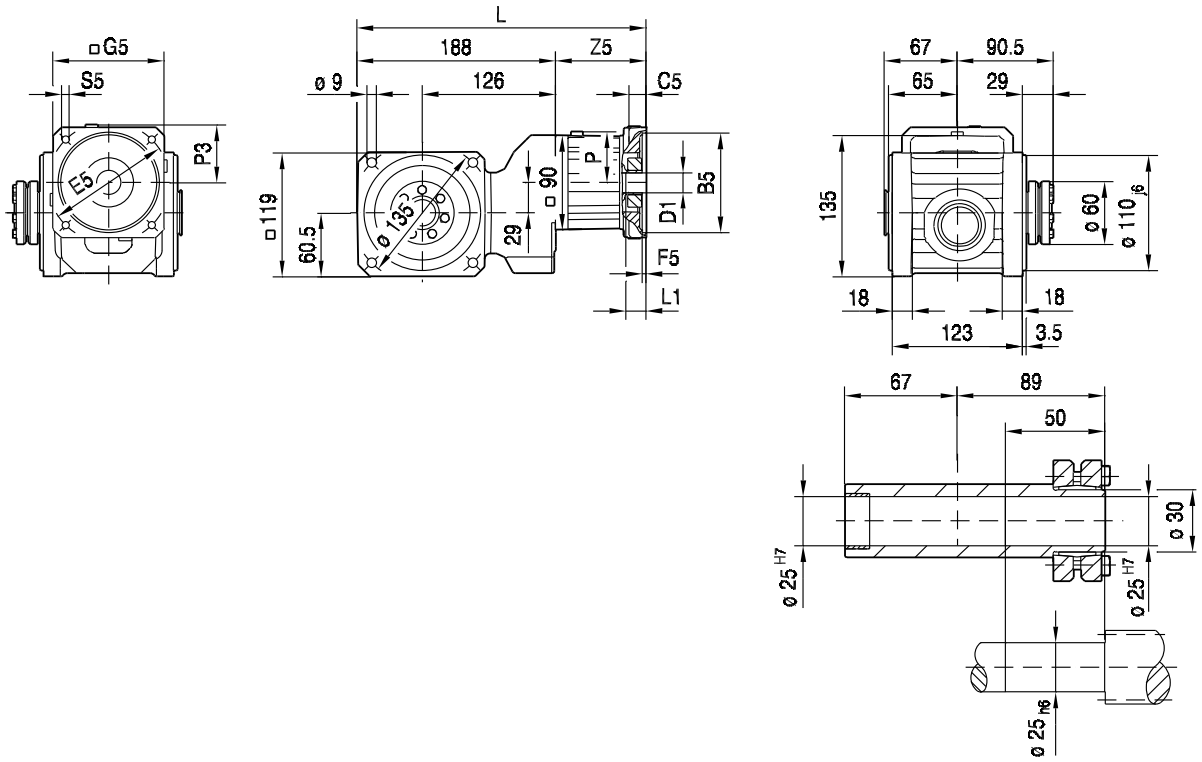

(→ 144)	L	B5	C5	E5	F5	G5	S5	Z5	L1	P	P3	D1 (→ 476)
EBH03/01/..	273	40	20	63	3.5	90	M4	86	42	45	47	8, 9, 10, 11, 12, 14
EBH03/03/..	273	50	20	60	3.5	90	M4	86	41	45	47	8, 9, 10, 11, 12, 14
EBH03/04/..	273	50	20	70	3.5	90	M5	86	41	45	47	8, 9, 10, 11, 12, 14
EBH03/05/..	273	50	20	80	3.5	90	M4	86	41	45	47	8, 9, 10, 11, 12, 14
EBH03/06/..	273	50	20	95	3.5	90	M6	86	41	45	47	8, 9, 10, 11, 12, 14
EBH03/07/..	273	50	20	100	3.5	90	M6	86	41	45	47	8, 9, 10, 11, 12, 14
EBH03/08/..	273	60	20	75	3.5	90	M5	86	41	45	47	8, 9, 10, 11, 12, 14
EBH03/09/..	273	60	20	90	3.5	90	M5	86	41	45	47	8, 9, 10, 11, 12, 14
EBH03/10/..	273	70	20	85	3.5	90	M6	86	41	45	47	8, 9, 10, 11, 12, 14
EBH03/11/..	273	70	20	90	3.5	90	M5	86	41	45	47	8, 9, 10, 11, 12, 14
EBH03/13/..	273	80	20	100	3.5	90	M6	86	41	45	47	8, 9, 10, 11, 12, 14
EBH03/14/..	273	95	16	115	4	105	M8	86	41	45	55	8, 9, 10, 11, 12, 14
EBH04/12/..	273	70	20	90	3.5	90	M6	86	41	45	47	11 ,12 ,14, 16, 19
EBH04/13/..	273	80	20	100	3.5	90	M6	86	41	45	47	11 ,12 ,14, 16, 19
EBH04/14/..	273	95	16	115	4	105	M8	86	41	45	55	11 ,12 ,14, 16, 19
EBH04/15/..	273	95	16	130	4	115	M8	86	41	45	60	11 ,12 ,14, 16, 19
EBH05/14/..	301	95	16	115	5	120	M8	114	56	56	62	14, 16, 17, 18, 19, 24
EBH05/15/..	301	95	16	130	5	120	M8	114	56	56	62	14, 16, 17, 18, 19, 24
EBH05/16/..	301	110	16	130	5	120	M8	114	56	56	62	14, 16, 17, 18, 19, 24
EBH05/17/..	301	110	16	145	7	120	M8	114	56	56	62	14, 16, 17, 18, 19, 24
EBH05/18/..	301	110	20	165	5	140	M10	114	56	56	72	14, 16, 17, 18, 19, 24
EBH05/20/..	301	130	20	165	5	140	M10	114	56	56	72	14, 16, 17, 18, 19, 24
EBH05/26/..	301	110	16	130	5	115	M8	114	56	56	61	14, 16, 17, 18, 19, 24

55 010 00 07

BSAF302..

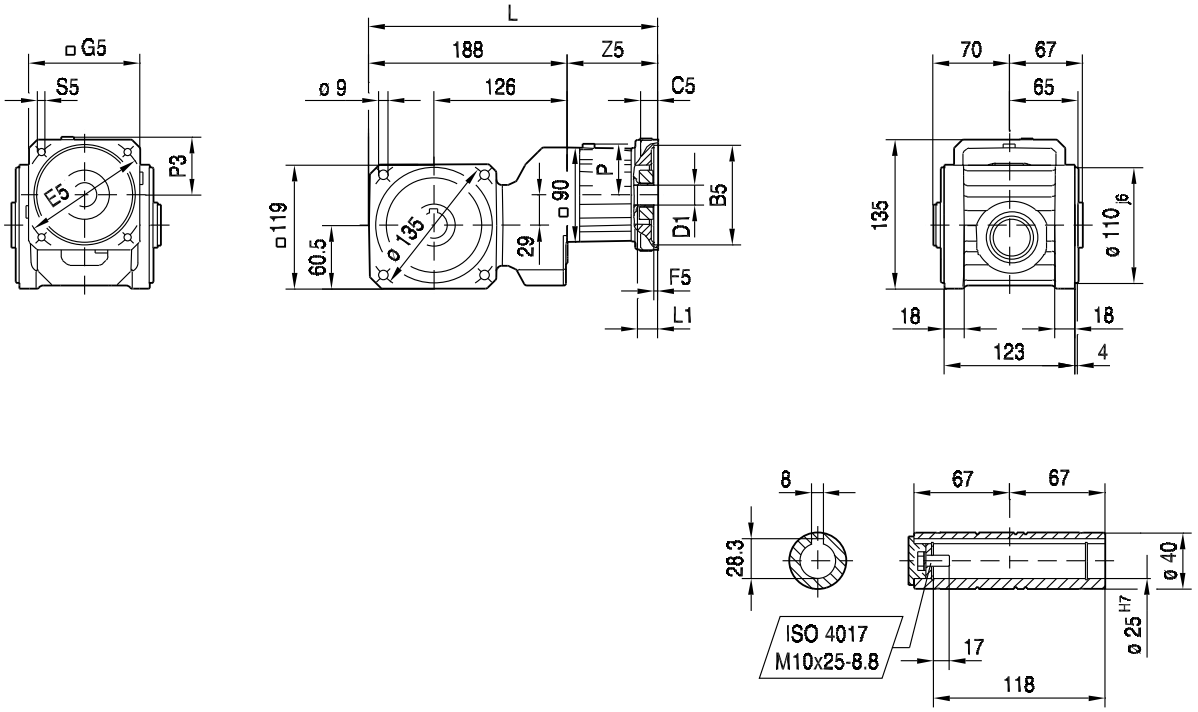

(→ 144)	L	B5	C5	E5	F5	G5	S5	Z5	L1	P	P3	D1 (→ 476)
EBH03/01/..	273	40	20	63	3.5	90	M4	86	42	45	47	8, 9, 10, 11, 12, 14
EBH03/03/..	273	50	20	60	3.5	90	M4	86	41	45	47	8, 9, 10, 11, 12, 14
EBH03/04/..	273	50	20	70	3.5	90	M5	86	41	45	47	8, 9, 10, 11, 12, 14
EBH03/05/..	273	50	20	80	3.5	90	M4	86	41	45	47	8, 9, 10, 11, 12, 14
EBH03/06/..	273	50	20	95	3.5	90	M6	86	41	45	47	8, 9, 10, 11, 12, 14
EBH03/07/..	273	50	20	100	3.5	90	M6	86	41	45	47	8, 9, 10, 11, 12, 14
EBH03/08/..	273	60	20	75	3.5	90	M5	86	41	45	47	8, 9, 10, 11, 12, 14
EBH03/09/..	273	60	20	90	3.5	90	M5	86	41	45	47	8, 9, 10, 11, 12, 14
EBH03/10/..	273	70	20	85	3.5	90	M6	86	41	45	47	8, 9, 10, 11, 12, 14
EBH03/11/..	273	70	20	90	3.5	90	M5	86	41	45	47	8, 9, 10, 11, 12, 14
EBH03/13/..	273	80	20	100	3.5	90	M6	86	41	45	47	8, 9, 10, 11, 12, 14
EBH03/14/..	273	95	16	115	4	105	M8	86	41	45	55	8, 9, 10, 11, 12, 14
EBH04/12/..	273	70	20	90	3.5	90	M6	86	41	45	47	11 ,12 ,14, 16, 19
EBH04/13/..	273	80	20	100	3.5	90	M6	86	41	45	47	11 ,12 ,14, 16, 19
EBH04/14/..	273	95	16	115	4	105	M8	86	41	45	55	11 ,12 ,14, 16, 19
EBH04/15/..	273	95	16	130	4	115	M8	86	41	45	60	11 ,12 ,14, 16, 19
EBH05/14/..	301	95	16	115	5	120	M8	114	56	56	62	14, 16, 17, 18, 19, 24
EBH05/15/..	301	95	16	130	5	120	M8	114	56	56	62	14, 16, 17, 18, 19, 24
EBH05/16/..	301	110	16	130	5	120	M8	114	56	56	62	14, 16, 17, 18, 19, 24
EBH05/17/..	301	110	16	145	7	120	M8	114	56	56	62	14, 16, 17, 18, 19, 24
EBH05/18/..	301	110	20	165	5	140	M10	114	56	56	72	14, 16, 17, 18, 19, 24
EBH05/20/..	301	130	20	165	5	140	M10	114	56	56	72	14, 16, 17, 18, 19, 24
EBH05/26/..	301	110	16	130	5	115	M8	114	56	56	61	14, 16, 17, 18, 19, 24

13.2.5 BS..402 EBH.. [Nm]

[Nm]		EBH M_{amax} | M_{apk} | $M_{aNotaus}$														
	i	03			04			05			06			07		
BSF402 2	3.00							122	183	275	122	183	270	122	183	270
	4.00	80	109	164	80	109	164	136	200	300	136	200	300	136	200	300
	6.00	95	164	245	95	164	245	156	205	305	156	205	305	156	205	305
	8.00	103	156	230	103	156	230	160	210	315	160	210	315	160	210	315
	10.00	124	186	275	124	186	275	124	186	275	124	186	275	124	186	275
	15.00	140	210	315	140	210	315	140	210	315	140	210	315	140	210	315
	20.00	152	220	330	152	220	330	152	220	330	152	220	330	152	220	330
	25.00	160	225	335	160	225	335	160	225	335	160	200	300	160	200	300
	30.00	160	225	335	160	225	335									

m [kg]		EBH				
	s	03	04	05	06	07
BSF402	2	12	12	14	15	15
BSBF: + 0.5 kg / BSHF: + -0.6 kg						

EBH03							c_T			F_{Ramax}			F_{Rapk}		
n_e = 1500	i	M_{amax} [Nm]	M_{apk} [Nm]	$M_{aNotaus}$ [Nm]	n_{ak} [1/min]	J_{GA} 10^{-4} [kgm^2]	BSF [Nm/']	BSBF [Nm/']	BSHF [Nm/']	BSF [N]	BSBF [N]	BSHF [N]	BSF [N]	BSBF [N]	BSHF [N]
BSF402 2	4.00	80	109	164	1750	4.2	6.4	7.0	6.8	7640	8770	7560	9310	10800	10800
	6.00	95	164	245	1167	2.6	7.7	8.6	8.3	8720	10000	8630	9130	10800	10800
	8.00	103	156	230	863	2.0	8.5	9.5	9.2	9320	10800	9510	9160	10800	10800
	10.00	124	186	275	140	2.9	14	17	16	9270	10800	10500	9040	10800	10800
	15.00	140	210	315	100	2.0	15	19	17	9220	10800	10800	8920	10800	10800
	20.00	152	220	330	75	1.6	16	19	18	9170	10800	10800	8870	10800	10800
	25.00	160	225	335	64	1.5	16	20	18	9140	10800	10800	8840	10800	10800
	30.00	160	225	335	60	1.4	16	20	19	9140	10800	10800	8840	10800	10800

EBH04							c_T			F_{Ramax}			F_{Rapk}		
n_e = 1500	i	M_{amax} [Nm]	M_{apk} [Nm]	$M_{aNotaus}$ [Nm]	n_{ak} [1/min]	J_{GA} 10^{-4} [kgm^2]	BSF [Nm/']	BSBF [Nm/']	BSHF [Nm/']	BSF [N]	BSBF [N]	BSHF [N]	BSF [N]	BSBF [N]	BSHF [N]
BSF402 2	4.00	80	109	164	1750	4.2	2.8	2.9	2.8	7640	8770	7560	9310	10800	10800
	6.00	95	164	245	1167	2.6	4.2	4.4	4.3	8720	10000	8630	9130	10800	10800
	8.00	103	156	230	863	2.0	6.9	7.6	7.4	9320	10800	9510	9160	10800	10800
	10.00	124	186	275	140	2.9	8.9	10	9.7	9270	10800	10500	9040	10800	10800
	15.00	140	210	315	100	2.0	14	16	16	9220	10800	10800	8920	10800	10800
	20.00	152	220	330	75	1.6	15	18	17	9170	10800	10800	8870	10800	10800
	25.00	160	225	335	64	1.5	16	20	19	9140	10800	10800	8840	10800	10800
	30.00	160	225	335	60	1.4	16	21	19	9140	10800	10800	8840	10800	10800

EBH05							c_T			F_{Ramax}			F_{Rapk}		
n_e = 1500	i	M_{amax} [Nm]	M_{apk} [Nm]	$M_{aNotaus}$ [Nm]	n_{ak} [1/min]	J_{GA} 10^{-4} [kgm^2]	BSF [Nm/']	BSBF [Nm/']	BSHF [Nm/']	BSF [N]	BSBF [N]	BSHF [N]	BSF [N]	BSBF [N]	BSHF [N]
BSF402 2	3.00	122	183	275	433	10	6.6	7.2	7.0	6600	7580	6510	9050	10800	10800
	4.00	136	200	300	375	8.1	7.2	8.0	7.8	7250	8330	7150	8970	10800	10800
	6.00	156	205	305	250	6.5	8.5	9.6	9.2	8300	9530	8190	8940	10800	10800
	8.00	160	210	315	213	5.8	9.2	10	10	9140	10600	9100	8920	10800	10800
	10.00	124	186	275	140	6.8	15	18	17	9270	10800	10500	9040	10800	10800
	15.00	140	210	315	100	5.9	16	19	18	9220	10800	10800	8920	10800	10800
	20.00	152	220	330	75	5.5	16	20	19	9170	10800	10800	8870	10800	10800
	25.00	160	225	335	64	5.3	16	20	19	9140	10800	10800	8840	10800	10800

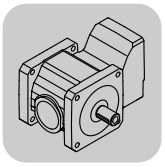

EBH06							c_T			F_{Ramax}			F_{Rapk}		
n_e = 1500	i	M_{amax} [Nm]	M_{apk} [Nm]	$M_{aNotaus}$ [Nm]	n_{ak} [1/min]	J_{GA} 10^{-4} [kgm^2]	BSF [Nm/']	BSBF [Nm/']	BSHF [Nm/']	BSF [N]	BSBF [N]	BSHF [N]	BSF [N]	BSBF [N]	BSHF [N]
BSF402 2	3.00	122	183	270	500	14	7.6	8.4	8.2	6600	7580	6510	9050	10800	10800
	4.00	136	200	300	375	12	8.4	9.4	9.1	7250	8330	7150	8970	10800	10800
	6.00	156	205	305	250	10	9.3	11	10	8300	9530	8190	8940	10800	10800
	8.00	160	210	315	213	9.8	9.7	11	11	9140	10600	9100	8920	10800	10800
	10.00	124	186	275	140	11	15	19	18	9270	10800	10500	9040	10800	10800
	15.00	140	210	315	100	9.9	16	20	19	9220	10800	10800	8920	10800	10800
	20.00	152	220	330	75	9.5	16	20	19	9170	10800	10800	8870	10800	10800
	25.00	160	200	300	64	9.3	16	21	19	9140	10800	10800	8970	10800	10800

EBH07							c_T			F_{Ramax}			F_{Rapk}		
n_e = 1500	i	M_{amax} [Nm]	M_{apk} [Nm]	$M_{aNotaus}$ [Nm]	n_{ak} [1/min]	J_{GA} 10^{-4} [kgm^2]	BSF [Nm/']	BSBF [Nm/']	BSHF [Nm/']	BSF [N]	BSBF [N]	BSHF [N]	BSF [N]	BSBF [N]	BSHF [N]
BSF402 2	3.00	122	183	270	500	14	7.6	8.4	8.2	6600	7580	6510	9050	10800	10800
	4.00	136	200	300	375	12	8.4	9.4	9.1	7250	8330	7150	8970	10800	10800
	6.00	156	205	305	250	10	9.3	11	10	8300	9530	8190	8940	10800	10800
	8.00	160	210	315	213	9.9	9.7	11	11	9140	10600	9100	8920	10800	10800
	10.00	124	186	275	140	11	15	19	18	9270	10800	10500	9040	10800	10800
	15.00	140	210	315	100	9.9	16	20	19	9220	10800	10800	8920	10800	10800
	20.00	152	220	330	75	9.5	16	20	19	9170	10800	10800	8870	10800	10800
	25.00	160	200	300	64	9.4	16	21	19	9140	10800	10800	8970	10800	10800

EBH				M1			M2;M4			M3;M5-6			φ		
	i	n_{epk} [1/min]	η [%]	a_0	a_1	a_2	a_0	a_1	a_2	a_0	a_1	a_2	[']	/R [']	/M [']
BSF402 2	3.00	4500	93.7	16.64	-0.042	136375	23.96	-0.064	131323	16.80	-0.043	134151	6	3	-
	4.00	4500	93.8	17.96	-0.052	135265	27.92	-0.082	129034	18.77	-0.053	132596	6	3	-
	6.00	4500	93.9	19.78	-0.066	133791	33.62	-0.110	126042	21.69	-0.070	130498	6	3	-
	8.00	4500	94	21.09	-0.077	132801	37.83	-0.131	124010	23.79	-0.082	129114	6	3	-
	10.00	4500	90.1	22.39	-0.211	82904	53.97	-0.374	74730	28.11	-0.227	79870	6	3	-
	15.00	4500	90.5	29.19	-0.282	80694	74.18	-0.523	70371	37.70	-0.308	77196	6	3	-
	20.00	4500	90.7	34.34	-0.335	79192	89.99	-0.638	67275	45.42	-0.370	75192	6	3	-
	25.00	4500	90.9	38.33	-0.375	78100	101.1	-0.725	65289	51.01	-0.417	73859	6	3	-
	30.00	4500	91	41.83	-0.407	77194	110.3	-0.794	63679	55.87	-0.455	72752	6	3	-

13.2.6 BS..402 EBH.. [mm]

55 009 00 03

BSF402..

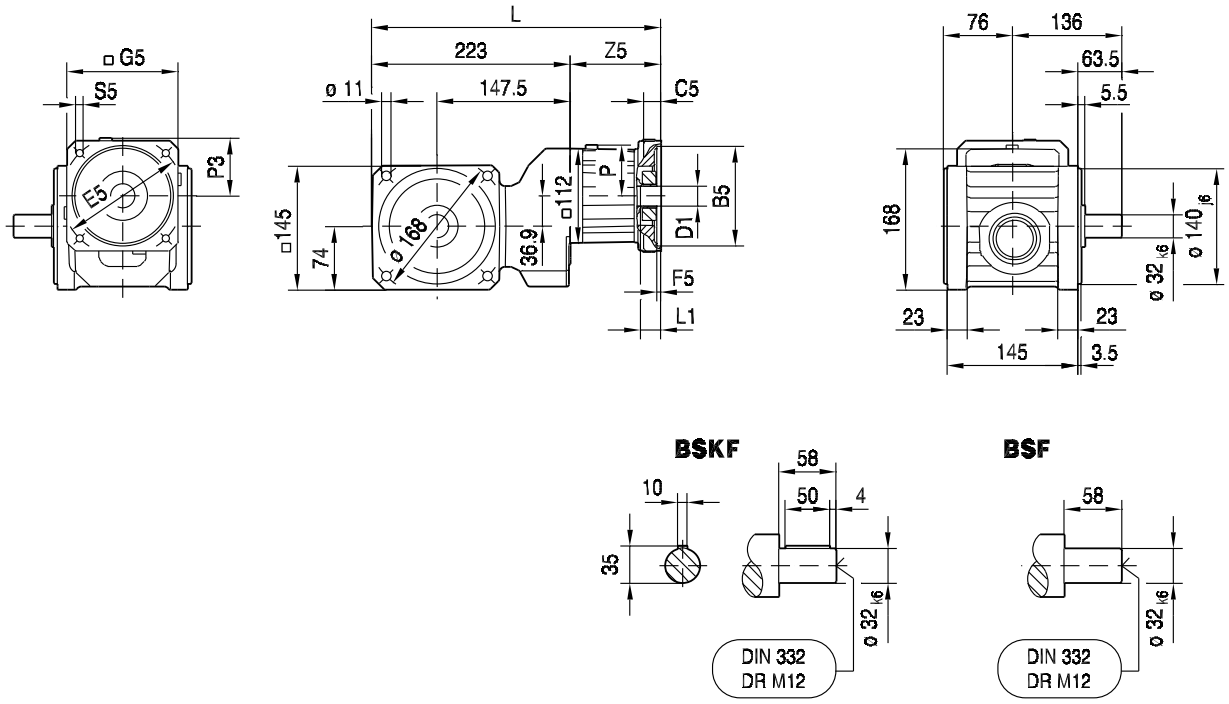

(→ 144)	L	B5	C5	E5	F5	G5	S5	Z5	L1	P	P3	D1 (→ 476)
EBH03/01/..	303	40	20	63	3.5	90	M4	80	42	58	47	8, 9, 10, 11, 12, 14
EBH03/03/..	303	50	20	60	3.5	90	M4	80	41	58	47	8, 9, 10, 11, 12, 14
EBH03/04/..	303	50	20	70	3.5	90	M5	80	41	58	47	8, 9, 10, 11, 12, 14
EBH03/05/..	303	50	20	80	3.5	90	M4	80	41	58	47	8, 9, 10, 11, 12, 14
EBH03/06/..	303	50	20	95	3.5	90	M6	80	41	58	47	8, 9, 10, 11, 12, 14
EBH03/07/..	303	50	20	100	3.5	90	M6	80	41	58	47	8, 9, 10, 11, 12, 14
EBH03/08/..	303	60	20	75	3.5	90	M5	80	41	58	47	8, 9, 10, 11, 12, 14
EBH03/09/..	303	60	20	90	3.5	90	M5	80	41	58	47	8, 9, 10, 11, 12, 14
EBH03/10/..	303	70	20	85	3.5	90	M6	80	41	58	47	8, 9, 10, 11, 12, 14
EBH03/11/..	303	70	20	90	3.5	90	M5	80	41	58	47	8, 9, 10, 11, 12, 14
EBH03/13/..	303	80	20	100	3.5	90	M6	80	41	58	47	8, 9, 10, 11, 12, 14
EBH03/14/..	303	95	16	115	4	105	M8	80	41	58	55	8, 9, 10, 11, 12, 14
EBH04/12/..	303	70	20	90	3.5	90	M6	80	41	58	47	11 ,12 ,14, 16, 19
EBH04/13/..	303	80	20	100	3.5	90	M6	80	41	58	47	11 ,12 ,14, 16, 19
EBH04/14/..	303	95	16	115	4	105	M8	80	41	58	55	11 ,12 ,14, 16, 19
EBH04/15/..	303	95	16	130	4	115	M8	80	41	58	60	11 ,12 ,14, 16, 19
EBH05/14/..	332	95	16	115	4	120	M8	109	56	56	62	14, 16, 17, 18, 19, 24
EBH05/15/..	332	95	16	130	4	120	M8	109	56	56	62	14, 16, 17, 18, 19, 24
EBH05/16/..	332	110	16	130	5	120	M8	109	56	56	62	14, 16, 17, 18, 19, 24
EBH05/17/..	332	110	16	145	7	120	M8	109	56	56	62	14, 16, 17, 18, 19, 24
EBH05/18/..	332	110	20	165	5	140	M10	109	56	56	72	14, 16, 17, 18, 19, 24
EBH05/20/..	332	130	20	165	5	140	M10	109	56	56	72	14, 16, 17, 18, 19, 24
EBH05/26/..	332	110	16	130	5	115	M8	109	56	56	61	14, 16, 17, 18, 19, 24
EBH06/19/..	371	114.3	24	200	5	174	M12	148	86	58	89	35
EBH07/20/..	351	130	24	165	5	155	M10	128	66	58	80	22, 24, 28, 32
EBH07/21/..	351	130	24	215	5	190	M12	128	66	58	97	22, 24, 28, 32
EBH07/22/..	351	180	24	215	5	190	M12	128	66	58	97	22, 24, 28, 32
EBH07/27/..	351	130	24	165	5	137	M10	128	66	58	72	22, 24, 28, 32
EBH07/28/..	351	155	24	190	5	162	M10	128	66	58	84	22, 24, 28, 32

BSBF402..

55 010 00 03

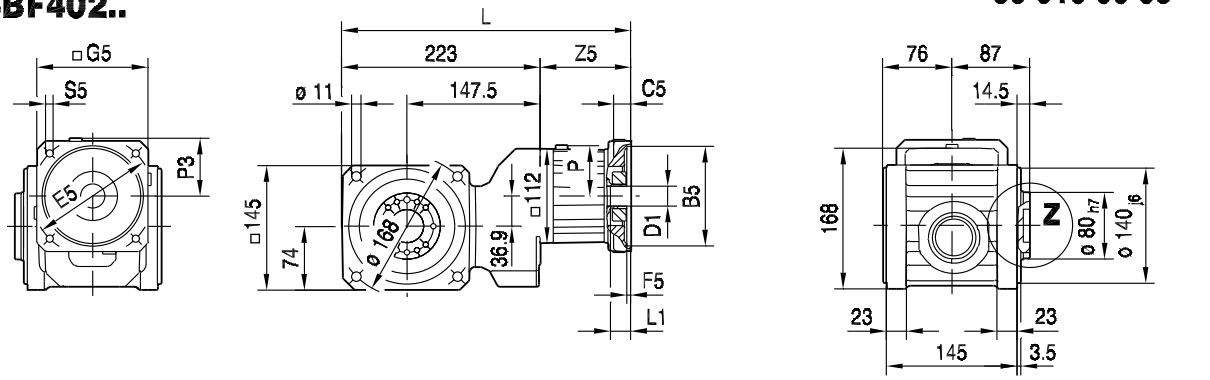

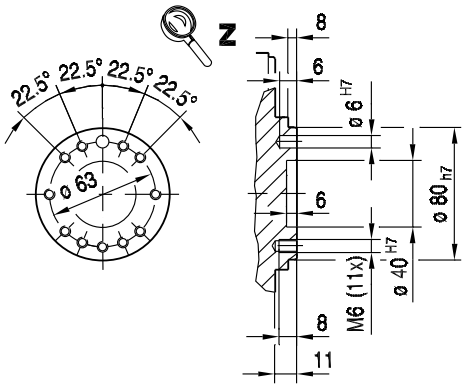

(→ 144)	L	B5	C5	E5	F5	G5	S5	Z5	L1	P	P3	D1 (→ 476)
EBH03/01/..	303	40	20	63	3.5	90	M4	80	42	58	47	8, 9, 10, 11, 12, 14
EBH03/03/..	303	50	20	60	3.5	90	M4	80	41	58	47	8, 9, 10, 11, 12, 14
EBH03/04/..	303	50	20	70	3.5	90	M5	80	41	58	47	8, 9, 10, 11, 12, 14
EBH03/05/..	303	50	20	80	3.5	90	M4	80	41	58	47	8, 9, 10, 11, 12, 14
EBH03/06/..	303	50	20	95	3.5	90	M6	80	41	58	47	8, 9, 10, 11, 12, 14
EBH03/07/..	303	50	20	100	3.5	90	M6	80	41	58	47	8, 9, 10, 11, 12, 14
EBH03/08/..	303	60	20	75	3.5	90	M5	80	41	58	47	8, 9, 10, 11, 12, 14
EBH03/09/..	303	60	20	90	3.5	90	M5	80	41	58	47	8, 9, 10, 11, 12, 14
EBH03/10/..	303	70	20	85	3.5	90	M6	80	41	58	47	8, 9, 10, 11, 12, 14
EBH03/11/..	303	70	20	90	3.5	90	M5	80	41	58	47	8, 9, 10, 11, 12, 14
EBH03/13/..	303	80	20	100	3.5	90	M6	80	41	58	47	8, 9, 10, 11, 12, 14
EBH03/14/..	303	95	16	115	4	105	M8	80	41	58	55	8, 9, 10, 11, 12, 14
EBH04/12/..	303	70	20	90	3.5	90	M6	80	41	58	47	11 ,12 ,14, 16, 19
EBH04/13/..	303	80	20	100	3.5	90	M6	80	41	58	47	11 ,12 ,14, 16, 19
EBH04/14/..	303	95	16	115	4	105	M8	80	41	58	55	11 ,12 ,14, 16, 19
EBH04/15/..	303	95	16	130	4	115	M8	80	41	58	60	11 ,12 ,14, 16, 19
EBH05/14/..	332	95	16	115	4	120	M8	109	56	56	62	14, 16, 17, 18, 19, 24
EBH05/15/..	332	95	16	130	4	120	M8	109	56	56	62	14, 16, 17, 18, 19, 24
EBH05/16/..	332	110	16	130	5	120	M8	109	56	56	62	14, 16, 17, 18, 19, 24
EBH05/17/..	332	110	16	145	7	120	M8	109	56	56	62	14, 16, 17, 18, 19, 24
EBH05/18/..	332	110	20	165	5	140	M10	109	56	56	72	14, 16, 17, 18, 19, 24
EBH05/20/..	332	130	20	165	5	140	M10	109	56	56	72	14, 16, 17, 18, 19, 24
EBH05/26/..	332	110	16	130	5	115	M8	109	56	56	61	14, 16, 17, 18, 19, 24
EBH06/19/..	371	114.3	24	200	5	174	M12	148	86	58	89	35
EBH07/20/..	351	130	24	165	5	155	M10	128	66	58	80	22, 24, 28, 32
EBH07/21/..	351	130	24	215	5	190	M12	128	66	58	97	22, 24, 28, 32
EBH07/22/..	351	180	24	215	5	190	M12	128	66	58	97	22, 24, 28, 32
EBH07/27/..	351	130	24	165	5	137	M10	128	66	58	72	22, 24, 28, 32
EBH07/28/..	351	155	24	190	5	162	M10	128	66	58	84	22, 24, 28, 32

BSHF402..

55 025 00 03

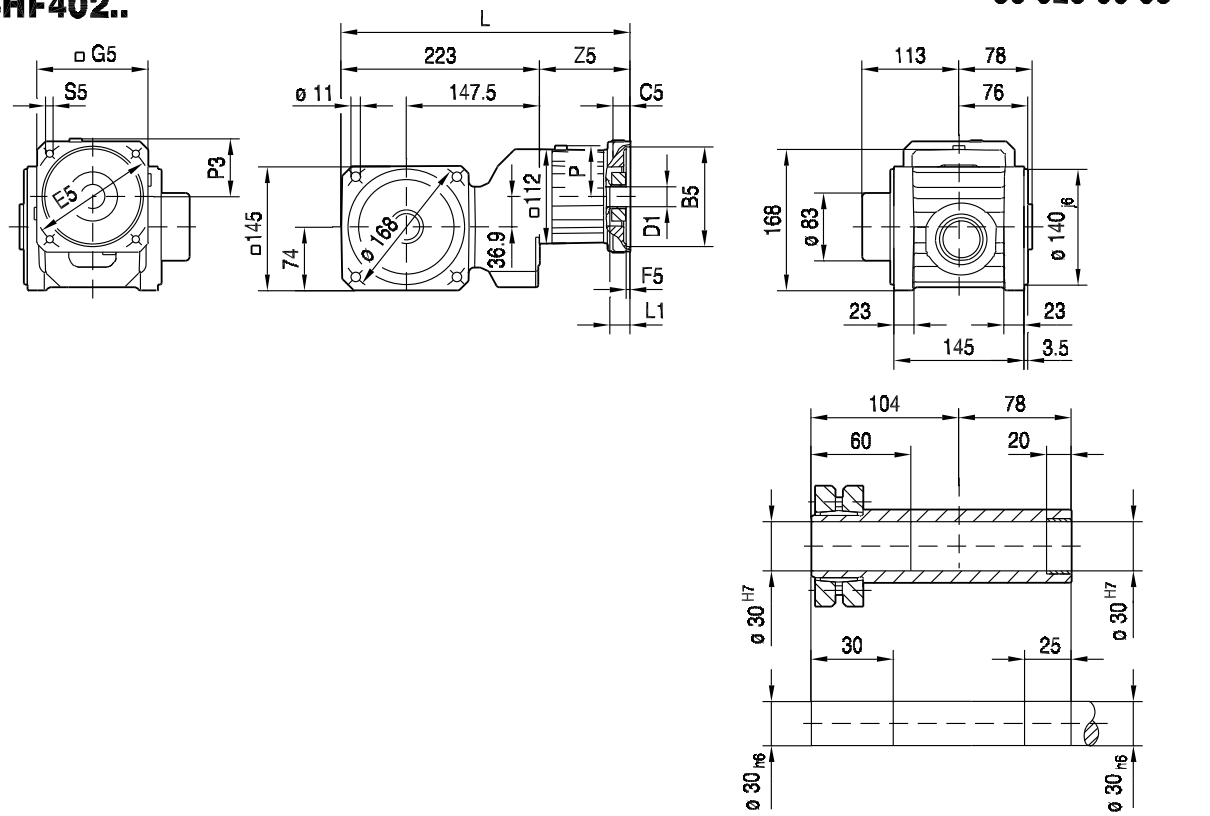

(→ 144)	L	B5	C5	E5	F5	G5	S5	Z5	L1	P	P3	D1 (→ 476)
EBH03/01/..	303	40	20	63	3.5	90	M4	80	42	58	47	8, 9, 10, 11, 12, 14
EBH03/03/..	303	50	20	60	3.5	90	M4	80	41	58	47	8, 9, 10, 11, 12, 14
EBH03/04/..	303	50	20	70	3.5	90	M5	80	41	58	47	8, 9, 10, 11, 12, 14
EBH03/05/..	303	50	20	80	3.5	90	M4	80	41	58	47	8, 9, 10, 11, 12, 14
EBH03/06/..	303	50	20	95	3.5	90	M6	80	41	58	47	8, 9, 10, 11, 12, 14
EBH03/07/..	303	50	20	100	3.5	90	M6	80	41	58	47	8, 9, 10, 11, 12, 14
EBH03/08/..	303	60	20	75	3.5	90	M5	80	41	58	47	8, 9, 10, 11, 12, 14
EBH03/09/..	303	60	20	90	3.5	90	M5	80	41	58	47	8, 9, 10, 11, 12, 14
EBH03/10/..	303	70	20	85	3.5	90	M6	80	41	58	47	8, 9, 10, 11, 12, 14
EBH03/11/..	303	70	20	90	3.5	90	M5	80	41	58	47	8, 9, 10, 11, 12, 14
EBH03/13/..	303	80	20	100	3.5	90	M6	80	41	58	47	8, 9, 10, 11, 12, 14
EBH03/14/..	303	95	16	115	4	105	M8	80	41	58	55	8, 9, 10, 11, 12, 14
EBH04/12/..	303	70	20	90	3.5	90	M6	80	41	58	47	11 ,12 ,14, 16, 19
EBH04/13/..	303	80	20	100	3.5	90	M6	80	41	58	47	11 ,12 ,14, 16, 19
EBH04/14/..	303	95	16	115	4	105	M8	80	41	58	55	11 ,12 ,14, 16, 19
EBH04/15/..	303	95	16	130	4	115	M8	80	41	58	60	11 ,12 ,14, 16, 19
EBH05/14/..	332	95	16	115	4	120	M8	109	56	56	62	14, 16, 17, 18, 19, 24
EBH05/15/..	332	95	16	130	4	120	M8	109	56	56	62	14, 16, 17, 18, 19, 24
EBH05/16/..	332	110	16	130	5	120	M8	109	56	56	62	14, 16, 17, 18, 19, 24
EBH05/17/..	332	110	16	145	7	120	M8	109	56	56	62	14, 16, 17, 18, 19, 24
EBH05/18/..	332	110	20	165	5	140	M10	109	56	56	72	14, 16, 17, 18, 19, 24
EBH05/20/..	332	130	20	165	5	140	M10	109	56	56	72	14, 16, 17, 18, 19, 24
EBH05/26/..	332	110	16	130	5	115	M8	109	56	56	61	14, 16, 17, 18, 19, 24
EBH06/19/..	371	114.3	24	200	5	174	M12	148	86	58	89	35
EBH07/20/..	351	130	24	165	5	155	M10	128	66	58	80	22, 24, 28, 32
EBH07/21/..	351	130	24	215	5	190	M12	128	66	58	97	22, 24, 28, 32
EBH07/22/..	351	180	24	215	5	190	M12	128	66	58	97	22, 24, 28, 32
EBH07/27/..	351	130	24	165	5	137	M10	128	66	58	72	22, 24, 28, 32
EBH07/28/..	351	155	24	190	5	162	M10	128	66	58	84	22, 24, 28, 32

BSHF402/I..

55 011 00 03

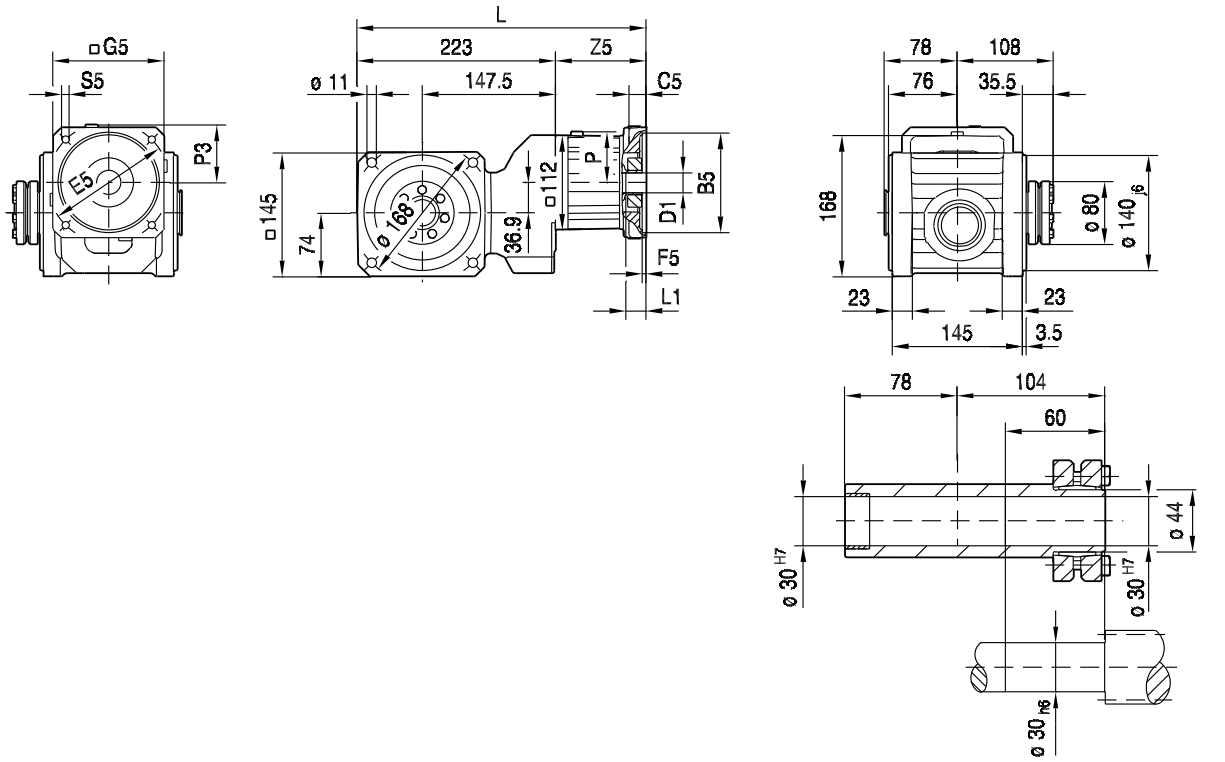

(→ 144)	L	B5	C5	E5	F5	G5	S5	Z5	L1	P	P3	D1 (→ 476)
EBH03/01/..	303	40	20	63	3.5	90	M4	80	42	58	47	8, 9, 10, 11, 12, 14
EBH03/03/..	303	50	20	60	3.5	90	M4	80	41	58	47	8, 9, 10, 11, 12, 14
EBH03/04/..	303	50	20	70	3.5	90	M5	80	41	58	47	8, 9, 10, 11, 12, 14
EBH03/05/..	303	50	20	80	3.5	90	M4	80	41	58	47	8, 9, 10, 11, 12, 14
EBH03/06/..	303	50	20	95	3.5	90	M6	80	41	58	47	8, 9, 10, 11, 12, 14
EBH03/07/..	303	50	20	100	3.5	90	M6	80	41	58	47	8, 9, 10, 11, 12, 14
EBH03/08/..	303	60	20	75	3.5	90	M5	80	41	58	47	8, 9, 10, 11, 12, 14
EBH03/09/..	303	60	20	90	3.5	90	M5	80	41	58	47	8, 9, 10, 11, 12, 14
EBH03/10/..	303	70	20	85	3.5	90	M6	80	41	58	47	8, 9, 10, 11, 12, 14
EBH03/11/..	303	70	20	90	3.5	90	M5	80	41	58	47	8, 9, 10, 11, 12, 14
EBH03/13/..	303	80	20	100	3.5	90	M6	80	41	58	47	8, 9, 10, 11, 12, 14
EBH03/14/..	303	95	16	115	4	105	M8	80	41	58	55	8, 9, 10, 11, 12, 14
EBH04/12/..	303	70	20	90	3.5	90	M6	80	41	58	47	11 ,12 ,14, 16, 19
EBH04/13/..	303	80	20	100	3.5	90	M6	80	41	58	47	11 ,12 ,14, 16, 19
EBH04/14/..	303	95	16	115	4	105	M8	80	41	58	55	11 ,12 ,14, 16, 19
EBH04/15/..	303	95	16	130	4	115	M8	80	41	58	60	11 ,12 ,14, 16, 19
EBH05/14/..	332	95	16	115	4	120	M8	109	56	56	62	14, 16, 17, 18, 19, 24
EBH05/15/..	332	95	16	130	4	120	M8	109	56	56	62	14, 16, 17, 18, 19, 24
EBH05/16/..	332	110	16	130	5	120	M8	109	56	56	62	14, 16, 17, 18, 19, 24
EBH05/17/..	332	110	16	145	7	120	M8	109	56	56	62	14, 16, 17, 18, 19, 24
EBH05/18/..	332	110	20	165	5	140	M10	109	56	56	72	14, 16, 17, 18, 19, 24
EBH05/20/..	332	130	20	165	5	140	M10	109	56	56	72	14, 16, 17, 18, 19, 24
EBH05/26/..	332	110	16	130	5	115	M8	109	56	56	61	14, 16, 17, 18, 19, 24
EBH06/19/..	371	114.3	24	200	5	174	M12	148	86	58	89	35
EBH07/20/..	351	130	24	165	5	155	M10	128	66	58	80	22, 24, 28, 32
EBH07/21/..	351	130	24	215	5	190	M12	128	66	58	97	22, 24, 28, 32
EBH07/22/..	351	180	24	215	5	190	M12	128	66	58	97	22, 24, 28, 32
EBH07/27/..	351	130	24	165	5	137	M10	128	66	58	72	22, 24, 28, 32
EBH07/28/..	351	155	24	190	5	162	M10	128	66	58	84	22, 24, 28, 32

55 011 00 07

BSAF402..

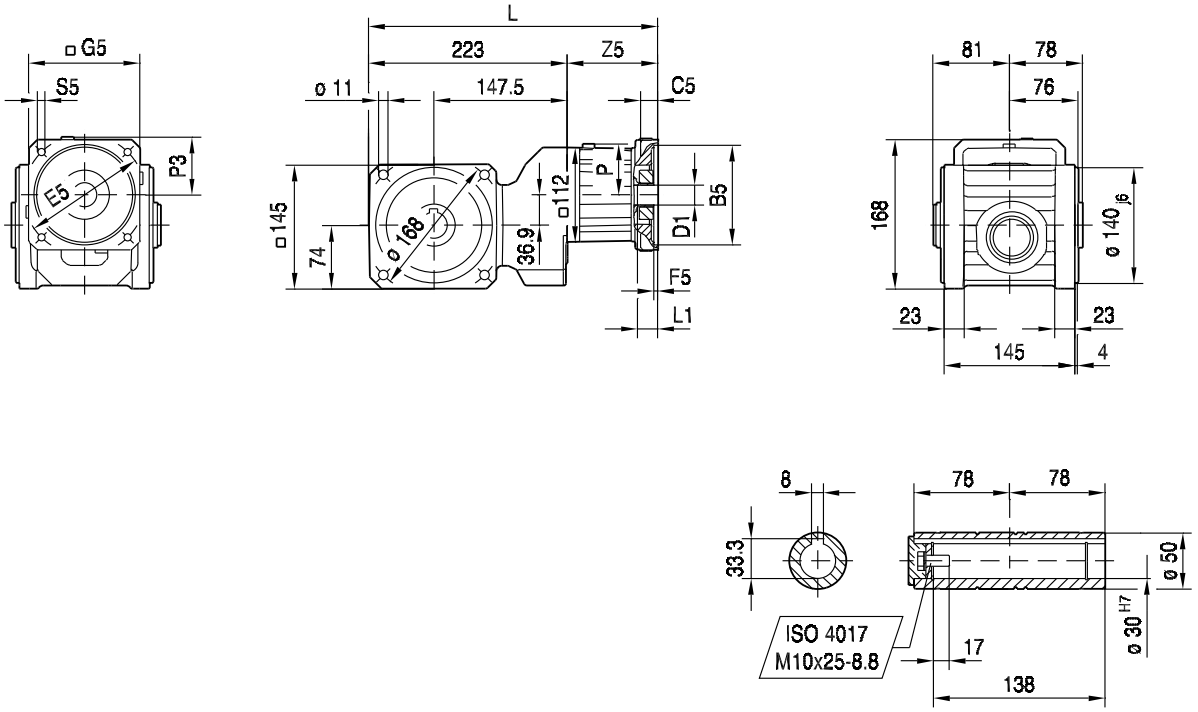

(→ 144)	L	B5	C5	E5	F5	G5	S5	Z5	L1	P	P3	D1 (→ 476)
EBH03/01/..	303	40	20	63	3.5	90	M4	80	42	58	47	8, 9, 10, 11, 12, 14
EBH03/03/..	303	50	20	60	3.5	90	M4	80	41	58	47	8, 9, 10, 11, 12, 14
EBH03/04/..	303	50	20	70	3.5	90	M5	80	41	58	47	8, 9, 10, 11, 12, 14
EBH03/05/..	303	50	20	80	3.5	90	M4	80	41	58	47	8, 9, 10, 11, 12, 14
EBH03/06/..	303	50	20	95	3.5	90	M6	80	41	58	47	8, 9, 10, 11, 12, 14
EBH03/07/..	303	50	20	100	3.5	90	M6	80	41	58	47	8, 9, 10, 11, 12, 14
EBH03/08/..	303	60	20	75	3.5	90	M5	80	41	58	47	8, 9, 10, 11, 12, 14
EBH03/09/..	303	60	20	90	3.5	90	M5	80	41	58	47	8, 9, 10, 11, 12, 14
EBH03/10/..	303	70	20	85	3.5	90	M6	80	41	58	47	8, 9, 10, 11, 12, 14
EBH03/11/..	303	70	20	90	3.5	90	M5	80	41	58	47	8, 9, 10, 11, 12, 14
EBH03/13/..	303	80	20	100	3.5	90	M6	80	41	58	47	8, 9, 10, 11, 12, 14
EBH03/14/..	303	95	16	115	4	105	M8	80	41	58	55	8, 9, 10, 11, 12, 14
EBH04/12/..	303	70	20	90	3.5	90	M6	80	41	58	47	11 ,12 ,14, 16, 19
EBH04/13/..	303	80	20	100	3.5	90	M6	80	41	58	47	11 ,12 ,14, 16, 19
EBH04/14/..	303	95	16	115	4	105	M8	80	41	58	55	11 ,12 ,14, 16, 19
EBH04/15/..	303	95	16	130	4	115	M8	80	41	58	60	11 ,12 ,14, 16, 19
EBH05/14/..	332	95	16	115	4	120	M8	109	56	56	62	14, 16, 17, 18, 19, 24
EBH05/15/..	332	95	16	130	4	120	M8	109	56	56	62	14, 16, 17, 18, 19, 24
EBH05/16/..	332	110	16	130	5	120	M8	109	56	56	62	14, 16, 17, 18, 19, 24
EBH05/17/..	332	110	16	145	7	120	M8	109	56	56	62	14, 16, 17, 18, 19, 24
EBH05/18/..	332	110	20	165	5	140	M10	109	56	56	72	14, 16, 17, 18, 19, 24
EBH05/20/..	332	130	20	165	5	140	M10	109	56	56	72	14, 16, 17, 18, 19, 24
EBH05/26/..	332	110	16	130	5	115	M8	109	56	56	61	14, 16, 17, 18, 19, 24
EBH06/19/..	371	114.3	24	200	5	174	M12	148	86	58	89	35
EBH07/20/..	351	130	24	165	5	155	M10	128	66	58	80	22, 24, 28, 32
EBH07/21/..	351	130	24	215	5	190	M12	128	66	58	97	22, 24, 28, 32
EBH07/22/..	351	180	24	215	5	190	M12	128	66	58	97	22, 24, 28, 32
EBH07/27/..	351	130	24	165	5	137	M10	128	66	58	72	22, 24, 28, 32
EBH07/28/..	351	155	24	190	5	162	M10	128	66	58	84	22, 24, 28, 32

13.2.7 BS..502 EBH.. [Nm]

[Nm]		EBH M_{amax} | M_{apk} | $M_{aNotaus}$																	
	i	03			04			05			06			07			08		
BSF502 2	3.00							159	200	300	230	370	555	230	370	555	310	370	555
	4.00	93	109	164	93	109	164	182	265	400	270	400	600	270	400	600	320	400	600
	6.00	114	164	245	114	164	245	215	325	485	315	410	615	315	410	615	320	410	615
	8.00	126	215	325	126	215	325	235	355	530	320	420	630	320	420	630	320	420	630
	10.00	225	260	395	225	260	395	250	375	560	250	375	560	250	375	560	250	375	560
	12.00	137	205	305	137	205	305	260	325	485	280	325	485	280	325	485			
	15.00	250	375	560	250	375	560	250	375	560	250	375	560	250	375	560	250	375	560
	20.00	250	375	560	250	375	560	250	375	560	250	375	560	250	375	560	250	375	560
	25.00	250	375	560	250	375	560	250	375	560	250	375	560	250	375	560	250	375	560
	30.00	250	375	560	250	375	560	250	375	560	250	375	560	250	375	560			
	35.00	250	375	560	250	375	560												

m [kg]		EBH					
	s	03	04	05	06	07	08
BSF502	2	30	30	32	35	35	39
BSBF: + 0.4 kg / BSHF: + -1.0 kg							

EBH03							c_T			F_{Ramax}			F_{Rapk}		
n_e = 1500	i	M_{amax} [Nm]	M_{apk} [Nm]	$M_{aNotaus}$ [Nm]	n_{ak} [1/min]	J_{GA} 10^{-4} [kgm^2]	BSF [Nm/']	BSBF [Nm/']	BSHF [Nm/']	BSF [N]	BSBF [N]	BSHF [N]	BSF [N]	BSBF [N]	BSHF [N]
BSF502 2	4.00	93	109	164	1750	8.1	10	11	11	12300	14400	13300	12600	14400	14400
	6.00	114	164	245	1167	4.5	13	15	14	12600	14400	14400	12500	14400	14400
	8.00	126	215	325	875	3.1	15	17	16	12500	14400	14400	12400	14400	14400
	10.00	225	260	395	700	4.8	23	28	25	12400	14400	14400	12300	14400	14400
	12.00	137	205	305	583	2.1	17	19	18	12500	14400	14400	12400	14400	14400
	15.00	250	375	560	467	3.1	25	31	28	12300	14400	14400	12000	14400	14400
	20.00	250	375	560	135	2.3	26	33	29	12300	14400	14400	12000	14400	14400
	25.00	250	375	560	132	2.0	27	34	30	12300	14400	14400	12000	14400	14400
	30.00	250	375	560	117	1.7	27	34	30	12300	14400	14400	12000	14400	14400
	35.00	250	375	560	103	1.6	27	34	30	12300	14400	14400	12000	14400	14400

EBH04							c_T			F_{Ramax}			F_{Rapk}		
n_e = 1500	i	M_{amax} [Nm]	M_{apk} [Nm]	$M_{aNotaus}$ [Nm]	n_{ak} [1/min]	J_{GA} 10^{-4} [kgm^2]	BSF [Nm/']	BSBF [Nm/']	BSHF [Nm/']	BSF [N]	BSBF [N]	BSHF [N]	BSF [N]	BSBF [N]	BSHF [N]
BSF502 2	4.00	93	109	164	1750	8.1	11	11	11	12300	14400	13300	12600	14400	14400
	6.00	114	164	245	1167	4.5	14	15	14	12600	14400	14400	12500	14400	14400
	8.00	126	215	325	875	3.1	15	17	16	12500	14400	14400	12400	14400	14400
	10.00	225	260	395	700	4.8	23	28	26	12400	14400	14400	12300	14400	14400
	12.00	137	205	305	583	2.1	17	19	18	12500	14400	14400	12400	14400	14400
	15.00	250	375	560	467	3.1	26	31	28	12300	14400	14400	12000	14400	14400
	20.00	250	375	560	135	2.3	27	33	30	12300	14400	14400	12000	14400	14400
	25.00	250	375	560	132	2.0	27	34	30	12300	14400	14400	12000	14400	14400
	30.00	250	375	560	117	1.7	27	34	31	12300	14400	14400	12000	14400	14400
	35.00	250	375	560	103	1.6	27	34	31	12300	14400	14400	12000	14400	14400

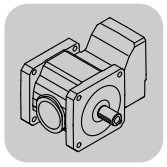

EBH05							c_T			F_{Ramax}			F_{Rapk}		
n_e = 1500	i	M_{amax} [Nm]	M_{apk} [Nm]	$M_{aNotaus}$ [Nm]	n_{ak} [1/min]	J_{GA} 10^{-4} [kgm^2]	BSF [Nm/']	BSBF [Nm/']	BSHF [Nm/']	BSF [N]	BSBF [N]	BSHF [N]	BSF [N]	BSBF [N]	BSHF [N]
BSF502 2	3.00	159	200	300	2333	17	12	13	12	10900	13100	11800	12400	14400	14400
	4.00	182	265	400	1750	12	14	15	15	11800	14200	12800	12300	14400	14400
	6.00	215	325	485	250	8.4	16	18	17	12400	14400	14400	12200	14400	14400
	8.00	235	355	530	188	7.0	17	20	18	12400	14400	14400	12100	14400	14400
	10.00	250	375	560	520	8.7	26	32	28	12300	14400	14400	12000	14400	14400
	12.00	260	325	485	583	6.0	18	21	19	12300	14400	14400	12200	14400	14400
	15.00	250	375	560	467	6.9	27	34	30	12300	14400	14400	12000	14400	14400
	20.00	250	375	560	350	6.2	28	35	31	12300	14400	14400	12000	14400	14400
	25.00	250	375	560	280	5.8	28	35	31	12300	14400	14400	12000	14400	14400
	30.00	250	375	560	233	5.6	28	35	31	12300	14400	14400	12000	14400	14400

EBH06							c_T			F_{Ramax}			F_{Rapk}		
n_e = 1500	i	M_{amax} [Nm]	M_{apk} [Nm]	$M_{aNotaus}$ [Nm]	n_{ak} [1/min]	J_{GA} 10^{-4} [kgm^2]	BSF [Nm/']	BSBF [Nm/']	BSHF [Nm/']	BSF [N]	BSBF [N]	BSHF [N]	BSF [N]	BSBF [N]	BSHF [N]
BSF502 2	3.00	230	370	555	1333	21	13	14	14	10500	12700	11400	12000	14400	14400
	4.00	270	400	600	375	16	15	17	16	11400	13700	12300	11900	14400	14400
	6.00	315	410	615	433	12	17	20	18	12200	14400	13800	11900	14400	14400
	8.00	320	420	630	250	11	18	21	19	12200	14400	14400	11800	14400	14400
	10.00	250	375	560	520	13	26	33	29	12300	14400	14400	12000	14400	14400
	12.00	280	325	485	583	10.0	19	21	20	12300	14400	14400	12200	14400	14400
	15.00	250	375	560	467	11	28	35	31	12300	14400	14400	12000	14400	14400
	20.00	250	375	560	350	10	28	35	31	12300	14400	14400	12000	14400	14400
	25.00	250	375	560	280	9.8	28	36	32	12300	14400	14400	12000	14400	14400
	30.00	250	375	560	233	9.6	28	36	32	12300	14400	14400	12000	14400	14400

EBH07							c_T			F_{Ramax}			F_{Rapk}		
n_e = 1500	i	M_{amax} [Nm]	M_{apk} [Nm]	$M_{aNotaus}$ [Nm]	n_{ak} [1/min]	J_{GA} 10^{-4} [kgm^2]	BSF [Nm/']	BSBF [Nm/']	BSHF [Nm/']	BSF [N]	BSBF [N]	BSHF [N]	BSF [N]	BSBF [N]	BSHF [N]
BSF502 2	3.00	230	370	555	1333	21	13	14	14	10500	12700	11400	12000	14400	14400
	4.00	270	400	600	375	16	15	17	16	11400	13700	12300	11900	14400	14400
	6.00	315	410	615	433	12	17	20	18	12200	14400	13800	11900	14400	14400
	8.00	320	420	630	250	11	18	21	19	12200	14400	14400	11800	14400	14400
	10.00	250	375	560	520	13	26	33	29	12300	14400	14400	12000	14400	14400
	12.00	280	325	485	583	10	19	21	20	12300	14400	14400	12200	14400	14400
	15.00	250	375	560	467	11	28	35	31	12300	14400	14400	12000	14400	14400
	20.00	250	375	560	350	10	28	35	31	12300	14400	14400	12000	14400	14400
	25.00	250	375	560	280	9.9	28	36	32	12300	14400	14400	12000	14400	14400
	30.00	250	375	560	233	9.6	28	36	32	12300	14400	14400	12000	14400	14400

EBH08							c_T			F_{Ramax}			F_{Rapk}		
n_e = 1500	i	M_{amax} [Nm]	M_{apk} [Nm]	$M_{aNotaus}$ [Nm]	n_{ak} [1/min]	J_{GA} 10^{-4} [kgm^2]	BSF [Nm/']	BSBF [Nm/']	BSHF [Nm/']	BSF [N]	BSBF [N]	BSHF [N]	BSF [N]	BSBF [N]	BSHF [N]
BSF502 2	3.00	310	370	555	500	30	15	16	15	10100	12100	10900	12000	14400	14400
	4.00	320	400	600	425	26	17	19	18	11100	13400	12000	11900	14400	14400
	6.00	320	410	615	417	22	18	21	20	12200	14400	13800	11900	14400	14400
	8.00	320	420	630	400	21	19	22	21	12200	14400	14400	11800	14400	14400
	10.00	250	375	560	520	22	27	34	30	12300	14400	14400	12000	14400	14400
	15.00	250	375	560	467	21	28	36	32	12300	14400	14400	12000	14400	14400
	20.00	250	375	560	350	20	29	36	32	12300	14400	14400	12000	14400	14400
	25.00	250	375	560	280	20	29	37	32	12300	14400	14400	12000	14400	14400

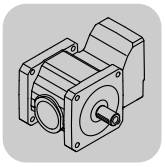

EBH				M1			M2;M4			M3;M5-6			φ		
	i	n_{epk} [1/min]	η [%]	a_0	a_1	a_2	a_0	a_1	a_2	a_0	a_1	a_2	[']	/R [']	/M [']
BSF502 2	3.00	4500	94.1	21.29	-0.055	184165	18.47	-0.081	183632	32.71	-0.077	180058	6	3	-
	4.00	4500	94.1	20.57	-0.065	183623	16.99	-0.097	182939	34.95	-0.094	178708	6	3	-
	6.00	4500	94.1	19.77	-0.080	182775	14.92	-0.121	181967	37.60	-0.120	177200	6	3	-
	8.00	4500	94.1	19.26	-0.090	182213	13.39	-0.137	181401	39.07	-0.138	176411	6	3	-
	10.00	4500	90.5	-6.62	-0.203	120320	-17.47	-0.316	119454	22.51	-0.334	115909	6	3	-
	12.00	4500	94.1	18.42	-0.103	181624	11.52	-0.158	180702	40.77	-0.162	175563	6	3	-
	15.00	4500	90.5	-8.98	-0.257	119313	-22.97	-0.403	118384	27.69	-0.441	114160	6	3	-
	20.00	4500	90.5	-10.77	-0.295	118759	-26.04	-0.466	117558	31.72	-0.518	112896	6	3	-
	25.00	4500	90.5	-11.48	-0.324	118189	-28.42	-0.511	117063	34.29	-0.575	112134	6	3	-
	30.00	4500	90.6	-12.28	-0.345	117868	-30.16	-0.546	116700	36.58	-0.620	111510	6	3	-
	35.00	4500	90.6	-12.89	-0.362	117623	-31.46	-0.574	116419	38.29	-0.655	111052	6	3	-

13.2.8 BS..502 EBH.. [mm]

BSF502..

55 012 00 03

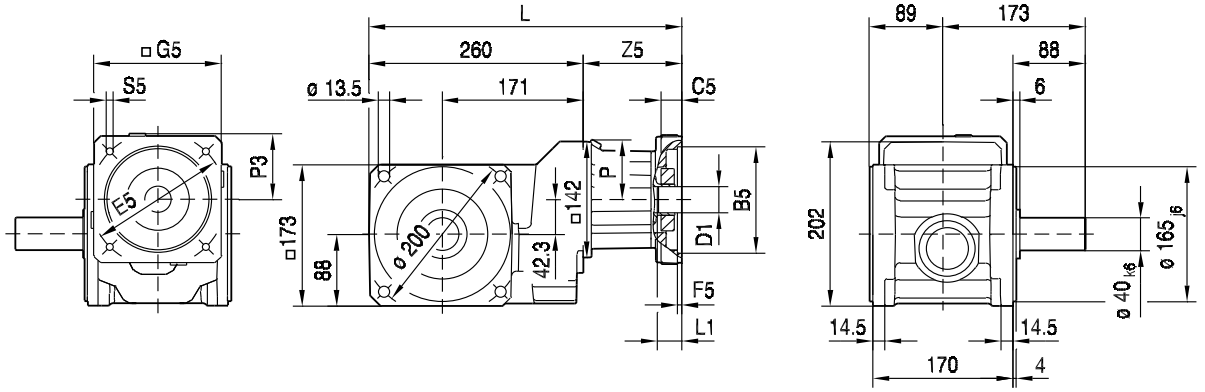

BSKF

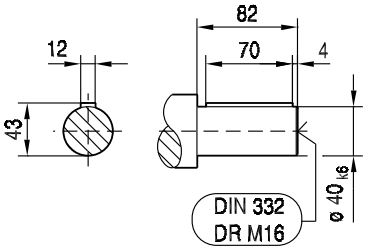

BSF

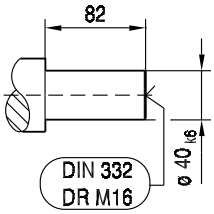

(→ 144)	L	B5	C5	E5	F5	G5	S5	Z5	L1	P	P3	D1 (→ 476)
EBH03/01/..	334	40	20	63	3.5	90	M4	74	42	72	47	8, 9, 10, 11, 12, 14
EBH03/03/..	334	50	20	60	3.5	90	M4	74	41	72	47	8, 9, 10, 11, 12, 14
EBH03/04/..	334	50	20	70	3.5	90	M5	74	41	72	47	8, 9, 10, 11, 12, 14
EBH03/05/..	334	50	20	80	3.5	90	M4	74	41	72	47	8, 9, 10, 11, 12, 14
EBH03/06/..	334	50	20	95	3.5	90	M6	74	41	72	47	8, 9, 10, 11, 12, 14
EBH03/07/..	334	50	20	100	3.5	90	M6	74	41	72	47	8, 9, 10, 11, 12, 14
EBH03/08/..	334	60	20	75	3.5	90	M5	74	41	72	47	8, 9, 10, 11, 12, 14
EBH03/09/..	334	60	20	90	3.5	90	M5	74	41	72	47	8, 9, 10, 11, 12, 14
EBH03/10/..	334	70	20	85	3.5	90	M6	74	41	72	47	8, 9, 10, 11, 12, 14
EBH03/11/..	334	70	20	90	3.5	90	M5	74	41	72	47	8, 9, 10, 11, 12, 14
EBH03/13/..	334	80	20	100	3.5	90	M6	74	41	72	47	8, 9, 10, 11, 12, 14
EBH03/14/..	334	95	16	115	4	105	M8	74	41	72	55	8, 9, 10, 11, 12, 14
EBH04/12/..	334	70	20	90	3.5	90	M6	74	41	72	47	11 ,12 ,14, 16, 19
EBH04/13/..	334	80	20	100	3.5	90	M6	74	41	72	47	11 ,12 ,14, 16, 19
EBH04/14/..	334	95	16	115	4	105	M8	74	41	72	55	11 ,12 ,14, 16, 19
EBH04/15/..	334	95	16	130	4	115	M8	74	41	72	60	11 ,12 ,14, 16, 19
EBH05/14/..	361	95	16	115	4	120	M8	101	56	72	62	14, 16, 17, 18, 19, 24
EBH05/15/..	361	95	16	130	4	120	M8	101	56	72	62	14, 16, 17, 18, 19, 24
EBH05/16/..	361	110	16	130	5	120	M8	101	56	72	62	14, 16, 17, 18, 19, 24
EBH05/17/..	361	110	16	145	7	120	M8	101	56	72	62	14, 16, 17, 18, 19, 24
EBH05/18/..	361	110	20	165	5	140	M10	101	56	72	72	14, 16, 17, 18, 19, 24
EBH05/20/..	361	130	20	165	5	140	M10	101	56	72	72	14, 16, 17, 18, 19, 24
EBH05/26/..	361	110	16	130	5	115	M8	101	56	72	61	14, 16, 17, 18, 19, 24
EBH06/19/..	400	114.3	24	200	5	174	M12	140	86	72	89	35
EBH07/20/..	380	130	24	165	5	155	M10	120	66	72	80	22, 24, 28, 32
EBH07/21/..	380	130	24	215	5	190	M12	120	66	72	97	22, 24, 28, 32
EBH07/22/..	380	180	24	215	5	190	M12	120	66	72	97	22, 24, 28, 32
EBH07/27/..	380	130	24	165	5	137	M10	120	66	72	72	22, 24, 28, 32
EBH07/28/..	380	155	24	190	5	162	M10	120	66	72	84	22, 24, 28, 32
EBH08/21/..	399	130	24	215	5	190	M12	139	82	72	97	32, 35, 38
EBH08/22/..	399	180	24	215	5	190	M12	139	82	72	97	32, 35, 38

BSBF502..

55 013 00 03

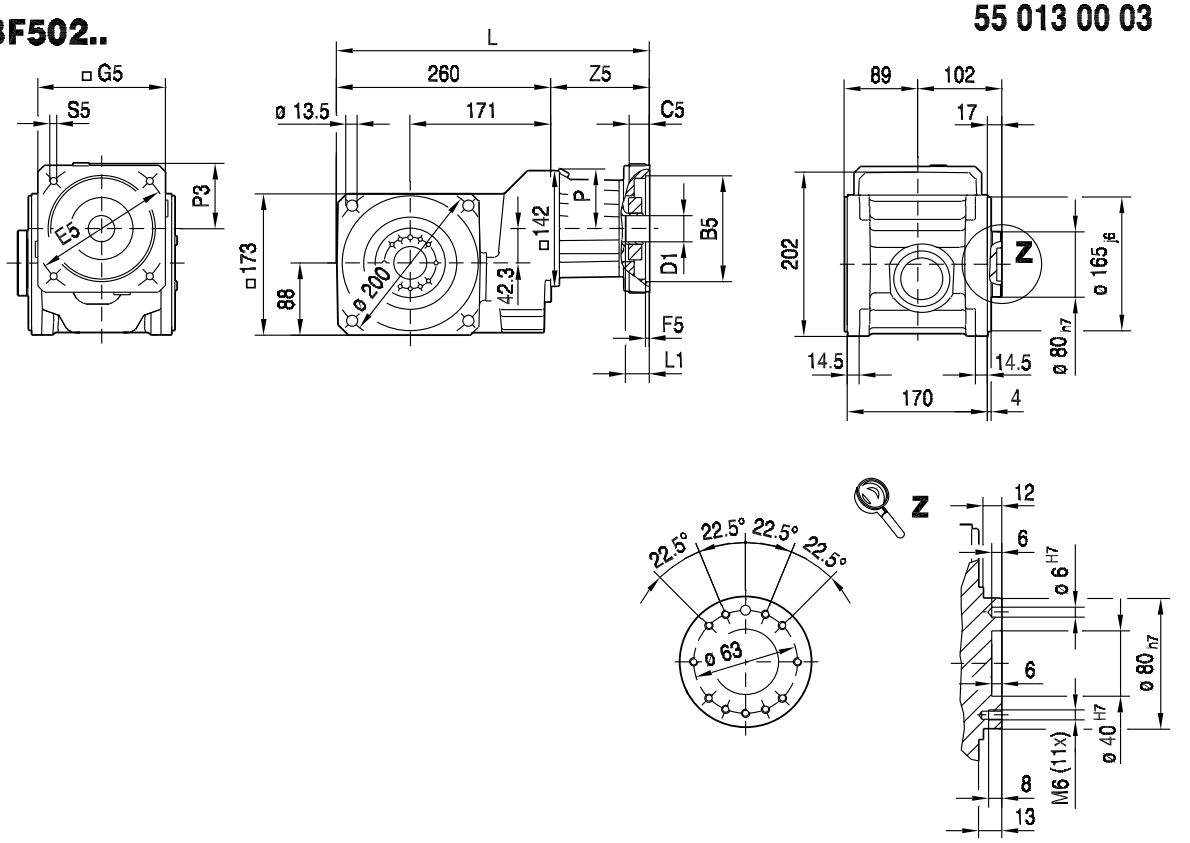

(→ 144)	L	B5	C5	E5	F5	G5	S5	Z5	L1	P	P3	D1 (→ 476)
EBH03/01/..	334	40	20	63	3.5	90	M4	74	42	72	47	8, 9, 10, 11, 12, 14
EBH03/03/..	334	50	20	60	3.5	90	M4	74	41	72	47	8, 9, 10, 11, 12, 14
EBH03/04/..	334	50	20	70	3.5	90	M5	74	41	72	47	8, 9, 10, 11, 12, 14
EBH03/05/..	334	50	20	80	3.5	90	M4	74	41	72	47	8, 9, 10, 11, 12, 14
EBH03/06/..	334	50	20	95	3.5	90	M6	74	41	72	47	8, 9, 10, 11, 12, 14
EBH03/07/..	334	50	20	100	3.5	90	M6	74	41	72	47	8, 9, 10, 11, 12, 14
EBH03/08/..	334	60	20	75	3.5	90	M5	74	41	72	47	8, 9, 10, 11, 12, 14
EBH03/09/..	334	60	20	90	3.5	90	M5	74	41	72	47	8, 9, 10, 11, 12, 14
EBH03/10/..	334	70	20	85	3.5	90	M6	74	41	72	47	8, 9, 10, 11, 12, 14
EBH03/11/..	334	70	20	90	3.5	90	M5	74	41	72	47	8, 9, 10, 11, 12, 14
EBH03/13/..	334	80	20	100	3.5	90	M6	74	41	72	47	8, 9, 10, 11, 12, 14
EBH03/14/..	334	95	16	115	4	105	M8	74	41	72	55	8, 9, 10, 11, 12, 14
EBH04/12/..	334	70	20	90	3.5	90	M6	74	41	72	47	11 ,12 ,14, 16, 19
EBH04/13/..	334	80	20	100	3.5	90	M6	74	41	72	47	11 ,12 ,14, 16, 19
EBH04/14/..	334	95	16	115	4	105	M8	74	41	72	55	11 ,12 ,14, 16, 19
EBH04/15/..	334	95	16	130	4	115	M8	74	41	72	60	11 ,12 ,14, 16, 19
EBH05/14/..	361	95	16	115	4	120	M8	101	56	72	62	14, 16, 17, 18, 19, 24
EBH05/15/..	361	95	16	130	4	120	M8	101	56	72	62	14, 16, 17, 18, 19, 24
EBH05/16/..	361	110	16	130	5	120	M8	101	56	72	62	14, 16, 17, 18, 19, 24
EBH05/17/..	361	110	16	145	7	120	M8	101	56	72	62	14, 16, 17, 18, 19, 24
EBH05/18/..	361	110	20	165	5	140	M10	101	56	72	72	14, 16, 17, 18, 19, 24
EBH05/20/..	361	130	20	165	5	140	M10	101	56	72	72	14, 16, 17, 18, 19, 24
EBH05/26/..	361	110	16	130	5	115	M8	101	56	72	61	14, 16, 17, 18, 19, 24
EBH06/19/..	400	114.3	24	200	5	174	M12	140	86	72	89	35
EBH07/20/..	380	130	24	165	5	155	M10	120	66	72	80	22, 24, 28, 32
EBH07/21/..	380	130	24	215	5	190	M12	120	66	72	97	22, 24, 28, 32
EBH07/22/..	380	180	24	215	5	190	M12	120	66	72	97	22, 24, 28, 32
EBH07/27/..	380	130	24	165	5	137	M10	120	66	72	72	22, 24, 28, 32
EBH07/28/..	380	155	24	190	5	162	M10	120	66	72	84	22, 24, 28, 32
EBH08/21/..	399	130	24	215	5	190	M12	139	82	72	97	32, 35, 38
EBH08/22/..	399	180	24	215	5	190	M12	139	82	72	97	32, 35, 38

BSHF502..

55 027 00 03

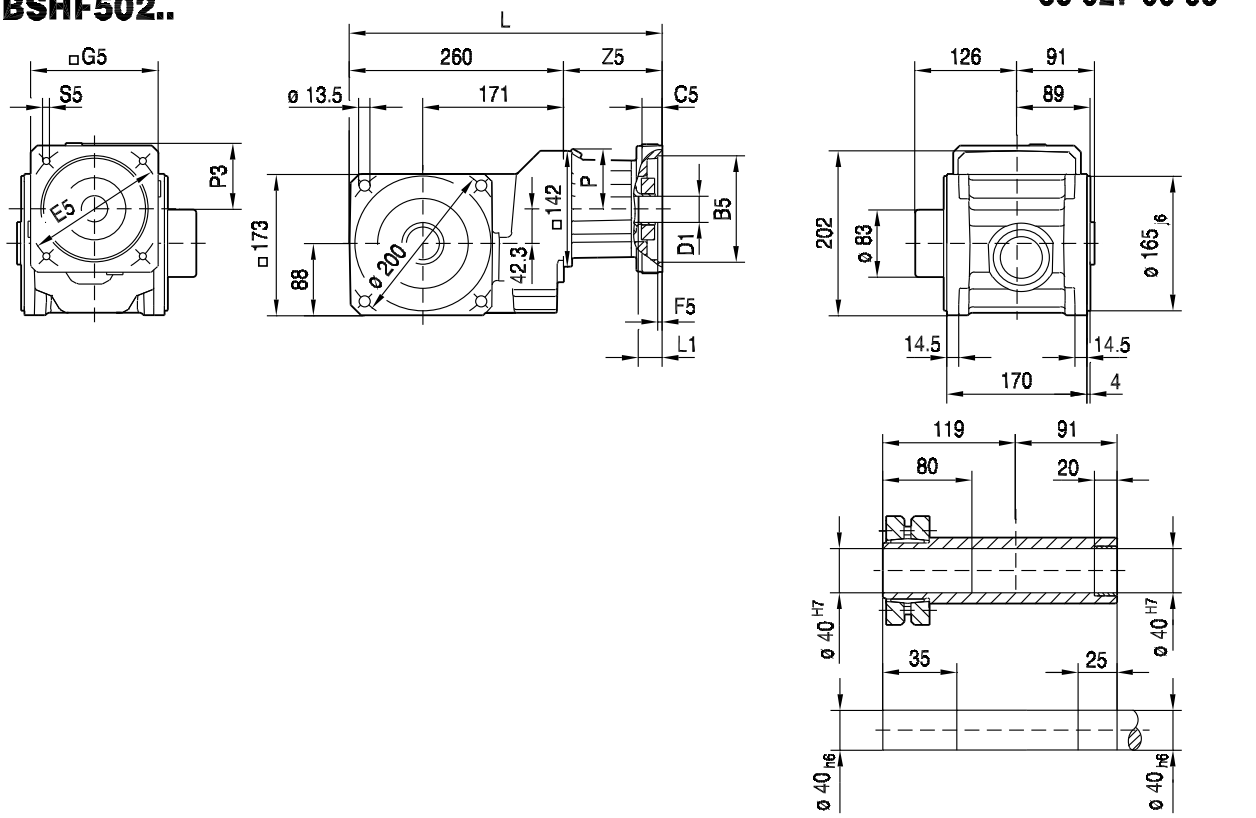

(→ 144)	L	B5	C5	E5	F5	G5	S5	Z5	L1	P	P3	D1 (→ 476)
EBH03/01/..	334	40	20	63	3.5	90	M4	74	42	72	47	8, 9, 10, 11, 12, 14
EBH03/03/..	334	50	20	60	3.5	90	M4	74	41	72	47	8, 9, 10, 11, 12, 14
EBH03/04/..	334	50	20	70	3.5	90	M5	74	41	72	47	8, 9, 10, 11, 12, 14
EBH03/05/..	334	50	20	80	3.5	90	M4	74	41	72	47	8, 9, 10, 11, 12, 14
EBH03/06/..	334	50	20	95	3.5	90	M6	74	41	72	47	8, 9, 10, 11, 12, 14
EBH03/07/..	334	50	20	100	3.5	90	M6	74	41	72	47	8, 9, 10, 11, 12, 14
EBH03/08/..	334	60	20	75	3.5	90	M5	74	41	72	47	8, 9, 10, 11, 12, 14
EBH03/09/..	334	60	20	90	3.5	90	M5	74	41	72	47	8, 9, 10, 11, 12, 14
EBH03/10/..	334	70	20	85	3.5	90	M6	74	41	72	47	8, 9, 10, 11, 12, 14
EBH03/11/..	334	70	20	90	3.5	90	M5	74	41	72	47	8, 9, 10, 11, 12, 14
EBH03/13/..	334	80	20	100	3.5	90	M6	74	41	72	47	8, 9, 10, 11, 12, 14
EBH03/14/..	334	95	16	115	4	105	M8	74	41	72	55	8, 9, 10, 11, 12, 14
EBH04/12/..	334	70	20	90	3.5	90	M6	74	41	72	47	11 ,12 ,14, 16, 19
EBH04/13/..	334	80	20	100	3.5	90	M6	74	41	72	47	11 ,12 ,14, 16, 19
EBH04/14/..	334	95	16	115	4	105	M8	74	41	72	55	11 ,12 ,14, 16, 19
EBH04/15/..	334	95	16	130	4	115	M8	74	41	72	60	11 ,12 ,14, 16, 19
EBH05/14/..	361	95	16	115	4	120	M8	101	56	72	62	14, 16, 17, 18, 19, 24
EBH05/15/..	361	95	16	130	4	120	M8	101	56	72	62	14, 16, 17, 18, 19, 24
EBH05/16/..	361	110	16	130	5	120	M8	101	56	72	62	14, 16, 17, 18, 19, 24
EBH05/17/..	361	110	16	145	7	120	M8	101	56	72	62	14, 16, 17, 18, 19, 24
EBH05/18/..	361	110	20	165	5	140	M10	101	56	72	72	14, 16, 17, 18, 19, 24
EBH05/20/..	361	130	20	165	5	140	M10	101	56	72	72	14, 16, 17, 18, 19, 24
EBH05/26/..	361	110	16	130	5	115	M8	101	56	72	61	14, 16, 17, 18, 19, 24
EBH06/19/..	400	114.3	24	200	5	174	M12	140	86	72	89	35
EBH07/20/..	380	130	24	165	5	155	M10	120	66	72	80	22, 24, 28, 32
EBH07/21/..	380	130	24	215	5	190	M12	120	66	72	97	22, 24, 28, 32
EBH07/22/..	380	180	24	215	5	190	M12	120	66	72	97	22, 24, 28, 32
EBH07/27/..	380	130	24	165	5	137	M10	120	66	72	72	22, 24, 28, 32
EBH07/28/..	380	155	24	190	5	162	M10	120	66	72	84	22, 24, 28, 32
EBH08/21/..	399	130	24	215	5	190	M12	139	82	72	97	32, 35, 38
EBH08/22/..	399	180	24	215	5	190	M12	139	82	72	97	32, 35, 38

BSHF502/I..

55 014 00 03

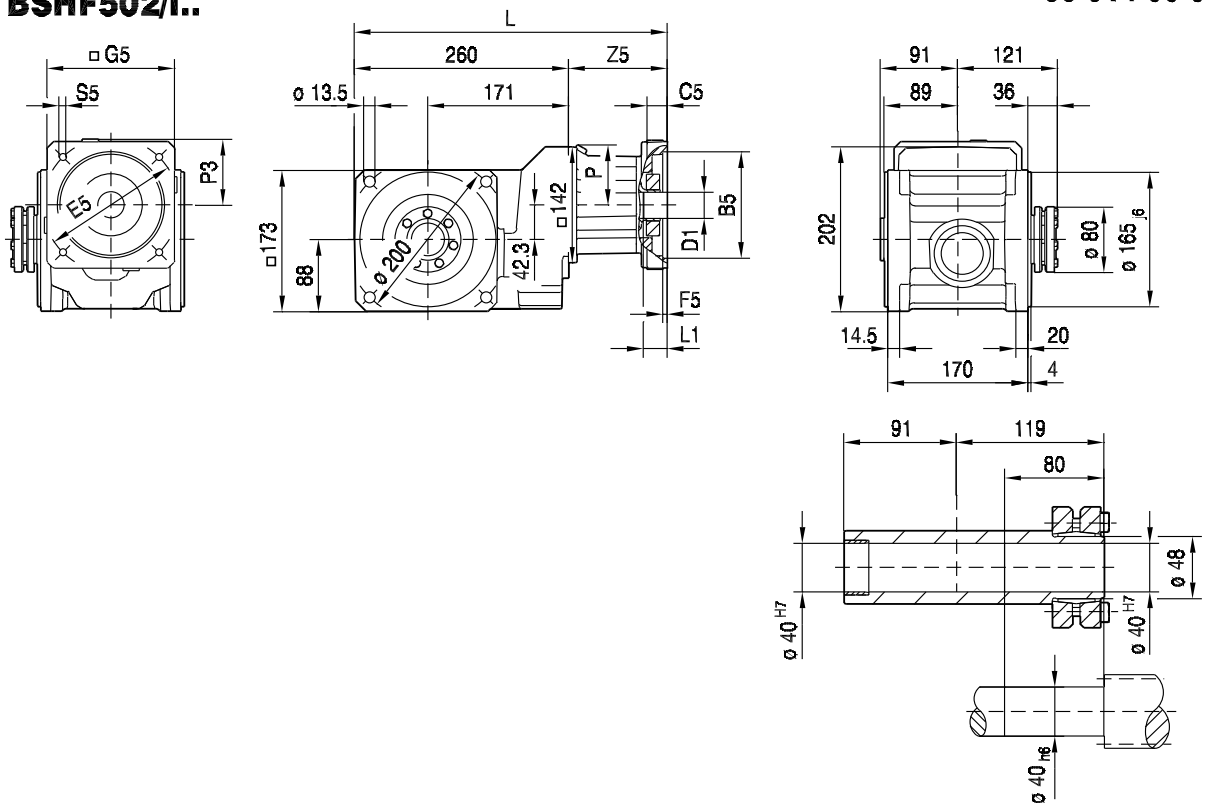

(→ 144)	L	B5	C5	E5	F5	G5	S5	Z5	L1	P	P3	D1 (→ 476)
EBH03/01/..	334	40	20	63	3.5	90	M4	74	42	72	47	8, 9, 10, 11, 12, 14
EBH03/03/..	334	50	20	60	3.5	90	M4	74	41	72	47	8, 9, 10, 11, 12, 14
EBH03/04/..	334	50	20	70	3.5	90	M5	74	41	72	47	8, 9, 10, 11, 12, 14
EBH03/05/..	334	50	20	80	3.5	90	M4	74	41	72	47	8, 9, 10, 11, 12, 14
EBH03/06/..	334	50	20	95	3.5	90	M6	74	41	72	47	8, 9, 10, 11, 12, 14
EBH03/07/..	334	50	20	100	3.5	90	M6	74	41	72	47	8, 9, 10, 11, 12, 14
EBH03/08/..	334	60	20	75	3.5	90	M5	74	41	72	47	8, 9, 10, 11, 12, 14
EBH03/09/..	334	60	20	90	3.5	90	M5	74	41	72	47	8, 9, 10, 11, 12, 14
EBH03/10/..	334	70	20	85	3.5	90	M6	74	41	72	47	8, 9, 10, 11, 12, 14
EBH03/11/..	334	70	20	90	3.5	90	M5	74	41	72	47	8, 9, 10, 11, 12, 14
EBH03/13/..	334	80	20	100	3.5	90	M6	74	41	72	47	8, 9, 10, 11, 12, 14
EBH03/14/..	334	95	16	115	4	105	M8	74	41	72	55	8, 9, 10, 11, 12, 14
EBH04/12/..	334	70	20	90	3.5	90	M6	74	41	72	47	11 ,12 ,14, 16, 19
EBH04/13/..	334	80	20	100	3.5	90	M6	74	41	72	47	11 ,12 ,14, 16, 19
EBH04/14/..	334	95	16	115	4	105	M8	74	41	72	55	11 ,12 ,14, 16, 19
EBH04/15/..	334	95	16	130	4	115	M8	74	41	72	60	11 ,12 ,14, 16, 19
EBH05/14/..	361	95	16	115	4	120	M8	101	56	72	62	14, 16, 17, 18, 19, 24
EBH05/15/..	361	95	16	130	4	120	M8	101	56	72	62	14, 16, 17, 18, 19, 24
EBH05/16/..	361	110	16	130	5	120	M8	101	56	72	62	14, 16, 17, 18, 19, 24
EBH05/17/..	361	110	16	145	7	120	M8	101	56	72	62	14, 16, 17, 18, 19, 24
EBH05/18/..	361	110	20	165	5	140	M10	101	56	72	72	14, 16, 17, 18, 19, 24
EBH05/20/..	361	130	20	165	5	140	M10	101	56	72	72	14, 16, 17, 18, 19, 24
EBH05/26/..	361	110	16	130	5	115	M8	101	56	72	61	14, 16, 17, 18, 19, 24
EBH06/19/..	400	114.3	24	200	5	174	M12	140	86	72	89	35
EBH07/20/..	380	130	24	165	5	155	M10	120	66	72	80	22, 24, 28, 32
EBH07/21/..	380	130	24	215	5	190	M12	120	66	72	97	22, 24, 28, 32
EBH07/22/..	380	180	24	215	5	190	M12	120	66	72	97	22, 24, 28, 32
EBH07/27/..	380	130	24	165	5	137	M10	120	66	72	72	22, 24, 28, 32
EBH07/28/..	380	155	24	190	5	162	M10	120	66	72	84	22, 24, 28, 32
EBH08/21/..	399	130	24	215	5	190	M12	139	82	72	97	32, 35, 38
EBH08/22/..	399	180	24	215	5	190	M12	139	82	72	97	32, 35, 38

55 012 00 07

BSAF502..

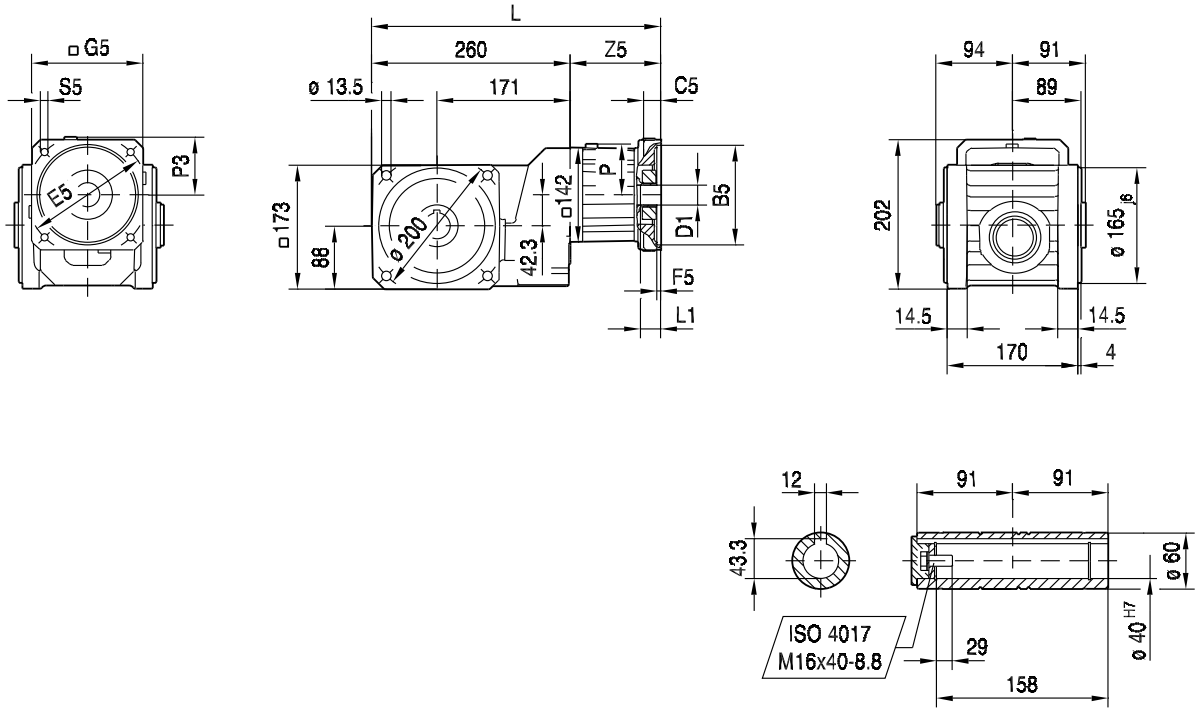

(→ 144)	L	B5	C5	E5	F5	G5	S5	Z5	L1	P	P3	D1 (→ 476)
EBH03/01/..	334	40	20	63	3.5	90	M4	74	42	72	47	8, 9, 10, 11, 12, 14
EBH03/03/..	334	50	20	60	3.5	90	M4	74	41	72	47	8, 9, 10, 11, 12, 14
EBH03/04/..	334	50	20	70	3.5	90	M5	74	41	72	47	8, 9, 10, 11, 12, 14
EBH03/05/..	334	50	20	80	3.5	90	M4	74	41	72	47	8, 9, 10, 11, 12, 14
EBH03/06/..	334	50	20	95	3.5	90	M6	74	41	72	47	8, 9, 10, 11, 12, 14
EBH03/07/..	334	50	20	100	3.5	90	M6	74	41	72	47	8, 9, 10, 11, 12, 14
EBH03/08/..	334	60	20	75	3.5	90	M5	74	41	72	47	8, 9, 10, 11, 12, 14
EBH03/09/..	334	60	20	90	3.5	90	M5	74	41	72	47	8, 9, 10, 11, 12, 14
EBH03/10/..	334	70	20	85	3.5	90	M6	74	41	72	47	8, 9, 10, 11, 12, 14
EBH03/11/..	334	70	20	90	3.5	90	M5	74	41	72	47	8, 9, 10, 11, 12, 14
EBH03/13/..	334	80	20	100	3.5	90	M6	74	41	72	47	8, 9, 10, 11, 12, 14
EBH03/14/..	334	95	16	115	4	105	M8	74	41	72	55	8, 9, 10, 11, 12, 14
EBH04/12/..	334	70	20	90	3.5	90	M6	74	41	72	47	11 ,12 ,14, 16, 19
EBH04/13/..	334	80	20	100	3.5	90	M6	74	41	72	47	11 ,12 ,14, 16, 19
EBH04/14/..	334	95	16	115	4	105	M8	74	41	72	55	11 ,12 ,14, 16, 19
EBH04/15/..	334	95	16	130	4	115	M8	74	41	72	60	11 ,12 ,14, 16, 19
EBH05/14/..	361	95	16	115	4	120	M8	101	56	72	62	14, 16, 17, 18, 19, 24
EBH05/15/..	361	95	16	130	4	120	M8	101	56	72	62	14, 16, 17, 18, 19, 24
EBH05/16/..	361	110	16	130	5	120	M8	101	56	72	62	14, 16, 17, 18, 19, 24
EBH05/17/..	361	110	16	145	7	120	M8	101	56	72	62	14, 16, 17, 18, 19, 24
EBH05/18/..	361	110	20	165	5	140	M10	101	56	72	72	14, 16, 17, 18, 19, 24
EBH05/20/..	361	130	20	165	5	140	M10	101	56	72	72	14, 16, 17, 18, 19, 24
EBH05/26/..	361	110	16	130	5	115	M8	101	56	72	61	14, 16, 17, 18, 19, 24
EBH06/19/..	400	114.3	24	200	5	174	M12	140	86	72	89	35
EBH07/20/..	380	130	24	165	5	155	M10	120	66	72	80	22, 24, 28, 32
EBH07/21/..	380	130	24	215	5	190	M12	120	66	72	97	22, 24, 28, 32
EBH07/22/..	380	180	24	215	5	190	M12	120	66	72	97	22, 24, 28, 32
EBH07/27/..	380	130	24	165	5	137	M10	120	66	72	72	22, 24, 28, 32
EBH07/28/..	380	155	24	190	5	162	M10	120	66	72	84	22, 24, 28, 32
EBH08/21/..	399	130	24	215	5	190	M12	139	82	72	97	32, 35, 38
EBH08/22/..	399	180	24	215	5	190	M12	139	82	72	97	32, 35, 38

13.2.9 BS..602 EBH.. [Nm]

[Nm]		EBH M_{amax} | M_{apk} | $M_{aNotaus}$																	
	i	03			04			05			06			07			08		
BSF602 2	3.00																370	615	920
	4.00							210	265	400	310	495	740	310	495	740	430	645	960
	6.00	137	164	245	137	164	245	255	400	600	380	570	850	380	570	850	525	790	1180
	8.00	147	215	325	147	215	325	275	415	620	410	615	920	410	615	920	565	780	1170
	10.00							505	650	970	520	750	1120	520	750	1120	520	750	1120
	12.00	162	325	490	162	325	490	305	460	690	440	505	760	440	505	760	505	585	870
	15.00	330	400	600	330	400	600	520	750	1120	520	750	1120	520	750	1120	520	750	1120
	20.00	355	530	800	355	530	800	520	750	1120	520	750	1120	520	750	1120	520	750	1120
	25.00	375	665	1000	375	665	1000	520	750	1120	520	750	1120	520	750	1120	520	750	1120
	30.00	390	585	870	390	585	870	520	750	1120	520	750	1120	520	750	1120	520	750	1120
	35.00	395	595	890	395	595	890	520	750	1120	520	750	1120	520	750	1120			
	40.00	425	640	960	425	640	960	520	750	1120	520	750	1120	520	750	1120			

m [kg]		EBH					
	s	03	04	05	06	07	08
BSF602	2	47	47	49	52	52	56
BSBF: + 0.3 kg / BSHF: + -2.9 kg							

EBH03							c_T			F_{Ramax}			F_{Rapk}		
n_e = 1500	i	M_{amax} [Nm]	M_{apk} [Nm]	$M_{aNotaus}$ [Nm]	n_{ak} [1/min]	J_{GA} 10^{-4} [kgm^2]	BSF [Nm/']	BSBF [Nm/']	BSHF [Nm/']	BSF [N]	BSBF [N]	BSHF [N]	BSF [N]	BSBF [N]	BSHF [N]
BSF602 2	6.00	137	164	245	1167	11	26	27	26	21100	24000	21800	24000	24000	24000
	8.00	147	215	325	875	7.0	31	33	31	23100	24000	23800	24000	24000	24000
	12.00	162	325	490	583	4.0	37	40	37	24000	24000	24000	24000	24000	24000
	15.00	330	400	600	467	6.0	51	56	52	24000	24000	24000	24000	24000	24000
	20.00	355	530	800	350	4.3	54	60	55	24000	24000	24000	24000	24000	24000
	25.00	375	665	1000	280	3.3	55	62	57	24000	24000	24000	24000	24000	24000
	30.00	390	585	870	50	2.8	56	64	58	24000	24000	24000	24000	24000	24000
	35.00	395	595	890	43	2.4	57	64	59	24000	24000	24000	24000	24000	24000
	40.00	425	640	960	38	2.1	58	66	60	24000	24000	24000	24000	24000	24000

EBH04							c_T			F_{Ramax}			F_{Rapk}		
n_e = 1500	i	M_{amax} [Nm]	M_{apk} [Nm]	$M_{aNotaus}$ [Nm]	n_{ak} [1/min]	J_{GA} 10^{-4} [kgm^2]	BSF [Nm/']	BSBF [Nm/']	BSHF [Nm/']	BSF [N]	BSBF [N]	BSHF [N]	BSF [N]	BSBF [N]	BSHF [N]
BSF602 2	6.00	137	164	245	1167	11	26	28	27	21100	24000	21800	24000	24000	24000
	8.00	147	215	325	875	7.0	31	34	32	23100	24000	23800	24000	24000	24000
	12.00	162	325	490	583	4.0	37	41	38	24000	24000	24000	24000	24000	24000
	15.00	330	400	600	467	6.0	51	57	53	24000	24000	24000	24000	24000	24000
	20.00	355	530	800	350	4.3	54	61	56	24000	24000	24000	24000	24000	24000
	25.00	375	665	1000	280	3.3	56	63	58	24000	24000	24000	24000	24000	24000
	30.00	390	585	870	50	2.8	57	64	59	24000	24000	24000	24000	24000	24000
	35.00	395	595	890	43	2.4	57	65	59	24000	24000	24000	24000	24000	24000
	40.00	425	640	960	38	2.1	59	67	61	24000	24000	24000	24000	24000	24000

EBH05							c_T			F_{Ramax}			F_{Rapk}		
n_e = 1500	i	M_{amax} [Nm]	M_{apk} [Nm]	$M_{aNotaus}$ [Nm]	n_{ak} [1/min]	J_{GA} 10^{-4} [kgm^2]	BSF [Nm/']	BSBF [Nm/']	BSHF [Nm/']	BSF [N]	BSBF [N]	BSHF [N]	BSF [N]	BSBF [N]	BSHF [N]
BSF602 2	4.00	210	265	400	1750	25	27	29	28	18300	20900	18900	24000	24000	24000
	6.00	255	400	600	1167	15	36	39	37	20600	23500	21200	24000	24000	24000
	8.00	275	415	620	188	11	40	43	41	22400	24000	23100	24000	24000	24000
	10.00	505	650	970	220	14	51	57	53	22500	24000	23200	24000	24000	24000
	12.00	305	460	690	583	7.8	43	47	44	24000	24000	24000	24000	24000	24000
	15.00	520	750	1120	173	9.9	56	64	58	24000	24000	24000	24000	24000	24000
	20.00	520	750	1120	160	8.2	58	65	60	24000	24000	24000	24000	24000	24000
	25.00	520	750	1120	152	7.2	58	66	60	24000	24000	24000	24000	24000	24000
	30.00	520	750	1120	143	6.6	59	67	61	24000	24000	24000	24000	24000	24000
	35.00	520	750	1120	126	6.3	58	66	61	24000	24000	24000	24000	24000	24000
	40.00	520	750	1120	138	6.0	60	69	63	24000	24000	24000	24000	24000	24000

EBH06							c_T			F_{Ramax}			F_{Rapk}		
n_e = 1500	i	M_{amax} [Nm]	M_{apk} [Nm]	$M_{aNotaus}$ [Nm]	n_{ak} [1/min]	J_{GA} 10^{-4} [kgm^2]	BSF [Nm/']	BSBF [Nm/']	BSHF [Nm/']	BSF [N]	BSBF [N]	BSHF [N]	BSF [N]	BSBF [N]	BSHF [N]
BSF602 2	4.00	310	495	740	1750	29	31	33	31	17800	20400	18400	24000	24000	24000
	6.00	380	570	850	250	19	40	43	41	20000	22800	20600	24000	24000	24000
	8.00	410	615	920	188	15	43	47	44	21800	24000	22500	24000	24000	24000
	10.00	520	750	1120	200	18	53	60	55	22400	24000	23100	24000	24000	24000
	12.00	440	505	760	583	12	45	49	46	24000	24000	24000	24000	24000	24000
	15.00	520	750	1120	187	14	58	66	60	24000	24000	24000	24000	24000	24000
	20.00	520	750	1120	190	12	59	67	61	24000	24000	24000	24000	24000	24000
	25.00	520	750	1120	188	11	60	68	62	24000	24000	24000	24000	24000	24000
	30.00	520	750	1120	190	11	60	68	62	24000	24000	24000	24000	24000	24000
	35.00	520	750	1120	200	10	59	68	61	24000	24000	24000	24000	24000	24000
	40.00	520	750	1120	175	10	61	70	63	24000	24000	24000	24000	24000	24000

EBH07							c_T			F_{Ramax}			F_{Rapk}		
n_e = 1500	i	M_{amax} [Nm]	M_{apk} [Nm]	$M_{aNotaus}$ [Nm]	n_{ak} [1/min]	J_{GA} 10^{-4} [kgm^2]	BSF [Nm/']	BSBF [Nm/']	BSHF [Nm/']	BSF [N]	BSBF [N]	BSHF [N]	BSF [N]	BSBF [N]	BSHF [N]
BSF602 2	4.00	310	495	740	1750	29	31	33	31	17800	20400	18400	24000	24000	24000
	6.00	380	570	850	250	19	40	43	41	20000	22800	20600	24000	24000	24000
	8.00	410	615	920	188	15	43	47	44	21800	24000	22500	24000	24000	24000
	10.00	520	750	1120	200	18	53	60	55	22400	24000	23100	24000	24000	24000
	12.00	440	505	760	583	12	45	49	46	24000	24000	24000	24000	24000	24000
	15.00	520	750	1120	187	14	58	66	60	24000	24000	24000	24000	24000	24000
	20.00	520	750	1120	190	12	59	67	61	24000	24000	24000	24000	24000	24000
	25.00	520	750	1120	188	11	60	68	62	24000	24000	24000	24000	24000	24000
	30.00	520	750	1120	190	11	60	68	62	24000	24000	24000	24000	24000	24000
	35.00	520	750	1120	200	10	59	68	61	24000	24000	24000	24000	24000	24000
	40.00	520	750	1120	175	10	61	70	63	24000	24000	24000	24000	24000	24000

EBH08							c_T			F_{Ramax}			F_{Rapk}		
n_e = 1500	i	M_{amax} [Nm]	M_{apk} [Nm]	$M_{aNotaus}$ [Nm]	n_{ak} [1/min]	J_{GA} 10^{-4} [kgm^2]	BSF [Nm/']	BSBF [Nm/']	BSHF [Nm/']	BSF [N]	BSBF [N]	BSHF [N]	BSF [N]	BSBF [N]	BSHF [N]
BSF602 2	3.00	370	615	920	1200	52	31	33	32	15900	18200	16400	24000	24000	24000
	4.00	430	645	960	375	39	37	40	38	17200	19700	17700	24000	24000	24000
	6.00	525	790	1180	250	28	45	50	46	19200	22000	19800	24000	24000	24000
	8.00	565	780	1170	188	25	47	52	48	21000	24000	21700	24000	24000	24000
	10.00	520	750	1120	200	28	57	64	59	22400	24000	23100	24000	24000	24000
	12.00	505	585	870	583	22	48	54	50	24000	24000	24000	24000	24000	24000
	15.00	520	750	1120	187	24	60	68	62	24000	24000	24000	24000	24000	24000
	20.00	520	750	1120	190	22	60	69	63	24000	24000	24000	24000	24000	24000
	25.00	520	750	1120	188	21	61	70	63	24000	24000	24000	24000	24000	24000
	30.00	520	750	1120	190	20	61	70	63	24000	24000	24000	24000	24000	24000

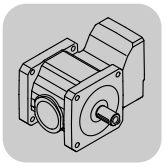

EBH				M1			M2;M4			M3;M5-6			φ		
	i	n_{epk} [1/min]	η [%]	a_0	a_1	a_2	a_0	a_1	a_2	a_0	a_1	a_2	[']	/R [']	/M [']
BSF602 2	3.00	4500	94	-1.22	-0.060	258182	17.38	-0.144	253939	36.73	-0.132	247267	6	3	-
	4.00	4500	94.1	-3.35	-0.071	257389	17.94	-0.178	252543	42.42	-0.166	244809	6	3	-
	6.00	4500	94.1	-6.35	-0.086	256315	18.50	-0.230	250689	50.09	-0.218	241723	6	3	-
	8.00	4500	94.1	-8.40	-0.097	255637	18.73	-0.267	249529	54.77	-0.255	239958	6	3	-
	10.00	4500	90.9	-47.50	-0.236	167324	-14.52	-0.678	162357	41.59	-0.662	155420	6	3	-
	12.00	4500	94.2	-11.01	-0.111	254840	18.58	-0.314	248244	60.30	-0.303	237995	6	3	-
	15.00	4500	90.8	-55.05	-0.294	166158	-15.40	-0.892	160319	47.82	-0.869	154910	6	3	-
	20.00	4500	90.8	-60.08	-0.333	165439	-17.90	-1.036	159395	52.82	-1.018	154092	6	3	-
	25.00	4500	90.9	-63.71	-0.362	164961	-18.71	-1.146	158560	57.42	-1.130	153134	6	3	-
	30.00	4500	90.9	-66.47	-0.383	164630	-19.57	-1.230	158019	60.84	-1.217	152406	6	3	-
	35.00	4500	90.9	-68.08	-0.402	164287	-20.31	-1.295	157620	64.77	-1.290	151662	6	3	-
	40.00	4500	90.9	-69.66	-0.415	164073	-20.99	-1.347	157322	67.10	-1.346	151214	6	3	-

13.2.10 BS..602 EBH.. [mm]

BSF602..

55 015 00 03

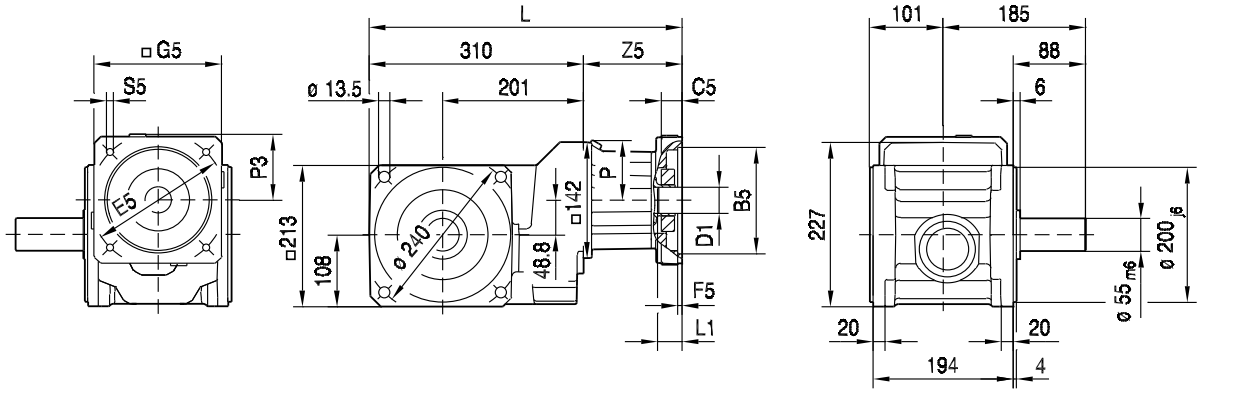

BSKF

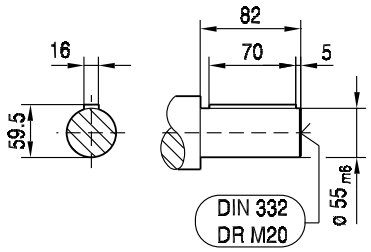

BSF

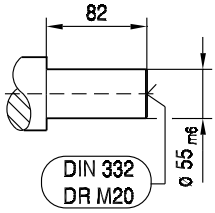

(→ 144)	L	B5	C5	E5	F5	G5	S5	Z5	L1	P	P3	D1 (→ 476)
EBH03/01/..	384	40	20	63	3.5	90	M4	74	42	72	47	8, 9, 10, 11, 12, 14
EBH03/03/..	384	50	20	60	3.5	90	M4	74	41	72	47	8, 9, 10, 11, 12, 14
EBH03/04/..	384	50	20	70	3.5	90	M5	74	41	72	47	8, 9, 10, 11, 12, 14
EBH03/05/..	384	50	20	80	3.5	90	M4	74	41	72	47	8, 9, 10, 11, 12, 14
EBH03/06/..	384	50	20	95	3.5	90	M6	74	41	72	47	8, 9, 10, 11, 12, 14
EBH03/07/..	384	50	20	100	3.5	90	M6	74	41	72	47	8, 9, 10, 11, 12, 14
EBH03/08/..	384	60	20	75	3.5	90	M5	74	41	72	47	8, 9, 10, 11, 12, 14
EBH03/09/..	384	60	20	90	3.5	90	M5	74	41	72	47	8, 9, 10, 11, 12, 14
EBH03/10/..	384	70	20	85	3.5	90	M6	74	41	72	47	8, 9, 10, 11, 12, 14
EBH03/11/..	384	70	20	90	3.5	90	M5	74	41	72	47	8, 9, 10, 11, 12, 14
EBH03/13/..	384	80	20	100	3.5	90	M6	74	41	72	47	8, 9, 10, 11, 12, 14
EBH03/14/..	384	95	16	115	4	105	M8	74	41	72	55	8, 9, 10, 11, 12, 14
EBH04/12/..	384	70	20	90	3.5	90	M6	74	41	72	47	11 ,12 ,14, 16, 19
EBH04/13/..	384	80	20	100	3.5	90	M6	74	41	72	47	11 ,12 ,14, 16, 19
EBH04/14/..	384	95	16	115	4	105	M8	74	41	72	55	11 ,12 ,14, 16, 19
EBH04/15/..	384	95	16	130	4	115	M8	74	41	72	60	11 ,12 ,14, 16, 19
EBH05/14/..	411	95	16	115	4	120	M8	101	56	72	62	14, 16, 17, 18, 19, 24
EBH05/15/..	411	95	16	130	4	120	M8	101	56	72	62	14, 16, 17, 18, 19, 24
EBH05/16/..	411	110	16	130	5	120	M8	101	56	72	62	14, 16, 17, 18, 19, 24
EBH05/17/..	411	110	16	145	7	120	M8	101	56	72	62	14, 16, 17, 18, 19, 24
EBH05/18/..	411	110	20	165	5	140	M10	101	56	72	72	14, 16, 17, 18, 19, 24
EBH05/20/..	411	130	20	165	5	140	M10	101	56	72	72	14, 16, 17, 18, 19, 24
EBH05/26/..	411	110	16	130	5	115	M8	101	56	72	61	14, 16, 17, 18, 19, 24
EBH06/19/..	450	114.3	24	200	5	174	M12	140	86	72	89	35
EBH07/20/..	430	130	24	165	5	155	M10	120	66	72	80	22, 24, 28, 32
EBH07/21/..	430	130	24	215	5	190	M12	120	66	72	97	22, 24, 28, 32
EBH07/22/..	430	180	24	215	5	190	M12	120	66	72	97	22, 24, 28, 32
EBH07/27/..	430	130	24	165	5	137	M10	120	66	72	72	22, 24, 28, 32
EBH07/28/..	430	155	24	190	5	162	M10	120	66	72	84	22, 24, 28, 32
EBH08/21/..	449	130	24	215	5	190	M12	139	82	72	97	32, 35, 38
EBH08/22/..	449	180	24	215	5	190	M12	139	82	72	97	32, 35, 38

BSBF602..

55 016 00 03

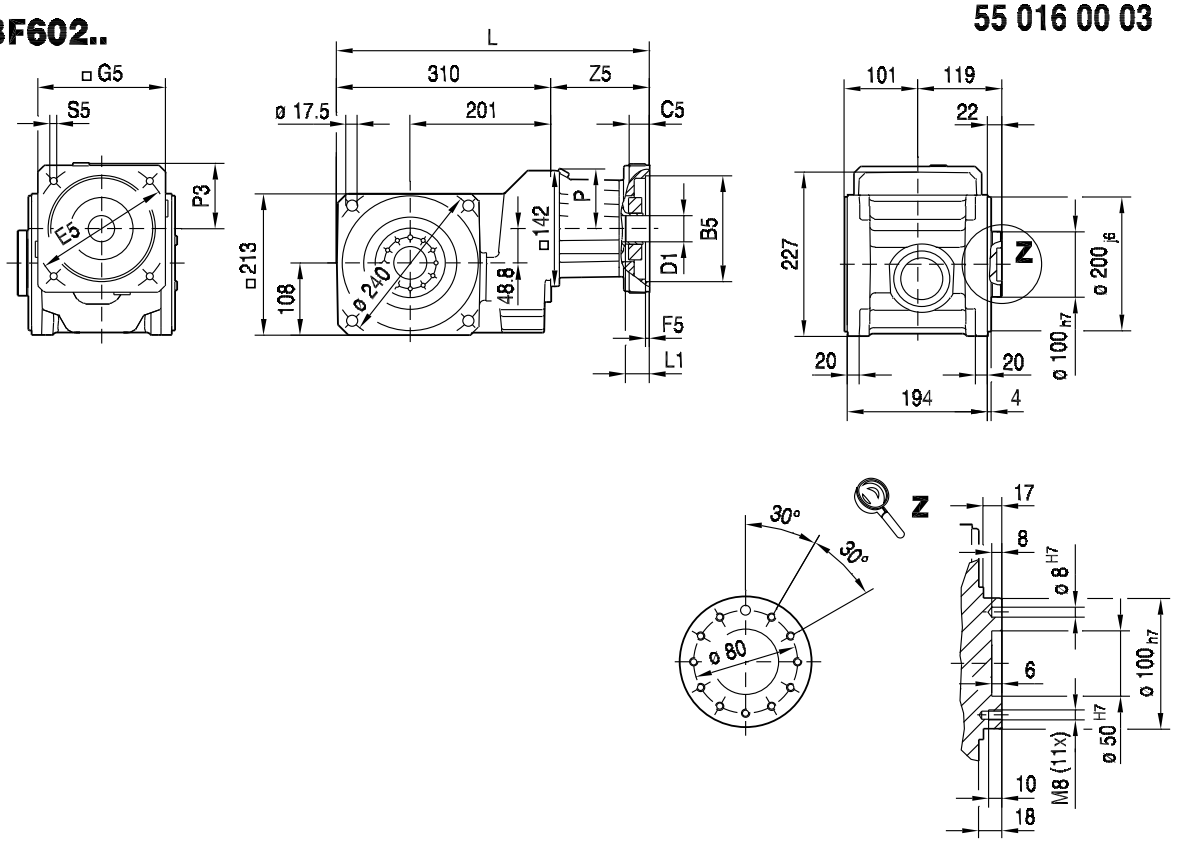

(→ 144)	L	B5	C5	E5	F5	G5	S5	Z5	L1	P	P3	D1 (→ 476)
EBH03/01/..	384	40	20	63	3.5	90	M4	74	42	72	47	8, 9, 10, 11, 12, 14
EBH03/03/..	384	50	20	60	3.5	90	M4	74	41	72	47	8, 9, 10, 11, 12, 14
EBH03/04/..	384	50	20	70	3.5	90	M5	74	41	72	47	8, 9, 10, 11, 12, 14
EBH03/05/..	384	50	20	80	3.5	90	M4	74	41	72	47	8, 9, 10, 11, 12, 14
EBH03/06/..	384	50	20	95	3.5	90	M6	74	41	72	47	8, 9, 10, 11, 12, 14
EBH03/07/..	384	50	20	100	3.5	90	M6	74	41	72	47	8, 9, 10, 11, 12, 14
EBH03/08/..	384	60	20	75	3.5	90	M5	74	41	72	47	8, 9, 10, 11, 12, 14
EBH03/09/..	384	60	20	90	3.5	90	M5	74	41	72	47	8, 9, 10, 11, 12, 14
EBH03/10/..	384	70	20	85	3.5	90	M6	74	41	72	47	8, 9, 10, 11, 12, 14
EBH03/11/..	384	70	20	90	3.5	90	M5	74	41	72	47	8, 9, 10, 11, 12, 14
EBH03/13/..	384	80	20	100	3.5	90	M6	74	41	72	47	8, 9, 10, 11, 12, 14
EBH03/14/..	384	95	16	115	4	105	M8	74	41	72	55	8, 9, 10, 11, 12, 14
EBH04/12/..	384	70	20	90	3.5	90	M6	74	41	72	47	11 ,12 ,14, 16, 19
EBH04/13/..	384	80	20	100	3.5	90	M6	74	41	72	47	11 ,12 ,14, 16, 19
EBH04/14/..	384	95	16	115	4	105	M8	74	41	72	55	11 ,12 ,14, 16, 19
EBH04/15/..	384	95	16	130	4	115	M8	74	41	72	60	11 ,12 ,14, 16, 19
EBH05/14/..	411	95	16	115	4	120	M8	101	56	72	62	14, 16, 17, 18, 19, 24
EBH05/15/..	411	95	16	130	4	120	M8	101	56	72	62	14, 16, 17, 18, 19, 24
EBH05/16/..	411	110	16	130	5	120	M8	101	56	72	62	14, 16, 17, 18, 19, 24
EBH05/17/..	411	110	16	145	7	120	M8	101	56	72	62	14, 16, 17, 18, 19, 24
EBH05/18/..	411	110	20	165	5	140	M10	101	56	72	72	14, 16, 17, 18, 19, 24
EBH05/20/..	411	130	20	165	5	140	M10	101	56	72	72	14, 16, 17, 18, 19, 24
EBH05/26/..	411	110	16	130	5	115	M8	101	56	72	61	14, 16, 17, 18, 19, 24
EBH06/19/..	450	114.3	24	200	5	174	M12	140	86	72	89	35
EBH07/20/..	430	130	24	165	5	155	M10	120	66	72	80	22, 24, 28, 32
EBH07/21/..	430	130	24	215	5	190	M12	120	66	72	97	22, 24, 28, 32
EBH07/22/..	430	180	24	215	5	190	M12	120	66	72	97	22, 24, 28, 32
EBH07/27/..	430	130	24	165	5	137	M10	120	66	72	72	22, 24, 28, 32
EBH07/28/..	430	155	24	190	5	162	M10	120	66	72	84	22, 24, 28, 32
EBH08/21/..	449	130	24	215	5	190	M12	139	82	72	97	32, 35, 38
EBH08/22/..	449	180	24	215	5	190	M12	139	82	72	97	32, 35, 38

BSHF602..

55 029 00 03

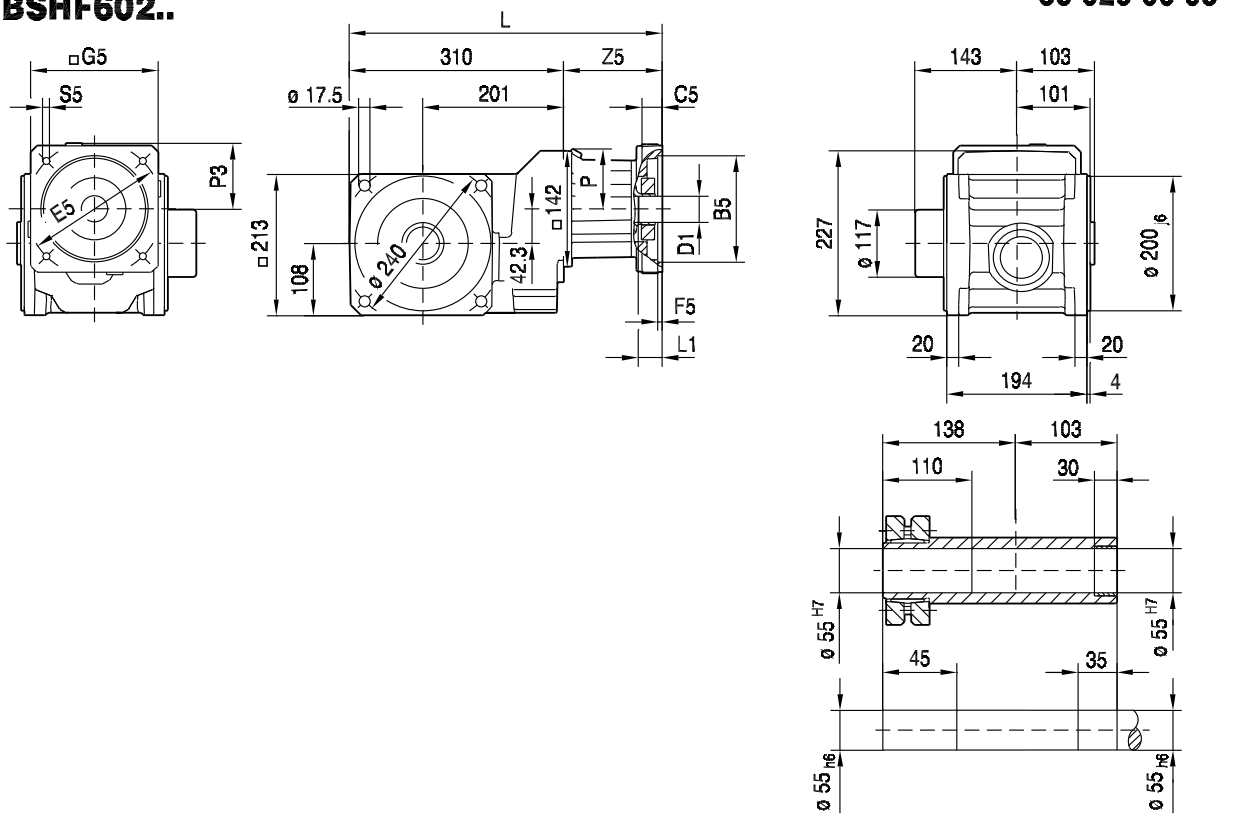

(→ 144)	L	B5	C5	E5	F5	G5	S5	Z5	L1	P	P3	D1 (→ 476)
EBH03/01/..	384	40	20	63	3.5	90	M4	74	42	72	47	8, 9, 10, 11, 12, 14
EBH03/03/..	384	50	20	60	3.5	90	M4	74	41	72	47	8, 9, 10, 11, 12, 14
EBH03/04/..	384	50	20	70	3.5	90	M5	74	41	72	47	8, 9, 10, 11, 12, 14
EBH03/05/..	384	50	20	80	3.5	90	M4	74	41	72	47	8, 9, 10, 11, 12, 14
EBH03/06/..	384	50	20	95	3.5	90	M6	74	41	72	47	8, 9, 10, 11, 12, 14
EBH03/07/..	384	50	20	100	3.5	90	M6	74	41	72	47	8, 9, 10, 11, 12, 14
EBH03/08/..	384	60	20	75	3.5	90	M5	74	41	72	47	8, 9, 10, 11, 12, 14
EBH03/09/..	384	60	20	90	3.5	90	M5	74	41	72	47	8, 9, 10, 11, 12, 14
EBH03/10/..	384	70	20	85	3.5	90	M6	74	41	72	47	8, 9, 10, 11, 12, 14
EBH03/11/..	384	70	20	90	3.5	90	M5	74	41	72	47	8, 9, 10, 11, 12, 14
EBH03/13/..	384	80	20	100	3.5	90	M6	74	41	72	47	8, 9, 10, 11, 12, 14
EBH03/14/..	384	95	16	115	4	105	M8	74	41	72	55	8, 9, 10, 11, 12, 14
EBH04/12/..	384	70	20	90	3.5	90	M6	74	41	72	47	11 ,12 ,14, 16, 19
EBH04/13/..	384	80	20	100	3.5	90	M6	74	41	72	47	11 ,12 ,14, 16, 19
EBH04/14/..	384	95	16	115	4	105	M8	74	41	72	55	11 ,12 ,14, 16, 19
EBH04/15/..	384	95	16	130	4	115	M8	74	41	72	60	11 ,12 ,14, 16, 19
EBH05/14/..	411	95	16	115	4	120	M8	101	56	72	62	14, 16, 17, 18, 19, 24
EBH05/15/..	411	95	16	130	4	120	M8	101	56	72	62	14, 16, 17, 18, 19, 24
EBH05/16/..	411	110	16	130	5	120	M8	101	56	72	62	14, 16, 17, 18, 19, 24
EBH05/17/..	411	110	16	145	7	120	M8	101	56	72	62	14, 16, 17, 18, 19, 24
EBH05/18/..	411	110	20	165	5	140	M10	101	56	72	72	14, 16, 17, 18, 19, 24
EBH05/20/..	411	130	20	165	5	140	M10	101	56	72	72	14, 16, 17, 18, 19, 24
EBH05/26/..	411	110	16	130	5	115	M8	101	56	72	61	14, 16, 17, 18, 19, 24
EBH06/19/..	450	114.3	24	200	5	174	M12	140	86	72	89	35
EBH07/20/..	430	130	24	165	5	155	M10	120	66	72	80	22, 24, 28, 32
EBH07/21/..	430	130	24	215	5	190	M12	120	66	72	97	22, 24, 28, 32
EBH07/22/..	430	180	24	215	5	190	M12	120	66	72	97	22, 24, 28, 32
EBH07/27/..	430	130	24	165	5	137	M10	120	66	72	72	22, 24, 28, 32
EBH07/28/..	430	155	24	190	5	162	M10	120	66	72	84	22, 24, 28, 32
EBH08/21/..	449	130	24	215	5	190	M12	139	82	72	97	32, 35, 38
EBH08/22/..	449	180	24	215	5	190	M12	139	82	72	97	32, 35, 38

BSHF602/I..

55 017 00 03

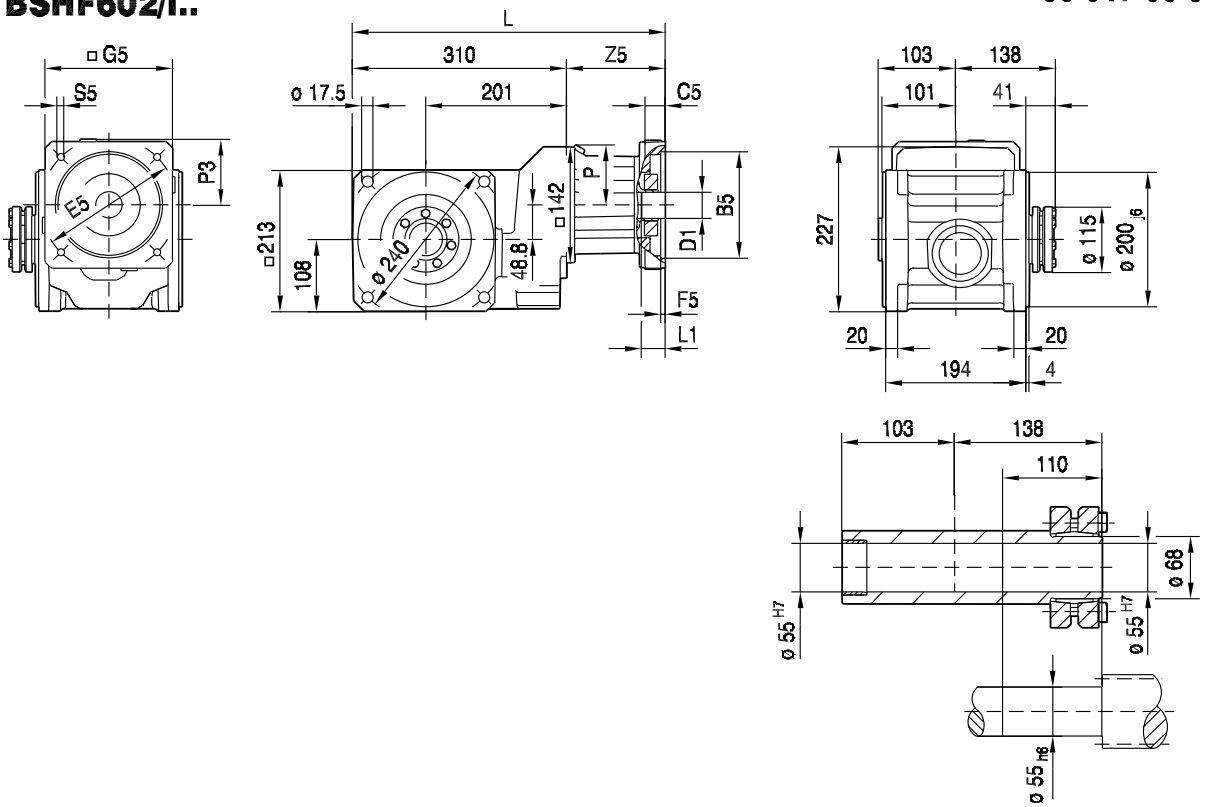

(→ 144)	L	B5	C5	E5	F5	G5	S5	Z5	L1	P	P3	D1 (→ 476)
EBH03/01/..	384	40	20	63	3.5	90	M4	74	42	72	47	8, 9, 10, 11, 12, 14
EBH03/03/..	384	50	20	60	3.5	90	M4	74	41	72	47	8, 9, 10, 11, 12, 14
EBH03/04/..	384	50	20	70	3.5	90	M5	74	41	72	47	8, 9, 10, 11, 12, 14
EBH03/05/..	384	50	20	80	3.5	90	M4	74	41	72	47	8, 9, 10, 11, 12, 14
EBH03/06/..	384	50	20	95	3.5	90	M6	74	41	72	47	8, 9, 10, 11, 12, 14
EBH03/07/..	384	50	20	100	3.5	90	M6	74	41	72	47	8, 9, 10, 11, 12, 14
EBH03/08/..	384	60	20	75	3.5	90	M5	74	41	72	47	8, 9, 10, 11, 12, 14
EBH03/09/..	384	60	20	90	3.5	90	M5	74	41	72	47	8, 9, 10, 11, 12, 14
EBH03/10/..	384	70	20	85	3.5	90	M6	74	41	72	47	8, 9, 10, 11, 12, 14
EBH03/11/..	384	70	20	90	3.5	90	M5	74	41	72	47	8, 9, 10, 11, 12, 14
EBH03/13/..	384	80	20	100	3.5	90	M6	74	41	72	47	8, 9, 10, 11, 12, 14
EBH03/14/..	384	95	16	115	4	105	M8	74	41	72	55	8, 9, 10, 11, 12, 14
EBH04/12/..	384	70	20	90	3.5	90	M6	74	41	72	47	11 ,12 ,14, 16, 19
EBH04/13/..	384	80	20	100	3.5	90	M6	74	41	72	47	11 ,12 ,14, 16, 19
EBH04/14/..	384	95	16	115	4	105	M8	74	41	72	55	11 ,12 ,14, 16, 19
EBH04/15/..	384	95	16	130	4	115	M8	74	41	72	60	11 ,12 ,14, 16, 19
EBH05/14/..	411	95	16	115	4	120	M8	101	56	72	62	14, 16, 17, 18, 19, 24
EBH05/15/..	411	95	16	130	4	120	M8	101	56	72	62	14, 16, 17, 18, 19, 24
EBH05/16/..	411	110	16	130	5	120	M8	101	56	72	62	14, 16, 17, 18, 19, 24
EBH05/17/..	411	110	16	145	7	120	M8	101	56	72	62	14, 16, 17, 18, 19, 24
EBH05/18/..	411	110	20	165	5	140	M10	101	56	72	72	14, 16, 17, 18, 19, 24
EBH05/20/..	411	130	20	165	5	140	M10	101	56	72	72	14, 16, 17, 18, 19, 24
EBH05/26/..	411	110	16	130	5	115	M8	101	56	72	61	14, 16, 17, 18, 19, 24
EBH06/19/..	450	114.3	24	200	5	174	M12	140	86	72	89	35
EBH07/20/..	430	130	24	165	5	155	M10	120	66	72	80	22, 24, 28, 32
EBH07/21/..	430	130	24	215	5	190	M12	120	66	72	97	22, 24, 28, 32
EBH07/22/..	430	180	24	215	5	190	M12	120	66	72	97	22, 24, 28, 32
EBH07/27/..	430	130	24	165	5	137	M10	120	66	72	72	22, 24, 28, 32
EBH07/28/..	430	155	24	190	5	162	M10	120	66	72	84	22, 24, 28, 32
EBH08/21/..	449	130	24	215	5	190	M12	139	82	72	97	32, 35, 38
EBH08/22/..	449	180	24	215	5	190	M12	139	82	72	97	32, 35, 38

55 013 00 07

BSAF602..

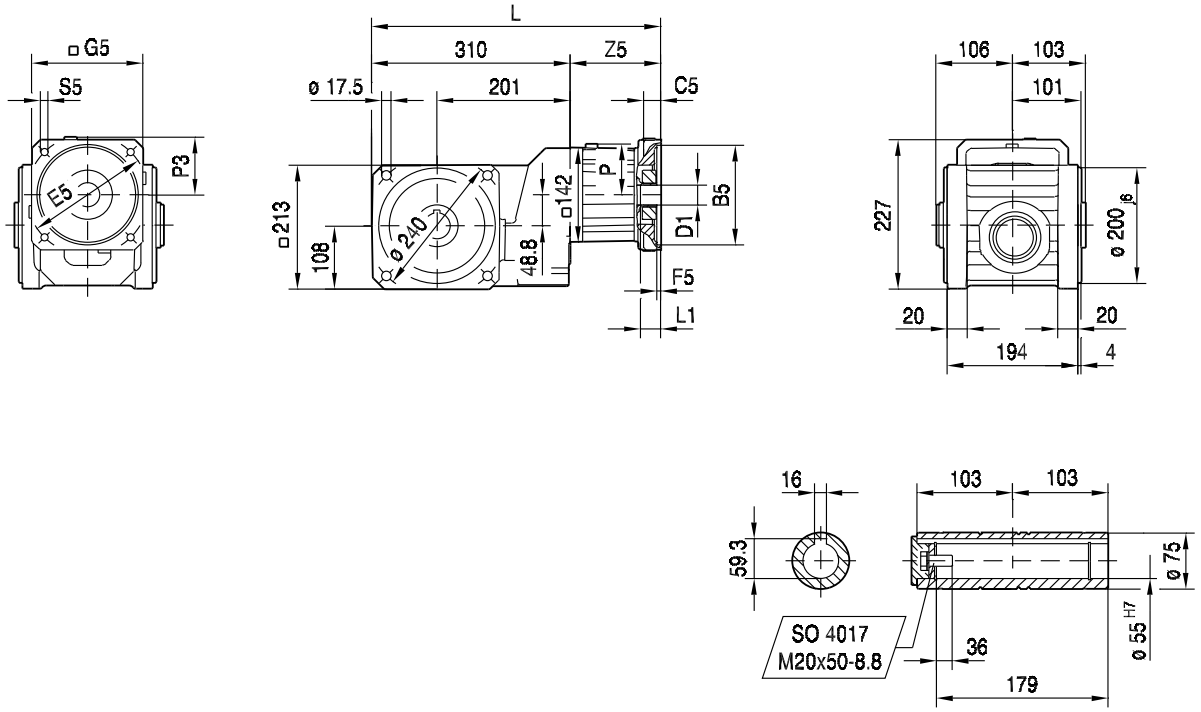

(→ 144)	L	B5	C5	E5	F5	G5	S5	Z5	L1	P	P3	D1 (→ 476)
EBH03/01/..	384	40	20	63	3.5	90	M4	74	42	72	47	8, 9, 10, 11, 12, 14
EBH03/03/..	384	50	20	60	3.5	90	M4	74	41	72	47	8, 9, 10, 11, 12, 14
EBH03/04/..	384	50	20	70	3.5	90	M5	74	41	72	47	8, 9, 10, 11, 12, 14
EBH03/05/..	384	50	20	80	3.5	90	M4	74	41	72	47	8, 9, 10, 11, 12, 14
EBH03/06/..	384	50	20	95	3.5	90	M6	74	41	72	47	8, 9, 10, 11, 12, 14
EBH03/07/..	384	50	20	100	3.5	90	M6	74	41	72	47	8, 9, 10, 11, 12, 14
EBH03/08/..	384	60	20	75	3.5	90	M5	74	41	72	47	8, 9, 10, 11, 12, 14
EBH03/09/..	384	60	20	90	3.5	90	M5	74	41	72	47	8, 9, 10, 11, 12, 14
EBH03/10/..	384	70	20	85	3.5	90	M6	74	41	72	47	8, 9, 10, 11, 12, 14
EBH03/11/..	384	70	20	90	3.5	90	M5	74	41	72	47	8, 9, 10, 11, 12, 14
EBH03/13/..	384	80	20	100	3.5	90	M6	74	41	72	47	8, 9, 10, 11, 12, 14
EBH03/14/..	384	95	16	115	4	105	M8	74	41	72	55	8, 9, 10, 11, 12, 14
EBH04/12/..	384	70	20	90	3.5	90	M6	74	41	72	47	11 ,12 ,14, 16, 19
EBH04/13/..	384	80	20	100	3.5	90	M6	74	41	72	47	11 ,12 ,14, 16, 19
EBH04/14/..	384	95	16	115	4	105	M8	74	41	72	55	11 ,12 ,14, 16, 19
EBH04/15/..	384	95	16	130	4	115	M8	74	41	72	60	11 ,12 ,14, 16, 19
EBH05/14/..	411	95	16	115	4	120	M8	101	56	72	62	14, 16, 17, 18, 19, 24
EBH05/15/..	411	95	16	130	4	120	M8	101	56	72	62	14, 16, 17, 18, 19, 24
EBH05/16/..	411	110	16	130	5	120	M8	101	56	72	62	14, 16, 17, 18, 19, 24
EBH05/17/..	411	110	16	145	7	120	M8	101	56	72	62	14, 16, 17, 18, 19, 24
EBH05/18/..	411	110	20	165	5	140	M10	101	56	72	72	14, 16, 17, 18, 19, 24
EBH05/20/..	411	130	20	165	5	140	M10	101	56	72	72	14, 16, 17, 18, 19, 24
EBH05/26/..	411	110	16	130	5	115	M8	101	56	72	61	14, 16, 17, 18, 19, 24
EBH06/19/..	450	114.3	24	200	5	174	M12	140	86	72	89	35
EBH07/20/..	430	130	24	165	5	155	M10	120	66	72	80	22, 24, 28, 32
EBH07/21/..	430	130	24	215	5	190	M12	120	66	72	97	22, 24, 28, 32
EBH07/22/..	430	180	24	215	5	190	M12	120	66	72	97	22, 24, 28, 32
EBH07/27/..	430	130	24	165	5	137	M10	120	66	72	72	22, 24, 28, 32
EBH07/28/..	430	155	24	190	5	162	M10	120	66	72	84	22, 24, 28, 32
EBH08/21/..	449	130	24	215	5	190	M12	139	82	72	97	32, 35, 38
EBH08/22/..	449	180	24	215	5	190	M12	139	82	72	97	32, 35, 38

13.2.11 BS..802 EBH.. [Nm]

[Nm]		EBH M_{amax} | M_{apk} | $M_{aNotaus}$																	
	i	05			06			07			08			09			10		
BSF802 2	4.00										540	820	1230	920	1370	2050	920	1370	2050
	6.00	320	400	600	475	740	1110	475	740	1110	660	990	1480	1120	1650	2480	1120	1680	2520
	8.00	345	530	800	515	775	1160	515	775	1160	710	1070	1600	1190	1720	2580	1190	1720	2580
	10.00										1220	1680	2520	1220	1680	2520	1220	1680	2520
	12.00	390	585	870	580	870	1300	580	870	1300	800	1160	1740						
	15.00	775	970	1460	1150	1680	2520	1150	1680	2520	1220	1680	2520	1220	1680	2520	1220	1680	2520
	20.00	830	1300	1950	1220	1680	2520	1220	1680	2520	1220	1680	2520	1220	1680	2520	1220	1680	2520
	25.00	910	1630	2440	1220	1680	2520	1220	1680	2520	1220	1680	2520						
	30.00	950	1430	2140	1220	1680	2520	1220	1680	2520	1220	1680	2520						
	35.00	960	1440	2160	1220	1680	2520	1220	1680	2520	1220	1680	2520						
	40.00	990	1490	2230	1220	1680	2520	1220	1680	2520	1220	1680	2520						

m [kg]		EBH					
	s	05	06	07	08	09	10
BSF802	2	77	80	80	84	94	96
BSBF: + 1.1 kg / BSHF: + -3.5 kg							

EBH05							c_T			F_{Ramax}			F_{Rapk}		
n_e = 1500	i	M_{amax} [Nm]	M_{apk} [Nm]	$M_{aNotaus}$ [Nm]	n_{ak} [1/min]	J_{GA} 10^{-4} [kgm^2]	BSF [Nm/']	BSBF [Nm/']	BSHF [Nm/']	BSF [N]	BSBF [N]	BSHF [N]	BSF [N]	BSBF [N]	BSHF [N]
BSF802 2	6.00	320	400	600	1167	39	66	70	69	36000	36000	36000	36000	36000	36000
	8.00	345	530	800	875	26	75	81	80	36000	36000	36000	36000	36000	36000
	12.00	390	585	870	583	16	91	99	97	36000	36000	36000	36000	36000	36000
	15.00	775	970	1460	467	23	142	163	150	36000	36000	36000	36000	36000	36000
	20.00	830	1300	1950	350	17	149	172	157	36000	36000	36000	36000	36000	36000
	25.00	910	1630	2440	280	14	156	182	166	36000	36000	36000	36000	36000	36000
	30.00	950	1430	2140	50	12	159	186	169	36000	36000	36000	36000	36000	36000
	35.00	960	1440	2160	43	10	158	184	168	36000	36000	36000	36000	36000	36000
	40.00	990	1490	2230	38	9.2	160	187	170	36000	36000	36000	36000	36000	36000

EBH06							c_T			F_{Ramax}			F_{Rapk}		
n_e = 1500	i	M_{amax} [Nm]	M_{apk} [Nm]	$M_{aNotaus}$ [Nm]	n_{ak} [1/min]	J_{GA} 10^{-4} [kgm^2]	BSF [Nm/']	BSBF [Nm/']	BSHF [Nm/']	BSF [N]	BSBF [N]	BSHF [N]	BSF [N]	BSBF [N]	BSHF [N]
BSF802 2	6.00	475	740	1110	1167	43	74	80	79	36000	36000	36000	36000	36000	36000
	8.00	515	775	1160	188	30	83	90	89	36000	36000	36000	36000	36000	36000
	12.00	580	870	1300	583	20	99	108	106	36000	36000	36000	36000	36000	36000
	15.00	1150	1680	2520	227	27	149	172	158	36000	36000	36000	36000	36000	36000
	20.00	1220	1680	2520	80	21	154	180	164	36000	36000	36000	36000	36000	36000
	25.00	1220	1680	2520	84	18	161	189	172	36000	36000	36000	36000	36000	36000
	30.00	1220	1680	2520	77	16	164	193	174	36000	36000	36000	36000	36000	36000
	35.00	1220	1680	2520	69	14	162	190	172	36000	36000	36000	36000	36000	36000
	40.00	1220	1680	2520	65	13	163	192	174	36000	36000	36000	36000	36000	36000

EBH07							c_T			F_{Ramax}			F_{Rapk}		
n_e = 1500	i	M_{amax} [Nm]	M_{apk} [Nm]	$M_{aNotaus}$ [Nm]	n_{ak} [1/min]	J_{GA} 10^{-4} [kgm^2]	BSF [Nm/']	BSBF [Nm/']	BSHF [Nm/']	BSF [N]	BSBF [N]	BSHF [N]	BSF [N]	BSBF [N]	BSHF [N]
BSF802 2	6.00	475	740	1110	1167	43	74	80	79	36000	36000	36000	36000	36000	36000
	8.00	515	775	1160	188	30	83	90	89	36000	36000	36000	36000	36000	36000
	12.00	580	870	1300	583	20	99	108	106	36000	36000	36000	36000	36000	36000
	15.00	1150	1680	2520	227	27	149	172	158	36000	36000	36000	36000	36000	36000
	20.00	1220	1680	2520	80	21	154	180	164	36000	36000	36000	36000	36000	36000
	25.00	1220	1680	2520	84	18	161	189	172	36000	36000	36000	36000	36000	36000
	30.00	1220	1680	2520	77	16	164	193	174	36000	36000	36000	36000	36000	36000
	35.00	1220	1680	2520	69	14	162	190	172	36000	36000	36000	36000	36000	36000
	40.00	1220	1680	2520	65	13	163	192	174	36000	36000	36000	36000	36000	36000

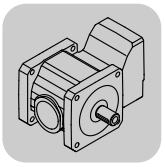

EBH08							c_T			F_{Ramax}			F_{Rapk}		
n_e = 1500	i	M_{amax} [Nm]	M_{apk} [Nm]	$M_{aNotaus}$ [Nm]	n_{ak} [1/min]	J_{GA} 10^{-4} [kgm^2]	BSF [Nm/']	BSBF [Nm/']	BSHF [Nm/']	BSF [N]	BSBF [N]	BSHF [N]	BSF [N]	BSBF [N]	BSHF [N]
BSF802 2	4.00	540	820	1230	1750	88	69	73	72	32000	36000	31900	36000	36000	36000
	6.00	660	990	1480	250	53	88	96	94	36000	36000	35900	36000	36000	36000
	8.00	710	1070	1600	188	40	93	101	99	36000	36000	36000	36000	36000	36000
	10.00	1220	1680	2520	190	51	144	166	153	36000	36000	36000	36000	36000	36000
	12.00	800	1160	1740	583	29	107	119	117	36000	36000	36000	36000	36000	36000
	15.00	1220	1680	2520	187	36	158	185	168	36000	36000	36000	36000	36000	36000
	20.00	1220	1680	2520	190	30	161	188	171	36000	36000	36000	36000	36000	36000
	25.00	1220	1680	2520	180	27	168	198	179	36000	36000	36000	36000	36000	36000
	30.00	1220	1680	2520	180	25	169	199	180	36000	36000	36000	36000	36000	36000
	35.00	1220	1680	2520	174	24	166	196	177	36000	36000	36000	36000	36000	36000
	40.00	1220	1680	2520	168	23	168	198	179	36000	36000	36000	36000	36000	36000

EBH09							c_T			F_{Ramax}			F_{Rapk}		
n_e = 1500	i	M_{amax} [Nm]	M_{apk} [Nm]	$M_{aNotaus}$ [Nm]	n_{ak} [1/min]	J_{GA} 10^{-4} [kgm^2]	BSF [Nm/']	BSBF [Nm/']	BSHF [Nm/']	BSF [N]	BSBF [N]	BSHF [N]	BSF [N]	BSBF [N]	BSHF [N]
BSF802 2	4.00	920	1370	2050	1025	127	76	82	80	30700	36000	30600	36000	36000	36000
	6.00	1120	1650	2480	483	92	92	101	99	34400	36000	34300	36000	36000	36000
	8.00	1190	1720	2580	425	79	96	106	104	36000	36000	36000	36000	36000	36000
	10.00	1220	1680	2520	190	90	148	171	157	36000	36000	36000	36000	36000	36000
	15.00	1220	1680	2520	187	76	159	186	169	36000	36000	36000	36000	36000	36000
	20.00	1220	1680	2520	190	70	161	189	171	36000	36000	36000	36000	36000	36000

EBH10							c_T			F_{Ramax}			F_{Rapk}		
n_e = 1500	i	M_{amax} [Nm]	M_{apk} [Nm]	$M_{aNotaus}$ [Nm]	n_{ak} [1/min]	J_{GA} 10^{-4} [kgm^2]	BSF [Nm/']	BSBF [Nm/']	BSHF [Nm/']	BSF [N]	BSBF [N]	BSHF [N]	BSF [N]	BSBF [N]	BSHF [N]
BSF802 2	4.00	920	1370	2050	1025	151	76	82	80	30700	36000	30600	36000	36000	36000
	6.00	1120	1680	2520	250	116	92	101	99	34400	36000	34300	36000	36000	36000
	8.00	1190	1720	2580	425	103	96	106	104	36000	36000	36000	36000	36000	36000
	10.00	1220	1680	2520	190	114	148	171	157	36000	36000	36000	36000	36000	36000
	15.00	1220	1680	2520	187	99	159	186	169	36000	36000	36000	36000	36000	36000
	20.00	1220	1680	2520	190	93	161	189	171	36000	36000	36000	36000	36000	36000

EBH				M1			M2;M4			M3;M5-6			φ		
	i	n_{epk} [1/min]	η [%]	a_0	a_1	a_2	a_0	a_1	a_2	a_0	a_1	a_2	[']	/R [']	/M [']
BSF802 2	4.00	4500	94.1	36.53	-0.257	380872	85.55	-0.552	372271	94.47	-0.447	370986	6	3	-
	6.00	4500	94.2	38.78	-0.322	379127	97.23	-0.720	369115	110.3	-0.584	367673	6	3	-
	8.00	4500	94.3	40.01	-0.368	378029	104.5	-0.839	367166	120.4	-0.682	365688	6	3	-
	10.00	4500	91.2	-23.29	-0.920	247749	61.41	-2.162	238512	91.96	-1.769	237008	6	3	-
	12.00	4500	94.3	41.33	-0.427	376719	112.6	-0.993	364991	131.8	-0.808	363576	6	3	-
	15.00	4500	91.2	-23.52	-1.178	245862	79.26	-2.866	235221	119.0	-2.352	233398	6	3	-
	20.00	4500	91.2	-23.77	-1.359	244661	87.97	-3.354	233524	136.4	-2.767	231226	6	3	-
	25.00	4500	91.2	-24.68	-1.491	243925	94.41	-3.718	232349	148.6	-3.076	229783	6	3	-
	30.00	4500	91.3	-25.17	-1.592	243363	99.42	-3.997	231420	158.0	-3.315	228644	6	3	-
	35.00	4500	91.3	-25.61	-1.671	242945	102.3	-4.214	230843	165.1	-3.503	227831	6	3	-
	40.00	4500	91.4	-26.02	-1.735	242626	107.0	-4.402	230135	170.8	-3.656	227184	6	3	-

13.2.12 BS..802 EBH.. [mm]

BSF802..

55 018 00 03

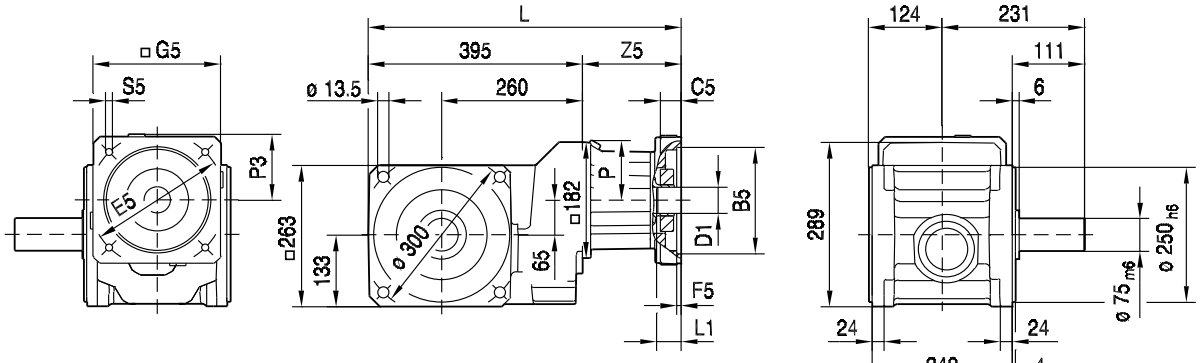

BSKF

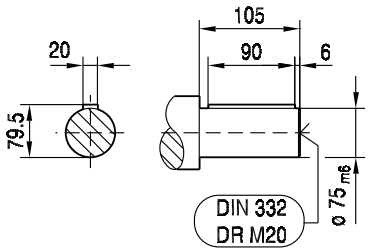

BSF

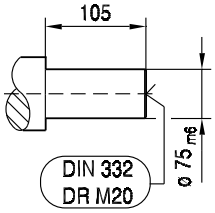

(→ 144)	L	B5	C5	E5	F5	G5	S5	Z5	L1	P	P3	D1 (→ 476)
EBH05/14/..	492	95	16	115	4	120	M8	97	56	92	62	14, 16, 17, 18, 19, 24
EBH05/15/..	492	95	16	130	4	120	M8	97	56	92	62	14, 16, 17, 18, 19, 24
EBH05/16/..	492	110	16	130	5	120	M8	97	56	92	62	14, 16, 17, 18, 19, 24
EBH05/17/..	492	110	16	145	7	120	M8	97	56	92	62	14, 16, 17, 18, 19, 24
EBH05/18/..	492	110	20	165	5	140	M10	97	56	92	72	14, 16, 17, 18, 19, 24
EBH05/20/..	492	130	20	165	5	140	M10	97	56	92	72	14, 16, 17, 18, 19, 24
EBH05/26/..	492	110	16	130	5	115	M8	97	56	92	61	14, 16, 17, 18, 19, 24
EBH06/19/..	531	114.3	24	200	5	174	M12	136	86	92	89	35
EBH07/20/..	511	130	24	165	5	155	M10	116	66	92	80	22, 24, 28, 32
EBH07/21/..	511	130	24	215	5	190	M12	116	66	92	97	22, 24, 28, 32
EBH07/22/..	511	180	24	215	5	190	M12	116	66	92	97	22, 24, 28, 32
EBH07/27/..	511	130	24	165	5	137	M10	116	66	92	72	22, 24, 28, 32
EBH07/28/..	511	155	24	190	5	162	M10	116	66	92	84	22, 24, 28, 32
EBH08/21/..	530	130	24	215	5	190	M12	135	82	92	97	32, 35, 38
EBH08/22/..	530	180	24	215	5	190	M12	135	82	92	97	32, 35, 38
EBH09/22/..	556	180	23	215	6	190	M12	161	86	92	97	32, 35, 38, 42
EBH09/23/..	586	230	30	265	5	240	M12	191	116	92	122	32, 35, 38, 42
EBH09/24/..	586	250	30	300	6	260	M16	191	116	92	132	32, 35, 38, 42
EBH09/25/..	586	300	30	350	6	310	M16	191	115	92	132	32, 35, 38, 42
EBH10/22/..	586	180	30	215	6	190	M12	191	85	92	132	48, 55
EBH10/23/..	586	230	30	265	6	240	M12	191	115	92	132	48, 55
EBH10/24/..	586	250	30	300	6	260	M16	191	116	92	132	48, 55
EBH10/25/..	586	300	30	350	6	310	M16	191	116	92	157	48, 55

BSBF802..

55 019 00 03

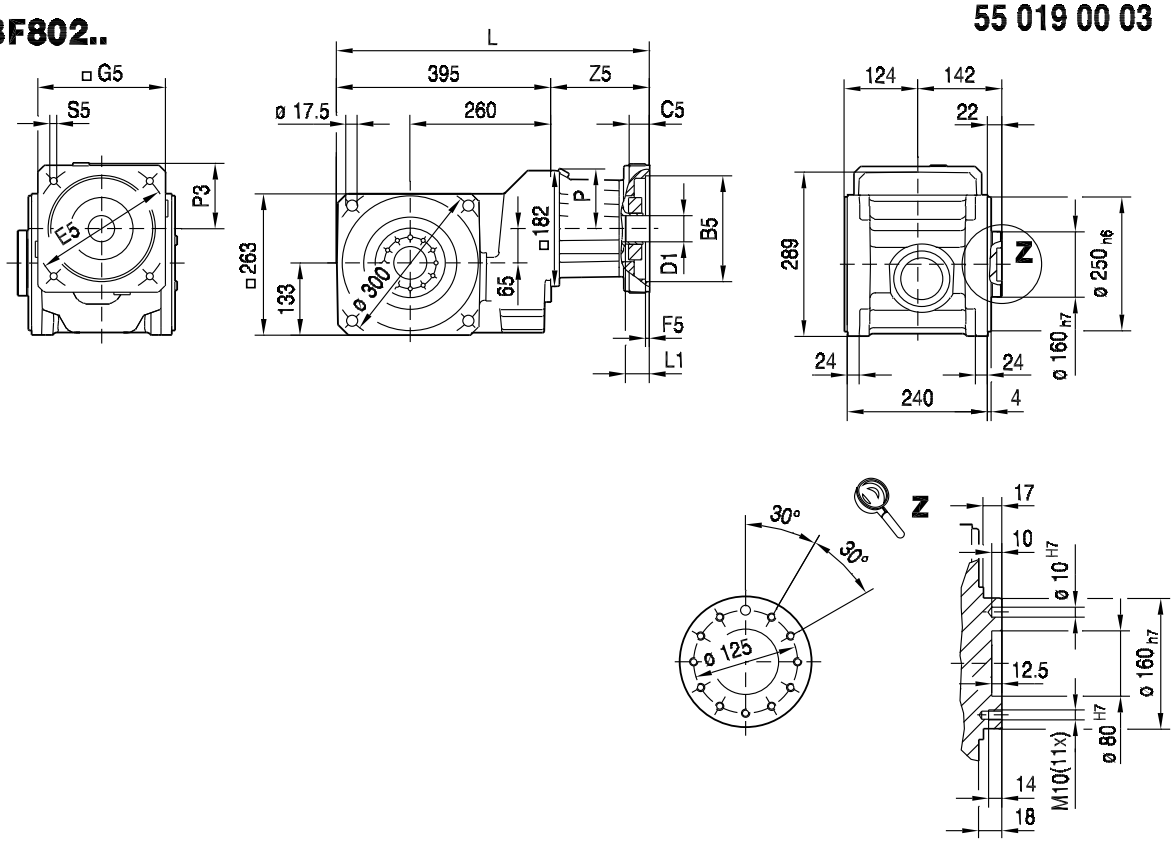

(→ 144)	L	B5	C5	E5	F5	G5	S5	Z5	L1	P	P3	D1 (→ 476)
EBH05/14/..	492	95	16	115	4	120	M8	97	56	92	62	14, 16, 17, 18, 19, 24
EBH05/15/..	492	95	16	130	4	120	M8	97	56	92	62	14, 16, 17, 18, 19, 24
EBH05/16/..	492	110	16	130	5	120	M8	97	56	92	62	14, 16, 17, 18, 19, 24
EBH05/17/..	492	110	16	145	7	120	M8	97	56	92	62	14, 16, 17, 18, 19, 24
EBH05/18/..	492	110	20	165	5	140	M10	97	56	92	72	14, 16, 17, 18, 19, 24
EBH05/20/..	492	130	20	165	5	140	M10	97	56	92	72	14, 16, 17, 18, 19, 24
EBH05/26/..	492	110	16	130	5	115	M8	97	56	92	61	14, 16, 17, 18, 19, 24
EBH06/19/..	531	114.3	24	200	5	174	M12	136	86	92	89	35
EBH07/20/..	511	130	24	165	5	155	M10	116	66	92	80	22, 24, 28, 32
EBH07/21/..	511	130	24	215	5	190	M12	116	66	92	97	22, 24, 28, 32
EBH07/22/..	511	180	24	215	5	190	M12	116	66	92	97	22, 24, 28, 32
EBH07/27/..	511	130	24	165	5	137	M10	116	66	92	72	22, 24, 28, 32
EBH07/28/..	511	155	24	190	5	162	M10	116	66	92	84	22, 24, 28, 32
EBH08/21/..	530	130	24	215	5	190	M12	135	82	92	97	32, 35, 38
EBH08/22/..	530	180	24	215	5	190	M12	135	82	92	97	32, 35, 38
EBH09/22/..	556	180	23	215	6	190	M12	161	86	92	97	32, 35, 38, 42
EBH09/23/..	586	230	30	265	5	240	M12	191	116	92	122	32, 35, 38, 42
EBH09/24/..	586	250	30	300	6	260	M16	191	116	92	132	32, 35, 38, 42
EBH09/25/..	586	300	30	350	6	310	M16	191	115	92	132	32, 35, 38, 42
EBH10/22/..	586	180	30	215	6	190	M12	191	85	92	132	48, 55
EBH10/23/..	586	230	30	265	6	240	M12	191	115	92	132	48, 55
EBH10/24/..	586	250	30	300	6	260	M16	191	116	92	132	48, 55
EBH10/25/..	586	300	30	350	6	310	M16	191	116	92	157	48, 55

BSHF802..

55 031 00 03

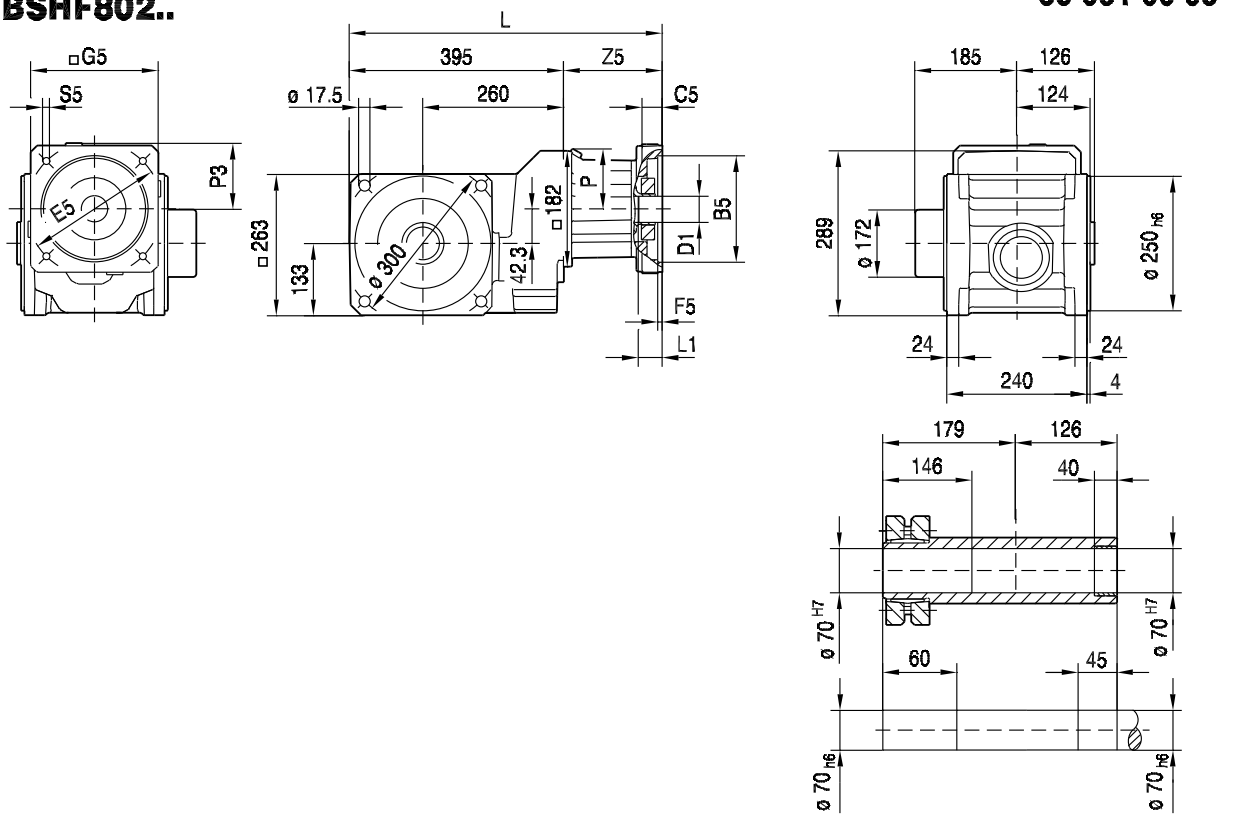

(→ 144)	L	B5	C5	E5	F5	G5	S5	Z5	L1	P	P3	D1 (→ 476)
EBH05/14/..	492	95	16	115	4	120	M8	97	56	92	62	14, 16, 17, 18, 19, 24
EBH05/15/..	492	95	16	130	4	120	M8	97	56	92	62	14, 16, 17, 18, 19, 24
EBH05/16/..	492	110	16	130	5	120	M8	97	56	92	62	14, 16, 17, 18, 19, 24
EBH05/17/..	492	110	16	145	7	120	M8	97	56	92	62	14, 16, 17, 18, 19, 24
EBH05/18/..	492	110	20	165	5	140	M10	97	56	92	72	14, 16, 17, 18, 19, 24
EBH05/20/..	492	130	20	165	5	140	M10	97	56	92	72	14, 16, 17, 18, 19, 24
EBH05/26/..	492	110	16	130	5	115	M8	97	56	92	61	14, 16, 17, 18, 19, 24
EBH06/19/..	531	114.3	24	200	5	174	M12	136	86	92	89	35
EBH07/20/..	511	130	24	165	5	155	M10	116	66	92	80	22, 24, 28, 32
EBH07/21/..	511	130	24	215	5	190	M12	116	66	92	97	22, 24, 28, 32
EBH07/22/..	511	180	24	215	5	190	M12	116	66	92	97	22, 24, 28, 32
EBH07/27/..	511	130	24	165	5	137	M10	116	66	92	72	22, 24, 28, 32
EBH07/28/..	511	155	24	190	5	162	M10	116	66	92	84	22, 24, 28, 32
EBH08/21/..	530	130	24	215	5	190	M12	135	82	92	97	32, 35, 38
EBH08/22/..	530	180	24	215	5	190	M12	135	82	92	97	32, 35, 38
EBH09/22/..	556	180	23	215	6	190	M12	161	86	92	97	32, 35, 38, 42
EBH09/23/..	586	230	30	265	5	240	M12	191	116	92	122	32, 35, 38, 42
EBH09/24/..	586	250	30	300	6	260	M16	191	116	92	132	32, 35, 38, 42
EBH09/25/..	586	300	30	350	6	310	M16	191	115	92	132	32, 35, 38, 42
EBH10/22/..	586	180	30	215	6	190	M12	191	85	92	132	48, 55
EBH10/23/..	586	230	30	265	6	240	M12	191	115	92	132	48, 55
EBH10/24/..	586	250	30	300	6	260	M16	191	116	92	132	48, 55
EBH10/25/..	586	300	30	350	6	310	M16	191	116	92	157	48, 55

BSHF802/I..

55 020 00 03

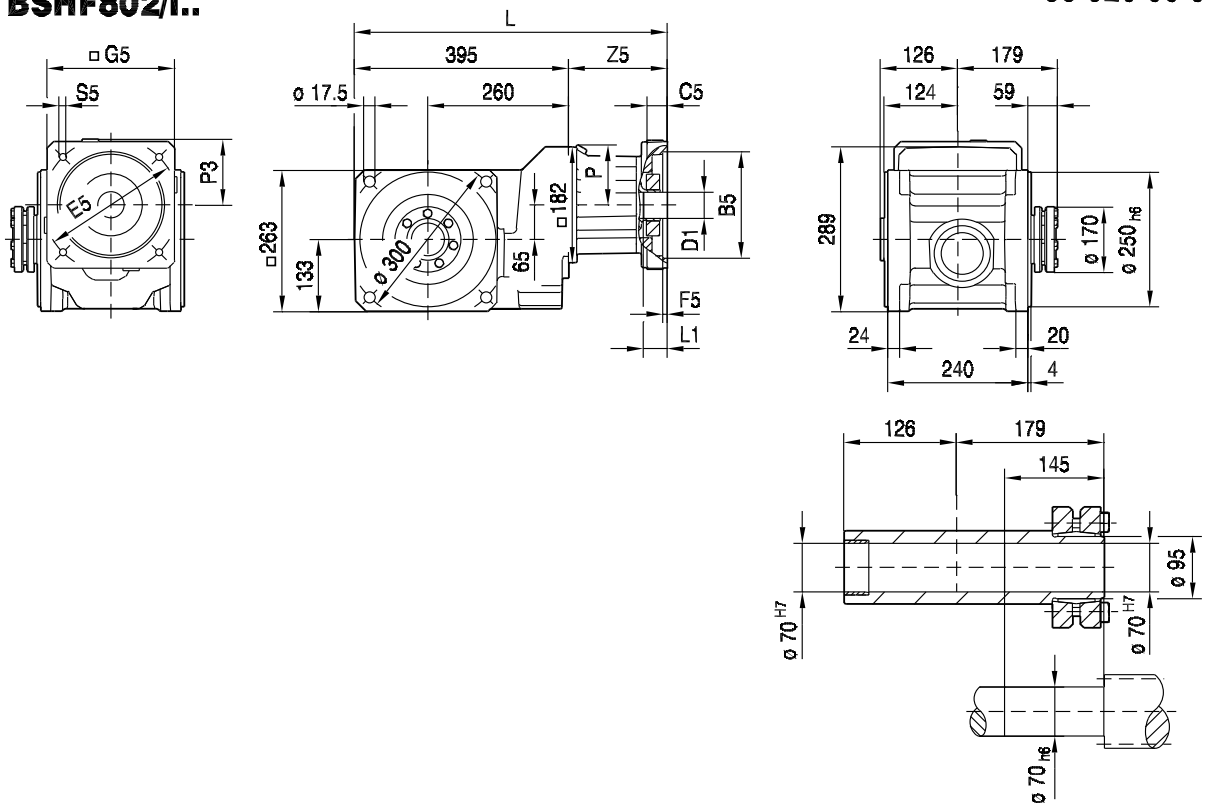

(→ 144)	L	B5	C5	E5	F5	G5	S5	Z5	L1	P	P3	D1 (→ 476)
EBH05/14/..	492	95	16	115	4	120	M8	97	56	92	62	14, 16, 17, 18, 19, 24
EBH05/15/..	492	95	16	130	4	120	M8	97	56	92	62	14, 16, 17, 18, 19, 24
EBH05/16/..	492	110	16	130	5	120	M8	97	56	92	62	14, 16, 17, 18, 19, 24
EBH05/17/..	492	110	16	145	7	120	M8	97	56	92	62	14, 16, 17, 18, 19, 24
EBH05/18/..	492	110	20	165	5	140	M10	97	56	92	72	14, 16, 17, 18, 19, 24
EBH05/20/..	492	130	20	165	5	140	M10	97	56	92	72	14, 16, 17, 18, 19, 24
EBH05/26/..	492	110	16	130	5	115	M8	97	56	92	61	14, 16, 17, 18, 19, 24
EBH06/19/..	531	114.3	24	200	5	174	M12	136	86	92	89	35
EBH07/20/..	511	130	24	165	5	155	M10	116	66	92	80	22, 24, 28, 32
EBH07/21/..	511	130	24	215	5	190	M12	116	66	92	97	22, 24, 28, 32
EBH07/22/..	511	180	24	215	5	190	M12	116	66	92	97	22, 24, 28, 32
EBH07/27/..	511	130	24	165	5	137	M10	116	66	92	72	22, 24, 28, 32
EBH07/28/..	511	155	24	190	5	162	M10	116	66	92	84	22, 24, 28, 32
EBH08/21/..	530	130	24	215	5	190	M12	135	82	92	97	32, 35, 38
EBH08/22/..	530	180	24	215	5	190	M12	135	82	92	97	32, 35, 38
EBH09/22/..	556	180	23	215	6	190	M12	161	86	92	97	32, 35, 38, 42
EBH09/23/..	586	230	30	265	5	240	M12	191	116	92	122	32, 35, 38, 42
EBH09/24/..	586	250	30	300	6	260	M16	191	116	92	132	32, 35, 38, 42
EBH09/25/..	586	300	30	350	6	310	M16	191	115	92	132	32, 35, 38, 42
EBH10/22/..	586	180	30	215	6	190	M12	191	85	92	132	48, 55
EBH10/23/..	586	230	30	265	6	240	M12	191	115	92	132	48, 55
EBH10/24/..	586	250	30	300	6	260	M16	191	116	92	132	48, 55
EBH10/25/..	586	300	30	350	6	310	M16	191	116	92	157	48, 55

55 014 00 07

BSAF802..

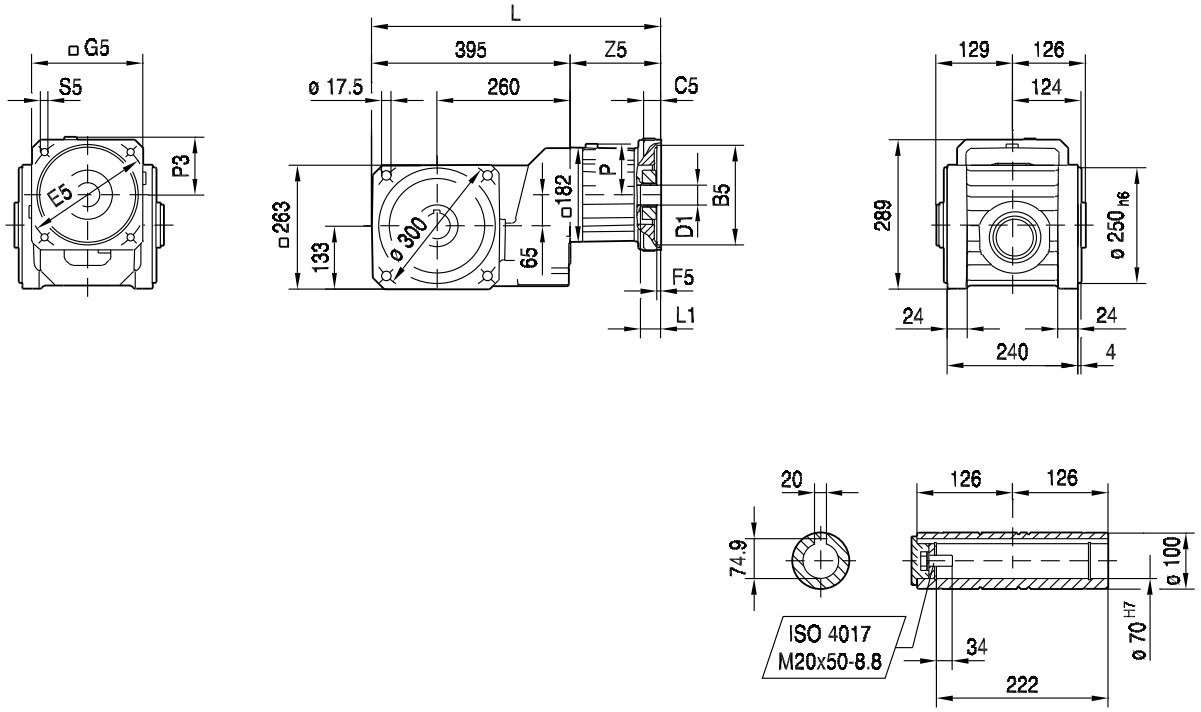

(→ 144)	L	B5	C5	E5	F5	G5	S5	Z5	L1	P	P3	D1 (→ 476)
EBH05/14/..	492	95	16	115	4	120	M8	97	56	92	62	14, 16, 17, 18, 19, 24
EBH05/15/..	492	95	16	130	4	120	M8	97	56	92	62	14, 16, 17, 18, 19, 24
EBH05/16/..	492	110	16	130	5	120	M8	97	56	92	62	14, 16, 17, 18, 19, 24
EBH05/17/..	492	110	16	145	7	120	M8	97	56	92	62	14, 16, 17, 18, 19, 24
EBH05/18/..	492	110	20	165	5	140	M10	97	56	92	72	14, 16, 17, 18, 19, 24
EBH05/20/..	492	130	20	165	5	140	M10	97	56	92	72	14, 16, 17, 18, 19, 24
EBH05/26/..	492	110	16	130	5	115	M8	97	56	92	61	14, 16, 17, 18, 19, 24
EBH06/19/..	531	114.3	24	200	5	174	M12	136	86	92	89	35
EBH07/20/..	511	130	24	165	5	155	M10	116	66	92	80	22, 24, 28, 32
EBH07/21/..	511	130	24	215	5	190	M12	116	66	92	97	22, 24, 28, 32
EBH07/22/..	511	180	24	215	5	190	M12	116	66	92	97	22, 24, 28, 32
EBH07/27/..	511	130	24	165	5	137	M10	116	66	92	72	22, 24, 28, 32
EBH07/28/..	511	155	24	190	5	162	M10	116	66	92	84	22, 24, 28, 32
EBH08/21/..	530	130	24	215	5	190	M12	135	82	92	97	32, 35, 38
EBH08/22/..	530	180	24	215	5	190	M12	135	82	92	97	32, 35, 38
EBH09/22/..	556	180	23	215	6	190	M12	161	86	92	97	32, 35, 38, 42
EBH09/23/..	586	230	30	265	5	240	M12	191	116	92	122	32, 35, 38, 42
EBH09/24/..	586	250	30	300	6	260	M16	191	116	92	132	32, 35, 38, 42
EBH09/25/..	586	300	30	350	6	310	M16	191	115	92	132	32, 35, 38, 42
EBH10/22/..	586	180	30	215	6	190	M12	191	85	92	132	48, 55
EBH10/23/..	586	230	30	265	6	240	M12	191	115	92	132	48, 55
EBH10/24/..	586	250	30	300	6	260	M16	191	116	92	132	48, 55
EBH10/25/..	586	300	30	350	6	310	M16	191	116	92	157	48, 55

13.2.13 BS.F..B EBH.. [mm]

BS..B

55 037 00 03

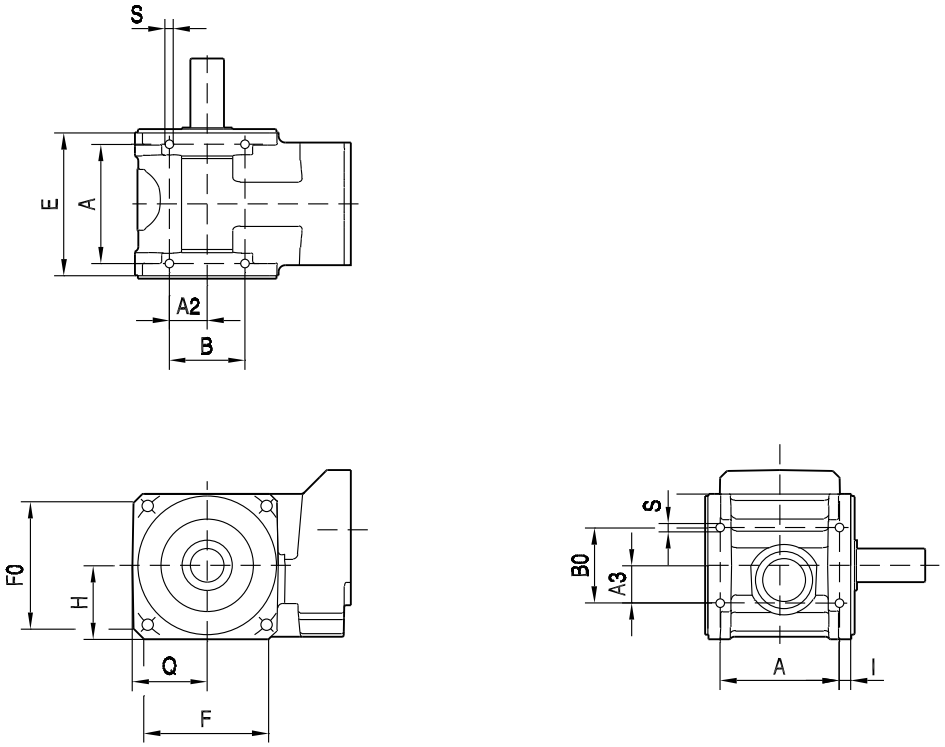

(→ 144)	E	A	S	A2	B	F	H	Q	F0	B0	A3	I
BSF..202B	111	96	M8x14	30	60	80	$47_{-0.3}$	$47_{-0.3}$	78	60	30	7.5
BSF..302B	123	105	M10x18	37.5	75	101	$58.5_{-0.3}$	$58.5_{-0.3}$	98.5	75	37.5	9
BSF..402B	145	120	M12x22	46.5	93	127	$72_{-0.3}$	$72_{-0.3}$	125	93	46.5	12.5
BSF..502B	170	142	M12x16	45	90	151	$86_{-0.5}$	$86_{-0.5}$	151	90	45	14
BSF..602B	194	160	M16x20	50	100	182	$106_{-0.5}$	$106_{-0.5}$	183	100	50	17
BSF..802B	240	186	M20x25	65	130	239	$131_{-0.5}$	$131_{-0.5}$	237	130	65	27

13.2.14 BSHF../T EBH.. [mm]

BSHF../T

55 038 00 03

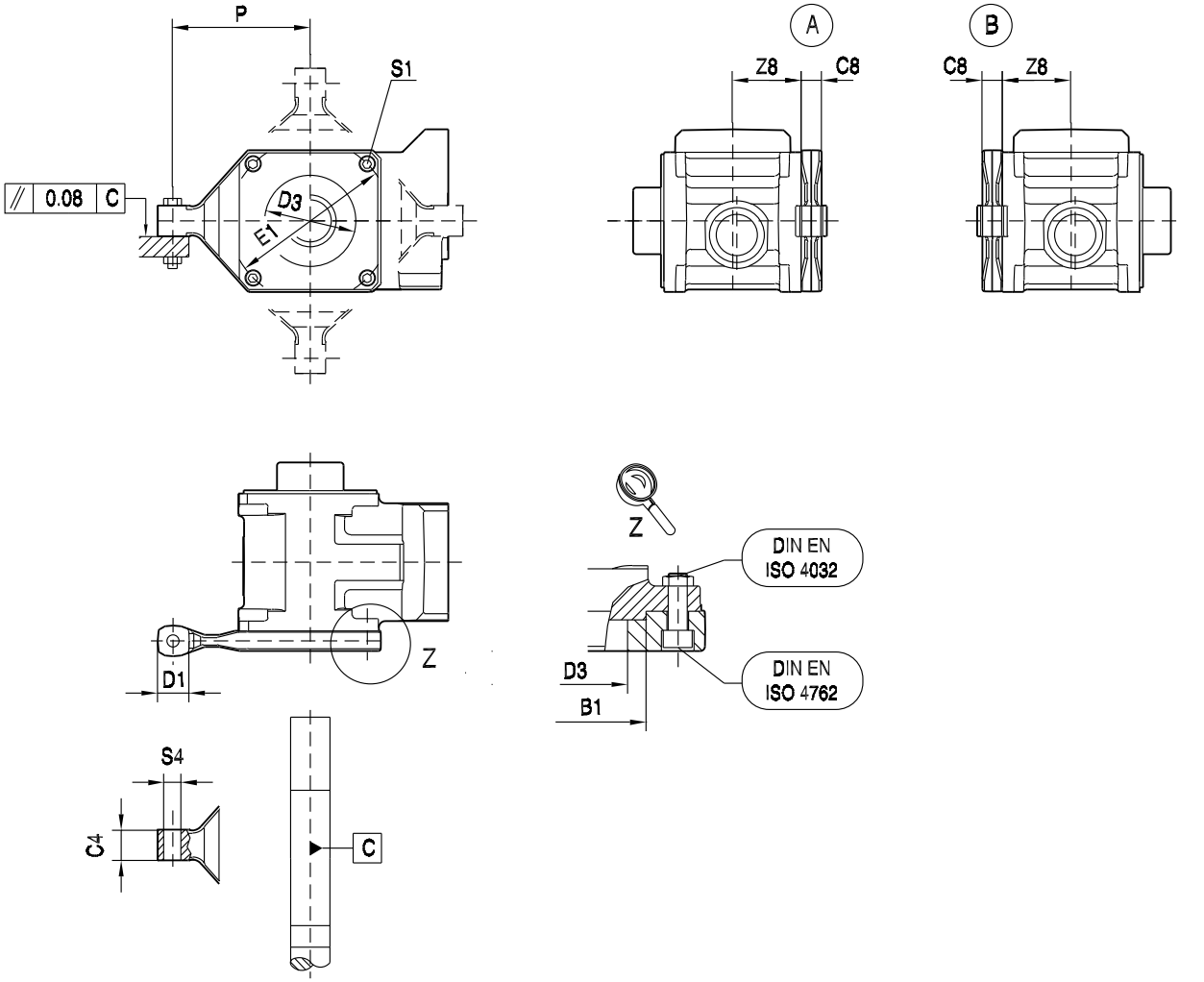

(→ 📖 144)	P	B1	E1	D3	Z8	C8	D1	S4	C4	S1							
BSHF202/T	110	90	109	75	55.5	18	34	14	20	M6x35							
BSHF302/T	140	110	135	90	61.5	20	38	14	24	M8x40							
BSHF402/T	158	140	168	115	72.5	22	38	14	28	M10x45							
BSHF502/T	170	165	200	140	85	25	38	14	38	M12x40							
BSHF602/T	198	200	240	140	97	35	58	22	50	M16x55							
BSHF802/T	278	250	300	195	120	34	58	22	70	M16x55							

13.2.15 BSBF EBH.. [mm]

55 035 02 03

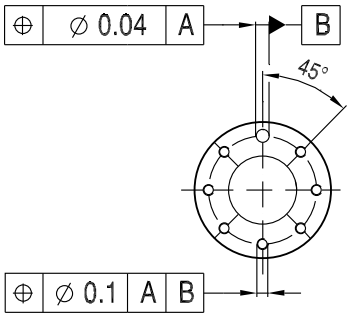

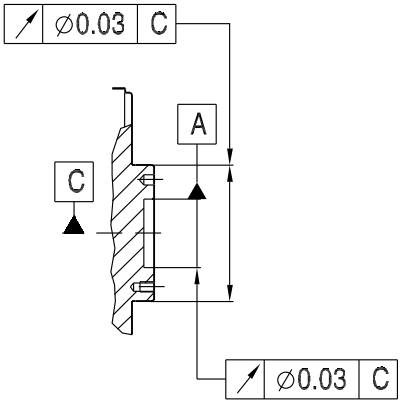

BSBF202 PSBF221/222
BSBF302 PSBF321/322

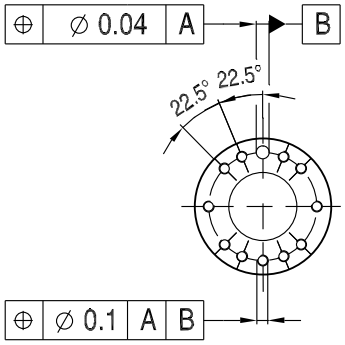

BSBF402 PSBF521/522
BSBF502

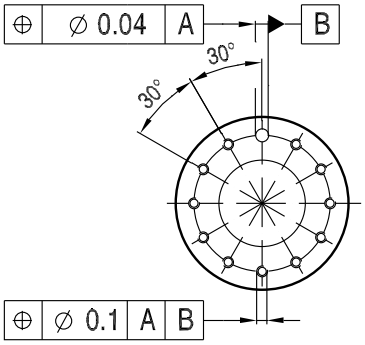

BSBF602 PSBF621/622
BSBF802 PSBF721/722
PSBF821/822

55 036 00 03

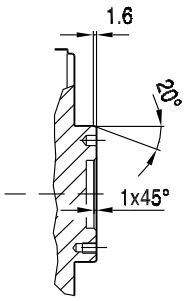

13.3 BS.F EBH.. → D1 [mm]

	BS.F202 BS.F302 BS.F402 BS.F502 BS.F602	BS.F202 BS.F302 BS.F402 BS.F502 BS.F602	BS.F302 BS.F402 BS.F502 BS.F602 BS.F802	BS.F402 BS.F502 BS.F602 BS.F802	BS.F402 BS.F502 BS.F602 BS.F802	BS.F502 BS.F602 BS.F802	BS.F802	BS.F802
	EBH03	**EBH04**	**EBH05**	**EBH06**	**EBH07**	**EBH08**	**EBH09**	**EBH10**
D1 [mm]	**Code numbers of mountable motor shaft diameters D1**							
8	01							
9	02							
10	03							
11	04	04						
12	05	05						
14	06	06	06					
16		08	08					
17			09					
18			10					
19		11	11					
22					12			
24			13		13			
28					14			
32					15	15	15	
35				16		16	16	
38						17	17	
42							18	
48								19
55								20

Example:

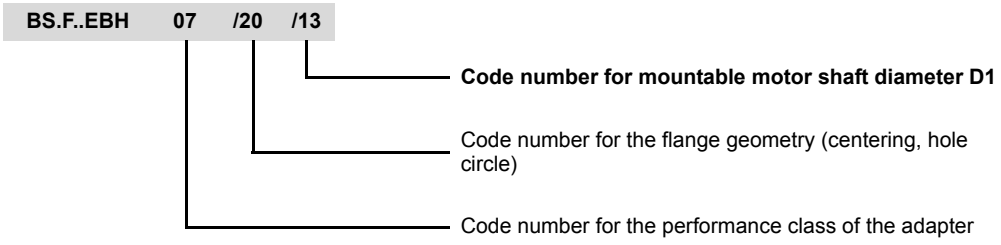

14 PS.F..

14.1 PS.F.. EPH..

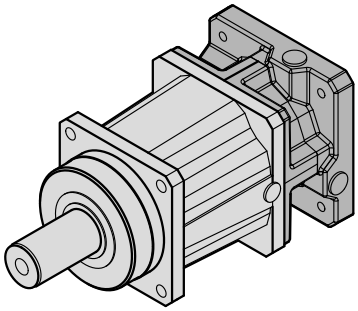

PSF../EPH..

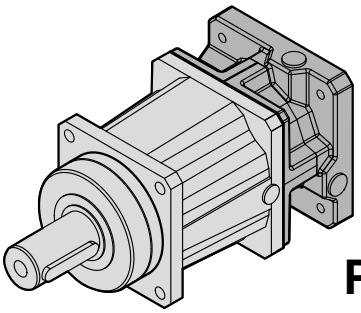

PSKF../EPH..

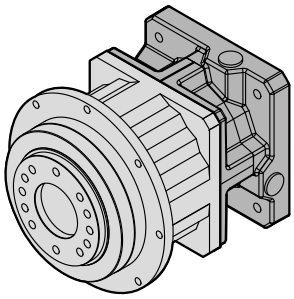

PSBF../EPH

63936axx

14.2 PS.F.. EPH..

14.2.1 PS.F 121/122 EPH.. [Nm]

[Nm]		EPH M_{amax} | M_{apk} | $M_{aNotaus}$					
	i	01			02		
PSF121 1	3.00	20	23	34	20	36	54
	4.00	25	30	45	25	38	57
	5.00	25	35	52	25	35	52
	7.00	25	37	55	25	37	55
	10.00	25	26	39	25	26	39
PSF122 2	16.00	25	38	57	25	38	57
	20.00	25	35	52	25	35	52
	25.00	25	35	52	25	35	52
	28.00	25	33	49	25	33	49
	35.00	25	35	52	25	35	52
	40.00	25	32	48	25	32	48
	49.00	25	37	55	25	37	55
	70.00	25	37	55	25	37	55
	100.00	25	26	39	25	26	39

m [kg]		EPH	
	s	01	02
PSF121	1	1.8	2.1
PSF122	2	2.4	2.7

EPH01 n_e = 1500	i	M_{amax} [Nm]	M_{apk} [Nm]	$M_{aNotaus}$ [Nm]	n_{ak} [1/min]	J_{GA} 10^{-4} [kgm^2]	c_T PSF [Nm/']	F_{Ramax} PSF [N]	F_{Rapk} PSF [N]
PSF121 1	3.00	20	23	34	542	0.28	1.6	2000	1990
	4.00	25	30	45	542	0.24	1.9	1980	1950
	5.00	25	35	52	500	0.22	2.0	1980	1910
	7.00	25	37	55	443	0.21	2.0	1980	1900
	10.00	25	26	39	405	0.20	1.7	1980	1970
PSF122 2	16.00	25	38	57	438	0.23	2.1	1980	1890
	20.00	25	35	52	350	0.23	2.1	1980	1910
	25.00	25	35	52	280	0.22	2.1	1980	1910
	28.00	25	33	49	250	0.21	2.1	1980	1930
	35.00	25	35	52	200	0.21	2.1	1980	1910
	40.00	25	32	48	175	0.20	2.1	1980	1930
	49.00	25	37	55	143	0.21	2.0	1980	1900
	70.00	25	37	55	100	0.20	2.0	1980	1900
	100.00	25	26	39	70	0.20	1.7	1980	1970

EPH02 n_e = 1500	i	M_{amax} [Nm]	M_{apk} [Nm]	$M_{aNotaus}$ [Nm]	n_{ak} [1/min]	J_{GA} 10^{-4} [kgm^2]	c_T PSF [Nm/']	F_{Ramax} PSF [N]	F_{Rapk} PSF [N]
PSF121 1	3.00	20	36	54	542	0.59	2.0	2000	1900
	4.00	25	38	57	542	0.54	2.2	1980	1890
	5.00	25	35	52	500	0.52	2.2	1980	1910
	7.00	25	37	55	443	0.51	2.0	1980	1900
	10.00	25	26	39	405	0.50	1.7	1980	1970

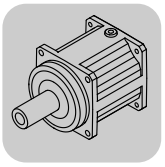

EPH02 n_e = 1500	i	M_{amax} [Nm]	M_{apk} [Nm]	$M_{aNotaus}$ [Nm]	n_{ak} [1/min]	J_{GA} 10^{-4} [kgm^2]	c_T PSF [Nm/']	F_{Ramax} PSF [N]	F_{Rapk} PSF [N]
PSF122 2	16.00	25	38	57	438	0.53	2.2	1980	1890
	20.00	25	35	52	350	0.53	2.1	1980	1910
	25.00	25	35	52	280	0.52	2.1	1980	1910
	28.00	25	33	49	250	0.51	2.1	1980	1930
	35.00	25	35	52	200	0.51	2.1	1980	1910
	40.00	25	32	48	175	0.50	2.1	1980	1930
	49.00	25	37	55	143	0.51	2.0	1980	1900
	70.00	25	37	55	100	0.50	2.0	1980	1900
	100.00	25	26	39	70	0.50	1.7	1980	1970

EPH				M1;M3;M5-6			M2			M4			φ		
	i	n_{epk} [1/min]	η [%]	a_0	a_1	a_2	a_0	a_1	a_2	a_0	a_1	a_2	[']	/R [']	/M [']
PSF121 1	3.00	8000	99	66.00	-0.045	0	80.00	-0.070	0	94.00	-0.101	0	8	4	2
	4.00	8000	99	94.00	-0.069	0	114.0	-0.105	0	134.0	-0.150	0	8	4	2
	5.00	8000	99	101.0	-0.079	0	119.0	-0.114	0	135.0	-0.157	0	8	4	2
	7.00	8000	99	115.0	-0.102	0	132.0	-0.141	0	135.0	-0.171	0	8	4	2
	10.00	8000	99	117.0	-0.127	0	132.0	-0.165	0	124.0	-0.177	0	8	4	2
PSF122 2	16.00	8000	98	151.0	-0.315	0	207	-0.622	0	217	-0.694	0	10	6	3
	20.00	8000	98	179.0	-0.452	0	250	-0.919	0	259	-1.002	0	10	6	3
	25.00	8000	98	186.0	-0.510	0	255	-0.982	0	264	-1.068	0	10	6	3
	28.00	8000	98	169.0	-0.453	0	219	-0.772	0	229	-0.850	0	10	6	3
	35.00	8000	98	202	-0.660	0	264	-1.140	0	273	-1.229	0	10	6	3
	40.00	8000	98	197.0	-0.666	0	242	-1.000	0	251	-1.083	0	10	6	3
	49.00	8000	98	274	-1.225	0	363	-2.155	0	372	-2.271	0	10	6	3
	70.00	8000	98	324	-1.844	0	401	-2.816	0	410	-2.940	0	10	6	3
	100.00	8000	98	432	-3.473	0	542	-5.374	0	550	-5.546	0	10	6	3

14.2.2 PS.F 121/122 EPH.. [mm]

PSF121..

57 004 00 03

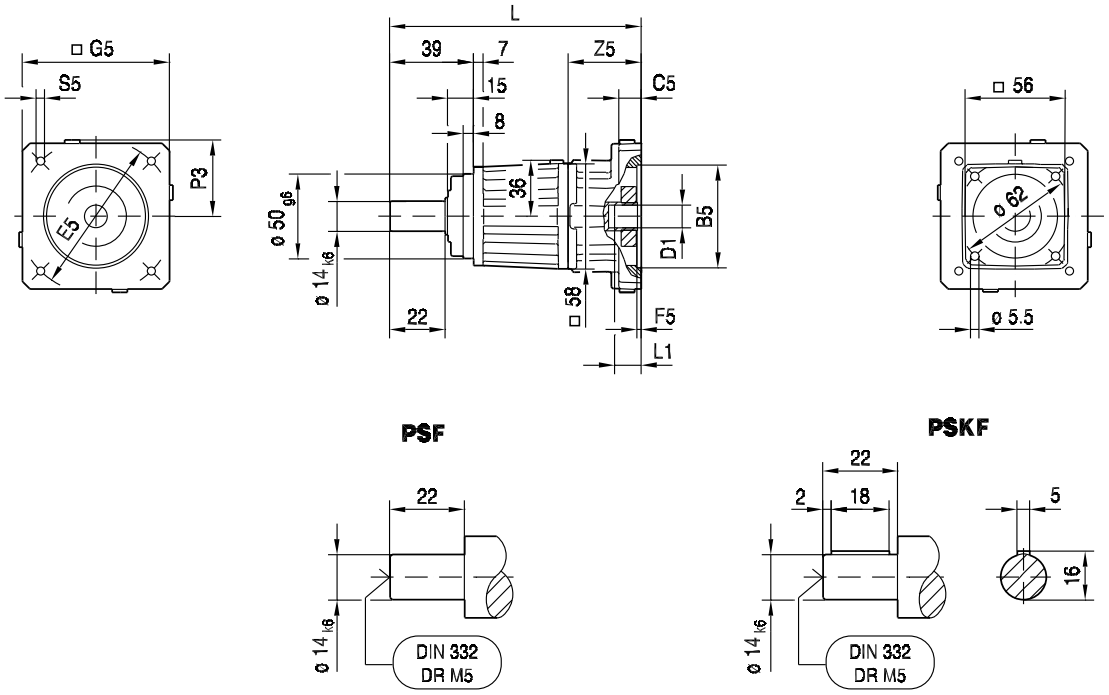

(→ 144)	L	B5	C5	E5	F5	G5	S5	Z5	L1	P3	D1 (→ 537)
EPH01/01/..	142	40	13	63	3.5	58	M4	44	33	31	9, 11
EPH01/03/..	142	50	13	60	3.5	58	M4	44	33	31	9, 11
EPH02/04/..	142	50	10	70	3.5	80	M5	44	34	42	8, 9, 10, 11, 12, 14
EPH02/05/..	142	50	10	80	3.5	80	M4	44	34	42	8, 9, 10, 11, 12, 14
EPH02/06/..	142	50	10	95	3.5	80	M6	44	34	42	8, 9, 10, 11, 12, 14
EPH02/08/..	142	60	10	75	3.5	80	M5	44	34	42	8, 9, 10, 11, 12, 14
EPH02/09/..	142	60	10	90	3.5	80	M5	44	34	42	8, 9, 10, 11, 12, 14
EPH02/10/..	142	70	10	85	3.5	80	M6	44	34	42	8, 9, 10, 11, 12, 14
EPH02/11/..	142	70	10	90	3.5	80	M5	44	34	42	8, 9, 10, 11, 12, 14
EPH02/13/..	155	80	23	100	5	88	M6	57	47	44	8, 9, 10, 11, 12, 14

PSF122..

57 005 00 03

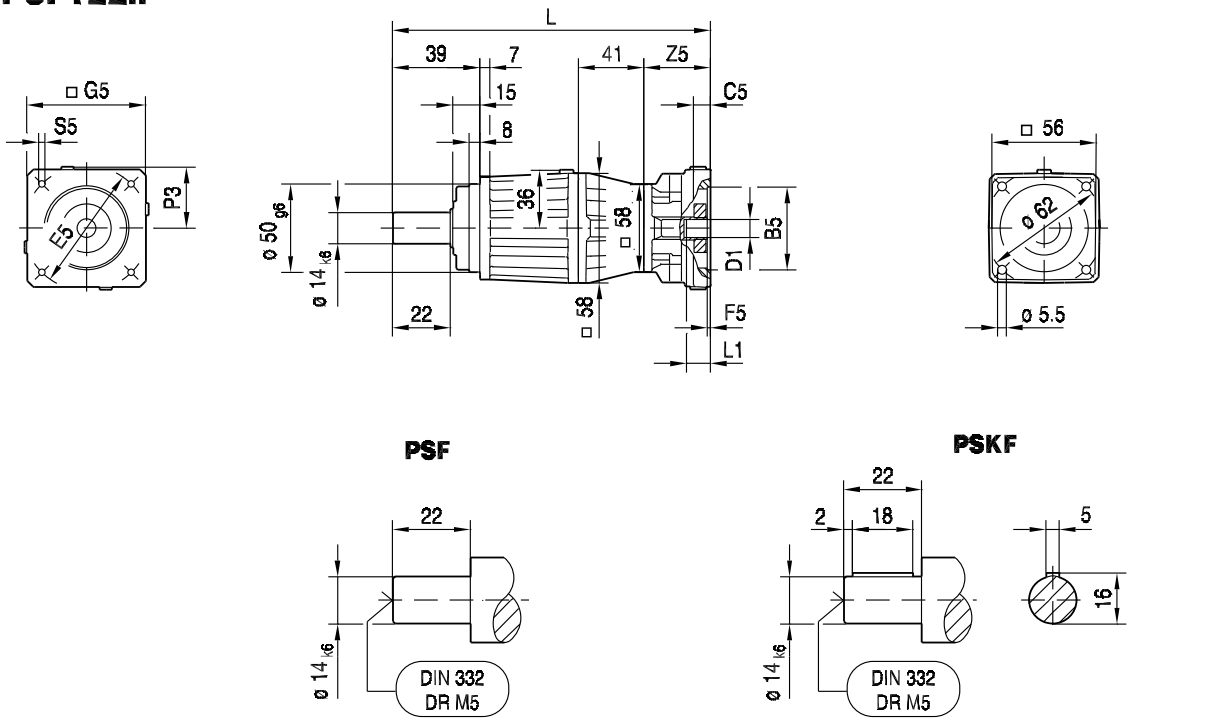

(→ 144)	L	B5	C5	E5	F5	G5	S5	Z5	L1	P3	D1 (→ 537)
EPH01/01/..	183	40	13	63	3.5	58	M4	44	33	31	9, 11
EPH01/03/..	183	50	13	60	3.5	58	M4	44	33	31	9, 11
EPH02/04/..	183	50	10	70	3.5	80	M5	44	34	42	8, 9, 10, 11, 12, 14
EPH02/05/..	183	50	10	80	3.5	80	M4	44	34	42	8, 9, 10, 11, 12, 14
EPH02/06/..	183	50	10	95	3.5	80	M6	44	34	42	8, 9, 10, 11, 12, 14
EPH02/08/..	183	60	10	75	3.5	80	M5	44	34	42	8, 9, 10, 11, 12, 14
EPH02/09/..	183	60	10	90	3.5	80	M5	44	34	42	8, 9, 10, 11, 12, 14
EPH02/10/..	183	70	10	85	3.5	80	M6	44	34	42	8, 9, 10, 11, 12, 14
EPH02/11/..	183	70	10	90	3.5	80	M5	44	34	42	8, 9, 10, 11, 12, 14
EPH02/13/..	196	80	23	100	5	88	M6	57	47	44	8, 9, 10, 11, 12, 14

14.2.3 PS.F 221/222 EPH.. [Nm]

[Nm]		EPH M_{amax} | M_{apk} | $M_{aNotaus}$											
	i	01			02			03			04		
PSF221 1	3.00	23	23	34	40	53	75	40	53	75	40	65	97
	4.00	30	30	45	55	70	100	55	70	100	55	85	127
	5.00	38	38	56	55	80	120	55	80	120	55	80	120
	7.00	53	53	79	55	85	127	55	85	127	55	85	127
	10.00	55	62	93	55	62	93	55	62	93	55	62	93
PSF222 2	16.00	55	85	127	55	85	127						
	20.00	55	80	120	55	80	120						
	25.00	55	80	120	55	80	120						
	28.00	55	83	124	55	83	124						
	35.00	55	80	120	55	80	120						
	40.00	55	79	118	55	79	118						
	49.00	55	85	127	55	85	127						
	70.00	55	85	127	55	85	127						
	100.00	55	62	93	55	62	93						

m [kg]		EPH			
	s	01	02	03	04
PSF221	1	2.7	2.8	3.0	3.2
PSF222	2	3.4	3.5	3.8	3.9

EPH01 n_e = 1500	i	M_{amax} [Nm]	M_{apk} [Nm]	$M_{aNotaus}$ [Nm]	n_{ak} [1/min]	J_{GA} 10^{-4} [kgm^2]	c_T PSF [Nm/']	F_{Ramax} PSF [N]	F_{Rapk} PSF [N]
PSF221 1	3.00	23	23	34	2333	0.43	2.3	2910	2930
	4.00	30	30	45	1750	0.31	2.7	2910	2910
	5.00	38	38	56	1400	0.27	3.0	2880	2880
	7.00	53	53	79	525	0.23	3.2	2720	2720
	10.00	55	62	93	420	0.21	3.0	2680	2520
PSF222 2	16.00	55	85	127	438	0.24	3.5	2680	1720
	20.00	55	80	120	350	0.23	3.6	2680	1950
	25.00	55	80	120	280	0.22	3.6	2680	1950
	28.00	55	83	124	250	0.21	3.5	2680	1820
	35.00	55	80	120	200	0.21	3.6	2680	1950
	40.00	55	79	118	175	0.20	3.5	2680	1990
	49.00	55	85	127	143	0.21	3.5	2680	1720
	70.00	55	85	127	100	0.20	3.5	2680	1720
	100.00	55	62	93	70	0.20	3.0	2680	2520

EPH02 n_e = 1500	i	M_{amax} [Nm]	M_{apk} [Nm]	$M_{aNotaus}$ [Nm]	n_{ak} [1/min]	J_{GA} 10^{-4} [kgm^2]	c_T PSF [Nm/']	F_{Ramax} PSF [N]	F_{Rapk} PSF [N]
PSF221 1	3.00	40	53	75	1890	0.73	3.1	2870	2720
	4.00	55	70	100	585	0.61	3.4	2680	2300
	5.00	55	80	120	530	0.52	3.5	2680	1950
	7.00	55	85	127	465	0.54	3.4	2680	1720
	10.00	55	62	93	420	0.52	3.0	2680	2520
PSF222 2	16.00	55	85	127	438	0.54	3.6	2680	1720
	20.00	55	80	120	350	0.54	3.6	2680	1950
	25.00	55	80	120	280	0.52	3.6	2680	1950
	28.00	55	83	124	250	0.51	3.5	2680	1820
	35.00	55	80	120	200	0.51	3.6	2680	1950
	40.00	55	79	118	175	0.50	3.5	2680	1990
	49.00	55	85	127	143	0.51	3.5	2680	1720
	70.00	55	85	127	100	0.50	3.5	2680	1720
	100.00	55	62	93	70	0.50	3.0	2680	2520

EPH03 n_e = 1500	i	M_{amax} [Nm]	M_{apk} [Nm]	$M_{aNotaus}$ [Nm]	n_{ak} [1/min]	J_{GA} 10^{-4} [kgm^2]	c_T PSF [Nm/']	F_{Ramax} PSF [N]	F_{Rapk} PSF [N]
PSF221 1	3.00	40	53	75	1890	0.81	3.1	2870	2720
	4.00	55	70	100	585	0.68	3.4	2680	2300
	5.00	55	80	120	530	0.64	3.5	2680	1950
	7.00	55	85	127	465	0.61	3.4	2680	1720
	10.00	55	62	93	420	0.59	3.0	2680	2520

EPH04 n_e = 1500	i	M_{amax} [Nm]	M_{apk} [Nm]	$M_{aNotaus}$ [Nm]	n_{ak} [1/min]	J_{GA} 10^{-4} [kgm^2]	c_T PSF [Nm/']	F_{Ramax} PSF [N]	F_{Rapk} PSF [N]
PSF221 1	3.00	40	65	97	1890	0.98	3.5	2870	2440
	4.00	55	85	127	585	0.86	3.6	2680	1720
	5.00	55	80	120	530	0.82	3.6	2680	1950
	7.00	55	85	127	465	0.79	3.5	2680	1720
	10.00	55	62	93	420	0.76	3.0	2680	2520

EPH				M1;M3;M5-6			M2			M4			φ		
	i	n_{epk} [1/min]	η [%]	a_0	a_1	a_2	a_0	a_1	a_2	a_0	a_1	a_2	[']	/R [']	/M [']
PSF221 1	3.00	7500	99	99.00	-0.071	0	129.0	-0.128	0	151.0	-0.183	0	6	3	1
	4.00	7500	99	140.0	-0.103	0	183.0	-0.184	0	215	-0.265	0	6	3	1
	5.00	7500	99	144.0	-0.111	0	185.0	-0.191	0	217	-0.273	0	6	3	1
	7.00	7500	99	163.0	-0.139	0	201	-0.223	0	196.0	-0.260	0	6	3	1
	10.00	7500	99	170.0	-0.168	0	196.0	-0.241	0	186.0	-0.269	0	6	3	1
PSF222 2	16.00	8000	98	194.0	-0.381	0	251	-0.710	0	266	-0.821	0	8	4	2
	20.00	8000	98	220	-0.515	0	292	-0.999	0	306	-1.121	0	8	4	2
	25.00	8000	98	227	-0.574	0	297	-1.061	0	311	-1.186	0	8	4	2
	28.00	8000	98	218	-0.537	0	271	-0.885	0	286	-1.005	0	8	4	2
	35.00	8000	98	250	-0.746	0	317	-1.259	0	331	-1.392	0	8	4	2
	40.00	8000	98	237	-0.727	0	283	-1.072	0	296	-1.195	0	8	4	2
	49.00	8000	98	328	-1.326	0	424	-2.293	0	438	-2.458	0	8	4	2
	70.00	8000	98	367	-1.879	0	449	-2.844	0	461	-3.013	0	8	4	2
	100.00	8000	98	470	-3.376	0	585	-5.223	0	597	-5.440	0	8	4	2

14.2.4 PS.F 221/222 EPH.. [mm]

PSF221..

57 006 00 03

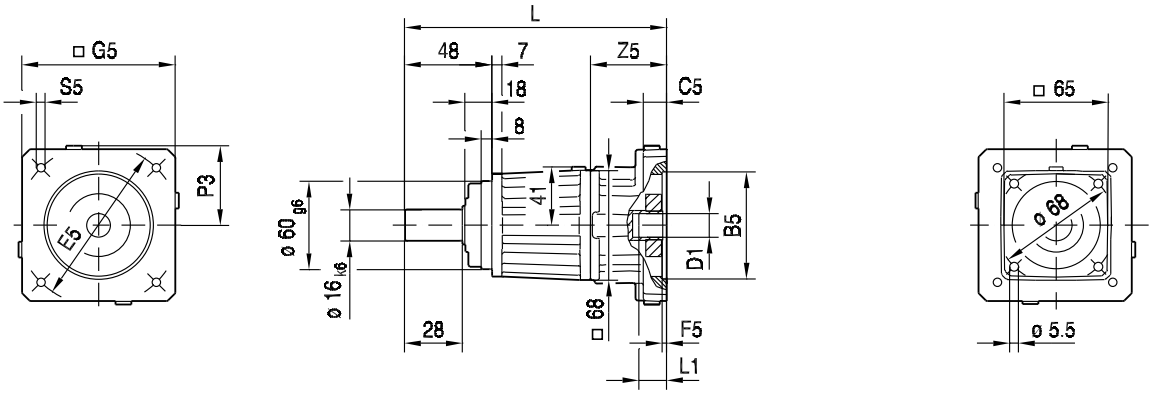

PSF

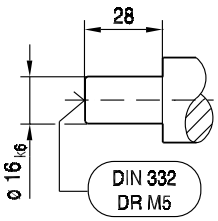

PSKF

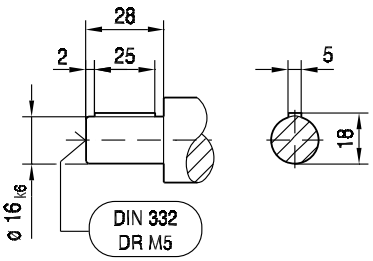

(→ 144)	L	B5	C5	E5	F5	G5	S5	Z5	L1	P3	D1 (→ 537)
EPH01/01/..	156	40	13	63	4	73	M4	38	33	39	9, 11
EPH01/03/..	156	50	13	60	4	73	M4	38	33	39	9, 11
EPH02/04/..	156	50	13	70	4	73	M5	38	34	39	8, 9, 10, 11, 12, 14
EPH02/05/..	156	50	13	80	4	73	M4	38	34	39	8, 9, 10, 11, 12, 14
EPH02/08/..	156	60	13	75	4	73	M5	38	34	39	8, 9, 10, 11, 12, 14
EPH03/01/..	165	40	20	63	3.5	90	M4	47	38	47	8, 9, 10, 11, 12, 14
EPH03/03/..	165	50	20	60	3.5	90	M4	47	30	47	8, 9, 10, 11, 12, 14
EPH03/04/..	165	50	20	70	3.5	90	M5	47	30	47	8, 9, 10, 11, 12, 14
EPH03/05/..	165	50	20	80	3.5	90	M4	47	30	47	8, 9, 10, 11, 12, 14
EPH03/06/..	165	50	20	95	3.5	90	M6	47	30	47	8, 9, 10, 11, 12, 14
EPH03/07/..	165	50	20	100	3.5	90	M6	47	30	47	8, 9, 10, 11, 12, 14
EPH03/08/..	165	60	20	75	3.5	90	M5	47	30	47	8, 9, 10, 11, 12, 14
EPH03/09/..	165	60	20	90	3.5	90	M5	47	30	47	8, 9, 10, 11, 12, 14
EPH03/10/..	165	70	20	85	3.5	90	M6	47	30	47	8, 9, 10, 11, 12, 14
EPH03/11/..	165	70	20	90	3.5	90	M5	47	30	47	8, 9, 10, 11, 12, 14
EPH03/12/..	165	70	20	90	3.5	90	M6	47	30	47	8, 9, 10, 11, 12, 14
EPH03/13/..	165	80	20	100	3.5	90	M6	47	30	47	8, 9, 10, 11, 12, 14
EPH03/14/..	165	95	16	115	4	105	M8	47	30	55	8, 9, 10, 11, 12, 14
EPH04/01/..	174	40	20	63	3.5	90	M4	56	43	47	11, 12, 14, 16, 19
EPH04/03/..	174	50	20	60	3.5	90	M4	56	41	47	11, 12, 14, 16, 19
EPH04/04/..	174	50	20	70	3.5	90	M5	56	41	47	11, 12, 14, 16, 19
EPH04/05/..	174	50	20	80	3.5	90	M4	56	41	47	11, 12, 14, 16, 19
EPH04/06/..	174	50	20	95	3.5	90	M6	56	41	47	11, 12, 14, 16, 19
EPH04/07/..	174	50	20	100	3.5	90	M6	56	41	47	11, 12, 14, 16, 19
EPH04/08/..	174	60	20	75	3.5	90	M5	56	41	47	11, 12, 14, 16, 19
EPH04/09/..	174	60	20	90	3.5	90	M5	56	41	47	11, 12, 14, 16, 19
EPH04/10/..	174	70	20	85	3.5	90	M6	56	41	47	11, 12, 14, 16, 19
EPH04/11/..	174	70	20	90	3.5	90	M5	56	41	47	11, 12, 14, 16, 19
EPH04/12/..	174	70	20	90	3.5	90	M6	56	41	47	11, 12, 14, 16, 19
EPH04/13/..	174	80	20	100	3.5	90	M6	56	41	47	11, 12, 14, 16, 19
EPH04/14/..	174	95	16	115	4	105	M8	56	41	55	11, 12, 14, 16, 19
EPH04/15/..	174	95	16	130	4	115	M8	56	41	60	11, 12, 14, 16, 19

PSF222..

57 007 00 03

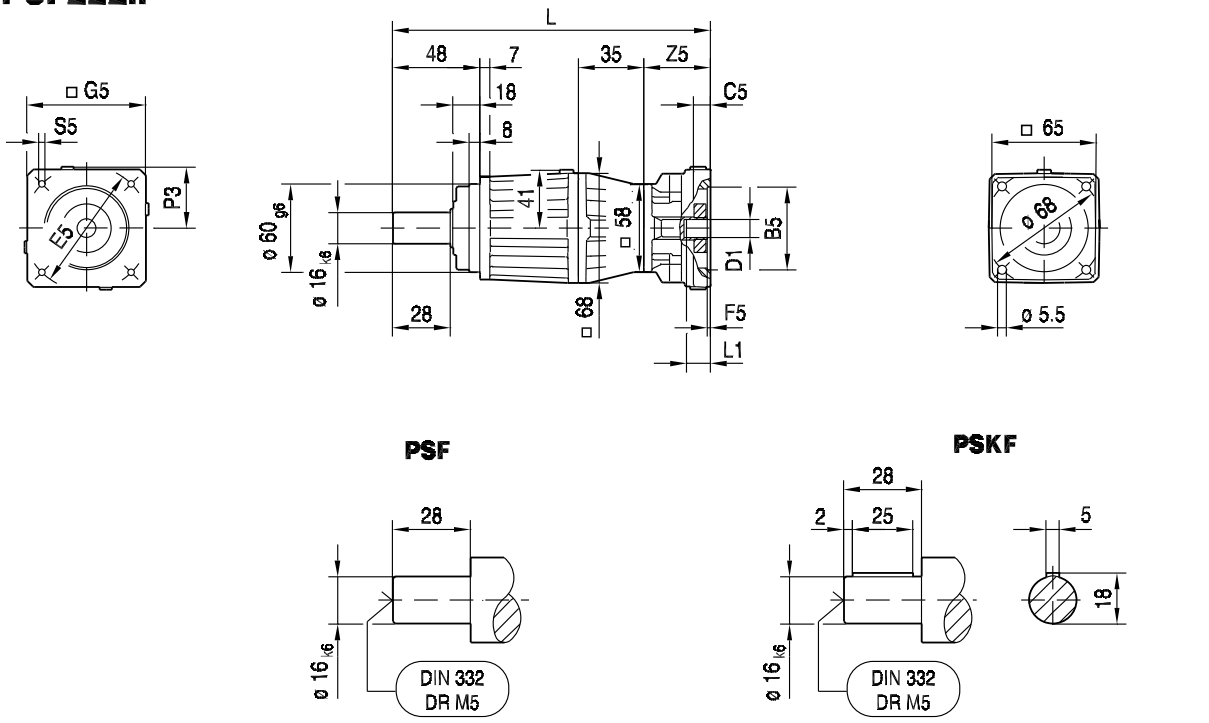

(→ 📖 144)	L	B5	C5	E5	F5	G5	S5	Z5	L1	P3	D1 (→ 📖 537)
EPH01/01/..	197	40	13	63	3.5	58	M4	44	33	31	9, 11
EPH01/03/..	197	50	13	60	3.5	58	M4	44	33	31	9, 11
EPH02/04/..	197	50	10	70	3.5	80	M5	44	34	42	8, 9, 10, 11, 12, 14
EPH02/05/..	197	50	10	80	3.5	80	M4	44	34	42	8, 9, 10, 11, 12, 14
EPH02/06/..	197	50	10	95	3.5	80	M6	44	34	42	8, 9, 10, 11, 12, 14
EPH02/08/..	197	60	10	75	3.5	80	M5	44	34	42	8, 9, 10, 11, 12, 14
EPH02/09/..	197	60	10	90	3.5	80	M5	44	34	42	8, 9, 10, 11, 12, 14
EPH02/10/..	197	70	10	85	3.5	80	M6	44	34	42	8, 9, 10, 11, 12, 14
EPH02/11/..	197	70	10	90	3.5	80	M5	44	34	42	8, 9, 10, 11, 12, 14
EPH02/13/..	210	80	23	100	5	88	M6	57	47	44	8, 9, 10, 11, 12, 14

14.2.5 PS.F 321/322 EPH.. [Nm]

[Nm]		EPH M_{amax} | M_{apk} | $M_{aNotaus}$														
	i	01			02			03			04			05		
PSF321 1	3.00										85	125	178	85	125	178
	4.00										110	170	235	110	170	235
	5.00										110	169	250	110	169	250
	7.00										110	168	250	110	168	250
	10.00										110	121	181	110	121	181
PSF322 2	16.00	110	120	181	110	153	225	110	153	225	110	153	225			
	20.00	110	150	225	110	169	250	110	169	250	110	169	250			
	25.00	110	169	250	110	169	250	110	169	250	110	169	250			
	28.00	110	145	215	110	145	215	110	145	215	110	145	215			
	35.00	110	169	250	110	169	250	110	169	250	110	169	250			
	40.00	110	142	210	110	142	210	110	142	210	110	142	210			
	49.00	110	168	250	110	168	250	110	168	250	110	168	250			
	70.00	110	168	250	110	168	250	110	168	250	110	168	250			
	100.00	110	121	181	110	121	181	110	121	181	110	121	181			

m [kg]		EPH				
	s	01	02	03	04	05
PSF321	1	4.0	4.1	4.4	4.6	5.9
PSF322	2	5.6	5.6	5.9	6.2	7.4

EPH01 n_e = 1500	i	M_{amax} [Nm]	M_{apk} [Nm]	$M_{aNotaus}$ [Nm]	n_{ak} [1/min]	J_{GA} 10^{-4} [kgm^2]	c_T PSF [Nm/']	F_{Ramax} PSF [N]	F_{Rapk} PSF [N]
PSF322 2	16.00	110	120	181	438	0.31	10	5480	5350
	20.00	110	150	225	350	0.31	11	5480	4850
	25.00	110	169	250	280	0.27	11	5480	4450
	28.00	110	145	215	250	0.24	10	5480	4950
	35.00	110	169	250	200	0.23	11	5480	4450
	40.00	110	142	210	175	0.21	10	5480	5000
	49.00	110	168	250	143	0.23	10	5480	4470
	70.00	110	168	250	100	0.21	10	5480	4470
	100.00	110	121	181	70	0.21	8.0	5480	5330

EPH02 n_e = 1500	i	M_{amax} [Nm]	M_{apk} [Nm]	$M_{aNotaus}$ [Nm]	n_{ak} [1/min]	J_{GA} 10^{-4} [kgm^2]	c_T PSF [Nm/']	F_{Ramax} PSF [N]	F_{Rapk} PSF [N]
PSF322 2	16.00	110	153	225	438	0.62	11	5480	4800
	20.00	110	169	250	350	0.61	11	5480	4450
	25.00	110	169	250	280	0.57	11	5480	4450
	28.00	110	145	215	250	0.54	11	5480	4950
	35.00	110	169	250	200	0.54	11	5480	4450
	40.00	110	142	210	175	0.52	10	5480	5000
	49.00	110	168	250	143	0.53	10	5480	4470
	70.00	110	168	250	100	0.52	10	5480	4470
	100.00	110	121	181	70	0.52	8.0	5480	5330

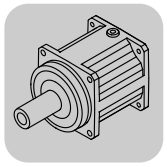

EPH03 n_e = 1500	i	M_{amax} [Nm]	M_{apk} [Nm]	$M_{aNotaus}$ [Nm]	n_{ak} [1/min]	J_{GA} 10^{-4} [kgm^2]	c_T PSF [Nm/']	F_{Ramax} PSF [N]	F_{Rapk} PSF [N]
PSF322 2	16.00	110	153	225	438	0.69	11	5480	4800
	20.00	110	169	250	350	0.68	11	5480	4450
	25.00	110	169	250	280	0.64	11	5480	4450
	28.00	110	145	215	250	0.61	11	5480	4950
	35.00	110	169	250	200	0.61	11	5480	4450
	40.00	110	142	210	175	0.59	10	5480	5000
	49.00	110	168	250	143	0.61	10	5480	4470
	70.00	110	168	250	100	0.59	10	5480	4470
	100.00	110	121	181	70	0.59	8.0	5480	5330

EPH04 n_e = 1500	i	M_{amax} [Nm]	M_{apk} [Nm]	$M_{aNotaus}$ [Nm]	n_{ak} [1/min]	J_{GA} 10^{-4} [kgm^2]	c_T PSF [Nm/']	F_{Ramax} PSF [N]	F_{Rapk} PSF [N]
PSF321 1	3.00	85	125	178	600	1.5	10	4380	5280
	4.00	110	170	235	500	1.1	11	4770	4420
	5.00	110	169	250	460	1.00	11	5100	4450
	7.00	110	168	250	405	0.89	11	5480	4470
	10.00	110	121	181	368	0.80	8.0	5480	5330
PSF322 2	16.00	110	153	225	438	0.87	11	5480	4800
	20.00	110	169	250	350	0.86	11	5480	4450
	25.00	110	169	250	280	0.82	11	5480	4450
	28.00	110	145	215	250	0.79	11	5480	4950
	35.00	110	169	250	200	0.79	11	5480	4450
	40.00	110	142	210	175	0.76	10	5480	5000
	49.00	110	168	250	143	0.79	10	5480	4470
	70.00	110	168	250	100	0.76	10	5480	4470
	100.00	110	121	181	70	0.76	8.0	5480	5330

EPH05 n_e = 1500	i	M_{amax} [Nm]	M_{apk} [Nm]	$M_{aNotaus}$ [Nm]	n_{ak} [1/min]	J_{GA} 10^{-4} [kgm^2]	c_T PSF [Nm/']	F_{Ramax} PSF [N]	F_{Rapk} PSF [N]
PSF321 1	3.00	85	125	178	600	3.2	10	4380	5280
	4.00	110	170	235	500	2.8	11	4770	4420
	5.00	110	169	250	460	2.7	11	5100	4450
	7.00	110	168	250	405	2.6	11	5480	4470
	10.00	110	121	181	368	2.5	8.0	5480	5330

EPH	i	n_{epk} [1/min]	η [%]	M1;M3;M5-6 a_0	M1;M3;M5-6 a_1	M1;M3;M5-6 a_2	M2 a_0	M2 a_1	M2 a_2	M4 a_0	M4 a_1	M4 a_2	φ [']	φ /R [']	φ /M [']
PSF321 1	3.00	7000	99	218	-0.204	0	251	-0.303	0	258	-0.395	0	6	3	1
	4.00	7000	99	291	-0.289	0	334	-0.420	0	361	-0.599	0	6	3	1
	5.00	7000	99	308	-0.327	0	352	-0.465	0	394	-0.698	0	6	3	1
	7.00	7000	99	315	-0.389	0	355	-0.525	0	419	-0.838	0	6	3	1
	10.00	7000	99	282	-0.426	0	324	-0.569	0	596	-1.963	0	6	3	1
PSF322 2	16.00	7500	98	302	-0.615	0	407	-1.248	0	441	-1.523	0	8	4	2
	20.00	7500	98	365	-0.878	0	494	-1.824	0	526	-2.129	0	8	4	2
	25.00	7500	98	382	-0.956	0	503	-1.894	0	534	-2.202	0	8	4	2
	28.00	7500	98	338	-0.785	0	434	-1.438	0	467	-1.728	0	8	4	2
	35.00	7500	98	404	-1.118	0	524	-2.098	0	555	-2.421	0	8	4	2
	40.00	7500	98	353	-0.951	0	440	-1.599	0	471	-1.890	0	8	4	2
	49.00	7500	98	479	-1.768	0	641	-3.474	0	668	-3.835	0	8	4	2
	70.00	7500	98	509	-2.219	0	655	-3.923	0	681	-4.288	0	8	4	2
	100.00	7500	98	588	-3.573	0	787	-6.596	0	809	-7.019	0	8	4	2

14.2.6 PS.F 321/322 EPH.. [mm]

57 008 00 03

PSF321..

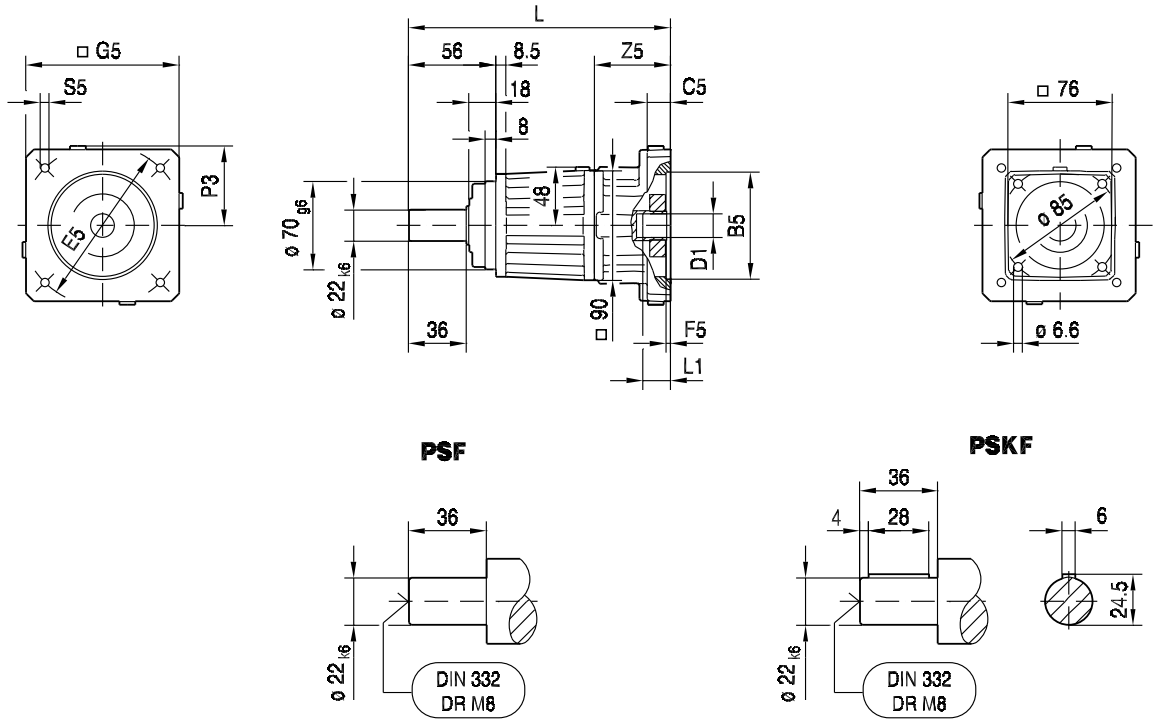

(→ 144)	L	B5	C5	E5	F5	G5	S5	Z5	L1	P3	D1 (→ 537)
EPH04/01/..	196	40	20	63	3.5	90	M4	51	43	47	11, 12, 14, 16, 19
EPH04/03/..	196	50	20	60	3.5	90	M4	51	41	47	11, 12, 14, 16, 19
EPH04/04/..	196	50	20	70	3.5	90	M5	51	41	47	11, 12, 14, 16, 19
EPH04/05/..	196	50	20	80	3.5	90	M4	51	41	47	11, 12, 14, 16, 19
EPH04/06/..	196	50	20	95	3.5	90	M6	51	41	47	11, 12, 14, 16, 19
EPH04/07/..	196	50	20	100	3.5	90	M6	51	41	47	11, 12, 14, 16, 19
EPH04/08/..	196	60	20	75	3.5	90	M5	51	41	47	11, 12, 14, 16, 19
EPH04/09/..	196	60	20	90	3.5	90	M5	51	41	47	11, 12, 14, 16, 19
EPH04/10/..	196	70	20	85	3.5	90	M6	51	41	47	11, 12, 14, 16, 19
EPH04/11/..	196	70	20	90	3.5	90	M5	51	41	47	11, 12, 14, 16, 19
EPH04/12/..	196	70	20	90	3.5	90	M6	51	41	47	11, 12, 14, 16, 19
EPH04/13/..	196	80	20	100	3.5	90	M6	51	41	47	11, 12, 14, 16, 19
EPH04/14/..	196	95	16	115	4	105	M8	51	41	55	11, 12, 14, 16, 19
EPH04/15/..	196	95	16	130	4	115	M8	51	41	60	11, 12, 14, 16, 19
EPH05/14/..	212	95	16	115	4	120	M8	67	52	62	14, 16, 17, 18, 19, 24
EPH05/15/..	212	95	16	130	4	120	M8	67	52	62	14, 16, 17, 18, 19, 24
EPH05/16/..	212	110	16	130	5	120	M8	67	52	62	14, 16, 17, 18, 19, 24
EPH05/17/..	212	110	16	145	7	120	M8	67	52	62	14, 16, 17, 18, 19, 24
EPH05/18/..	212	110	20	165	5	140	M10	67	52	72	14, 16, 17, 18, 19, 24
EPH05/20/..	212	130	20	165	5	140	M10	67	52	72	14, 16, 17, 18, 19, 24
EPH05/26/..	212	110	16	130	5	115	M8	67	52	61	14, 16, 17, 18, 19, 24

PSF322..

57 009 00 03

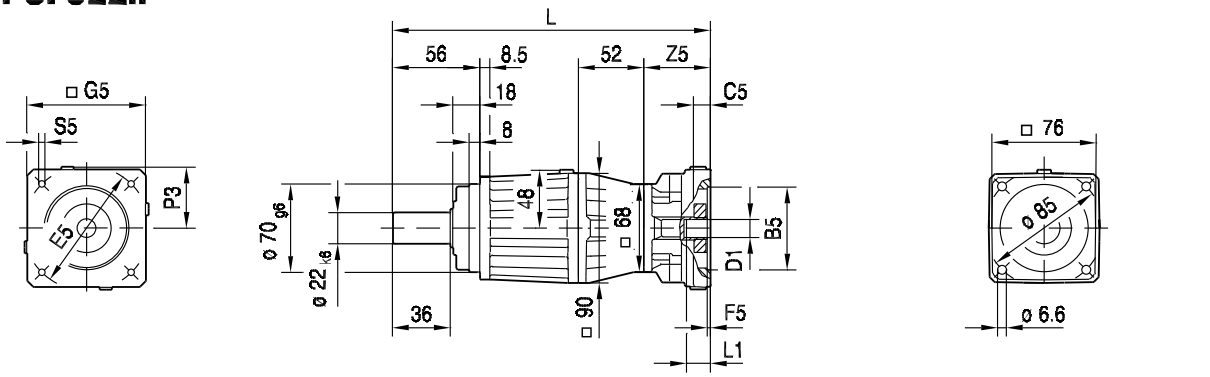

PSF

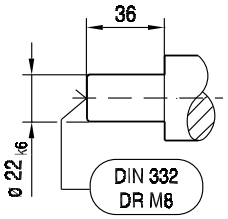

PSKF

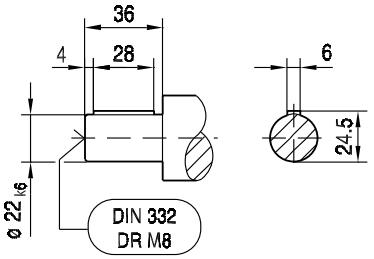

(→ 144)	L	B5	C5	E5	F5	G5	S5	Z5	L1	P3	D1 (→ 537)
EPH01/01/..	235	40	13	63	4	73	M4	38	33	39	9, 11
EPH01/03/..	235	50	13	60	4	73	M4	38	33	39	9, 11
EPH02/04/..	235	50	13	70	4	73	M5	38	34	39	8, 9, 10, 11, 12, 14
EPH02/05/..	235	50	13	80	4	73	M4	38	34	39	8, 9, 10, 11, 12, 14
EPH02/08/..	235	60	13	75	4	73	M5	38	34	39	8, 9, 10, 11, 12, 14
EPH03/01/..	244	40	20	63	3.5	90	M4	47	38	47	8, 9, 10, 11, 12, 14
EPH03/03/..	244	50	20	60	3.5	90	M4	47	30	47	8, 9, 10, 11, 12, 14
EPH03/04/..	244	50	20	70	3.5	90	M5	47	30	47	8, 9, 10, 11, 12, 14
EPH03/05/..	244	50	20	80	3.5	90	M4	47	30	47	8, 9, 10, 11, 12, 14
EPH03/06/..	244	50	20	95	3.5	90	M6	47	30	47	8, 9, 10, 11, 12, 14
EPH03/07/..	244	50	20	100	3.5	90	M6	47	30	47	8, 9, 10, 11, 12, 14
EPH03/08/..	244	60	20	75	3.5	90	M5	47	30	47	8, 9, 10, 11, 12, 14
EPH03/09/..	244	60	20	90	3.5	90	M5	47	30	47	8, 9, 10, 11, 12, 14
EPH03/10/..	244	70	20	85	3.5	90	M6	47	30	47	8, 9, 10, 11, 12, 14
EPH03/11/..	244	70	20	90	3.5	90	M5	47	30	47	8, 9, 10, 11, 12, 14
EPH03/12/..	244	70	20	90	3.5	90	M6	47	30	47	8, 9, 10, 11, 12, 14
EPH03/13/..	244	80	20	100	3.5	90	M6	47	30	47	8, 9, 10, 11, 12, 14
EPH03/14/..	244	95	16	115	4	105	M8	47	30	55	8, 9, 10, 11, 12, 14
EPH04/01/..	253	40	20	63	3.5	90	M4	56	43	47	11, 12, 14, 16, 19
EPH04/03/..	253	50	20	60	3.5	90	M4	56	41	47	11, 12, 14, 16, 19
EPH04/04/..	253	50	20	70	3.5	90	M5	56	41	47	11, 12, 14, 16, 19
EPH04/05/..	253	50	20	80	3.5	90	M4	56	41	47	11, 12, 14, 16, 19
EPH04/06/..	253	50	20	95	3.5	90	M6	56	41	47	11, 12, 14, 16, 19
EPH04/07/..	253	50	20	100	3.5	90	M6	56	41	47	11, 12, 14, 16, 19
EPH04/08/..	253	60	20	75	3.5	90	M5	56	41	47	11, 12, 14, 16, 19
EPH04/09/..	253	60	20	90	3.5	90	M5	56	41	47	11, 12, 14, 16, 19
EPH04/10/..	253	70	20	85	3.5	90	M6	56	41	47	11, 12, 14, 16, 19
EPH04/11/..	253	70	20	90	3.5	90	M5	56	41	47	11, 12, 14, 16, 19
EPH04/12/..	253	70	20	90	3.5	90	M6	56	41	47	11, 12, 14, 16, 19
EPH04/13/..	253	80	20	100	3.5	90	M6	56	41	47	11, 12, 14, 16, 19
EPH04/14/..	253	95	16	115	4	105	M8	56	41	55	11, 12, 14, 16, 19
EPH04/15/..	253	95	16	130	4	115	M8	56	41	60	11, 12, 14, 16, 19

14.2.7 PS.F 521/522 EPH.. [Nm]

[Nm]		EPH M_{amax} | M_{apk} | $M_{aNotaus}$											
	i	04			05			06			07		
PSF521 1	3.00				180	280	420	180	280	420	180	280	420
	4.00	170	170	235	300	385	575	300	385	575	300	385	575
	5.00	210	210	295	300	375	560	300	375	560	300	375	560
	7.00	300	305	455	300	360	540	300	360	540	300	360	540
	10.00	270	270	445	270	270	445	270	270	445	270	270	445
PSF522 2	16.00	300	385	575	300	385	575						
	20.00	300	375	560	300	375	560						
	25.00	300	375	560	300	375	560						
	28.00	300	385	575	300	385	575						
	35.00	300	375	560	300	375	560						
	40.00	300	385	575	300	385	575						
	49.00	300	360	540	300	360	540						
	70.00	300	360	540	300	360	540						
	100.00	270	270	445	270	270	445						

m [kg]		EPH			
	s	04	05	06	07
PSF521	1	8.0	9.3	11	11
PSF522	2	11	12	14	14

EPH04 n_e = 1500	i	M_{amax} [Nm]	M_{apk} [Nm]	$M_{aNotaus}$ [Nm]	n_{ak} [1/min]	J_{GA} 10^{-4} [kgm^2]	c_T PSF [Nm/']	F_{Ramax} PSF [N]	F_{Rapk} PSF [N]
PSF521 1	4.00	170	170	235	1750	2.2	23	6700	10100
	5.00	210	210	295	1400	1.7	25	7170	9940
	7.00	300	305	455	375	1.3	27	7930	9370
	10.00	270	270	445	485	1.1	22	8820	9610
PSF522 2	16.00	300	385	575	438	1.2	31	9400	8680
	20.00	300	375	560	350	1.1	31	9400	8780
	25.00	300	375	560	280	1.00	31	9400	8780
	28.00	300	385	575	250	0.90	31	9400	8680
	35.00	300	375	560	200	0.89	31	9400	8780
	40.00	300	385	575	175	0.81	29	9400	8680
	49.00	300	360	540	143	0.88	28	9400	8920
	70.00	300	360	540	100	0.80	28	9400	8920
	100.00	270	270	445	70	0.80	22	9610	9610

EPH05 n_e = 1500	i	M_{amax} [Nm]	M_{apk} [Nm]	$M_{aNotaus}$ [Nm]	n_{ak} [1/min]	J_{GA} 10^{-4} [kgm^2]	c_T PSF [Nm/']	F_{Ramax} PSF [N]	F_{Rapk} PSF [N]
PSF521 1	3.00	180	280	420	1085	5.5	28	6150	9540
	4.00	300	385	575	463	4.0	31	6700	8680
	5.00	300	375	560	425	3.5	31	7170	8780
	7.00	300	360	540	375	3.0	29	7930	8920
	10.00	270	270	445	485	2.8	22	8820	9610
PSF522 2	16.00	300	385	575	438	2.8	31	9400	8680
	20.00	300	375	560	350	2.8	31	9400	8780
	25.00	300	375	560	280	2.7	31	9400	8780
	28.00	300	385	575	250	2.6	31	9400	8680
	35.00	300	375	560	200	2.6	31	9400	8780
	40.00	300	385	575	175	2.5	29	9400	8680
	49.00	300	360	540	143	2.6	28	9400	8920
	70.00	300	360	540	100	2.5	28	9400	8920
	100.00	270	270	445	70	2.5	22	9610	9610

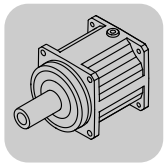

EPH06 n_e = 1500	i	M_{amax} [Nm]	M_{apk} [Nm]	$M_{aNotaus}$ [Nm]	n_{ak} [1/min]	J_{GA} 10^{-4} [kgm^2]	c_T PSF [Nm/']	F_{Ramax} PSF [N]	F_{Rapk} PSF [N]
PSF521 1	3.00	180	280	420	1085	8.4	29	6150	9540
	4.00	300	385	575	463	6.8	32	6700	8680
	5.00	300	375	560	425	6.3	32	7170	8780
	7.00	300	360	540	375	5.9	29	7930	8920
	10.00	270	270	445	485	5.6	22	8820	9610

EPH07 n_e = 1500	i	M_{amax} [Nm]	M_{apk} [Nm]	$M_{aNotaus}$ [Nm]	n_{ak} [1/min]	J_{GA} 10^{-4} [kgm^2]	c_T PSF [Nm/']	F_{Ramax} PSF [N]	F_{Rapk} PSF [N]
PSF521 1	3.00	180	280	420	1085	8.5	30	6150	9540
	4.00	300	385	575	463	6.9	32	6700	8680
	5.00	300	375	560	425	6.4	32	7170	8780
	7.00	300	360	540	375	6.0	29	7930	8920
	10.00	270	270	445	485	5.7	22	8820	9610

EPH	i	n_{epk} [1/min]	η [%]	M1;M3;M5-6 a_0	a_1	a_2	M2 a_0	a_1	a_2	M4 a_0	a_1	a_2	φ [']	/R [']	/M [']
PSF521 1	3.00	6000	99	463	-0.494	0	540	-0.758	0	664	-1.374	0	6	3	1
	4.00	6000	99	538	-0.566	0	613	-0.869	0	771	-1.631	0	6	3	1
	5.00	6000	99	532	-0.576	0	641	-0.923	0	832	-1.785	0	6	3	1
	7.00	6000	99	616	-0.723	0	740	-1.127	0	982	-2.214	0	6	3	1
	10.00	6000	99	582	-0.774	0	710	-1.198	0	951	-2.305	0	6	3	1
PSF522 2	16.00	7000	98	715	-1.806	0	883	-3.190	0	941	-3.834	0	8	4	2
	20.00	7000	98	792	-2.368	0	1041	-4.791	0	1182	-6.670	0	8	4	2
	25.00	7000	98	827	-2.651	0	1076	-5.144	0	1220	-7.094	0	8	4	2
	28.00	7000	98	777	-2.424	0	928	-3.825	0	983	-4.491	0	8	4	2
	35.00	7000	98	872	-3.262	0	1099	-5.764	0	1230	-7.693	0	8	4	2
	40.00	7000	98	812	-3.112	0	936	-4.437	0	982	-5.070	0	8	4	2
	49.00	7000	98	1149	-6.255	0	1423	-9.914	0	1559	-12.241	0	8	4	2
	70.00	7000	98	1225	-8.221	0	1450	-11.702	0	1553	-13.832	0	8	4	2
	100.00	7000	98	1492	-13.723	0	1823	-20.406	0	1925	-22.958	0	8	4	2

14.2.8 PS.F 521/522 EPH.. [mm]

57 012 00 03

PSF521..

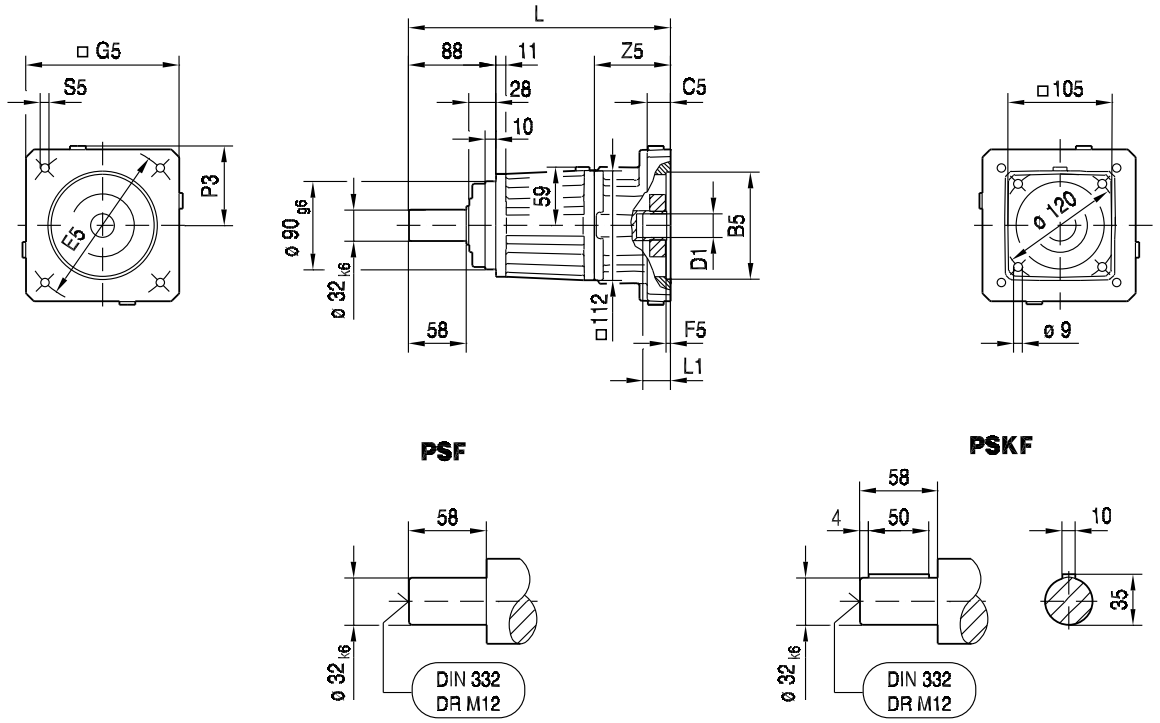

(→ 144)	L	B5	C5	E5	F5	G5	S5	Z5	L1	P3	D1 (→ 537)
EPH04/01/..	236	40	20	63	3.5	90	M4	46	43	47	11, 12, 14, 16, 19
EPH04/03/..	236	50	20	60	3.5	90	M4	46	41	47	11, 12, 14, 16, 19
EPH04/04/..	236	50	20	70	3.5	90	M5	46	41	47	11, 12, 14, 16, 19
EPH04/05/..	236	50	20	80	3.5	90	M4	46	41	47	11, 12, 14, 16, 19
EPH04/06/..	236	50	20	95	3.5	90	M6	46	41	47	11, 12, 14, 16, 19
EPH04/07/..	236	50	20	100	3.5	90	M6	46	41	47	11, 12, 14, 16, 19
EPH04/08/..	236	60	20	75	3.5	90	M5	46	41	47	11, 12, 14, 16, 19
EPH04/09/..	236	60	20	90	3.5	90	M5	46	41	47	11, 12, 14, 16, 19
EPH04/10/..	236	70	20	85	3.5	90	M6	46	41	47	11, 12, 14, 16, 19
EPH04/11/..	236	70	20	90	3.5	90	M5	46	41	47	11, 12, 14, 16, 19
EPH04/12/..	236	70	20	90	3.5	90	M6	46	41	47	11, 12, 14, 16, 19
EPH04/13/..	236	80	20	100	3.5	90	M6	46	41	47	11, 12, 14, 16, 19
EPH04/14/..	236	95	16	115	4	105	M8	46	41	55	11, 12, 14, 16, 19
EPH04/15/..	236	95	16	130	4	115	M8	46	41	60	11, 12, 14, 16, 19
EPH05/14/..	252	95	16	115	4	120	M8	62	52	62	14, 16, 17, 18, 19, 24
EPH05/15/..	252	95	16	130	4	120	M8	62	52	62	14, 16, 17, 18, 19, 24
EPH05/16/..	252	110	16	130	5	120	M8	62	52	62	14, 16, 17, 18, 19, 24
EPH05/17/..	252	110	16	145	7	120	M8	62	52	62	14, 16, 17, 18, 19, 24
EPH05/18/..	252	110	20	165	5	140	M10	62	52	72	14, 16, 17, 18, 19, 24
EPH05/20/..	252	130	20	165	5	140	M10	62	52	72	14, 16, 17, 18, 19, 24
EPH05/26/..	252	110	16	130	5	115	M8	62	52	61	14, 16, 17, 18, 19, 24
EPH06/19/..	287	114.3	24	200	5	174	M12	97	82	89	35
EPH07/20/..	267	130	24	165	5	155	M10	77	62	80	22, 24, 28, 32
EPH07/21/..	267	130	24	215	5	190	M12	77	62	97	22, 24, 28, 32
EPH07/22/..	267	180	24	215	5	190	M12	77	62	97	22, 24, 28, 32
EPH07/27/..	267	130	24	165	5	137	M10	77	62	72	22, 24, 28, 32
EPH07/28/..	267	155	24	190	5	162	M10	77	62	84	22, 24, 28, 32

PSF522..

57 013 00 03

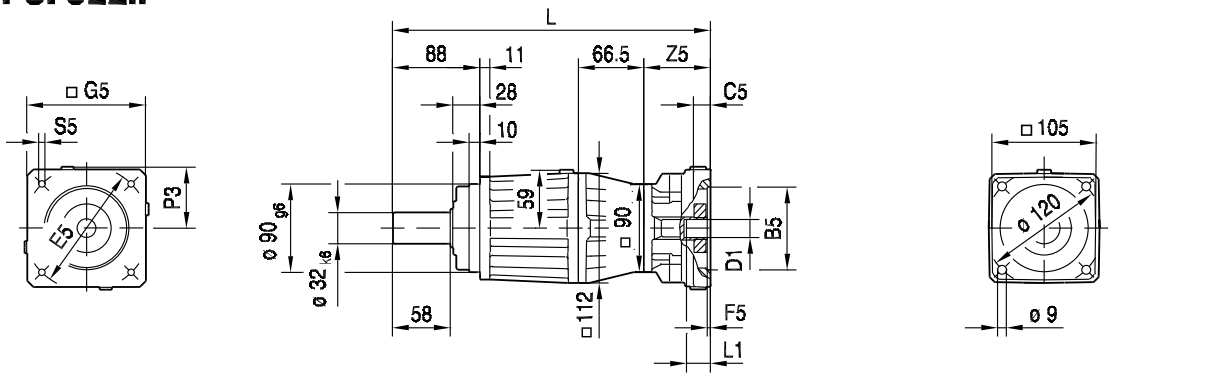

PSF

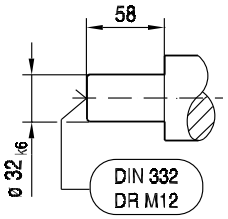

PSKF

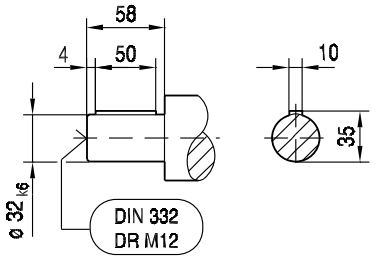

(→ 📖 144)	L	B5	C5	E5	F5	G5	S5	Z5	L1	P3	D1 (→ 📖 537)
EPH04/01/..	307	40	20	63	3.5	90	M4	51	43	47	11, 12, 14, 16, 19
EPH04/03/..	307	50	20	60	3.5	90	M4	51	41	47	11, 12, 14, 16, 19
EPH04/04/..	307	50	20	70	3.5	90	M5	51	41	47	11, 12, 14, 16, 19
EPH04/05/..	307	50	20	80	3.5	90	M4	51	41	47	11, 12, 14, 16, 19
EPH04/06/..	307	50	20	95	3.5	90	M6	51	41	47	11, 12, 14, 16, 19
EPH04/07/..	307	50	20	100	3.5	90	M6	51	41	47	11, 12, 14, 16, 19
EPH04/08/..	307	60	20	75	3.5	90	M5	51	41	47	11, 12, 14, 16, 19
EPH04/09/..	307	60	20	90	3.5	90	M5	51	41	47	11, 12, 14, 16, 19
EPH04/10/..	307	70	20	85	3.5	90	M6	51	41	47	11, 12, 14, 16, 19
EPH04/11/..	307	70	20	90	3.5	90	M5	51	41	47	11, 12, 14, 16, 19
EPH04/12/..	307	70	20	90	3.5	90	M6	51	41	47	11, 12, 14, 16, 19
EPH04/13/..	307	80	20	100	3.5	90	M6	51	41	47	11, 12, 14, 16, 19
EPH04/14/..	307	95	16	115	4	105	M8	51	41	55	11, 12, 14, 16, 19
EPH04/15/..	307	95	16	130	4	115	M8	51	41	60	11, 12, 14, 16, 19
EPH05/14/..	323	95	16	115	4	120	M8	67	52	62	14, 16, 17, 18, 19, 24
EPH05/15/..	323	95	16	130	4	120	M8	67	52	62	14, 16, 17, 18, 19, 24
EPH05/16/..	323	110	16	130	5	120	M8	67	52	62	14, 16, 17, 18, 19, 24
EPH05/17/..	323	110	16	145	7	120	M8	67	52	62	14, 16, 17, 18, 19, 24
EPH05/18/..	323	110	20	165	5	140	M10	67	52	72	14, 16, 17, 18, 19, 24
EPH05/20/..	323	130	20	165	5	140	M10	67	52	72	14, 16, 17, 18, 19, 24
EPH05/26/..	323	110	16	130	5	115	M8	67	52	61	14, 16, 17, 18, 19, 24

14.2.9 PS.F 621/622 EPH.. [Nm]

[Nm]		EPH M_{amax} | M_{apk} | $M_{aNotaus}$														
	i	04			05			06			07			08		
PSF621 1	4.00				520	520	770	570	745	1110	570	745	1110	570	745	1110
	5.00				595	650	960	595	700	1050	595	700	1050	595	700	1050
	7.00				600	660	1020	600	660	1020	600	660	1020	600	660	1020
	10.00				500	500	850	500	500	850	500	500	850	500	500	850
PSF622 2	16.00	600	680	940	600	745	1110	600	745	1110	600	745	1110			
	20.00	600	700	1050	600	700	1050	600	700	1050	600	700	1050			
	25.00	600	700	1050	600	700	1050	600	700	1050	600	700	1050			
	28.00	600	745	1110	600	745	1110	600	745	1110	600	745	1110			
	35.00	600	700	1050	600	700	1050	600	700	1050	600	700	1050			
	40.00	600	745	1110	600	745	1110	600	745	1110	600	745	1110			
	49.00	600	660	990	600	660	990	600	660	990	600	660	990			
	70.00	600	660	990	600	660	990	600	660	990	600	660	990			
	100.00	500	500	750	500	500	750	500	500	750	500	500	750			

m [kg]		EPH				
	s	04	05	06	07	08
PSF621	1	16	18	19	19	24
PSF622	2	22	23	25	25	29

EPH04 n_e = 1500	i	M_{amax} [Nm]	M_{apk} [Nm]	$M_{aNotaus}$ [Nm]	n_{ak} [1/min]	J_{GA} 10^{-4} [kgm^2]	c_T PSF [Nm/']	F_{Ramax} PSF [N]	F_{Rapk} PSF [N]
PSF622 2	16.00	600	680	940	317	2.2	53	13900	13600
	20.00	600	700	1050	292	2.1	54	13900	13500
	25.00	600	700	1050	280	1.7	54	13900	13500
	28.00	600	745	1110	250	1.3	54	13900	13400
	35.00	600	700	1050	200	1.2	54	13900	13500
	40.00	600	745	1110	175	1.1	53	13900	13400
	49.00	600	660	990	143	1.2	50	13900	13700
	70.00	600	660	990	100	1.1	50	13900	13700
	100.00	500	500	750	70	1.1	41	14200	14200

EPH05 n_e = 1500	i	M_{amax} [Nm]	M_{apk} [Nm]	$M_{aNotaus}$ [Nm]	n_{ak} [1/min]	J_{GA} 10^{-4} [kgm^2]	c_T PSF [Nm/']	F_{Ramax} PSF [N]	F_{Rapk} PSF [N]
PSF621 1	4.00	520	520	770	513	6.5	48	13400	14100
	5.00	595	650	960	300	5.1	50	13900	13700
	7.00	600	660	1020	260	3.9	49	13900	13700
	10.00	500	500	850	425	3.2	41	14200	14200
PSF622 2	16.00	600	745	1110	317	4.0	55	13900	13400
	20.00	600	700	1050	292	3.9	55	13900	13500
	25.00	600	700	1050	280	3.4	55	13900	13500
	28.00	600	745	1110	250	3.0	55	13900	13400
	35.00	600	700	1050	200	3.0	54	13900	13500
	40.00	600	745	1110	175	2.8	53	13900	13400
	49.00	600	660	990	143	3.0	51	13900	13700
	70.00	600	660	990	100	2.8	50	13900	13700
	100.00	500	500	750	70	2.8	41	14200	14200

EPH06 n_e = 1500	i	M_{amax} [Nm]	M_{apk} [Nm]	$M_{aNotaus}$ [Nm]	n_{ak} [1/min]	J_{GA} 10^{-4} [kgm^2]	c_T PSF [Nm/']	F_{Ramax} PSF [N]	F_{Rapk} PSF [N]
PSF621 1	4.00	570	745	1110	375	9.6	54	13400	13400
	5.00	595	700	1050	300	8.2	54	13900	13500
	7.00	600	660	1020	260	6.8	50	13900	13700
	10.00	500	500	850	425	6.1	41	14200	14200
PSF622 2	16.00	600	745	1110	317	6.8	55	13900	13400
	20.00	600	700	1050	292	6.7	55	13900	13500
	25.00	600	700	1050	280	6.3	55	13900	13500
	28.00	600	745	1110	250	5.9	55	13900	13400
	35.00	600	700	1050	200	5.9	54	13900	13500
	40.00	600	745	1110	175	5.6	53	13900	13400
	49.00	600	660	990	143	5.8	51	13900	13700
	70.00	600	660	990	100	5.6	50	13900	13700
	100.00	500	500	750	70	5.6	41	14200	14200

EPH07 n_e = 1500	i	M_{amax} [Nm]	M_{apk} [Nm]	$M_{aNotaus}$ [Nm]	n_{ak} [1/min]	J_{GA} 10^{-4} [kgm^2]	c_T PSF [Nm/']	F_{Ramax} PSF [N]	F_{Rapk} PSF [N]
PSF621 1	4.00	570	745	1110	375	9.7	54	13400	13400
	5.00	595	700	1050	300	8.3	54	13900	13500
	7.00	600	660	1020	260	6.9	50	13900	13700
	10.00	500	500	850	425	6.2	41	14200	14200
PSF622 2	16.00	600	745	1110	317	6.9	55	13900	13400
	20.00	600	700	1050	292	6.9	55	13900	13500
	25.00	600	700	1050	280	6.4	55	13900	13500
	28.00	600	745	1110	250	6.0	55	13900	13400
	35.00	600	700	1050	200	6.0	54	13900	13500
	40.00	600	745	1110	175	5.7	53	13900	13400
	49.00	600	660	990	143	5.9	51	13900	13700
	70.00	600	660	990	100	5.7	50	13900	13700
	100.00	500	500	750	70	5.7	41	14200	14200

EPH08 n_e = 1500	i	M_{amax} [Nm]	M_{apk} [Nm]	$M_{aNotaus}$ [Nm]	n_{ak} [1/min]	J_{GA} 10^{-4} [kgm^2]	c_T PSF [Nm/']	F_{Ramax} PSF [N]	F_{Rapk} PSF [N]
PSF621 1	4.00	570	745	1110	375	16	55	13400	13400
	5.00	595	700	1050	300	14	55	13900	13500
	7.00	600	660	1020	260	13	51	13900	13700
	10.00	500	500	850	425	12	41	14200	14200

EPH				M1;M3;M5-6			M2			M4			φ		
	i	n_{epk} [1/min]	η [%]	a_0	a_1	a_2	a_0	a_1	a_2	a_0	a_1	a_2	[']	/R [']	/M [']
PSF621 1	4.00	6000	99	996	-1.152	0	1207	-1.848	0	1849	-4.743	0	4	2	1
	5.00	6000	99	1121	-1.327	0	1326	-2.063	0	1903	-4.914	0	4	2	1
	7.00	6000	99	1192	-1.511	0	1432	-2.373	0	2021	-5.353	0	4	2	1
	10.00	6000	99	1064	-1.505	0	1337	-2.426	0	1889	-5.215	0	4	2	1
PSF622 2	16.00	6000	98	1323	-3.716	0	1687	-7.193	0	1796	-8.699	0	6	3	1
	20.00	6000	98	1562	-6.428	0	1939	-11.106	0	2184	-15.605	0	6	3	1
	25.00	6000	98	1580	-6.664	0	1955	-11.342	0	2209	-15.961	0	6	3	1
	28.00	6000	98	1434	-4.471	0	1788	-8.092	0	1902	-9.706	0	6	3	1
	35.00	6000	98	1652	-7.501	0	2029	-12.358	0	2288	-17.166	0	6	3	1
	40.00	6000	98	1473	-5.229	0	1794	-8.771	0	1898	-10.358	0	6	3	1
	49.00	6000	98	2013	-11.606	0	2658	-21.472	0	2869	-26.726	0	6	3	1
	70.00	6000	98	2097	-13.821	0	2653	-23.285	0	2848	-28.435	0	6	3	1
	100.00	6000	98	2535	-22.533	0	3404	-41.310	0	3639	-47.984	0	6	3	1

14.2.10 PS.F 621/622 EPH.. [mm]

PSF621..

57 014 00 03

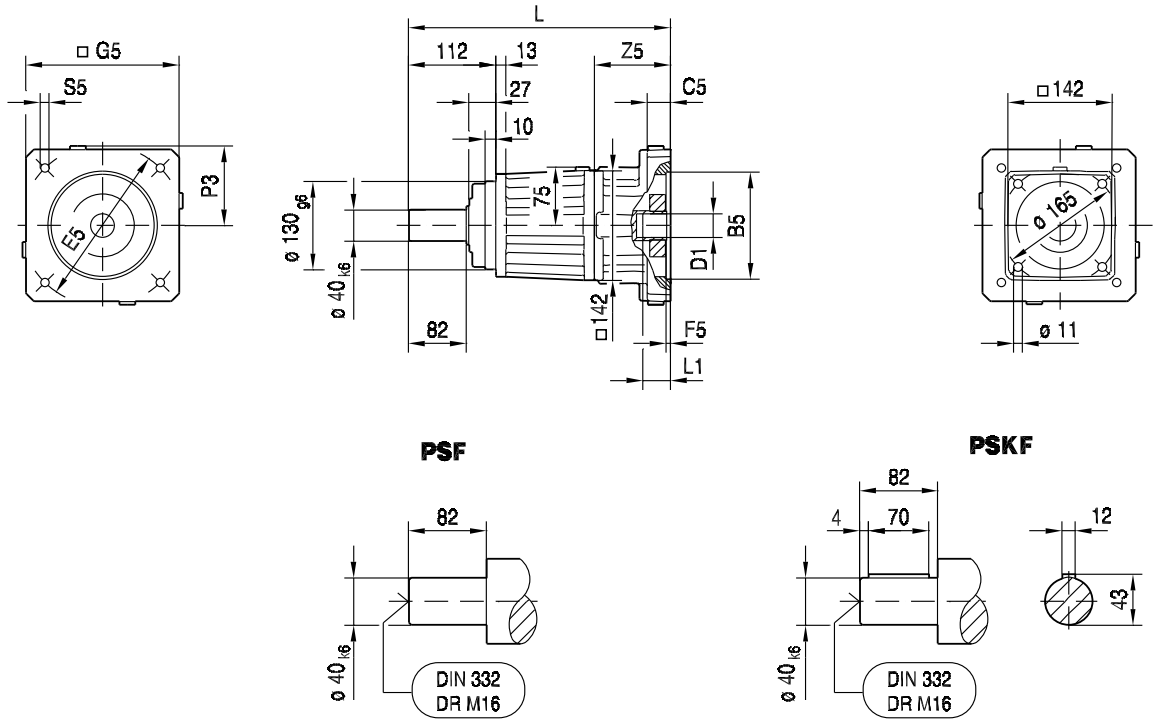

(→ 144)	L	B5	C5	E5	F5	G5	S5	Z5	L1	P3	D1 (→ 537)
EPH05/14/..	302	95	16	115	4	120	M8	54	52	62	14, 16, 17, 18, 19, 24
EPH05/15/..	302	95	16	130	4	120	M8	54	52	62	14, 16, 17, 18, 19, 24
EPH05/16/..	302	110	16	130	5	120	M8	54	52	62	14, 16, 17, 18, 19, 24
EPH05/17/..	302	110	16	145	7	120	M8	54	52	62	14, 16, 17, 18, 19, 24
EPH05/18/..	302	110	20	165	5	140	M10	54	52	72	14, 16, 17, 18, 19, 24
EPH05/20/..	302	130	20	165	5	140	M10	54	52	72	14, 16, 17, 18, 19, 24
EPH05/26/..	302	110	16	130	5	115	M8	54	52	61	14, 16, 17, 18, 19, 24
EPH06/19/..	337	114.3	24	200	5	174	M12	89	82	89	35
EPH07/20/..	317	130	24	165	5	155	M10	69	62	80	22, 24, 28, 32
EPH07/21/..	317	130	24	215	5	190	M12	69	62	97	22, 24, 28, 32
EPH07/22/..	317	180	24	215	5	190	M12	69	62	97	22, 24, 28, 32
EPH07/27/..	317	130	24	165	5	137	M10	69	62	72	22, 24, 28, 32
EPH07/28/..	317	155	24	190	5	162	M10	69	62	84	22, 24, 28, 32
EPH08/21/..	342	130	24	215	5	190	M12	94	82	97	32, 35, 38
EPH08/22/..	342	180	24	215	5	190	M12	94	82	97	32, 35, 38

PSF622..

57 015 00 03

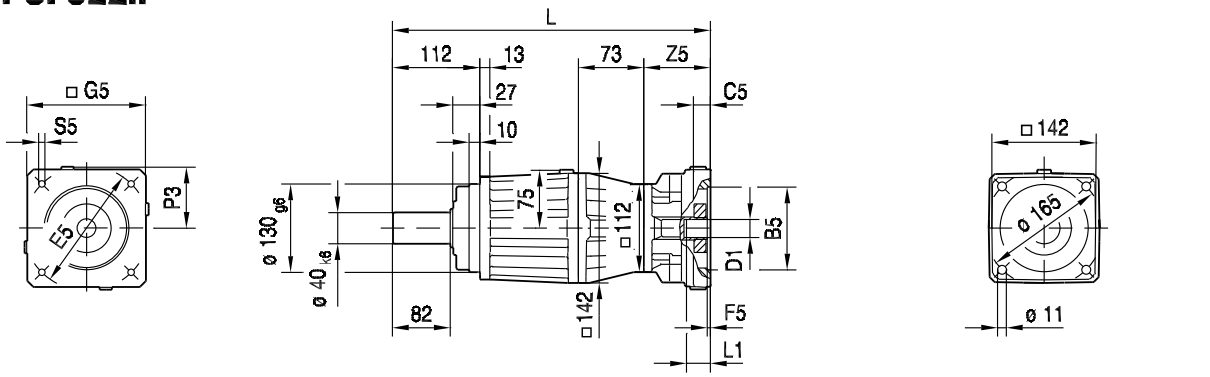

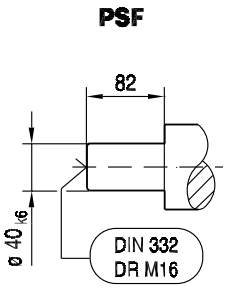

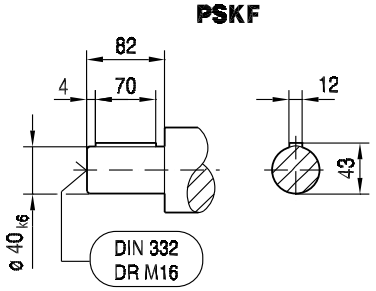

(→ 📖 144)	L	B5	C5	E5	F5	G5	S5	Z5	L1	P3	D1 (→ 📖 537)
EPH04/01/..	367	40	20	63	3.5	90	M4	46	43	47	11, 12, 14, 16, 19
EPH04/03/..	367	50	20	60	3.5	90	M4	46	41	47	11, 12, 14, 16, 19
EPH04/04/..	367	50	20	70	3.5	90	M5	46	41	47	11, 12, 14, 16, 19
EPH04/05/..	367	50	20	80	3.5	90	M4	46	41	47	11, 12, 14, 16, 19
EPH04/06/..	367	50	20	95	3.5	90	M6	46	41	47	11, 12, 14, 16, 19
EPH04/07/..	367	50	20	100	3.5	90	M6	46	41	47	11, 12, 14, 16, 19
EPH04/08/..	367	60	20	75	3.5	90	M5	46	41	47	11, 12, 14, 16, 19
EPH04/09/..	367	60	20	90	3.5	90	M5	46	41	47	11, 12, 14, 16, 19
EPH04/10/..	367	70	20	85	3.5	90	M6	46	41	47	11, 12, 14, 16, 19
EPH04/11/..	367	70	20	90	3.5	90	M5	46	41	47	11, 12, 14, 16, 19
EPH04/12/..	367	70	20	90	3.5	90	M6	46	41	47	11, 12, 14, 16, 19
EPH04/13/..	367	80	20	100	3.5	90	M6	46	41	47	11, 12, 14, 16, 19
EPH04/14/..	367	95	16	115	4	105	M8	46	41	55	11, 12, 14, 16, 19
EPH04/15/..	367	95	16	130	4	115	M8	46	41	60	11, 12, 14, 16, 19
EPH05/14/..	383	95	16	115	4	120	M8	62	52	62	14, 16, 17, 18, 19, 24
EPH05/15/..	383	95	16	130	4	120	M8	62	52	62	14, 16, 17, 18, 19, 24
EPH05/16/..	383	110	16	130	5	120	M8	62	52	62	14, 16, 17, 18, 19, 24
EPH05/17/..	383	110	16	145	7	120	M8	62	52	62	14, 16, 17, 18, 19, 24
EPH05/18/..	383	110	20	165	5	140	M10	62	52	72	14, 16, 17, 18, 19, 24
EPH05/20/..	383	130	20	165	5	140	M10	62	52	72	14, 16, 17, 18, 19, 24
EPH05/26/..	383	110	16	130	5	115	M8	62	52	61	14, 16, 17, 18, 19, 24
EPH06/19/..	418	114.3	24	200	5	174	M12	97	82	89	35
EPH07/20/..	398	130	24	165	5	155	M10	77	62	80	22, 24, 28, 32
EPH07/21/..	398	130	24	215	5	190	M12	77	62	97	22, 24, 28, 32
EPH07/22/..	398	180	24	215	5	190	M12	77	62	97	22, 24, 28, 32
EPH07/27/..	398	130	24	165	5	137	M10	77	62	72	22, 24, 28, 32
EPH07/28/..	398	155	24	190	5	162	M10	77	62	84	22, 24, 28, 32

14.2.11 PS.F 721/722 EPH.. [Nm]

[Nm]		EPH M_{amax} | M_{apk} | $M_{aNotaus}$														
	i	04			05			06			07			08		
PSF721 1	4.00				520	520	770	950	950	1410	950	950	1410	1000	1550	1980
	5.00				650	650	960	1000	1190	1760	1000	1190	1760	1000	1540	2310
	7.00				1000	1010	1520	1000	1380	2070	1000	1380	2070	1000	1380	2070
	10.00				1000	1040	1550	1000	1040	1550	1000	1040	1550	1000	1040	1550
PSF722 2	16.00	680	680	940	1000	1470	2200	1000	1470	2200	1000	1470	2200			
	20.00	850	850	1180	1000	1540	2310	1000	1540	2310	1000	1540	2310			
	25.00	1000	1060	1480	1000	1540	2310	1000	1540	2310	1000	1540	2310			
	28.00	1000	1220	1830	1000	1350	2020	1000	1350	2020	1000	1350	2020			
	35.00	1000	1530	2290	1000	1540	2310	1000	1540	2310	1000	1540	2310			
	40.00	1000	1080	1620	1000	1080	1620	1000	1080	1620	1000	1080	1620			
	49.00	1000	1380	2070	1000	1380	2070	1000	1380	2070	1000	1380	2070			
	70.00	1000	1380	2070	1000	1380	2070	1000	1380	2070	1000	1380	2070			
	100.00	1000	1040	1550	1000	1040	1550	1000	1040	1550	1000	1040	1550			

m [kg]		EPH				
	s	04	05	06	07	08
PSF721	1	30	32	34	34	38
PSF722	2	37	39	41	41	45

EPH04 n_e = 1500	i	M_{amax} [Nm]	M_{apk} [Nm]	$M_{aNotaus}$ [Nm]	n_{ak} [1/min]	J_{GA} 10^{-4} [kgm^2]	c_T PSF [Nm/']	F_{Ramax} PSF [N]	F_{Rapk} PSF [N]
PSF722 2	16.00	680	680	940	438	2.7	122	36900	36900
	20.00	850	850	1180	350	2.5	131	36200	36200
	25.00	1000	1060	1480	280	1.9	135	35900	35800
	28.00	1000	1220	1830	172	1.4	132	36400	35800
	35.00	1000	1530	2290	200	1.4	138	35900	34500
	40.00	1000	1080	1620	157	1.2	123	36400	36200
	49.00	1000	1380	2070	143	1.3	124	35900	35000
	70.00	1000	1380	2070	100	1.1	122	35900	35000
	100.00	1000	1040	1550	70	1.1	94	35900	35800

EPH05 n_e = 1500	i	M_{amax} [Nm]	M_{apk} [Nm]	$M_{aNotaus}$ [Nm]	n_{ak} [1/min]	J_{GA} 10^{-4} [kgm^2]	c_T PSF [Nm/']	F_{Ramax} PSF [N]	F_{Rapk} PSF [N]
PSF721 1	4.00	520	520	770	1750	15	93	25700	37100
	5.00	650	650	960	1400	10	108	27500	36500
	7.00	1000	1010	1520	378	6.8	112	30400	35900
	10.00	1000	1040	1550	345	4.7	93	33800	35800
PSF722 2	16.00	1000	1470	2200	212	4.5	139	36400	35100
	20.00	1000	1540	2310	350	4.2	142	35900	34500
	25.00	1000	1540	2310	280	3.6	141	35900	34500
	28.00	1000	1350	2020	172	3.2	135	36400	35500
	35.00	1000	1540	2310	200	3.1	139	35900	34500
	40.00	1000	1080	1620	157	2.9	123	36400	36200
	49.00	1000	1380	2070	143	3.0	125	35900	35000
	70.00	1000	1380	2070	100	2.8	122	35900	35000
	100.00	1000	1040	1550	70	2.8	94	35900	35800

EPH06 n_e = 1500	i	M_{amax} [Nm]	M_{apk} [Nm]	$M_{aNotaus}$ [Nm]	n_{ak} [1/min]	J_{GA} 10^{-4} [kgm^2]	c_T PSF [Nm/']	F_{Ramax} PSF [N]	F_{Rapk} PSF [N]
PSF721 1	4.00	950	950	1410	555	18	121	25700	36500
	5.00	1000	1190	1760	430	14	130	27500	35500
	7.00	1000	1380	2070	378	9.9	124	30400	35000
	10.00	1000	1040	1550	345	7.5	94	33800	35800
PSF722 2	16.00	1000	1470	2200	212	7.4	140	36400	35100
	20.00	1000	1540	2310	350	7.1	142	35900	34500
	25.00	1000	1540	2310	280	6.5	141	35900	34500
	28.00	1000	1350	2020	172	6.1	136	36400	35500
	35.00	1000	1540	2310	200	6.0	140	35900	34500
	40.00	1000	1080	1620	157	5.7	123	36400	36200
	49.00	1000	1380	2070	143	5.9	125	35900	35000
	70.00	1000	1380	2070	100	5.6	122	35900	35000
	100.00	1000	1040	1550	70	5.6	94	35900	35800

EPH07 n_e = 1500	i	M_{amax} [Nm]	M_{apk} [Nm]	$M_{aNotaus}$ [Nm]	n_{ak} [1/min]	J_{GA} 10^{-4} [kgm^2]	c_T PSF [Nm/']	F_{Ramax} PSF [N]	F_{Rapk} PSF [N]
PSF721 1	4.00	950	950	1410	555	18	121	25700	36500
	5.00	1000	1190	1760	430	14	130	27500	35500
	7.00	1000	1380	2070	378	10.0	124	30400	35000
	10.00	1000	1040	1550	345	7.7	95	33800	35800
PSF722 2	16.00	1000	1470	2200	212	7.5	140	36400	35100
	20.00	1000	1540	2310	350	7.2	143	35900	34500
	25.00	1000	1540	2310	280	6.6	141	35900	34500
	28.00	1000	1350	2020	172	6.2	136	36400	35500
	35.00	1000	1540	2310	200	6.1	140	35900	34500
	40.00	1000	1080	1620	157	5.8	123	36400	36200
	49.00	1000	1380	2070	143	6.0	125	35900	35000
	70.00	1000	1380	2070	100	5.7	122	35900	35000
	100.00	1000	1040	1550	70	5.7	94	35900	35800

EPH08 n_e = 1500	i	M_{amax} [Nm]	M_{apk} [Nm]	$M_{aNotaus}$ [Nm]	n_{ak} [1/min]	J_{GA} 10^{-4} [kgm^2]	c_T PSF [Nm/']	F_{Ramax} PSF [N]	F_{Rapk} PSF [N]
PSF721 1	4.00	1000	1550	1980	465	24	130	25700	34800
	5.00	1000	1540	2310	430	19	136	27500	34500
	7.00	1000	1380	2070	378	16	127	30400	35000
	10.00	1000	1040	1550	345	14	95	33800	35800

EPH				M1;M3;M5-6			M2			M4			φ		
	i	n_{epk} [1/min]	η [%]	a_0	a_1	a_2	a_0	a_1	a_2	a_0	a_1	a_2	[']	/R [']	/M [']
PSF721 1	4.00	4500	99	1524	-1.947	0	2117	-3.799	0	3501	-10.340	0	4	2	1
	5.00	4500	99	1594	-2.053	0	2210	-3.979	0	3511	-10.393	0	4	2	1
	7.00	4500	99	1950	-2.602	0	2579	-4.792	0	3728	-11.195	0	4	2	1
	10.00	4500	99	1972	-2.804	0	2542	-4.959	0	3526	-10.834	0	4	2	1
PSF722 2	16.00	6000	98	1703	-4.528	0	2233	-8.655	0	2524	-11.916	0	6	3	1
	20.00	6000	98	1981	-6.022	0	2615	-11.892	0	2899	-15.452	0	6	3	1
	25.00	6000	98	2110	-6.545	0	2699	-12.379	0	2947	-15.840	0	6	3	1
	28.00	6000	98	2095	-6.037	0	2524	-10.259	0	2785	-13.668	0	6	3	1
	35.00	6000	98	2491	-8.271	0	2997	-14.334	0	3228	-17.969	0	6	3	1
	40.00	6000	98	2030	-6.487	0	2431	-10.532	0	2677	-13.820	0	6	3	1
	49.00	6000	98	2840	-12.118	0	3661	-23.086	0	3907	-27.349	0	6	3	1
	70.00	6000	98	2907	-14.090	0	3637	-24.695	0	3841	-28.698	0	6	3	1
	100.00	6000	98	3316	-21.875	0	4422	-41.392	0	4631	-46.160	0	6	3	1

14.2.12 PS.F 721/722 EPH.. [mm]

PSF721..

57 016 00 03

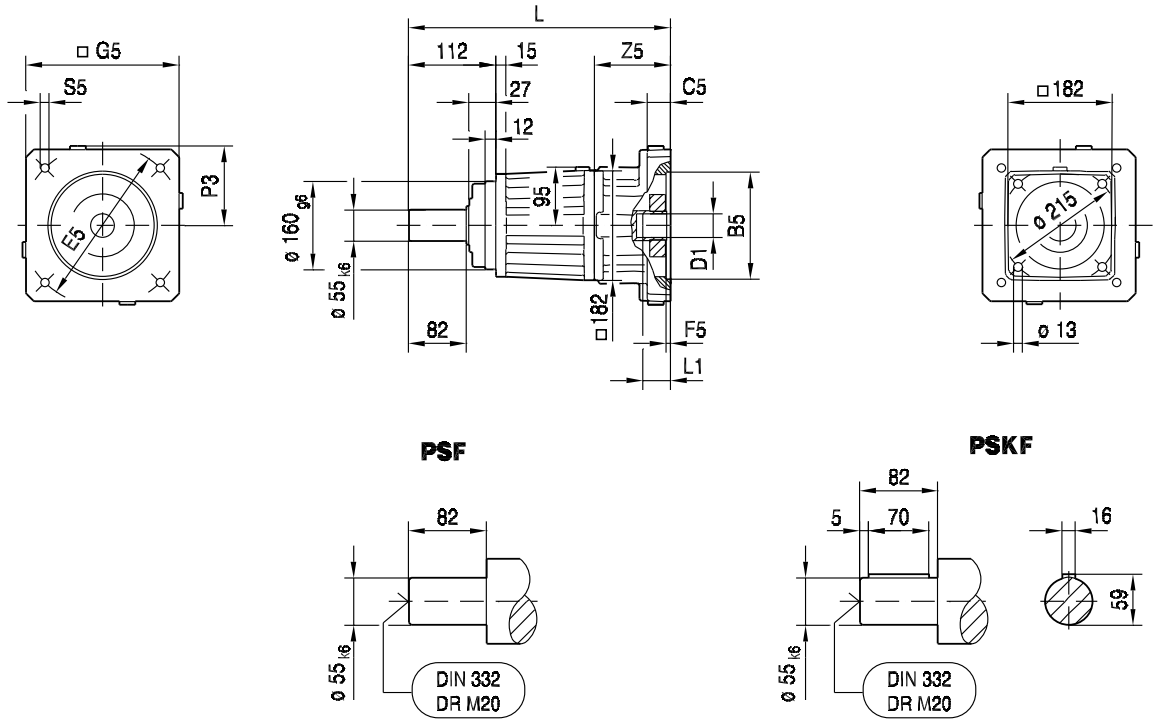

(→ 144)	L	B5	C5	E5	F5	G5	S5	Z5	L1	P3	D1 (→ 537)
EPH05/14/..	324	95	16	115	4	120	M8	50	56	62	14, 16, 17, 18, 19, 24
EPH05/15/..	324	95	16	130	4	120	M8	50	56	62	14, 16, 17, 18, 19, 24
EPH05/16/..	324	110	16	130	5	120	M8	50	56	62	14, 16, 17, 18, 19, 24
EPH05/17/..	324	110	16	145	7	120	M8	50	56	62	14, 16, 17, 18, 19, 24
EPH05/18/..	324	110	20	165	5	140	M10	50	56	72	14, 16, 17, 18, 19, 24
EPH05/20/..	324	130	20	165	5	140	M10	50	56	72	14, 16, 17, 18, 19, 24
EPH05/26/..	324	110	16	130	5	115	M8	50	56	61	14, 16, 17, 18, 19, 24
EPH06/19/..	359	114.3	24	200	5	174	M12	85	82	89	35
EPH07/20/..	339	130	24	165	5	155	M10	65	66	80	22, 24, 28, 32
EPH07/21/..	339	130	24	215	5	190	M12	65	66	97	22, 24, 28, 32
EPH07/22/..	339	180	24	215	5	190	M12	65	66	97	22, 24, 28, 32
EPH07/27/..	339	130	24	165	5	137	M10	65	66	72	22, 24, 28, 32
EPH07/28/..	339	155	24	190	5	162	M10	65	66	84	22, 24, 28, 32
EPH08/21/..	364	130	24	215	5	190	M12	90	82	97	32, 35, 38
EPH08/22/..	364	180	24	215	5	190	M12	90	82	97	32, 35, 38

PSF722..

57 017 00 03

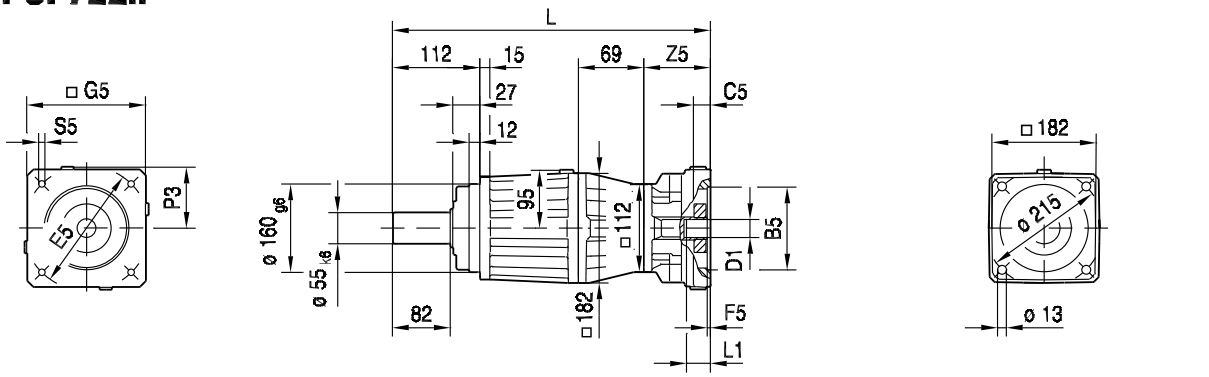

PSF

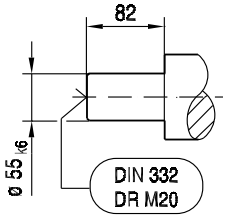

PSKF

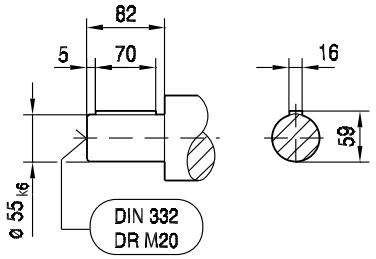

(→ 📖 144)	L	B5	C5	E5	F5	G5	S5	Z5	L1	P3	D1 (→ 📖 537)
EPH04/01/..	389	40	20	63	3.5	90	M4	46	43	47	11, 12, 14, 16, 19
EPH04/03/..	389	50	20	60	3.5	90	M4	46	41	47	11, 12, 14, 16, 19
EPH04/04/..	389	50	20	70	3.5	90	M5	46	41	47	11, 12, 14, 16, 19
EPH04/05/..	389	50	20	80	3.5	90	M4	46	41	47	11, 12, 14, 16, 19
EPH04/06/..	389	50	20	95	3.5	90	M6	46	41	47	11, 12, 14, 16, 19
EPH04/07/..	389	50	20	100	3.5	90	M6	46	41	47	11, 12, 14, 16, 19
EPH04/08/..	389	60	20	75	3.5	90	M5	46	41	47	11, 12, 14, 16, 19
EPH04/09/..	389	60	20	90	3.5	90	M5	46	41	47	11, 12, 14, 16, 19
EPH04/10/..	389	70	20	85	3.5	90	M6	46	41	47	11, 12, 14, 16, 19
EPH04/11/..	389	70	20	90	3.5	90	M5	46	41	47	11, 12, 14, 16, 19
EPH04/12/..	389	70	20	90	3.5	90	M6	46	41	47	11, 12, 14, 16, 19
EPH04/13/..	389	80	20	100	3.5	90	M6	46	41	47	11, 12, 14, 16, 19
EPH04/14/..	389	95	16	115	4	105	M8	46	41	55	11, 12, 14, 16, 19
EPH04/15/..	389	95	16	130	4	115	M8	46	41	60	11, 12, 14, 16, 19
EPH05/14/..	405	95	16	115	4	120	M8	62	52	62	14, 16, 17, 18, 19, 24
EPH05/15/..	405	95	16	130	4	120	M8	62	52	62	14, 16, 17, 18, 19, 24
EPH05/16/..	405	110	16	130	5	120	M8	62	52	62	14, 16, 17, 18, 19, 24
EPH05/17/..	405	110	16	145	7	120	M8	62	52	62	14, 16, 17, 18, 19, 24
EPH05/18/..	405	110	20	165	5	140	M10	62	52	72	14, 16, 17, 18, 19, 24
EPH05/20/..	405	130	20	165	5	140	M10	62	52	72	14, 16, 17, 18, 19, 24
EPH05/26/..	405	110	16	130	5	115	M8	62	52	61	14, 16, 17, 18, 19, 24
EPH06/19/..	440	114.3	24	200	5	174	M12	97	82	89	35
EPH07/20/..	420	130	24	165	5	155	M10	77	62	80	22, 24, 28, 32
EPH07/21/..	420	130	24	215	5	190	M12	77	62	97	22, 24, 28, 32
EPH07/22/..	420	180	24	215	5	190	M12	77	62	97	22, 24, 28, 32
EPH07/27/..	420	130	24	165	5	137	M10	77	62	72	22, 24, 28, 32
EPH07/28/..	420	155	24	190	5	162	M10	77	62	84	22, 24, 28, 32

14.2.13 PS.F 821/822 EPH.. [Nm]

[Nm]		EPH M_{amax} | M_{apk} | $M_{aNotaus}$																	
	i	05			06			07			08			09			10		
PSF821 1	4.00													1750	2330	2330	1750	2500	3750
	5.00													1750	2500	2660	1750	2500	3750
	7.00													1750	2740	3720	1750	2740	4110
	10.00													1750	2060	3090	1750	2060	3090
PSF822 2	16.00	1750	2080	3090	1750	2500	3750	1750	2500	3750	1750	2500	3750						
	20.00	1750	2500	3750	1750	2500	3750	1750	2500	3750	1750	2500	3750						
	25.00	1750	2500	3750	1750	2500	3750	1750	2500	3750	1750	2500	3750						
	28.00	1750	2500	3750	1750	2500	3750	1750	2500	3750	1750	2500	3750						
	35.00	1750	2500	3750	1750	2500	3750	1750	2500	3750	1750	2500	3750						
	40.00	1750	2000	3000	1750	2000	3000	1750	2000	3000	1750	2000	3000						
	49.00	1750	2740	4110	1750	2740	4110	1750	2740	4110	1750	2740	4110						
	70.00	1750	2740	4110	1750	2740	4110	1750	2740	4110	1750	2740	4110						
	100.00	1750	2060	3090	1750	2060	3090	1750	2060	3090	1750	2060	3090						

m [kg]		EPH					
	s	05	06	07	08	09	10
PSF821	1	44	46	46	50	58	61
PSF822	2	58	59	59	63	72	74

EPH05 n_e = 1500	i	M_{amax} [Nm]	M_{apk} [Nm]	$M_{aNotaus}$ [Nm]	n_{ak} [1/min]	J_{GA} 10^{-4} [kgm^2]	c_T PSF [Nm/']	F_{Ramax} PSF [N]	F_{Rapk} PSF [N]
PSF822 2	16.00	1750	2080	3090	228	8.8	364	51400	62300
	20.00	1750	2500	3750	290	7.8	386	54900	61700
	25.00	1750	2500	3750	280	6.0	391	58700	61700
	28.00	1750	2500	3750	185	4.7	373	60700	61700
	35.00	1750	2500	3750	200	4.3	389	62800	61700
	40.00	1750	2000	3000	168	3.6	335	62800	62500
	49.00	1750	2740	4110	143	4.1	375	62800	61200
	70.00	1750	2740	4110	100	3.3	364	62800	61200
	100.00	1750	2060	3090	70	3.2	295	62800	62400

EPH06 n_e = 1500	i	M_{amax} [Nm]	M_{apk} [Nm]	$M_{aNotaus}$ [Nm]	n_{ak} [1/min]	J_{GA} 10^{-4} [kgm^2]	c_T PSF [Nm/']	F_{Ramax} PSF [N]	F_{Rapk} PSF [N]
PSF822 2	16.00	1750	2500	3750	228	12	388	51400	61700
	20.00	1750	2500	3750	290	11	399	54900	61700
	25.00	1750	2500	3750	280	9.1	400	58700	61700
	28.00	1750	2500	3750	185	7.5	375	60700	61700
	35.00	1750	2500	3750	200	7.2	390	62800	61700
	40.00	1750	2000	3000	168	6.5	336	62800	62500
	49.00	1750	2740	4110	143	6.9	376	62800	61200
	70.00	1750	2740	4110	100	6.2	364	62800	61200
	100.00	1750	2060	3090	70	6.1	295	62800	62400

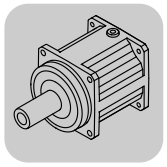

EPH07 n_e = 1500	i	M_{amax} [Nm]	M_{apk} [Nm]	$M_{aNotaus}$ [Nm]	n_{ak} [1/min]	J_{GA} 10^{-4} [kgm^2]	c_T PSF [Nm/']	F_{Ramax} PSF [N]	F_{Rapk} PSF [N]
PSF822 2	16.00	1750	2500	3750	228	12	388	51400	61700
	20.00	1750	2500	3750	290	11	399	54900	61700
	25.00	1750	2500	3750	280	9.2	400	58700	61700
	28.00	1750	2500	3750	185	7.6	376	60700	61700
	35.00	1750	2500	3750	200	7.3	391	62800	61700
	40.00	1750	2000	3000	168	6.6	336	62800	62500
	49.00	1750	2740	4110	143	7.0	376	62800	61200
	70.00	1750	2740	4110	100	6.3	364	62800	61200
	100.00	1750	2060	3090	70	6.2	295	62800	62400

EPH08 n_e = 1500	i	M_{amax} [Nm]	M_{apk} [Nm]	$M_{aNotaus}$ [Nm]	n_{ak} [1/min]	J_{GA} 10^{-4} [kgm^2]	c_T PSF [Nm/']	F_{Ramax} PSF [N]	F_{Rapk} PSF [N]
PSF822 2	16.00	1750	2500	3750	228	18	392	51400	61700
	20.00	1750	2500	3750	290	17	402	54900	61700
	25.00	1750	2500	3750	280	15	402	58700	61700
	28.00	1750	2500	3750	185	14	377	60700	61700
	35.00	1750	2500	3750	200	13	392	62800	61700
	40.00	1750	2000	3000	168	12	337	62800	62500
	49.00	1750	2740	4110	143	13	377	62800	61200
	70.00	1750	2740	4110	100	12	364	62800	61200
	100.00	1750	2060	3090	70	12	295	62800	62400

EPH09 n_e = 1500	i	M_{amax} [Nm]	M_{apk} [Nm]	$M_{aNotaus}$ [Nm]	n_{ak} [1/min]	J_{GA} 10^{-4} [kgm^2]	c_T PSF [Nm/']	F_{Ramax} PSF [N]	F_{Rapk} PSF [N]
PSF821 1	4.00	1750	2330	2330	314	68	345	33900	62000
	5.00	1750	2500	2660	290	52	372	36200	61700
	7.00	1750	2740	3720	255	37	364	40100	61200
	10.00	1750	2060	3090	233	29	293	44600	62400

EPH10 n_e = 1500	i	M_{amax} [Nm]	M_{apk} [Nm]	$M_{aNotaus}$ [Nm]	n_{ak} [1/min]	J_{GA} 10^{-4} [kgm^2]	c_T PSF [Nm/']	F_{Ramax} PSF [N]	F_{Rapk} PSF [N]
PSF821 1	4.00	1750	2500	3750	314	92	385	33900	61700
	5.00	1750	2500	3750	290	76	398	36200	61700
	7.00	1750	2740	4110	255	61	378	40100	61200
	10.00	1750	2060	3090	233	52	298	44600	62400

EPH				M1;M3;M5-6			M2			M4			φ		
	i	n_{epk} [1/min]	η [%]	a_0	a_1	a_2	a_0	a_1	a_2	a_0	a_1	a_2	[']	/R [']	/M [']
PSF821 1	4.00	4500	99	4217	-7.425	0	5191	-12.252	0	6721	-23.969	0	4	2	1
	5.00	4500	99	4471	-8.247	0	5349	-12.863	0	6853	-24.727	0	4	2	1
	7.00	4500	99	5039	-10.347	0	5819	-14.853	0	7333	-27.386	0	4	2	1
	10.00	4500	99	4719	-11.159	0	5315	-14.717	0	6753	-26.550	0	4	2	1
PSF822 2	16.00	6000	98	3568	-10.880	0	4345	-19.243	0	4794	-25.988	0	6	3	1
	20.00	6000	98	4416	-21.396	0	5069	-31.290	0	6192	-54.460	0	6	3	1
	25.00	6000	98	4450	-21.888	0	5106	-31.768	0	6237	-55.183	0	6	3	1
	28.00	6000	98	3995	-13.025	0	4743	-21.874	0	5208	-29.194	0	6	3	1
	35.00	6000	98	4592	-23.660	0	5266	-33.916	0	6431	-58.264	0	6	3	1
	40.00	6000	98	3702	-13.189	0	4456	-21.708	0	4902	-28.696	0	6	3	1
	49.00	6000	98	5417	-33.382	0	6507	-53.318	0	7429	-77.782	0	6	3	1
	70.00	6000	98	5506	-37.270	0	6516	-56.809	0	7406	-81.296	0	6	3	1
	100.00	6000	98	6006	-52.245	0	7651	-89.531	0	8327	-113.9	0	6	3	1

14.2.14 PS.F 821/822 EPH.. [mm]

PSF821..

57 018 00 03

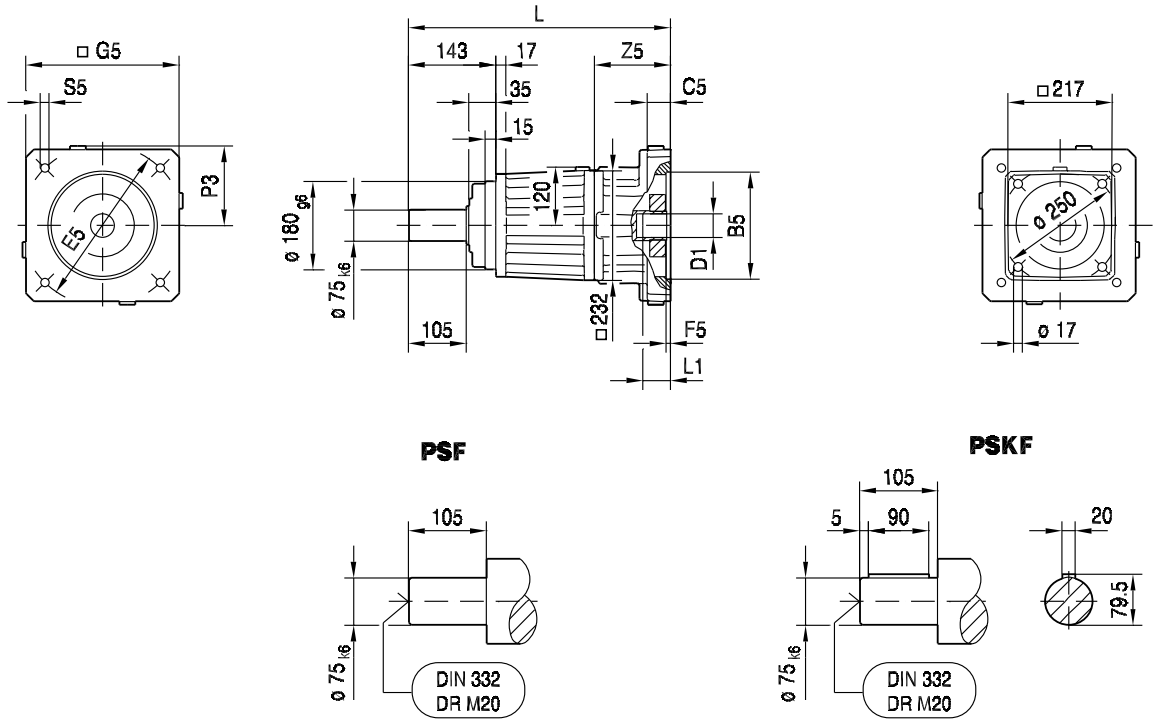

(→ 📖 144)	L	B5	C5	E5	F5	G5	S5	Z5	L1	P3	D1 (→ 📖 537)
EPH09/22/..	423	180	36	215	5	190	M12	99	85	97	32, 35, 38, 42
EPH09/23/..	453	230	30	265	5	240	M12	129	115	122	32, 35, 38, 42
EPH09/24/..	453	250	30	300	6	260	M16	129	115	132	32, 35, 38, 42
EPH09/25/..	453	300	30	350	6	310	M16	129	115	132	32, 35, 38, 42
EPH10/22/..	447	180	30	215	6	190	M12	123	85	132	48, 55
EPH10/23/..	447	230	30	265	6	240	M12	123	115	132	48, 55
EPH10/24/..	453	250	30	300	6	260	M16	129	115	132	48, 55
EPH10/25/..	453	300	30	350	6	310	M16	129	115	157	48, 55

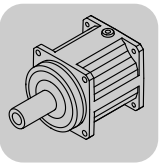

PSF822..

57 019 00 03

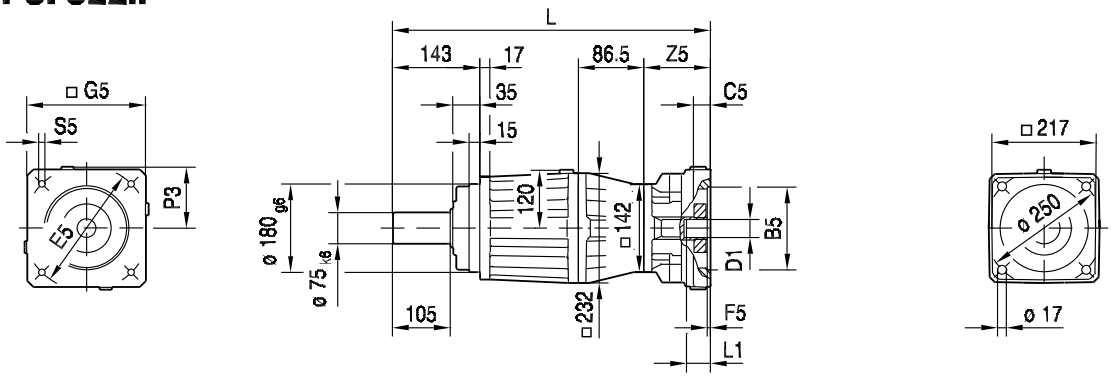

PSF

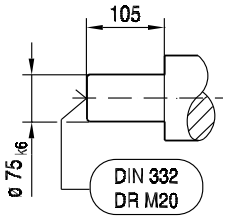

PSKF

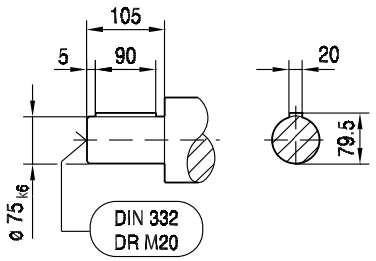

(→ 📖 144)	L	B5	C5	E5	F5	G5	S5	Z5	L1	P3	D1 (→ 📖 537)
EPH05/14/..	465	95	16	115	4	120	M8	54	52	62	14, 16, 17, 18, 19, 24
EPH05/15/..	465	95	16	130	4	120	M8	54	52	62	14, 16, 17, 18, 19, 24
EPH05/16/..	465	110	16	130	5	120	M8	54	52	62	14, 16, 17, 18, 19, 24
EPH05/17/..	465	110	16	145	7	120	M8	54	52	62	14, 16, 17, 18, 19, 24
EPH05/18/..	465	110	20	165	5	140	M10	54	52	72	14, 16, 17, 18, 19, 24
EPH05/20/..	465	130	20	165	5	140	M10	54	52	72	14, 16, 17, 18, 19, 24
EPH05/26/..	465	110	16	130	5	115	M8	54	52	61	14, 16, 17, 18, 19, 24
EPH06/19/..	500	114.3	24	200	5	174	M12	89	82	89	35
EPH07/20/..	480	130	24	165	5	155	M10	69	62	80	22, 24, 28, 32
EPH07/21/..	480	130	24	215	5	190	M12	69	62	97	22, 24, 28, 32
EPH07/22/..	480	180	24	215	5	190	M12	69	62	97	22, 24, 28, 32
EPH07/27/..	480	130	24	165	5	137	M10	69	62	72	22, 24, 28, 32
EPH07/28/..	480	155	24	190	5	162	M10	69	62	84	22, 24, 28, 32
EPH08/21/..	505	130	24	215	5	190	M12	94	82	97	32, 35, 38
EPH08/22/..	505	180	24	215	5	190	M12	94	82	97	32, 35, 38

14.2.15 PS.F 921/922 EPH.. [Nm]

[Nm]		EPH M_{amax} | M_{apk} | $M_{aNotaus}$																	
	i	05			06			07			08			09			10		
PSF921 1	4.00																3000	4200	6230
	5.00																3000	4200	6300
	7.00													3000	4080	4080	3000	4200	6300
	10.00													3000	3230	4840	3000	3230	4840
PSF922 2	16.00	2080	2080	3090	3000	3800	5650	3000	3800	5640	3000	4150	6230						
	20.00	2600	2600	3860	3000	4200	6300	3000	4200	6300	3000	4200	6300						
	25.00	3000	3250	4830	3000	4200	6300	3000	4200	6300	3000	4200	6300						
	28.00	3000	4060	6090	3000	4200	6230	3000	4200	6230	3000	4200	6230						
	35.00	3000	4200	6300	3000	4200	6300	3000	4200	6300	3000	4200	6300						
	40.00	3000	4150	6230	3000	4150	6230	3000	4150	6230	3000	4150	6230						
	49.00	3000	3310	4960	3000	3310	4960	3000	3310	4960	3000	3310	4960						
	70.00	3000	4200	6300	3000	4200	6300	3000	4200	6300	3000	4200	6300						
	100.00	3000	3230	4840	3000	3230	4840	3000	3230	4840	3000	3230	4840						

m [kg]		EPH					
	s	05	06	07	08	09	10
PSF921	1	60	61	62	65	73	76
PSF922	2	80	82	82	86	94	96

EPH05 n_e = 1500	i	M_{amax} [Nm]	M_{apk} [Nm]	$M_{aNotaus}$ [Nm]	n_{ak} [1/min]	J_{GA} 10^{-4} [kgm^2]	c_T PSF [Nm/']	F_{Ramax} PSF [N]	F_{Rapk} PSF [N]
PSF922 2	16.00	2080	2080	3090	438	17	454	55000	84200
	20.00	2600	2600	3860	350	16	484	58800	83700
	25.00	3000	3250	4830	247	11	501	62800	83000
	28.00	3000	4060	6090	247	7.6	494	65000	81900
	35.00	3000	4200	6300	200	7.1	511	69500	81600
	40.00	3000	4150	6230	175	5.1	468	72300	81700
	49.00	3000	3310	4960	143	6.5	486	76900	82900
	70.00	3000	4200	6300	100	4.6	485	83300	81600
	100.00	3000	3230	4840	70	4.4	405	83300	83000

EPH06 n_e = 1500	i	M_{amax} [Nm]	M_{apk} [Nm]	$M_{aNotaus}$ [Nm]	n_{ak} [1/min]	J_{GA} 10^{-4} [kgm^2]	c_T PSF [Nm/']	F_{Ramax} PSF [N]	F_{Rapk} PSF [N]
PSF922 2	16.00	3000	3800	5650	269	20	502	55000	82300
	20.00	3000	4200	6300	248	19	519	58800	81600
	25.00	3000	4200	6300	247	14	522	62800	81600
	28.00	3000	4200	6230	247	11	505	65000	81600
	35.00	3000	4200	6300	200	10	519	69500	81600
	40.00	3000	4150	6230	175	8.0	469	72300	81700
	49.00	3000	3310	4960	143	9.6	492	76900	82900
	70.00	3000	4200	6300	100	7.4	484	83300	81600
	100.00	3000	3230	4840	70	7.3	405	83300	83000

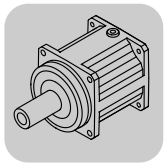

EPH07 n_e = 1500	i	M_{amax} [Nm]	M_{apk} [Nm]	$M_{aNotaus}$ [Nm]	n_{ak} [1/min]	J_{GA} 10^{-4} [kgm^2]	c_T PSF [Nm/']	F_{Ramax} PSF [N]	F_{Rapk} PSF [N]
PSF922 2	16.00	3000	3800	5640	269	21	502	55000	82300
	20.00	3000	4200	6300	248	19	519	58800	81600
	25.00	3000	4200	6300	247	14	522	62800	81600
	28.00	3000	4200	6230	247	11	505	65000	81600
	35.00	3000	4200	6300	200	10	519	69500	81600
	40.00	3000	4150	6230	175	8.1	471	72300	81700
	49.00	3000	3310	4960	143	9.8	492	76900	82900
	70.00	3000	4200	6300	100	7.5	486	83300	81600
	100.00	3000	3230	4840	70	7.4	406	83300	83000

EPH08 n_e = 1500	i	M_{amax} [Nm]	M_{apk} [Nm]	$M_{aNotaus}$ [Nm]	n_{ak} [1/min]	J_{GA} 10^{-4} [kgm^2]	c_T PSF [Nm/']	F_{Ramax} PSF [N]	F_{Rapk} PSF [N]
PSF922 2	16.00	3000	4150	6230	269	27	518	55000	81700
	20.00	3000	4200	6300	248	25	528	58800	81600
	25.00	3000	4200	6300	247	21	528	62800	81600
	28.00	3000	4200	6230	247	17	508	65000	81600
	35.00	3000	4200	6300	200	16	521	69500	81600
	40.00	3000	4150	6230	175	14	471	72300	81700
	49.00	3000	3310	4960	143	16	492	76900	82900
	70.00	3000	4200	6300	100	13	486	83300	81600
	100.00	3000	3230	4840	70	13	406	83300	83000

EPH09 n_e = 1500	i	M_{amax} [Nm]	M_{apk} [Nm]	$M_{aNotaus}$ [Nm]	n_{ak} [1/min]	J_{GA} 10^{-4} [kgm^2]	c_T PSF [Nm/']	F_{Ramax} PSF [N]	F_{Rapk} PSF [N]
PSF921	7.00	3000	4080	4080	218	53	467	42900	81800
1	10.00	3000	3230	4840	199	36	399	47700	83000

EPH10 n_e = 1500	i	M_{amax} [Nm]	M_{apk} [Nm]	$M_{aNotaus}$ [Nm]	n_{ak} [1/min]	J_{GA} 10^{-4} [kgm^2]	c_T PSF [Nm/']	F_{Ramax} PSF [N]	F_{Rapk} PSF [N]
PSF921	4.00	3000	4200	6230	270	132	480	36300	81600
1	5.00	3000	4200	6300	248	102	503	38800	81600
	7.00	3000	4200	6300	218	77	490	42900	81600
	10.00	3000	3230	4840	199	60	406	47700	83000

EPH				M1;M3;M5-6			M2			M4			φ		
	i	n_{epk} [1/min]	η [%]	a_0	a_1	a_2	a_0	a_1	a_2	a_0	a_1	a_2	[']	/R [']	/M [']
PSF921 1	4.00	4500	99	9165	-29.587	0	9784	-35.216	0	11056	-49.413	0	4	2	1
	5.00	4500	99	8486	-24.118	0	9185	-29.905	0	10599	-44.485	0	4	2	1
	7.00	4500	99	8258	-21.645	0	9107	-28.075	0	10744	-43.844	0	4	2	1
	10.00	4500	99	7237	-18.956	0	8101	-25.125	0	9728	-40.131	0	4	2	1
PSF922 2	16.00	4500	98	5759	-25.215	0	7084	-42.528	0	7589	-51.714	0	6	3	1
	20.00	4500	98	6227	-28.168	0	7969	-53.374	0	8324	-61.945	0	6	3	1
	25.00	4500	98	6514	-29.555	0	8216	-55.100	0	8600	-64.118	0	6	3	1
	28.00	4500	98	6902	-31.033	0	8120	-49.734	0	8638	-59.933	0	6	3	1
	35.00	4500	98	7223	-33.707	0	8865	-60.700	0	9286	-70.544	0	6	3	1
	40.00	4500	98	6839	-32.069	0	8005	-50.503	0	8504	-60.571	0	6	3	1
	49.00	4500	98	7867	-44.242	0	10602	-93.334	0	10921	-103.7	0	6	3	1
	70.00	4500	98	8301	-49.818	0	10735	-98.071	0	11043	-108.5	0	6	3	1
	100.00	4500	98	9298	-74.207	0	12973	-162.3	0	13196	-173.6	0	6	3	1

14.2.16 PS.F 921/922 EPH.. [mm]

57 020 00 03

PSF921..

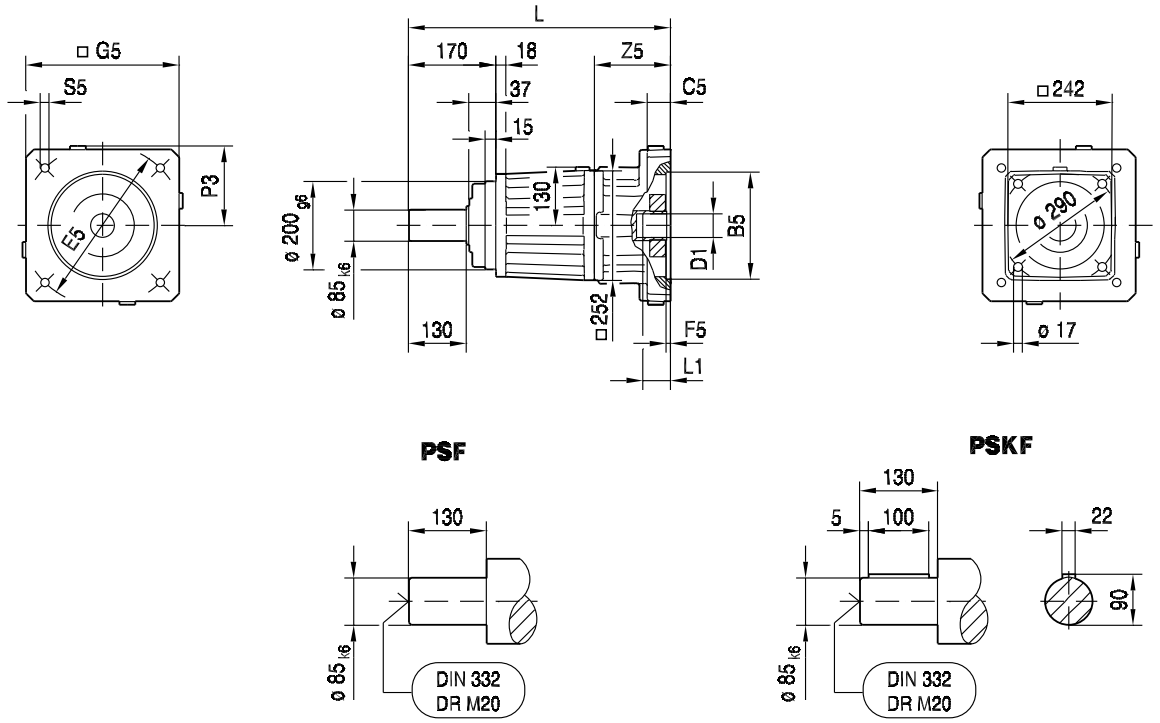

(→ 📖 144)	L	B5	C5	E5	F5	G5	S5	Z5	L1	P3	D1 (→ 📖 537)
EPH09/22/..	464	180	36	215	5	190	M12	93	85	97	32, 35, 38, 42
EPH09/23/..	494	230	30	265	5	240	M12	123	115	122	32, 35, 38, 42
EPH09/24/..	494	250	30	300	6	260	M16	123	115	132	32, 35, 38, 42
EPH09/25/..	500	300	30	350	6	310	M16	129	115	132	32, 35, 38, 42
EPH10/22/..	494	180	30	215	6	190	M12	123	85	132	48, 55
EPH10/23/..	494	230	30	265	6	240	M12	123	115	132	48, 55
EPH10/24/..	494	250	30	300	6	260	M16	123	115	132	48, 55
EPH10/25/..	494	300	30	350	6	310	M16	123	115	157	48, 55

PSF922..

57 021 00 03

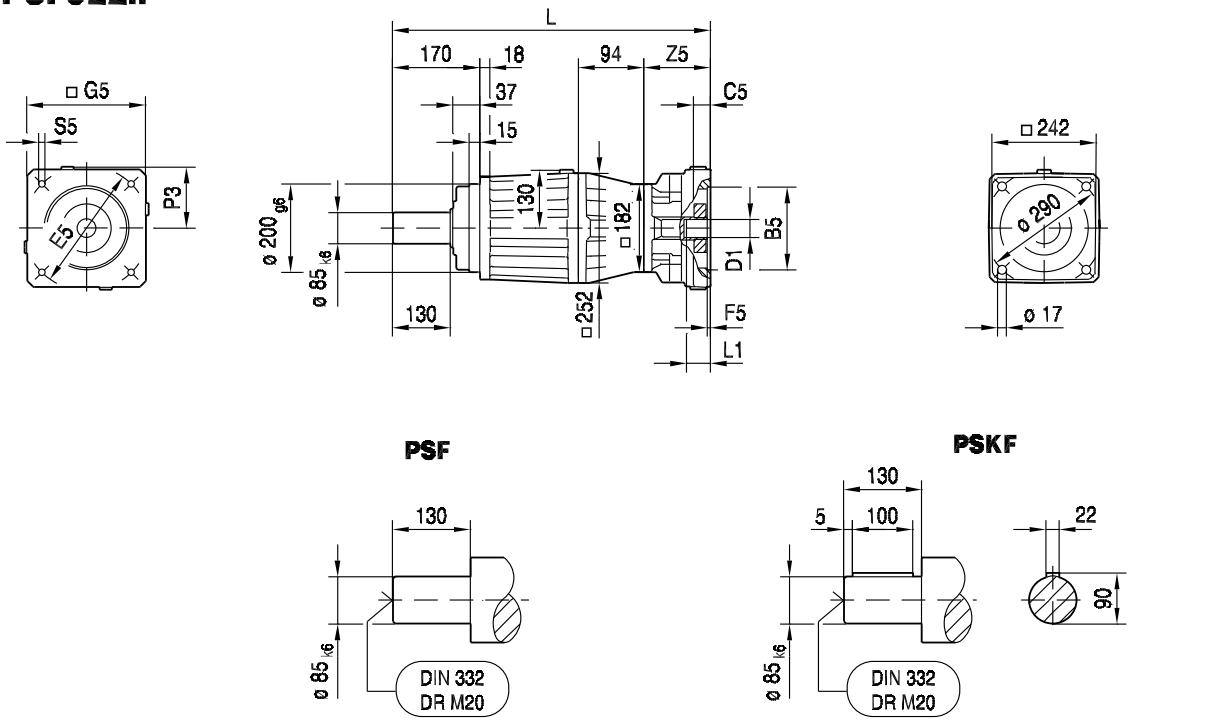

(→ 📖 144)	L	B5	C5	E5	F5	G5	S5	Z5	L1	P3	D1 (→ 📖 537)
EPH05/14/..	515	95	16	115	4	120	M8	50	56	62	14, 16, 17, 18, 19, 24
EPH05/15/..	515	95	16	130	4	120	M8	50	56	62	14, 16, 17, 18, 19, 24
EPH05/16/..	515	110	16	130	5	120	M8	50	56	62	14, 16, 17, 18, 19, 24
EPH05/17/..	515	110	16	145	7	120	M8	50	56	62	14, 16, 17, 18, 19, 24
EPH05/18/..	515	110	20	165	5	140	M10	50	56	72	14, 16, 17, 18, 19, 24
EPH05/20/..	515	130	20	165	5	140	M10	50	56	72	14, 16, 17, 18, 19, 24
EPH05/26/..	515	110	16	130	5	115	M8	50	56	61	14, 16, 17, 18, 19, 24
EPH06/19/..	550	114.3	24	200	5	174	M12	85	82	89	35
EPH07/20/..	530	130	24	165	5	155	M10	65	66	80	22, 24, 28, 32
EPH07/21/..	530	130	24	215	5	190	M12	65	66	97	22, 24, 28, 32
EPH07/22/..	530	180	24	215	5	190	M12	65	66	97	22, 24, 28, 32
EPH07/27/..	530	130	24	165	5	137	M10	65	66	72	22, 24, 28, 32
EPH07/28/..	530	155	24	190	5	162	M10	65	66	84	22, 24, 28, 32
EPH08/21/..	555	130	24	215	5	190	M12	90	82	97	32, 35, 38
EPH08/22/..	555	180	24	215	5	190	M12	90	82	97	32, 35, 38

14.2.17 PSBF 221/222 EPH.. [Nm]

[Nm]		EPH M_{amax} | M_{apk} | $M_{aNotaus}$											
	i	01			02			03			04		
PSBF221 1	5.00	38	38	56	55	80	120	55	80	120	55	80	120
	7.00	53	53	79	55	85	127	55	85	127	55	85	127
	10.00	55	62	93	55	62	93	55	62	93	55	62	93
PSBF222 2	20.00	55	80	120	55	80	120						
	25.00	55	80	120	55	80	120						
	35.00	55	80	120	55	80	120						
	49.00	55	85	127	55	85	127						
	70.00	55	85	127	55	85	127						
	100.00	55	62	93	55	62	93						

m [kg]		EPH			
	s	01	02	03	04
PSBF221	1	2.2	2.2	2.5	2.6
PSBF222	2	2.8	2.8	3.1	3.2

EPH01 n_e = 1500	i	M_{amax} [Nm]	M_{apk} [Nm]	$M_{aNotaus}$ [Nm]	n_{ak} [1/min]	J_{GA} 10^{-4} [kgm^2]	c_T PSBF [Nm/']	F_{Ramax} PSBF [N]	F_{Rapk} PSBF [N]
PSBF221 1	5.00	38	38	56	1400	0.29	8.4	1530	5000
	7.00	53	53	79	525	0.24	10.0	1720	5000
	10.00	55	62	93	420	0.22	8.5	1930	5000
PSBF222 2	20.00	55	80	120	350	0.23	15	2430	5000
	25.00	55	80	120	280	0.22	16	2620	5000
	35.00	55	80	120	200	0.21	16	2930	5000
	49.00	55	85	127	143	0.21	14	3280	5000
	70.00	55	85	127	100	0.20	14	3700	5000
	100.00	55	62	93	70	0.20	8.4	4160	5000

EPH02 n_e = 1500	i	M_{amax} [Nm]	M_{apk} [Nm]	$M_{aNotaus}$ [Nm]	n_{ak} [1/min]	J_{GA} 10^{-4} [kgm^2]	c_T PSBF [Nm/']	F_{Ramax} PSBF [N]	F_{Rapk} PSBF [N]
PSBF221 1	5.00	55	80	120	530	0.59	14	1530	5000
	7.00	55	85	127	465	0.55	14	1720	5000
	10.00	55	62	93	420	0.52	8.6	1930	5000
PSBF222 2	20.00	55	80	120	350	0.54	16	2430	5000
	25.00	55	80	120	280	0.52	16	2620	5000
	35.00	55	80	120	200	0.51	16	2930	5000
	49.00	55	85	127	143	0.51	14	3280	5000
	70.00	55	85	127	100	0.50	14	3700	5000
	100.00	55	62	93	70	0.50	8.4	4160	5000

EPH03 n_e = 1500	i	M_{amax} [Nm]	M_{apk} [Nm]	$M_{aNotaus}$ [Nm]	n_{ak} [1/min]	J_{GA} 10^{-4} [kgm^2]	c_T PSBF [Nm/']	F_{Ramax} PSBF [N]	F_{Rapk} PSBF [N]
PSBF221 1	5.00	55	80	120	530	0.66	14	1530	5000
	7.00	55	85	127	465	0.62	14	1720	5000
	10.00	55	62	93	420	0.60	8.6	1930	5000

EPH04 n_e = 1500	i	M_{amax} [Nm]	M_{apk} [Nm]	$M_{aNotaus}$ [Nm]	n_{ak} [1/min]	J_{GA} 10^{-4} [kgm^2]	c_T PSBF [Nm/']	F_{Ramax} PSBF [N]	F_{Rapk} PSBF [N]
PSBF221 1	5.00	55	80	120	530	0.84	17	1530	5000
	7.00	55	85	127	465	0.80	15	1720	5000
	10.00	55	62	93	420	0.77	8.6	1930	5000

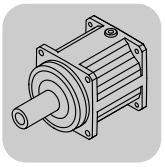

EPH	i	n_{epk} [1/min]	η [%]	M1;M3;M5-6 a_0	M1;M3;M5-6 a_1	M1;M3;M5-6 a_2	M2 a_0	M2 a_1	M2 a_2	M4 a_0	M4 a_1	M4 a_2	φ [']	φ /R [']	φ /M [']
PSBF221 1	5.00	7500	99	144.0	-0.111	0	185.0	-0.191	0	217	-0.273	0	6	3	1
	7.00	7500	99	163.0	-0.139	0	201	-0.223	0	196.0	-0.260	0	6	3	1
	10.00	7500	99	170.0	-0.168	0	196.0	-0.241	0	186.0	-0.269	0	6	3	1
PSBF222 2	20.00	8000	98	220	-0.515	0	292	-0.999	0	306	-1.121	0	8	4	2
	25.00	8000	98	227	-0.574	0	297	-1.061	0	311	-1.186	0	8	4	2
	35.00	8000	98	250	-0.746	0	317	-1.259	0	331	-1.392	0	8	4	2
	49.00	8000	98	328	-1.326	0	424	-2.293	0	438	-2.458	0	8	4	2
	70.00	8000	98	367	-1.879	0	449	-2.844	0	461	-3.013	0	8	4	2
	100.00	8000	98	470	-3.376	0	585	-5.223	0	597	-5.440	0	8	4	2

14.2.18 PSBF 221/222 EPH.. [mm]

PSBF221..

57 022 00 03

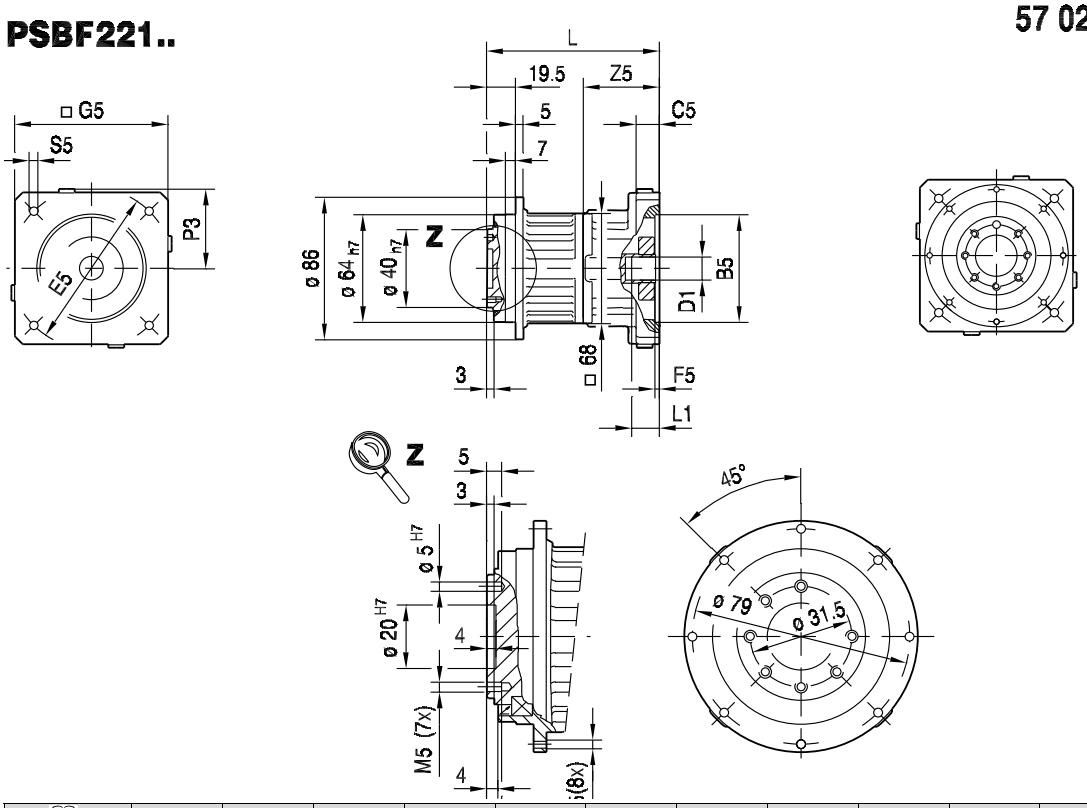

(→ 144)	L	B5	C5	E5	F5	G5	S5	Z5	L1	P3	D1 (→ 537)
EPH01/01/..	98	40	13	63	4	73	M4	38	33	39	9, 11
EPH01/03/..	98	50	13	60	4	73	M4	38	33	39	9, 11
EPH02/04/..	98	50	13	70	4	73	M5	38	34	39	8, 9, 10, 11, 12, 14
EPH02/05/..	98	50	13	80	4	73	M4	38	34	39	8, 9, 10, 11, 12, 14
EPH02/08/..	98	60	13	75	4	73	M5	38	34	39	8, 9, 10, 11, 12, 14
EPH03/01/..	106	40	20	63	3.5	90	M4	47	38	47	8, 9, 10, 11, 12, 14
EPH03/03/..	106	50	20	60	3.5	90	M4	47	30	47	8, 9, 10, 11, 12, 14
EPH03/04/..	106	50	20	70	3.5	90	M5	47	30	47	8, 9, 10, 11, 12, 14
EPH03/05/..	106	50	20	80	3.5	90	M4	47	30	47	8, 9, 10, 11, 12, 14
EPH03/06/..	106	50	20	95	3.5	90	M6	47	30	47	8, 9, 10, 11, 12, 14
EPH03/07/..	106	50	20	100	3.5	90	M6	47	30	47	8, 9, 10, 11, 12, 14
EPH03/08/..	106	60	20	75	3.5	90	M5	47	30	47	8, 9, 10, 11, 12, 14
EPH03/09/..	106	60	20	90	3.5	90	M5	47	30	47	8, 9, 10, 11, 12, 14
EPH03/10/..	106	70	20	85	3.5	90	M6	47	30	47	8, 9, 10, 11, 12, 14
EPH03/11/..	106	70	20	90	3.5	90	M5	47	30	47	8, 9, 10, 11, 12, 14
EPH03/12/..	106	70	20	90	3.5	90	M6	47	30	47	8, 9, 10, 11, 12, 14
EPH03/13/..	106	80	20	100	3.5	90	M6	47	30	47	8, 9, 10, 11, 12, 14
EPH03/14/..	106	95	16	115	4	105	M8	47	30	55	8, 9, 10, 11, 12, 14
EPH04/01/..	116	40	20	63	3.5	90	M4	56	43	47	11, 12, 14, 16, 19
EPH04/03/..	116	50	20	60	3.5	90	M4	56	41	47	11, 12, 14, 16, 19
EPH04/04/..	116	50	20	70	3.5	90	M5	56	41	47	11, 12, 14, 16, 19
EPH04/05/..	116	50	20	80	3.5	90	M4	56	41	47	11, 12, 14, 16, 19
EPH04/06/..	116	50	20	95	3.5	90	M6	56	41	47	11, 12, 14, 16, 19
EPH04/07/..	116	50	20	100	3.5	90	M6	56	41	47	11, 12, 14, 16, 19
EPH04/08/..	116	60	20	75	3.5	90	M5	56	41	47	11, 12, 14, 16, 19
EPH04/09/..	116	60	20	90	3.5	90	M5	56	41	47	11, 12, 14, 16, 19
EPH04/10/..	116	70	20	85	3.5	90	M6	56	41	47	11, 12, 14, 16, 19
EPH04/11/..	116	70	20	90	3.5	90	M5	56	41	47	11, 12, 14, 16, 19
EPH04/12/..	116	70	20	90	3.5	90	M6	56	41	47	11, 12, 14, 16, 19
EPH04/13/..	116	80	20	100	3.5	90	M6	56	41	47	11, 12, 14, 16, 19
EPH04/14/..	116	95	16	115	4	105	M8	56	41	55	11, 12, 14, 16, 19
EPH04/15/..	116	95	16	130	4	115	M8	56	41	60	11, 12, 14, 16, 19

PSBF222..

57 023 00 03

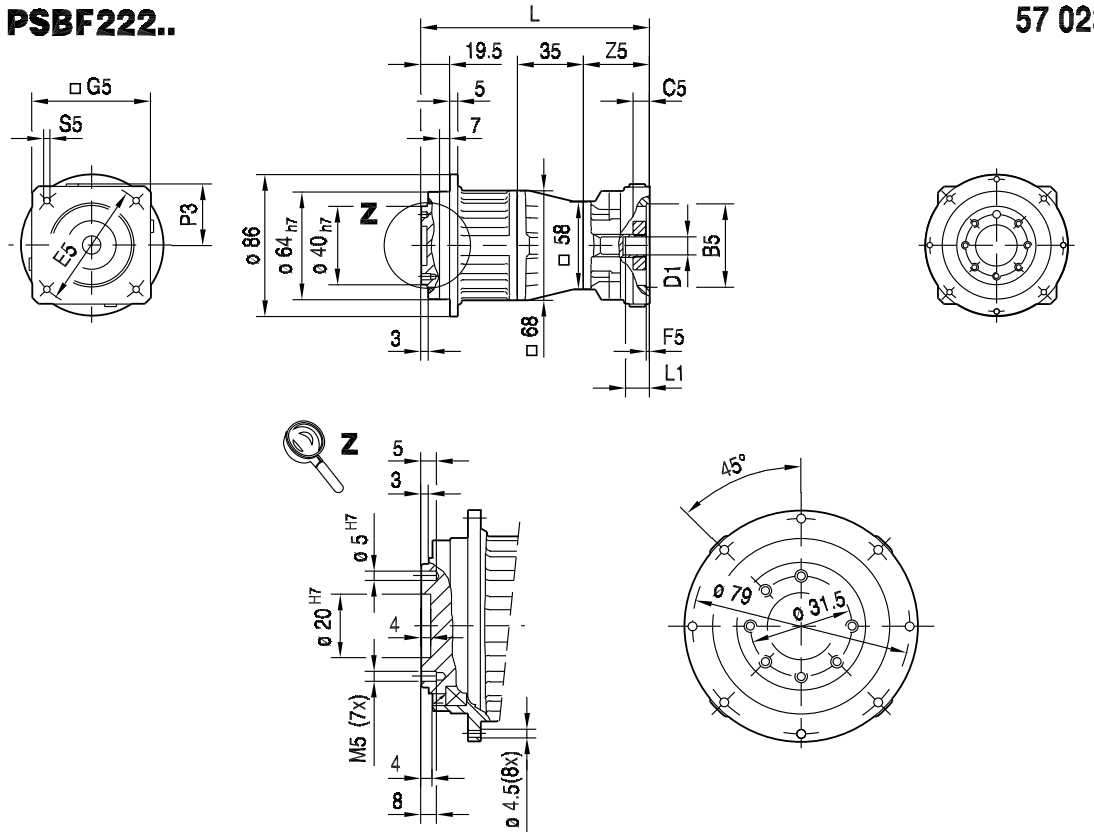

(→ 144)	L	B5	C5	E5	F5	G5	S5	Z5	L1	P3	D1 (→ 537)
EPH01/01/..	139	40	13	63	3.5	58	M4	44	33	31	9, 11
EPH01/03/..	139	50	13	60	3.5	58	M4	44	33	31	9, 11
EPH02/04/..	139	50	10	70	3.5	80	M5	44	34	42	8, 9, 10, 11, 12, 14
EPH02/05/..	139	50	10	80	3.5	80	M4	44	34	42	8, 9, 10, 11, 12, 14
EPH02/06/..	139	50	10	95	3.5	80	M6	44	34	42	8, 9, 10, 11, 12, 14
EPH02/08/..	139	60	10	75	3.5	80	M5	44	34	42	8, 9, 10, 11, 12, 14
EPH02/09/..	139	60	10	90	3.5	80	M5	44	34	42	8, 9, 10, 11, 12, 14
EPH02/10/..	139	70	10	85	3.5	80	M6	44	34	42	8, 9, 10, 11, 12, 14
EPH02/11/..	139	70	10	90	3.5	80	M5	44	34	42	8, 9, 10, 11, 12, 14
EPH02/13/..	152	80	23	100	5	88	M6	57	47	44	8, 9, 10, 11, 12, 14

14.2.19 PSBF 321/322 EPH.. [Nm]

[Nm]		EPH M_{amax} | M_{apk} | $M_{aNotaus}$														
	i	01			02			03			04			05		
PSBF321 1	5.00										110	169	250	110	169	250
	7.00										110	168	250	110	168	250
	10.00										110	121	181	110	121	181
PSBF322 2	15.00	110	113	169	110	169	250	110	169	250	110	169	250			
	20.00	110	150	225	110	169	250	110	169	250	110	169	250			
	25.00	110	169	250	110	169	250	110	169	250	110	169	250			
	35.00	110	169	250	110	169	250	110	169	250	110	169	250			
	49.00	110	168	250	110	168	250	110	168	250	110	168	250			
	70.00	110	168	250	110	168	250	110	168	250	110	168	250			
	100.00	110	121	181	110	121	181	110	121	181	110	121	181			

m [kg]		EPH				
	s	01	02	03	04	05
PSBF321	1	4.0	4.1	4.4	4.6	5.9
PSBF322	2	5.6	5.6	5.9	6.2	7.4

EPH01 n_e = 1500	i	M_{amax} [Nm]	M_{apk} [Nm]	$M_{aNotaus}$ [Nm]	n_{ak} [1/min]	J_{GA} 10^{-4} [kgm^2]	c_T PSBF [Nm/']	F_{Ramax} PSBF [N]	F_{Rapk} PSBF [N]
PSBF322 2	15.00	110	113	169	455	0.46	26	11900	25000
	20.00	110	150	225	350	0.33	30	13000	25000
	25.00	110	169	250	280	0.28	31	13900	25000
	35.00	110	169	250	200	0.24	32	15400	25000
	49.00	110	168	250	143	0.23	28	17000	25000
	70.00	110	168	250	100	0.21	28	18900	25000
	100.00	110	121	181	70	0.21	16	21100	25000

EPH02 n_e = 1500	i	M_{amax} [Nm]	M_{apk} [Nm]	$M_{aNotaus}$ [Nm]	n_{ak} [1/min]	J_{GA} 10^{-4} [kgm^2]	c_T PSBF [Nm/']	F_{Ramax} PSBF [N]	F_{Rapk} PSBF [N]
PSBF322 2	15.00	110	169	250	455	0.77	29	11900	25000
	20.00	110	169	250	350	0.63	33	13000	25000
	25.00	110	169	250	280	0.58	33	13900	25000
	35.00	110	169	250	200	0.54	33	15400	25000
	49.00	110	168	250	143	0.54	29	17000	25000
	70.00	110	168	250	100	0.52	28	18900	25000
	100.00	110	121	181	70	0.52	16	21100	25000

EPH03 n_e = 1500	i	M_{amax} [Nm]	M_{apk} [Nm]	$M_{aNotaus}$ [Nm]	n_{ak} [1/min]	J_{GA} 10^{-4} [kgm^2]	c_T PSBF [Nm/']	F_{Ramax} PSBF [N]	F_{Rapk} PSBF [N]
PSBF322 2	15.00	110	169	250	455	0.84	29	11900	25000
	20.00	110	169	250	350	0.71	33	13000	25000
	25.00	110	169	250	280	0.66	33	13900	25000
	35.00	110	169	250	200	0.62	33	15400	25000
	49.00	110	168	250	143	0.61	29	17000	25000
	70.00	110	168	250	100	0.59	28	18900	25000
	100.00	110	121	181	70	0.59	16	21100	25000

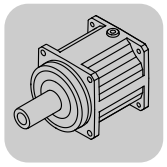

EPH04 n_e = 1500	i	M_{amax} [Nm]	M_{apk} [Nm]	$M_{aNotaus}$ [Nm]	n_{ak} [1/min]	J_{GA} 10^{-4} [kgm^2]	c_T PSBF [Nm/']	F_{Ramax} PSBF [N]	F_{Rapk} PSBF [N]
PSBF321 1	5.00	110	169	250	460	1.3	34	8580	25000
	7.00	110	168	250	405	1.1	30	9500	25000
	10.00	110	121	181	368	0.89	16	10600	25000
PSBF322 2	15.00	110	169	250	455	1.0	29	11900	25000
	20.00	110	169	250	350	0.88	33	13000	25000
	25.00	110	169	250	280	0.84	33	13900	25000
	35.00	110	169	250	200	0.79	33	15400	25000
	49.00	110	168	250	143	0.79	29	17000	25000
	70.00	110	168	250	100	0.76	28	18900	25000
	100.00	110	121	181	70	0.76	16	21100	25000

EPH05 n_e = 1500	i	M_{amax} [Nm]	M_{apk} [Nm]	$M_{aNotaus}$ [Nm]	n_{ak} [1/min]	J_{GA} 10^{-4} [kgm^2]	c_T PSBF [Nm/']	F_{Ramax} PSBF [N]	F_{Rapk} PSBF [N]
PSBF321 1	5.00	110	169	250	460	3.0	35	8580	25000
	7.00	110	168	250	405	2.8	30	9500	25000
	10.00	110	121	181	368	2.6	16	10600	25000

EPH	i	n_{epk} [1/min]	η [%]	M1;M3;M5-6 a_0	M1;M3;M5-6 a_1	M1;M3;M5-6 a_2	M2 a_0	M2 a_1	M2 a_2	M4 a_0	M4 a_1	M4 a_2	φ [']	φ /R [']	φ /M [']
PSBF321 1	5.00	7000	99	308	-0.327	0	352	-0.465	0	394	-0.698	0	6	3	1
	7.00	7000	99	315	-0.389	0	355	-0.525	0	419	-0.838	0	6	3	1
	10.00	7000	99	282	-0.426	0	324	-0.569	0	596	-1.963	0	6	3	1
PSBF322 2	15.00	7500	98	353	-0.949	0	460	-1.717	0	536	-2.477	0	8	4	2
	20.00	7500	98	365	-0.878	0	494	-1.824	0	526	-2.129	0	8	4	2
	25.00	7500	98	382	-0.956	0	503	-1.894	0	534	-2.202	0	8	4	2
	35.00	7500	98	404	-1.118	0	524	-2.098	0	555	-2.421	0	8	4	2
	49.00	7500	98	479	-1.768	0	641	-3.474	0	668	-3.835	0	8	4	2
	70.00	7500	98	509	-2.219	0	655	-3.923	0	681	-4.288	0	8	4	2
	100.00	7500	98	588	-3.573	0	787	-6.596	0	809	-7.019	0	8	4	2

14.2.20 PSBF 321/322 EPH.. [mm]

PSBF321..

57 024 00 03

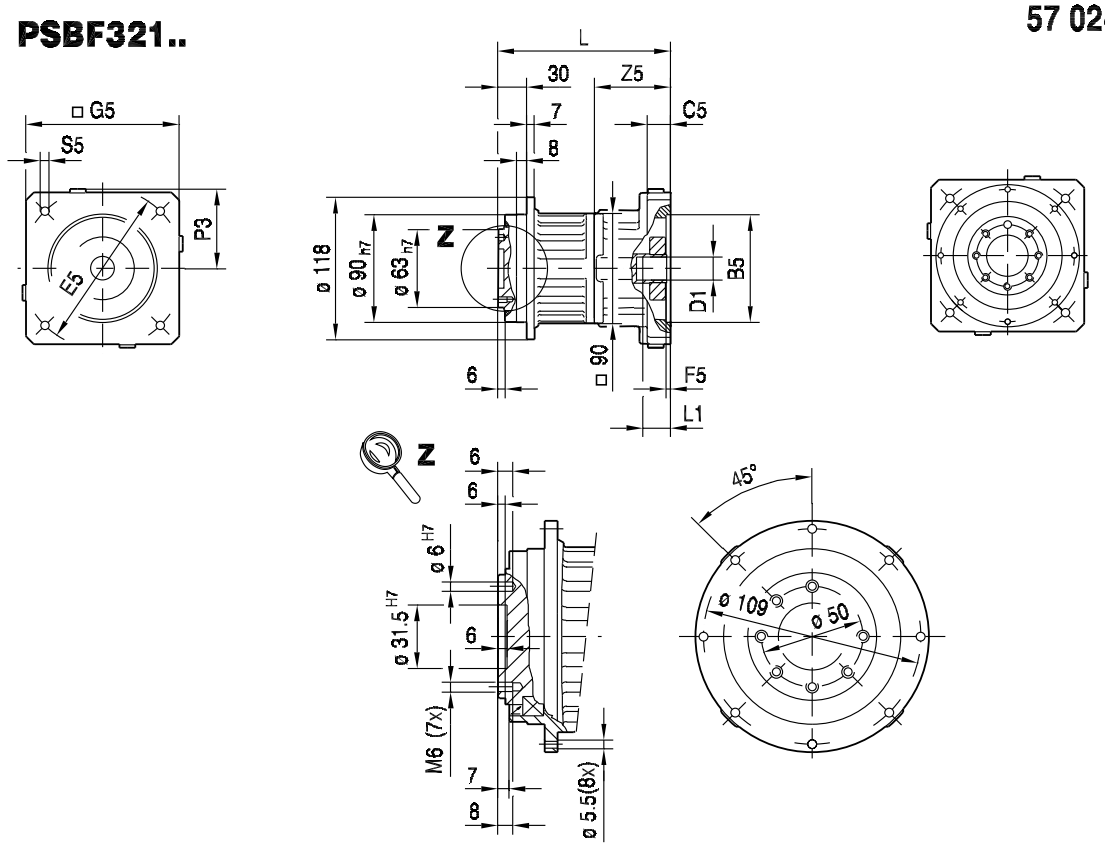

(→ 144)	L	B5	C5	E5	F5	G5	S5	Z5	L1	P3	D1 (→ 537)
EPH04/01/..	134	40	20	63	3.5	90	M4	51	43	47	11, 12, 14, 16, 19
EPH04/03/..	134	50	20	60	3.5	90	M4	51	41	47	11, 12, 14, 16, 19
EPH04/04/..	134	50	20	70	3.5	90	M5	51	41	47	11, 12, 14, 16, 19
EPH04/05/..	134	50	20	80	3.5	90	M4	51	41	47	11, 12, 14, 16, 19
EPH04/06/..	134	50	20	95	3.5	90	M6	51	41	47	11, 12, 14, 16, 19
EPH04/07/..	134	50	20	100	3.5	90	M6	51	41	47	11, 12, 14, 16, 19
EPH04/08/..	134	60	20	75	3.5	90	M5	51	41	47	11, 12, 14, 16, 19
EPH04/09/..	134	60	20	90	3.5	90	M5	51	41	47	11, 12, 14, 16, 19
EPH04/10/..	134	70	20	85	3.5	90	M6	51	41	47	11, 12, 14, 16, 19
EPH04/11/..	134	70	20	90	3.5	90	M5	51	41	47	11, 12, 14, 16, 19
EPH04/12/..	134	70	20	90	3.5	90	M6	51	41	47	11, 12, 14, 16, 19
EPH04/13/..	134	80	20	100	3.5	90	M6	51	41	47	11, 12, 14, 16, 19
EPH04/14/..	134	95	16	115	4	105	M8	51	41	55	11, 12, 14, 16, 19
EPH04/15/..	134	95	16	130	4	115	M8	51	41	60	11, 12, 14, 16, 19
EPH05/14/..	150	95	16	115	4	120	M8	67	52	62	14, 16, 17, 18, 19, 24
EPH05/15/..	150	95	16	130	4	120	M8	67	52	62	14, 16, 17, 18, 19, 24
EPH05/16/..	150	110	16	130	5	120	M8	67	52	62	14, 16, 17, 18, 19, 24
EPH05/17/..	150	110	16	145	7	120	M8	67	52	62	14, 16, 17, 18, 19, 24
EPH05/18/..	150	110	20	165	5	140	M10	67	52	72	14, 16, 17, 18, 19, 24
EPH05/20/..	150	130	20	165	5	140	M10	67	52	72	14, 16, 17, 18, 19, 24
EPH05/26/..	150	110	16	130	5	115	M8	67	52	61	14, 16, 17, 18, 19, 24

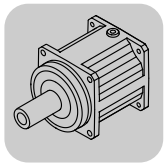

PSBF322..

57 025 00 03

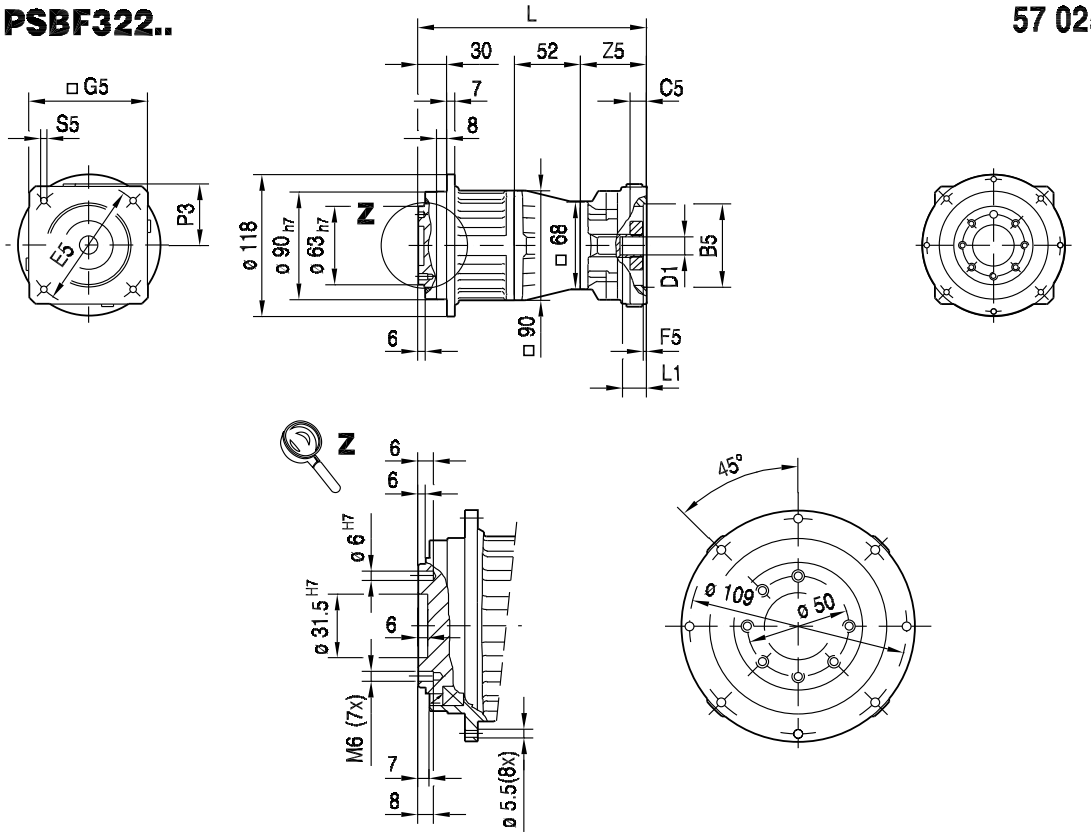

(→ 144)	L	B5	C5	E5	F5	G5	S5	Z5	L1	P3	D1 (→ 537)
EPH01/01/..	173	40	13	63	4	73	M4	38	33	39	9, 11
EPH01/03/..	173	50	13	60	4	73	M4	38	33	39	9, 11
EPH02/04/..	173	50	13	70	4	73	M5	38	34	39	8, 9, 10, 11, 12, 14
EPH02/05/..	173	50	13	80	4	73	M4	38	34	39	8, 9, 10, 11, 12, 14
EPH02/08/..	173	60	13	75	4	73	M5	38	34	39	8, 9, 10, 11, 12, 14
EPH03/01/..	182	40	20	63	3.5	90	M4	47	38	47	8, 9, 10, 11, 12, 14
EPH03/03/..	182	50	20	60	3.5	90	M4	47	30	47	8, 9, 10, 11, 12, 14
EPH03/04/..	182	50	20	70	3.5	90	M5	47	30	47	8, 9, 10, 11, 12, 14
EPH03/05/..	182	50	20	80	3.5	90	M4	47	30	47	8, 9, 10, 11, 12, 14
EPH03/06/..	182	50	20	95	3.5	90	M6	47	30	47	8, 9, 10, 11, 12, 14
EPH03/07/..	182	50	20	100	3.5	90	M6	47	30	47	8, 9, 10, 11, 12, 14
EPH03/08/..	182	60	20	75	3.5	90	M5	47	30	47	8, 9, 10, 11, 12, 14
EPH03/09/..	182	60	20	90	3.5	90	M5	47	30	47	8, 9, 10, 11, 12, 14
EPH03/10/..	182	70	20	85	3.5	90	M6	47	30	47	8, 9, 10, 11, 12, 14
EPH03/11/..	182	70	20	90	3.5	90	M5	47	30	47	8, 9, 10, 11, 12, 14
EPH03/12/..	182	70	20	90	3.5	90	M6	47	30	47	8, 9, 10, 11, 12, 14
EPH03/13/..	182	80	20	100	3.5	90	M6	47	30	47	8, 9, 10, 11, 12, 14
EPH03/14/..	182	95	16	115	4	105	M8	47	30	55	8, 9, 10, 11, 12, 14
EPH04/01/..	191	40	20	63	3.5	90	M4	56	43	47	11, 12, 14, 16, 19
EPH04/03/..	191	50	20	60	3.5	90	M4	56	41	47	11, 12, 14, 16, 19
EPH04/04/..	191	50	20	70	3.5	90	M5	56	41	47	11, 12, 14, 16, 19
EPH04/05/..	191	50	20	80	3.5	90	M4	56	41	47	11, 12, 14, 16, 19
EPH04/06/..	191	50	20	95	3.5	90	M6	56	41	47	11, 12, 14, 16, 19
EPH04/07/..	191	50	20	100	3.5	90	M6	56	41	47	11, 12, 14, 16, 19
EPH04/08/..	191	60	20	75	3.5	90	M5	56	41	47	11, 12, 14, 16, 19
EPH04/09/..	191	60	20	90	3.5	90	M5	56	41	47	11, 12, 14, 16, 19
EPH04/10/..	191	70	20	85	3.5	90	M6	56	41	47	11, 12, 14, 16, 19
EPH04/11/..	191	70	20	90	3.5	90	M5	56	41	47	11, 12, 14, 16, 19
EPH04/12/..	191	70	20	90	3.5	90	M6	56	41	47	11, 12, 14, 16, 19
EPH04/13/..	191	80	20	100	3.5	90	M6	56	41	47	11, 12, 14, 16, 19
EPH04/14/..	191	95	16	115	4	105	M8	56	41	55	11, 12, 14, 16, 19
EPH04/15/..	191	95	16	130	4	115	M8	56	41	60	11, 12, 14, 16, 19

14.2.21 PSBF 521/522 EPH.. [Nm]

[Nm]		EPH M_{amax} | M_{apk} | $M_{aNotaus}$											
	i	04			05			06			07		
PSBF521 1	5.00	210	210	295	300	375	560	300	375	560	300	375	560
	7.00	300	305	455	300	360	540	300	360	540	300	360	540
	10.00	270	270	445	270	270	445	270	270	445	270	270	445
PSBF522 2	15.00	300	375	560	300	375	560						
	20.00	300	375	560	300	375	560						
	25.00	300	375	560	300	375	560						
	35.00	300	375	560	300	375	560						
	49.00	300	360	540	300	360	540						
	70.00	300	360	540	300	360	540						
	100.00	270	270	445	270	270	445						

m [kg]		EPH			
	s	04	05	06	07
PSBF521	1	6.9	8.2	9.8	9.8
PSBF522	2	9.8	11	13	13

EPH04 n_e = 1500	i	M_{amax} [Nm]	M_{apk} [Nm]	$M_{aNotaus}$ [Nm]	n_{ak} [1/min]	J_{GA} 10^{-4} [kgm^2]	c_T PSBF [Nm/']	F_{Ramax} PSBF [N]	F_{Rapk} PSBF [N]
PSBF521 1	5.00	210	210	295	1400	2.0	59	13900	40000
	7.00	300	305	455	375	1.4	65	15400	40000
	10.00	270	270	445	485	1.2	43	17200	40000
PSBF522 2	15.00	300	375	560	425	1.5	98	19400	40000
	20.00	300	375	560	350	1.1	100	21100	40000
	25.00	300	375	560	280	1.0	100	22600	40000
	35.00	300	375	560	200	0.90	98	25000	40000
	49.00	300	360	540	143	0.88	77	27600	40000
	70.00	300	360	540	100	0.80	73	30800	40000
	100.00	270	270	445	70	0.80	42	34200	40000

EPH05 n_e = 1500	i	M_{amax} [Nm]	M_{apk} [Nm]	$M_{aNotaus}$ [Nm]	n_{ak} [1/min]	J_{GA} 10^{-4} [kgm^2]	c_T PSBF [Nm/']	F_{Ramax} PSBF [N]	F_{Rapk} PSBF [N]
PSBF521 1	5.00	300	375	560	425	3.7	101	13900	40000
	7.00	300	360	540	375	3.2	78	15400	40000
	10.00	270	270	445	485	2.9	43	17200	40000
PSBF522 2	15.00	300	375	560	425	3.2	99	19400	40000
	20.00	300	375	560	350	2.8	100	21100	40000
	25.00	300	375	560	280	2.7	100	22600	40000
	35.00	300	375	560	200	2.6	98	25000	40000
	49.00	300	360	540	143	2.6	77	27600	40000
	70.00	300	360	540	100	2.5	73	30800	40000
	100.00	270	270	445	70	2.5	42	34200	40000

EPH06 n_e = 1500	i	M_{amax} [Nm]	M_{apk} [Nm]	$M_{aNotaus}$ [Nm]	n_{ak} [1/min]	J_{GA} 10^{-4} [kgm^2]	c_T PSBF [Nm/']	F_{Ramax} PSBF [N]	F_{Rapk} PSBF [N]
PSBF521 1	5.00	300	375	560	425	6.6	105	13900	40000
	7.00	300	360	540	375	6.0	81	15400	40000
	10.00	270	270	445	485	5.7	43	17200	40000

EPH07 n_e = 1500	i	M_{amax} [Nm]	M_{apk} [Nm]	$M_{aNotaus}$ [Nm]	n_{ak} [1/min]	J_{GA} 10^{-4} [kgm^2]	c_T PSBF [Nm/']	F_{Ramax} PSBF [N]	F_{Rapk} PSBF [N]
PSBF521 1	5.00	300	375	560	425	6.7	109	13900	40000
	7.00	300	360	540	375	6.1	81	15400	40000
	10.00	270	270	445	485	5.8	43	17200	40000

EPH	i	n_{epk} [1/min]	η [%]	M1;M3;M5-6 a_0	M1;M3;M5-6 a_1	M1;M3;M5-6 a_2	M2 a_0	M2 a_1	M2 a_2	M4 a_0	M4 a_1	M4 a_2	φ [']	φ /R [']	φ /M [']
PSBF521 1	5.00	6000	99	532	-0.576	0	641	-0.923	0	832	-1.785	0	6	3	1
	7.00	6000	99	616	-0.723	0	740	-1.127	0	982	-2.214	0	6	3	1
	10.00	6000	99	582	-0.774	0	710	-1.198	0	951	-2.305	0	6	3	1
PSBF522 2	15.00	7000	98	769	-2.552	0	937	-4.188	0	1052	-5.766	0	8	4	2
	20.00	7000	98	792	-2.368	0	1041	-4.791	0	1182	-6.670	0	8	4	2
	25.00	7000	98	827	-2.651	0	1076	-5.144	0	1220	-7.094	0	8	4	2
	35.00	7000	98	872	-3.262	0	1099	-5.764	0	1230	-7.693	0	8	4	2
	49.00	7000	98	1149	-6.255	0	1423	-9.914	0	1559	-12.241	0	8	4	2
	70.00	7000	98	1225	-8.221	0	1450	-11.702	0	1553	-13.832	0	8	4	2
	100.00	7000	98	1492	-13.723	0	1823	-20.406	0	1925	-22.958	0	8	4	2

14.2.22 PSBF 521/522 EPH.. [mm]

PSBF521..

57 028 00 03

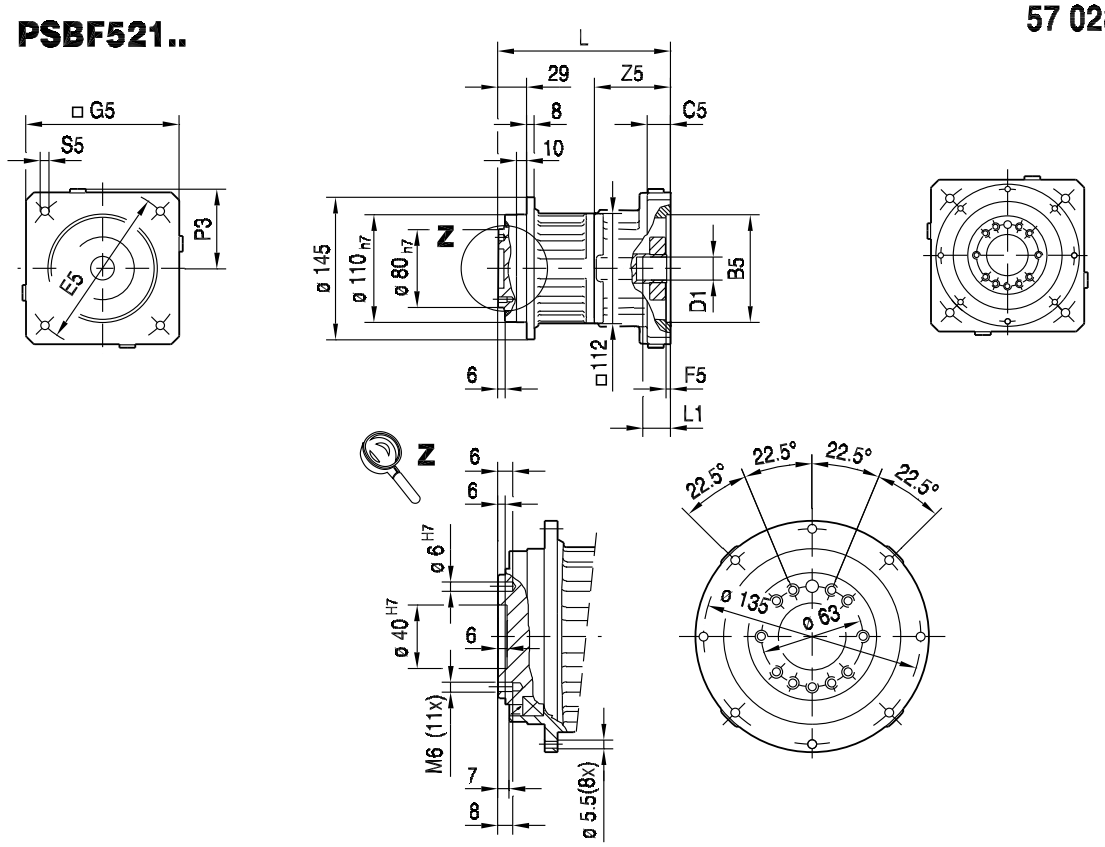

(→ 144)	L	B5	C5	E5	F5	G5	S5	Z5	L1	P3	D1 (→ 537)
EPH04/01/..	145	40	20	63	3.5	90	M4	46	43	47	11, 12, 14, 16, 19
EPH04/03/..	145	50	20	60	3.5	90	M4	46	41	47	11, 12, 14, 16, 19
EPH04/04/..	145	50	20	70	3.5	90	M5	46	41	47	11, 12, 14, 16, 19
EPH04/05/..	145	50	20	80	3.5	90	M4	46	41	47	11, 12, 14, 16, 19
EPH04/06/..	145	50	20	95	3.5	90	M6	46	41	47	11, 12, 14, 16, 19
EPH04/07/..	145	50	20	100	3.5	90	M6	46	41	47	11, 12, 14, 16, 19
EPH04/08/..	145	60	20	75	3.5	90	M5	46	41	47	11, 12, 14, 16, 19
EPH04/09/..	145	60	20	90	3.5	90	M5	46	41	47	11, 12, 14, 16, 19
EPH04/10/..	145	70	20	85	3.5	90	M6	46	41	47	11, 12, 14, 16, 19
EPH04/11/..	145	70	20	90	3.5	90	M5	46	41	47	11, 12, 14, 16, 19
EPH04/12/..	145	70	20	90	3.5	90	M6	46	41	47	11, 12, 14, 16, 19
EPH04/13/..	145	80	20	100	3.5	90	M6	46	41	47	11, 12, 14, 16, 19
EPH04/14/..	145	95	16	115	4	105	M8	46	41	55	11, 12, 14, 16, 19
EPH04/15/..	145	95	16	130	4	115	M8	46	41	60	11, 12, 14, 16, 19
EPH05/14/..	161	95	16	115	4	120	M8	62	52	62	14, 16, 17, 18, 19, 24
EPH05/15/..	161	95	16	130	4	120	M8	62	52	62	14, 16, 17, 18, 19, 24
EPH05/16/..	161	110	16	130	5	120	M8	62	52	62	14, 16, 17, 18, 19, 24
EPH05/17/..	161	110	16	145	7	120	M8	62	52	62	14, 16, 17, 18, 19, 24
EPH05/18/..	161	110	20	165	5	140	M10	62	52	72	14, 16, 17, 18, 19, 24
EPH05/20/..	161	130	20	165	5	140	M10	62	52	72	14, 16, 17, 18, 19, 24
EPH05/26/..	161	110	16	130	5	115	M8	62	52	61	14, 16, 17, 18, 19, 24
EPH06/19/..	196	114.3	24	200	5	174	M12	97	82	89	35
EPH07/20/..	176	130	24	165	5	155	M10	77	62	80	22, 24, 28, 32
EPH07/21/..	176	130	24	215	5	190	M12	77	62	97	22, 24, 28, 32
EPH07/22/..	176	180	24	215	5	190	M12	77	62	97	22, 24, 28, 32
EPH07/27/..	176	130	24	165	5	137	M10	77	62	72	22, 24, 28, 32
EPH07/28/..	176	155	24	190	5	162	M10	77	62	84	22, 24, 28, 32

PSBF522..

57 029 00 03

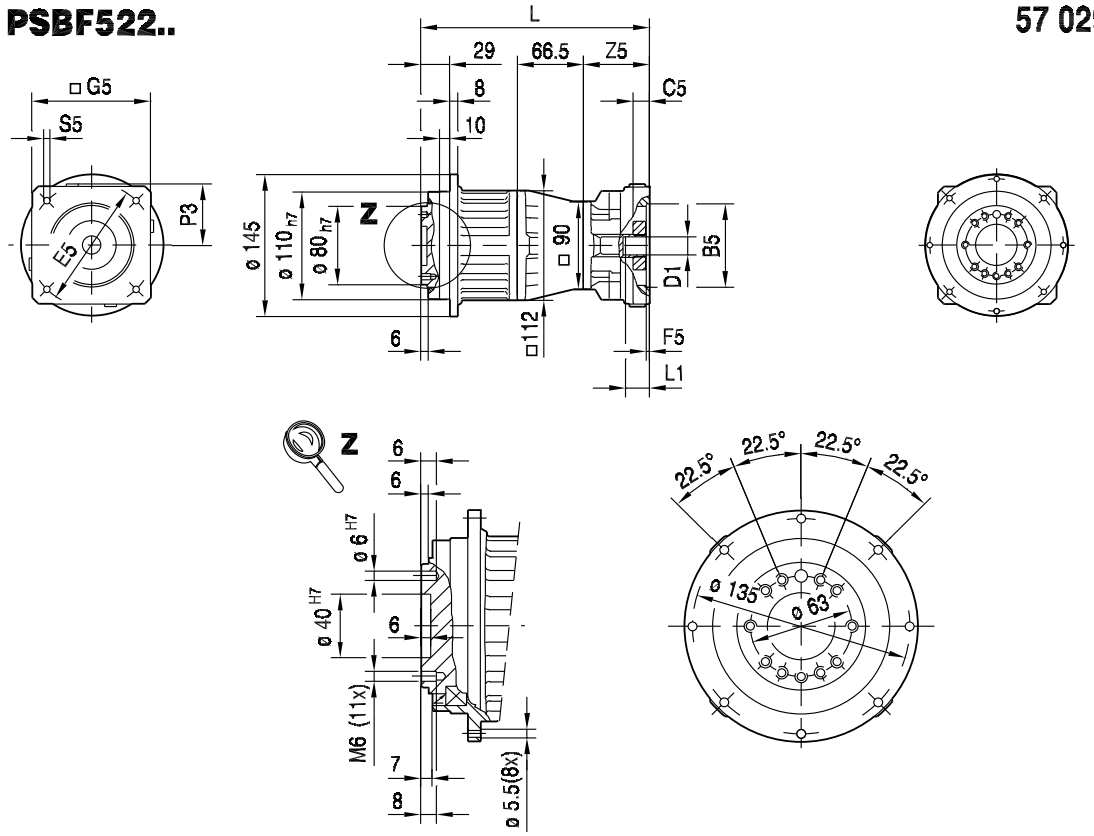

(→ 144)	L	B5	C5	E5	F5	G5	S5	Z5	L1	P3	D1 (→ 537)
EPH04/01/..	216	40	20	63	3.5	90	M4	51	43	47	11, 12, 14, 16, 19
EPH04/03/..	216	50	20	60	3.5	90	M4	51	41	47	11, 12, 14, 16, 19
EPH04/04/..	216	50	20	70	3.5	90	M5	51	41	47	11, 12, 14, 16, 19
EPH04/05/..	216	50	20	80	3.5	90	M4	51	41	47	11, 12, 14, 16, 19
EPH04/06/..	216	50	20	95	3.5	90	M6	51	41	47	11, 12, 14, 16, 19
EPH04/07/..	216	50	20	100	3.5	90	M6	51	41	47	11, 12, 14, 16, 19
EPH04/08/..	216	60	20	75	3.5	90	M5	51	41	47	11, 12, 14, 16, 19
EPH04/09/..	216	60	20	90	3.5	90	M5	51	41	47	11, 12, 14, 16, 19
EPH04/10/..	216	70	20	85	3.5	90	M6	51	41	47	11, 12, 14, 16, 19
EPH04/11/..	216	70	20	90	3.5	90	M5	51	41	47	11, 12, 14, 16, 19
EPH04/12/..	216	70	20	90	3.5	90	M6	51	41	47	11, 12, 14, 16, 19
EPH04/13/..	216	80	20	100	3.5	90	M6	51	41	47	11, 12, 14, 16, 19
EPH04/14/..	216	95	16	115	4	105	M8	51	41	55	11, 12, 14, 16, 19
EPH04/15/..	216	95	16	130	4	115	M8	51	41	60	11, 12, 14, 16, 19
EPH05/14/..	232	95	16	115	4	120	M8	67	52	62	14, 16, 17, 18, 19, 24
EPH05/15/..	232	95	16	130	4	120	M8	67	52	62	14, 16, 17, 18, 19, 24
EPH05/16/..	232	110	16	130	5	120	M8	67	52	62	14, 16, 17, 18, 19, 24
EPH05/17/..	232	110	16	145	7	120	M8	67	52	62	14, 16, 17, 18, 19, 24
EPH05/18/..	232	110	20	165	5	140	M10	67	52	72	14, 16, 17, 18, 19, 24
EPH05/20/..	232	130	20	165	5	140	M10	67	52	72	14, 16, 17, 18, 19, 24
EPH05/26/..	232	110	16	130	5	115	M8	67	52	61	14, 16, 17, 18, 19, 24

14.2.23 PSBF 621/622 EPH.. [Nm]

[Nm]		EPH M_{amax} | M_{apk} | $M_{aNotaus}$														
	i	04			05			06			07			08		
PSBF621 1	5.00				595	650	960	595	700	1050	595	700	1050	595	700	1050
	7.00				600	660	1020	600	660	1020	600	660	1020	600	660	1020
	10.00				500	500	850	500	500	850	500	500	850	500	500	850
PSBF622 2	20.00	600	700	1050	600	700	1050	600	700	1050	600	700	1050			
	25.00	600	700	1050	600	700	1050	600	700	1050	600	700	1050			
	35.00	600	700	1050	600	700	1050	600	700	1050	600	700	1050			
	49.00	600	660	990	600	660	990	600	660	990	600	660	990			
	70.00	600	660	990	600	660	990	600	660	990	600	660	990			
	100.00	500	500	750	500	500	750	500	500	750	500	500	750			

m [kg]		EPH				
	s	04	05	06	07	08
PSBF621	1	11	13	14	14	19
PSBF622	2	17	18	20	20	24

EPH04 n_e = 1500	i	M_{amax} [Nm]	M_{apk} [Nm]	$M_{aNotaus}$ [Nm]	n_{ak} [1/min]	J_{GA} 10^{-4} [kgm^2]	c_T PSBF [Nm/']	F_{Ramax} PSBF [N]	F_{Rapk} PSBF [N]
PSBF622 2	20.00	600	700	1050	292	2.2	220	31500	60000
	25.00	600	700	1050	280	1.7	227	33600	60000
	35.00	600	700	1050	200	1.3	227	37200	60000
	49.00	600	660	990	143	1.2	174	41200	60000
	70.00	600	660	990	100	1.1	169	45800	60000
	100.00	500	500	750	70	1.1	95	51000	60000

EPH05 n_e = 1500	i	M_{amax} [Nm]	M_{apk} [Nm]	$M_{aNotaus}$ [Nm]	n_{ak} [1/min]	J_{GA} 10^{-4} [kgm^2]	c_T PSBF [Nm/']	F_{Ramax} PSBF [N]	F_{Rapk} PSBF [N]
PSBF621 1	5.00	595	650	960	300	6.5	170	20800	60000
	7.00	600	660	1020	260	4.6	162	23000	60000
	10.00	500	500	850	425	3.6	94	25500	60000
PSBF622 2	20.00	600	700	1050	292	4.0	239	31500	60000
	25.00	600	700	1050	280	3.5	239	33600	60000
	35.00	600	700	1050	200	3.0	232	37200	60000
	49.00	600	660	990	143	3.0	175	41200	60000
	70.00	600	660	990	100	2.8	169	45800	60000
	100.00	500	500	750	70	2.8	95	51000	60000

EPH06 n_e = 1500	i	M_{amax} [Nm]	M_{apk} [Nm]	$M_{aNotaus}$ [Nm]	n_{ak} [1/min]	J_{GA} 10^{-4} [kgm^2]	c_T PSBF [Nm/']	F_{Ramax} PSBF [N]	F_{Rapk} PSBF [N]
PSBF621 1	5.00	595	700	1050	300	9.6	227	20800	60000
	7.00	600	660	1020	260	7.5	167	23000	60000
	10.00	500	500	850	425	6.4	96	25500	60000
PSBF622 2	20.00	600	700	1050	292	6.8	241	31500	60000
	25.00	600	700	1050	280	6.3	240	33600	60000
	35.00	600	700	1050	200	5.9	233	37200	60000
	49.00	600	660	990	143	5.8	175	41200	60000
	70.00	600	660	990	100	5.6	169	45800	60000
	100.00	500	500	750	70	5.6	95	51000	60000

EPH07 n_e = 1500	i	M_{amax} [Nm]	M_{apk} [Nm]	$M_{aNotaus}$ [Nm]	n_{ak} [1/min]	J_{GA} 10^{-4} [kgm^2]	c_T PSBF [Nm/']	F_{Ramax} PSBF [N]	F_{Rapk} PSBF [N]
PSBF621 1	5.00	595	700	1050	300	9.7	227	20800	60000
	7.00	600	660	1020	260	7.6	172	23000	60000
	10.00	500	500	850	425	6.6	93	25500	60000
PSBF622 2	20.00	600	700	1050	292	6.9	242	31500	60000
	25.00	600	700	1050	280	6.4	241	33600	60000
	35.00	600	700	1050	200	6.0	233	37200	60000
	49.00	600	660	990	143	6.0	175	41200	60000
	70.00	600	660	990	100	5.7	169	45800	60000
	100.00	500	500	750	70	5.7	95	51000	60000

EPH08 n_e = 1500	i	M_{amax} [Nm]	M_{apk} [Nm]	$M_{aNotaus}$ [Nm]	n_{ak} [1/min]	J_{GA} 10^{-4} [kgm^2]	c_T PSBF [Nm/']	F_{Ramax} PSBF [N]	F_{Rapk} PSBF [N]
PSBF621 1	5.00	595	700	1050	300	16	243	20800	60000
	7.00	600	660	1020	260	14	175	23000	60000
	10.00	500	500	850	425	12	96	25500	60000

EPH				M1;M3;M5-6			M2			M4			φ		
	i	n_{epk} [1/min]	η [%]	a_0	a_1	a_2	a_0	a_1	a_2	a_0	a_1	a_2	[']	/R [']	/M [']
PSBF621 1	5.00	6000	99	1121	-1.327	0	1326	-2.063	0	1903	-4.914	0	4	2	1
	7.00	6000	99	1192	-1.511	0	1432	-2.373	0	2021	-5.353	0	4	2	1
	10.00	6000	99	1064	-1.505	0	1337	-2.426	0	1889	-5.215	0	4	2	1
PSBF622 2	20.00	6000	98	1562	-6.428	0	1939	-11.106	0	2184	-15.605	0	6	3	1
	25.00	6000	98	1580	-6.664	0	1955	-11.342	0	2209	-15.961	0	6	3	1
	35.00	6000	98	1652	-7.501	0	2029	-12.358	0	2288	-17.166	0	6	3	1
	49.00	6000	98	2013	-11.606	0	2658	-21.472	0	2869	-26.726	0	6	3	1
	70.00	6000	98	2097	-13.821	0	2653	-23.285	0	2848	-28.435	0	6	3	1
	100.00	6000	98	2535	-22.533	0	3404	-41.310	0	3639	-47.984	0	6	3	1

14.2.24 PSBF 621/622 EPH.. [mm]

PSBF621..

57 030 00 03

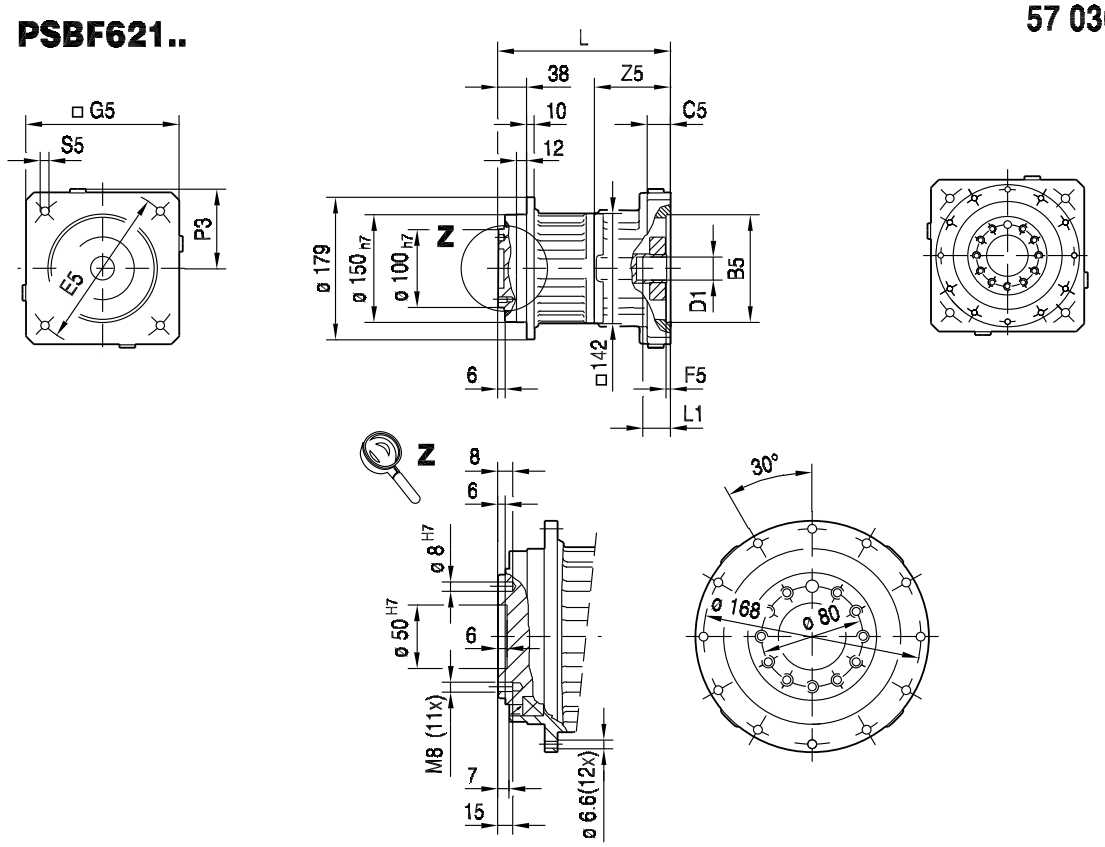

(→ 144)	L	B5	C5	E5	F5	G5	S5	Z5	L1	P3	D1 (→ 537)
EPH05/14/..	173	95	16	115	4	120	M8	54	52	62	14, 16, 17, 18, 19, 24
EPH05/15/..	173	95	16	130	4	120	M8	54	52	62	14, 16, 17, 18, 19, 24
EPH05/16/..	173	110	16	130	5	120	M8	54	52	62	14, 16, 17, 18, 19, 24
EPH05/17/..	173	110	16	145	7	120	M8	54	52	62	14, 16, 17, 18, 19, 24
EPH05/18/..	173	110	20	165	5	140	M10	54	52	72	14, 16, 17, 18, 19, 24
EPH05/20/..	173	130	20	165	5	140	M10	54	52	72	14, 16, 17, 18, 19, 24
EPH05/26/..	173	110	16	130	5	115	M8	54	52	61	14, 16, 17, 18, 19, 24
EPH06/19/..	208	114.3	24	200	5	174	M12	89	82	89	35
EPH07/20/..	188	130	24	165	5	155	M10	69	62	80	22, 24, 28, 32
EPH07/21/..	188	130	24	215	5	190	M12	69	62	97	22, 24, 28, 32
EPH07/22/..	188	180	24	215	5	190	M12	69	62	97	22, 24, 28, 32
EPH07/27/..	188	130	24	165	5	137	M10	69	62	72	22, 24, 28, 32
EPH07/28/..	188	155	24	190	5	162	M10	69	62	84	22, 24, 28, 32
EPH08/21/..	213	130	24	215	5	190	M12	94	82	97	32, 35, 38
EPH08/22/..	213	180	24	215	5	190	M12	94	82	97	32, 35, 38

PSBF622..

57 031 00 03

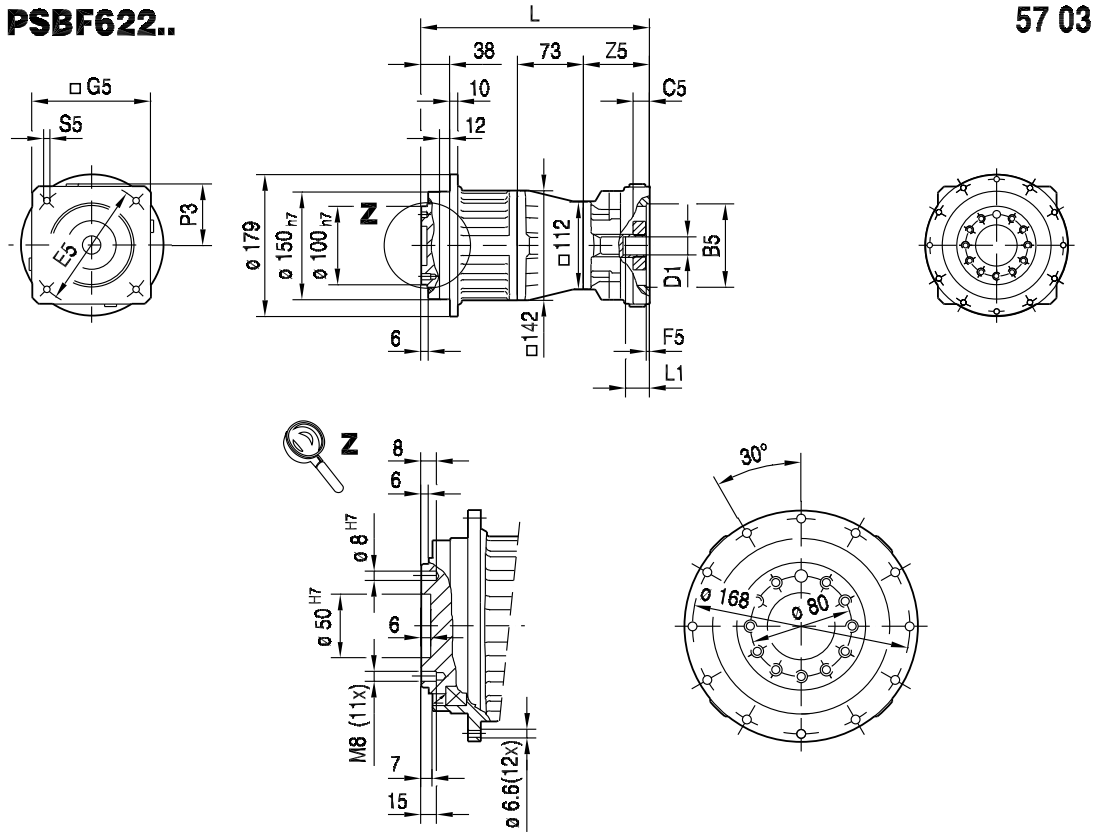

(→ 144)	L	B5	C5	E5	F5	G5	S5	Z5	L1	P3	D1 (→ 537)
EPH04/01/..	238	40	20	63	3.5	90	M4	46	43	47	11, 12, 14, 16, 19
EPH04/03/..	238	50	20	60	3.5	90	M4	46	41	47	11, 12, 14, 16, 19
EPH04/04/..	238	50	20	70	3.5	90	M5	46	41	47	11, 12, 14, 16, 19
EPH04/05/..	238	50	20	80	3.5	90	M4	46	41	47	11, 12, 14, 16, 19
EPH04/06/..	238	50	20	95	3.5	90	M6	46	41	47	11, 12, 14, 16, 19
EPH04/07/..	238	50	20	100	3.5	90	M6	46	41	47	11, 12, 14, 16, 19
EPH04/08/..	238	60	20	75	3.5	90	M5	46	41	47	11, 12, 14, 16, 19
EPH04/09/..	238	60	20	90	3.5	90	M5	46	41	47	11, 12, 14, 16, 19
EPH04/10/..	238	70	20	85	3.5	90	M6	46	41	47	11, 12, 14, 16, 19
EPH04/11/..	238	70	20	90	3.5	90	M5	46	41	47	11, 12, 14, 16, 19
EPH04/12/..	238	70	20	90	3.5	90	M6	46	41	47	11, 12, 14, 16, 19
EPH04/13/..	238	80	20	100	3.5	90	M6	46	41	47	11, 12, 14, 16, 19
EPH04/14/..	238	95	16	115	4	105	M8	46	41	55	11, 12, 14, 16, 19
EPH04/15/..	238	95	16	130	4	115	M8	46	41	60	11, 12, 14, 16, 19
EPH05/14/..	254	95	16	115	4	120	M8	62	52	62	14, 16, 17, 18, 19, 24
EPH05/15/..	254	95	16	130	4	120	M8	62	52	62	14, 16, 17, 18, 19, 24
EPH05/16/..	254	110	16	130	5	120	M8	62	52	62	14, 16, 17, 18, 19, 24
EPH05/17/..	254	110	16	145	7	120	M8	62	52	62	14, 16, 17, 18, 19, 24
EPH05/18/..	254	110	20	165	5	140	M10	62	52	72	14, 16, 17, 18, 19, 24
EPH05/20/..	254	130	20	165	5	140	M10	62	52	72	14, 16, 17, 18, 19, 24
EPH05/26/..	254	110	16	130	5	115	M8	62	52	61	14, 16, 17, 18, 19, 24
EPH06/19/..	289	114.3	24	200	5	174	M12	97	82	89	35
EPH07/20/..	269	130	24	165	5	155	M10	77	62	80	22, 24, 28, 32
EPH07/21/..	269	130	24	215	5	190	M12	77	62	97	22, 24, 28, 32
EPH07/22/..	269	180	24	215	5	190	M12	77	62	97	22, 24, 28, 32
EPH07/27/..	269	130	24	165	5	137	M10	77	62	72	22, 24, 28, 32
EPH07/28/..	269	155	24	190	5	162	M10	77	62	84	22, 24, 28, 32

14.2.25 PSBF 721/722 EPH.. [Nm]

[Nm]		EPH M_{amax} | M_{apk} | $M_{aNotaus}$														
	i	04			05			06			07			08		
PSBF721 1	5.00				650	650	960	1000	1190	1760	1000	1190	1760	1000	1540	2310
	7.00				1000	1010	1520	1000	1380	2070	1000	1380	2070	1000	1380	2070
	10.00				1000	1040	1550	1000	1040	1550	1000	1040	1550	1000	1040	1550
PSBF722 2	20.00	850	850	1180	1000	1540	2310	1000	1540	2310	1000	1540	2310			
	25.00	1000	1060	1480	1000	1540	2310	1000	1540	2310	1000	1540	2310			
	35.00	1000	1530	2290	1000	1540	2310	1000	1540	2310	1000	1540	2310			
	49.00	1000	1380	2070	1000	1380	2070	1000	1380	2070	1000	1380	2070			
	70.00	1000	1380	2070	1000	1380	2070	1000	1380	2070	1000	1380	2070			
	100.00	1000	1040	1550	1000	1040	1550	1000	1040	1550	1000	1040	1550			

m [kg]		EPH				
	s	04	05	06	07	08
PSBF721	1	27	30	31	31	35
PSBF722	2	34	36	38	38	42

EPH04 n_e = 1500	i	M_{amax} [Nm]	M_{apk} [Nm]	$M_{aNotaus}$ [Nm]	n_{ak} [1/min]	J_{GA} 10^{-4} [kgm^2]	c_T PSBF [Nm/']	F_{Ramax} PSBF [N]	F_{Rapk} PSBF [N]
PSBF722 2	20.00	850	850	1180	350	3.5	330	57400	120000
	25.00	1000	1060	1480	280	2.5	355	61400	120000
	35.00	1000	1530	2290	200	1.7	374	67900	120000
	49.00	1000	1380	2070	143	1.4	288	75100	120000
	70.00	1000	1380	2070	100	1.2	276	83600	120000
	100.00	1000	1040	1550	70	1.1	166	93100	120000

EPH05 n_e = 1500	i	M_{amax} [Nm]	M_{apk} [Nm]	$M_{aNotaus}$ [Nm]	n_{ak} [1/min]	J_{GA} 10^{-4} [kgm^2]	c_T PSBF [Nm/']	F_{Ramax} PSBF [N]	F_{Rapk} PSBF [N]
PSBF721 1	5.00	650	650	960	1400	27	215	37900	120000
	7.00	1000	1010	1520	378	15	231	41900	120000
	10.00	1000	1040	1550	345	8.9	163	46600	120000
PSBF722 2	20.00	1000	1540	2310	350	5.3	405	57400	120000
	25.00	1000	1540	2310	280	4.3	399	61400	120000
	35.00	1000	1540	2310	200	3.5	388	67900	120000
	49.00	1000	1380	2070	143	3.2	293	75100	120000
	70.00	1000	1380	2070	100	2.9	276	83600	120000
	100.00	1000	1040	1550	70	2.8	166	93100	120000

EPH06 n_e = 1500	i	M_{amax} [Nm]	M_{apk} [Nm]	$M_{aNotaus}$ [Nm]	n_{ak} [1/min]	J_{GA} 10^{-4} [kgm^2]	c_T PSBF [Nm/']	F_{Ramax} PSBF [N]	F_{Rapk} PSBF [N]
PSBF721 1	5.00	1000	1190	1760	430	30	322	37900	120000
	7.00	1000	1380	2070	378	18	286	41900	120000
	10.00	1000	1040	1550	345	12	165	46600	120000
PSBF722 2	20.00	1000	1540	2310	350	8.2	409	57400	120000
	25.00	1000	1540	2310	280	7.2	401	61400	120000
	35.00	1000	1540	2310	200	6.3	390	67900	120000
	49.00	1000	1380	2070	143	6.1	293	75100	120000
	70.00	1000	1380	2070	100	5.7	276	83600	120000
	100.00	1000	1040	1550	70	5.6	167	93100	120000

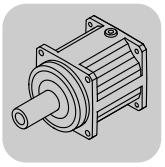

EPH07 n_e = 1500	i	M_{amax} [Nm]	M_{apk} [Nm]	$M_{aNotaus}$ [Nm]	n_{ak} [1/min]	J_{GA} 10^{-4} [kgm^2]	c_T PSBF [Nm/']	F_{Ramax} PSBF [N]	F_{Rapk} PSBF [N]
PSBF721 1	5.00	1000	1190	1760	430	30	322	37900	120000
	7.00	1000	1380	2070	378	19	286	41900	120000
	10.00	1000	1040	1550	345	12	168	46600	120000
PSBF722 2	20.00	1000	1540	2310	350	8.3	413	57400	120000
	25.00	1000	1540	2310	280	7.3	403	61400	120000
	35.00	1000	1540	2310	200	6.4	390	67900	120000
	49.00	1000	1380	2070	143	6.2	293	75100	120000
	70.00	1000	1380	2070	100	5.8	276	83600	120000
	100.00	1000	1040	1550	70	5.7	167	93100	120000

EPH08 n_e = 1500	i	M_{amax} [Nm]	M_{apk} [Nm]	$M_{aNotaus}$ [Nm]	n_{ak} [1/min]	J_{GA} 10^{-4} [kgm^2]	c_T PSBF [Nm/']	F_{Ramax} PSBF [N]	F_{Rapk} PSBF [N]
PSBF721 1	5.00	1000	1540	2310	430	36	361	37900	120000
	7.00	1000	1380	2070	378	24	306	41900	120000
	10.00	1000	1040	1550	345	18	169	46600	120000

EPH	i	n_{epk} [1/min]	η [%]	M1;M3;M5-6 a_0	a_1	a_2	M2 a_0	a_1	a_2	M4 a_0	a_1	a_2	φ [']	/R [']	/M [']
PSBF721 1	5.00	4500	99	1594	-2.053	0	2210	-3.979	0	3511	-10.393	0	4	2	1
	7.00	4500	99	1950	-2.602	0	2579	-4.792	0	3728	-11.195	0	4	2	1
	10.00	4500	99	1972	-2.804	0	2542	-4.959	0	3526	-10.834	0	4	2	1
PSBF722 2	20.00	6000	98	1981	-6.022	0	2615	-11.892	0	2899	-15.452	0	6	3	1
	25.00	6000	98	2110	-6.545	0	2699	-12.379	0	2947	-15.840	0	6	3	1
	35.00	6000	98	2491	-8.271	0	2997	-14.334	0	3228	-17.969	0	6	3	1
	49.00	6000	98	2840	-12.118	0	3661	-23.086	0	3907	-27.349	0	6	3	1
	70.00	6000	98	2907	-14.090	0	3637	-24.695	0	3841	-28.698	0	6	3	1
	100.00	6000	98	3316	-21.875	0	4422	-41.392	0	4631	-46.160	0	6	3	1

14.2.26 PSBF 721/722 EPH.. [mm]

PSBF721..

57 073 00 07

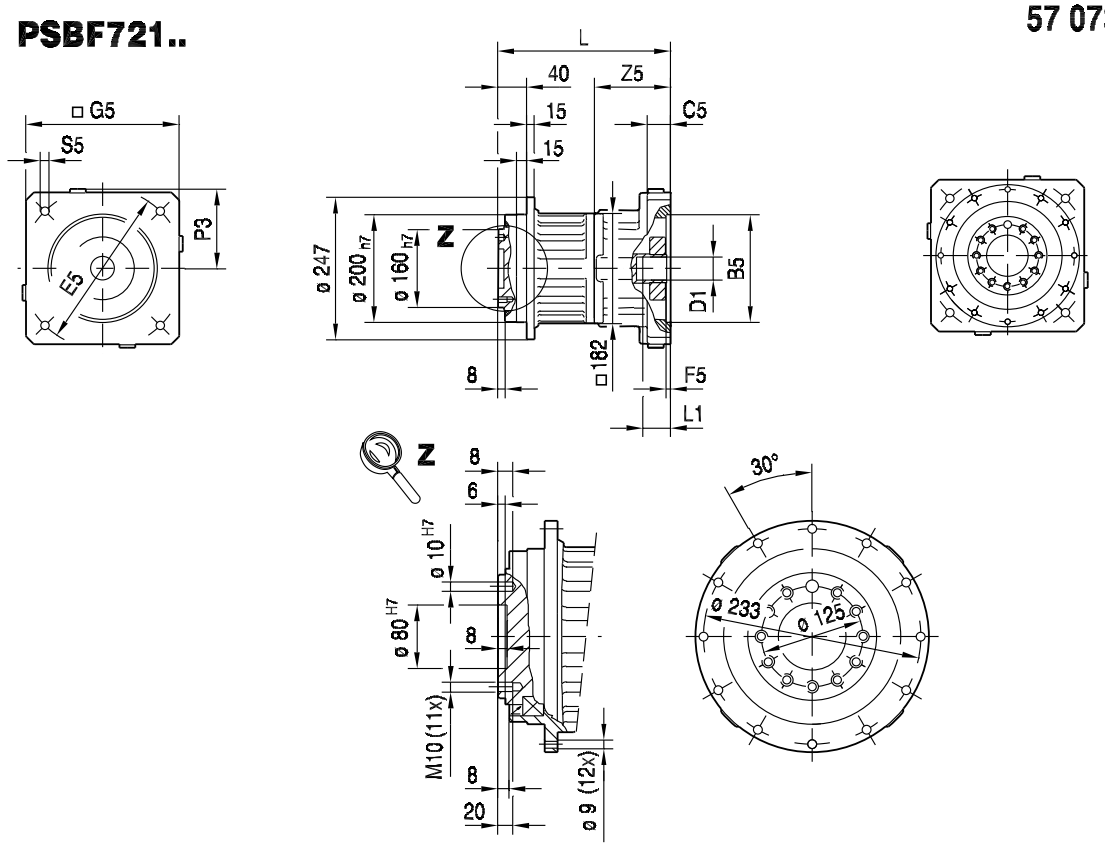

(→ 144)	L	B5	C5	E5	F5	G5	S5	Z5	L1	P3	D1 (→ 537)
EPH05/14/..	195	95	16	115	4	120	M8	50	56	62	14, 16, 17, 18, 19, 24
EPH05/15/..	195	95	16	130	4	120	M8	50	56	62	14, 16, 17, 18, 19, 24
EPH05/16/..	195	110	16	130	5	120	M8	50	56	62	14, 16, 17, 18, 19, 24
EPH05/17/..	195	110	16	145	7	120	M8	50	56	62	14, 16, 17, 18, 19, 24
EPH05/18/..	195	110	20	165	5	140	M10	50	56	72	14, 16, 17, 18, 19, 24
EPH05/20/..	195	130	20	165	5	140	M10	50	56	72	14, 16, 17, 18, 19, 24
EPH05/26/..	195	110	16	130	5	115	M8	50	56	61	14, 16, 17, 18, 19, 24
EPH06/19/..	230	114.3	24	200	5	174	M12	85	82	89	35
EPH07/20/..	210	130	24	165	5	155	M10	65	66	80	22, 24, 28, 32
EPH07/21/..	210	130	24	215	5	190	M12	65	66	97	22, 24, 28, 32
EPH07/22/..	210	180	24	215	5	190	M12	65	66	97	22, 24, 28, 32
EPH07/27/..	210	130	24	165	5	137	M10	65	66	72	22, 24, 28, 32
EPH07/28/..	210	155	24	190	5	162	M10	65	66	84	22, 24, 28, 32
EPH08/21/..	235	130	24	215	5	190	M12	90	82	97	32, 35, 38
EPH08/22/..	235	180	24	215	5	190	M12	90	82	97	32, 35, 38

PSBF722..

57 074 00 07

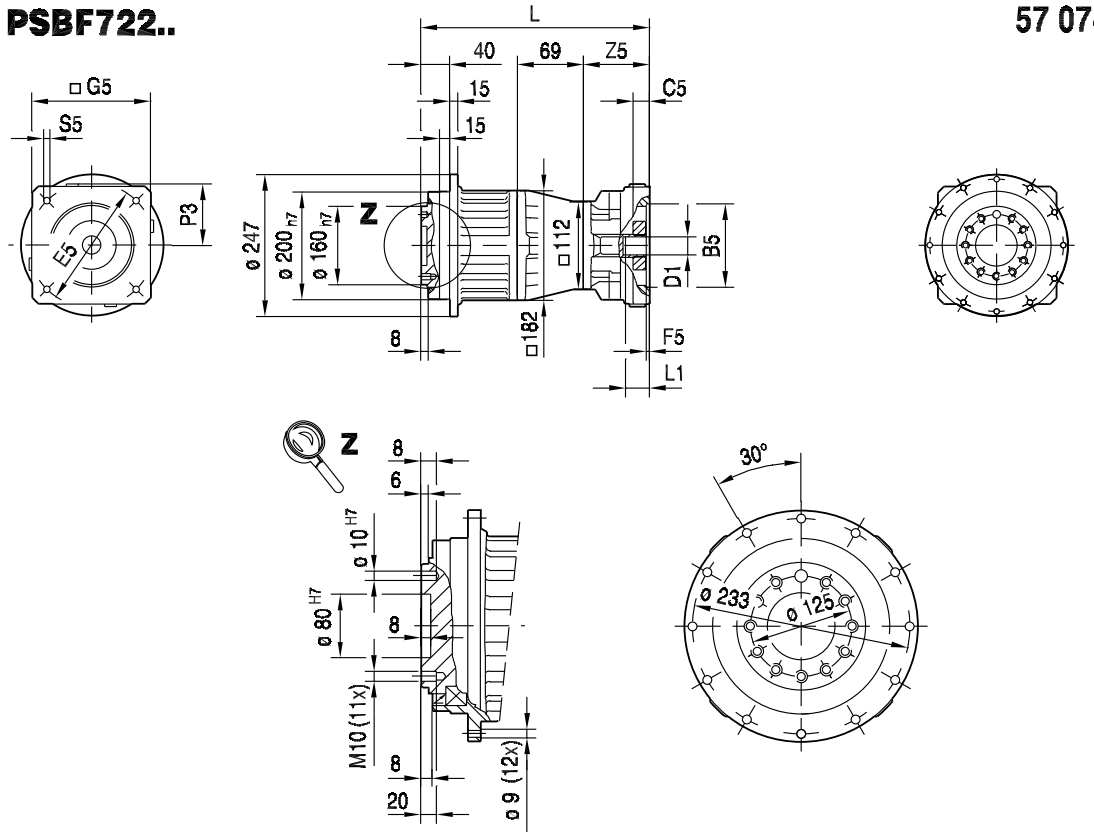

(→ 144)	L	B5	C5	E5	F5	G5	S5	Z5	L1	P3	D1 (→ 537)
EPH04/01/..	260	40	20	63	3.5	90	M4	46	43	47	11, 12, 14, 16, 19
EPH04/03/..	260	50	20	60	3.5	90	M4	46	41	47	11, 12, 14, 16, 19
EPH04/04/..	260	50	20	70	3.5	90	M5	46	41	47	11, 12, 14, 16, 19
EPH04/05/..	260	50	20	80	3.5	90	M4	46	41	47	11, 12, 14, 16, 19
EPH04/06/..	260	50	20	95	3.5	90	M6	46	41	47	11, 12, 14, 16, 19
EPH04/07/..	260	50	20	100	3.5	90	M6	46	41	47	11, 12, 14, 16, 19
EPH04/08/..	260	60	20	75	3.5	90	M5	46	41	47	11, 12, 14, 16, 19
EPH04/09/..	260	60	20	90	3.5	90	M5	46	41	47	11, 12, 14, 16, 19
EPH04/10/..	260	70	20	85	3.5	90	M6	46	41	47	11, 12, 14, 16, 19
EPH04/11/..	260	70	20	90	3.5	90	M5	46	41	47	11, 12, 14, 16, 19
EPH04/12/..	260	70	20	90	3.5	90	M6	46	41	47	11, 12, 14, 16, 19
EPH04/13/..	260	80	20	100	3.5	90	M6	46	41	47	11, 12, 14, 16, 19
EPH04/14/..	260	95	16	115	4	105	M8	46	41	55	11, 12, 14, 16, 19
EPH04/15/..	260	95	16	130	4	115	M8	46	41	60	11, 12, 14, 16, 19
EPH05/14/..	276	95	16	115	4	120	M8	62	52	62	14, 16, 17, 18, 19, 24
EPH05/15/..	276	95	16	130	4	120	M8	62	52	62	14, 16, 17, 18, 19, 24
EPH05/16/..	276	110	16	130	5	120	M8	62	52	62	14, 16, 17, 18, 19, 24
EPH05/17/..	276	110	16	145	7	120	M8	62	52	62	14, 16, 17, 18, 19, 24
EPH05/18/..	276	110	20	165	5	140	M10	62	52	72	14, 16, 17, 18, 19, 24
EPH05/20/..	276	130	20	165	5	140	M10	62	52	72	14, 16, 17, 18, 19, 24
EPH05/26/..	276	110	16	130	5	115	M8	62	52	61	14, 16, 17, 18, 19, 24
EPH06/19/..	311	114.3	24	200	5	174	M12	97	82	89	35
EPH07/20/..	291	130	24	165	5	155	M10	77	62	80	22, 24, 28, 32
EPH07/21/..	291	130	24	215	5	190	M12	77	62	97	22, 24, 28, 32
EPH07/22/..	291	180	24	215	5	190	M12	77	62	97	22, 24, 28, 32
EPH07/27/..	291	130	24	165	5	137	M10	77	62	72	22, 24, 28, 32
EPH07/28/..	291	155	24	190	5	162	M10	77	62	84	22, 24, 28, 32

14.2.27 PSBF 821/822 EPH.. [Nm]

[Nm]		EPH M_{amax} | M_{apk} | $M_{aNotaus}$																	
	i	05			06			07			08			09			10		
PSBF821 1	5.00													1750	2500	2660	1750	2500	3750
	7.00													1750	2740	3720	1750	2740	4110
	10.00													1750	2060	3090	1750	2060	3090
PSBF822 2	20.00	1750	2500	3750	1750	2500	3750	1750	2500	3750	1750	2500	3750						
	25.00	1750	2500	3750	1750	2500	3750	1750	2500	3750	1750	2500	3750						
	35.00	1750	2500	3750	1750	2500	3750	1750	2500	3750	1750	2500	3750						
	49.00	1750	2740	4110	1750	2740	4110	1750	2740	4110	1750	2740	4110						
	70.00	1750	2740	4110	1750	2740	4110	1750	2740	4110	1750	2740	4110						
	100.00	1750	2060	3090	1750	2060	3090	1750	2060	3090	1750	2060	3090						

m [kg]		EPH					
	s	05	06	07	08	09	10
PSBF821	1	36	38	38	42	50	53
PSBF822	2	50	51	52	56	64	66

EPH05 n_e = 1500	i	M_{amax} [Nm]	M_{apk} [Nm]	$M_{aNotaus}$ [Nm]	n_{ak} [1/min]	J_{GA} 10^{-4} [kgm^2]	c_T PSBF [Nm/']	F_{Ramax} PSBF [N]	F_{Rapk} PSBF [N]
PSBF822 2	20.00	1750	2500	3750	290	8.7	1052	100200	180000
	25.00	1750	2500	3750	280	6.6	1092	107100	180000
	35.00	1750	2500	3750	200	4.6	1076	118500	180000
	49.00	1750	2740	4110	143	4.2	977	131100	180000
	70.00	1750	2740	4110	100	3.4	902	145900	180000
	100.00	1750	2060	3090	70	3.3	572	162400	180000

EPH06 n_e = 1500	i	M_{amax} [Nm]	M_{apk} [Nm]	$M_{aNotaus}$ [Nm]	n_{ak} [1/min]	J_{GA} 10^{-4} [kgm^2]	c_T PSBF [Nm/']	F_{Ramax} PSBF [N]	F_{Rapk} PSBF [N]
PSBF822 2	20.00	1750	2500	3750	290	12	1159	100200	180000
	25.00	1750	2500	3750	280	9.7	1163	107100	180000
	35.00	1750	2500	3750	200	7.5	1084	118500	180000
	49.00	1750	2740	4110	143	7.1	981	131100	180000
	70.00	1750	2740	4110	100	6.2	905	145900	180000
	100.00	1750	2060	3090	70	6.1	573	162400	180000

EPH07 n_e = 1500	i	M_{amax} [Nm]	M_{apk} [Nm]	$M_{aNotaus}$ [Nm]	n_{ak} [1/min]	J_{GA} 10^{-4} [kgm^2]	c_T PSBF [Nm/']	F_{Ramax} PSBF [N]	F_{Rapk} PSBF [N]
PSBF822 2	20.00	1750	2500	3750	290	12	1160	100200	180000
	25.00	1750	2500	3750	280	9.8	1163	107100	180000
	35.00	1750	2500	3750	200	7.6	1093	118500	180000
	49.00	1750	2740	4110	143	7.2	985	131100	180000
	70.00	1750	2740	4110	100	6.4	905	145900	180000
	100.00	1750	2060	3090	70	6.2	573	162400	180000

EPH08 n_e = 1500	i	M_{amax} [Nm]	M_{apk} [Nm]	$M_{aNotaus}$ [Nm]	n_{ak} [1/min]	J_{GA} 10^{-4} [kgm^2]	c_T PSBF [Nm/']	F_{Ramax} PSBF [N]	F_{Rapk} PSBF [N]
PSBF822 2	20.00	1750	2500	3750	290	18	1184	100200	180000
	25.00	1750	2500	3750	280	16	1179	107100	180000
	35.00	1750	2500	3750	200	14	1098	118500	180000
	49.00	1750	2740	4110	143	13	986	131100	180000
	70.00	1750	2740	4110	100	12	905	145900	180000
	100.00	1750	2060	3090	70	12	573	162400	180000

EPH09 n_e = 1500	i	M_{amax} [Nm]	M_{apk} [Nm]	$M_{aNotaus}$ [Nm]	n_{ak} [1/min]	J_{GA} 10^{-4} [kgm^2]	c_T PSBF [Nm/']	F_{Ramax} PSBF [N]	F_{Rapk} PSBF [N]
PSBF821 1	5.00	1750	2500	2660	290	67	953	66100	180000
	7.00	1750	2740	3720	255	44	908	73100	180000
	10.00	1750	2060	3090	233	32	567	81400	180000

EPH10 n_e = 1500	i	M_{amax} [Nm]	M_{apk} [Nm]	$M_{aNotaus}$ [Nm]	n_{ak} [1/min]	J_{GA} 10^{-4} [kgm^2]	c_T PSBF [Nm/']	F_{Ramax} PSBF [N]	F_{Rapk} PSBF [N]
PSBF821 1	5.00	1750	2500	3750	290	91	1152	66100	180000
	7.00	1750	2740	4110	255	68	994	73100	180000
	10.00	1750	2060	3090	233	56	584	81400	180000

EPH	i	n_{epk} [1/min]	η [%]	M1;M3;M5-6 a_0	 a_1	 a_2	M2 a_0	 a_1	 a_2	M4 a_0	 a_1	 a_2	φ [']	/R [']	/M [']
PSBF821 1	5.00	4500	99	4471	-8.247	0	5349	-12.863	0	6853	-24.727	0	4	2	1
	7.00	4500	99	5039	-10.347	0	5819	-14.853	0	7333	-27.386	0	4	2	1
	10.00	4500	99	4719	-11.159	0	5315	-14.717	0	6753	-26.550	0	4	2	1
PSBF822 2	20.00	6000	98	4416	-21.396	0	5069	-31.290	0	6192	-54.460	0	6	3	1
	25.00	6000	98	4450	-21.888	0	5106	-31.768	0	6237	-55.183	0	6	3	1
	35.00	6000	98	4592	-23.660	0	5266	-33.916	0	6431	-58.264	0	6	3	1
	49.00	6000	98	5417	-33.382	0	6507	-53.318	0	7429	-77.782	0	6	3	1
	70.00	6000	98	5506	-37.270	0	6516	-56.809	0	7406	-81.296	0	6	3	1
	100.00	6000	98	6006	-52.245	0	7651	-89.531	0	8327	-113.9	0	6	3	1

14.2.28 PSBF 821/822 EPH.. [mm]

PSBF821..

57 032 00 03

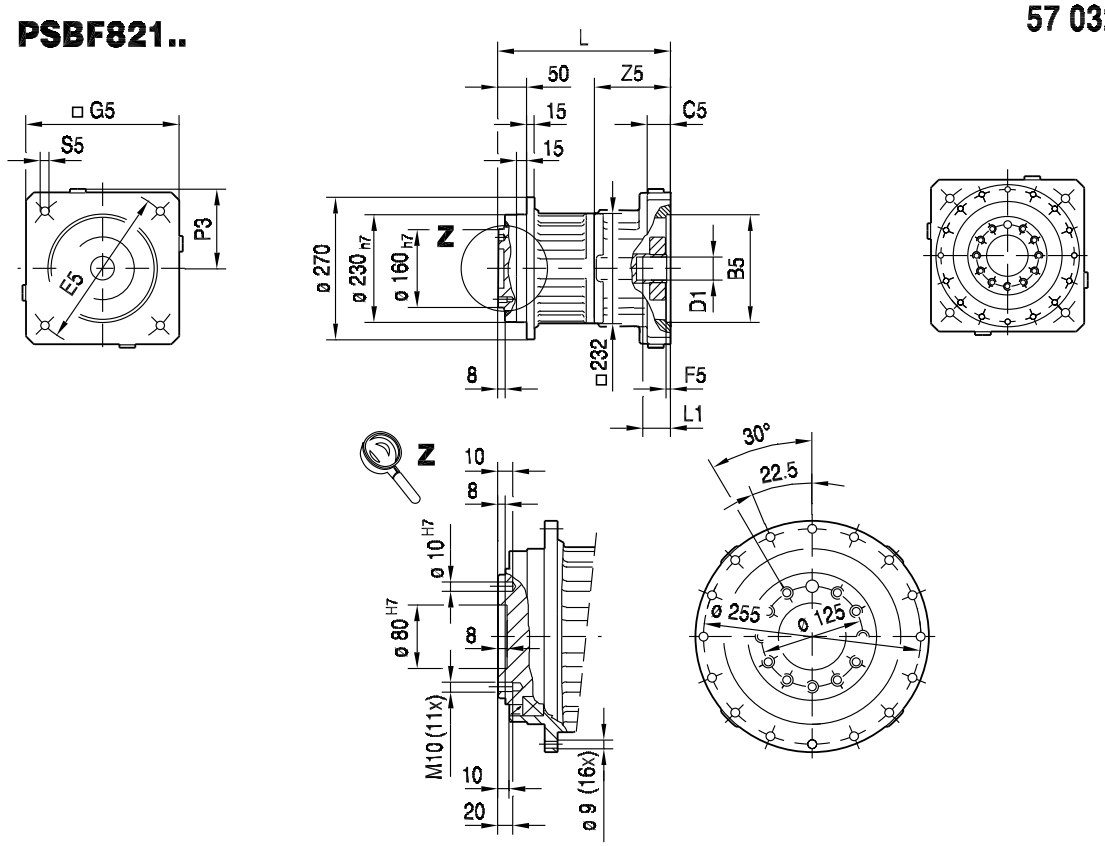

(→ 144)	L	B5	C5	E5	F5	G5	S5	Z5	L1	P3	D1 (→ 537)
EPH09/22/..	265	180	36	215	5	190	M12	99	85	97	32, 35, 38, 42
EPH09/23/..	295	230	30	265	5	240	M12	129	115	122	32, 35, 38, 42
EPH09/24/..	295	250	30	300	6	260	M16	129	115	132	32, 35, 38, 42
EPH09/25/..	295	300	30	350	6	310	M16	129	115	132	32, 35, 38, 42
EPH10/22/..	289	180	30	215	6	190	M12	123	85	132	48, 55
EPH10/23/..	289	230	30	265	6	240	M12	123	115	132	48, 55
EPH10/24/..	295	250	30	300	6	260	M16	129	115	132	48, 55
EPH10/25/..	295	300	30	350	6	310	M16	129	115	157	48, 55

PSBF822..

57 033 00 03

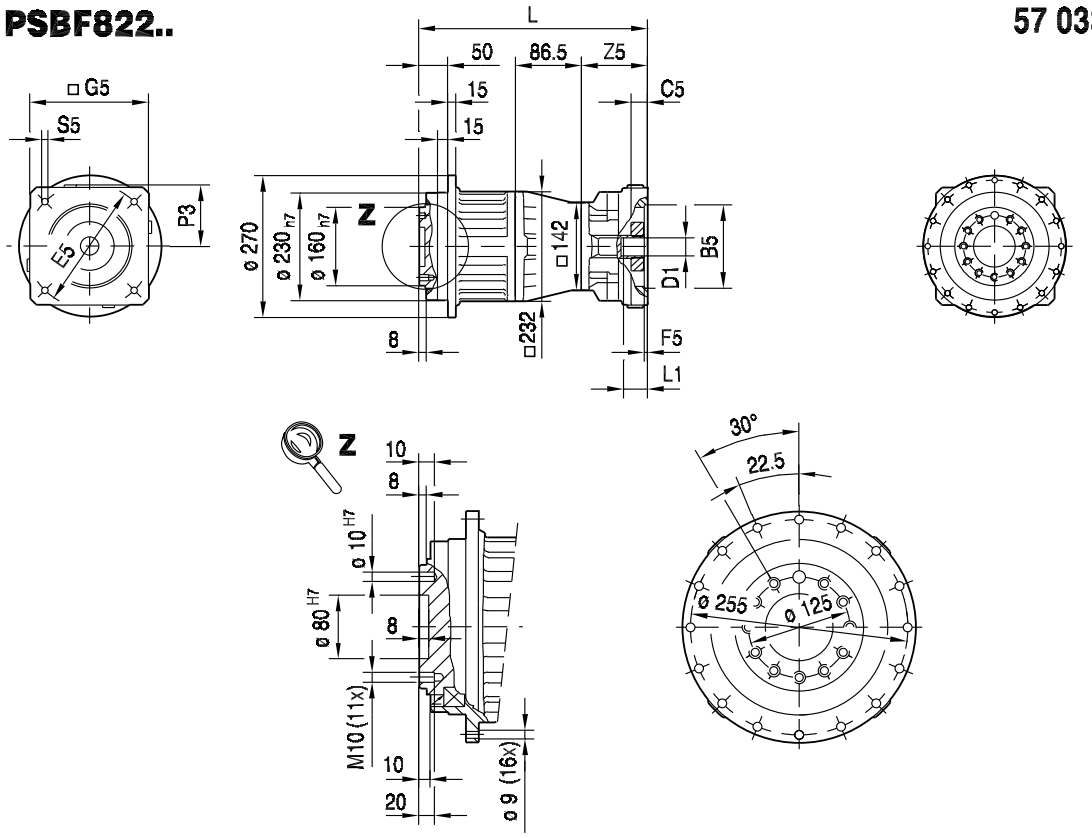

(→ 📖 144)	L	B5	C5	E5	F5	G5	S5	Z5	L1	P3	D1 (→ 📖 537)
EPH05/14/..	307	95	16	115	4	120	M8	54	52	62	14, 16, 17, 18, 19, 24
EPH05/15/..	307	95	16	130	4	120	M8	54	52	62	14, 16, 17, 18, 19, 24
EPH05/16/..	307	110	16	130	5	120	M8	54	52	62	14, 16, 17, 18, 19, 24
EPH05/17/..	307	110	16	145	7	120	M8	54	52	62	14, 16, 17, 18, 19, 24
EPH05/18/..	307	110	20	165	5	140	M10	54	52	72	14, 16, 17, 18, 19, 24
EPH05/20/..	307	130	20	165	5	140	M10	54	52	72	14, 16, 17, 18, 19, 24
EPH05/26/..	307	110	16	130	5	115	M8	54	52	61	14, 16, 17, 18, 19, 24
EPH06/19/..	342	114.3	24	200	5	174	M12	89	82	89	35
EPH07/20/..	322	130	24	165	5	155	M10	69	62	80	22, 24, 28, 32
EPH07/21/..	322	130	24	215	5	190	M12	69	62	97	22, 24, 28, 32
EPH07/22/..	322	180	24	215	5	190	M12	69	62	97	22, 24, 28, 32
EPH07/27/..	322	130	24	165	5	137	M10	69	62	72	22, 24, 28, 32
EPH07/28/..	322	155	24	190	5	162	M10	69	62	84	22, 24, 28, 32
EPH08/21/..	347	130	24	215	5	190	M12	94	82	97	32, 35, 38
EPH08/22/..	347	180	24	215	5	190	M12	94	82	97	32, 35, 38

14.2.29 PSBF EPH.. [mm]

55 035 02 03

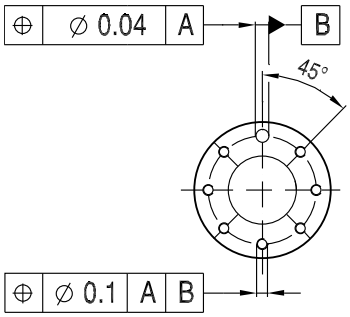

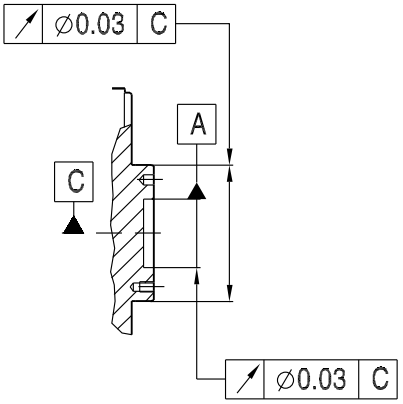

BSBF202 PSBF221/222
BSBF302 PSBF321/322

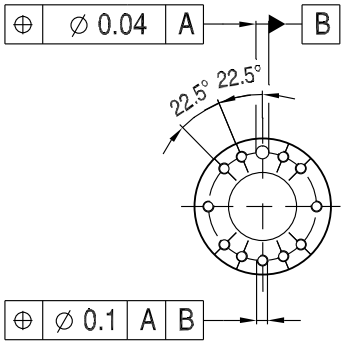

BSBF402 PSBF521/522
BSBF502

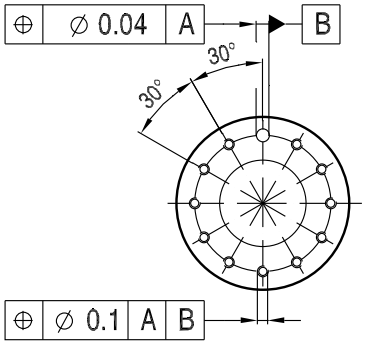

BSBF602 PSBF621/622
BSBF802 PSBF721/722
PSBF821/822

55 036 00 03

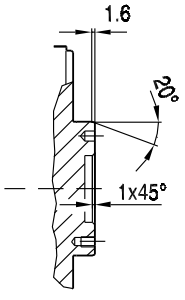

14.3 PS.F EPH.. → D1 [mm]

	PS.F121 PS.F122 PS.F221 PS.F222 PS.F322	PS.F121 PS.F122 PS.F221 PS.F222 PS.F322	PS.F221 PS.F322	PS.F221 PS.F321 PS.F322 PS.F521 PS.F522 PS.F622 PS.F722	PS.F321 PS.F521 PS.F522 PS.F621 PS.F622 PS.F721 PS.F722 PS.F822 PS.F922	PS.F521 PS.F621 PS.F622 PS.F721 PS.F722 PS.F822 PS.F922	PS.F521 PS.F621 PS.F622 PS.F721 PS.F722 PS.F822 PS.F922	PS.F621 PS.F721 PS.F822 PS.F922	PS.F821 PS.F921	PS.F821 PS.F921
	EPH01	**EPH02**	**EPH03**	**EPH04**	**EPH05**	**EPH06**	**EPH07**	**EPH08**	**EPH09**	**EPH10**
D1 [mm]	**Code number for mountable motor shaft diameter D1**									
8		01	01							
9	02	02	02							
10		03	03							
11	04	04	04	04						
12		05	05	05						
14		06	06	06	06					
16				08	08					
17					09					
18					10					
19				11	11					
22							12			
24					13		13			
28							14			
32							15	15	15	
35						16		16	16	
38								17	17	
42									18	
48										19
55										20

Example:

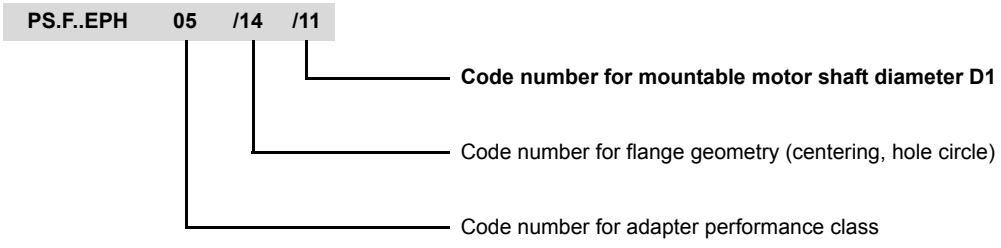

15 PS.C..

15.1 PS.C.. ECH..

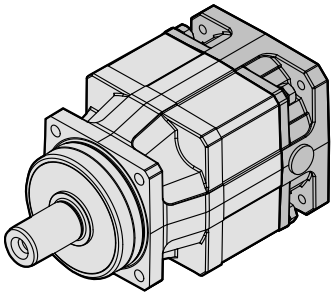

PSC../ECH..

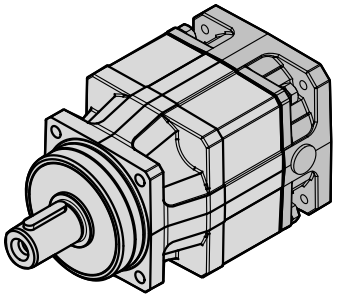

PSKC../ECH..

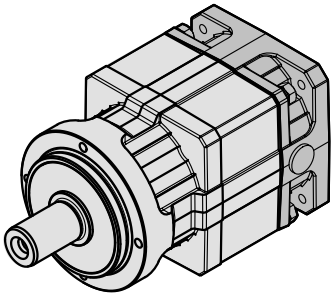

PSCZ../ECH

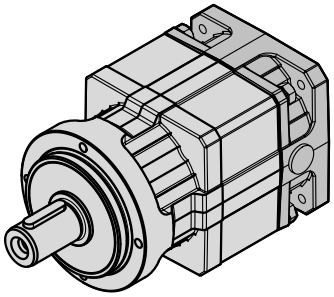

PSKCZ../ECH..

63935axx

15.2 PS.C.. EPH..

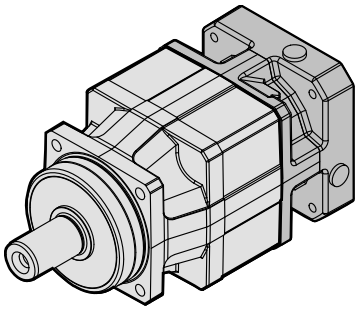

PSC../EPH..

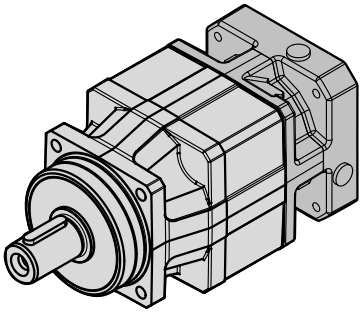

PSKC../EPH..

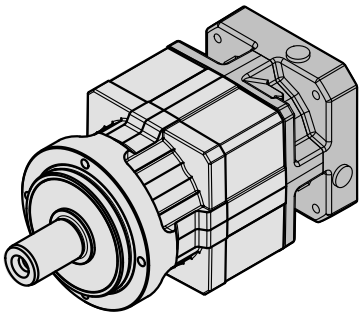

PSCZ../EPH

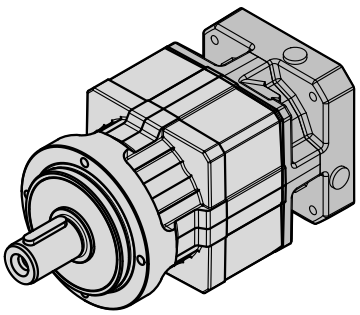

PSKCZ../EPH..

63934axx

15.3 PS.C.. ECH.. / EPH..

15.3.1 PS.C221/222 ECH.. / EPH.. [Nm]

[Nm]		ECH M_{amax} |M_{apk} |$M_{aNotaus}$			EPH M_{amax} | M_{apk} | $M_{aNotaus}$												
	i	02			01			02			03			04			
PSC221 1	3.00	29	40	57	23	23	34	29	40	60	29	40	60	29	40	60	
	5.00	34	42	63	34	42	63	34	42	63	34	42	63	34	42	63	
	7.00	32	39	59	32	39	59	32	39	59	32	39	59	32	39	59	
	10.00	30	37	56	30	37	56	30	37	56	30	37	56	30	37	56	
PSC222 2	15.00	29	40	60	29	40	60	29	40	60	29	40	60	29	40	60	
	21.00	29	40	60	29	40	60	29	40	60	29	40	60	29	40	60	
	25.00	34	42	63	34	42	63	34	42	63	34	42	63	34	42	63	
	30.00	29	40	60	29	40	60	29	40	60	29	40	60	29	40	60	
	35.00	34	42	63	34	42	63	34	42	63	34	42	63	34	42	63	
	49.00	32	39	59	32	39	59	32	39	59	32	39	59	32	39	59	
	50.00	34	42	63	34	42	63	34	42	63	34	42	63	34	42	63	
	70.00	32	39	59	32	39	59	32	39	59	32	39	59	32	39	59	
	100.00	30	37	56	30	37	56	30	37	56	30	37	56	30	37	56	

m [kg]		ECH	EPH			
	s	02	01	02	03	04
PSC221	1	1.8	2.4	2.5	2.8	2.9
PSC222	2	2.5	3.1	3.1	3.4	3.5

ECH02 n_e = 1500	i	M_{amax} [Nm]	M_{apk} [Nm]	$M_{aNotaus}$ [Nm]	n_{ak} [1/min]	J_{GA} 10^{-4} [kgm^2]	c_T PSC [Nm/']	F_{Ramax} PSC [N]	F_{Rapk} PSC [N]
PSC221 1	3.00	29	40	57	1500	0.37	3.1	1170	2000
	5.00	34	42	63	723	0.26	3.3	1390	2000
	7.00	32	39	59	809	0.23	3.2	1550	2000
	10.00	30	37	56	700	0.22	2.9	1750	2000
PSC222 2	15.00	29	40	60	467	0.26	3.0	2000	2000
	21.00	29	40	60	333	0.23	3.0	2000	2000
	25.00	34	42	63	280	0.25	3.2	2000	2000
	30.00	29	40	60	233	0.22	2.9	2000	2000
	35.00	34	42	63	200	0.23	3.2	2000	2000
	49.00	32	39	59	143	0.23	3.2	2000	2000
	50.00	34	42	63	140	0.22	3.2	2000	2000
	70.00	32	39	59	100	0.22	3.2	2000	2000
	100.00	30	37	56	70	0.22	2.9	2000	2000

EPH01 n_e = 1500	i	M_{amax} [Nm]	M_{apk} [Nm]	$M_{aNotaus}$ [Nm]	n_{ak} [1/min]	J_{GA} 10^{-4} [kgm^2]	c_T PSC [Nm/']	F_{Ramax} PSC [N]	F_{Rapk} PSC [N]
PSC221 1	3.00	23	23	34	2333	0.35	3.4	1170	2000
	5.00	34	42	63	723	0.24	3.4	1390	2000
	7.00	32	39	59	809	0.22	3.3	1550	2000
	10.00	30	37	56	700	0.21	3.0	1750	2000
PSC222 2	15.00	29	40	60	467	0.24	3.0	2000	2000
	21.00	29	40	60	333	0.22	3.0	2000	2000
	25.00	34	42	63	280	0.24	3.3	2000	2000
	30.00	29	40	60	233	0.21	3.0	2000	2000
	35.00	34	42	63	200	0.22	3.2	2000	2000
	49.00	32	39	59	143	0.22	3.2	2000	2000
	50.00	34	42	63	140	0.21	3.2	2000	2000
	70.00	32	39	59	100	0.21	3.2	2000	2000
	100.00	30	37	56	70	0.21	2.9	2000	2000

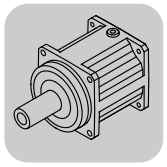

EPH02 n_e = 1500	i	M_{amax} [Nm]	M_{apk} [Nm]	$M_{aNotaus}$ [Nm]	n_{ak} [1/min]	J_{GA} 10^{-4} [kgm^2]	c_T PSC [Nm/']	F_{Ramax} PSC [N]	F_{Rapk} PSC [N]
PSC221 1	3.00	29	40	60	1500	0.66	3.4	1170	2000
	5.00	34	42	63	723	0.55	3.4	1390	2000
	7.00	32	39	59	809	0.52	3.3	1550	2000
	10.00	30	37	56	700	0.51	3.0	1750	2000
PSC222 2	15.00	29	40	60	467	0.54	3.0	2000	2000
	21.00	29	40	60	333	0.52	3.0	2000	2000
	25.00	34	42	63	280	0.54	3.3	2000	2000
	30.00	29	40	60	233	0.51	3.0	2000	2000
	35.00	34	42	63	200	0.52	3.2	2000	2000
	49.00	32	39	59	143	0.52	3.2	2000	2000
	50.00	34	42	63	140	0.51	3.2	2000	2000
	70.00	32	39	59	100	0.51	3.2	2000	2000
	100.00	30	37	56	70	0.51	2.9	2000	2000

EPH03 n_e = 1500	i	M_{amax} [Nm]	M_{apk} [Nm]	$M_{aNotaus}$ [Nm]	n_{ak} [1/min]	J_{GA} 10^{-4} [kgm^2]	c_T PSC [Nm/']	F_{Ramax} PSC [N]	F_{Rapk} PSC [N]
PSC221 1	3.00	29	40	60	1500	0.73	3.4	1170	2000
	5.00	34	42	63	723	0.62	3.4	1390	2000
	7.00	32	39	59	809	0.60	3.3	1550	2000
	10.00	30	37	56	700	0.58	3.0	1750	2000
PSC222 2	15.00	29	40	60	467	0.62	3.0	2000	2000
	21.00	29	40	60	333	0.60	3.0	2000	2000
	25.00	34	42	63	280	0.62	3.3	2000	2000
	30.00	29	40	60	233	0.58	3.0	2000	2000
	35.00	34	42	63	200	0.60	3.2	2000	2000
	49.00	32	39	59	143	0.59	3.2	2000	2000
	50.00	34	42	63	140	0.58	3.2	2000	2000
	70.00	32	39	59	100	0.58	3.2	2000	2000
	100.00	30	37	56	70	0.58	2.9	2000	2000

EPH04 n_e = 1500	i	M_{amax} [Nm]	M_{apk} [Nm]	$M_{aNotaus}$ [Nm]	n_{ak} [1/min]	J_{GA} 10^{-4} [kgm^2]	c_T PSC [Nm/']	F_{Ramax} PSC [N]	F_{Rapk} PSC [N]
PSC221 1	3.00	29	40	60	1500	0.91	3.4	1170	2000
	5.00	34	42	63	723	0.80	3.4	1390	2000
	7.00	32	39	59	809	0.78	3.3	1550	2000
	10.00	30	37	56	700	0.76	3.0	1750	2000
PSC222 2	15.00	29	40	60	467	0.80	3.0	2000	2000
	21.00	29	40	60	333	0.77	3.0	2000	2000
	25.00	34	42	63	280	0.79	3.3	2000	2000
	30.00	29	40	60	233	0.76	3.0	2000	2000
	35.00	34	42	63	200	0.77	3.2	2000	2000
	49.00	32	39	59	143	0.77	3.2	2000	2000
	50.00	34	42	63	140	0.76	3.2	2000	2000
	70.00	32	39	59	100	0.76	3.2	2000	2000
	100.00	30	37	56	70	0.76	2.9	2000	2000

ECH / EPH	i	n_{epk} [1/min]	η [%]	M1;M3;M5-6 a_0	M1;M3;M5-6 a_1	M1;M3;M5-6 a_2	M2 a_0	M2 a_1	M2 a_2	M4 a_0	M4 a_1	M4 a_2	φ [']
PSC221 1	3.00	7000	99	115.0	-0.090	0	122.0	-0.101	0	124.0	-0.107	0	10
	5.00	7000	99	186.0	-0.183	0	191.0	-0.191	0	195.0	-0.200	0	10
	7.00	7000	99	225	-0.272	0	228	-0.279	0	232	-0.289	0	10
	10.00	7000	99	244	-0.383	0	246	-0.389	0	244	-0.391	0	10

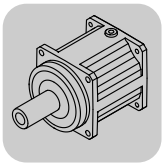

ECH / EPH	i	n_{epk} [1/min]	η [%]	M1;M3;M5-6 a_0	M1;M3;M5-6 a_1	M1;M3;M5-6 a_2	M2 a_0	M2 a_1	M2 a_2	M4 a_0	M4 a_1	M4 a_2	φ [°]
PSC222 2	15.00	7000	98	221	-0.660	0	222	-0.670	0	223	-0.679	0	15
	21.00	7000	98	247	-0.905	0	247	-0.912	0	248	-0.922	0	15
	25.00	7000	98	415	-1.997	0	417	-2.037	0	418	-2.050	0	15
	30.00	7000	98	279	-1.323	0	278	-1.329	0	279	-1.340	0	15
	35.00	7000	98	468	-2.789	0	468	-2.820	0	469	-2.833	0	15
	49.00	7000	98	630	-5.217	0	630	-5.280	0	631	-5.294	0	15
	50.00	7000	98	531	-4.125	0	529	-4.149	0	529	-4.163	0	15
	70.00	7000	98	716	-7.759	0	714	-7.805	0	715	-7.821	0	15
	100.00	7000	98	908	-13.997	0	905	-14.089	0	905	-14.104	0	15

15.3.2 PS.C221/222 ECH.. [mm]

57 015 00 07

PSC221..

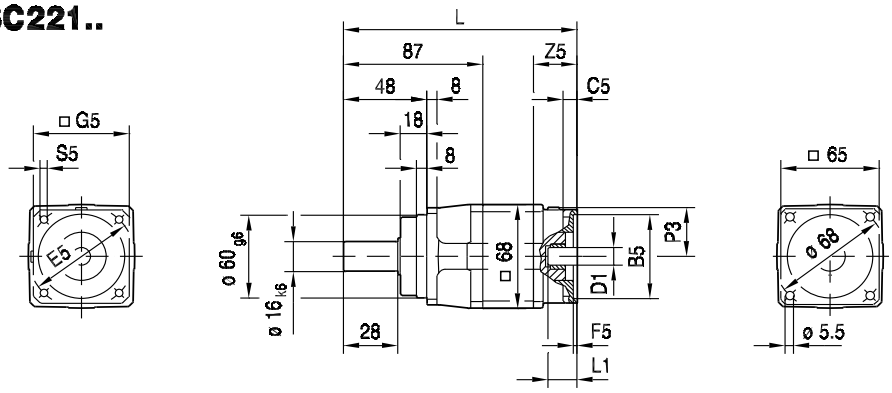

PSC / PSCZ

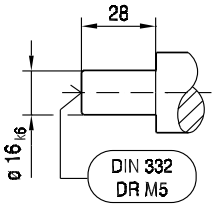

PSKC / PSKCZ

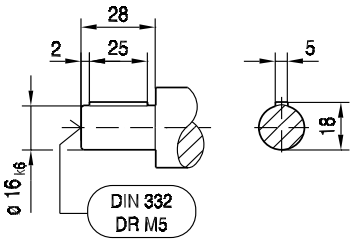

PSCZ221..

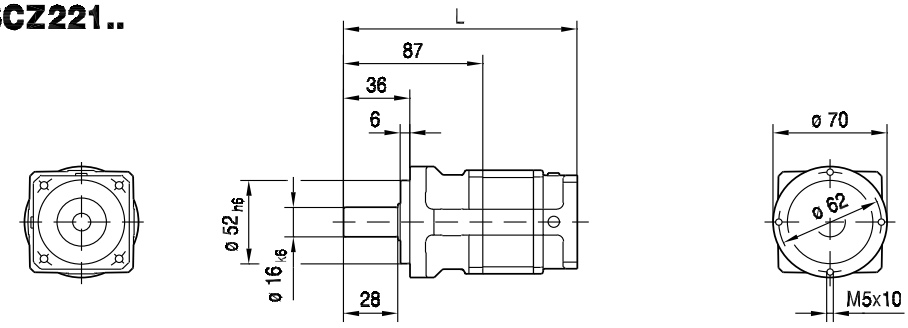

(→ 📖 144)	L	B5	C5	E5	F5	G5	S5	Z5	L1	P3	D1 (→ 📖 566)
ECH02/01/..	149	40	8	63	5	55	M4	28	25	30	9, 11
ECH02/08/..	152	60	9	75	5	73	M5	31	28	36	9, 11

57 016 00 07

PSC222..

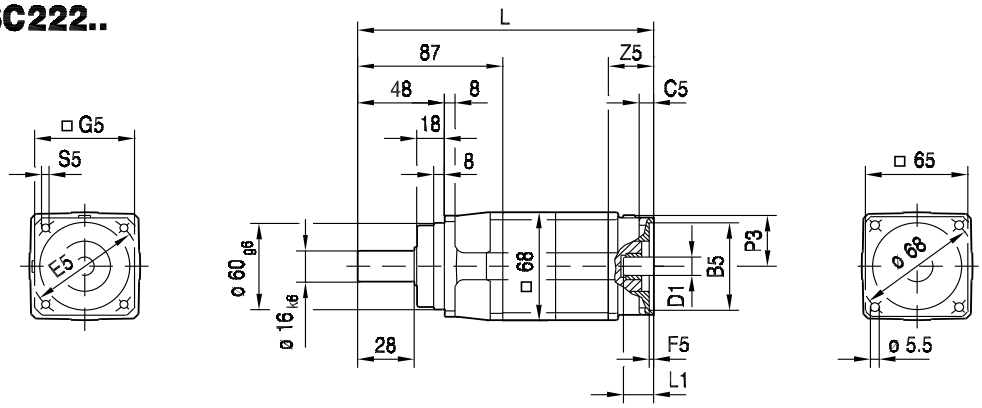

PSC / PSCZ

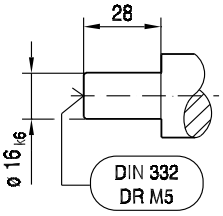

PSKC / PSKCZ

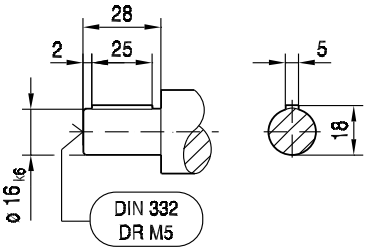

PSCZ222..

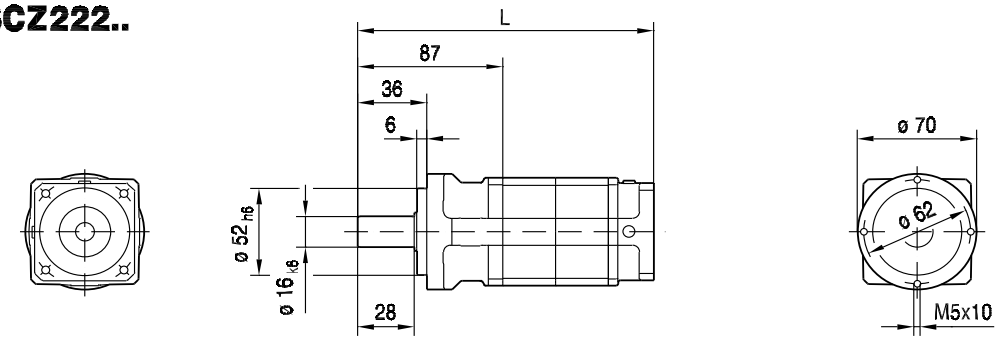

(→ 📖 144)	L	B5	C5	E5	F5	G5	S5	Z5	L1	P3	D1 (→ 📖 566)
ECH02/01/..	184	40	8	63	5	55	M4	28	25	30	9, 11
ECH02/08/..	187	60	9	75	5	73	M5	31	28	36	9, 11

15.3.3 PS.C221/222 EPH.. [mm]

57 023 00 07

PSC221..

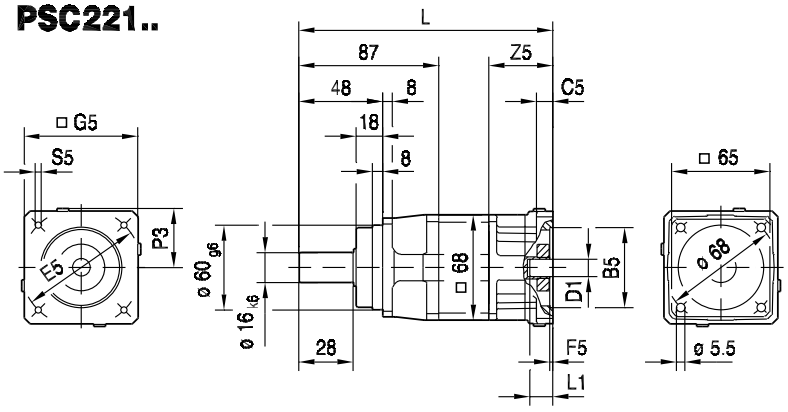

PSC / PSCZ

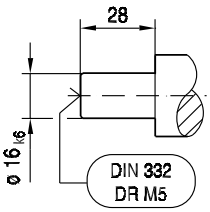

PSCZ221..

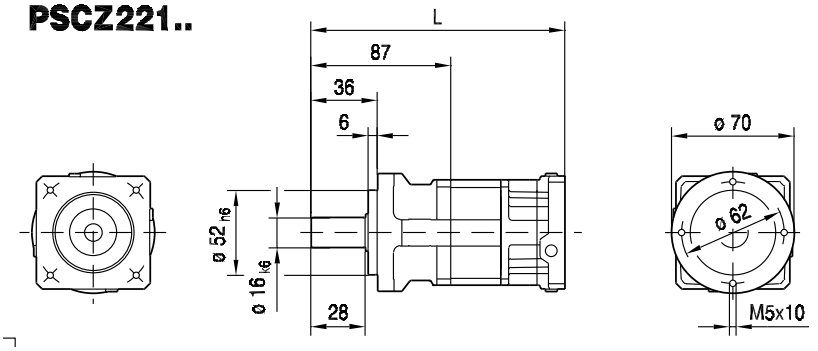

PSKC / PSKCZ

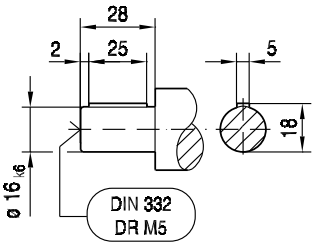

(→ 📖 144)	L	B5	C5	E5	F5	G5	S5	Z5	L1	P3	D1 (→ 📖 567)
EPH01/01/..	159	40	13	63	4	73	M4	38	33	39	9, 11
EPH01/03/..	159	50	13	60	4	73	M4	38	33	39	9, 11
EPH02/04/..	159	50	13	70	4	73	M5	38	34	39	8, 9, 10, 11, 12, 14
EPH02/05/..	159	50	13	80	4	73	M4	38	34	39	8, 9, 10, 11, 12, 14
EPH02/08/..	159	60	13	75	4	73	M5	38	34	39	8, 9, 10, 11, 12, 14
EPH03/01/..	168	40	20	63	3.5	90	M4	47	38	47	8, 9, 10, 11, 12, 14
EPH03/03/..	168	50	20	60	3.5	90	M4	47	30	47	8, 9, 10, 11, 12, 14
EPH03/04/..	168	50	20	70	3.5	90	M5	47	30	47	8, 9, 10, 11, 12, 14
EPH03/05/..	168	50	20	80	3.5	90	M4	47	30	47	8, 9, 10, 11, 12, 14
EPH03/06/..	168	50	20	95	3.5	90	M6	47	30	47	8, 9, 10, 11, 12, 14
EPH03/07/..	168	50	20	100	3.5	90	M6	47	30	47	8, 9, 10, 11, 12, 14
EPH03/08/..	168	60	20	75	3.5	90	M5	47	30	47	8, 9, 10, 11, 12, 14
EPH03/09/..	168	60	20	90	3.5	90	M5	47	30	47	8, 9, 10, 11, 12, 14
EPH03/10/..	168	70	20	85	3.5	90	M6	47	30	47	8, 9, 10, 11, 12, 14
EPH03/11/..	168	70	20	90	3.5	90	M5	47	30	47	8, 9, 10, 11, 12, 14
EPH03/12/..	168	70	20	90	3.5	90	M6	47	30	47	8, 9, 10, 11, 12, 14
EPH03/13/..	168	80	20	100	3.5	90	M6	47	30	47	8, 9, 10, 11, 12, 14
EPH03/14/..	168	95	16	115	4	105	M8	47	30	55	8, 9, 10, 11, 12, 14
EPH04/01/..	177	40	20	63	3.5	90	M4	56	43	47	11, 12, 14, 16, 19
EPH04/03/..	177	50	20	60	3.5	90	M4	56	41	47	11, 12, 14, 16, 19
EPH04/04/..	177	50	20	70	3.5	90	M5	56	41	47	11, 12, 14, 16, 19
EPH04/05/..	177	50	20	80	3.5	90	M4	56	41	47	11, 12, 14, 16, 19
EPH04/06/..	177	50	20	95	3.5	90	M6	56	41	47	11, 12, 14, 16, 19
EPH04/07/..	177	50	20	100	3.5	90	M6	56	41	47	11, 12, 14, 16, 19
EPH04/08/..	177	60	20	75	3.5	90	M5	56	41	47	11, 12, 14, 16, 19
EPH04/09/..	177	60	20	90	3.5	90	M5	56	41	47	11, 12, 14, 16, 19
EPH04/10/..	177	70	20	85	3.5	90	M6	56	41	47	11, 12, 14, 16, 19
EPH04/11/..	177	70	20	90	3.5	90	M5	56	41	47	11, 12, 14, 16, 19
EPH04/12/..	177	70	20	90	3.5	90	M6	56	41	47	11, 12, 14, 16, 19
EPH04/13/..	177	80	20	100	3.5	90	M6	56	41	47	11, 12, 14, 16, 19
EPH04/14/..	177	95	16	115	4	105	M8	56	41	55	11, 12, 14, 16, 19
EPH04/15/..	177	95	16	130	4	115	M8	56	41	60	11, 12, 14, 16, 19

57 024 00 07

PSC222..

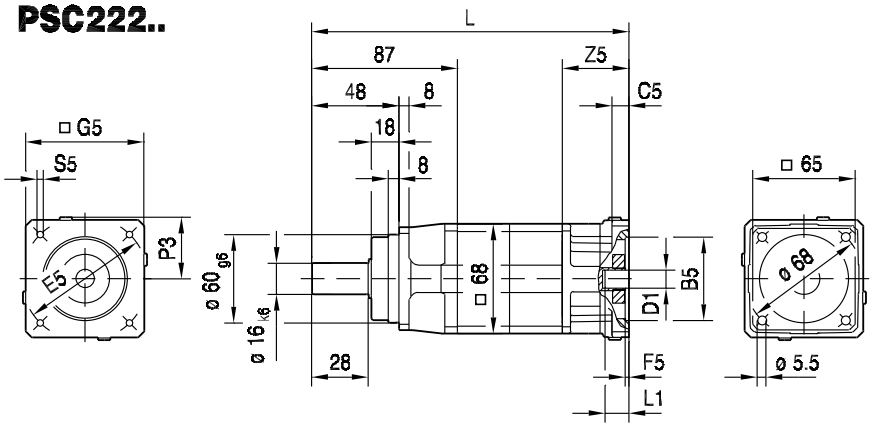

PSC / PSCZ

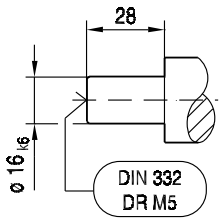

PSCZ222..

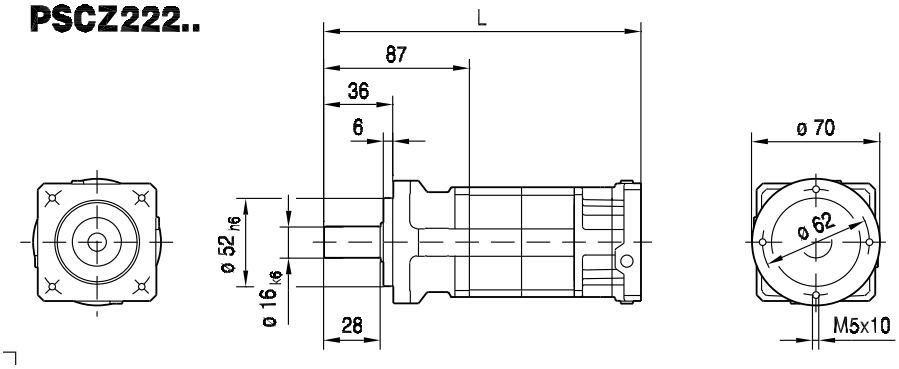

PSKC / PSKCZ

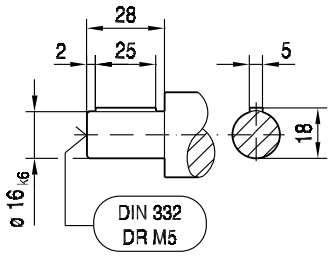

(→ 144)	L	B5	C5	E5	F5	G5	S5	Z5	L1	P3	D1 (→ 567)
EPH01/01/..	194	40	13	63	4	73	M4	38	33	39	9, 11
EPH01/03/..	194	50	13	60	4	73	M4	38	33	39	9, 11
EPH02/04/..	194	50	13	70	4	73	M5	38	34	39	8, 9, 10, 11, 12, 14
EPH02/05/..	194	50	13	80	4	73	M4	38	34	39	8, 9, 10, 11, 12, 14
EPH02/08/..	194	60	13	75	4	73	M5	38	34	39	8, 9, 10, 11, 12, 14
EPH03/01/..	203	40	20	63	3.5	90	M4	47	38	47	8, 9, 10, 11, 12, 14
EPH03/03/..	203	50	20	60	3.5	90	M4	47	30	47	8, 9, 10, 11, 12, 14
EPH03/04/..	203	50	20	70	3.5	90	M5	47	30	47	8, 9, 10, 11, 12, 14
EPH03/05/..	203	50	20	80	3.5	90	M4	47	30	47	8, 9, 10, 11, 12, 14
EPH03/06/..	203	50	20	95	3.5	90	M6	47	30	47	8, 9, 10, 11, 12, 14
EPH03/07/..	203	50	20	100	3.5	90	M6	47	30	47	8, 9, 10, 11, 12, 14
EPH03/08/..	203	60	20	75	3.5	90	M5	47	30	47	8, 9, 10, 11, 12, 14
EPH03/09/..	203	60	20	90	3.5	90	M5	47	30	47	8, 9, 10, 11, 12, 14
EPH03/10/..	203	70	20	85	3.5	90	M6	47	30	47	8, 9, 10, 11, 12, 14
EPH03/11/..	203	70	20	90	3.5	90	M5	47	30	47	8, 9, 10, 11, 12, 14
EPH03/12/..	203	70	20	90	3.5	90	M6	47	30	47	8, 9, 10, 11, 12, 14
EPH03/13/..	203	80	20	100	3.5	90	M6	47	30	47	8, 9, 10, 11, 12, 14
EPH03/14/..	203	95	16	115	4	105	M8	47	30	55	8, 9, 10, 11, 12, 14
EPH04/01/..	212	40	20	63	3.5	90	M4	56	43	47	11, 12, 14, 16, 19
EPH04/03/..	212	50	20	60	3.5	90	M4	56	41	47	11, 12, 14, 16, 19
EPH04/04/..	212	50	20	70	3.5	90	M5	56	41	47	11, 12, 14, 16, 19
EPH04/05/..	212	50	20	80	3.5	90	M4	56	41	47	11, 12, 14, 16, 19
EPH04/06/..	212	50	20	95	3.5	90	M6	56	41	47	11, 12, 14, 16, 19
EPH04/07/..	212	50	20	100	3.5	90	M6	56	41	47	11, 12, 14, 16, 19
EPH04/08/..	212	60	20	75	3.5	90	M5	56	41	47	11, 12, 14, 16, 19
EPH04/09/..	212	60	20	90	3.5	90	M5	56	41	47	11, 12, 14, 16, 19
EPH04/10/..	212	70	20	85	3.5	90	M6	56	41	47	11, 12, 14, 16, 19
EPH04/11/..	212	70	20	90	3.5	90	M5	56	41	47	11, 12, 14, 16, 19
EPH04/12/..	212	70	20	90	3.5	90	M6	56	41	47	11, 12, 14, 16, 19
EPH04/13/..	212	80	20	100	3.5	90	M6	56	41	47	11, 12, 14, 16, 19
EPH04/14/..	212	95	16	115	4	105	M8	56	41	55	11, 12, 14, 16, 19
EPH04/15/..	212	95	16	130	4	115	M8	56	41	60	11, 12, 14, 16, 19

15.3.4 PS.C321/322 ECH.. / EPH.. [Nm]

[Nm]		ECH M_{amax} | M_{apk} | $M_{aNotaus}$			EPH M_{amax} | M_{apk} | $M_{aNotaus}$					
	i	03			04			05		
PSC321 1	3.00	62	86	129	62	86	129	62	86	129
	5.00	74	91	136	74	91	136	74	91	136
	7.00	69	85	128	69	85	128	69	85	128
	10.00	66	73	110	66	81	122	66	81	122
PSC322 2	15.00	62	86	129	62	86	129	62	86	129
	21.00	62	86	129	62	86	129	62	86	129
	25.00	74	91	136	74	91	136	74	91	136
	30.00	62	86	129	62	86	129	62	86	129
	35.00	74	91	136	74	91	136	74	91	136
	49.00	69	85	128	69	85	128	69	85	128
	50.00	74	91	136	74	91	136	74	91	136
	70.00	69	85	128	69	85	128	69	85	128
	100.00	66	81	122	66	81	122	66	81	122

m [kg]		ECH	EPH	
	s	03	04	05
PSC321	1	3.6	4.4	5.7
PSC322	2	5.0	5.8	7.1

ECH03 n_e = 1500	i	M_{amax} [Nm]	M_{apk} [Nm]	$M_{aNotaus}$ [Nm]	n_{ak} [1/min]	J_{GA} 10^{-4} [kgm^2]	c_T PSC [Nm/']	F_{Ramax} PSC [N]	F_{Rapk} PSC [N]
PSC321 1	3.00	62	86	129	662	1.2	9.4	1710	4000
	5.00	74	91	136	305	0.92	11	2030	4000
	7.00	69	85	128	341	0.85	10	2270	4000
	10.00	66	73	110	364	0.81	8.1	2560	4000
PSC322 2	15.00	62	86	129	467	0.90	8.9	2930	4000
	21.00	62	86	129	333	0.84	8.9	3280	4000
	25.00	74	91	136	280	0.89	10	3470	4000
	30.00	62	86	129	233	0.80	8.7	3690	4000
	35.00	74	91	136	200	0.83	10	3880	4000
	49.00	69	85	128	143	0.83	10	4000	4000
	50.00	74	91	136	140	0.80	10	4000	4000
	70.00	69	85	128	100	0.80	9.9	4000	4000
	100.00	66	81	122	70	0.80	8.5	4000	4000

EPH04 n_e = 1500	i	M_{amax} [Nm]	M_{apk} [Nm]	$M_{aNotaus}$ [Nm]	n_{ak} [1/min]	J_{GA} 10^{-4} [kgm^2]	c_T PSC [Nm/']	F_{Ramax} PSC [N]	F_{Rapk} PSC [N]
PSC321 1	3.00	62	86	129	662	1.2	10.0	1710	4000
	5.00	74	91	136	305	0.92	10	2030	4000
	7.00	69	85	128	341	0.85	10	2270	4000
	10.00	66	81	122	364	0.79	8.6	2560	4000
PSC322 2	15.00	62	86	129	467	0.91	9.0	2930	4000
	21.00	62	86	129	333	0.84	8.9	3280	4000
	25.00	74	91	136	280	0.89	10	3470	4000
	30.00	62	86	129	233	0.78	8.7	3690	4000
	35.00	74	91	136	200	0.84	10	3880	4000
	49.00	69	85	128	143	0.84	10	4000	4000
	50.00	74	91	136	140	0.78	10	4000	4000
	70.00	69	85	128	100	0.78	10.0	4000	4000
	100.00	66	81	122	70	0.78	8.6	4000	4000

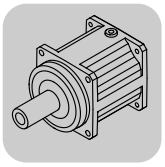

EPH05 n_e = 1500	i	M_{amax} [Nm]	M_{apk} [Nm]	$M_{aNotaus}$ [Nm]	n_{ak} [1/min]	J_{GA} 10^{-4} [kgm^2]	c_T PSC [Nm/']	F_{Ramax} PSC [N]	F_{Rapk} PSC [N]
PSC321 1	3.00	62	86	129	662	2.9	10.0	1710	4000
	5.00	74	91	136	305	2.6	10	2030	4000
	7.00	69	85	128	341	2.5	10	2270	4000
	10.00	66	81	122	364	2.5	8.6	2560	4000
PSC322 2	15.00	62	86	129	467	2.6	9.0	2930	4000
	21.00	62	86	129	333	2.5	8.9	3280	4000
	25.00	74	91	136	280	2.6	10	3470	4000
	30.00	62	86	129	233	2.5	8.7	3690	4000
	35.00	74	91	136	200	2.5	10	3880	4000
	49.00	69	85	128	143	2.5	10	4000	4000
	50.00	74	91	136	140	2.5	10	4000	4000
	70.00	69	85	128	100	2.5	10.0	4000	4000
	100.00	66	81	122	70	2.5	8.6	4000	4000

ECH / EPH				M1;M3;M5-6			M2			M4			φ
	i	n_{epk} [1/min]	η [%]	a_0	a_1	a_2	a_0	a_1	a_2	a_0	a_1	a_2	[']
PSC321 1	3.00	6500	99	214	-0.202	0	224	-0.220	0	231	-0.236	0	10
	5.00	6500	99	316	-0.363	0	323	-0.375	0	331	-0.398	0	10
	7.00	6500	99	327	-0.452	0	332	-0.461	0	329	-0.469	0	10
	10.00	6500	99	331	-0.585	0	334	-0.589	0	334	-0.605	0	10
PSC322 2	15.00	6500	98	406	-1.398	0	406	-1.404	0	409	-1.429	0	15
	21.00	6500	98	434	-1.798	0	434	-1.800	0	436	-1.825	0	15
	25.00	6500	98	739	-4.082	0	741	-4.124	0	743	-4.157	0	15
	30.00	6500	98	469	-2.467	0	469	-2.475	0	471	-2.501	0	15
	35.00	6500	98	792	-5.306	0	792	-5.334	0	794	-5.368	0	15
	49.00	6500	98	1003	-9.318	0	1003	-9.375	0	1005	-9.410	0	15
	50.00	6500	98	855	-7.340	0	856	-7.376	0	857	-7.410	0	15
	70.00	6500	98	1087	-12.974	0	1089	-13.050	0	1090	-13.085	0	15
	100.00	6500	98	1349	-22.902	0	1352	-23.048	0	1352	-23.081	0	15

15.3.5 PS.C321/322 ECH.. [mm]

57 017 00 07

PSC321..

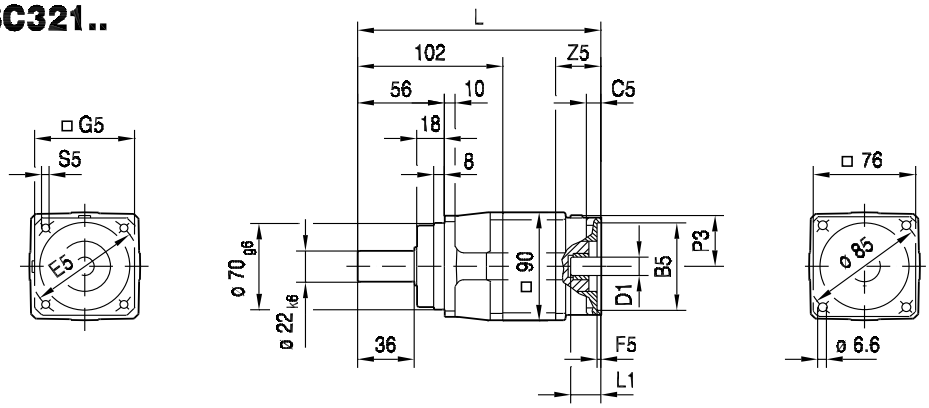

PSC / PSCZ

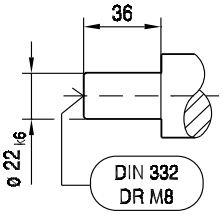

PSKC / PSKCZ

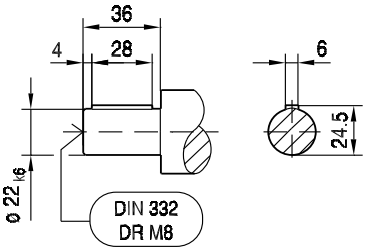

PSCZ321..

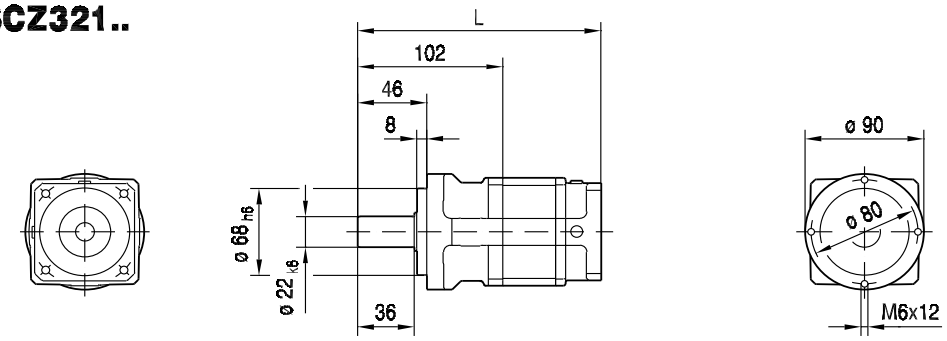

(→ 📖 144)	L	B5	C5	E5	F5	G5	S5	Z5	L1	P3	D1 (→ 📖 566)
ECH03/08/..	172	60	9	75	5	73	M5	28	28	38	11, 14
ECH03/13/..	179	80	10	100	5	90	M6	35	35	47	11, 14

57 018 00 07

PSC322..

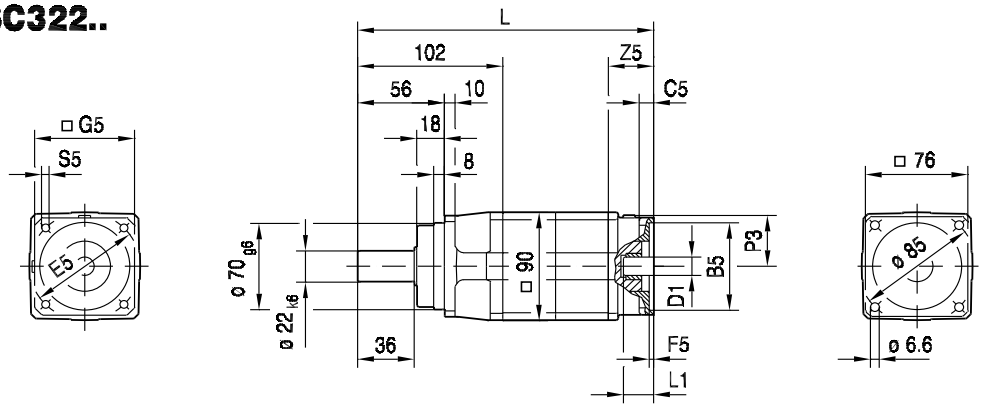

PSC / PSCZ

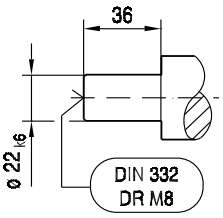

PSKC / PSKCZ

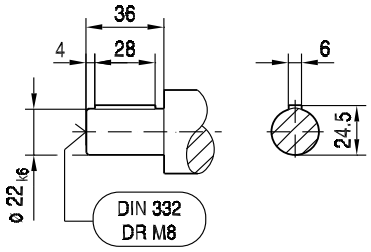

PSCZ322..

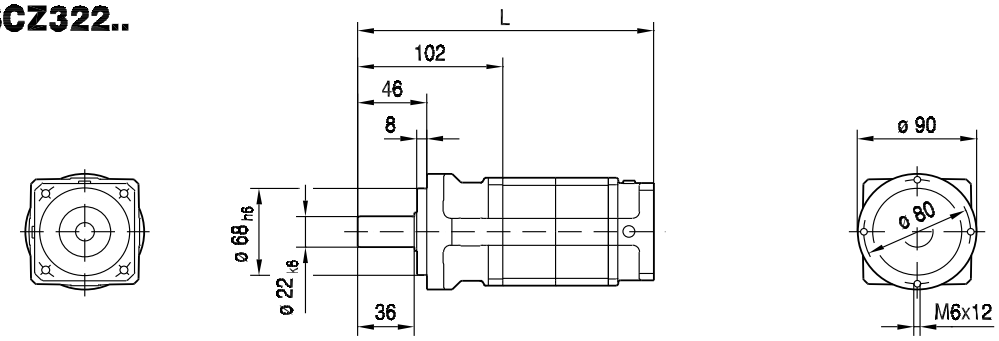

(→ 📖 144)	L	B5	C5	E5	F5	G5	S5	Z5	L1	P3	D1 (→ 📖 566)
ECH03/08/..	214	60	9	75	5	73	M5	28	28	38	11, 14
ECH03/13/..	221	80	10	100	5	90	M6	35	35	47	11, 14

15.3.6 PS.C321/322 EPH.. [mm]

57 025 00 07

PSC321..

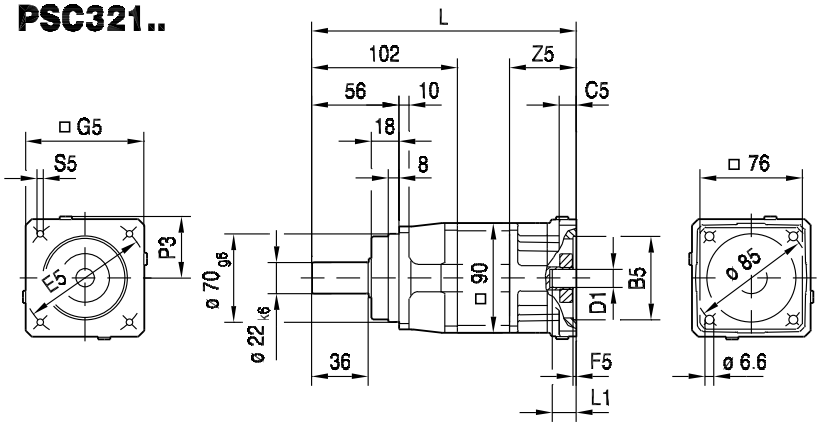

PSC / PSCZ

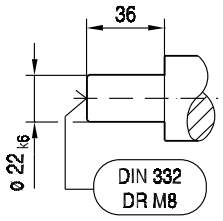

PSCZ321..

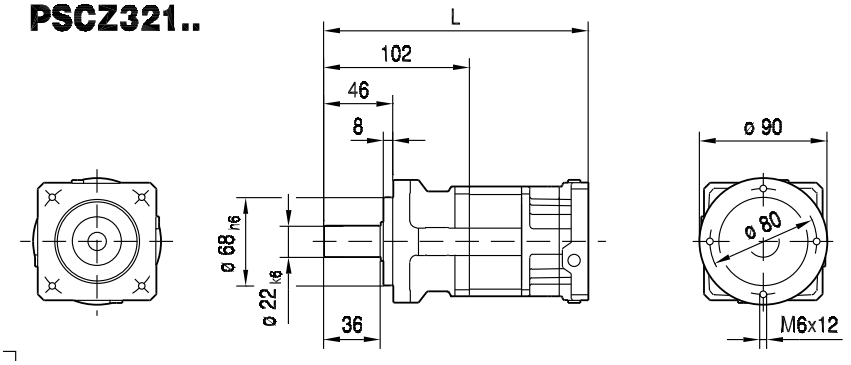

PSKC / PSKCZ

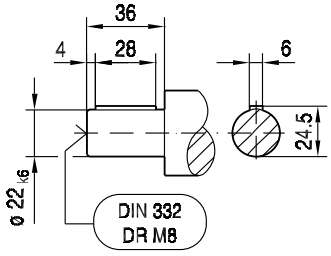

(→ 📖 144)	L	B5	C5	E5	F5	G5	S5	Z5	L1	P3	D1 (→ 📖 567)
EPH04/01/..	195	40	20	63	3.5	90	M4	51	43	47	11, 12, 14, 16, 19
EPH04/03/..	195	50	20	60	3.5	90	M4	51	41	47	11, 12, 14, 16, 19
EPH04/04/..	195	50	20	70	3.5	90	M5	51	41	47	11, 12, 14, 16, 19
EPH04/05/..	195	50	20	80	3.5	90	M4	51	41	47	11, 12, 14, 16, 19
EPH04/06/..	195	50	20	95	3.5	90	M6	51	41	47	11, 12, 14, 16, 19
EPH04/07/..	195	50	20	100	3.5	90	M6	51	41	47	11, 12, 14, 16, 19
EPH04/08/..	195	60	20	75	3.5	90	M5	51	41	47	11, 12, 14, 16, 19
EPH04/09/..	195	60	20	90	3.5	90	M5	51	41	47	11, 12, 14, 16, 19
EPH04/10/..	195	70	20	85	3.5	90	M6	51	41	47	11, 12, 14, 16, 19
EPH04/11/..	195	70	20	90	3.5	90	M5	51	41	47	11, 12, 14, 16, 19
EPH04/12/..	195	70	20	90	3.5	90	M6	51	41	47	11, 12, 14, 16, 19
EPH04/13/..	195	80	20	100	3.5	90	M6	51	41	47	11, 12, 14, 16, 19
EPH04/14/..	195	95	16	115	4	105	M8	51	41	55	11, 12, 14, 16, 19
EPH04/15/..	195	95	16	130	4	115	M8	51	41	60	11, 12, 14, 16, 19
EPH05/14/..	211	95	16	115	4	120	M8	67	52	62	14, 16, 17, 18, 19, 24
EPH05/15/..	211	95	16	130	4	120	M8	67	52	62	14, 16, 17, 18, 19, 24
EPH05/16/..	211	110	16	130	5	120	M8	67	52	62	14, 16, 17, 18, 19, 24
EPH05/17/..	211	110	16	145	7	120	M8	67	52	62	14, 16, 17, 18, 19, 24
EPH05/18/..	211	110	20	165	5	140	M10	67	52	72	14, 16, 17, 18, 19, 24
EPH05/20/..	211	130	20	165	5	140	M10	67	52	72	14, 16, 17, 18, 19, 24
EPH05/26/..	211	110	16	130	5	115	M8	67	52	61	14, 16, 17, 18, 19, 24

57 026 00 07

PSC322..

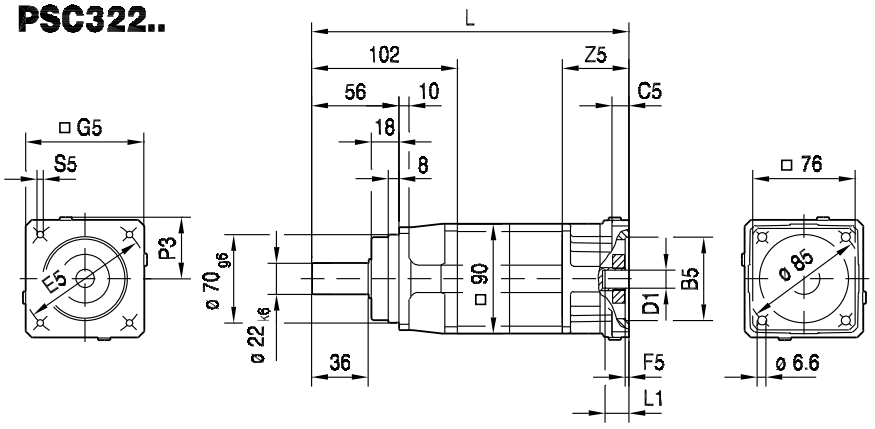

PSC / PSCZ

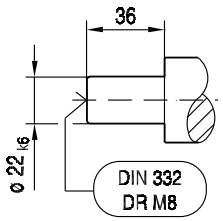

PSCZ322..

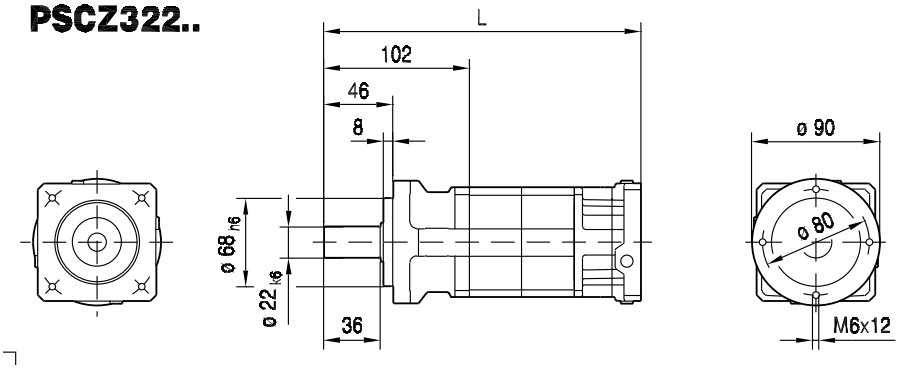

PSKC / PSKCZ

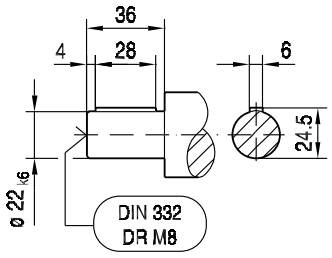

(→ 📖 144)	L	B5	C5	E5	F5	G5	S5	Z5	L1	P3	D1 (→ 📖 567)
EPH04/01/..	237	40	20	63	3.5	90	M4	51	43	47	11, 12, 14, 16, 19
EPH04/03/..	237	50	20	60	3.5	90	M4	51	41	47	11, 12, 14, 16, 19
EPH04/04/..	237	50	20	70	3.5	90	M5	51	41	47	11, 12, 14, 16, 19
EPH04/05/..	237	50	20	80	3.5	90	M4	51	41	47	11, 12, 14, 16, 19
EPH04/06/..	237	50	20	95	3.5	90	M6	51	41	47	11, 12, 14, 16, 19
EPH04/07/..	237	50	20	100	3.5	90	M6	51	41	47	11, 12, 14, 16, 19
EPH04/08/..	237	60	20	75	3.5	90	M5	51	41	47	11, 12, 14, 16, 19
EPH04/09/..	237	60	20	90	3.5	90	M5	51	41	47	11, 12, 14, 16, 19
EPH04/10/..	237	70	20	85	3.5	90	M6	51	41	47	11, 12, 14, 16, 19
EPH04/11/..	237	70	20	90	3.5	90	M5	51	41	47	11, 12, 14, 16, 19
EPH04/12/..	237	70	20	90	3.5	90	M6	51	41	47	11, 12, 14, 16, 19
EPH04/13/..	237	80	20	100	3.5	90	M6	51	41	47	11, 12, 14, 16, 19
EPH04/14/..	237	95	16	115	4	105	M8	51	41	55	11, 12, 14, 16, 19
EPH04/15/..	237	95	16	130	4	115	M8	51	41	60	11, 12, 14, 16, 19
EPH05/14/..	253	95	16	115	4	120	M8	67	52	62	14, 16, 17, 18, 19, 24
EPH05/15/..	253	95	16	130	4	120	M8	67	52	62	14, 16, 17, 18, 19, 24
EPH05/16/..	253	110	16	130	5	120	M8	67	52	62	14, 16, 17, 18, 19, 24
EPH05/17/..	253	110	16	145	7	120	M8	67	52	62	14, 16, 17, 18, 19, 24
EPH05/18/..	253	110	20	165	5	140	M10	67	52	72	14, 16, 17, 18, 19, 24
EPH05/20/..	253	130	20	165	5	140	M10	67	52	72	14, 16, 17, 18, 19, 24
EPH05/26/..	253	110	16	130	5	115	M8	67	52	61	14, 16, 17, 18, 19, 24

15.3.7 PS.C521/522 ECH.. / EPH.. [Nm]

[Nm]		ECH M_{amax} |M_{apk} |$M_{aNotaus}$			EPH M_{amax} | M_{apk} | $M_{aNotaus}$												
	i	05			04			05			06			07			
PSC521 1	3.00	147	200	290	119	119	178	147	200	305	147	200	305	147	200	305	
	5.00	181	220	330	181	198	295	181	220	330	181	220	330	181	220	330	
	7.00	169	205	310	169	205	310	169	205	310	169	205	310	169	205	310	
	10.00	161	163	245	161	199	295	161	199	295	161	199	295	161	199	295	
PSC522 2	15.00	147	200	305	147	200	305	147	200	305	147	200	305	147	200	305	
	21.00	147	200	305	147	200	305	147	200	305	147	200	305	147	200	305	
	25.00	181	220	330	181	220	330	181	220	330	181	220	330	181	220	330	
	30.00	147	200	305	147	200	305	147	200	305	147	200	305	147	200	305	
	35.00	181	220	330	181	220	330	181	220	330	181	220	330	181	220	330	
	49.00	169	205	310	169	205	310	169	205	310	169	205	310	169	205	310	
	50.00	181	220	330	181	220	330	181	220	330	181	220	330	181	220	330	
	70.00	169	205	310	169	205	310	169	205	310	169	205	310	169	205	310	
	100.00	161	199	295	161	199	295	161	199	295	161	199	295	161	199	295	

m [kg]		ECH	EPH			
	s	05	04	05	06	07
PSC521	1	7.4	7.7	9.0	11	11
PSC522	2	10	11	12	14	14

ECH05 n_e = 1500	i	M_{amax} [Nm]	M_{apk} [Nm]	$M_{aNotaus}$ [Nm]	n_{ak} [1/min]	J_{GA} 10^{-4} [kgm^2]	c_T PSC [Nm/']	F_{Ramax} PSC [N]	F_{Rapk} PSC [N]
PSC521 1	3.00	147	200	290	911	4.2	26	2900	6750
	5.00	181	220	330	375	3.0	27	3440	6750
	7.00	169	205	310	417	2.7	26	3850	6750
	10.00	161	163	245	447	2.5	21	4330	6750
PSC522 2	15.00	147	200	305	467	2.9	25	4960	6750
	21.00	147	200	305	333	2.7	25	5550	6750
	25.00	181	220	330	280	2.9	26	5880	6750
	30.00	147	200	305	233	2.5	24	6250	6750
	35.00	181	220	330	200	2.6	26	6580	6750
	49.00	169	205	310	143	2.6	26	6750	6750
	50.00	181	220	330	140	2.5	26	6750	6750
	70.00	169	205	310	100	2.5	26	6750	6750
	100.00	161	199	295	70	2.5	18	6750	6750

EPH04 n_e = 1500	i	M_{amax} [Nm]	M_{apk} [Nm]	$M_{aNotaus}$ [Nm]	n_{ak} [1/min]	J_{GA} 10^{-4} [kgm^2]	c_T PSC [Nm/']	F_{Ramax} PSC [N]	F_{Rapk} PSC [N]
PSC521 1	3.00	119	119	178	1856	2.7	25	2900	6750
	5.00	181	198	295	375	1.4	26	3440	6750
	7.00	169	205	310	417	1.1	26	3850	6750
	10.00	161	199	295	447	0.94	22	4330	6750
PSC522 2	15.00	147	200	305	467	1.3	25	4960	6750
	21.00	147	200	305	333	1.1	25	5550	6750
	25.00	181	220	330	280	1.3	26	5880	6750
	30.00	147	200	305	233	0.93	24	6250	6750
	35.00	181	220	330	200	1.1	26	6580	6750
	49.00	169	205	310	143	1.0	26	6750	6750
	50.00	181	220	330	140	0.91	26	6750	6750
	70.00	169	205	310	100	0.91	26	6750	6750
	100.00	161	199	295	70	0.91	18	6750	6750

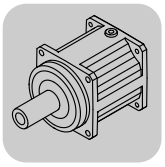

EPH05 n_e = 1500	i	M_{amax} [Nm]	M_{apk} [Nm]	$M_{aNotaus}$ [Nm]	n_{ak} [1/min]	J_{GA} 10^{-4} [kgm^2]	c_T PSC [Nm/']	F_{Ramax} PSC [N]	F_{Rapk} PSC [N]
PSC521 1	3.00	147	200	305	911	4.4	25	2900	6750
	5.00	181	220	330	375	3.2	26	3440	6750
	7.00	169	205	310	417	2.9	26	3850	6750
	10.00	161	199	295	447	2.6	22	4330	6750
PSC522 2	15.00	147	200	305	467	3.1	25	4960	6750
	21.00	147	200	305	333	2.8	25	5550	6750
	25.00	181	220	330	280	3.0	26	5880	6750
	30.00	147	200	305	233	2.6	24	6250	6750
	35.00	181	220	330	200	2.8	26	6580	6750
	49.00	169	205	310	143	2.8	26	6750	6750
	50.00	181	220	330	140	2.6	26	6750	6750
	70.00	169	205	310	100	2.6	26	6750	6750
	100.00	161	199	295	70	2.6	18	6750	6750

EPH06 n_e = 1500	i	M_{amax} [Nm]	M_{apk} [Nm]	$M_{aNotaus}$ [Nm]	n_{ak} [1/min]	J_{GA} 10^{-4} [kgm^2]	c_T PSC [Nm/']	F_{Ramax} PSC [N]	F_{Rapk} PSC [N]
PSC521 1	3.00	147	200	305	911	7.3	25	2900	6750
	5.00	181	220	330	375	6.0	26	3440	6750
	7.00	169	205	310	417	5.7	26	3850	6750
	10.00	161	199	295	447	5.5	22	4330	6750
PSC522 2	15.00	147	200	305	467	6.0	25	4960	6750
	21.00	147	200	305	333	5.7	25	5550	6750
	25.00	181	220	330	280	5.9	26	5880	6750
	30.00	147	200	305	233	5.4	24	6250	6750
	35.00	181	220	330	200	5.7	26	6580	6750
	49.00	169	205	310	143	5.7	26	6750	6750
	50.00	181	220	330	140	5.4	26	6750	6750
	70.00	169	205	310	100	5.4	26	6750	6750
	100.00	161	199	295	70	5.4	18	6750	6750

EPH07 n_e = 1500	i	M_{amax} [Nm]	M_{apk} [Nm]	$M_{aNotaus}$ [Nm]	n_{ak} [1/min]	J_{GA} 10^{-4} [kgm^2]	c_T PSC [Nm/']	F_{Ramax} PSC [N]	F_{Rapk} PSC [N]
PSC521 1	3.00	147	200	305	911	7.4	25	2900	6750
	5.00	181	220	330	375	6.1	26	3440	6750
	7.00	169	205	310	417	5.8	26	3850	6750
	10.00	161	199	295	447	5.6	22	4330	6750
PSC522 2	15.00	147	200	305	467	6.1	25	4960	6750
	21.00	147	200	305	333	5.8	25	5550	6750
	25.00	181	220	330	280	6.0	26	5880	6750
	30.00	147	200	305	233	5.6	24	6250	6750
	35.00	181	220	330	200	5.8	26	6580	6750
	49.00	169	205	310	143	5.8	26	6750	6750
	50.00	181	220	330	140	5.5	26	6750	6750
	70.00	169	205	310	100	5.5	26	6750	6750
	100.00	161	199	295	70	5.5	18	6750	6750

ECH / EPH				M1;M3;M5-6			M2			M4			φ
	i	n_{epk} [1/min]	η [%]	a_0	a_1	a_2	a_0	a_1	a_2	a_0	a_1	a_2	[']
PSC521 1	3.00	6000	99	453	-0.483	0	470	-0.524	0	472	-0.549	0	10
	5.00	6000	99	689	-0.864	0	704	-0.897	0	702	-0.928	0	10
	7.00	6000	99	778	-1.147	0	794	-1.177	0	775	-1.184	0	10
	10.00	6000	99	910	-1.663	0	936	-1.730	0	936	-1.788	0	10

ECH / EPH				M1;M3;M5-6			M2			M4			φ
	i	n_{epk} [1/min]	η [%]	a_0	a_1	a_2	a_0	a_1	a_2	a_0	a_1	a_2	[']
PSC522 2	15.00	6000	98	890	-3.449	0	889	-3.466	0	895	-3.528	0	15
	21.00	6000	98	958	-4.348	0	956	-4.359	0	962	-4.424	0	15
	25.00	6000	98	1672	-10.357	0	1673	-10.464	0	1677	-10.551	0	15
	30.00	6000	98	1054	-5.892	0	1055	-5.923	0	1059	-5.992	0	15
	35.00	6000	98	1812	-13.262	0	1811	-13.350	0	1816	-13.441	0	15
	49.00	6000	98	2421	-24.558	0	2421	-24.735	0	2424	-24.834	0	15
	50.00	6000	98	2008	-18.259	0	2010	-18.396	0	2014	-18.493	0	15
	70.00	6000	98	2690	-33.982	0	2694	-34.270	0	2697	-34.375	0	15
	100.00	6000	98	3590	-64.445	0	3595	-65.022	0	3598	-65.133	0	15

15.3.8 PS.C521/522 ECH.. [mm]

57 019 00 07

PSC521..

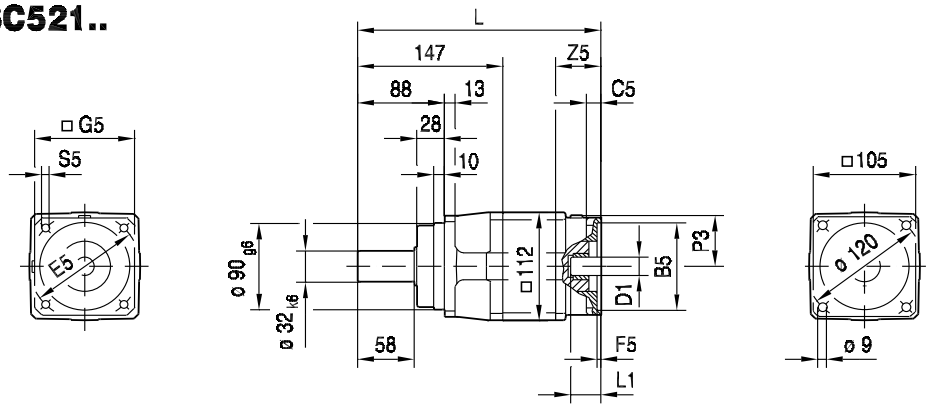

PSC / PSCZ

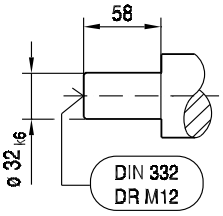

PSKC / PSKCZ

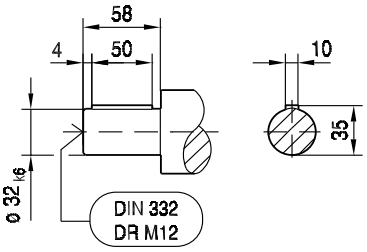

PSCZ521..

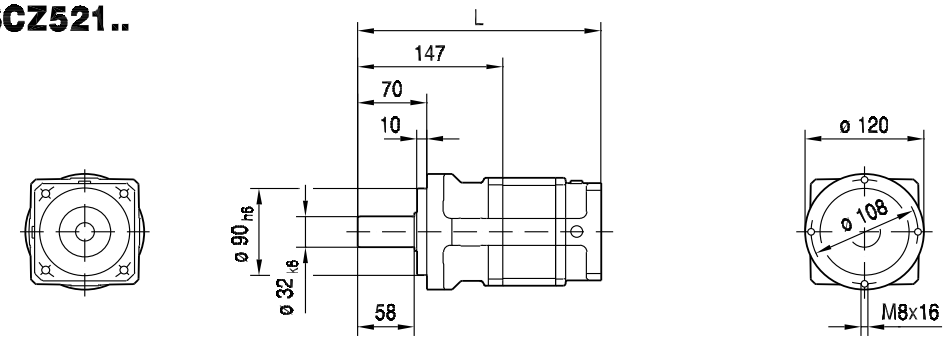

(→ 📖 144)	L	B5	C5	E5	F5	G5	S5	Z5	L1	P3	D1 (→ 📖 566)
ECH05/13/..	237	80	11	100	5	88	M6	36	35	47	14, 19
ECH05/14/..	247	95	15	115	5	105	M8	46	45	55	14, 19

57 020 00 07

PSC522..

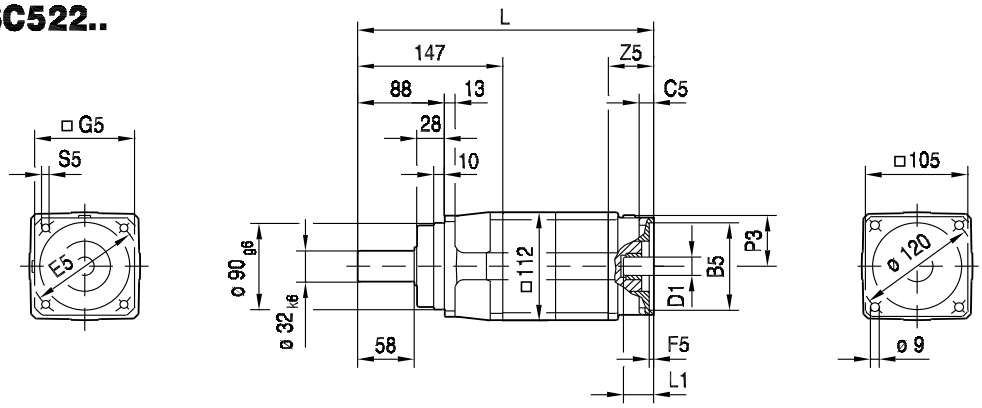

PSC / PSCZ

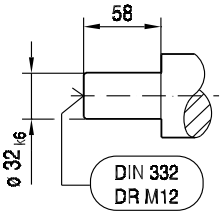

PSKC / PSKCZ

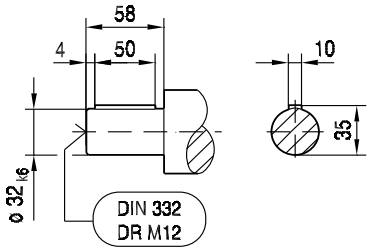

PSCZ522..

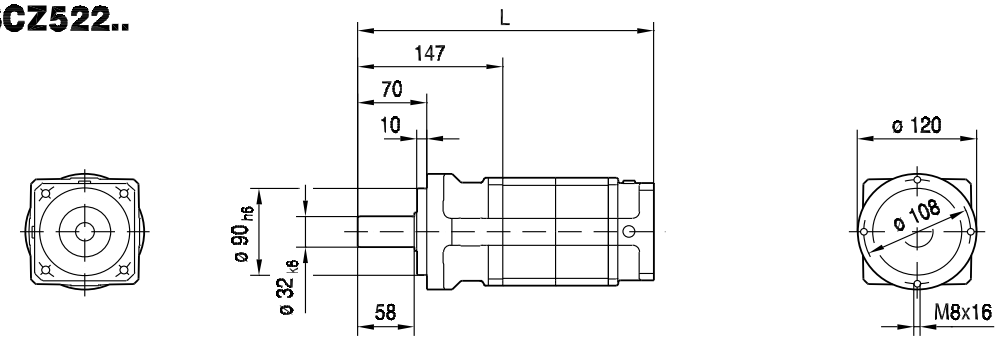

(→ 📖 144)	L	B5	C5	E5	F5	G5	S5	Z5	L1	P3	D1 (→ 📖 566)
ECH05/13/..	290	80	11	100	5	88	M6	36	35	47	14, 19
ECH05/14/..	300	95	15	115	5	105	M8	46	45	55	14, 19

15.3.9 PS.C521/522 EPH.. [mm]

57 027 00 07

PSC521..

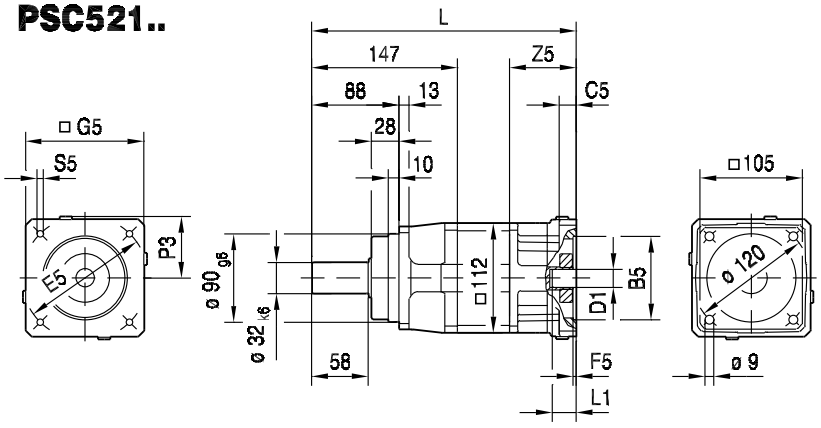

PSC / PSCZ

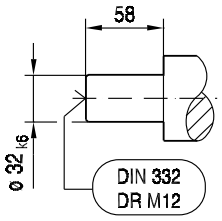

PSCZ521..

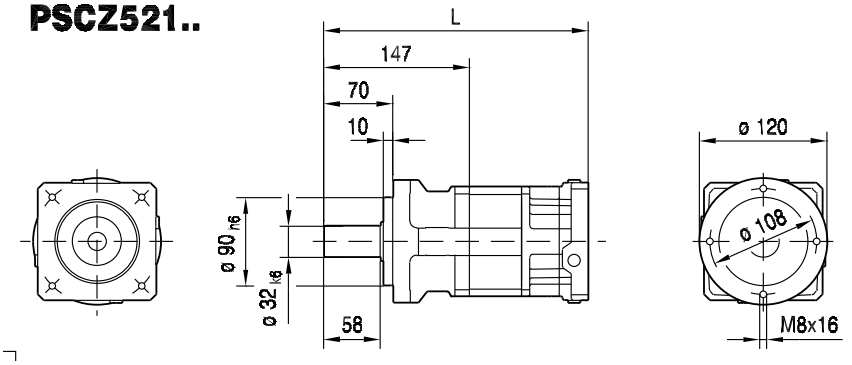

PSKC / PSKCZ

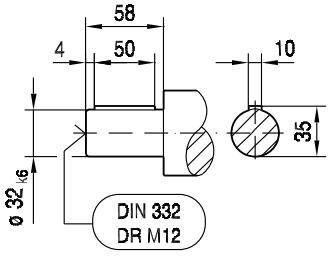

(→ 📖 144)	L	B5	C5	E5	F5	G5	S5	Z5	L1	P3	D1 (→ 📖 567)
EPH04/01/..	247	40	20	63	3.5	90	M4	46	43	47	11, 12, 14, 16, 19
EPH04/03/..	247	50	20	60	3.5	90	M4	46	41	47	11, 12, 14, 16, 19
EPH04/04/..	247	50	20	70	3.5	90	M5	46	41	47	11, 12, 14, 16, 19
EPH04/05/..	247	50	20	80	3.5	90	M4	46	41	47	11, 12, 14, 16, 19
EPH04/06/..	247	50	20	95	3.5	90	M6	46	41	47	11, 12, 14, 16, 19
EPH04/07/..	247	50	20	100	3.5	90	M6	46	41	47	11, 12, 14, 16, 19
EPH04/08/..	247	60	20	75	3.5	90	M5	46	41	47	11, 12, 14, 16, 19
EPH04/09/..	247	60	20	90	3.5	90	M5	46	41	47	11, 12, 14, 16, 19
EPH04/10/..	247	70	20	85	3.5	90	M6	46	41	47	11, 12, 14, 16, 19
EPH04/11/..	247	70	20	90	3.5	90	M5	46	41	47	11, 12, 14, 16, 19
EPH04/12/..	247	70	20	90	3.5	90	M6	46	41	47	11, 12, 14, 16, 19
EPH04/13/..	247	80	20	100	3.5	90	M6	46	41	47	11, 12, 14, 16, 19
EPH04/14/..	247	95	16	115	4	105	M8	46	41	55	11, 12, 14, 16, 19
EPH04/15/..	247	95	16	130	4	115	M8	46	41	60	11, 12, 14, 16, 19
EPH05/14/..	263	95	16	115	4	120	M8	62	52	62	14, 16, 17, 18, 19, 24
EPH05/15/..	263	95	16	130	4	120	M8	62	52	62	14, 16, 17, 18, 19, 24
EPH05/16/..	263	110	16	130	5	120	M8	62	52	62	14, 16, 17, 18, 19, 24
EPH05/17/..	263	110	16	145	7	120	M8	62	52	62	14, 16, 17, 18, 19, 24
EPH05/18/..	263	110	20	165	5	140	M10	62	52	72	14, 16, 17, 18, 19, 24
EPH05/20/..	263	130	20	165	5	140	M10	62	52	72	14, 16, 17, 18, 19, 24
EPH05/26/..	263	110	16	130	5	115	M8	62	52	61	14, 16, 17, 18, 19, 24
EPH06/19/..	298	114.3	24	200	5	174	M12	97	82	89	35
EPH07/20/..	278	130	24	165	5	155	M10	77	62	80	22, 24, 28, 32
EPH07/21/..	278	130	24	215	5	190	M12	77	62	97	22, 24, 28, 32
EPH07/22/..	278	180	24	215	5	190	M12	77	62	97	22, 24, 28, 32
EPH07/27/..	278	130	24	165	5	137	M10	77	62	72	22, 24, 28, 32
EPH07/28/..	278	155	24	190	5	162	M10	77	62	84	22, 24, 28, 32

57 028 00 07

PSC522..

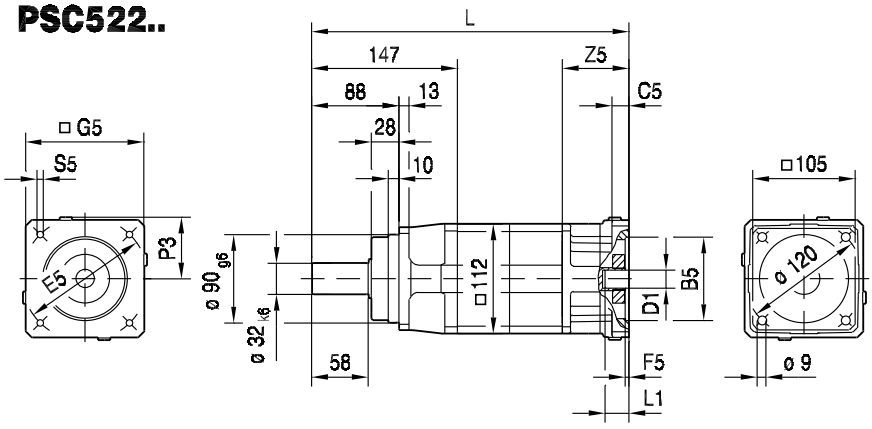

PSC / PSCZ

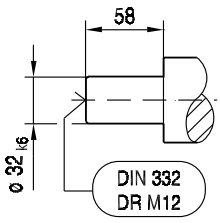

PSCZ522..

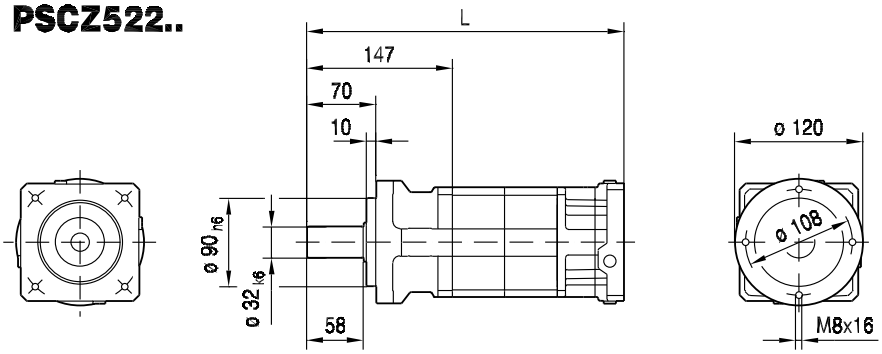

PSKC / PSKCZ

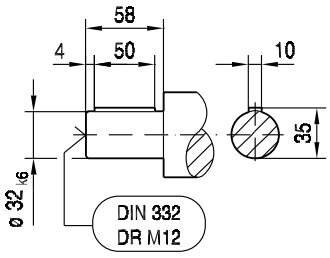

(→ 144)	L	B5	C5	E5	F5	G5	S5	Z5	L1	P3	D1 (→ 567)
EPH04/01/..	300	40	20	63	3.5	90	M4	46	43	47	11, 12, 14, 16, 19
EPH04/03/..	300	50	20	60	3.5	90	M4	46	41	47	11, 12, 14, 16, 19
EPH04/04/..	300	50	20	70	3.5	90	M5	46	41	47	11, 12, 14, 16, 19
EPH04/05/..	300	50	20	80	3.5	90	M4	46	41	47	11, 12, 14, 16, 19
EPH04/06/..	300	50	20	95	3.5	90	M6	46	41	47	11, 12, 14, 16, 19
EPH04/07/..	300	50	20	100	3.5	90	M6	46	41	47	11, 12, 14, 16, 19
EPH04/08/..	300	60	20	75	3.5	90	M5	46	41	47	11, 12, 14, 16, 19
EPH04/09/..	300	60	20	90	3.5	90	M5	46	41	47	11, 12, 14, 16, 19
EPH04/10/..	300	70	20	85	3.5	90	M6	46	41	47	11, 12, 14, 16, 19
EPH04/11/..	300	70	20	90	3.5	90	M5	46	41	47	11, 12, 14, 16, 19
EPH04/12/..	300	70	20	90	3.5	90	M6	46	41	47	11, 12, 14, 16, 19
EPH04/13/..	300	80	20	100	3.5	90	M6	46	41	47	11, 12, 14, 16, 19
EPH04/14/..	300	95	16	115	4	105	M8	46	41	55	11, 12, 14, 16, 19
EPH04/15/..	300	95	16	130	4	115	M8	46	41	60	11, 12, 14, 16, 19
EPH05/14/..	316	95	16	115	4	120	M8	62	52	62	14, 16, 17, 18, 19, 24
EPH05/15/..	316	95	16	130	4	120	M8	62	52	62	14, 16, 17, 18, 19, 24
EPH05/16/..	316	110	16	130	5	120	M8	62	52	62	14, 16, 17, 18, 19, 24
EPH05/17/..	316	110	16	145	7	120	M8	62	52	62	14, 16, 17, 18, 19, 24
EPH05/18/..	316	110	20	165	5	140	M10	62	52	72	14, 16, 17, 18, 19, 24
EPH05/20/..	316	130	20	165	5	140	M10	62	52	72	14, 16, 17, 18, 19, 24
EPH05/26/..	316	110	16	130	5	115	M8	62	52	61	14, 16, 17, 18, 19, 24
EPH06/19/..	351	114.3	24	200	5	174	M12	97	82	89	35
EPH07/20/..	331	130	24	165	5	155	M10	77	62	80	22, 24, 28, 32
EPH07/21/..	331	130	24	215	5	190	M12	77	62	97	22, 24, 28, 32
EPH07/22/..	331	180	24	215	5	190	M12	77	62	97	22, 24, 28, 32
EPH07/27/..	331	130	24	165	5	137	M10	77	62	72	22, 24, 28, 32
EPH07/28/..	331	155	24	190	5	162	M10	77	62	84	22, 24, 28, 32

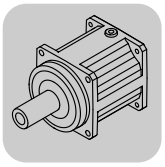

15.3.10 PS.C621/622 ECH.. / EPH.. [Nm]

[Nm]		ECH M_{amax} |M_{apk} |$M_{aNotaus}$			EPH M_{amax} | M_{apk} | $M_{aNotaus}$												
	i	06			05			06			07			08			
PSC621 1	5.00	345	425	520	345	425	640	345	425	640	345	425	640	345	425	640	
	7.00	320	395	595	320	395	595	320	395	595	320	395	595	320	395	595	
	10.00	305	380	570	305	380	570	305	380	570	305	380	570	305	380	570	
PSC622 2	25.00	345	425	640	345	425	640	345	425	640	345	425	640	345	425	640	
	35.00	345	425	640	345	425	640	345	425	640	345	425	640	345	425	640	
	49.00	320	395	595	320	395	595	320	395	595	320	395	595	320	395	595	
	50.00	345	425	640	345	425	640	345	425	640	345	425	640	345	425	640	
	70.00	320	395	595	320	395	595	320	395	595	320	395	595	320	395	595	
	100.00	305	380	565	305	380	565	305	380	565	305	380	565	305	380	565	

m [kg]		ECH	EPH			
	s	06	05	06	07	08
PSC621	1	13	14	15	15	20
PSC622	2	18	19	21	21	25

ECH06 n_e = 1500	i	M_{amax} [Nm]	M_{apk} [Nm]	$M_{aNotaus}$ [Nm]	n_{ak} [1/min]	J_{GA} 10^{-4} [kgm^2]	c_T PSC [Nm/']	F_{Ramax} PSC [N]	F_{Rapk} PSC [N]
PSC621 1	5.00	345	425	520	836	7.9	57	5390	11000
	7.00	320	395	595	929	7.0	53	6030	11000
	10.00	305	380	570	700	6.5	45	6790	11000
PSC622 2	25.00	345	425	640	280	7.5	57	9220	11000
	35.00	345	425	640	200	6.8	56	10300	11000
	49.00	320	395	595	143	6.8	54	11000	11000
	50.00	345	425	640	140	6.4	56	11000	11000
	70.00	320	395	595	100	6.4	54	11000	11000
	100.00	305	380	565	70	6.4	46	11000	11000

EPH05 n_e = 1500	i	M_{amax} [Nm]	M_{apk} [Nm]	$M_{aNotaus}$ [Nm]	n_{ak} [1/min]	J_{GA} 10^{-4} [kgm^2]	c_T PSC [Nm/']	F_{Ramax} PSC [N]	F_{Rapk} PSC [N]
PSC621 1	5.00	345	425	640	836	4.4	58	5390	11000
	7.00	320	395	595	929	3.6	54	6030	11000
	10.00	305	380	570	700	3.1	46	6790	11000
PSC622 2	25.00	345	425	640	280	4.1	57	9220	11000
	35.00	345	425	640	200	3.4	56	10300	11000
	49.00	320	395	595	143	3.4	54	11000	11000
	50.00	345	425	640	140	3.0	56	11000	11000
	70.00	320	395	595	100	3.0	54	11000	11000
	100.00	305	380	565	70	3.0	46	11000	11000

EPH06 n_e = 1500	i	M_{amax} [Nm]	M_{apk} [Nm]	$M_{aNotaus}$ [Nm]	n_{ak} [1/min]	J_{GA} 10^{-4} [kgm^2]	c_T PSC [Nm/']	F_{Ramax} PSC [N]	F_{Rapk} PSC [N]
PSC621 1	5.00	345	425	640	836	7.6	58	5390	11000
	7.00	320	395	595	929	6.4	54	6030	11000
	10.00	305	380	570	700	5.9	46	6790	11000
PSC622 2	25.00	345	425	640	280	7.2	57	9220	11000
	35.00	345	425	640	200	6.2	56	10300	11000
	49.00	320	395	595	143	6.2	54	11000	11000
	50.00	345	425	640	140	5.8	56	11000	11000
	70.00	320	395	595	100	5.8	54	11000	11000
	100.00	305	380	565	70	5.8	46	11000	11000

EPH07 n_e = 1500	i	M_{amax} [Nm]	M_{apk} [Nm]	$M_{aNotaus}$ [Nm]	n_{ak} [1/min]	J_{GA} 10^{-4} [kgm^2]	c_T PSC [Nm/']	F_{Ramax} PSC [N]	F_{Rapk} PSC [N]
PSC621 1	5.00	345	425	640	836	7.7	58	5390	11000
	7.00	320	395	595	929	6.5	58	6030	11000
	10.00	305	380	570	700	6.0	58	6790	11000
PSC622 2	25.00	345	425	640	280	7.3	57	9220	11000
	35.00	345	425	640	200	6.3	56	10300	11000
	49.00	320	395	595	143	6.3	54	11000	11000
	50.00	345	425	640	140	5.9	56	11000	11000
	70.00	320	395	595	100	5.9	54	11000	11000
	100.00	305	380	565	70	5.9	46	11000	11000

EPH08 n_e = 1500	i	M_{amax} [Nm]	M_{apk} [Nm]	$M_{aNotaus}$ [Nm]	n_{ak} [1/min]	J_{GA} 10^{-4} [kgm^2]	c_T PSC [Nm/']	F_{Ramax} PSC [N]	F_{Rapk} PSC [N]
PSC621 1	5.00	345	425	640	836	14	54	5390	11000
	7.00	320	395	595	929	12	46	6030	11000
	10.00	305	380	570	700	12	46	6790	11000
PSC622 2	25.00	345	425	640	280	13	57	9220	11000
	35.00	345	425	640	200	12	56	10300	11000
	49.00	320	395	595	143	12	54	11000	11000
	50.00	345	425	640	140	12	56	11000	11000
	70.00	320	395	595	100	12	54	11000	11000
	100.00	305	380	565	70	12	46	11000	11000

ECH / EPH				M1;M3;M5-6			M2			M4			φ
	i	n_{epk} [1/min]	η [%]	a_0	a_1	a_2	a_0	a_1	a_2	a_0	a_1	a_2	[']
PSC621 1	5.00	5000	99	1157	-1.547	0	1184	-1.614	0	1161	-1.659	0	10
	7.00	5000	99	1277	-1.954	0	1304	-2.016	0	1292	-2.099	0	10
	10.00	5000	99	1368	-2.549	0	1385	-2.588	0	1402	-2.751	0	10
PSC622 2	25.00	5000	98	2990	-20.033	0	3003	-20.516	0	3013	-20.730	0	15
	35.00	5000	98	3183	-24.552	0	3195	-25.017	0	3206	-25.260	0	15
	49.00	5000	98	4245	-45.266	0	4257	-46.030	0	4265	-46.294	0	15
	50.00	5000	98	3394	-31.850	0	3409	-32.380	0	3418	-32.617	0	15
	70.00	5000	98	4538	-59.027	0	4564	-60.189	0	4571	-60.447	0	15
	100.00	5000	98	5831	-107.7	0	5863	-109.8	0	5868	-110.0	0	15

15.3.11 PS.C621/622 ECH.. [mm]

57 021 00 07

PSC621..

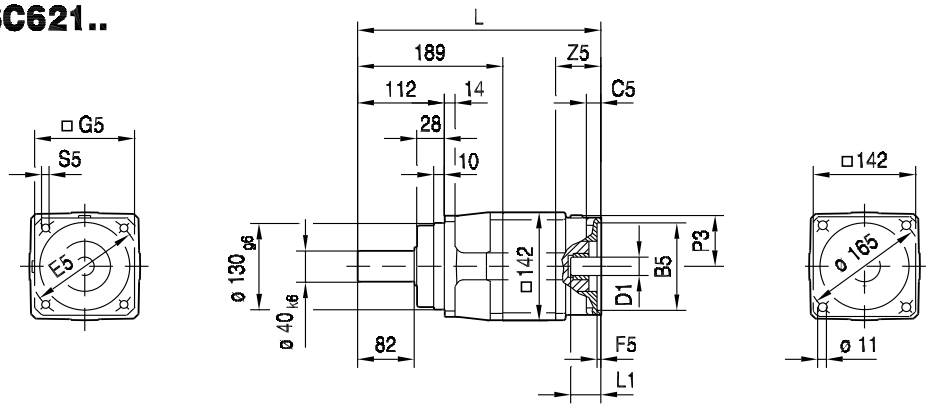

PSC / PSCZ

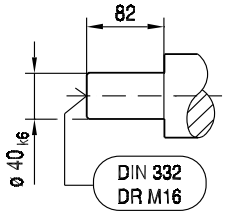

PSKC / PSKCZ

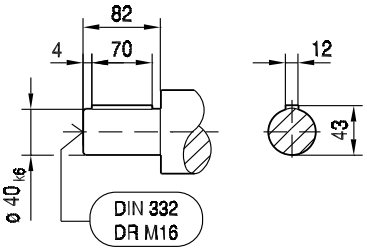

PSCZ621..

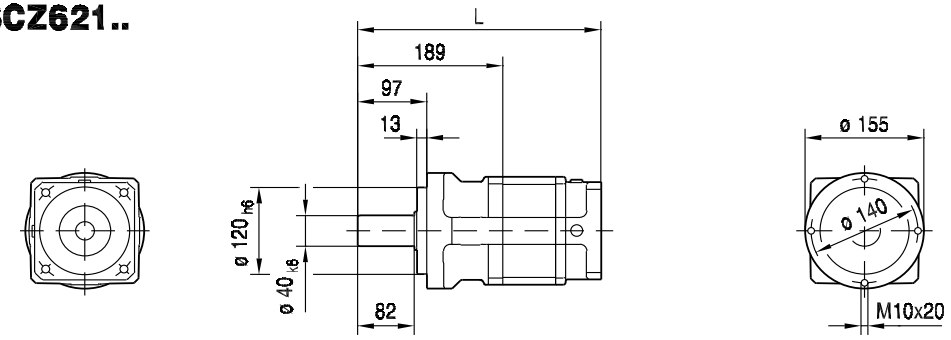

(→ 📖 144)	L	B5	C5	E5	F5	G5	S5	Z5	L1	P3	D1 (→ 📖 566)
ECH06/14/..	291	95	15	115	5	105	M8	43	48	55	19, 24
ECH06/20/..	301	130	18	165	5	142	M10	53	58	73	19, 24

57 022 00 07

PSC622..

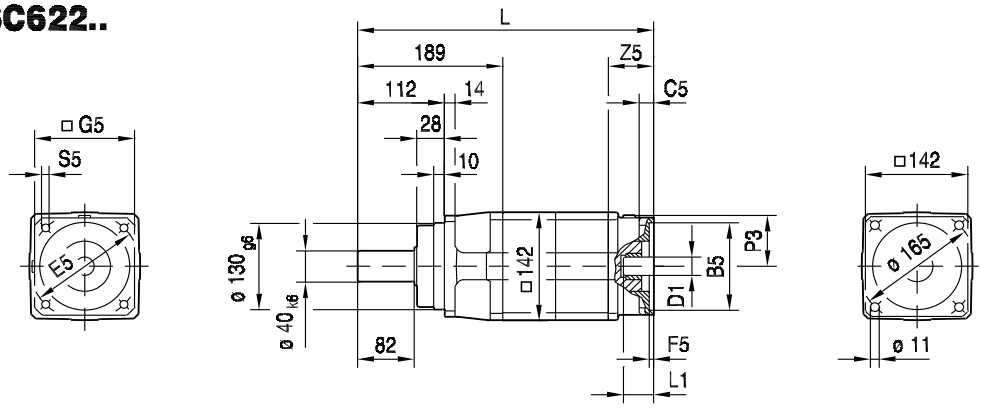

PSC / PSCZ

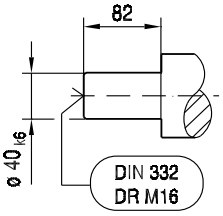

PSKC / PSKCZ

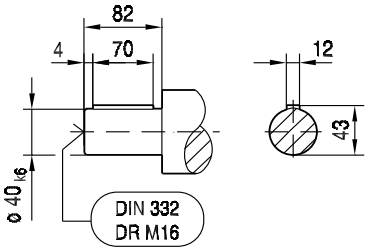

PSCZ622..

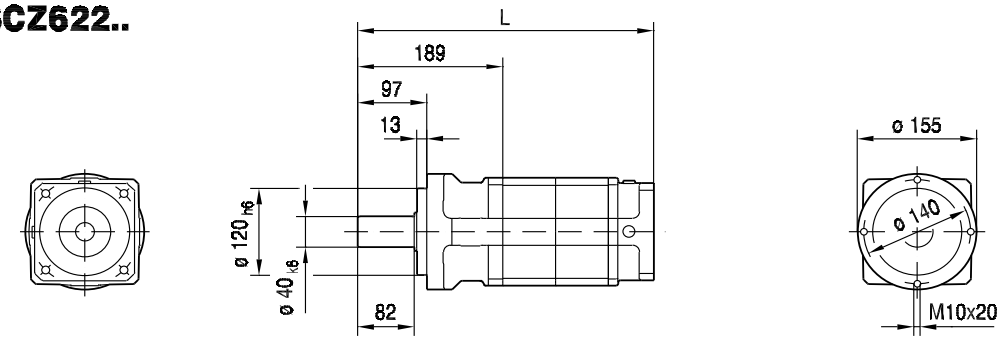

(→ 📖 144)	L	B5	C5	E5	F5	G5	S5	Z5	L1	P3	D1 (→ 📖 566)
ECH06/14/..	350	95	15	115	5	105	M8	43	48	55	19, 24
ECH06/20/..	360	130	18	165	5	142	M10	53	58	73	19, 24

15.3.12 PS.C621/622 EPH.. [mm]

57 029 00 07

PSC621..

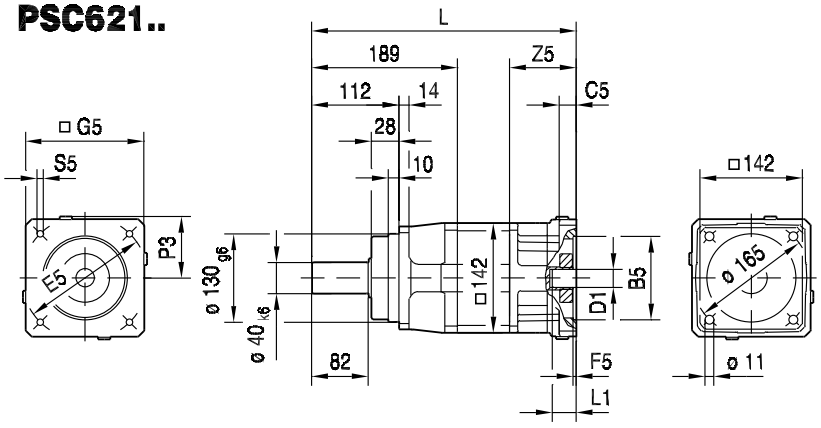

PSC / PSCZ

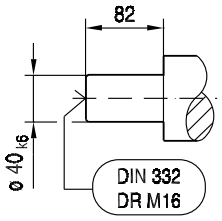

PSCZ621..

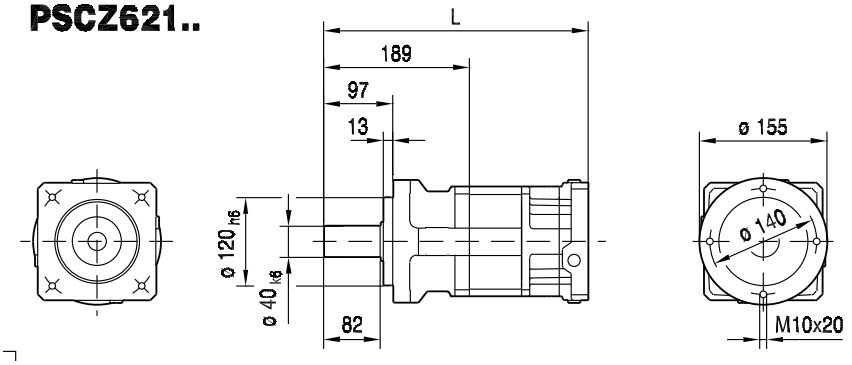

PSKC / PSKCZ

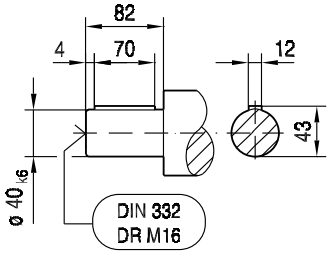

(→ 📖 144)	L	B5	C5	E5	F5	G5	S5	Z5	L1	P3	D1 (→ 📖 567)
EPH05/14/..	302	95	16	115	4	120	M8	54	52	62	14, 16, 17, 18, 19, 24
EPH05/15/..	302	95	16	130	4	120	M8	54	52	62	14, 16, 17, 18, 19, 24
EPH05/16/..	302	110	16	130	5	120	M8	54	52	62	14, 16, 17, 18, 19, 24
EPH05/17/..	302	110	16	145	7	120	M8	54	52	62	14, 16, 17, 18, 19, 24
EPH05/18/..	302	110	20	165	5	140	M10	54	52	72	14, 16, 17, 18, 19, 24
EPH05/20/..	302	130	20	165	5	140	M10	54	52	72	14, 16, 17, 18, 19, 24
EPH05/26/..	302	110	16	130	5	115	M8	54	52	61	14, 16, 17, 18, 19, 24
EPH06/19/..	337	114.3	24	200	5	174	M12	89	82	89	35
EPH07/20/..	317	130	24	165	5	155	M10	69	62	80	22, 24, 28, 32
EPH07/21/..	317	130	24	215	5	190	M12	69	62	97	22, 24, 28, 32
EPH07/22/..	317	180	24	215	5	190	M12	69	62	97	22, 24, 28, 32
EPH07/27/..	317	130	24	165	5	137	M10	69	62	72	22, 24, 28, 32
EPH07/28/..	317	155	24	190	5	162	M10	69	62	84	22, 24, 28, 32
EPH08/21/..	342	130	24	215	5	190	M12	94	82	97	32, 35, 38
EPH08/22/..	342	180	24	215	5	190	M12	94	82	97	32, 35, 38

57 030 00 07

PSC622..

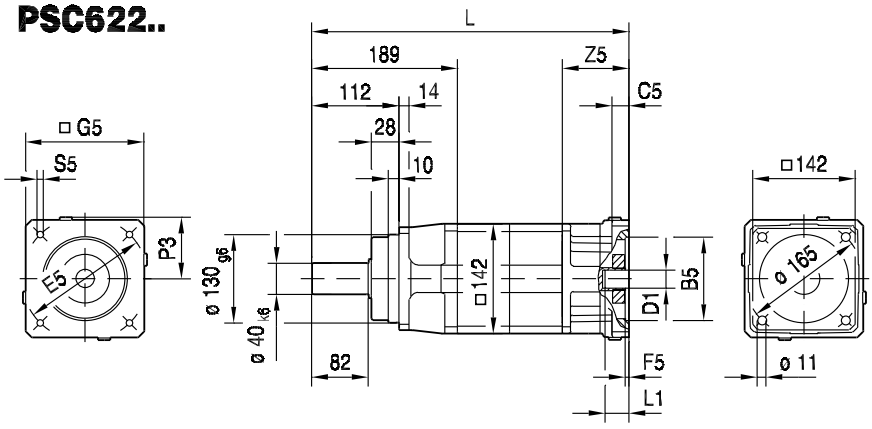

PSC / PSCZ

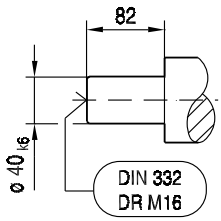

PSCZ622..

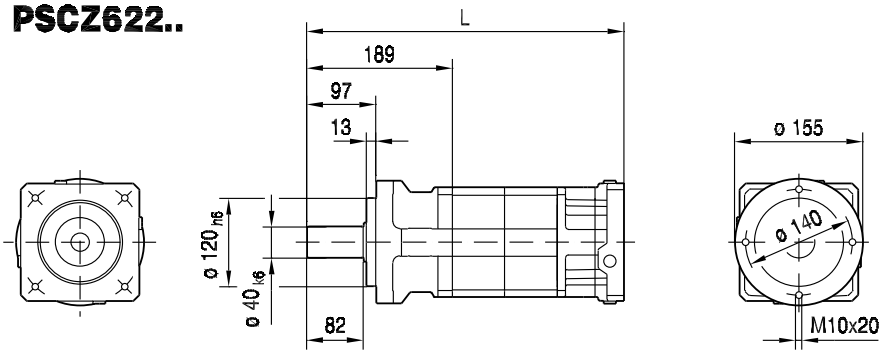

PSKC / PSKCZ

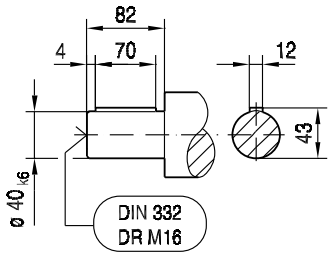

(→ 📖 144)	L	B5	C5	E5	F5	G5	S5	Z5	L1	P3	D1 (→ 📖 567)
EPH05/14/..	361	95	16	115	4	120	M8	54	52	62	14, 16, 17, 18, 19, 24
EPH05/15/..	361	95	16	130	4	120	M8	54	52	62	14, 16, 17, 18, 19, 24
EPH05/16/..	361	110	16	130	5	120	M8	54	52	62	14, 16, 17, 18, 19, 24
EPH05/17/..	361	110	16	145	7	120	M8	54	52	62	14, 16, 17, 18, 19, 24
EPH05/18/..	361	110	20	165	5	140	M10	54	52	72	14, 16, 17, 18, 19, 24
EPH05/20/..	361	130	20	165	5	140	M10	54	52	72	14, 16, 17, 18, 19, 24
EPH05/26/..	361	110	16	130	5	115	M8	54	52	61	14, 16, 17, 18, 19, 24
EPH06/19/..	396	114.3	24	200	5	174	M12	89	82	89	35
EPH07/20/..	376	130	24	165	5	155	M10	69	62	80	22, 24, 28, 32
EPH07/21/..	376	130	24	215	5	190	M12	69	62	97	22, 24, 28, 32
EPH07/22/..	376	180	24	215	5	190	M12	69	62	97	22, 24, 28, 32
EPH07/27/..	376	130	24	165	5	137	M10	69	62	72	22, 24, 28, 32
EPH07/28/..	376	155	24	190	5	162	M10	69	62	84	22, 24, 28, 32
EPH08/21/..	401	130	24	215	5	190	M12	94	82	97	32, 35, 38
EPH08/22/..	401	180	24	215	5	190	M12	94	82	97	32, 35, 38

15.4 PS.C ECH.. → D1 [mm]

	PS.C221 PS.C222	PS.C321 PS.C322	PS.C521 PS.C522	PS.C621 PS.C622
	ECH02	**ECH03**	**ECH05**	**ECH06**
D1 [mm]	**Code number for the mountable motor shaft diameter D1**			
9	**02**			
11	**04**	**04**		
14		**06**	**06**	
19			**11**	**11**
24				**13**

Example:

PS.C..ECH 05 /14 /11

- **/11** – **Code number for the mountable motor shaft diameter D1**
- **/14** – Code number for the flange geometry (centering, hole circle)
- **05** – Code number for the adapter performance class

15.5 PS.C EPH.. → D1 [mm]

	PS.C221 PS.C222	PS.C221 PS.C222	PS.C221 PS.C222	PS.C221 PS.C222 PS.C321 PS.C322 PS.C521 PS.C522	PS.C321 PS.C322 PS.C521 PS.C522 PS.C621 PS.C622	PS.C521 PS.C522 PS.C621 PS.C622	PS.C521 PS.C522 PS.C621 PS.C622	PS.C621 PS.C622
	EPH01	**EPH02**	**EPH03**	**EPH04**	**EPH05**	**EPH06**	**EPH07**	**EPH08**
D1 [mm]	**Code number for the mountable motor shaft diameter D1**							
8		**01**	**01**					
9	**02**	**02**	**02**					
10		**03**	**03**					
11	**04**	**04**	**04**	**04**				
12		**05**	**05**	**05**				
14		**06**	**06**	**06**	**06**			
16				**08**	**08**			
17					**09**			
18					**10**			
19				**11**	**11**			
22							**12**	
24					**13**		**13**	
28							**14**	
32							**15**	**15**
35						**16**		**16**
38								**17**

Example:

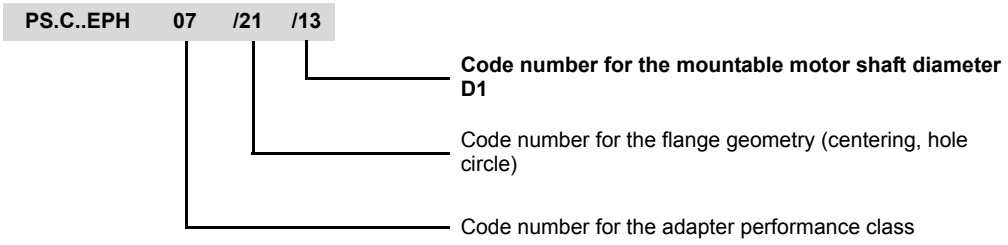

Abbreviation Key

Abbreviation key

For a detailed list of abbreviations used, refer to chapter 4 "Project Planning Information for Servo Gear Units".

A

Abbreviation key 41, 564
Adapter EPH 38
Ambient temperature
BS.F, PS.F, PS.C gear units 20
R, F, K, S, W gear units 16
AQ adapter 19
ATEX, explosion protection 13
Available torque arms 117

B

Breather valves 142

C

Chamfers for flange block gear units 143
Changing the mounting position 65
Churning losses 47, 69
Condition monitoring
Technical data 123
Contents of this publication 9
Covers, fixed 121

D

Definition of A and B ends of output shafts 67
Definition of force application for
BS.F, PS.F, PS.C gear units 52
Determining the overhung load of
BS.F, PS.F, PS.C gear units 51
Diagnostic unit
DUV10A/30A vibration sensor 125
Oil aging sensor DUO10A 123
Direction of rotation of the output shaft 64, 67
Documentation 9
Documentation, additional 9, 62
Drive and gear unit selection data 41

E

Efficiency of R, F, K, S, W gear units 46
EPH adapter 38
Explosion protection according to ATEX 13
Extended storage 14
Eyebolts 142

F

Fastening, gear units 117
Fill quantities
BS.F 134
BS.F, PS.F, PS.C gear units 133
BS.F.. 134
PS.F 135, 136
PS.F.. 135
R, F, K, S, W gear units 126
Flange contours
FAF.., KAF.., SAF.. and WAF.. 120
FF.., KF.., SF.. and WF.. 119
RF.. and R..F 118
Force application, definition 49
Front-end mounting of BS.F..B gear units 143

G

Gear unit
Extended storage 14
Gear unit mounting 117
Gearmotor dimensions 144
Motor dimensions 144
General information
BS.F, PS.F, PS.C gear units 20
R, F, K, S, W gear units 16

H

Helical gear units
Mounting positions 70
Unit designation 22
Helical-bevel gear units
Mounting positions 78
Unit designation 23, 34
Helical-worm gear units
Mounting positions 83
Unit designation 23
Higher permitted overhung loads
R, F, K, S, W gear units 48
Hollow shaft, shouldered with shrink disk 110

I

Information on dimension sheets 141
Information on the mounting position
BS.F, PS.F, PS.C gear units 66

L

Lubricant fill quantities for
R, F, K, S, W gear units 129
Lubricant table for BS.F servo gear units 134
Lubricant table of PS.F servo gear units 135
Lubricants
General information 126, 133
Lubricant table 128

M

Mounting 89
Mounting gear units with hollow shaft and key
Supplied fastening parts 103
Use the SEW installation/removal kit 104
Mounting positions 63
BS.F.. servo gear units 66
Helical gear units 70
Helical-bevel gearmotors 78
Helical-worm gear units 83
Parallel shaft helical gear units 75
Planetary gear units 101

N

NOCO 12

O

Oil aging sensor
Technical data and part numbers 123
Options 24
Unit designation 24, 34

Order information servo gear units
BS.F, PS.F, PS.C gear units 67
R, F, K, S, W gear units 64
OS surface protection 11
Overhung load conversion
BS.F, PS.F, PS.C gear units 53
Gear unit constants
BS.F, PS.F, PS.C gear units 54
R, F, K, S, W gear units 50
Overhung loads
BS.F, PS.F, PS.C gear units 52
Overhung loads, R, F, K, S, W gear units 48
Overview 138
Overview and unit designation 22
BS.F, PS.F, PS.C gear units 34
Helical gear units 25
Helical-bevel gear units 28, 34
Helical-worm gear units 30
Parallel shaft helical gear units 26
Planetary gear units 34
R, F, K, S, W gear units 22

P

Paint 11
Parallel shaft helical gear units
Mounting positions 75
Unit designation 22
Permitted 117
Permitted axial load 49
BS.F, PS.F, PS.C gear units 52
Permitted overhung load
BS.F, PS.F, PS.C gear units 52
R, F, K, S, W gear units 48
Planetary gear units
Mounting positions 101
Unit designation 34
Position
Output end in right-angle gear units 65
Output shaft and output flange 64
Product description of R, F, K, S, W gear units ..16
Product groups 7
Project description
BS.F, PS.F, PS.C gear units 20
Project planning for gear units
Off-center force application, overhung load conversion 49
Project planning procedure 43
Part 1, servo gear units 44
Part 2, servo gear units 45
Protective measures 12
PS 34

R

Reduced backlash gear units 17
Removal of gear units with hollow shaft and key
using the SEW installation/removal kit 106
Rolling bearing greases 127
Rubber buffer for FA/FH/FV/FT 142

S

Selection tables and dimension sheets 138
Self 46
SEW-EURODRIVE
group of companies 6
Products 7
Systems 7
Shaft heights 141
Shrink disk connection 142
Special protection measures 12
SPIROPLAN 18, 24, 32
Splined hollow shaft 142
Storage conditions 15

T

Tolerances 141
Flange block gear units 143
Flanges 141
Hollow shafts 141
Multiple-spline shafts 141
Shaft ends 141
TorqLOC 108
Torque arm 143
Torque arm position 143
Types 25, 26, 28, 30
Helical gear units 25
Helical-bevel gear units 28
Helical-worm gear units 30
Parallel shaft helical gear units 26

U

Unit designation
Bevel gear units 34
Condition monitoring 24
Helical gear units 22
Helical-bevel gear units 23
Helical-worm gear units 23
Options 24, 34
Parallel shaft helical gear units 22
Planetary gear units 34
Unit designations of servo gear units
PSF gear units 38

V

Variants, possible
reduced backlash 17
Vibration sensor
Part numbers 125
Technical data 125

Address Directory

Germany			
Headquarters **Production** **Sales**	**Bruchsal**	SEW-EURODRIVE GmbH & Co KG Ernst-Blickle-Straße 42 D-76646 Bruchsal P.O. Box Postfach 3023 • D-76642 Bruchsal	Tel. +49 7251 75-0 Fax +49 7251 75-1970 http://www.sew-eurodrive.de sew@sew-eurodrive.de
Production	**Graben**	SEW-EURODRIVE GmbH & Co KG Ernst-Blickle-Straße 1 D-76676 Graben-Neudorf P.O. Box Postfach 1220 • D-76671 Graben-Neudorf	Tel. +49 7251 75-0 Fax +49 7251 75-2970
	Östringen	SEW-EURODRIVE Östringen GmbH Franz-Gurk-Straße 2 D-76684 Östringen P.O. Box Postfach 1174 • D-76677 Östringen	Tel. +49 7253 92540 Fax +49 7253 925490 oestringen@sew-eurodrive.de
Service Competence Center	**Central**	SEW-EURODRIVE GmbH & Co KG Ernst-Blickle-Straße 1 D-76676 Graben-Neudorf	Tel. +49 7251 75-1710 Fax +49 7251 75-1711 sc-mitte@sew-eurodrive.de
	North	SEW-EURODRIVE GmbH & Co KG Alte Ricklinger Straße 40-42 D-30823 Garbsen (near Hannover)	Tel. +49 5137 8798-30 Fax +49 5137 8798-55 sc-nord@sew-eurodrive.de
	East	SEW-EURODRIVE GmbH & Co KG Dänkritzer Weg 1 D-08393 Meerane (near Zwickau)	Tel. +49 3764 7606-0 Fax +49 3764 7606-30 sc-ost@sew-eurodrive.de
	South	SEW-EURODRIVE GmbH & Co KG Domagkstraße 5 D-85551 Kirchheim (near München)	Tel. +49 89 909552-10 Fax +49 89 909552-50 sc-sued@sew-eurodrive.de
	West	SEW-EURODRIVE GmbH & Co KG Siemensstraße 1 D-40764 Langenfeld (near Düsseldorf)	Tel. +49 2173 8507-30 Fax +49 2173 8507-55 sc-west@sew-eurodrive.de
	Electronics	SEW-EURODRIVE GmbH & Co KG Ernst-Blickle-Straße 42 D-76646 Bruchsal	Tel. +49 7251 75-1780 Fax +49 7251 75-1769 sc-elektronik@sew-eurodrive.de
	Drive Service Hotline / 24 Hour Service		+49 180 5 SEWHELP +49 180 5 7394357
Technical Offices	**Augsburg**	SEW-EURODRIVE GmbH & Co KG August-Wessels-Straße 29 D-86156 Augsburg	Tel. +49 821 22779-10 Fax +49 821 22779-50 tb-augsburg@sew-eurodrive.de
	Berlin	SEW-EURODRIVE GmbH & Co KG Lilienthalstraße 3a D-12529 Schönefeld	Tel. +49 306331131-30 Fax +49 306331131-36 tb-berlin@sew-eurodrive.de
	Bodensee	SEW-EURODRIVE GmbH & Co KG Burgbergring 91 D-88662 Überlingen	Tel. +49 7551 9226-30 Fax +49 7551 9226-56 tb-bodensee@sew-eurodrive.de
	Bremen	SEW-EURODRIVE GmbH & Co KG Bornstr.19 ... 22 D-28195 Bremen	Tel. +49 421 33918-10 Fax +49 421 33918-22 tb-bremen@sew-eurodrive.de
	Dortmund	SEW-EURODRIVE GmbH & Co KG Hildastraße 10 D-44145 Dortmund	Tel. +49 231 912050-10 Fax +49 231 912050-20 tb-dortmund@sew-eurodrive.de
	Dresden	SEW-EURODRIVE GmbH & Co KG Hauptstraße 32 D-01445 Radebeul	Tel. +49 351 26338-0 Fax +49 351 26338-38 tb-dresden@sew-eurodrive.de

Germany			
	Erfurt	SEW-EURODRIVE GmbH & Co KG Dubliner Straße 12 D-99091 Erfurt	Tel. +49 361 21709-70 Fax +49 361 21709-79 tb-erfurt@sew-eurodrive.de
	Güstrow	SEW-EURODRIVE GmbH & Co KG Am Gewerbegrund 3 D-18273 Güstrow P.O. Box Postfach 1216 • D-18262 Güstrow	Tel. +49 3843 8557-80 Fax +49 3843 8557-88 tb-guestrow@sew-eurodrive.de
	Hamburg	SEW-EURODRIVE GmbH & Co KG Bramfelder Straße 119 D-22305 Hamburg	Tel. +49 40 298109-60 Fax +49 40 298109-70 tb-hamburg@sew-eurodrive.de
	Hannover/ Garbsen	SEW-EURODRIVE GmbH & Co KG Alte Ricklinger Str.40-42 D-30823 Garbsen P.O. Box Postfach 1104 53 • D-30804 Garbsen	Tel. +49 5137 8798-10 Fax +49 5137 8798-50 tb-hannover@sew-eurodrive.de
	Heilbronn	SEW-EURODRIVE GmbH & Co KG Zeppelinstraße 7 D-74357 Bönnigheim	Tel. +49 7143 8738-0 Fax +49 7143 8738-25 tb-heilbronn@sew-eurodrive.de
	Herford	SEW-EURODRIVE GmbH & Co KG Radewiger Straße 21 D-32052 Herford P.O. Box Postfach 4108 • D-32025 Herford	Tel. +49 5221 9141-0 Fax +49 5221 9141-20 tb-herford@sew-eurodrive.de
	Karlsruhe	SEW-EURODRIVE GmbH & Co KG Ettlinger Weg 2 D-76467 Bietigheim P.O. Box Postfach 43 • D-76463 Bietigheim	Tel. +49 7245 9190-10 Fax +49 7245 9190-20 tb-karlsruhe@sew-eurodrive.de
	Kassel	SEW-EURODRIVE GmbH & Co KG Lange Straße 14 D-34253 Lohfelden	Tel. +49 561 95144-80 Fax +49 561 95144-90 tb-kassel@sew-eurodrive.de
	Koblenz	SEW-EURODRIVE GmbH & Co KG Bahnstraße 17a D-56743 Mendig	Tel. +49 2652 9713-30 Fax +49 2652 9713-40 tb-koblenz@sew-eurodrive.de
	Lahr	SEW-EURODRIVE GmbH & Co KG Europastraße 3/1 D-77933 Lahr / Schwarzwald	Tel. +49 7821 90999-60 Fax +49 7821 90999-79 tb-lahr@sew-eurodrive.de
	Langenfeld	SEW-EURODRIVE GmbH & Co KG Siemensstraße 1 D-40764 Langenfeld	Tel. +49 2173 8507-10 Fax +49 2173 8507-50 tb-langenfeld@sew-eurodrive.de
	Magdeburg	SEW-EURODRIVE GmbH & Co KG Breiteweg 53 D-39179 Barleben	Tel. +49 39203 7577-1 Fax +49 39203 7577-9 tb-magdeburg@sew-eurodrive.de
	Mannheim	SEW-EURODRIVE GmbH & Co KG Besseltraße 26 D-68219 Mannheim	Tel. +49 621 71683-10 Fax +49 621 71683-22 tb-mannheim@sew-eurodrive.de
	München	SEW-EURODRIVE GmbH & Co KG Domagkstraße 5 D-85551 Kirchheim	Tel. +49 89 90955-110 Fax +49 89 90955-150 tb-muenchen@sew-eurodrive.de
	Münster	SEW-EURODRIVE GmbH & Co KG Hafenplatz 4 D-48155 Münster	Tel. +49 251 41475-11 Fax +49 251 41475-50 tb-muenster@sew-eurodrive.de
	Nürnberg	SEW-EURODRIVE GmbH & Co KG Plattenäckerweg 6 D-90455 Nürnberg	Tel. +49 911 98884-50 Fax +49 911 98884-60 tb-nuernberg@sew-eurodrive.de

Germany			
	Regensburg	SEW-EURODRIVE GmbH & Co KG Im Gewerbepark A15 D-93059 Regensburg	Tel. +49 941 46668-68 Fax +49 941 46668-66 tb-regensburg@sew-eurodrive.de
	Rhein-Main	SEW-EURODRIVE GmbH & Co KG Niederstedter Weg 5 D-61348 Bad Homburg	Tel. +49 6172 9617-0 Fax +49 6172 9617-50 tb-rheinmain@sew-eurodrive.de
	Stuttgart	SEW-EURODRIVE GmbH & Co KG Friedrich-List-Straße 46 D-70771 Leinfelden-Echterdingen	Tel. +49 711 16072-0 Fax +49 711 16072-72 tb-stuttgart@sew-eurodrive.de
	Ulm	SEW-EURODRIVE GmbH & Co KG Dieselstraße 14 D-89160 Dornstadt	Tel. +49 7348 9885-0 Fax +49 7348 9885-90 tb-ulm@sew-eurodrive.de
	Würzburg	SEW-EURODRIVE GmbH & Co KG Nürnbergerstraße 118 D-97076 Würzburg-Lengfeld	Tel. +49 931 27886-60 Fax +49 931 27886-66 tb-wuerzburg@sew-eurodrive.de
	Zwickau / Meerane	SEW-EURODRIVE GmbH & Co KG Dänkritzer Weg1 D-08393 Meerane	Tel. +49 3764 7606-0 Fax +49 3764 7606-20 tb-zwickau@sew-eurodrive.de

France			
Production **Sales** **Service**	**Haguenau**	SEW-USOCOME 48-54 route de Soufflenheim B. P. 20185 F-67506 Haguenau Cedex	Tel. +33 3 88 73 67 00 Fax +33 3 88 73 66 00 http://www.usocome.com sew@usocome.com
Production	**Forbach**	SEW-EUROCOME Zone Industrielle Technopôle Forbach Sud B. P. 30269 F-57604 Forbach Cedex	Tel. +33 3 87 29 38 00
Assembly **Sales** **Service**	**Bordeaux**	SEW-USOCOME Parc d'activités de Magellan 62 avenue de Magellan - B. P. 182 F-33607 Pessac Cedex	Tel. +33 5 57 26 39 00 Fax +33 5 57 26 39 09
	Lyon	SEW-USOCOME Parc d'Affaires Roosevelt Rue Jacques Tati F-69120 Vaulx en Velin	Tel. +33 4 72 15 37 00 Fax +33 4 72 15 37 15
	Paris	SEW-USOCOME Zone industrielle 2 rue Denis Papin F-77390 Verneuil l'Etang	Tel. +33 1 64 42 40 80 Fax +33 1 64 42 40 88
Technical Offices	**Alsace**	SEW-USOCOME 1 rue Auguste Gasser F-68360 Soultz	Tel. +33 3 89 74 51 62 Fax +33 3 89 76 58 71
	Aquitaine / Charentes	SEW-USOCOME Parc d'activités de Magellan 62 avenue de Magellan B. P. 182 F-33607 Pessac Cedex	Tel. +33 5 57 26 39 00 Fax +33 5 57 26 39 09
	Auvergne / Limousin	SEW-USOCOME 27 avenue du Colombier F-19150 Laguenne	Tel. +33 5 55 20 12 10 Fax +33 5 55 20 12 11
	Basse-Normandie	SEW-USOCOME 5 rue de la Limare F-14250 Brouay	Tel. +33 2 31 37 92 86 Fax +33 2 31 74 68 15

France			
	Bourgogne	SEW-USOCOME 10 rue de la Poste F-71350 Saint Loup Géanges	Tel. +33 3 85 49 92 18 Fax +33 3 85 49 92 19
	Bretagne	SEW-USOCOME Le bois Foucaud F-44270 Saint Même Le Tenu	Tel. +33 2 28 21 12 52 Fax +33 2 28 21 12 84
	Centre / Poitou	SEW-USOCOME 18 avenue André Ampère Appartement 14 F-37540 Saint Cyr sur Loire	Tel. +33 2 47 41 33 23 Fax +33 2 47 41 34 03
	Champagne-Ardenne	SEW-USOCOME Impasse des Ouises F-10120 Saint André les Vergers	Tel. +33 3 25 79 63 24 Fax +33 3 25 79 63 25
	Franche-Comté	SEW-USOCOME 5 route de Besançon Maison B F-25870 Devecey	Tel. +33 3 81 60 20 47 Fax +33 3 81 87 75 93
	Ile-de-France est / Somme	SEW-USOCOME 45 rue des Cinelles F-77700 Bailly Romainvilliers	Tel. +33 1 64 17 02 47 Fax +33 1 64 17 66 49
	Ile-de-France nord / Picardie	SEW-USOCOME 25bis rue Kléber F-92300 Levallois Perret	Tel. +33 1 41 05 92 74 Fax +33 1 41 05 92 75
	Ile-de-France sud	SEW-USOCOME 6 chemin des Bergers Lieu-dit Marchais F-91410 Roinville sous Dourdan	Tel. +33 1 60 81 10 56 Fax +33 1 60 81 10 57
	Lorraine / Alsace nord	SEW-USOCOME 1 rue de la Forêt F-54250 Champigneulles	Tel. +33 3 83 96 28 04 Fax +33 3 83 96 28 07
	Midi-Pyrénées / Roussillon	SEW-USOCOME 179 route de Grazac F-31190 Caujac	Tel. +33 5 61 08 15 85 Fax +33 5 61 08 16 44
	Nord-Pas de Calais	SEW-USOCOME 209 route d'Hesdigneul F-62360 Hesdin l'Abbé	Tel. +33 3 21 10 86 86 Fax +33 3 21 10 86 87
	Paris / Ile-de-France ouest	SEW-USOCOME 42 avenue Jean Jaurès F-78580 Maule	Tel. +33 1 30 90 89 86 Fax +33 1 30 90 93 15
	Pays de la Loire	SEW-USOCOME 4 rue des Châtaigniers F-44830 Brains	Tel. +33 2 51 70 54 04 Fax +33 2 51 70 54 05
	Provence-Alpes-Côte d'Azur	SEW-USOCOME Résidence Les Hespérides Bât. B2 67 boulevard des Alpes F-13012 Marseille	Tel. +33 4 91 18 00 11 Fax +33 4 91 18 00 12
	Rhône-Alpes est	SEW-USOCOME Montée de la Garenne F-26750 Génissieux	Tel. +33 4 75 05 65 95 Fax +33 4 75 05 65 96
	Rhône-Alpes nord	SEW-USOCOME Parc d'Affaires Roosevelt Rue Jacques Tati F-69120 Vaulx en Velin	Tel. +33 4 72 15 37 03 Fax +33 4 72 15 37 15



France			
	Rhône-Alpes ouest	SEW-USOCOME Parc d'Affaires Roosevelt Rue Jacques Tati F-69120 Vaulx en Velin	Tel. +33 4 72 15 37 04 Fax +33 4 72 15 37 15

Algeria			
Sales	**Alger**	Réducom 16, rue des Frères Zaghnoun Bellevue El-Harrach 16200 Alger	Tel. +213 21 8222-84 Fax +213 21 8222-84 reducom_sew@yahoo.fr

Argentina			
Assembly **Sales** **Service**	**Buenos Aires**	SEW EURODRIVE ARGENTINA S.A. Centro Industrial Garin, Lote 35 Ruta Panamericana Km 37,5 1619 Garin	Tel. +54 3327 4572-84 Fax +54 3327 4572-21 sewar@sew-eurodrive.com.ar http://www.sew-eurodrive.com.ar

Australia			
Assembly **Sales** **Service**	**Melbourne**	SEW-EURODRIVE PTY. LTD. 27 Beverage Drive Tullamarine, Victoria 3043	Tel. +61 3 9933-1000 Fax +61 3 9933-1003 http://www.sew-eurodrive.com.au enquires@sew-eurodrive.com.au
	Sydney	SEW-EURODRIVE PTY. LTD. 9, Sleigh Place, Wetherill Park New South Wales, 2164	Tel. +61 2 9725-9900 Fax +61 2 9725-9905 enquires@sew-eurodrive.com.au
Sales **Service**	**Adelaide**	SEW-EURODRIVE PTY. LTD. 9C Park Way Mawson Lakes, SA 5095	Tel. +61 8 8161 4000 Fax +61 8 8161 4002 enquires@sew-eurodrive.com.au
	Brisbane	SEW-EURODRIVE PTY.LTD. 1 /34 Collinsvale St Rocklea, Queensland, 4106	Tel. +61 7 3276 5100 Fax +61 7 3276 5102 enquires@sew-eurodrive.com.au
	Perth	SEW-EURODRIVE PTY. LTD. 105 Robinson Avenue Belmont, W.A. 6104	Tel. +61 8 9478-2688 Fax +61 8 9277-7572 enquires@sew-eurodrive.com.au
Technical Office	**Townsville**	SEW-EURODRIVE PTY. LTD. 12 Leyland Street Garbutt, QLD 4814	Tel. +61 7 4779 4333 Fax +61 7 4779 5333 enquires@sew-eurodrive.com.au

Austria			
Assembly **Sales** **Service**	**Wien**	SEW-EURODRIVE Ges.m.b.H. Richard-Strauss-Strasse 24 A-1230 Wien	Tel. +43 1 617 55 00-0 Fax +43 1 617 55 00-30 http://www.sew-eurodrive.at sew@sew-eurodrive.at
Technical Offices	**Linz**	SEW-EURODRIVE Ges.m.b.H. Reuchlinstr. 6/3 A-4020 Linz	Tel. +43 732 655 109-0 Fax +43 732 655 109-20 tb-linz@sew-eurodrive.at
	Graz	SEW-EURODRIVE Ges.m.b.H. Grabenstraße 231 A-8045 Graz	Tel. +43 316 685 756-0 Fax +43 316 685 755 tb-graz@sew-eurodrive.at
	Dornbirn	SEW-EURODRIVE Ges.m.b.H. Lustenauerstraße 27/1 A-6850 Dornbirn	Tel. +43 5572 3799-0 Fax +43 5572 3725 99-20 tb-dornbirn@sew-eurodrive.at

Bangladesh			
Sales	**Dhaka**	Jainex Industrial and Engineering Ltd B 12 Apon Nibash East Nasirabad Bangladesh	Tel. +880 1713103502 Fax +880 31 613041 jainexbd@onlinectg.net

Belarus			
Sales	**Minsk**	SEW-EURODRIVE BY RybalkoStr. 26 BY-220033 Minsk	Tel.+375 (17) 298 38 50 Fax +375 (17) 29838 50 sales@sew.by

Belgium			
Assembly **Sales** **Service**	**Brüssel**	**SEW Caron-Vector** Avenue Eiffel 5 B-1300 Wavre	Tel. +32 10 231-311 Fax +32 10 231-336 http://www.sew-eurodrive.be info@caron-vector.be
Service Competence Center	**Industrial Gears**	**SEW Caron-Vector** Rue de Parc Industriel, 31 BE-6900 Marche-en-Famenne	Tel. +32 84 219-878 Fax +32 84 219-879 http://www.sew-eurodrive.be service-wallonie@sew-eurodrive.be
	Antwerp	**SEW Caron-Vector** Glasstraat, 19 BE-2170 Merksem	Tel. +32 3 64 19 333 Fax +32 3 64 19 336 http://www.sew-eurodrive.be service-antwerpen@sew-eurodrive.be

Brazil			
Production **Sales** **Service**	**Sao Paulo**	SEW-EURODRIVE Brasil Ltda. Avenida Amâncio Gaiolli, 152 - Rodovia Presidente Dutra Km 208 Guarulhos - 07251-250 - SP SAT - SEW ATENDE - 0800 7700496	Tel. +55 11 2489-9133 Fax +55 11 2480-3328 http://www.sew-eurodrive.com.br sew@sew.com.br

Bulgaria			
Sales	**Sofia**	BEVER-DRIVE GmbH Bogdanovetz Str.1 BG-1606 Sofia	Tel. +359 2 9151160 Fax +359 2 9151166 bever@fastbg.net

Cameroon			
Sales	**Douala**	Electro-Services Rue Drouot Akwa B.P. 2024 Douala	Tel. +237 33 431137 Fax +237 33 431137

Canada			
Assembly **Sales** **Service**	**Toronto**	SEW-EURODRIVE CO. OF CANADA LTD. 210 Walker Drive Bramalea, ON L6T 3W1	Tel. +1 905 791-1553 Fax +1 905 791-2999 http://www.sew-eurodrive.ca l.watson@sew-eurodrive.ca
	Vancouver	SEW-EURODRIVE CO. OF CANADA LTD. Tilbury Industrial Park 7188 Honeyman Street Delta, BC V4G 1G1	Tel. +1 604 946-5535 Fax +1 604 946-2513 b.wake@sew- eurodrive.ca
	Montreal	SEW-EURODRIVE CO. OF CANADA LTD. 2555 Rue Leger Lasalle, PQ H8N 2V9	Tel. +1 514 367-1124 Fax +1 514 367-3677 a.peluso@sew- eurodrive.ca
	Additional addresses for service in Canada provided on request!		

Chile			
Assembly **Sales** **Service**	**Santiago de Chile**	SEW-EURODRIVE CHILE LTDA. Las Encinas 1295 Parque Industrial Valle Grande LAMPA RCH-Santiago de Chile P.O. Box Casilla 23 Correo Quilicura - Santiago - Chile	Tel. +56 2 75770-00 Fax +56 2 75770-01 http://www.sew-eurodrive.cl ventas@sew-eurodrive.cl



China			
Production **Assembly** **Sales** **Service**	**Tianjin**	SEW-EURODRIVE (Tianjin) Co., Ltd. No. 46, 7th Avenue, TEDA Tianjin 300457	Tel. +86 22 25322612 Fax +86 22 25322611 info@sew-eurodrive.cn http://www.sew-eurodrive.cn
Assembly **Sales** **Service**	**Suzhou**	SEW-EURODRIVE (Suzhou) Co., Ltd. 333, Suhong Middle Road Suzhou Industrial Park Jiangsu Province, 215021	Tel. +86 512 62581781 Fax +86 512 62581783 suzhou@sew-eurodrive.cn
	Guangzhou	SEW-EURODRIVE (Guangzhou) Co., Ltd. No. 9, JunDa Road East Section of GETDD Guangzhou 510530	Tel. +86 20 82267890 Fax +86 20 82267891 guangzhou@sew-eurodrive.cn
	Shenyang	SEW-EURODRIVE (Shenyang) Co., Ltd. 10A-2, 6th Road Shenyang Economic Technological Development Area Shenyang, 110141	Tel. +86 24 25382538 Fax +86 24 25382580 shenyang@sew-eurodrive.cn
	Wuhan	SEW-EURODRIVE (Wuhan) Co., Ltd. 10A-2, 6th Road No. 59, the 4th Quanli Road, WEDA 430056 Wuhan	Tel. +86 27 84478398 Fax +86 27 84478388
	Xi'An	SEW-EURODRIVE (Xi'An) Co., Ltd. No. 12 Jinye 2nd Road Xi'An High-Technology Industrial Development Zone Xi'An 710065	Tel. +86 29 88241718 Fax +86 29 68686296 logistic-xa@sew-eurodrive.cn

Colombia			
Assembly **Sales** **Service**	**Bogotá**	SEW-EURODRIVE COLOMBIA LTDA. Calle 22 No. 132-60 Bodega 6, Manzana B Santafé de Bogotá	Tel. +57 1 54750-50 Fax +57 1 54750-44 http://www.sew-eurodrive.com.co sewcol@sew-eurodrive.com.co

Croatia			
Sales **Service**	**Zagreb**	KOMPEKS d. o. o. PIT Erdödy 4 II HR 10 000 Zagreb	Tel. +385 1 4613-158 Fax +385 1 4613-158 kompeks@inet.hr

Czech Republic			
Sales	**Praha**	SEW-EURODRIVE CZ S.R.O. Business Centrum Praha Lužná 591 CZ-16000 Praha 6 - Vokovice	Tel. +420 255 709 601 Fax +420 220 121 237 http://www.sew-eurodrive.cz sew@sew-eurodrive.cz
Technical Offices	**Brno**	SEW-EURODRIVE CZ S.R.O. Křenová 52 CZ -60200 Brno	Tel. +420 543 256 151 +420 543 256 163 Fax +420 543 256 845
	Hradec Králové	SEW-EURODRIVE CZ S.R.O. Čechova 498 CZ-50202 Hradec Králové	Tel. +420 495 510 141 Fax +420 495 521 313
	Plzeň	SEW-EURODRIVE CZ S.R.O. Areal KRPA a.s. Zahradni 173/2 CZ-32600 Plzeň	Tel. +420 378 775 300 Fax +420 377 970 710
	Ostrava	SEW-EURODRIVE CZ S.R.O. Studenská 6202/17 CZ-708 00 Ostrava-Poruba	Tel. +420 738 339 044 Mobile +420 724 889 965

Czech Republic			
	Klatovy	SEW-EURODRIVE CZ S.R.O. Technická kancelář Klatovy Domažlická 800 CZ-33901 Klatovy	Tel. +420 376 310 729 Fax +420 376 310 725

Denmark			
Assembly **Sales** **Service**	**Kopenhagen**	SEW-EURODRIVEA/S Geminivej 28-30 DK-2670 Greve	Tel. +45 43 9585-00 Fax +45 43 9585-09 http://www.sew-eurodrive.dk sew@sew-eurodrive.dk

Egypt			
Sales **Service**	**Cairo**	Copam Egypt for Engineering & Agencies 33 El Hegaz ST, Heliopolis, Cairo	Tel. +20 2 22566-299 + 1 23143088 Fax +20 2 22594-757 http://www.copam-egypt.com/ copam@datum.com.eg
Service	**Sharjah**	Copam Middle East (FZC) Sharjah Airport International Free Zone P.O. Box 120709 Sharjah **United Arabian Emirates**	Tel. +971 6 5578-488 Fax +971 6 5578-499 copam_me@eim.ae

Estonia			
Sales	**Tallin**	ALAS-KUUL AS Reti tee 4 EE-75301 Peetri küla, Rae vald, Harjumaa	Tel. +372 6593230 Fax +372 6593231 veiko.soots@alas-kuul.ee

Finland			
Assembly **Sales** **Service**	**Lahti**	SEW-EURODRIVE OY Vesimäentie 4 FIN-15860 Hollola 2	Tel. +358 201 589-300 Fax +358 3 780-6211 sew@sew.fi http://www.sew-eurodrive.fi
Technical Offices	**Helsinki**	SEW-EURODRIVE OY Luutnantintie 5 FIN-00410 Helsinki	Tel. +358 201 589-300 Fax + 358 9 5666-311 sew@sew.fi
	Vaasa	SEW-EURODRIVE OY Hietasaarenkatu 18 FIN-65100 Vaasa	Tel. +358 201 589-300 Fax +358 6 3127-470 sew@sew.fi
	Rovaniemi	SEW-EURODRIVE OY Valtakatu 4 A FIN-96100 Rovaniemi	Tel. +358 201 589-300 Fax +358 201 589-239 sew@sew.fi
Production **Assembly**	**Karkkila**	SEW Industrial Gears Oy Valurinkatu 6, PL 8 FI-03600 Karkkila, 03601 Karkkila	Tel. +358 201 589-300 Fax +358 201 589-310 sew@sew.fi http://www.sew-eurodrive.fi

Gabon			
Sales	**Libreville**	ESG Electro Services Gabun Feu Rouge Lalala 1889 Libreville Gabun	Tel. +241 741059 Fax +241 741059

Great Britain			
Assembly **Sales** **Service**	**Normanton**	SEW-EURODRIVE Ltd. Beckbridge Industrial Estate P.O. Box No.1 GB-Normanton, West- Yorkshire WF6 1QR	Tel. +44 1924 893-855 Fax +44 1924 893-702 http://www.sew-eurodrive.co.uk info@sew-eurodrive.co.uk



Great Britain			
Technical Offices	**London**	SEW-EURODRIVE Ltd. 764 Finchely Road, Temple Fortune GB-London N.W.11 7TH	Tel. +44 20 8458-8949 Fax +44 20 8458-7417
	Midlands	SEW-EURODRIVE Ltd. 5 Sugar Brook court, Aston Road, Bromsgrove, Worcs B60 3EX	Tel. +44 1527 877-319 Fax +44 1527 575-245
	Scotland	SEW-EURODRIVE Ltd. Scottish Office No 37 Enterprise House Springkerse Business Park GB-Stirling FK7 7UF Scotland	Tel. +44 17 8647-8730 Fax +44 17 8645-0223
	Northern Ireland	Heyn Engineering (NI) Ltd. 1 Corry Place, Belfast, BT3 9AH	Tel. +44 02890350022 Fax +44 02890350012 info@heyn.co.uk http://www.heyn.co.uk

Greece			
Sales **Service**	**Athen**	Christ. Boznos & Son S.A. 12, Mavromichali Street P.O. Box 80136, GR-18545 Piraeus	Tel. +30 2 1042 251-34 Fax +30 2 1042 251-59 http://www.boznos.gr info@boznos.gr
Technical Office	**Thessaloniki**	Christ. Boznos & Son S.A. Asklipiou 26 562 24 Evosmos, Thessaloniki	Tel. +30 2 310 7054-00 Fax +30 2 310 7055-15 info@boznos.gr

Hong Kong			
Assembly **Sales** **Service**	**Hong Kong**	SEW-EURODRIVE LTD. Unit No. 801-806, 8th Floor Hong Leong Industrial Complex No. 4, Wang Kwong Road Kowloon, Hong Kong	Tel. +852 36902200 Fax +852 36902211 contact@sew-eurodrive.hk

Hungary			
Sales **Service**	**Budapest**	SEW-EURODRIVE Kft. H-1037 Budapest Kunigunda u. 18	Tel. +36 1 437 06-58 Fax +36 1 437 06-50 office@sew-eurodrive.hu

Iceland			
Sales	**Reykjavik**	Vélaverk ehf. Bolholti 8, 3h. IS - 105 Reykjavik	Tel. +354 568 3536 Fax +354 568 3537 velaverk@velaverk.is

India			
Registered Office **Assembly** **Sales** **Service**	**Vadodara**	SEW-EURODRIVE India Private Limited Plot No. 4, GIDC POR Ramangamdi • Vadodara - 391 243 Gujarat	Tel. +91 265 3045200, +91 265 2831086 Fax +91 265 3045300, +91 265 2831087 http://www.seweurodriveindia.com sales@seweurodriveindia.com subodh.ladwa@seweurodriveindia.com
Assembly **Sales** **Service**	**Chennai**	SEW-EURODRIVE India Private Limited Plot No. K3/1, Sipcot Industrial Park Phase II Mambakkam Village Sriperumbudur - 602105 Kancheepuram Dist, Tamil Nadu	Tel. +91 44 37188888 Fax +91 44 37188811 c.v.shivkumar@seweurodriveindia.com

India			
Technical Offices	**Ahmedabad**	SEW-EURODRIVE India Private Limited 306, Shaan office complex, Behind Sakar-IV, Ellisebridge, Ashram Road Ahmedabad – Gujarat	Tel. +91 79 40072067/68 Fax +91 79 40072069 bankim.barot@seweurodriveindia.com
	Bengaluru	SEW-EURODRIVE India Private Limited 308, Prestige Centre Point 7, Edward Road Bengaluru - 560052 - Karnataka	Tel. +91 80 22266565 Fax +91 80 22266569 salesbang@seweurodriveindia.com ganesh@seweurodriveindia.com
	Chandigarh	SEW EURODRIVE India Private Limited Sujit Kumar Mishra H.No.5464/3 Modern Housing Complex Manimajra Chandigarh -160101	Tel. +91 9878469579 Fax +91 1722738664 saleschand@seweurodriveindia.com
	Chennai	SEW-EURODRIVE India Private Limited 2nd Floor, Josmans Complex, No. 5, McNichols Road, Chetpet Chennai - 600031 - Tamil Nadu	Tel. +91 44 42849813 Fax +91 44 42849816 saleschen@seweurodriveindia.com c.v.shivkumar@seweurodriveindia.com
	Coimbatore	SEW-EURODRIVE India Private Limited Office No 60 Arpee Centre (Opp Annapoorna Hotel) 420 N, NSR Road, Saibaba Colony Coimbatore 641 0111 - Tamil Nadu	Tel. +91 422 2455420 Fax +91 422 2443988 salescmb@seweurodriveindia.com p.selvakumar@seweurodriveindia.com
	Cuttack	SEW-EURODRIVE India Private Limited Plot No.- 1764, Nuasahi, Nayapalli Bhubaneswar-12 Orissa	Tel. +91 9937446333 manoranjan.sahoo@seweurodriveindia.com
	Hyderabad	SEW-EURODRIVE India Private Limited 408, 4th Floor, Meridian Place Green Park Road Amerpeet Hyderabad - 500016 - Andhra Pradesh	Tel. +91 40 23414698 Fax +91 40 23413884 saleshyd@seweurodriveindia.com ma.choudary@seweurodriveindia.com
	Jamshedpur	SEW-EURODRIVE India Private Limited Flat No.: B/2, B.S. Apartment Road No.: 4, Contractor's area, Bistupur Jamshedpur 831 001 - Chhattisgarh	Tel. +91 9934123671 siddaratha.mishra@seweurodriveindia.com
	Kolkata	SEW EURODRIVE India Private Limited 2nd floor, Room No. 35 Chowringhee Court 55, Chowringhee Road Kolkata - 700 071 - West Bengal	Tel. +91 33 22827457 Fax +91 33 22894204 saleskal@seweurodriveindia.com a.j.biswas@seweurodriveindia.com
	Lucknow	SEW-EURODRIVE India Private Limited 69, Shiv Vihar Colony Vikas Nagar-5 Lucknow 226022 - Uttar Pradesh	Tel. +91 9793627333 amit.nigam@seweurodriveindia.com
	Madgaon	SEW-EURODRIVE India Private Limited Flat No.-G1, Shivas-Laxmi Prasad Co-Operative Housing Society, Padmanarayan Estate, Near Jivottaam Math, Gagole Madgao, Goa - 403 602	samrat.chakravorty@seweurodriveindia.com



India			
	Mumbai	SEW-EURODRIVE India Private Limited 312 A, 3rd Floor, Acme Plaza, J.B. Nagar, Andheri Kurla Road, Andheri (E) Mumbai - 400059 - Maharashtra	Tel. +91 22 28348440 Fax +91 22 28217858 salesmumbai@seweurodriveindia.com p.s.ray@seweurodriveindia.com
	New Delhi	SEW-EURODRIVE India Private Limited 418-419, Suneja Tower-1 District Centre, Janak Puri New Delhi 110 058	Tel. +91 11 25544111 Fax +91 11 25544113 salesdelhi@seweurodriveindia.com vikram.juneja@seweurodriveindia.com
	Pune	SEW-EURODRIVE India Private Limited Lunawat Prism 4th floor, S. No. 148, Neena Co-Operative Housing Society, Paud Road, Pune 411038 - Maharashtra	Tel. +91 20 25380730 / 735 Fax +91 20 25380721 salespune@seweurodriveindia.com praveen.hosur@seweurodriveindia.com
	Raipur	SEW-EURODRIVE India Private Limited A-42, Ashoka Millenium Complex, Ring Road-1, Raipur 492 001 - Chhattisgarh	Tel. +91 771 4090765 Fax +91 771 4090765 sutanu.sarkar@seweurodriveindia.com

Indonesia			
Represented by	**Singapore**	SEW-EURODRIVE PTE. LTD. No 9, Tuas Drive 2 Jurong Industrial Estate Singapore 638644	Tel. +65 68621701 Fax +65 68612827 http://www.sew-eurodrive.com.sg sewsingapore@sew-eurodrive.com

Ireland			
Sales **Service**	**Dublin**	Alperton Engineering Ltd. 48 Moyle Road Dublin Industrial Estate Glasnevin, Dublin 11	Tel. +353 1 830-6277 Fax +353 1 830-6458 info@alperton.ie http://www.alperton.ie

Israel			
Sales	**Tel-Aviv**	Liraz Handasa Ltd. Ahofer Str 34B / 228 58858 Holon	Tel. +972 3 5599511 Fax +972 3 5599512 http://www.liraz-handasa.co.il office@liraz-handasa.co.il

Italy			
Assembly **Sales** **Service**	**Milano**	SEW-EURODRIVE di R. Blickle & Co.s.a.s. Via Bernini,14 I-20020 Solaro (Milano)	Tel. +39 02 96 9801 Fax +39 02 96 799781 http://www.sew-eurodrive.it sewit@sew-eurodrive.it
Technical Offices	**Bologna**	SEW-EURODRIVE di R. Blickle & Co.s.a.s. Via della Grafica, 47 I-40064 Ozzano dell'Emilia (Bo)	Tel. +39 051 65-23-801 Fax +39 051 796-595
	Caserta	SEW-EURODRIVE di R. Blickle & Co.s.a.s. Viale Carlo III Km. 23,300 I-81020 S. Nicola la Strada (Caserta)	Tel. +39 0823 219011 Fax +39 0823 421414
	Pescara	SEW-EURODRIVE di R. Blickle & Co.s.a.s. Viale Europa,132 I-65010 Villa Raspa di Spoltore (PE)	Tel. +39 085 41-59-427 Fax +39 085 41-59-643
	Torino	SEW-EURODRIVE di R. Blickle & Co.s.a.s. Filiale Torino c.so Unione Sovietica 612/15 - int. C I-10135 Torino	Tel. +39 011 3473780 Fax +39 011 3473783
	Verona	SEW-EURODRIVE di R. Blickle & Co.s.a.s. Via P. Sgulmero, 27/A I-37132 Verona	Tel. +39 045 89-239-11 Fax +39 045 97-6079

Ivory Coast			
Sales	**Abidjan**	SICA Ste industrielle et commerciale pour l'Afrique 165, Bld de Marseille B.P. 2323, Abidjan 08	Tel. +225 2579-44 Fax +225 2584-36

Japan			
Assembly **Sales** **Service**	**Iwata**	SEW-EURODRIVE JAPAN CO., LTD 250-1, Shimoman-no, Iwata Shizuoka 438-0818	Tel. +81 538 373811 Fax +81 538 373814 http://www.sew-eurodrive.co.jp sewjapan@sew-eurodrive.co.jp
Technical Offices	**Fukuoka**	SEW-EURODRIVE JAPAN CO., LTD. C-go, 5th-floor, Yakuin-Hiruzu-Bldg. 1-5-11, Yakuin, Chuo-ku Fukuoka, 810-0022	Tel. +81 92 713-6955 Fax +81 92 713-6860 sewkyushu@jasmine.ocn.ne.jp
	Osaka	SEW-EURODRIVE JAPAN CO., LTD. Higobashi Shimizu Bldg. 10th flor 1-3-7 Tosabori, Nishi-ku Osaka, 550-0001	Tel. +81 6 6444--8330 Fax +81 6 6444--8338 sewosaka@crocus.ocn.ne.jp
	Tokyo	SEW-EURODRIVE JAPAN CO., LTD. Omarimon Yusen Bldg. 13th floor 3-23-5 Nishinbashi, Minato-ku Tokyo 105-0003	Tel. +81 3 3239-0469 Fax +81 3 3239-0943 sewtokyo@basil.ocn.ne.jp

Kazakhstan			
Sales	**Almaty**	SEW-EURODRIVE LLP Raimbek Ave. 348 KZ-050061 Almaty	Tel.+7 (727) 334 1880 Fax +7 (727) 334 1881 http://www.sew-eurodrive.kz sew@sew-eurodrive.kz

Korea			
Assembly **Sales** **Service**	**Ansan-City**	SEW-EURODRIVE KOREA CO., LTD. B 601-4, Banweol Industrial Estate 1048-4, Shingil-Dong Ansan 425-120	Tel. +82 31 492-8051 Fax +82 31 492-8056 http://www.sew-korea.co.kr master@sew-korea.co.kr
	Busan	SEW-EURODRIVE KOREA Co., Ltd. No. 1720 - 11, Songjeong - dong Gangseo-ku Busan 618-270	Tel. +82 51 832-0204 Fax +82 51 832-0230 master@sew-korea.co.kr
Technical Offices	**Daegu**	SEW-EURODRIVE KOREA Co., Ltd. No.1108 Sungan officetel 87-36, Duryu 2-dong, Dalseo-ku Daegu 704-712	Tel. +82 53 650-7111 Fax +82 53 650-7112
	DaeJeon	SEW-EURODRIVE KOREA Co., Ltd. No. 1502, Hongin officetel 536-9, Bongmyung-dong, Yusung-ku Daejeon 305-301	Tel. +82 42 828-6461 Fax +82 42 828-6463
	Kwangju	SEW-EURODRIVE KOREA Co., Ltd. 4fl., Dae-Myeong B/D 96-16 Unam-dong, Buk-ku Kwangju 500-170	Tel. +82 62 511-9172 Fax +82 62 511-9174
	Seoul	SEW-EURODRIVE KOREA Co., Ltd. No.504 Sunkyung officetel 106-4 Kuro 6-dong, Kuro-ku Seoul 152-054	Tel. +82 2 862-8051 Fax +82 2 862-8199

Latvia			
Sales	**Riga**	SIA Alas-Kuul Katlakalna 11C LV-1073 Riga	Tel. +371 7139253 Fax +371 7139386 http://www.alas-kuul.com info@alas-kuul.com

Lebanon			
Sales	**Beirut**	Gabriel Acar & Fils sarl B. P. 80484 Bourj Hammoud, Beirut	Tel. +961 1 4947-86 +961 1 4982-72 +961 3 2745-39 Fax +961 1 4949-71 ssacar@inco.com.lb
	Beirut	Middle East Drives S.A.L. (offshore) Sin El Fil. B. P. 55-378 Beirut	Tel. +961 1 494 786 Fax +961 1 494 971 philipppe.acar@medrives.com

Lithuania			
Sales	**Alytus**	UAB Irseva Naujoji 19 LT-62175 Alytus	Tel. +370 315 79204 Fax +370 315 56175 info@irseva.lt http://www.sew-eurodrive.lt

Luxembourg			
Assembly **Sales** **Service**	**Brüssel**	CARON-VECTOR S.A. Avenue Eiffel 5 B-1300 Wavre	Tel. +32 10 231-311 Fax +32 10 231-336 http://www.sew-eurodrive.lu info@caron-vector.be

Malaysia			
Assembly **Sales** **Service**	**Johore**	SEW-EURODRIVE SDN BHD No. 95, Jalan Seroja 39, Taman Johor Jaya 81000 Johor Bahru, Johor West Malaysia	Tel. +60 7 3549409 Fax +60 7 3541404 sales@sew-eurodrive.com.my
Technical Offices	**Kota Kinabalu**	SEW-EURODRIVE Sdn Bhd (Kota Kinabalu Branch) Lot No. 2,1st Floor, Inanam Baru Phase III, Miles 5.1 /2, Jalan Tuaran, Inanam 89350 Kota Kinabalu Sabah, Malaysia	Tel. +60 88 424792 Fax +60 88 424807
	Kuala Lumpur	SEW-EURODRIVE Sdn. Bhd. No. 2, Jalan Anggerik Mokara 31/46 Kota Kemuning Seksyen 31 40460 Shah Alam Selangor Darul Ehsan	Tel. +60 3 5229633 Fax +60 3 5229622 sewpjy@po.jaring.my
	Kuching	SEW-EURODRIVE Sdn. Bhd. Lot 268, Section 9 KTLD Lorong 9, Jalan Satok 93400 Kuching, Sarawak East Malaysia	Tel. +60 82 232380 Fax +60 82 242380
	Penang	SEW-EURODRIVE Sdn. Bhd. No. 38, Jalan Bawal Kimsar Garden 13700 Prai, Penang	Tel. +60 4 3999349 Fax +60 4 3999348 seweurodrive@po.jaring.my

Mauritania			
Sales	**Zouérate**	AFRICOM - SARL En Face Marché Dumez P.B. 88 Zouérate	Tel. +222 54 40134 Fax +222 54 40538 cybertiris@mauritel.mr

Mexico			
Assembly **Sales** **Service**	**Quéretaro**	SEW-EURODRIVE MEXICO SA DE CV SEM-981118-M93 Tequisquiapan No. 102 Parque Industrial Quéretaro C.P. 76220 Quéretaro, México	Tel. +52 442 1030-300 Fax +52 442 1030-301 http://www.sew-eurodrive.com.mx scmexico@seweurodrive.com.mx

Morocco			
Sales	**Casablanca**	Afit 5, rue Emir Abdelkader MA 20300 Casablanca	Tel. +212 522618372 Fax +212 522618351 ali.alami@premium.net.ma

Netherlands			
Assembly **Sales** **Service**	**Rotterdam**	VECTOR Aandrijftechniek B.V. Industrieweg 175 NL-3044 AS Rotterdam Postbus 10085 NL-3004 AB Rotterdam	Tel. +31 10 4463-700 Fax +31 10 4155-552 http://www.vector.nu info@vector.nu
		VECTOR Aandrijftechniek B.V. Gelderhorst 10 NL-7207 BH Zutphen Industrieterrein de Revelhorst	Tel. +31 575 57 44 94 Fax +31 575 57 24 43 oost@vector.nu
		VECTOR Aandrijftechniek B.V. Mercuriusweg 8A NL-5971 LX Grubbenvorst	Tel. +31 77 36 61 873 Fax +31 77 36 62 109 zuid@vector.nu
		VECTOR Aandrijftechniek B.V. Weberstraat 74 NL-1446 VV Purmerend Industrieterrein "De Baanstee"	Tel. +31 299 66 63 38 Fax +31 299 47 60 55 noordwest@vector.nu

New Zealand			
Assembly **Sales** **Service**	**Auckland**	SEW-EURODRIVE NEW ZEALAND LTD. P.O. Box 58-428 82 Greenmount drive East Tamaki Auckland	Tel. +64 9 2745627 Fax +64 9 2740165 http://www.sew-eurodrive.co.nz sales@sew-eurodrive.co.nz
	Christchurch	SEW-EURODRIVE NEW ZEALAND LTD. 10 Settlers Crescent, Ferrymead Christchurch	Tel. +64 3 384-6251 Fax +64 3 384-6455 sales@sew-eurodrive.co.nz
Technical Office	**Palmerston North**	SEW-EURODRIVE NEW ZEALAND LTD. C/-Grant Shearman, RD 5, Aronui Road Palmerston North	Tel. +64 6 355-2165 Fax +64 6 355-2316 sales@sew-eurodrive.co.nz

Norway			
Assembly **Sales** **Service**	**Moss**	SEW-EURODRIVE A/S Solgaard skog 71 N-1599 Moss	Tel. +47 69 24 10 20 Fax +47 69 24 10 40 http://www.sew-eurodrive.no sew@sew-eurodrive.no

Peru			
Assembly **Sales** **Service**	**Lima**	SEW DEL PERU MOTORES REDUCTORES S.A.C. Los Calderos, 120-124 Urbanizacion Industrial Vulcano, ATE, Lima	Tel. +51 1 3495280 Fax +51 1 3493002 http://www.sew-eurodrive.com.pe sewperu@sew-eurodrive.com.pe

Philippines			
Represented by	**Singapore**	SEW-EURODRIVE PTE. LTD. No 9, Tuas Drive 2 Jurong Industrial Estate Singapore 638644	Tel. +65 68621701 Fax +65 68612827 http://www.sew-eurodrive.com.sg sewsingapore@sew-eurodrive.com

Poland			
Assembly **Sales** **Service**	**Lodz**	SEW-EURODRIVE Polska Sp.z.o.o. ul. Techniczna 5 PL-92-518 Łódź	Tel. +48 42 676 53 00 Fax +48 42 676 53 45 http://www.sew-eurodrive.pl sew@sew-eurodrive.pl
		24 Hour Service	Tel. +48 602 739 739 (+48 602 SEW SEW) serwis@sew-eurodrive.pl
Technical Office	**Tychy**	SEW-EURODRIVE Polska Sp.z.o.o. ul. Fabryczna 5 PL-43-100 Tychy	Tel. +48 32 32 32 610 Fax +48 32 32 32 647
	Bydgoszcz	SEW-EURODRIVE Polska Sp.z.o.o. ul. Fordońska 246 PL-85-959 Bydgoszcz	Tel. +48 52 3606590 Fax +48 52 3606591
	Poznan	SEW-EURODRIVE Polska Sp.z.o.o. ul. Romana Maya 1 PL-61-371 Poznań	Tel. +48 61 8741640 Fax +48 61 8741641
	Radom	SEW-EURODRIVE Polska Sp.z.o.o. ul. Słowackiego 84 PL-26-600 Radom	Tel. +48 48 365 40 50 Fax +48 48 365 40 51
	Szczecinek	SEW-EURODRIVE Polska Sp.z.o.o. ul. Mickiewicza 2 PL-78-400 Szczecinek	Tel. +48 94 3728820 Fax +48 94 3728821

Portugal			
Assembly **Sales** **Service**	**Coimbra**	SEW-EURODRIVE, LDA. Apartado 15 P-3050-901 Mealhada	Tel. +351 231 20 9670 Fax +351 231 20 3685 http://www.sew-eurodrive.pt infosew@sew-eurodrive.pt
Technical Offices	**Lisboa**	SEW-EURODRIVE, LDA. Núcleo Empresarial I de São Julião do Tojal Rua de Entremuros, 54 Fracção I P-2660-533 São Julião do Tojal	Tel. +351 21 958-0198 Fax +351 21 958-0245 esc.lisboa@sew-eurodrive.pt
	Porto	SEW-EURODRIVE, LDA. Av. 25 de Abril, 68 4440-502 Valongo	Tel. +351 229 350 383 Fax +351 229 350 384 MobilTel. +351 9 32559110 esc.porto@sew-eurodrive.pt

Romania			
Sales **Service**	**Bucureşti**	Sialco Trading SRL str. Madrid nr.4 011785 Bucuresti	Tel. +40 21 230-1328 Fax +40 21 230-7170 sialco@sialco.ro

Russia			
Assembly **Sales** **Service**	**St. Petersburg**	ZAO SEW-EURODRIVE P.O. Box 36 195220 St. Petersburg Russia	Tel. +7 812 3332522 +7 812 5357142 Fax +7 812 3332523 http://www.sew-eurodrive.ru sew@sew-eurodrive.ru
Technical Office	**Yekaterinburg**	ZAO SEW-EURODRIVE Kominterna Str. 16 Office 614 RUS-620078 Ekaterinburg	Tel. +7 343 310 3977 Fax +7 343 310 3978 eso@sew-eurodrive.ru
	Irkutsk	ZAO SEW-EURODRIVE 5-Armii Str., 31 RUS-664011 Irkutsk	Tel. +7 3952 25 5880 Fax +7 3952 25 5881 iso@sew-eurodrive.ru
	Moskau	ZAO SEW-EURODRIVE RUS-107023 Moskau	Tel. +7 495 9337090 Fax +7 495 9337094 mso@sew-eurodrive.ru
	Novosibirsk	ZAO SEW-EURODRIVE pr. K Marksa, d.30 RUS-630087 Novosibirsk	Tel. +7 383 3350200 Fax +7 383 3462544 nso@sew-eurodrive.ru
	Togliatti	ZAO SEW-EURODRIVE Sportivnaya Str. 4B, office 2 Samarskaya obl. RUS-445057 Togliatti	Tel. +7 8482 710529 Fax +7 8482 810590

Senegal			
Sales	**Dakar**	SENEMECA Mécanique Générale Km 8, Route de Rufisque B.P. 3251, Dakar	Tel. +221 338 494 770 Fax +221 338 494 771 senemeca@sentoo.sn

Serbia			
Sales	**Beograd**	DIPAR d.o.o. Ustanicka 128a PC Košum, IV floor SCG-11000 Beograd	Tel. +381 11 347 3244 / +381 11 288 0393 Fax +381 11 347 1337 office@dipar.co.yu

Singapore			
Assembly **Sales** **Service**	**Singapore**	SEW-EURODRIVE PTE. LTD. No 9, Tuas Drive 2 Jurong Industrial Estate Singapore 638644	Tel. +65 68621701 Fax +65 68612827 http://www.sew-eurodrive.com.sg sewsingapore@sew-eurodrive.com

Slovakia			
Sales	**Bratislava**	SEW-Eurodrive SK s.r.o. Rybničná 40 SK-831 06 Bratislava	Tel. +421 2 33595 202 Fax +421 2 33595 200 sew@sew-eurodrive.sk http://www.sew-eurodrive.sk
	Žilina	SEW-Eurodrive SK s.r.o. Industry Park - PChZ ulica M.R.Štefánika 71 SK-010 01 Žilina	Tel. +421 41 700 2513 Fax +421 41 700 2514 sew@sew-eurodrive.sk
	Banská Bystrica	SEW-Eurodrive SK s.r.o. Rudlovská cesta 85 SK-974 11 Banská Bystrica	Tel. +421 48 414 6564 Fax +421 48 414 6566 sew@sew-eurodrive.sk
	Košice	SEW-Eurodrive SK s.r.o. Slovenská ulica 26 SK-040 01 Košice	Tel. +421 55 671 2245 Fax +421 55 671 2254 sew@sew-eurodrive.sk

Slovenia			
Sales **Service**	**Celje**	Pakman - Pogonska Tehnika d.o.o. UI. XIV. divizije 14 SLO - 3000 Celje	Tel. +386 3 490 83-20 Fax +386 3 490 83-21 pakman@siol.net

South Africa			
Assembly **Sales** **Service**	**Johannesburg**	SEW-EURODRIVE (PROPRIETARY) LIMITED Eurodrive House Cnr. Adcock Ingram and Aerodrome Roads Aeroton Ext. 2 Johannesburg 2013 P.O.Box 90004 Bertsham 2013	Tel. +27 11 248-7000 Fax +27 11 494-3104 http://www.sew.co.za info@sew.co.za
	Cape Town	SEW-EURODRIVE (PROPRIETARY) LIMITED Rainbow Park Cnr. Racecourse & Omuramba Road Montague Gardens Cape Town P.O.Box 36556 Chempet 7442 Cape Town	Tel. +27 21 552-9820 Fax +27 21 552-9830 Telex 576 062 cfoster@sew.co.za
	Durban	SEW-EURODRIVE (PROPRIETARY) LIMITED 2 Monaco Place Pinetown Durban P.O. Box 10433, Ashwood 3605	Tel. +27 31 700-3451 Fax +27 31 700-3847 cdejager@sew.co.za
	Nelspruit	SEW-EURODRIVE (PTY) LTD. 7 Christie Crescent Vintonia P.O.Box 1942 Nelspruit 1200	Tel. +27 13 752-8007 Fax +27 13 752-8008 robermeyer@sew.co.za
Technical Offices	**Port Elizabeth**	SEW-EURODRIVE PTY LTD. 8 Ruan Access Park Old Cape Road Greenbushes 6000 Port Elizabeth	Tel. +27 41 3722246 Fax +27 41 3722247 dtait@sew.co.za
	Richards Bay	SEW-EURODRIVE PTY LTD. 103 Bulion Blvd Richards Bay P.O. Box 458 Richards Bay, 3900	Tel. +27 35 797-3805 Fax +27 35 797-3819 jswart@sew.co.za

Spain			
Assembly **Sales** **Service**	**Bilbao**	SEW-EURODRIVE ESPAÑA, S.L. Parque Tecnológico, Edificio, 302 E-48170 Zamudio (Vizcaya)	Tel. +34 94 43184-70 Fax +34 94 43184-71 http://www.sew-eurodrive.es sew.spain@sew-eurodrive.es
Technical Offices	**Barcelona**	Delegación Barcelona Avenida Francesc Maciá 40-44 Oficina 4.2 E-08208 Sabadell (Barcelona)	Tel. +34 93 7162200 Fax +34 93 7233007
	Lugo	Delegación Noroeste Apartado, 1003 E-27080 Lugo	Tel. +34 639 403348 Fax +34 982 202934
	Madrid	Delegación Madrid Gran Via. 48-2° A-D E-28220 Majadahonda (Madrid)	Tel. +34 91 6342250 Fax +34 91 6340899
	Seville	MEB Pólogono Calonge, C/A Nave 2 - C E-41.077 Sevilla	Tel. +34 954 356 361 Fax +34 954 356 274 mebsa.sevilla@mebsa.com

Spain			
	Valencia	MEB Músico Andreu i Piqueres, 4 E-46.900 Torrente (Valencia)	Tel. +34 961 565 493 Fax +34 961 566 688 mebsa.valencia@mebsa.com

Sri Lanka			
Sales	**Colombo**	SM International (Pte) Ltd 254, Galle Raod Colombo 4, Sri Lanka	Tel. +94 1 2584887 Fax +94 1 2582981

Sweden			
Assembly **Sales** **Service**	**Jönköping**	SEW-EURODRIVE AB Gnejsvägen 6-8 S-55303 Jönköping Box 3100 S-55003 Jönköping	Tel. +46 36 3442 00 Fax +46 36 3442 80 http://www.sew-eurodrive.se jonkoping@sew.se
Sales	**Göteborg**	SEW-EURODRIVE AB Gustaf Werners gata 8 S-42132 Västra Frölunda	Tel. +46 31 70968 80 Fax +46 31 70968 93 goteborg@sew.se
	Stockholm	SEW-EURODRIVE AB Björkholmsvägen 10 S-14146 Huddinge	Tel. +46 8 44986 80 Fax +46 8 44986 93 stockholm@sew.se
	Malmö	SEW-EURODRIVE AB Borrgatan 5 S-21124 Malmö	Tel. +46 40 68064 80 Fax +46 40 68064 93 malmo@sew.se
	Skellefteå	SEW-EURODRIVE AB Trädgårdsgatan 8 S-93131 Skellefteå	Tel. +46 910 7153 80 Fax +46 910 7153 93 skelleftea@sew.se

Switzerland			
Assembly **Sales** **Service**	**Basel**	Alfred Imhof A.G. Jurastrasse 10 CH-4142 Münchenstein bei Basel	Tel. +41 61 417 1717 Fax +41 61 417 1700 http://www.imhof-sew.ch info@imhof-sew.ch
Technical Offices	**Rhaetian Switzerland**	André Gerber Es Perreyres CH-1436 Chamblon	Tel. +41 24 445 3850 Fax +41 24 445 4887
	Bern / Solothurn	Rudolf Bühler Muntersweg 5 CH-2540 Grenchen	Tel. +41 32 652 2339 Fax +41 32 652 2331
	Central Switzerland and Ticino	Beat Lütolf Baumacher 11 CH-6244 Nebikon	Tel. +41 62 756 4780 Fax +41 62 756 4786
	Central Switzerland, Aargau	Armin Pfister Stierenweid CH-4950 Huttwill, BE	Tel. +41 62 962 54 55 Fax +41 62 962 54 56
	Zürich, Ticino	Gian-Michele Muletta Fischerstrasse 61 CH-8132 Egg bei Zürich	Tel. +41 44 994 81 15 Fax +41 44 994 81 16
	Bodensee and East Switzerland	Markus Künzle Eichweg 4 CH-9403 Goldach	Tel. +41 71 845 2808 Fax +41 71 845 2809

Taiwan (R.O.C.)			
Sales	**Nan Tou**	Ting Shou Trading Co., Ltd. No. 55 Kung Yeh N. Road Industrial District Nan Tou 540	Tel. +886 49 255353 Fax +886 49 257878

Taiwan (R.O.C.)			
	Taipei	Ting Shou Trading Co., Ltd. 6F-3, No. 267, Sec. 2 Tung Hwa South Road, Taipei	Tel. +886 2 27383535 Fax +886 2 27368268 Telex 27 245 sewtwn@ms63.hinet.net

Thailand			
Assembly **Sales** **Service**	**Chonburi**	SEW-EURODRIVE (Thailand) Ltd. 700/456, Moo.7, Donhuaroh Muang Chonburi 20000	Tel. +66 38 454281 Fax +66 38 454288 sewthailand@sew-eurodrive.com
Technical Offices	**Bangkok**	SEW-EURODRIVE (Thailand) Ltd. 6th floor, TPS Building 1023, Phattanakarn Road Suanluang Bangkok,10250	Tel. +66 2 7178149 Fax +66 2 7178152 sewthailand@sew-eurodrive.com
	Hadyai	SEW-EURODRIVE (Thailand) Ltd. Hadyai Country Home Condominium 59/101 Soi.17/1 Rachas-Utid Road. Hadyai, Songkhla 90110	Tel. +66 74 359441 Fax +66 74 359442 sewthailand@sew-eurodrive.com
	Khonkaen	SEW-EURODRIVE (Thailand) Ltd. 4th Floor, Kaow-U-HA MOTOR Bldg, 359/2, Mitraphab Road. Muang District Khonkaen 40000	Tel. +66 43 225745 Fax +66 43 324871 sew-thailand@sew-eurodrive.com

Tunisia			
Sales	**Tunis**	T. M.S. Technic Marketing Service Zone Industrielle Mghira 2 Lot No. 39 2082 Fouchana	Tel. +216 71 4340-64 + 71 4320-29 Fax +216 71 4329-76 tms@tms.com.tn

Turkey			
Assembly **Sales** **Service**	**Istanbul**	SEW-EURODRIVE Hareket Sistemleri San. ve Tic. Ltd. Sti. Bagdat Cad. Koruma Cikmazi No. 3 TR-34846 Maltepe ISTANBUL	Tel. +90 216 4419163 / 4419164 Fax +90 216 3055867 http://www.sew-eurodrive.com.tr sew@sew-eurodrive.com.tr
Technical Offices	**Adana**	SEW-EURODRIVE Hareket Sistemleri San. ve Tic. Ltd. Sti. Kizilay Caddesi 8 Sokak No 6 Daðtekin Is Merkezi Kat 4 Daire 2 TR-01170 SEYHAN / ADANA	Tel. +90 322 359 94 15 Fax +90 322 359 94 16
	Ankara	SEW-EURODRIVE Hareket Sistemleri San. ve Tic. Ltd. Sti. Özcelik Is Merkezi, 14. Sok, No. 4/42 TR-06370 Ostim/Ankara	Tel. +90 312 385 33 90 Fax +90 312 385 32 58
	Bursa	SEW-EURODRIVE Hareket Sistemleri San. ve Tic. Ltd. Sti. Üçevler Mah. Bayraktepe Sok. Akay İş Merkezi Kat:3 No: 7/6 TR Nilüfer/Bursa	Tel. +90 224 443 45 60 Fax +90 224 443 45 58
	Izmir	SEW-EURODRIVE Hareket Sistemleri San. ve Tic. Ltd. Sti. 1203/11 Sok. No. 4/613 Hasan Atli Is Merkezi TR-35110 Yenisehir-İzmir	Tel. +90 232 469 62 64 Fax +90 232 433 61 05

Ukraine			
Sales **Service**	**Dnepropetrovsk**	SEW-EURODRIVE Str. Rabochaja 23-B, Office 409 49008 Dnepropetrovsk	Tel. +380 56 370 3211 Fax +380 56 372 2078 http://www.sew-eurodrive.ua sew@sew-eurodrive.ua
Sales	**Kiev**	SEW-EURODRIVE GmbH S. Oleynika str. 21 02068 Kiev	Tel. +380 44 503 95 77 Fax +380 44 503 95 78 kso@sew-eurodrive.ua
	Donetsk	SEW-EURODRIVE GmbH 25th anniversary of RKKA av. 1-B, of. 805 Donetsk 83000	Tel. +380 62 38 80 545 Fax +380 62 38 80 533 dso@sew-eurodrive.ua

Uruguay			
Sales	**Montevideo**	SEW-EURODRIVE Uruguay, S. A. Jose Serrato 3569 Esqina Corumbe CP 12000 Montevideo	Tel. +598 2 21181-89 Fax +598 2 21181-89 sewuy@sew-eurodrive.com.uy

USA			
Production **Assembly** **Sales** **Service** **Corporate Offices**	**Southeast Region**	SEW-EURODRIVE INC. 1295 Old Spartanburg Highway P.O. Box 518 Lyman, S.C. 29365	Tel. +1 864 439-7537 Fax Sales +1 864 439-7830 Fax Manufacturing +1 864 439-9948 Fax Assembly +1 864 439-0566 Fax Confidential/HR +1 864 949-5557 http://www.seweurodrive.com cslyman@seweurodrive.com
Assembly **Sales** **Service**	**Northeast Region**	SEW-EURODRIVE INC. Pureland Ind. Complex 2107 High Hill Road, P.O. Box 481 Bridgeport, New Jersey 08014	Tel. +1 856 467-2277 Fax +1 856 845-3179 csbridgeport@seweurodrive.com
	Midwest Region	SEW-EURODRIVE INC. 2001 West Main Street Troy, Ohio 45373	Tel. +1 937 335-0036 Fax +1 937 440-3799 cstroy@seweurodrive.com
	Southwest Region	SEW-EURODRIVE INC. 3950 Platinum Way Dallas, Texas 75237	Tel. +1 214 330-4824 Fax +1 214 330-4724 csdallas@seweurodrive.com
	Western Region	SEW-EURODRIVE INC. 30599 San Antonio St. Hayward, CA 94544	Tel. +1 510 487-3560 Fax +1 510 487-6433 cshayward@seweurodrive.com
	Additional addresses for service in the USA provided on request!		

Venezuela			
Assembly **Sales** **Service**	**Valencia**	SEW-EURODRIVE Venezuela S.A. Av. Norte Sur No. 3, Galpon 84-319 Zona Industrial Municipal Norte Valencia, Estado Carabobo	Tel. +58 241 832-9804 Fax +58 241 838-6275 http://www.sew-eurodrive.com.ve ventas@sew-eurodrive.com.ve sewfinanzas@cantv.net






How we're driving the world

With people who think fast and develop the future with you.

With a worldwide service network that is always close at hand.

With drives and controls that automatically improve your productivity.

With comprehensive knowledge in virtually every branch of industry today.

With uncompromising quality that reduces the cost and complexity of daily operations.



SEW-EURODRIVE
Driving the world

With a global presence that offers responsive and reliable solutions. Anywhere.

With innovative technology that solves tomorrow's problems today.

With online information and software updates, via the Internet, available around the clock.

SEW-EURODRIVE GmbH & Co KG
P.O. Box 3023 · D-76642 Bruchsal / Germany
Phone +49 7251 75-0 · Fax +49 7251 75-1970
sew@sew-eurodrive.com

→ **www.sew-eurodrive.com**