SEW EURODRIVE

Catalog

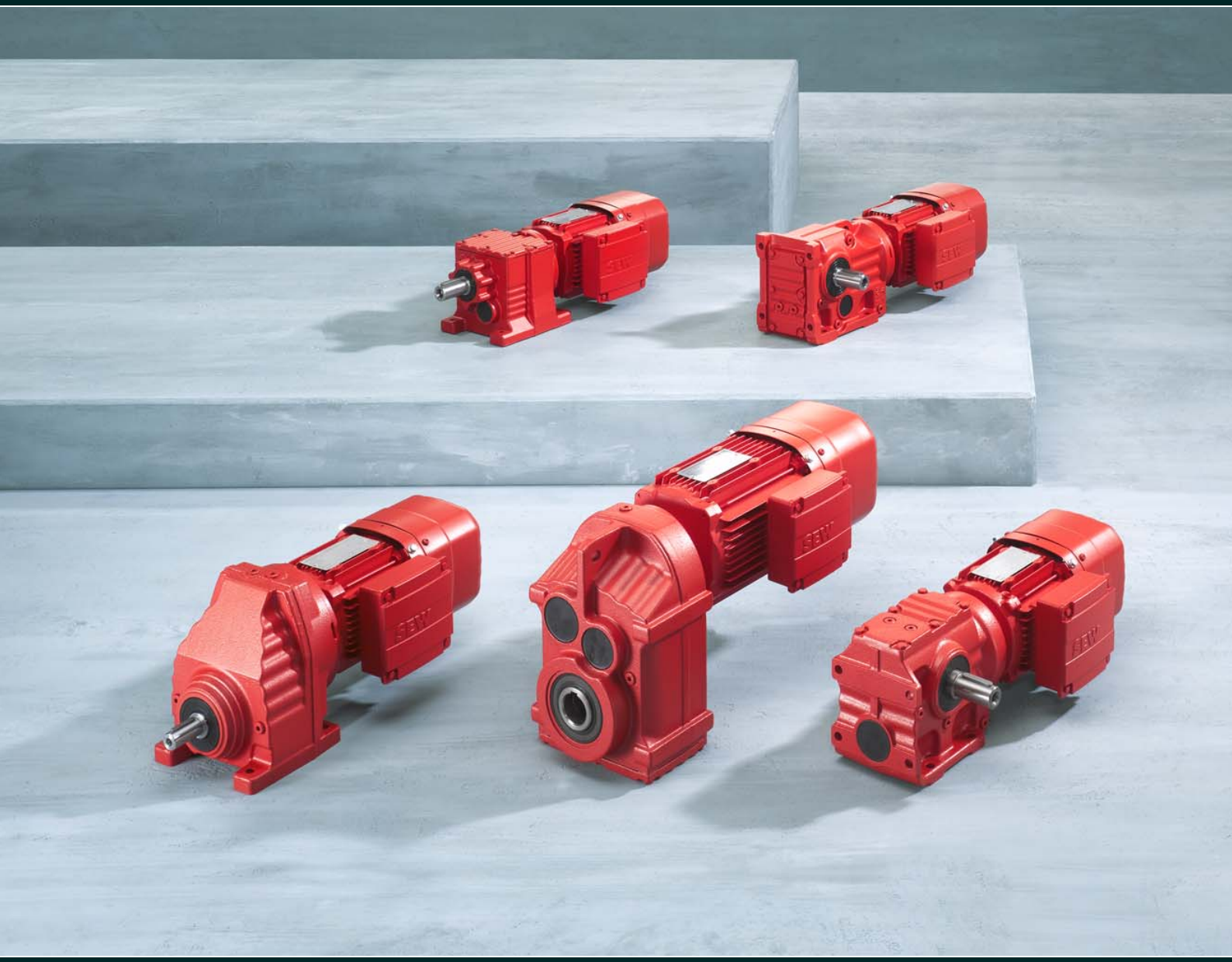

Asynchronous Servo Gearmotors

DRL71 – 225 Servomotors
with R, F, K, S, W Gear Units

Edition 10/2010

16749219 / EN

KKFU 144794 3
42G1

1 Introduction 5
1.1 The SEW-EURODRIVE Group of Companies 5
1.2 Products and systems from SEW-EURODRIVE 6
1.3 Additional documentation 7
1.4 Product names and trademarks 8
1.5 Copyright 8

2 Product Description of Gear Units and Gearmotors 9
2.1 General information 9
2.2 Asynchronous servomotors of the DRL series 10
2.3 Corrosion and surface protection 12
2.4 Extended storage 14
2.5 General product description 16
2.6 Explosion protection according to ATEX 19

3 Overview of Types and Type Designation 22
3.1 Product variants and options of the gear units 22
3.2 Gearmotor variants 25
3.3 Motor variants and options 34
3.4 Nameplate for servo gearmotors 35
3.5 Overview of servo gearmotors 36

4 Project Planning Notes for Servo Gearmotors 37
4.1 Additional documentation 37
4.2 Data for drive and gear unit selection 38
4.3 Project planning procedure 40
4.4 Project planning information 44
4.5 Project planning example 51

5 Gear Unit Mounting Positions 63
5.1 General information on mounting positions 63
5.2 Order information for servo gearmotors/gear units 64
5.3 Order information for servo gearmotors 66
5.4 Key to the mounting position sheets 67
5.5 Mounting positions of helical gearmotors 69
5.6 Mounting positions of parallel shaft helical gearmotors 74
5.7 Mounting positions of helical-bevel gearmotors 77
5.8 Mounting positions of helical-worm gearmotors 82
5.9 Mounting positions of SPIROPLAN® gearmotors 88

6 Design and Operating Notes 91
6.1 Reduced backlash gear units 91
6.2 Assembly/disassembly of gear units with hollow shaft and key 92
6.3 Gear units with hollow shaft 96
6.4 TorqLOC® mounting system for gear units with hollow shaft 97
6.5 Gear unit with flange block shaft 98
6.6 Shouldered hollow shaft option with shrink disk 99
6.7 Fastening the gear unit 106
6.8 Torque arms 106
6.9 Flange contours of RF.. and R..F gear units 107
6.10 Flange contours of FF.., KF.., SF.. and WF.. gear units 108
6.11 Flange contours of FAF.., KAF.., SAF.. and WAF.. gear units 110

6.12 Fixed covers ... 111
6.13 Condition monitoring: Oil aging and vibration sensor ... 113
6.14 Lubricants and fill quantities ... 116

7 Important Information on Selection Tables and Dimension Sheets ... 124
7.1 Information on the selection tables ... 124
7.2 Information on the dimension sheets ... 126
7.3 Gearmotor dimensions ... 129

8 Helical Gearmotors – R Gear Units ... 131
8.1 Types ... 131
8.2 RX75 - 107/DRL – Selection tables, dimension sheets ... 132
8.3 R07 - 157/DRL – Selection tables, dimension sheets ... 156

9 Parallel Shaft Helical Gearmotors – F Gear Units ... 243
9.1 Types ... 243
9.2 F27 - 157/DRL – Selection tables, dimension sheets ... 245

10 Helical-Bevel Gearmotors – K Gear Units ... 342
10.1 Types ... 342
10.2 K37 - 187/DRL – Selection tables, dimension sheets ... 344

11 Helical-Worm Gearmotors – S Gear Units ... 434
11.1 Types ... 434
11.2 S37 - 67/DRL – Selection tables, dimension sheets ... 436

12 SPIROPLAN® Gearmotors – W Gear Units ... 463
12.1 Types ... 463
12.2 W37 - 47/DRL – Selection tables, dimension sheets ... 464

13 Main Technical Data of Asynchronous DRL Servomotors ... 479

14 Abbreviation Key and Index ... 484
14.1 Abbreviation key ... 484
14.2 Index ... 485

15 Address Directory ... 488

1 Introduction

1.1 The SEW-EURODRIVE Group of Companies

Global presence

Driving the world with innovative drive solutions for all branches and for every application. Products and systems from SEW-EURODRIVE are used in a multitude of applications worldwide. Be it in the automotive, building materials, food and beverage or metal-processing industry the decision to use drive technology "made by SEW-EURODRIVE" stands for reliability for both functionality and investment.

We are represented in the most important branches of industry all over the world: with 13 manufacturing plants, 67 assembly plants in 44 countries and our comprehensive range of services, which we consider an integrative service that continues our commitment to outstanding quality.

Always the right drive

The SEW-EURODRIVE modular concept offers millions of combinations. This wide selection enables you to choose the correct drive for all applications, each based on the required speed and torque range, space available and the ambient conditions. Gear units and gearmotors offering a unique and finely tuned performance range and the best economic prerequisites to face your drive challenges.

The gearmotors are powered by MOVITRAC® frequency inverters, MOVIDRIVE® inverters and MOVIAXIS® multi-axis servo inverters, a combination that blends perfectly with the existing SEW-EURODRIVE program. As in the case for mechanical systems, the development, production and assembly is also carried out completely by SEW-EURODRIVE. In combination with our drive electronics, these drives provide the utmost in flexibility.

Products of the servo drive system, such as low backlash servo gear units, compact servomotors or MOVIAXIS® multi-axis servo inverters provide precision and dynamics. From single-axis or multi-axis applications all the way to synchronized process sequences, servo drive systems by SEW-EURODRIVE offer a flexible and customized implementation of your application.

For economical, decentralized installations, SEW-EURODRIVE offers components from its decentralized drive system, such as MOVIMOT®, the gearmotor with integrated frequency inverter or MOVI-SWITCH®, the gearmotor with integrated switching and protection function. SEW-EURODRIVE hybrid cables have been designed specifically to ensure cost-effective solutions, independent of the philosophy behind or the size of the system. The latest developments from SEW-EURODRIVE: MOVITRANS® system components for contactless energy transfer, MOVIPRO®, the decentralized drive control and MOVIFIT®, the new decentralized intelligence.

Power, quality and sturdy design combined in one standard product: With high torque levels, industrial gear units from SEW-EURODRIVE realize major movements. The modular concept will once again provide optimum adaptation of industrial gear units to meet a wide range of different applications.

Your ideal partner

Its global presence, extensive product range and broad spectrum of services make SEW-EURODRIVE the ideal partner for the machinery and plant construction industry when it comes to providing drive systems for demanding applications in all branches of industries and applications.

1.2 Products and systems from SEW-EURODRIVE

The products and systems from SEW-EURODRIVE are divided into the following 4 product groups:

1. Gearmotors and frequency inverters
2. Servo drive systems
3. Decentralized drive systems
4. Industrial gear units

Products and systems used in several group applications are listed in a separate group "Products and systems covering several product groups". Consult the following tables to locate the products and systems included in the respective product group:

1. Gearmotors and frequency inverters		
Gear units/gearmotors	**Motors**	**Frequency inverters**
• Helical gear units/helical gearmotors • Parallel-shaft helical gear units/parallel-shaft helical gearmotors • Helical-bevel gear units/helical-bevel gear-motors • Helical-worm gear units/helical-worm gear-motors • SPIROPLAN® right-angle gearmotors • EMS drives • Geared torque motors • Pole-changing gearmotors • Variable speed gear units/variable speed gear-motors • Aseptic gearmotors • Gear units/gearmotors to ATEX standard • Variable speed gear units/variable speed gear-motors to ATEX standard	• Asynchronous AC motors/AC brakemotors • Pole-changing AC motors/AC brakemotors • Energy-efficient motors • Explosion-proof AC motors/AC brakemotors • Torque motors • Single-phase motors/single-phase brakemotors • Asynchronous linear motors	• MOVITRAC® frequency inverters • MOVIDRIVE® inverters • Control, technology and communication options for inverters

2. Servo drive systems		
Servo gear units/servo gear-motors	**Servomotors**	**Servo drive inverters/servo inverters**
• Low backlash planetary servo gear units/planetary gear-motors • Low backlash helical-bevel gear units/helical-bevel gear-motors • R, F, K, S, W gear units/gear-motors • Explosion-proof servo gear units/servo gearmotors	• Asynchronous servo-motors/servo brakemotors • Synchronous servo-motors/servo brakemotors • Explosion-proof servo-motors/servo brakemotors • Synchronous linear motors	• MOVIDRIVE® servo inverters • MOVIAXIS® multi-axis servo inverters • Control, technology and communication options for servo drive inverters and servo inverters

3. Decentralized drive systems		
Decentralized drives	**Communication and installation**	**Contactless energy transfer**
• MOVIMOT® gearmotors with integrated frequency inverter • MOVIMOT® motors/brake-motors with integrated frequency inverter • MOVI-SWITCH® gearmotors with integrated switching and protection function • MOVI-SWITCH® motors/brakemotors with integrated switching and protection function • Explosion-proof MOVIMOT® and MOVI-SWITCH® gear-motors	• Fieldbus interfaces • Field distributors for decentralized installation • MOVIFIT® product range – MOVIFIT® MC for controlling MOVIMOT® drives – MOVIFIT® SC with integrated electronic motor switch – MOVIFIT® FC with integrated frequency inverter	• MOVITRANS® system – Stationary components for energy supply – Mobile components for energy consumption – Line cables and installa-tion material

4. Industrial gear units
• Helical gear units • Bevel-helical gear units • Planetary gear units

Products and systems covering several product groups
• Operator terminals • MOVI-PLC® drive-based control system

In addition to products and systems, SEW-EURODRIVE offers a comprehensive range of services. These include:

- Technical consulting
- Application software
- Seminars and training
- Extensive technical documentation
- International customer service

Visit our homepage at

→ **www.sew-eurodrive.com**

The website provides comprehensive information and services.

1.3 Additional documentation

Content of this publication

This "Asynchronous Servo Gearmotors" catalog/price catalog provides a detailed description of the following product groups of SEW-EURODRIVE:

- The combination of DRL asynchronous servomotors mounted directly to
  - R, F, K, S, W gear units

The descriptions include:

- Product descriptions
- Overview of types
- Project planning information
- Visual representation of mounting positions
- Explanation on the order information
- Combination overviews and technical data
- Dimension sheets

For details on motor options, refer to the "AC Motors" catalog/price catalog.

For details on gear unit options and adapters, refer to the "Servo Gear Units" and "Gear Units" catalog/price catalog.

Additional documentation

The following documents are available from SEW-EURODRIVE in addition to this "Asynchronous Servo Gearmotors" catalog:

- "AC Motors" price catalogs/catalogs
- "Servo Gear Units" price catalogs/catalogs
- "Gear Units" price catalogs/catalogs
- "AC Motors Inverter Assignments and Characteristic Curves" manual

These price catalogs and catalogs offer the following information:

- Product descriptions
- Technical data and inverter assignments
- Important information about tables and dimension sheets
- Description of the different types
- Selection tables
- Dimension sheets
- Technical data
- Notes on adapter mounting

1.4 Product names and trademarks

The brands and product names in this catalog are trademarks or registered trademarks of the titleholders.

1.5 Copyright

© 2010 - SEW-EURODRIVE. All rights reserved.

Copyright law prohibits the unauthorized duplication, modification, distribution, and use of this document, in whole or in part.

2 Product Description of Gear Units and Gearmotors

2.1 General information

Coating

Asynchronous servo gearmotors from SEW-EURODRIVE are painted as follows:

Type	Coating according to DIN 1843
Asynchronous gearmotor with R, F, K, S, W gear unit	RAL 7031 blue/gray
	RAL 9005 black

Special paints are available on request.

Weight specifications

Please note that all weights shown in the catalogs exclude the oil fill for the gear units and gearmotors. The weights vary according to gear unit type and gear unit size. The lubricant fill depends on the mounting position which means no universally applicable information can be given. For approximate lubricant fill volumes depending on the mounting position, refer to the gear unit catalog. For the exact weight, refer to the order confirmation.

Surface and corrosion protection

If required, all motors from SEW-EURODRIVE can be supplied with special surface protection for applications in extremely humid and chemically aggressive environments.

Air admission and accessibility

The motors/brakemotors must be mounted on the driven machine in such a way that both axially and radially there is enough space left for unimpeded air admission and for maintenance of the brake. Please also refer to the notes in the motor dimension sheets.

Brakemotors

On request, the motors can be supplied with an integrated mechanical brake. The SEW-EURODRIVE brake is an electromagnetic disk brake with a DC coil that releases electrically and brakes using spring force. Due to its operating principle, the brake is applied if the power fails. It meets the basic safety requirements. The brake can also be released mechanically if equipped with manual brake release. For this purpose, the brake is supplied with either a hand lever with automatic reset or an adjustable setscrew. The brake is controlled by a brake controller that is either installed in the motor wiring space or the control cabinet.

A characteristic feature of the brakes is their extremely short design. The brake bearing end shield is a part of both the motor and the brake. The integrated construction of the SEW-EURODRIVE brakemotor permits particularly compact and sturdy solutions.

Inverter operation

DRS/DRE/DRP motors can be combined with the proven SEW-EURODRIVE frequency inverter series MOVIDRIVE®, MOVITRAC®, MOVIFIT® and MOVIMOT®, and as of now also with MOVIPRO®.

The asynchronous DRL servomotors are operated with inverters of the MOVIDRIVE® series and multi-axis servo inverters of the MOVIAXIS® series.

International markets

On request, SEW-EURODRIVE supplies UL registered motors or CSA certified motors with connection conditions according to CSA and NEMA standard.

For the Japanese market, SEW-EURODRIVE offers motors conforming to JIS standard. Contact your sales representative to assist you in such cases.

2.2 Asynchronous servomotors of the DRL series

Asynchronous servomotors are the link between the classical asynchronous AC motors for supply system and inverter operation and the highly dynamic synchronous servomotors with permanent magnets.

DRL motors

Asynchronous servomotors of the DRL series are a drive package made up from the many options of the modular DR motor system.

In its basic variant, the drive package always contains

- Encoder, sine signals and electronic nameplate
- Thermal motor protection
- Dynamics package
- Various connection options
- Winding optimized with respect to speed

Depending on the application and requirements, the following elements can be added:

- Forced cooling fan
- Connection via plug connectors instead of terminals
- Temperature detection
- And many more

Alternatives can be selected instead of the elements of the basic variant, e.g. an absolute encoder instead of the sine encoder.

Dynamics

AC motors operated on the supply system usually have an overload capacity of 160% to 180% of the rated torque during startup.

If the motor is operated on an inverter of the same power, the inverter usually provides 150% current, and thus roughly 150% torque, for 60 seconds during startup. If a larger inverter is selected, the inverter can provide a higher current and theoretically a greater torque as well. In this case, the mechanical resistance of the motor against the overload, which might reach or exceed the permitted limit values, must be checked.

As a rule, the synchronous servomotors and the corresponding inverters are designed for a high short-time overload. 400% of the rated torque can generally be reached and are permitted.

The mechanical design of asynchronous servomotors of the DRL series is of such a high quality that dynamic overload values can be reached which exceed the classical values of an asynchronous motor operated on a supply system or inverter and almost match the values of a synchronous servomotor.

SEW-EURODRIVE offers the DRL motors in two dynamics packages:

Package	Overload capacity to nominal torque
Dynamics 1 (D1)	190% – 220%
Dynamics 2 (D2)	300% – 350%

The nameplate of the motor specifies the respective package.

Speeds

SEW-EURODRIVE offers the DRL servomotors with 4 rated speeds:

- 1200 rpm
- 1700 rpm
- 2100 rpm
- 3000 rpm

In inverter operation, field weakening begins at the rated speed.

Inverter combinations

The DRL motors are optimally adapted to operation on MOVIDRIVE® inverters and MOVIAXIS® multi-axis servo inverters.

Usually, the selection diagrams offer several inverter sizes. The size of the inverter which fits perfectly is based on the application data and project planning.

Sample selection diagram for the MOVIDRIVE® inverter (dynamic and thermal limit characteristic curve):

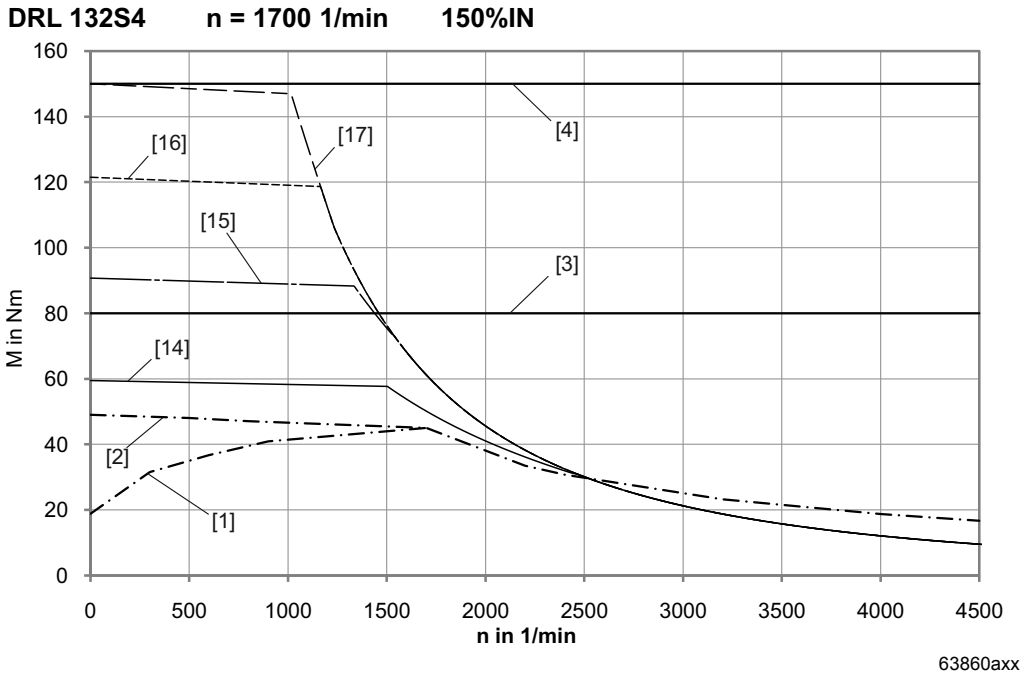

[1]	S1 characteristic curve	[14]	7.5 kW inverter output
[2]	S1 characteristic curve with forced cooling fan	[15]	11 kW inverter output
[3]	Maximum limit torque of dynamics package 1	[16]	15 kW inverter output
[4]	Maximum limit torque of dynamics package 2	[17]	22 kW inverter output

Startup

Startup of DRL motors on the MOVIDRIVE® inverter is particularly user-friendly with encoders that have an electronic nameplate.

The nameplate of the following encoders contains all drive-relevant data that is uploaded from the encoder to the inverter before startup.

- Incremental encoders ES7S, EG7S
- Absolute encoders AS7W, AG7W.

2.3 Corrosion and surface protection

General

SEW-EURODRIVE offers various optional protective measures for operation of motors and gearmotors under special ambient conditions.

The protective measures comprise two groups:

- Corrosion protection KS for motors
- Surface protection OS for motors and gear units

For motors, optimum protection is offered by a combination of KS corrosion protection and OS surface protection.

Special optional protective measures for the output shafts are also available.

KS corrosion protection

KS corrosion protection for motors comprises the following measures:

- All retaining screws that are loosened during operation are made of stainless steel.
- The nameplates are made of stainless steel.
- A top coating is applied to various motor parts.
- The flange contact surfaces and shaft ends are treated with a temporary anti-corrosion agent.
- Additional measures for brakemotors.

A sticker labeled "KORROSIONSSCHUTZ" (corrosion protection) indicates that special treatment has been applied.

	INFORMATION
	Motors with forced cooling fan are not available with KS corrosion protection.

OS surface protection

In addition to standard surface protection, motors and gear units are available with surface protection OS1 to OS4. The special procedure "Z" is also available. Special procedure "Z" means that large surface recesses are sprayed with a rubber filling prior to painting.

Surface protection[1)]		Ambient conditions	Sample applications
Standard		Suitable for machines and systems in buildings and rooms indoors with neutral atmospheres. According to corrosivity category [2)]: • C1 (negligible)	• Machines and systems in the automobile industry • Transport systems in logistics • Conveyor belts at airports
OS1		Suited for environments prone to condensation and atmospheres with low humidity or contamination, such as applications outdoors under roof or with protection. According to corrosivity category [2)]: • C2 (low)	• Systems in saw mills • Hall gates • Agitators and mixers
OS2		Suitable for environments with high humidity or mean atmospheric contamination, such as applications outdoors subject to direct weathering. According to corrosivity category [2)]: • C3 (moderate)	• Applications in amusement parks • Funiculars and chair-lifts • Applications in gravel plants • Systems in nuclear power plants
OS3		Suited for environments with high humidity and occasionally severe atmospheric and chemical contamination. Occasionally acidic or caustic wet cleaning. Also for applications in coastal areas with moderate salt load. According to corrosivity category [2)]: • C4 (high)	• Sewage treatment plants • Port cranes • Mining applications
OS4	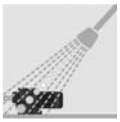	Suitable for environments with permanent humidity or severe atmospheric or chemical contamination. Regular acidic and caustic wet cleaning also with chemical cleaning agents. According to corrosivity category [2)]: • C5-1 (very high)	• Drives in malting plants • Wet areas in the beverage industry • Conveyor belts in the food industry

1) Motors/brakemotors in degree of protection IP56 or IP66 are only available with OS2, OS3, or OS4 surface protection

2) To DIN EN ISO 12944-2 classification of ambient conditions

Special protection measures

Gearmotor output shafts can be treated with special optional protective measures for operation subject to severe environmental pollution or in particularly demanding applications.

Gear unit type	Measure	Protection principle	Suitable for
R, F, K, S, W	**FKM oil seal (Viton)**	High quality material	Drives subject to chemical contamination
R, F, K, S, W	**Surface coating of the contact surface of the oil seal**	Protective layer	Severe environmental impact and in conjunction with FKM oil seal (Viton)
R, F, K, S, W	**Stainless steel output shaft**	Surface protection with high-quality material	Particularly demanding applications in terms of surface protection

NOCO® fluid

As standard, SEW-EURODRIVE supplies NOCO® fluid corrosion protection and lubricant with every hollow shaft gear unit. Use NOCO® fluid when installing hollow shaft gear units. Using this fluid can help prevent contact corrosion and makes it easier to disassemble the drive at a later time.

NOCO® fluid is also suitable for protecting machined metal surfaces that do not have corrosion protection, such as parts of shaft ends or flanges. You can order larger quantities of NOCO® fluid from SEW-EURODRIVE.

NOCO® fluid is a food grade substance according to USDA-H1. You can tell that NOCO® fluid is a food grade oil by the USDA-H1 identification label on its packaging.

2.4 Extended storage

Type

You can also order gear units prepared for "extended storage." SEW-EURODRIVE recommends the "extended storage" type for storage periods longer than 9 months.

In this case, a VCI corrosion inhibitor (**v**olatile **c**orrosion **i**nhibitor) is added to the lubricant in these gear units. Please note that this VCI anti-corrosion agent is only effective in a temperature range of -25 °C to +50 °C. The flange contact surfaces and shaft ends are also treated with anti-corrosion agent. If not specified otherwise in your order, the gear unit will be supplied with OS1 surface protection. Instead of OS1, you can order OS2, OS3 or OS4.

Surface protection	Suitable for
OS1	Low environmental impact
OS2	Medium environmental impact
OS3	High environmental impact
OS4	Very high environmental impact

INFORMATION

The gear units must remain tightly sealed until taken into operation to prevent the VCI corrosion protection agent from evaporating.

At the factory, the gear units are filled with oil to the appropriate level depending on the specified mounting position (M1 to M6). Check the oil level before you start operating the gear unit for the first time.

Storage conditions

Observe the storage conditions specified in the following table for extended storage:

Climate zone	Packaging[1)]	Storage location[2)]	Storage duration
Temperate (Europe, USA, Canada, China and Russia, excluding tropical zones)	Packed in containers, with desiccant and moisture indicator sealed in the plastic wrap.	Under roof, protected against rain and snow, no shock loads.	Up to 3 years with regular checks of the packaging and moisture indicator (relative humidity < 50%).
	Open	Under roof, enclosed at constant temperature and atmospheric humidity (5 °C < ϑ < 60°C, < 50% relative humidity). No sudden temperature fluctuations. Controlled ventilation with filter (free from dust and dirt). Protected against aggressive vapors and shocks.	2 years or more with regular inspections. Check for cleanliness and mechanical damage during inspection. Check corrosion protection.
Tropical (Asia, Africa, Central and South America, Australia, New Zealand excluding temperate zones)	Packed in containers, with desiccant and moisture indicator sealed in the plastic wrap. Protected against insect damage and mildew by chemical treatment.	With roof, protected against rain and shocks.	Up to 3 years with regular checks of the packaging and moisture indicator (relative humidity < 50%).
	Open	Under roof, enclosed at constant temperature and atmospheric humidity (5 °C < ϑ < 50°C, < 50% relative humidity). No sudden temperature fluctuations. Controlled ventilation with filter (free from dust and dirt). Protected against aggressive vapors and shocks. Protected against insect damage.	2 years or more with regular inspections. Check for cleanliness and mechanical damage during inspection. Check corrosion protection.

1) Packaging must be carried out by an experienced company using the packaging materials that have been explicitly specified for the particular application.

2) SEW-EURODRIVE recommends to store the gear units according to the mounting position.

2.5 General product description

Ambient temperature

Gear units and gearmotors from SEW-EURODRIVE can be operated in a wide ambient temperature range. The following standard temperature ranges are permitted for filling the gear units according to the lubricant table:

Gear unit	Filled with	Permitted standard temperature range
Helical, parallel shaft helical and helical-bevel gear units	CLP(CC) VG220	-10 °C to +40 °C
Helical-worm gear units	CLP(CC) VG680	0 °C to +40 °C
SPIROPLAN® gear units	CLP(SEW-PG) VG460	-10 °C to +40 °C

The rated data of the gear units and gearmotors specified in the catalog/price catalog refer to an ambient temperature of +25 °C.

Gear units and gearmotors from SEW-EURODRIVE can be operated outside the standard temperature range if project planning is adapted to ambient temperatures from as low as up to -40 °C in the intensive cooling range until up to +60 °C. Project planning must take special operating conditions into account and adapt the drive to the ambient conditions by selecting suitable lubricants and seals. This kind of project planning is generally recommended for increased ambient temperatures as of size 97 and for helical-worm gear units with small gear ratios. SEW-EURODRIVE will gladly perform this project planning for you.

If the drive is to be operated on a frequency inverter, you must also consider the project planning notes of the inverter and take into account the thermal effects of inverter operation.

Installation altitude

Due to the low air density at high installation altitudes, heat dissipation on the surface of motors and gear units decreases. The rated data listed in the catalog/price catalog applies to an installation altitude of maximum 1000 m above sea level. Installation altitudes of more than 100 m asl must be taken into account for project planning of gear units and gearmotors.

Power and torque

The power and torque ratings listed in the catalogs refer to mounting position M1 and similar mounting positions in which the input stage is not completely submerged in oil. In addition, the gearmotors are assumed to be standard versions with standard lubrication and under normal ambient conditions.

Please note that the motor power shown in the selection tables for gearmotors is subject to selection. However, the output torque and the desired output speed are essential for the application and need to be checked.

Speeds

The quoted output speeds of the gearmotors are recommended values. You can calculate the rated output speed based on the rated motor speed and the gear unit ratio. Please note that the actual output speed depends on the motor load and the supply system conditions.

Noise

The noise levels of all SEW-EURODRIVE gear units, motors and gearmotors are well within the maximum permitted noise levels set forth in the VDI guideline 2159 for gear units and IEC/EN 60034 for motors.

Weights

Please note that all weights shown in the catalogs exclude the oil fill for the gear units and gearmotors. The weights vary according to gear unit type and gear unit size. The lubricant fill depends on the mounting position which means no universally applicable information can be given. Please refer to "Lubricants" in the "Design and Operating Notes" section for recommended lubricant fill quantities depending on the mounting position. For the exact weight, refer to the order confirmation.

Multi-stage gearmotors

You can achieve particularly low output speeds by using multi-stage gear units or multi-stage gearmotors. Such a setup requires a helical gear unit or gearmotor on the input end as a second gear unit.

It may be necessary to limit the motor power to match the maximum permitted output torque of the gear unit.

Reduced backlash design

Helical, parallel shaft helical and helical-bevel gear units with reduced backlash are available from gear unit size 37. The circumferential backlash of these gear units is considerably less than that of the standard versions so that positioning tasks can be solved with great precision. The circumferential backlash is specified in angular minutes ['] in the technical data. The circumferential backlash for the output shaft is specified without load (max. 1% of the rated output torque); the gear unit input end is blocked. For further information, refer to section "Reduced backlash gear units" on page 91.

RM gear units, RM gearmotors

RM gear units and RM gearmotors are a special type of helical gear units with an extended output bearing hub. They were designed especially for agitating applications and allow for high overhung and axial loads and bending moments. The other data are the same as for standard helical gear units and standard helical gearmotors.

SPIROPLAN® right-angle gear units/gearmotors

SPIROPLAN® right-angle gearmotors are robust, single- and two-stage right-angle gearmotors with SPIROPLAN® gearing. The difference to the helical-worm gear units is the material combination of the steel-on-steel gearing, the special tooth meshing relationships and the aluminum housing. As a result, SPIROPLAN® right-angle gearmotors are wear-free, very quiet and light.

The particularly short design and the aluminum housing make for very compact and lightweight drive solutions.

The wear-free gearing and the life-long lubrication facilitate long periods of maintenance-free operation. The fact that the oil filling is independent of the mounting position, except for SPIROPLAN® W..37 and W..47 in mounting position M4, makes any position possible for SPIROPLAN® right-angle gearmotors without having to alter the oil quantity. Identical hole spacing in the foot and face, as well as the equal shaft height to both, provides you with diverse mounting options.

Two different flange diameters are available. On request, SPIROPLAN® right-angle gearmotors can be equipped with a torque arm.

Input components

The following components on the input side are available for the gear units from SEW-EURODRIVE:

- **Input covers with input shaft extension, optionally with**
  - Centering shoulder
  - Backstop
  - Motor mounting platform
- **Adapter**
  - For mounting IEC or NEMA motors with the option of a backstop
  - For mounting servomotors with a square flange
  - With torque limiting safety couplings and speed or slip monitor
  - With hydraulic centrifugal coupling, also with disk brake or backstop

Swing base

A swing base is a drive unit consisting of helical-bevel gear unit, hydraulic centrifugal coupling and electric motor. The complete arrangement is mounted to a rigid mounting rail.

Motor swings are available with the following optional accessories:

- Torque arm
- Mechanical thermal monitoring unit
- Contactless thermal monitoring unit

2.6 Explosion protection according to ATEX

The following chapter provides a short explanation of the various zones, categories, and protection types. You find more detailed information on this topic in the "Explosion-Proof AC Motors" and "Explosion-Proof Drives" catalogs.

Explosion-proof DRL motors are currently being prepared.

2.6.1 Regulations

Zones in a potentially explosive atmospheres

According to EU Directive 99/92/EC, the operator of the equipment must divide potentially explosive atmospheres into zones.

Zone		Probability of a potentially explosive atmosphere occuring	SEW-relevant
Gas	Dust		
0[1)]	20[1)]	Continuous, long-term, frequent, predominant in time	
1	21	Occasional, in normal operation	x
2	22	Seldom, short-term	x

1) Not relevant for electric drives

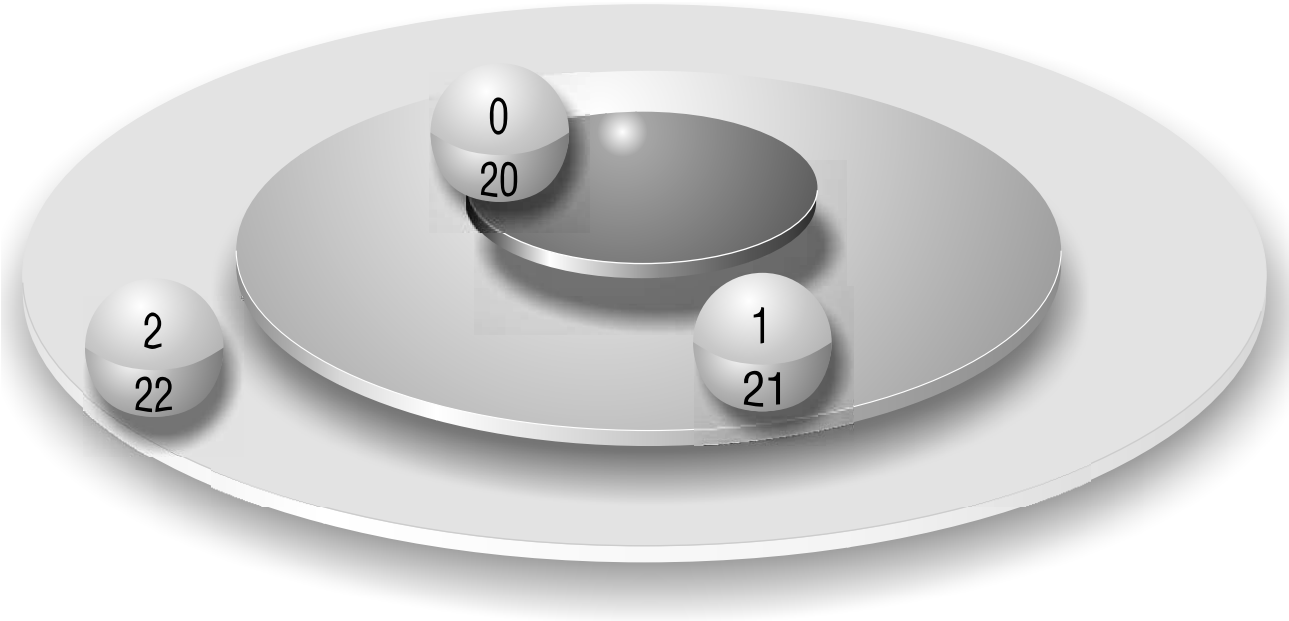

03535AXX

Dividing explosion-proof equipment into categories

According to EU Directive 94/9/EC, explosion-proof equipment is divided into categories. The category specifies the protection level of the equipment, describes the operating conditions and makes it easier to assign permitted equipment to a zone. In addition to the degree of protection (normal, high, very high), the directive distinguishes between explosive G (gas) and D (dust) atmospheres.

Category	Protection level	Guaranteed protection	Operating conditions	SEW-relevant
M1	Very high	With two independent preventive measures; two faults are allowed to occur independently of one another	Equipment continues to operate in the presence of a potentially explosive atmosphere	
1	Very high	With two independent preventive measures; two faults are allowed to occur independently of one another	Equipment continues to operate in the presence of a potentially explosive atmosphere	
M2	High	Suitable for normal operation and harsh operating conditions	Equipment is switched off in the presence of a potentially explosive atmosphere	
2	High	One preventive measure; suitable for normal operation with the likeliness of frequent malfunctions, one fault is allowed to occur	Equipment continues to operate in the presence of a potentially explosive atmosphere	x
3	Standard	Suitable for standard operation	Equipment continues to operate in the presence of a potentially explosive atmosphere	x

Overview of explosion-proof equipment

The following table describes the division of explosion-proof equipment into equipment groups I and II:

	Equipment group I Mines, firedamp		Equipment group II Other areas with potentially explosive atmospheres due to gas or dust					
Category	M1	M2	1		2		3	
Ex atmosphere[1)]			G	D	G	D	G	D
Zone			0	20	1	21	2	22
Protection type **Motor** **Gear unit[2)]**					d, e, i, p ... (c, k ...)	t or tD (c, k ...)	 (c, k ...)	t or tD (c, k ...)

1) G = Gas atmosphere, D = Dust atmosphere

2) Standardization of protection types for gear units has not yet been completed.

INFORMATION

All gear units and motors offered by SEW-EURODRIVE for potentially explosive atmospheres are equipment group II units. SEW-EURODRIVE does not supply any drives for use in equipment group I (mining).

Potentially explosive atmospheres

Potentially explosive atmospheres are divided into gas and dust. The atmosphere is indicated by the letters G (Gas) and D (Dust) in the designation of the variant.

Protection types

Unit type	Protection type	Standard	Description	SEW-relevant
Motors (electrical units)	d	EN 60079-0 and -1	Flameproof enclosure	x
	e	EN 60079-0 and -7	Increased safety	x
	i	EN 60079-0 and -11	Intrinsic safety	
	n/nA	EN 60079-0 and -15	Non-sparking	x
	m	EN 60079-0 and -18	Casting compound enclosure	
	p	EN 60079-0 and -2	Excess pressure enclosure	
	t	EN 60079-0 and -31	Dust explosion protection	x
Gear units (mechanical units)	b	EN 13463-1 and -6	Protection by monitoring sources of ignition	
	c	EN 13463-1 and -5	Constructional safety	x
	d	EN 13463-1 and -3	Flameproof enclosure	
	fr	EN 13463-1 and -2	Restricted breathing	
	k	EN 13463-1 and -8	Liquid immersion	x

Validity of the Declaration of Conformity

The declaration of conformity is a statement that a device complies with Directive 94/9/EC. The validity of this statement of conformance is bindingly linked to compliance with the operating instructions supplied with the explosion-proof unit (in particular maintenance and servicing measures and permitted ambient conditions, e.g. ambient temperature, unit heating from other customer's equipment). This is necessary for adequate risk minimization. The validity of the declaration of conformity becomes void if the specifications for designated use made in the operating isntructions no longer apply.

The validity of the statement of conformance exclusively refers to the gear unit and motor types listed in the catalog or in the order confirmation. For customer-specific types, it is essential that you contact SEW-EURODRIVE.

2.6.2 Categories and protection types

Category 1 – Particularly high safety

SEW-EURODRIVE does not provide category 1 gear units and electric motors. Consequently, drives from SEW-EURODRIVE cannot be used in zones 0 and 20 where potentially explosive atmospheres are to be expected on a continuous and long-term basis.

Category 2 – High safety

Units in category 2 are safe in terms of the expected unit malfunctions and are predominantly intended for use in zones 1 and 21. Of course, these units can also be used in zones 2 and 22.

Category 3 – Normal safety

Category 3 equipment is only intended for zones 2 and 22 where there is a low probability of potentially explosive atmospheres occurring.

3 Overview of Types and Type Designation

3.1 Product variants and options of the gear units

Below an overview of type designations for R, F, K, S, and W gear units and their options.

Helical gear units

Designation	
RX..	Single-stage foot-mounted type
RXF..	Single-stage B5 flange-mounted type
R..	Foot-mounted
R..F	Foot and B5-flange mounted type
RF..	B5 flange-mounted
RZ..	B14 flange-mounted
RM..	B5 flange-mounted type with extended bearing hub

Parallel shaft helical gear units

Designation	
F..	Foot-mounted
FA..B	Foot-mounted, hollow shaft
FH..B	Foot-mounted, hollow shaft with shrink disk
FV..B	Foot-mounted, hollow shaft with splined hollow shaft to DIN 5480
FF..	B5 flange-mounted
FAF..	B5 flange-mounted type, hollow shaft
FHF..	B5 flange-mounted type and hollow shaft with shrink disk
FVF..	B5 flange-mounted type and hollow shaft with splined hollow shaft to DIN 5480
FA..	Hollow shaft
FH..	Hollow shaft with shrink disk
FT..	Hollow shaft with TorqLOC® hollow shaft mounting system
FV..	Hollow shaft with splining to DIN 5480
FAZ..	B14 flange-mounted type, hollow shaft
FHZ..	B14 flange-mounted type and hollow shaft with shrink disk
FVZ..	B14 flange-mounted type and hollow shaft with splined hollow shaft to DIN 5480

Helical-bevel gear units

Designation	
K..	Foot-mounted
KA..B	Foot-mounted, hollow shaft
KH..B	Foot-mounted, hollow shaft with shrink disk
KV..B	Foot-mounted, hollow shaft with splined hollow shaft to DIN 5480
KF..	B5 flange-mounted
KAF..	B5 flange-mounted type and hollow shaft
KHF..	B5 flange-mounted type and hollow shaft with shrink disk
KVF..	B5 flange-mounted type and hollow shaft with splined hollow shaft to DIN 5480
KA..	Hollow shaft
KH..	Hollow shaft with shrink disk
KT..	Hollow shaft with TorqLOC® hollow shaft mounting system
KV..	Hollow shaft with splining to DIN 5480
KAZ..	B14 flange-mounted type and hollow shaft
KHZ..	B14 flange-mounted type and hollow shaft with shrink disk
KVZ..	B14 flange-mounted type and hollow shaft with splined hollow shaft to DIN 5480

Helical-worm gear units

Designation	
S..	Foot-mounted
SF..	B5 flange-mounted
SAF..	B5 flange-mounted and hollow shaft
SHF..	B5 flange-mounted and hollow shaft with shrink disk
SA..	Hollow shaft
SH..	Hollow shaft with shrink disk
ST..	Hollow shaft with TorqLOC® hollow shaft mounting system
SAZ..	B14 flange-mounted and hollow shaft
SHZ..	B14 flange-mounted and hollow shaft with shrink disk

SPIROPLAN® gear units

Designation	
W..	Foot-mounted
WF..	Flange-mounted
WAF..	Flange-mounted type, hollow shaft
WA..	Hollow shaft
WA..B	Foot-mounted, hollow shaft
WH..B	Foot-mounted, hollow shaft with shrink disk
WHF..	Flange-mounted, hollow shaft with shrink disk
WH..	Hollow shaft with shrink disk
WT..	Hollow shaft with TorqLOC® hollow shaft mounting system

Options

R, F and K gear units:

Designation	
/R	Reduced backlash

K, S and W gear units:

Designation	
/T	With torque arm

F gear units:

Designation	
/G	With rubber buffer

Condition monitoring

Designation	Option
/DUO	Diagnostic Unit Oil = Oil aging sensor
/DUV	Diagnostic Unit Vibration = Vibration sensor

3.2 Gearmotor variants

	INFORMATION
	The variants described in this chapter refer to DRL gearmotors from SEW-EURODRIVE. These variants also apply to gear units without motors.

Helical gearmotors

The following types of helical gearmotors are available:

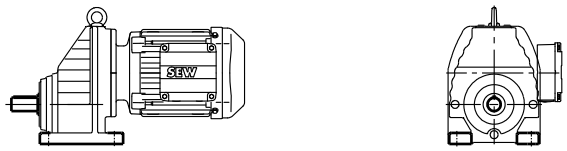

RX..DRL..
Foot-mounted single stage helical gear unit

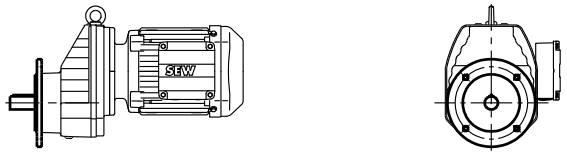

RXF..DRL..
Single-stage helical gearmotor in B5 flange-mounted design

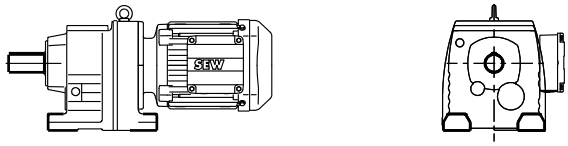

R..DRL..
Foot-mounted helical gearmotor

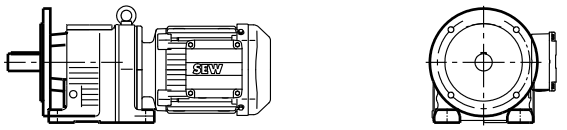

R..F DRL..
Foot and B5 flange-mounted helical gearmotor

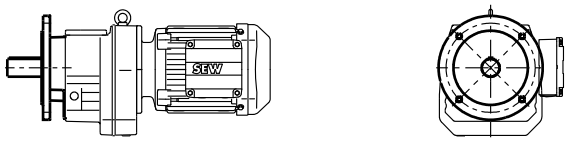

RF..DRL..
B5 flange-mounted helical gearmotor

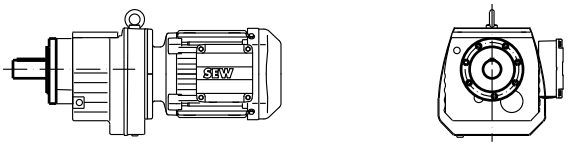

RZ..DRL..
B14 flange-mounted helical gearmotor

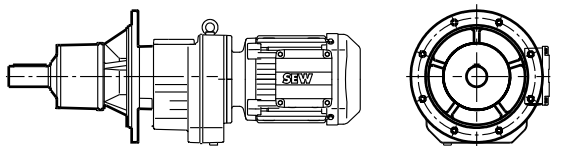

RM..DRL..
B5 flange-mounted helical gearmotor with extended bearing hub

60382AXX

Parallel shaft helical gearmotors

The following types of parallel shaft helical gearmotors are available:

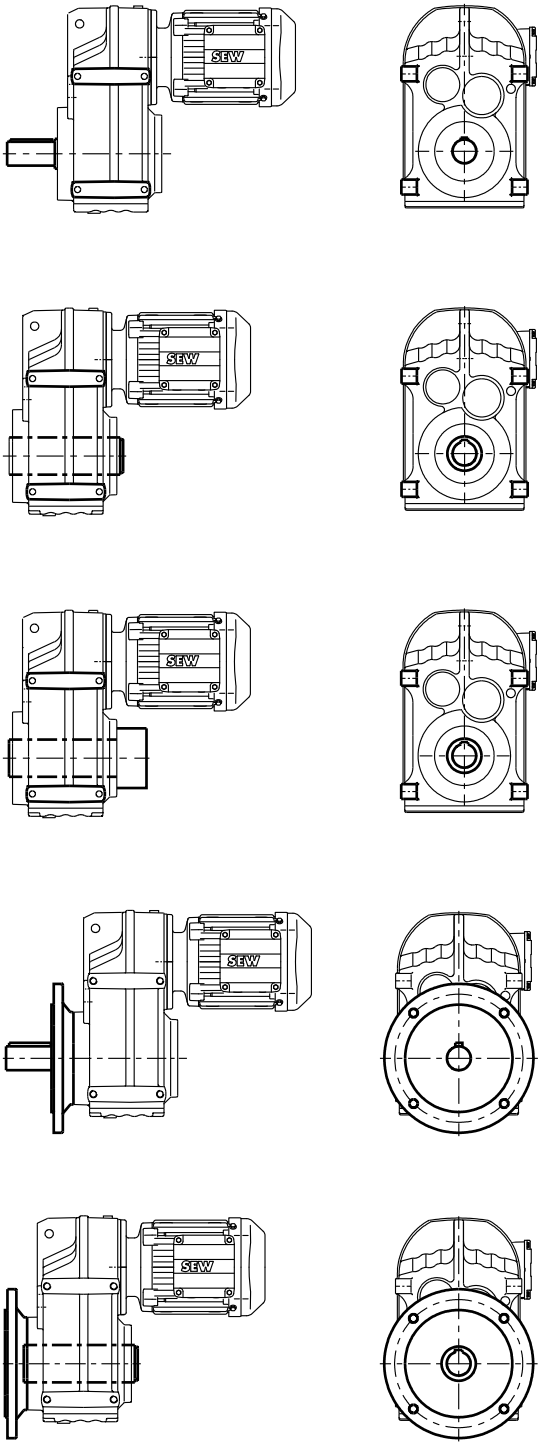

F..DRL..
Foot-mounted parallel shaft helical gearmotor

FA..B DRL..
Foot-mounted parallel shaft helical gearmotor with hollow shaft

FV..B DRL..
Foot-mounted parallel shaft gearmotor with hollow shaft and splining according to DIN 5480

FH..B DRL..
Foot-mounted parallel shaft helical gearmotor with hollow shaft and shrink disk

FF..DRL..
B5 flange-mounted parallel shaft helical gearmotor

FAF..DRL..
B5 flange-mounted parallel shaft helical gearmotor with hollow shaft

FVF..DRL..
B5 flange-mounted parallel shaft helical gearmotor in B14 with hollow shaft and splining according to DIN 5480

60383AXX

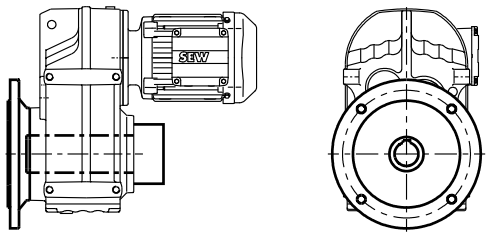

FHF..DRL..
B5 flange-mounted parallel shaft helical gearmotor with hollow shaft and shrink disk

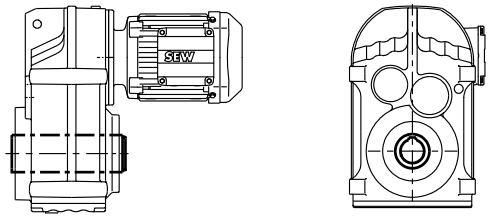

FA..DRL..
Parallel shaft helical gearmotor with hollow shaft

FV..DRL..
Parallel shaft helical gearmotor with hollow shaft and splining according to DIN 5480

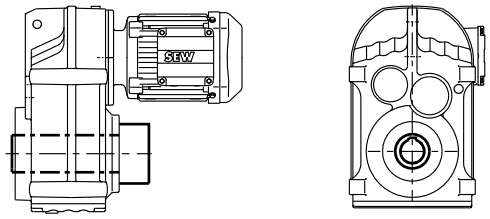

FH..DRL..
Parallel shaft helical gearmotor with hollow shaft and shrink disk

FT..DRL..
Parallel shaft helical gearmotor with hollow shaft and TorqLOC® hollow shaft mounting system

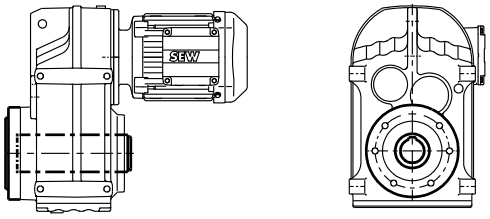

FAZ..DRL..
B14 flange-mounted parallel shaft helical gearmotor with hollow shaft

FVZ..DRL..
B14 flange-mounted parallel shaft helical gearmotor in B14 with hollow shaft and splining according to DIN 5480

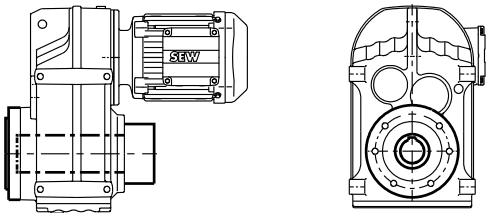

FHZ..DRL..
B14 flange-mounted parallel shaft helical gearmotor with hollow shaft and shrink disk

60396AXX

Helical-bevel gearmotors

The following types of helical-bevel gearmotors are available:

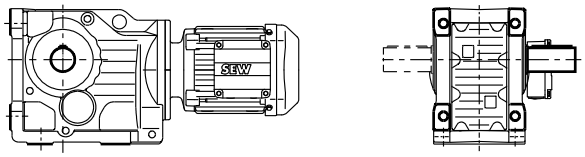

K..DRL..
Foot-mounted helical-bevel gearmotor

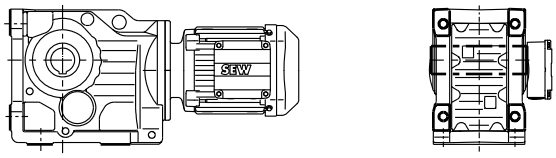

KA..B DRL..
Foot-mounted helical-bevel gearmotor with hollow shaft

KV..B DRL..
Foot-mounted helical-bevel gearmotor with hollow shaft and splining according to DIN 5480

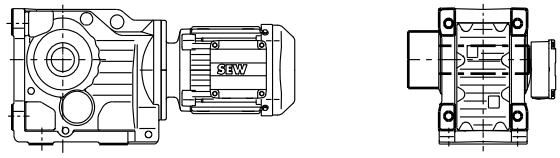

KH..B DRL..
Foot-mounted helical-bevel gearmotor with hollow shaft and shrink disk

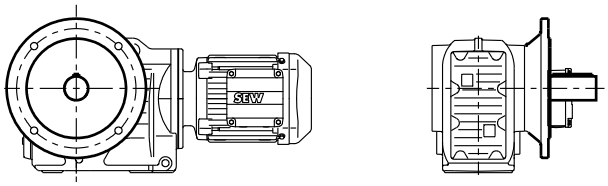

KF..DRL..
B5 flange-mounted helical-bevel gearmotor

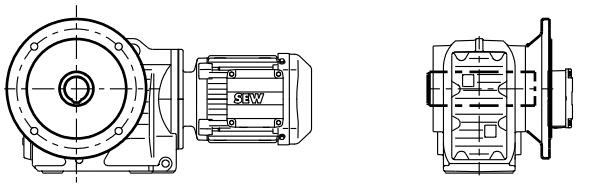

KAF..DRL..
B5 flange-mounted helical-bevel gearmotor with hollow shaft

KVF..DRL..
B5 flange-mounted helical-bevel gearmotor with hollow shaft and splined hollow shaft to DIN 5480

60397AXX

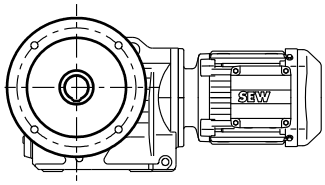

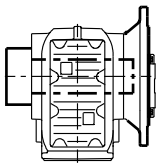

KHF..DRL..
B5 flange-mounted helical-bevel gearmotor with hollow shaft and shrink disk

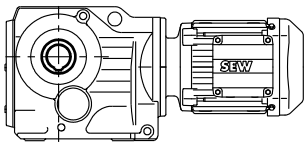

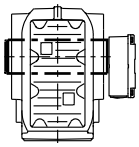

KA..DRL..
Helical-bevel gearmotor with hollow shaft

KV..DRL..
Helical-bevel gearmotor with hollow shaft and splined hollow shaft to DIN 5480

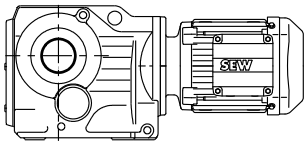

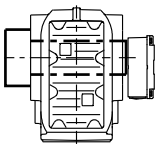

KH..DRL..
Helical-bevel gearmotor with hollow shaft and shrink disk

KT..DRL..
Helical-bevel gearmotor with hollow shaft and TorqLOC® hollow shaft mounting system

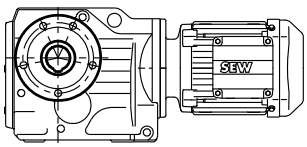

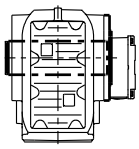

KAZ..DRL..
B14 flange-mounted helical-bevel gearmotor with hollow shaft

KVZ..DRL..
B14 flange-mounted helical-bevel gearmotor with hollow shaft and splined hollow shaft to DIN 5480

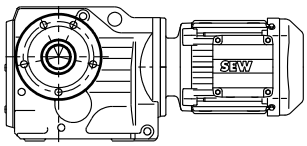

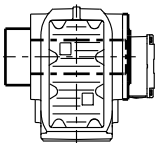

KHZ..DRL..
B14 flange-mounted helical-bevel gearmotor with hollow shaft and shrink disk

60398AXX

Helical-worm gearmotors

The following types of helical-worm gearmotors are available:

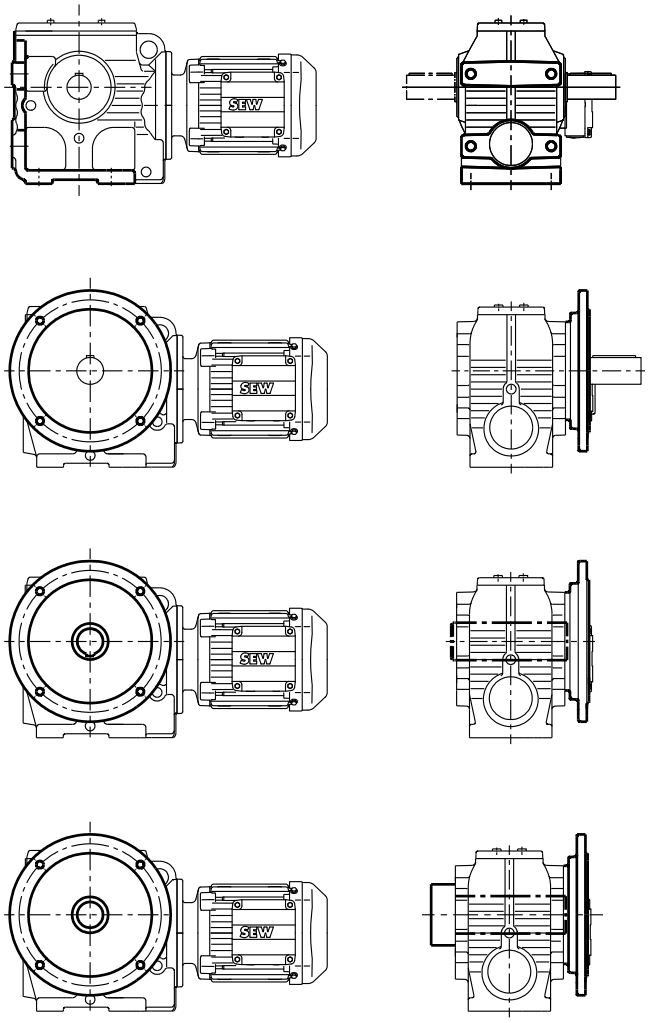

S..DRL..
Foot-mounted helical-worm gearmotor

SF..DRL..
B5 flange-mounted helical-worm gearmotor

SAF..DRL..
B5 flange-mounted helical-worm gearmotor with hollow shaft

SHF..DRL..
B5 flange-mounted helical-worm gearmotor with hollow shaft and shrink disk

60399AXX

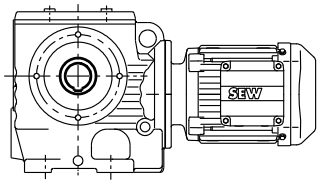

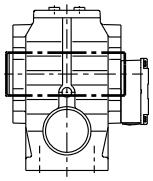

SA..DRL..
Helical-worm gearmotor with hollow shaft

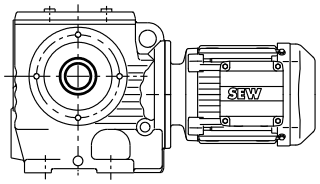

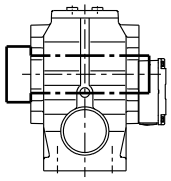

SH..DRL..
Helical-worm gearmotor with hollow shaft and shrink disk

ST..DRL..
Helical-worm gearmotor with hollow shaft and TorqLOC® hollow shaft mounting system

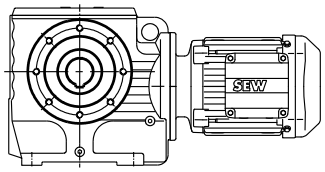

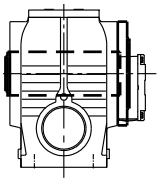

SAZ..DRL..
B14 flange-mounted helical-worm gearmotor with hollow shaft

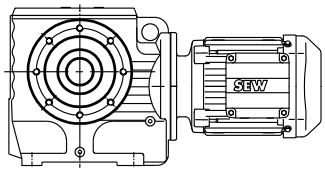

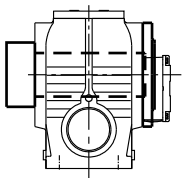

SHZ..DRL..
B14 flange-mounted helical-worm gearmotor with hollow shaft and shrink disk

60400AXX

SPIROPLAN® gearmotors

The following types of SPIROPLAN® gearmotors are available:

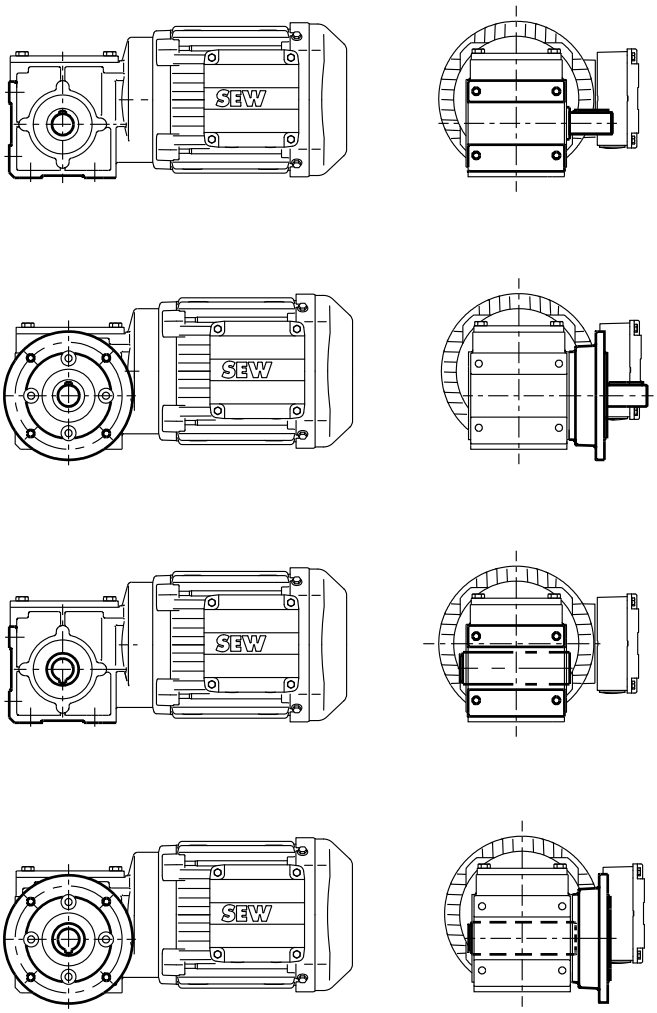

W..DRL..
Foot-mounted SPRIOPLAN® gearmotor

WF..DRL..
Flange-mounted SPIROPLAN® gearmotor

WA..DRL..
SPIROPLAN® gearmotor with hollow shaft

WAF..DRL..
Flange-mounted SPIROPLAN® gearmotor with hollow shaft

60401AXX

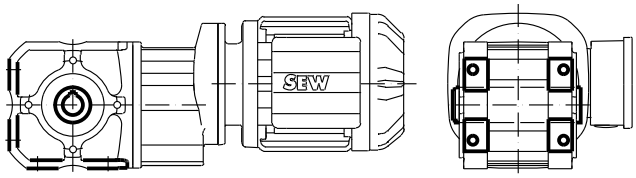

WA..B DRL..
Foot-mounted SPIROPLAN® gearmotor with hollow shaft

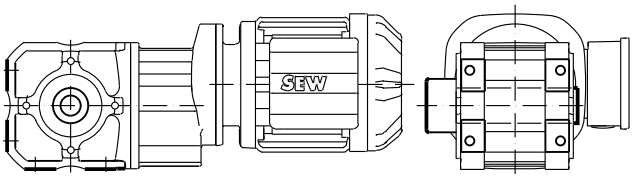

WH..B DRL..
Foot-mounted SPIROPLAN® gearmotor with hollow shaft and shrink disk

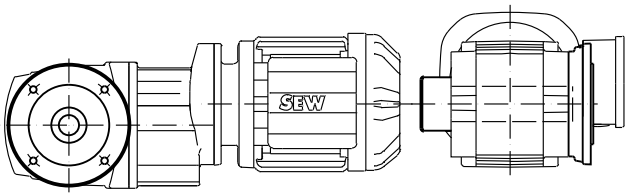

WHF.. DRL..
Flange-mounted SPIROPLAN® gearmotor with hollow shaft and shrink disk

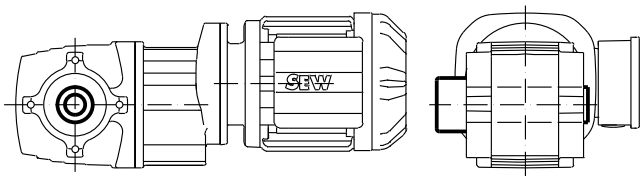

WH.. DRL..
SPIROPLAN® gearmotor with hollow shaft and shrink disk

WT.. DRL..
SPIROPLAN® gearmotor with hollow shaft and TorqLOC®

62643AXX

3.3 Motor variants and options

Motor variant	Type designation of the motor variant										
Condition monitoring											
Brake monitoring		/DUB	/DUV								
Ventilation											
Low-noise fan guard	-	/LN									
Fan guard	-	/C	/LF								
Fan	-	/Z	/AL								
Forced cooling fan	-	/V	/VE*	* in preparation							
Connection options											
Connection options	-	/IS	/AB..	/AC..	/AD..	/AK..	/AM..	/AS..	/KCC	/KC1	
Encoder											
Built-in encoder	-		/EI7C	/EI76	/EI72	/EI71					
Encoder	-		/ES7.	/EG7.	/EV7.	/AS7.	/AG7.	/XV..			
Explosion-proof motors											
Explosion protection	-	/3GD*	* in preparation								
Temperature sensor/temperature detection											
Thermal motor protection	-	/TF	/TH								
Temperature detection	-	/KT	/PT								
Output variants											
Output variant	**/FF**	/FG	/FM	/FI*	/FT	/FC	/FE*	/FY*	/FL	/FK*	*= Shaft height
Mechanical attachments											
Backstop	-	/RS									
Manual brake release	-	HF	HR								
Brake	-	BE05	BE1	BE2	BE5	BE11	BE20	BE30	BE32		
Asynchronous servomotor											
Number of poles	**4**										
Length	**S**	M	L	MC	LC						
Size	**100**	71	80	90	100	112	132	160	180	200	225
Type designation	**L**										
Series	**DR**										

Motor variant	Type designation of the motor variant		
Other additional features			
2nd shaft end	-	/2W	
Condensation drain hole	-	/DH	

3.4 Nameplate for servo gearmotors

Example: Nameplate of a servo gearmotor

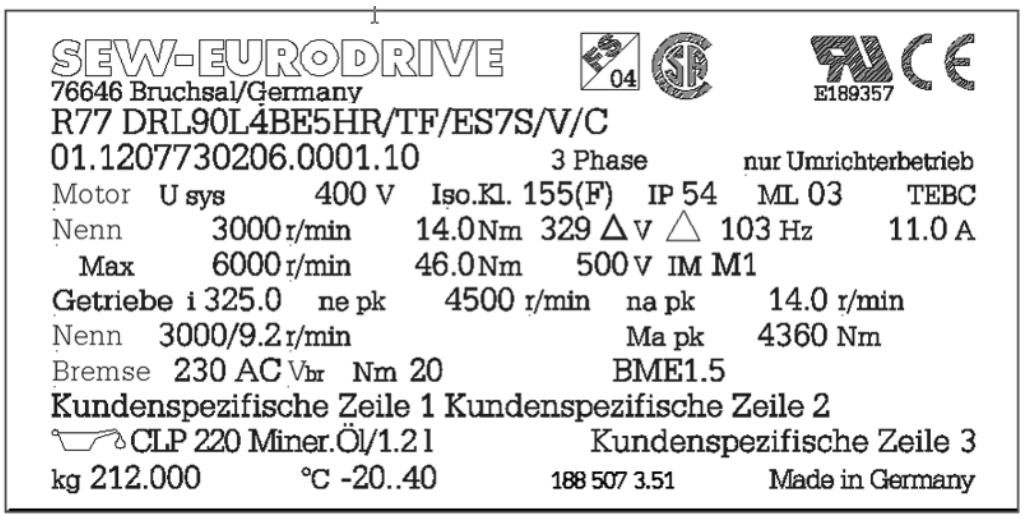

12266ADE

Key

i	Gear unit reduction ratio	n_{epk}	rpm	Maximum permitted input speed
IM	Mounting position	n_{apk}	rpm	Maximum permitted output speed
IP	Degree of protection	M_{apk}	Nm	Max. permitted output torque

	INFORMATION
	The nameplate of servo gearmotors is fixed to the servomotor!

3.5 Overview of servo gearmotors

Axially parallel gear units

Gear unit type For details, refer to			RX.. page 132	R.. page 156	F.. page 245
Technical data			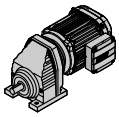	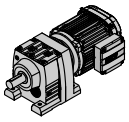	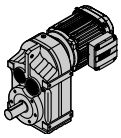
Peak torque	M_{apk}	Nm	90 - 690	51 - 21800	130 - 18000
Max. continuous torque	M_{amax}	Nm	63 - 460	50 - 18000	87 - 18000
Max. input speed	n_{epk}	rpm	Up to 4500	Up to 4500	Up to 4500
Peak overhung load	F_{rapk}	N	3940 - 30000	1500 - 120000	4500 - 120000
Gear ratio range	i		1.3 - 6.63	3.21 - 229.71	4.16 - 267.43
Option with reduced backlash	/R		x	x	x
Option with minimized backlash	/M		-	-	-
Mechanical data					
Hollow shaft			-	-	x
Flange-mounting			x	x	x
Foot-mounting			x	x	-
Flange block			-	-	-
B5 flange			x	x	x
B14 flange			-	x	x

Right-angle gear units

Gear unit type For details, refer to			K.. page 344	S.. page 436	W.7 page 464
Technical data			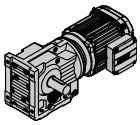	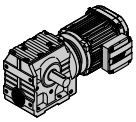	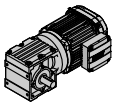
Peak torque	M_{apk}	Nm	187 - 55600	48 - 655	84 - 215
Max. continuous torque	M_{amax}	Nm	125 - 50000	32 - 480	70 - 180
Max. input speed	n_{epk}	rpm	4500	4500	4500
Peak overhung load	F_{rapk}	N	5140 - 190000	3000 - 9740	1490 - 6990
Gear ratio range	i		3.98 - 179.86	3.97 - 75.06	3.2 - 74.98
Option with reduced backlash	/R		x	x	-
Option with minimized backlash	/M		-	-	-
Mechanical data					
Hollow shaft			x	x	x
Flange-mounting			x	x	x
Foot-mounting			x	x	x
Flange block			-	-	-
B5 flange			x	x	x
B14 flange			x	x	-

For information on all available options and variants, refer to page 22 et seq.

4 Project Planning Notes for Servo Gearmotors

4.1 Additional documentation

In addition to the information in this publication, SEW-EURODRIVE offers extensive documentation covering the entire topic of electrical drive engineering. These are mainly the publications in the "Drive Engineering – Practical Implementation" series as well as the manuals and catalogs for electronically controlled drives.

You will find additional links to a wide selection of our documentation in many languages for download on the SEW-EURODRIVE homepage (http://www.sew-eurodrive.com). The list below includes other documents that are of interest in terms of project planning. You can order these publications from SEW-EURODRIVE.

Technical data for motors and gear units

The following documents are available from SEW-EURODRIVE in addition to this "Asynchronous Servo Gearmotors" catalog:

- "AC Motors" price catalog/catalog
- "Servo Gear Units" price catalog/catalog
- "Gear Units" price catalog/catalog
- "AC Motors Inverter Assignments and Characteristic Curves" manual

Drive Engineering Practical Implementation

- Project Planning for Drives
- Controlled AC Drives
- SEW encoder systems
- Servo technology
- EMC in Drive Engineering
- Explosion-Proof Drives to EU Directive 94/9/EC
- SEW Disk Brakes

Electronics documentation

- MOVIDRIVE® MDX60/61B system manual
- MOVIAXIS® MX system manual

Mechanical brakes

- "AC Motors" price catalog/catalog

4.2 Data for drive and gear unit selection

The data of the application must be known for projecting a drive. The abbreviations used for project planning are summarized in the following table:

Designation	Meaning	Unit
φ	Circumferential backlash	`
h	Gear unit efficiency for M_{apk}	
a, b, f	Gear unit constants as regards the overhung load conversion	mm
c	Gear unit constants as regards the overhung load conversion	Nmm
a_0, a_1, a_2	Gear unit constants as regards the rise in temperature in the gear unit	
F_A	Axial load (tension and compression) on the output shaft	N
f_k	Speed ratio	
F_R	Overhung load on the output shaft	N
F_{Rapk}	Maximum permitted overhung load at the output shaft for short-time duty (load application point is the middle of the shaft end)	N
F_{Ramax}	Maximum permitted overhung load at the output shaft for continuous duty (load application point is the middle of the shaft end)	N
F_{Repk}	Maximum permitted overhung load at the input shaft for short-time duty (load application point is the middle of the shaft end)	N
F_{Remax}	Maximum permitted overhung load at the input shaft for continuous duty (load application point is the middle of the shaft end)	N
H	Installation altitude	m above sea level
I_0	Current consumption of the motor at M_0	A
I_{max}	Maximum permitted motor current (root-mean-square value)	A
Ins. cl.	Thermal classification of the motor	
i	Gear unit reduction ratio	
IM	Mounting position of the gear unit (international mounting position) M1 - M6	
IP..	Degree of protection according to IEC60034-5	
J_A	Mass moment of inertia of the adapter	kgm^2
J_G	Mass moment of inertia of the gear unit	kgm^2
J_{ext}	Mass moment of inertia (external) reduced on motor shaft	kgm^2
J_{mot}	Mass moment of inertia of the motor	kgm^2
J_L	Mass moment of inertia of the load	kgm^2
k	Inertia ratio J_{ext} / / J_{Mot}	
l	Length of output shaft	mm
M_1 - M_n	Output torque in time period t_1 to t_n	Nm
M_0	Thermally permitted output torque of the motor in continuous duty at low speed (not to be confused with standstill torque)	Nm
M_a^{DYN}	Dynamic output torque assumed for the drive in project planning	Nm
M_{aeff}	Effective torque for component testing calculated in project planning	Nm
M_{akub}	Effective torque for bearing testing calculated in project planning	Nm
M_{amax}	Maximum permitted output torque for continuous duty	Nm
M_{apk}	Maximum permitted torque for short-time duty	Nm
$M_{aNOTAUS}$	Maximum permitted emergency stop torque, max. 1000 emergency stops	Nm
M_{ath}	Effective torque for thermal testing calculated in project planning	Nm
M_B	Rated brake torque	Nm
M_{pk}	Dynamic limit torque of the servomotor	Nm

Table continued on next page.

Designation	Meaning	Unit
M_{eff}	Effective torque requirement (in relation to the motor)	Nm
M_{max}	Maximum output torque assumed for the drive in project planning	Nm
ML	Mounting location (UL)	
n_{apk}	Maximum permitted output speed for short-time duty	rpm
n_{epk}	Maximum permitted input speed for short-time duty	rpm
n_{em}	Mean input speed	rpm
n_{am}	Mean output speed	rpm
n_{ak}	Breakpoint speed (output)	rpm
n_N	Rated speed	rpm
n_1 - n_n	Output speed in time period t_1 to t_n	rpm
n_{etn_pk}	Maximum input speed in section	rpm
P_{Br}	Braking power	W
P_{Br_pk}	Peak braking power	W
P_{Br_eff}	Effective braking power	W
P_{Br_tn}	Braking power in section t_n	W
S.., ..% cdf	Duty type and cyclic duration factor (cdf) or exact load cycle can be entered.	s
t_1 - t_n	Time period 1 to n	s
t_z	Cycle time	s
T_{Amb}	Ambient temperature	°C
U_{sys}	System voltage, voltage of the supplying inverter	V
U_{Br}	Operating voltage of the brake	V
x	Distance between overhung load application point and shaft shoulder	mm

Determining the application data

It is necessary to have data on the machine to be driven (mass, speed, setting range, etc.) to project the drive correctly.

These data help determine the required power, torque and speed. Refer to the SEW publication "Drive Engineering Practical Implementation/Drive Planning" or the SEW project planning tool SEW Workbench for assistance.

Selecting the correct drive

The appropriate drive can be selected once the power and speed of the drive have been calculated and with regard to mechanical requirements.

4.3 Project planning procedure

The following flowcharts show a schematic view of the project planning procedure of a servo gear unit for a positioning drive in S3 duty cycle.

Project planning procedure part 1, servo gear units

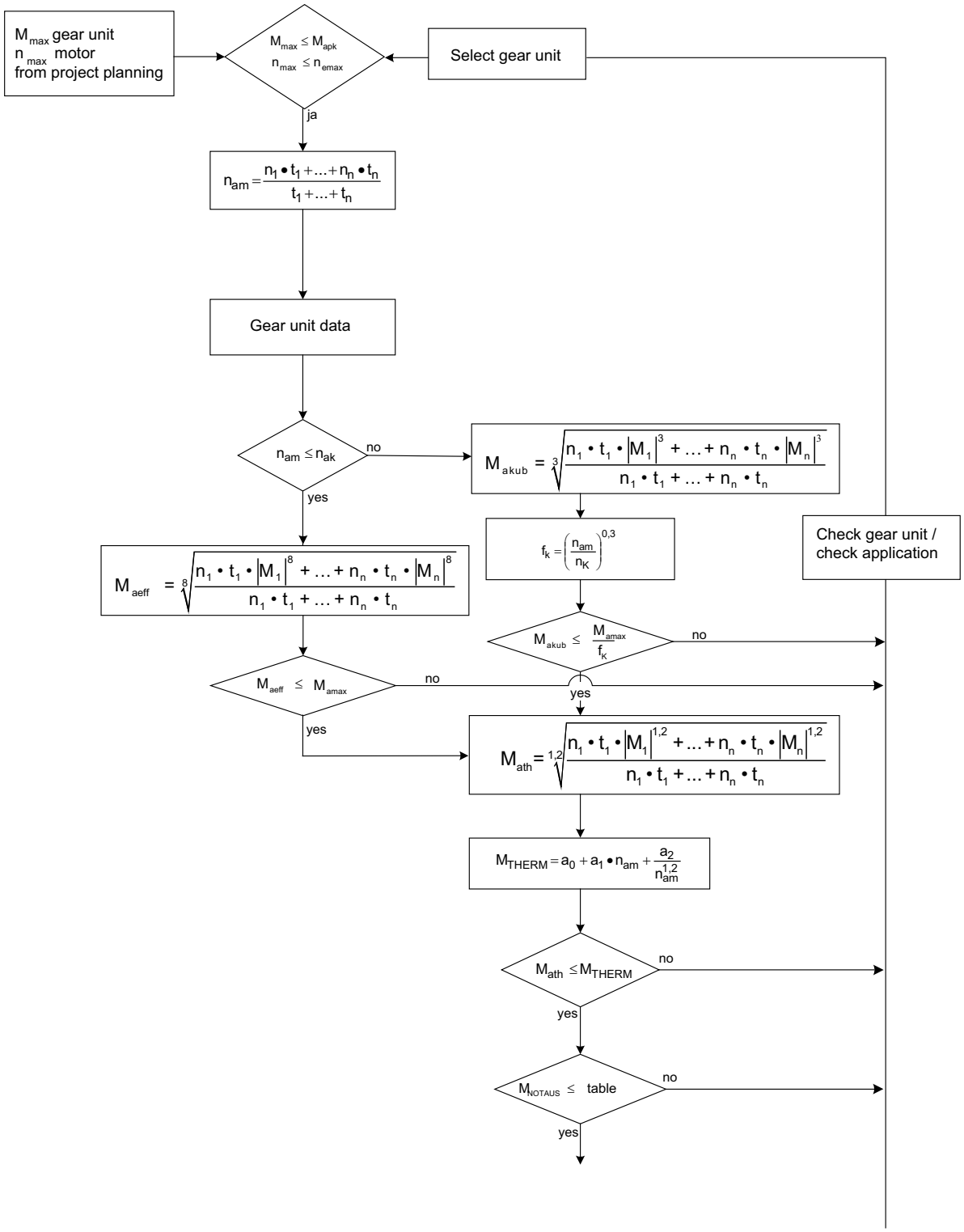

62893aen

* For thermal project planning of R, F, K, S, W gear units, please contact SEW-EURODRIVE.

Project planning procedure part 2, servo gear units

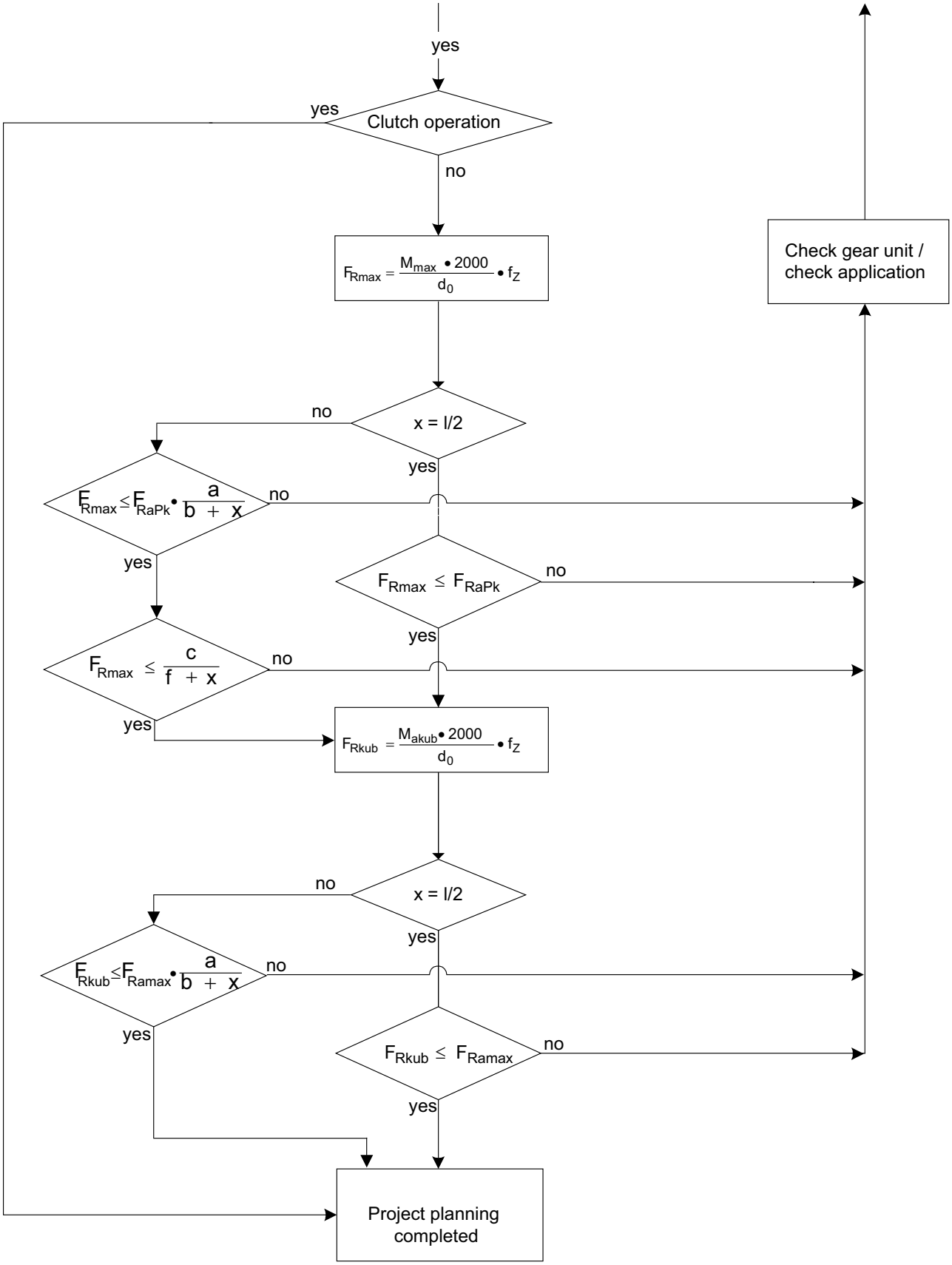

62783aen

Project planning procedure part 3, servomotors

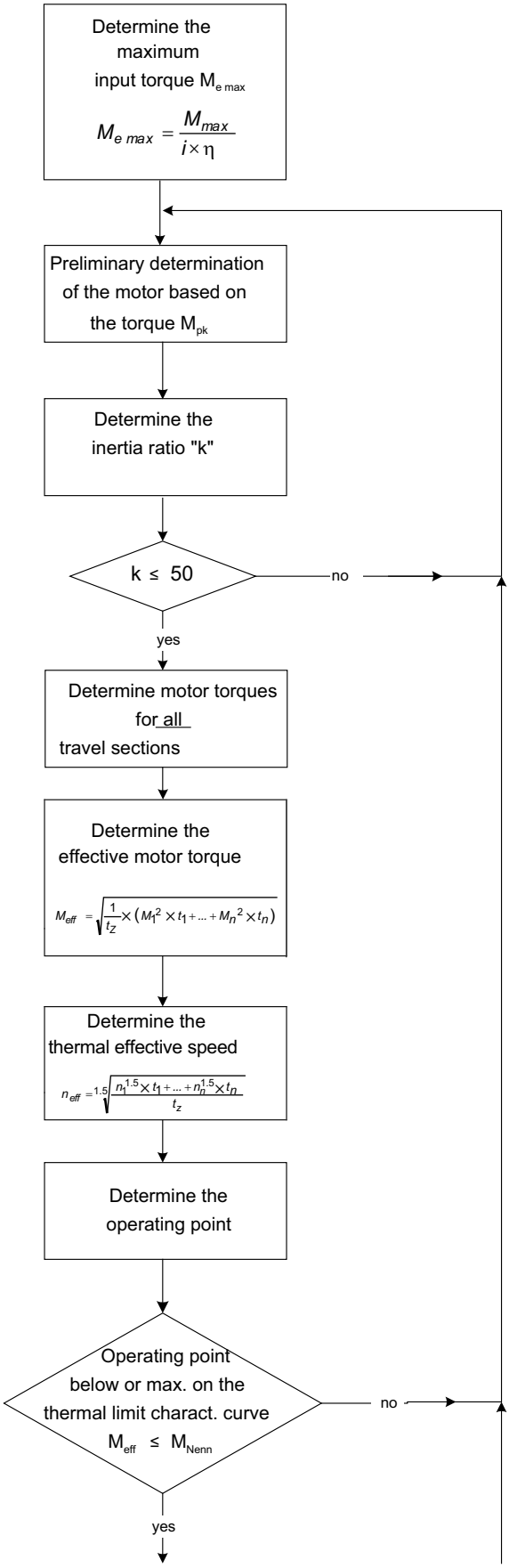

Project planning procedure part 4, servomotors

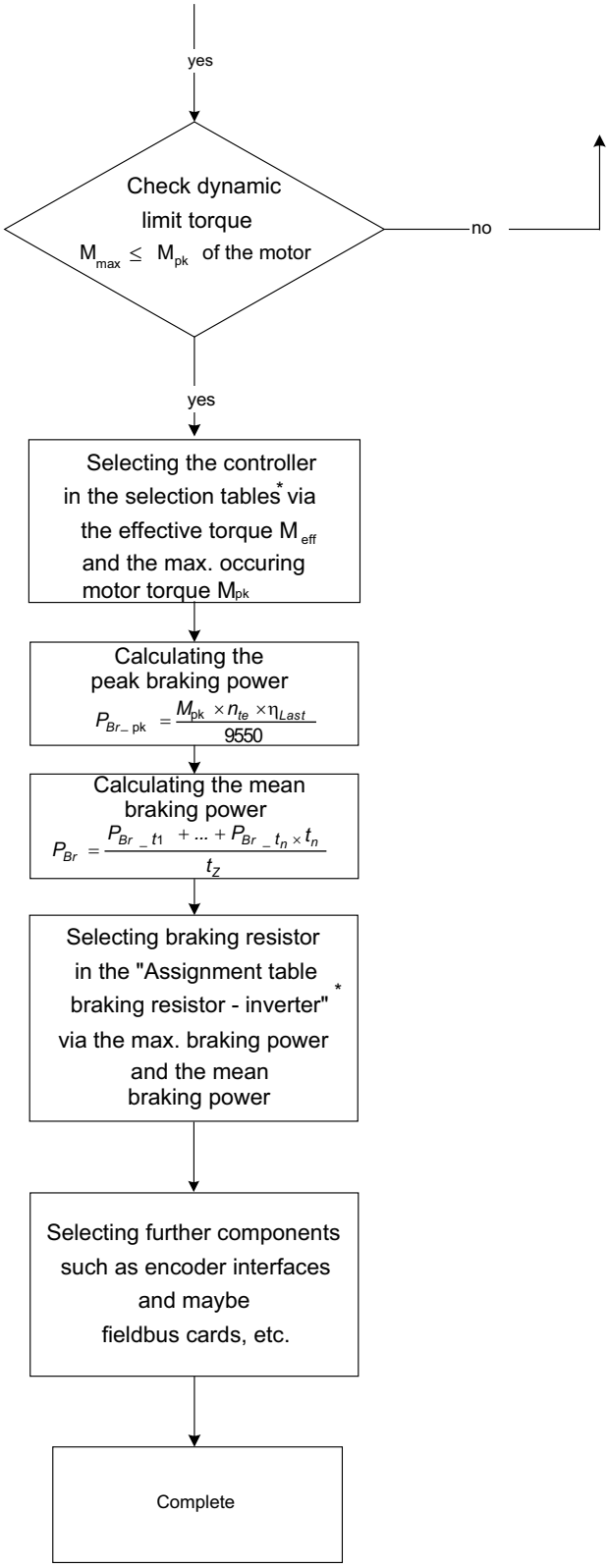

62890aen

* MOVIDRIVE® system manual, MOVIAXIS® system manual

4.4 Project planning information

Efficiency of the gear units

General

The efficiency of gear units is mainly determined by the gearing and bearing friction. Keep in mind that the starting efficiency of a gear unit is always less than its efficiency at operating speed. This applies in particular to helical-worm and SPIROPLAN® right-angle gearmotors.

R, F, K gear units

The efficiency of helical, parallel shaft and helical-bevel gear units varies with the number of gear stages, between 96% (3-stage), 97% (2-stage) and 98% (1-stage).

S and W gear units

The gearing in helical-worm and SPIROPLAN® gear units produces a high proportion of sliding friction. As a result, these gear units have higher gearing losses than R, F or K gear units and therefore lower efficiency.

The efficiency depends on the following factors:

- Gear ratio of the helical-worm or SPIROPLAN® stage
- Input speed
- Gear unit temperature

Helical-worm gear units from SEW-EURODRIVE are helical gear/worm combinations that are significantly more efficient than plain worm gear units.

The efficiency η can be < 0.5 if the helical-worm gear stage has a very high gear ratio.

The SPIROPLAN® gear unit W37/W47 from SEW-EURODRIVE has an efficiency of more than 90%, which drops only slightly even for large gear unit ratios.

Self-locking

Retrodriving torques on helical-worm or SPIROPLAN® gear units produce an efficiency of $\eta = 2 - 1/\eta$, which is significantly less favorable than the forward efficiency η. The helical-worm or SPIROPLAN® gear unit is self-locking if the forward efficiency is $\eta \leq 0.5$. Some SPIROPLAN® gear units are dynamically self-locking. Contact SEW-EURODRIVE if you want to make technical use of the braking effect of self-locking characteristics.

	INFORMATION
	Note that the self-locking effect of helical-worm and SPIROPLAN® gear units is not permitted as the sole safety function for hoists.

Run-in phase

The tooth flanks of new helical-worm and SPIROPLAN® gear units are not yet completely smooth. This fact results in a greater friction angle and less efficiency than during later operation. This effect intensifies with increasing gear unit ratio. Subtract the following values from the listed efficiency during the running-in phase:

	Worm	
	i range	**η reduction**
1-start	ca. 50 - 280	ca. 12%
2-start	ca. 20 - 75	ca. 6%
3-start	ca. 20 - 90	ca. 3%
5-start	ca. 6 - 25	ca. 3%
6-start	ca. 7 - 25	ca. 2%

SPIROPLAN® W..	
i range	**η reduction**
ca. 30 - 70	ca. 8%
ca. 10 - 30	ca. 5%
ca. 3 - 10	ca. 3%

The run-in phase usually lasts 48 hours. Helical-worm and SPRIOPLAN® gear units achieve their listed rated efficiency values when:

- The gear unit has been completely run-in,
- The gear unit has reached nominal operating temperature,
- The recommended lubricant has been filled in, and
- The gear unit is operating in the rated load range.

Churning losses

With certain gear unit mounting positions, the first gearing stage is completely immersed in the lubricant, see chapter "Gear Unit Mounting positions" on page 68. When the circumferential velocity of the input stage is high, considerable churning losses occur in larger gear units that must be taken into account. Contact SEW-EURODRIVE if you wish to use gear units of this type.

To reduce churning losses to a minimum, use gear units in M1 mounting position.

Oil expansion tank

The oil expansion tank allows the lubricant/air space of the gear unit to expand. This means no lubricant can escape the breather valve at high operating temperatures.

SEW-EURODRIVE recommends to use oil expansion tanks for gear units and gearmotors in M4 mounting position and for input speeds > 2000 rpm.

The following figure shows an example of a gearmotor with oil expansion tank.

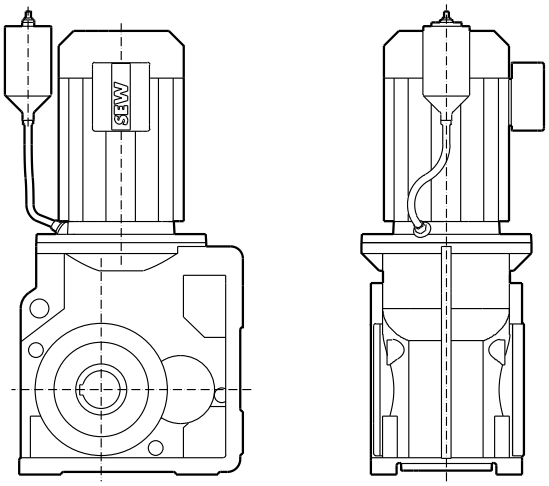

62658AXX

The oil expansion tank is provided as assembly kit. It is intended for mounting onto the gearmotor. However, if installation space is limited or if the expansion tank is intended for gear units without motor, it can be mounted to nearby machine parts.

For further information, please contact your SEW-EURODRIVE sales representative.

Overhung and axial loads

Determining overhung loads

An important factor for determining the resulting overhung load is the type of transmission element mounted to the shaft end. The following transmission element factors f_Z have to be considered for various transmission elements.

Transmission element	Transmission element factor f_Z	Comments
Gears	1.15	< 17 teeth
Chain sprockets	1.40	< 13 teeth
Chain sprockets	1.25	< 20 teeth
Narrow V-belt pulleys	1.75	Influence of the pre-tensioning
Flat belt pulleys	2.50	Influence of the pre-tensioning
Toothed belt pulleys	2.00 - 2.50	Influence of the pre-tensioning
Gear rack pinion, pre-tensioned	2.00	Influence of the pre-tensioning
Gear rack pinion, not pre-tensioned	1.15	< 17 teeth

The overhung load exerted on the motor or gear shaft is calculated as follows:

$$F_R = \frac{M_d \cdot 2000}{d_0} \cdot f_Z$$

F_R = Overhung load in N
M_d = Torque in Nm
d_0 = Mean diameter of the installed transmission element in mm
f_Z = Transmission element factor

Permitted overhung load

The basis for determining the permitted overhung loads is the calculation of the rated bearing service life L_{10h} of the rolling bearings (according to ISO 281).

For special operating conditions, the permitted overhung loads can be determined with regard to the modified service life L_{na} on request.

The permitted overhung loads F_{Ra} for the output shafts of foot-mounted gear units with a solid shaft are listed in the selection tables for gearmotors. Contact SEW-EURODRIVE in case of other versions.

INFORMATION

The values refer to force applied to the center of the shaft end (in right-angle gear units as viewed onto the drive end). The values for the force application angle α and direction of rotation are based on the most unfavorable conditions.

	INFORMATION
	Reduction of overhung loads • Only 50% of the F_{Ramax} and F_{Rapk} values specified in the selection tables are permitted in mounting positions M1 and M3 with wall attachment on the front face for K and S gear units. • Helical-bevel gearmotors K167 and K187 in mounting positions M1 to M4: A maximum of 50% of the overhung load F_{Ramax} specified in the selection tables in the case of gear unit mounting other than as shown in the mounting position sheets. • Foot and flange-mounted helical gearmotors (R..F): A maximum of 50% of the overhung load F_{Ramax} specified in the selection tables in the case of torque transmission via the flange mounting.

Higher permitted overhung loads

Exactly considering the force application angle α and the direction of rotation makes it possible to achieve a higher overhung load than listed in the selection tables.

Higher output shaft loads are permitted if heavy duty bearings are installed, especially with R, F and K gear units.

Contact SEW-EURODRIVE in such cases.

Definition of force application

The force application is defined according to the following figure:

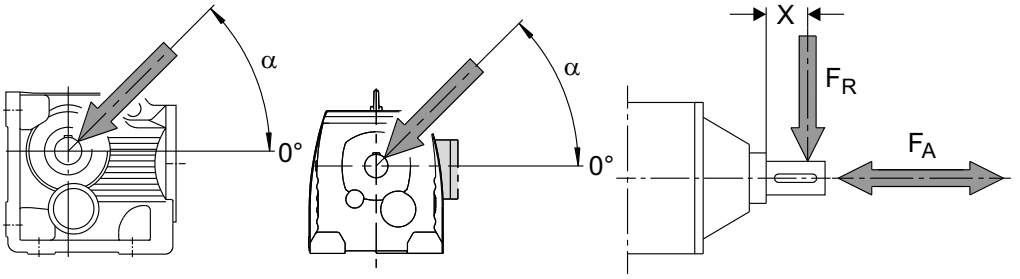

F_X = Permitted overhung load at point x in N

F_A = Permitted axial load in N

Permitted axial load

If there is no overhung load, then an axial force F_A (tension or compression) amounting to 50% of the overhung load given in the selection tables is permitted. This condition applies to the following gearmotors:

- Helical gearmotors except for R..137... to R..167...
- Parallel shaft and helical-bevel gearmotors with solid shaft except for F97...
- Helical-worm gearmotors with solid shaft

	INFORMATION
	Contact SEW-EURODRIVE for all other types of gear units and in the event of significantly greater axial loads or combinations of overhung load and axial load.

Input side: Overhung load conversion for off-center force application

Important: only applies to gear units with input shaft assembly:

Please contact SEW-EURODRIVE for off-center force application on the drive end.

Output end: Overhung load conversion for off-center force application

The permitted overhung loads F_{Ramax} and F_{Rapk} specified in the data tables apply to force application at l / 2 (solid shaft) or to force application at the shaft end (hollow shaft). For any other distance of the force application point to the gear unit, it is necessary to determine the permitted overhung loads again according to the project planning procedure page 40 .

The following conditions must be met:

$$F_R \leq F_{Ra\max} \cdot \frac{a}{b+x}\ [N] \qquad F_R \leq \frac{c}{f+x}\ [N]$$

F_{Ramax} = Permitted overhung load [N]

x = Distance from the shaft shoulder to the force application point in mm

a, b, f = Gear unit constants for overhung load conversion in mm

c = Gear unit constant for overhung load conversion Nmm

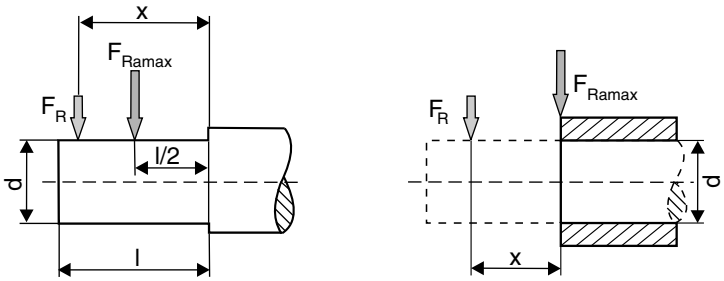

63215axx

Gear unit constants for overhung load conversion

Gear unit type	a mm	b mm	c Nmm	f mm	d mm	l mm
RX57	43.5	23.5	1.51×10^5	34.2	20	40
RX67	52.5	27.5	2.42×10^5	39.7	25	50
RX77	60.5	30.5	1.95×10^5	0	30	60
RX87	73.5	33.5	7.69×10^5	48.9	40	80
RX97	86.5	36.5	1.43×10^6	53.9	50	100
RX107	102.5	42.5	2.47×10^6	62.3	60	120
R07	72.0	52.0	4.67×10^4	11	20	40
R17	88.5	68.5	6.527×10^4	17	20	40
R27	106.5	81.5	1.56×10^5	11.8	25	50
R37	118	93	1.24×10^5	0	25	50
R47	137	107	2.44×10^5	15	30	60
R57	147.5	112.5	3.77×10^5	18	35	70
R67	168.5	133.5	2.65×10^5	0	35	70
R77	173.7	133.7	3.97×10^5	0	40	80
R87	216.7	166.7	8.47×10^5	0	50	100
R97	255.5	195.5	1.06×10^6	0	60	120
R107	285.5	215.5	2.06×10^6	0	70	140
R137	343.5	258.5	4.58×10^6	0	90	170
R147	402	297	8.65×10^6	33	110	210
R167	450	345	1.26×10^7	0	120	210
F27	109.5	84.5	1.13×10^5	0	25	50
F37	123.5	98.5	1.07×10^5	0	25	50
F47	153.5	123.5	1.40×10^5	0	30	60
F57	170.7	135.7	2.70×10^5	0	35	70
F67	181.3	141.3	4.12×10^5	0	40	80
F77	215.8	165.8	7.87×10^5	0	50	100
F87	263	203	1.06×10^6	0	60	120
F97	350	280	2.09×10^6	0	70	140
F107	373.5	288.5	4.23×10^6	0	90	170
F127	442.5	337.5	9.45×10^6	0	110	210
F157	512	407	1.05×10^7	0	120	210
K37	123.5	98.5	1.30×10^5	0	25	50
K47	153.5	123.5	1.40×10^5	0	30	60
K57	169.7	134.7	2.70×10^5	0	35	70
K67	181.3	141.3	4.12×10^5	0	40	80
K77	215.8	165.8	7.69×10^5	0	50	100
K87	252	192	1.64×10^6	0	60	120
K97	319	249	2.80×10^6	0	70	140
K107	373.5	288.5	5.53×10^6	0	90	170
K127	443.5	338.5	8.31×10^6	0	110	210
K157	509	404	1.18×10^7	0	120	210
K167	621.5	496.5	1.88×10^7	0	160	250
K187	720.5	560.5	3.04×10^7	0	190	320
W37	121.1	101.1	$6.95 \xi 10^4$	0	20	40
W47	145.5	115.5	4.26×10^5	35.6	30	60
S37	118.5	98.5	6.0×10^4	0	20	40
S47	130	105	1.33×10^5	0	25	50
S57	150	120	2.14×10^5	0	30	60
S67	184	149	3.04×10^5	0	35	70
S77	224	179	5.26×10^5	0	45	90
S87	281.5	221.5	1.68×10^6	0	60	120
S97	326.3	256.3	2.54×10^6	0	70	140

Values for types not listed are available on request.

4.5 Project planning example

The travel drive of a storage/retrieval system is calculated in this project planning example.

Reference data:

- Total moved mass: m_L = 15000 kg (trolley) + 2000 kg (useful load)
- Drive wheel diameter: d_0 = 445 mm
- Resistance to motion: F_F = 50 N/t
- Traveling velocity: V_{max} = 240 m/min
- Maximum occurring acceleration/deceleration: a_{max} = 0.5 m/s^2
- Travel time: 60%
- Mounting position: M4

An asynchronous DRL servomotor with a KV gear unit is used.

No overhung load acts on the output shaft.

Travel sections

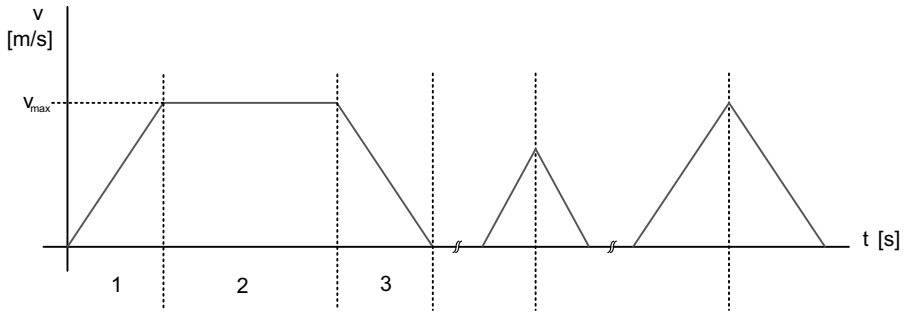

Longest acceleration time in travel section 1

$$t_{1\max} = \frac{v_{\max}}{a_{\max}}$$
$$t_{1\max} = \frac{240\,\frac{m}{\min}}{0{,}5\,\frac{m}{s^2} \times 60\,\frac{s}{\min}}$$
$$t_{1\max} = 8\,s$$

M_{stat} for all travel sections

$$M_{stat} = \frac{m \times F_F \times d_0}{2000 \times \eta_L}$$
$$M_{stat} = \frac{(15000\,kg + 2000\,kg) \times 50\,\frac{N}{t} \times \frac{t}{1000kg} \times \frac{0{,}445\,m}{2}}{0{,}9}$$
$$M_{stat} = 210{,}14\,Nm$$

M_{dyn} during acceleration in travel section 1

$$M_{dyn} = \frac{m \times a \times \frac{d_0}{2}}{\eta_L}$$
$$M_{dyn} = \frac{(15000\,kg + 2000\,kg) \times 0{,}5\,\frac{m}{s^2} \times \frac{0{,}445\,m}{2}}{0{,}9}$$
$$M_{dyn} = 2101{,}39\,Nm$$

M_{dyn} during deceleration in travel section 3

$$M_{dyn} = m \times a \times \frac{d_0}{2} \times \eta_L$$
$$M_{dyn} = (15000\,kg + 2000\,kg) \times 0{,}5\,\frac{m}{s^2} \times \frac{0{,}445\,m}{2} \times 0{,}9$$
$$M_{dyn} = 1702{,}125\,Nm$$

M_{max} during acceleration in travel section 1

$$M_{\max} = M_{stat} + M_{dyn}$$
$$M_{\max} = 210{,}14\,Nm + 2101{,}39\,Nm$$
$$M_{\max} = 2311{,}53\,Nm$$

M_{dyn} during deceleration in travel section 3

$$M_{max} = M_{stat} + M_{dyn}$$
$$M_{max} = 210{,}14\ Nm + (-1702{,}125\ Nm)$$
$$M_{max} = -1491{,}99\ Nm$$

Maximum output speed

$$n_{a\ max} = \frac{V_{max}}{d_0 \times \pi}$$
$$n_{a\ max} = \frac{240\ \frac{m}{min}}{0{,}445\ m \times \pi}$$
$$n_{a\ max} = 171{,}67\ \frac{1}{min}$$

Gear ratio

The rated motor speed should be 2100 rpm.

$$i = \frac{n_N}{n_{a\ max}}$$
$$i = \frac{2100\ \frac{1}{min}}{171{,}67\ \frac{1}{min}}$$
$$i = 12{,}23$$

Gear unit pre-selection

The KV gear unit is selected based on the following values:

- i = 12.23
- M_{max} = 2311.53 Nm

DRL..							F_{Ramax}				F_{Rapk}			
n_e = 1400	i	M_{amax} [Nm]	M_{apk} [Nm]	$M_{aNotaus}$ [Nm]	n_{ak} [1/min]	J_G 10^{-4} [kgm^2]	K [N]	KF [N]	KA [N]	KAF [N]	K [N]	KF [N]	KA [N]	KAF [N]
K87 3	7.21	1300	1950	2210	250	46	13200	15100	4970	4970	28100	27000	30000	30000
	8.29	1400	2100	2380	205	35	13500	15600	4960	4960	27900	26900	30000	30000
	10.00	1500	2240	2550	180	26	14200	16400	5210	5210	27800	26700	30000	30000
	11.17	1500	2250	2550	188	22	14900	17100	5770	5770	27800	26700	30000	30000
	12.56	2000	3000	3400	223	42	14800	17000	5030	5030	26900	25900	30000	30000
	14.45	2100	3150	3570	201	32	15300	17700	5240	5240	26700	25700	30000	30000
	16.00	1800	2270	3060	119	12	16000	18500	5810	5810	27700	26700	30000	30000

DRL..	i	n_{epk} [rpm]	η [%]	c_{TG} K [Nm/']	KF [Nm/']	KA [Nm/']	KAF [Nm/']	φ /R [']
K87 3	7.21	4378	96	169	156	411	411	7
	8.29	4500	96	169	156	411	411	7
	10.00	4500	96	169	156	411	411	7
	11.17	4500	96	169	156	411	411	7
	12.56	4378	96	198	181	640	640	6
	14.45	4500	96	198	181	640	640	6
	16.00	4500	96	169	156	411	411	6

Selected gear unit: KV87

- i = 12.56
- M_{amax} = 2000 Nm
- M_{apk} = 3000 Nm
- n_{epk} = 4378 rpm
- η = 0.96

Maximum motor speed

$$n_{max} = n_{a\,max} \times i$$

$$n_{max} = 171{,}67\,\frac{1}{min} \times 12{,}56$$

$$n_{max} = 2157\,\frac{1}{min}$$

Checking the selection critera

You find the selection criterion in the project planning procedure on page 40.

$M_{max} \leq M_{apk}$

2311.53 Nm ≤ 3000 Nm

$n_{max} \leq n_{epk}$

2157 rpm ≤ 4378 rpm

Conditions are fulfilled.

Checking gear unit KV87

A regular travel cycle is usually not known for storage/retrieval systems because the system covers variable distances within the overall distance. The actual velocity and speed is adjusted depending on the lifting times and travel distances, see also the travel diagram on page 51.

Mean output speed

$n_{amax} \approx 172$ rpm

cdf = 60%

$$n_{am} = n_{a\,max} \times \%ED$$

$$n_{am} = 172 \frac{1}{min} \times 0{,}6$$

$$n_{am} = 103 \frac{1}{min}$$

Selection criterion:

$$n_{am} \leq n_{ak}$$

$$103 \frac{1}{min} \leq 223 \frac{1}{min}$$

The condition is fulfilled.

Effective torque based on an adjusted travel profile

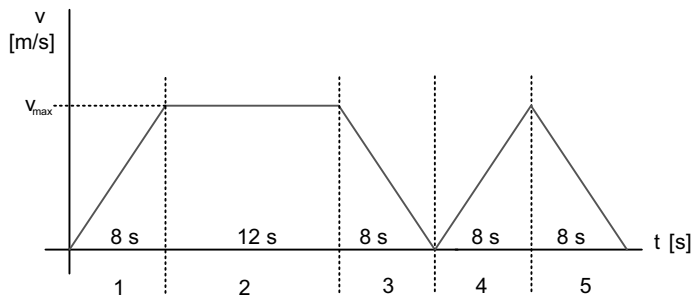

t_{ges} = 44 s

cdf = 60%

M_1 = 2311.53 Nm

M2 = 210.14 Nm

M3 = -1491.99 Nm

M_4 = 2311.53 Nm

M5 = -1491.99 Nm

$$n_1 = n_3 = n_4 = n_5 = \frac{n_{max}}{2}$$

$$n_1 = n_3 = n_4 = n_5 = \frac{172 \frac{1}{min}}{2}$$

$$n_1 = n_3 = n_4 = n_5 = 86 \frac{1}{min}$$

$n_2 = n_{max}$

$n_2 = 172$ rpm

$$M_{a\,eff} = \sqrt[8]{\frac{n_1 \times t_1 \times |M_1|^8 + \ldots + n_n \times t_n \times |M_n|^8}{n_1 \times t_1 + \ldots + n_n \times t_n}}$$

$$M_{a\,eff} = \sqrt[8]{\frac{86\,\frac{1}{\min} \times 8\,s \times \frac{1\,\min}{60\,s} \times |2311{,}53|^8 + 172\,\frac{1}{\min} \times 12\,s \times \frac{1\,\min}{60\,s} \times |210{,}14|^8 + 172\,\frac{1}{\min} \times 8\,s \times \frac{1\,\min}{60\,s} \times |-1491{,}99|^8 + 86\,\frac{1}{\min} \times 8\,s \times \frac{1\,\min}{60\,s} \times |2311{,}53|^8 + 86\,\frac{1}{\min} \times 8\,s \times \frac{1\,\min}{60\,s} \times |-1491{,}99|^8}{86\,\frac{1}{\min} \times 8\,s \times \frac{1\,\min}{60\,s} + 172\,\frac{1}{\min} \times 12\,s \times \frac{1\,\min}{60\,s} + 86\,\frac{1}{\min} \times 8\,s \times \frac{1\,\min}{60\,s} + 86\,\frac{1}{\min} \times 8\,s \times \frac{1\,\min}{60\,s} + 86\,\frac{1}{\min} \times 8\,s \times \frac{1\,\min}{60\,s}}}$$

$$M_{a\,eff} = 1987{,}42\ Nm$$

Selection criterion:

$M_{a\,eff} \leq M_{a\,max}$

1984.11 Nm ≤ 2000 Nm

The condition is fulfilled.

Load torques in travel sections 1 to 3

Travel section 1

$$M_{e\,max1} = \frac{M_{max}}{i \times \eta_G}$$

$$M_{e\,max1} = \frac{2311{,}53\ Nm}{12{,}56 \times 0{,}96}$$

$$M_{e\,max1} = 191{,}71\ Nm$$

Travel section 2

$$M_{e\,max2} = \frac{M_{stat}}{i \times \eta_G}$$

$$M_{e\,max2} = \frac{210{,}14\ Nm}{12{,}56 \times 0{,}96}$$

$$M_{e\,max2} = 17{,}43\ Nm$$

Travel section 3

$$M_{e\,max3} = \frac{M_{max}}{i \times \eta_G}$$

$$M_{e\,max3} = \frac{-1491{,}99\ Nm}{12{,}56 \times 0{,}96}$$

$$M_{e\,max3} = -123{,}74\ Nm$$

Travel section 4 $M_{e\,max4} = M_{e\,max1}$

$M_{e\,max4} = 191.71$ Nm

Travel section 5 $M_{e\,max5} = M_{e\,max3}$

$M_{e\,max5} = -123.74$ Nm

Motor selection Preliminary determination of motor using torque M_{pk} and M_N.

$$M_N = \sqrt{\frac{t_1 \times M_1 + ... + t_n \times M_n}{t_{ges}}}$$

$$M_N = \sqrt{\frac{8\,s \times (191{,}71\ Nm)^2 + 12\,s \times (17{,}43\ Nm)^2 + 8\,s \times (-123{,}74\ Nm)^2 + 8\,s \times (191{,}71\ Nm)^2 + 8\,s \times (-123{,}74\ Nm)^2}{\frac{44\,s}{0{,}6}}}$$

$$M_N = 106{,}81\,Nm$$

M_{eff} = 106.81 Nm + dynamic share

n_N	Motor type	M_N Nm	I_N A	M_{pk} Dyn1 Nm	M_{pk} Dyn2 Nm	m kg	J_{Mot} 10^{-4} kgm²
2100	DRL71S4	2.6	2	5	8.5	8.6	4.9
	DRL71M4	3.8	2.7	7	14	10	7.1
	DRL80S	6.2	3.59	10	25	11.5	14.9
	DRL80M4	9.5	5	14	30	15.2	21.5
	DRL90L4	15	8.4	25	46	22.5	43.5
	DRL100L4	25	14	40	85	30	68
	DRL132S4	41	21.4	80	150	45.5	190
	DRL132MC4	52	28.8	130	200	65	340
	DRL160M4	85	44	165	280	93	450
	DRL160MC4	88	48	185	320	95	590
	DRL180S	110	55.3	210	380	122	900
	DRL180M4	130	64	250	430	143	1110
	DRL180L4	160	78	320	520	154	1300
	DRL180LC4	170	87	420	600	163	1680
	DRL200L	195	99	475	680	260	2360
	DRL225S4	235	119	520	770	295	2930
	DRL225MC4	265	142	770	1100	330	4330

Selected motor:

DRL180 M4

M_{pk} = 250 Nm / 430 Nm (D1 / D2)

J_{Mot} = 0.111 kgm²

J_{brake} = 0.023 kgm² (BE32)

Determining the inertia ratio "k"

$$J_{ext} = 91{,}2 \times m \times \left(\frac{v_{max}}{n_{max}}\right)^2$$

$$J_{ext} = 91{,}2 \times 17000\ kg \times \left(\frac{240\ \frac{m}{min} \times \frac{min}{60\ s}}{2157\ \frac{1}{min}}\right)^2$$

$$J_{ext} = 5{,}332\ kgm^2$$

J_{ext} is the mass moment of inertia in relation to the motor shaft.

$$k = \frac{J_{ext}}{J_{Mot} + J_{Bremse} + J_G}$$

$$k = \frac{5{,}332\ kgm^2}{0{,}111\ kgm^2 + 0{,}023\ kgm^2 + 0{,}0042\ kgm^2}$$

$$k = 38{,}6$$

Selection criterion:

k ≤ 50 (mass inertia ratio)

38.6 ≤ 50

The condition is fulfilled.

Intrinsic motor acceleration or deceleration in travel sections 1, 3, 4, 5

$$M_{Eigen} = \left(J_G + J_{Mot} + J_{Bremse}\right) \times \frac{n_{max}}{9{,}55 \times t}$$

$$M_{Eigen} = \left(0{,}0042\ kgm^2 + 0{,}111\ kgm^2 + 0{,}023\ kgm^2\right) \times \frac{2157\ \frac{1}{min}}{9{,}55 \times 8\ s}$$

$$M_{Eigen} = 3{,}9\ Nm$$

Maximum motor torques in travel sections 1 to 5

Travel sections 1, 4

$$M_{t1} = M_{e\,max1} + M_{Eigen}$$

$$M_{t1} = 191{,}71\ Nm + 3{,}9\ Nm$$

$$M_{t1} = 195{,}61\ Nm$$

Travel section 2

$$M_{t2} = M_{e\,max2}$$

$$M_{t2} = 17{,}43\ Nm$$

Travel sections 3, 5

$$M_{t3} = M_{e\,max3} + M_{Eigen}$$

$$M_{t3} = -123{,}74\ Nm + 3{,}9\ Nm$$

$$M_{t3} = -119{,}84\ Nm$$

Effective motor torque

$$M_{eff} = \sqrt{\frac{1}{t_z} \times \left(M_{t1}^2 \times t_1 + ... + M_{tn}^2 \times t_n \right)}$$

$$M_{eff} = \sqrt{\frac{1}{73{,}3\ s} \times \left((196\ Nm)^2 \times 8\ s + (17{,}5\ Nm)^2 \times 12\ s + (-120\ Nm)^2 \times 8\ s + (196\ Nm)^2 \times 8\ s + (-120\ Nm)^2 \times 8\ s \right)}$$

$$M_{eff} = 111{,}12\ Nm$$

Effective motor speed

$$n_{eff} < n_{max} \times 0{,}6$$

$$n_{eff} < 2157\ \frac{1}{min} \times 0{,}6$$

$$n_{eff} < 1294\ \frac{1}{min}$$

Limit characteristic curves DRL – MOVIAXIS®, DC link voltage $V_{DC\ link}$ = 565 V, PWM = 8 kHz

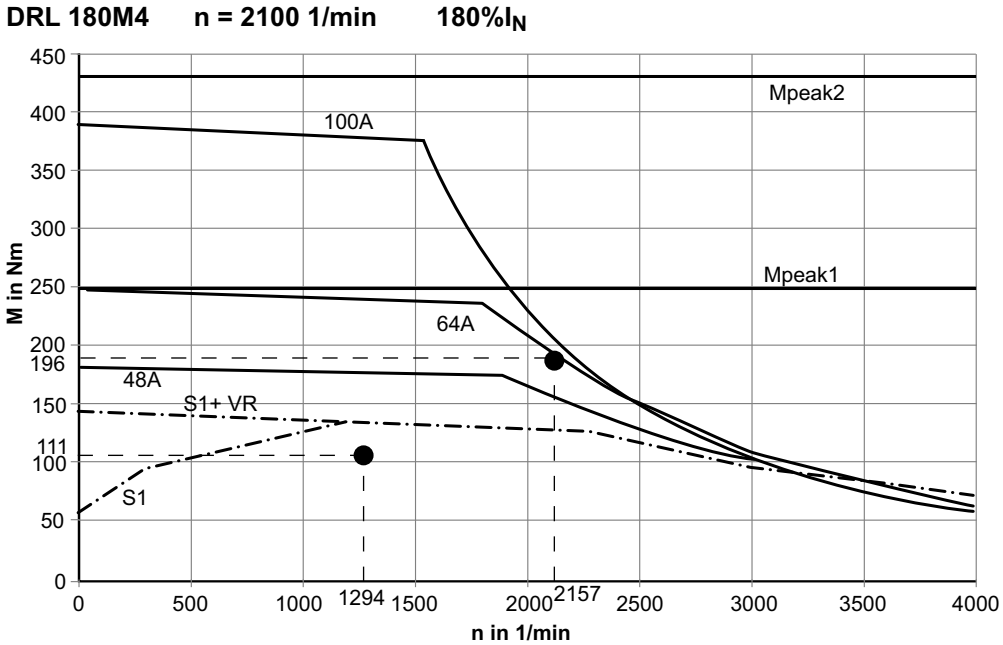

n_{eff}	=	1294 rpm	M_{eff}	=	111.12 Nm
n_{max}	=	2157 rpm	M_{max}	=	195.61 Nm

Condition: The operating point (n_{eff}, M_{eff}) must lie below the S1 characteristic curve.
The maximum operating point (n_{max}, M_{max}) is required for selecting the inverter.

Inverter selection

You find information on inverter selection in the MOVIAXIS® and MOVIDRIVE® system manuals.

Selecting the braking resistor

Peak braking power in travel sections 3 and 5

$$P_{Br_pk} = \frac{M_{tn} \times n_{tn} \times \eta_L}{9550}$$

$$P_{Br_pk} = \frac{198\ Nm \times 2157\ \frac{1}{\min} \times 0{,}9}{9550}$$

$$P_{Br_pk} = 40\ kW$$

Mean braking power in travel sections 3 and 5

$$P_{Br} = \frac{P_{Br_pk}}{2}$$

$$P_{Br} = \frac{40\ kW}{2}$$

$$P_{Br} = 20\ kW$$

Effective braking power in travel sections 3 and 5

$$P_{Br_eff} = \frac{P_{Br} \times (t_3 + t_5)}{t_z}$$

$$P_{Br_eff} = \frac{20\ kW \times (8\ s + 8\ s)}{44\ s}$$

$$P_{Br_eff} = 7{,}3\ kW$$

The selection of the braking resistor depends, among other factors, on which braking resistor may be connected to the respective inverter. For more information, refer to the inverters' system manuals MOVIAXIS® and MOVIDRIVE®.

You can also determine braking resistors via the "SEW Workbench".

Thermal emergency load of the brake (EMERGENCY STOP)

$$W_B = \frac{M_B}{M_B + M_L \times \eta_L} \times \frac{(J_{Mot} + J_B + J_{ext} \times \eta_L) \times n_{\max}^2}{182{,}5}$$

$$W_B = \frac{M_B}{M_B + 17{,}61\ Nm \times 0{,}9} \times \frac{\left(0{,}111\ kgm^2 + 0{,}023\ kgm^2 + 5{,}332\ kgm^2 \times 0{,}9\right) \times \left(2157\ \frac{1}{\min}\right)^2}{182{,}5}$$

$$W_B = \frac{M_B}{M_B + 15{,}85\ Nm} \times 125756\ J$$

$$W_B = \frac{M_B}{M_B + 15{,}85\ Nm} \times 125756\ J$$

$$W_B = \frac{150\ Nm}{150\ Nm + 15{,}85\ Nm} \times 125756\ J$$

$$W_B = 113738\ J$$

The brake can be selected in the following diagram by means of the value 113.74 kJ:

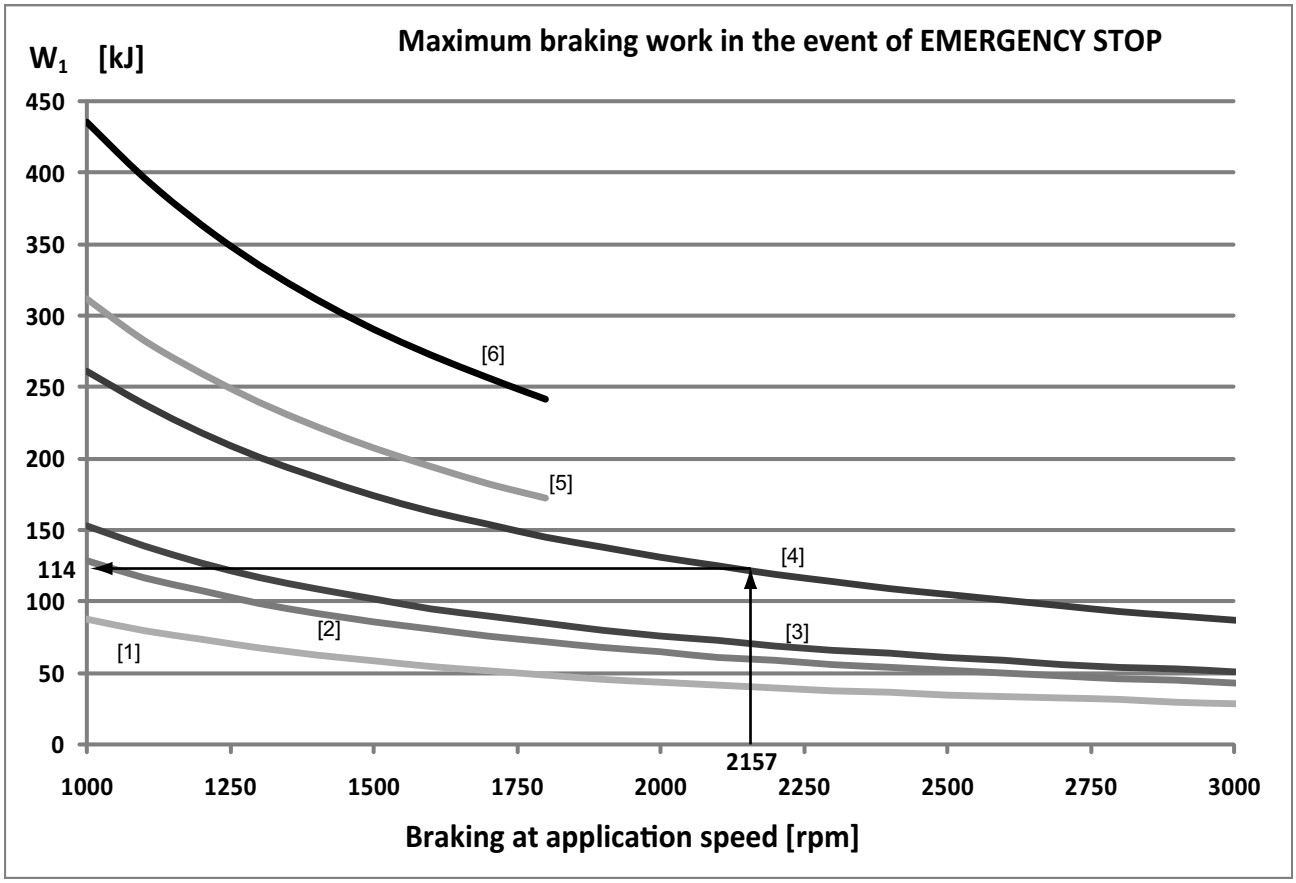

[1]	BE11	**[4]**	**BE32**
[2]	BE20	[5]	BE120
[3]	BE30	[6]	BE122
n_{max}	= 2157 rpm	W_B	= 113.74 kJ

Selected brake: BE32

Assigned braking torque: 150 Nm

Selected drive

KV87 DRL180M4 BE32

i = 12.56

M_B = 150 Nm

Checking the gear unit's braking torque

$$M_{a\,Bremse} \approx M_{Bremse} \times i$$
$$M_{a\,Bremse} \approx 150\ Nm \times 12{,}56$$
$$M_{a\,Bremse} \approx 1884\ Nm$$

Criterion:

$M_{a\ brake} < M_{amax}$

1884 Nm < 2000 Nm

The condition is fulfilled.

5 Gear Unit Mounting Positions

5.1 General information on mounting positions

SEW-EURODRIVE differentiates between six mounting positions M1 - M6 for gear units and gearmotors.

The following figure shows the position of the gear unit in mounting positions M1 - M6.

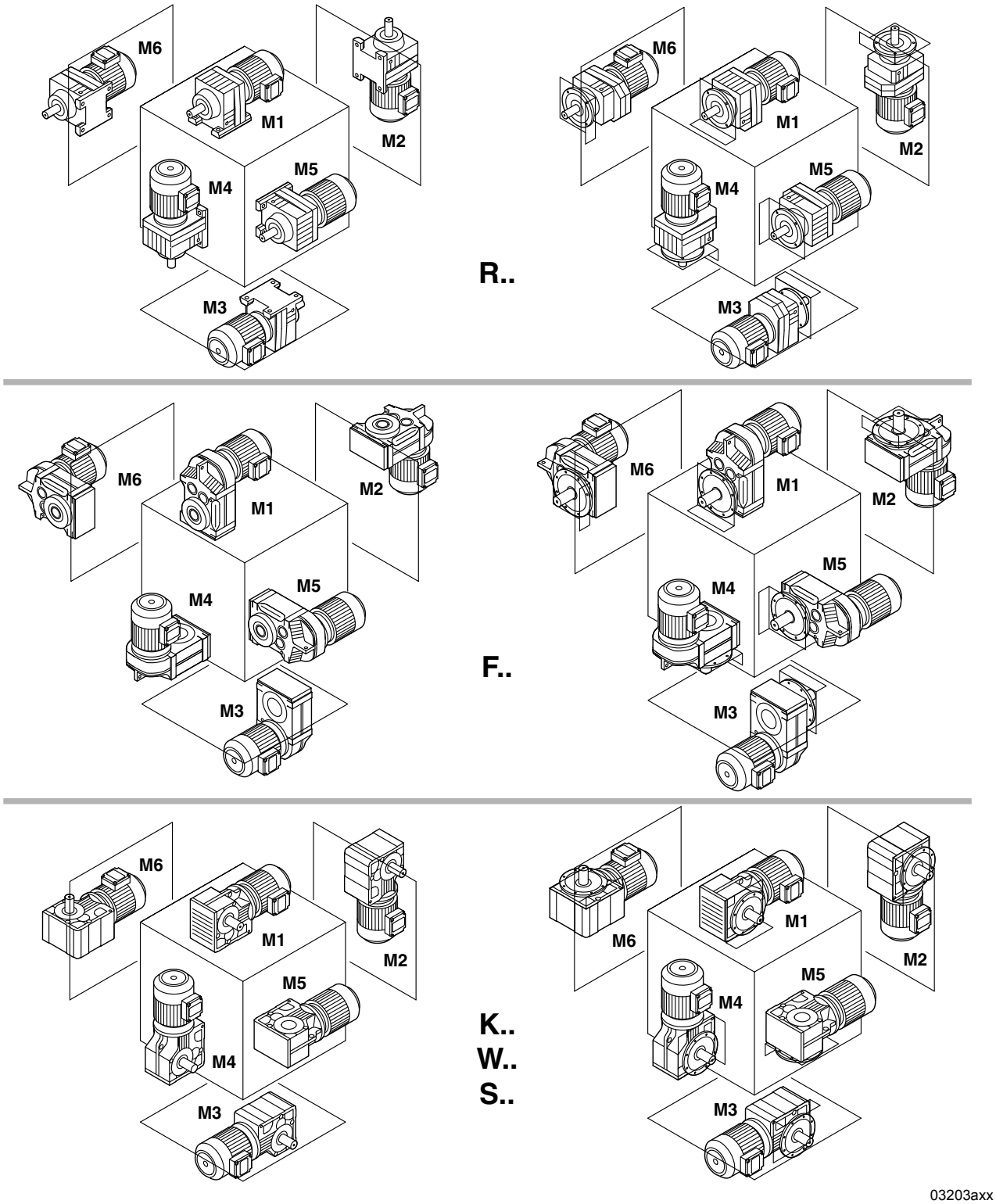

The term MX for the mounting positions stands for a product design that the customer can adjust with a few adaptations to any mounting position.

5.2 Order information for servo gearmotors/gear units

	INFORMATION
	The following order information is required for R, F, K and S gear units or gearmotors in addition to the mounting position to exactly determine the type of drive. This information is also required for SPIROPLAN® gearmotors (W gearmotors) that do not depend on a particular mounting position.

The following applies to all gear units and gearmotors

Observe the following notes for all gear units and gearmotors from SEW-EURODRIVE.

Output direction of rotation with backstop

If the drive has an RS backstop, you also have to indicate the direction of rotation of the output for the drive. The following definition applies:

As viewed at the output shaft:	Clockwise (CW)	= Rotating clockwise
	Counterclockwise (CCW)	= Rotating counterclockwise

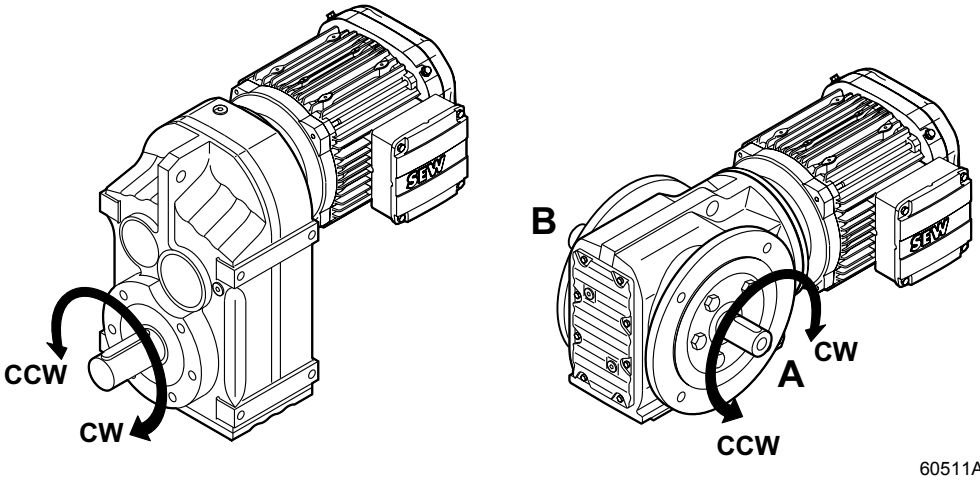

60511AXX

In right-angle gear units, you also have to indicate whether the direction of rotation is given looking onto the A or B end.

Position of the output shaft and output flange

In right-angle gear units, you also have to indicate the position of the output shaft and the output flange:

- A or B or AB

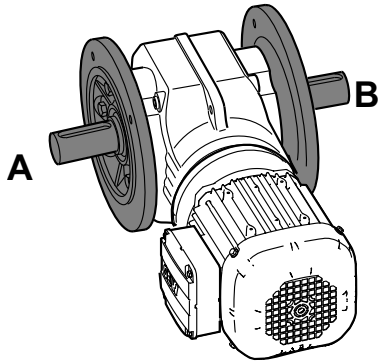

60513axx

Position of the output end in right-angle gear units

In shaft mounted right-angle gear units with a shrink disk, you also have to indicate whether the A or B end is the output end. In the following figure, the A end is the output end. The shrink disk is located opposite the output end, here on the B end.

In shaft mounted right-angle gear units, the "output end" is equivalent to the "shaft position" of right-angle gear units with solid shaft.

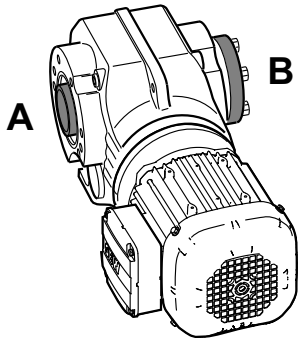

60510axx

	INFORMATION
	You find the permitted mounting surfaces (= hatched area) in the mounting position sheets (page 69 and subsequent pages). **Example:** In mounting positions M5 and M6, only the mounting surface at the bottom is possible with helical-bevel gear units K167/K187.

Changing the mounting position

It is important that you read the following information when you operate the gearmotor in a mounting position other than indicated in the order:

- Adjust the lubricant fill quantity to match the new mounting position.
- Adjust the position of the breather valve.
- For helical-bevel gearmotors: Contact the SEW-EURODRIVE customer service prior to changing to mounting position M5 or M6 and when changing from M5 to M6 or vice versa.
- For helical-worm gearmotors: Contact the SEW-EURODRIVE customer service when changing to mounting position M2 or M3.

5.3 Order information for servo gearmotors

Observe the following notes for all gearmotors from SEW-EURODRIVE.

Position of motor terminal box and cable entry

The position of the motor terminal box has so far been specified indicated with 0°, 90°, 180° or 270° as viewed onto the fan guard = B-end, see the following figure. A change in the product standard EN 60034 specifies that the following designations will have to be used for terminal box positions for foot-mounted motors in the future:

- As viewed onto the output shaft = A-end
- Designation as R (right), B (bottom), L (left) and T (top)

This new designation applies to foot-mounted motors without a gear unit in mounting position B3 (= M1). The previous designation is maintained for gearmotors. The following figure shows both designations. Where the mounting position of the motor changes, R, B, L and T are rotated accordingly. In motor mounting position B8 (= M3), T is at the bottom.

The position of the cable entry can be selected as well. The possibilities are "X" (= normal position), "1, "2" or "3".

The following figure depicts the position of the terminal box and the cable entry.

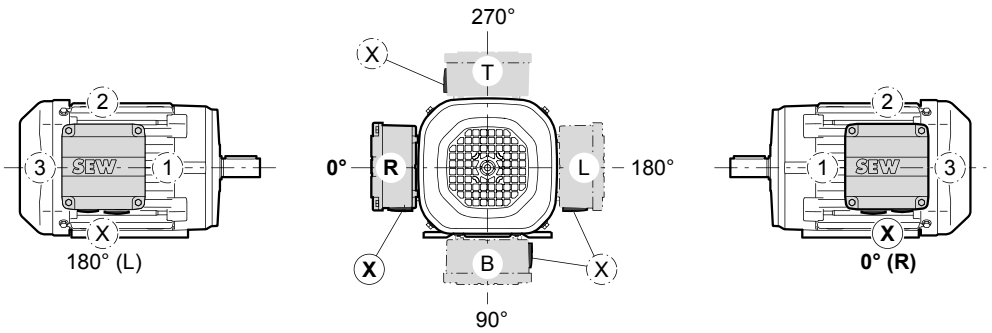

60500AXX

Unless indicated otherwise, you will receive the terminal box type 0° (R) with "X" cable entry. SEW-EURODRIVE recommends selecting cable entry "2" with mounting position M3.

	INFORMATION
	When the terminal box is in the 90° (B) position, check to see if the gearmotor has to be supported.

Software support

Not any cable entry position [X, 1, 2, 3] and terminal box position [0°(R), 90°(B), 180°(L), 270°(T)] can be chosen. Some additional features for the motor require a connection inside the terminal box, which means this terminal box is larger than the standard terminal box due to the normative air gaps and creepage distances. The dimension sheets only depict the standard terminal box.

For a thorough check of the possible positions of your drive, you can use the DRIVECAD software in DriveGate® on the SEW-EURODRIVE website.

- If you are already a registered DriveGate user®: https://portal.drivegate.biz/drivecad
- If you are not yet a registered DriveGate® user: www.sew-eurodrive.com → DriveGate® login

5.4 Key to the mounting position sheets

Symbols used

The following table shows the symbols used in the mounting position sheets and their meaning:

Symbol	Meaning
	Breather valve
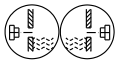	Oil level plug[1)]
	Oil drain plug
③	Cable entry position "3"

1) Does not apply to the first gear unit (larger gear unit) of multi-stage gear units

	INFORMATION
	Notes on the shafts illustrated on the mounting position sheets. Observe the following information regarding the illustrations on the mounting position sheets: • **For gear units with solid shaft:** The displayed shaft is always on the A end. • **For shaft-mounted gear units:** The shaft with dashed lines represents the customer shaft. The output end (= shaft position) is always shown on the A end.

	INFORMATION
	SPRIOPLAN® gearmotors do not depend on the mounting position, except for W..37/47 gearmotors in M4 mounting position. However, mounting positions M1 to M6 are also shown for SPIROPLAN® gear units to assist you in working with this documentation. **Important! Please note:** SPIROPLAN® gearmotors W..37 and W..47 can be equipped with breather valve, oil level plug or drain plug.

	INFORMATION
	Notes on the depicted motors. Motors are only represented symbolically on the mounting position sheets.

Churning losses

* → page XX

Churning losses may occur in some mounting positions. Contact SEW-EURODRIVE in case of the following combinations:

Mounting position	Gear unit type	Gear unit size	Input speed [rpm]
M2, M4	R	97 - 107	> 2500
		> 107	>1500
M2, M3, M4, M5, M6	F	97 - 107	> 2500
		> 107	> 1500
	K	77 - 107	> 2500
		> 107	> 1500
	S	77 - 97	> 2500

5.5 Mounting positions of helical gearmotors

RX57...RX107

04 043 02 00

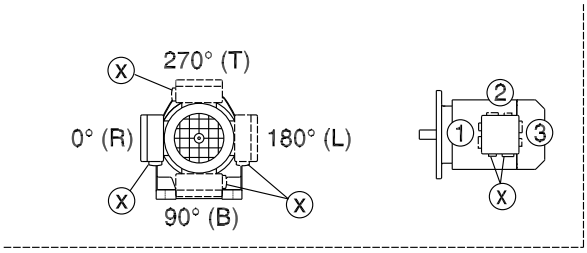

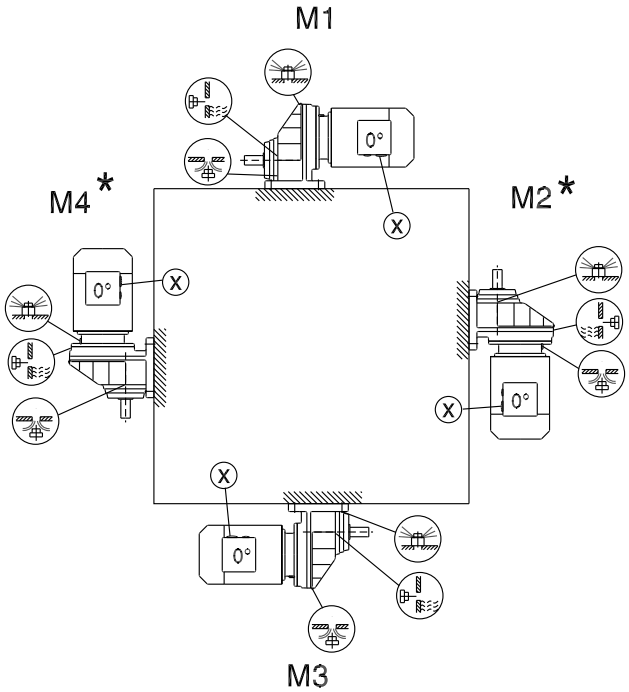

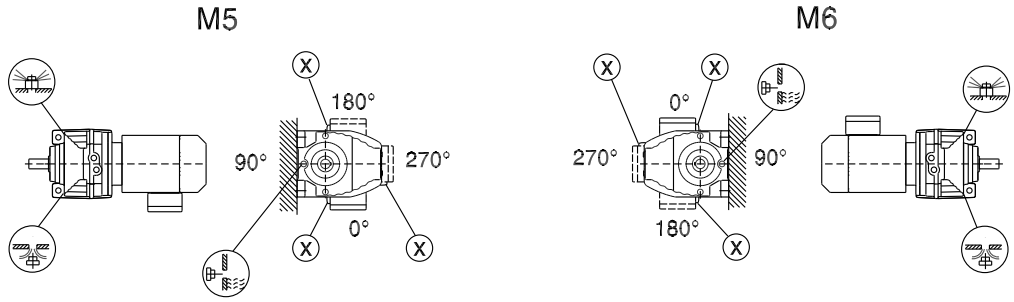

* → page 68

RXF57...RXF107

04 044 02 00

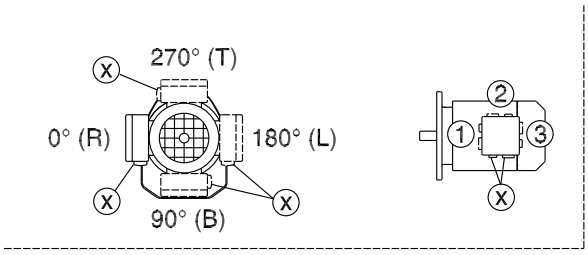

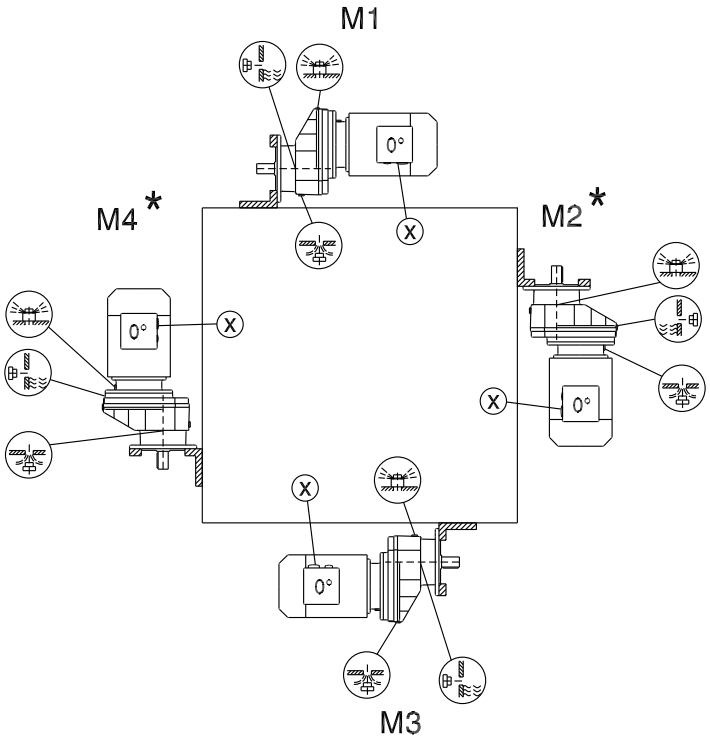

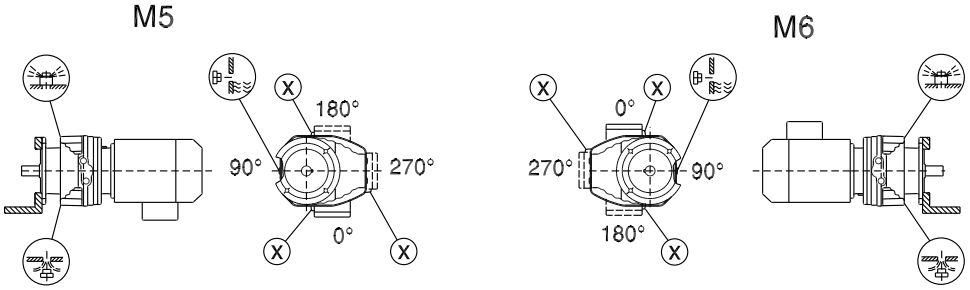

* → page 68

R07...R167

04 040 03 00

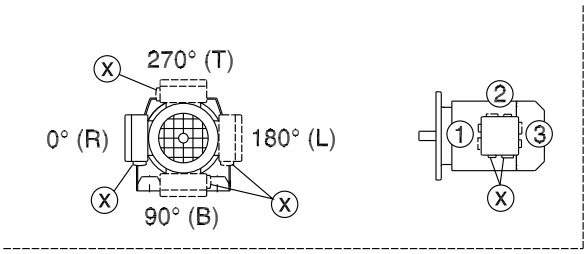

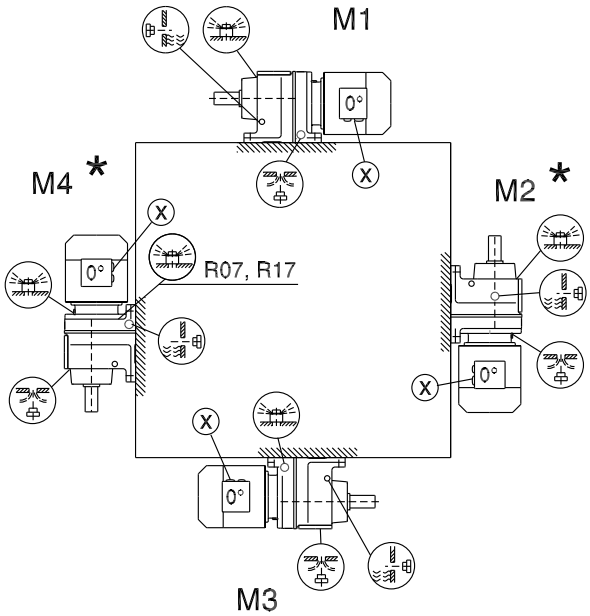

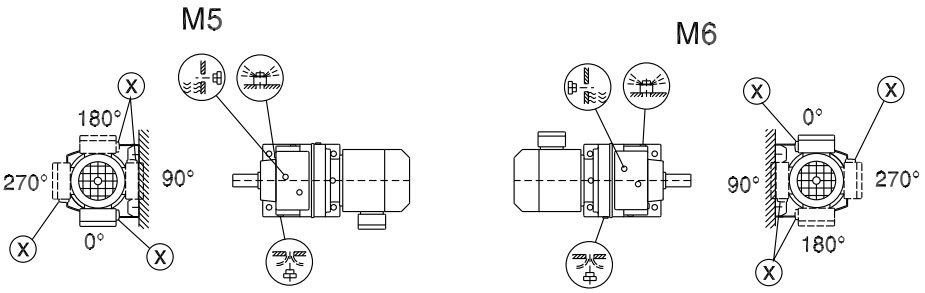

R07		M1, M2 , M3 , M5 , M6
R17, R27		M1, M3 , M5 , M6
R07, R17, R27		
R47, R57		M5

* → page 68

RF07...RF167, RZ07...RZ87

04 041 03 00

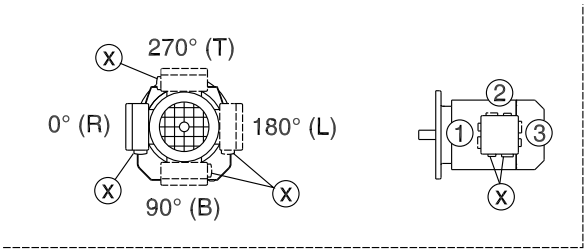

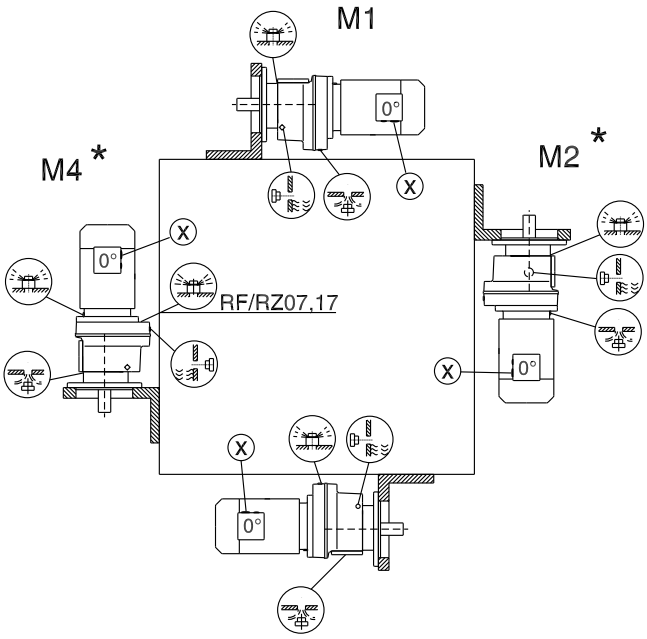

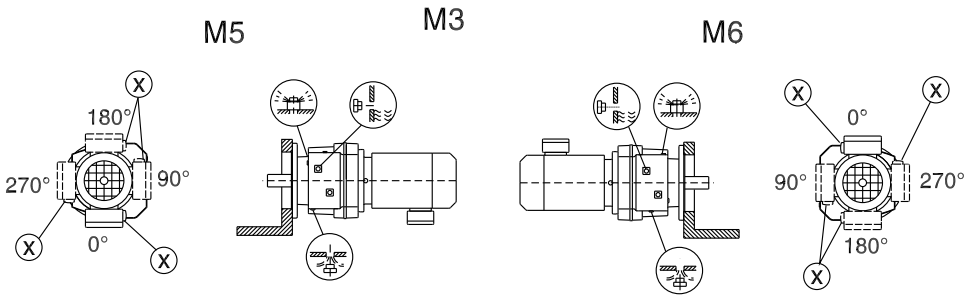

RF/RZ07		M1, M2 , M3 , M5 , M6
RF/RZ17,27		M1, M3 , M5 , M6
RF/RZ07, 17, 27		
RF/RZ47, 57		M5

* → page 68

R07F...R87F

04 042 03 00

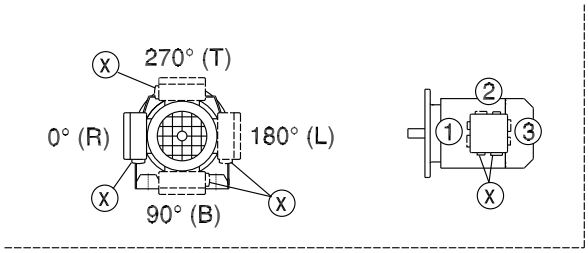

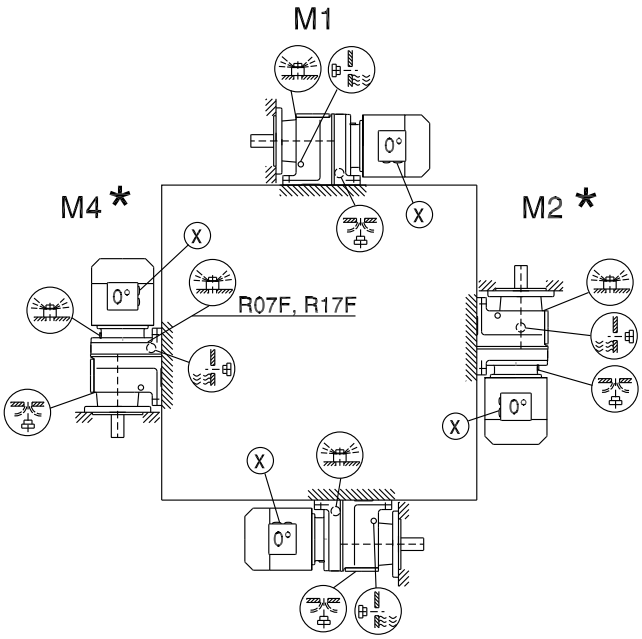

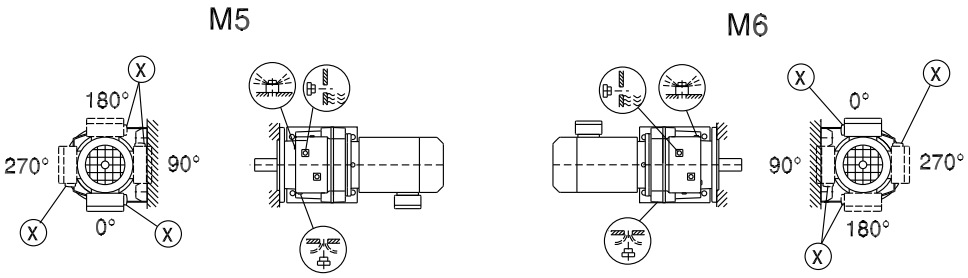

R07F		M1, M2 , M3 , M5 , M6
R17F, R27F		M1, M3 , M5 , M6
R07F, R17F, R27F		
R47F, R57F		M5

* → page 68

Important: See the ⓘ notes in section "Overhung and axial loads" on page 47.

5.6 *Mounting positions of parallel shaft helical gearmotors*

F/FA..B/FH27B...157B, FV27B...107B

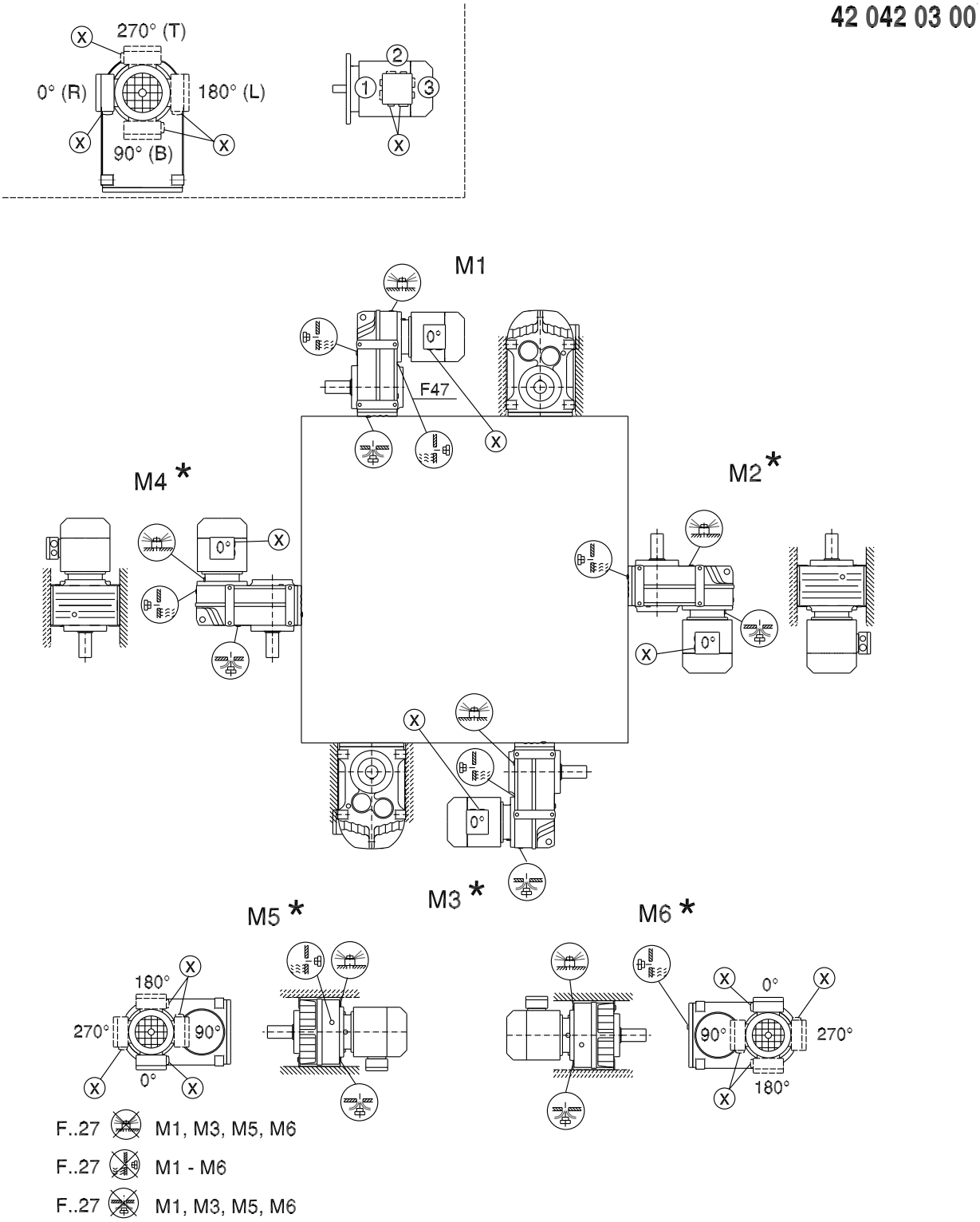

* → page 68

FF/FAF/FHF/FAZ/FHZ27...157, FVF/FVZ27...107

42 043 03 00

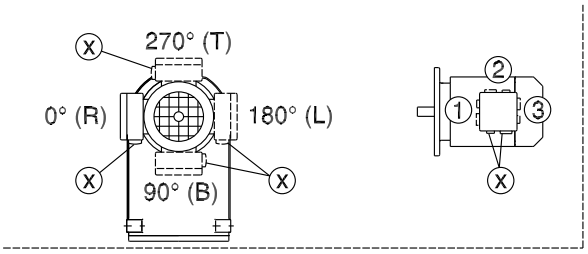

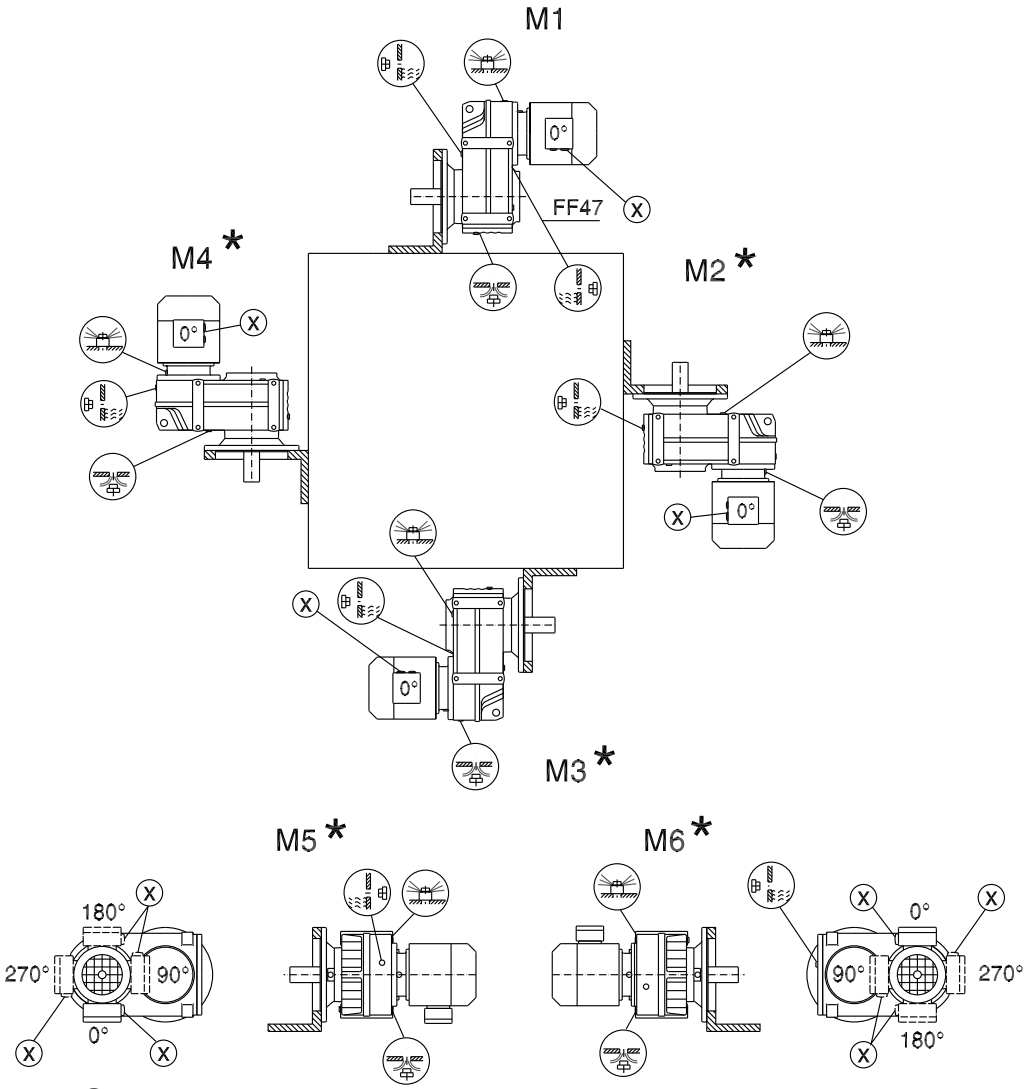

F..27 M1, M3, M5, M6

F..27 M1 - M6

F..27 M1, M3, M5, M6

* → page 68

FA/FH27...157, FV27...107, FT37...97

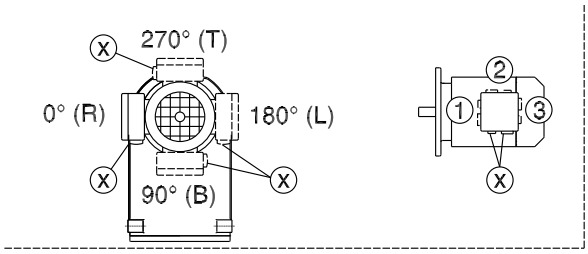

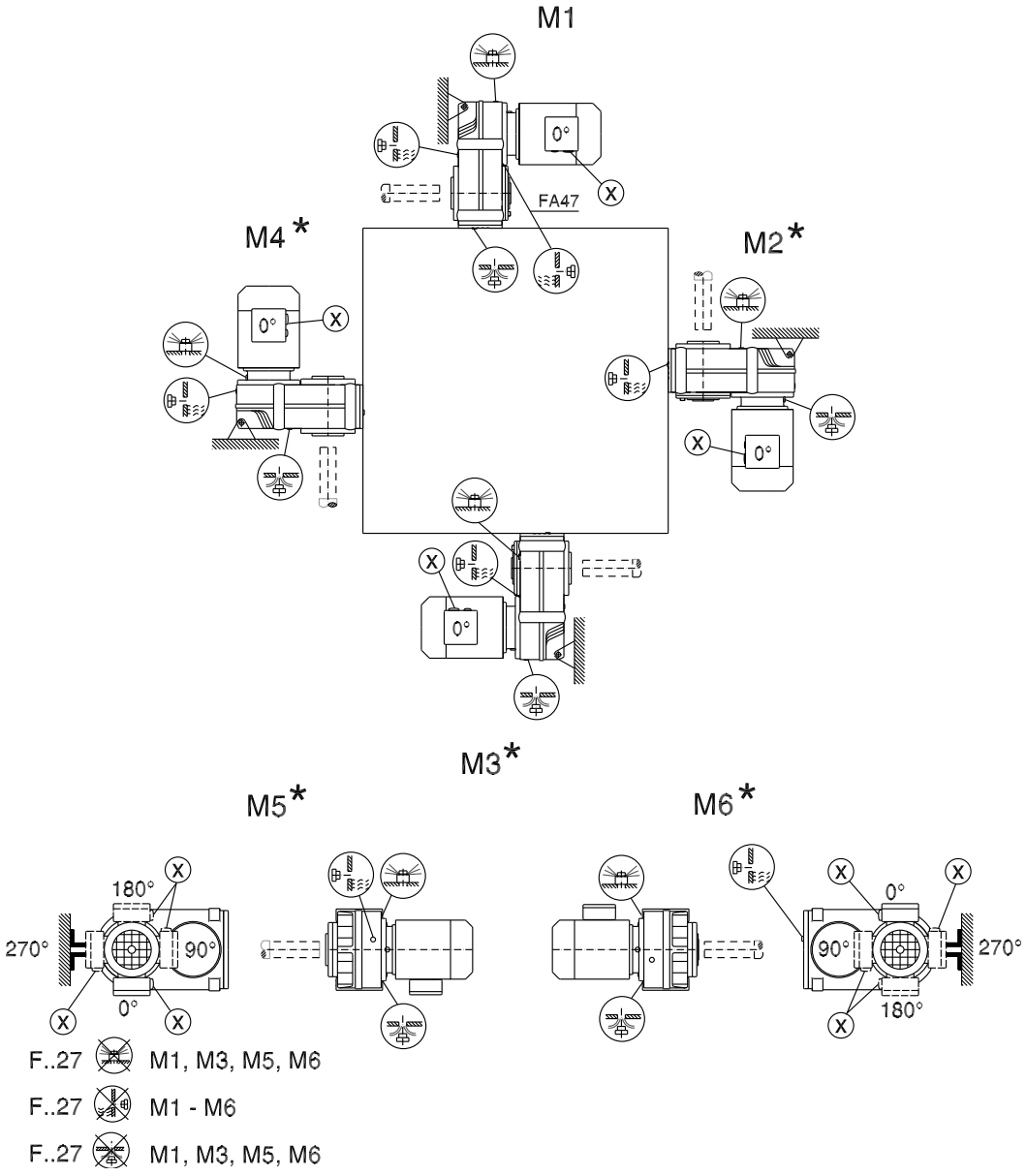

* → page 68

5.7 Mounting positions of helical-bevel gearmotors

K/KA..B/KH37B...157B, KV37B...107B

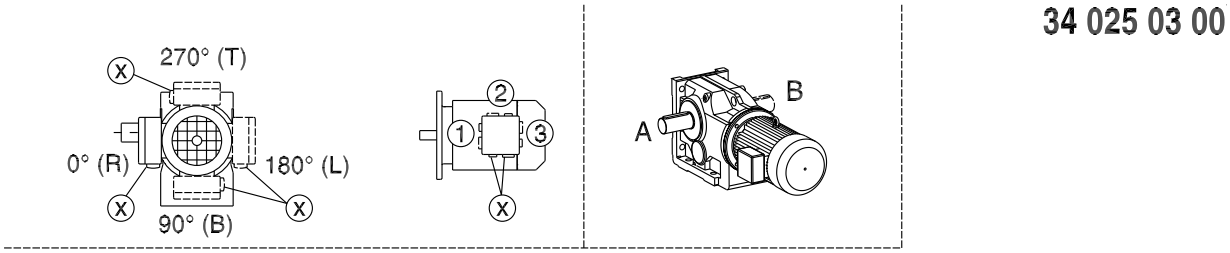

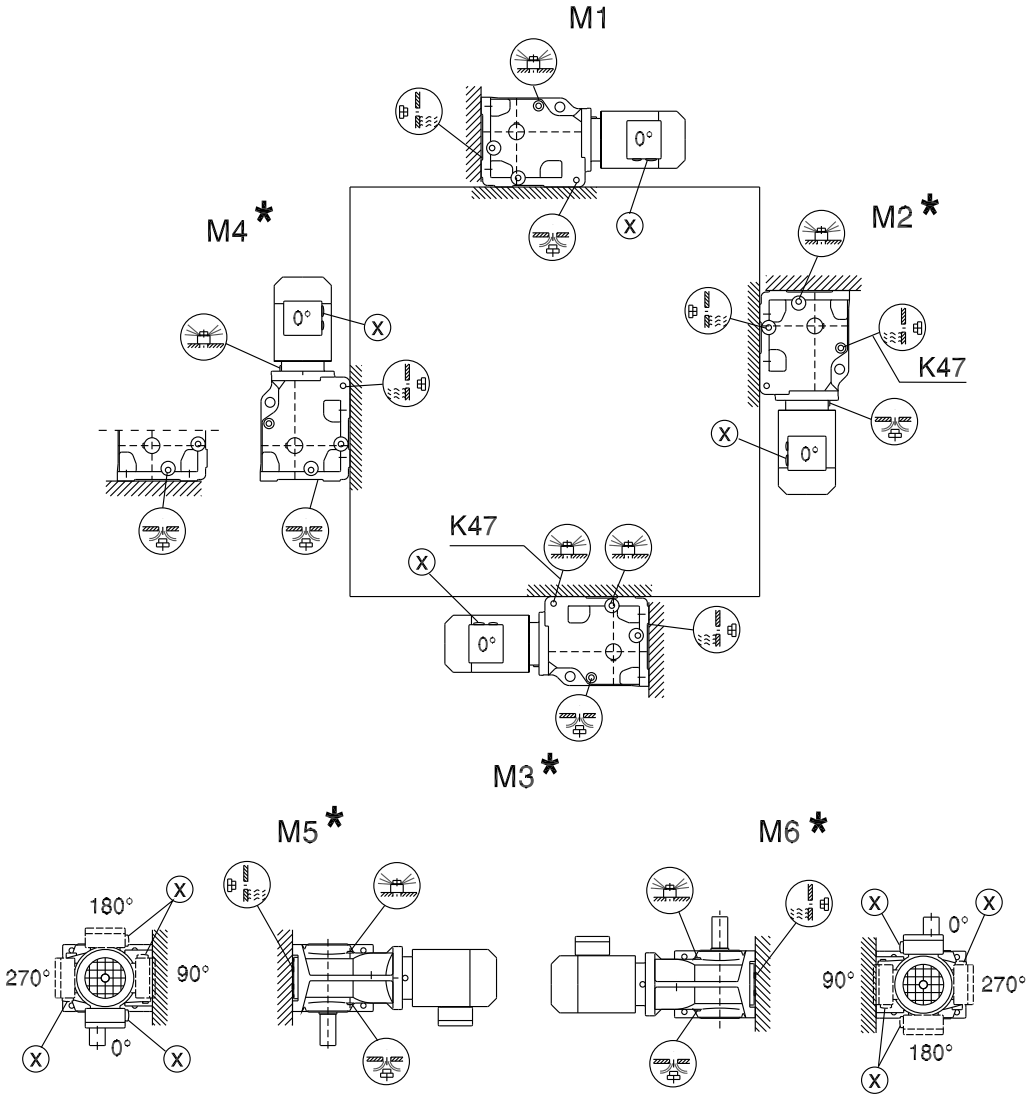

* → page 68

Important: See the ⓘ notes in section "Overhung and axial loads" on page 47.

K167...187, KH167B...187B

34 026 03 00

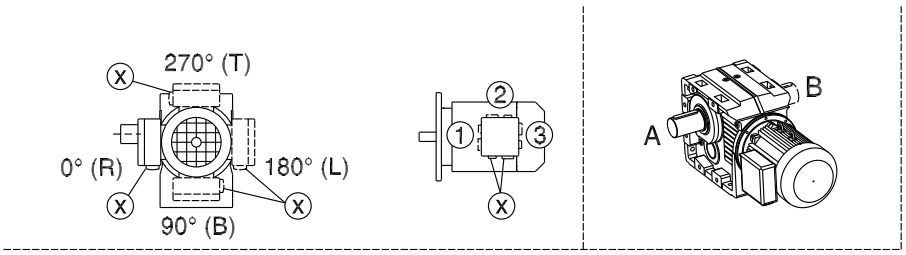

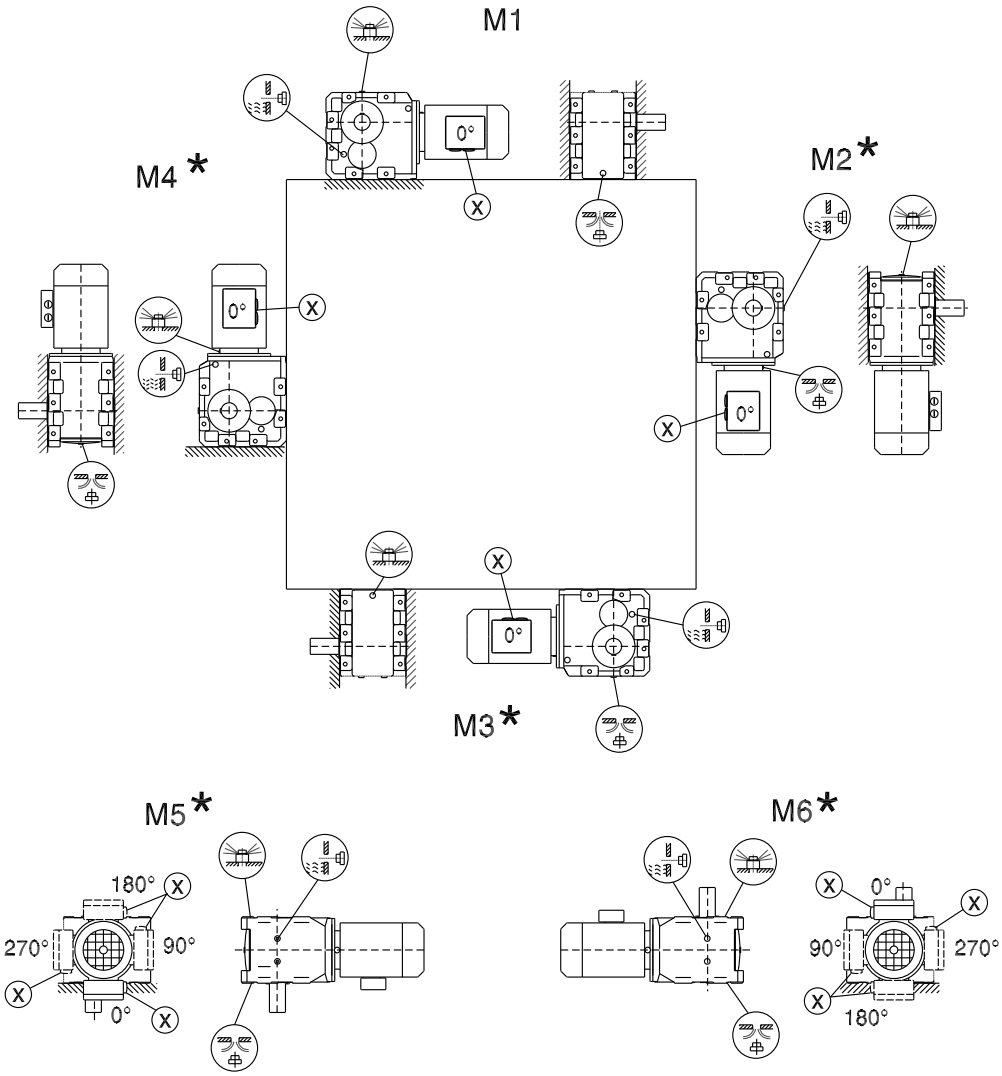

* → page 68

Important: See the ⓘ notes in section "Overhung and axial loads" on page 47.

KF/KAF/KHF/KAZ/KHZ37...157, KVF/KVZ37...107

34 027 03 00

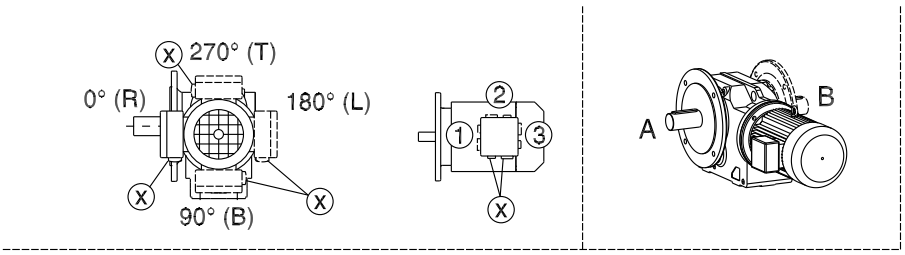

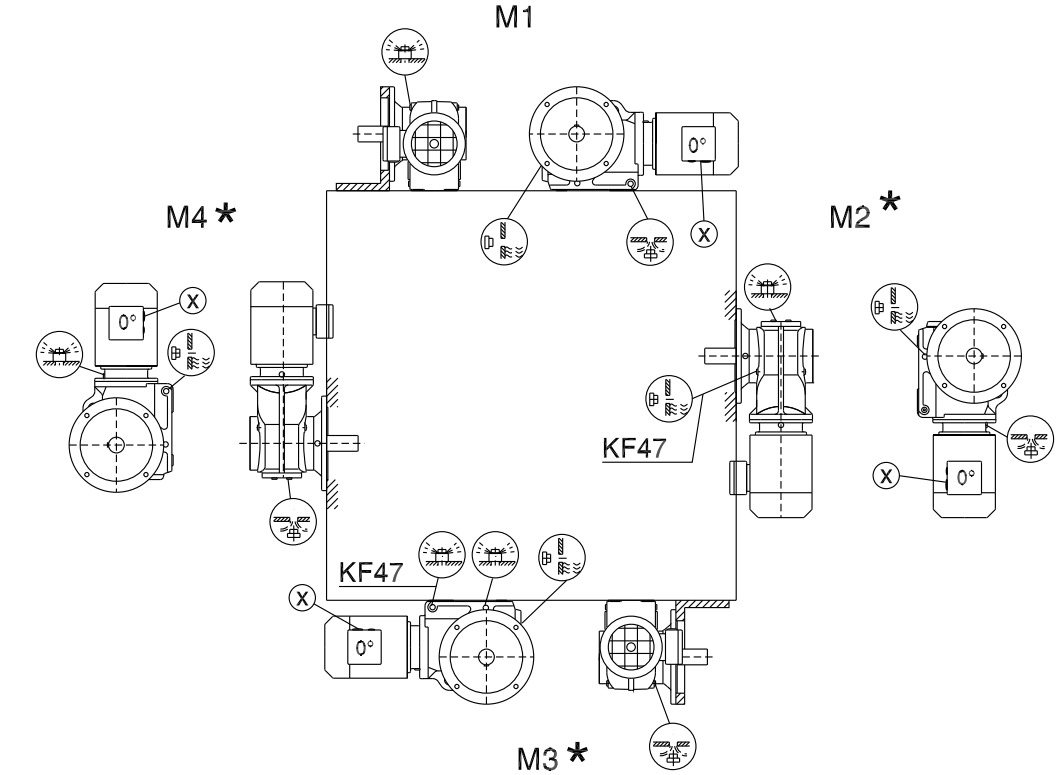

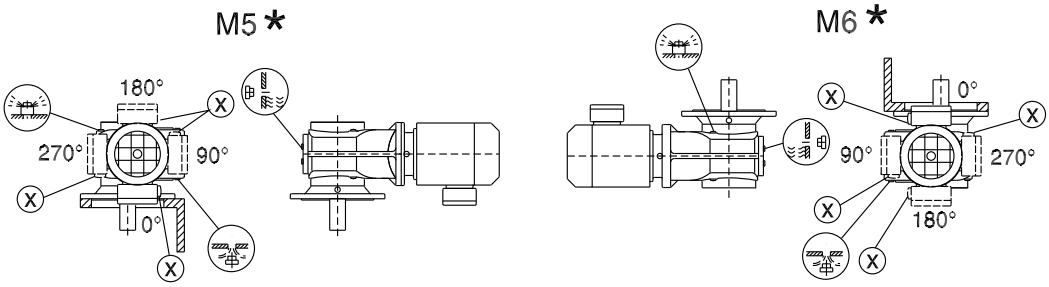

* → page 68

KA/KH37...157, KV37...107, KT37...97

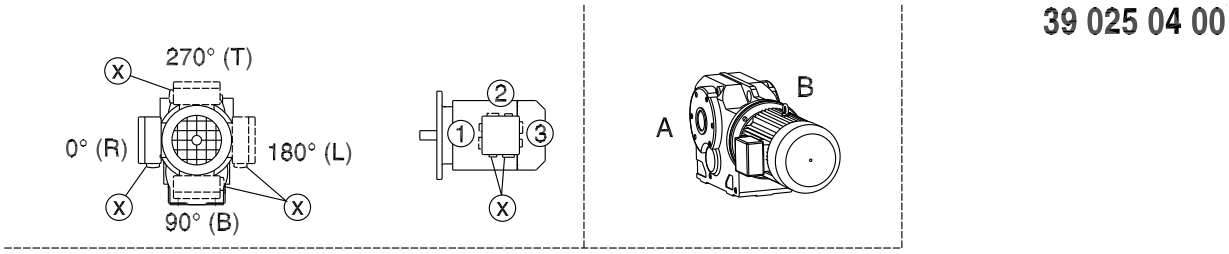

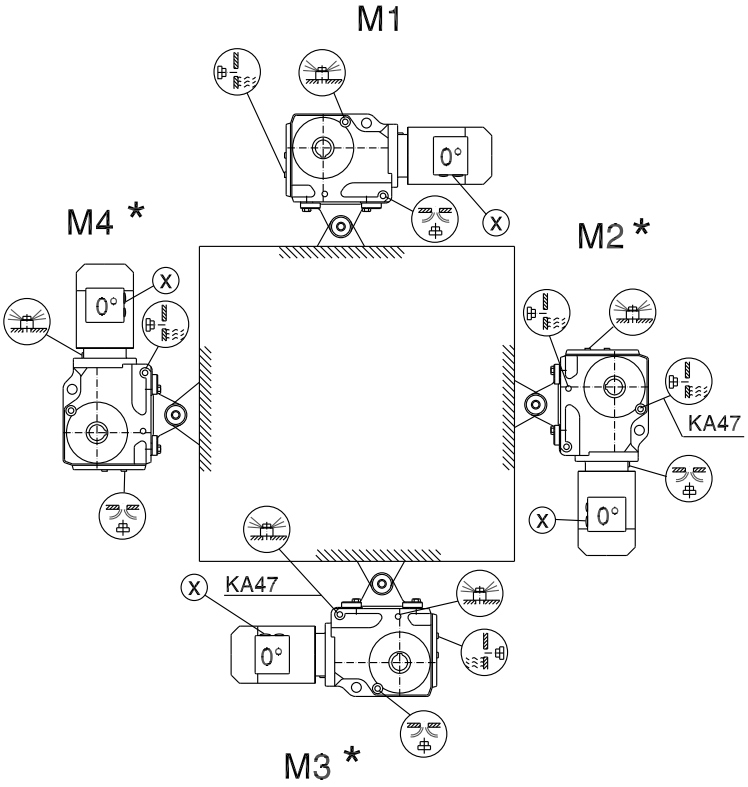

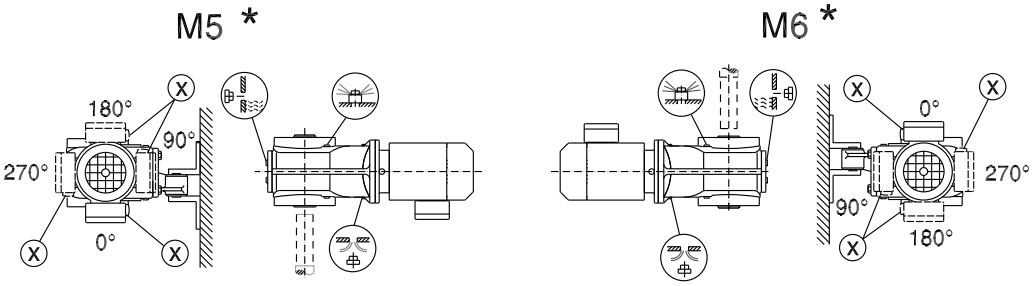

* → page 68

KH167...187

39 026 04 00

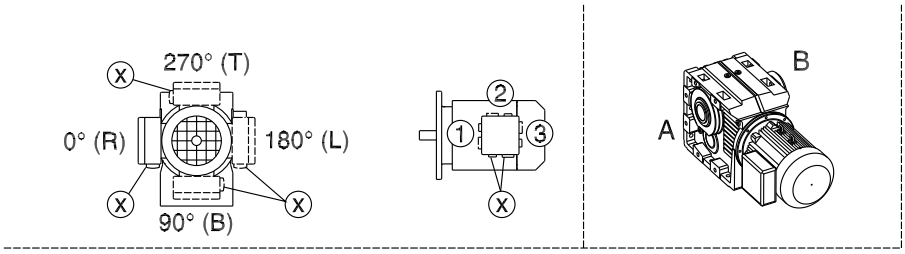

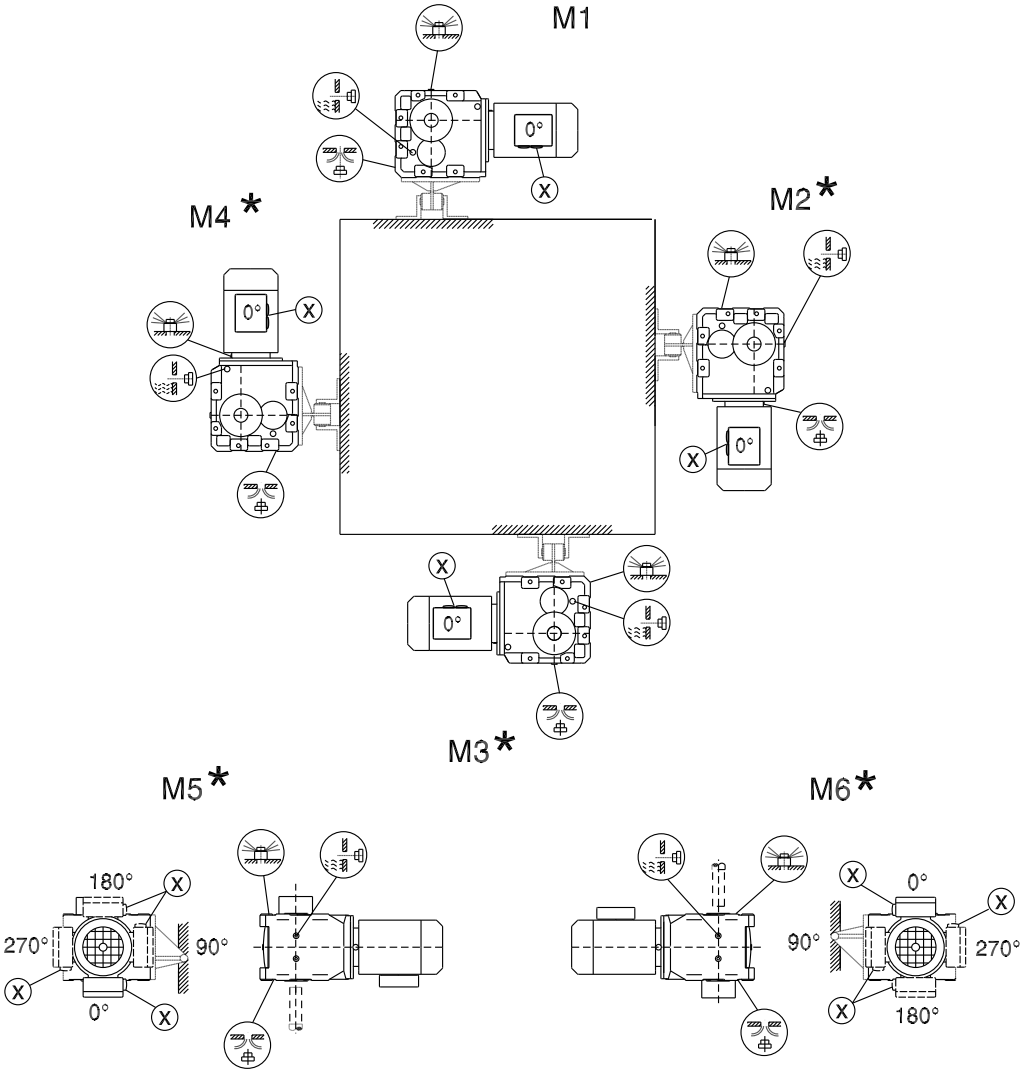

* → page 68

5.8 Mounting positions of helical-worm gearmotors

S37

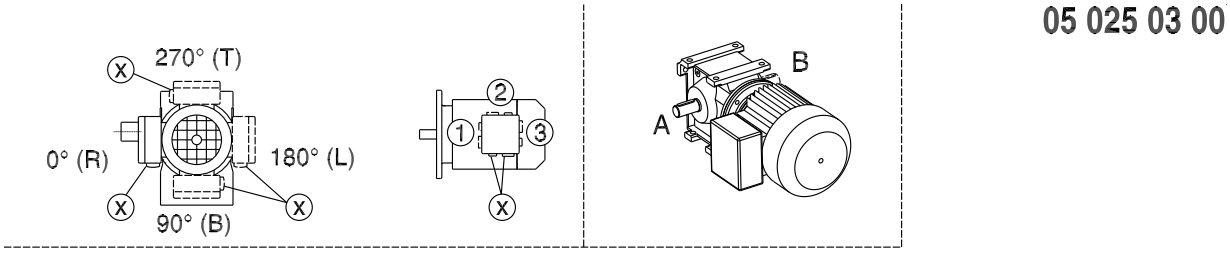

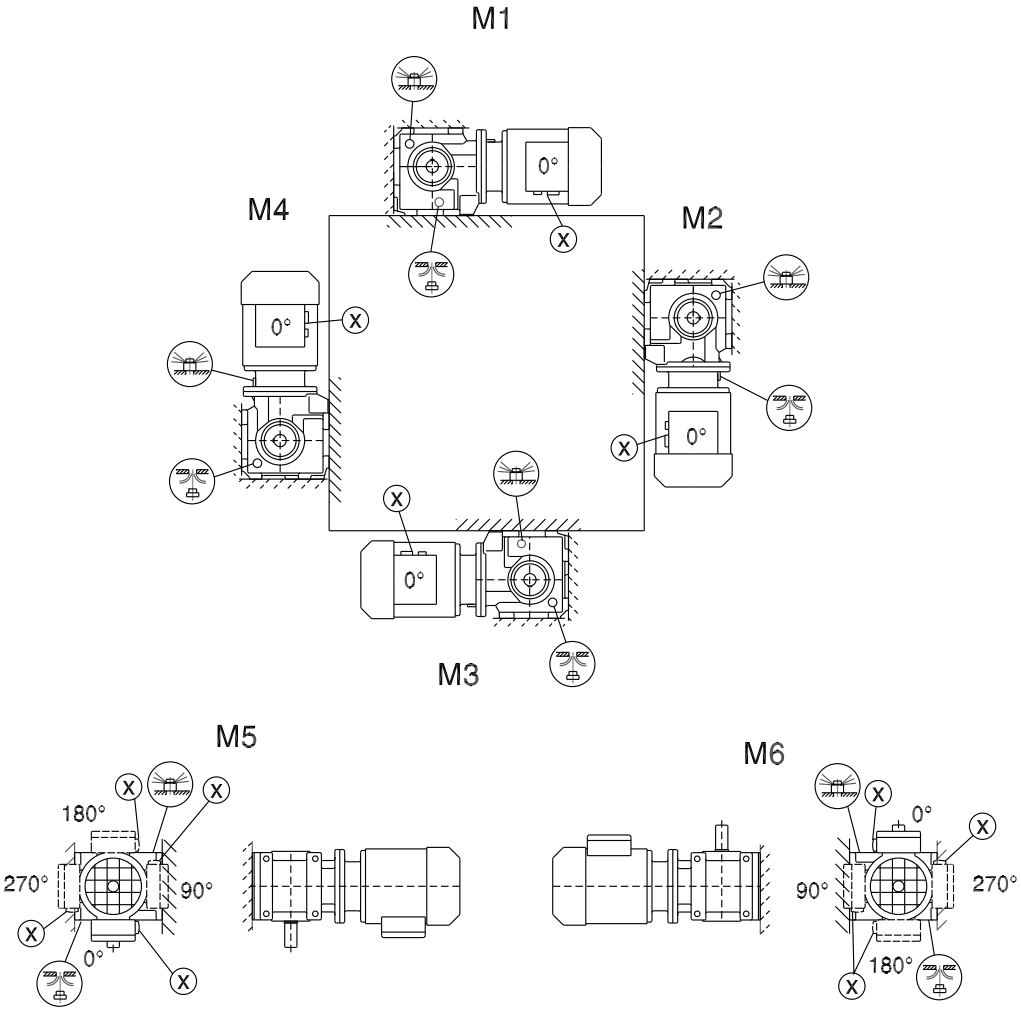

* → page 68

Important: See the ⓘ notes in section "Overhung and axial loads" on page 47.

S47...S97

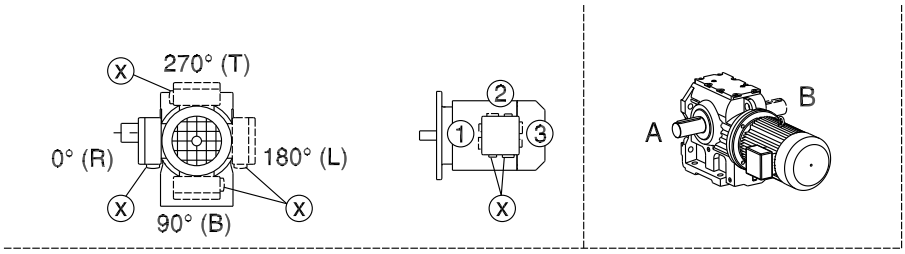

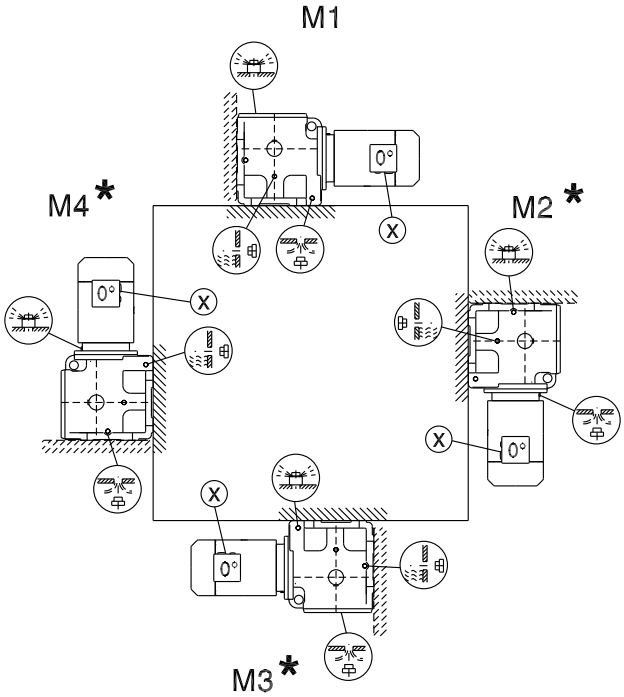

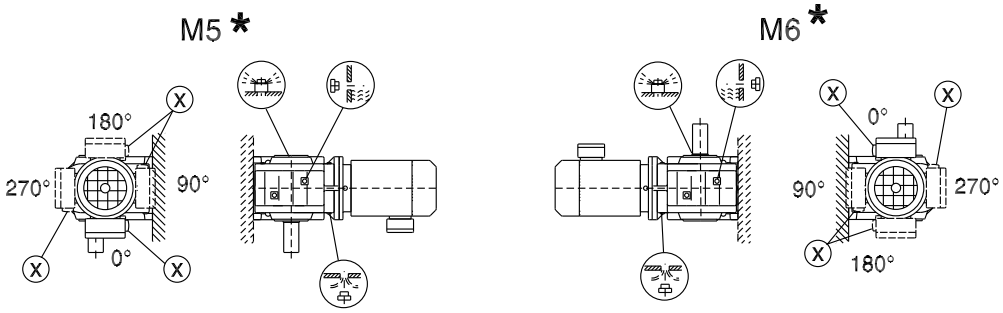

* → page 68

Important: See the ⓘ notes in section "Overhung and axial loads" on page 47.

SF/SAF/SHF37

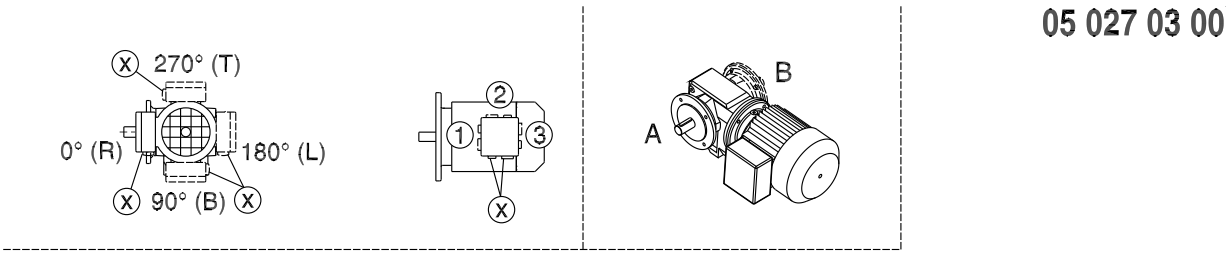

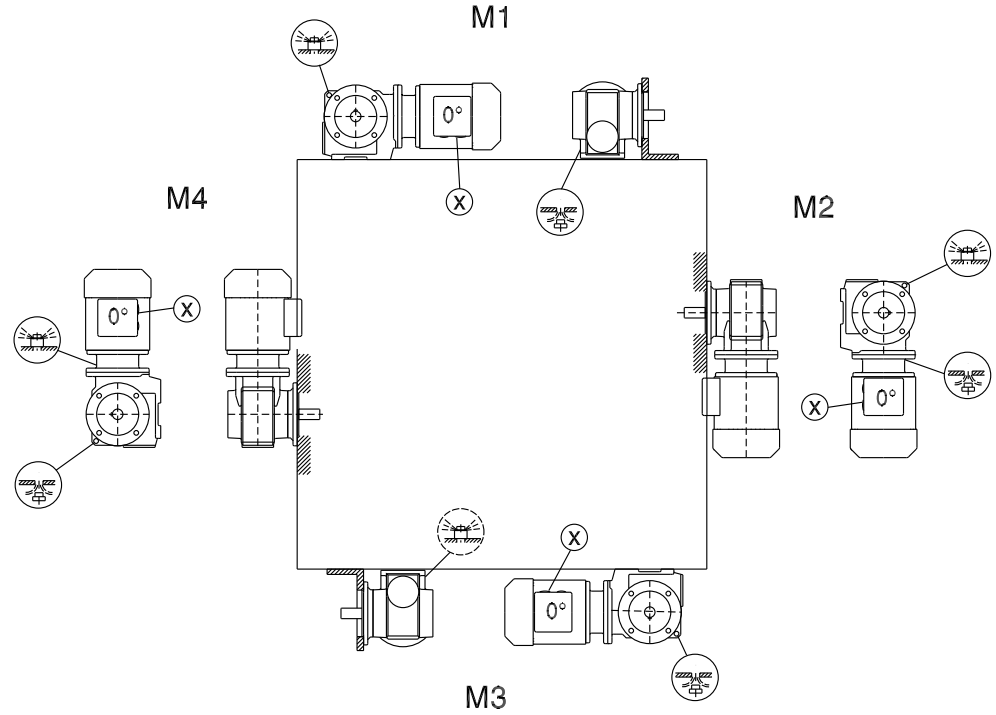

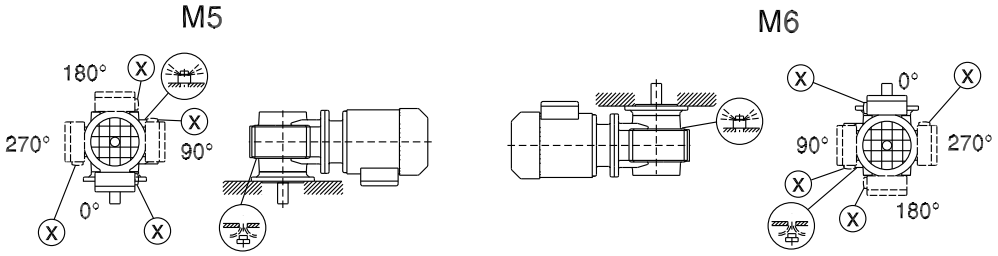

* → page 68

SF/SAF/SHF/SAZ/SHZ47...97

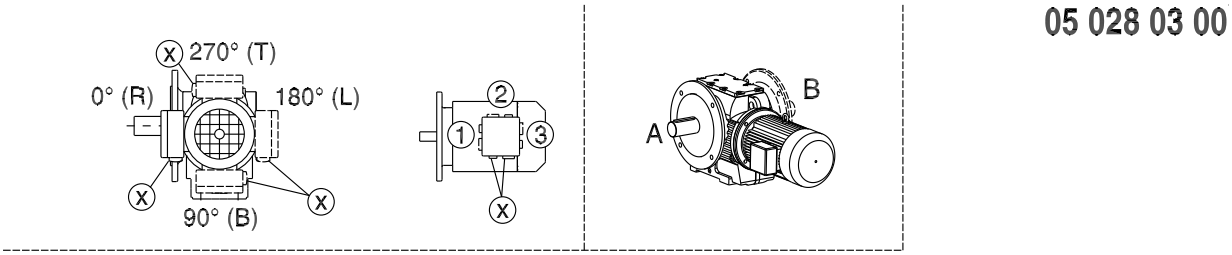

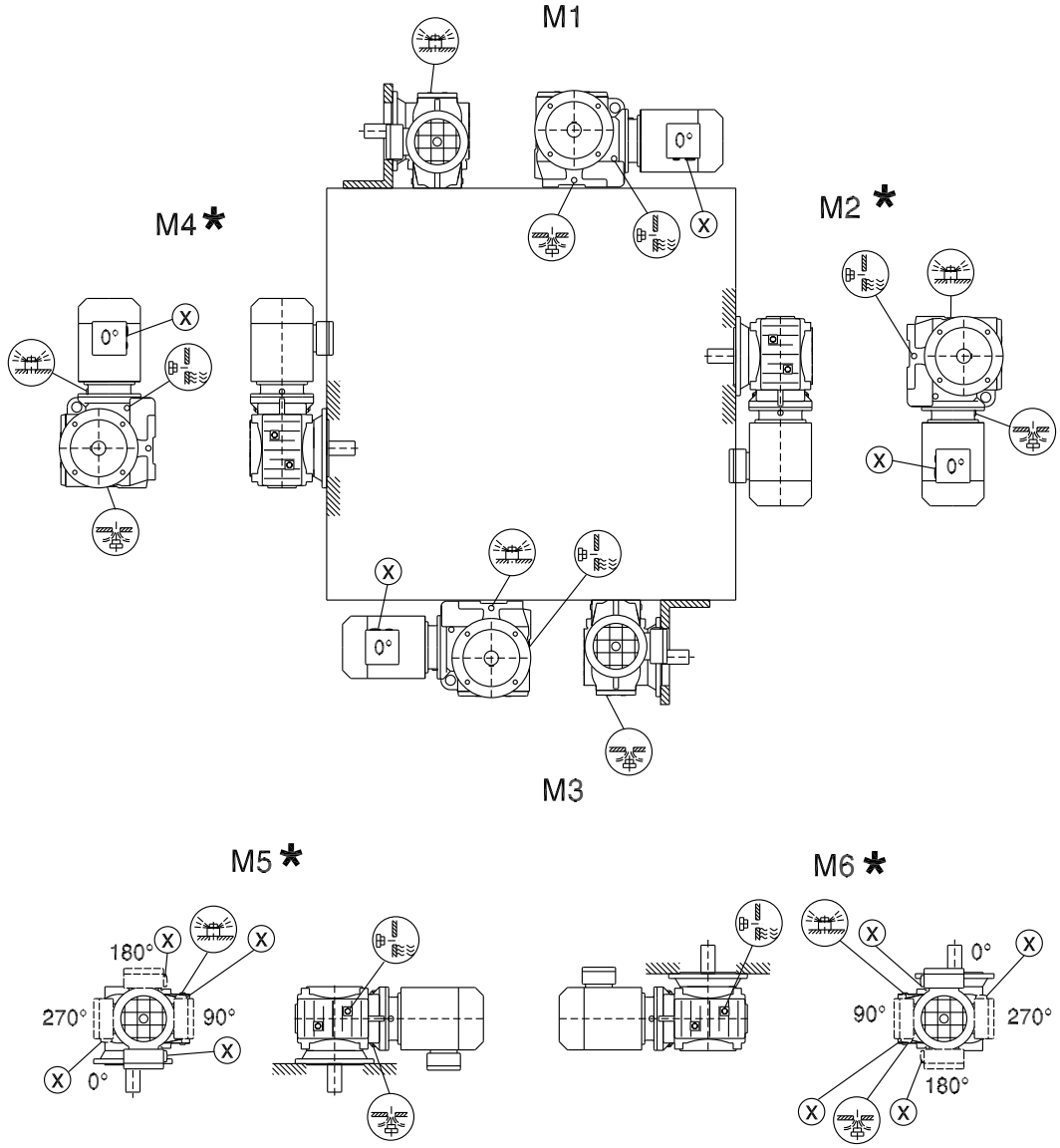

* → page 68

SA/SH/ST37

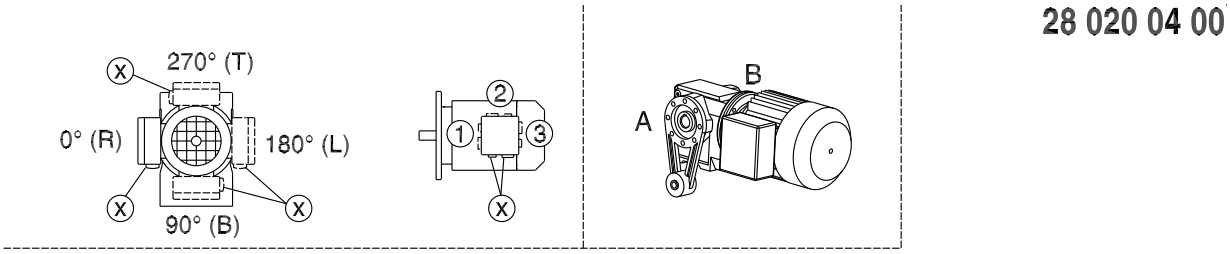

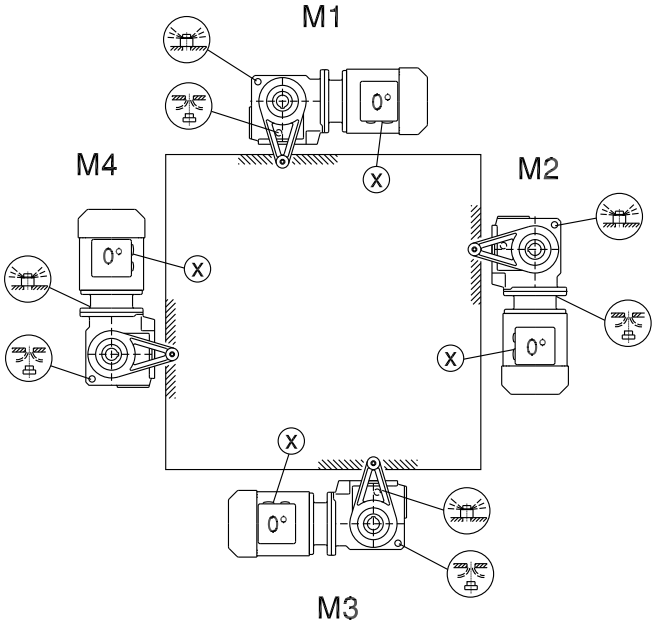

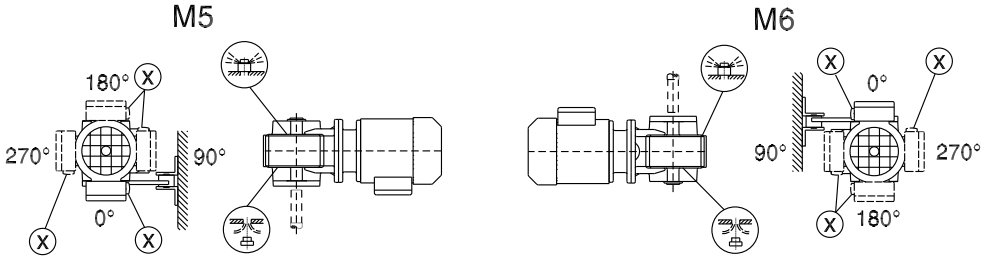

* → page 68

SA/SH/ST47...97

28 021 03 00

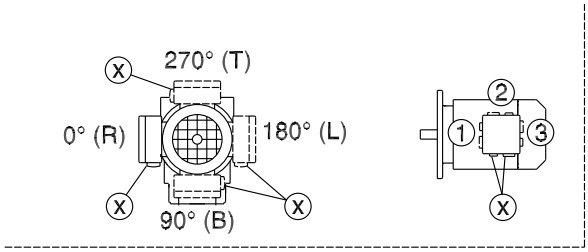

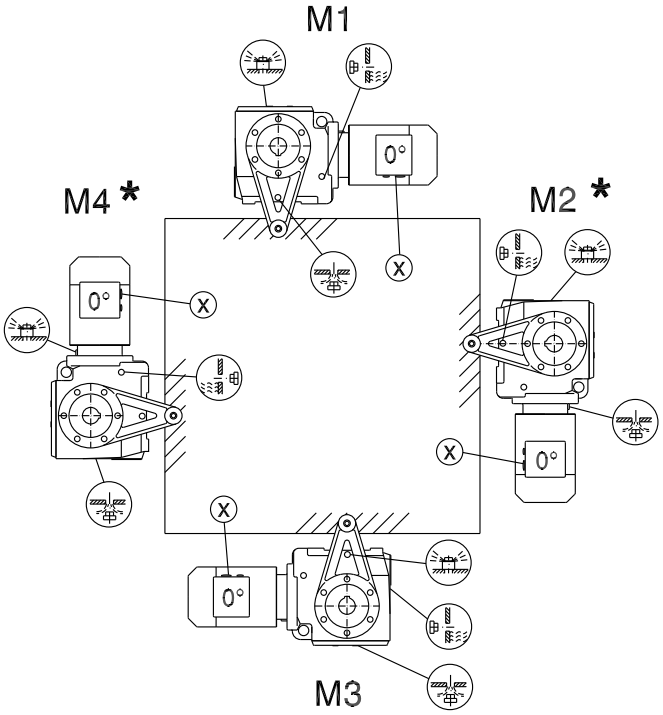

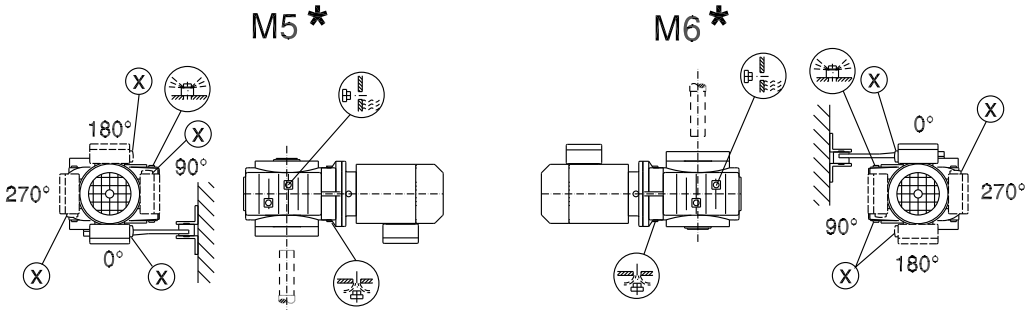

* → page 68

5.9 Mounting positions of SPIROPLAN® gearmotors

W/WA37-47B/WH37-47B

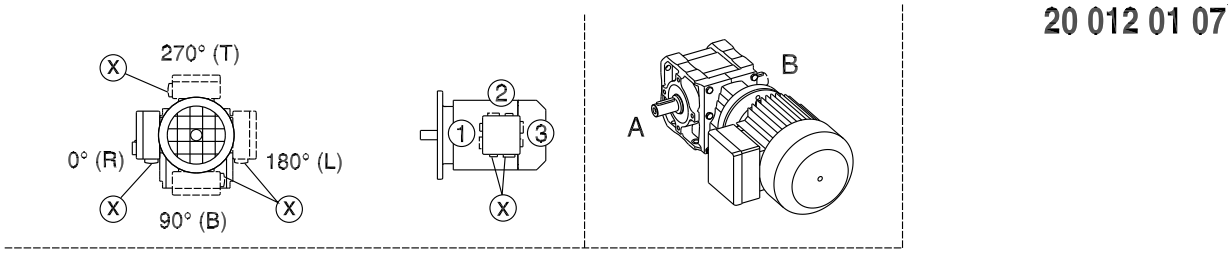

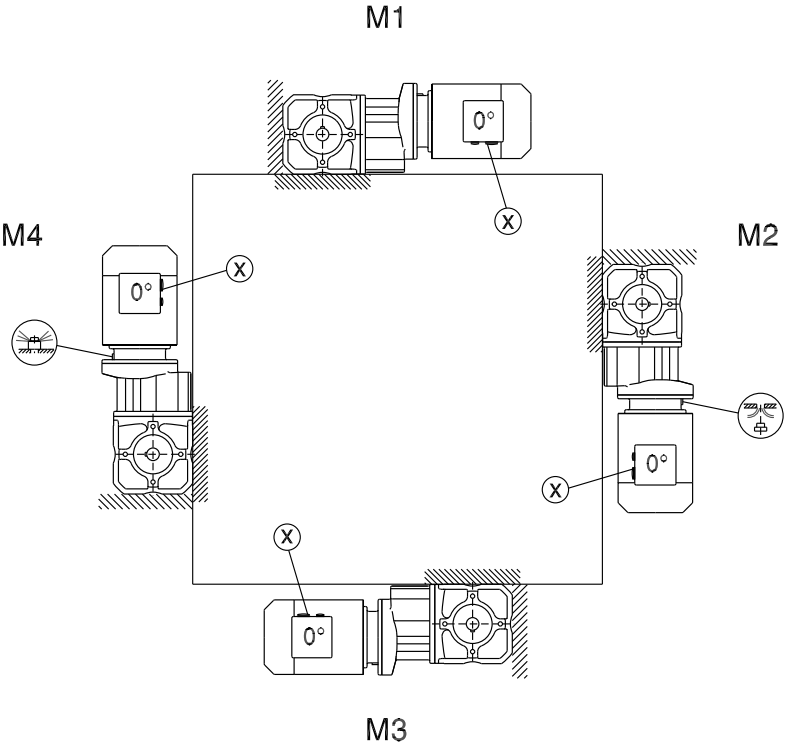

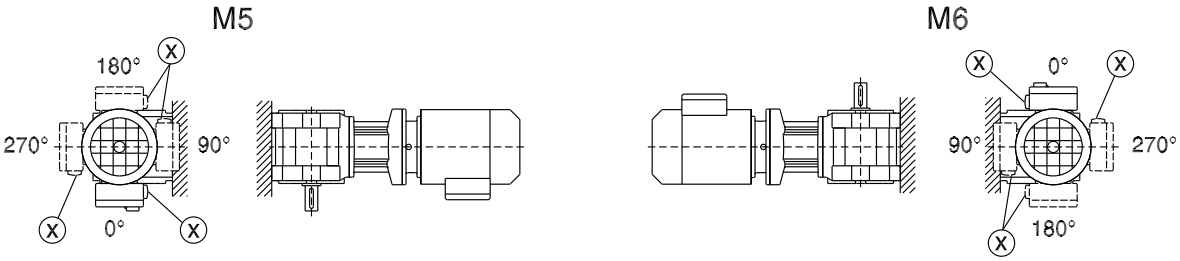

→ page 68

WF/WAF/WHF37-47

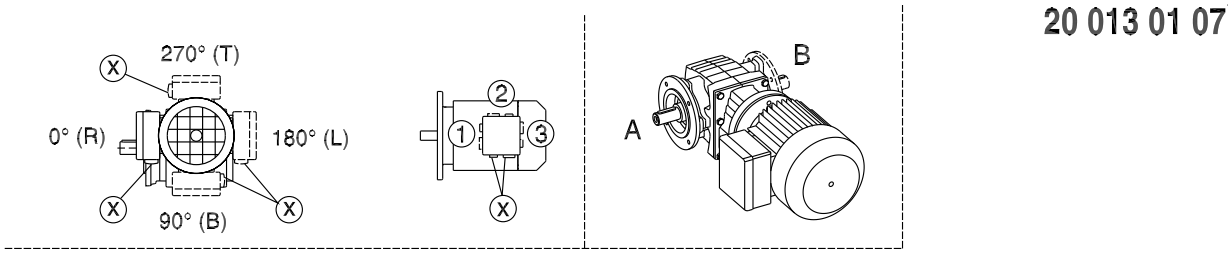

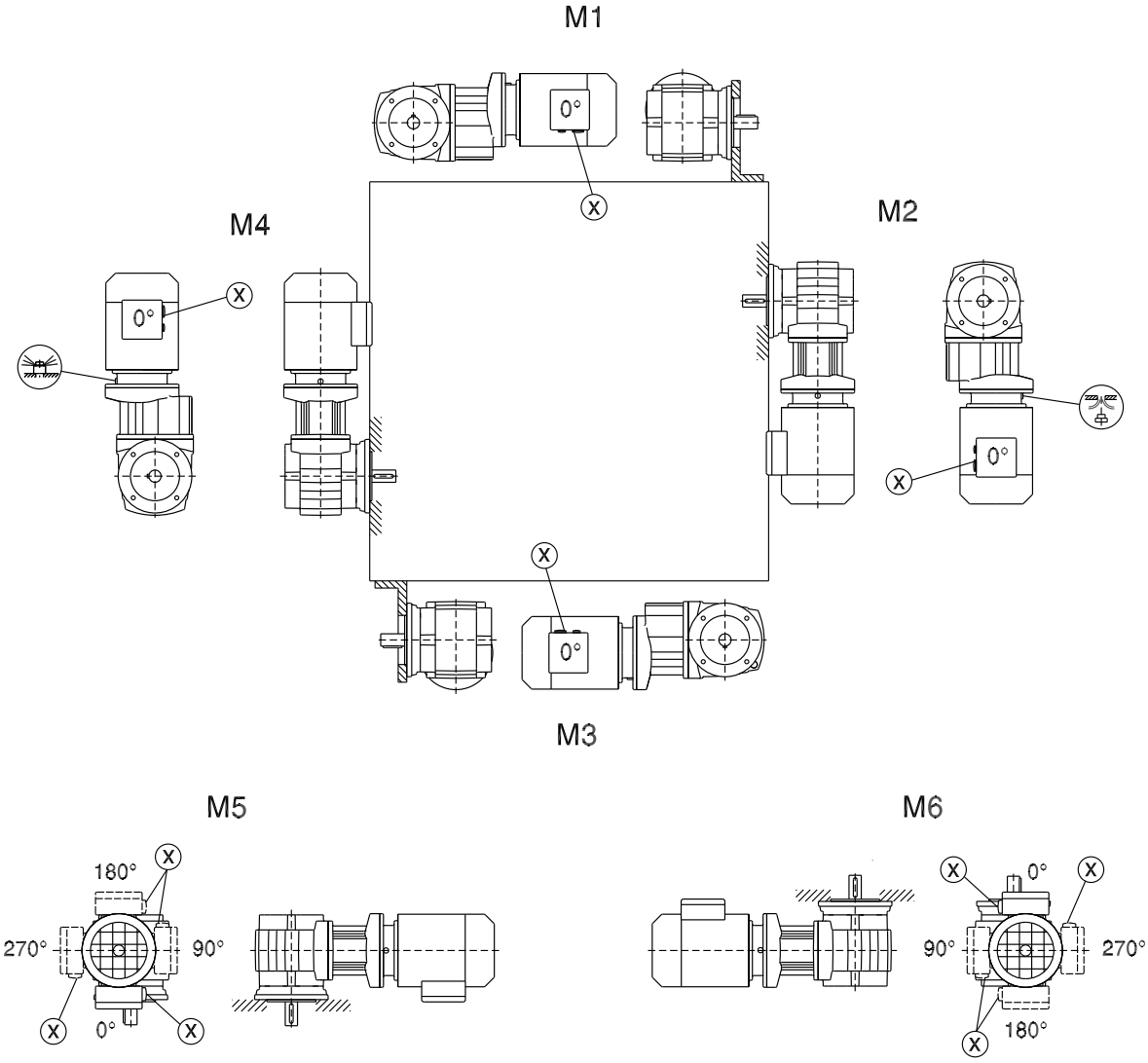

→ page 68

WA/WH/WT37-47

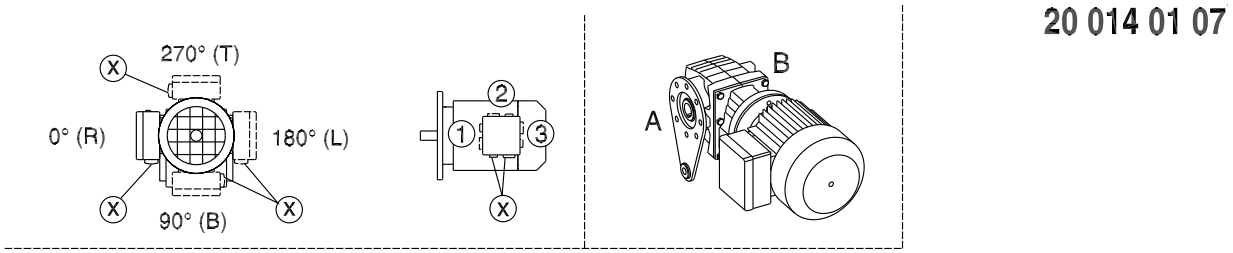

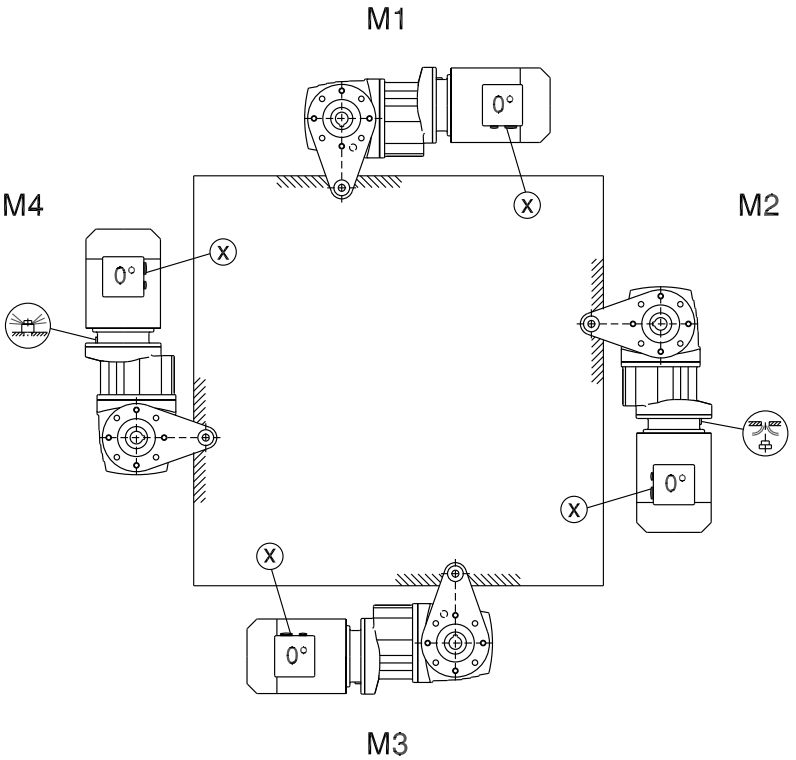

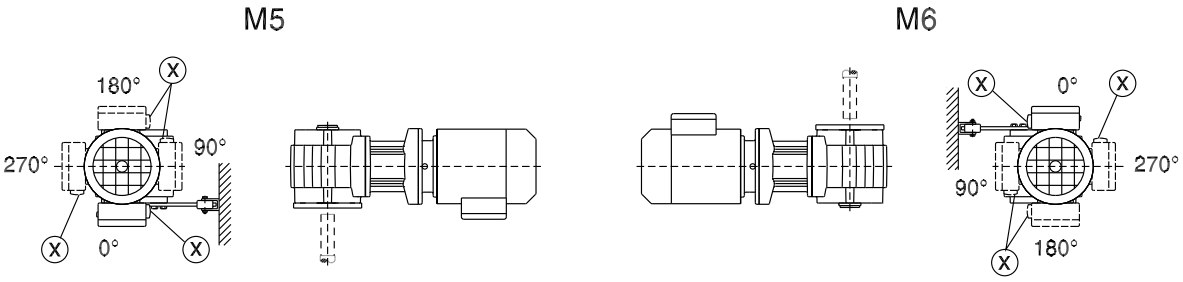

→ page 68

6 Design and Operating Notes

6.1 Reduced backlash gear units

Helical, parallel shaft helical and helical-bevel gear units with reduced backlash are available from gear unit size 37. The circumferential backlash of these gear units is considerably less than that of the standard versions so that positioning tasks can be solved with great precision. The circumferential backlash is specified in angular minutes ['] in the technical data. The circumferential backlash for the output shaft is specified without load (max. 1% of the rated output torque); the gear unit input end is blocked.

The reduced backlash variant is available for the following gear units:

- Helical gear units (R), sizes 37 to 167
- Parallel-shaft gear units (F), sizes 37 to 157
- Helical-bevel gear units (K), sizes 37 to 187

Multi-stage gear units are not available with reduced backlash.

The dimensions of the reduced backlash variants correspond to the dimensions of the standard designs, except for parallel-shaft gear units FH.87 and FH.97 with reduced backlash.

The following figure shows the dimensions of the FH.87 and FH.97 gear units with reduced backlash:

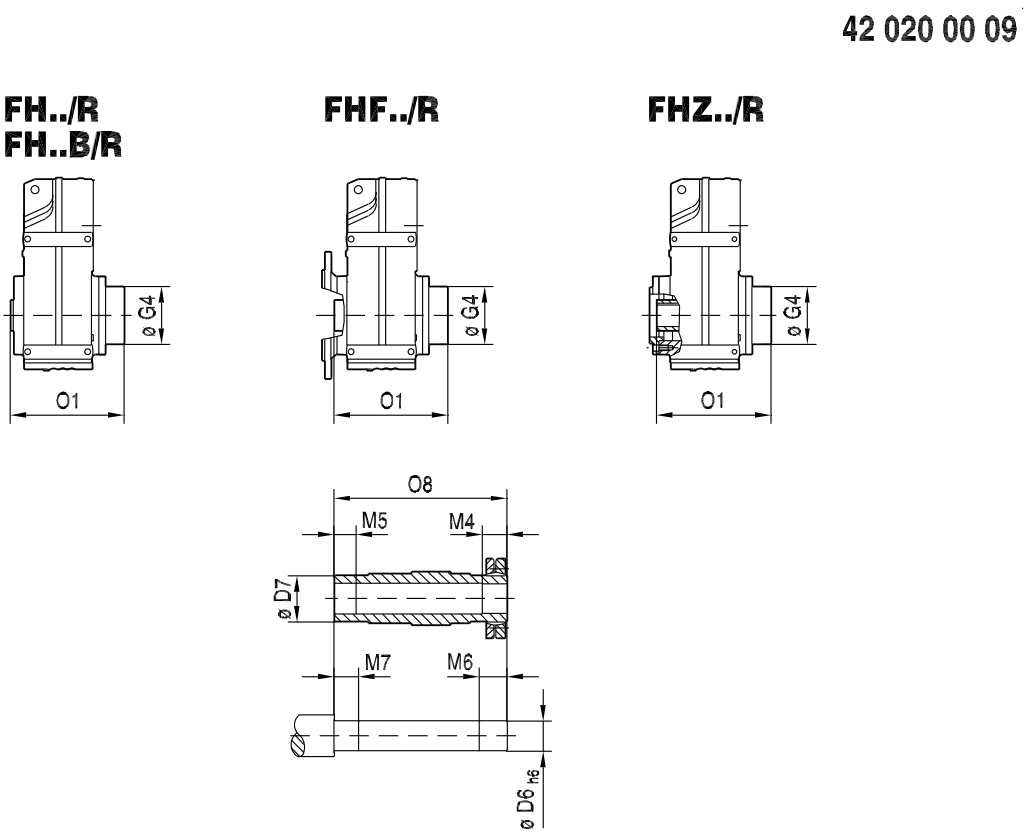

Type	D6	D7	G4	M4	M5	M6	M7	O1	O8
FH.87/R	Ø 65 $_{h6}$	Ø 85	Ø 163	41	40	46	45	312.5	299.5
FH.97/R	Ø 75 $_{h6}$	Ø 95	Ø 184	55	50	60	55	382.5	367

6.2 Assembly/disassembly of gear units with hollow shaft and key

	INFORMATION
	• Always use the supplied NOCO® fluid for assembly. The fluid prevents contact corrosion and facilitates subsequent disassembly. • The key dimension X is specified by the customers, but X > DK must apply, see Figure .

Installation

SEW-EURODRIVE recommends two variants for mounting gear units with hollow shaft and key onto the input shaft of the driven machine (= customer shaft):

1. Use the provided fastening parts for installation.
2. Use the optional installation/removal kit for installation.

1) Supplied fastening parts

The following fastening parts are supplied as standard:

- Retaining screw with washer (2)
- Retaining ring (3)

Note the following points concerning the customer shaft:

- The installation length of the customer shaft with contact shoulder (A) must be L8 - 1 mm.
- The installation length of the customer shaft without contact shoulder (B) must equal L8.

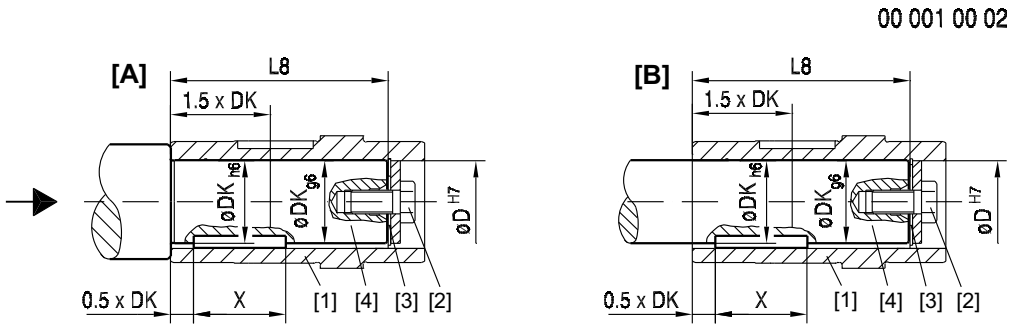

[1]	Hollow shaft	[3]	Retaining ring
[2]	Retaining screw with washer	[4]	Customer shaft

Dimensions and tightening torque:

The retaining screw (2) must be tightened to the tightening torque MS given in the following table.

Gear unit type	D^{H7} mm	DK mm	L8 mm	MS Nm
FA..27	25	25	88	20
WA..37	20	20	105	8
SA..37			104	
FA..37, KA..37, SA..47	30	30	105	20
SA..47, WA..37	25	25	118	
			105	
SAF402	30	30	138	
FA..47, KA..47, SA..57	35	35	132	
WA..47	30	30	122	
SA..57			132	
FA..57, KA..57	40	40	142	40
FA..67, KA..67			158	
			156	
SA..67			144	
SA..67	45	45	144	
FA..77, KA..77, SA..77	50	50	183	40
SA..77	60	60	180	80
FA..87, KA..87			210	
SA..87			220	
SA..87	70	70	220	
FA..97, KA..97	70	70	270	
SA..97			260	
SA..97	90	90	255	200
FA..107			313	
KA..107			313	
FA..127, KA..127	100	100	373	
FA..157, KA..157	120	120	460	

2. Installation/removal kit

You can use the optional installation/removal kit for installation. You can order the kit for the specific gear unit type(s) by quoting the part numbers in the table below. The delivery includes:

- Spacer tube for installation without contact shoulder (5)
- Retaining screw for installation (2)
- Forcing washer for removal (7)
- Locked nut for removal (8)

The short retaining screw delivered as standard is not required.

Note the following points concerning the customer shaft:

- The installation length of the customer shaft must be LK2. Do not use the spacer if the customer shaft **has a contact shoulder (A)**.
- The installation length of the customer shaft must be LK2. Use the spacer if the customer shaft **has a contact shoulder (B)**.

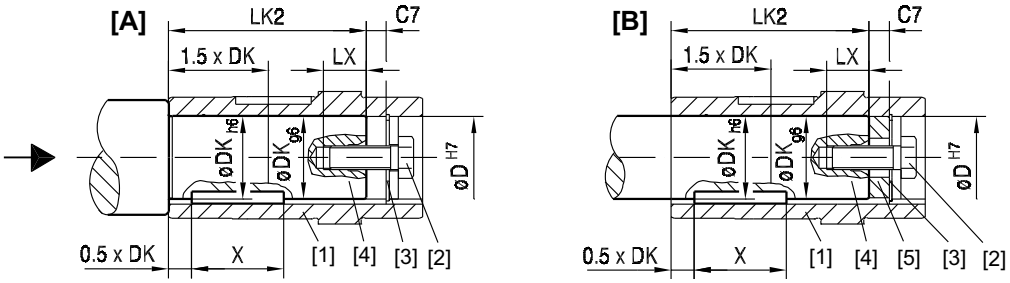

[1]	Hollow shaft	[4]	Customer shaft
[2]	Retaining screw with washer	[5]	Spacer tube
[3]	Retaining ring		

Dimensions, tightening torque and part numbers:

The retaining screw (2) must be tightened to the tightening torque MS given in the following table.

Type	D^{H7} mm	DK mm	LK2 mm	LX^{+2} mm	C7 mm	MS Nm	Part number of installa-tion/removal set
WA..37	20	20	72, 93	16	12	8	643 683 8
SA..37	20	20	92	16	12	8	643 683 8
FA..27	25	25	72	22	16	20	643 684 6
SA..47			89				
WA..47	30	30	106				643 685 4
FA..37, KA..37			89				643 685 4
SA..47			89				
SA..57			116				
FA..47, KA..47, SA..57	35	35	114	28	18		643 686 2
FA..57, KA..57	40	40	124	36		40	643 687 0
FA..67			138				
KA..67			138				
SA..67			126				
SA..67	45	45	126				643 688 9
FA..77, KA..77, SA..77	50	50	165				643 689 7
FA..87, KA..87	60	60	188	42	22	80	643 690 0
SA..77			158				
SA..87			198				
FA..97, KA..97	70	70	248				643 691 9
SA..87			198				
SA..97			238				
FA..107, KA..107	90	90	287	50	26	200	643 692 7
SA..97			229				
FA..127, KA..127	100	100	347				643 693 5
FA..157, KA..157	120	120	434				643 694 3

Removal

Applies only if the installation/removal kit was previously used for installation.

Proceed as follows to remove the gear unit:

1. Loosen the retaining screw (6).
2. Remove the circlip (3) and, if used, the spacer tube (5).
3. According to the Figure place the forcing washer (7) and the locked nut (8) between the customer shaft (4) and circlip (3).
4. Re-install the circlip (3).
5. Re-install the retaining screw (6). Now you can force the gear unit off the shaft.

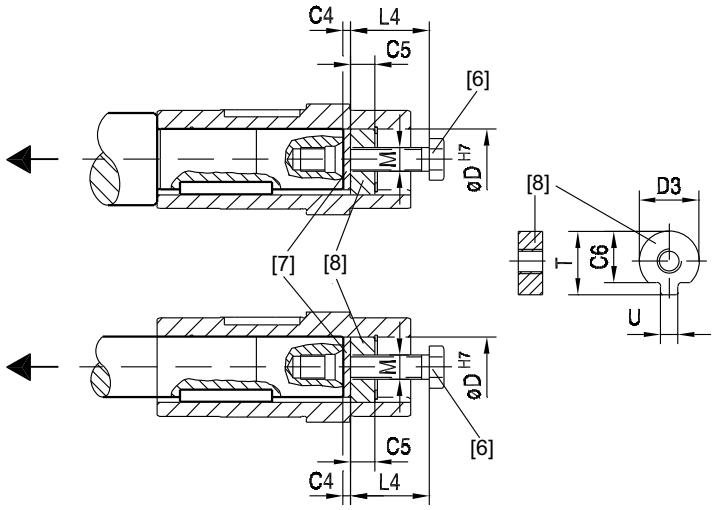

[6]	Retaining screw	[8]	Locked nut for removal
[7]	Forcing washer		

Dimensions and part numbers:

Type	D^{H7} mm	M	C4 mm	C5 mm	C6 mm	$V^{-0.5}$ mm	$T^{-0.5}$ mm	$D3^{-0.5}$ mm	L4 mm	Part number of installa-tion/removal kit
WA..37, SA..37	20	M6	5	6	15.5	5.5	22.5	19.7	25	643 683 8
FA27.., SA..47	25	M10		10	20	7.5	28	24.7	35	643 684 6
FA..37, KA..37, SA..47, SA..57, WA..47	30				25	7.5	33	29.7		643 685 4
FA..47, KA..47, SA..57	35	M12		12	29	9.5	38	34.7	45	643 686 2
FA..57, KA..57, FA..67, KA..67, SA..67	40	M16			34	11.5	41.9	39.7	50	643 687 0
SA..67	45				38.5	13.5	48.5	44.7		643 688 9
FA..77, KA..77, SA..77	50				43.5	13.5	53.5	49.7		643 689 7
FA..87, KA..87, SA..77, SA..87	60	M20		16	56	17.5	64	59.7	60	643 690 0
FA..97, KA..97, SA..87, SA..97	70				65.5	19.5	74.5	69.7		643 691 9
FA..107, KA..107, SA..97	90	M24		20	80	24.5	95	89.7	70	643 692 7
FA..127, KA..127	100				89	27.5	106	99.7		643 693 5
FA..157, KA..157	120				107	31	127	119.7		643 694 3

6.3 Gear units with hollow shaft

Chamfers on hollow shafts

The following illustration shows the chamfers on parallel shaft helical, helical-bevel, helical-worm and SPIROPLAN® gear units with hollow shaft:

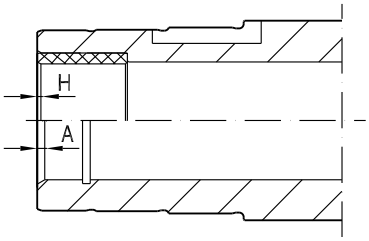

59845AXX

Gear unit	Type	
	with hollow shaft (A)	with hollow shaft and shrink disk (H)
F..27	2 × 30°	0.5 × 45°
F../K../S../W..37	2 × 30°	0.5 × 45°
F../K../S../ W..47	2 × 30°	0.5 × 45°
S..57	2 × 30°	0.5 × 45°
F../K..57	2 × 30°	3 × 2°
F../K../S..67	2 × 30°	3 × 2°
F../K../S..77	2 × 30°	3 × 2°
F../K../S..87	3 × 30°	3 × 2°
F../K../S..97	3 × 30°	3 × 2°
F../K..107	3 × 30°	3 × 2°
F../K..127	5 × 30°	1.5 × 30°
F../K..157	5 × 30°	1.5 × 30°
KH167	-	1.5 × 30°
KH187	-	1.5 × 30°

Special motor/gear unit combinations

Please note for parallel shaft helical gearmotors with hollow shaft (FA..B, FV..B, FH..B, FAF, FVF, FHF, FA, FV, FH, FT, FAZ, FVZ, FHZ):

- If you are using a customer shaft pushed through on the motor end, there may be a collision when a "small gear unit" is used in combination with a "large motor".
- Check the motor dimension AC to decide whether there will be a collision with a pushed-through customer shaft.

6.4 TorqLOC® mounting system for gear units with hollow shaft

Description of TorqLOC®

The TorqLOC® hollow shaft mounting system is used for achieving a non-positive connection between customer shaft and the hollow shaft in the gear unit. The TorqLOC® hollow shaft mounting system is an alternative to the hollow shaft with shrink disk, the hollow shaft with key, and the splined hollow shaft.

The TorqLOC® hollow shaft mounting system consists of the following components:

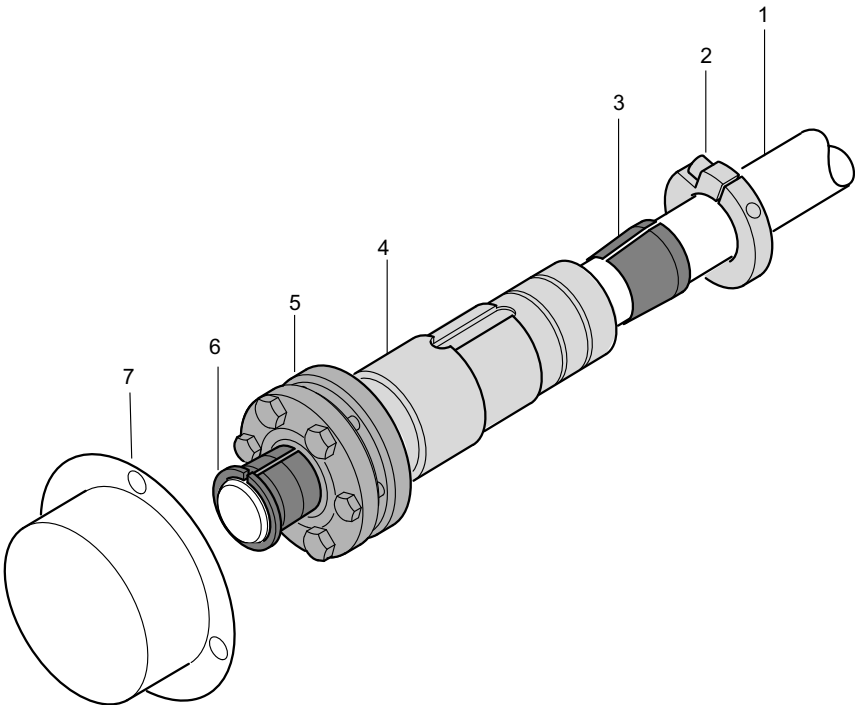

51939AXX

[1]	Customer shaft	[5]	Shrink disk
[2]	Clamping ring	[6]	Conical steel bushing
[3]	Conical bronze bushing	[7]	Fixed cover
[4]	Hollow shaft in gear unit		

Advantages of TorqLOC®

The TorqLOC® hollow shaft mounting system provides the following advantages:

- Cost saving as the customer shaft can be made from drawn material up to quality h11.
- Costs are saved as different customer shaft diameters can be realized with one hollow shaft diameter and different bushings.
- Simple installation as there is no need to accommodate any shaft connections.
- Simple disassembly even after many hours of operation since the formation of contact corrosion has been reduced and the conical connections can easily be released.

Technical data

The TorqLOC® hollow shaft mounting system is approved for input torques of 92 Nm to 18000 Nm.

The following gear units are available with TorqLOC® hollow shaft mounting system:

- Parallel shaft helical gear units in gear unit sizes 37 to 157 (FT37 to FT157)
- Helical-bevel gear units in gear unit sizes 37 to 157 (KT37 to KT157)
- Helical-worm gear units in gear unit sizes 37 to 97 (ST37 to ST97)
- SPIROPLAN® gear unit sizes 37 and 47 (WT37, WT47)

Available options

The following options are available for gear units with a TorqLOC® hollow shaft mounting system:

- Helical-bevel, helical-worm and SPIROPLAN® gear units with TorqLOC® (KT.., ST.., WT.7): The "torque arm" (../T) option is available.
- Parallel shaft helical gear units with TorqLOC® (FT..): The "rubber buffer" (../G) option is available.

6.5 Gear unit with flange block shaft

	INFORMATION
	Only use screws in **strength class 12.9** to fasten the output elements onto the flange block shaft of the gear unit.

6.6 *Shouldered hollow shaft option with shrink disk*

As an option, gear units with hollow shaft and shrink disk (parallel-shaft helical gear units FH/FHF/FHZ37-157, helical-bevel gear units KH/KHF/KHZ37-157 and helical-worm gear units SH/SHF47-97) can be supplied with a larger bore diameter D'.

D' = D as standard.

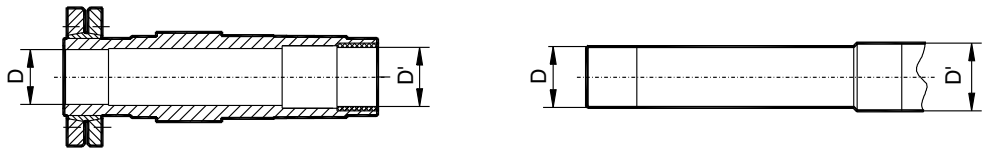

03389AXX

Gear unit	Bore diameter D / optionally D' mm
FH/FHF/FHZ37, KH/KHF/KHZ37, SH/SHF/SHZ47	30 / 32
FH/FHF/FHZ47, KH/KHF/KHZ47, SH/SHF/SHZ57	35 / 36
FH/FHF/FHZ57, KH/KHF/KHZ57	40 / 42
FH/FHF/FHZ67, KH/KHF/KHZ67, SH/SHF/SHZ67	40 / 42
FH/FHF/FHZ77, KH/KHF/KHZ77, SH/SHF/SHZ77	50 / 52
FH/FHF/FHZ87, KH/KHF/KHZ87, SH/SHF/SHZ87	65 / 66
FH/FHF/FHZ97, KH/KHF/KHZ97, SH/SHF/SHZ97	75 / 76
FH/FHF/FHZ107, KH/KHF/KHZ107	95 / 96
FH/FHF/FHZ127, KH/KHF/KHZ127	105 / 106
FH/FHF/FHZ157, KH/KHF/KHZ157	125 / 126

Diameter D/D' must be specified when ordering gear units with a shouldered hollow shaft (optional bore diameter D').

Sample order FH37 DRS80M4 with hollow shaft 30/32 mm

Parallel shaft helical gear units with shouldered hollow shaft (dimensions in mm):

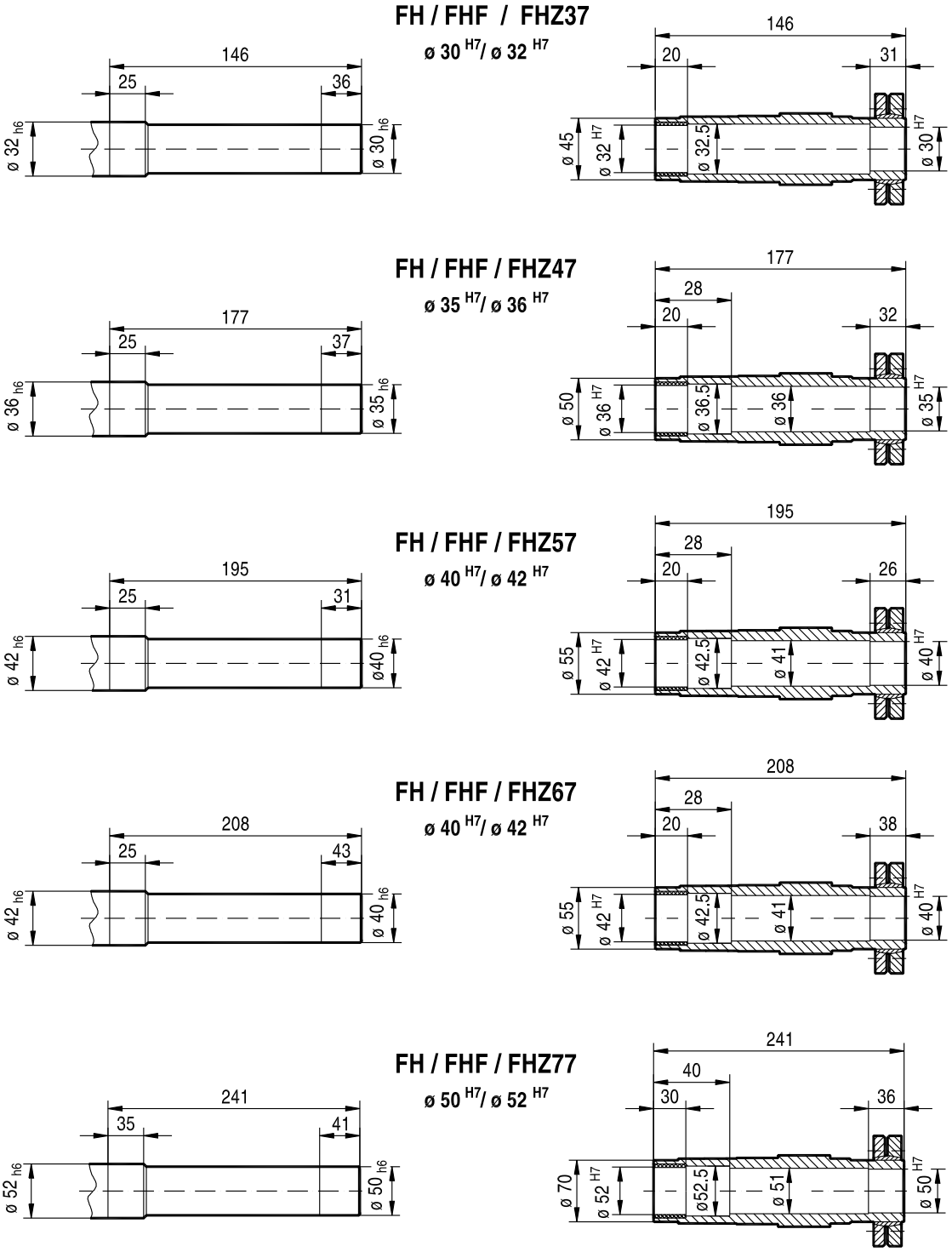

04341AXX

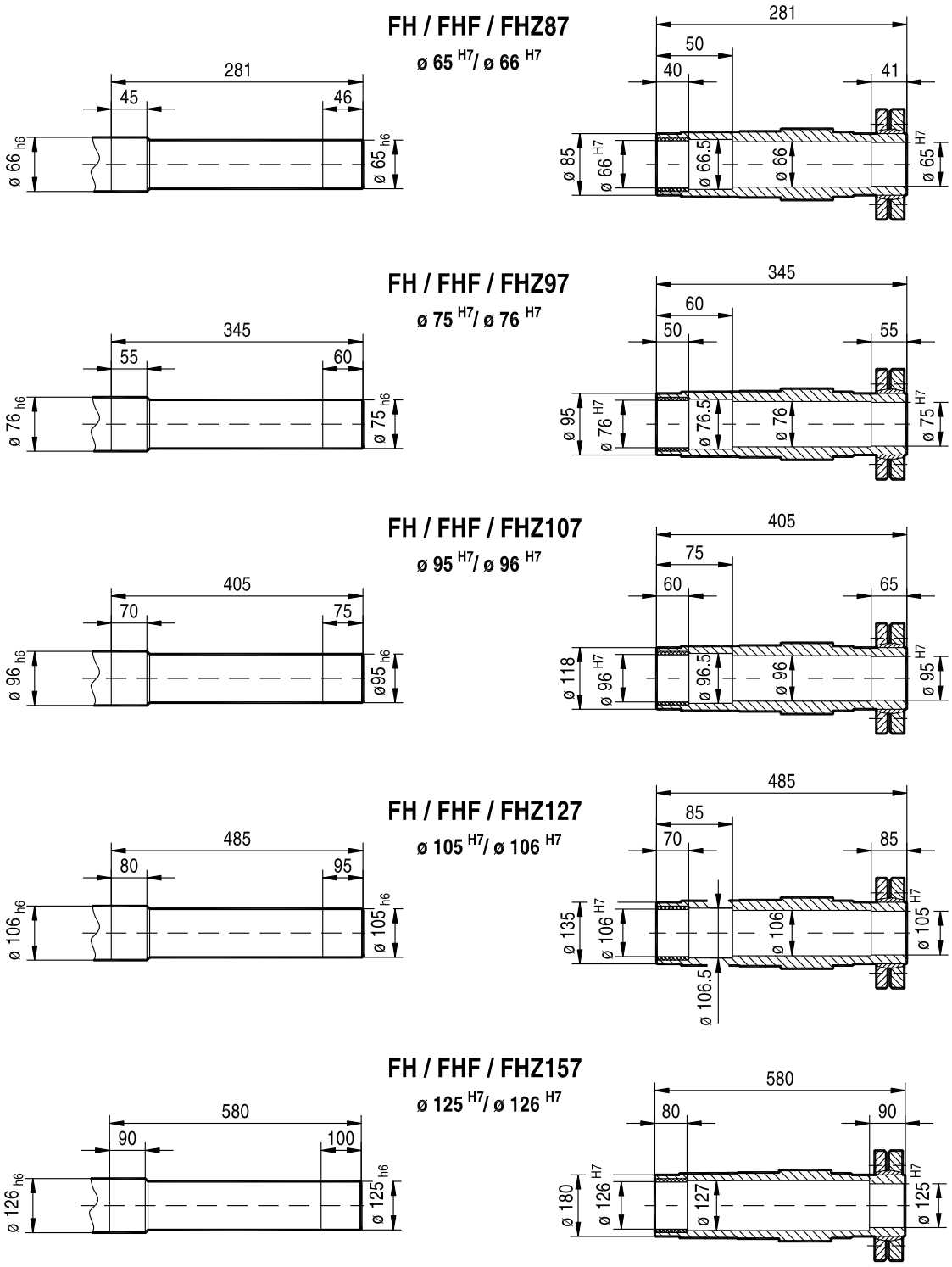
FH / FHF / FHZ87
ø 65 H7/ ø 66 H7
281
45
46
ø 66 h6
ø 65 h6
281
50
40
41
ø 85
ø 66 H7
ø 66.5
ø 66
ø 65 H7
FH / FHF / FHZ97
ø 75 H7/ ø 76 H7
345
55
60
ø 76 h6
ø 75 h6
345
60
50
55
ø 95
ø 76 H7
ø 76.5
ø 76
ø 75 H7
FH / FHF / FHZ107
ø 95 H7/ ø 96 H7
405
70
75
ø 96 h6
ø95 h6
405
75
60
65
ø 118
ø 96 H7
ø 96.5
ø 96
ø 95 H7
FH / FHF / FHZ127
ø 105 H7/ ø 106 H7
485
80
95
ø 106 h6
ø 105 h6
485
85
70
85
ø 135
ø 106 H7
ø 106
ø 105 H7
ø 106.5
FH / FHF / FHZ157
ø 125 H7/ ø 126 H7
580
90
100
ø 126 h6
ø 125 h6
580
80
90
ø 180
ø 126 H7
ø 127
ø 125 H7

04342AXX

Helical-bevel gear units with shouldered hollow shaft (dimensions in mm):

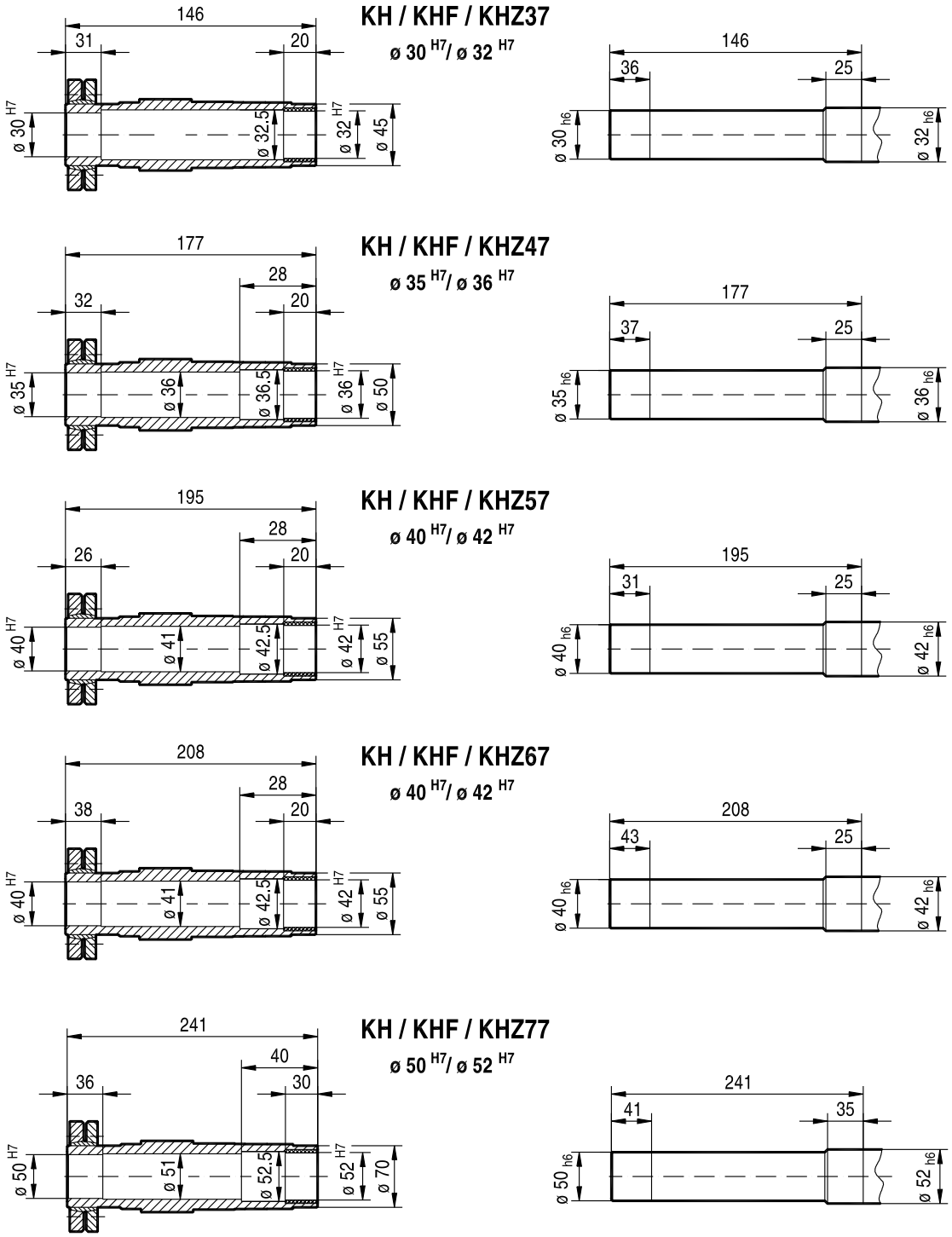

04343AXX

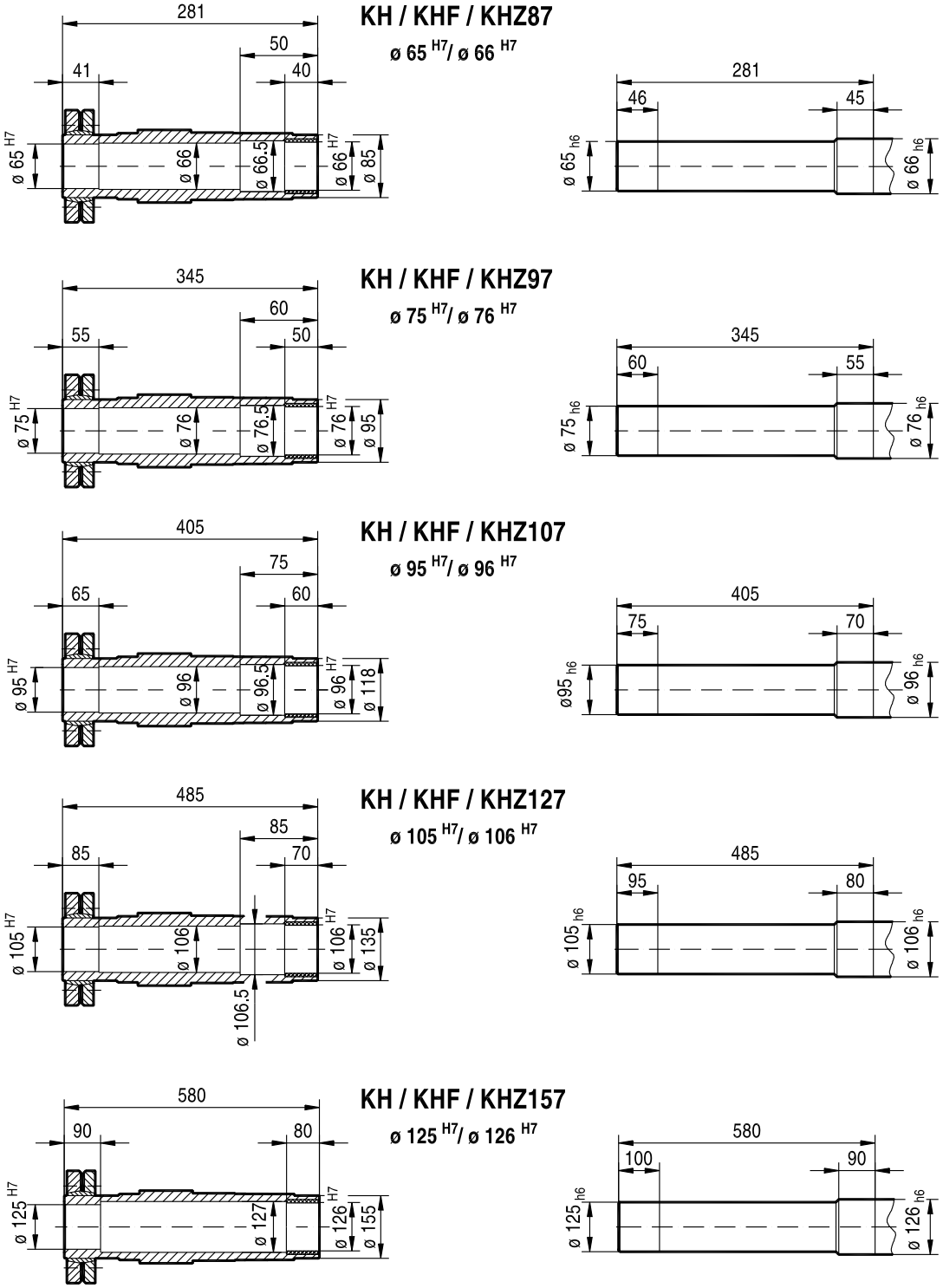
KH / KHF / KHZ87
ø 65 H7/ ø 66 H7
281
50
41
40
ø 65 H7
ø 66
ø 66.5
ø 66 H7
ø 85
281
46
45
ø 65 h6
ø 66 h6
KH / KHF / KHZ97
ø 75 H7/ ø 76 H7
345
60
55
50
ø 75 H7
ø 76
ø 76.5
ø 76 H7
ø 95
345
60
55
ø 75 h6
ø 76 h6
KH / KHF / KHZ107
ø 95 H7/ ø 96 H7
405
75
65
60
ø 95 H7
ø 96
ø 96.5
ø 96 H7
ø 118
405
75
70
ø95 h6
ø 96 h6
KH / KHF / KHZ127
ø 105 H7/ ø 106 H7
485
85
85
70
ø 105 H7
ø 106
ø 106 H7
ø 135
ø 106.5
485
95
80
ø 105 h6
ø 106 h6
KH / KHF / KHZ157
ø 125 H7/ ø 126 H7
580
90
80
ø 125 H7
ø 127
ø 126 H7
ø 155
580
100
90
ø 125 h6
ø 126 h6
04344AXX

Helical-worm gear units with shouldered hollow shaft (dimensions in mm):

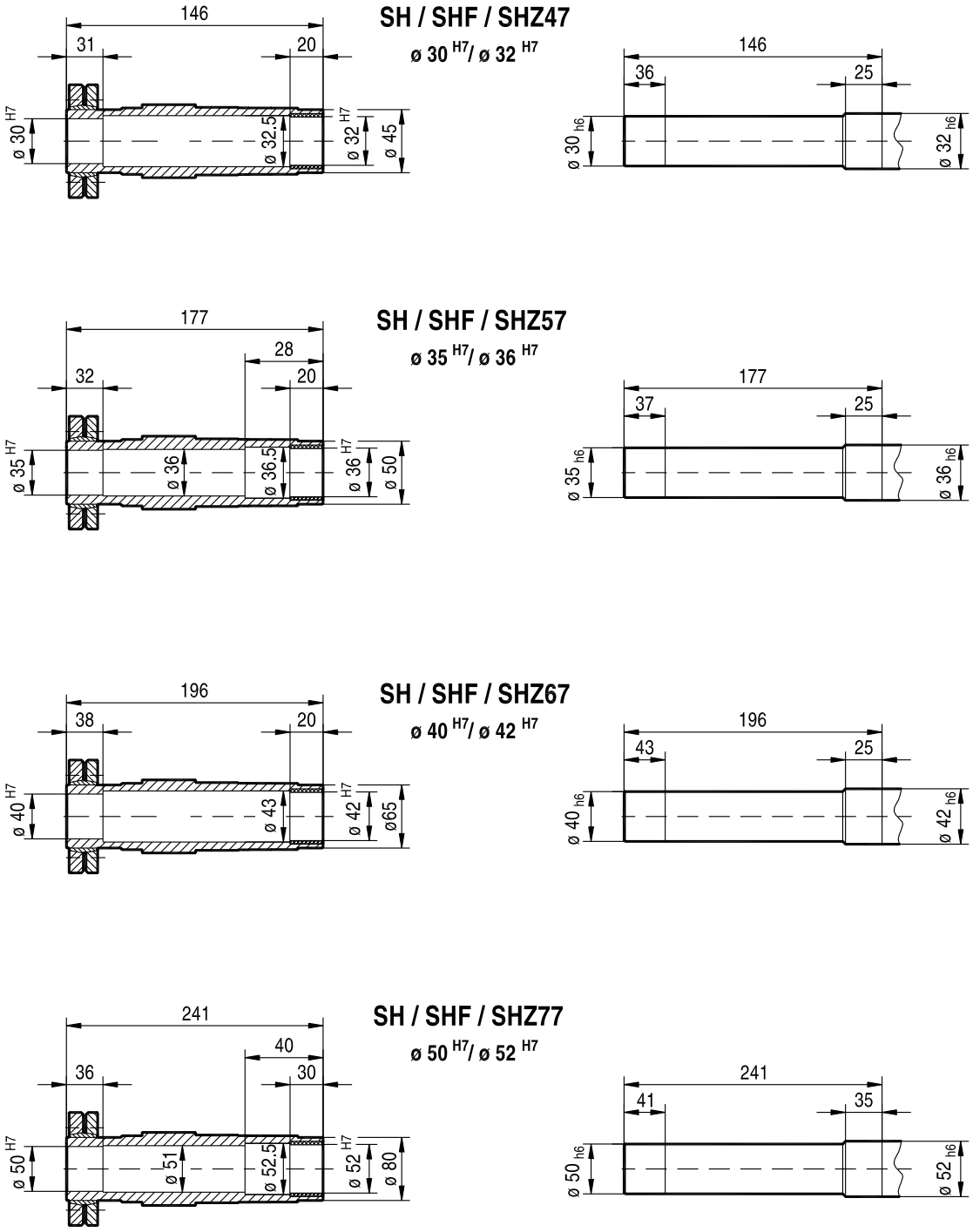

04345AXX

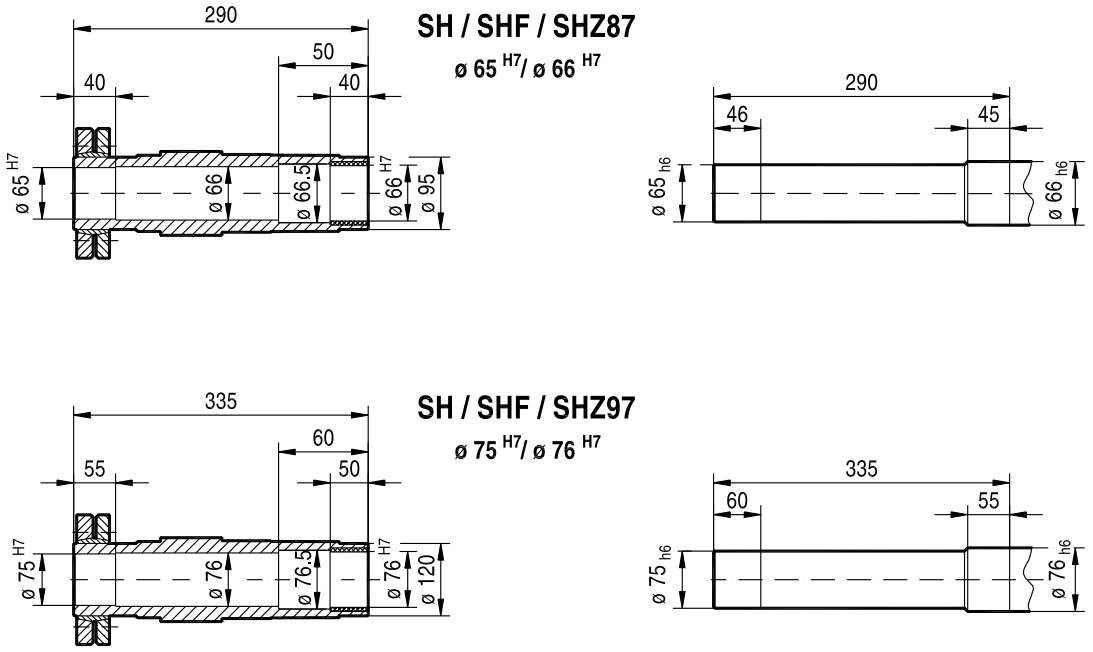
SH / SHF / SHZ87
ø 65 H7/ ø 66 H7
290
50
40
40
ø 65 H7
ø 66
ø 66.5
ø 66 H7
ø 95
290
46
45
ø 65 h6
ø 66 h6
SH / SHF / SHZ97
ø 75 H7/ ø 76 H7
335
60
55
50
ø 75 H7
ø 76
ø 76.5
ø 76 H7
ø 120
335
60
55
ø 75 h6
ø 76 h6

04346AXX

6.7 Fastening the gear unit

Use bolts of quality 8.8 to fasten gear units and gearmotors.

Exception

Use bolts of **quality 10.9** to fasten the customer flange to transmit the rated torques for the following flange-mounted (RF ..ßRZ..) and foot/flange-mounted gearmotors (RF../RZ..):

- RF37, R37F with flange ∅ 120 mm
- RF47, R47F with flange ∅ 140 mm
- RF57, R57F with flange ∅ 160 mm
- RZ37 - RZ87

6.8 Torque arms

Available torque arms

Gear unit	Size					
	27	37	47	57	67	77
KA, KH, KV, KT	-	643 425 8	643 428 2	643 431 2	643 431 2	643 434 7
SA, SH, ST	-	126 994 1	644 237 4	644 240 4	644 243 9	644 246 3
FA, FH, FV, FT Rubber buffer (2 pieces)	013 348 5	013 348 5	013 348 5	013 348 5	013 348 5	013 349 3

Gear unit	Size				
	87	97	107	127	157
KA, KH, KV, KT	643 437 1	643 440 1	643 443 6	643 294 8	-
SA, SH, ST	644 249 8	644 252 8	-	-	-
FA, FH, FV, FT Rubber buffer (2 pieces)	013 349 3	013 350 7	013 350 7	013 351 5	013 347 7

Gear unit	Size				
	10	20	30	37	47
WA	1 061 021 9	1 68 073 0	1 68 011 0	1 061 129 0	1 061 187 8

Torque arms for KH167.., KH187..

As standard, torque arms are not available for gear unit sizes KH167.. and KH187... Consult SEW-EURODRIVE if you need torque arms for these gear units. You will then obtain design proposals.

6.9 *Flange contours of RF.. and R..F gear units*

04355AXX

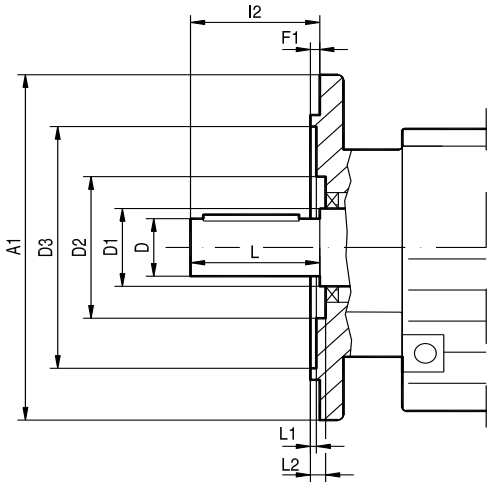

Check dimensions L1 and L2 for selection and installation of output elements.

Type	Dimensions in mm											
	A1	D	D1	D2		D3	F1	l2	L	L1		L2
				RF	R..F					RF	R..F	
RF07, R07F	120	20	22	38	38	72	3	40	40	2	2	6
	140[1)]				-	85	3			2	-	6
	160[1)]				-	100	3.5			2.5	-	6.5
RF17, R17F	120	20	25	46	46	65	3	40	40	1	1	5
	140				-	78	3			1	-	5
	160[1)]				-	95	3.5			1	-	6
RF27, R27F	120	25	30	54	54	66	3	50	50	1	1	6
	140				-	79	3			3	-	7
	160				-	92	3.5			3	-	7
RF37, R37F	120	25	35	60	63	70	3	50	50	5	4	7
	160				-	96	3.5			1	-	7.5
	200[1)]				-	119	3.5			1	-	7.5
RF47, R47F	140	30	35	72	64	82	3	60	60	4	1	6
	160				-	96	3.5			0.5	-	6.5
	200				-	116	3.5			0.5	-	6.5
RF57, R57F	160	35	40	76	75	96	3.5	70	70	4	2.5	5
	200				-	116	3.5			0	-	5
	250[1)]				-	160	4			0.5	-	5.5
RF67, R67F	200	35	50	90	90	118	3.5	70	70	2	4	7
	250				-	160	4			1	-	7.5
RF77, R77F	250	40	52	112	100	160	4	80	80	0.5	2.5	7
	300[1)]				-	210	4			0.5	-	7
RF87, R87F	300	50	62	123	122	210	4	100	100	0	1.5	8
	350				-	226	5			1	-	9
RF97	350	60	72	136		236	5	120	120	0		9
	450					320						
RF107	350	70	82	157		232	5	140	140	0		11
	450			186		316						
RF137	450	90	108	180		316	5	170	170	0		10
	550					416						
RF147	450	110	125	210		316	5	210	210	0		10
	550					416						
RF167	550	120	145	290		416	5	210	210	1		10
	660					517	6			2		11

1) The flange contour protrudes from under the base surface.

6.10 Flange contours of FF.., KF.., SF.. and WF.. gear units

59720AXX

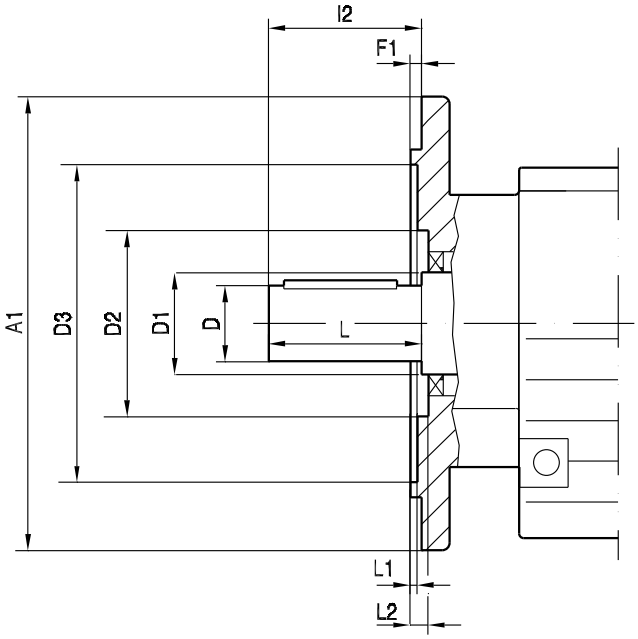

Check dimensions L1 and L2 for selection and installation of output elements.

Type	Dimensions in mm									
	A1	D	D1	D2	D3	F1	l2	L	L1	L2
FF27	160	25	40	66	96	3.5	50	50	3	18.5
FF37	160	25	30	70	94	3.5	50	50	2	6
FF47	200	30	40	72	115	3.5	60	60	3.5	7.5
FF57	250	35	40	84	155	4	70	70	4	9
FF67	250	40	50	84	155	4	80	80	4	9
FF77	300	50	55	82	205	4	100	100	5	9
FF87	350	60	65	115	220	5	120	120	5	9
FF97	450	70	75	112	320	5	140	140	8	10
FF107	450	90	100	159	318	5	170	170	16	9
FF127	550	110	118	-	420	5	210	210	10	-
FF157	660	120	135	190	520	6	210	210	8	14
KF37	160	25	30	70	94	3.5	50	50	2	6
KF47	200	30	40	72	115	3.5	60	60	3.5	7.5
KF57	250	35	40	84	155	4	70	70	4	9
KF67	250	40	50	84	155	4	80	80	4	9
KF77	300	50	55	82	205	4	100	100	5	9
KF87	350	60	65	115	220	5	120	120	5	9
KF97	450	70	75	112	320	5	140	140	8	10
KF107	450	90	100	159	318	5	170	170	16	9
KF127	550	110	118	-	420	5	210	210	10	-
KF157	660	120	135	190	520	6	210	210	8	14
SF37	120	20	25	-	68	3	40	40	6	-
SF37	160	20	25	-	96	3.5	40	40	5.5	-
SF47	160	25	30	70	94	3.5	50	50	2	6
SF57	200	30	40	72	115	3.5	60	60	3.5	7.5
SF67	200	35	45	-	115	3.5	70	70	8.5	-
SF77	250	45	55	108	160	4	90	90	8	9
SF87	350	60	65	130	220	5	120	120	6	10
SF97	450	70	75	150	320	5	140	140	8.5	10

Table continued on next page.

Type	Dimensions in mm									
	A1	D	D1	D2	D3	F1	l2	L	L1	L2
WF37	120	20	30	-	70	2.5	40	40	-	10.5
WF37	160	20	30	-	70	2.5	40	40	-	25.5
WF47	160	30	35	35 -	92	3.5	10	60	6	-

6.11 Flange contours of FAF.., KAF.., SAF.. and WAF.. gear units

59719AXX

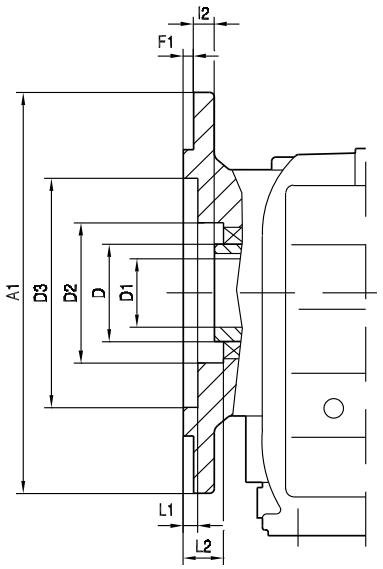

Check dimensions L1 and L2 for selection and installation of output elements.

Type	Dimensions in mm								
	A1	D	D1	D2	D3	F1	l2	L1	L2
FAF27	160	40	25	66	96	3.5	20	3	18.5
FAF37	160	45	30	62	94	3.5	24	2	30
FAF47	200	50	35	70	115	3.5	25	3.5	31.5
FAF57	250	55	40	76	155	4	23.5	4	31
FAF67	250	55	40	76	155	4	23	4	31
FAF77	300	70	50	95	205	4	37	5	45
FAF87	350	85	60	120	220	5	30	5	39
FAF97	450	95	70	135	320	5	41.5	5.5	51
FAF107	450	118	90	224	320	5	41	16	52
FAF127	550	135	100	185	420	5	51	6	63
FAF157	660	155	120	200	520	6	60	10	74
KAF37	160	45	30	62	94	3.5	24	2	30
KAF47	200	50	35	70	115	3.5	25	3.5	8.5
KAF57	250	55	40	76	155	4	23.5	4	31
KAF67	250	55	40	76	155	4	23	4	31
KAF77	300	70	50	95	205	4	37	5	45
KAF87	350	85	60	120	220	5	30	5	39
KAF97	450	95	70	135	320	5	41.5	5.5	51
KAF107	450	118	90	224	320	5	41	16	52
KAF127	550	135	100	185	420	5	51	6	63
KAF157	660	155	120	200	520	6	60	10	74
SAF37	120	35	20	-	68	3	15	6	-
SAF37	160	35	20	-	96	3.5	15	5.5	-

Table continued on next page.

Type	Dimensions in mm								
	A1	D	D1	D2	D3	F1	l2	L1	L2
SAF47	160	45	30 / 25	62	94	3.5	24	2	30
SAF57	200	50	35 / 30	70	115	3.5	25	3.5	31.5
SAF67	200	65	45 / 40	91	115	3.5	42.5	4	48.5
SAF77	250	80	60 / 50	112	164	4	45.5	5	53.5
SAF87	350	95	70 / 60	131	220	5	52.5	6	62.5
SAF97	450	120	90 / 70	160	320	5	60	6.5	69
WAF37	120	35	20 / 25	54	70	2.5	19.5	10.5	27
WAF37	160	35	20 / 25	54	70	2.5	34.5	25.5	42
WAF47	160	45	25 / 30	72	92	3.5	10	6	45

6.12 Fixed covers

Parallel shaft helical gear units, helical-bevel gear units, helical-worm and SPIROPLAN® gear units with hollow shafts and shrink disks of size 37 up to size 97 come equipped with a rotating cover as standard.

If, for safety reasons, you require fixed covers for these gear units, you can order them for the respective gear unit types. You find the part numbers in the tables on page 112. As standard, size 107 parallel-shaft helical gear units and helical-bevel gear units with hollow shafts and shrink disks and size 27 parallel-shaft helical gear units come equipped with a fixed cover.

Figure: Replacing a rotating cover with a fixed cover:

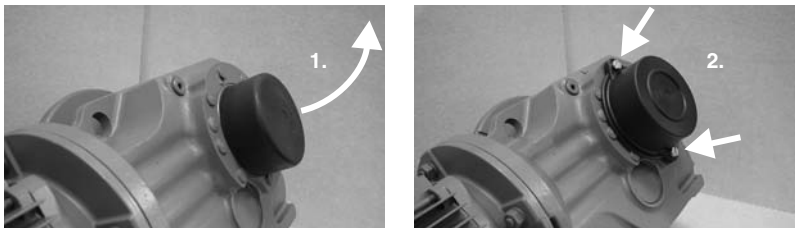

03190AXX

[1] Pull off the rotating cover

[2] Install and fasten fixed cover

Part numbers and dimensions

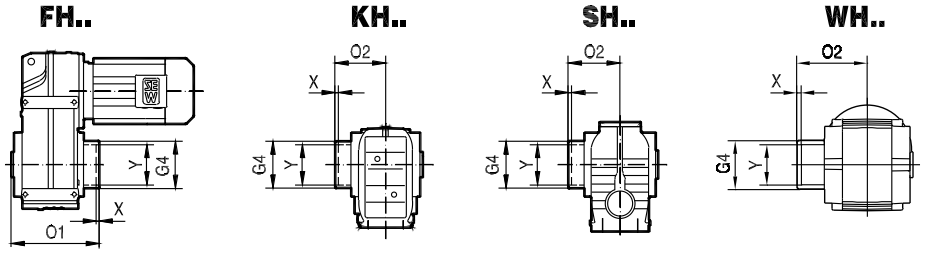

62664AXX

Parallel-shaft helical gearmotors	FH..37	FH..47	FH..57	FH..67	FH..77	FH..87	FH..97
Part number	643 513 0	643 514 9	643 515 7	643 515 7	643 516 5	643 517 3	643 518 1
G4	78	88	100	100	121	164	185
O1	157	188.5	207.5	221.5	255	295	363.5
X	2	4.5	7.5	6	6	4	6.5
Y	75	83	83	93	114	159	174

Helical-bevel gearmotors[1)]	KH..37	KH..47	KH..57	KH..67	KH..77	KH..87	KH..97
Part number	643 513 0	643 514 9	643 515 7	643 515 7	643 516 5	643 517 3	643 518 1
G4 [mm]	78	88	100	100	121	164	185
O2 [mm]	95	111.5	122.5	129	147	172	210.5
X [mm]	0	1.5	5.5	3	1	2	4.5
Y [mm]	75	83	83	93	114	159	174

1) Not possible in foot-mounted helical-bevel gear units with hollow shaft and shrink disk (KH..B).

Helical-worm gearmotors	SH..37	SH..47	SH..57	SH..67	SH..77	SH..87	SH..97
Part number	643 512 2	643 513 0	643 514 9	643 515 7	643 516 5	643 517 3	643 518 1
G4 [mm]	59	78	88	100	121	164	185
O2 [mm]	88	95	111.5	123	147	176	204.5
X [mm]	1	0	1.5	3	1	0	0.5
Y [mm]	53	75	83	93	114	159	174

SPIROPLAN® gearmotors	WH..37	WH..47					
Part number	1 061 136 3	1 061 194 0					
G4 [mm]	68	80.5					
O2 [mm]	95.5	109.5					
X [mm]	11	12.5					
Y [mm]	50	72					

6.13 Condition monitoring: Oil aging and vibration sensor

Technical data for oil aging sensor

DUO10A diagnostic unit

/DUO10A	Technical data		
Preset oil grades	OIL1	CLP mineral oil.	T_{max} = 100 °C
		Bio oil	T_{max} = 100 °C
	OIL2	CLP HC synthetic oil:	T_{max} = 130 °C
		CLP PAO oil	T_{max} = 130 °C
	OIL3	CLP PG polyglycol	T_{max} = 130 °C
	OIL4	Food grade oil	T_{max} = 100 °C
Switch outputs	1: Early warning (time to next oil change can be set to between 2 and 100 days) 2: Main alarm (time to oil change 0 days) 3: Exceeded temperature T_{max} 4: DUO10A is ready for operation		
Permitted oil temperature	-40 °C to +130 °C		
Permitted temperature sensors	PT1000		
EMC	IEC1000-4-2/3/4/6		
Ambient temperature	-25 °C to +70 °C		
Operating voltage	DC 18-28 V		
Current consumption at DC 24 V	< 90 mA		
Protection class	III		
Degree of protection	IP67 (optionally IP69K)		
Housing materials	Evaluation unit: V2A, EPDM/X, PBT, FPM Temperature sensor: V4A		
Electrical connection	Evaluation unit: M12 plug connector PT1000 temperature sensor: M12 plug connector		

Designations and part numbers

Designation	Description	Part number
DUO10A	Evaluation unit (basic unit)	1 343 875 1
DUO10A-PUR-M12-5m	5 m PUR cable with 1 connector	1 343 877 8
DUO10A-PVC-M12-5m	5 m PVC cable with 1 connector	1 343 878 6
DUO10A	Mounting bracket	1 343 880 8
DUO10A D = 34	Mounting clamp	1 343 879 4

Designation	Description	Part number
W4843 PT1000	PT1000 temperature sensor	1 343 881 6
W4843_4x0.34-2m-PUR	2 m PUR cable for PT1000[1)]	1 343 882 4
W4843_4x0.34-2m-PVC	2 m PVC cable for PT1000[2)]	1 343 883 2
DUO10A	Protection cap (for aseptic design, IP69K)	1 343 902 2

1) PUR cables are particularly suited for use in oil-contaminated environments.
2) PVC cables are particularly suited for use in wet environments.

Mounting on standard gear units (R, F, K, S)

Adapter for mounting the PT1000 temperature sensor in screw plug holes:

Complete adapter for PT1000 sensor	Part number
M10 × 1	1 343 903 0
M12 × 1.5	1 343 904 9
M22 × 1.5	1 343 905 7
M33 × 2	1 343 906 5
M42 × 2	1 343 907 3

Mounting base for installing the diagnostic unit at the gear unit with an angle bracket:

Mounting base with sealing ring	Part number
M10 × 1	1 343 441 1
M12 × 1.5	1 343 827 1
M22 × 1.5	1 343 829 8
M33 × 2	1 343 830 1
M42 × 2	1 343 832 8

Technical data for vibration sensor

DUV10A/DUV30A diagnostic unit

DUV10A and DUV30A vibration sensors are suited for early detection of gearmotor damage, which can be detected using vibration diagnostics, such as bearing damage or imbalance. The highest load of the drives at constant speed must be present to being able to use the full functionality of the diagnostic unit. Drives in which the maximum load is present during acceleration are suitable for monitoring using vibration sensors to a limited degree only.

	Technical data	
	DUV10A	**DUV30A**
Measuring range	± 20 g	± 20 g
Frequency range	0.125 to 500 Hz	0.125 to 500 Hz / 0.125 to 5000 Hz
Spectral resolution	0.125 Hz	0.125 Hz / 1.25 Hz
Diagnostic methods	FFT, envelope-FFT, trend analysis	
Minimum measuring period	8.0 s	8.0 s / 0.8 s
Speed range	12 to 3500 rpm	12 to 3500 rpm / 120 to 12000 rpm
Switch outputs	1: Early warning 2: Main alarm	
Operating voltage	DC 10-32 V	
Current consumption for DC 24 V	100 mA	
Protection class	III	
EMC	IEC1000-4-2/3/4/6	
Overload capacity	100 g	
Ambient temperature	-30 °C to +60 °C	-30 °C to +70 °C
Degree of protection	IP67	
Housing materials	Zinc die-casting, coating based on epoxy finish, polyester membrane keypad	
Electrical connection for supply and switching output	M12 plug connector	
Electrical connection RS-232 for communication	M8 plug connector	
Certificates and standards	CE, UL	

Designations and part numbers

Designation	Description	Part number
DUV10A / DUV30A 	Diagnostic unit (basic unit)	DUV10A: 1 406 629 7 DUV30A: 1 328 969 1
DUV.0A-S	Parameter setting software	1 406 630 0
DUV.0A-K-RS232-M8	Communication cable	1 406 631 9
DUV.0A-N24DC	DC 24 V power supply unit	1 406 632 7
DUV.0A-I	Pulse tester	1 406 633 5

Designation	Description	Part number
DUV.0A-K-M12-2m PUR	2 m PUR cable with 1 connector[1)]	1 406 634 3
DUV.0A-K-M12-5m PUR	5 m PUR cable with 1 connector[1)]	1 406 635 1
DUV.0A-K-M12-2m PVC	2 m PVC cable with 1 connector[2)]	1 326 620 9
DUV.0A-K-M12-5m PVC	5 m PVC cable with 1 connector[2)]	1 326 621 7

1) PUR cables are particularly suited for use in oil-contaminated environments.
2) PVC cables are particularly suited for use in wet environments.

Mounting on standard gear units (R, F, K, S)

Mounting base for installing the diagnostic unit at the gear unit:

Mounting base with sealing ring	Part number
M10 × 1	1 343 441 1
M12 × 1.5	1 343 827 1
M22 × 1.5	1 343 829 8
M33 × 2	1 343 830 1
M42 × 2	1 343 832 8

6.14 Lubricants and fill quantities

General information

Unless a special arrangement is made, SEW-EURODRIVE supplies the drives with a lubricant fill adapted for the specific gear unit and mounting position. This applies when specifying the M1 - M6 mounting position when ordering the drive, see chapter "Mounting positions of gear units" on page 63 et seq. You must adapt the lubricant fill to any subsequent changes made to the mounting position, see section "Lubricant fill quantities" on page 119 and subsequent pages..

INFORMATION

SEW-EURODRIVE fills the gear units with the amount of oil specified for the specific mounting positions. If the mounting position is changed, the amount of oil must be adapted as required. Consequently, a **mounting position may only be changed** after consultation with SEW-EURODRIVE, otherwise your right to claim under warranty **no longer applies**.

Lubricant table

The lubricant table on the following page shows the permitted lubricants for SEW-EURODRIVE gear units. Observe the following key to the lubricant table.

Key to the lubricant table

Abbreviations, meaning of shading and notes:

CLP	= Mineral oil
CLP PG	= Polyglycol (W gear units, conforms to USDA-H1)
CLP HC	= Synthetic hydrocarbons
E	= Ester oil (water hazard classification 1)
HCE	= Synthetic hydrocarbons + ester oil (USDA - H1 certification)
HLP	= Hydraulic oil
	= Synthetic lubricant (= synthetic-based roller bearing grease)
	= Mineral lubricant (= mineral-based rolling bearing grease)
1)	Helical-worm gear units with PG oil: consult SEW-EURODRIVE.
2)	Special lubricant for SPIROPLAN® gear units only
3)	SEW-$f_B \geq 1.2$ required
4)	Observe the critical starting behavior at low temperatures.
5)	Low-viscosity grease
6)	Ambient temperature
	Lubricant for the food industry (food grade oil)
	Biodegradable oil (lubricant for agriculture, forestry, and water management)

Rolling bearing greases

The rolling bearings in gear units and motors are given a factory-fill with the greases listed below. SEW-EURODRIVE recommends regreasing rolling bearings with a grease fill at the same time as changing the oil or replacing the rolling bearings.

	Ambient temperature	Manufacturer	Type
Gear unit rolling bearings	-40 °C to +80 °C	Fuchs	Renolit CX-TOM15[1)]
Motor rolling bearings[2)]	-20 °C to +80 °C	Esso	Polyrex EM
	+20 °C to +100 °C	Klüber	Barrierta L55/2
	-40 °C to +60 °C	Kyodo Yushi	Multemp SRL[3)]
Special greases for gear unit rolling bearings:			
	-30 °C to +40 °C	Aral	Aral Eural Grease EP 2
	-20 °C to +40 °C	Aral	Aral Aralube BAB EP2

1) Rolling bearing grease based on semi-synthetic base oil.
2) The motor rolling bearings are covered on both sides and cannot be regreased.
3) Recommended for continuous operation at ambient temperatures below 0 °C, for example in a cold storage.

INFORMATION

The following grease quantities are required:

- For fast-running bearings (gear unit input end): Fill the cavities between the rolling elements one-third full with grease.
- For slow-running bearings (in gear units and at gear unit output end): Fill the cavities between the rolling elements two-thirds full with grease.

Lubricant table

	6) °C	DIN (ISO)	ISO,NLGI	Mobil®	Shell	Klüber	ARAL	bp	Texaco	Castrol Tribol	Castrol Optimol	Fuchs	Total
R... K...(HK...) F...	Standard -15 +40	CLP(CC)	VG 220	Mobilgear 600 XP 220	Shell Omala 220	Klüberoil GEM 1-220 N	Aral Degol BG 220	BP Energol GR-XP 220	Meropa 220	Tribol 1100/220	Optigear BM 220	Renolin CLP 220	Carter EP 220
	-20 +80	CLP PG	VG 220	Mobil Glygoyle 220	Shell Tivela S 220	Klübersynth GH 6-220	Aral Degol GS 220	BP Enersyn SG-XP 220	Synlube CLP 220	Tribol 800/220	Optiflex A 220	Renolin PG 220	Carter SY 220
	4) -20 +60	CLP HC	VG 220	Mobil SHC 630	Shell Omala HD 220	Klübersynth GEM 4-220 N	Aral Degol PAS 220		Pinnacle EP 220	Tribol 1510/220	Optigear Synthetic X 220	Renolin Unisyn CLP 220	
	4) -40 +40	CLP HC	VG 150	Mobil SHC 629	Shell Omala HD 150	Klübersynth GEM 4-150 N			Pinnacle EP 150		Optigear Synthetic X 150	Renolin Unisyn CLP 150	Carter SH 150
	-20 +25	CLP (CC)	VG 150 VG 100	Mobilgear 600 XP 100	Shell Omala 100	Klüberoil GEM 1-150 N	Aral Degol BG 100	BP Energol GR-XP 100	Meropa 150	Tribol 1100/100	Optigear BM 100	Renolin CLP 150	Carter EP 100
	-30 +10	HLP (HM)	VG 68-46 VG 32	Mobil DTE 10 Excel 32	Shell Tellus T 32	Klüberoil GEM 1-68 N	Aral Degol BG 46		Rando EP Ashless 46	Tribol 1100/68	Optigear 32	Renolin B 46 HVI	Equivis ZS 46
	4) -40 +20	CLP HC	VG 68	Mobil SHC 626	Shell Omala HD 68							Renolin Unisyn CLP 68	
	4) -40 + 0	CLP HC	VG 32	Mobil SHC 624		Klüber-Summit HySyn FG-32			Cetus PAO 46		Optilieb HY 32	Renolin Unisyn OL 32	Dacnis SH 32
	4) -40 -20	HLP (HM)	VG 22 VG 15	Mobil DTE 10 Excel 15	Shell Tellus T 15	Isoflex MT 30 ROT		BP Energol HLP-HM 15	Rando HDZ 15		Hyspin AWS 22	Renolin MR 310	Equivis ZS 15
S...(HS...)	Standard 0 +40	CLP (CC)	VG 680	Mobilgear 600 XP 680	Shell Omala 680	Klüberoil GEM 1-680 N	Aral Degol BG 680	BP Energol GR-XP 680	Meropa 680	Tribol 1100/680	Optigear BM 680	Renolin SEW 680	Carter EP 680
	-20 +80	CLP PG	VG 680 1)	Mobil Glygoyle 680	Shell Tivela S 680	Klübersynth GH 6-680		BP Enersyn SG-XP 680	Synlube CLP 680	Tribol 800/680	Optiflex A 680	Renolin PG 680	
	4) -20 +60	CLP HC	VG 460	Mobil SHC 634	Shell Omala HD 460	Klübersynth GEM 4-460 N			Pinnacle EP 460		Optigear Synthetic X 460	Renolin Unisyn CLP 460	
	4) -40 +30	CLP HC	VG 150	Mobil SHC 629	Shell Omala HD 150	Klübersynth GEM 4-150 N			Pinnacle EP 150		Optigear Synthetic X 150	Renolin Unisyn CLP 150	Carter SH 150
	-20 +10	CLP (CC)	VG 150 VG 100	Mobilgear 600 XP 100	Shell Omala 100	Klüberoil GEM 1-150 N	Aral Degol BG 100	BP Energol GR-XP 100	Meropa 150	Tribol 1100/100	Optigear BM 100	Renolin CLP 150	Carter EP 100
	-20 +40	CLP PG	VG 220 1)	Mobil Glygoyle 220	Shell Tivela S 220	Klübersynth GH 6-220	Aral Degol GS 220	BP Enersyn SG-XP 220	Synlube CLP 220	Tribol 800/220	Optiflex A 220	Renolin PG 220	Carter SY 220
	4) -40 +20	CLP HC	VG 68	Mobil SHC 626	Shell Omala HD 68							Renolin Unisyn CLP 68	
	4) -40 0	CLP HC	VG 32	Mobil SHC 624		Klüber-Summit HySyn FG-32			Cetus PAO 46		Alphasyn T32	Renolin Unisyn OL 32	Dacnis SH 32
R...,K...(HK...), F...,S...(HS...)	4) -10 +40	CLPHC NSF H1	VG 460		Shell Cassida Fluid GL 460	Klüberoil 4UH1-460 N					Optileb GT 460	Geralyn SF 460	
	-20 +30		VG 220		Shell Cassida Fluid GL 220	Klüberoil 4UH1-220 N					Optileb GT 220		
	-40 0		VG 68		Shell Cassida Fluid HF 68	Klüberoil 4UH1-68 N					Optileb HY 68		
	-20 +40	E	VG 460			Klüberbio CA2-460				Tribol Bio Top 1418/460		Plantogear 460 S	
W...(HW...)	Standard -20 +40	CLP PG 460 -SEW	VG 460 2)			Klüber SEW HT-460-5							
	4) -40 +10	API GL5	SAE 75W90 (~VG 100)	Mobil Synthetic Gear Oil 75 W90									
	-20 +60	H1 PG	VG 460 2) 3)			Klübersynth UH1 6-460							
PS.F..	Standard -20 +40	CLP PG	VG 220			Klübersynth GH 6-220							
	-20 +60	H1 PG	VG 460 2) 3)			Klübersynth UH1 6-460							
	-40 0	CLP HC	VG 32	Mobil SHC 624									
PS.C..	Standard -10 +40	CLP (CC)	VG 220	Mobilgear 600 XP 220									
	-20 +40	DIN 51 818	00 5)	Mobillux EP 004									
	-20 +40		1 7)			Klübersynth UH1 14-151							
	-40 0	CLP HC	VG 32	Mobil SHC 624									
BS.F..	Standard -40 +40	API GL5	SAE 75W90 (~VG 100)	Mobil Synth Gear Oil 75 W90									
	-20 +60	H1 PG	VG 460 2) 3)			Klübersynth UH1 6-460							

Lubricant fill quantities

The specified fill quantities are **recommended values**. The precise values vary depending on the number of stages and gear ratio. When filling, it is essential to check the **oil level plug since it indicates the precise oil volume**.

The following tables show guide values for lubricant fill quantities in relation to the mounting position M1 - M6.

Helical gear units (R)

RX..

Gear unit	Fill quantity in liters					
	M1	M2	M3	M4	M5	M6
RX57	0.60	0.80	1.30	1.30	0.90	0.90
RX67	0.80	0.80	1.70	1.90	1.10	1.10
RX77	1.10	1.50	2.60	2.70	1.60	1.60
RX87	1.70	2.50	4.80	4.80	2.90	2.90
RX97	2.10	3.40	7.4	7.0	4.80	4.80
RX107	3.90	5.6	11.6	11.9	7.7	7.7

RXF..

Gear unit	Fill quantity in liters					
	M1	M2	M3	M4	M5	M6
RXF57	0.50	0.80	1.10	1.10	0.70	0.70
RXF67	0.70	0.80	1.50	1.40	1.00	1.00
RXF77	0.90	1.30	2.40	2.00	1.60	1.60
RXF87	1.60	1.95	4.90	3.95	2.90	2.90
RXF97	2.10	3.70	7.1	6.3	4.80	4.80
RXF107	3.10	5.7	11.2	9.3	7.2	7.2

R.., R..F

Gear unit	Fill quantity in liters					
	M1[1)]	M2	M3	M4	M5	M6
R07	0.12	0.20	0.20	0.20	0.20	0.20
R17	0.25	0.55	0.35	0.55	0.35	0.40
R27	0.25/0.40	0.70	0.50	0.70	0.50	0.50
R37	0.30/0.95	0.85	0.95	1.05	0.75	0.95
R47	0.70/1.50	1.60	1.50	1.65	1.50	1.50
R57	0.80/1.70	1.90	1.70	2.10	1.70	1.70
R67	1.10/2.30	2.40	2.80	2.90	1.80	2.00
R77	1.20/3.00	3.30	3.60	3.80	2.50	3.40
R87	2.30/6.0	6.4	7.2	7.2	6.3	6.5
R97	4.60/9.8	11.7	11.7	13.4	11.3	11.7
R107	6.0/13.7	16.3	16.9	19.2	13.2	15.9
R137	10.0/25.0	28.0	29.5	31.5	25.0	25.0
R147	15.4/40.0	46.5	48.0	52.0	39.5	41.0
R167	27.0/70.0	82.0	78.0	88.0	66.0	69.0

1) The larger gear unit of multi-stage gear units must be filled with the larger oil volume.

RF..

Gear unit	Fill quantity in liters					
	M1[1)]	M2	M3	M4	M5	M6
RF07	0.12	0.20	0.20	0.20	0.20	0.20
RF17	0.25	0.55	0.35	0.55	0.35	0.40
RF27	0.25/0.40	0.70	0.50	0.70	0.50	0.50
RF37	0.35/0.95	0.90	0.95	1.05	0.75	0.95
RF47	0.65/1.50	1.60	1.50	1.65	1.50	1.50
RF57	0.80/1.70	1.80	1.70	2.00	1.70	1.70
RF67	1.20/2.50	2.50	2.70	2.80	1.90	2.10
RF77	1.20/2.60	3.10	3.30	3.60	2.40	3.00
RF87	2.40/6.0	6.4	7.1	7.2	6.3	6.4
RF97	5.1/10.2	11.9	11.2	14.0	11.2	11.8
RF107	6.3/14.9	15.9	17.0	19.2	13.1	15.9
RF137	9.5/25.0	27.0	29.0	32.5	25.0	25.0
RF147	16.4/42.0	47.0	48.0	52.0	42.0	42.0
RF167	26.0/70.0	82.0	78.0	88.0	65.0	71.0

1) The larger gear unit of multi-stage gear units must be filled with the larger oil volume.

Parallel shaft helical gear units (F)

F.., FA..B, FH..B, FV..B

Gear unit	Fill quantity in liters					
	M1	M2	M3	M4	M5	M6
F..27	0.60	0.80	0.65	0.70	0.60	0.60
F..37	0.95	1.25	0.70	1.25	1.00	1.10
F..47	1.50	1.80	1.10	1.90	1.50	1.70
F..57	2.60	3.50	2.10	3.50	2.80	2.90
F..67	2.70	3.80	1.90	3.80	2.90	3.20
F..77	5.9	7.3	4.30	8.0	6.0	6.3
F..87	10.8	13.0	7.7	13.8	10.8	11.0
F..97	18.5	22.5	12.6	25.2	18.5	20.0
F..107	24.5	32.0	19.5	37.5	27.0	27.0
F..127	40.5	54.5	34.0	61.0	46.3	47.0
F..157	69.0	104.0	63.0	105.0	86.0	78.0

FF..

Gear unit	Fill quantity in liters					
	M1	M2	M3	M4	M5	M6
FF27	0.60	0.80	0.65	0.70	0.60	0.60
FF37	1.00	1.25	0.70	1.30	1.00	1.10
FF47	1.60	1.85	1.10	1.90	1.50	1.70
FF57	2.80	3.50	2.10	3.70	2.90	3.00
FF67	2.70	3.80	1.90	3.80	2.90	3.20
FF77	5.9	7.3	4.30	8.1	6.0	6.3
FF87	10.8	13.2	7.8	14.1	11.0	11.2
FF97	19.0	22.5	12.6	25.6	18.9	20.5
FF107	25.5	32.0	19.5	38.5	27.5	28.0
FF127	41.5	55.5	34.0	63.0	46.3	49.0
FF157	72.0	105.0	64.0	106.0	87.0	79.0

FA.., FH.., FV.., FAF.., FAZ.., FHF.., FHZ.., FVF.., FVZ.., FT..

Gear unit	Fill quantity in liters					
	M1	M2	M3	M4	M5	M6
F..27	0.60	0.80	0.65	0.70	0.60	0.60
F..37	0.95	1.25	0.70	1.25	1.00	1.10
F..47	1.50	1.80	1.10	1.90	1.50	1.70
F..57	2.70	3.50	2.10	3.40	2.90	3.00
F..67	2.70	3.80	1.90	3.80	2.90	3.20
F..77	5.9	7.3	4.30	8.0	6.0	6.3
F..87	10.8	13.0	7.7	13.8	10.8	11.0
F..97	18.5	22.5	12.6	25.2	18.5	20.0
F..107	24.5	32.0	19.5	37.5	27.0	27.0
F..127	39.0	54.5	34.0	61.0	45.0	46.5
F..157	68.0	103.0	62.0	104.0	85.0	77.0

Helical-bevel gear units (K)

K.., KA..B, KH..B, KV..B

Gear unit	Fill quantity in liters					
	M1	M2	M3	M4	M5	M6
K..37	0.50	1.00	1.00	1.25	0.95	0.95
K..47	0.80	1.30	1.50	2.00	1.60	1.60
K..57	1.10	2.20	2.20	2.80	2.30	2.10
K..67	1.10	2.40	2.60	3.45	2.60	2.60
K..77	2.20	4.10	4.40	5.8	4.20	4.40
K..87	3.70	8.0	8.7	10.9	8.0	8.0
K..97	7.0	14.0	15.7	20.0	15.7	15.5
K..107	10.0	21.0	25.5	33.5	24.0	24.0
K..127	21.0	41.5	44.0	54.0	40.0	41.0
K..157	31.0	62.0	65.0	90.0	58.0	62.0
K..167	33.0	95.0	105.0	123.0	85.0	84.0
K..187	53.0	152.0	167.0	200	143.0	143.0

KF..

Gear unit	Fill quantity in liters					
	M1	M2	M3	M4	M5	M6
KF37	0.50	1.10	1.10	1.50	1.00	1.00
KF47	0.80	1.30	1.70	2.20	1.60	1.60
KF57	1.20	2.20	2.40	3.15	2.50	2.30
KF67	1.10	2.40	2.80	3.70	2.70	2.70
KF77	2.10	4.10	4.40	5.9	4.50	4.50
KF87	3.70	8.2	9.0	11.9	8.4	8.4
KF97	7.0	14.7	17.3	21.5	15.7	16.5
KF107	10.0	21.8	25.8	35.1	25.2	25.2
KF127	21.0	41.5	46.0	55.0	41.0	41.0
KF157	31.0	66.0	69.0	92.0	62.0	62.0

KA.., KH.., KV.., KAF.., KHF.., KVF.., KAZ.., KHZ.., KVZ.., KT..

Gear unit	Fill quantity in liters					
	M1	M2	M3	M4	M5	M6
K..37	0.50	1.00	1.00	1.40	1.00	1.00
K..47	0.80	1.30	1.60	2.15	1.60	1.60
K..57	1.20	2.20	2.40	3.15	2.70	2.40
K..67	1.10	2.40	2.70	3.70	2.60	2.60
K..77	2.10	4.10	4.60	5.9	4.40	4.40
K..87	3.70	8.2	8.8	11.1	8.0	8.0
K..97	7.0	14.7	15.7	20.0	15.7	15.7
K..107	10.0	20.5	24.0	32.4	24.0	24.0
K..127	21.0	41.5	43.0	52.0	40.0	40.0
K..157	31.0	66.0	67.0	87.0	62.0	62.0

Helical-worm gear units (S)

S

Gear unit	Fill quantity in liters					
	M1	M2	M3[1)]	M4	M5	M6
S..37	0.25	0.40	0.50	0.55	0.40	0.40
S..47	0.35	0.80	0.70/0.90	1.00	0.80	0.80
S..57	0.50	1.20	1.00/1.20	1.45	1.30	1.30
S..67	1.00	2.00	2.20/3.10	3.10	2.60	2.60
S..77	1.90	4.20	3.70/5.4	5.9	4.40	4.40
S..87	3.30	8.1	6.9/10.4	11.3	8.4	8.4
S..97	6.8	15.0	13.4/18.0	21.8	17.0	17.0

1) The larger gear unit of multi-stage gear units must be filled with the larger oil volume.

SF..

Gear unit	Fill quantity in liters					
	M1	M2	M3[1)]	M4	M5	M6
SF37	0.25	0.40	0.50	0.55	0.40	0.40
SF47	0.40	0.90	0.90/1.05	1.05	1.00	1.00
SF57	0.50	1.20	1.00/1.50	1.55	1.40	1.40
SF67	1.00	2.20	2.30/3.00	3.20	2.70	2.70
SF77	1.90	4.10	3.90/5.8	6.5	4.90	4.90
SF87	3.80	8.0	7.1/10.1	12.0	9.1	9.1
SF97	7.4	15.0	13.8/18.8	22.6	18.0	18.0

1) The larger gear unit of multi-stage gear units must be filled with the larger oil volume.

SA.., SH.., SAF.., SHZ.., SAZ.., SHF.., ST..

Gear unit	Fill quantity in liters					
	M1	M2	M3[1)]	M4	M5	M6
S..37	0.25	0.40	0.50	0.50	0.40	0.40
S..47	0.40	0.80	0.70/0.90	1.00	0.80	0.80
S..57	0.50	1.10	1.00/1.50	1.50	1.20	1.20
S..67	1.00	2.00	1.80/2.60	2.90	2.50	2.50
S..77	1.80	3.90	3.60/5.0	5.8	4.50	4.50
S..87	3.80	7.4	6.0/8.7	10.8	8.0	8.0
S..97	7.0	14.0	11.4/16.0	20.5	15.7	15.7

1) The larger gear unit of multi-stage gear units must be filled with the larger oil volume.

SPIROPLAN® gear units (W)

The fill quantities of SPRIOPLAN® gear units W..37 and W..47 in mounting position M4 are different from those of other mounting positions.

W.., WF.., WA..B, WH..B

Gear unit	Fill quantity in liters					
	M1	M2	M3	M4	M5	M6
W..37	0.50			0.70	0.50	
W..47	0.90			1,40	0.90	

WA.., WAF.., WT.., WH.., WHF..

Gear unit	Fill quantity in liters					
	M1	M2	M3	M4	M5	M6
W..37	0.50			0.70	0.50	
W..47	0.80			1,25	0.80	

7 Important Information on Selection Tables and Dimension Sheets

7.1 Information on the selection tables

M_{aDyn} Nm		DRL												
	i	71M	80S		80M		90L		100L		132S		132MC	
		D2	D1	D2	D1	D2	D1	D2	D1	D2	D1	D2	D1	D2
FA97 3	58.06	780	555	1390	720	1830	1390	2560	1950	>4360	>4360	>4360	>4360	>4360
	65.47	870	625	1570	810	2070	1570	2890	2190	>4360	>4360	>4360	>4360	>4360
	72.29	970	690	1730	900	2290	1730	3190	2420	>4360	>4360	>4360	>4360	>4360
	75.63									>4360	>4360	>4360	>4360	>4360
	80.31	1060	760	1900	990	2510	1900	3500	2670	>4360	>4360	>4360	>4360	

Dynamic output torque of the drive M_{aDyn} in dynamics package D1 or D2

Gear unit reduction ratio

Gear unit size with number of gear unit stages

	The dark-gray fields contain preferred combinations
	Please contact SEW-EURODRIVE for more information about the light-gray fields.
	White fields mean: Combination not possible

INFORMATION

In fields marked with ">...", M_{aDyn} must not exceed the maximum permitted torque M_{apk} in short-term duty because the motor may overload the gear unit. The motor current I_{max} must be limited during startup.

m kg		DRL						
	s	71M	80S	80M	90L	100L	132S	132MC
FA97	2	160	160	165	170	180	195	210
FA97	3	165	165	170	175	185	200	215
FAF: + 21.7 kg / F: + 7.5 kg / FF: + 40.3 kg								

m Mass of the drive

s Number of gear unit stages

DRL..	i	n_{epk} rpm	η %	c_{TG} FA Nm/'	FAF Nm/'	F Nm/'	FF Nm/'	φ /R '
FA97 2	3.87	3197	97	627	627	324	283	9
	4.57	3597	97	627	627	324	283	9
	5.23	3924	97	627	627	324	283	9
	6.17	4378	97	627	627	324	283	9
	7.07	4500	97	627	627	324	283	9

i	Gear unit reduction ratio
n_{epk}	Maximum permitted input speed for short-time duty
η	Efficiency of the gear unit (at M_{apk}, n_e=1400 rpm, mounting position M1, S1 operation)
c_{TG}	Torsional rigidity of the gear unit
FA **FAF** **F** **FF**	Overhung load for gear unit type
φ	Circumferential backlash

DRL.. n_e = 1400	i	M_{amax} Nm	M_{apk} Nm	$M_{aNotaus}$ Nm	n_{ak} rpm	J_G 10^{-4} kgm^2	F_{Ramax} FA N	FAF N	F N	FF N	F_{Rapk} FA N	FAF N	F N	FF N
FA97 2	3.87	1800	2700	3060	465	266	10300	10300	9960	16500	40000	40000	33600	30600
	4.57	2050	3000	3485	328	193	10200	10200	9950	16800	40000	40000	32900	30300
	5.23	2150	3020	3655	325	153	10700	10700	10400	17400	40000	40000	32800	30300
	6.17	2250	3030	3825	324	116	11400	11400	11100	18300	40000	40000	32800	30200
	7.07	2360	3040	4012	297	92	11900	11900	11500	19000	40000	40000	32800	30200

n_e	Reference speed at continuous duty
i	Gear unit reduction ratio
M_{amax}	Maximum permitted output torque for continuous duty
M_{apk}	Maximum permitted output torque for short-time duty
$M_{aNotaus}$	Maximum permitted output emergency stop torque, max. 1000 emergency stops
n_{AK}	Breakpoint speed (output)
J_G	Mass moment of inertia of the gear unit with reference to the input shaft
F_{Ramax}	Maximum permitted overhung load at the output shaft at M_{amax}, load application point at the center of the shaft end
FA **FAF** **F** **FF**	Overhung load for gear unit type
F_{Rapk}	Maximum permitted overhung load at the output shaft at M_{apk}, load application point at the center of the shaft end
FA **FAF** **F** **FF**	Overhung load for gear unit type

7.2 Information on the dimension sheets

Scope of delivery

= Standard parts supplied by SEW-EURODRIVE.

= Standard parts not supplied by SEW-EURODRIVE.

Tolerances

Shaft heights

The following tolerances apply to the indicated dimensions:

h	≤ 250 mm	→ -0.5 mm
h	> 250 mm	→ -1 mm

Foot-mounted gear units: Check the mounted motor because it may project below the mounting surface.

Shaft ends

Diameter tolerance:

∅	≤ 50 mm	→ ISO k6
∅	> 50 mm	→ ISO m6

Center bores according to DIN 332, shape DR:

∅	= 7 - 10 mm	→ M3	∅	> 30 - 38 mm	→ M12
∅	> 10 - 13 mm	→ M4	∅	> 38 - 50 mm	→ M16
∅	> 13 - 16 mm	→ M5	∅	> 50 - 85 mm	→ M20
∅	> 16 - 21 mm	→ M6	∅	> 85 - 130 mm	→ M24
∅	> 21 - 24 mm	→ M8	∅	> 130 mm	→ M30
∅	> 24 - 30 mm	→ M10			

Keys: according to DIN 6885 (domed type)

Output shafts without keyway

Please contact SEW-EURODRIVE if you require output shafts without keyway.

Hollow shafts

Diameter tolerance:

∅ → ISO H7 measured with plug gauge

Keys: according to DIN 6885 (domed type)

Exception: Key for WA37 with shaft ∅ 25 mm according to DIN 6885-3 (low form)

Multiple-spline shafts

Dm = Measuring roller diameter
Me = Check gauge

Flanges

Centering shoulder tolerance:

∅ ≤ 230 mm (flange sizes A120 - A300) → ISO j6
∅ > 230 mm (flange sizes A350 - A660) → ISO h6

Up to 3 different flange dimensions are available for each size of helical gear units, SPIROPLAN® gear units, AC (brake)motors and explosion-proof AC (brake)motors. The dimension sheets show the possible flanges for the respective sizes.

Eyebolts, lifting eyes

R07 to R27 helical gear units are delivered without special transportation fixtures. All other gear units and motors are equipped with cast-on suspension eye lugs, screw-on suspension eye lugs or screw-on lifting eyebolts.

Gear unit/motor type	screw-on		Cast-on eyebolts
	eyebolts	lifting eyes	
R..37 – R..57	-	•	-
R..67 – R..167	•	-	-
RX57 – RX67	-	•	-
RX77 – RX107	•	-	-
F..27 – F..157	-	-	•
K..37 – K..157	-	-	•
K..167 – K..187	•	-	-
W..37 – W..47	-	•	-
S..37 – S..47	-	•	-
S..57 – S..97	-	-	•

Breather valves

The gear unit dimension drawings always show the screw plugs. The corresponding screw plug is replaced by an activated breather valve at the factory depending on the ordered mounting position M1 to M6. Contour dimensions might therefore be slightly different.

Shrink disk connection

Hollow shaft gear unit with shrink disk connection: If required, please request a detailed data sheet on shrink disks, data sheet no. 33 753 ..95.

Splined hollow shaft

FV.. hollow shaft gear unit sizes 27 to 107 and KV.. sizes 37 to 107 are supplied with splining according to DIN 5480.

Rubber buffer for FA/FH/FV/FT

Preload rubber buffer by the indicated value mL. The characteristic curve of spring for the rubber buffers is available at SEW-EURODRIVE on request.

Position of the torque arm

The following figure shows the possible torque arm positions for helical-worm gear units and SPIROPLAN® gear units as well as the respective angles:

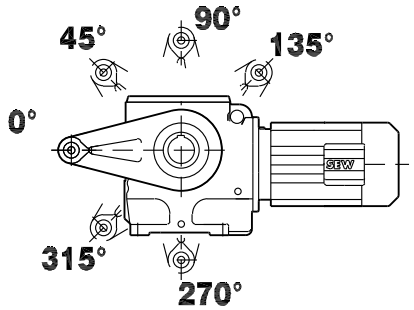

59253axx

For information on torque arms for helical-worm gearmotors, refer to the dimension sheets from page 436. For information on torque arms for SPIROPLAN® gearmotors, refer to the dimension sheets from page 464.

You find specifications regarding the torque arms of helical-bevel gearmotors from page 342.

7.3 Gearmotor dimensions

Motor options

The motor dimensions may change due to motor options. Refer to the dimension drawings of the motor options.

Special designs

The terminal box dimensions for special designs might vary from the standard.

EN 50347

European standard EN 50347 became effective in August 2001. This standard adopts the dimension designations for three-phase AC motors of size 56 to 315M and flange size 65 to 740 from the IEC 72-1 standard.

The new dimension designations given in EN 50347 / IEC 72-1 are used for the relevant dimensions in the dimension sheet tables.

Dimensions designations of gearmotors

Below an overview of dimension designations for gearmotors:

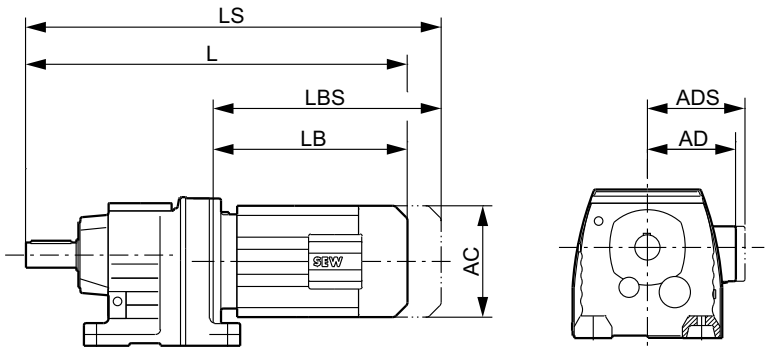

59251axx

L	Total length of gearmotor	AC	Diameter of motor
LS	Total length of gearmotor including brake	AD	Center of motor shaft to top part of terminal box
LB	Length of motor	ADS	Center of brakemotor shaft to top part of terminal box
LBS	Length of brakemotor		

Terminal box size

	INFORMATION
	The terminal box of a motor might deviate from the standard depending on the connected functions.

Page remains empty for printing reasons.

8 R..DRL

8.1 R, RF, R..F, RX, RXF..DRL

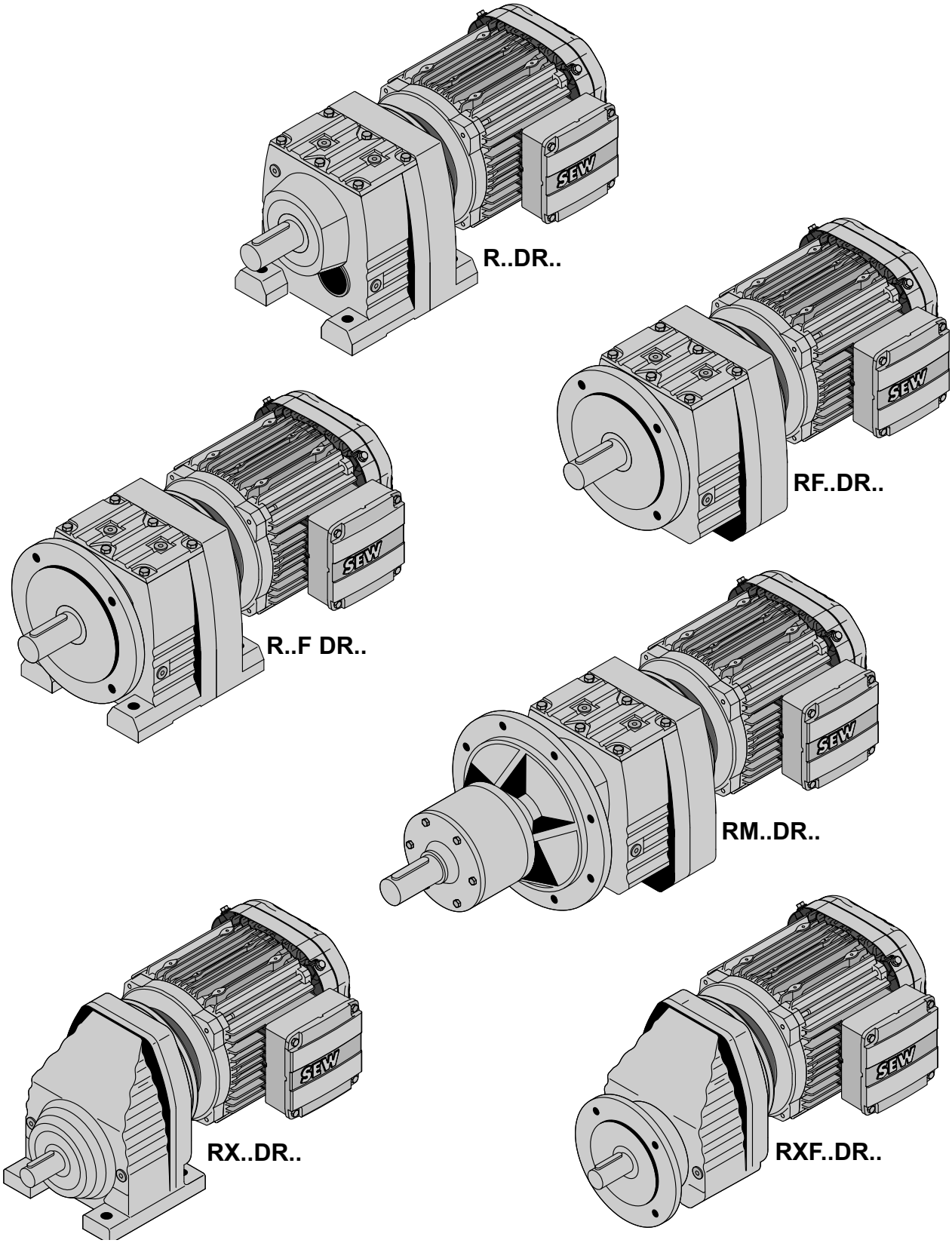

8.2 RX..Nm

8.2.1 RX 57

M_{aDyn} Nm	i	DRL											
		71S		71M		80S		80M		90L		100L	132S
		D1	D2	D1	D2	D1	D2	D1	D2	D1	D2	D1	D1
RX57 1	1.30	6.4	11	8.9	18	13	32	17	42	32	59	45	>90
	1.48	7.3	12	10	20	15	36	19	48	36	67	51	>90
	1.65	8.1	14	11	23	16	40	21	53	40	74	57	>90
	1.92	9.4	16	13	26	19	47	24	62	47	87	66	>90
	2.04	10.0	17	14	28	20	50	26	66	50	>90	70	>90
	2.37	12	20	16	33	23	58	30	77	58	>90	81	
	2.64	13	22	18	36	26	65	34	85	65	>90	>90	
	2.91	14	24	20	40	29	71	37					
	3.14	15	26	22	43	31	77	40	>90	77		>90	
	3.55	17	30	24	49	35	87	45					
	3.79	19	32	26	52	37	>90	48					
	4.35	21	36	30		43		55					
	5.07	25		35									
	5.50	27		38									

m kg	s	DRL						
		71S	71M	80S	80M	90L	100L	132S
RX57	1	17	18	21	23	31	39	54
RXF: + 1.9 kg								

→ 124

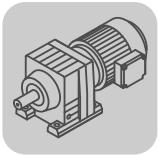

DRL..	i	n_{epk} 1/min	η %	c_{TG} RX Nm/'	RXF Nm/'
RX57 1	1.30	2483	98	4.2	4.2
	1.48	2827	98	4.2	4.2
	1.65	3151	98	4.2	4.2
	1.92	3667	98	4.2	4.2
	2.04	3896	98	4.2	4.2
	2.37	4500	98	4.2	4.2
	2.64	4500	98	4.2	4.2
	2.91	4500	98	4.2	4.2
	3.14	4500	98	4.2	4.2
	3.55	4500	98	4.2	4.2
	3.79	4500	98	4.2	4.2
	4.35	4500	98	4.2	4.2
	5.07	4500	98	4.2	4.2
	5.50	4500	98	4.2	4.2

DRL.. n_e = 1400	i	M_{amax} Nm	M_{apk} Nm	$M_{aNotaus}$ Nm	n_{ak} 1/min	J_G 10^{-4} kgm^2	F_{Ramax} RX N	F_{Ramax} RXF N	F_{Rapk} RX N	F_{Rapk} RXF N
RX57 1	1.30	63	90	107	1154	1.9	132	132	3940	3940
	1.48	68	90	116	1014	1.4	112	112	3950	3950
	1.65	69	90	117	1091	1.2	430	430	3960	3960
	1.92	69	90	117	1250	0.94	880	880	3970	3970
	2.04	69	90	117	1324	0.85	1070	1070	3970	3970
	2.37	69	90	117	1477	0.64	1500	1500	3980	3980
	2.64	69	90	117	1629	0.55	1810	1810	3980	3980
	2.91	67	90	114	1856	0.44	2170	2170	3980	3980
	3.14	65	90	111	2197	0.42	2320	2320	3990	3990
	3.55	69	90	117	1972	0.35	2420	2420	3990	3990
	3.79	69	90	117	1847	0.32	2480	2480	3990	3990
	4.35	68	90	116	1609	0.26	2640	2640	4000	4000
	5.07	36	54	61	1381	0.21	3030	3030	4210	4210
	5.50	39	58	66	1273	0.18	3100	3100	4190	4190

01 132 00 08

RX57..

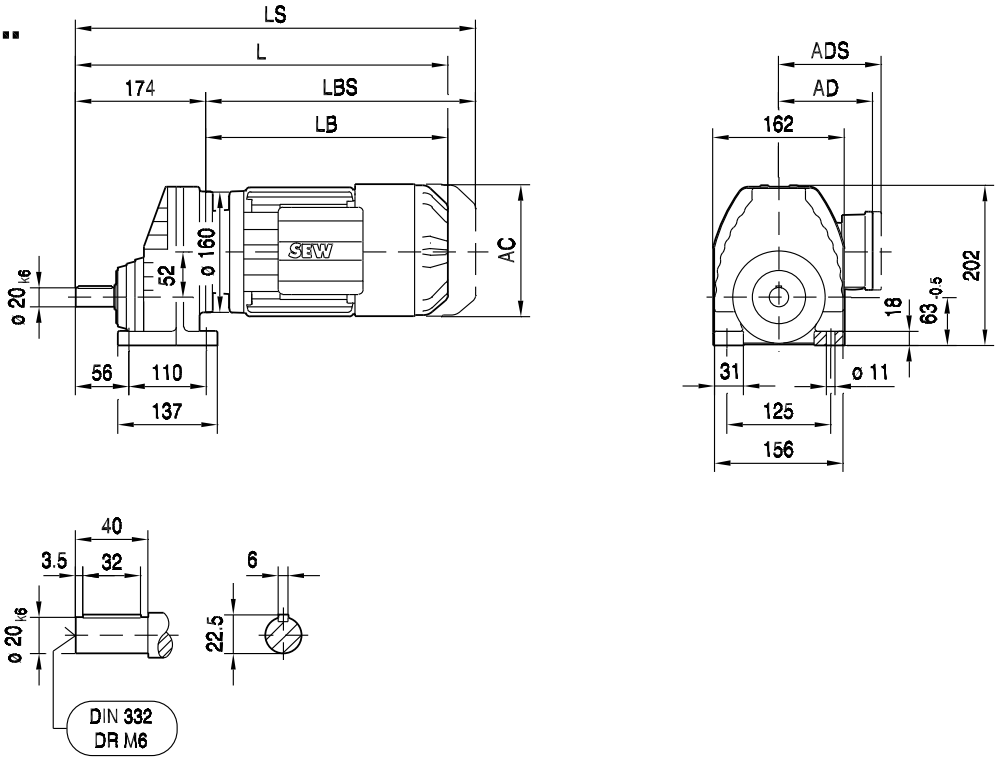

(→ 📖 129)	DRL71S	DRL71M	DRL80S	DRL80M	DRL90L	DRL100L	DRL132S	
AC	139	139	156	156	179	197	221	
AD	119	119	128	128	140	157	170	
ADS	129	129	139	139	150	158	172	
L	454	479	500	531	545	604	689	
LS	519	544	580	611	631	691	797	
LB	280	305	326	357	371	430	515	
LBS	345	370	406	437	457	517	623	

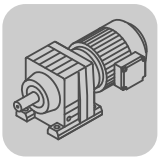

01 133 00 08

RXF57..

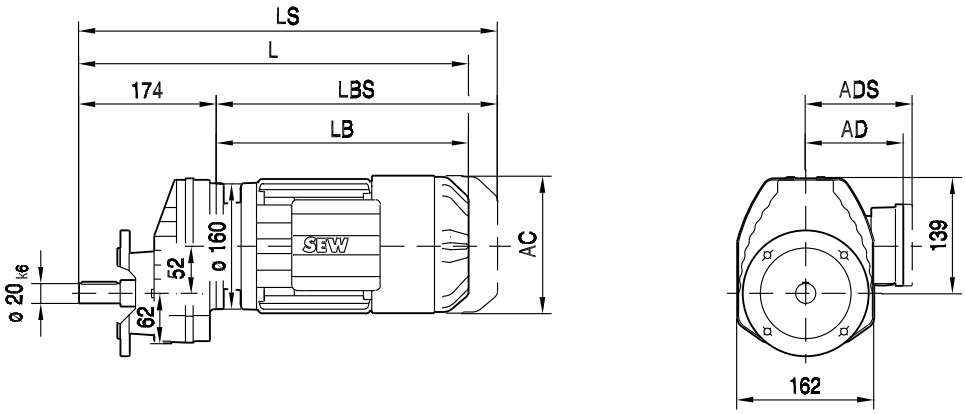

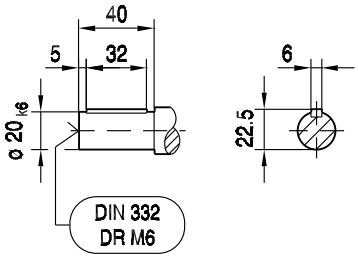

ø 140

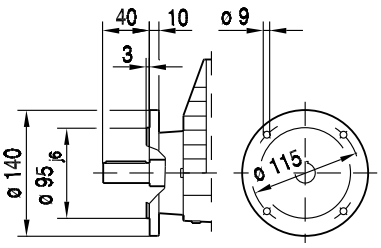

ø 160

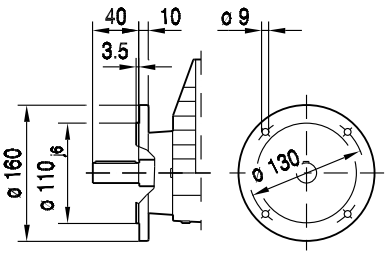

ø 200

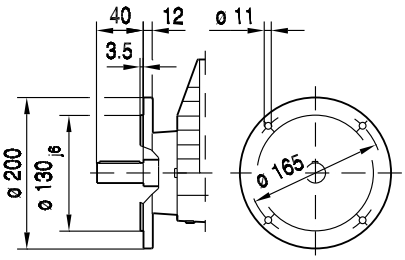

(→ 📖 129)	DRL71S	DRL71M	DRL80S	DRL80M	DRL90L	DRL100L	DRL132S	
AC	139	139	156	156	179	197	221	
AD	119	119	128	128	140	157	170	
ADS	129	129	139	139	150	158	172	
L	454	479	500	531	545	604	689	
LS	519	544	580	611	631	691	797	
LB	280	305	326	357	371	430	515	
LBS	345	370	406	437	457	517	623	

8.2.2 RX 67

M_{aDyn} Nm	i	DRL											
		71S		71M		80S		80M		90L		100L	132S
		D1	D2	D1	D2	D1	D2	D1	D2	D1	D2	D1	D1
RX67 1	1.40		12		19	14	35	18	46	35	64	49	111
	1.61	8.0	14	11	22	16	40	21	53	40	73	56	128
	1.86	9.2	16	13	26	18	46	24	61	46	85	64	147
	2.04	10	17	14	28	20	50	26	67	50	93	71	162
	2.40	12	20	17	33	24	59	31	78	59	109	83	>163
	2.54	13	21	18	35	25	63	33	83	63	116	88	>162
	2.89	14	24	20	40	28	71	37	93	71	130	99	
	3.20	16	27	22	44	31	78	41	103	78	>142	110	
	3.77	18	31	26	52	37	92	48	122	92		129	
	4.30	21	36	29	59	42	105	55					
	4.53	22	38	31	62	44	>110	58					
	5.18	25	43	36		51		66					
	6.07	30		42									

m kg		DRL						
	s	71S	71M	80S	80M	90L	100L	132S
RX67	1	20	21	23	26	34	41	57
RXF: + 4.0 kg								

→ 124

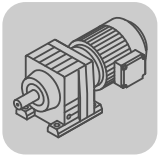

DRL..	i	n_{epk} 1/min	η %	c_{TG} RX Nm/'	RXF Nm/'
RX67 1	1.40	2507	99	8.1	8.1
	1.61	2883	99	8.1	8.1
	1.86	3330	99	8.1	8.1
	2.04	3653	99	8.1	8.1
	2.40	4297	99	8.1	8.1
	2.54	4500	99	8.1	8.1
	2.89	4500	98	8.1	8.1
	3.20	4500	98	8.1	8.1
	3.77	4500	98	8.1	8.1
	4.30	4500	98	8.1	8.1
	4.53	4500	98	8.1	8.1
	5.18	4500	98	8.1	8.1
	6.07	4500	98	8.1	8.1

DRL.. n_e = 1400	i	M_{amax} Nm	M_{apk} Nm	$M_{aNotaus}$ Nm	n_{ak} 1/min	J_G 10^{-4} kgm^2	F_{Ramax} RX N	F_{Ramax} RXF N	F_{Rapk} RX N	F_{Rapk} RXF N
RX67 1	1.40	104	156	177	1071	3.2	205	205	5450	5450
	1.61	114	171	194	932	2.6	245	245	5380	5380
	1.86	126	187	214	806	2.1	225	225	5300	5300
	2.04	134	186	228	735	1.8	230	230	5310	5310
	2.40	123	163	209	1125	1.4	1530	1530	5460	5460
	2.54	118	162	201	1339	1.3	2000	2000	5470	5470
	2.89	106	142	180	1972	1.0	2640	2640	5590	5590
	3.20	100	142	170	2188	0.88	2800	2800	5590	5590
	3.77	87	130	148	1857	0.69	3090	3090	5660	5660
	4.30	80	109	136	1628	0.47	3300	3300	5770	5770
	4.53	82	110	139	1545	0.42	3350	3350	5760	5760
	5.18	75	110	128	1351	0.34	3580	3580	5760	5760
	6.07	43	64	73	1153	0.28	4000	4000	5970	5970

01 134 00 08

RX67..

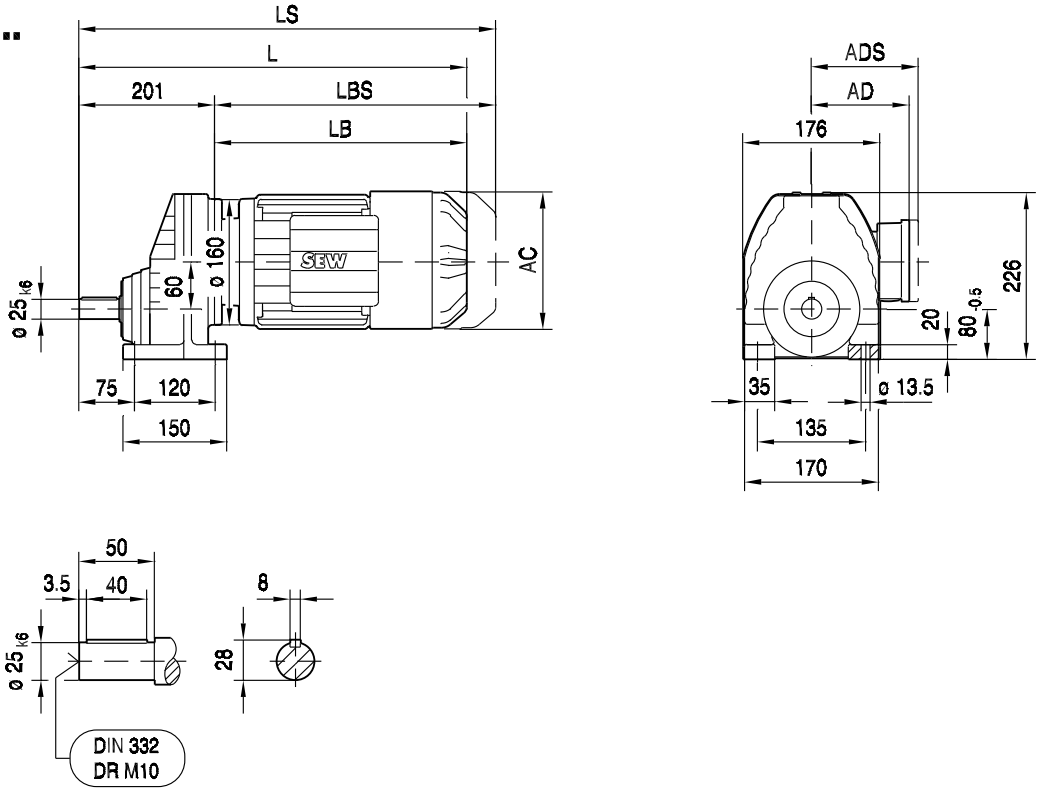

(→ 📖 129)	DRL71S	DRL71M	DRL80S	DRL80M	DRL90L	DRL100L	DRL132S	
AC	139	139	156	156	179	197	221	
AD	119	119	128	128	140	157	170	
ADS	129	129	139	139	150	158	172	
L	481	506	527	558	572	631	716	
LS	546	571	607	638	658	718	824	
LB	280	305	326	357	371	430	515	
LBS	345	370	406	437	457	517	623	

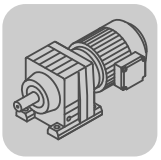

01 135 00 08

RXF67..

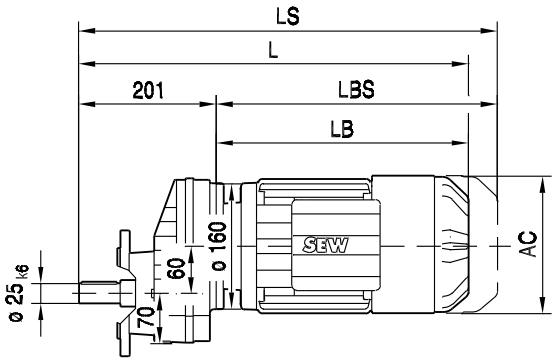

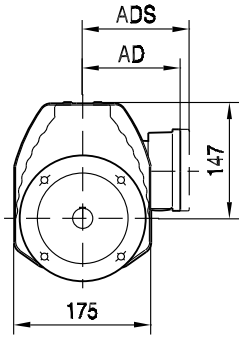

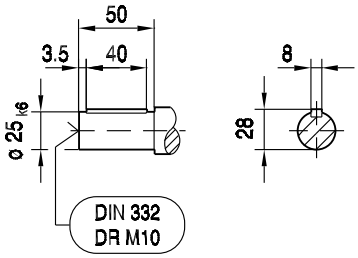

ø 160

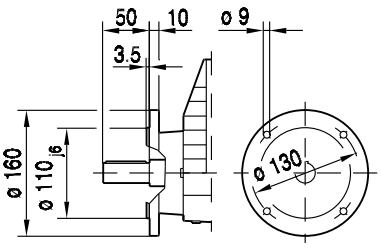

ø 200

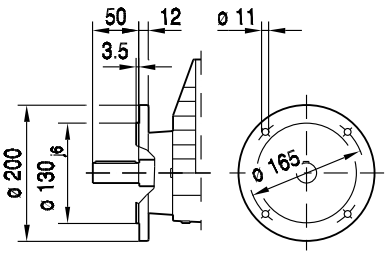

ø 250

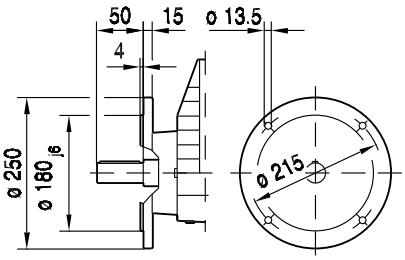

(→ 📖 129)	DRL71S	DRL71M	DRL80S	DRL80M	DRL90L	DRL100L	DRL132S	
AC	139	139	156	156	179	197	221	
AD	119	119	128	128	140	157	170	
ADS	129	129	139	139	150	158	172	
L	481	506	527	558	572	631	716	
LS	546	571	607	638	658	718	824	
LB	280	305	326	357	371	430	515	
LBS	345	370	406	437	457	517	623	

8.2.3 RX 77

M_{aDyn} Nm	i	DRL 71S D1	71S D2	71M D1	71M D2	80S D1	80S D2	80M D1	80M D2	90L D1	90L D2
RX77 1	1.42		12		19	14	35	18	46	35	64
	1.67		14		23	17	41	21	55	41	76
	1.88		16		26	19	47	24	61	47	86
	2.13	11	18	15	30	21	53	27	70	53	97
	2.43	12	20	17	34	24	60	31	79	60	111
	2.70	13	23	19	37	27	67	35	88	67	123
	3.08	15	26	21	43	30	76	40	101	76	140
	3.25	16	27	22	45	32	80	41	105	80	147
	3.70	18	31	25	51	36	91	47	120	91	167
	4.04	20	34	28	55	40	99	51	131	99	182
	4.73	23	39	32	65	46	116	60	153	116	
	5.35	26	45	37	73	52	131	68			
	5.63	28	47	39	77	55	138	72			
	6.41	31	53	44		63		82			
	7.47	36		51							
	8.00	39		54							

m kg	s	DRL 71S	71M	80S	80M	90L
RX77	1	30	32	34	37	44
RXF: + 2.3 kg						

M_{aDyn} Nm	i	DRL 100L D1	100L D2	132S D1	132S D2	132MC D1	132MC D2	160M D1	160M D2	160MC D1	160MC D2
RX77 1	1.42	49	118	111	205	181	>230	225	>230	>230	>230
	1.67	58	141	132	245	210	>255	>255	>255	>255	>255
	1.88	65	158	149	275	240	>280	>280	>280	>280	>280
	2.13	74	179	169	>300	270		>300		>300	
	2.43	84	200	192	>305	>305		>305		>305	
	2.70	94	225	210							
	3.08	107	255	240							
	3.25	111	>260	250							
	3.70	127									
	4.04	139									
	4.73	162									
	5.35										
	5.63										
	6.41										
	7.47										
	8.00										

m kg	s	DRL 100L	132S	132MC	160M	160MC
RX77	1	51	67	83	105	110
RXF: + 2.3 kg						

	→ 📖 124

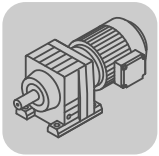

DRL..	i	n_{epk} 1/min	η %	c_{TG} RX Nm/'	RXF Nm/'
RX77 1	1.42	2164	98	17	17
	1.67	2545	99	17	17
	1.88	2865	99	17	17
	2.13	3246	99	17	17
	2.43	3703	99	17	17
	2.70	4114	99	17	17
	3.08	4500	99	17	17
	3.25	4500	98	17	17
	3.70	4500	98	17	17
	4.04	4500	98	17	17
	4.73	4500	98	17	17
	5.35	4500	98	17	17
	5.63	4500	98	17	17
	6.41	4500	98	17	17
	7.47	4500	97	17	17
	8.00	4500	97	17	17

DRL.. n_e = 1400	i	M_{amax} Nm	M_{apk} Nm	$M_{aNotaus}$ Nm	n_{ak} 1/min	J_G 10^{-4} kgm^2	F_{Ramax} RX N	F_{Ramax} RXF N	F_{Rapk} RX N	F_{Rapk} RXF N
RX77 1	1.42	155	232	264	1056	7.6	315	315	10000	10000
	1.67	173	259	294	898	6.0	315	315	10000	10000
	1.88	187	280	318	798	5.0	335	335	10000	10000
	2.13	200	300	340	704	4.1	435	435	10000	10000
	2.43	215	305	366	658	3.4	510	510	10000	10000
	2.70	215	285	366	741	3.0	1110	1110	10000	10000
	3.08	193	260	328	1104	2.5	2560	2560	10000	10000
	3.25	182	260	309	1385	2.3	3200	3200	10000	10000
	3.70	153	215	260	1892	1.9	4290	4290	10000	10000
	4.04	143	214	243	1733	1.6	4500	4500	10000	10000
	4.73	123	184	209	1480	1.3	4900	4900	10000	10000
	5.35	103	154	175	1308	0.90	5240	5240	10000	10000
	5.63	110	165	187	1243	0.81	5300	5300	10000	10000
	6.41	103	154	175	1092	0.66	5600	5600	10000	10000
	7.47	53	79	90	937	0.53	6200	6200	10000	10000
	8.00	57	85	97	875	0.46	6330	6330	10000	10000

01 136 00 08

RX77..

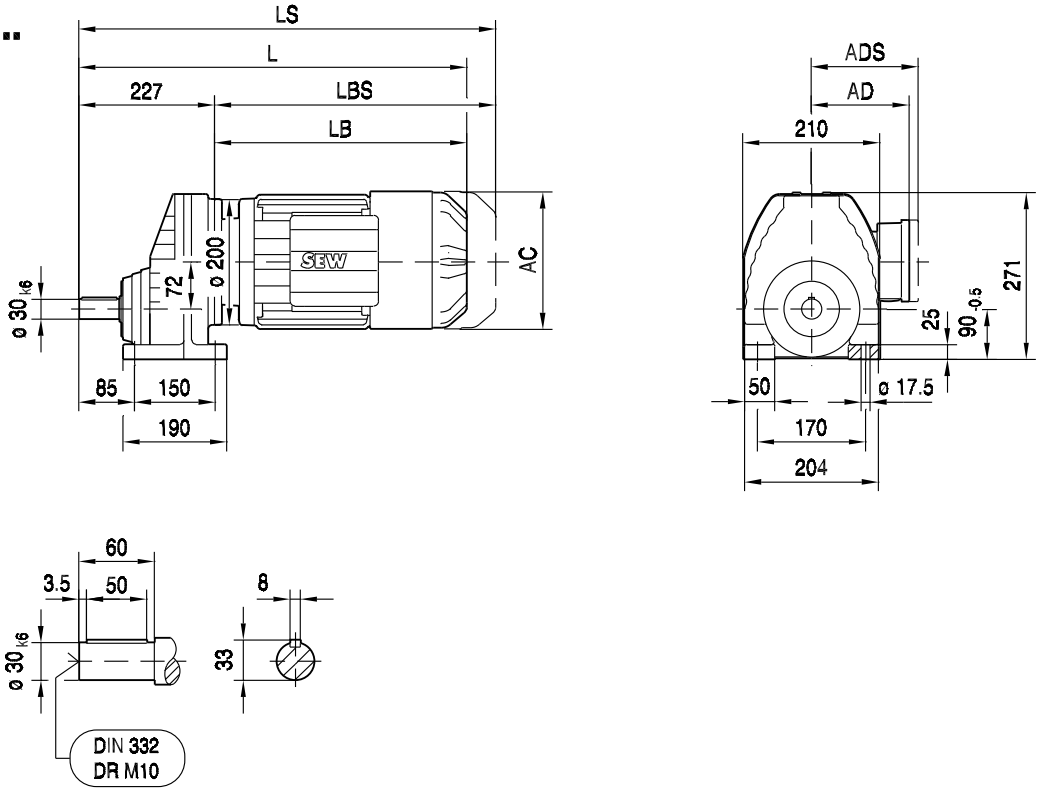

(→ 📖 129)	DRL71S	DRL71M	DRL80S	DRL80M	DRL90L	DRL100L	DRL132S	DRL132MC	DRL160..
AC	139	139	156	156	179	197	221	221	270
AD	119	119	128	128	140	157	170	170	228
ADS	129	129	139	139	150	158	172	172	228
L	500	525	546	577	591	650	731	781	785
LS	565	590	626	657	677	737	839	889	922
LB	273	298	319	350	364	423	504	554	558
LBS	338	363	399	430	450	510	612	662	695

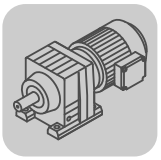

01 137 00 08

RXF77..

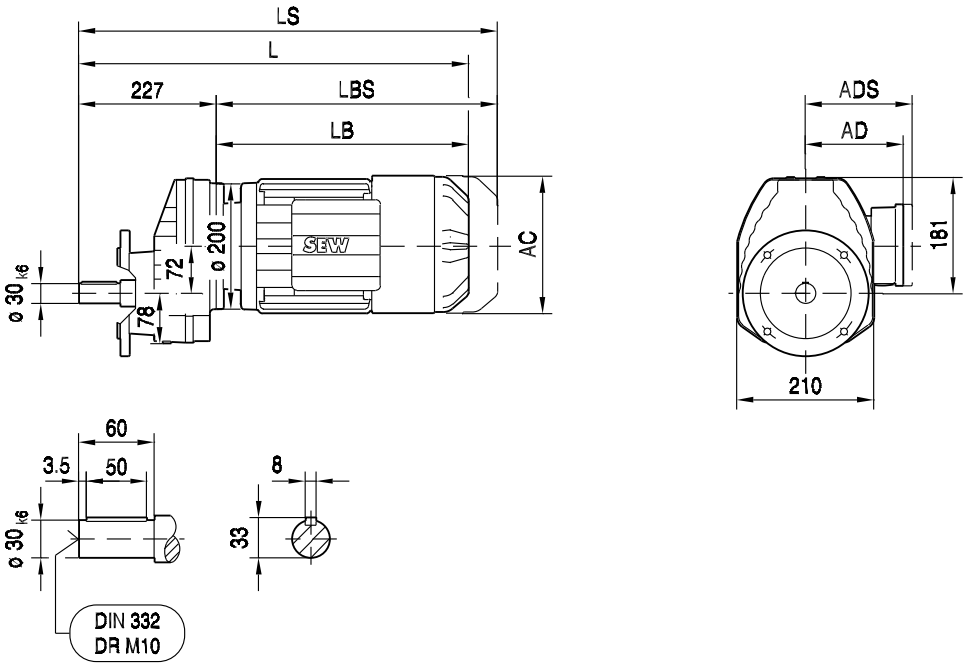

ø 200

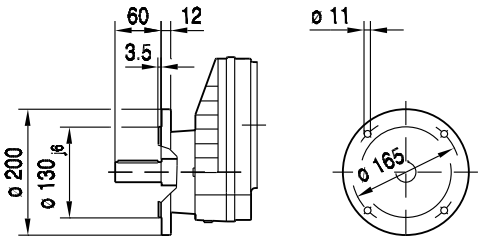

ø 250

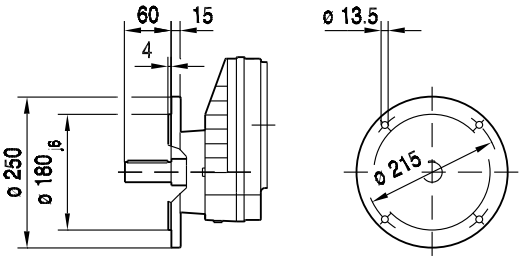

(→ 📖 129)	DRL71S	DRL71M	DRL80S	DRL80M	DRL90L	DRL100L	DRL132S	DRL132MC	DRL160..
AC	139	139	156	156	179	197	221	221	270
AD	119	119	128	128	140	157	170	170	228
ADS	129	129	139	139	150	158	172	172	228
L	500	525	546	577	591	650	731	781	785
LS	565	590	626	657	677	737	839	889	922
LB	273	298	319	350	364	423	504	554	558
LBS	338	363	399	430	450	510	612	662	695

8.2.4 RX 87

M_{aDyn} Nm	i	DRL 71M D1	71M D2	80S D1	80S D2	80M D1	80M D2	90L D1	90L D2	100L D1	100L D2	132S D1	132S D2	132MC D1	132MC D2
RX87 1	1.39										117	110	205	179	275
	1.60						52	40	73	55	135	127	235	205	315
	1.93						63	48	88	67	162	153	285	245	380
	2.15		30	21	53	28	70	53	98	74	181	170	315	275	425
	2.48		34	25	61	32	81	61	113	86	205	196	365	315	490
	2.76		38	27	68	36	90	68	126	96	230	215	405	355	>535
	3.09	21	43	31	76	40	101	76	141	107	260	240	455	395	
	3.48	24	48	34	86	45	114	86	158	121	290	275	515	445	
	3.78	26	52	37	94	49	123	94	172	131	315	295			
	4.50	31	62	44	110	57	146	110	200	154	370	350			
	5.07	35	70	50	124	65	164	124	225	174					
	5.56	38	76	54	136	71	180	136	250	191					
	6.45	44	88	63	158	82	205	158		220					
	7.20	49	99	71	176	92									
	7.63	52	105	75	187	97									
	8.65	59		85		110									

m kg	s	DRL 71M	80S	80M	90L	100L	132S	132MC
RX87	1	48	50	53	60	68	83	100
RXF: + 5.0 kg								

M_{aDyn} Nm	i	DRL 160M D1	160M D2	160MC D1	160MC D2	180S D1	180S D2	180M D1	180M D2	180L D1	180L D2	180LC D1
RX87 1	1.39	225	385	250	>435	285	>435	340	>435	>435	>435	>435
	1.60	260	440	290	>470	330	>470	395	>470	>470	>470	>470
	1.93	315	>530	350	>530	400	>530	475	>530	>530	>530	>530
	2.15	350	>540	390	>540	445	>540	530	>540	>540	>540	>540
	2.48	405	>540	450	>540	515		>540		>540		
	2.76	450	>535	505	>535	>535		>535		>535		
	3.09	500		>540								
	3.48	>540		>540								
	3.78											
	4.50											
	5.07											
	5.56											
	6.45											
	7.20											
	7.63											
	8.65											

m kg	s	DRL 160M	160MC	180S	180M	180L	180LC
RX87	1	120	125	155	170	180	195
RXF: + 5.0 kg							

→ 124

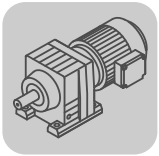

DRL..	i	n_{epk} 1/min	η %	c_{TG} RX Nm/'	RXF Nm/'
RX87 1	1.39	2170	99	34	34
	1.60	2498	99	34	34
	1.93	3013	99	34	34
	2.15	3356	99	34	34
	2.48	3871	99	34	34
	2.76	4308	99	34	34
	3.09	4500	99	34	34
	3.48	4500	99	34	34
	3.78	4500	99	34	34
	4.50	4500	98	34	34
	5.07	4500	98	34	34
	5.56	4500	98	34	34
	6.45	4500	98	34	34
	7.20	4500	98	34	34
	7.63	4500	98	34	34
	8.65	4500	98	34	34

DRL.. n_e = 1400	i	M_{amax} Nm	M_{apk} Nm	$M_{aNotaus}$ Nm	n_{ak} 1/min	J_G 10^{-4} kgm^2	F_{Ramax} RX N	F_{Ramax} RXF N	F_{Rapk} RX N	F_{Rapk} RXF N
RX87 1	1.39	290	435	493	1007	25	74	74	12700	12700
	1.60	315	472	536	875	19	74	74	12500	12500
	1.93	355	532	604	725	15	185	185	12300	12300
	2.15	385	540	655	651	13	42	42	12300	12300
	2.48	405	540	689	605	11	470	470	12300	12300
	2.76	405	535	689	652	9.4	1200	1200	12400	12400
	3.09	405	540	689	744	8.1	1950	1950	12400	12400
	3.48	405	540	689	805	6.9	2730	2730	12400	12400
	3.78	305	457	519	1852	6.2	5030	5030	12700	12700
	4.50	290	435	493	1556	4.8	5500	5500	12800	12800
	5.07	250	375	425	1381	3.9	5980	5980	13000	13000
	5.56	225	337	383	1259	3.4	6320	6320	13000	13000
	6.45	192	288	326	1085	2.7	6850	6850	13000	13000
	7.20	140	210	238	972	1.8	7380	7380	13000	13000
	7.63	149	223	253	917	1.6	7490	7490	13000	13000
	8.65	139	208	236	809	1.3	7890	7890	13000	13000

01 138 00 08

RX87..

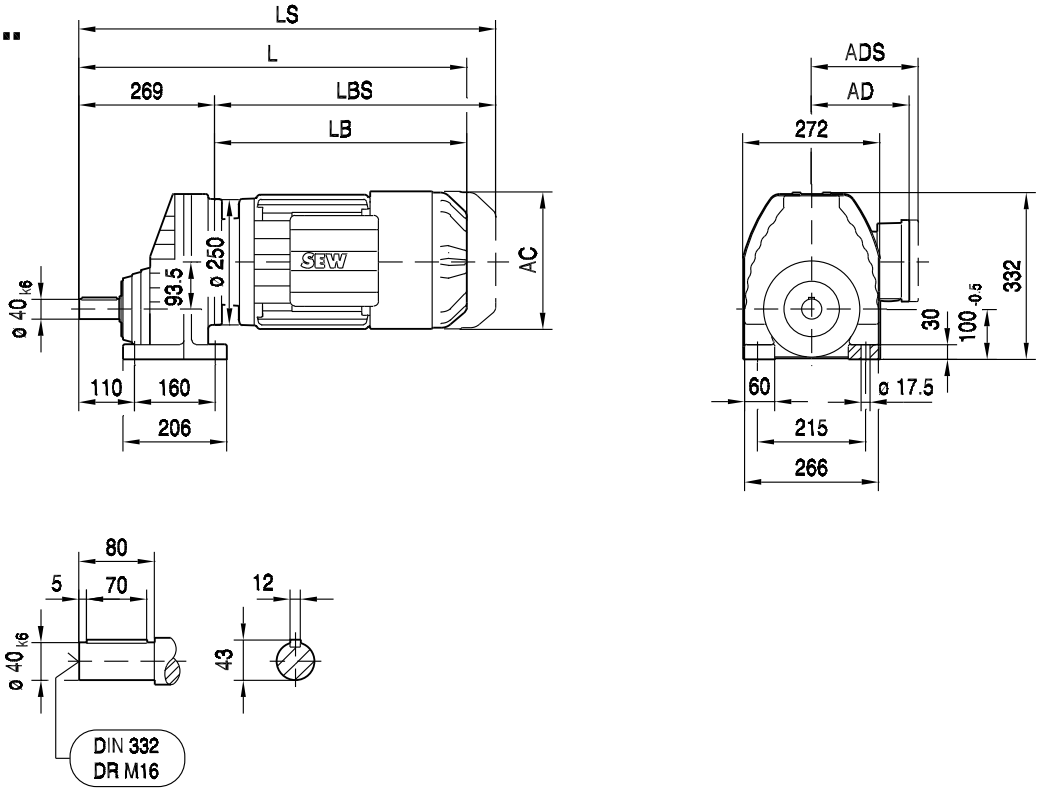

(→ 📖 129)	DRL71M	DRL80S	DRL80M	DRL90L	DRL100L	DRL132S	DRL132MC	DRL160..	DRL180S/M	DRL180L/LC
AC	139	156	156	179	197	221	221	270	316	316
AD	119	128	128	140	157	170	170	228	253	253
ADS	129	139	139	150	158	172	172	228	253	253
L	562	583	614	628	687	768	818	822	891	951
LS	627	663	694	714	774	876	926	959	1080	1140
LB	293	314	345	359	418	499	549	553	622	682
LBS	358	394	425	445	505	607	657	690	811	871

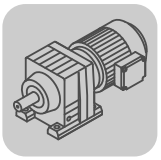

01 139 00 08

RXF87..

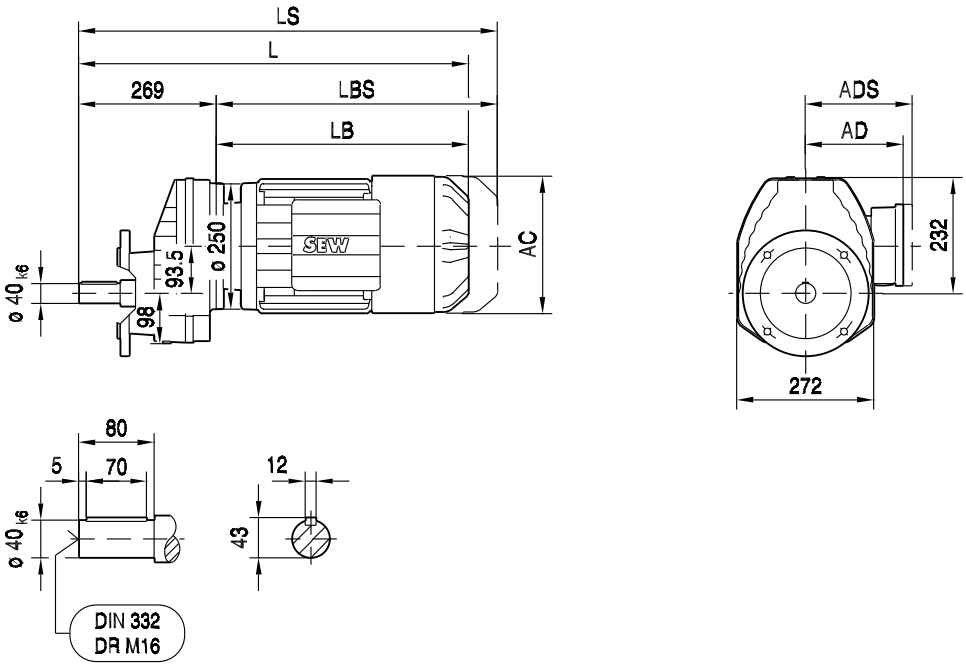

ø 250

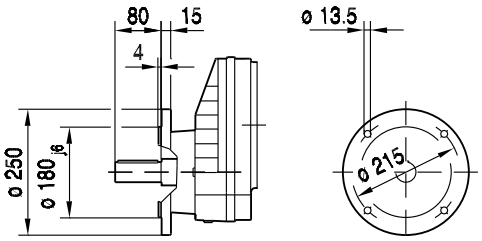

ø 300

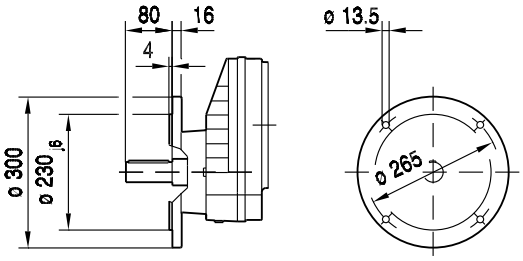

(→ 📖 129)	DRL71M	DRL80S	DRL80M	DRL90L	DRL100L	DRL132S	DRL132MC	DRL160..	DRL180S/M	DRL180L/LC
AC	139	156	156	179	197	221	221	270	316	316
AD	119	128	128	140	157	170	170	228	253	253
ADS	129	139	139	150	158	172	172	228	253	253
L	562	583	614	628	687	768	818	822	891	951
LS	627	663	694	714	774	876	926	959	1080	1140
LB	293	314	345	359	418	499	549	553	622	682
LBS	358	394	425	445	505	607	657	690	811	871

8.2.5 RX 97

M_{aDyn} Nm	i	DRL 71M D1	71M D2	80S D1	80S D2	80M D1	80M D2	90L D1	90L D2	100L D1	100L D2	132S D1	132S D2	132MC D1	132MC D2
RX97 1	1.42										118	111	205	181	275
	1.64										137	129	240	205	320
	1.96										163	154	285	245	380
	2.24						73	55	102	78	188	177	330	285	440
	2.64						86	65	120	91	220	205	390	335	520
	2.92		40	29	72	38	95	72	133	101	245	230	430	375	575
	3.30		46	33	82	42	108	82	150	114	275	260	490	420	650
	3.64		50	36	90	47	119	90	166	126	305	285	540	465	720
	4.04	28	56	40	100	52	132	100	184	140	335	315	595	515	
	4.52	31	63	45	112	58	148	112	205	157	380	355	670	580	
	4.91	34	67	48	120	63	159	120	220	168	405	380			
	5.79	40	79	57	142	74	187	142	260	199	480	450			
	6.56	45	90	64	161	84	210	161	295	225					
	7.16	49	98	70	175	91	230	175	320	245					
	8.23	56	113	81	200	105	265	200		280					

m kg	s	DRL 71M	80S	80M	90L	100L	132S	132MC
RX97	1	73	74	77	84	91	105	125
RXF: + 8.6 kg								

M_{aDyn} Nm	i	DRL 160M D1	160M D2	160MC D1	160MC D2	180S D1	180S D2	180M D1	180M D2	180L D1	180L D2	180LC D1	200L D1	225S D1
RX97 1	1.42	225	385	255	445	290	525	345	595	445	>680	580	660	>680
	1.64	265	450	295	510	335	610	400	690	510	>755	675	>755	>755
	1.96	315	535	355	610	400	725	480	>800	610	>800	>800	>800	>800
	2.24	365	620	410	705	465	>800	550	>800	705	>800	>800	>800	>800
	2.64	430	730	480	>800	545	>800	650	>800	>800	>800	>800	>800	>800
	2.92	475	>800	530	>800	605	>800	720	>800	>800	>800	>800	>800	>800
	3.30	535	>800	600	>800	685		>800		>800				
	3.64	590	>800	665	>800	755		>800		>800				
	4.04	655		735										
	4.52	735		>800										
	4.91													
	5.79													
	6.56													
	7.16													
	8.23													

m kg	s	DRL 160M	160MC	180S	180M	180L	180LC	200L	225S
RX97	1	145	150	180	195	205	215	315	345
RXF: + 8.6 kg									

→ 124

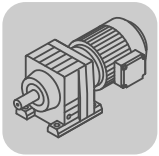

DRL..	i	n_{epk} 1/min	η %	c_{TG} RX Nm/'	RXF Nm/'
RX97 1	1.42	2187	98	58	58
	1.64	2526	98	58	58
	1.96	3019	98	58	58
	2.24	3450	99	58	58
	2.64	4066	99	58	58
	2.92	4497	99	58	58
	3.30	4500	99	58	58
	3.64	4500	99	58	58
	4.04	4500	99	58	58
	4.52	4500	99	58	58
	4.91	4500	98	58	58
	5.79	4500	98	58	58
	6.56	4500	98	58	58
	7.16	4500	98	58	58
	8.23	4500	98	58	58

DRL.. n_e = 1400	i	M_{amax} Nm	M_{apk} Nm	$M_{aNotaus}$ Nm	n_{ak} 1/min	J_G 10^{-4} kgm^2	F_{Ramax} RX N	F_{Ramax} RXF N	F_{Rapk} RX N	F_{Rapk} RXF N
RX97 1	1.42	455	682	774	986	61	132	132	20000	20000
	1.64	505	757	859	854	51	51	51	20000	20000
	1.96	570	800	969	714	41	19	19	20000	20000
	2.24	595	800	1012	670	33	495	495	20000	20000
	2.64	595	800	1012	795	28	1980	1980	20000	20000
	2.92	595	800	1012	856	24	2810	2810	20000	20000
	3.30	595	800	1012	909	20	3730	3730	20000	20000
	3.64	595	800	1012	962	18	4530	4530	20000	20000
	4.04	595	800	1012	1015	15	5380	5380	20000	20000
	4.52	595	800	1012	1062	13	6180	6180	20000	20000
	4.91	395	592	672	1426	12	7220	7220	20000	20000
	5.79	420	630	714	1209	9.2	7630	7630	20000	20000
	6.56	300	450	510	1067	5.8	8500	8500	20000	20000
	7.16	260	390	442	978	5.1	8950	8950	20000	20000
	8.23	225	337	383	851	4.0	9560	9560	20000	20000

01 140 00 08

RX97..

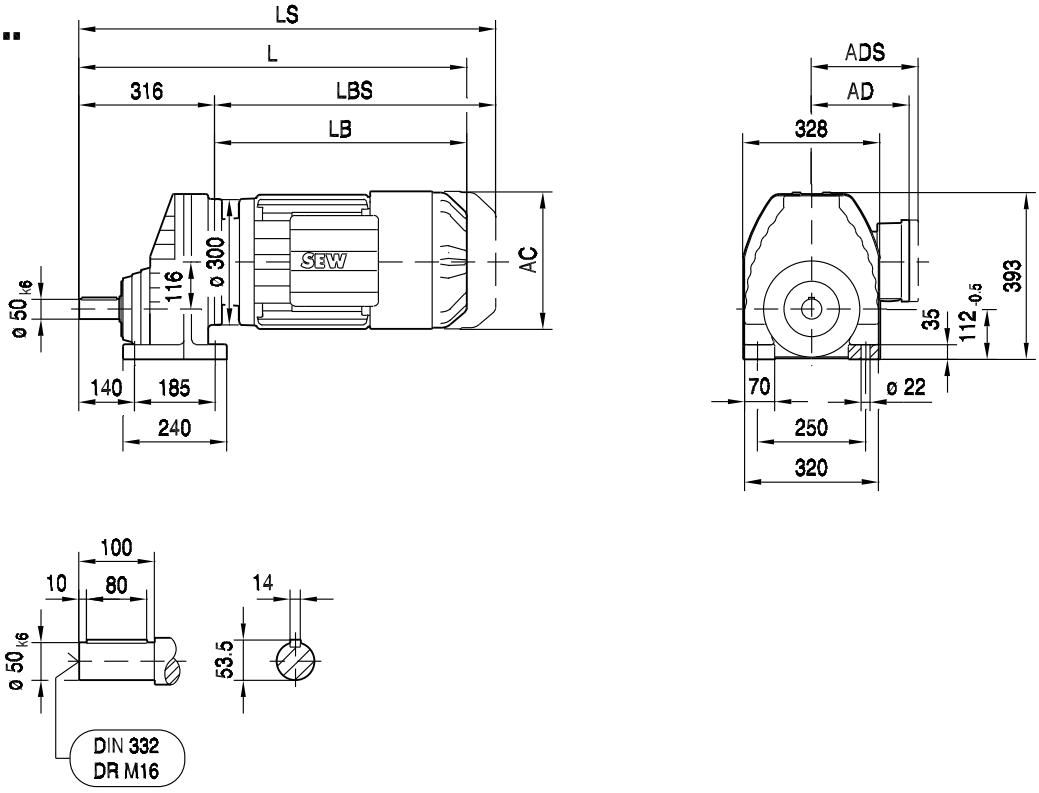

(→ 📖 129)	DRL71M	DRL80S	DRL80M	DRL90L	DRL100L	DRL132S	DRL132MC	DRL160..	DRL180S/M	DRL180L/LC	DRL225S
AC	139	156	156	179	197	221	221	270	316	316	394
AD	119	128	128	140	157	170	170	228	253	253	283
ADS	129	139	139	150	158	172	172	228	253	253	283
L	604	625	656	670	729	810	860	864	933	993	1066
LS	669	705	736	756	816	918	968	1001	1122	1182	1271
LB	288	309	340	354	413	494	544	548	617	677	750
LBS	353	389	420	440	500	602	652	685	806	866	955

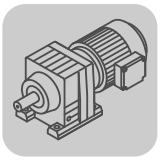

01 141 00 08

RXF97..

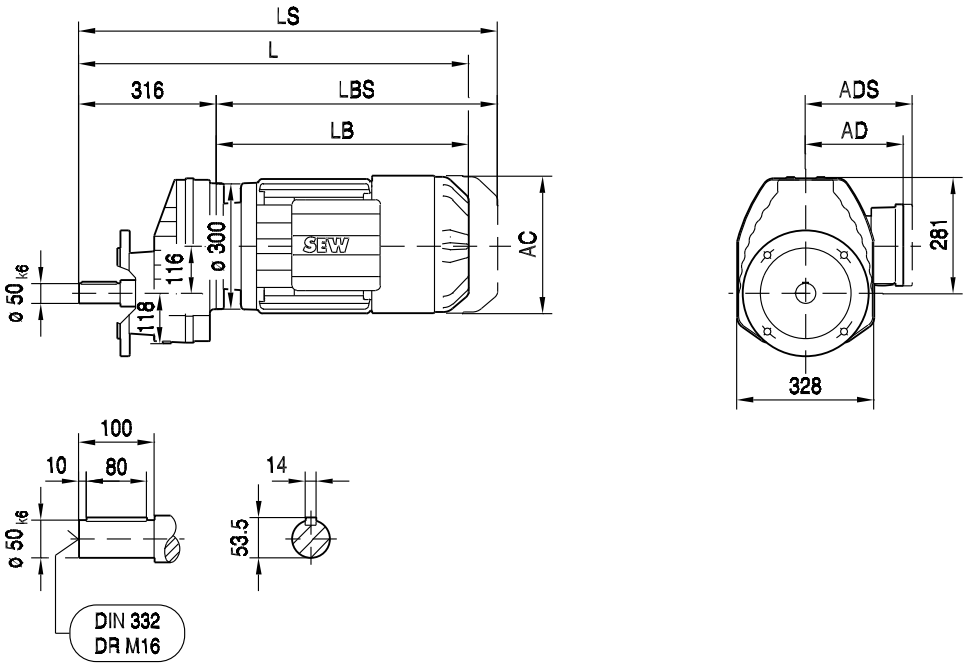

ø 300

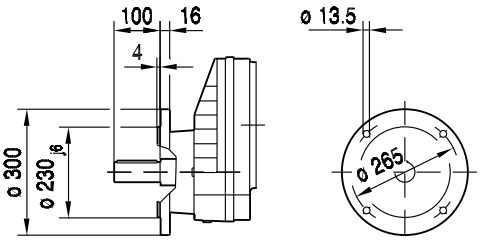

ø 350

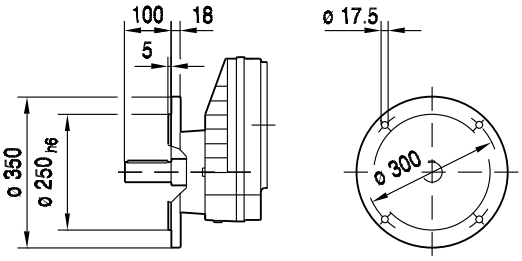

(→ 📖 129)	DRL71M	DRL80S	DRL80M	DRL90L	DRL100L	DRL132S	DRL132MC	DRL160..	DRL180S/M	DRL180L/LC	DRL225S
AC	139	156	156	179	197	221	221	270	316	316	394
AD	119	128	128	140	157	170	170	228	253	253	283
ADS	129	139	139	150	158	172	172	228	253	253	283
L	604	625	656	670	729	810	860	864	933	993	1066
LS	669	705	736	756	816	918	968	1001	1122	1182	1271
LB	288	309	340	354	413	494	544	548	617	677	750
LBS	353	389	420	440	500	602	652	685	806	866	955

8.2.6 RX 107

M_{aDyn} Nm	i	DRL													
		90L		100L		132S		132MC		160M		160MC		180S	
		D1	D2	D1	D2	D1	D2	D1	D2	D1	D2	D1	D2	D1	D2
RX107 1	1.44						210	183	280	230	395	260	450	295	535
	1.71				142	134	250	215	335	275	465	310	535	350	635
	1.95				162	153	285	245	380	315	535	350	610	400	725
	2.30				192	180	335	290	450	370	630	415	720	470	850
	2.64	65	120	91	220	205	390	335	520	430	730	480	830	545	990
	3.07	76	140	106	255	240	455	395	605	500	850	560	970	635	>1130
	3.38	84	154	117	280	265	500	435	665	550	930	615	1070	700	>1130
	3.81	94	174	132	320	300	565	490	750	620	1050	695	>1140	790	
	4.20	104	191	146	350	330	620	540	830	685	>1150	765	>1150	870	
	4.65	115	210	161	390	365	690	595		755		850			
	5.19	128	235	180	435	410	770	665		840		950			
	5.61	137	250	192	465	435									
	6.63	162	295	225	550	515									

m kg	s	DRL						
		90L	100L	132S	132MC	160M	160MC	180S
RX107	1	120	125	140	155	180	185	210
RXF: + 16.8 kg								

M_{aDyn} Nm	i	DRL										
		180M		180L		180LC		200L		225S		225MC
		D1	D2	D1	D2	D1	D2	D1	D2	D1	D2	D1
RX107 1	1.44	350	605	450	730	590	840	670	950	730	>960	>960
	1.71	415	720	535	870	700	1000	795	>1050	870	>1050	>1050
	1.95	475	820	610	990	800	>1090	900	>1090	990	>1090	>1090
	2.30	560	960	720	>1110	940	>1110	1070	>1110	>1110	>1110	>1110
	2.64	650	>1120	830	>1120	1090	>1120	>1120	>1120	>1120	>1120	>1120
	3.07	755	>1130	970	>1130	>1130		>1130		>1130		
	3.38	830	>1130	1070	>1130	>1130		>1130		>1130		
	3.81	940		>1140								
	4.20	1030		>1150								
	4.65											
	5.19											
	5.61											
	6.63											

m kg	s	DRL					
		180M	180L	180LC	200L	225S	225MC
RX107	1	230	240	250	345	375	420
RXF: + 16.8 kg							

→ 124

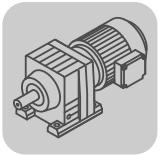

DRL..	i	n_{epk} 1/min	η %	c_{TG} RX Nm/'	RXF Nm/'
RX107 1	1.44	2101	98	93	93
	1.71	2495	98	93	93
	1.95	2845	98	93	93
	2.30	3356	98	93	93
	2.64	3852	99	93	93
	3.07	4479	99	93	93
	3.38	4500	99	93	93
	3.81	4500	99	93	93
	4.20	4500	99	93	93
	4.65	4500	99	93	93
	5.19	4500	99	93	93
	5.61	4500	98	93	93
	6.63	4500	98	93	93

DRL.. n_e = 1400	i	M_{amax} Nm	M_{apk} Nm	$M_{aNotaus}$ Nm	n_{ak} 1/min	J_G 10^{-4} kgm^2	F_{Ramax} RX N	F_{Ramax} RXF N	F_{Rapk} RX N	F_{Rapk} RXF N
RX107 1	1.44	645	967	1097	972	111	315	315	30000	30000
	1.71	705	1057	1199	819	84	480	480	30000	30000
	1.95	765	1090	1301	769	70	555	555	30000	30000
	2.30	830	1110	1411	696	57	900	900	30000	30000
	2.64	830	1120	1411	720	47	2160	2160	30000	30000
	3.07	830	1130	1411	814	39	3600	3600	30000	30000
	3.38	830	1130	1411	858	34	4490	4490	30000	30000
	3.81	830	1140	1411	919	29	5550	5550	30000	30000
	4.20	830	1150	1411	952	25	6420	6420	30000	30000
	4.65	695	1042	1182	1505	19	7450	7450	30000	30000
	5.19	695	1042	1182	1349	17	7850	7850	30000	30000
	5.61	455	682	774	1248	15	9080	9080	30000	30000
	6.63	460	690	782	1056	12	9700	9700	30000	30000

01 142 00 08

RX107..

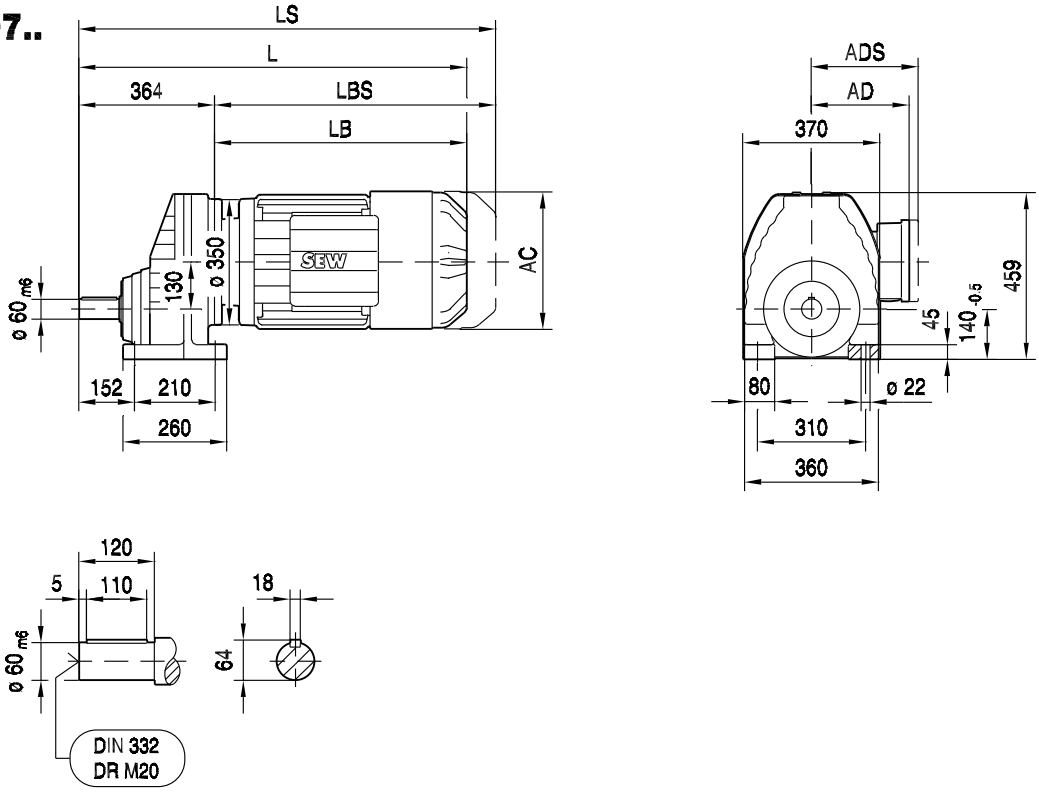

(→ 📖 129)	DRL90L	DRL100L	DRL132S	DRL132MC	DRL160..	DRL180S/M	DRL180L/LC	DRL225S	DRL225MC
AC	179	197	221	221	270	316	316	394	394
AD	140	157	170	170	228	253	253	283	283
ADS	150	158	172	172	228	253	253	283	283
L	712	771	852	902	906	975	1035	1108	1158
LS	798	858	960	1010	1043	1164	1224	1313	1363
LB	348	407	488	538	542	611	671	744	794
LBS	434	494	596	646	679	800	860	949	999

01 143 00 08

RXF107..

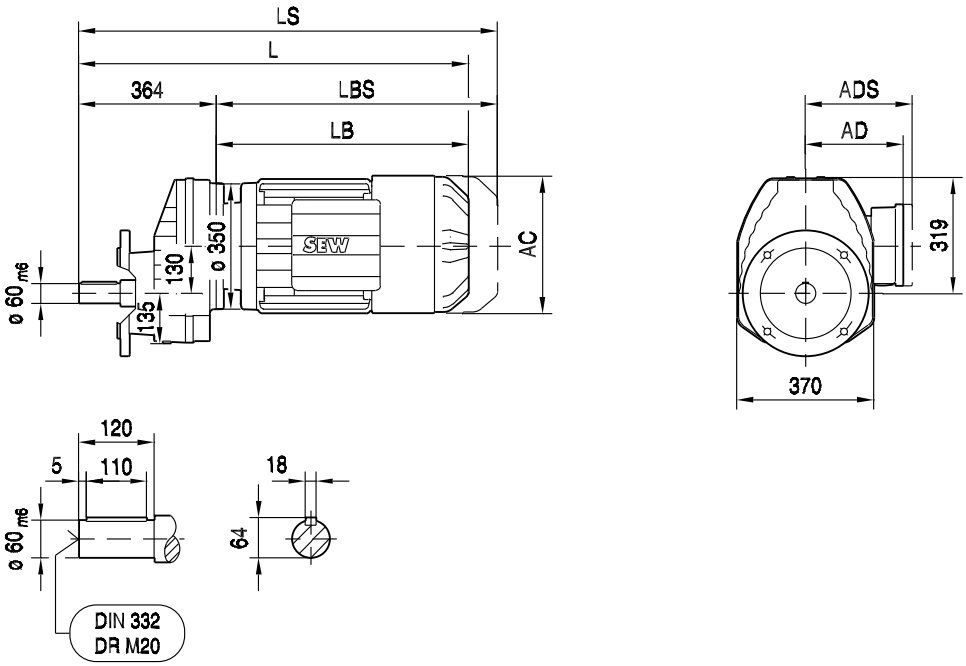

ø 350

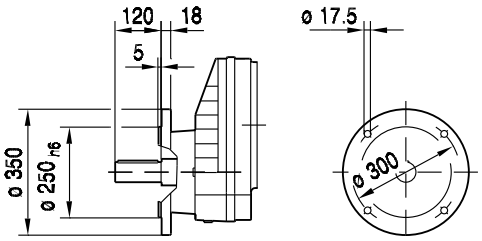

ø 450

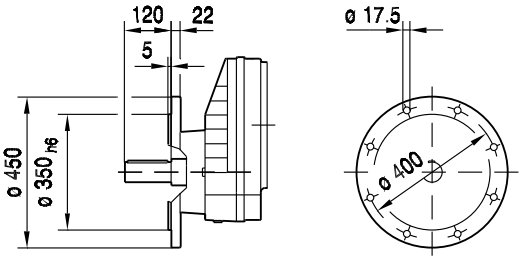

(→ 📖 129)	DRL90L	DRL100L	DRL132S	DRL132MC	DRL160..	DRL180S/M	DRL180L/LC	DRL225S	DRL225MC
AC	179	197	221	221	270	316	316	394	394
AD	140	157	170	170	228	253	253	283	283
ADS	150	158	172	172	228	253	253	283	283
L	712	771	852	902	906	975	1035	1108	1158
LS	798	858	960	1010	1043	1164	1224	1313	1363
LB	348	407	488	538	542	611	671	744	794
LBS	434	494	596	646	679	800	860	949	999

8.3 R..Nm

8.3.1 R 07

M_{aDyn} Nm	i	DRL 71S D1	DRL 71S D2	DRL 71M D1
R07 2	3.21	16	26	22
	3.68	18	30	25
	3.95	19	33	27
	4.57	22	38	31
	4.92	24	41	33
	5.76	28	>46	39
	6.83	33		>46
	7.48	36		>46
	7.85	38	>51	>51
	9.01	43	>51	>51
	9.67	46	>51	>51
	11.18	>51	>51	>51
	12.06	>51	>51	>51
	14.12	>51	>51	>51
	16.73	>51		>51
	18.31	>51		>51
R07 3	21.73	>51	>51	>51
	23.32	>51	>51	>51
	26.97	>51	>51	>51
	29.08	>51	>51	>51
	34.05	>51	>51	>51
	38.51	>51	>51	>51
	40.34	>51		>51
	41.31	>51	>51	>51
	44.16	>51		>51
	47.78	>51	>51	>51
	51.52	>51	>51	>51
	60.32	>51	>51	>51
	71.47	>51		>51
	78.24	>51		>51

	→ 📖 124

m kg	s	DRL 71S	DRL 71M
R07	2	10	11
R07	3	10	11
RF: + 0.0 kg			

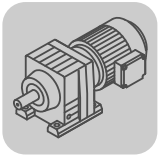

DRL..	i	n_{epk} 1/min	η %	c_{TG} R Nm/'	RF Nm/'
R07 2	3.21	3872	97	2.8	2.7
	3.68	4439	97	2.8	2.7
	3.95	4500	97	2.8	2.7
	4.57	4500	97	2.8	2.7
	4.92	4500	97	2.8	2.7
	5.76	4500	97	2.8	2.7
	6.83	4500	97	2.8	2.7
	7.48	4500	97	2.8	2.7
	7.85	4500	96	3.9	3.7
	9.01	4500	96	3.9	3.7
	9.67	4500	96	3.9	3.7
	11.18	4500	96	3.9	3.7
	12.06	4500	96	3.9	3.7
	14.12	4500	96	3.9	3.7
	16.73	4500	96	3.9	3.7
	18.31	4500	96	3.9	3.7
R07 3	21.73	4500	93	4.1	3.8
	23.32	4500	93	4.1	3.8
	26.97	4500	93	4.1	3.8
	29.08	4500	93	4.1	3.8
	34.05	4500	93	4.1	3.8
	38.51	4500	91	4.1	3.9
	40.34	4500	92	4.1	3.8
	41.31	4500	91	4.1	3.9
	44.16	4500	92	4.1	3.8
	47.78	4500	90	4.1	3.9
	51.52	4500	90	4.1	3.9
	60.32	4500	90	4.1	3.9
	71.47	4500	89	4.1	3.9
	78.24	4500	88	4.1	3.9

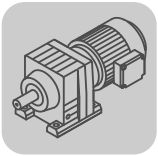

R..DRL
R..Nm

DRL.. n_e = 1400	i	M_{amax} Nm	M_{apk} Nm	$M_{aNotaus}$ Nm	n_{ak} 1/min	J_G 10^{-4} kgm^2	F_{Ramax} R N	F_{Ramax} RF N	F_{Rapk} R N	F_{Rapk} RF N
R07 2	3.21	31	46	53	561	0.24	495	415	1530	1250
	3.68	33	46	56	516	0.19	500	420	1530	1250
	3.95	34	46	58	506	0.17	505	425	1530	1250
	4.57	36	46	61	460	0.13	520	435	1530	1250
	4.92	37	46	63	427	0.12	530	445	1530	1250
	5.76	40	46	68	365	0.090	530	440	1530	1250
	6.83	43	46	73	307	0.070	535	450	1530	1250
	7.48	43	46	73	321	0.060	595	500	1530	1250
	7.85	49	51	83	166	0.20	645	585	1500	1220
	9.01	50	51	85	166	0.16	685	620	1500	1220
	9.67	50	51	85	165	0.14	710	645	1500	1220
	11.18	50	51	85	179	0.11	760	695	1500	1220
	12.06	50	51	85	182	0.10	790	720	1500	1220
	14.12	50	51	85	184	0.080	850	780	1500	1220
	16.73	50	51	85	191	0.060	920	840	1500	1220
	18.31	50	51	85	191	0.050	960	880	1500	1220
R07 3	21.73	50	51	85	161	0.16	1040	950	1500	1220
	23.32	50	51	85	163	0.14	1080	980	1500	1220
	26.97	50	51	85	163	0.11	1150	1050	1500	1220
	29.08	50	51	85	162	0.10	1190	1080	1500	1220
	34.05	50	51	85	162	0.080	1270	1160	1500	1220
	38.51	50	51	85	171	0.14	1340	1220	1500	1220
	40.34	50	51	85	164	0.060	1370	1230	1500	1220
	41.31	50	51	85	169	0.13	1380	1230	1500	1220
	44.16	50	51	85	159	0.050	1420	1230	1500	1220
	47.78	50	51	85	147	0.10	1470	1230	1500	1220
	51.52	50	51	85	136	0.090	1510	1230	1500	1220
	60.32	50	51	85	116	0.070	1510	1230	1500	1220
	71.47	50	51	85	98	0.060	1510	1230	1500	1220
	78.24	50	51	85	89	0.050	1510	1230	1500	1220

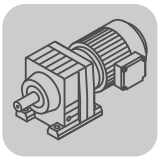

01 144 00 08

R07..

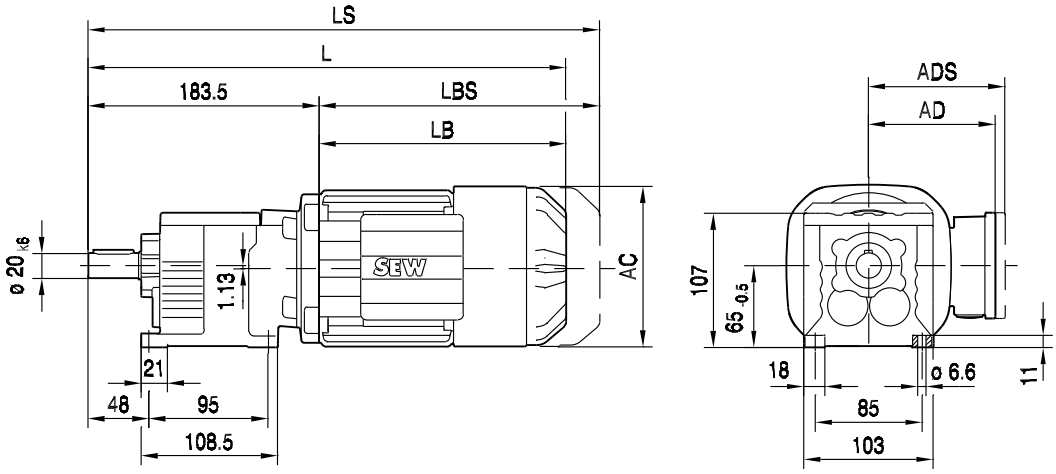

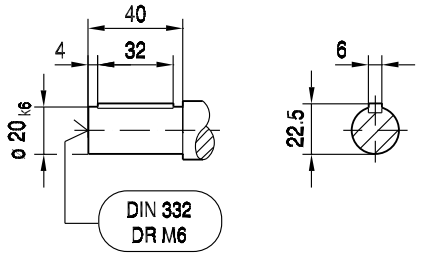

R07F..

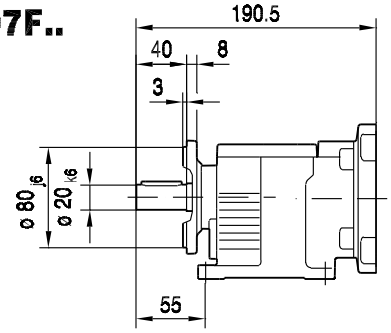

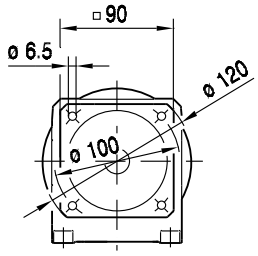

(→ 📖 129)	DRL71S	DRL71M						
AC	139	139						
AD	119	119						
ADS	129	129						
L	428	453						
LS	493	518						
LB	245	270						
LBS	309	334						

01 145 00 08

RF07..

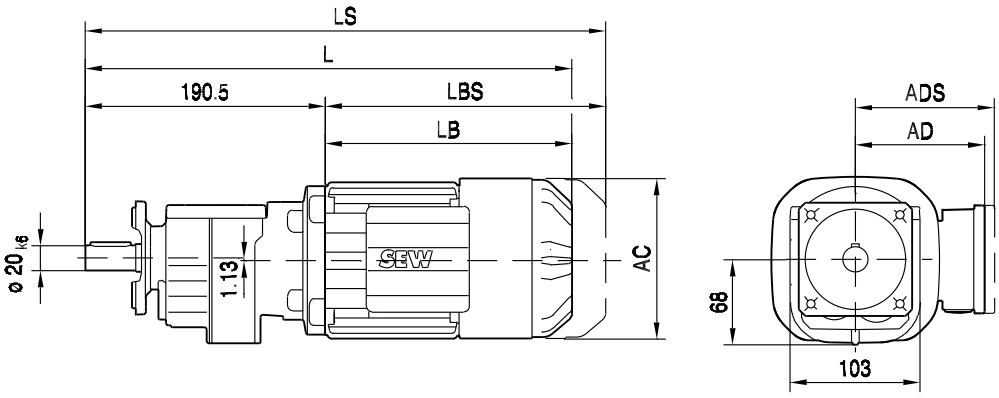

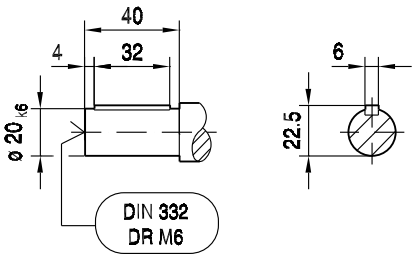

ø 120

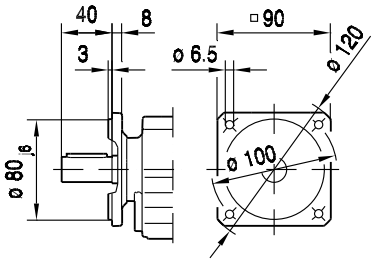

ø 140

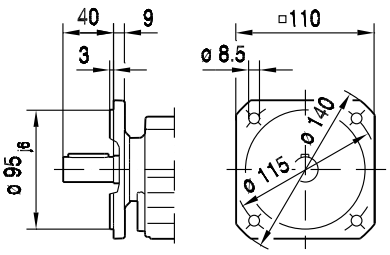

ø 160

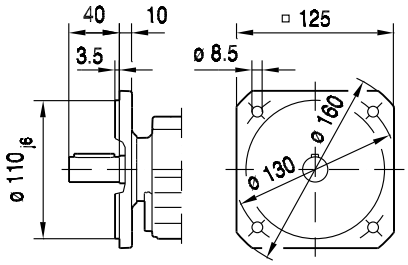

(→ 📖 129)	DRL71S	DRL71M						
AC	139	139						
AD	119	119						
ADS	129	129						
L	435	460						
LS	500	525						
LB	245	270						
LBS	309	334						

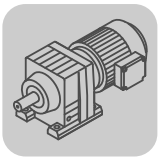

01 146 00 08

RZ07..

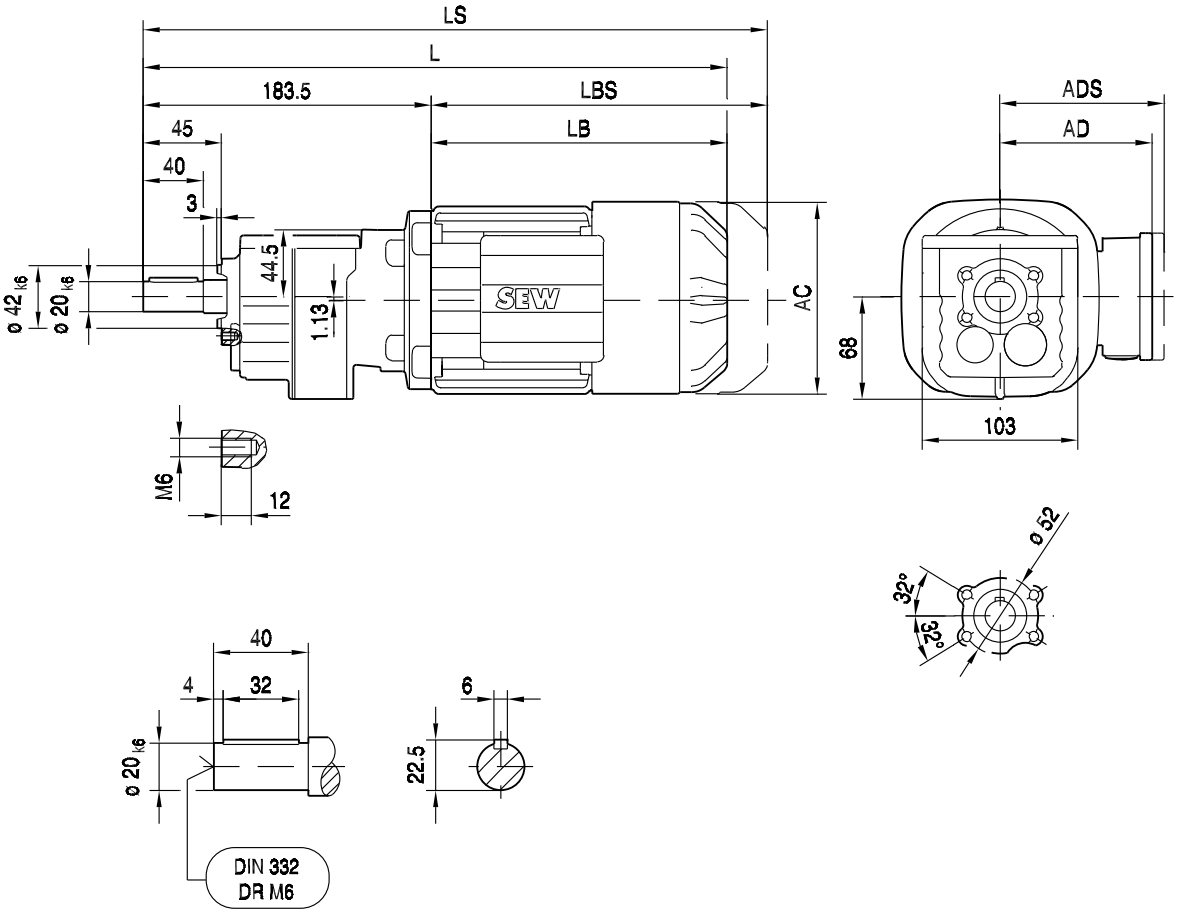

(→ 📖 129)	DRL71S	DRL71M						
AC	139	139						
AD	119	119						
ADS	129	129						
L	428	453						
LS	493	518						
LB	245	270						
LBS	309	334						

8.3.2 R 17

M_{aDyn} Nm	i	DRL 71S D1	DRL 71S D2	DRL 71M D1
R17 2	3.83	19	32	26
	4.51	22	37	31
	5.09	25	42	35
	5.76	28	47	39
	6.15	30	51	42
	7.04	34	>58	48
	7.55	37	>59	51
	8.63	41	70	58
	10.15	49	83	68
	11.45	55	>86	77
	12.98	62	>86	>86
	13.84	66	>86	>86
	15.84	76	>86	>86
	16.99	82	>86	>86
	19.71	>86	>86	>86
	23.15	>86		>86
	25.23	>86		>86
R17 3	24.07	>86	>86	>86
	28.32	>86	>86	>86
	31.94	>86	>86	>86
	36.20	>86	>86	>86
	38.61	>86	>86	>86
	44.18	>86	>86	>86
	47.44	>86	>86	>86
	53.76	>86	>86	>86
	57.35	>86	>86	>86
	65.61	>86	>86	>86
	70.39	>86	>86	>86
	81.64	>86	>86	>86

→ 124

m kg	s	DRL 71S	DRL 71M
R17	2	11	12
R17	3	11	13
RF: + -0.1 kg			

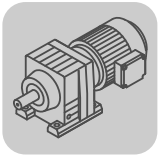

DRL..	i	n_{epk} 1/min	η %	c_{TG} R Nm/'	RF Nm/'
R17 2	3.83	4500	97	3.0	3.0
	4.51	4500	97	3.0	3.0
	5.09	4500	97	3.0	3.0
	5.76	4500	97	3.0	3.0
	6.15	4500	97	3.0	3.0
	7.04	4500	97	3.0	3.0
	7.55	4500	97	3.0	3.0
	8.63	4500	96	4.4	4.3
	10.15	4500	96	4.4	4.3
	11.45	4500	96	4.4	4.3
	12.98	4500	96	4.4	4.3
	13.84	4500	96	4.4	4.3
	15.84	4500	96	4.4	4.3
	16.99	4500	96	4.4	4.3
	19.71	4500	96	4.4	4.3
	23.15	4500	96	4.4	4.3
	25.23	4500	96	4.4	4.3
R17 3	24.07	4500	93	4.6	4.4
	28.32	4500	93	4.6	4.4
	31.94	4500	93	4.6	4.4
	36.20	4500	93	4.6	4.4
	38.61	4500	93	4.6	4.4
	44.18	4500	93	4.6	4.4
	47.44	4500	92	4.6	4.4
	53.76	4500	92	4.6	4.4
	57.35	4500	92	4.6	4.4
	65.61	4500	92	4.6	4.4
	70.39	4500	91	4.6	4.4
	81.64	4500	91	4.6	4.4

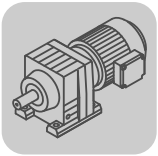

R..DRL
R..Nm

DRL.. n_e = 1400	i	M_{amax} Nm	M_{apk} Nm	$M_{aNotaus}$ Nm	n_{ak} 1/min	J_G 10^{-4} kgm^2	F_{Ramax} R N	F_{Ramax} RF N	F_{Rapk} R N	F_{Rapk} RF N
R17 2	3.83	45	52	77	366	0.46	820	755	2500	2200
	4.51	48	54	82	310	0.35	870	795	2500	2200
	5.09	51	55	87	275	0.29	890	820	2500	2190
	5.76	53	59	90	243	0.24	930	860	2500	2180
	6.15	54	57	92	228	0.22	950	880	2500	2190
	7.04	55	58	94	227	0.18	1010	930	2500	2180
	7.55	56	59	95	225	0.16	1040	950	2500	2180
	8.63	72	86	122	162	0.39	1090	1000	1700	1510
	10.15	77	86	131	138	0.30	1140	1050	1700	1510
	11.45	81	86	138	122	0.26	1180	1080	1700	1510
	12.98	85	86	145	108	0.21	1230	1130	1700	1510
	13.84	85	86	145	108	0.20	1270	1160	1700	1510
	15.84	85	86	145	114	0.16	1350	1240	1700	1510
	16.99	85	86	145	112	0.15	1400	1280	1700	1510
	19.71	85	86	145	117	0.12	1500	1380	1700	1510
	23.15	85	86	145	117	0.090	1620	1480	1700	1510
	25.23	85	86	145	119	0.080	1680	1540	1700	1510
R17 3	24.07	85	86	145	104	0.41	1650	1510	1700	1510
	28.32	85	86	145	106	0.32	1770	1560	1700	1510
	31.94	85	86	145	103	0.27	1770	1560	1700	1510
	36.20	85	86	145	105	0.22	1770	1560	1700	1510
	38.61	85	86	145	104	0.20	1770	1560	1700	1510
	44.18	85	86	145	104	0.17	1770	1560	1700	1510
	47.44	85	86	145	110	0.25	1770	1560	1700	1510
	53.76	85	86	145	108	0.21	1770	1560	1700	1510
	57.35	85	86	145	108	0.19	1770	1560	1700	1510
	65.61	85	86	145	107	0.16	1770	1560	1700	1510
	70.39	85	86	145	99	0.14	1770	1560	1700	1510
	81.64	85	86	145	86	0.11	1770	1560	1700	1510

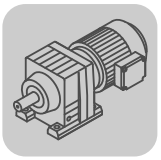

01 147 00 08

R17..

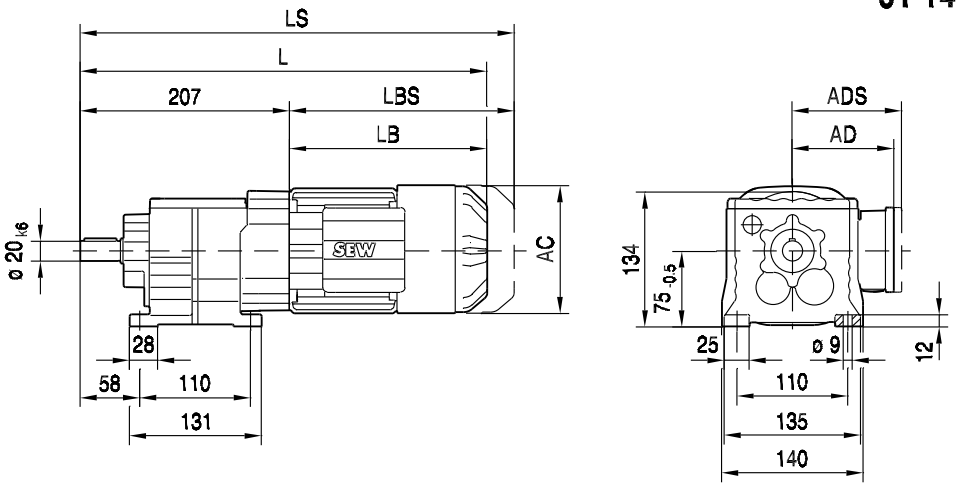

DRL80..

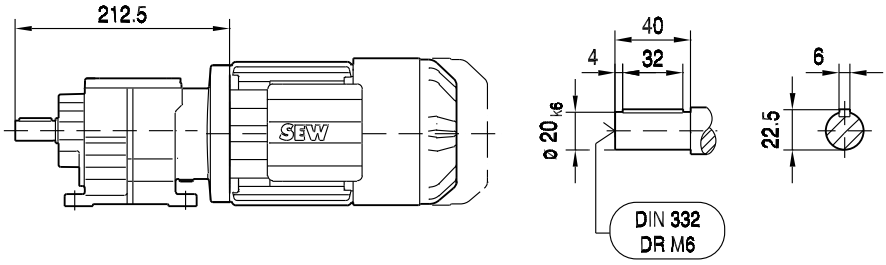

R17F..

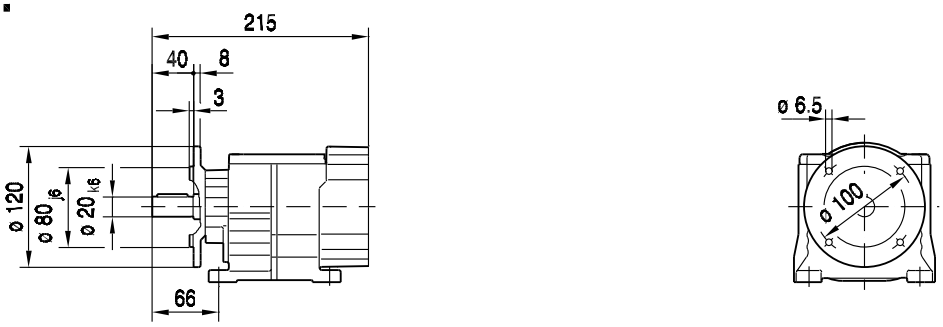

(→ 📖 129)	DRL71S	DRL71M						
AC	139	139						
AD	119	119						
ADS	129	129						
L	452	477						
LS	516	541						
LB	245	270						
LBS	309	334						

01 148 00 08

RF17..

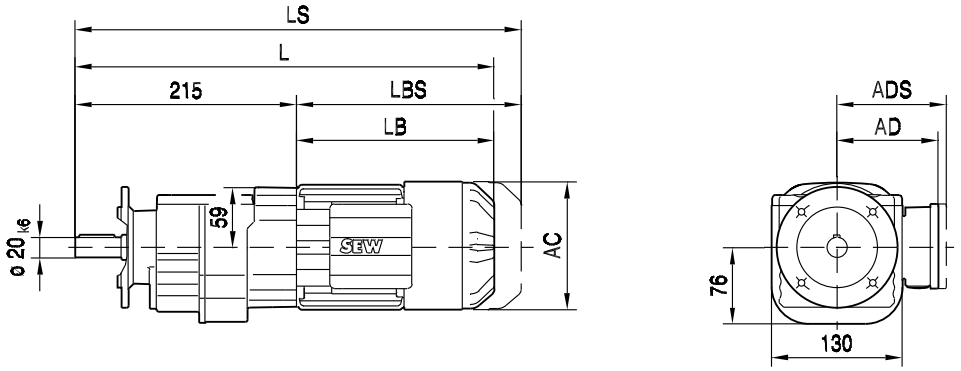

DRL80..

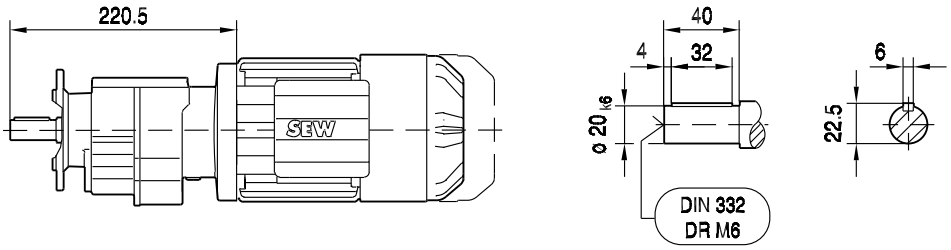

ø 120

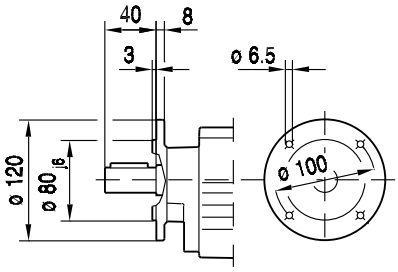

ø 140

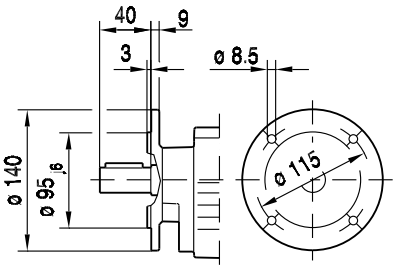

ø 160

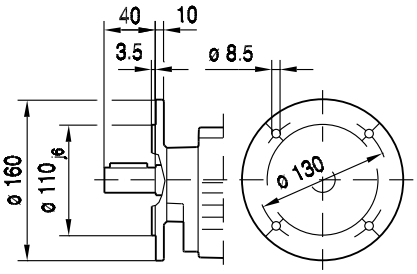

(→ 📖 129)	DRL71S	DRL71M						
AC	139	139						
AD	119	119						
ADS	129	129						
L	460	485						
LS	524	549						
LB	245	270						
LBS	309	334						

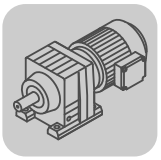

01 149 00 08

RZ17..

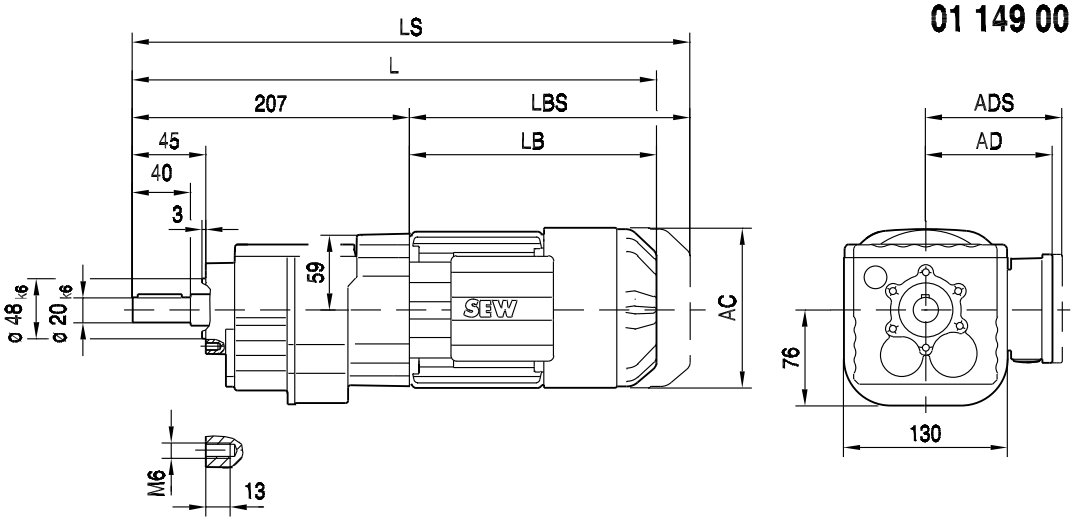

DRL80..

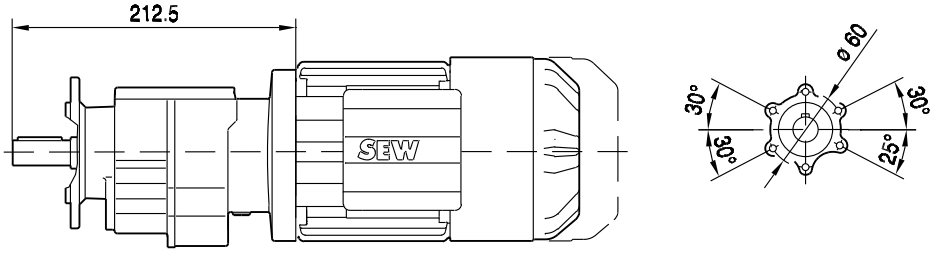

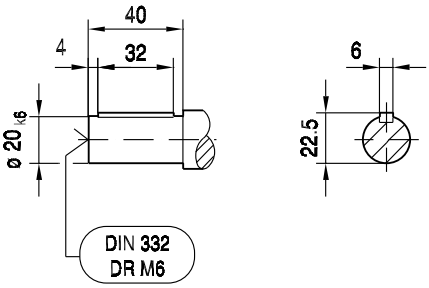

(→ 📖 129)	DRL71S	DRL71M						
AC	139	139						
AD	119	119						
ADS	129	129						
L	452	477						
LS	516	541						
LB	245	270						
LBS	309	334						

8.3.3 R 27

M_{aDyn} Nm	i	DRL 71S D1	71S D2	71M D1	71M D2	80S D1	80S D2	80M D1	90L D1	90L D2	100L D1
R27 2	3.37	16	28	23	46	33	82	42	82	>118	114
	4.00	19	33	27	54	39	97	50	97	>127	>127
	4.27	21	35	29	58	41	104	54	104	>130	>130
	5.00	24	41	34	68	48	121	63	121	>142	>142
	5.60	27	46	38	76	54	136	71	136	>144	>144
	6.59	32	54	45	89	64	>145	83	>145		>145
	7.63	37	63	52	104	74	>148	96			
	8.16	40	67	55	111	79	>148	103			
	9.41	46	78	64		91		119			
	10.13	49	84	69	>136	98	>136	128	>136	>136	>136
	11.86	58	98	81	>136	115	>136	>136	>136	>136	>136
	13.28	64	109	90	>136	129	>136	>136	>136	>136	>136
	15.63	76	129	106	>136	>136	>136	>136	>136		>136
	18.08	88	>136	123	>136	>136	>136	>136			
	19.35	94	>136	131	>136	>136	>136	>136			
	22.32	108	>136	>136		>136		>136			
	26.09	125		>136							
	28.37	>136		>136							
R27 3	24.47	115	>136	>136	>136	>136	>136	>136	>136	>136	>136
	28.78	135	>136	>136	>136	>136	>136	>136	>136	>136	>136
	32.47	>136	>136	>136	>136	>136	>136	>136	>136	>136	>136
	36.79	>136	>136	>136	>136	>136	>136	>136			
	39.25	>136	>136	>136	>136	>136	>136	>136	>136		>136
	44.90	>136	>136	>136	>136	>136	>136	>136			
	48.17	>136	>136	>136	>136	>136	>136	>136			
	55.87	>136	>136	>136		>136		>136			
	61.30	>136	>136	>136	>136	>136	>136	>136	>136	>136	>136
	69.47	>136	>136	>136	>136	>136	>136	>136			
	74.11	>136	>136	>136	>136	>136	>136	>136	>136		>136
	84.78	>136	>136	>136	>136	>136	>136	>136			
	90.96	>136	>136	>136	>136	>136	>136	>136			
	105.49	>136	>136	>136		>136		>136			
	123.91	>136		>136							
	135.09	>136		>136							

→ 124

m kg	s	DRL 71S	71M	80S	80M	90L	100L
R27	2	12	13	15	18	25	33
R27	3	12	13	15	18	25	33
RF: + -0.1 kg							

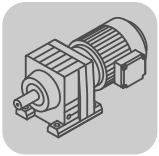

DRL..	i	n_{epk} 1/min	η %	c_{TG} R Nm/'	RF Nm/'
R27 2	3.37	4500	97	7.2	7.1
	4.00	4500	97	7.2	7.1
	4.27	4500	97	7.2	7.1
	5.00	4500	97	7.2	7.1
	5.60	4500	97	7.2	7.1
	6.59	4500	97	7.2	7.1
	7.63	4500	97	7.2	7.1
	8.16	4500	97	7.2	7.1
	9.41	4500	97	7.2	7.1
	10.13	4500	97	9.0	8.8
	11.86	4500	97	9.0	8.8
	13.28	4500	97	9.0	8.8
	15.63	4500	97	9.0	8.8
	18.08	4500	97	9.0	8.8
	19.35	4500	97	9.0	8.8
	22.32	4500	97	9.0	8.8
	26.09	4500	96	9.0	8.8
	28.37	4500	96	9.0	8.8
R27 3	24.47	4500	94	9.0	8.8
	28.78	4500	94	9.0	8.8
	32.47	4500	94	9.0	8.8
	36.79	4500	94	9.0	8.8
	39.25	4500	94	9.0	8.8
	44.90	4500	94	9.0	8.8
	48.17	4500	94	9.0	8.8
	55.87	4500	94	9.0	8.8
	61.30	4500	92	9.1	8.8
	69.47	4500	92	9.1	8.8
	74.11	4500	92	9.1	8.8
	84.78	4500	92	9.1	8.8
	90.96	4500	92	9.1	8.8
	105.49	4500	92	9.1	8.8
	123.91	4500	91	9.1	8.8
	135.09	4500	91	9.1	8.8

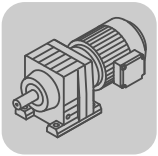

R..DRL
R..Nm

DRL.. n_e = 1400	i	M_{amax} Nm	M_{apk} Nm	$M_{aNotaus}$ Nm	n_{ak} 1/min	J_G 10^{-4} kgm^2	F_{Ramax} R N	F_{Ramax} RF N	F_{Rapk} R N	F_{Rapk} RF N
R27 2	3.37	79	118	134	415	1.1	900	790	4290	3690
	4.00	85	127	145	350	0.85	900	800	4250	3660
	4.27	87	130	148	328	0.76	920	810	4230	3640
	5.00	95	142	162	280	0.58	860	760	4180	3590
	5.60	99	144	168	250	0.48	880	775	4170	3580
	6.59	106	145	180	212	0.36	880	775	4160	3580
	7.63	112	148	190	183	0.29	900	795	4150	3570
	8.16	116	148	197	172	0.26	870	770	4150	3570
	9.41	122	149	207	149	0.21	900	795	4140	3560
	10.13	122	136	207	138	0.61	1890	1670	4210	3620
	11.86	129	136	219	118	0.47	1980	1750	4210	3620
	13.28	130	136	221	120	0.39	2140	1910	4210	3620
	15.63	130	136	221	122	0.29	2290	2170	4210	3620
	18.08	130	136	221	122	0.24	2440	2310	4210	3620
	19.35	130	136	221	124	0.22	2510	2380	4210	3620
	22.32	130	136	221	125	0.18	2660	2520	4210	3620
	26.09	130	136	221	126	0.14	2840	2690	4210	3620
	28.37	130	136	221	130	0.12	2940	2780	4210	3620
R27 3	24.47	130	136	221	98	0.49	2760	2620	4210	3620
	28.78	130	136	221	97	0.37	2950	2800	4210	3620
	32.47	130	136	221	99	0.31	3100	2940	4210	3620
	36.79	130	136	221	98	0.25	3260	3090	4210	3620
	39.25	130	136	221	97	0.22	3350	3170	4210	3620
	44.90	130	136	221	98	0.18	3530	3340	4210	3620
	48.17	130	136	221	98	0.16	3630	3430	4210	3620
	55.87	130	136	221	98	0.13	3840	3640	4210	3620
	61.30	130	136	221	106	0.26	3980	3640	4210	3620
	69.47	130	136	221	101	0.22	4180	3640	4210	3620
	74.11	130	136	221	94	0.20	4230	3640	4210	3620
	84.78	130	136	221	83	0.16	4230	3640	4210	3620
	90.96	130	136	221	77	0.15	4230	3640	4210	3620
	105.49	130	136	221	66	0.12	4230	3640	4210	3620
	123.91	130	136	221	56	0.090	4230	3640	4210	3620
	135.09	130	136	221	52	0.080	4230	3640	4210	3620

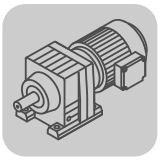

01 150 00 08

R27..

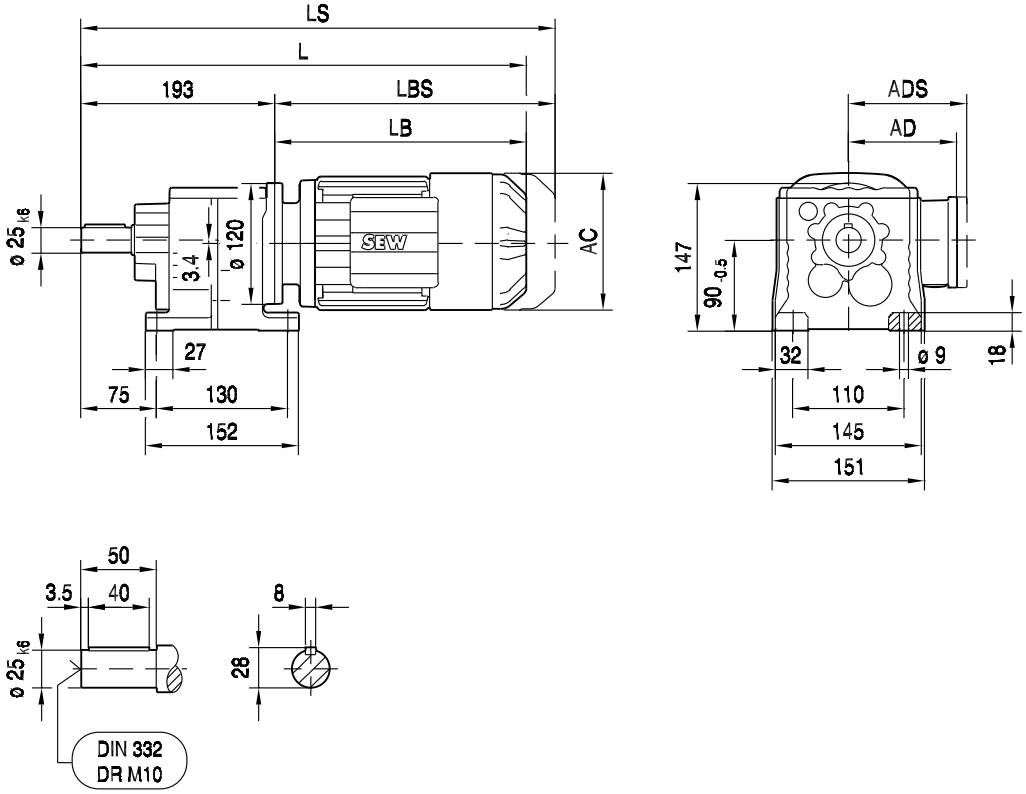

R27F..

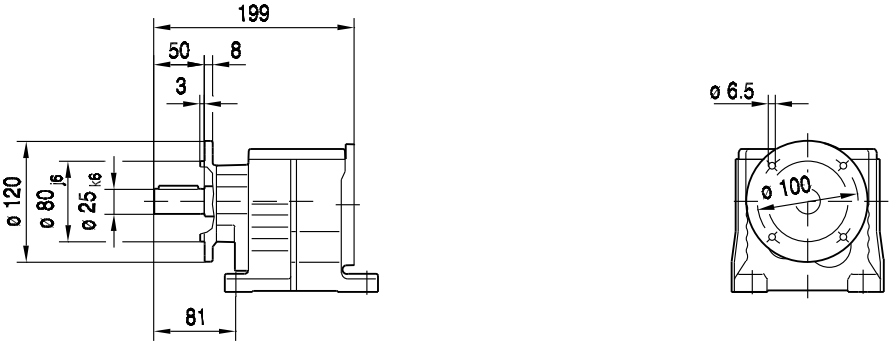

(→ 📖 129)	DRL71S	DRL71M	DRL80S	DRL80M	DRL90L	DRL100L		
AC	139	139	156	156	179	197		
AD	119	119	128	128	140	157		
ADS	129	129	139	139	150	158		
L	481	506	525	556	573	632		
LS	545	570	605	636	659	719		
LB	288	313	332	363	380	439		
LBS	352	377	412	443	466	526		

01 151 00 08

RF27..

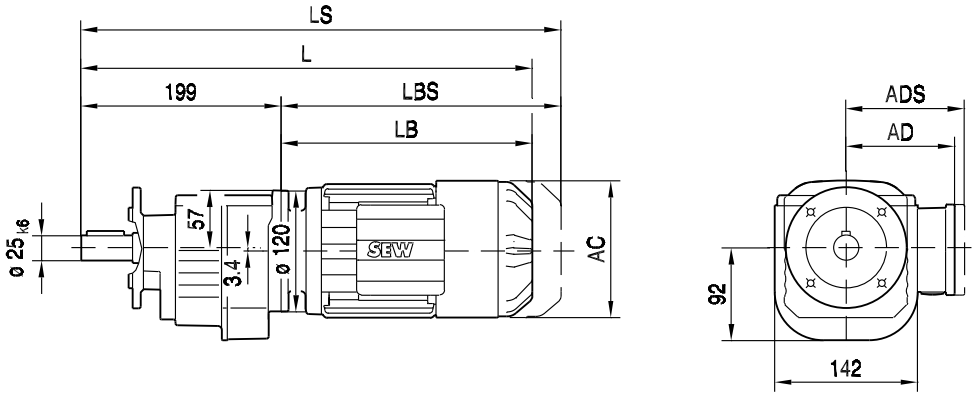

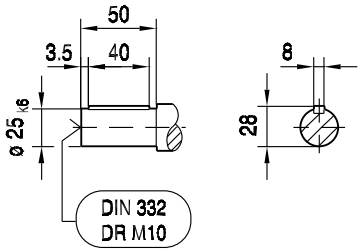

ø 120

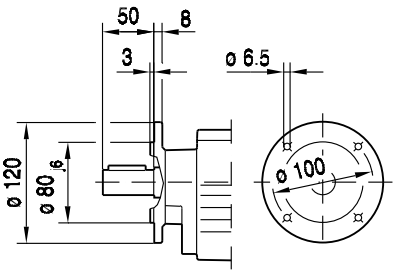

ø 140

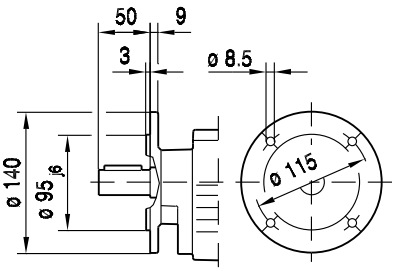

ø 160

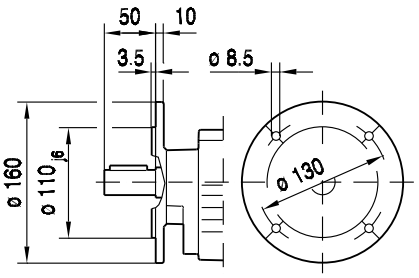

(→ 📖 129)	DRL71S	DRL71M	DRL80S	DRL80M	DRL90L	DRL100L		
AC	139	139	156	156	179	197		
AD	119	119	128	128	140	157		
ADS	129	129	139	139	150	158		
L	487	512	531	562	579	638		
LS	551	576	611	642	665	725		
LB	288	313	332	363	380	439		
LBS	352	377	412	443	466	526		

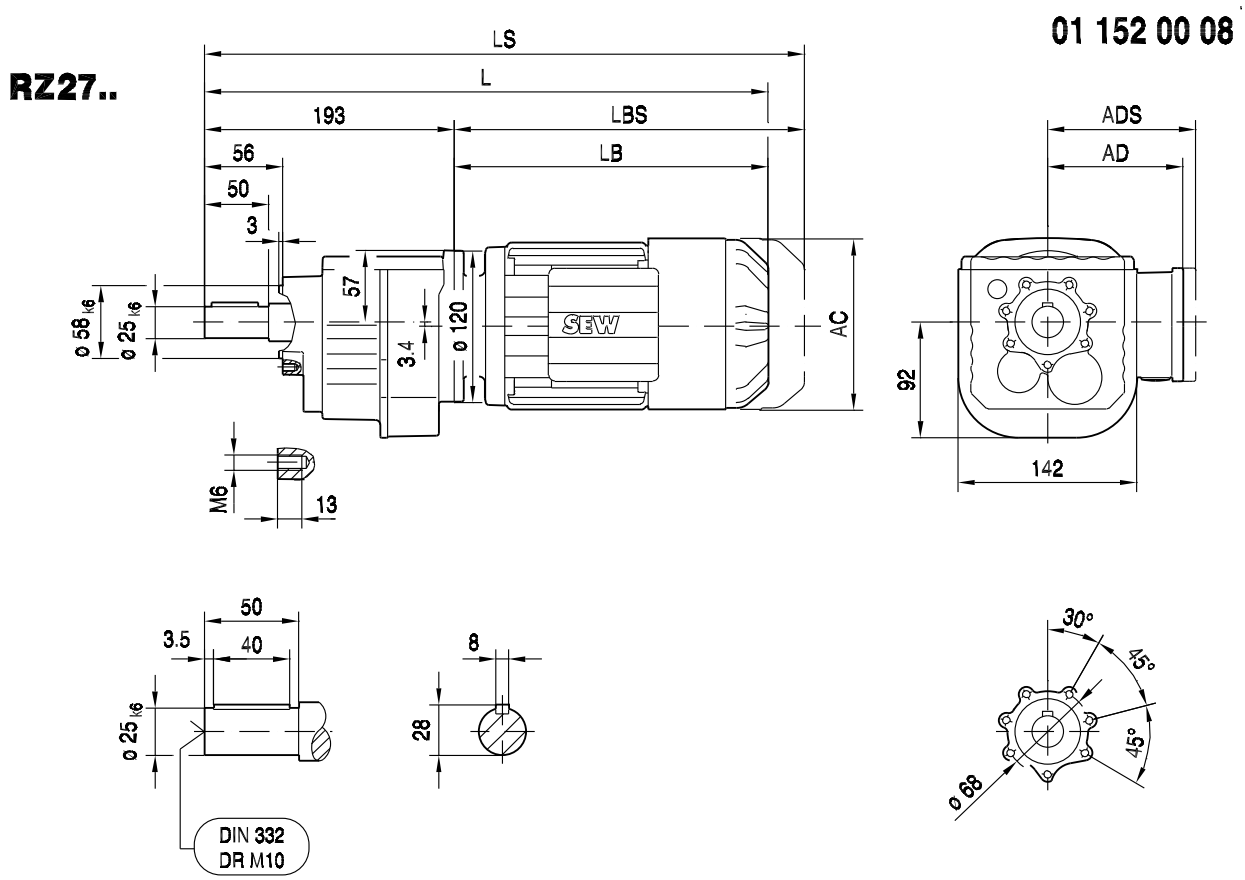

(→ 📖 129)	DRL71S	DRL71M	DRL80S	DRL80M	DRL90L	DRL100L		
AC	139	139	156	156	179	197		
AD	119	119	128	128	140	157		
ADS	129	129	139	139	150	158		
L	481	506	525	556	573	632		
LS	545	570	605	636	659	719		
LB	288	313	332	363	380	439		
LBS	352	377	412	443	466	526		

8.3.4 R 37

M_{aDyn} Nm	i	DRL 71S D1	71S D2	71M D1	71M D2	80S D1	80S D2	80M D1	90L D1	90L D2	100L D1
R37 2	3.41	17	28	23	46	33	83	43	83	>147	116
	4.05	20	33	27	55	39	98	51	98	>153	137
	4.32	21	36	29	59	42	105	54	105	>155	147
	5.06	25	42	34	69	49	123	64	123	>156	>156
	5.67	27	47	38	77	55	137	71	137	>156	>156
	6.67	32	55	45	91	65	162	84	162		>166
	7.97	39	66	54	108	77	193	101	193	>205	>205
	9.47	46	78	64	129	92	>205	119	>205	>205	>205
	10.11	49	83	69	137	98	>205	127	>205	>205	>205
	11.83	57	98	80	161	115	>205	149	>205	>205	>205
	13.25	64	109	90	180	129	>205	167	>205	>205	>205
	15.60	76	129	106	>205	151	>205	197	>205		>205
	18.05	88	149	123	>205	175	>205	>205			
	19.31	94	159	131	>205	187	>205	>205			
	22.27	108	184	151		>205		>205			
	26.03	126		177							
	28.32	137		192							
R37 3	24.42	116	197	162	>205	>205	>205	>205	>205	>205	>205
	28.73	136	>205	191	>205	>205	>205	>205	>205	>205	>205
	32.40	154	>205	>205	>205	>205	>205	>205	>205	>205	>205
	36.72	174	>205	>205	>205	>205	>205	>205			
	39.17	186	>205	>205	>205	>205	>205	>205	>205		>205
	44.81	>205	>205	>205	>205	>205	>205	>205			
	48.08	>205	>205	>205	>205	>205	>205	>205			
	55.76	>205	>205	>205		>205		>205			
	61.18	>205	>205	>205	>205	>205	>205	>205	>205	>205	>205
	69.33	>205	>205	>205	>205	>205	>205	>205			
	73.96	>205	>205	>205	>205	>205	>205	>205	>205		>205
	84.61	>205	>205	>205	>205	>205	>205	>205			
	90.77	>205	>205	>205	>205	>205	>205	>205			
	105.28	>205	>205	>205		>205		>205			
	123.66	>205		>205							
	134.82	>205		>205							

	→ 124

m kg	s	DRL 71S	71M	80S	80M	90L	100L
R37	2	17	18	21	23	31	39
R37	3	18	19	21	24	31	39
RF: + 1.5 kg							

DRL..	i	n_{epk} 1/min	η %	c_{TG} R Nm/'	RF Nm/'	φ /R '
R37 2	3.41	3587	97	9.7	9.5	14
	4.05	4261	97	9.7	9.5	13
	4.32	4500	97	9.7	9.5	13
	5.06	4500	97	9.7	9.5	13
	5.67	4500	97	9.7	9.5	12
	6.67	4500	97	9.7	9.5	12
	7.97	4500	97	13	12	8
	9.47	4500	97	13	12	8
	10.11	4500	97	13	12	8
	11.83	4500	97	13	12	8
	13.25	4500	97	13	12	8
	15.60	4500	97	13	12	8
	18.05	4500	97	13	12	8
	19.31	4500	97	13	12	7
	22.27	4500	97	13	12	7
	26.03	4500	97	13	12	7
	28.32	4500	97	13	12	7
R37 3	24.42	4500	95	13	12	9
	28.73	4500	95	13	12	9
	32.40	4500	95	13	12	9
	36.72	4500	95	13	12	9
	39.17	4500	95	13	12	9
	44.81	4500	95	13	12	9
	48.08	4500	95	13	12	9
	55.76	4500	95	13	12	9
	61.18	4500	94	13	13	8
	69.33	4500	94	13	13	8
	73.96	4500	94	13	13	8
	84.61	4500	93	13	13	8
	90.77	4500	93	13	13	8
	105.28	4500	93	13	13	8
	123.66	4500	93	13	13	8
	134.82	4500	93	13	13	8

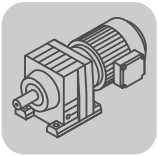

R..DRL
R..Nm

DRL.. n_e = 1400	i	M_{amax} Nm	M_{apk} Nm	$M_{aNotaus}$ Nm	n_{ak} 1/min	J_G 10^{-4} kgm^2	F_{Ramax} R N	F_{Ramax} RF N	F_{Rapk} R N	F_{Rapk} RF N
R37 2	3.41	112	147	190	411	1.4	900	800	5500	5500
	4.05	122	153	207	346	1.1	840	750	5440	5440
	4.32	126	155	214	324	0.95	820	725	5430	5430
	5.06	135	156	230	277	0.72	790	700	5420	5420
	5.67	142	156	241	247	0.59	760	675	5420	5420
	6.67	144	166	245	210	0.43	1000	890	5320	5320
	7.97	156	205	265	176	0.96	1720	1520	4880	4880
	9.47	167	205	284	148	0.74	1760	1560	4880	4880
	10.11	170	205	289	138	0.66	1820	1620	4880	4880
	11.83	183	205	311	118	0.51	1810	1610	4880	4880
	13.25	190	205	323	106	0.43	1880	1670	4880	4880
	15.60	200	205	340	90	0.31	2010	1780	4880	4880
	18.05	200	205	340	94	0.26	2390	2120	4880	4880
	19.31	200	205	340	93	0.23	2570	2280	4880	4880
	22.27	200	205	340	99	0.19	2970	2640	4880	4880
	26.03	185	205	315	127	0.15	3860	3420	4880	4880
	28.32	200	205	340	99	0.13	3690	3270	4880	4880
R37 3	24.42	200	205	340	70	0.53	3240	2870	4880	4880
	28.73	200	205	340	70	0.39	3740	3310	4880	4880
	32.40	200	205	340	71	0.31	4120	3650	4880	4880
	36.72	200	205	340	71	0.25	4540	4020	4880	4880
	39.17	200	205	340	71	0.23	4760	4220	4880	4880
	44.81	200	205	340	71	0.19	4940	4640	4880	4880
	48.08	200	205	340	73	0.17	4940	4870	4880	4880
	55.76	200	205	340	74	0.13	4940	4940	4880	4880
	61.18	200	205	340	75	0.26	4940	4940	4880	4880
	69.33	200	205	340	75	0.22	4940	4940	4880	4880
	73.96	200	205	340	76	0.20	4940	4940	4880	4880
	84.61	200	205	340	76	0.16	4940	4940	4880	4880
	90.77	200	205	340	76	0.15	4940	4940	4880	4880
	105.28	200	205	340	66	0.12	4940	4940	4880	4880
	123.66	200	205	340	57	0.090	4940	4940	4880	4880
	134.82	200	205	340	52	0.080	4940	4940	4880	4880

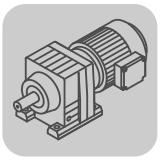

01 153 00 08

R37..

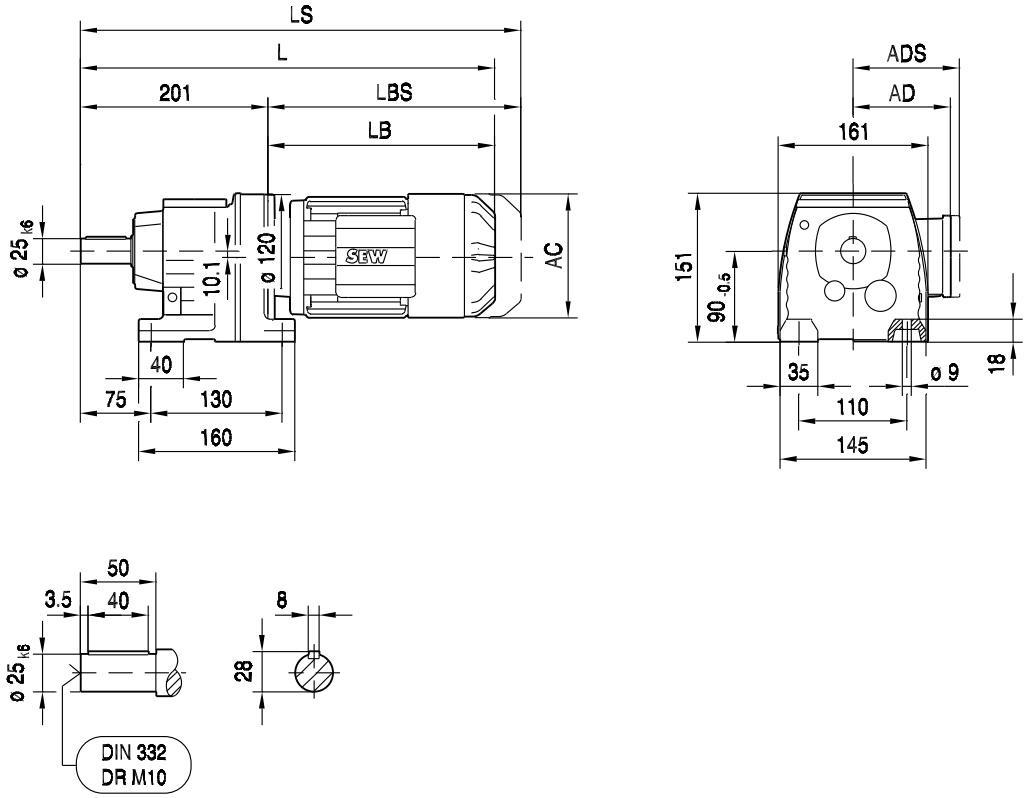

R37F..

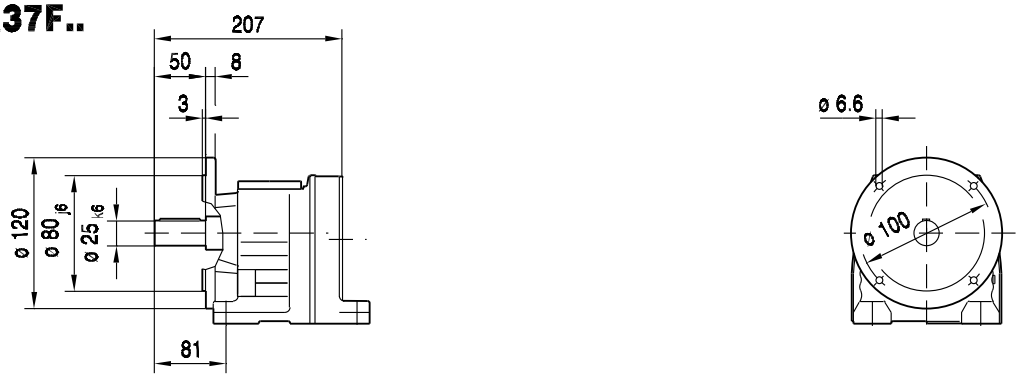

(→ 📖 129)	DRL71S	DRL71M	DRL80S	DRL80M	DRL90L	DRL100L		
AC	139	139	156	156	179	197		
AD	119	119	128	128	140	157		
ADS	129	129	139	139	150	158		
L	489	514	533	564	581	640		
LS	553	578	613	644	667	727		
LB	288	313	332	363	380	439		
LBS	352	377	412	443	466	526		

01 154 00 08

RF37..

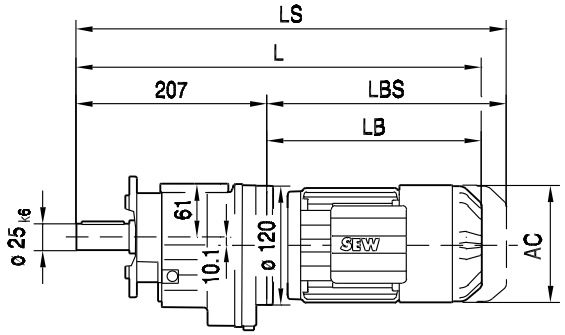

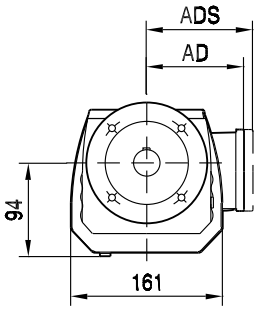

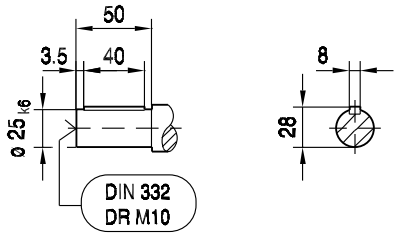

ø 120

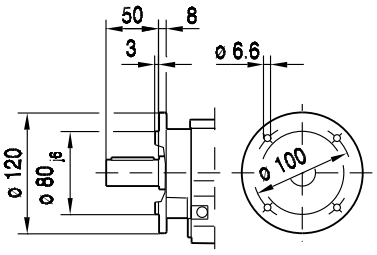

ø 160

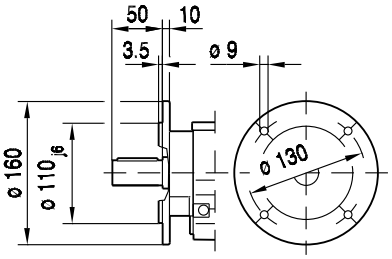

ø 200

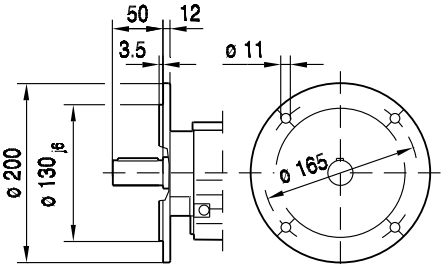

(→ 📖 129)	DRL71S	DRL71M	DRL80S	DRL80M	DRL90L	DRL100L		
AC	139	139	156	156	179	197		
AD	119	119	128	128	140	157		
ADS	129	129	139	139	150	158		
L	495	520	539	570	587	646		
LS	559	584	619	650	673	733		
LB	288	313	332	363	380	439		
LBS	352	377	412	443	466	526		

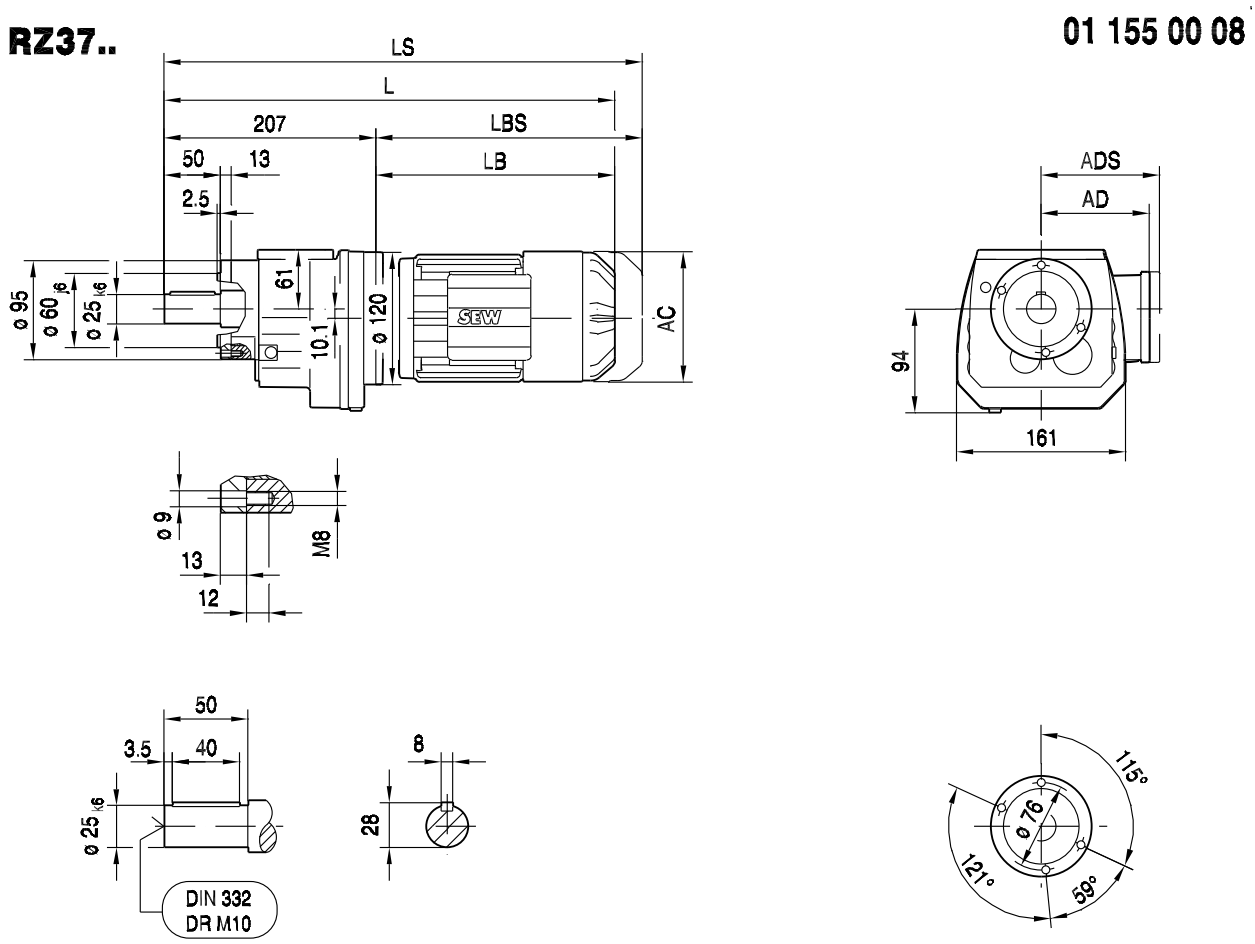

(→ 📖 129)	DRL71S	DRL71M	DRL80S	DRL80M	DRL90L	DRL100L		
AC	139	139	156	156	179	197		
AD	119	119	128	128	140	157		
ADS	129	129	139	139	150	158		
L	495	520	539	570	587	646		
LS	559	584	619	650	673	733		
LB	288	313	332	363	380	439		
LBS	352	377	412	443	466	526		

8.3.5 R 47

M_{aDyn} Nm	i	DRL											
		71S		71M		80S		80M		90L		100L	132S
		D1	D2	D1	D2	D1	D2	D1	D2	D1	D2	D1	D1
R47 2	3.83	19	32	26	52	37	93	48	123	93	>166	130	>166
	4.34	21	36	29	59	42	105	55	139	105	>170	147	>170
	4.85	24	40	33	66	47	118	61	155	118	>175	165	>175
	5.64	27	47	38	77	55	137	71	>180	137	>180	>180	>180
	6.00	29	49	41	81	58	146	76	>182	146	>182	>182	>182
	6.96	34	57	47	95	68	169	88	>187	169	>187	>187	
	7.76	38	64	53	105	75	188	98	>190	188	>190	>190	
	8.01	39	66	54	109	78	194	101	255	194	>300	270	>300
	9.07	44	75	62	123	88	215	114	290	215	>305	>305	>305
	10.15	49	84	69	138	98	245	128	>305	245	>305	>305	>305
	11.79	57	97	80	160	114	285	149	>305	285	>305	>305	>305
	12.54	61	103	85	170	122	300	158	>305	300	>305	>305	>305
	14.56	71	120	99	198	141	>305	184	>305	>305	>305	>305	
	16.22	79	134	110	220	157	>305	200	>305	>305	>305	>305	
	17.89	87	148	121	240	174	>305	225					
	19.27	93	159	131	260	187	>305	240	>305	>305		>305	
	21.81	106	180	148	295	210	>305	275					
	23.28	113	192	158	>305	225	>305	290					
	26.74	130	220	182		255		>305					
	31.12	151		210									
	33.79	164		225									
R47 3	23.59	112	190	157	>305	220	>305	290	>305	>305		>305	
	26.70	127	215	178	>305	250	>305	>305	>305	>305		>305	
	29.88	142	240	199	>305	280	>305	>305	>305	>305		>305	
	34.73	165	280	230	>305	>305	>305	>305	>305	>305		>305	
	36.93	175	295	245	>305	>305	>305	>305	>305	>305		>305	
	42.87	200	>305	285	>305	>305	>305	>305	>305	>305		>305	
	47.75	225	>305	>305	>305	>305	>305	>305	>305	>305		>305	
	52.69	250	>305	>305	>305	>305	>305	>305					
	56.73	265	>305	>305	>305	>305	>305	>305	>305	>305		>305	
	64.21	300	>305	>305	>305	>305	>305	>305					
	68.54	>305	>305	>305	>305	>305	>305	>305					
	76.23	>305	>305	>305	>305	>305	>305	>305					
	84.90	>305	>305	>305	>305	>305	>305	>305					
	93.68	>305	>305	>305	>305	>305	>305	>305					
	100.86	>305	>305	>305	>305	>305	>305	>305					
	114.17	>305	>305	>305	>305	>305	>305	>305					
	121.87	>305	>305	>305	>305	>305	>305	>305					
	139.99	>305	>305	>305		>305		>305					
	162.94	>305		>305									
	176.88	>305		>305									

→ 124

m kg	s	DRL						
		71S	71M	80S	80M	90L	100L	132S
R47	2	21	22	24	27	35	42	58
R47	3	21	22	25	28	35	43	59
RF: + 0.1 kg								

DRL..	i	n_{epk} 1/min	η %	c_{TG} R Nm/'	RF Nm/'	φ /R '
R47 2	3.83	3657	97	11	11	11
	4.34	4144	97	11	11	11
	4.85	4500	97	11	11	10
	5.64	4500	97	11	11	10
	6.00	4500	97	11	11	10
	6.96	4500	97	11	11	10
	7.76	4500	97	11	11	10
	8.01	4500	97	15	15	8
	9.07	4500	97	15	15	8
	10.15	4500	97	15	15	7
	11.79	4500	97	15	15	7
	12.54	4500	97	15	15	7
	14.56	4500	97	15	15	7
	16.22	4500	97	15	15	7
	17.89	4500	97	15	15	7
	19.27	4500	97	15	15	7
	21.81	4500	97	15	15	7
	23.28	4500	97	15	15	7
	26.74	4500	97	15	15	7
	31.12	4500	97	15	15	7
	33.79	4500	97	15	15	7
R47 3	23.59	4500	95	15	15	8
	26.70	4500	95	15	15	8
	29.88	4500	95	15	15	8
	34.73	4500	95	15	15	8
	36.93	4500	95	15	15	8
	42.87	4500	95	15	15	8
	47.75	4500	95	15	15	8
	52.69	4500	95	15	15	8
	56.73	4500	95	15	15	8
	64.21	4500	95	15	15	8
	68.54	4500	95	15	15	8
	76.23	4500	94	15	15	7
	84.90	4500	94	15	15	7
	93.68	4500	94	15	15	7
	100.86	4500	93	15	15	7
	114.17	4500	93	15	15	7
	121.87	4500	93	15	15	7
	139.99	4500	93	15	15	7
	162.94	4500	93	15	15	7
	176.88	4500	93	15	15	7

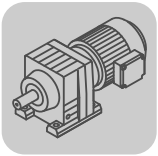

R..DRL
R..Nm

DRL.. n_e = 1400	i	M_{amax} Nm	M_{apk} Nm	$M_{aNotaus}$ Nm	n_{ak} 1/min	J_G 10^{-4} kgm^2	F_{Ramax} R N	F_{Ramax} RF N	F_{Rapk} R N	F_{Rapk} RF N
R47 2	3.83	144	166	245	392	2.6	2080	2080	5960	5960
	4.34	146	170	248	415	2.0	2190	2190	5940	5940
	4.85	150	175	255	392	1.7	2280	2280	5930	5930
	5.64	155	180	264	372	1.3	2410	2410	5920	5920
	6.00	156	182	265	383	1.2	2470	2470	5910	5910
	6.96	159	187	270	374	0.93	2620	2620	5890	5890
	7.76	163	190	277	361	0.77	2720	2720	5880	5880
	8.01	205	300	349	200	2.0	2690	2690	5420	5420
	9.07	220	305	374	165	1.6	2780	2780	5390	5390
	10.15	230	305	391	158	1.3	2880	2880	5390	5390
	11.79	245	305	417	136	1.0	3020	3020	5390	5390
	12.54	250	305	425	128	0.95	3080	3080	5390	5390
	14.56	265	305	451	110	0.74	3230	3230	5390	5390
	16.22	275	305	468	99	0.63	3350	3350	5390	5390
	17.89	290	305	493	84	0.51	3390	3390	5390	5390
	19.27	295	305	502	83	0.48	3530	3530	5390	5390
	21.81	300	305	510	78	0.39	3710	3710	5390	5390
	23.28	300	305	510	82	0.36	3820	3820	5390	5390
	26.74	300	305	510	82	0.29	4050	4050	5390	5390
	31.12	220	305	374	212	0.23	4610	4610	5390	5390
	33.79	240	305	408	163	0.20	4680	4680	5390	5390
R47 3	23.59	300	305	510	85	1.7	3840	3840	5390	5390
	26.70	300	305	510	86	1.4	4050	4050	5390	5390
	29.88	300	305	510	84	1.2	4240	4240	5390	5390
	34.73	300	305	510	84	0.93	4520	4520	5390	5390
	36.93	300	305	510	84	0.85	4630	4630	5390	5390
	42.87	300	305	510	86	0.67	4930	4930	5390	5390
	47.75	300	305	510	86	0.56	5140	5140	5390	5390
	52.69	300	305	510	85	0.47	5350	5350	5390	5390
	56.73	300	305	510	85	0.44	5420	5420	5390	5390
	64.21	300	305	510	86	0.37	5420	5420	5390	5390
	68.54	300	305	510	86	0.33	5420	5420	5390	5390
	76.23	300	305	510	89	0.60	5420	5420	5390	5390
	84.90	300	305	510	82	0.52	5420	5420	5390	5390
	93.68	300	305	510	75	0.43	5420	5420	5390	5390
	100.86	300	305	510	69	0.41	5420	5420	5390	5390
	114.17	300	305	510	61	0.34	5420	5420	5390	5390
	121.87	300	305	510	57	0.31	5420	5420	5390	5390
	139.99	300	305	510	50	0.25	5420	5420	5390	5390
	162.94	300	305	510	43	0.20	5420	5420	5390	5390
	176.88	300	305	510	40	0.18	5420	5420	5390	5390

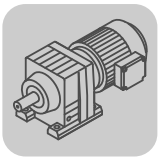

01 156 00 08

R47..

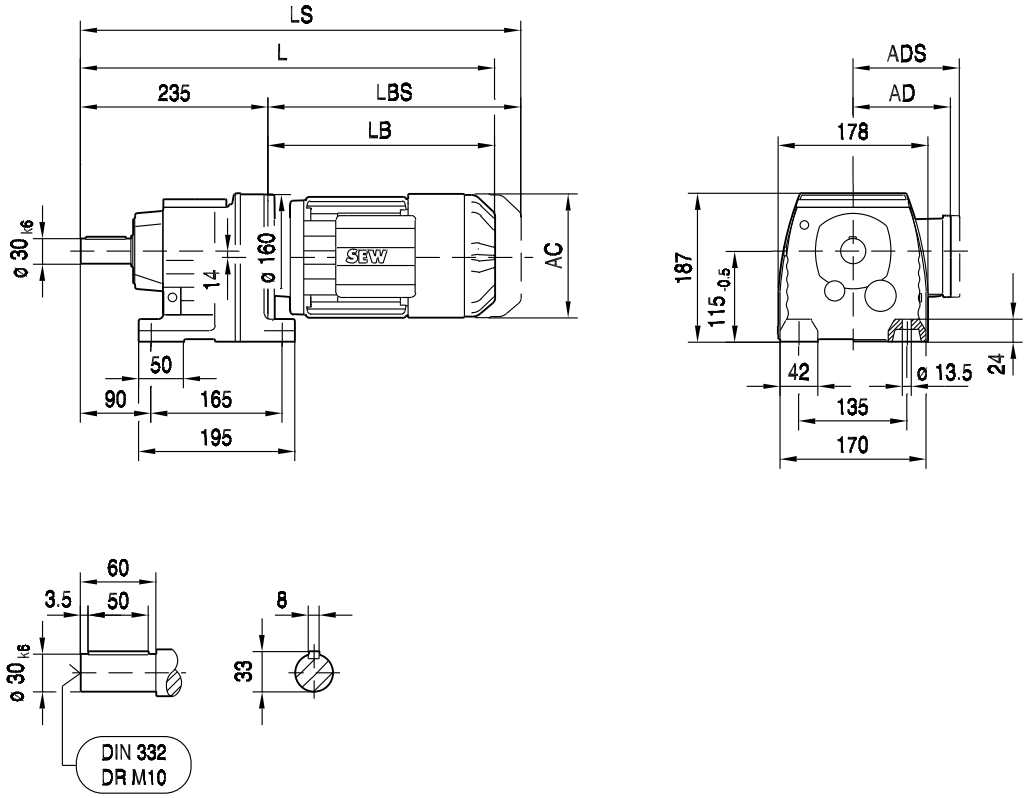

R47F..

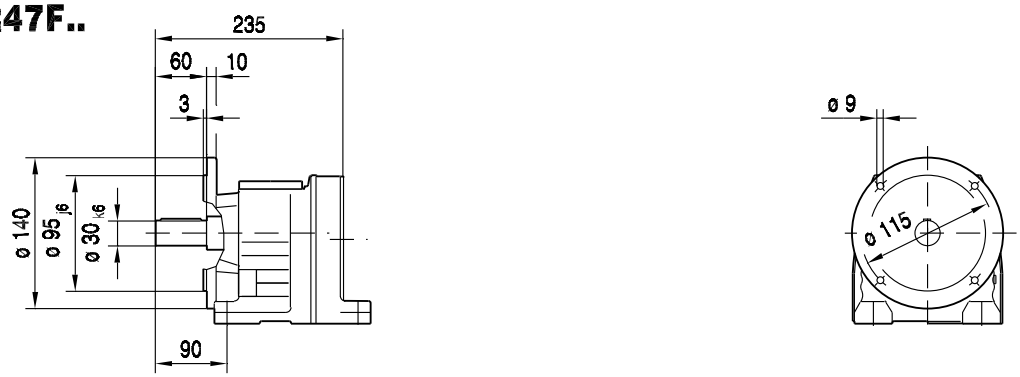

(→ 📖 129)	DRL71S	DRL71M	DRL80S	DRL80M	DRL90L	DRL100L	DRL132S	
AC	139	139	156	156	179	197	221	
AD	119	119	128	128	140	157	170	
ADS	129	129	139	139	150	158	172	
L	515	540	561	592	606	665	750	
LS	580	605	641	672	692	752	858	
LB	280	305	326	357	371	430	515	
LBS	345	370	406	437	457	517	623	

01 157 00 08

RF47..

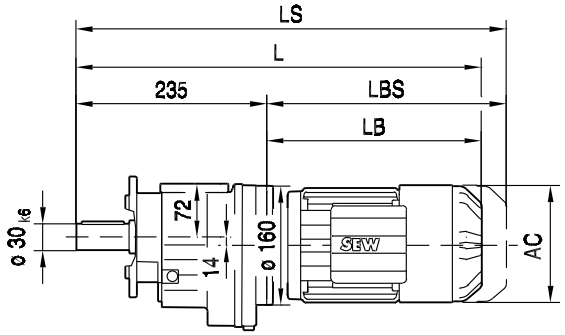

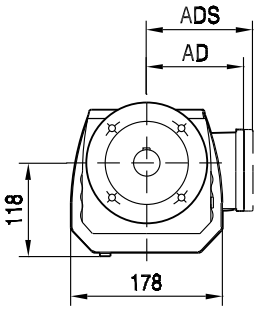

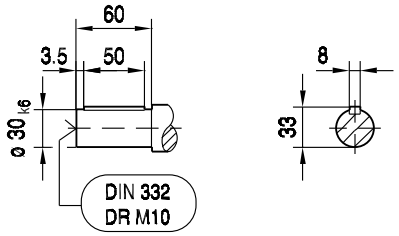

ø 140

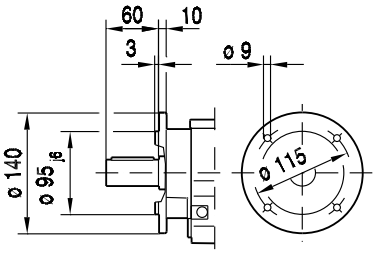

ø 160

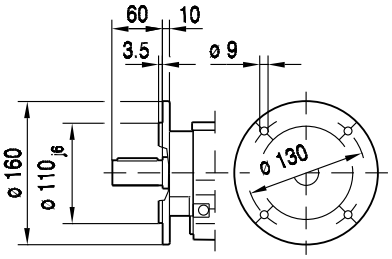

ø 200

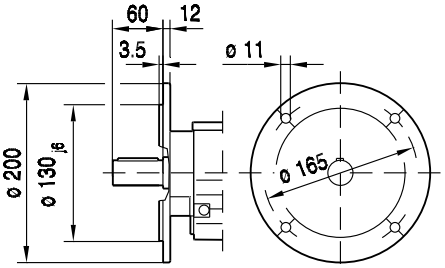

(→ 📖 129)	DRL71S	DRL71M	DRL80S	DRL80M	DRL90L	DRL100L	DRL132S	
AC	139	139	156	156	179	197	221	
AD	119	119	128	128	140	157	170	
ADS	129	129	139	139	150	158	172	
L	515	540	561	592	606	665	750	
LS	580	605	641	672	692	752	858	
LB	280	305	326	357	371	430	515	
LBS	345	370	406	437	457	517	623	

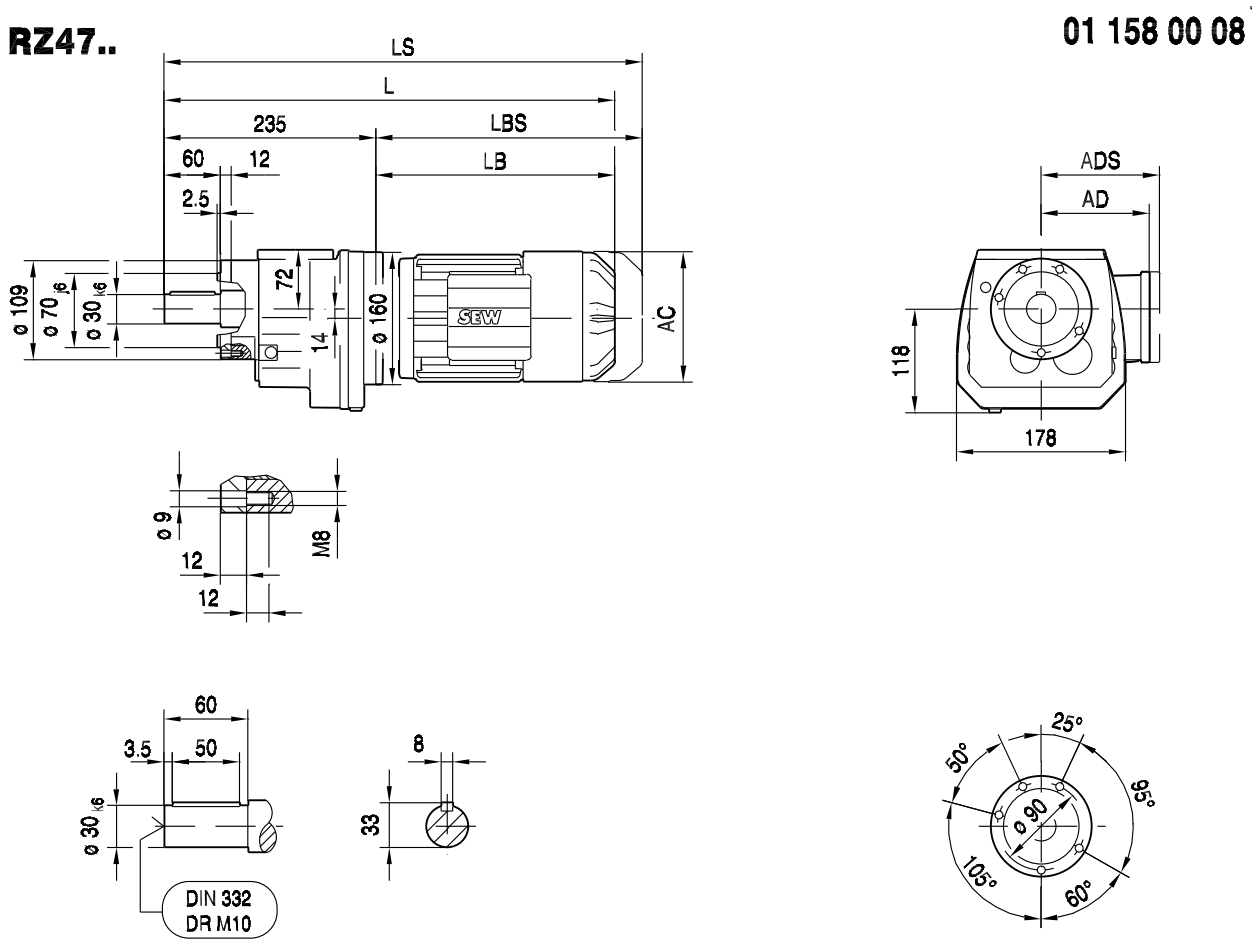

(→ 📖 129)	DRL71S	DRL71M	DRL80S	DRL80M	DRL90L	DRL100L	DRL132S	
AC	139	139	156	156	179	197	221	
AD	119	119	128	128	140	157	170	
ADS	129	129	139	139	150	158	172	
L	515	540	561	592	606	665	750	
LS	580	605	641	672	692	752	858	
LB	280	305	326	357	371	430	515	
LBS	345	370	406	437	457	517	623	

8.3.6 R 57

M_{aDyn} Nm	i	DRL 71S D1	71S D2	71M D1	71M D2	80S D1	80S D2	80M D1	80M D2	90L D1	90L D2	100L D1	132S D1	132S D2	132MC D1
R57 2	4.39		36		60	43	106	55	141	106	196	149	340	>420	>420
	5.05	24	42	34	69	49	122	64	162	122	225	171	390	>425	>425
	5.82	28	48	40	79	56	141	73	186	141	255	198	>425	>425	>425
	6.41	31	53	44	87	62	155	81	205	155	285	215	>425		
	7.53	37	62	51	102	73	183	95	240	183	335	255	>425		
	7.97	39	66	54	108	77	193	101	255	193	355	270	>425		
	9.06	44	75	62	123	88	215	114	290	215	400	305			
	9.35	45	77	63	127	91	225	118	295	225	415	315	>455	>455	>455
	10.79	52	89	73	147	105	260	136	345	260	>455	365	>455	>455	>455
	11.88	58	98	81	161	115	285	150	380	285	>455	400	>455		
	13.95	68	115	95	189	135	335	176	445	335	>455	>455	>455		
	14.77	72	122	100	200	143	355	186	>455	355	>455	>455	>455		
	16.79	81	138	114	225	163	405	210	>455	405	>455	>455			
	18.60	90	153	126	250	180	450	230	>455	450	>455	>455			
	21.93	106	181	149	295	210	>455	275	>455	>455		>455			
	24.99	121	205	170	335	240	>455	315							
	26.31	128	215	179	355	255	>455	330							
R57 3	26.97	128	215	179	355	255	>455	330	>455	>455	>455	>455	>455		
	30.18	143	240	200	400	285	>455	370	>455	>455	>455	>455	>455		
	35.07	167	280	230	>455	330	>455	430	>455	>455	>455	>455	>455		
	37.30	177	300	245	>455	350	>455	>455	>455	>455	>455	>455	>455		
	43.30	205	345	285	>455	410	>455	>455	>455	>455	>455	>455			
	48.23	225	385	320	>455	>455	>455	>455	>455	>455	>455	>455			
	53.22	250	425	350	>455	>455	>455	>455							
	57.29	270	>455	380	>455	>455	>455	>455	>455	>455		>455			
	64.85	305	>455	430	>455	>455	>455	>455							
	69.23	325	>455	>455	>455	>455	>455	>455							
	80.55	375	>455	>455	>455	>455	>455	>455	>455	>455	>455	>455			
	89.71	420	>455	>455	>455	>455	>455	>455	>455	>455	>455	>455			
	98.99	>455	>455	>455	>455	>455	>455	>455							
	106.58	>455	>455	>455	>455	>455	>455	>455	>455	>455		>455			
	120.63	>455	>455	>455	>455	>455	>455	>455							
	128.77	>455	>455	>455	>455	>455	>455	>455							
	147.92	>455	>455	>455		>455		>455							
	172.17	>455		>455											
	186.89	>455		>455											

→ 124

m kg	s	DRL 71S	71M	80S	80M	90L	100L	132S	132MC
R57	2	25	27	29	32	40	47	63	79
R57	3	26	28	30	33	41	48	64	80
RF: + 3.4 kg / RM: + 15.4 kg									

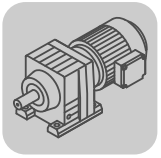

DRL..	i	n_{epk} 1/min	η %	c_{TG} R Nm/'	RF Nm/'	RM Nm/'	φ /R '
R57 2	4.39	4500	97	21	21	17	10
	5.05	4500	97	21	21	17	10
	5.82	4500	97	21	21	17	10
	6.41	4500	97	21	21	17	9
	7.53	4500	97	21	21	17	9
	7.97	4500	97	21	21	17	9
	9.06	4500	97	21	21	17	9
	9.35	4500	97	25	25	20	7
	10.79	4500	97	25	25	20	7
	11.88	4500	97	25	25	20	7
	13.95	4500	97	25	25	20	7
	14.77	4500	97	25	25	20	7
	16.79	4500	97	25	25	20	7
	18.60	4500	97	25	25	20	7
	21.93	4500	97	25	25	20	7
	24.99	4500	97	25	25	20	6
	26.31	4500	97	25	25	20	6
R57 3	26.97	4500	95	26	26	20	8
	30.18	4500	95	26	26	20	8
	35.07	4500	95	26	26	20	8
	37.30	4500	95	26	26	20	8
	43.30	4500	95	26	26	20	8
	48.23	4500	95	26	26	20	8
	53.22	4500	95	26	26	20	8
	57.29	4500	95	26	26	20	8
	64.85	4500	95	26	26	20	8
	69.23	4500	95	26	26	20	7
	80.55	4500	94	26	26	20	7
	89.71	4500	94	26	26	20	7
	98.99	4500	94	26	26	20	7
	106.58	4500	94	26	26	20	7
	120.63	4500	94	26	26	20	7
	128.77	4500	94	26	26	20	7
	147.92	4500	94	26	26	20	7
	172.17	4500	93	26	26	20	7
	186.89	4500	93	26	26	20	7

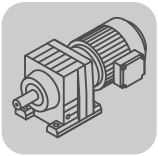

R..DRL
R..Nm

DRL.. n_e = 1400	i	M_{amax} Nm	M_{apk} Nm	$M_{aNotaus}$ Nm	n_{ak} 1/min	J_G 10^{-4} kgm^2	F_{Ramax} R N	F_{Ramax} RF N	F_{Ramax} RM N	F_{Rapk} R N	F_{Rapk} RF N	F_{Rapk} RM N
R57 2	4.39	280	420	476	319	4.3	1900	1900	4000	7230	7230	4000
	5.05	305	425	519	277	3.4	1730	1730	4000	7210	7210	4000
	5.82	320	425	544	241	2.7	1820	1820	4000	7210	7210	4000
	6.41	335	425	570	218	2.3	1770	1770	4000	7210	7210	4000
	7.53	350	425	595	226	1.8	1950	1950	4000	7210	7210	4000
	7.97	355	425	604	213	1.6	2020	2020	4000	7210	7210	4000
	9.06	375	425	638	188	1.3	2010	2010	4000	7210	7210	4000
	9.35	370	455	629	193	2.8	3180	3180	4000	7080	7080	4000
	10.79	390	455	663	167	2.2	3330	3330	4000	7080	7080	4000
	11.88	405	455	689	143	1.9	3430	3430	4000	7080	7080	4000
	13.95	430	455	731	122	1.6	3610	3610	4000	7080	7080	4000
	14.77	435	455	740	115	1.4	3690	3690	4000	7080	7080	4000
	16.79	450	455	765	107	1.1	3860	3860	4000	7080	7080	4000
	18.60	450	455	765	108	0.94	4050	4050	4000	7080	7080	4000
	21.93	450	455	765	109	0.73	4370	4370	4000	7080	7080	4000
	24.99	450	455	765	108	0.51	4640	4640	4000	7080	7080	4000
	26.31	450	455	765	110	0.45	4750	4750	4000	7080	7080	4000
R57 3	26.97	450	455	765	63	1.5	4800	4800	4000	7080	7080	4000
	30.18	450	455	765	63	1.3	5040	5040	4000	7080	7080	4000
	35.07	450	455	765	66	0.97	5390	5390	4000	7080	7080	4000
	37.30	450	455	765	64	0.89	5530	5530	4000	7080	7080	4000
	43.30	450	455	765	65	0.70	5900	5900	4000	7080	7080	4000
	48.23	450	455	765	64	0.60	6170	6170	4000	7080	7080	4000
	53.22	450	455	765	66	0.49	6430	6430	4000	7080	7080	4000
	57.29	450	455	765	65	0.46	6630	6630	4000	7080	7080	4000
	64.85	450	455	765	65	0.38	6980	6980	4000	7080	7080	4000
	69.23	450	455	765	65	0.35	7100	7100	4000	7080	7080	4000
	80.55	450	455	765	56	0.62	7100	7100	4000	7080	7080	4000
	89.71	450	455	765	56	0.54	7100	7100	4000	7080	7080	4000
	98.99	450	455	765	56	0.45	7100	7100	4000	7080	7080	4000
	106.58	450	455	765	55	0.42	7100	7100	4000	7080	7080	4000
	120.63	450	455	765	56	0.35	7100	7100	4000	7080	7080	4000
	128.77	450	455	765	54	0.32	7100	7100	4000	7080	7080	4000
	147.92	450	455	765	47	0.26	7100	7100	4000	7080	7080	4000
	172.17	450	455	765	41	0.21	7100	7100	4000	7080	7080	4000
	186.89	450	455	765	37	0.18	7100	7100	4000	7080	7080	4000

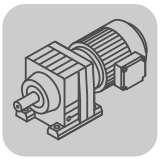

01 159 00 08

R57..

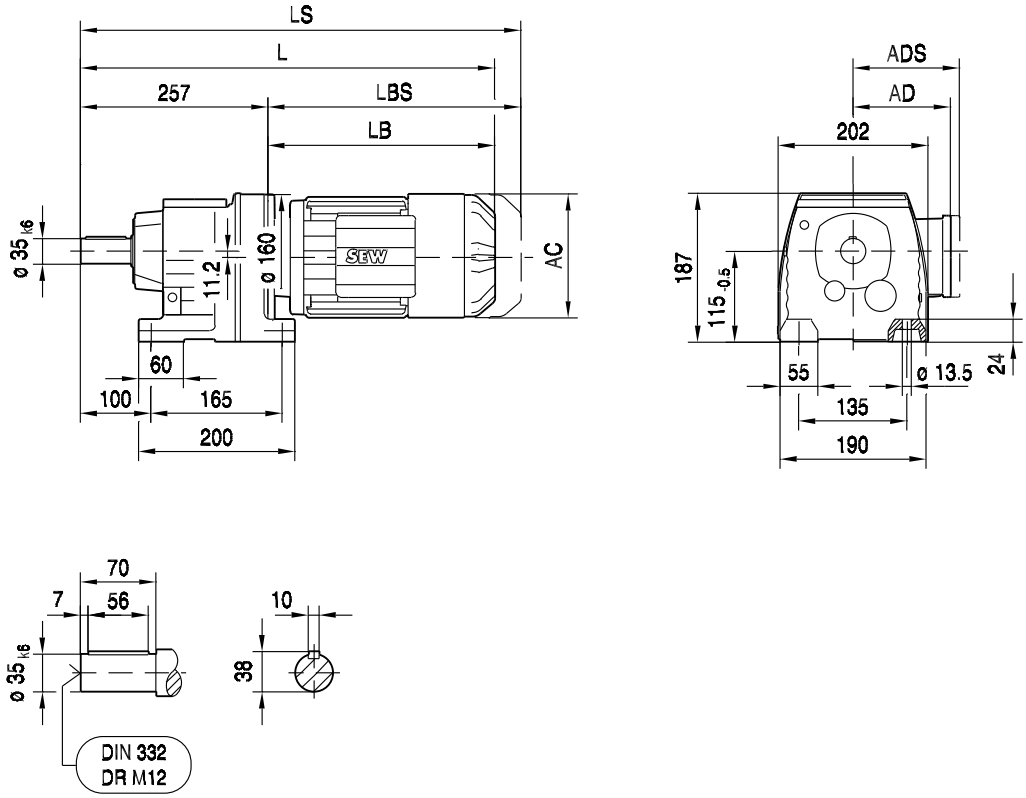

R57F..

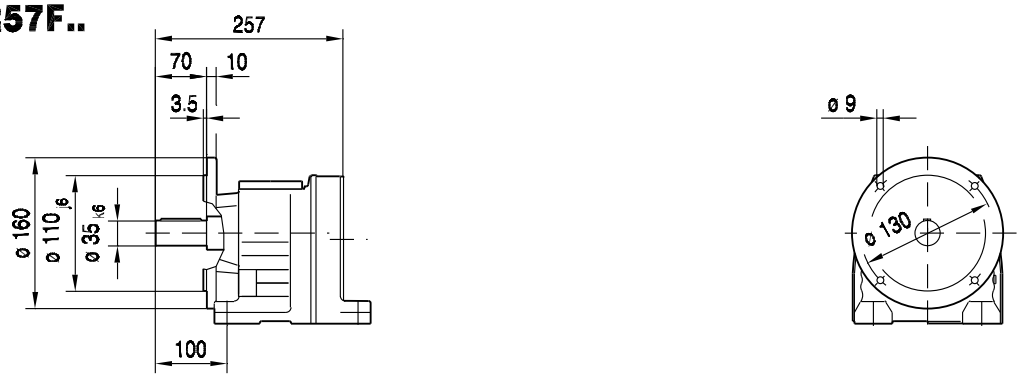

(→ 📖 129)	DRL71S	DRL71M	DRL80S	DRL80M	DRL90L	DRL100L	DRL132S	DRL132MC
AC	139	139	156	156	179	197	221	221
AD	119	119	128	128	140	157	170	170
ADS	129	129	139	139	150	158	172	172
L	537	562	583	614	628	687	772	822
LS	602	627	663	694	714	774	880	930
LB	280	305	326	357	371	430	515	565
LBS	345	370	406	437	457	517	623	673

RF57..

01 160 00 08

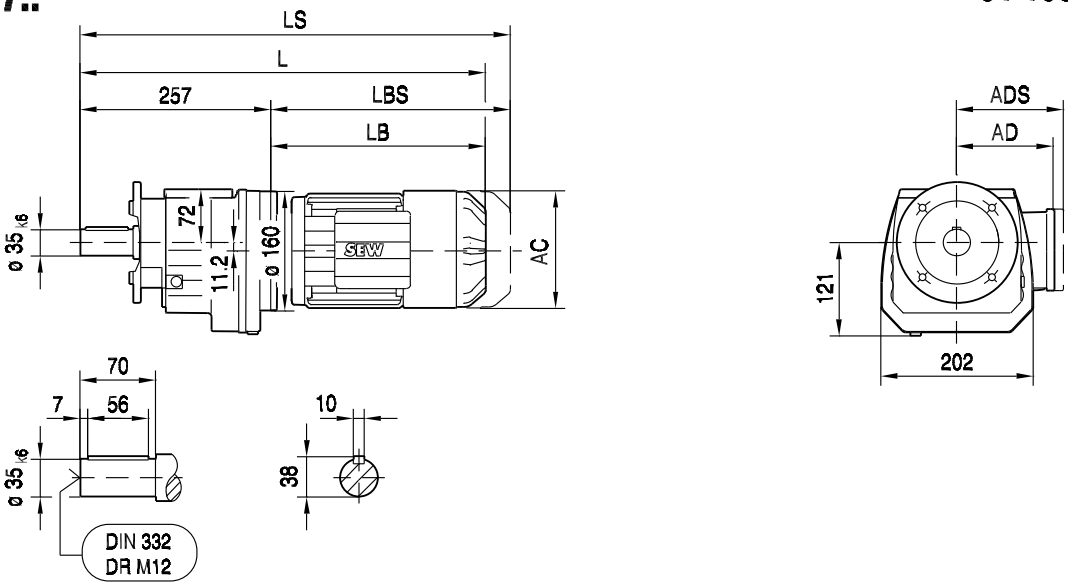

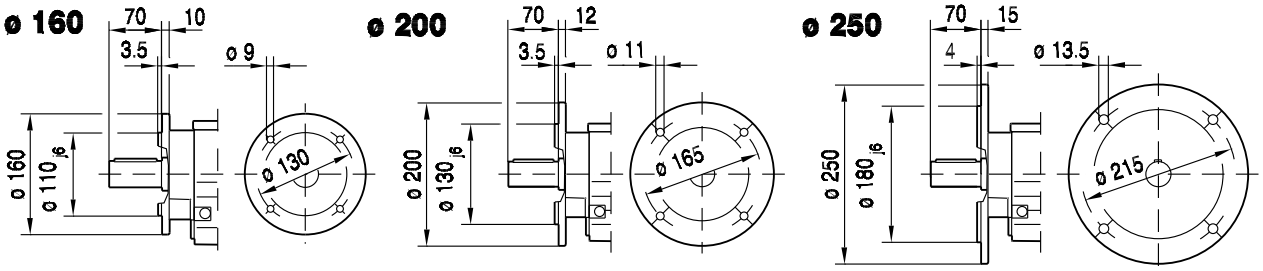

RM57..

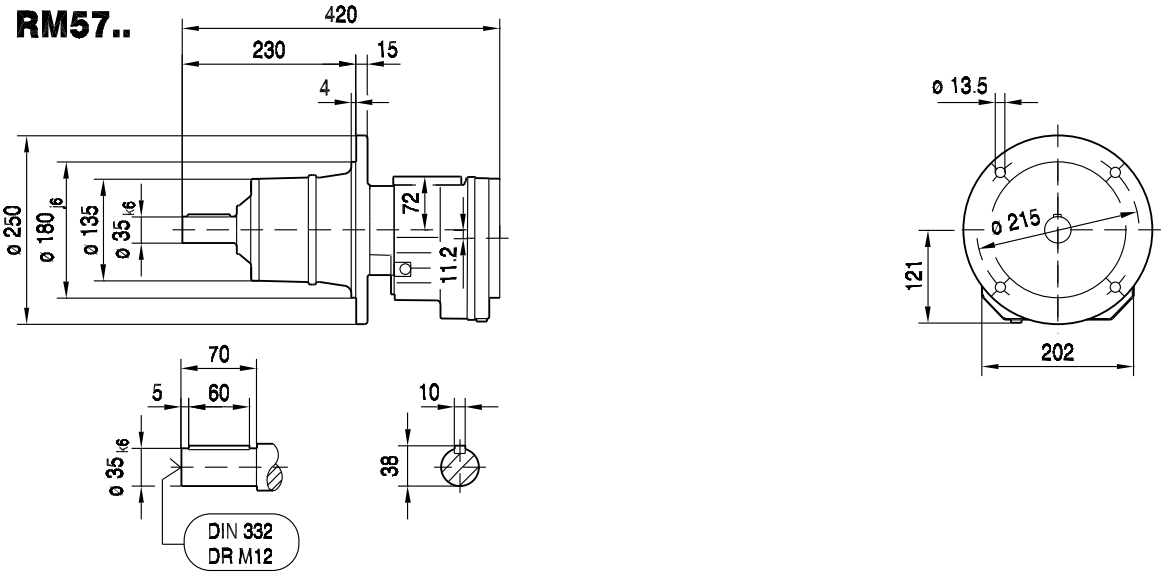

(→ 📖 129)	DRL71S	DRL71M	DRL80S	DRL80M	DRL90L	DRL100L	DRL132S	DRL132MC
AC	139	139	156	156	179	197	221	221
AD	119	119	128	128	140	157	170	170
ADS	129	129	139	139	150	158	172	172
L	537	562	583	614	628	687	772	822
LS	602	627	663	694	714	774	880	930
LB	280	305	326	357	371	430	515	565
LBS	345	370	406	437	457	517	623	673

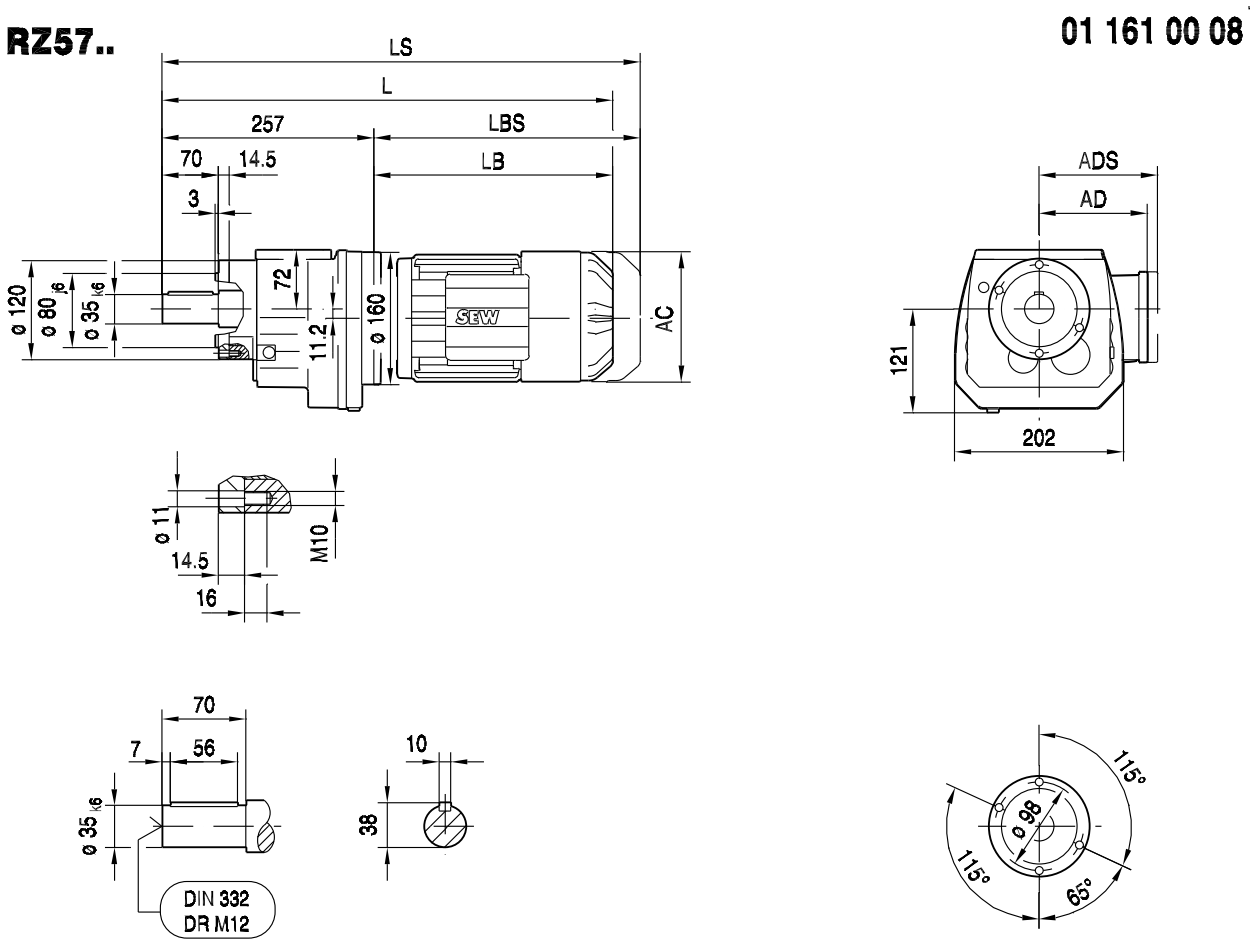

(→ 📖 129)	DRL71S	DRL71M	DRL80S	DRL80M	DRL90L	DRL100L	DRL132S	DRL132MC
AC	139	139	156	156	179	197	221	221
AD	119	119	128	128	140	157	170	170
ADS	129	129	139	139	150	158	172	172
L	537	562	583	614	628	687	772	822
LS	602	627	663	694	714	774	880	930
LB	280	305	326	357	371	430	515	565
LBS	345	370	406	437	457	517	623	673

8.3.7 R 67

M_{aDyn} Nm	i	DRL 71S D1	71S D2	71M D1	71M D2	80S D1	80S D2	80M D1	80M D2	90L D1	90L D2	100L D1	132S D1	132S D2	132MC D1
R67 2	4.29		35		58	42	104	54	137	104	191	146	330	>405	>405
	4.93	24	41	33	67	48	120	62	158	120	215	167	380	>435	>435
	5.70	28	47	39	77	55	138	72	182	138	250	194	440	>465	>465
	6.27	30	52	43	85	61	152	79	200	152	275	210	>485		
	7.36	36	61	50	100	71	178	93	235	178	325	245	>485		
	7.79	38	64	53	106	76	189	98	245	189	345	260	>485		
	8.70		72		118	84	210	110	275	210	385	295	>660	>660	>660
	10.00	48	82	68	136	97	240	126	320	240	445	335	>665	>665	>665
	11.54	56	95	78	157	112	275	146	365	275	510	390	>665	>665	>665
	12.70	62	105	86	172	123	305	160	405	305	565	430	>665		
	14.91	72	123	101	200	145	360	188	475	360	>665	505	>665		
	15.79	77	130	107	210	153	380	199	505	380	>665	535	>665		
	17.95	87	148	122	240	174	435	225	570	435	>665	605			
	19.89	96	164	135	270	193	480	250	635	480	>665	>665			
	23.44	114	193	159	315	225	565	295	>665	565		>665			
	26.72	130	220	181	360	255	645	335							
	28.13	136	230	191	380	270	>665	350							
R67 3	28.83	137	230	192	380	270	>595	355	>595	>595	>595	>595	>595		
	32.27	153	260	210	425	305	>595	395	>595	>595	>595	>595	>595		
	37.50	178	300	245	495	355	>595	460	>595	>595	>595	>595	>595		
	39.88	189	320	265	530	375	>595	490	>595	>595	>595	>595	>595		
	46.29	215	370	305	>600	435	>600	570	>600	>600	>600	>600			
	51.56	240	415	340	>600	485	>600	>600	>600	>600	>600	>600			
	56.89	270	455	375	>600	540	>600	>600							
	61.26	290	490	405	>600	580	>600	>600	>600	>600		>600			
	69.75	330	560	460	>660	>660	>660	>660	>660	>660	>660	>660	>660		
	74.17	350	595	490	>660	>660	>660	>660	>660	>660	>660	>660	>660		
	86.11	405	>660	570	>660	>660	>660	>660	>660	>660	>660	>660			
	95.91	455	>660	635	>660	>660	>660	>660	>660	>660	>660	>660			
	105.83	500	>660	>660	>660	>660	>660	>660							
	113.94	540	>660	>660	>660	>660	>660	>660	>660	>660		>660			
	128.97	610	>660	>660	>660	>660	>660	>660							
	137.67	645	>660	>660	>660	>660	>660	>660							
	158.14	>660	>660	>660		>660		>660							
	184.07	>660		>660											
	199.81	>660		>660											

	→ 124

m kg	s	DRL 71S	71M	80S	80M	90L	100L	132S	132MC
R67	2	32	33	36	38	46	54	69	86
R67	3	33	34	37	39	47	55	70	87
RF: + 3.2 kg / RM: + 19.0 kg									

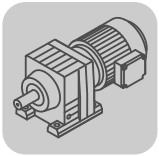

DRL..	i	n_{epk} 1/min	η %	c_{TG} R Nm/'	RF Nm/'	RM Nm/'	φ /R '
R67 2	4.29	3700	97	24	24	22	10
	4.93	4252	97	24	24	22	9
	5.70	4500	97	24	24	22	9
	6.27	4500	97	24	24	22	9
	7.36	4500	97	24	24	22	8
	7.79	4500	97	24	24	22	8
	8.70	4500	97	32	32	28	7
	10.00	4500	97	32	32	28	7
	11.54	4500	97	32	32	28	7
	12.70	4500	97	32	32	28	6
	14.91	4500	97	32	32	28	6
	15.79	4500	97	32	32	28	6
	17.95	4500	97	32	32	28	6
	19.89	4500	97	32	32	28	6
	23.44	4500	97	32	32	28	6
	26.72	4500	97	32	32	28	6
	28.13	4500	97	32	32	28	6
R67 3	28.83	4500	95	33	33	29	7
	32.27	4500	95	33	33	29	7
	37.50	4500	95	33	33	29	7
	39.88	4500	95	33	33	29	7
	46.29	4500	95	33	33	29	7
	51.56	4500	95	33	33	29	7
	56.89	4500	95	33	33	29	7
	61.26	4500	95	33	33	29	7
	69.75	4500	95	33	33	29	7
	74.17	4500	95	33	33	29	7
	86.11	4500	95	33	33	29	6
	95.91	4500	95	33	33	29	6
	105.83	4500	95	33	33	29	6
	113.94	4500	95	33	33	29	6
	128.97	4500	95	33	33	29	6
	137.67	4500	94	33	33	29	6
	158.14	4500	94	33	33	29	6
	184.07	4500	94	33	33	29	6
	199.81	4500	93	33	33	29	6

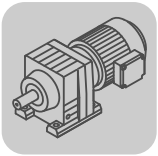

R..DRL
R..Nm

DRL.. n_e = 1400	i	M_{amax} Nm	M_{apk} Nm	$M_{aNotaus}$ Nm	n_{ak} 1/min	J_G 10^{-4} kgm^2	F_{Ramax} R N	F_{Ramax} RF N	F_{Ramax} RM N	F_{Rapk} R N	F_{Rapk} RF N	F_{Rapk} RM N
R67 2	4.29	270	405	459	326	5.9	5000	5000	8720	9300	9300	9800
	4.93	290	435	493	284	4.6	5210	5210	9120	9100	9100	9760
	5.70	310	465	527	246	3.6	5450	5450	9560	8870	8870	9710
	6.27	330	485	561	223	3.0	5590	5590	9850	8710	8710	9680
	7.36	370	485	629	190	2.4	5790	5790	9850	8710	8710	9680
	7.79	380	485	646	180	2.1	5830	5830	9840	8710	8710	9680
	8.70	440	660	748	161	4.0	5960	5960	9750	5350	5350	9330
	10.00	470	665	799	140	3.2	6220	6220	9700	4700	4700	9320
	11.54	500	665	850	130	2.5	6500	6500	9660	4700	4700	9320
	12.70	520	665	884	118	2.2	6640	6640	9620	4700	4700	9320
	14.91	550	665	935	101	1.7	6980	6980	9560	4700	4700	9320
	15.79	560	665	952	95	1.6	7130	7130	9540	4700	4700	9320
	17.95	590	665	1003	84	1.2	7330	7330	9480	4700	4700	9320
	19.89	600	665	1020	75	1.0	7560	7560	9460	4700	4700	9320
	23.44	560	665	952	94	0.80	8010	8010	9540	4700	4700	9320
	26.72	540	665	918	105	0.56	8210	8210	9580	4700	4700	9320
	28.13	540	665	918	103	0.50	8210	8210	9580	4700	4700	9320
R67 3	28.83	520	595	884	49	1.5	8400	8400	9620	7620	7620	9470
	32.27	540	595	918	43	1.3	8210	8210	9580	7620	7620	9470
	37.50	570	595	969	37	1.0	7900	7900	9520	7620	7620	9470
	39.88	580	595	986	35	0.93	7790	7790	9500	7620	7620	9470
	46.29	600	600	1020	32	0.72	7560	7560	9460	7620	7620	9470
	51.56	600	600	1020	33	0.61	7560	7560	9460	7620	7620	9470
	56.89	600	600	1020	33	0.50	7560	7560	9460	7620	7620	9470
	61.26	600	600	1020	33	0.47	7560	7560	9460	7620	7620	9470
	69.75	600	660	1020	29	0.88	7560	7560	9460	5350	5350	9330
	74.17	600	660	1020	28	0.81	7560	7560	9460	5350	5350	9330
	86.11	600	660	1020	29	0.63	7560	7560	9460	5350	5350	9330
	95.91	600	660	1020	29	0.54	7560	7560	9460	5350	5350	9330
	105.83	600	660	1020	29	0.45	7560	7560	9460	5350	5350	9330
	113.94	600	660	1020	30	0.42	7560	7560	9460	5350	5350	9330
	128.97	600	660	1020	29	0.36	7560	7560	9460	5350	5350	9330
	137.67	600	660	1020	30	0.32	7560	7560	9460	5350	5350	9330
	158.14	600	660	1020	30	0.26	7560	7560	9460	5350	5350	9330
	184.07	600	660	1020	30	0.21	7560	7560	9460	5350	5350	9330
	199.81	600	660	1020	30	0.19	7560	7560	9460	5350	5350	9330

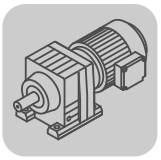

01 162 00 08

R67..

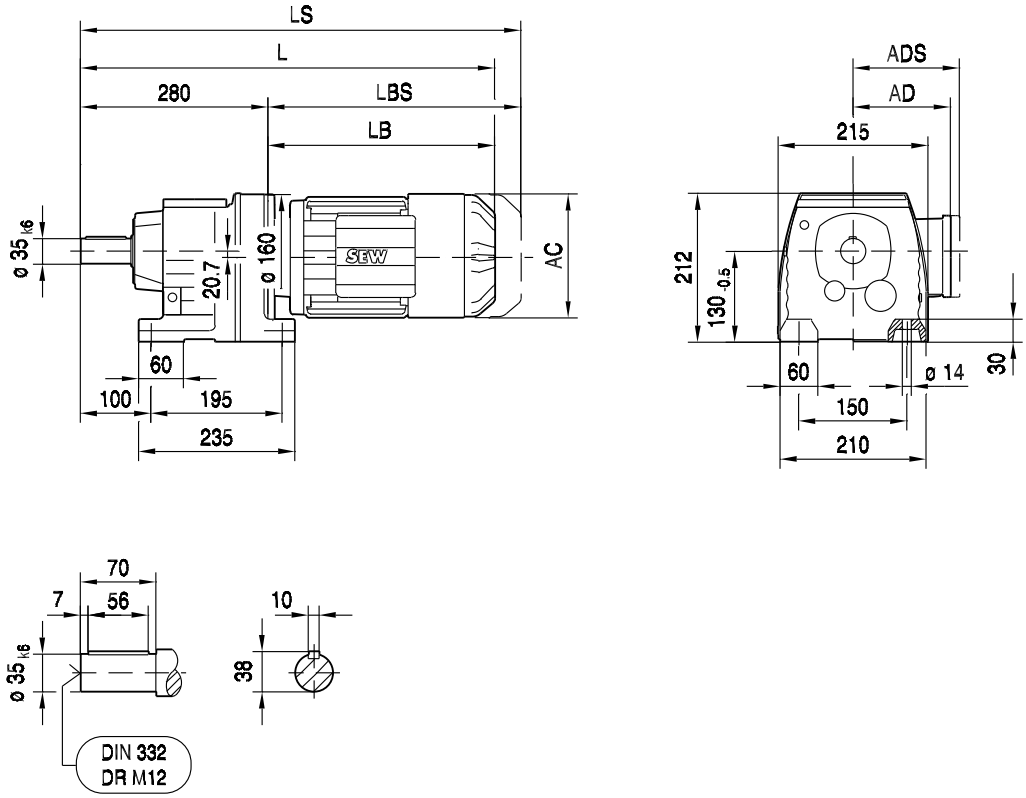

R67F..

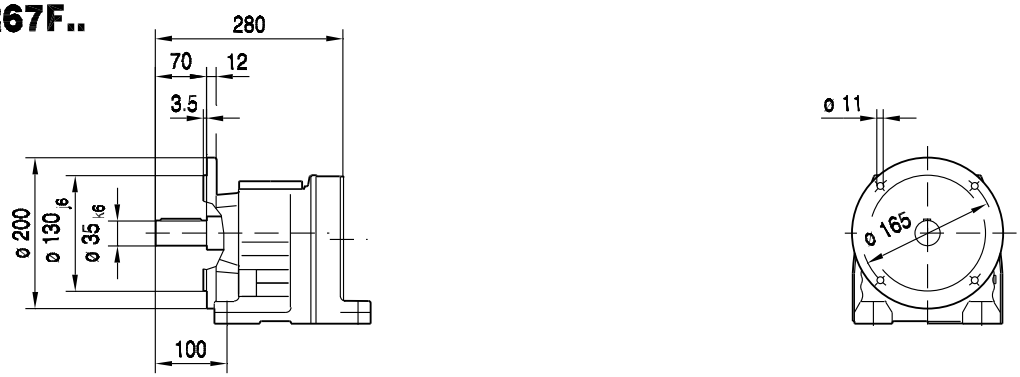

(→ 📖 129)	DRL71S	DRL71M	DRL80S	DRL80M	DRL90L	DRL100L	DRL132S	DRL132MC
AC	139	139	156	156	179	197	221	221
AD	119	119	128	128	140	157	170	170
ADS	129	129	139	139	150	158	172	172
L	560	585	606	637	651	710	795	845
LS	625	650	686	717	737	797	903	953
LB	280	305	326	357	371	430	515	565
LBS	345	370	406	437	457	517	623	673

01 163 00 08

RF67..

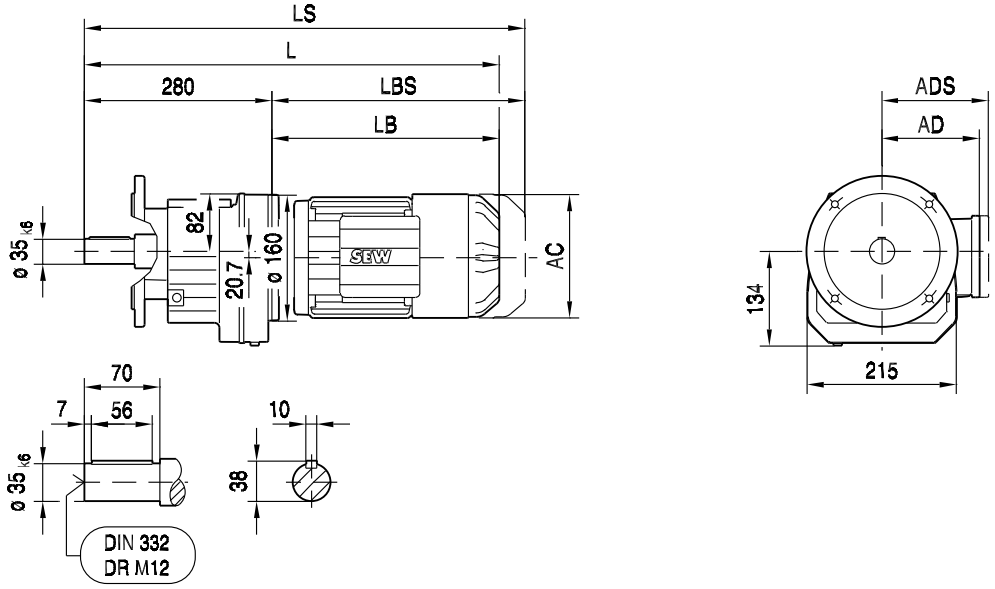

ø 200

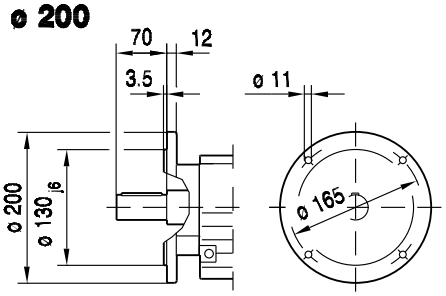

ø 250

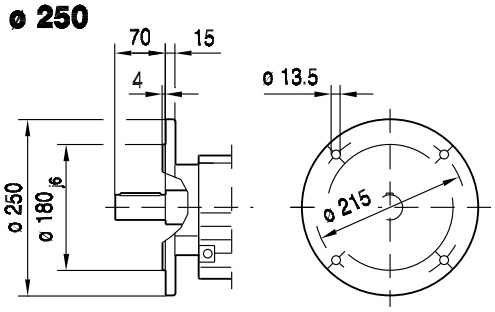

RM67..

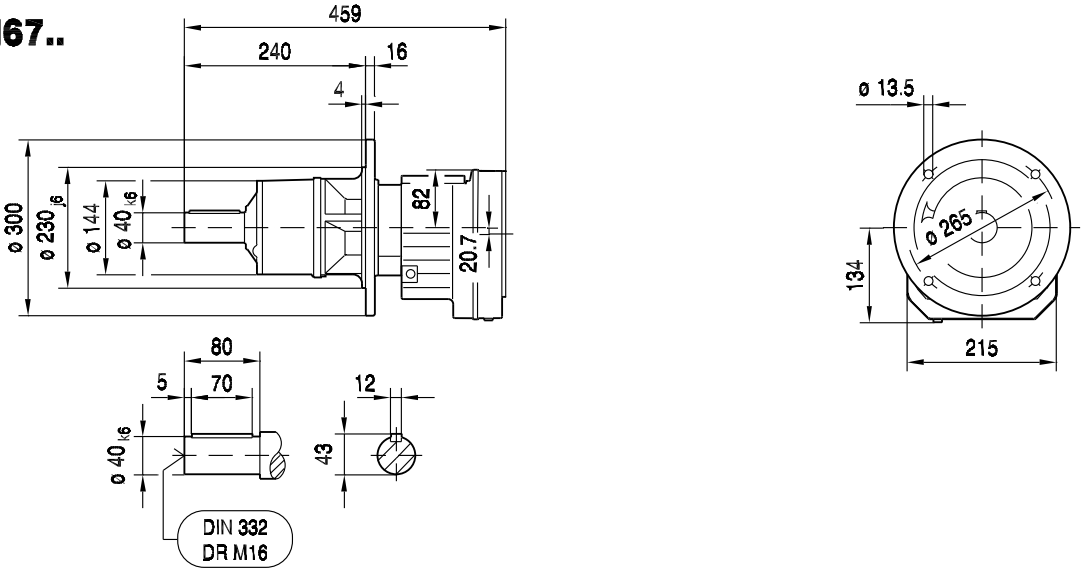

(→ 📖 129)	DRL71S	DRL71M	DRL80S	DRL80M	DRL90L	DRL100L	DRL132S	DRL132MC
AC	139	139	156	156	179	197	221	221
AD	119	119	128	128	140	157	170	170
ADS	129	129	139	139	150	158	172	172
L	560	585	606	637	651	710	795	845
LS	625	650	686	717	737	797	903	953
LB	280	305	326	357	371	430	515	565
LBS	345	370	406	437	457	517	623	673

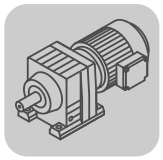

01 164 00 08

RZ67..

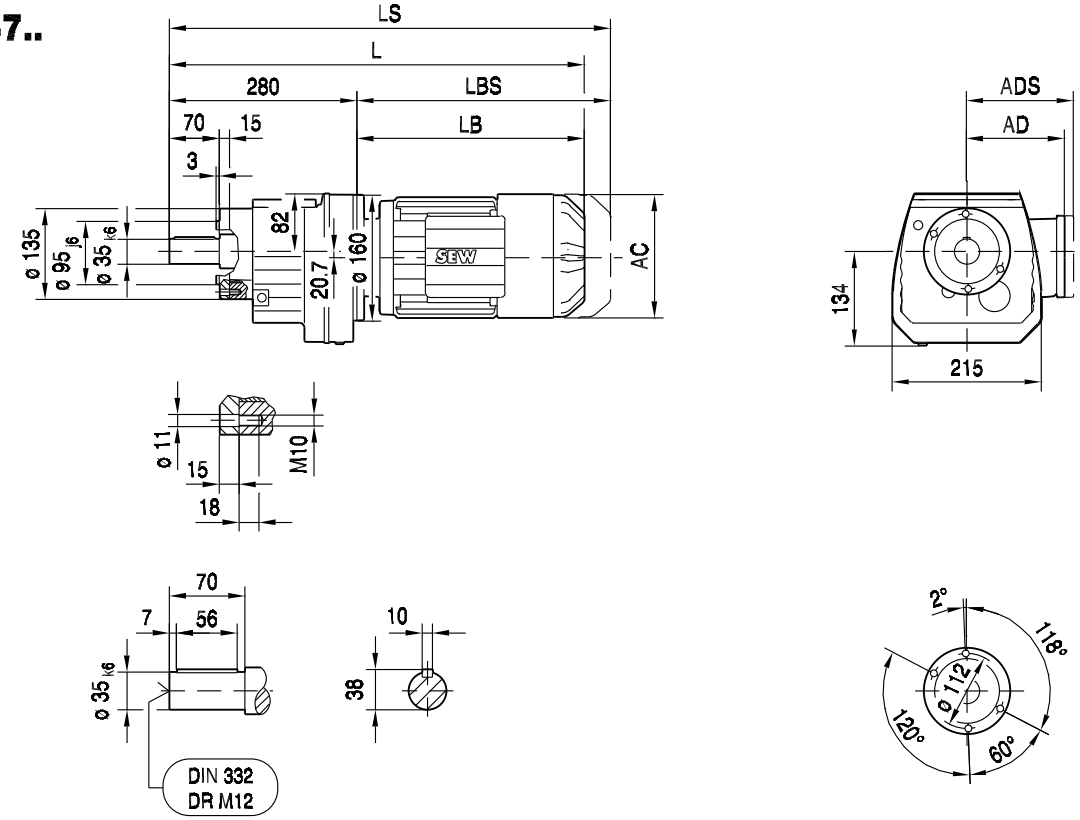

(→ 📖 129)	DRL71S	DRL71M	DRL80S	DRL80M	DRL90L	DRL100L	DRL132S	DRL132MC
AC	139	139	156	156	179	197	221	221
AD	119	119	128	128	140	157	170	170
ADS	129	129	139	139	150	158	172	172
L	560	585	606	637	651	710	795	845
LS	625	650	686	717	737	797	903	953
LB	280	305	326	357	371	430	515	565
LBS	345	370	406	437	457	517	623	673

8.3.8 R 77

M_{aDyn} Nm	i	DRL 71S D1	71S D2	71M D1	71M D2	80S D1	80S D2	80M D1	80M D2	90L D1	90L D2
R77 2	5.31		44		72	52	129	67	170	129	235
	5.99		49		81	58	145	76	192	145	265
	6.79	33	56	46	92	66	165	86	215	165	300
	7.74	38	64	53	105	75	188	98	245	188	345
	8.59	42	71	58	117	83	205	108	270	205	380
	9.64		79		131	94	230	122	305	230	430
	10.88		90		148	106	260	137	345	260	485
	12.33	60	102	84	167	120	295	155	390	295	550
	14.05	68	116	95	191	136	340	177	445	340	625
	15.60	76	129	106	210	151	375	197	495	375	695
	17.82	86	147	121	240	173	430	220	570	430	795
	18.80	91	155	128	255	182	455	235	600	455	830
	21.43	104	177	146	290	205	515	270	685	515	>900
	23.37	113	193	159	315	225	565	290	745	565	>900
R77 3	25.23		205		335	240	605	310	795	605	>900
	29.00	139	235	195	385	275	695	360	>900	695	>900
	33.47	161	270	220	445	320	800	415	>900	800	>900
	36.83	175	295	240	485	345	870	450	>900	870	>900
	43.26	205	345	285	575	410	>900	530	>900	>900	>900
	45.81	215	365	300	605	435	>900	565	>900	>900	>900
	52.07	245	420	345	690	490	>900	640	>900	>900	>900
	57.68	270	465	380	765	545	>900	710	>900	>900	>900
	65.77	310	530	435	870	620	>900	810	>900	>900	>900
	77.24	365	620	510	>900	730	>900	>900	>900	>900	>900
	81.80	385	660	540	>900	775	>900	>900	>900	>900	>900
	92.97	440	750	615	>900	880	>900	>900	>900	>900	>900
	102.99	485	830	680	>900	>900	>900	>900	>900	>900	>900
	121.42	570	>900	795	>900	>900	>900	>900	>900	>900	
	138.39	650	>900	>900	>900	>900	>900	>900			
	145.67	680	>900	>900	>900	>900	>900	>900			
	166.59	780	>900	>900		>900		>900			
	195.24	>900		>900							

→ 124

m kg	s	DRL 71S	71M	80S	80M	90L
R77	2	39	40	43	46	52
R77	3	40	42	44	47	53
RF: + 5.7 kg / RM: + 30.7 kg						

M_{aDyn} Nm	i	DRL 100L D1	DRL 100L D2	DRL 132S D1	DRL 132S D2	DRL 132MC D1	DRL 132MC D2	DRL 160M D1	DRL 160M D2	DRL 160MC D1	DRL 160MC D2
R77 2	5.31	180	435	410	>765	665	>765	>765	>765	>765	>765
	5.99	200	490	460	>810	755	>810	>810	>810	>810	>810
	6.79	230	555	525	>840	>840		>840		>840	
	7.74	260	635	600	>840	>840		>840		>840	
	8.59	290	705	665							
	9.64	325	790	745	>900	>900	>900	>900	>900	>900	>900
	10.88	365	890	840	>900	>900	>900	>900	>900	>900	>900
	12.33	415	>900	>900	>900	>900		>900		>900	
	14.05	475	>900	>900	>900	>900		>900		>900	
	15.60	525	>900	>900							
	17.82	600	>900	>900							
	18.80	635	>900	>900							
	21.43	725									
	23.37	790									
R77 3	25.23	840	>900	>900	>900	>900		>900		>900	
	29.00	>900	>900	>900	>900	>900		>900		>900	
	33.47	>900	>900	>900	>900	>900		>900		>900	
	36.83	>900	>900	>900							
	43.26	>900	>900	>900							
	45.81	>900	>900	>900							
	52.07	>900									
	57.68	>900									
	65.77	>900	>900	>900							
	77.24	>900	>900	>900							
	81.80	>900	>900	>900							
	92.97	>900									
	102.99	>900									
	121.42	>900									
	138.39										
	145.67										
	166.59										
	195.24										

→ 124

m kg	s	DRL 100L	DRL 132S	DRL 132MC	DRL 160M	DRL 160MC
R77	2	60	75	92	115	120
R77	3	61	76	93	115	120
RF: + 5.7 kg / RM: + 30.7 kg						

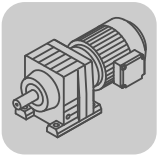

R..DRL
R..Nm

DRL..	i	n_{epk} 1/min	η %	c_{TG} R Nm/'	RF Nm/'	RM Nm/'	φ /R '
R77 2	5.31	4500	97	42	42	46	8
	5.99	4500	97	42	42	46	8
	6.79	4500	97	42	42	46	8
	7.74	4500	97	42	42	46	8
	8.59	4500	97	42	42	46	7
	9.64	4500	97	51	51	58	7
	10.88	4500	97	51	51	58	7
	12.33	4500	97	51	51	58	6
	14.05	4500	97	51	51	58	6
	15.60	4500	97	51	51	58	6
	17.82	4500	97	51	51	58	6
	18.80	4500	97	51	51	58	6
	21.43	4500	97	51	51	58	6
	23.37	4500	97	51	51	58	6
R77 3	25.23	4500	96	53	53	61	7
	29.00	4500	96	53	53	61	7
	33.47	4500	96	53	53	61	7
	36.83	4500	95	53	53	61	7
	43.26	4500	95	53	53	61	7
	45.81	4500	95	53	53	61	7
	52.07	4500	95	53	53	61	7
	57.68	4500	95	53	53	61	7
	65.77	4500	95	53	53	61	7
	77.24	4500	95	53	53	61	7
	81.80	4500	95	53	53	61	6
	92.97	4500	95	53	53	61	6
	102.99	4500	95	53	53	61	6
	121.42	4500	94	53	53	61	6
	138.39	4500	94	53	53	61	6
	145.67	4500	94	53	53	61	6
	166.59	4500	94	53	53	61	6
	195.24	4500	93	53	53	61	6

DRL.. n_e = 1400	i	M_{amax} Nm	M_{apk} Nm	$M_{aNotaus}$ Nm	n_{ak} 1/min	J_G 10^{-4} kgm^2	F_{Ramax} R N	F_{Ramax} RF N	F_{Ramax} RM N	F_{Rapk} R N	F_{Rapk} RF N	F_{Rapk} RM N
R77 2	5.31	510	765	867	264	7.7	3990	3990	12700	10400	10400	13000
	5.99	540	810	918	234	6.4	3990	3990	13000	10000	10000	13000
	6.79	580	840	986	206	5.2	3850	3850	13000	9730	9730	13000
	7.74	610	840	1037	181	4.2	3940	3940	13000	9730	9730	13000
	8.59	630	840	1071	175	3.7	4110	4110	13000	9730	9730	13000
	9.64	630	900	1071	145	6.6	6300	6300	13000	9110	9110	13000
	10.88	660	900	1122	129	5.5	6490	6490	13000	9110	9110	13000
	12.33	690	900	1173	114	4.5	6740	6740	13000	9110	9110	13000
	14.05	720	900	1224	100	3.7	7050	7050	13000	9110	9110	13000
	15.60	740	900	1258	90	3.3	7390	7390	13000	9110	9110	13000
	17.82	780	900	1326	79	2.7	7620	7620	13000	9110	9110	13000
	18.80	780	900	1326	74	2.5	7980	7980	13000	9110	9110	13000
	21.43	820	900	1394	65	2.0	8250	8250	13000	9110	9110	13000
	23.37	820	900	1394	64	1.7	8870	8870	13000	9110	9110	13000
R77 3	25.23	780	900	1326	59	3.7	10100	10100	13000	9110	9110	13000
	29.00	820	900	1394	52	3.0	9920	9920	13000	9110	9110	13000
	33.47	820	900	1394	51	2.2	9920	9920	13000	9110	9110	13000
	36.83	820	900	1394	52	1.9	9920	9920	13000	9110	9110	13000
	43.26	820	900	1394	53	1.6	9920	9920	13000	9110	9110	13000
	45.81	820	900	1394	52	1.4	9920	9920	13000	9110	9110	13000
	52.07	820	900	1394	54	1.1	9920	9920	13000	9110	9110	13000
	57.68	820	900	1394	54	0.97	9920	9920	13000	9110	9110	13000
	65.77	820	900	1394	38	1.6	9920	9920	13000	9110	9110	13000
	77.24	820	900	1394	38	1.3	9920	9920	13000	9110	9110	13000
	81.80	820	900	1394	38	1.2	9920	9920	13000	9110	9110	13000
	92.97	820	900	1394	39	0.99	9920	9920	13000	9110	9110	13000
	102.99	820	900	1394	38	0.86	9920	9920	13000	9110	9110	13000
	121.42	820	900	1394	39	0.68	9920	9920	13000	9110	9110	13000
	138.39	820	900	1394	38	0.46	9920	9920	13000	9110	9110	13000
	145.67	820	900	1394	38	0.42	9920	9920	13000	9110	9110	13000
	166.59	820	900	1394	38	0.34	9920	9920	13000	9110	9110	13000
	195.24	820	900	1394	36	0.27	9920	9920	13000	9110	9110	13000

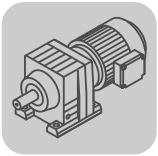

R..DRL
R..Nm

01 165 00 08

R77..

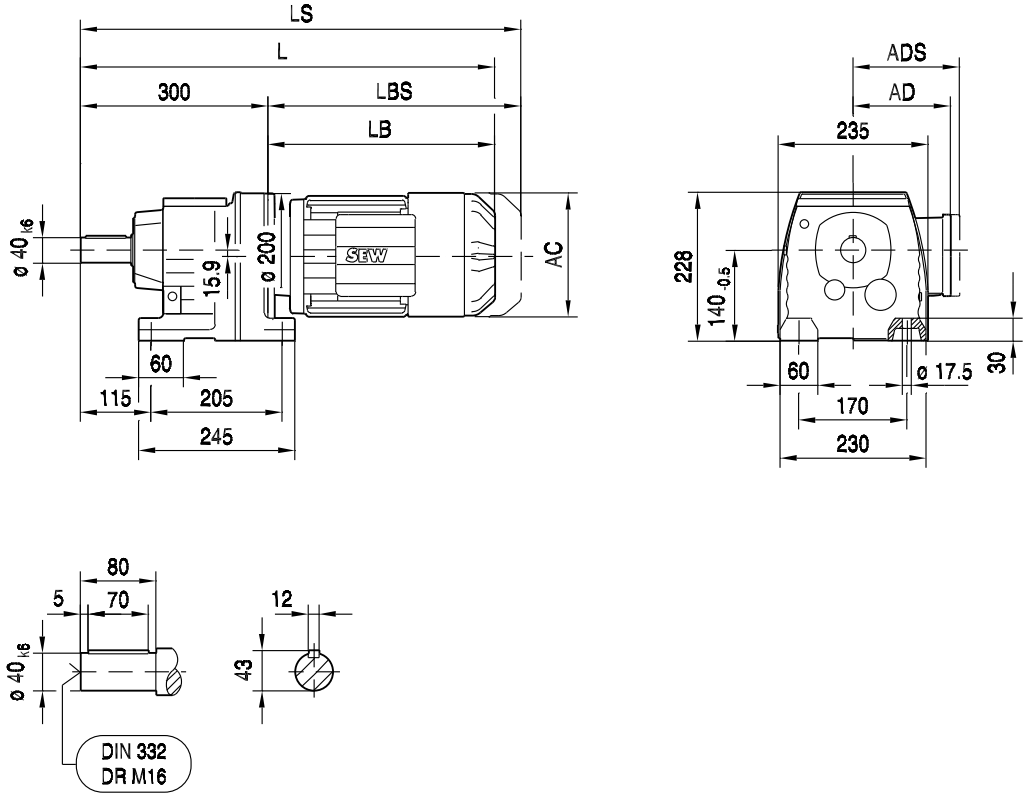

R77F..

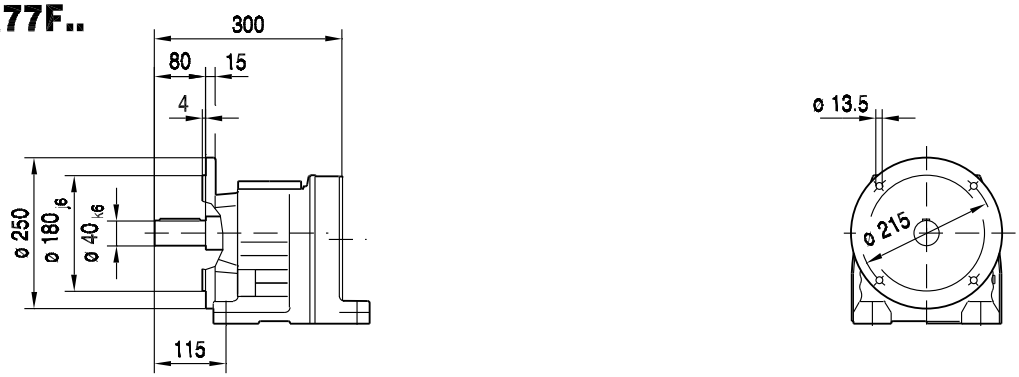

(→ 📖 129)	DRL71S	DRL71M	DRL80S	DRL80M	DRL90L	DRL100L	DRL132S	DRL132MC	DRL160..
AC	139	139	156	156	179	197	221	221	270
AD	119	119	128	128	140	157	170	170	228
ADS	129	129	139	139	150	158	172	172	228
L	573	598	619	650	664	723	804	854	858
LS	638	663	699	730	750	810	912	962	995
LB	273	298	319	350	364	423	504	554	558
LBS	338	363	399	430	450	510	612	662	695

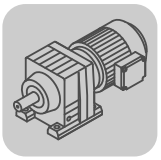

01 166 00 08

RF77..

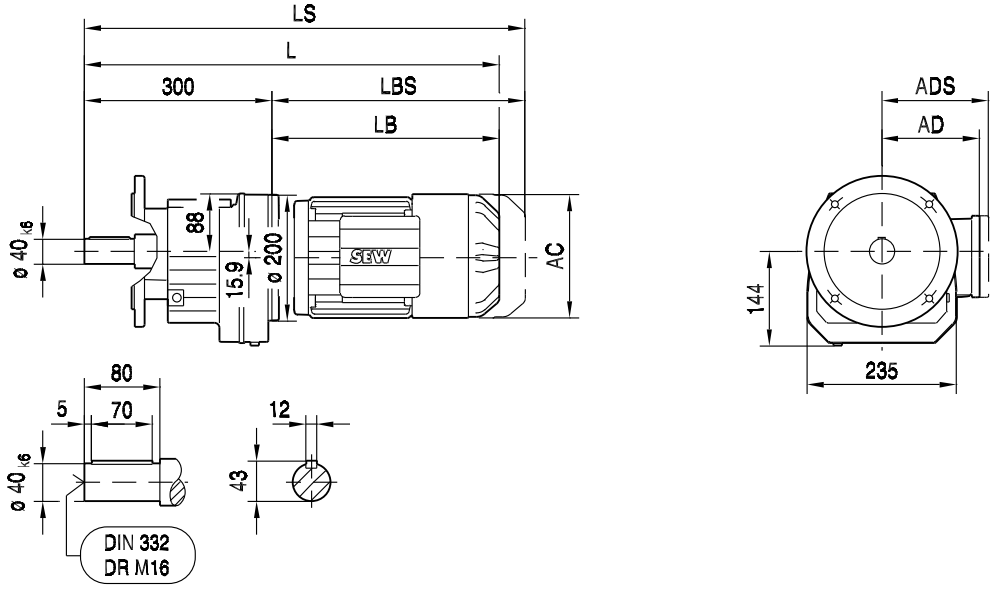

ø 250

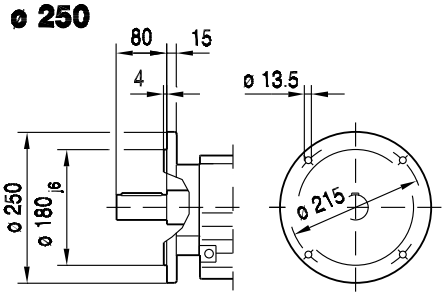

ø 300

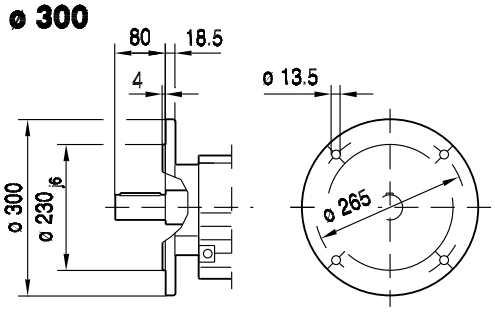

RM77..

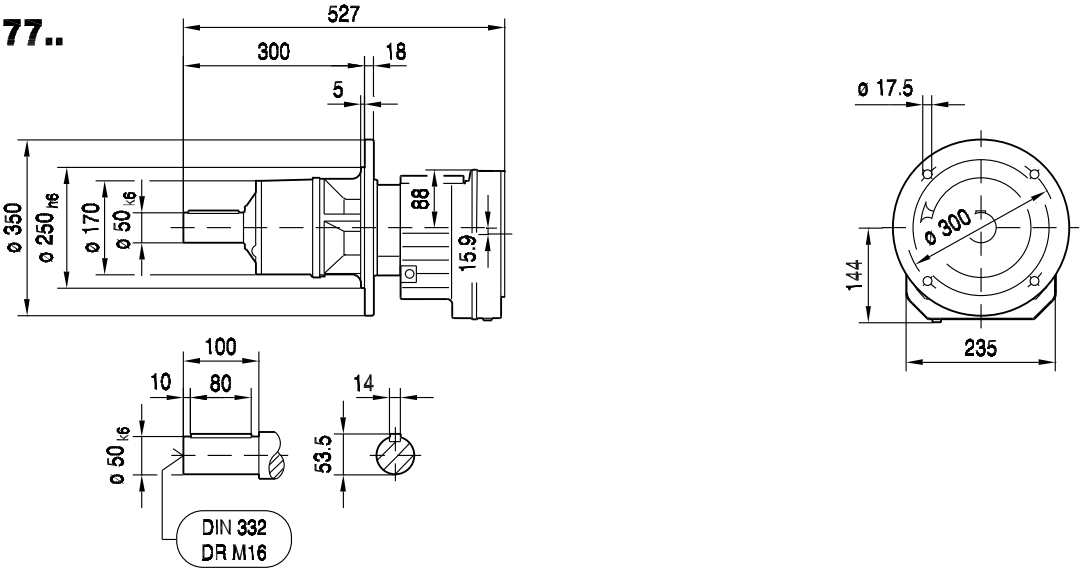

(→ 📖 129)	DRL71S	DRL71M	DRL80S	DRL80M	DRL90L	DRL100L	DRL132S	DRL132MC	DRL160..
AC	139	139	156	156	179	197	221	221	270
AD	119	119	128	128	140	157	170	170	228
ADS	129	129	139	139	150	158	172	172	228
L	573	598	619	650	664	723	804	854	858
LS	638	663	699	730	750	810	912	962	995
LB	273	298	319	350	364	423	504	554	558
LBS	338	363	399	430	450	510	612	662	695

01 167 00 08

RZ77..

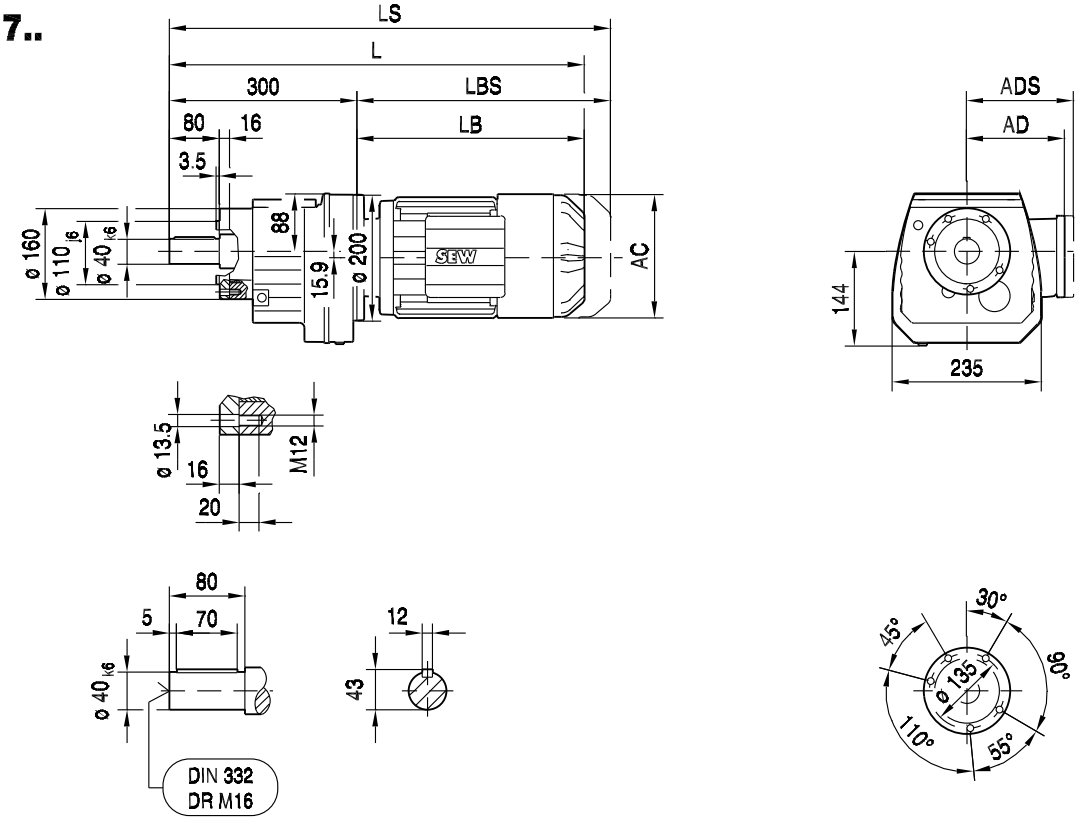

(→ 📖 129)	DRL71S	DRL71M	DRL80S	DRL80M	DRL90L	DRL100L	DRL132S	DRL132MC	DRL160..
AC	139	139	156	156	179	197	221	221	270
AD	119	119	128	128	140	157	170	170	228
ADS	129	129	139	139	150	158	172	172	228
L	573	598	619	650	664	723	804	854	858
LS	638	663	699	730	750	810	912	962	995
LB	273	298	319	350	364	423	504	554	558
LBS	338	363	399	430	450	510	612	662	695

Seite bleibt aus drucktechnischen Gründen frei.

8.3.9 R 87

M_{aDyn} Nm	i	DRL													
		71M		80S		80M		90L		100L		132S		132MC	
		D1	D2	D1	D2	D1	D2	D1	D2	D1	D2	D1	D2	D1	D2
R87 2	5.30						170	129	235	180	435	410	770	665	1020
	6.39						200	155	285	215	525	495	920	800	1230
	7.13		97	69	173	90	225	173	315	240	585	550	1030	890	>1270
	8.22		112	80	199	104	260	199	365	275	675	635	1190	1030	>1270
	9.14		124	89	220	115	290	220	405	310	750	705	>1270	1150	>1270
	9.90						315	240	440	335	810	765	1440	1240	>1550
	11.93						380	285	530	405	980	920	>1550	1500	>1550
	13.33		181	129	320	168	425	320	590	450	1090	1030	>1550	>1550	>1550
	15.35		205	149	370	194	490	370	680	520	1260	1190	>1550	>1550	>1550
	17.08		230	166	410	215	545	410	760	575	1400	1320	>1550	>1550	>1550
	19.10	130	255	185	460	240	610	460	850	645	>1550	1480	>1550	>1550	
	21.51	146	290	205	520	270	685	520	950	730	>1550	>1550	>1550	>1550	
	23.40	159	315	225	565	295	745	565	1040	790	>1550	>1550			
	27.84	189	375	270	675	350	890	675	1240	940	>1550	>1550			
	31.40	210	425	300	760	395	1000	760	1400	1060					
	34.40	230	465	330	830	430	1100	830	1530	1160					
R87 3	27.88		370	265	665	345	880	665	1230	930	>1550	>1550	>1550	>1550	>1550
	32.66		435	310	780	405	1030	780	1440	1090	>1550	>1550	>1550	>1550	>1550
	36.84		495	350	880	455	1160	880	>1550	1230	>1550	>1550	>1550	>1550	>1550
	41.74	280	560	400	1000	520	1320	1000	>1550	1400	>1550	>1550	>1550	>1550	
	47.58	315	635	455	1140	590	1500	1140	>1550	>1550	>1550	>1550	>1550	>1550	
	52.82	350	705	505	1260	655	>1550	1260	>1550	>1550	>1550	>1550			
	60.35	405	810	575	1440	750	>1550	1440	>1550	>1550	>1550	>1550			
	63.68	425	850	610	1520	790	>1550	1520	>1550	>1550	>1550	>1550			
	72.57	485	970	695	>1550	900	>1550	>1550	>1550	>1550					
	81.92	540	1080	775	>1550	1010	>1550	>1550	>1550	>1550	>1550	>1550	>1550	>1550	
	93.38	620	1240	880	>1550	1150	>1550	>1550	>1550	>1550	>1550	>1550	>1550	>1550	
	103.65	685	1370	980	>1550	1280	>1550	>1550	>1550	>1550	>1550	>1550			
	118.43	785	>1550	1120	>1550	1460	>1550	>1550	>1550	>1550	>1550	>1550			
	124.97	830	>1550	1180	>1550	1540	>1550	>1550	>1550	>1550	>1550	>1550			
	142.41	940	>1550	1350	>1550	>1550	>1550	>1550	>1550	>1550					
	155.34	1020	>1550	1460	>1550	>1550	>1550	>1550	>1550	>1550					
	181.77	1190	>1550	>1550	>1550	>1550	>1550	>1550		>1550					
	205.71	1350	>1550	>1550	>1550	>1550									
	216.54	1420	>1550	>1550	>1550	>1550									
	246.54	>1550		>1550		>1550									

→ 124

m kg	s	DRL						
		71M	80S	80M	90L	100L	132S	132MC
R87	2	66	69	71	78	86	100	120
R87	3	68	70	73	80	88	105	120
RF: + 7.1 kg / RM: + 36.8 kg								

M_{aDyn} Nm	i	DRL										
		160M		160MC		180S		180M		180L		180LC
		D1	D2	D1	D2	D1	D2	D1	D2	D1	D2	D1
R87 2	5.30	840	>1270	950	>1270	1070	>1270	>1270	>1270	>1270	>1270	>1270
	6.39	1020	>1270	1140	>1270	>1270	>1270	>1270	>1270	>1270	>1270	>1270
	7.13	1140	>1270	>1270	>1270	>1270	>1270	>1270	>1270	>1270	>1270	>1270
	8.22	>1270	>1270	>1270	>1270	>1270		>1270		>1270		
	9.14	>1270	>1270	>1270	>1270	>1270		>1270		>1270		
	9.90	>1550	>1550	>1550	>1550	>1550	>1550	>1550	>1550	>1550	>1550	>1550
	11.93	>1550	>1550	>1550	>1550	>1550	>1550	>1550	>1550	>1550	>1550	>1550
	13.33	>1550	>1550	>1550	>1550	>1550	>1550	>1550	>1550	>1550	>1550	>1550
	15.35	>1550	>1550	>1550	>1550	>1550		>1550		>1550		
	17.08	>1550	>1550	>1550	>1550	>1550		>1550		>1550		
	19.10	>1550		>1550								
	21.51	>1550		>1550								
	23.40											
	27.84											
	31.40											
	34.40											
R87 3	27.88	>1550	>1550	>1550	>1550	>1550		>1550		>1550		
	32.66	>1550	>1550	>1550	>1550	>1550		>1550		>1550		
	36.84	>1550	>1550	>1550	>1550	>1550		>1550		>1550		
	41.74	>1550		>1550								
	47.58	>1550		>1550								
	52.82											
	60.35											
	63.68											
	72.57											
	81.92	>1550		>1550								
	93.38	>1550		>1550								
	103.65											
	118.43											
	124.97											
	142.41											
	155.34											
	181.77											
	205.71											
	216.54											
	246.54											

→ 124

m kg	s	DRL					
		160M	160MC	180S	180M	180L	180LC
R87	2	140	145	170	190	200	210
R87	3	140	145	175	190	200	215
RF: + 7.1 kg / RM: + 36.8 kg							

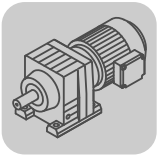

R..DRL
R..Nm

DRL..	i	n_{epk} 1/min	η %	c_{TG} R Nm/'	RF Nm/'	RM Nm/'	φ /R '
R87 2	5.30	4500	97	76	76	78	7
	6.39	4500	97	76	76	78	7
	7.13	4500	97	76	76	78	7
	8.22	4500	97	76	76	78	7
	9.14	4500	97	76	76	78	6
	9.90	4500	97	93	93	96	6
	11.93	4500	97	93	93	96	6
	13.33	4500	97	93	93	96	6
	15.35	4500	97	93	93	96	6
	17.08	4500	97	93	93	96	6
	19.10	4500	97	93	93	96	6
	21.51	4500	97	93	93	96	6
	23.40	4500	97	93	93	96	6
	27.84	4500	97	93	93	96	6
	31.40	4500	97	93	93	96	5
	34.40	4500	97	93	93	96	5
R87 3	27.88	4500	96	97	97	99	7
	32.66	4500	96	97	97	99	7
	36.84	4500	96	97	97	99	7
	41.74	4500	96	97	97	99	7
	47.58	4500	96	97	97	99	7
	52.82	4500	96	97	97	99	6
	60.35	4500	96	97	97	99	6
	63.68	4500	96	97	97	99	6
	72.57	4500	96	97	97	99	6
	81.92	4500	95	97	97	100	6
	93.38	4500	95	97	97	100	6
	103.65	4500	95	97	97	100	6
	118.43	4500	95	97	97	100	6
	124.97	4500	95	97	97	100	6
	142.41	4500	95	97	97	100	6
	155.34	4500	94	97	97	100	6
	181.77	4500	94	97	97	100	6
	205.71	4500	94	97	97	100	6
	216.54	4500	94	97	97	100	6
	246.54	4500	93	97	97	100	6

DRL.. n_e = 1400	i	M_{amax} Nm	M_{apk} Nm	$M_{aNotaus}$ Nm	n_{ak} 1/min	J_G 10^{-4} kgm^2	F_{Ramax} R N	F_{Ramax} RF N	F_{Ramax} RM N	F_{Rapk} R N	F_{Rapk} RF N	F_{Rapk} RM N
R87 2	5.30	910	1270	1547	264	25	8980	8980	16600	18600	18600	20000
	6.39	1020	1270	1734	219	19	9450	9450	17700	18600	18600	20000
	7.13	1070	1270	1819	196	16	9780	9780	18300	18600	18600	20000
	8.22	1160	1270	1972	170	13	10200	10200	19200	18600	18600	20000
	9.14	1210	1270	2057	153	11	10500	10500	19800	18600	18600	20000
	9.90	1180	1550	2006	141	21	10400	10400	20000	16900	16900	20000
	11.93	1230	1550	2091	117	17	11200	11200	20000	16900	16900	20000
	13.33	1280	1550	2176	105	14	11600	11600	20000	16900	16900	20000
	15.35	1340	1550	2278	91	12	12100	12100	20000	16900	16900	20000
	17.08	1390	1550	2363	82	10	12600	12600	19900	16900	16900	20000
	19.10	1440	1550	2448	79	8.7	13000	13000	19900	16900	16900	20000
	21.51	1500	1550	2550	70	7.3	13600	13600	19800	16900	16900	20000
	23.40	1550	1550	2635	60	6.6	13900	13900	19700	16900	16900	20000
	27.84	1550	1550	2635	61	5.1	15000	15000	19700	16900	16900	20000
	31.40	1550	1550	2635	61	4.1	7820	7820	19700	16900	16900	20000
	34.40	1500	1550	2550	70	3.6	9480	9480	19800	16900	16900	20000
R87 3	27.88	1500	1550	2550	54	9.8	15100	15100	19800	16900	16900	20000
	32.66	1550	1550	2635	49	7.6	16000	16000	19700	16900	16900	20000
	36.84	1550	1550	2635	49	6.2	16800	16800	19700	16900	16900	20000
	41.74	1550	1550	2635	50	5.1	16900	16900	19700	16900	16900	20000
	47.58	1550	1550	2635	50	4.1	16900	16900	19700	16900	16900	20000
	52.82	1550	1550	2635	51	3.6	13500	13500	19700	16900	16900	20000
	60.35	1550	1550	2635	51	2.9	15200	15200	19700	16900	16900	20000
	63.68	1550	1550	2635	50	2.7	15800	15800	19700	16900	16900	20000
	72.57	1550	1550	2635	51	2.2	16900	16900	19700	16900	16900	20000
	81.92	1550	1550	2635	51	4.0	16900	16900	19700	16900	16900	20000
	93.38	1550	1550	2635	51	3.3	16900	16900	19700	16900	16900	20000
	103.65	1550	1550	2635	52	3.0	16900	16900	19700	16900	16900	20000
	118.43	1550	1550	2635	52	2.4	16900	16900	19700	16900	16900	20000
	124.97	1550	1550	2635	52	2.3	16900	16900	19700	16900	16900	20000
	142.41	1550	1550	2635	49	1.9	16900	16900	19700	16900	16900	20000
	155.34	1550	1550	2635	45	1.6	16900	16900	19700	16900	16900	20000
	181.77	1550	1550	2635	39	1.3	16900	16900	19700	16900	16900	20000
	205.71	1550	1550	2635	34	0.90	16900	16900	19700	16900	16900	20000
	216.54	1550	1550	2635	32	0.81	16900	16900	19700	16900	16900	20000
	246.54	1550	1550	2635	28	0.66	16900	16900	19700	16900	16900	20000

01 168 00 08

R87..

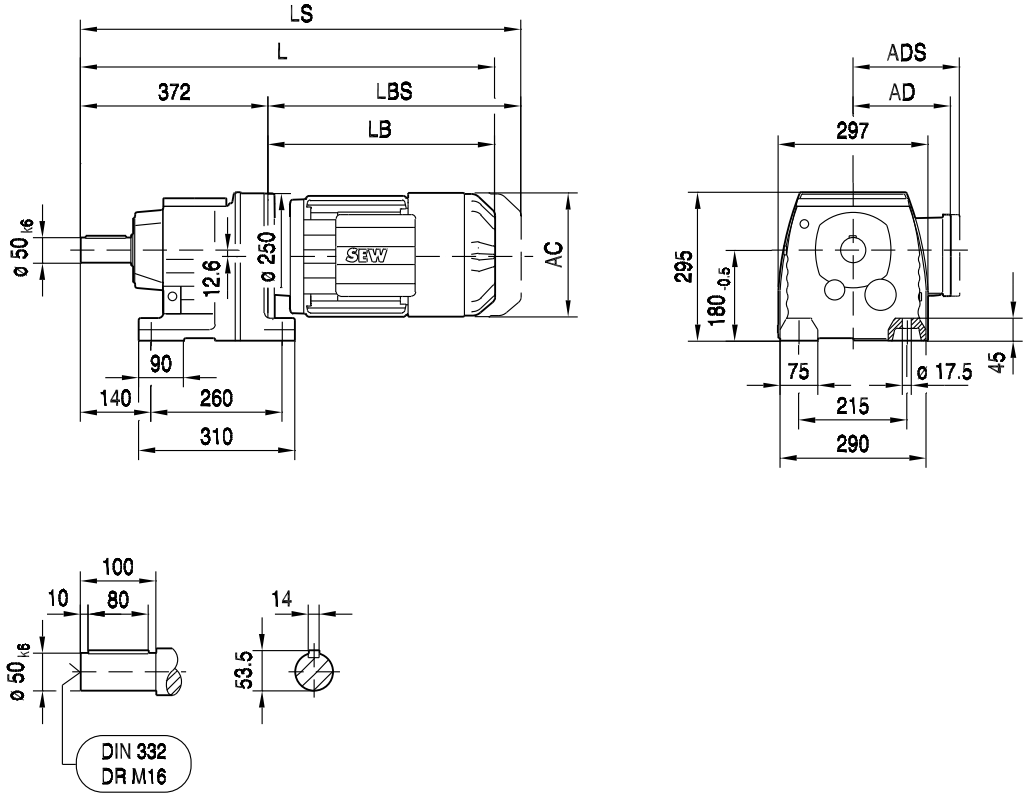

R87F..

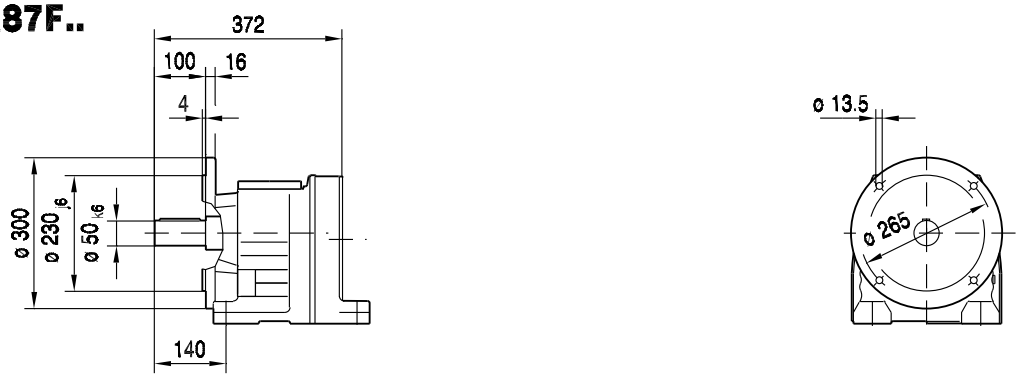

(→ 📖 129)	DRL71M	DRL80S	DRL80M	DRL90L	DRL100L	DRL132S	DRL132MC	DRL160..	DRL180S/M	DRL180L/LC
AC	139	156	156	179	197	221	221	270	316	316
AD	119	128	128	140	157	170	170	228	253	253
ADS	129	139	139	150	158	172	172	228	253	253
L	665	686	717	731	790	871	921	925	994	1054
LS	730	766	797	817	877	979	1029	1062	1183	1243
LB	293	314	345	359	418	499	549	553	622	682
LBS	358	394	425	445	505	607	657	690	811	871

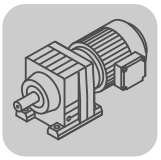

01 169 00 08

RF87..

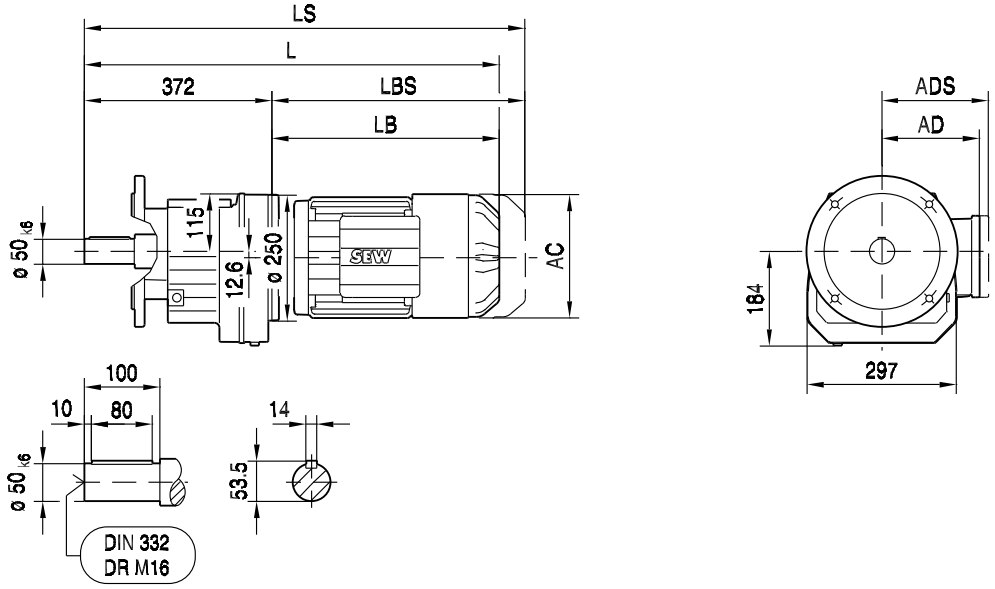

ø 300

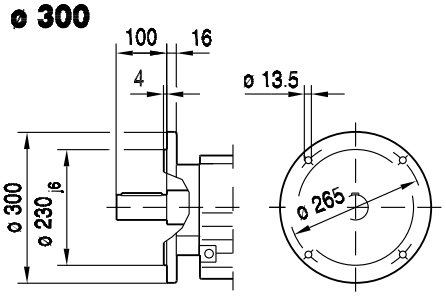

ø 350

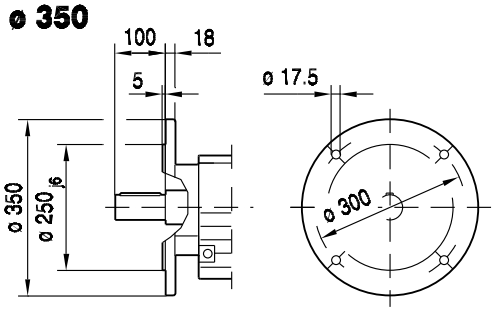

RM87..

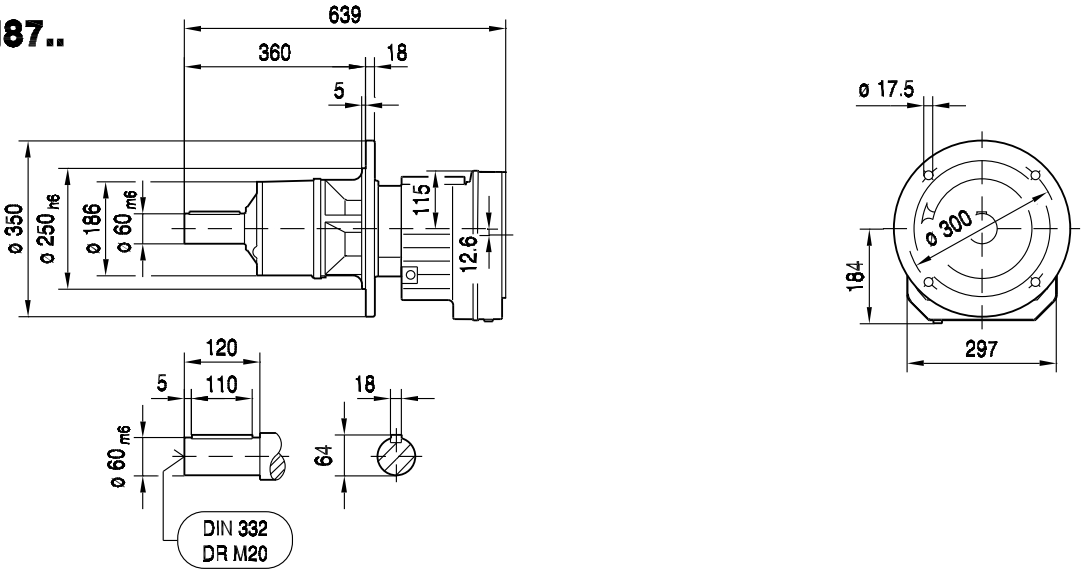

(→ 📖 129)	DRL71M	DRL80S	DRL80M	DRL90L	DRL100L	DRL132S	DRL132MC	DRL160..	DRL180S/M	DRL180L/LC
AC	139	156	156	179	197	221	221	270	316	316
AD	119	128	128	140	157	170	170	228	253	253
ADS	129	139	139	150	158	172	172	228	253	253
L	665	686	717	731	790	871	921	925	994	1054
LS	730	766	797	817	877	979	1029	1062	1183	1243
LB	293	314	345	359	418	499	549	553	622	682
LBS	358	394	425	445	505	607	657	690	811	871

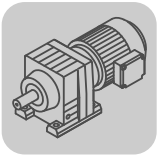

01 170 00 08

RZ87..

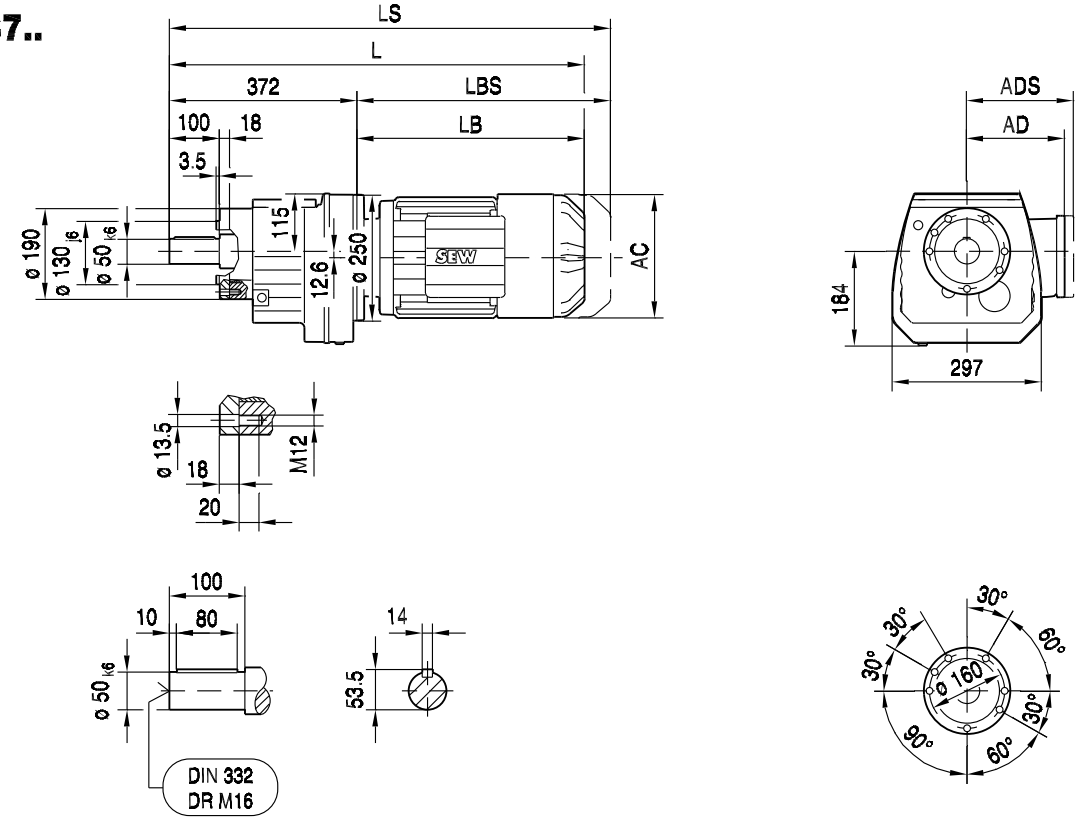

(→ 📖 129)	DRL71M	DRL80S	DRL80M	DRL90L	DRL100L	DRL132S	DRL132MC	DRL160..	DRL180S/M	DRL180L/LC
AC	139	156	156	179	197	221	221	270	316	316
AD	119	128	128	140	157	170	170	228	253	253
ADS	129	139	139	150	158	172	172	228	253	253
L	665	686	717	731	790	871	921	925	994	1054
LS	730	766	797	817	877	979	1029	1062	1183	1243
LB	293	314	345	359	418	499	549	553	622	682
LBS	358	394	425	445	505	607	657	690	811	871

Seite bleibt aus drucktechnischen Gründen frei.

8.3.10 R 97

M_{aDyn} Nm	i	DRL 71M D1	71M D2	80S D1	80S D2	80M D1	80M D2	90L D1	90L D2	100L D1	100L D2	132S D1	132S D2	132MC D1	132MC D2
R97 2	4.50										370	345	650	565	870
	5.20										425	400	755	655	1000
	6.21										510	480	900	780	1200
	7.12						225	173	315	240	585	550	1030	890	1380
	8.39						265	200	370	280	690	650	1220	1050	1620
	9.29		126	90	225	117	295	225	410	315	765	720	1350	1170	1800
	10.83										890	840	1570	1360	2100
	12.39						395	300	550	420	1020	960	1800	1560	2400
	14.62						465	350	650	495	1200	1130	2120	1840	2830
	16.17		215	157	390	200	515	390	720	545	1330	1250	2350	2030	>3090
	18.24		245	177	440	230	580	440	810	615	1500	1410	2650	2300	>3090
	20.14		270	195	485	250	640	485	890	680	1660	1560	2930	2530	>3090
	22.37	152	300	215	540	280	715	540	990	755	1840	1730	>3090	2820	
	25.03	170	335	240	605	315	800	605	1110	840	2060	1940	>3090	>3090	
	27.19	185	365	260	655	340	870	655	1210	920	2240	2100			
	32.05	215	435	310	775	400	1020	775	1430	1080	2640	2480			
R97 3	27.58						870	660	1210	920	2250	2110	>3090	>3090	>3090
	33.25						1050	795	1460	1110	2710	2550	>3090	>3090	>3090
	37.13		495	355	890	460	1170	890	1630	1240	3020	2850	>3090	>3090	>3090
	42.78		570	410	1020	530	1350	1020	1880	1430	>3090	>3090	>3090	>3090	>3090
	47.58		635	455	1140	590	1500	1140	2100	1590	>3090	>3090	>3090	>3090	>3090
	53.21	355	715	510	1270	660	1680	1270	2340	1780	>3090	>3090	>3090	>3090	
	59.92	400	800	575	1430	745	1890	1430	2640	2010	>3090	>3090	>3090	>3090	
	65.21	435	870	625	1560	810	2060	1560	2870	2190	>3090	>3090			
	72.17		950	685	1710	890	2260	1710	>3090	2390	>3090	>3090	>3090	>3090	>3090
	83.15		1100	785	1970	1020	2600	1970	>3090	2760	>3090	>3090	>3090	>3090	>3090
	92.48		1220	870	2190	1140	2890	2190	>3090	3070	>3090	>3090	>3090	>3090	>3090
	103.44	685	1370	980	2450	1270	>3090	2450	>3090	>3090	>3090	>3090	>3090	>3090	
	116.48	770	1540	1100	2760	1430	>3090	2760	>3090	>3090	>3090	>3090	>3090	>3090	
	126.75	840	1680	1200	3010	1560	>3090	3010	>3090	>3090	>3090	>3090			
	150.78	1000	2000	1430	>3090	1860	>3090	>3090	>3090	>3090	>3090	>3090			
	170.02	1130	2260	1610	>3090	2090	>3090	>3090	>3090	>3090					
	186.30	1230	2470	1760	>3090	2300	>3090	>3090	>3090	>3090					
	216.28	1420	2840	2030	>3090	2640	>3090	>3090		>3090					
	241.25	1580	>3090	2260	>3090	2940									
	255.71	1680	>3090	2400	>3090	>3090									
	289.74	1880		2690		>3090									

→ 124

m kg	s	DRL 71M	80S	80M	90L	100L	132S	132MC
R97	2	105	110	110	120	125	140	155
R97	3	110	110	115	120	130	145	160
RF: + 17.2 kg / RM: + 68.5 kg								

M_{aDyn} Nm	i	DRL												
		160M		160MC		180S		180M		180L		180LC	200L	225S
		D1	D2	D1	D2	D1	D2	D1	D2	D1	D2	D1	D1	D1
R97 2	4.50	720	1220	800	1390	910	1650	1090	1870	1390	2260	1830	2070	2260
	5.20	830	1410	930	1610	1050	1910	1260	2160	1610	>2560	2110	2390	>2560
	6.21	990	1680	1110	1920	1260	2280	1500	>2560	1920	>2560	2520	>2560	>2560
	7.12	1130	1930	1270	2210	1450	>2560	1720	>2560	2210	>2560	>2560	>2560	>2560
	8.39	1340	2270	1500	>2560	1700	>2560	2030	>2560	>2560	>2560	>2560	>2560	>2560
	9.29	1480	2520	1660	>2560	1890	>2560	2250	>2560	>2560	>2560	>2560	>2560	>2560
	10.83	1730	2940	1940	>3090	2200	>3090	2620	>3090	>3090	>3090	>3090	>3090	>3090
	12.39	1980	>3090	2220	>3090	2520	>3090	3000	>3090	>3090	>3090	>3090	>3090	>3090
	14.62	2330	>3090	2620	>3090	2970	>3090	>3090	>3090	>3090	>3090	>3090	>3090	>3090
	16.17	2580	>3090	2900	>3090	>3090	>3090	>3090	>3090	>3090	>3090	>3090	>3090	>3090
	18.24	2910	>3090	>3090	>3090	>3090		>3090		>3090				
	20.14	>3090	>3090	>3090	>3090	>3090		>3090		>3090				
	22.37	>3090		>3090										
	25.03	>3090		>3090										
	27.19													
	32.05													
R97 3	27.58	>3090	>3090	>3090	>3090	>3090	>3090	>3090	>3090	>3090	>3090	>3090	>3090	>3090
	33.25	>3090	>3090	>3090	>3090	>3090	>3090	>3090	>3090	>3090	>3090	>3090	>3090	>3090
	37.13	>3090	>3090	>3090	>3090	>3090	>3090	>3090	>3090	>3090	>3090	>3090	>3090	>3090
	42.78	>3090	>3090	>3090	>3090	>3090		>3090		>3090				
	47.58	>3090	>3090	>3090	>3090	>3090		>3090		>3090				
	53.21	>3090		>3090										
	59.92	>3090		>3090										
	65.21													
	72.17	>3090	>3090	>3090	>3090	>3090	>3090	>3090	>3090	>3090	>3090	>3090	>3090	>3090
	83.15	>3090	>3090	>3090	>3090	>3090		>3090		>3090				
	92.48	>3090	>3090	>3090	>3090	>3090		>3090		>3090				
	103.44	>3090		>3090										
	116.48	>3090		>3090										
	126.75													
	150.78													
	170.02													
	186.30													
	216.28													
	241.25													
	255.71													
	289.74													

→ 124

m kg	s	DRL							
		160M	160MC	180S	180M	180L	180LC	200L	225S
R97	2	180	185	210	230	240	250	345	375
R97	3	180	185	215	230	240	255	350	380
RF: + 17.2 kg / RM: + 68.5 kg									

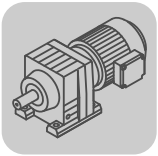

R..DRL
R..Nm

DRL..	i	n_{epk} 1/min	η %	c_{TG} R Nm/'	RF Nm/'	RM Nm/'	φ /R '
R97 2	4.50	3597	97	127	127	112	6
	5.20	3924	97	127	127	112	6
	6.21	4378	97	127	127	112	6
	7.12	4500	97	127	127	112	6
	8.39	4500	97	127	127	112	6
	9.29	4500	97	127	127	112	6
	10.83	4500	97	155	155	132	6
	12.39	4500	97	155	155	132	6
	14.62	4500	97	155	155	132	6
	16.17	4500	97	155	155	132	6
	18.24	4500	97	155	155	132	6
	20.14	4500	97	155	155	132	5
	22.37	4500	97	155	155	132	5
	25.03	4500	97	155	155	132	5
	27.19	4500	97	155	155	132	5
	32.05	4500	97	155	155	132	5
R97 3	27.58	4500	96	163	163	138	6
	33.25	4500	96	163	163	138	6
	37.13	4500	96	163	163	138	6
	42.78	4500	96	163	163	138	6
	47.58	4500	96	163	163	138	6
	53.21	4500	96	163	163	138	6
	59.92	4500	96	163	163	138	6
	65.21	4500	96	163	163	138	6
	72.17	4500	95	164	164	139	6
	83.15	4500	95	164	164	139	6
	92.48	4500	95	164	164	139	6
	103.44	4500	95	164	164	139	6
	116.48	4500	95	164	164	139	6
	126.75	4500	95	164	164	139	6
	150.78	4500	95	164	164	139	6
	170.02	4500	95	164	164	139	6
	186.30	4500	95	164	164	139	6
	216.28	4500	94	164	164	139	6
	241.25	4500	94	164	164	139	6
	255.71	4500	94	164	164	139	6
	289.74	4500	93	164	164	139	6

DRL.. n_e = 1400	i	M_{amax} Nm	M_{apk} Nm	$M_{aNotaus}$ Nm	n_{ak} 1/min	J_G 10^{-4} kgm^2	F_{Ramax} R N	F_{Ramax} RF N	F_{Ramax} RM N	F_{Rapk} R N	F_{Rapk} RF N	F_{Rapk} RM N
R97 2	4.50	1630	2445	2771	244	80	9500	9500	17900	24400	24400	26300
	5.20	1780	2560	3026	192	65	9850	9850	18700	23800	23800	26100
	6.21	1890	2560	3213	161	51	10500	10500	19900	23800	23800	26100
	7.12	2000	2560	3400	140	41	10900	10900	20800	23800	23800	26100
	8.39	2030	2560	3451	131	33	11700	11700	22000	23800	23800	26100
	9.29	2030	2560	3451	129	28	12200	12200	22800	23800	23800	26100
	10.83	2090	3090	3553	129	46	12100	12100	23700	16000	16000	24500
	12.39	2190	3090	3723	113	37	12700	12700	24800	16000	16000	24500
	14.62	2300	3090	3910	103	30	13400	13400	26200	16000	16000	24500
	16.17	2400	3090	4080	87	26	13800	13800	26200	16000	16000	24500
	18.24	2500	3090	4250	77	22	14400	14400	26100	16000	16000	24500
	20.14	2610	3090	4437	70	19	14800	14800	26000	16000	16000	24500
	22.37	2720	3090	4624	63	16	15300	15300	25800	16000	16000	24500
	25.03	2830	3090	4811	56	14	15900	15900	25700	16000	16000	24500
	27.19	2560	3090	4352	74	13	8380	8380	26000	16000	16000	24500
	32.05	2560	3090	4352	75	9.8	10600	10600	26000	16000	16000	24500
R97 3	27.58	2670	3090	4539	54	24	16900	16900	25900	16000	16000	24500
	33.25	2890	3090	4913	45	19	17900	17900	25600	16000	16000	24500
	37.13	3000	3090	5100	40	16	18600	18600	25400	16000	16000	24500
	42.78	3000	3090	5100	37	13	19800	19800	25400	16000	16000	24500
	47.58	3000	3090	5100	38	11	19800	19800	25400	16000	16000	24500
	53.21	3000	3090	5100	39	9.5	19800	19800	25400	16000	16000	24500
	59.92	3000	3090	5100	40	8.0	19800	19800	25400	16000	16000	24500
	65.21	3000	3090	5100	40	7.1	19800	19800	25400	16000	16000	24500
	72.17	3000	3090	5100	35	14	18000	18000	25400	16000	16000	24500
	83.15	3000	3090	5100	35	11	19800	19800	25400	16000	16000	24500
	92.48	3000	3090	5100	35	9.8	19800	19800	25400	16000	16000	24500
	103.44	3000	3090	5100	35	8.4	19800	19800	25400	16000	16000	24500
	116.48	3000	3090	5100	35	7.0	19800	19800	25400	16000	16000	24500
	126.75	3000	3090	5100	36	6.3	19800	19800	25400	16000	16000	24500
	150.78	3000	3090	5100	35	4.9	19800	19800	25400	16000	16000	24500
	170.02	3000	3090	5100	35	4.0	19800	19800	25400	16000	16000	24500
	186.30	3000	3090	5100	35	3.5	19800	19800	25400	16000	16000	24500
	216.28	3000	3090	5100	32	2.8	19800	19800	25400	16000	16000	24500
	241.25	3000	3090	5100	29	1.8	19800	19800	25400	16000	16000	24500
	255.71	3000	3090	5100	27	1.6	19800	19800	25400	16000	16000	24500
	289.74	3000	3090	5100	24	1.3	19800	19800	25400	16000	16000	24500

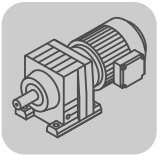

R..DRL
R..Nm

01 171 00 08

R97..

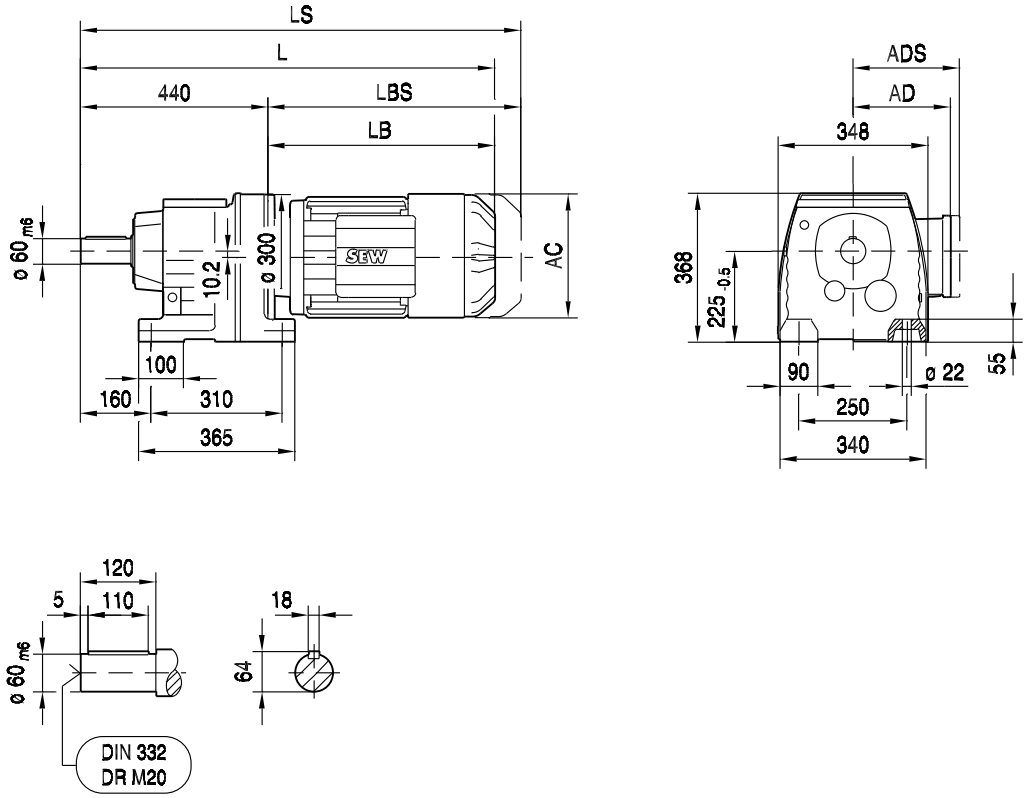

(→ 📖 129)	DRL71M	DRL80S	DRL80M	DRL90L	DRL100L	DRL132S	DRL132MC	DRL160..	DRL180S/M	DRL180L/LC	DRL225S
AC	139	156	156	179	197	221	221	270	316	316	394
AD	119	128	128	140	157	170	170	228	253	253	283
ADS	129	139	139	150	158	172	172	228	253	253	283
L	728	749	780	794	853	934	984	988	1057	1117	1190
LS	793	829	860	880	940	1042	1092	1125	1246	1306	1395
LB	288	309	340	354	413	494	544	548	617	677	750
LBS	353	389	420	440	500	602	652	685	806	866	955

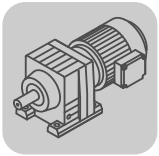

01 172 00 08

RF97..

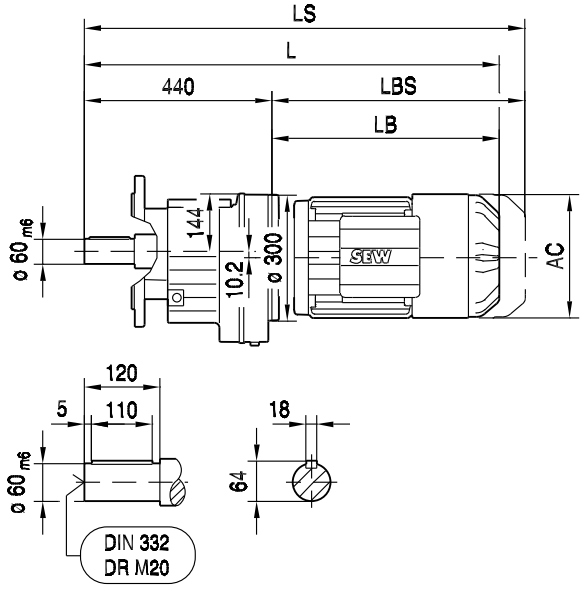

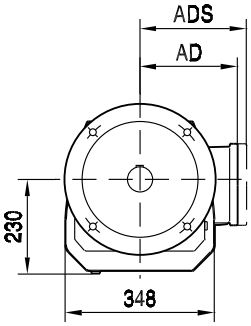

ø 350

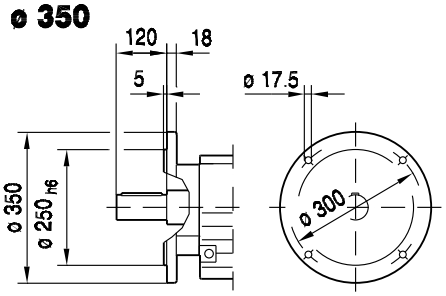

ø 450

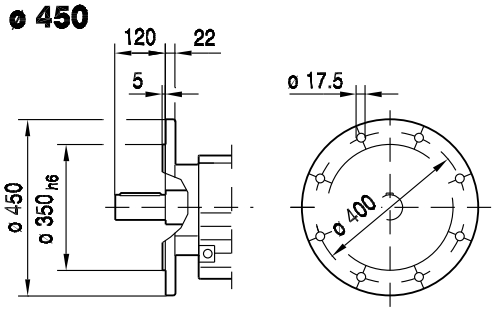

RM97..

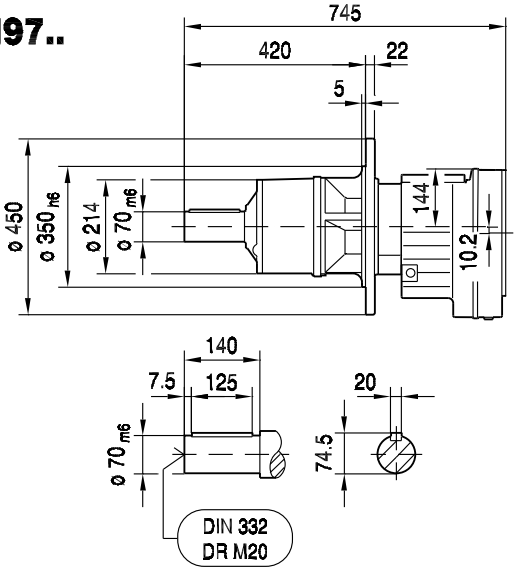

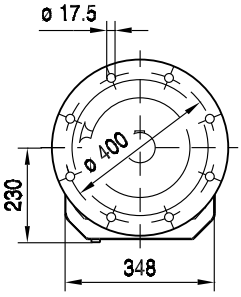

(→ 📖 129)	DRL71M	DRL80S	DRL80M	DRL90L	DRL100L	DRL132S	DRL132MC	DRL160..	DRL180S/M	DRL180L/LC	DRL225S
AC	139	156	156	179	197	221	221	270	316	316	394
AD	119	128	128	140	157	170	170	228	253	253	283
ADS	129	139	139	150	158	172	172	228	253	253	283
L	728	749	780	794	853	934	984	988	1057	1117	1190
LS	793	829	860	880	940	1042	1092	1125	1246	1306	1395
LB	288	309	340	354	413	494	544	548	617	677	750
LBS	353	389	420	440	500	602	652	685	806	866	955

8.3.11 R 107

M_{aDyn} Nm	i	DRL													
		90L		100L		132S		132MC		160M		160MC		180S	
		D1	D2	D1	D2	D1	D2	D1	D2	D1	D2	D1	D2	D1	D2
R107 2	4.92						715	620	950	785	1330	880	1520	1000	1810
	5.82				475	450	840	730	1120	930	1580	1040	1800	1180	2140
	6.66				545	515	960	830	1290	1060	1800	1190	2060	1350	2450
	7.86				645	605	1140	990	1520	1250	2130	1410	2430	1600	2890
	8.56						1240	1070	1660	1370	2320	1530	2650	1740	3150
	10.13				830	785	1470	1270	1960	1620	2750	1810	3140	2060	3730
	11.59				950	890	1680	1460	2240	1850	3140	2070	3590	2360	4270
	13.66				1120	1060	1980	1720	2650	2180	3710	2450	4240	2780	>4360
	15.65	375	695	530	1290	1210	2270	1970	3030	2500	4250	2800	>4360	3180	>4360
	18.21	440	810	615	1500	1410	2640	2290	3530	2910	>4360	3260	>4360	3700	>4360
	20.07	485	890	680	1650	1550	2920	2530	3890	3210	>4360	3600	>4360	4080	>4360
	22.62	545	1000	765	1860	1750	3290	2850	>4360	3620	>4360	4050	>4360	>4360	
	24.90	600	1110	840	2050	1930	3620	3130	>4360	3980	>4360	>4360	>4360	>4360	
	27.58	665	1230	930	2270	2140	4010	3470		>4360		>4360			
	30.77	745	1370	1040	2530	2380	>4360	3880		>4360		>4360			
R107 3	29.49				2380	2240	4200	3640	>4360	>4360	>4360	>4360	>4360	>4360	>4360
	35.26				2870	2700	>4360	>4360	>4360	>4360	>4360	>4360	>4360	>4360	>4360
	40.37	960	1780	1350	3290	3100	>4360	>4360	>4360	>4360	>4360	>4360	>4360	>4360	>4360
	47.63	1140	2100	1600	3880	3650	>4360	>4360	>4360	>4360	>4360	>4360	>4360	>4360	>4360
	52.68	1260	2320	1770	4290	4040	>4360	>4360	>4360	>4360	>4360	>4360	>4360	>4360	>4360
	59.41	1420	2620	1990	>4360	>4360	>4360	>4360	>4360	>4360	>4360	>4360	>4360	>4360	
	65.60	1570	2890	2200	>4360	>4360	>4360	>4360	>4360	>4360	>4360	>4360	>4360	>4360	
	72.88	1740	3210	2440	>4360	>4360	>4360	>4360		>4360		>4360			
	78.57	1860	3430	2610	>4360	>4360	>4360	>4360	>4360	>4360	>4360	>4360	>4360	>4360	>4360
	92.70	2200	4050	3080	>4360	>4360	>4360	>4360	>4360	>4360	>4360	>4360	>4360	>4360	>4360
	102.53	2430	>4360	3400	>4360	>4360	>4360	>4360	>4360	>4360	>4360	>4360	>4360	>4360	>4360
	115.63	2740	>4360	3840	>4360	>4360	>4360	>4360	>4360	>4360	>4360	>4360	>4360	>4360	
	127.68	3030	>4360	4240	>4360	>4360	>4360	>4360	>4360	>4360	>4360	>4360	>4360	>4360	
	141.83	3360	>4360	>4360	>4360	>4360	>4360	>4360		>4360		>4360			
	158.68	3760	>4360	>4360	>4360	>4360	>4360	>4360		>4360		>4360			
	172.34	4090	>4360	>4360	>4360	>4360									
	203.16	>4360	>4360	>4360	>4360	>4360									
	229.95	>4360	>4360	>4360											
	251.15	>4360	>4360	>4360											

→ 124

m kg		DRL						
	s	90L	100L	132S	132MC	160M	160MC	180S
R107	2	175	180	195	210	235	240	265
R107	3	180	185	200	215	240	245	275
RF: + 6.0 kg / RM: + 94.0 kg								

M_{aDyn} Nm	i	DRL										
		180M		180L		180LC		200L		225S		225MC
		D1	D2	D1	D2	D1	D2	D1	D2	D1	D2	D1
R107 2	4.92	1190	2050	1520	2480	2000	2860	2260	3240	2480	3670	3670
	5.82	1410	2420	1800	2930	2370	3380	2680	>3820	2930	>3820	>3820
	6.66	1610	2770	2060	3350	2710	>3820	3060	>3820	3350	>3820	>3820
	7.86	1900	3270	2430	>3820	3200	>3820	3620	>3820	>3820	>3820	>3820
	8.56	2070	3570	2650	4310	3480	>4360	3940	>4360	4310	>4360	>4360
	10.13	2450	4220	3140	>4360	4120	>4360	>4360	>4360	>4360	>4360	>4360
	11.59	2810	>4360	3590	>4360	>4360	>4360	>4360	>4360	>4360	>4360	>4360
	13.66	3310	>4360	4240	>4360	>4360	>4360	>4360	>4360	>4360	>4360	>4360
	15.65	3790	>4360	>4360	>4360	>4360	>4360	>4360	>4360	>4360	>4360	>4360
	18.21	>4360	>4360	>4360	>4360	>4360		>4360		>4360		
	20.07	>4360	>4360	>4360	>4360	>4360		>4360		>4360		
	22.62	>4360		>4360								
	24.90	>4360		>4360								
	27.58											
	30.77											
R107 3	29.49	>4360	>4360	>4360	>4360	>4360	>4360	>4360	>4360	>4360	>4360	>4360
	35.26	>4360	>4360	>4360	>4360	>4360	>4360	>4360	>4360	>4360	>4360	>4360
	40.37	>4360	>4360	>4360	>4360	>4360	>4360	>4360	>4360	>4360	>4360	>4360
	47.63	>4360	>4360	>4360	>4360	>4360		>4360		>4360		
	52.68	>4360	>4360	>4360	>4360	>4360		>4360		>4360		
	59.41	>4360		>4360								
	65.60	>4360		>4360								
	72.88											
	78.57	>4360	>4360	>4360	>4360	>4360		>4360		>4360		
	92.70	>4360	>4360	>4360	>4360	>4360		>4360		>4360		
	102.53	>4360	>4360	>4360	>4360	>4360		>4360		>4360		
	115.63	>4360		>4360								
	127.68	>4360		>4360								
	141.83											
	158.68											
	172.34											
	203.16											
	229.95											
	251.15											

	→ 124

m kg		DRL					
	s	180M	180L	180LC	200L	225S	225MC
R107	2	285	295	305	400	430	475
R107	3	290	300	310	410	440	480
RF: + 6.0 kg / RM: + 94.0 kg							

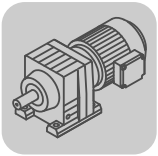

R..DRL
R..Nm

DRL..	i	n_{epk} 1/min	η %	c_{TG} R Nm/'	RF Nm/'	RM Nm/'	φ /R '
R107 2	4.92	3197	97	208	208	175	9
	5.82	3597	97	208	208	175	9
	6.66	3924	97	208	208	175	9
	7.86	4378	97	208	208	175	9
	8.56	4500	97	250	250	203	7
	10.13	4500	97	250	250	203	7
	11.59	4500	97	250	250	203	7
	13.66	4500	97	250	250	203	7
	15.65	4500	97	250	250	203	7
	18.21	4500	97	250	250	203	7
	20.07	4500	97	250	250	203	7
	22.62	4500	97	250	250	203	7
	24.90	4500	97	250	250	203	7
	27.58	4500	97	250	250	203	7
	30.77	4500	97	250	250	203	7
R107 3	29.49	4500	95	259	259	210	7
	35.26	4500	96	259	259	210	7
	40.37	4500	96	259	259	210	7
	47.63	4500	96	259	259	210	7
	52.68	4500	96	259	259	210	7
	59.41	4500	96	259	259	210	7
	65.60	4500	96	259	259	210	7
	72.88	4500	96	259	259	210	7
	78.57	4500	95	260	260	210	7
	92.70	4500	95	260	260	210	7
	102.53	4500	95	260	260	210	7
	115.63	4500	95	260	260	210	7
	127.68	4500	95	260	260	210	7
	141.83	4500	95	260	260	210	7
	158.68	4500	95	260	260	210	7
	172.34	4500	95	260	260	210	7
	203.16	4500	94	260	260	210	7
	229.95	4500	94	260	260	210	7
	251.15	4500	94	260	260	210	7

DRL.. n_e = 1400	i	M_{amax} Nm	M_{apk} Nm	$M_{aNotaus}$ Nm	n_{ak} 1/min	J_G 10^{-4} kgm^2	F_{Ramax} R N	F_{Ramax} RF N	F_{Ramax} RM N	F_{Rapk} R N	F_{Rapk} RF N	F_{Rapk} RM N
R107 2	4.92	2900	3820	4930	467	144	11300	11300	21100	31800	31800	33500
	5.82	2970	3820	5049	515	108	12100	12100	22400	31800	31800	33500
	6.66	2970	3820	5049	586	88	12800	12800	23500	31800	31800	33500
	7.86	2970	3820	5049	700	70	13800	13800	24900	31800	31800	33500
	8.56	4300	4360	7310	245	129	11300	11300	24400	29100	29100	32100
	10.13	4300	4360	7310	237	97	12400	12400	26000	29100	29100	32100
	11.59	4300	4360	7310	242	80	13300	13300	27300	29100	29100	32100
	13.66	4300	4360	7310	242	64	14400	14400	29000	29100	29100	32100
	15.65	4300	4360	7310	236	52	15400	15400	30500	29100	29100	32100
	18.21	4300	4360	7310	236	43	16600	16600	32300	29100	29100	32100
	20.07	4300	4360	7310	234	37	17300	17300	32800	29100	29100	32100
	22.62	4300	4360	7310	234	31	18300	18300	32800	29100	29100	32100
	24.90	4300	4360	7310	237	27	19200	19200	32800	29100	29100	32100
	27.58	4300	4360	7310	232	21	20100	20100	32800	29100	29100	32100
	30.77	4300	4360	7310	227	18	21100	21100	32800	29100	29100	32100
R107 3	29.49	4300	4360	7310	85	60	20700	20700	32800	29100	29100	32100
	35.26	4300	4360	7310	88	47	22400	22400	32800	29100	29100	32100
	40.37	4300	4360	7310	87	38	23800	23800	32800	29100	29100	32100
	47.63	4300	4360	7310	88	31	25500	25500	32800	29100	29100	32100
	52.68	4300	4360	7310	89	27	26600	26600	32800	29100	29100	32100
	59.41	4300	4360	7310	89	22	28000	28000	32800	29100	29100	32100
	65.60	4300	4360	7310	90	19	29200	29200	32800	29100	29100	32100
	72.88	4300	4360	7310	89	17	29500	29500	32800	29100	29100	32100
	78.57	4300	4360	7310	46	34	29500	29500	32800	29100	29100	32100
	92.70	4300	4360	7310	47	28	29500	29500	32800	29100	29100	32100
	102.53	4300	4360	7310	48	25	29500	29500	32800	29100	29100	32100
	115.63	4300	4360	7310	48	20	29500	29500	32800	29100	29100	32100
	127.68	4300	4360	7310	49	18	29500	29500	32800	29100	29100	32100
	141.83	4300	4360	7310	49	15	29500	29500	32800	29100	29100	32100
	158.68	4300	4360	7310	44	13	29500	29500	32800	29100	29100	32100
	172.34	4300	4360	7310	41	12	29500	29500	32800	29100	29100	32100
	203.16	4300	4360	7310	34	9.2	29500	29500	32800	29100	29100	32100
	229.95	4300	4360	7310	30	5.9	29500	29500	32800	29100	29100	32100
	251.15	4300	4360	7310	28	5.1	29500	29500	32800	29100	29100	32100

01 173 00 08

R107..

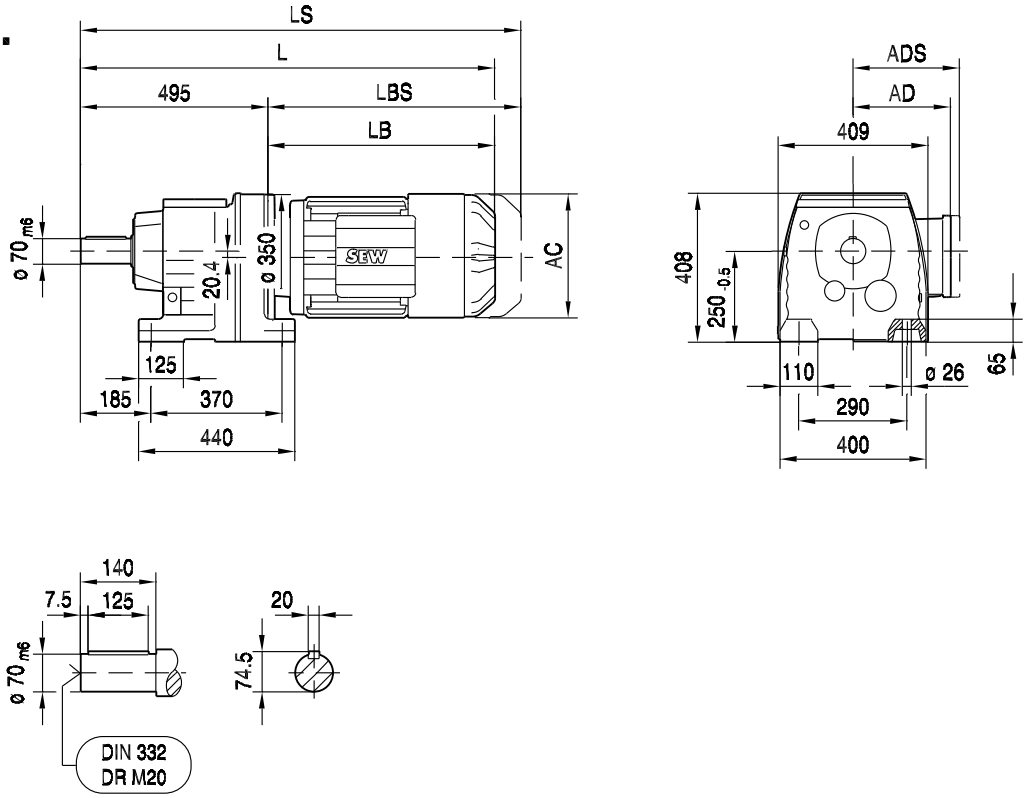

(→ 📖 129)	DRL90L	DRL100L	DRL132S	DRL132MC	DRL160..	DRL180S/M	DRL180L/LC	DRL225S	DRL225MC
AC	179	197	221	221	270	316	316	394	394
AD	140	157	170	170	228	253	253	283	283
ADS	150	158	172	172	228	253	253	283	283
L	843	902	983	1033	1037	1106	1166	1239	1289
LS	929	989	1091	1141	1174	1295	1355	1444	1494
LB	348	407	488	538	542	611	671	744	794
LBS	434	494	596	646	679	800	860	949	999

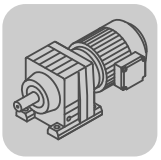

01 174 00 08

RF107..

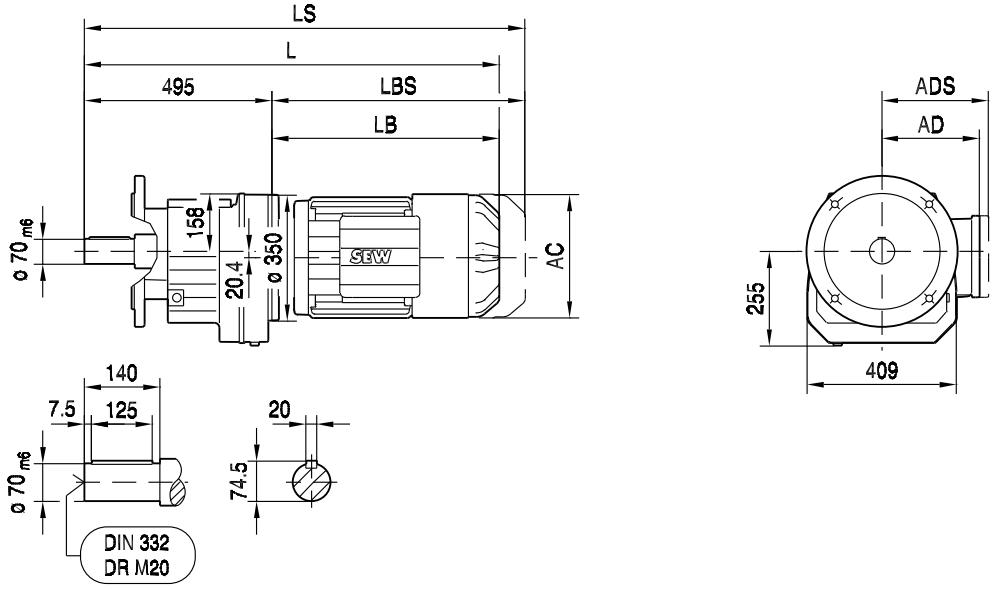

ø 350

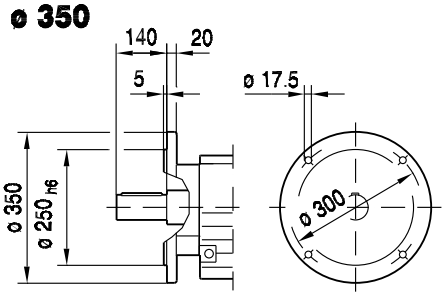

ø 450

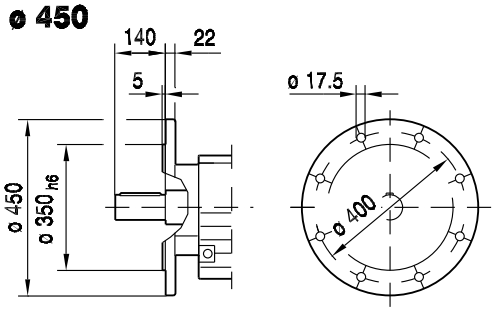

RM107..

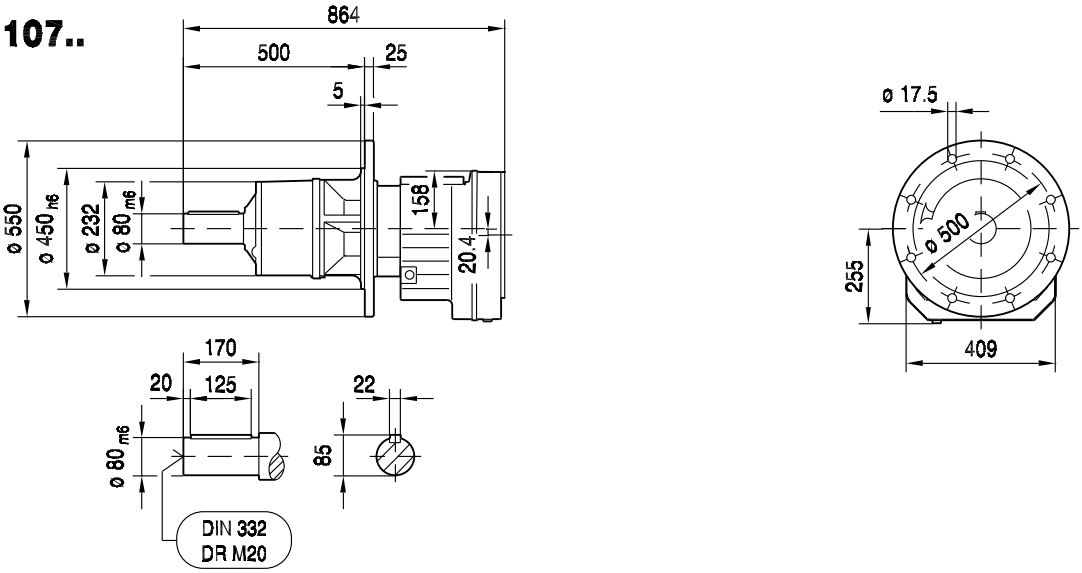

(→ 📖 129)	DRL90L	DRL100L	DRL132S	DRL132MC	DRL160..	DRL180S/M	DRL180L/LC	DRL225S	DRL225MC
AC	179	197	221	221	270	316	316	394	394
AD	140	157	170	170	228	253	253	283	283
ADS	150	158	172	172	228	253	253	283	283
L	843	902	983	1033	1037	1106	1166	1239	1289
LS	929	989	1091	1141	1174	1295	1355	1444	1494
LB	348	407	488	538	542	611	671	744	794
LBS	434	494	596	646	679	800	860	949	999

8.3.12 R 137

M_{aDyn} Nm	i	DRL 132S D1	132S D2	132MC D1	132MC D2	160M D1	160M D2	160MC D1	160MC D2	180S D1	180S D2	180M D1	180M D2	180L D1	180L D2
R137 2	5.15				990		1390		1590	1040	1890	1240	2140	1590	2590
	6.38		920	800	1230	1020	1730	1140	1980	1290	2350	1540	2660	1980	3210
	7.59	585	1100	950	1470	1210	2060	1360	2350	1540	2790	1840	3160	2350	3820
	8.71				1680		2360		2700	1770	3210	2110	3630	2700	4390
	10.79		1560	1360	2090	1720	2930	1930	3340	2190	3970	2610	4500	3340	5440
	12.83	990	1860	1610	2480	2050	3480	2300	3980	2610	4720	3110	5350	3980	6470
	14.51	1120	2110	1820	2810	2320	3940	2600	4500	2950	5340	3510	6050	4500	7310
	16.80	1300	2440	2110	3250	2680	4560	3010	5210	3420	6190	4070	7000	5210	>8160
	19.04	1470	2770	2400	3690	3040	5170	3410	5910	3870	7010	4610	7940	5910	>8160
	22.00	1700	3200	2770	4260	3520	5970	3940	6820	4480	8100	5330	>8160	6820	>8160
	24.12	1870	3500	3040	4670	3860	6550	4320	7480	4910	>8160	5840	>8160	7480	>8160
	29.57	2290	4300	3720	5730	4730	8030	5300	>8160	6020		7170		>8160	
R137 3	27.83		4000	3470	5340	4400	7480	4940	>8160	5610	>8160	6670	>8160	>8160	>8160
	32.91	2520	4730	4100	6310	5210	>8160	5840	>8160	6630	>8160	7890	>8160	>8160	>8160
	37.65	2890	5420	4690	7220	5960	>8160	6680	>8160	7590	>8160	>8160	>8160	>8160	>8160
	44.39	3400	6390	5530	>8160	7030	>8160	7880	>8160	>8160	>8160	>8160	>8160	>8160	>8160
	50.86	3900	7320	6340	>8160	8050	>8160	>8160	>8160	>8160	>8160	>8160	>8160	>8160	>8160
	59.17	4540	>8160	7380	>8160	>8160	>8160	>8160	>8160	>8160	>8160	>8160	>8160	>8160	>8160
	65.20	5000	>8160	8130	>8160	>8160	>8160	>8160	>8160	>8160	>8160	>8160	>8160	>8160	>8160
	73.49	5640	>8160	>8160	>8160	>8160	>8160	>8160	>8160	>8160		>8160		>8160	
	80.91	6210	>8160	>8160	>8160	>8160	>8160	>8160	>8160	>8160		>8160		>8160	
	88.70	6740	>8160	>8160	>8160	>8160	>8160	>8160	>8160	>8160	>8160	>8160	>8160	>8160	>8160
	103.20	7840	>8160	>8160	>8160	>8160	>8160	>8160	>8160	>8160	>8160	>8160	>8160	>8160	>8160
	113.72	>8160	>8160	>8160	>8160	>8160	>8160	>8160	>8160	>8160	>8160	>8160	>8160	>8160	>8160
	128.18	>8160	>8160	>8160	>8160	>8160	>8160	>8160	>8160	>8160		>8160		>8160	
	141.12	>8160	>8160	>8160	>8160	>8160	>8160	>8160	>8160	>8160		>8160		>8160	
	156.31	>8160	>8160	>8160		>8160		>8160							
	174.40	>8160	>8160	>8160		>8160		>8160							
	188.45	>8160													
	222.60	>8160													

→ 124

m kg	s	DRL 132S	132MC	160M	160MC	180S	180M	180L
R137	2	280	295	315	320	345	360	375
R137	3	290	305	325	330	355	370	385
RF: + 23.3 kg / RM: + 134.4 kg								

M_{aDyn} Nm	i	DRL							
		180LC		200L		225S		225MC	
		D1	D2	D1	D2	D1	D2	D1	D2
R137 2	5.15	2090	2990	2370	3390	2590	3840	3840	5490
	6.38	2590	3710	2930	4200	3210	4760	4760	>6150
	7.59	3090	4410	3490	5000	3820	5660	5660	>6150
	8.71	3540	5060	4010	5740	4390	6500	6500	>8160
	10.79	4390	6270	4970	7110	5440	8050	8050	>8160
	12.83	5220	7460	5910	>8160	6470	>8160	>8160	>8160
	14.51	5910	>8160	6680	>8160	7310	>8160	>8160	>8160
	16.80	6840	>8160	7740	>8160	>8160	>8160	>8160	
	19.04	7750	>8160	>8160	>8160	>8160	>8160	>8160	
	22.00	>8160		>8160		>8160			
	24.12	>8160		>8160		>8160			
	29.57								
R137 3	27.83	>8160	>8160	>8160	>8160	>8160	>8160	>8160	>8160
	32.91	>8160	>8160	>8160	>8160	>8160	>8160	>8160	>8160
	37.65	>8160	>8160	>8160	>8160	>8160	>8160	>8160	>8160
	44.39	>8160	>8160	>8160	>8160	>8160	>8160	>8160	
	50.86	>8160	>8160	>8160	>8160	>8160	>8160	>8160	
	59.17	>8160		>8160		>8160			
	65.20	>8160		>8160		>8160			
	73.49								
	80.91								
	88.70	>8160	>8160	>8160	>8160	>8160	>8160	>8160	
	103.20	>8160		>8160		>8160			
	113.72	>8160		>8160		>8160			
	128.18								
	141.12								
	156.31								
	174.40								
	188.45								
	222.60								

→ 124

m kg	s	DRL			
		180LC	200L	225S	225MC
R137	2	385	480	510	550
R137	3	395	490	520	560
RF: + 23.3 kg / RM: + 134.4 kg					

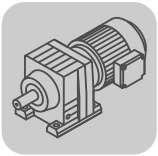

R..DRL
R..Nm

DRL..	i	n_{epk} 1/min	η %	c_{TG} R Nm/'	RF Nm/'	RM Nm/'	φ /R '
R137 2	5.15	2797	97	433	433	351	8
	6.38	3197	97	433	433	351	8
	7.59	3597	97	433	433	351	8
	8.71	2797	97	524	524	409	6
	10.79	4500	97	524	524	409	6
	12.83	4500	97	524	524	409	6
	14.51	4500	97	524	524	409	6
	16.80	4500	97	524	524	409	6
	19.04	4500	97	524	524	409	6
	22.00	4500	97	524	524	409	6
	24.12	4500	97	524	524	409	6
	29.57	4500	97	524	524	409	6
R137 3	27.83	4500	96	546	546	422	7
	32.91	4500	96	546	546	422	6
	37.65	3924	96	546	546	422	6
	44.39	4378	96	546	546	422	6
	50.86	4500	96	546	546	422	6
	59.17	4500	96	546	546	422	6
	65.20	4500	96	546	546	422	6
	73.49	4500	96	546	546	422	6
	80.91	4500	96	546	546	422	6
	88.70	4500	95	548	548	423	6
	103.20	4500	95	548	548	423	6
	113.72	4500	95	548	548	423	6
	128.18	4500	95	548	548	423	6
	141.12	4500	95	548	548	423	6
	156.31	4500	95	548	548	423	6
	174.40	4500	95	548	548	423	6
	188.45	4500	95	548	548	423	6
	222.60	4500	95	548	548	423	6

DRL.. n_e = 1400	i	M_{amax} Nm	M_{apk} Nm	$M_{aNotaus}$ Nm	n_{ak} 1/min	J_G 10^{-4} kgm^2	F_{Ramax} R N	F_{Ramax} RF N	F_{Ramax} RM N	F_{Rapk} R N	F_{Rapk} RF N	F_{Rapk} RM N
R137 2	5.15	4600	6150	7820	1359	304	34500	34500	38800	56800	56800	56600
	6.38	5110	6150	8687	1097	223	35900	35900	41400	56800	56800	56600
	7.59	5110	6150	8687	922	173	39000	39000	44300	56800	56800	56600
	8.71	7840	8160	13328	161	289	27600	27600	42200	53000	53000	51000
	10.79	8000	8160	13600	148	213	31100	31100	45900	53000	53000	51000
	12.83	8000	8160	13600	140	161	34700	34700	49300	53000	53000	51000
	14.51	8000	8160	13600	138	136	37300	37300	51800	53000	53000	51000
	16.80	8000	8160	13600	131	110	40600	40600	54400	53000	53000	51000
	19.04	8000	8160	13600	126	91	43500	43500	54400	53000	53000	51000
	22.00	8000	8160	13600	123	75	47100	47100	54400	53000	53000	51000
	24.12	8000	8160	13600	124	66	49400	49400	54400	53000	53000	51000
	29.57	7780	8160	13226	132	42	53900	53900	55000	53000	53000	51000
R137 3	27.83	7680	8160	13056	54	125	54100	54100	55100	53000	53000	51000
	32.91	8000	8160	13600	46	94	53400	53400	54400	53000	53000	51000
	37.65	8000	8160	13600	50	78	53400	53400	54400	53000	53000	51000
	44.39	8000	8160	13600	54	62	53400	53400	54400	53000	53000	51000
	50.86	8000	8160	13600	55	51	53400	53400	54400	53000	53000	51000
	59.17	8000	8160	13600	59	42	53400	53400	54400	53000	53000	51000
	65.20	8000	8160	13600	60	37	53400	53400	54400	53000	53000	51000
	73.49	8000	8160	13600	63	31	53400	53400	54400	53000	53000	51000
	80.91	8000	8160	13600	63	27	53400	53400	54400	53000	53000	51000
	88.70	8000	8160	13600	70	47	53400	53400	54400	53000	53000	51000
	103.20	8000	8160	13600	68	39	53400	53400	54400	53000	53000	51000
	113.72	8000	8160	13600	62	34	53400	53400	54400	53000	53000	51000
	128.18	8000	8160	13600	55	28	53400	53400	54400	53000	53000	51000
	141.12	8000	8160	13600	50	25	53400	53400	54400	53000	53000	51000
	156.31	8000	8160	13600	45	19	53400	53400	54400	53000	53000	51000
	174.40	8000	8160	13600	40	16	53400	53400	54400	53000	53000	51000
	188.45	8000	8160	13600	37	15	53400	53400	54400	53000	53000	51000
	222.60	8000	8160	13600	31	12	53400	53400	54400	53000	53000	51000

01 175 00 08

R137..

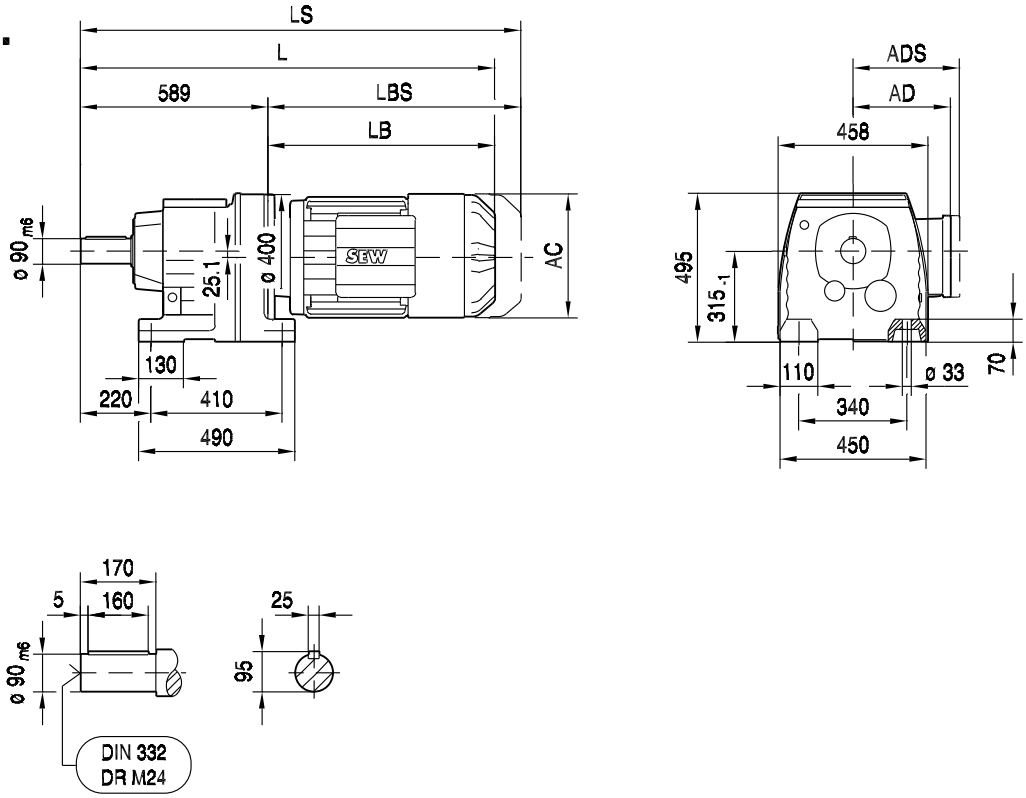

(→ 📖 129)	DRL132S	DRL132MC	DRL160..	DRL180S/M	DRL180L/LC	DRL225S	DRL225MC	
AC	221	221	270	316	316	394	394	
AD	170	170	228	253	253	283	283	
ADS	172	172	228	253	253	283	283	
L	1070	1120	1124	1193	1253	1326	1376	
LS	1178	1228	1261	1382	1442	1531	1581	
LB	481	531	535	604	664	737	787	
LBS	589	639	672	793	853	942	992	

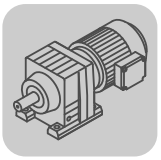

01 176 00 08

RF137..

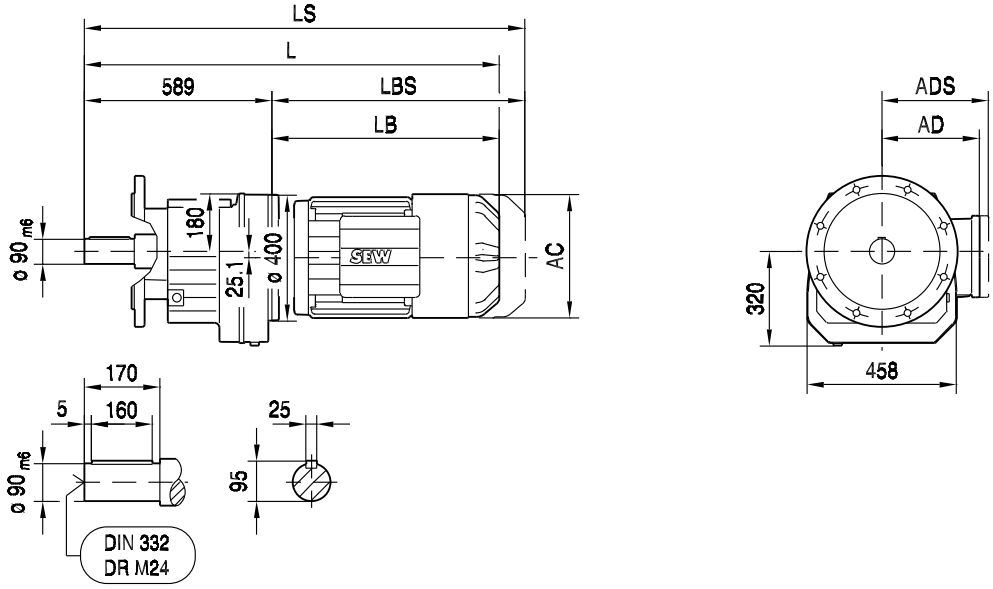

ø 450

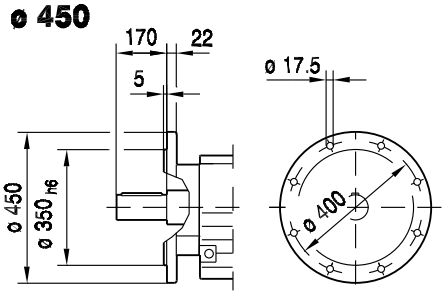

ø 550

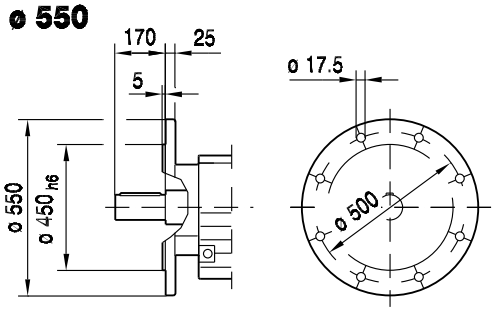

RM137..

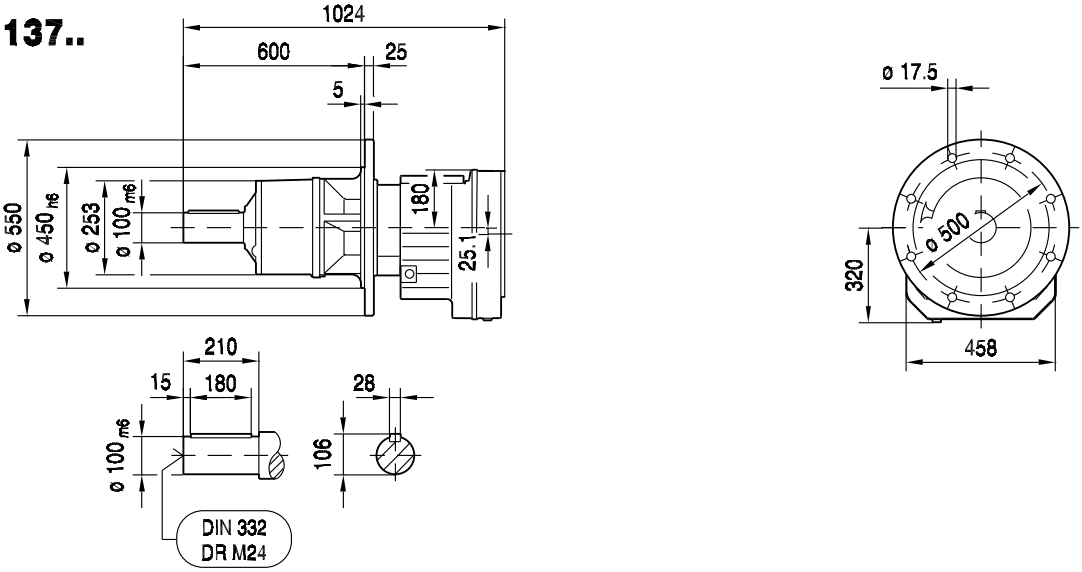

(→ 📖 129)	DRL132S	DRL132MC	DRL160..	DRL180S/M	DRL180L/LC	DRL225S	DRL225MC	
AC	221	221	270	316	316	394	394	
AD	170	170	228	253	253	283	283	
ADS	172	172	228	253	253	283	283	
L	1070	1120	1124	1193	1253	1326	1376	
LS	1178	1228	1261	1382	1442	1531	1581	
LB	481	531	535	604	664	737	787	
LBS	589	639	672	793	853	942	992	

8.3.13 R 147

M_{aDyn} Nm	i	DRL												
		132S	132MC		160M		160MC		180S		180M		180L	
		D2	D1	D2	D1	D2	D1	D2	D1	D2	D1	D2	D1	D2
R147 2	5.00									1840		2080		2520
	5.89			1140		1590		1820	1190	2170	1420	2450	1820	2970
	7.25	1050	910	1400	1160	1960	1300	2250	1470	2670	1750	3020	2250	3650
	8.26									3040		3440		4160
	9.74			1880		2640		3020	1980	3590	2360	4060	3020	4910
	11.99	1740	1510	2320	1910	3250	2150	3720	2440	4410	2900	5000	3720	6040
	13.91	2020	1750	2690	2220	3770	2490	4310	2830	5120	3370	5800	4310	7010
	15.64	2270	1970	3030	2500	4240	2800	4850	3180	5760	3790	6520	4850	7880
	18.04	2620	2270	3490	2880	4890	3230	5590	3670	6640	4370	7520	5590	9090
	20.44	2970	2570	3960	3270	5550	3660	6340	4160	7530	4950	8520	6340	10300
R147 3	24.19			4640		6500		7430	4870	8820	5800	9980	7430	12000
	29.95	4310	3730	5750	4740	8050	5310	9200	6030	10900	7180	12300	9200	>13000
	35.64	5130	4440	6840	5640	9580	6320	10900	7180	>13000	8550	>13000	10900	>13000
	40.29	5800	5020	7730	6380	10800	7150	12300	8120	>13000	9660	>13000	12300	>13000
	46.65	6710	5820	8950	7380	12500	8280	>13000	9400	>13000	11100	>13000	>13000	>13000
	52.87	7610	6590	10100	8370	>13000	9380	>13000	10600	>13000	12600	>13000	>13000	>13000
	61.09	8790	7620	11700	9670	>13000	10800	>13000	12300	>13000	>13000	>13000	>13000	>13000
	66.99	9640	8360	12800	10600	>13000	11800	>13000	>13000	>13000	>13000	>13000	>13000	>13000
	72.09	10300	8990	>13000	11400	>13000	12800	>13000	>13000	>13000	>13000	>13000	>13000	>13000
	83.47	12000	10400	>13000	>13000	>13000	>13000	>13000	>13000	>13000	>13000	>13000	>13000	>13000
	94.60	>13000	11800	>13000	>13000	>13000	>13000	>13000	>13000	>13000	>13000	>13000	>13000	>13000
	109.31	>13000	>13000	>13000	>13000	>13000	>13000	>13000	>13000	>13000	>13000	>13000	>13000	>13000
	119.86	>13000	>13000	>13000	>13000	>13000	>13000	>13000	>13000	>13000	>13000	>13000	>13000	>13000
	146.91	>13000	>13000	>13000	>13000	>13000	>13000	>13000	>13000		>13000		>13000	
	163.31	>13000	>13000		>13000		>13000							

	→ 124

m kg		DRL						
	s	132S	132MC	160M	160MC	180S	180M	180L
R147	2	405	425	440	445	470	485	500
R147	3	420	435	450	455	485	500	510
RF: + 8.3 kg / RM: + 175.7 kg								

M_{aDyn} Nm	i	DRL							
		180LC		200L		225S		225MC	
		D1	D2	D1	D2	D1	D2	D1	D2
R147 2	5.00	2030	2910	2300	3290	2520	3730	3730	5330
	5.89	2390	3420	2710	3880	2970	4390	4390	6280
	7.25	2950	4210	3340	4780	3650	5410	5410	7730
	8.26	3360	4800	3800	5440	4160	6160	6160	8810
	9.74	3960	5660	4480	6420	4910	7270	7270	10300
	11.99	4880	6970	5520	7900	6040	8950	8950	12700
	13.91	5660	8090	6400	9170	7010	10300	10300	>13000
	15.64	6370	9100	7200	10300	7880	11600	11600	>13000
	18.04	7340	10400	8310	11800	9090	>13000	>13000	
	20.44	8320	11800	9410	>13000	10300	>13000	>13000	
R147 3	24.19	9750	>13000	11000	>13000	12000	>13000	>13000	>13000
	29.95	12000	>13000	>13000	>13000	>13000	>13000	>13000	>13000
	35.64	>13000	>13000	>13000	>13000	>13000	>13000	>13000	>13000
	40.29	>13000	>13000	>13000	>13000	>13000	>13000	>13000	>13000
	46.65	>13000	>13000	>13000	>13000	>13000	>13000	>13000	
	52.87	>13000	>13000	>13000	>13000	>13000	>13000	>13000	
	61.09	>13000		>13000		>13000			
	66.99	>13000		>13000		>13000			
	72.09	>13000	>13000	>13000	>13000	>13000	>13000	>13000	>13000
	83.47	>13000	>13000	>13000	>13000	>13000	>13000	>13000	
	94.60	>13000	>13000	>13000	>13000	>13000	>13000	>13000	
	109.31	>13000		>13000		>13000			
	119.86	>13000		>13000		>13000			
	146.91								
	163.31								

	→ 📖 **124**

m kg		DRL			
	s	180LC	200L	225S	225MC
R147	2	510	610	640	680
R147	3	520	620	650	690
RF: + 8.3 kg / RM: + 175.7 kg					

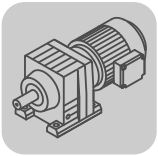

R..DRL
R..Nm

DRL..	i	n_{epk} 1/min	η %	c_{TG} R Nm/'	RF Nm/'	RM Nm/'	φ /R '
R147 2	5.00	2518	97	665	665	461	8
	5.89	2797	97	665	665	461	8
	7.25	3197	97	665	665	461	8
	8.26	2518	97	873	873	551	6
	9.74	2797	97	873	873	551	6
	11.99	4500	97	873	873	551	5
	13.91	4500	97	873	873	551	5
	15.64	4500	97	873	873	551	5
	18.04	4500	97	873	873	551	5
	20.44	4500	97	873	873	551	5
R147 3	24.19	4500	96	913	913	567	6
	29.95	4500	96	913	913	567	6
	35.64	4500	96	913	913	567	6
	40.29	4500	96	913	913	567	6
	46.65	4378	96	913	913	567	6
	52.87	4500	96	913	913	567	6
	61.09	4500	96	913	913	567	6
	66.99	4500	96	913	913	567	6
	72.09	3924	96	917	917	568	6
	83.47	4378	96	917	917	568	6
	94.60	4500	96	917	917	568	6
	109.31	4500	96	917	917	568	5
	119.86	4500	96	917	917	568	5
	146.91	4500	96	917	917	568	5
	163.31	4500	96	917	917	568	5

DRL.. n_e = 1400	i	M_{amax} Nm	M_{apk} Nm	$M_{aNotaus}$ Nm	n_{ak} 1/min	J_G 10^{-4} kgm^2	F_{Ramax} R N	RF N	RM N	F_{Rapk} R N	RF N	RM N
R147 2	5.00	8670	10500	14739	280	642	49300	49300	38300	67000	67000	73900
	5.89	8670	10500	14739	323	491	53200	53200	41000	67000	67000	73900
	7.25	8670	10500	14739	372	358	58400	58400	44600	67000	67000	73900
	8.26	13000	13000	22100	182	591	49900	49900	42700	62700	62700	64300
	9.74	13000	13000	22100	205	454	54400	54400	45900	62700	62700	64300
	11.99	13000	13000	22100	200	334	60400	60400	50200	62700	62700	64300
	13.91	12600	13000	21420	216	250	63400	63400	53800	62700	62700	64300
	15.64	13000	13000	22100	185	210	62700	62700	56000	62700	62700	64300
	18.04	10500	13000	17850	371	168	67000	67000	62100	62700	62700	64300
	20.44	12000	13000	20400	230	140	64600	64600	63600	62700	62700	64300
R147 3	24.19	11900	13000	20230	62	291	64700	64700	68100	62700	62700	64300
	29.95	13000	13000	22100	50	214	62700	62700	64300	62700	62700	64300
	35.64	13000	13000	22100	51	166	62700	62700	64300	62700	62700	64300
	40.29	13000	13000	22100	52	136	62700	62700	64300	62700	62700	64300
	46.65	13000	13000	22100	54	110	62700	62700	64300	62700	62700	64300
	52.87	13000	13000	22100	55	91	62700	62700	64300	62700	62700	64300
	61.09	13000	13000	22100	57	75	62700	62700	64300	62700	62700	64300
	66.99	13000	13000	22100	58	66	62700	62700	64300	62700	62700	64300
	72.09	13000	13000	22100	40	118	62700	62700	64300	62700	62700	64300
	83.47	13000	13000	22100	41	97	62700	62700	64300	62700	62700	64300
	94.60	13000	13000	22100	41	81	62700	62700	64300	62700	62700	64300
	109.31	13000	13000	22100	41	68	62700	62700	64300	62700	62700	64300
	119.86	13000	13000	22100	42	60	62700	62700	64300	62700	62700	64300
	146.91	13000	13000	22100	42	38	62700	62700	64300	62700	62700	64300
	163.31	13000	13000	22100	42	34	62700	62700	64300	62700	62700	64300

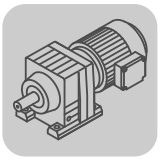

01 177 00 08

R147..

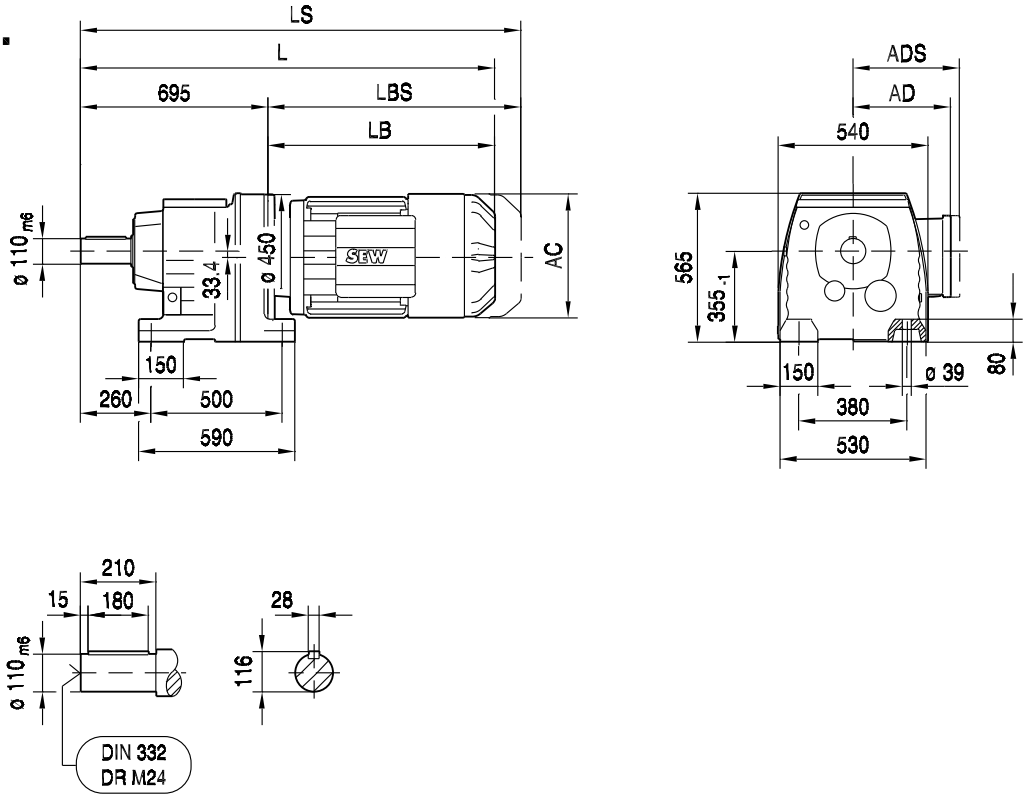

(→ 📖 129)	DRL132S	DRL132MC	DRL160..	DRL180S/M	DRL180L/LC	DRL225S	DRL225MC	
AC	221	221	270	316	316	394	394	
AD	170	170	228	253	253	283	283	
ADS	172	172	228	253	253	283	283	
L	1168	1218	1222	1291	1351	1424	1474	
LS	1276	1326	1359	1480	1540	1629	1679	
LB	473	523	527	596	656	729	779	
LBS	581	631	664	785	845	934	984	

01 178 00 08

RF147..

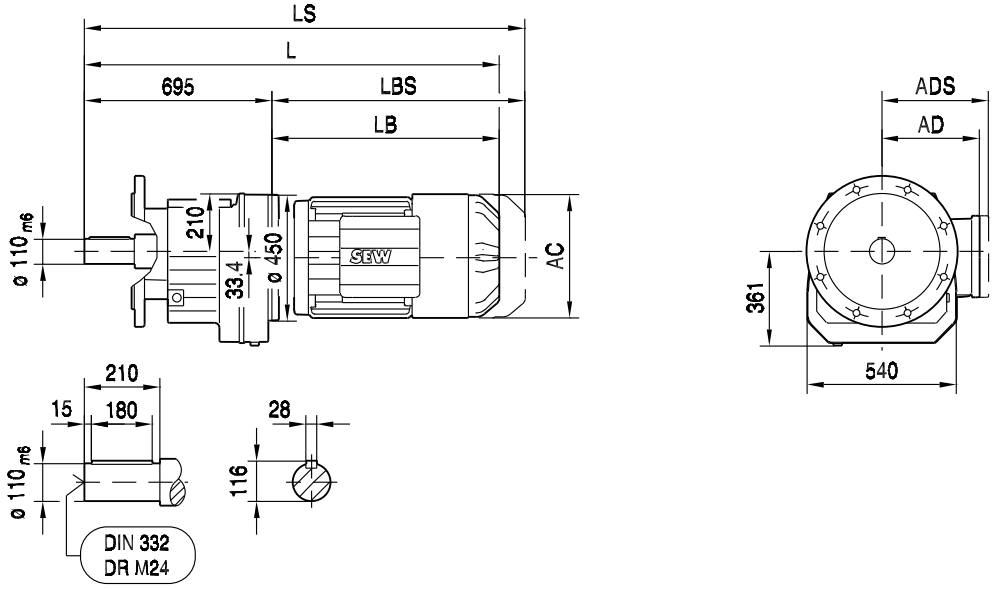

ø 450

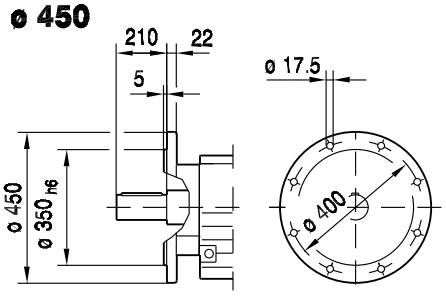

ø 550

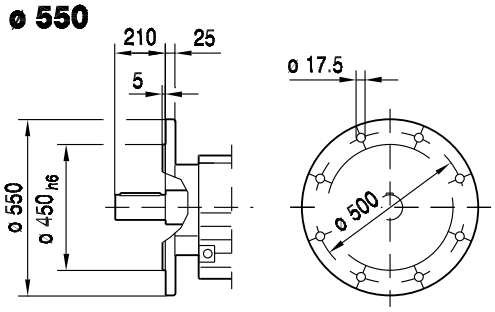

RM147..

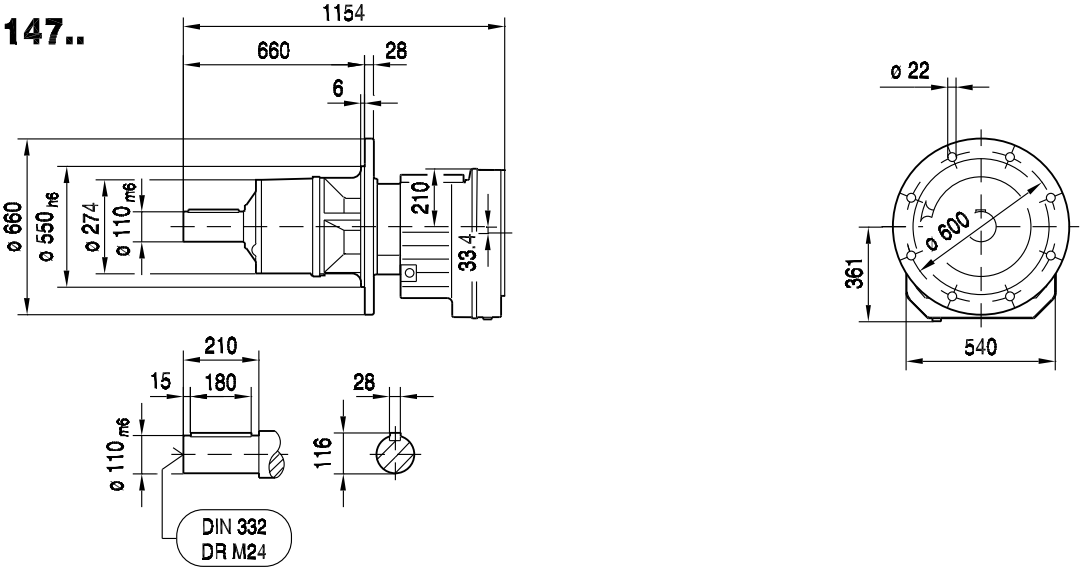

(→ 📖 129)	DRL132S	DRL132MC	DRL160..	DRL180S/M	DRL180L/LC	DRL225S	DRL225MC	
AC	221	221	270	316	316	394	394	
AD	170	170	228	253	253	283	283	
ADS	172	172	228	253	253	283	283	
L	1168	1218	1222	1291	1351	1424	1474	
LS	1276	1326	1359	1480	1540	1629	1679	
LB	473	523	527	596	656	729	779	
LBS	581	631	664	785	845	934	984	

Seite bleibt aus drucktechnischen Gründen frei.

8.3.14 R 167

M_{aDyn} Nm	i	DRL 160M D1	160M D2	160MC D1	160MC D2	180S D1	180S D2	180M D1	180M D2	180L D1	180L D2
R167 2	10.24						3770		4270		5160
	11.99		3250		3720	2440	4410	2900	5000	3720	6040
	14.48	2310	3930	2590	4490	2940	5330	3510	6030	4490	7300
	16.98	2710	4610	3040	5270	3450	6250	4110	7080	5270	8560
	19.03	3040	5160	3410	5900	3870	7010	4610	7930	5900	9590
	21.85	3490	5930	3920	6780	4450	8050	5290	9110	6780	11000
	24.57	3930	6670	4400	7620	5000	9050	5950	10200	7620	12300
	30.71	4910	8340	5510	9530	6250	11300	7440	12800	9530	>15000
	37.74	6040	10200	6770	11700	7680		9150		11700	
	46.00	7360		8250							
R167 3	23.71						8640		9780		11800
	27.96		7510		8580	5630	10100	6710	11500	8580	13900
	34.41	5450	9240	6110	10500	6930	12500	8250	14200	10500	17100
	39.92	6320	10700	7080	12200	8040	14500	9580	16400	12200	19900
	44.87	7100	12000	7960	13700	9040	16300	10700	18500	13700	>21800
	51.76	8190	13900	9190	15900	10400	18800	12400	21300	15900	>21800
	58.65	9290	15700	10400	18000	11800	21300	14000	>21800	18000	>21800
	67.40	10600	18100	11900	20700	13500	>21800	16100	>21800	20700	>21800
	73.70	11600	19800	13000	>21800	14800	>21800	17600	>21800	>21800	>21800
	82.91	13100	>21800	14700	>21800	16700	>21800	19800	>21800	>21800	>21800
	93.19	14700	>21800	16500	>21800	18700	>21800	>21800	>21800	>21800	>21800
	107.49	17000	>21800	19000	>21800	21600	>21800	>21800	>21800	>21800	>21800
	121.81	19200	>21800	21600	>21800	>21800	>21800	>21800	>21800	>21800	>21800
	139.98	>21800	>21800	>21800	>21800	>21800	>21800	>21800	>21800	>21800	>21800
	153.07	>21800	>21800	>21800	>21800	>21800	>21800	>21800	>21800	>21800	>21800
	186.93	>21800	>21800	>21800	>21800	>21800		>21800		>21800	
	229.71	>21800		>21800							

→ 124

m kg	s	DRL 160M	160MC	180S	180M	180L
R167	2	690	700	720	740	750
R167	3	700	700	730	750	760
RF: + 6.4 kg / RM: + 201.8 kg						

M_{aDyn} Nm	i	DRL 180LC D1	DRL 180LC D2	DRL 200L D1	DRL 200L D2	DRL 225S D1	DRL 225S D2	DRL 225MC D1	DRL 225MC D2
R167 2	10.24	4170	5950	4710	6750	5160	7640	7640	10900
	11.99	4880	6970	5520	7900	6040	8950	8950	12700
	14.48	5890	8420	6670	9550	7300	10800	10800	15400
	16.98	6910	9880	7820	11200	8560	12600	12600	18100
	19.03	7750	11000	8760	12500	9590	14200	14200	20300
	21.85	8900	12700	10000	14400	11000	16300	16300	
	24.57	10000	14200	11300	16200	12300	18300	18300	
	30.71	12500		14100		>15000			
	37.74								
	46.00								
R167 3	23.71	9550	13600	10800	15400	11800	17500	17500	>21800
	27.96	11200	16100	12700	18200	13900	20600	20600	>21800
	34.41	13800	19800	15600	>21800	17100	>21800	>21800	>21800
	39.92	16000	>21800	18200	>21800	19900	>21800	>21800	>21800
	44.87	18000	>21800	20400	>21800	>21800	>21800	>21800	>21800
	51.76	20800	>21800	>21800	>21800	>21800	>21800	>21800	
	58.65	>21800	>21800	>21800	>21800	>21800	>21800	>21800	
	67.40	>21800		>21800		>21800			
	73.70	>21800		>21800		>21800			
	82.91	>21800	>21800	>21800	>21800	>21800	>21800	>21800	>21800
	93.19	>21800	>21800	>21800	>21800	>21800	>21800	>21800	>21800
	107.49	>21800	>21800	>21800	>21800	>21800	>21800	>21800	
	121.81	>21800	>21800	>21800	>21800	>21800	>21800	>21800	
	139.98	>21800		>21800		>21800			
	153.07	>21800		>21800		>21800			
	186.93								
	229.71								

→ 124

m kg	s	DRL 180LC	DRL 200L	DRL 225S	DRL 225MC
R167	2	760	860	890	930
R167	3	770	870	900	940
RF: + 6.4 kg / RM: + 201.8 kg					

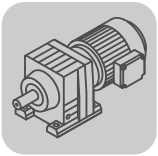

R..DRL
R..Nm

DRL..	i	n_{epk} 1/min	η %	c_{TG} R Nm/'	RF Nm/'	RM Nm/'	φ /R '
R167 2	10.24	2518	97	1293	1293	865	5
	11.99	4500	97	1293	1293	865	5
	14.48	4500	97	1293	1293	865	5
	16.98	4500	97	1293	1293	865	5
	19.03	4500	97	1293	1293	865	5
	21.85	4500	97	1293	1293	865	5
	24.57	4500	97	1293	1293	865	5
	30.71	4500	97	1293	1293	865	5
	37.74	4500	97	1293	1293	865	5
	46.00	4500	97	1293	1293	865	5
R167 3	23.71	4500	96	1387	1387	906	6
	27.96	4500	96	1387	1387	906	6
	34.41	4500	96	1387	1387	906	6
	39.92	4500	96	1387	1387	906	6
	44.87	4500	96	1387	1387	906	6
	51.76	4378	96	1387	1387	906	6
	58.65	4500	96	1387	1387	906	6
	67.40	4500	96	1387	1387	906	6
	73.70	4500	96	1387	1387	906	6
	82.91	3597	96	1400	1400	912	5
	93.19	3924	96	1400	1400	912	5
	107.49	4378	96	1400	1400	912	5
	121.81	4500	96	1400	1400	912	5
	139.98	4500	96	1400	1400	912	5
	153.07	4500	96	1400	1400	912	5
	186.93	4500	95	1400	1400	912	5
	229.71	4500	95	1400	1400	912	5

DRL.. n_e = 1400	i	M_{amax} Nm	M_{apk} Nm	$M_{aNotaus}$ Nm	n_{ak} 1/min	J_G 10^{-4} kgm^2	F_{Ramax} R N	RF N	RM N	F_{Rapk} R N	RF N	RM N
R167 2	10.24	17000	21800	28900	176	751	82500	82500	53500	120000	120000	31100
	11.99	17000	21800	28900	167	583	88700	88700	57300	120000	120000	31100
	14.48	18000	21800	30600	131	431	93800	93800	61100	120000	120000	31100
	16.98	15000	21800	25500	230	329	108900	108900	68300	120000	120000	31100
	19.03	16000	21800	27200	179	276	111400	111400	70600	120000	120000	31100
	21.85	13000	19500	22100	320	222	120000	120000	77600	120000	120000	70200
	24.57	14000	19800	23800	265	183	120000	120000	80200	120000	120000	69700
	30.71	10000	15000	17000	228	130	120000	120000	91300	120000	120000	76800
	37.74	9000	12700	15300	185	86	120000	120000	96600	120000	120000	79300
	46.00	7000	10500	11900	152	62	120000	120000	97700	120000	120000	81300
R167 3	23.71	18000	21800	30600	67	576	116500	116500	75200	120000	120000	31100
	27.96	18000	21800	30600	72	416	120000	120000	80400	120000	120000	31100
	34.41	18000	21800	30600	81	315	120000	120000	87400	120000	120000	31100
	39.92	18000	21800	30600	85	245	120000	120000	88500	120000	120000	31100
	44.87	18000	21800	30600	89	206	120000	120000	88500	120000	120000	31100
	51.76	18000	21800	30600	93	165	120000	120000	88500	120000	120000	31100
	58.65	18000	21800	30600	95	137	120000	120000	88500	120000	120000	31100
	67.40	18000	21800	30600	98	113	120000	120000	88500	120000	120000	31100
	73.70	18000	21800	30600	95	98	120000	120000	88500	120000	120000	31100
	82.91	18000	21800	30600	80	202	120000	120000	88500	120000	120000	31100
	93.19	18000	21800	30600	75	173	120000	120000	88500	120000	120000	31100
	107.49	18000	21800	30600	65	142	120000	120000	88500	120000	120000	31100
	121.81	18000	21800	30600	57	120	120000	120000	88500	120000	120000	31100
	139.98	18000	21800	30600	50	99	120000	120000	88500	120000	120000	31100
	153.07	18000	21800	30600	46	87	120000	120000	88500	120000	120000	31100
	186.93	18000	21800	30600	37	57	120000	120000	88500	120000	120000	31100
	229.71	18000	21800	30600	30	42	120000	120000	88500	120000	120000	31100

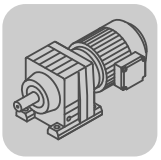

01 179 00 08

R167..

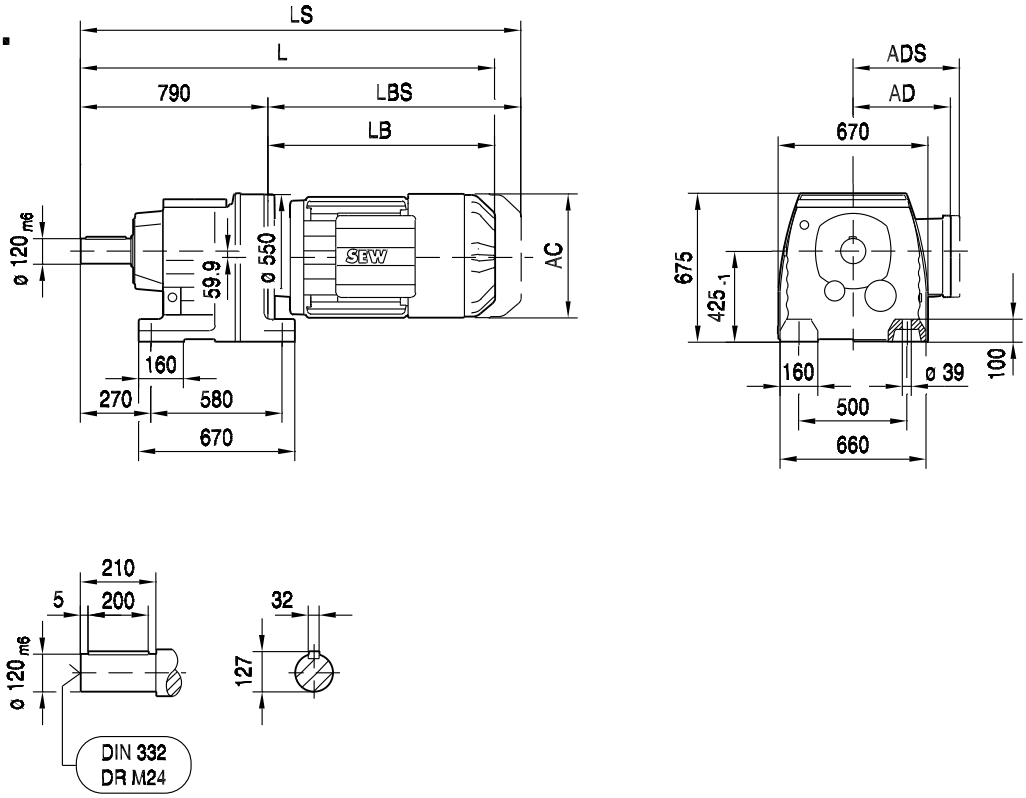

(→ 📖 129)	DRL160..	DRL180S/M	DRL180L/LC	DRL225S	DRL225MC			
AC	270	316	316	394	394			
AD	228	253	253	283	283			
ADS	228	253	253	283	283			
L	1309	1378	1438	1511	1561			
LS	1446	1567	1627	1716	1766			
LB	519	588	648	721	771			
LBS	656	777	837	926	976			

01 180 00 08

RF167..

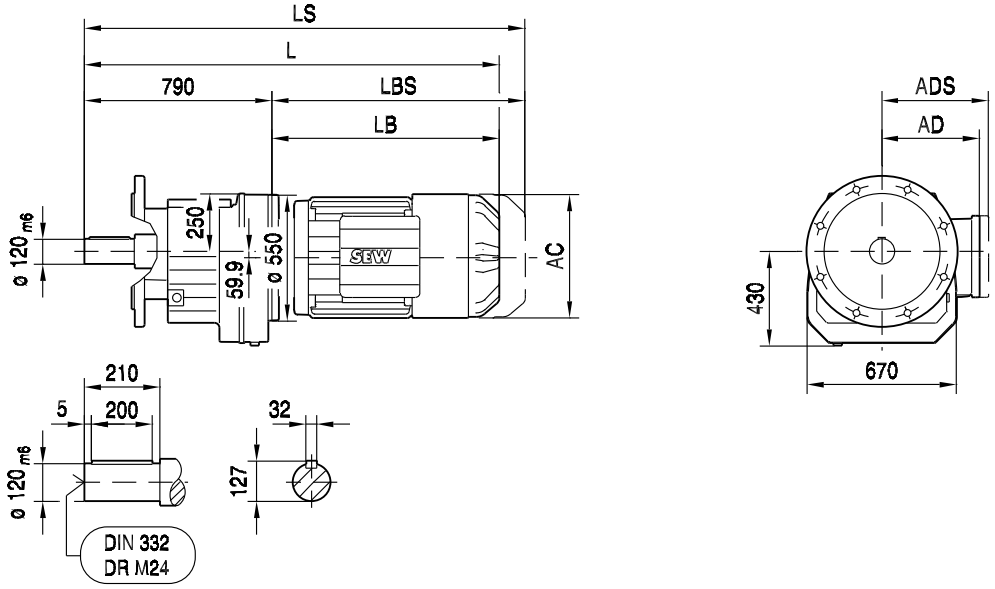

ø 550

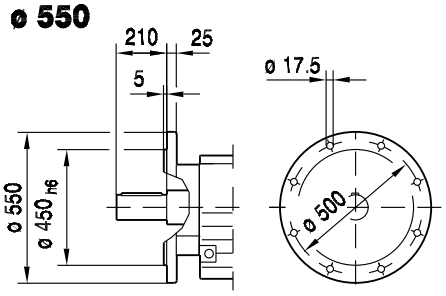

ø 660

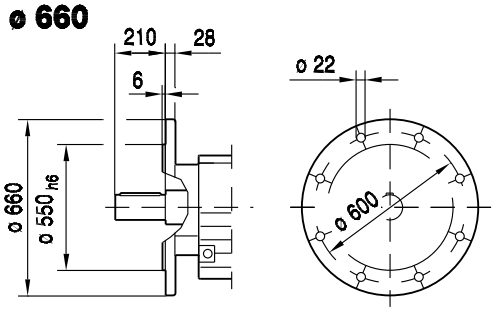

RM167..

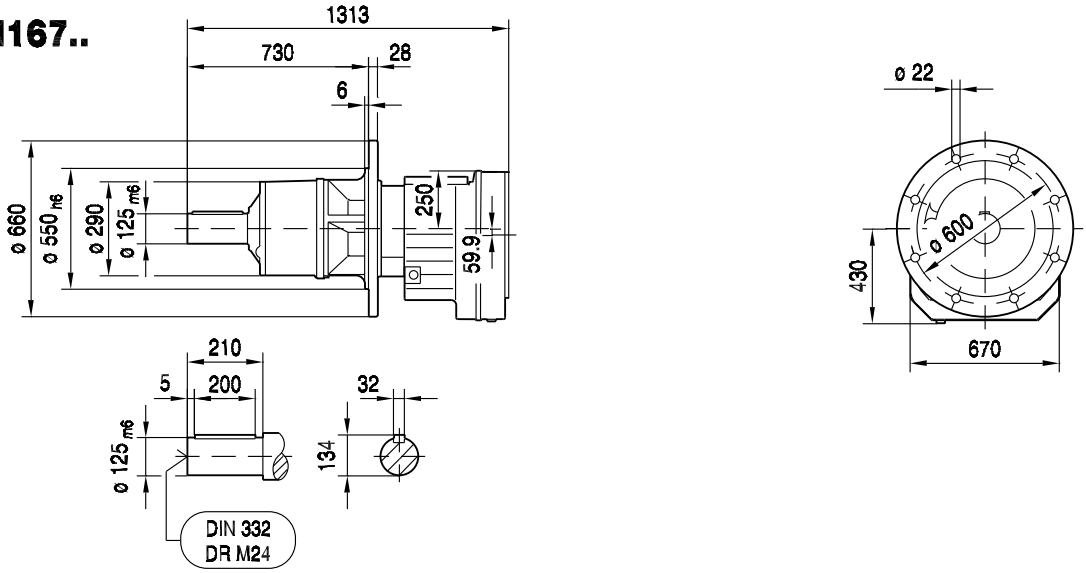

(→ 📖 129)	DRL160..	DRL180S/M	DRL180L/LC	DRL225S	DRL225MC			
AC	270	316	316	394	394			
AD	228	253	253	283	283			
ADS	228	253	253	283	283			
L	1309	1378	1438	1511	1561			
LS	1446	1567	1627	1716	1766			
LB	519	588	648	721	771			
LBS	656	777	837	926	976			

9 F..DRL

9.1 F, FA, FV, FH, FF, FAF, FVF, FHF, FA..B, FV..B, FH..B, FAZ, FVZ, FAF, FVF..DRL

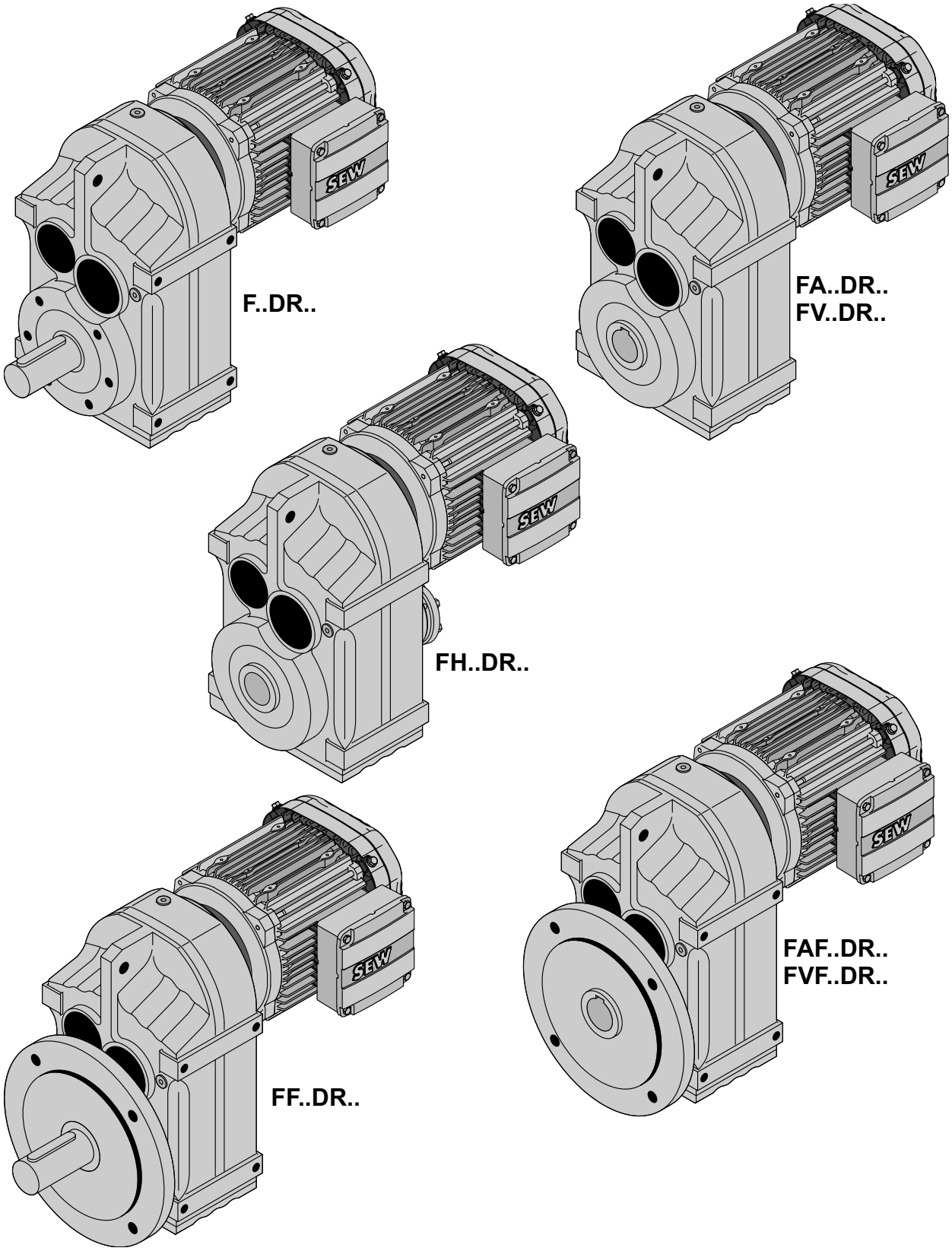

60404axx

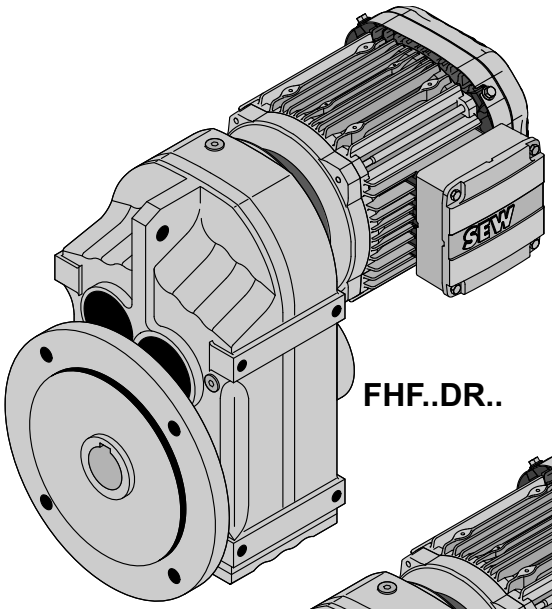

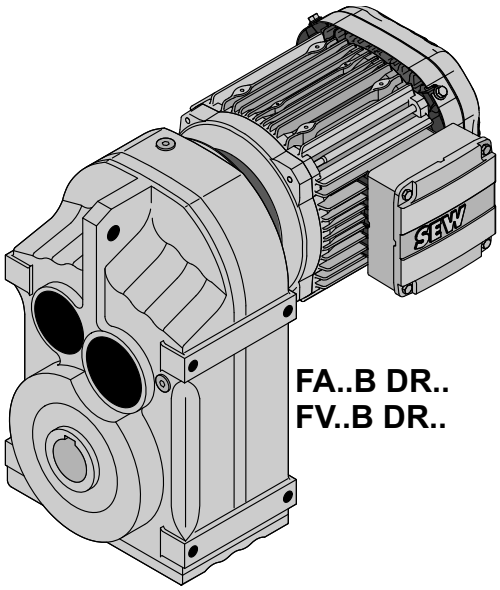

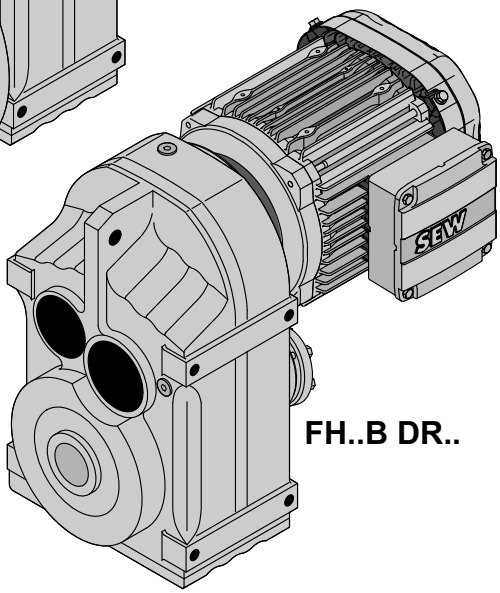

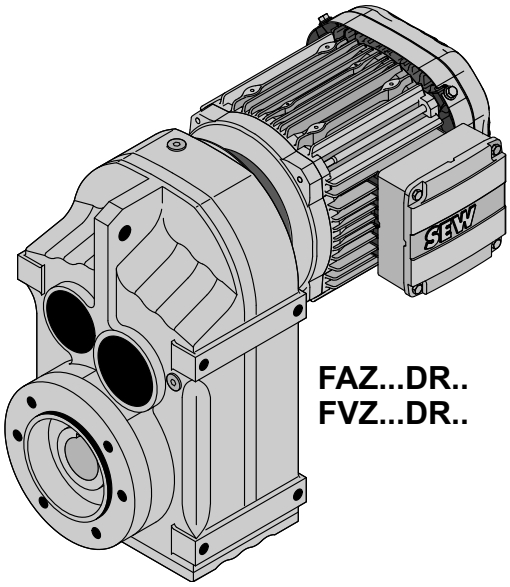

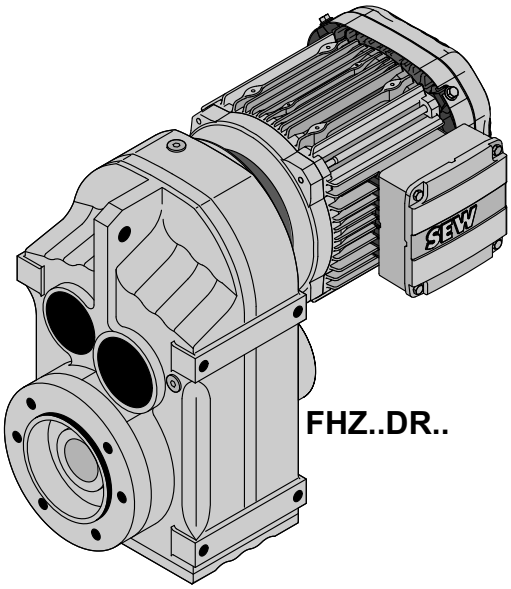

60410axx

9.2 F..Nm

9.2.1 F 27

M_{aDyn} Nm	i	DRL 71S D1	71S D2	71M D1	71M D2	80S D1	80S D2	80M D1	90L D1	100L D1
FA27 2	4.16	20	34	28	56	40	101	52	101	>130
	4.93	24	41	33	67	48	120	62	120	>144
	5.27	26	43	36	72	51	128	66	128	>150
	6.17	30	51	42	84	60	150	78	150	>163
	6.91	34	57	47	94	67	>163	87	>163	>163
	8.13	39	67	55	110	79	>163	103	>163	>163
	9.40	46	78	64	128	91	>163	119		
	9.88	48	81	67	134	96	>157	125	>157	>157
	10.55	51	87	72	143	102	>157	133	>157	>157
	12.35	60	102	84	>157	120	>157	156	>157	>157
	13.84	67	114	94	>157	134	>157	>157	>157	>157
	16.28	79	134	111	>157	>157	>157	>157	>157	>157
	18.84	91	155	128	>157	>157	>157	>157		
	20.15	98	>157	137	>157	>157	>157	>157		
	23.25	113	>157	>157		>157		>157		
	27.18	130		>157						
	29.56	142		>157						
FA27 3	33.83	>157	>157	>157	>157	>157	>157	>157	>157	>157
	38.33	>157	>157	>157	>157	>157	>157	>157		
	40.89	>157	>157	>157	>157	>157	>157	>157	>157	>157
	46.78	>157	>157	>157	>157	>157	>157	>157		
	50.19	>157	>157	>157	>157	>157	>157	>157		
	56.62	>157	>157	>157	>157	>157	>157	>157	>157	>157
	63.86	>157	>157	>157	>157	>157	>157	>157	>157	>157
	72.37	>157	>157	>157	>157	>157	>157	>157		
	77.21	>157	>157	>157	>157	>157	>157	>157	>157	>157
	88.32	>157	>157	>157	>157	>157	>157	>157		
	94.76	>157	>157	>157	>157	>157	>157	>157		
	109.90	>157	>157	>157		>157		>157		
	129.09	>157		>157						
	140.74	>157		>157						

→ 124

m kg	s	DRL 71S	71M	80S	80M	90L	100L
FA27	2	13	14	17	19	27	34
FA27	3	13	14	17	20	27	35
FAF: + 0.7 kg / F: + 0.5 kg / FF: + 1.3 kg							

F..DRL
F..Nm

DRL..	i	n_{epk} 1/min	η %	c_{TG} FA Nm/'	FAF Nm/'	F Nm/'	FF Nm/'
FA27 2	4.16	4120	97	46	46	21	18
	4.93	4500	97	46	46	21	18
	5.27	4500	97	46	46	21	18
	6.17	4500	97	46	46	21	18
	6.91	4500	97	46	46	21	18
	8.13	4500	97	46	46	21	18
	9.40	4500	97	46	46	21	18
	9.88	4500	97	83	83	26	22
	10.55	4500	97	83	83	26	22
	12.35	4500	97	83	83	26	22
	13.84	4500	97	83	83	26	22
	16.28	4500	97	83	83	26	22
	18.84	4500	97	83	83	26	22
	20.15	4500	97	83	83	26	22
	23.25	4500	97	83	83	26	22
	27.18	4500	96	83	83	26	22
	29.56	4500	96	83	83	26	22
FA27 3	33.83	4500	95	95	95	27	23
	38.33	4500	95	95	95	27	23
	40.89	4500	95	95	95	27	23
	46.78	4500	94	95	95	27	23
	50.19	4500	94	95	95	27	23
	56.62	4500	94	99	99	27	23
	63.86	4500	94	99	99	27	23
	72.37	4500	93	99	99	27	23
	77.21	4500	93	99	99	27	23
	88.32	4500	93	99	99	27	23
	94.76	4500	92	99	99	27	23
	109.90	4500	92	99	99	27	23
	129.09	4500	91	99	99	27	23
	140.74	4500	90	99	99	27	23

DRL.. n_e = 1400	i	M_{amax} Nm	M_{apk} Nm	$M_{aNotaus}$ Nm	n_{ak} 1/min	J_G 10^{-4} kgm^2	F_{Ramax} FA N	FAF N	F N	FF N	F_{Rapk} FA N	FAF N	F N	FF N
FA27 2	4.16	87	130	148	361	1.4	1810	1810	1380	1180	4500	4500	4500	4500
	4.93	96	144	163	304	1.0	1860	1860	1420	1210	4500	4500	4500	4500
	5.27	100	150	170	266	0.90	1880	1880	1440	1220	4500	4500	4500	4500
	6.17	109	163	185	227	0.68	1940	1940	1480	1260	4500	4500	4500	4500
	6.91	114	163	194	217	0.56	2000	2000	1530	1300	4500	4500	4500	4500
	8.13	123	163	209	172	0.42	2080	2080	1580	1350	4500	4500	4500	4500
	9.40	130	163	221	160	0.33	2170	2170	1660	1410	4500	4500	4500	4500
	9.88	130	157	221	202	0.74	2400	2400	1830	1560	4500	4500	4500	4500
	10.55	130	157	221	209	0.67	2490	2490	1900	1620	4500	4500	4500	4500
	12.35	130	157	221	211	0.51	2700	2700	2060	1760	4500	4500	4500	4500
	13.84	130	157	221	210	0.43	2860	2860	2180	1860	4500	4500	4500	4500
	16.28	130	157	221	209	0.32	3110	3110	2370	2020	4500	4500	4500	4500
	18.84	130	157	221	212	0.26	3340	3340	2550	2170	4500	4500	4500	4500
	20.15	130	157	221	213	0.23	3450	3450	2630	2240	4500	4500	4500	4500
	23.25	130	157	221	215	0.19	3690	3690	2820	2400	4500	4500	4500	4500
	27.18	130	157	221	217	0.15	3970	3970	3030	2580	4500	4500	4500	4500
	29.56	130	157	221	220	0.13	4120	4120	3140	2680	4500	4500	4500	4500
FA27 3	33.83	130	157	221	166	0.31	4380	4380	3340	2850	4500	4500	4500	4500
	38.33	130	157	221	167	0.26	4500	4500	3530	3010	4500	4500	4500	4500
	40.89	130	157	221	166	0.23	4500	4500	3640	3100	4500	4500	4500	4500
	46.78	130	157	221	150	0.18	4500	4500	3860	3290	4500	4500	4500	4500
	50.19	130	157	221	139	0.17	4500	4500	3980	3390	4500	4500	4500	4500
	56.62	130	157	221	124	0.31	4500	4500	4180	3570	4500	4500	4500	4500
	63.86	130	157	221	110	0.26	4500	4500	4400	3750	4500	4500	4500	4500
	72.37	130	157	221	97	0.22	4500	4500	4500	3960	4500	4500	4500	4500
	77.21	130	157	221	91	0.20	4500	4500	4500	4060	4500	4500	4500	4500
	88.32	130	157	221	79	0.16	4500	4500	4500	4290	4500	4500	4500	4500
	94.76	130	157	221	74	0.15	4500	4500	4500	4420	4500	4500	4500	4500
	109.90	130	157	221	64	0.12	4500	4500	4500	4500	4500	4500	4500	4500
	129.09	130	157	221	54	0.090	4500	4500	4500	4500	4500	4500	4500	4500
	140.74	130	157	221	50	0.080	4500	4500	4500	4500	4500	4500	4500	4500

F..DRL
F..Nm

42 130 00 08

F27..

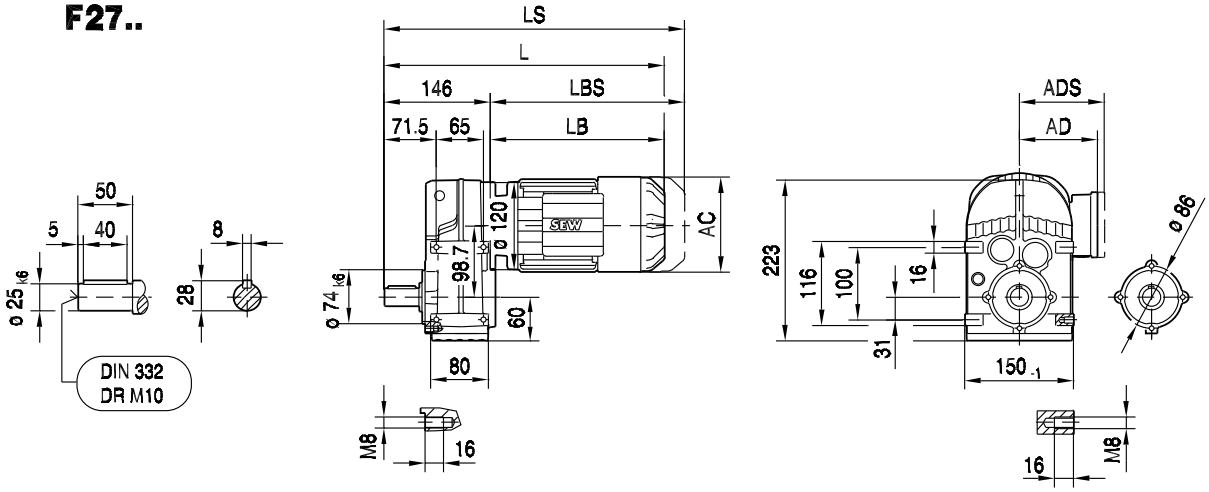

FA27B..

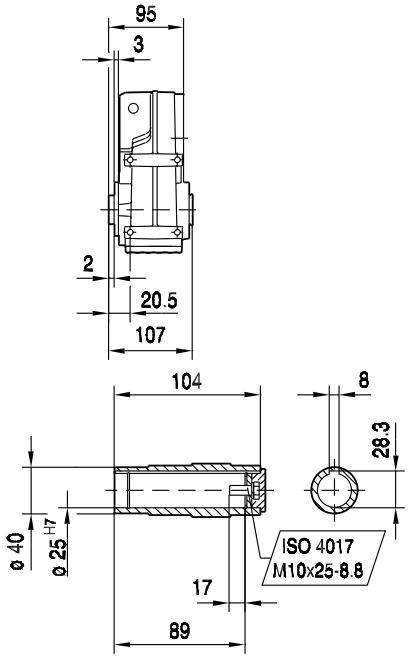

FH27B..
max. DR71..

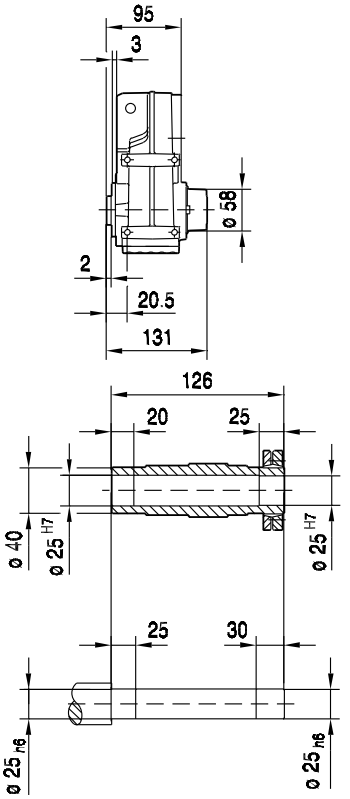

FV27B..

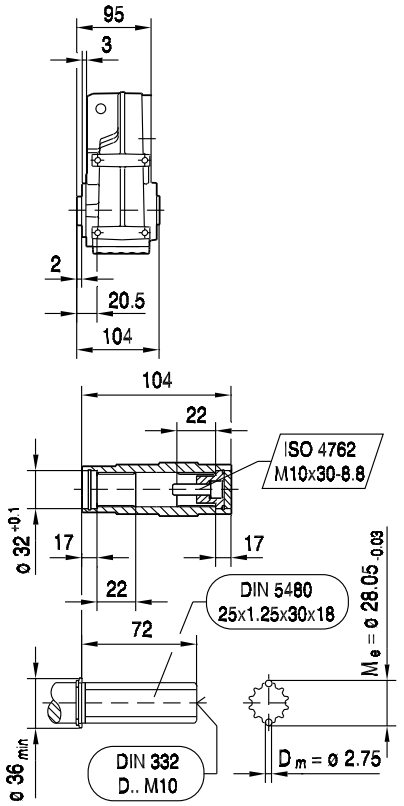

(→ 📖 129)	DRL71S	DRL71M	DRL80S	DRL80M	DRL90L	DRL100L		
AC	139	139	156	156	179	197		
AD	119	119	128	128	140	157		
ADS	129	129	139	139	150	158		
L	434	459	478	509	526	585		
LS	498	523	558	589	612	672		
LB	288	313	332	363	380	439		
LBS	352	377	412	443	466	526		

42 131 00 08

FF27..

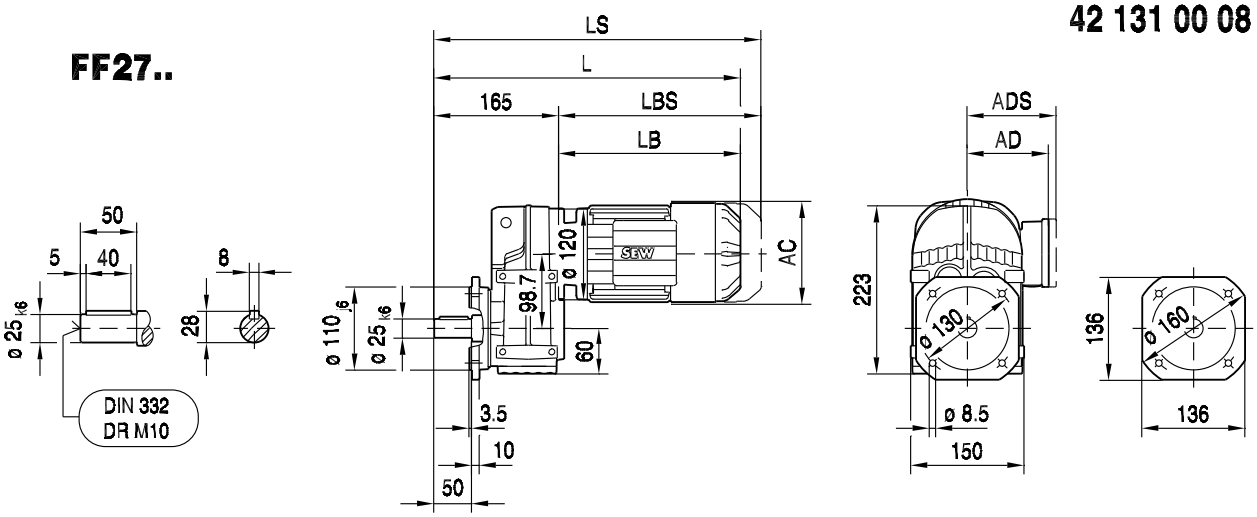

FAF27..

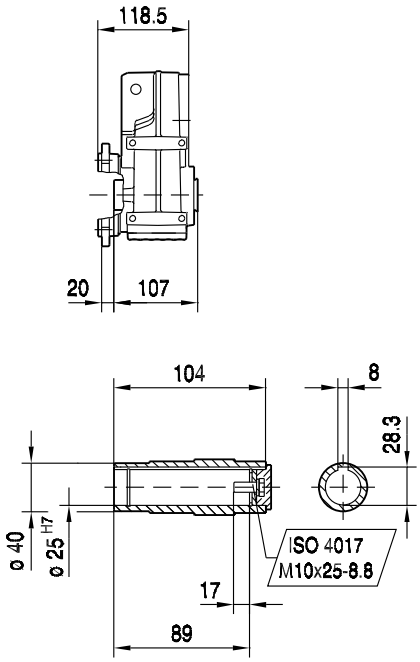

FHF27..

max. DR71..

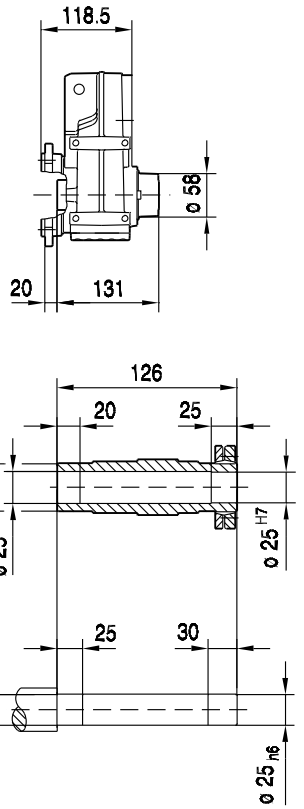

FVF27..

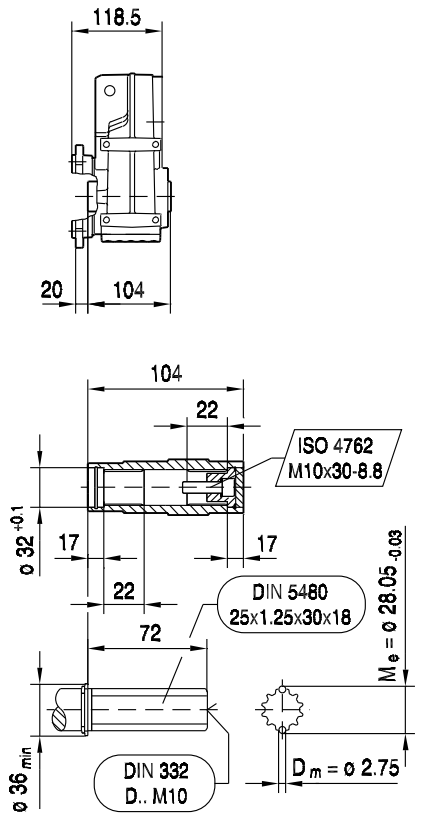

(→ 📖 129)	DRL71S	DRL71M	DRL80S	DRL80M	DRL90L	DRL100L		
AC	139	139	156	156	179	197		
AD	119	119	128	128	140	157		
ADS	129	129	139	139	150	158		
L	453	478	497	528	545	604		
LS	517	542	577	608	631	691		
LB	288	313	332	363	380	439		
LBS	352	377	412	443	466	526		

F..DRL
F..Nm

FA27..

42 132 00 08

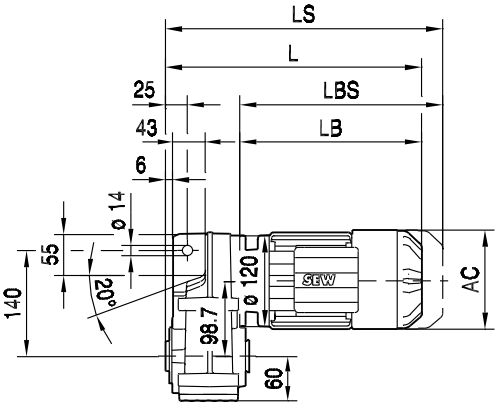

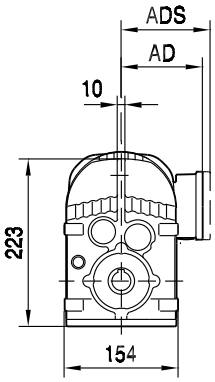

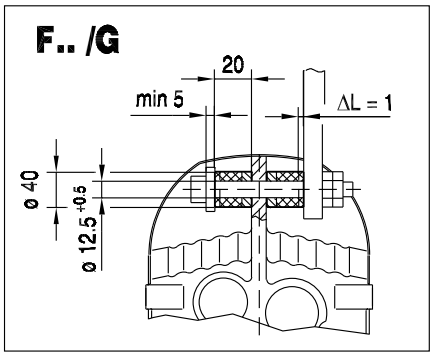

FA27..

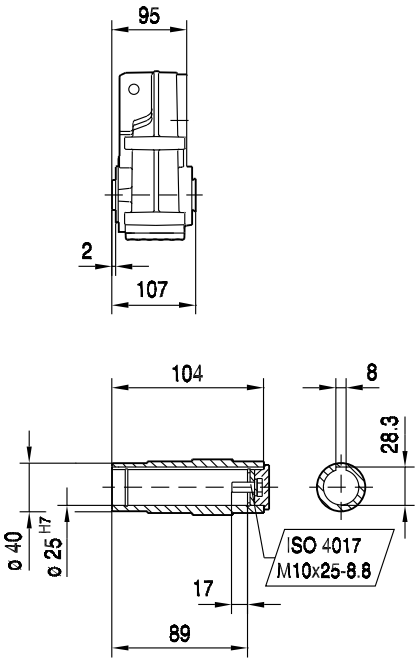

FH27..

max. DR71..

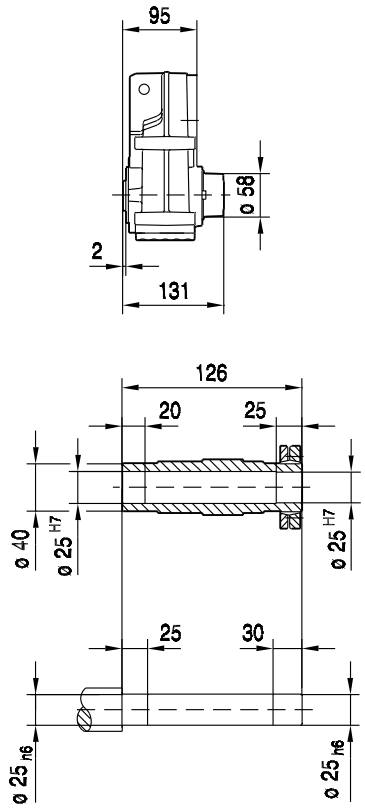

FV27..

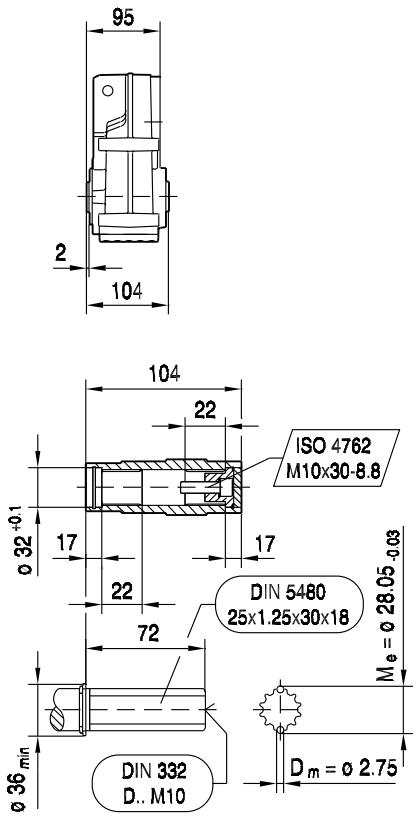

(→ 📖 129)	DRL71S	DRL71M	DRL80S	DRL80M	DRL90L	DRL100L		
AC	139	139	156	156	179	197		
AD	119	119	128	128	140	157		
ADS	129	129	139	139	150	158		
L	383	408	427	458	475	534		
LS	447	472	507	538	561	621		
LB	288	313	332	363	380	439		
LBS	352	377	412	443	466	526		

42 133 00 08

FAZ27..

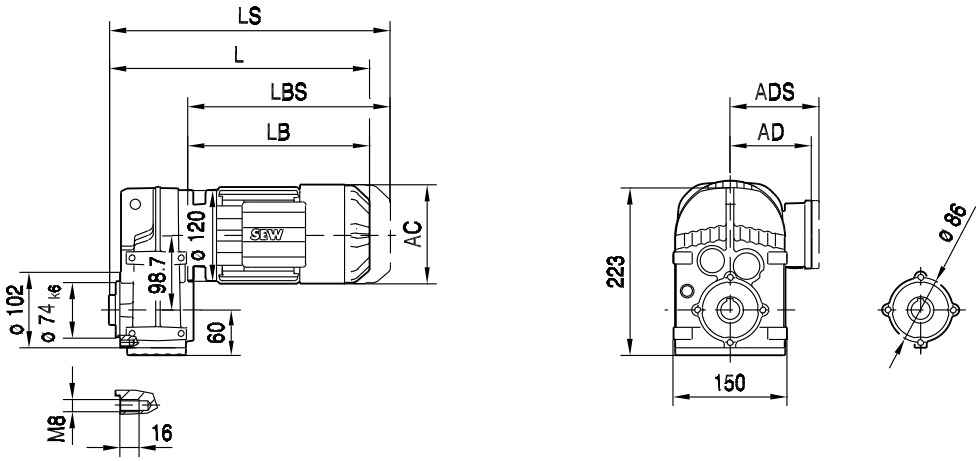

FAZ27..

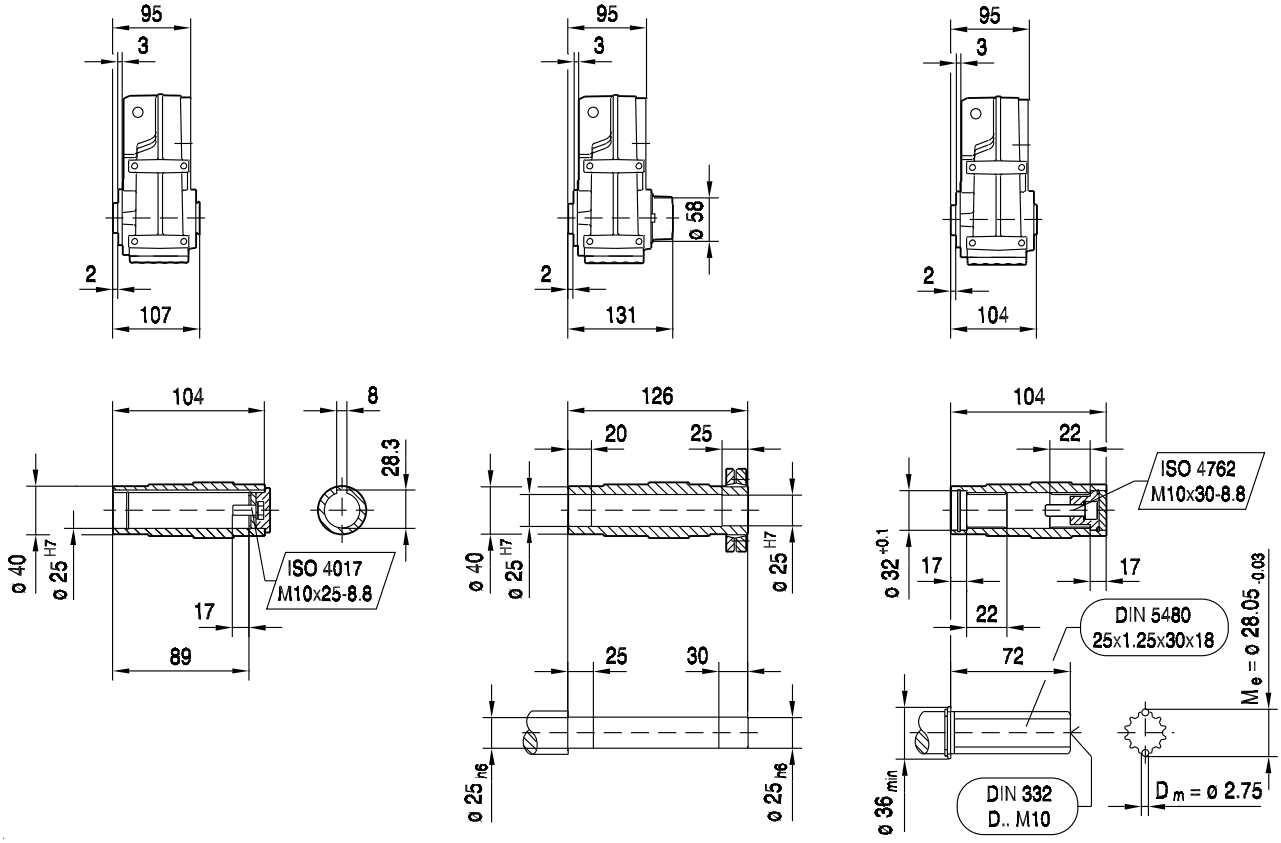

FHZ27..

max. DR71..

FVZ27..

(→ 📖 129)	DRL71S	DRL71M	DRL80S	DRL80M	DRL90L	DRL100L		
AC	139	139	156	156	179	197		
AD	119	119	128	128	140	157		
ADS	129	129	139	139	150	158		
L	383	408	427	458	475	534		
LS	447	472	507	538	561	621		
LB	288	313	332	363	380	439		
LBS	352	377	412	443	466	526		

9.2.2 F 37

M_{aDyn} Nm	i	DRL								
		71S		71M		80S		80M	90L	100L
		D1	D2	D1	D2	D1	D2	D1	D1	D1
FA37 2	3.77	18	31	26	51	37	91	48	91	128
	4.22	20	35	29	57	41	102	53	102	143
	4.90	24	40	33	67	48	119	62	119	166
	5.21	25	43	35	71	51	126	66	126	177
	6.05	29	50	41	82	59	147	76	147	>188
	6.74	33	56	46	92	65	163	85	163	>188
	7.44	36	61	51	101	72	180	94		
	8.01	39	66	54	109	78	194	101	194	>240
	8.97	44	74	61	122	87	215	113	215	>240
	10.42	51	86	71	142	101	>240	131	>240	>240
	11.08	54	91	75	150	107	>240	140	>240	>240
	12.87	62	106	87	175	125	>240	162	>240	>240
	14.33	70	118	97	195	139	>240	181	>240	>240
	15.81	77	130	107	210	153	>240	199		
	17.03	83	140	116	230	165	>240	210	>240	>240
	19.27	93	159	131	>240	187	>240	>240		
	20.57	100	170	140	>240	200	>240	>240		
	23.63	115	195	160		225		>240		
FA37 3	23.88	115	195	160	>240	225	>240	>240	>240	>240
	28.09	135	225	189	>240	>240	>240	>240	>240	>240
	31.69	152	>240	210	>240	>240	>240	>240	>240	>240
	35.91	171	>240	235	>240	>240	>240	>240		
	38.31	182	>240	>240	>240	>240	>240	>240	>240	>240
	43.83	205	>240	>240	>240	>240	>240	>240		
	47.02	220	>240	>240	>240	>240	>240	>240		
	51.70	>240	>240	>240	>240	>240	>240	>240	>240	>240
	54.54	>240	>240	>240		>240		>240		
	58.32	>240	>240	>240	>240	>240	>240	>240	>240	>240
	66.09	>240	>240	>240	>240	>240	>240	>240		
	70.50	>240	>240	>240	>240	>240	>240	>240	>240	>240
	80.65	>240	>240	>240	>240	>240	>240	>240		
	86.53	>240	>240	>240	>240	>240	>240	>240		
	100.36	>240	>240	>240		>240		>240		
	117.88	>240		>240						
	128.51	>240		>240						

→ 124

m kg	s	DRL					
		71S	71M	80S	80M	90L	100L
FA37	2	19	20	23	25	33	41
FA37	3	20	21	23	26	33	41
FAF: + 1.5 kg / F: + 0.5 kg / FF: + 2.3 kg							

DRL..	i	n_{epk} 1/min	η %	c_{TG} FA Nm/'	FAF Nm/'	F Nm/'	FF Nm/'	φ /R '
FA37 2	3.77	4500	97	41	41	20	15	12
	4.22	4500	97	41	41	20	15	11
	4.90	4500	97	41	41	20	15	11
	5.21	4500	97	41	41	20	15	10
	6.05	4500	97	41	41	20	15	10
	6.74	4500	97	41	41	20	15	10
	7.44	4500	97	41	41	20	15	10
	8.01	4500	97	84	84	26	19	7
	8.97	4500	97	84	84	26	19	7
	10.42	4500	97	84	84	26	19	7
	11.08	4500	97	84	84	26	19	7
	12.87	4500	97	84	84	26	19	7
	14.33	4500	97	84	84	26	19	7
	15.81	4500	97	84	84	26	19	6
	17.03	4500	97	84	84	26	19	6
	19.27	4500	97	84	84	26	19	6
	20.57	4500	97	84	84	26	19	6
	23.63	4500	97	84	84	26	19	6
FA37 3	23.88	4500	96	94	94	27	19	8
	28.09	4500	96	94	94	27	19	8
	31.69	4500	96	94	94	27	19	8
	35.91	4500	95	94	94	27	19	8
	38.31	4500	95	94	94	27	19	8
	43.83	4500	95	94	94	27	19	8
	47.02	4500	95	94	94	27	19	8
	51.70	4500	95	97	97	27	19	7
	54.54	4500	95	94	94	27	19	8
	58.32	4500	95	97	97	27	19	7
	66.09	4500	95	97	97	27	19	7
	70.50	4500	94	97	97	27	19	7
	80.65	4500	94	97	97	27	19	7
	86.53	4500	94	97	97	27	19	7
	100.36	4500	94	97	97	27	19	7
	117.88	4500	93	97	97	27	19	7
	128.51	4500	93	97	97	27	19	7

F..DRL
F..Nm

DRL.. n_e = 1400	i	M_{amax} Nm	M_{apk} Nm	$M_{aNotaus}$ Nm	n_{ak} 1/min	J_G 10^{-4} kgm^2	F_{Ramax} FA N	FAF N	F N	FF N	F_{Rapk} FA N	FAF N	F N	FF N
FA37 2	3.77	105	157	179	451	2.8	2470	2470	1970	2220	7000	7000	4810	5860
	4.22	110	165	187	427	2.3	2550	2550	2030	2300	7000	7000	4730	5820
	4.90	120	180	204	367	1.8	2630	2630	2100	2380	7000	7000	4560	5740
	5.21	125	187	213	326	1.6	2660	2660	2120	2410	7000	7000	4470	5700
	6.05	135	188	230	281	1.2	2750	2750	2190	2510	7000	7000	4460	5700
	6.74	140	188	238	267	1.0	2850	2850	2270	2600	7000	7000	4460	5700
	7.44	145	188	247	242	0.83	2940	2940	2350	2680	7000	7000	4460	5700
	8.01	170	240	289	200	1.5	2960	2960	2360	2710	7000	7000	3610	4100
	8.97	175	240	298	190	1.3	3080	3080	2460	2820	7000	7000	3610	4100
	10.42	185	240	315	163	1.0	3230	3230	2580	2960	7000	7000	3610	4100
	11.08	190	240	323	144	0.94	3290	3290	2620	3020	7000	7000	3610	4100
	12.87	200	240	340	124	0.74	3450	3450	2750	3170	7000	7000	3610	4100
	14.33	200	240	340	126	0.63	3650	3650	2910	3330	7000	7000	3610	4100
	15.81	200	240	340	127	0.52	3840	3840	3070	3490	7000	7000	3610	4100
	17.03	200	240	340	129	0.48	3990	3990	3180	3610	7000	7000	3610	4100
	19.27	200	240	340	130	0.40	4250	4250	3390	3820	7000	7000	3610	4100
	20.57	200	240	340	131	0.36	4390	4390	3500	3940	7000	7000	3610	4100
	23.63	200	240	340	135	0.29	4690	4690	3740	4190	7000	7000	3610	4100
FA37 3	23.88	200	240	340	96	0.60	4720	4720	3760	4210	7000	7000	3610	4100
	28.09	200	240	340	96	0.45	5090	5090	4060	4520	7000	7000	3610	4100
	31.69	200	240	340	95	0.35	5380	5380	4290	4760	7000	7000	3610	4100
	35.91	200	240	340	97	0.29	5700	5700	4290	5020	7000	7000	3610	4100
	38.31	200	240	340	97	0.26	5870	5870	4290	5160	7000	7000	3610	4100
	43.83	200	240	340	96	0.21	6240	6240	4290	5460	7000	7000	3610	4100
	47.02	200	240	340	96	0.19	6430	6430	4290	5620	7000	7000	3610	4100
	51.70	200	240	340	95	0.34	6710	6710	4290	5670	7000	7000	3610	4100
	54.54	200	240	340	97	0.15	6860	6860	4290	5670	7000	7000	3610	4100
	58.32	200	240	340	96	0.27	7000	7000	4290	5670	7000	7000	3610	4100
	66.09	200	240	340	95	0.23	7000	7000	4290	5670	7000	7000	3610	4100
	70.50	200	240	340	95	0.21	7000	7000	4290	5670	7000	7000	3610	4100
	80.65	200	240	340	87	0.17	7000	7000	4290	5670	7000	7000	3610	4100
	86.53	200	240	340	81	0.15	7000	7000	4290	5670	7000	7000	3610	4100
	100.36	200	240	340	70	0.12	7000	7000	4290	5670	7000	7000	3610	4100
	117.88	200	240	340	59	0.10	7000	7000	4290	5670	7000	7000	3610	4100
	128.51	200	240	340	54	0.080	7000	7000	4290	5670	7000	7000	3610	4100

42 134 00 08

F37..

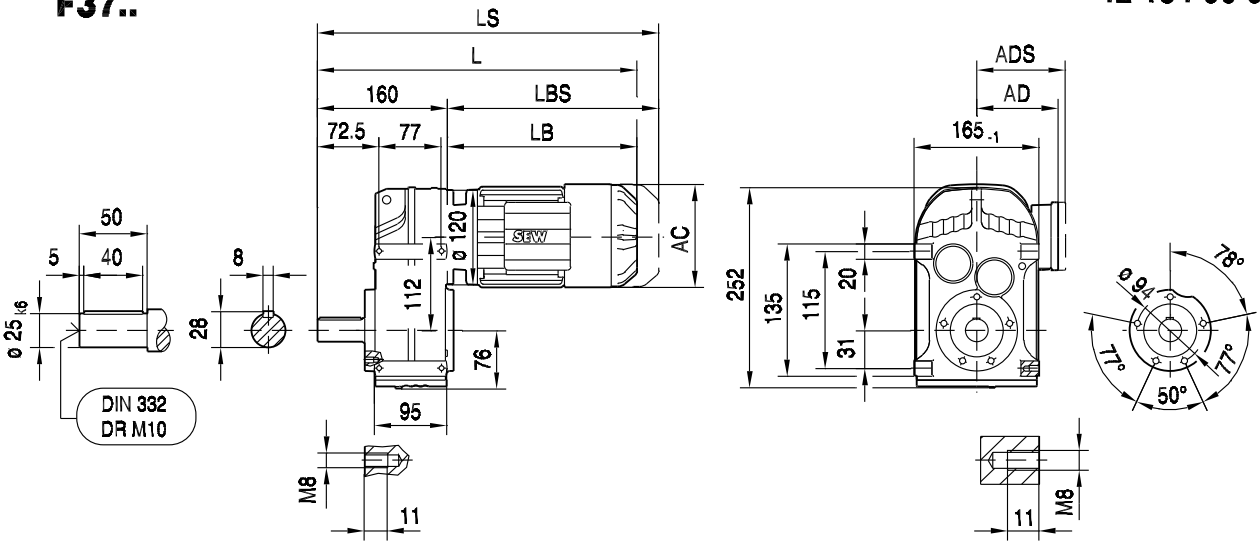

FA37B..

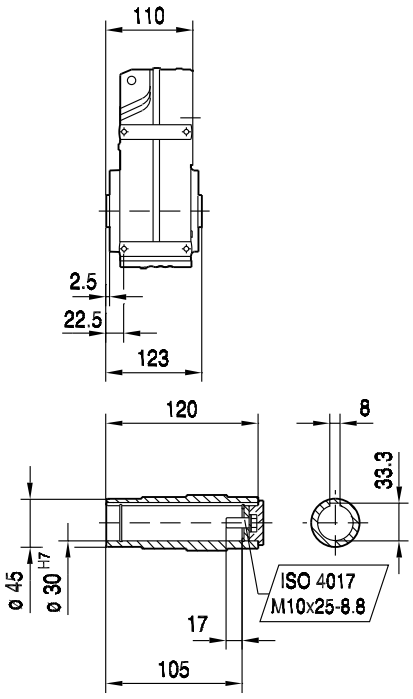

FH37B..

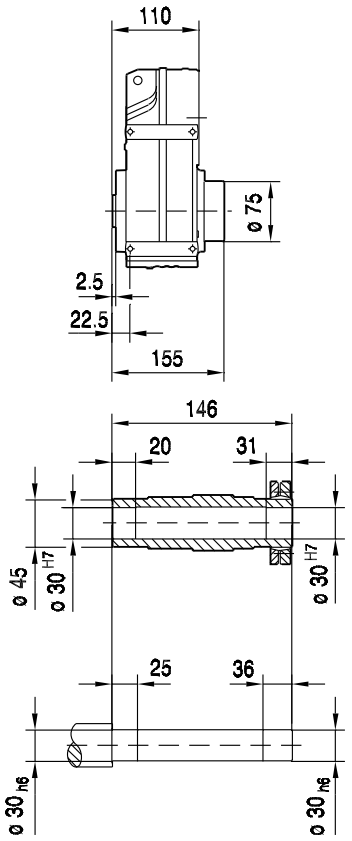

FV37B..

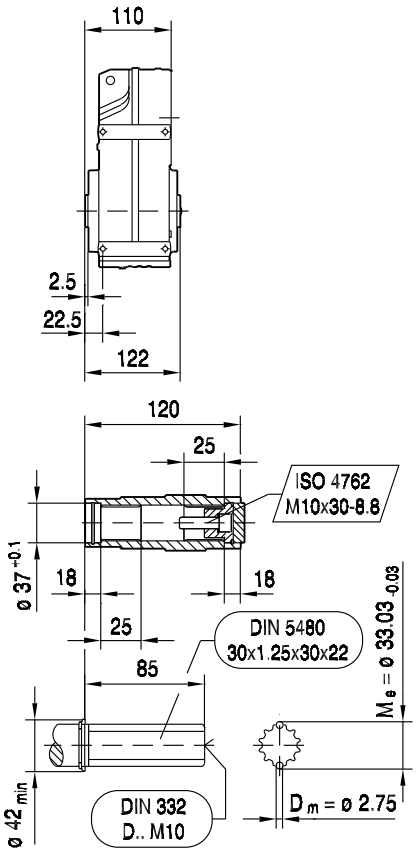

(→ 📖 129)	DRL71S	DRL71M	DRL80S	DRL80M	DRL90L	DRL100L		
AC	139	139	156	156	179	197		
AD	119	119	128	128	140	157		
ADS	129	129	139	139	150	158		
L	448	473	492	523	540	599		
LS	512	537	572	603	626	686		
LB	288	313	332	363	380	439		
LBS	352	377	412	443	466	526		

F..DRL
F..Nm

FF37..

42 135 00 08

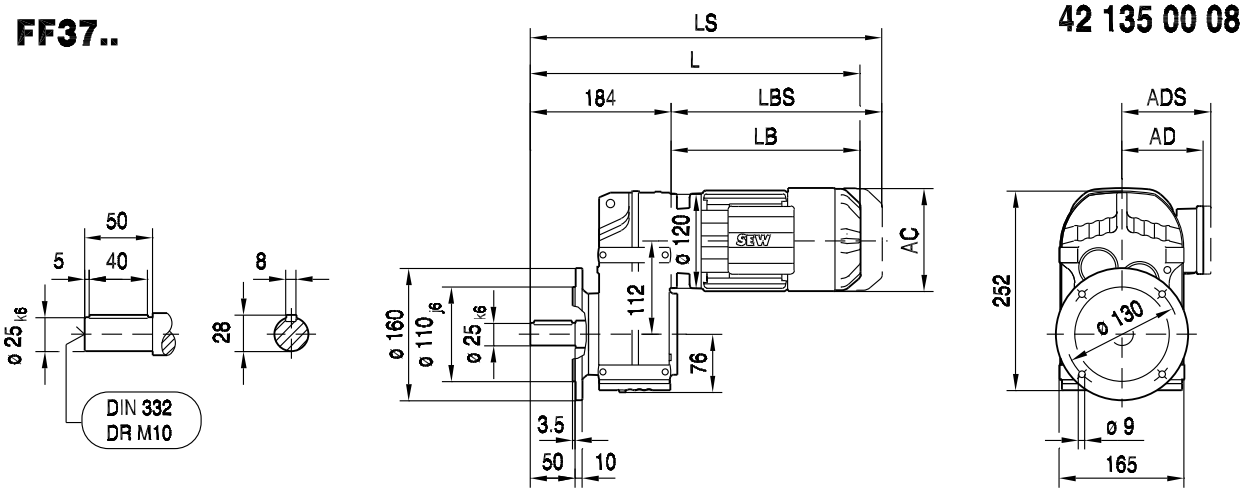

FAF37..

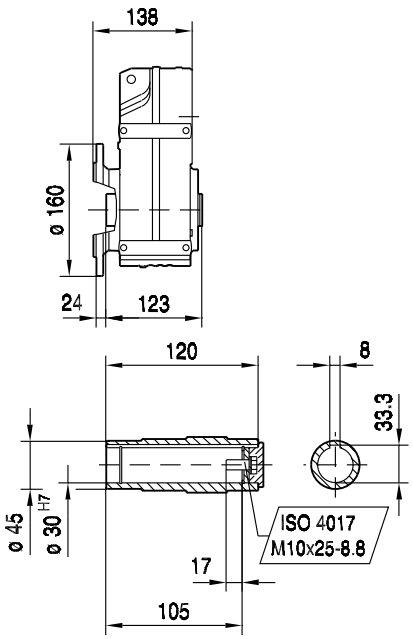

FHF37..

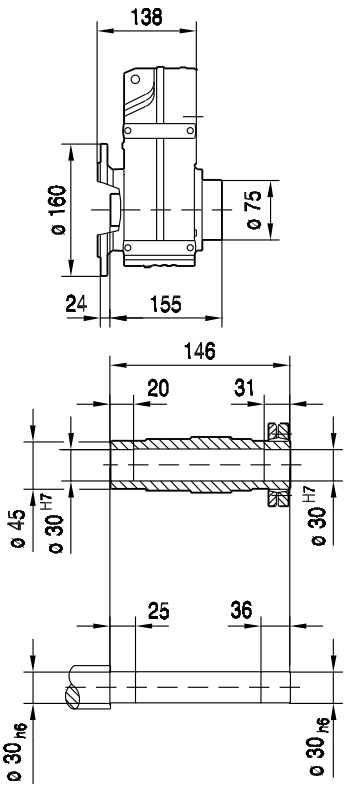

FVF37..

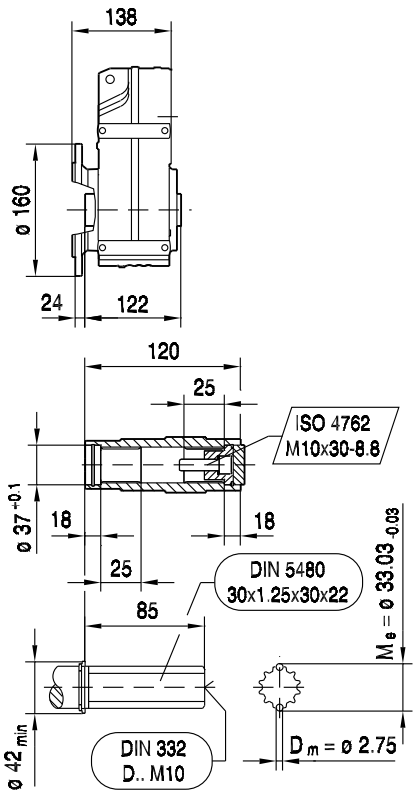

(→ 📖 129)	DRL71S	DRL71M	DRL80S	DRL80M	DRL90L	DRL100L		
AC	139	139	156	156	179	197		
AD	119	119	128	128	140	157		
ADS	129	129	139	139	150	158		
L	472	497	516	547	564	623		
LS	536	561	596	627	650	710		
LB	288	313	332	363	380	439		
LBS	352	377	412	443	466	526		

42 136 00 08

FA37..

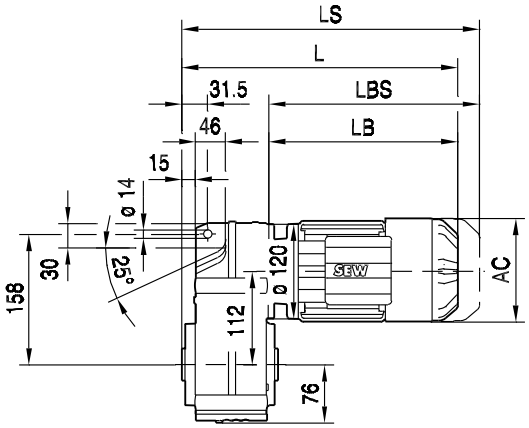

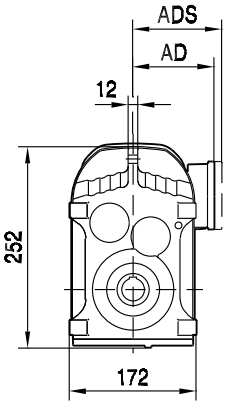

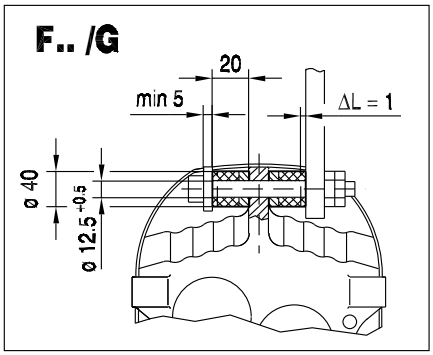

FA37..

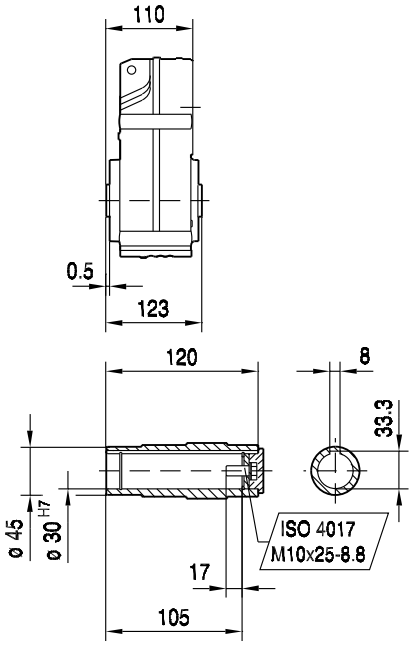

FH37..

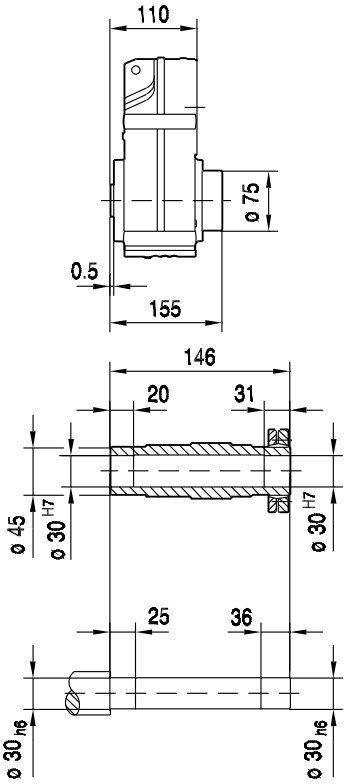

FV37..

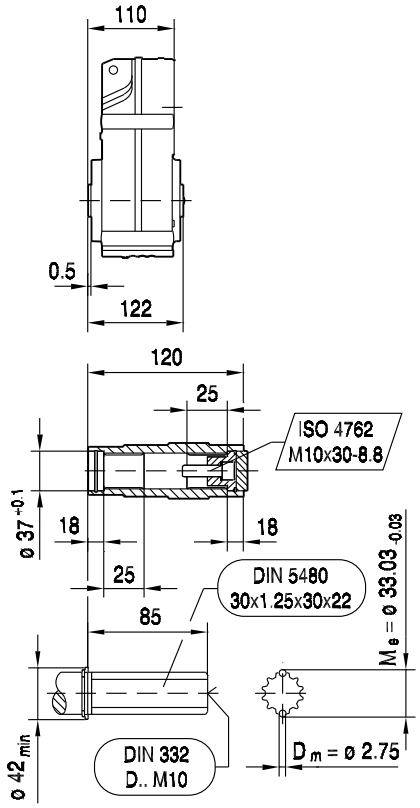

(→ 📖 129)	DRL71S	DRL71M	DRL80S	DRL80M	DRL90L	DRL100L		
AC	139	139	156	156	179	197		
AD	119	119	128	128	140	157		
ADS	129	129	139	139	150	158		
L	398	423	442	473	490	549		
LS	462	487	522	553	576	636		
LB	288	313	332	363	380	439		
LBS	352	377	412	443	466	526		

F..DRL
F..Nm

FAZ37..

42 137 00 08

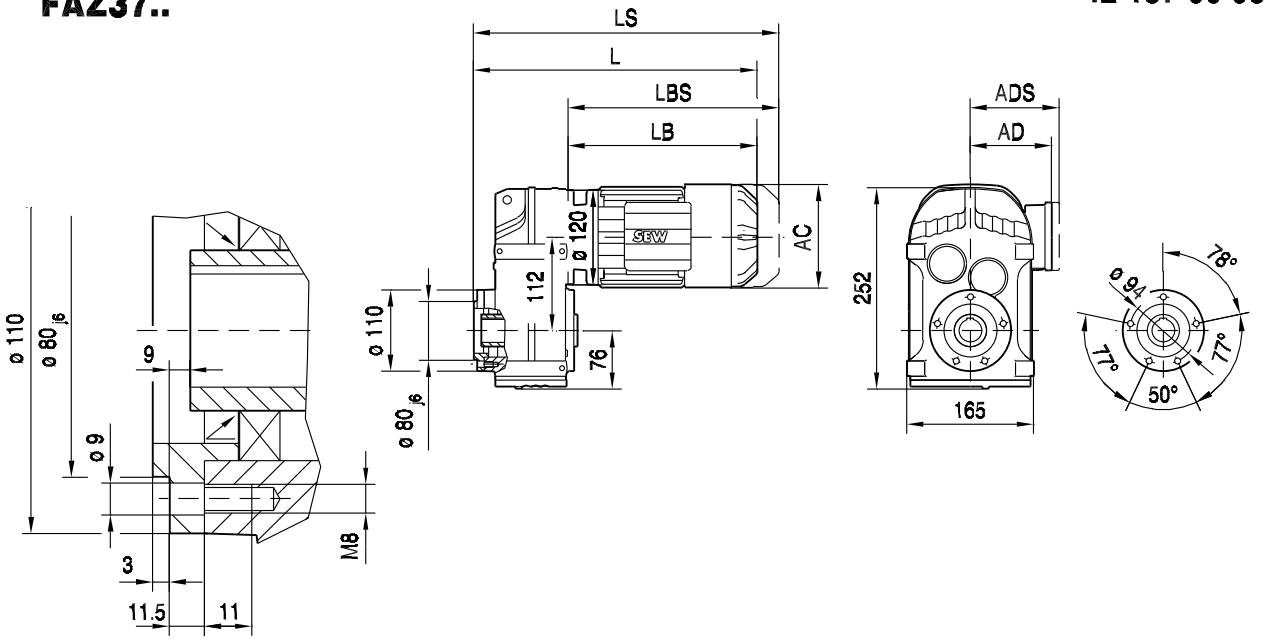

FAZ37..

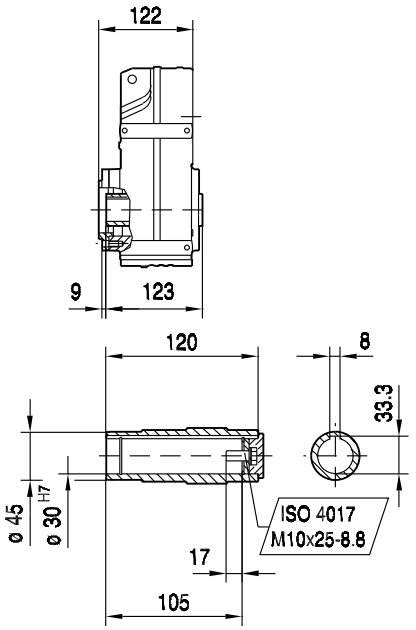

FHZ37..

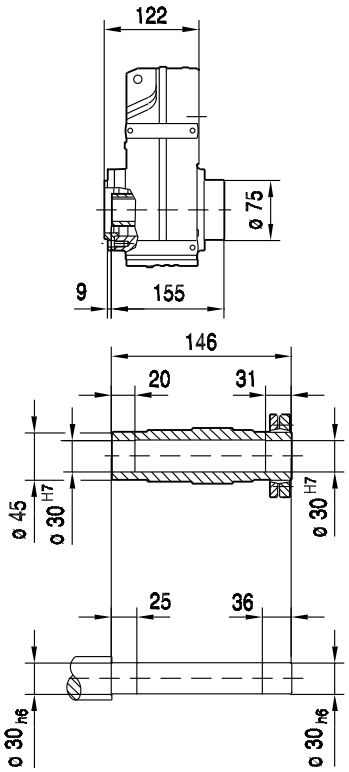

FVZ37..

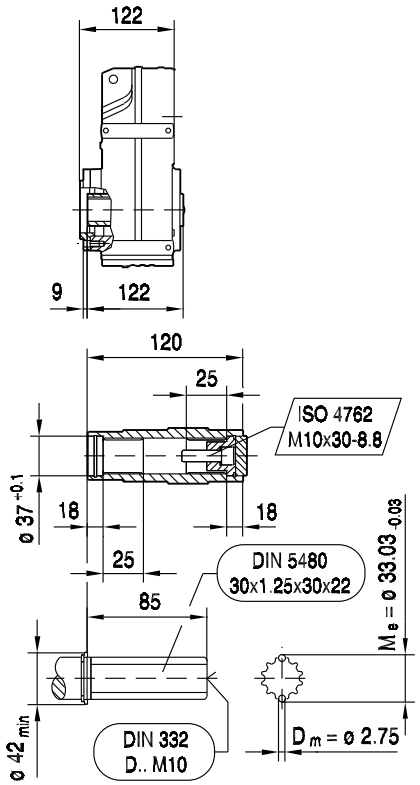

(→ 📖 129)	DRL71S	DRL71M	DRL80S	DRL80M	DRL90L	DRL100L		
AC	139	139	156	156	179	197		
AD	119	119	128	128	140	157		
ADS	129	129	139	139	150	158		
L	410	435	454	485	502	561		
LS	474	499	534	565	588	648		
LB	288	313	332	363	380	439		
LBS	352	377	412	443	466	526		

42 138 00 08

FT37..

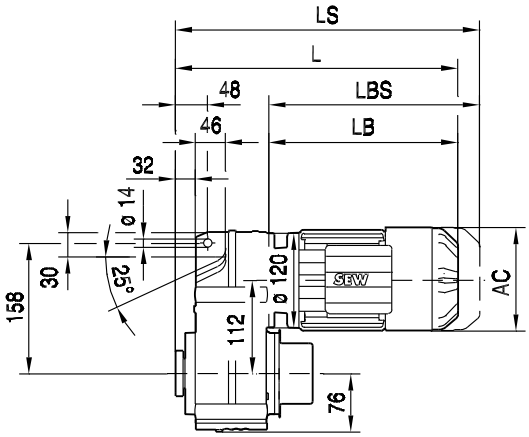

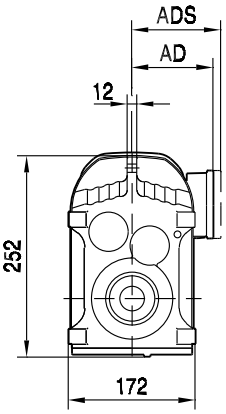

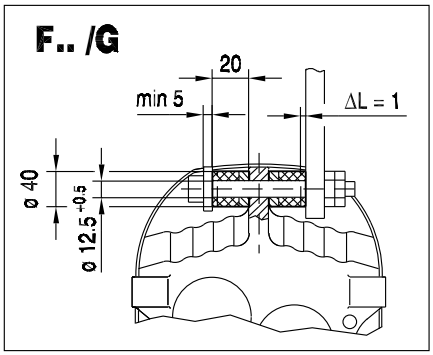

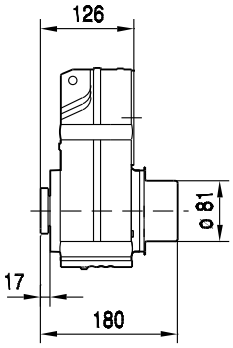

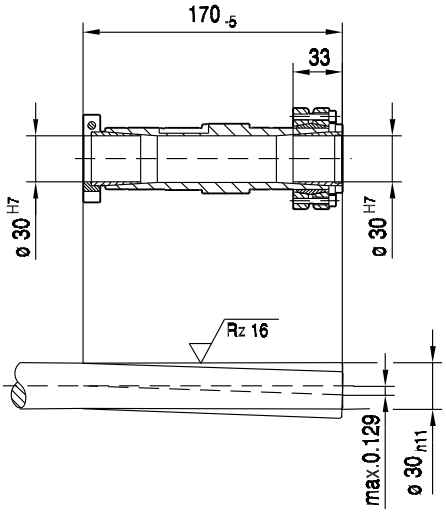

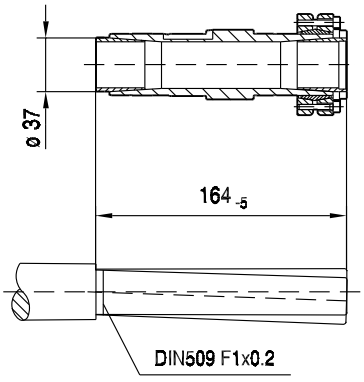

(→ 📖 129)	DRL71S	DRL71M	DRL80S	DRL80M	DRL90L	DRL100L		
AC	139	139	156	156	179	197		
AD	119	119	128	128	140	157		
ADS	129	129	139	139	150	158		
L	414	439	458	489	506	565		
LS	478	503	538	569	592	652		
LB	288	313	332	363	380	439		
LBS	352	377	412	443	466	526		

9.2.3 F 47

M_{aDyn} Nm	i	DRL 71S D1	71S D2	71M D1	71M D2	80S D1	80S D2	80M D1	90L D1	90L D2	100L D1
FA47 2	4.99	24	41	34	68	48	121	63	121	220	169
	5.76	28	47	39	78	56	140	73	140	255	196
	6.34	31	52	43	86	61	154	80	154	280	215
	7.44	36	61	51	101	72	180	94	180	330	250
	7.88	38	65	54	107	76	191	99	191	350	265
	8.96	43	74	61	122	87	215	113	215	395	300
	10.97	53	90	74	149	106	265	138	265	>435	370
	12.66	61	104	86	172	123	305	160	305	>435	425
	13.93	68	115	95	189	135	335	176	335	>435	>435
	16.36	79	135	111	220	159	395	205	395	>435	>435
	17.33	84	143	118	235	168	420	215	420	>435	>435
	19.70	96	162	134	265	191	>435	245	>435	>435	>435
	21.82	106	180	148	295	210	>435	275	>435	>435	>435
	25.72	125	210	175	345	245	>435	320	>435		>435
	29.32	142	240	199	395	280	>435	365			
	30.86	150	250	205	415	295	>435	385			
FA47 3	28.88	139	235	194	385	275	>435	360	>435	>435	>435
	34.29	165	275	230	>435	325	>435	425	>435	>435	>435
	36.61	176	295	245	>435	350	>435	>435	>435	>435	>435
	42.86	205	345	285	>435	410	>435	>435	>435	>435	>435
	48.00	225	385	315	>435	>435	>435	>435	>435	>435	>435
	56.49	265	>435	375	>435	>435	>435	>435	>435		>435
	65.36	310	>435	430	>435	>435	>435	>435			
	68.09	320	>435	>435	>435	>435	>435	>435	>435		>435
	79.72	375	>435	>435	>435	>435	>435	>435	>435		>435
	89.29	420	>435	>435	>435	>435	>435	>435	>435		>435
	105.09	>435	>435	>435	>435	>435	>435	>435	>435		>435
	121.57	>435	>435	>435	>435	>435	>435	>435			
	130.07	>435	>435	>435	>435	>435	>435	>435			
	150.06	>435	>435	>435		>435		>435			
	175.38	>435		>435							
	190.76	>435		>435							

	→ 124

m kg	s	DRL 71S	71M	80S	80M	90L	100L
FA47	2	24	25	27	30	37	45
FA47	3	24	25	28	30	38	46
FAF: + 2.7 kg / F: + 0.8 kg / FF: + 3.9 kg							

DRL..	i	n_{epk} 1/min	η %	c_{TG} FA Nm/'	FAF Nm/'	F Nm/'	FF Nm/'	φ /R '
FA47 2	4.99	4500	97	99	99	34	30	9
	5.76	4500	97	99	99	34	30	9
	6.34	4500	97	99	99	34	30	8
	7.44	4500	97	99	99	34	30	8
	7.88	4500	97	99	99	34	30	8
	8.96	4500	97	99	99	34	30	8
	10.97	4500	97	125	125	37	32	6
	12.66	4500	97	125	125	37	32	6
	13.93	4500	97	125	125	37	32	6
	16.36	4500	97	125	125	37	32	6
	17.33	4500	97	125	125	37	32	6
	19.70	4500	97	125	125	37	32	6
	21.82	4500	97	125	125	37	32	6
	25.72	4500	97	125	125	37	32	6
	29.32	4500	97	125	125	37	32	6
	30.86	4500	97	125	125	37	32	6
FA47 3	28.88	4500	96	136	136	38	33	7
	34.29	4500	96	136	136	38	33	7
	36.61	4500	96	136	136	38	33	7
	42.86	4500	96	136	136	38	33	7
	48.00	4500	95	136	136	38	33	7
	56.49	4500	95	136	136	38	33	7
	65.36	4500	95	136	136	38	33	7
	68.09	4500	95	138	138	38	33	6
	79.72	4500	95	138	138	38	33	6
	89.29	4500	95	138	138	38	33	6
	105.09	4500	94	138	138	38	33	6
	121.57	4500	94	138	138	38	33	6
	130.07	4500	94	138	138	38	33	6
	150.06	4500	93	138	138	38	33	6
	175.38	4500	93	138	138	38	33	6
	190.76	4500	92	138	138	38	33	6

F..DRL
F..Nm

DRL.. n_e = 1400	i	M_{amax} Nm	M_{apk} Nm	$M_{aNotaus}$ Nm	n_{ak} 1/min	J_G 10^{-4} kgm^2	F_{Ramax} FA N	FAF N	F N	FF N	F_{Rapk} FA N	FAF N	F N	FF N
FA47 2	4.99	320	435	544	341	4.4	1160	1160	2310	2410	10000	10000	900	900
	5.76	340	435	578	295	3.4	1180	1180	2390	2500	10000	10000	900	900
	6.34	350	435	595	284	2.9	1230	1230	2470	2580	10000	10000	900	900
	7.44	380	435	646	242	2.3	1190	1190	2530	2660	10000	10000	900	900
	7.88	380	435	646	254	2.1	1280	1280	2630	2750	10000	10000	900	900
	8.96	330	435	561	424	1.6	1970	1970	3250	3310	10000	10000	900	900
	10.97	400	435	680	346	2.6	2060	2060	3440	3510	10000	10000	900	900
	12.66	400	435	680	371	2.1	2320	2320	3740	3790	10000	10000	900	900
	13.93	400	435	680	388	1.8	2510	2510	3950	3990	10000	10000	900	900
	16.36	400	435	680	403	1.5	2840	2840	4320	4340	10000	10000	900	900
	17.33	400	435	680	398	1.4	2960	2960	4450	4470	10000	10000	900	900
	19.70	400	435	680	355	1.1	3230	3230	4770	4770	10000	10000	900	900
	21.82	400	435	680	321	0.96	3460	3460	5030	5020	10000	10000	900	900
	25.72	400	435	680	272	0.75	3850	3850	5460	5430	10000	10000	900	900
	29.32	400	435	680	239	0.52	4170	4170	5830	5780	10000	10000	900	900
	30.86	400	435	680	227	0.46	4300	4300	5920	5920	10000	10000	900	900
FA47 3	28.88	400	435	680	111	1.1	4130	4130	5790	5740	10000	10000	900	900
	34.29	400	435	680	111	0.85	4580	4580	5920	5920	10000	10000	900	900
	36.61	400	435	680	112	0.76	4750	4750	5920	5920	10000	10000	900	900
	42.86	400	435	680	112	0.58	5190	5190	5920	5920	10000	10000	900	900
	48.00	400	435	680	113	0.48	5520	5520	5920	5920	10000	10000	900	900
	56.49	400	435	680	113	0.36	6020	6020	5920	5920	10000	10000	900	900
	65.36	400	435	680	107	0.29	6490	6490	5920	5920	10000	10000	900	900
	68.09	400	435	680	103	0.61	6620	6620	5920	5920	10000	10000	900	900
	79.72	400	435	680	88	0.48	7160	7160	5920	5920	10000	10000	900	900
	89.29	400	435	680	78	0.40	7570	7570	5920	5920	10000	10000	900	900
	105.09	400	435	680	67	0.30	8180	8180	5920	5920	10000	10000	900	900
	121.57	400	435	680	58	0.25	8760	8760	5920	5920	10000	10000	900	900
	130.07	400	435	680	54	0.23	9040	9040	5920	5920	10000	10000	900	900
	150.06	400	435	680	47	0.18	9640	9640	5920	5920	10000	10000	900	900
	175.38	400	435	680	40	0.14	10000	10000	5920	5920	10000	10000	900	900
	190.76	400	435	680	37	0.13	10000	10000	5920	5920	10000	10000	900	900

F47..

42 139 00 08

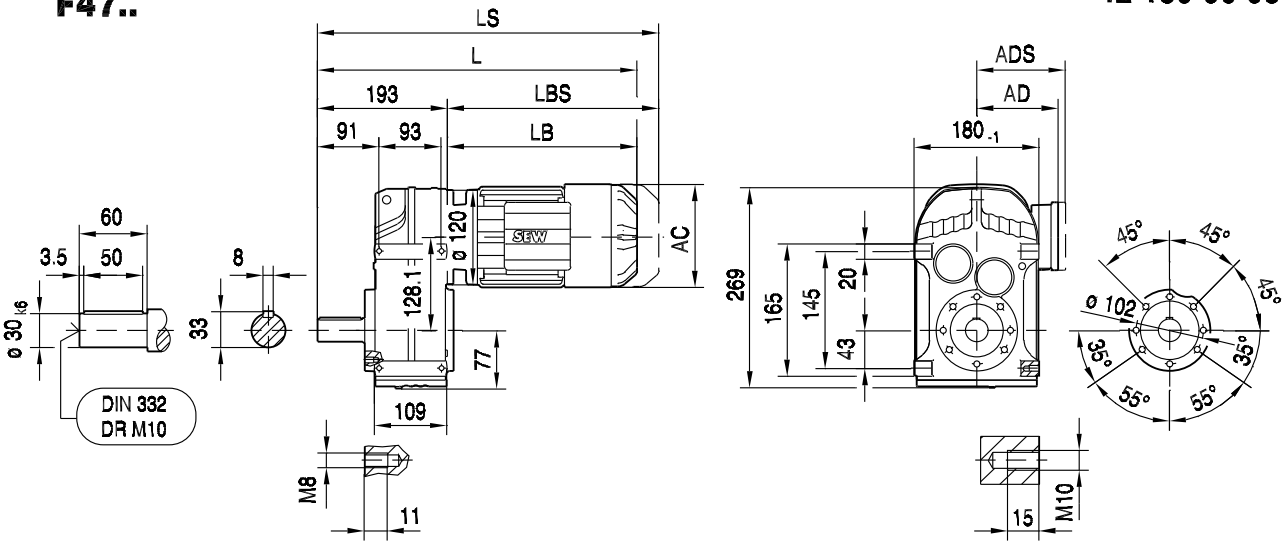

FA47B..

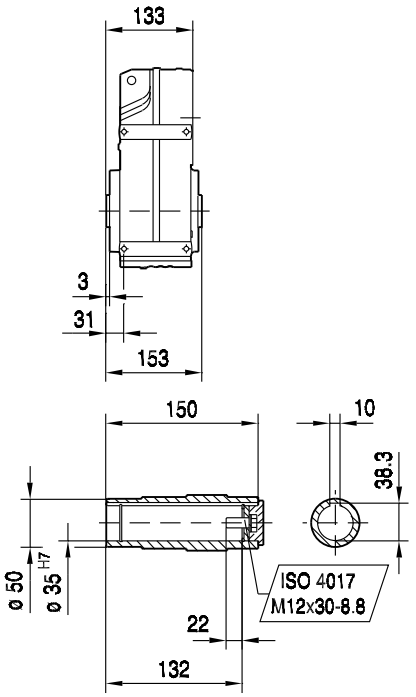

FH47B..

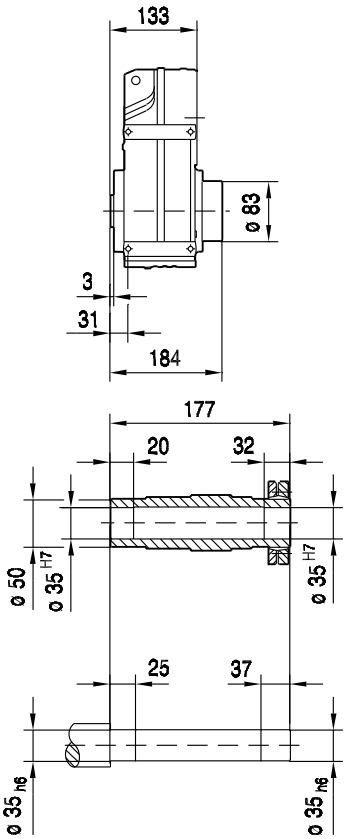

FV47B..

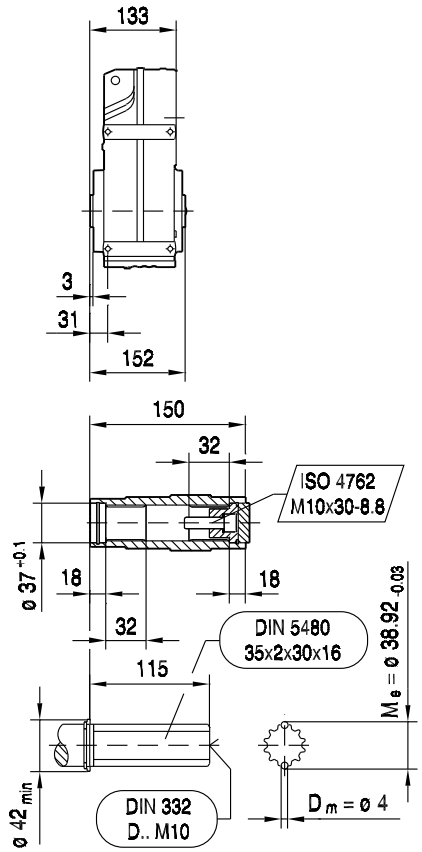

(→ 📖 129)	DRL71S	DRL71M	DRL80S	DRL80M	DRL90L	DRL100L		
AC	139	139	156	156	179	197		
AD	119	119	128	128	140	157		
ADS	129	129	139	139	150	158		
L	481	506	525	556	573	632		
LS	545	570	605	636	659	719		
LB	288	313	332	363	380	439		
LBS	352	377	412	443	466	526		

F..DRL
F..Nm

FF47..

42 140 00 08

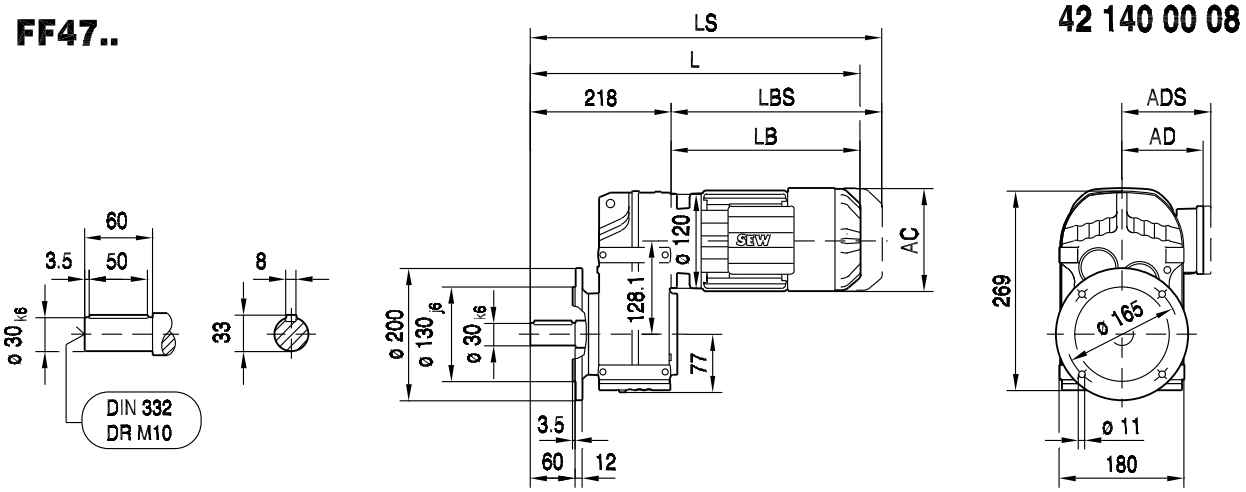

FAF47..

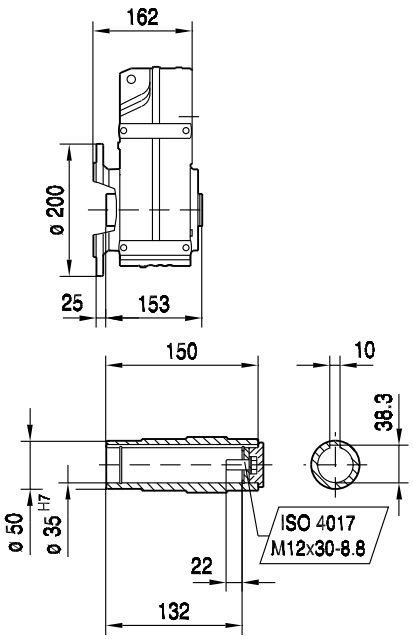

FHF47..

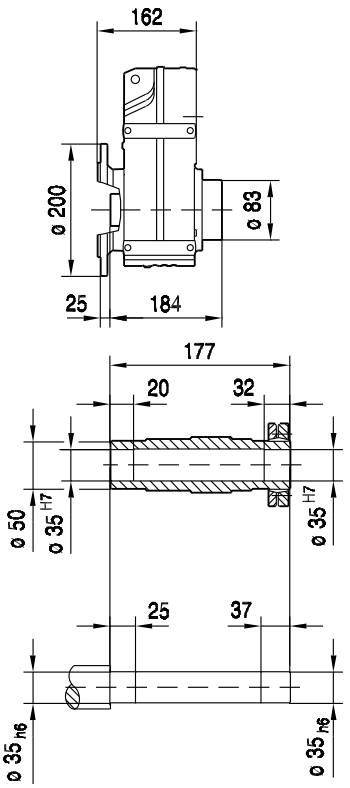

FVF47..

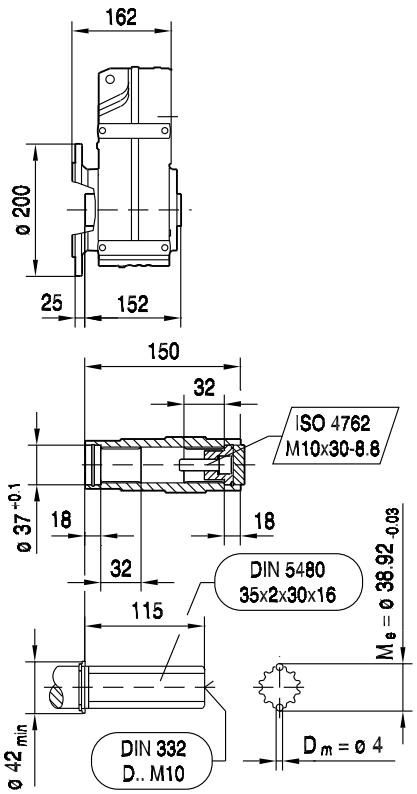

(→ 📖 129)	DRL71S	DRL71M	DRL80S	DRL80M	DRL90L	DRL100L		
AC	139	139	156	156	179	197		
AD	119	119	128	128	140	157		
ADS	129	129	139	139	150	158		
L	506	531	550	581	598	657		
LS	570	595	630	661	684	744		
LB	288	313	332	363	380	439		
LBS	352	377	412	443	466	526		

42 141 00 08

FA47..

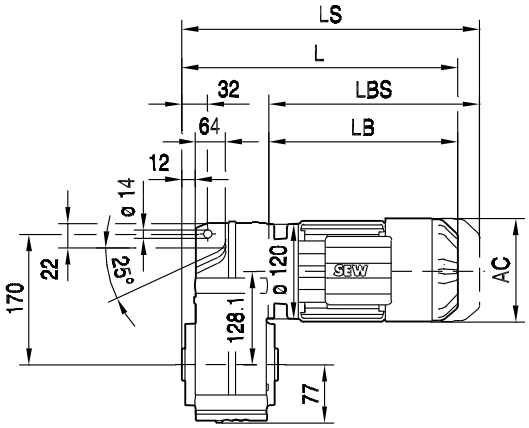

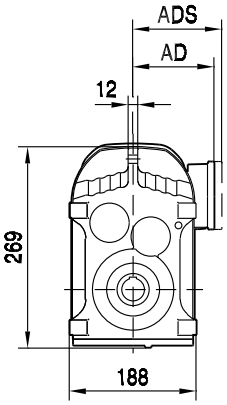

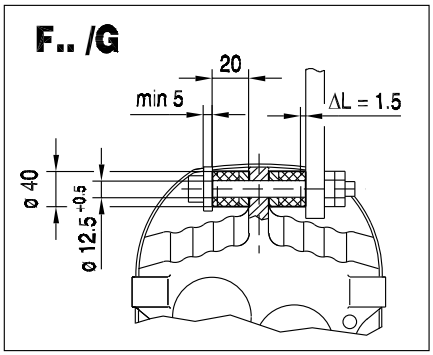

FA47..

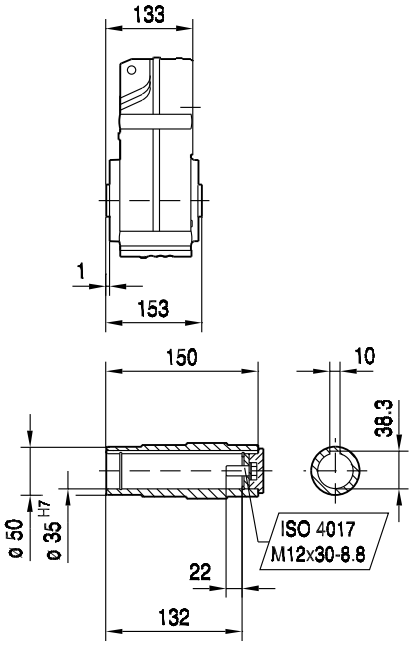

FH47..

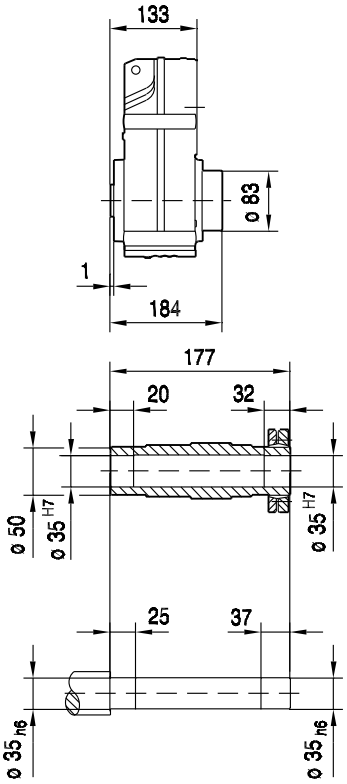

FV47..

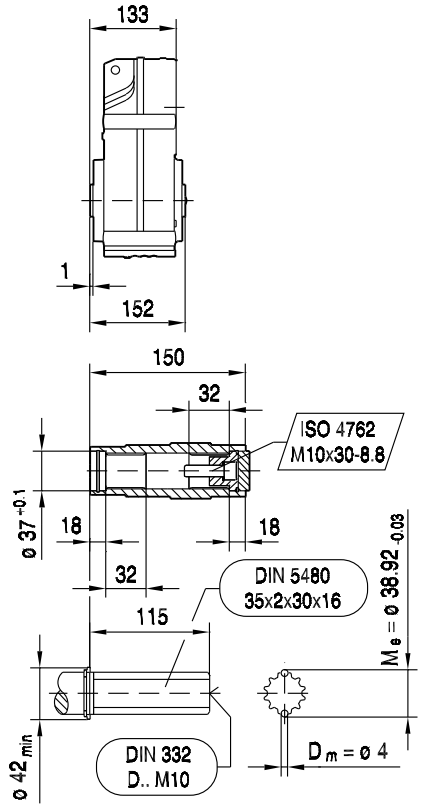

(→ 📖 129)	DRL71S	DRL71M	DRL80S	DRL80M	DRL90L	DRL100L		
AC	139	139	156	156	179	197		
AD	119	119	128	128	140	157		
ADS	129	129	139	139	150	158		
L	421	446	465	496	513	572		
LS	485	510	545	576	599	659		
LB	288	313	332	363	380	439		
LBS	352	377	412	443	466	526		

F..DRL
F..Nm

42 142 00 08

FAZ47..

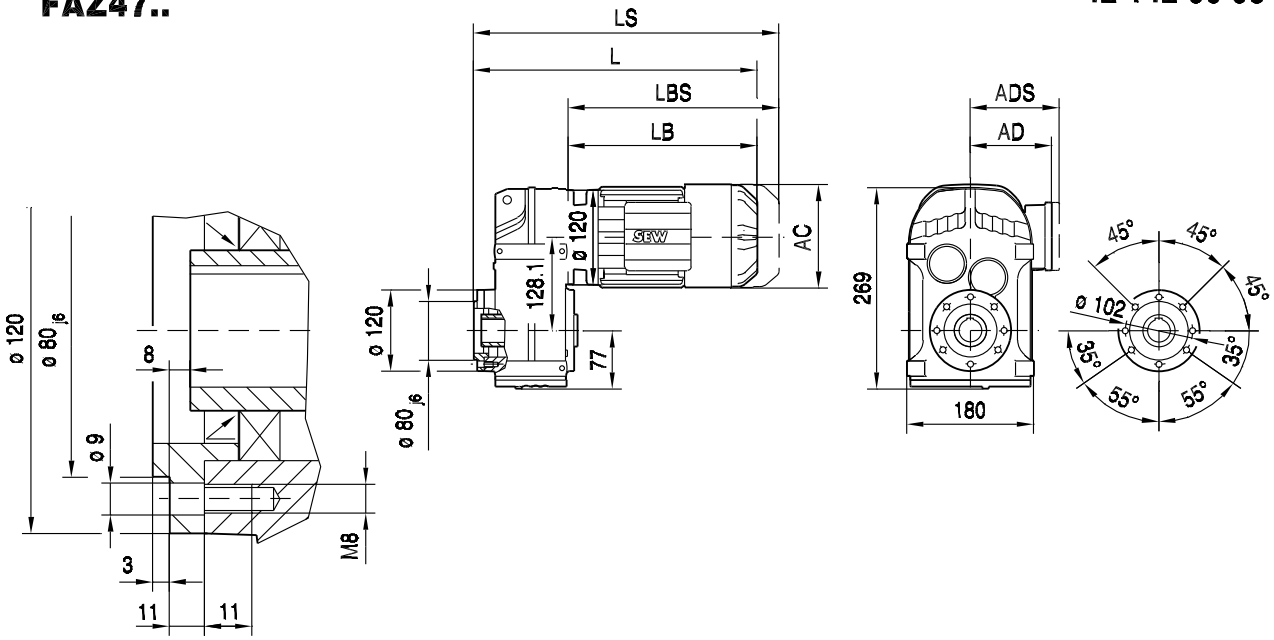

FAZ47..

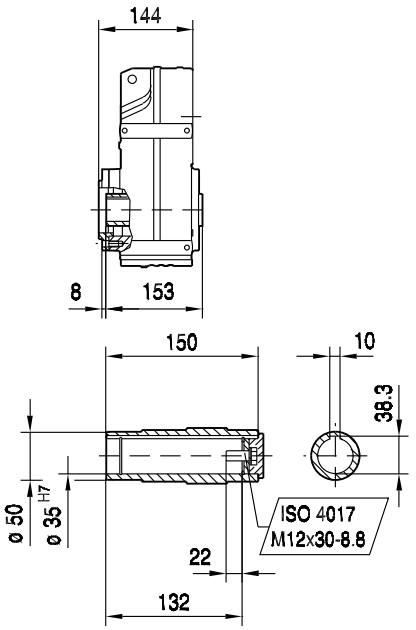

FHZ47..

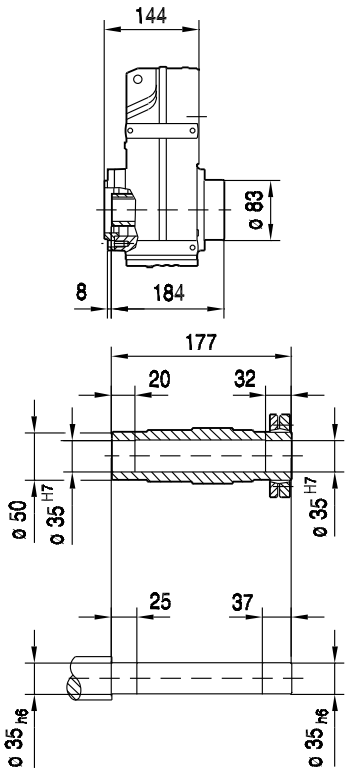

FVZ47..

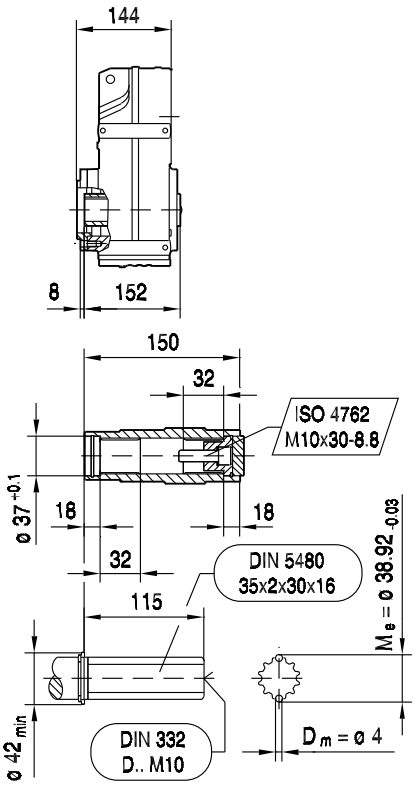

(→ 📖 129)	DRL71S	DRL71M	DRL80S	DRL80M	DRL90L	DRL100L		
AC	139	139	156	156	179	197		
AD	119	119	128	128	140	157		
ADS	129	129	139	139	150	158		
L	432	457	476	507	524	583		
LS	496	521	556	587	610	670		
LB	288	313	332	363	380	439		
LBS	352	377	412	443	466	526		

FT47..

42 143 00 08

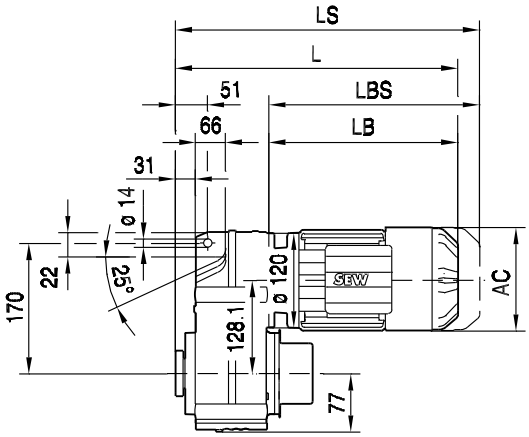

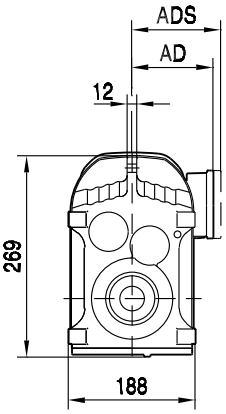

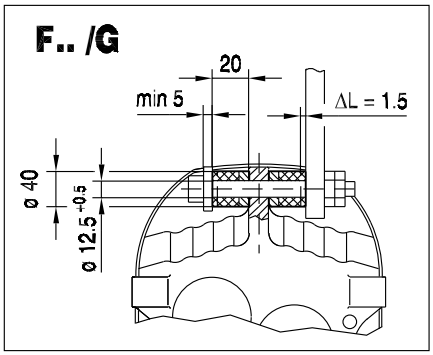

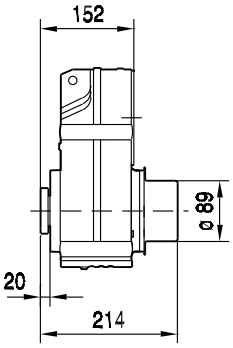

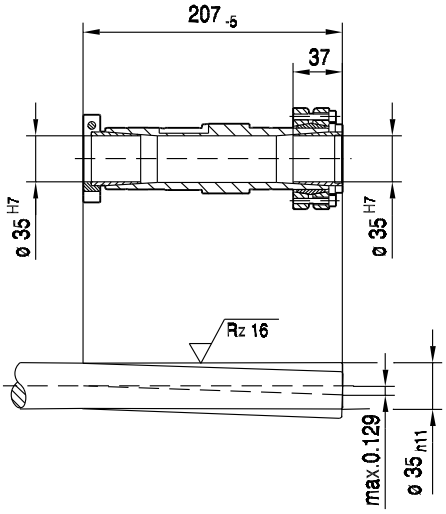

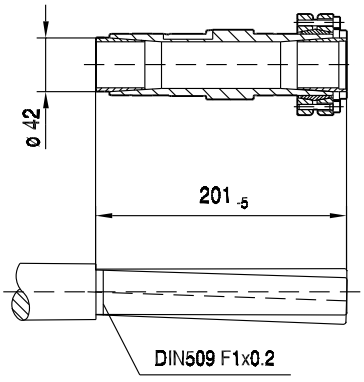

(→ 📖 129)	DRL71S	DRL71M	DRL80S	DRL80M	DRL90L	DRL100L		
AC	139	139	156	156	179	197		
AD	119	119	128	128	140	157		
ADS	129	129	139	139	150	158		
L	440	465	484	515	532	591		
LS	504	529	564	595	618	678		
LB	288	313	332	363	380	439		
LBS	352	377	412	443	466	526		

9.2.4 F 57

M_{aDyn} Nm	i	DRL											
		71S		71M		80S		80M		90L		100L	132S
		D1	D2	D1	D2	D1	D2	D1	D2	D1	D2	D1	D1
FA57 2	5.18	25	43	35	70	50	126	65	166	126	230	176	400
	5.98	29	49	41	81	58	145	75	191	145	265	200	460
	6.58	32	54	45	89	64	160	83	210	160	290	220	>480
	7.73	37	64	52	105	75	187	97	245	187	340	260	>480
	8.19	40	68	56	111	79	199	103	260	199	365	275	>485
	9.31	45	77	63	126	90	225	117	295	225	415	315	
	10.64	52	88	72	144	103	255	134	340	255	470	360	>645
	12.29	60	101	83	167	119	295	155	390	295	545	415	>645
	13.52	66	111	92	184	131	325	170	430	325	600	455	>645
	15.88	77	131	108	215	154	385	200	505	385	>645	535	>645
	16.81	82	139	114	225	163	405	210	535	405	>645	570	>645
	19.11	93	158	130	255	185	460	240	610	460	>645	>645	
	21.17	103	175	144	285	205	510	265	>645	510	>645	>645	
	24.96	121	205	169	335	240	605	310	>645	605		>645	
	28.45	138	230	193	385	275	>645	355					
	29.94	145	245	200	405	290	>645	375					
	34.24	166	280	230		330		430					
	40.13	193		265									
FA57 3	30.15	145	245	200	405	285	>645	375	>645	>645	>645	>645	>645
	35.79	172	290	240	480	340	>645	445	>645	>645	>645	>645	>645
	38.21	183	310	255	510	365	>645	475	>645	>645	>645	>645	>645
	44.73	210	360	300	600	425	>645	555	>645	>645	>645	>645	
	50.10	240	405	335	>645	480	>645	625	>645	>645	>645	>645	
	58.97	280	475	390	>645	560	>645	>645	>645	>645		>645	
	68.22	320	550	450	>645	>645	>645	>645					
	72.98	345	585	485	>645	>645	>645	>645					
	83.46	395	>645	555	>645	>645	>645	>645	>645	>645	>645	>645	
	93.47	440	>645	620	>645	>645	>645	>645	>645	>645	>645	>645	
	110.01	515	>645	>645	>645	>645	>645	>645	>645	>645		>645	
	127.27	595	>645	>645	>645	>645	>645	>645					
	136.16	635	>645	>645	>645	>645	>645	>645					
	157.09	>645	>645	>645		>645		>645					
	183.60	>645		>645									
	199.70	>645		>645									

→ 124

m kg	s	DRL						
		71S	71M	80S	80M	90L	100L	132S
FA57	2	31	32	34	37	45	53	68
FA57	3	31	33	35	38	46	53	69
FAF: + 5.5 kg / F: + 0.2 kg / FF: + 6.6 kg								

DRL..	i	n_{epk} 1/min	η %	c_{TG} FA Nm/'	FAF Nm/'	F Nm/'	FF Nm/'	φ /R '
FA57 2	5.18	4468	97	120	120	43	38	9
	5.98	4500	97	120	120	43	38	9
	6.58	4500	97	120	120	43	38	8
	7.73	4500	97	120	120	43	38	8
	8.19	4500	97	120	120	43	38	8
	9.31	4500	97	120	120	43	38	8
	10.64	4500	97	150	150	47	40	6
	12.29	4500	97	150	150	47	40	6
	13.52	4500	97	150	150	47	40	6
	15.88	4500	97	150	150	47	40	6
	16.81	4500	97	150	150	47	40	6
	19.11	4500	97	150	150	47	40	6
	21.17	4500	97	150	150	47	40	6
	24.96	4500	97	150	150	47	40	6
	28.45	4500	97	150	150	47	40	6
	29.94	4500	97	150	150	47	40	6
	34.24	4500	97	150	150	47	40	6
	40.13	4500	96	150	150	47	40	6
FA57 3	30.15	4500	96	169	169	49	41	7
	35.79	4500	96	169	169	49	41	7
	38.21	4500	96	169	169	49	41	7
	44.73	4500	96	169	169	49	41	7
	50.10	4500	96	169	169	49	41	7
	58.97	4500	95	169	169	49	41	7
	68.22	4500	95	169	169	49	41	6
	72.98	4500	95	169	169	49	41	6
	83.46	4500	95	171	171	49	42	6
	93.47	4500	95	171	171	49	42	6
	110.01	4500	94	171	171	49	42	6
	127.27	4500	94	171	171	49	42	6
	136.16	4500	94	171	171	49	42	6
	157.09	4500	94	171	171	49	42	6
	183.60	4500	93	171	171	49	42	6
	199.70	4500	93	171	171	49	42	6

F..DRL
F..Nm

DRL.. n_e = 1400	i	M_{amax} Nm	M_{apk} Nm	$M_{aNotaus}$ Nm	n_{ak} 1/min	J_G 10^{-4} kgm^2	F_{Ramax} FA N	FAF N	F N	FF N	F_{Rapk} FA N	FAF N	F N	FF N
FA57 2	5.18	415	475	706	405	5.8	2020	2020	3460	3670	11500	11500	9910	8490
	5.98	420	475	714	452	4.5	2240	2240	3730	3940	11500	11500	9910	8490
	6.58	420	480	714	502	3.8	2430	2430	3940	4140	11500	11500	9880	8460
	7.73	420	480	714	595	2.9	2760	2760	4310	4500	11500	11500	9880	8460
	8.19	420	485	714	623	2.6	2880	2880	4450	4640	11500	11500	9840	8440
	9.31	420	460	714	666	2.0	3170	3170	4760	4950	11500	11500	10000	8580
	10.64	600	645	1020	207	3.2	2470	2470	4320	4590	11500	11500	6930	6930
	12.29	600	645	1020	212	2.6	2810	2810	4710	4970	11500	11500	6930	6930
	13.52	600	645	1020	207	2.2	3050	3050	4980	5230	11500	11500	6930	6930
	15.88	600	645	1020	214	1.8	3470	3470	5450	5690	11500	11500	6930	6930
	16.81	600	645	1020	214	1.6	3630	3630	5620	5860	11500	11500	6930	6930
	19.11	600	645	1020	215	1.3	3980	3980	6020	6260	11500	11500	6930	6930
	21.17	600	645	1020	217	1.1	4280	4280	6350	6580	11500	11500	6930	6930
	24.96	575	645	978	252	0.84	4970	4970	7060	7260	11500	11500	6930	6930
	28.45	535	645	910	246	0.59	5690	5690	7760	7930	11500	11500	6930	6930
	29.94	545	645	927	234	0.53	5790	5790	7890	8060	11500	11500	6930	6930
	34.24	500	645	850	204	0.43	6580	6580	8670	8500	11500	11500	6930	6930
	40.13	290	435	493	174	0.34	8750	8750	10500	9550	11500	11500	10400	8850
FA57 3	30.15	590	645	1003	50	1.3	5460	5460	7650	7850	11500	11500	6930	6930
	35.79	600	645	1020	47	0.94	5980	5980	8250	7900	11500	11500	6930	6930
	38.21	600	645	1020	50	0.84	6210	6210	8510	7900	11500	11500	6930	6930
	44.73	600	645	1020	49	0.64	6790	6790	9160	7900	11500	11500	6930	6930
	50.10	600	645	1020	50	0.52	7230	7230	9200	7900	11500	11500	6930	6930
	58.97	600	645	1020	51	0.38	7890	7890	9200	7900	11500	11500	6930	6930
	68.22	600	645	1020	51	0.31	8510	8510	9200	7900	11500	11500	6930	6930
	72.98	600	645	1020	51	0.28	8810	8810	9200	7900	11500	11500	6930	6930
	83.46	600	645	1020	42	0.51	9420	9420	9200	7900	11500	11500	6930	6930
	93.47	600	645	1020	42	0.42	9960	9960	9200	7900	11500	11500	6930	6930
	110.01	600	645	1020	42	0.31	10800	10800	9200	7900	11500	11500	6930	6930
	127.27	600	645	1020	42	0.26	11500	11500	9200	7900	11500	11500	6930	6930
	136.16	600	645	1020	43	0.23	11500	11500	9200	7900	11500	11500	6930	6930
	157.09	600	645	1020	43	0.19	11500	11500	9200	7900	11500	11500	6930	6930
	183.60	600	645	1020	38	0.15	11500	11500	9200	7900	11500	11500	6930	6930
	199.70	600	645	1020	35	0.13	11500	11500	9200	7900	11500	11500	6930	6930

42 144 00 08

F57..

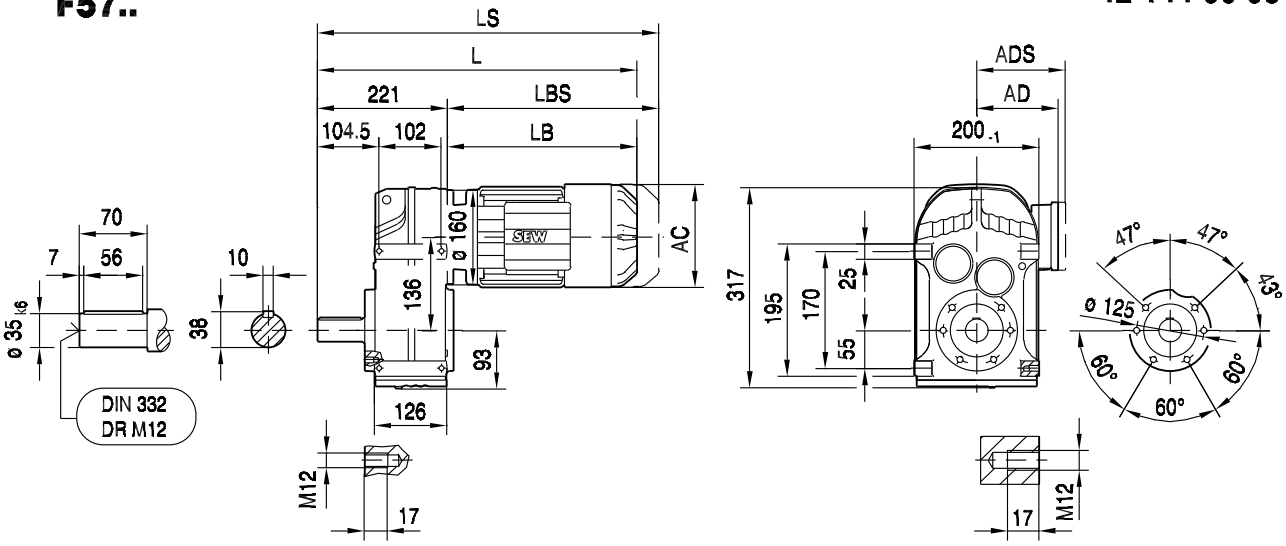

FA57B..

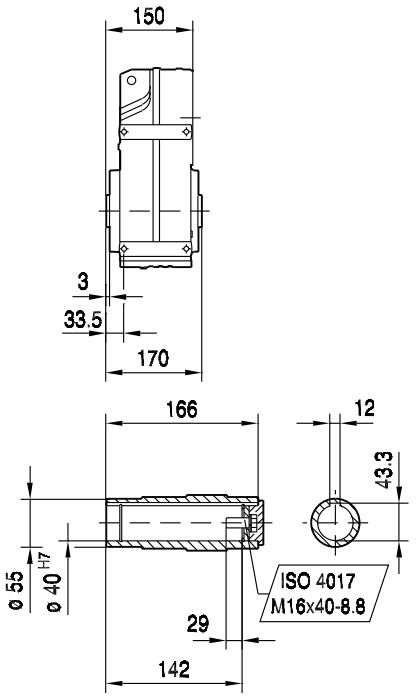

FH57B..
max. DR132S

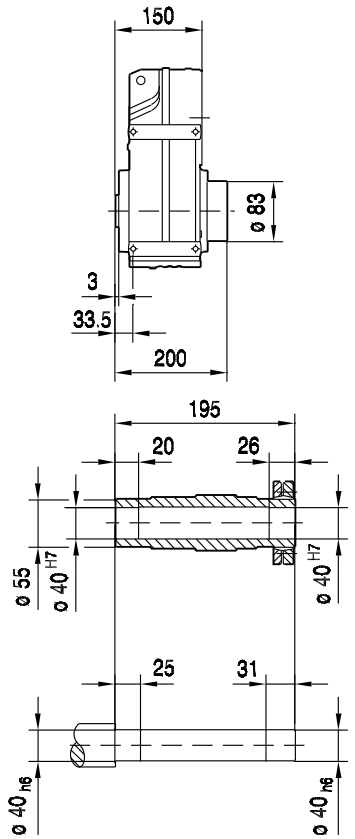

FV57B..

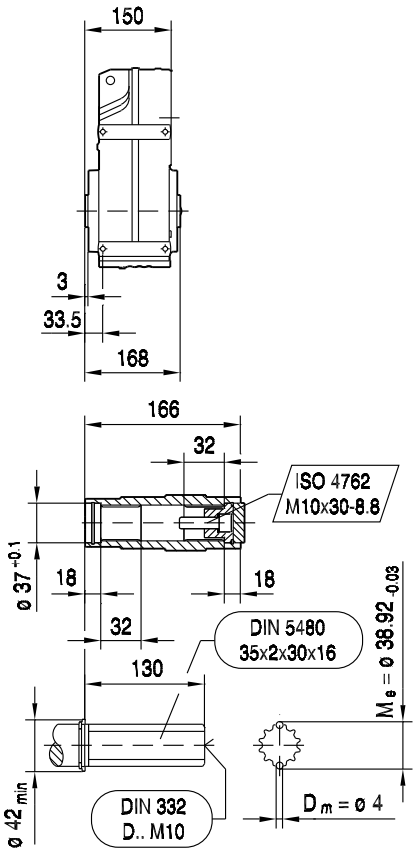

(→ 📖 129)	DRL71S	DRL71M	DRL80S	DRL80M	DRL90L	DRL100L	DRL132S	
AC	139	139	156	156	179	197	221	
AD	119	119	128	128	140	157	170	
ADS	129	129	139	139	150	158	172	
L	501	526	547	578	592	651	736	
LS	566	591	627	658	678	738	844	
LB	280	305	326	357	371	430	515	
LBS	345	370	406	437	457	517	623	

F..DRL
F..Nm

FF57..

42 145 00 08

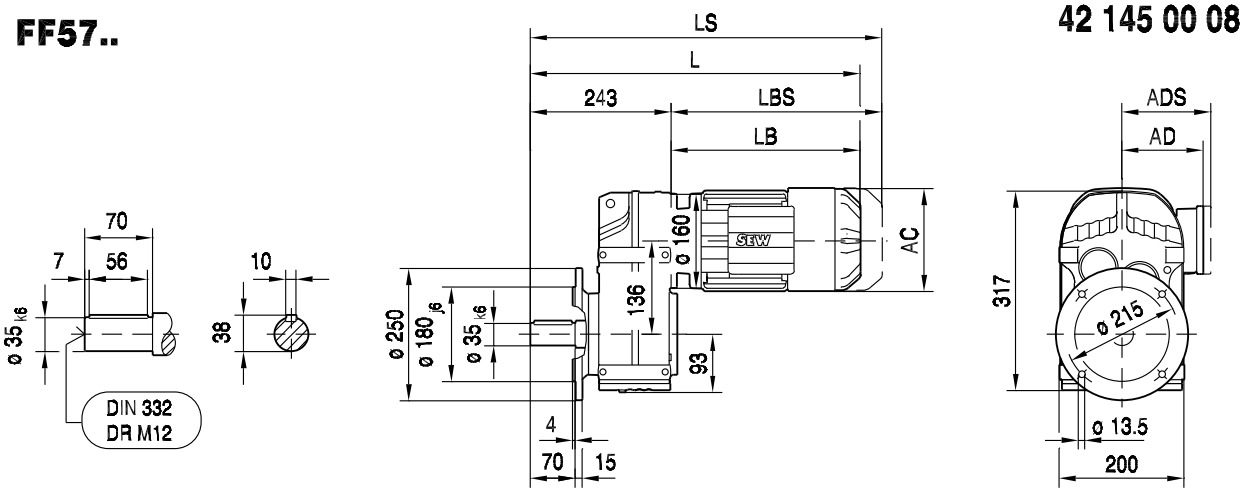

FAF57..

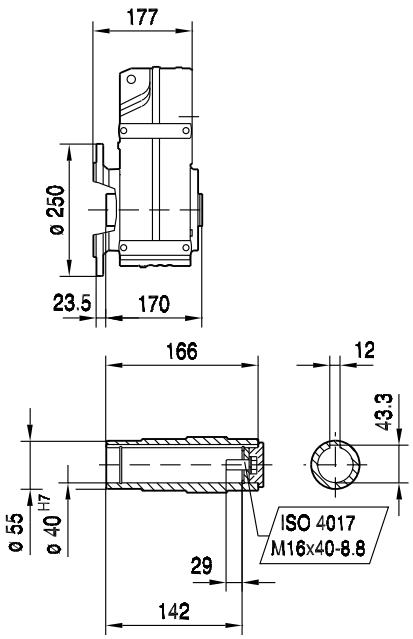

FHF57..
max. DR132S

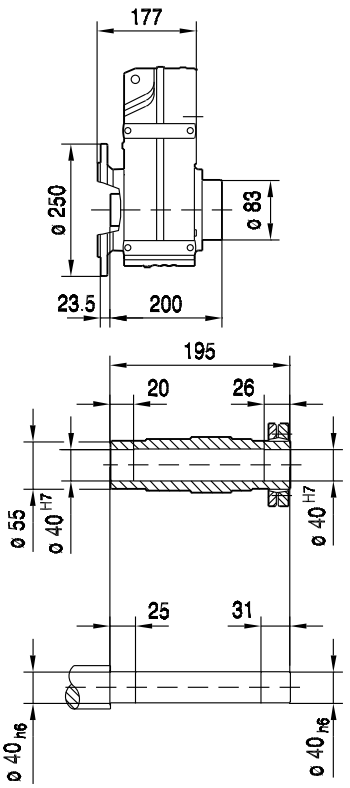

FVF57..

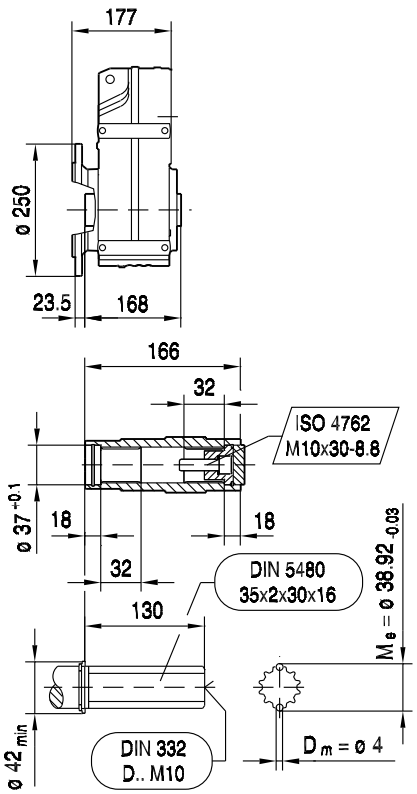

(→ 📖 129)	DRL71S	DRL71M	DRL80S	DRL80M	DRL90L	DRL100L	DRL132S	
AC	139	139	156	156	179	197	221	
AD	119	119	128	128	140	157	170	
ADS	129	129	139	139	150	158	172	
L	523	548	569	600	614	673	758	
LS	588	613	649	680	700	760	866	
LB	280	305	326	357	371	430	515	
LBS	345	370	406	437	457	517	623	

42 146 00 08

FA57..

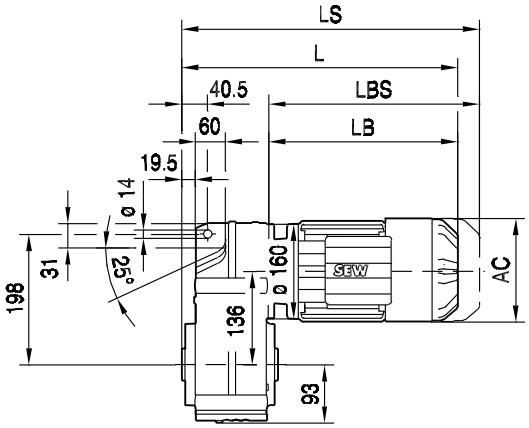

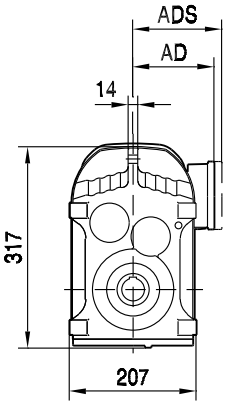

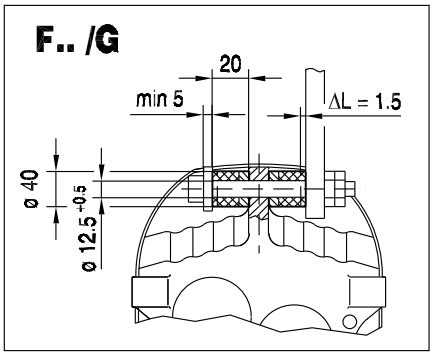

FA57..

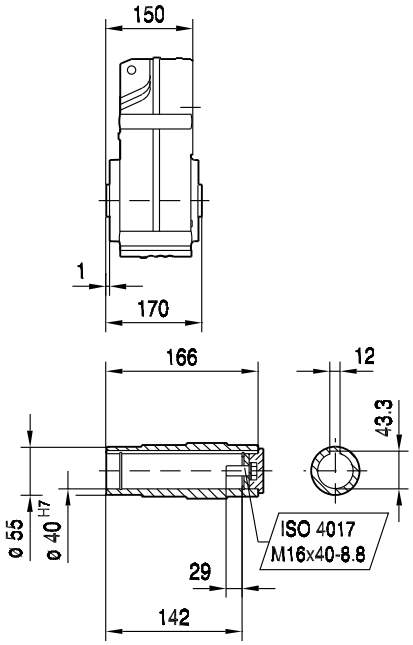

FH57..
max. DR132S

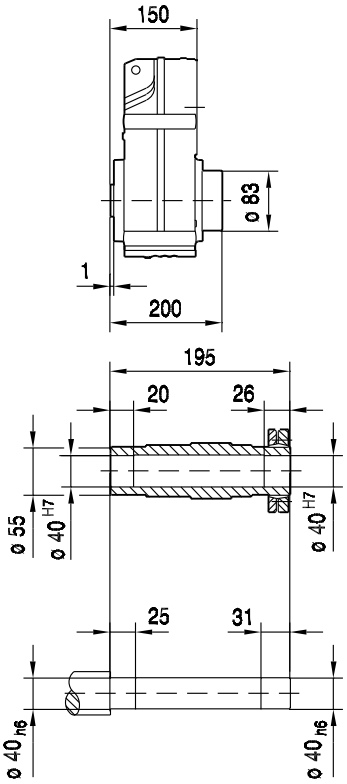

FV57..

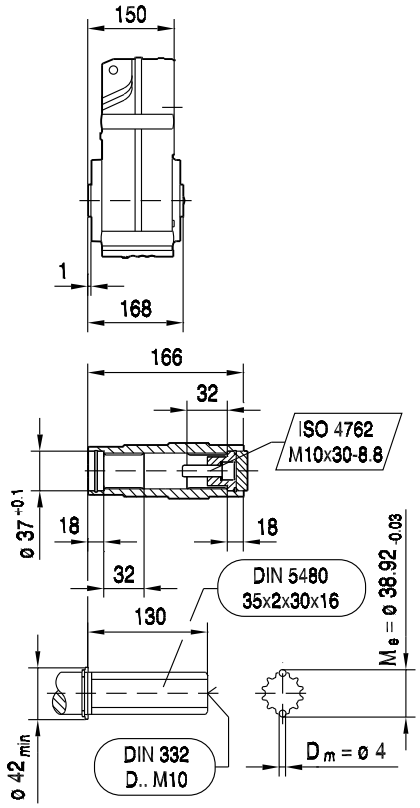

(→ 📖 129)	DRL71S	DRL71M	DRL80S	DRL80M	DRL90L	DRL100L	DRL132S	
AC	139	139	156	156	179	197	221	
AD	119	119	128	128	140	157	170	
ADS	129	129	139	139	150	158	172	
L	430	455	476	507	521	580	665	
LS	495	520	556	587	607	667	773	
LB	280	305	326	357	371	430	515	
LBS	345	370	406	437	457	517	623	

FAZ57..

42 147 00 08

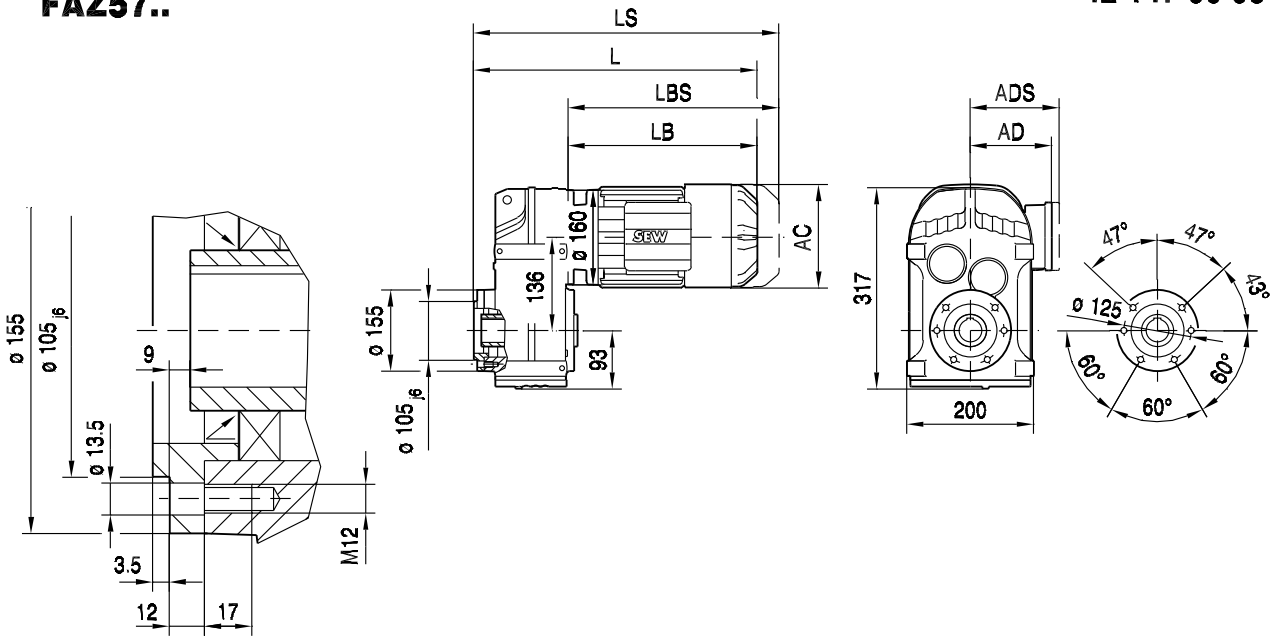

FAZ57..

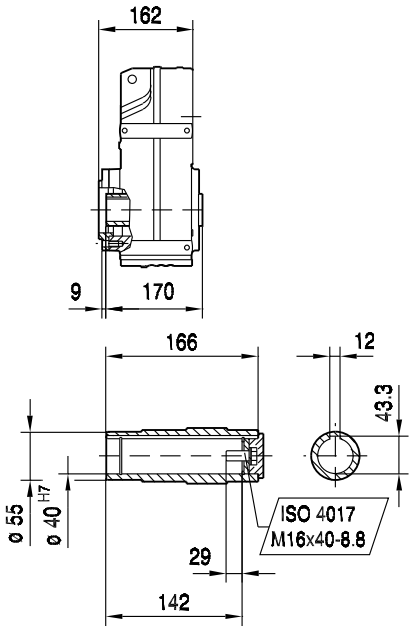

FHZ57..
max. DR132S

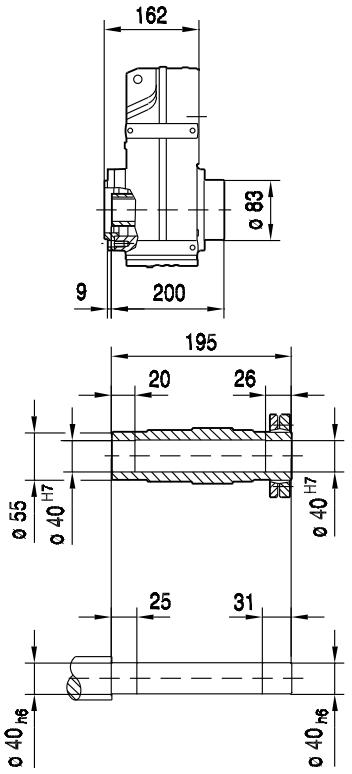

FVZ57..

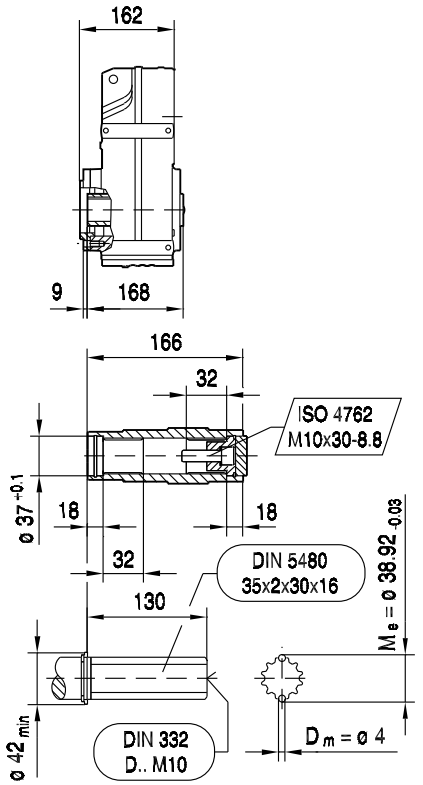

(→ 📖 129)	DRL71S	DRL71M	DRL80S	DRL80M	DRL90L	DRL100L	DRL132S	
AC	139	139	156	156	179	197	221	
AD	119	119	128	128	140	157	170	
ADS	129	129	139	139	150	158	172	
L	442	467	488	519	533	592	677	
LS	507	532	568	599	619	679	785	
LB	280	305	326	357	371	430	515	
LBS	345	370	406	437	457	517	623	

42 148 00 08

FT57..

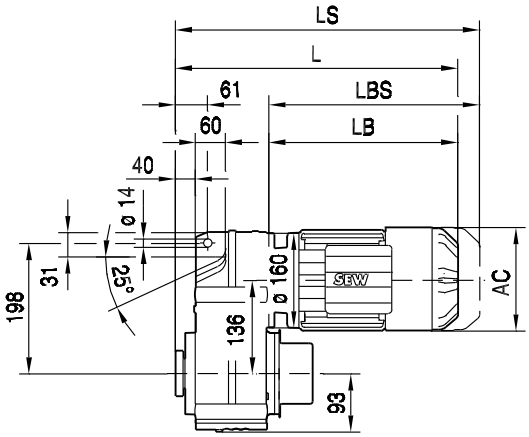

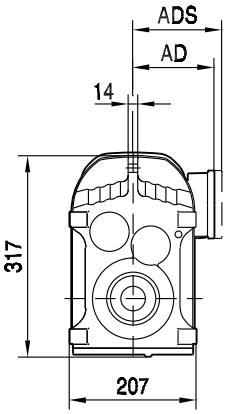

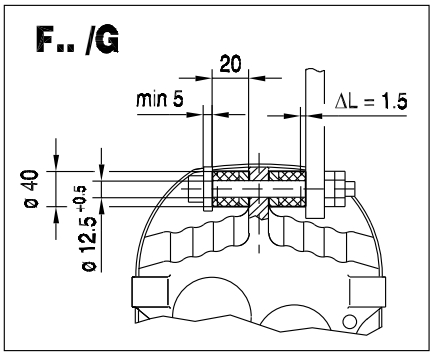

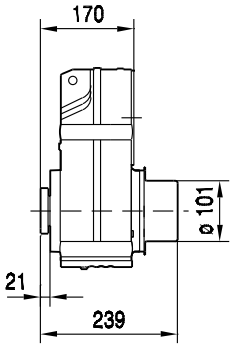

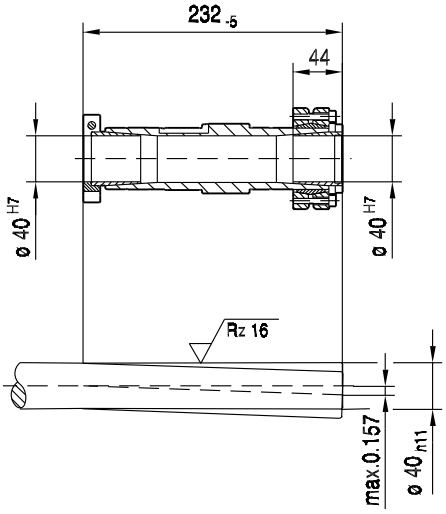

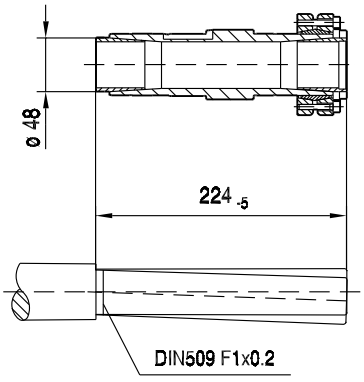

(→ 📖 129)	DRL71S	DRL71M	DRL80S	DRL80M	DRL90L	DRL100L	DRL132S	
AC	139	139	156	156	179	197	221	
AD	119	119	128	128	140	157	170	
ADS	129	129	139	139	150	158	172	
L	450	475	496	527	541	600	685	
LS	515	540	576	607	627	687	793	
LB	280	305	326	357	371	430	515	
LBS	345	370	406	437	457	517	623	

F..DRL
F..Nm

9.2.5 F 67

M_{aDyn} Nm	i	DRL 71S D1	71S D2	71M D1	71M D2	80S D1	80S D2	80M D1	80M D2	90L D1	90L D2	100L D1	132S D1	132S D2	132MC D1
FA67 2	3.97		33		54	39	96	50	127	96	177	135	305	575	500
	4.66		38		63	45	113	59	149	113	205	158	360	675	585
	5.25		43		71	51	127	66	168	127	230	178	405	>705	660
	5.95	29	50	41	82	58	146	76	192	146	265	200	465	>705	>705
	6.78	33	56	46	92	66	164	85	215	164	300	230	525	>710	>710
	7.53	37	62	51	102	73	183	95	240	183	335	255	580		
	8.60	42	71	58	117	83	205	108	275	205	380	290	665		
	9.08	44	75	62	123	88	220	114	290	220	405	305	700		
	9.66		80		131	94	230	122	305	230	430	325	745	>920	>920
	11.31		93		154	110	270	143	360	270	500	380	870	>920	>920
	12.76		105		173	124	305	161	405	305	565	430	>920	>920	>920
	14.46	70	119	98	196	140	350	182	460	350	645	490	>920	>920	>920
	16.48	80	136	112	220	160	395	205	525	395	735	555	>920	>920	>920
	18.29	89	151	124	245	177	440	230	585	440	810	620	>920		
	20.90	101	172	142	280	200	505	260	665	505	>920	705	>920		
	22.05	107	182	150	295	210	530	275	705	530	>920	745	>920		
	25.13	122	205	171	340	240	605	315	800	605	>920	850			
	27.41	133	225	186	370	265	660	345	870	660	>920	>920			
	32.08	156	260	215	435	310	775	400	>920	775		>920			
	36.30	176	295	245	490	350	880	455							
FA67 3	34.01	163	275	225	455	325	810	420	>920	810	>920	>920	>920		
	39.26	188	320	260	525	375	>920	485	>920	>920	>920	>920	>920		
	43.20	205	350	290	580	410	>920	535	>920	>920	>920	>920	>920		
	50.74	240	410	340	680	485	>920	630	>920	>920	>920	>920	>920		
	53.73	255	435	360	720	515	>920	670	>920	>920	>920	>920	>920		
	61.07	290	490	405	810	580	>920	750	>920	>920	>920	>920			
	67.65	320	545	445	890	640	>920	830	>920	>920	>920	>920			
	79.76	375	640	530	>920	755	>920	>920	>920	>920		>920			
	90.59	430	730	600	>920	860	>920	>920	>920	>920	>920	>920	>920		
	95.94	455	770	635	>920	910	>920	>920	>920	>920	>920	>920	>920		
	109.04	515	880	725	>920	>920	>920	>920	>920	>920	>920	>920			
	120.79	565	>920	790	>920	>920	>920	>920	>920	>920	>920	>920			
	142.40	665	>920	>920	>920	>920	>920	>920	>920	>920		>920			
	162.31	760	>920	>920	>920	>920	>920	>920							
	170.85	790	>920	>920	>920	>920	>920	>920							
	195.39	900	>920	>920		>920		>920							
	228.99	>920		>920											

→ 124

m kg	s	DRL 71S	71M	80S	80M	90L	100L	132S	132MC
FA67	2	34	35	38	40	48	56	71	88
FA67	3	35	37	39	42	49	57	73	89
FAF: + 6.3 kg / F: + 2.8 kg / FF: + 8.9 kg									

DRL..	i	n_{epk} 1/min	η %	c_{TG} FA Nm/'	FAF Nm/'	F Nm/'	FF Nm/'	φ /R '
FA67 2	3.97	4500	97	129	129	68	62	10
	4.66	4500	97	129	129	68	62	9
	5.25	4500	97	129	129	68	62	9
	5.95	4500	98	129	129	68	62	9
	6.78	4500	97	129	129	68	62	9
	7.53	4500	97	129	129	68	62	8
	8.60	4500	97	129	129	68	62	8
	9.08	4500	97	129	129	68	62	8
	9.66	4500	97	173	173	79	71	6
	11.31	4500	97	173	173	79	71	6
	12.76	4500	97	173	173	79	71	6
	14.46	4500	97	173	173	79	71	6
	16.48	4500	97	173	173	79	71	6
	18.29	4500	97	173	173	79	71	6
	20.90	4500	97	173	173	79	71	5
	22.05	4500	97	173	173	79	71	5
	25.13	4500	97	173	173	79	71	5
	27.41	4500	97	173	173	79	71	5
	32.08	4500	97	173	173	79	71	5
	36.30	4500	97	173	173	79	71	5
FA67 3	34.01	4500	96	187	187	82	74	6
	39.26	4500	96	187	187	82	74	6
	43.20	4500	96	187	187	82	74	6
	50.74	4500	96	187	187	82	74	6
	53.73	4500	96	187	187	82	74	6
	61.07	4500	95	187	187	82	74	6
	67.65	4500	95	187	187	82	74	6
	79.76	4500	95	187	187	82	74	6
	90.59	4500	95	189	189	82	74	6
	95.94	4500	95	189	189	82	74	6
	109.04	4500	95	189	189	82	74	6
	120.79	4500	94	189	189	82	74	6
	142.40	4500	94	189	189	82	74	6
	162.31	4500	94	189	189	82	74	6
	170.85	4500	93	189	189	82	74	6
	195.39	4500	93	189	189	82	74	6
	228.99	4500	93	189	189	82	74	6

F..DRL
F..Nm

DRL.. n_e = 1400	i	M_{amax} Nm	M_{apk} Nm	$M_{aNotaus}$ Nm	n_{ak} 1/min	J_G 10^{-4} kgm^2	F_{Ramax} FA N	FAF N	F N	FF N	F_{Rapk} FA N	FAF N	F N	FF N
FA67 2	3.97	500	695	850	403	16	1220	1220	8390	8620	13000	13000	11300	11300
	4.66	560	700	952	322	12	1020	1020	8590	8860	13000	13000	11300	11300
	5.25	590	705	1003	286	10.0	1010	1010	8850	9140	13000	13000	11200	11200
	5.95	610	705	1037	286	8.0	1090	1090	9200	9500	13000	13000	11200	11200
	6.78	620	710	1054	295	6.3	1280	1280	9660	9950	13000	13000	11200	11200
	7.53	610	715	1037	332	5.5	1570	1570	10100	10400	13000	13000	11200	11200
	8.60	570	715	969	442	4.4	2180	2180	10900	11200	13000	13000	11200	11200
	9.08	530	715	901	573	4.0	2620	2620	11400	11600	13000	13000	11200	11200
	9.66	820	920	1394	186	8.5	1580	1580	10300	10300	13000	13000	9310	9310
	11.31	820	920	1394	203	6.7	1960	1960	10300	10300	13000	13000	9310	9310
	12.76	820	920	1394	212	5.6	2260	2260	10300	10300	13000	13000	9310	9310
	14.46	820	920	1394	228	4.6	2580	2580	10300	10300	13000	13000	9310	9310
	16.48	820	920	1394	237	3.8	2940	2940	10300	10300	13000	13000	9310	9310
	18.29	820	920	1394	252	3.4	3230	3230	10300	10300	13000	13000	9310	9310
	20.90	820	920	1394	263	2.7	3620	3620	10300	10300	13000	13000	9310	9310
	22.05	820	920	1394	268	2.5	3780	3780	10300	10300	13000	13000	9310	9310
	25.13	820	920	1394	275	2.0	4190	4190	10300	10300	13000	13000	9310	9310
	27.41	820	920	1394	255	1.7	4470	4470	10300	10300	13000	13000	9310	9310
	32.08	820	920	1394	218	1.4	5000	5000	10300	10300	13000	13000	9310	9310
	36.30	820	920	1394	193	0.98	5440	5440	10300	10300	13000	13000	9310	9310
FA67 3	34.01	740	920	1258	44	2.8	5730	5730	11000	11000	13000	13000	9310	9310
	39.26	780	920	1326	38	2.2	5980	5980	10700	10700	13000	13000	9310	9310
	43.20	820	920	1394	35	1.9	6080	6080	10300	10300	13000	13000	9310	9310
	50.74	820	920	1394	34	1.6	6710	6710	10300	10300	13000	13000	9310	9310
	53.73	820	920	1394	34	1.4	6940	6940	10300	10300	13000	13000	9310	9310
	61.07	820	920	1394	34	1.1	7480	7480	10300	10300	13000	13000	9310	9310
	67.65	820	920	1394	35	0.97	7930	7930	10300	10300	13000	13000	9310	9310
	79.76	820	920	1394	36	0.76	8680	8680	10300	10300	13000	13000	9310	9310
	90.59	820	920	1394	56	1.4	9290	9290	10300	10300	13000	13000	9310	9310
	95.94	820	920	1394	56	1.2	9570	9570	10300	10300	13000	13000	9310	9310
	109.04	820	920	1394	57	0.98	10200	10200	10300	10300	13000	13000	9310	9310
	120.79	820	920	1394	57	0.85	10800	10800	10300	10300	13000	13000	9310	9310
	142.40	820	920	1394	49	0.68	11700	11700	10300	10300	13000	13000	9310	9310
	162.31	820	920	1394	43	0.47	12400	12400	10300	10300	13000	13000	9310	9310
	170.85	820	920	1394	41	0.42	12700	12700	10300	10300	13000	13000	9310	9310
	195.39	820	920	1394	36	0.34	13000	13000	10300	10300	13000	13000	9310	9310
	228.99	820	920	1394	31	0.27	13000	13000	10300	10300	13000	13000	9310	9310

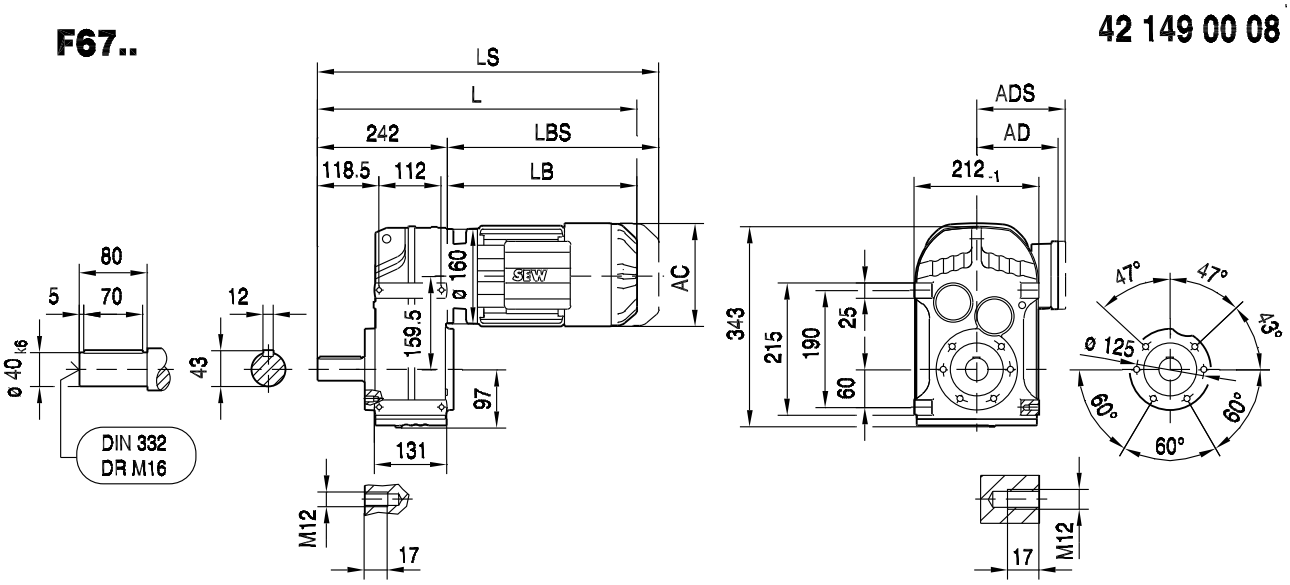

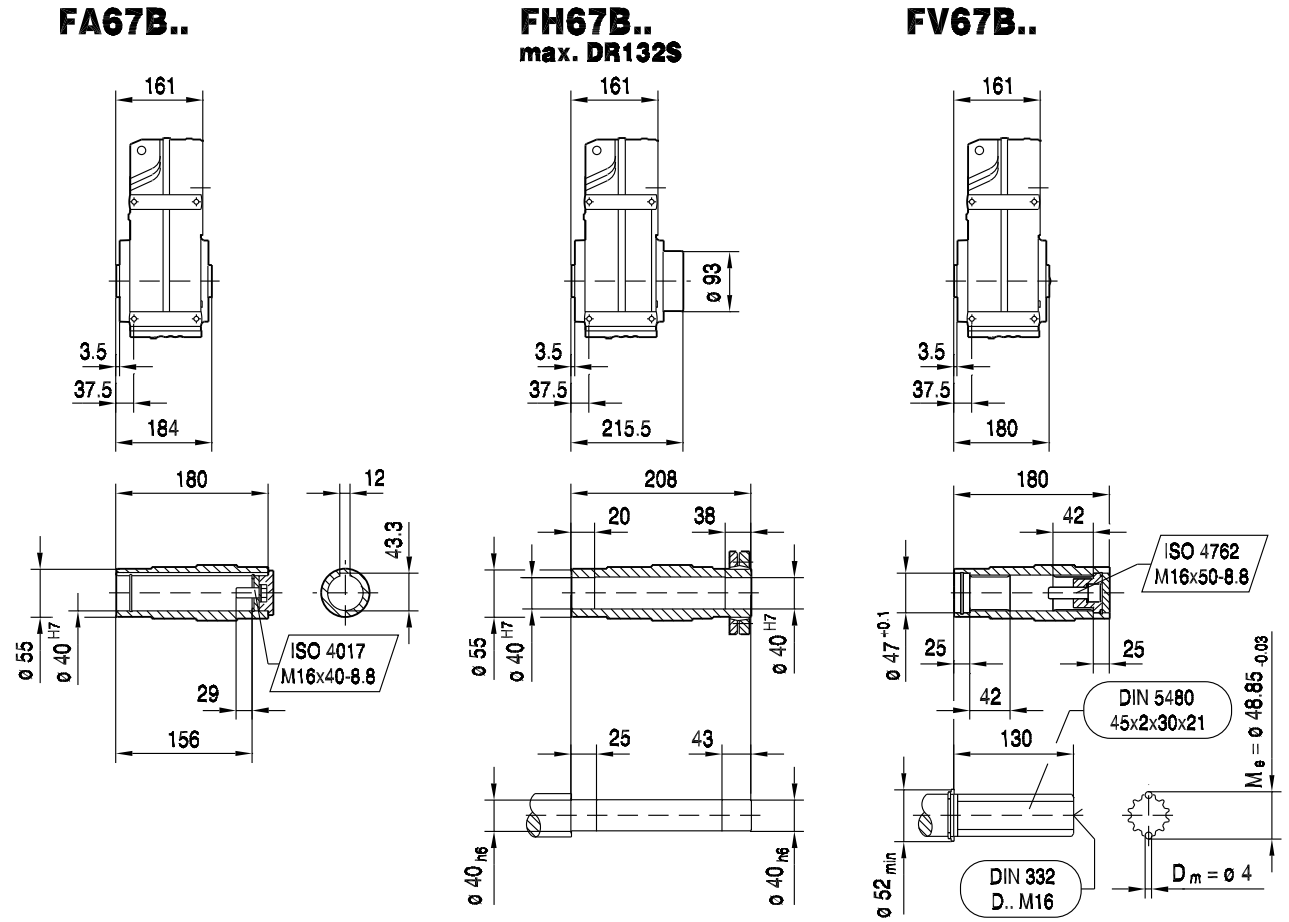

(→ 📖 129)	DRL71S	DRL71M	DRL80S	DRL80M	DRL90L	DRL100L	DRL132S	DRL132MC
AC	139	139	156	156	179	197	221	221
AD	119	119	128	128	140	157	170	170
ADS	129	129	139	139	150	158	172	172
L	522	547	568	599	613	672	757	807
LS	587	612	648	679	699	759	865	915
LB	280	305	326	357	371	430	515	565
LBS	345	370	406	437	457	517	623	673

F..DRL
F..Nm

FF67..

42 150 00 08

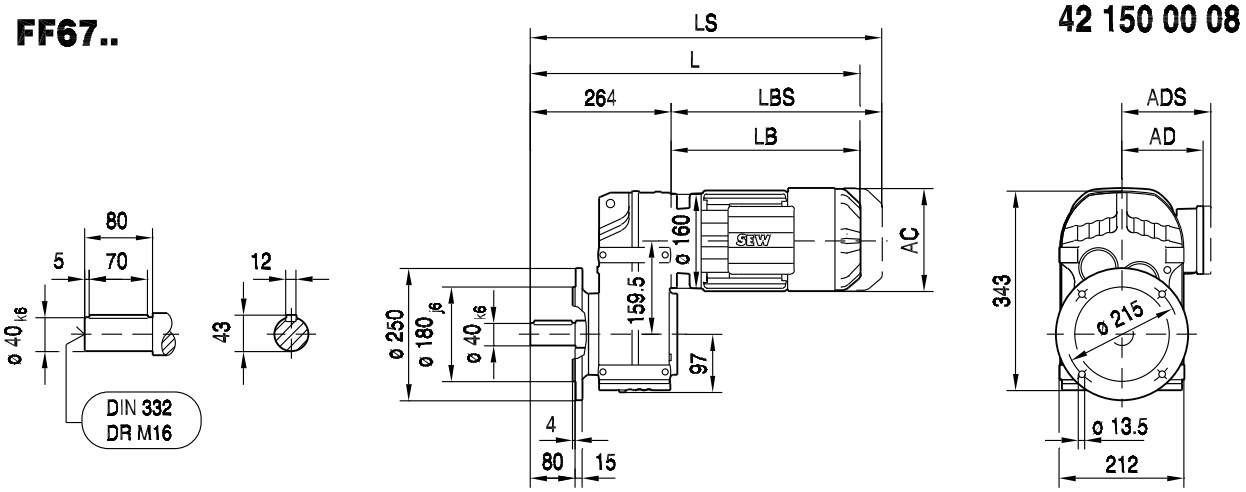

FAF67..

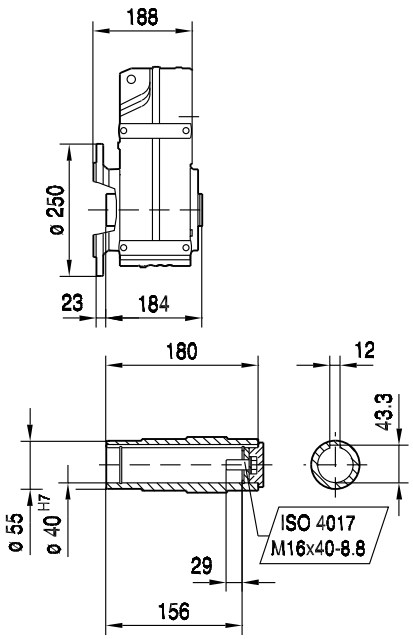

FHF67..
max. DR132S

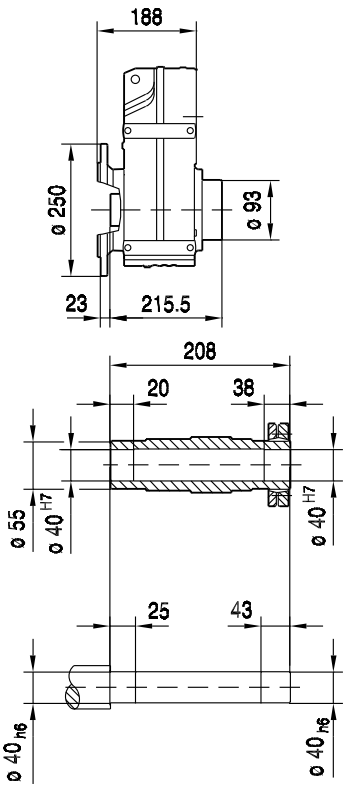

FVF67..

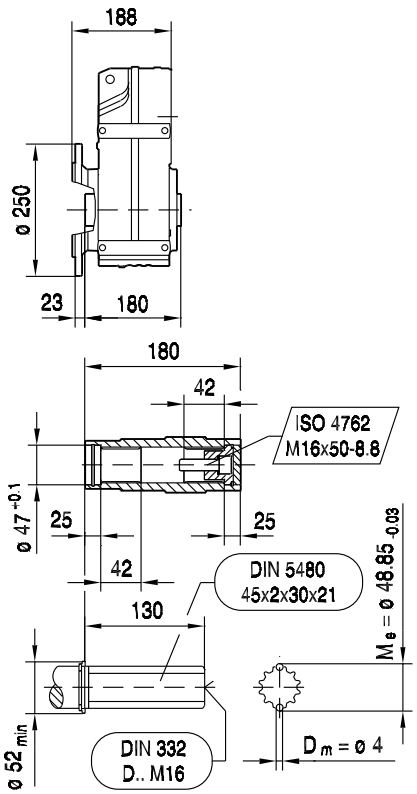

(→ 📖 129)	DRL71S	DRL71M	DRL80S	DRL80M	DRL90L	DRL100L	DRL132S	DRL132MC
AC	139	139	156	156	179	197	221	221
AD	119	119	128	128	140	157	170	170
ADS	129	129	139	139	150	158	172	172
L	544	569	590	621	635	694	779	829
LS	609	634	670	701	721	781	887	937
LB	280	305	326	357	371	430	515	565
LBS	345	370	406	437	457	517	623	673

42 151 00 08

FA67..

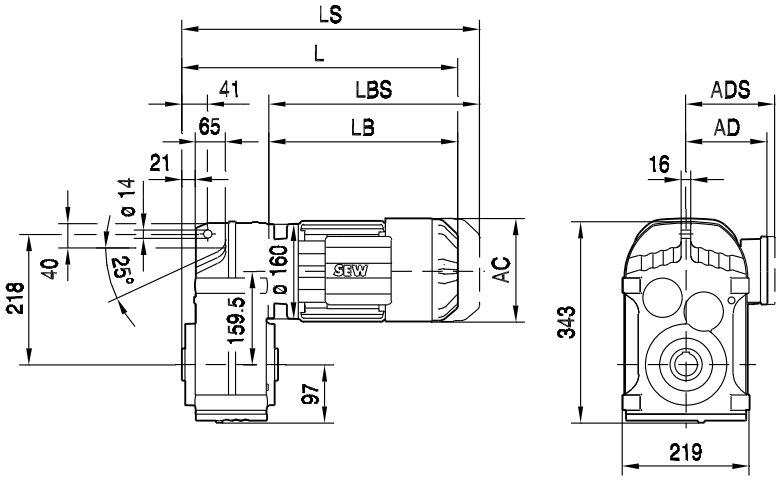

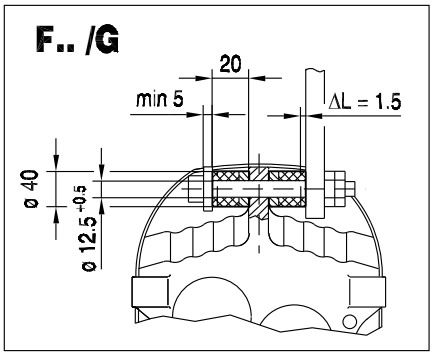

FA67..

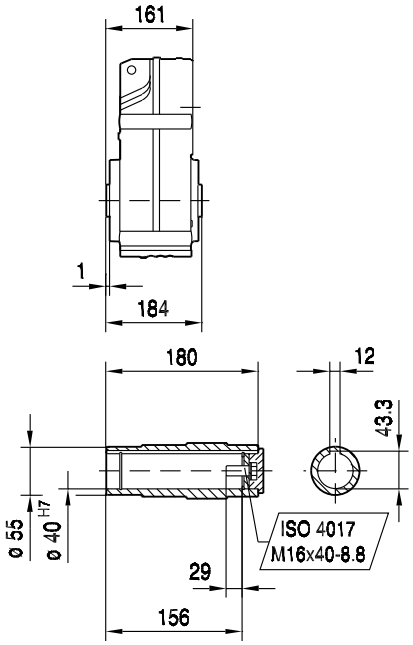

FH67..
max. DR132S

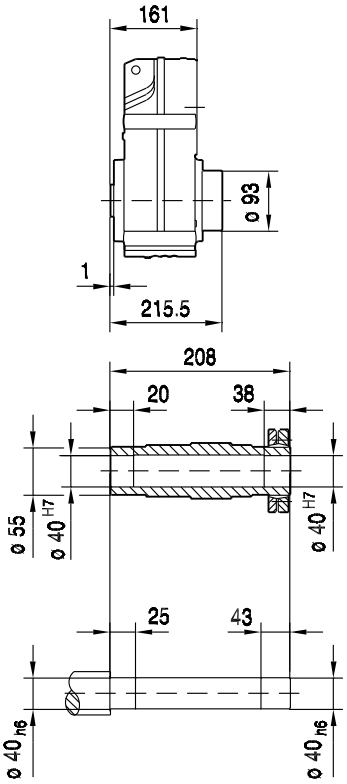

FV67..

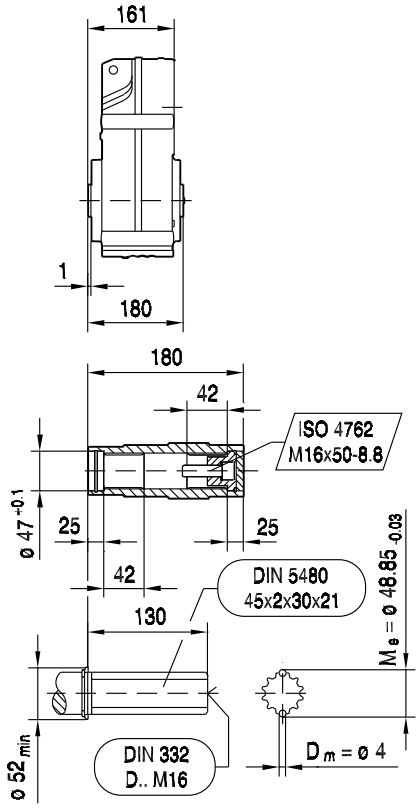

(→ 📖 129)	DRL71S	DRL71M	DRL80S	DRL80M	DRL90L	DRL100L	DRL132S	DRL132MC
AC	139	139	156	156	179	197	221	221
AD	119	119	128	128	140	157	170	170
ADS	129	129	139	139	150	158	172	172
L	441	466	487	518	532	591	676	726
LS	506	531	567	598	618	678	784	834
LB	280	305	326	357	371	430	515	565
LBS	345	370	406	437	457	517	623	673

F..DRL
F..Nm

42 152 00 08

FAZ67..

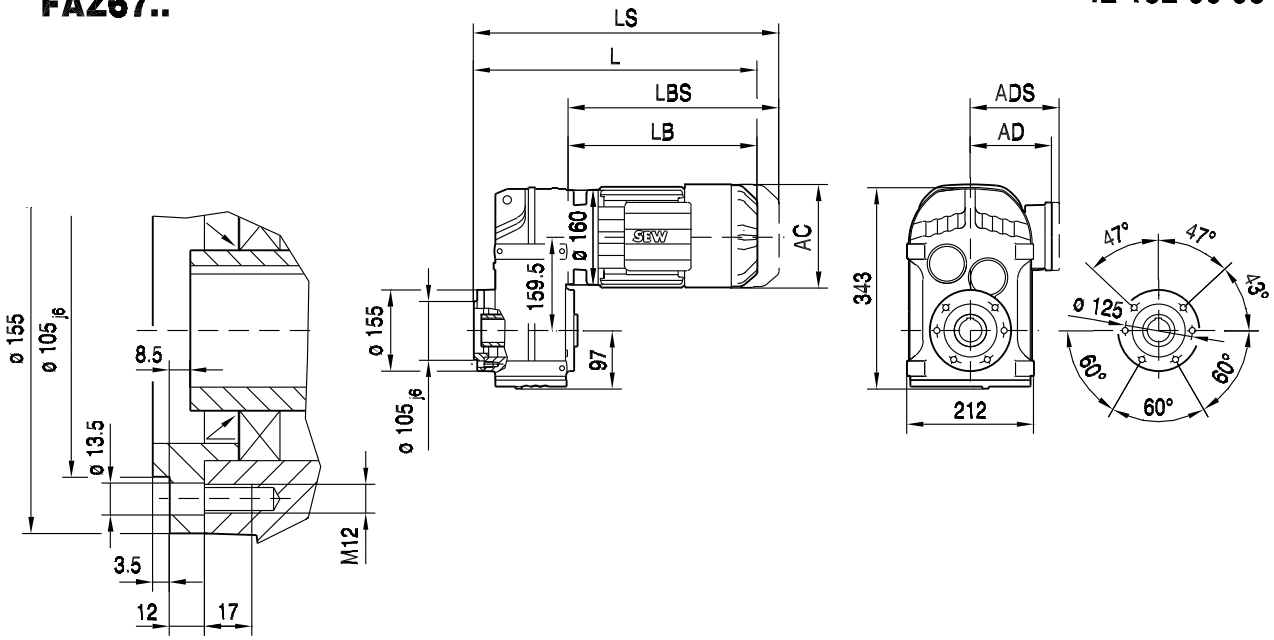

FAZ67..

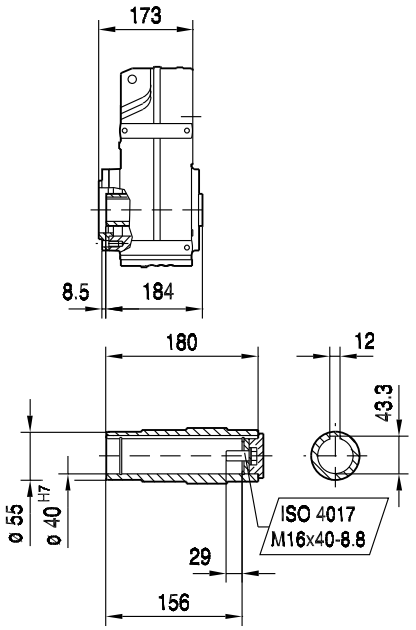

FHZ67..
max. DR132S

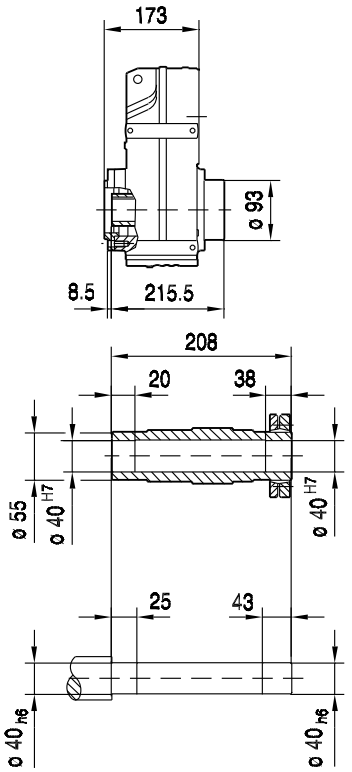

FVZ67..

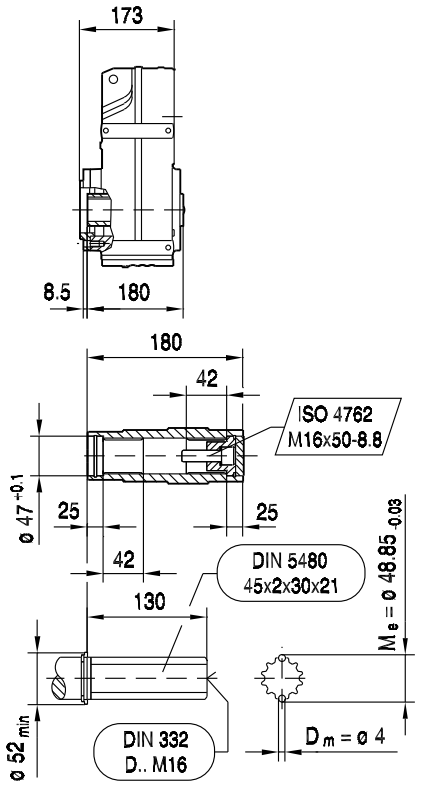

(→ 📖 129)	DRL71S	DRL71M	DRL80S	DRL80M	DRL90L	DRL100L	DRL132S	DRL132MC
AC	139	139	156	156	179	197	221	221
AD	119	119	128	128	140	157	170	170
ADS	129	129	139	139	150	158	172	172
L	453	478	499	530	544	603	688	738
LS	518	543	579	610	630	690	796	846
LB	280	305	326	357	371	430	515	565
LBS	345	370	406	437	457	517	623	673

42 153 00 08

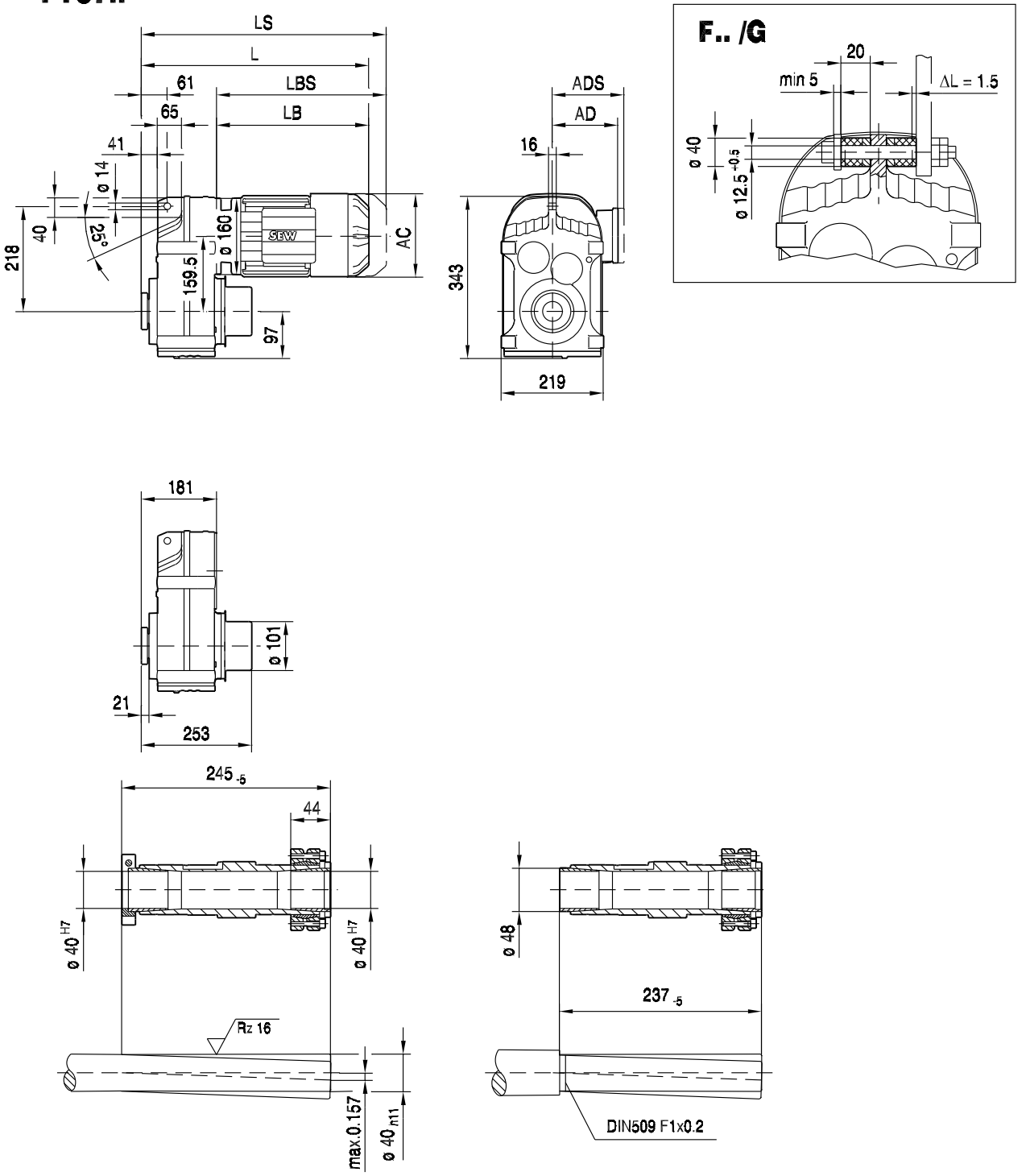

(→ 📖 129)	DRL71S	DRL71M	DRL80S	DRL80M	DRL90L	DRL100L	DRL132S	DRL132MC
AC	139	139	156	156	179	197	221	221
AD	119	119	128	128	140	157	170	170
ADS	129	129	139	139	150	158	172	172
L	462	487	507	538	553	612	697	747
LS	526	551	587	618	638	698	804	854
LB	280	305	326	357	371	430	515	565
LBS	345	370	406	437	457	517	623	673

9.2.6 F 77

M_{aDyn} Nm	i	DRL 71S D1	71S D2	71M D1	71M D2	80S D1	80S D2	80M D1	80M D2	90L D1	90L D2
FA77 2	4.28								137	104	191
	5.16								165	125	230
	5.76		47		78	56	140	73	184	140	255
	6.64		55		90	64	161	84	210	161	295
	7.39		61		100	72	179	93	235	179	325
	8.26	40	68	56	112	80	200	104	260	200	365
	9.30	45	77	63	126	90	225	117	295	225	410
	10.93								345	265	485
	12.20		101		166	118	295	154	390	295	540
	14.06		116		191	136	340	177	450	340	625
	15.64		129		210	152	375	197	500	375	695
	17.49	85	144	119	235	170	420	220	555	420	780
	19.70	96	162	134	265	191	475	245	630	475	870
	21.43	104	177	146	290	205	515	270	685	515	950
	25.50	124	210	173	345	245	615	320	810	615	1130
	28.75	139	235	195	390	275	695	360	920	695	1280
	31.51	153	255	210	425	305	760	395	1000	760	1400
	36.58	177	300	245	495	350	880	460	1170	880	
FA77 3	25.54		205		340	245	610	315	800	610	1120
	29.91		240		400	285	715	370	940	715	1320
	33.74		275		450	320	800	420	1060	800	1480
	38.23	184	310	255	510	365	910	475	1210	910	>1530
	43.58	205	355	290	585	415	1040	540	1380	1040	>1530
	48.37	230	390	325	650	460	1160	600	>1530	1160	>1530
	55.27	265	450	370	740	530	1320	685	>1530	1320	>1530
	58.32	275	475	390	780	555	1390	725	>1530	1390	>1530
	66.46	315	535	440	880	630	>1530	820	>1530	>1530	>1530
	72.50	340	585	480	960	685	>1530	890	>1530	>1530	>1530
	75.02	355	605	495	990	710	>1530	920	>1530	>1530	>1530
	85.52	405	690	565	1130	810	>1530	1050	>1530	>1530	>1530
	94.93	450	765	630	1260	900	>1530	1170	>1530	>1530	>1530
	108.46	515	870	720	1440	1030	>1530	1330	>1530	>1530	>1530
	114.45	540	920	760	1520	1080	>1530	1410	>1530	>1530	>1530
	130.42	615	1050	860	>1530	1230	>1530	>1530	>1530	>1530	>1530
	142.27	665	1130	930	>1530	1330	>1530	>1530	>1530	>1530	>1530
	166.47	780	1330	1090	>1530	>1530	>1530	>1530	>1530	>1530	
	188.40	880	1500	1230	>1530	>1530	>1530	>1530			
	198.31	930	>1530	1300	>1530	>1530	>1530	>1530			
	225.79	1040	>1530	1460		>1530		>1530			
	262.93	1220		>1530							
	281.71	1290		>1530							

→ 124

m kg	s	DRL 71S	71M	80S	80M	90L
FA77	2	58	59	62	64	71
FA77	3	59	61	63	66	72
FAF: + 6.6 kg / F: + 3.8 kg / FF: + 14.4 kg						

M_{aDyn} Nm	i	DRL 100L D1	100L D2	132S D1	132S D2	132MC D1	132MC D2	160M D1	160M D2	160MC D1	160MC D2
FA77 2	4.28	145	350	330	620	535	830	685	1160	765	>1310
	5.16	175	425	400	750	650	1000	820	>1320	920	>1320
	5.76	196	470	445	830	725	1110	920	>1320	1030	>1320
	6.64	225	545	515	960	830	1280	1060	>1320	1190	>1320
	7.39	250	605	570	1070	930	>1330	1180	>1330	1320	>1330
	8.26	280	680	640	1200	1040		1320		>1330	
	9.30	315	765	720	>1330	1170		>1330		>1330	
	10.93	370	900	840	>1530	1370	>1530	>1530	>1530	>1530	>1530
	12.20	410	1000	940	>1530	>1530	>1530	>1530	>1530	>1530	>1530
	14.06	475	1150	1090	>1530	>1530	>1530	>1530	>1530	>1530	>1530
	15.64	530	1280	1210	>1530	>1530	>1530	>1530	>1530	>1530	>1530
	17.49	590	1440	1350	>1530	>1530		>1530		>1530	
	19.70	665	>1530	1520	>1530	>1530		>1530		>1530	
	21.43	725	>1530	>1530							
	25.50	860	>1530	>1530							
	28.75	970									
	31.51	1060									
	36.58	1240									
FA77 3	25.54	850	>1530	>1530	>1530	>1530	>1530	>1530	>1530	>1530	>1530
	29.91	1000	>1530	>1530	>1530	>1530	>1530	>1530	>1530	>1530	>1530
	33.74	1130	>1530	>1530	>1530	>1530	>1530	>1530	>1530	>1530	>1530
	38.23	1280	>1530	>1530	>1530	>1530		>1530		>1530	
	43.58	1460	>1530	>1530	>1530	>1530		>1530		>1530	
	48.37	>1530	>1530	>1530							
	55.27	>1530	>1530	>1530							
	58.32	>1530	>1530	>1530							
	66.46	>1530									
	72.50	>1530									
	75.02	>1530	>1530	>1530							
	85.52	>1530	>1530	>1530							
	94.93	>1530	>1530	>1530							
	108.46	>1530	>1530	>1530							
	114.45	>1530	>1530	>1530							
	130.42	>1530									
	142.27	>1530									
	166.47	>1530									
	188.40										
	198.31										
	225.79										
	262.93										
	281.71										

→ 124

m kg	s	DRL 100L	132S	132MC	160M	160MC
FA77	2	79	94	110	130	135
FA77	3	80	95	110	135	140
FAF: + 6.6 kg / F: + 3.8 kg / FF: + 14.4 kg						

F..DRL
F..Nm

DRL..	i	n_{epk} 1/min	η %	c_{TG} FA Nm/'	FAF Nm/'	F Nm/'	FF Nm/'	φ /R '
FA77 2	4.28	4500	97	263	263	132	106	8
	5.16	4500	97	263	263	132	106	8
	5.76	4500	97	263	263	132	106	8
	6.64	4500	97	263	263	132	106	8
	7.39	4500	97	263	263	132	106	7
	8.26	4500	97	263	263	132	106	7
	9.30	4500	97	263	263	132	106	7
	10.93	4500	97	351	351	151	118	6
	12.20	4500	97	351	351	151	118	5
	14.06	4500	97	351	351	151	118	5
	15.64	4500	97	351	351	151	118	5
	17.49	4500	97	351	351	151	118	5
	19.70	4500	97	351	351	151	118	5
	21.43	4500	97	351	351	151	118	5
	25.50	4500	97	351	351	151	118	5
	28.75	4500	97	351	351	151	118	5
	31.51	4500	97	351	351	151	118	5
	36.58	4500	97	351	351	151	118	5
FA77 3	25.54	4500	96	388	388	157	122	6
	29.91	4500	96	388	388	157	122	6
	33.74	4500	96	388	388	157	122	6
	38.23	4500	96	388	388	157	122	6
	43.58	4500	96	388	388	157	122	6
	48.37	4500	96	388	388	157	122	6
	55.27	4500	96	388	388	157	122	6
	58.32	4500	96	388	388	157	122	6
	66.46	4500	95	388	388	157	122	6
	72.50	4500	95	388	388	157	122	6
	75.02	4500	95	394	394	158	123	6
	85.52	4500	95	394	394	158	123	6
	94.93	4500	95	394	394	158	123	5
	108.46	4500	95	394	394	158	123	5
	114.45	4500	95	394	394	158	123	5
	130.42	4500	95	394	394	158	123	5
	142.27	4500	94	394	394	158	123	5
	166.47	4500	94	394	394	158	123	5
	188.40	4500	94	394	394	158	123	5
	198.31	4500	94	394	394	158	123	5
	225.79	4500	93	394	394	158	123	5
	262.93	4500	93	394	394	158	123	5
	281.71	4500	92	394	394	158	123	5

DRL.. n_e = 1400	i	M_{amax} Nm	M_{apk} Nm	$M_{aNotaus}$ Nm	n_{ak} 1/min	J_G 10^{-4} kgm^2	F_{Ramax} FA N	FAF N	F N	FF N	F_{Rapk} FA N	FAF N	F N	FF N
FA77 2	4.28	1010	1310	1717	327	42	630	630	10200	10900	20000	20000	16900	17400
	5.16	1080	1320	1836	271	31	640	640	10700	11500	20000	20000	16800	17400
	5.76	1080	1320	1836	295	26	930	930	11300	12000	20000	20000	16800	17400
	6.64	1080	1320	1836	346	20	1310	1310	12000	12700	20000	20000	16800	17400
	7.39	1080	1330	1836	365	17	1610	1610	12500	13300	20000	20000	16800	17400
	8.26	1080	1330	1836	400	14	1940	1940	13100	13900	20000	20000	16800	17400
	9.30	1080	1330	1836	430	12	2300	2300	13800	14600	20000	20000	16800	17400
	10.93	1500	1530	2550	183	19	2080	2080	14200	15100	20000	20000	15500	17000
	12.20	1500	1530	2550	205	16	2450	2450	14900	15800	20000	20000	15500	17000
	14.06	1500	1530	2550	220	13	2940	2940	15700	16700	20000	20000	15500	17000
	15.64	1500	1530	2550	237	11	3330	3330	15700	17100	20000	20000	15500	17000
	17.49	1500	1530	2550	252	9.5	3750	3750	15700	17100	20000	20000	15500	17000
	19.70	1500	1530	2550	264	7.9	4220	4220	15700	17100	20000	20000	15500	17000
	21.43	1500	1530	2550	275	7.1	4560	4560	15700	17100	20000	20000	15500	17000
	25.50	1500	1530	2550	275	5.5	5300	5300	15700	17100	20000	20000	15500	17000
	28.75	1430	1530	2431	243	4.4	6190	6190	16200	17300	20000	20000	15500	17000
	31.51	1380	1530	2346	222	3.8	6870	6870	16500	17500	20000	20000	15500	17000
	36.58	1110	1530	1887	191	3.0	8990	8990	17900	18300	20000	20000	15500	17000
FA77 3	25.54	1450	1530	2465	59	10	5560	5560	16100	17300	20000	20000	15500	17000
	29.91	1500	1530	2550	50	7.8	6010	6010	15700	17100	20000	20000	15500	17000
	33.74	1500	1530	2550	50	6.4	6580	6580	15700	17100	20000	20000	15500	17000
	38.23	1500	1530	2550	50	5.2	7190	7190	15700	17100	20000	20000	15500	17000
	43.58	1500	1530	2550	50	4.3	7850	7850	15700	17100	20000	20000	15500	17000
	48.37	1500	1530	2550	52	3.8	8410	8410	15700	17100	20000	20000	15500	17000
	55.27	1500	1530	2550	52	3.0	9140	9140	15700	17100	20000	20000	15500	17000
	58.32	1500	1530	2550	51	2.8	9450	9450	15700	17100	20000	20000	15500	17000
	66.46	1500	1530	2550	53	2.2	10200	10200	15700	17100	20000	20000	15500	17000
	72.50	1500	1530	2550	52	1.9	10700	10700	15700	17100	20000	20000	15500	17000
	75.02	1500	1530	2550	53	4.0	11000	11000	15700	17100	20000	20000	15500	17000
	85.52	1500	1530	2550	53	3.3	11800	11800	15700	17100	20000	20000	15500	17000
	94.93	1500	1530	2550	54	3.0	12500	12500	15700	17100	20000	20000	15500	17000
	108.46	1500	1530	2550	53	2.5	13400	13400	15700	17100	20000	20000	15500	17000
	114.45	1500	1530	2550	54	2.3	13800	13800	15700	17100	20000	20000	15500	17000
	130.42	1500	1530	2550	54	1.9	14800	14800	15700	17100	20000	20000	15500	17000
	142.27	1500	1530	2550	49	1.6	15400	15400	15700	17100	20000	20000	15500	17000
	166.47	1500	1530	2550	42	1.3	16700	16700	15700	17100	20000	20000	15500	17000
	188.40	1500	1530	2550	37	0.91	17700	17700	15700	17100	20000	20000	15500	17000
	198.31	1500	1530	2550	35	0.82	18100	18100	15700	17100	20000	20000	15500	17000
	225.79	1500	1530	2550	31	0.67	19300	19300	15700	17100	20000	20000	15500	17000
	262.93	1500	1530	2550	27	0.54	20000	20000	15700	17100	20000	20000	15500	17000
	281.71	1500	1530	2550	25	0.47	20000	20000	15700	17100	20000	20000	15500	17000

F..DRL
F..Nm

F77..

42 154 00 08

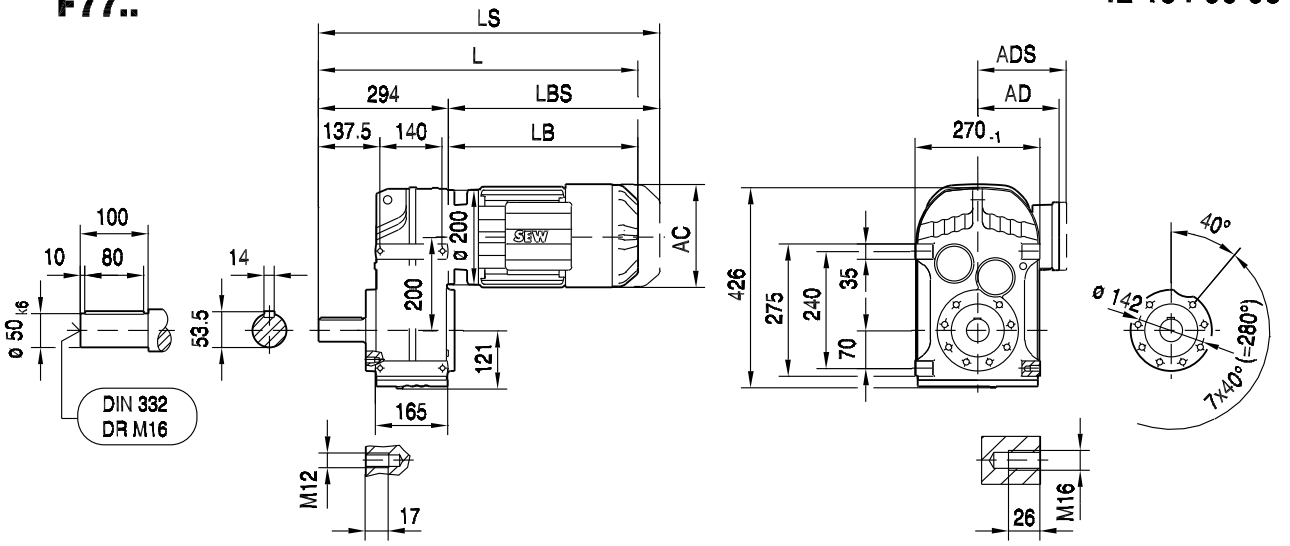

FA77B..

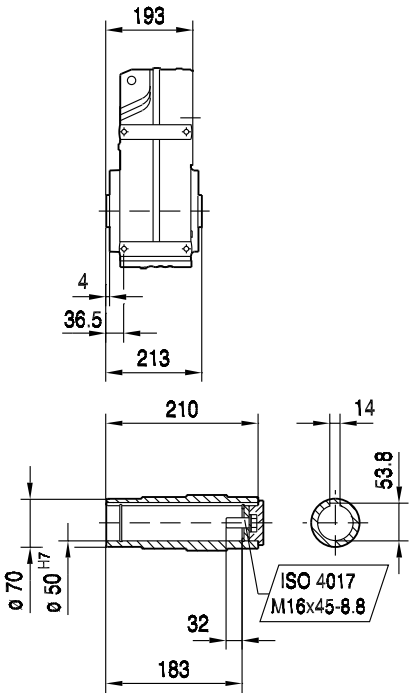

FH77B..

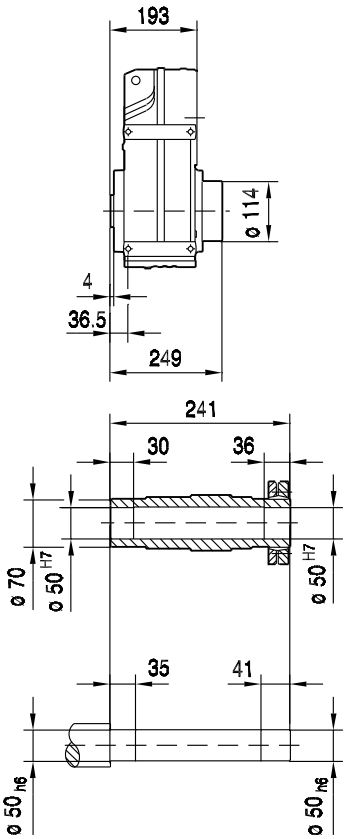

FV77B..

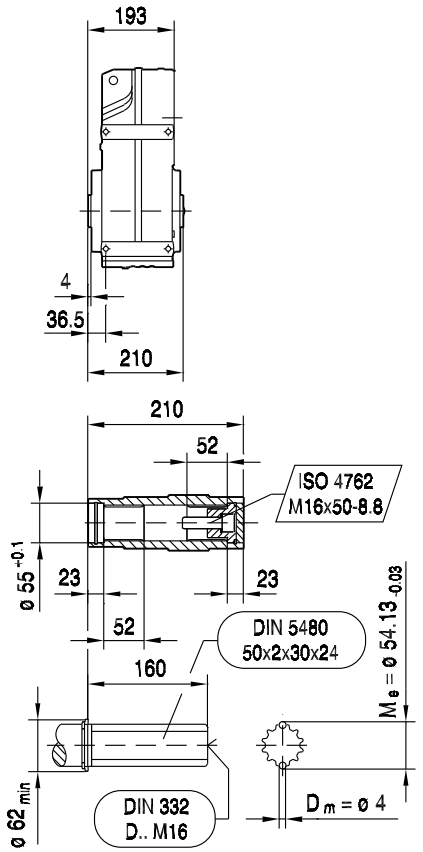

(→ 📖 129)	DRL71S	DRL71M	DRL80S	DRL80M	DRL90L	DRL100L	DRL132S	DRL132MC	DRL160..
AC	139	139	156	156	179	197	221	221	270
AD	119	119	128	128	140	157	170	170	228
ADS	129	129	139	139	150	158	172	172	228
L	567	592	613	644	658	717	798	848	852
LS	632	657	693	724	744	804	906	956	989
LB	273	298	319	350	364	423	504	554	558
LBS	338	363	399	430	450	510	612	662	695

FF77..

42 155 00 08

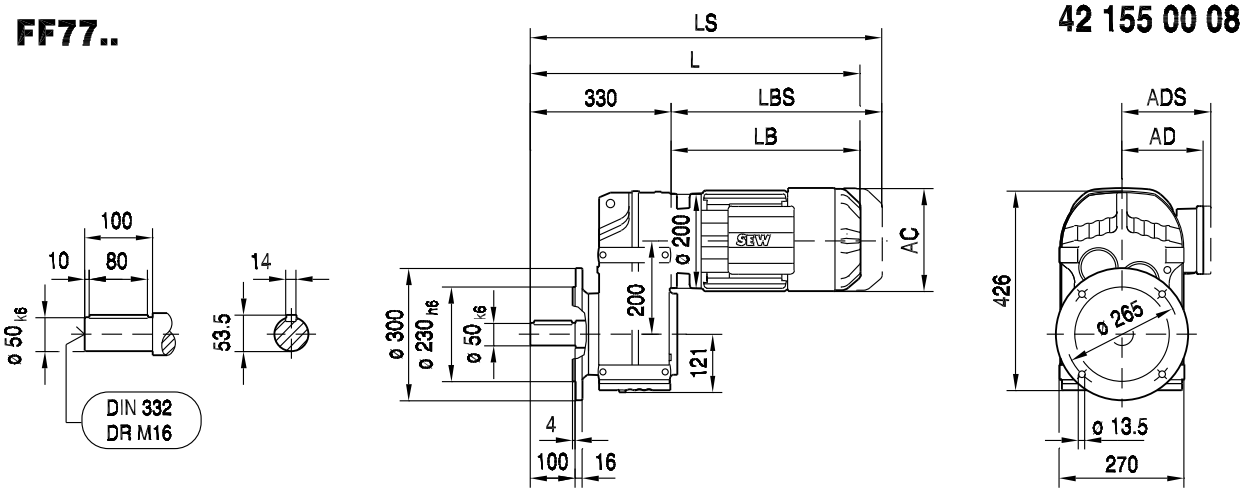

FAF77..

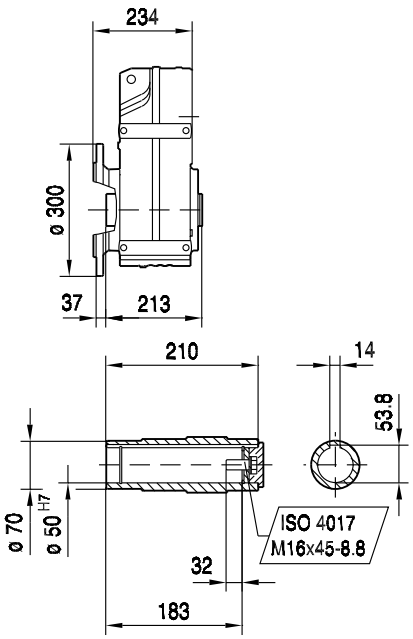

FHF77..

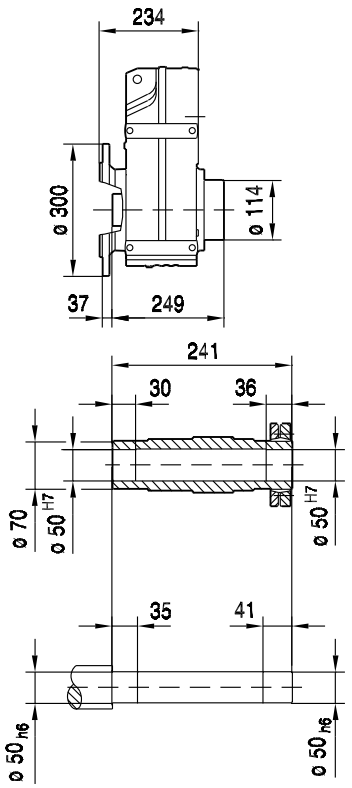

FVF77..

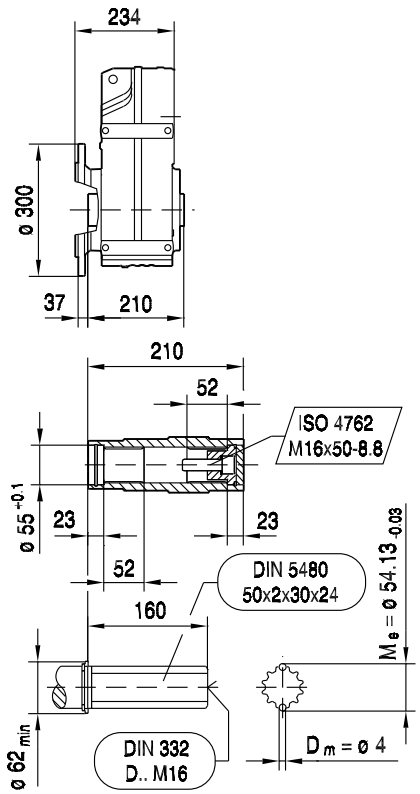

(→ 📖 129)	DRL71S	DRL71M	DRL80S	DRL80M	DRL90L	DRL100L	DRL132S	DRL132MC	DRL160..
AC	139	139	156	156	179	197	221	221	270
AD	119	119	128	128	140	157	170	170	228
ADS	129	129	139	139	150	158	172	172	228
L	603	628	649	680	694	753	834	884	888
LS	668	693	729	760	780	840	942	992	1025
LB	273	298	319	350	364	423	504	554	558
LBS	338	363	399	430	450	510	612	662	695

F..DRL
F..Nm

FA77..

42 156 00 08

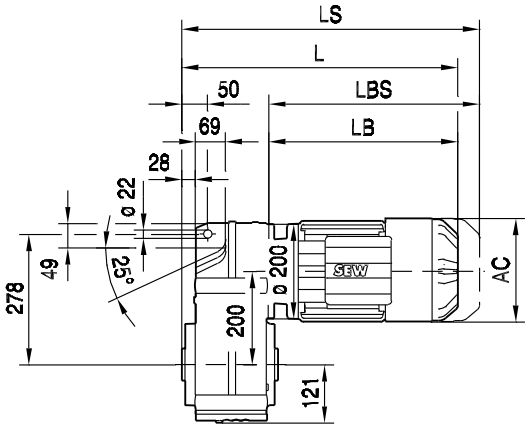

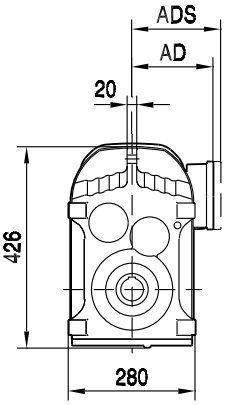

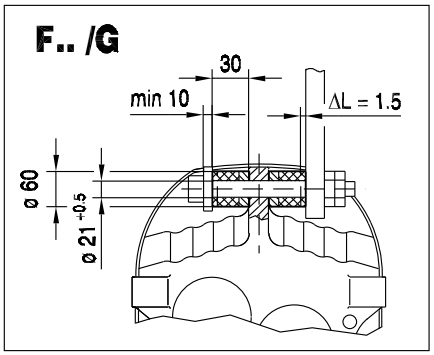

FA77..

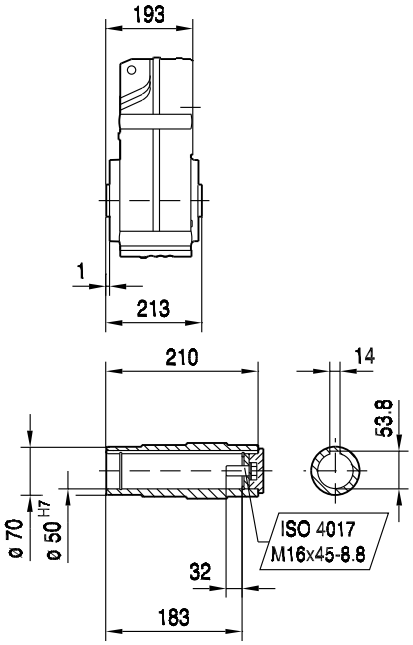

FH77..

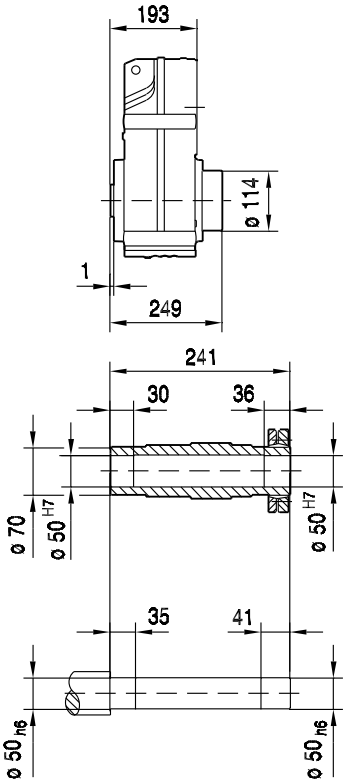

FV77..

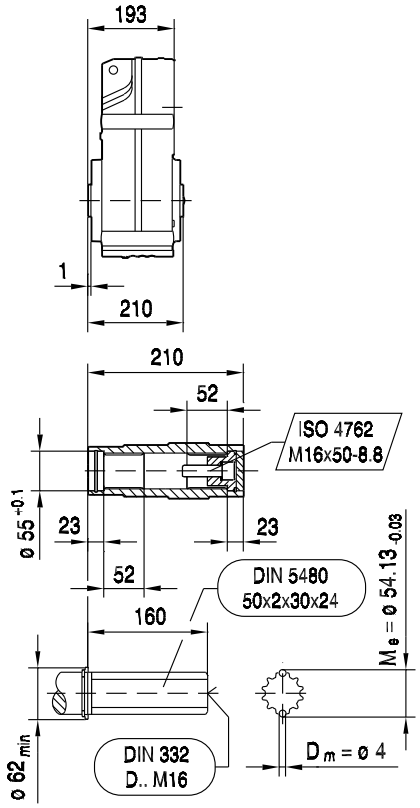

(→ 📖 129)	DRL71S	DRL71M	DRL80S	DRL80M	DRL90L	DRL100L	DRL132S	DRL132MC	DRL160..
AC	139	139	156	156	179	197	221	221	270
AD	119	119	128	128	140	157	170	170	228
ADS	129	129	139	139	150	158	172	172	228
L	466	491	512	543	557	616	697	747	751
LS	531	556	592	623	643	703	805	855	888
LB	273	298	319	350	364	423	504	554	558
LBS	338	363	399	430	450	510	612	662	695

42 157 00 08

FAZ77..

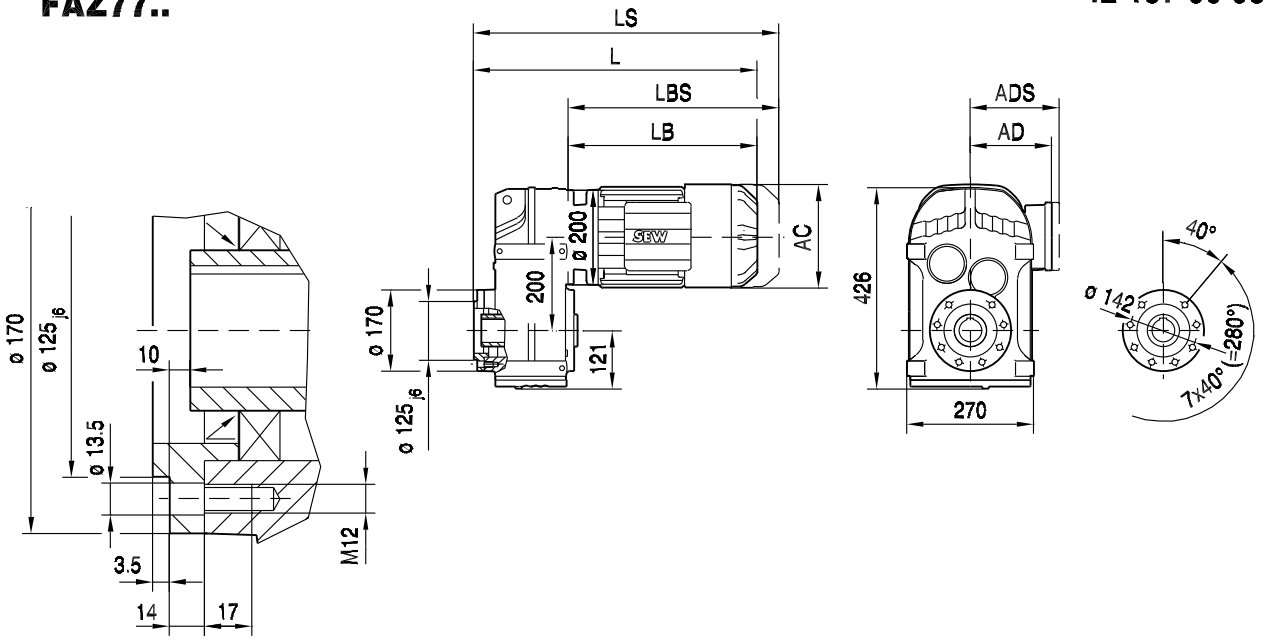

FAZ77..

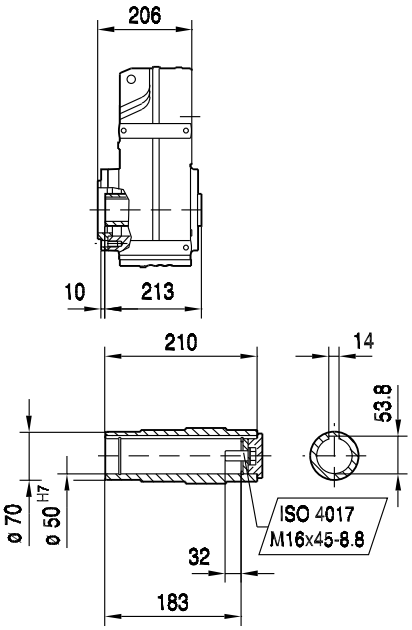

FHZ77..

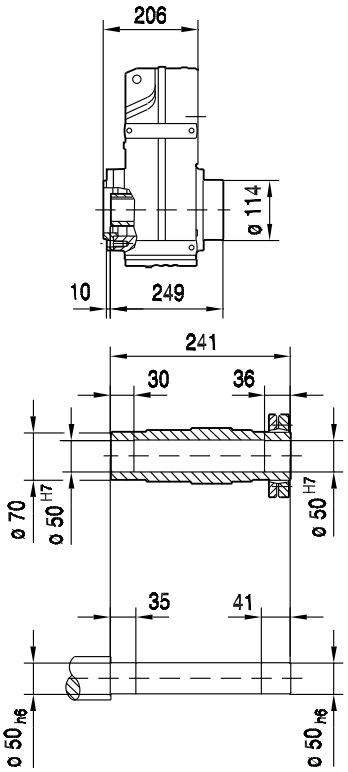

FVZ77..

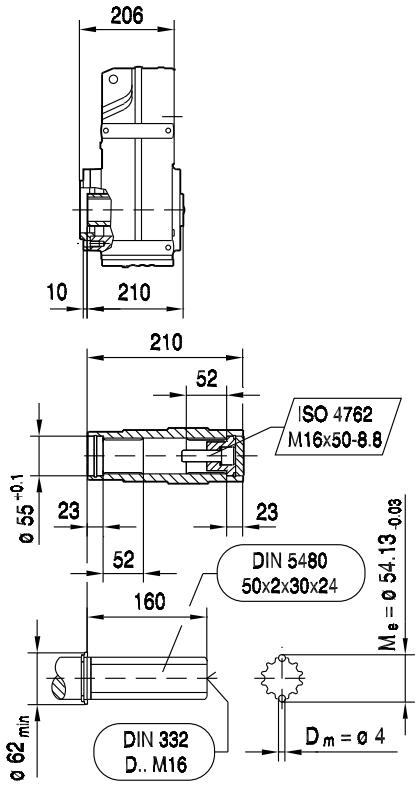

(→ 📖 129)	DRL71S	DRL71M	DRL80S	DRL80M	DRL90L	DRL100L	DRL132S	DRL132MC	DRL160..
AC	139	139	156	156	179	197	221	221	270
AD	119	119	128	128	140	157	170	170	228
ADS	129	129	139	139	150	158	172	172	228
L	479	504	525	556	570	629	710	760	764
LS	544	569	605	636	656	716	818	868	901
LB	273	298	319	350	364	423	504	554	558
LBS	338	363	399	430	450	510	612	662	695

F..DRL
F..Nm

FT77..

42 158 00 08

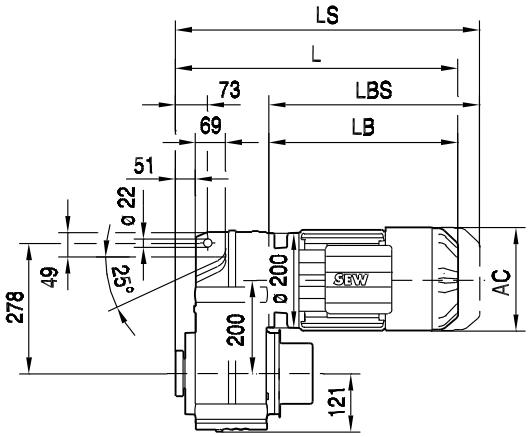

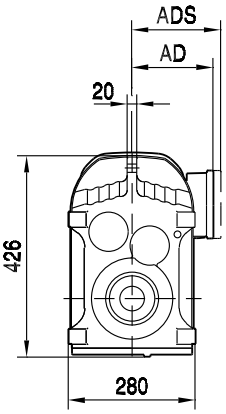

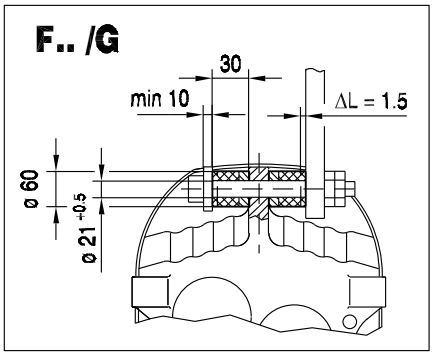

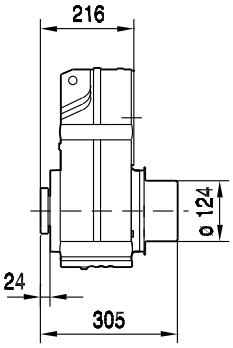

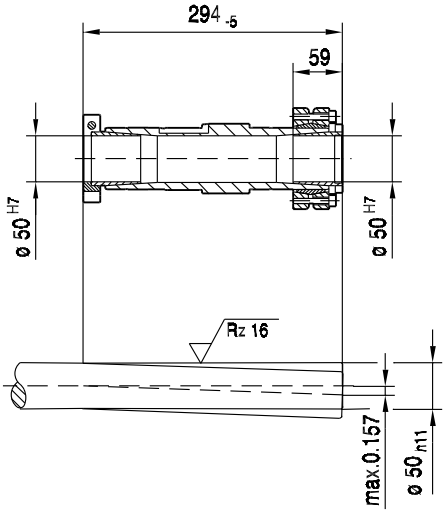

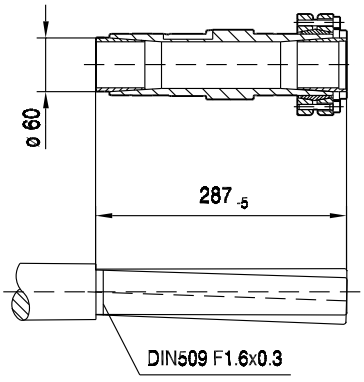

(→ 📖 129)	DRL71S	DRL71M	DRL80S	DRL80M	DRL90L	DRL100L	DRL132S	DRL132MC	DRL160..
AC	139	139	156	156	179	197	221	221	270
AD	119	119	128	128	140	157	170	170	228
ADS	129	129	139	139	150	158	172	172	228
L	489	514	535	566	580	639	720	770	774
LS	554	579	615	646	666	726	828	878	911
LB	273	298	319	350	364	423	504	554	558
LBS	338	363	399	430	450	510	612	662	695

Diese Seite bleibt aus drucktechnischen Gründen frei.

9.2.7 F 87

M_{aDyn} Nm	i	DRL 71M D1	71M D2	80S D1	80S D2	80M D1	80M D2	90L D1	90L D2	100L D1	100L D2	132S D1	132S D2	132MC D1	132MC D2
FA87 2	4.12										335	315	595	515	795
	4.92										405	380	715	620	950
	5.63						180	137	250	191	460	435	810	705	1090
	6.65						210	161	295	225	545	515	960	830	1290
	7.35		100	71	178	93	235	178	325	245	605	570	1060	920	1420
	8.29		113	80	200	105	265	200	365	280	680	640	1200	1040	1600
	9.58										785	740	1390	1200	1850
	11.46										940	880	1660	1440	2220
	13.12						415	315	585	445	1080	1010	1900	1650	2540
	15.48						495	375	690	525	1270	1200	2250	1950	3000
	17.12		230	166	415	215	545	415	760	580	1410	1320	2490	2150	>3090
	19.31		260	187	465	240	615	465	860	655	1590	1490	2800	2430	>3090
	21.32		285	205	515	265	680	515	950	720	1750	1650	>3090	2680	>3090
	23.68	161	320	225	570	295	755	570	1050	800	1950	1830	>3090	2980	
	26.50	180	355	255	640	330	840	640	1180	890	2180	2050	>3090	>3090	
	28.78	195	390	275	695	360	920	695	1280	970	2370	2230			
	33.92	230	460	325	820	425	1080	820	1510	1150	2790	2630			
FA87 3	29.20						920	700	1280	980	2380	2240	>3090	>3090	>3090
	35.19						1110	840	1550	1180	2870	2700	>3090	>3090	>3090
	39.30		525	375	940	490	1240	940	1730	1320	>3090	3010	>3090	>3090	>3090
	45.28		605	430	1080	565	1430	1080	1990	1520	>3090	>3090	>3090	>3090	>3090
	50.36		675	480	1200	625	1590	1200	2220	1690	>3090	>3090	>3090	>3090	>3090
	56.75						1770	1340	2470	1880	>3090	>3090	>3090	>3090	
	68.40						2140	1620	2980	2270	>3090	>3090	>3090	>3090	
	76.39		1010	725	1810	940	2390	1810	>3090	2530	>3090	>3090	>3090	>3090	
	88.01		1170	830	2090	1080	2750	2090	>3090	2920	>3090	>3090	>3090	>3090	
	97.89		1300	920	2320	1200	3060	2320	>3090	>3090	>3090	>3090	>3090	>3090	
	109.49	725	1450	1040	2600	1350	>3090	2600	>3090	>3090	>3090	>3090	>3090	>3090	
	123.29	810	1630	1170	2920	1520	>3090	2920	>3090	>3090	>3090	>3090	>3090	>3090	
	134.16	890	1780	1270	>3090	1650	>3090	>3090	>3090	>3090	>3090	>3090			
	159.61	1060	2120	1510	>3090	1970	>3090	>3090	>3090	>3090	>3090	>3090			
	179.97	1180	2360	1690	>3090	2190	>3090	>3090	>3090	>3090					
	197.20	1290	2590	1850	>3090	2400	>3090	>3090	>3090	>3090					
	228.93	1500	3010	2150	>3090	2790	>3090	>3090		>3090					
	255.37	1680	>3090	2400	>3090	>3090									
	270.68	1760	>3090	2510	>3090	>3090									

→ 124

m kg	s	DRL 71M	80S	80M	90L	100L	132S	132MC
FA87	2	97	99	100	110	115	130	150
FA87	3	100	100	105	110	120	135	150
FAF: + 12.7 kg / F: + 5.7 kg / FF: + 21.3 kg								

M_{aDyn} Nm	i	DRL										
		160M		160MC		180S		180M		180L		180LC
		D1	D2	D1	D2	D1	D2	D1	D2	D1	D2	D1
FA87 2	4.12	655	1110	735	1270	830	1510	990	1710	1270	>1940	1670
	4.92	785	1330	880	1520	1000	1810	1190	>1960	1520	>1960	>1960
	5.63	900	1520	1010	1740	1140	>1960	1360	>1960	1740	>1960	>1960
	6.65	1060	1800	1190	>1970	1350	>1970	1610	>1970	>1970	>1970	>1970
	7.35	1170	>1970	1310	>1970	1490	>1970	1780	>1970	>1970	>1970	>1970
	8.29	1320	>1980	1480	>1980	1680		>1980		>1980		
	9.58	1530	2600	1710	2970	1950	>3090	2320	>3090	2970	>3090	>3090
	11.46	1830	>3090	2050	>3090	2330	>3090	2770	>3090	>3090	>3090	>3090
	13.12	2090	>3090	2350	>3090	2670	>3090	>3090	>3090	>3090	>3090	>3090
	15.48	2470	>3090	2770	>3090	>3090	>3090	>3090	>3090	>3090	>3090	>3090
	17.12	2740	>3090	3070	>3090	>3090	>3090	>3090	>3090	>3090	>3090	>3090
	19.31	>3090	>3090	>3090	>3090	>3090		>3090		>3090		
	21.32	>3090	>3090	>3090	>3090	>3090		>3090		>3090		
	23.68	>3090		>3090								
	26.50	>3090		>3090								
	28.78											
	33.92											
FA87 3	29.20	>3090	>3090	>3090	>3090	>3090	>3090	>3090	>3090	>3090	>3090	>3090
	35.19	>3090	>3090	>3090	>3090	>3090	>3090	>3090	>3090	>3090	>3090	>3090
	39.30	>3090	>3090	>3090	>3090	>3090	>3090	>3090	>3090	>3090	>3090	>3090
	45.28	>3090	>3090	>3090	>3090	>3090		>3090		>3090		
	50.36	>3090	>3090	>3090	>3090	>3090		>3090		>3090		
	56.75	>3090		>3090								
	68.40	>3090		>3090								
	76.39	>3090		>3090								
	88.01	>3090		>3090								
	97.89	>3090		>3090								
	109.49	>3090		>3090								
	123.29	>3090		>3090								
	134.16											
	159.61											
	179.97											
	197.20											
	228.93											
	255.37											
	270.68											

→ 124

m kg	s	DRL					
		160M	160MC	180S	180M	180L	180LC
FA87	2	170	175	205	220	230	240
FA87	3	170	175	205	220	235	245
FAF: + 12.7 kg / F: + 5.7 kg / FF: + 21.3 kg							

F..DRL
F..Nm

DRL..	i	n_{epk} 1/min	η %	c_{TG} FA Nm/'	FAF Nm/'	F Nm/'	FF Nm/'	φ /R '
FA87 2	4.12	3924	97	465	465	197	186	7
	4.92	4378	97	465	465	197	186	7
	5.63	4500	97	465	465	197	186	7
	6.65	4500	97	465	465	197	186	7
	7.35	4500	97	465	465	197	186	7
	8.29	4500	97	465	465	197	186	7
	9.58	4500	97	711	711	230	216	7
	11.46	4500	97	711	711	230	216	7
	13.12	4500	97	711	711	230	216	7
	15.48	4500	97	711	711	230	216	7
	17.12	4500	97	711	711	230	216	7
	19.31	4500	97	711	711	230	216	7
	21.32	4500	97	711	711	230	216	7
	23.68	4500	97	711	711	230	216	7
	26.50	4500	97	711	711	230	216	7
	28.78	4500	97	711	711	230	216	7
	33.92	4500	97	711	711	230	216	7
FA87 3	29.20	4500	96	833	833	242	226	8
	35.19	4500	96	833	833	242	226	8
	39.30	4500	96	833	833	242	226	8
	45.28	4500	96	833	833	242	226	8
	50.36	4500	96	833	833	242	226	7
	56.75	4500	95	846	846	243	227	7
	68.40	4500	95	846	846	243	227	7
	76.39	4500	95	846	846	243	227	7
	88.01	4500	95	846	846	243	227	7
	97.89	4500	95	846	846	243	227	7
	109.49	4500	95	846	846	243	227	7
	123.29	4500	95	846	846	243	227	7
	134.16	4500	95	846	846	243	227	7
	159.61	4500	95	846	846	243	227	7
	179.97	4500	94	846	846	243	227	7
	197.20	4500	94	846	846	243	227	7
	228.93	4500	94	846	846	243	227	7
	255.37	4500	94	846	846	243	227	7
	270.68	4500	93	846	846	243	227	7

DRL..							F_{Ramax}				F_{Rapk}			
n_e = 1400	i	M_{amax} Nm	M_{apk} Nm	$M_{aNotaus}$ Nm	n_{ak} 1/min	J_G 10^{-4} kgm^2	FA N	FAF N	F N	FF N	FA N	FAF N	F N	FF N
FA87 2	4.12	1460	1940	2482	340	114	3020	3020	5980	11800	30000	30000	26400	23400
	4.92	1530	1960	2601	346	85	3310	3310	6430	12600	30000	30000	26300	23400
	5.63	1530	1960	2601	391	67	3850	3850	7020	13400	30000	30000	26300	23400
	6.65	1530	1970	2601	466	52	4550	4550	7790	14400	30000	30000	26300	23400
	7.35	1530	1970	2601	490	44	5000	5000	8280	15000	30000	30000	26300	23400
	8.29	1530	1980	2601	531	36	5550	5550	8890	15800	30000	30000	26200	23300
	9.58	2880	3090	4896	146	63	275	275	5050	11000	30000	30000	16000	16000
	11.46	3000	3090	5100	122	49	575	575	5580	11800	30000	30000	16000	16000
	13.12	3000	3090	5100	114	40	1300	1300	6370	13100	30000	30000	16000	16000
	15.48	3000	3090	5100	110	32	2220	2220	7390	14700	30000	30000	16000	16000
	17.12	3000	3090	5100	105	28	2810	2810	8040	15800	30000	30000	16000	16000
	19.31	3000	3090	5100	104	23	3540	3540	8840	17000	30000	30000	16000	16000
	21.32	3000	3090	5100	98	20	4160	4160	9520	18000	30000	30000	16000	16000
	23.68	3000	3090	5100	97	17	4850	4850	10300	19100	30000	30000	16000	16000
	26.50	3000	3090	5100	98	15	5610	5610	11100	19800	30000	30000	16000	16000
	28.78	2450	3090	4165	191	13	8940	8940	13900	22500	30000	30000	16000	16000
	33.92	2610	3090	4437	150	10	9340	9340	14600	22200	30000	30000	16000	16000
FA87 3	29.20	2510	3090	4267	48	25	8740	8740	13800	22400	30000	30000	16000	16000
	35.19	2610	3090	4437	40	19	9610	9610	14900	22200	30000	30000	16000	16000
	39.30	2720	3090	4624	36	16	9910	9910	15400	22000	30000	30000	16000	16000
	45.28	2820	3090	4794	31	13	10500	10500	16200	21700	30000	30000	16000	16000
	50.36	2940	3090	4998	28	11	10800	10800	16800	21500	30000	30000	16000	16000
	56.75	3000	3090	5100	32	20	11600	11600	17700	19800	30000	30000	16000	16000
	68.40	3000	3090	5100	32	16	13300	13300	19600	19800	30000	30000	16000	16000
	76.39	3000	3090	5100	31	14	14300	14300	19800	19800	30000	30000	16000	16000
	88.01	3000	3090	5100	32	11	15800	15800	19800	19800	30000	30000	16000	16000
	97.89	3000	3090	5100	32	9.9	16900	16900	19800	19800	30000	30000	16000	16000
	109.49	3000	3090	5100	32	8.3	18100	18100	19800	19800	30000	30000	16000	16000
	123.29	3000	3090	5100	32	7.0	19400	19400	19800	19800	30000	30000	16000	16000
	134.16	3000	3090	5100	32	6.3	20400	20400	19800	19800	30000	30000	16000	16000
	159.61	3000	3090	5100	32	4.9	22500	22500	19800	19800	30000	30000	16000	16000
	179.97	3000	3090	5100	32	4.0	24100	24100	19800	19800	30000	30000	16000	16000
	197.20	3000	3090	5100	32	3.5	25300	25300	19800	19800	30000	30000	16000	16000
	228.93	3000	3090	5100	31	2.8	27300	27300	19800	19800	30000	30000	16000	16000
	255.37	3000	3090	5100	27	1.8	28900	28900	19800	19800	30000	30000	16000	16000
	270.68	3000	3090	5100	26	1.6	29800	29800	19800	19800	30000	30000	16000	16000

F..DRL
F..Nm

F87..

42 159 00 08

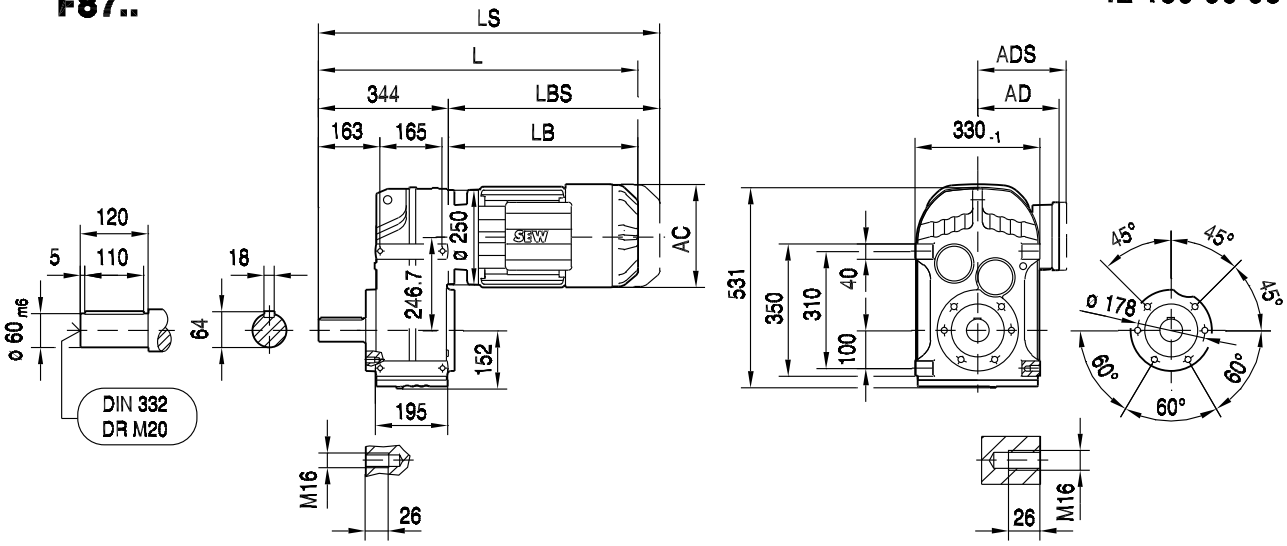

FA87B..

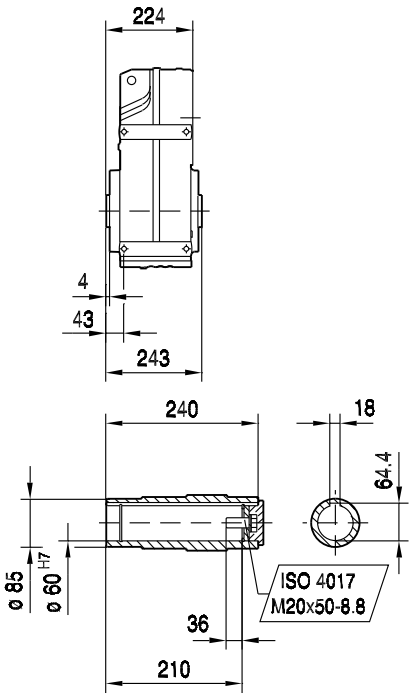

FH87B..

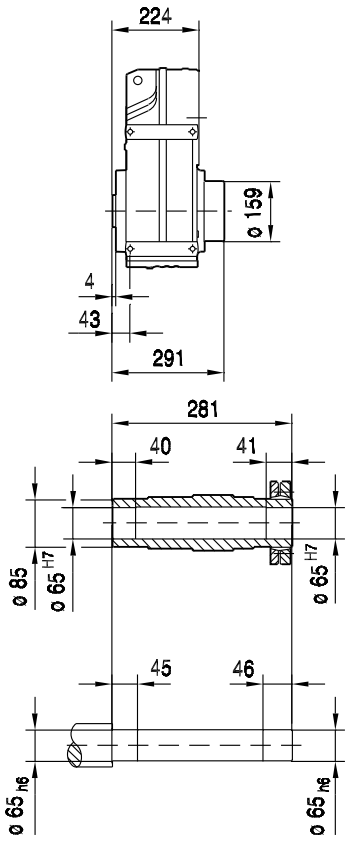

FV87B..

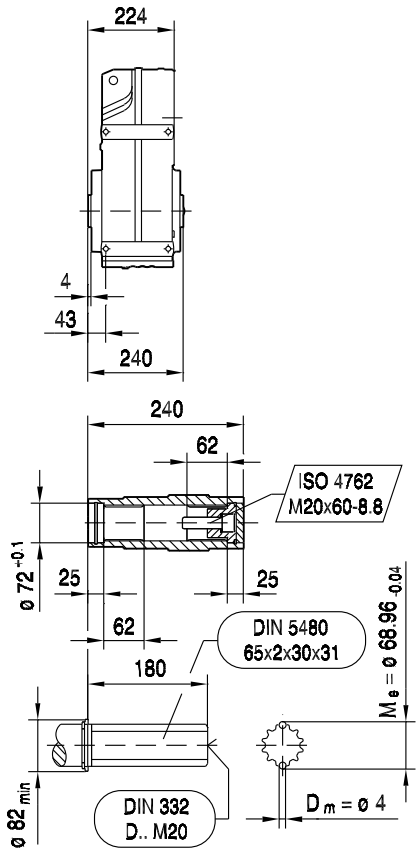

(→ 📖 129)	DRL71M	DRL80S	DRL80M	DRL90L	DRL100L	DRL132S	DRL132MC	DRL160..	DRL180S/M	DRL180L/LC
AC	139	156	156	179	197	221	221	270	316	316
AD	119	128	128	140	157	170	170	228	253	253
ADS	129	139	139	150	158	172	172	228	253	253
L	637	658	689	703	762	843	893	897	966	1026
LS	702	738	769	789	849	951	1001	1034	1155	1215
LB	293	314	345	359	418	499	549	553	622	682
LBS	358	394	425	445	505	607	657	690	811	871

FF87..

42 160 00 08

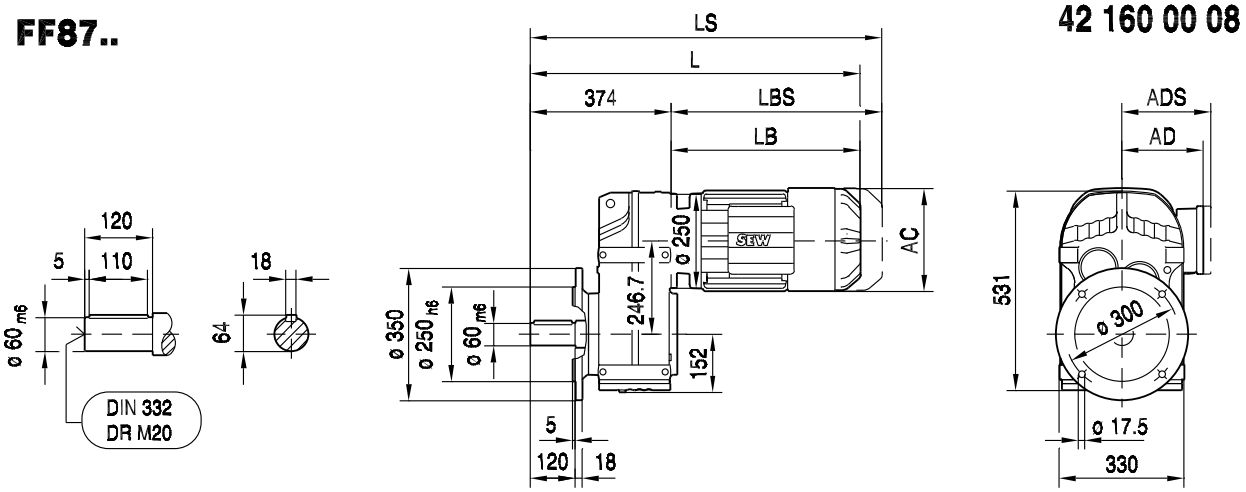

FAF87..

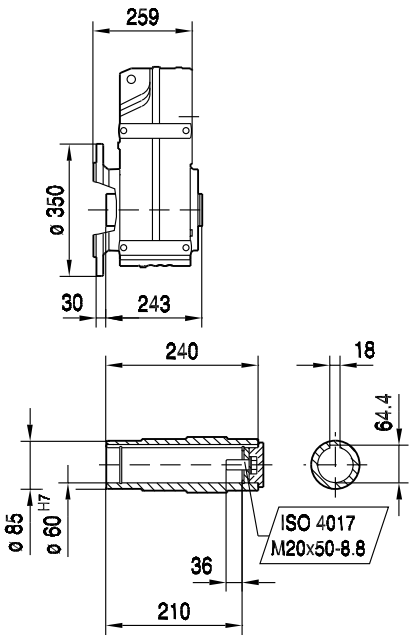

FHF87..

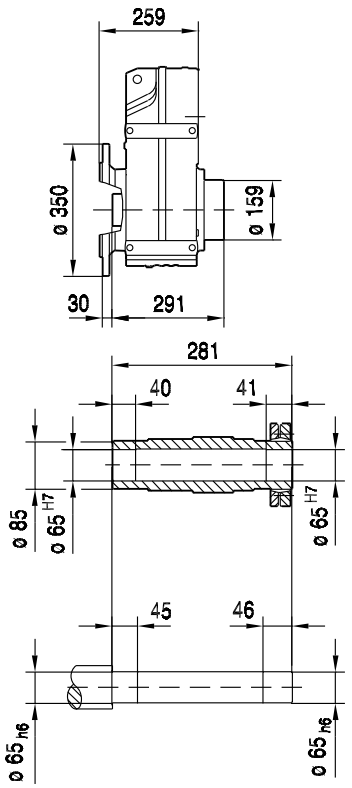

FVF87..

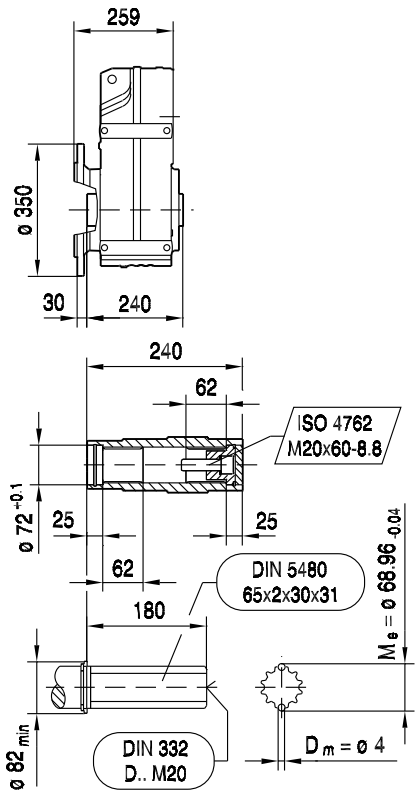

(→ 📖 129)	DRL71M	DRL80S	DRL80M	DRL90L	DRL100L	DRL132S	DRL132MC	DRL160..	DRL180S/M	DRL180L/LC
AC	139	156	156	179	197	221	221	270	316	316
AD	119	128	128	140	157	170	170	228	253	253
ADS	129	139	139	150	158	172	172	228	253	253
L	667	688	719	733	792	873	923	927	996	1056
LS	732	768	799	819	879	981	1031	1064	1185	1245
LB	293	314	345	359	418	499	549	553	622	682
LBS	358	394	425	445	505	607	657	690	811	871

F..DRL
F..Nm

42 161 00 08

FA87..

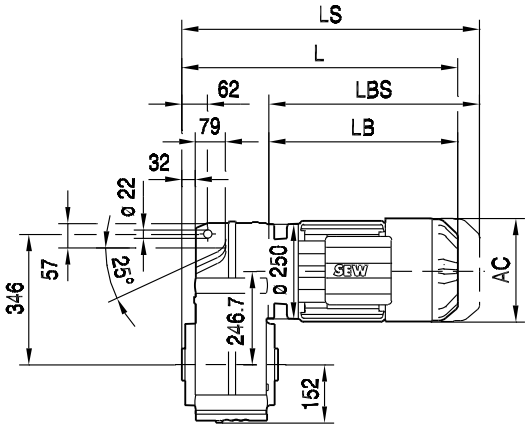

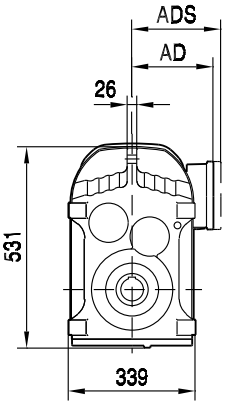

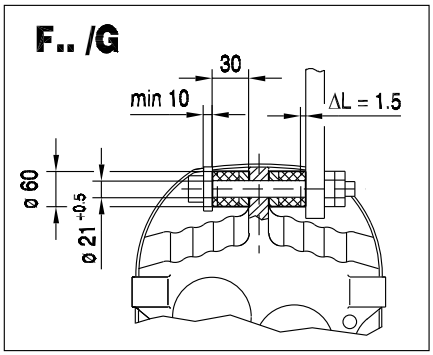

FA87..

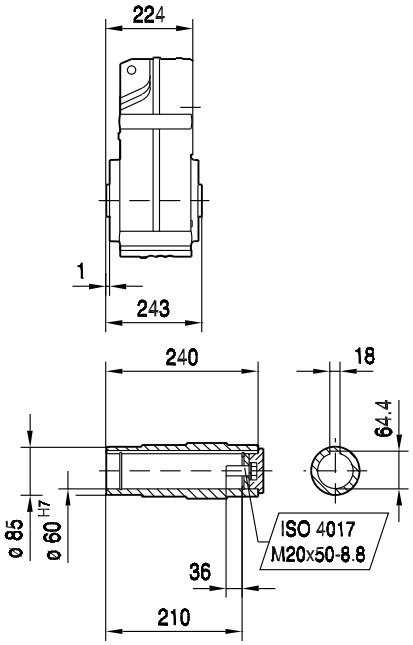

FH87..

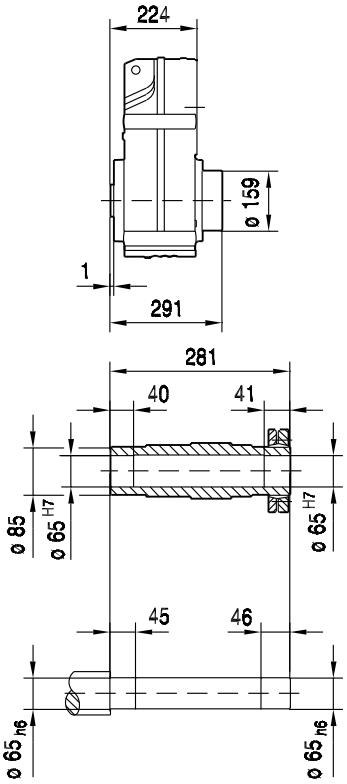

FV87..

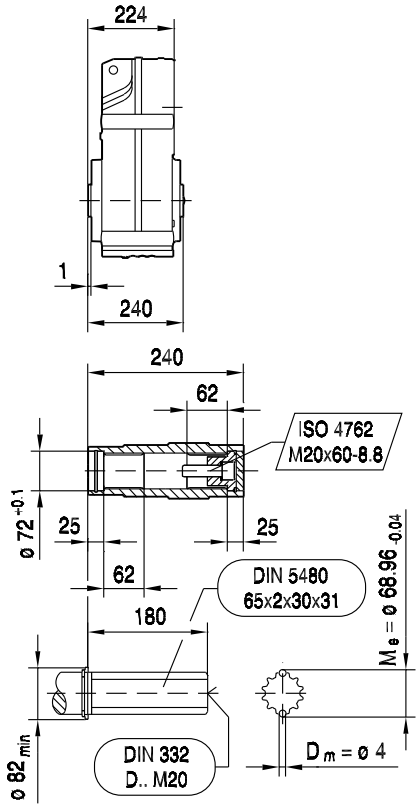

(→ 📖 129)	DRL71M	DRL80S	DRL80M	DRL90L	DRL100L	DRL132S	DRL132MC	DRL160..	DRL180S/M	DRL180L/LC
AC	139	156	156	179	197	221	221	270	316	316
AD	119	128	128	140	157	170	170	228	253	253
ADS	129	139	139	150	158	172	172	228	253	253
L	517	538	569	583	642	723	773	777	846	906
LS	582	618	649	669	729	831	881	914	1035	1095
LB	293	314	345	359	418	499	549	553	622	682
LBS	358	394	425	445	505	607	657	690	811	871

42 162 00 08

FAZ87..

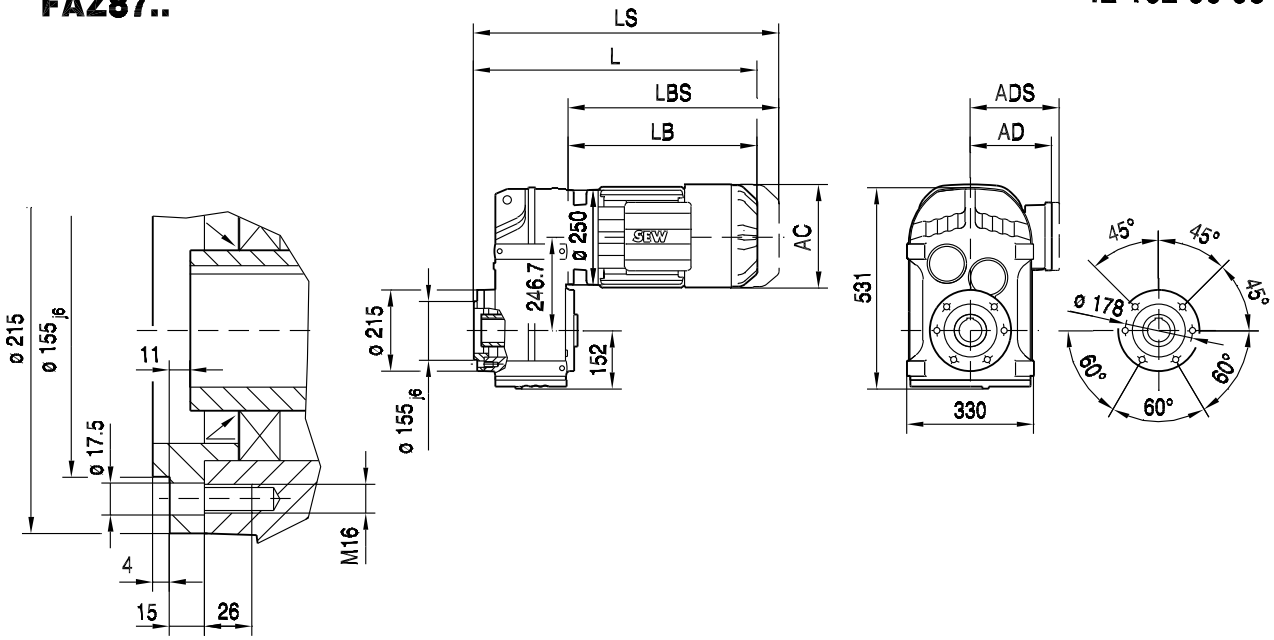

FAZ87..

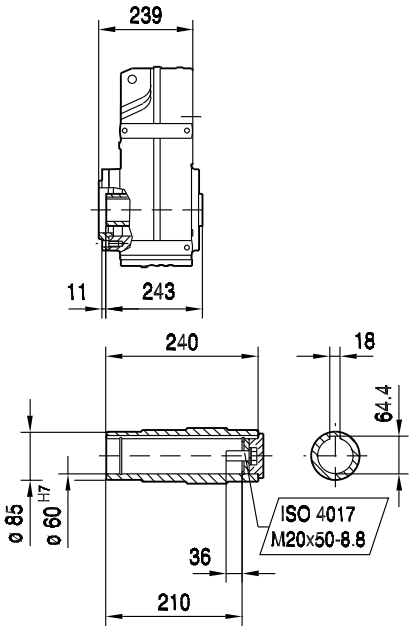

FHZ87..

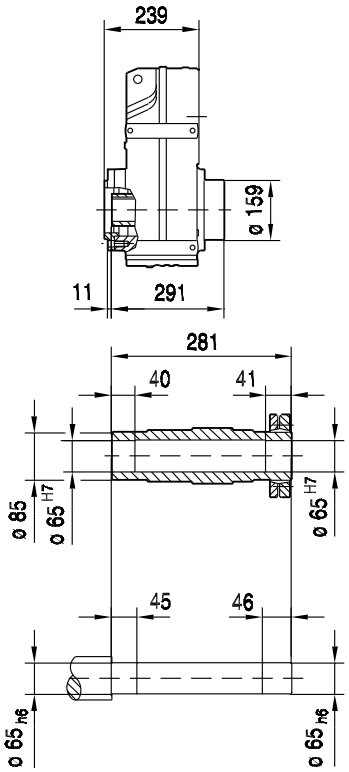

FVZ87..

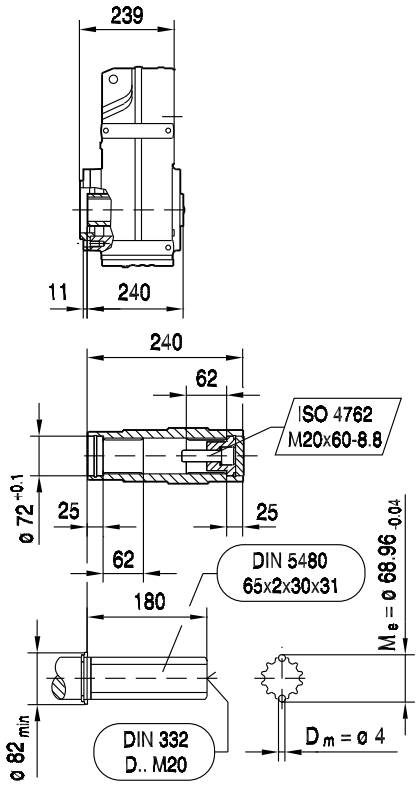

(→ 📖 129)	DRL71M	DRL80S	DRL80M	DRL90L	DRL100L	DRL132S	DRL132MC	DRL160..	DRL180S/M	DRL180L/LC
AC	139	156	156	179	197	221	221	270	316	316
AD	119	128	128	140	157	170	170	228	253	253
ADS	129	139	139	150	158	172	172	228	253	253
L	532	553	584	598	657	738	788	792	861	921
LS	597	633	664	684	744	846	896	929	1050	1110
LB	293	314	345	359	418	499	549	553	622	682
LBS	358	394	425	445	505	607	657	690	811	871

F..DRL
F..Nm

FT87..

42 163 00 08

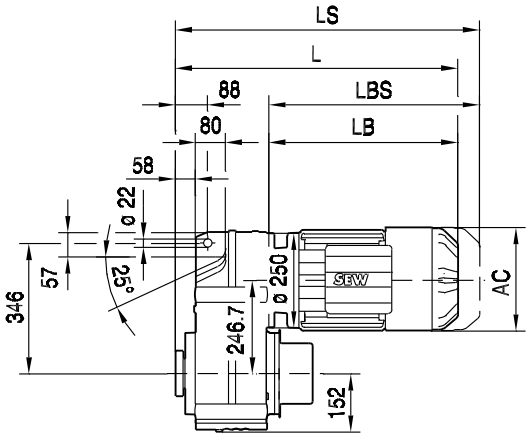

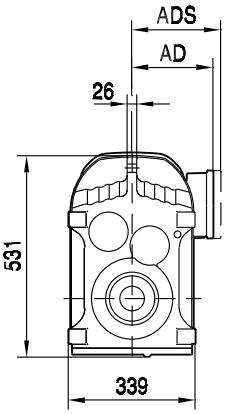

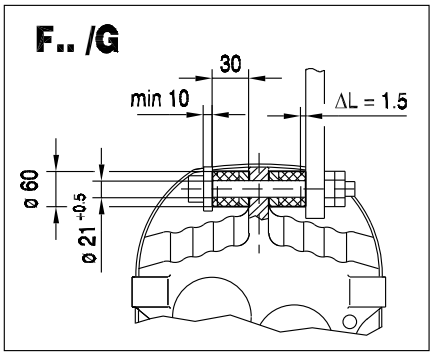

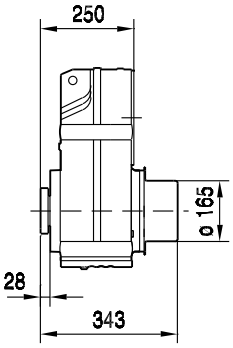

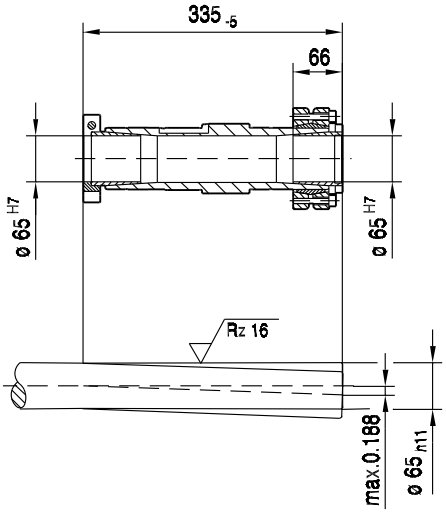

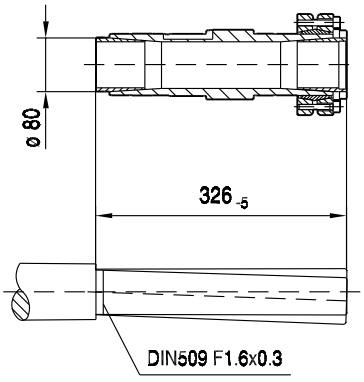

(→ 📖 129)	DRL71M	DRL80S	DRL80M	DRL90L	DRL100L	DRL132S	DRL132MC	DRL160..	DRL180S/M	DRL180L/LC
AC	139	156	156	179	197	221	221	270	316	316
AD	119	128	128	140	157	170	170	228	253	253
ADS	129	139	139	150	158	172	172	228	253	253
L	543	564	595	609	668	749	799	803	872	932
LS	608	644	675	695	755	857	907	940	1061	1121
LB	293	314	345	359	418	499	549	553	622	682
LBS	358	394	425	445	505	607	657	690	811	871

Diese Seite bleibt aus drucktechnischen Gründen frei.

F..DRL
F..Nm

9.2.8 F 97

M_{aDyn} Nm	i	DRL												
		71M	80S		80M		90L		100L		132S		132MC	
		D2	D1	D2	D1	D2	D1	D2	D1	D2	D1	D2	D1	D2
FA97 2	3.87											560	485	750
	4.57									375	350	660	575	880
	5.23									430	405	760	655	1010
	6.17									505	475	890	775	1190
	7.07					225	171	315	240	580	545	1020	890	1370
	8.22					260	199	365	275	675	635	1190	1030	1590
	9.06	123	88	215	114	290	215	400	305	745	700	1310	1140	1750
	11.16									920	860	1620	1400	2160
	12.77									1050	990	1850	1610	2470
	15.06									1240	1160	2190	1890	2920
	17.25					550	415	765	585	1420	1330	2500	2170	3340
	20.07					640	485	890	680	1650	1550	2920	2530	3890
	22.11	300	210	535	275	705	535	980	750	1820	1710	3210	2780	4280
	24.92	335	240	600	310	795	600	1110	840	2050	1930	3620	3140	>4360
	27.44	370	265	665	345	870	665	1220	930	2260	2120	3990	3460	>4360
	30.39	410	290	735	380	970	735	1350	1030	2500	2350	>4360	3830	
	33.91	460	325	820	425	1080	820	1510	1150	2790	2630	>4360	4270	
	36.64	495	355	880	460	1170	880	1630	1240	3020	2840			
	43.28	585	415	1040	545	1380	1040	1930	1460	3560	3350			
FA97 3	32.50									2650	2490	>4360	4050	>4360
	38.86									3170	2980	>4360	>4360	>4360
	44.49					1400	1060	1960	1490	3630	3410	>4360	>4360	>4360
	52.49					1660	1250	2310	1760	4280	4030	>4360	>4360	>4360
	58.06	780	555	1390	720	1830	1390	2560	1950	>4360	>4360	>4360	>4360	>4360
	65.47	870	625	1570	810	2070	1570	2890	2190	>4360	>4360	>4360	>4360	>4360
	72.29	970	690	1730	900	2290	1730	3190	2420	>4360	>4360	>4360	>4360	>4360
	75.63									>4360	>4360	>4360	>4360	>4360
	80.31	1060	760	1900	990	2510	1900	3500	2670	>4360	>4360	>4360	>4360	
	86.59					2710	2050	3780	2870	>4360	>4360	>4360	>4360	>4360
	89.85	1190	850	2130	1100	2810	2130	3920	2980	>4360	>4360	>4360	>4360	
	97.58	1290	920	2310	1200	3050	2310	4260	3240	>4360	>4360			
	102.16					3200	2420	>4360	3390	>4360	>4360	>4360	>4360	>4360
	112.99	1500	1070	2680	1390	3540	2680	>4360	3750	>4360	>4360	>4360	>4360	>4360
	127.42	1690	1210	3020	1570	3990	3020	>4360	4230	>4360	>4360	>4360	>4360	>4360
	140.71	1870	1330	3340	1730	>4360	3340	>4360	>4360	>4360	>4360	>4360	>4360	>4360
	156.30	2070	1480	3710	1930	>4360	3710	>4360	>4360	>4360	>4360	>4360	>4360	
	174.87	2300	1640	4100	2130	>4360	4100	>4360	>4360	>4360	>4360	>4360	>4360	
	189.92	2490	1780	>4360	2320	>4360	>4360	>4360	>4360	>4360	>4360			
	223.88	2940	2100	>4360	2730	>4360	>4360	>4360	>4360	>4360	>4360			
	253.41	3290	2350	>4360	3060	>4360	>4360	>4360	>4360					
	276.77	3600	2570	>4360	3340	>4360	>4360	>4360	>4360					

→ 124

m kg	s	DRL						
		71M	80S	80M	90L	100L	132S	132MC
FA97	2	160	160	165	170	180	195	210
FA97	3	165	165	170	175	185	200	215
FAF: + 21.7 kg / F: + 7.5 kg / FF: + 40.3 kg								

M_{aDyn} Nm	i	DRL 160M D1	160M D2	160MC D1	160MC D2	180S D1	180S D2	180M D1	180M D2	180L D1	180L D2	180LC D1	180LC D2	200L D1	200L D2	225S D1	225S D2	225MC D1
FA97 2	3.87	615	1050	690	1200	785	1420	930	1610	1200	1950	1570	2250	1780	2550	1950	>2700	>2700
	4.57	730	1240	820	1410	930	1680	1100	1900	1410	2300	1860	2650	2100	>3000	2300	>3000	>3000
	5.23	830	1420	930	1620	1060	1920	1260	2180	1620	2630	2130	>3020	2400	>3020	2630	>3020	>3020
	6.17	980	1670	1100	1910	1250	2270	1490	2570	1910	>3030	2510	>3030	2840	>3030	>3030	>3030	>3030
	7.07	1130	1920	1260	2190	1440	2600	1710	2940	2190	>3040	2880	>3040	>3040	>3040	>3040	>3040	>3040
	8.22	1310	2230	1470	2550	1670	3020	1990	>3050	2550	>3050	>3050		>3050		>3050		
	9.06	1450	2460	1620	2810	1840	>3050	2190	>3050	2810	>3050	>3050		>3050		>3050		
	11.16	1780	3030	2000	3460	2270	4110	2700	>4360	3460	>4360	>4360	>4360	>4360	>4360	>4360	>4360	>4360
	12.77	2040	3460	2290	3960	2600	>4360	3090	>4360	3960	>4360	>4360	>4360	>4360	>4360	>4360	>4360	>4360
	15.06	2410	4090	2700	>4360	3060	>4360	3650	>4360	>4360	>4360	>4360	>4360	>4360	>4360	>4360	>4360	>4360
	17.25	2760	>4360	3090	>4360	3510	>4360	4180	>4360	>4360	>4360	>4360	>4360	>4360	>4360	>4360	>4360	>4360
	20.07	3210	>4360	3600	>4360	4080	>4360	>4360	>4360	>4360	>4360	>4360		>4360		>4360		
	22.11	3530	>4360	3960	>4360	>4360	>4360	>4360	>4360	>4360	>4360	>4360		>4360		>4360		
	24.92	3980	>4360	>4360	>4360	>4360		>4360		>4360								
	27.44	>4360	>4360	>4360	>4360	>4360		>4360		>4360								
	30.39	>4360		>4360														
	33.91	>4360		>4360														
	36.64																	
	43.28																	
FA97 3	32.50	>4360	>4360	>4360	>4360	>4360	>4360	>4360	>4360	>4360	>4360	>4360	>4360	>4360	>4360	>4360	>4360	>4360
	38.86	>4360	>4360	>4360	>4360	>4360	>4360	>4360	>4360	>4360	>4360	>4360	>4360	>4360	>4360	>4360	>4360	>4360
	44.49	>4360	>4360	>4360	>4360	>4360	>4360	>4360	>4360	>4360	>4360	>4360	>4360	>4360	>4360	>4360	>4360	>4360
	52.49	>4360	>4360	>4360	>4360	>4360	>4360	>4360	>4360	>4360	>4360	>4360		>4360		>4360		
	58.06	>4360	>4360	>4360	>4360	>4360	>4360	>4360	>4360	>4360	>4360	>4360		>4360		>4360		
	65.47	>4360	>4360	>4360	>4360	>4360		>4360		>4360								
	72.29	>4360	>4360	>4360	>4360	>4360		>4360		>4360								
	75.63	>4360	>4360	>4360	>4360	>4360	>4360	>4360	>4360	>4360	>4360	>4360		>4360		>4360		
	80.31	>4360		>4360														
	86.59	>4360	>4360	>4360	>4360	>4360	>4360	>4360	>4360	>4360	>4360	>4360		>4360		>4360		
	89.85	>4360		>4360														
	97.58																	
	102.16	>4360	>4360	>4360	>4360	>4360	>4360	>4360	>4360	>4360	>4360	>4360		>4360		>4360		
	112.99	>4360	>4360	>4360	>4360	>4360	>4360	>4360	>4360	>4360	>4360	>4360		>4360		>4360		
	127.42	>4360	>4360	>4360	>4360	>4360		>4360		>4360								
	140.71	>4360	>4360	>4360	>4360	>4360		>4360		>4360								
	156.30	>4360		>4360														
	174.87	>4360		>4360														
	189.92																	
	223.88																	
	253.41																	
	276.77																	

→ 124

m kg	s	DRL 160M	160MC	180S	180M	180L	180LC	200L	225S	225MC
FA97	2	230	235	265	280	290	305	400	430	470
FA97	3	235	240	270	285	295	310	405	435	475
FAF: + 21.7 kg / F: + 7.5 kg / FF: + 40.3 kg										

F..DRL
F..Nm

DRL..	i	n_{epk} 1/min	η %	c_{TG} FA Nm/'	FAF Nm/'	F Nm/'	FF Nm/'	φ /R '
FA97 2	3.87	3197	97	627	627	324	283	9
	4.57	3597	97	627	627	324	283	9
	5.23	3924	97	627	627	324	283	9
	6.17	4378	97	627	627	324	283	9
	7.07	4500	97	627	627	324	283	9
	8.22	4500	97	627	627	324	283	9
	9.06	4500	97	627	627	324	283	9
	11.16	4500	97	873	873	380	325	6
	12.77	4500	97	873	873	380	325	6
	15.06	4500	97	873	873	380	325	6
	17.25	4500	97	873	873	380	325	6
	20.07	4500	97	873	873	380	325	6
	22.11	4500	97	873	873	380	325	6
	24.92	4500	97	873	873	380	325	6
	27.44	4500	97	873	873	380	325	6
	30.39	4500	97	873	873	380	325	6
	33.91	4500	97	873	873	380	325	6
	36.64	4500	97	873	873	380	325	6
	43.28	4500	97	873	873	380	325	6
FA97 3	32.50	4500	96	956	956	395	336	6
	38.86	4378	96	956	956	395	336	6
	44.49	4500	96	956	956	395	336	6
	52.49	4500	96	956	956	395	336	6
	58.06	4500	96	956	956	395	336	6
	65.47	4500	96	956	956	395	336	6
	72.29	4500	96	956	956	395	336	6
	75.63	4378	95	965	965	396	337	6
	80.31	4500	95	956	956	395	336	6
	86.59	4500	95	965	965	396	337	6
	89.85	4500	95	956	956	395	336	6
	97.58	4500	95	956	956	395	336	6
	102.16	4500	95	965	965	396	337	6
	112.99	4500	95	965	965	396	337	6
	127.42	4500	95	965	965	396	337	6
	140.71	4500	95	965	965	396	337	6
	156.30	4500	95	965	965	396	337	6
	174.87	4500	94	965	965	396	337	6
	189.92	4500	94	965	965	396	337	6
	223.88	4500	94	965	965	396	337	6
	253.41	4500	93	965	965	396	337	6
	276.77	4500	93	965	965	396	337	6

DRL.. n_e = 1400	i	M_{amax} Nm	M_{apk} Nm	$M_{aNotaus}$ Nm	n_{ak} 1/min	J_G 10^{-4} kgm^2	F_{Ramax} FA N	FAF N	F N	FF N	F_{Rapk} FA N	FAF N	F N	FF N
FA97 2	3.87	1800	2700	3060	465	266	10300	10300	9960	16500	40000	40000	33600	30600
	4.57	2050	3000	3485	328	193	10200	10200	9950	16800	40000	40000	32900	30300
	5.23	2150	3020	3655	325	153	10700	10700	10400	17400	40000	40000	32800	30300
	6.17	2250	3030	3825	324	116	11400	11400	11100	18300	40000	40000	32800	30200
	7.07	2360	3040	4012	297	92	11900	11900	11500	19000	40000	40000	32800	30200
	8.22	2360	3050	4012	328	72	13100	13100	12600	20300	40000	40000	32800	30200
	9.06	2360	3050	4012	353	61	13900	13900	13400	21100	40000	40000	32800	30200
	11.16	4100	4360	6970	143	104	9710	9710	10000	18700	40000	40000	29700	28200
	12.77	4300	4360	7310	141	85	10100	10100	10500	19400	40000	40000	29700	28200
	15.06	4300	4360	7310	153	67	11700	11700	11900	21100	40000	40000	29700	28200
	17.25	4300	4360	7310	157	55	13100	13100	13200	22500	40000	40000	29700	28200
	20.07	4300	4360	7310	149	45	14700	14700	14600	24100	40000	40000	29700	28200
	22.11	4300	4360	7310	149	39	15700	15700	15600	25200	40000	40000	29700	28200
	24.92	4300	4360	7310	144	33	17100	17100	16800	26600	40000	40000	29700	28200
	27.44	4300	4360	7310	142	28	18200	18200	17900	27800	40000	40000	29700	28200
	30.39	4300	4360	7310	141	22	19500	19500	19000	28300	40000	40000	29700	28200
	33.91	4300	4360	7310	139	19	20900	20900	20300	28300	40000	40000	29700	28200
	36.64	3070	4360	5219	191	17	27000	27000	25500	30200	40000	40000	29700	28200
	43.28	3070	4360	5219	162	13	29300	29300	27600	30200	40000	40000	29700	28200
FA97 3	32.50	4300	4360	7310	52	60	20300	20300	19800	28300	40000	40000	29700	28200
	38.86	4300	4360	7310	51	48	22700	22700	21900	28300	40000	40000	29700	28200
	44.49	4300	4360	7310	52	39	24500	24500	23600	28300	40000	40000	29700	28200
	52.49	4300	4360	7310	51	31	26900	26900	25800	28300	40000	40000	29700	28200
	58.06	4300	4360	7310	52	27	28500	28500	27200	28300	40000	40000	29700	28200
	65.47	4300	4360	7310	52	23	30400	30400	29000	28300	40000	40000	29700	28200
	72.29	4300	4360	7310	53	20	32000	32000	29900	28300	40000	40000	29700	28200
	75.63	4300	4360	7310	56	42	32800	32800	29900	28300	40000	40000	29700	28200
	80.31	4300	4360	7310	52	17	33800	33800	29900	28300	40000	40000	29700	28200
	86.59	4300	4360	7310	57	34	35100	35100	29900	28300	40000	40000	29700	28200
	89.85	4300	4360	7310	52	14	35700	35700	29900	28300	40000	40000	29700	28200
	97.58	4300	4360	7310	52	13	37200	37200	29900	28300	40000	40000	29700	28200
	102.16	4300	4360	7310	58	28	38100	38100	29900	28300	40000	40000	29700	28200
	112.99	4300	4360	7310	58	25	40000	40000	29900	28300	40000	40000	29700	28200
	127.42	4300	4360	7310	55	20	40000	40000	29900	28300	40000	40000	29700	28200
	140.71	4300	4360	7310	50	18	40000	40000	29900	28300	40000	40000	29700	28200
	156.30	4300	4360	7310	45	15	40000	40000	29900	28300	40000	40000	29700	28200
	174.87	4300	4360	7310	40	13	40000	40000	29900	28300	40000	40000	29700	28200
	189.92	4300	4360	7310	37	12	40000	40000	29900	28300	40000	40000	29700	28200
	223.88	4300	4360	7310	31	9.2	40000	40000	29900	28300	40000	40000	29700	28200
	253.41	4300	4360	7310	28	5.9	40000	40000	29900	28300	40000	40000	29700	28200
	276.77	4300	4360	7310	25	5.1	40000	40000	29900	28300	40000	40000	29700	28200

F..DRL
F..Nm

F97..

42 164 00 08

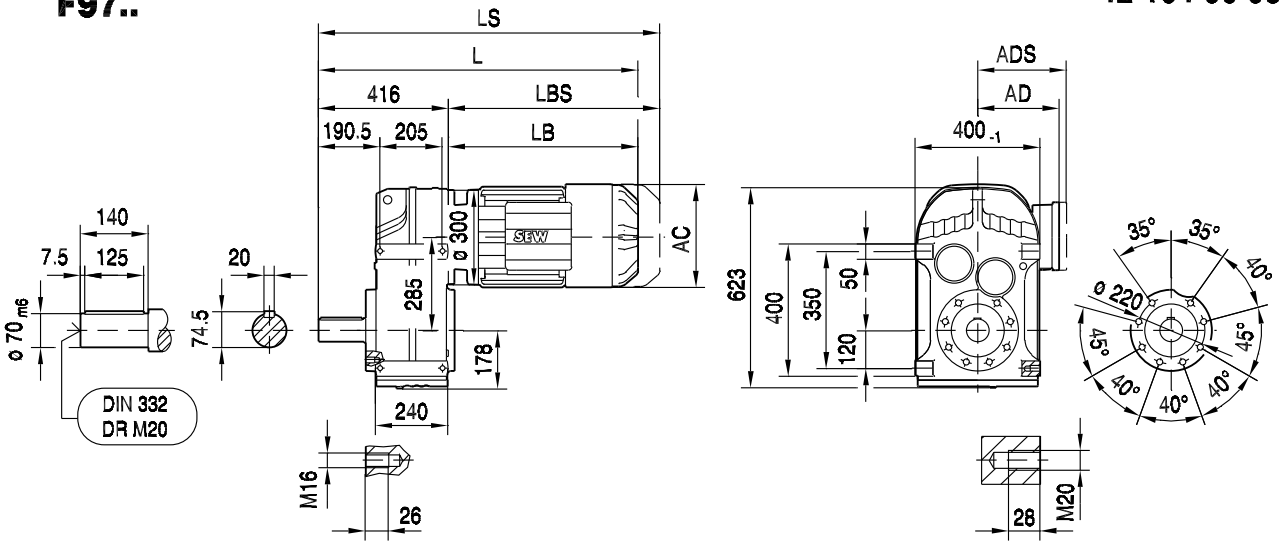

FA97B..

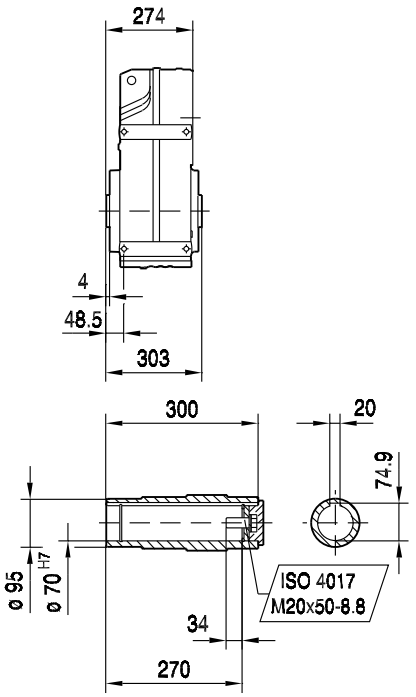

FH97B..

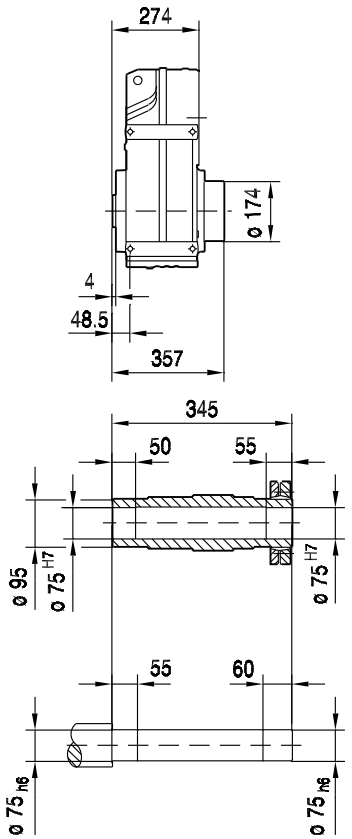

FV97B..

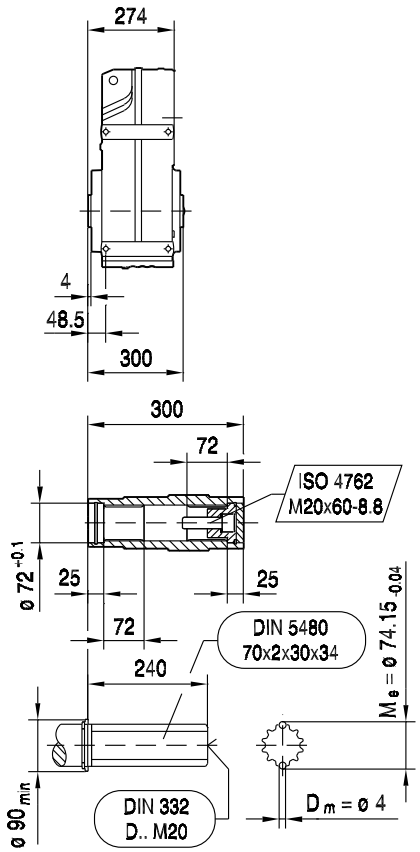

(→ 📖 129)	DRL80 S	DRL80 M	DRL90 L	DRL100L	DRL132S	DRL132MC	DRL160..	DRL180S/M	DRL180L/LC	DRL225S	DRL225MC
AC	156	156	179	197	221	221	270	316	316	394	394
AD	128	128	140	157	170	170	228	253	253	283	283
ADS	139	139	150	158	172	172	228	253	253	283	283
L	725	756	770	829	910	960	964	1033	1093	1166	1216
LS	805	836	856	916	1018	1068	1101	1222	1282	1371	1421
LB	309	340	354	413	494	544	548	617	677	750	800
LBS	389	420	440	500	602	652	685	806	866	955	1005

FF97..

42 165 00 08

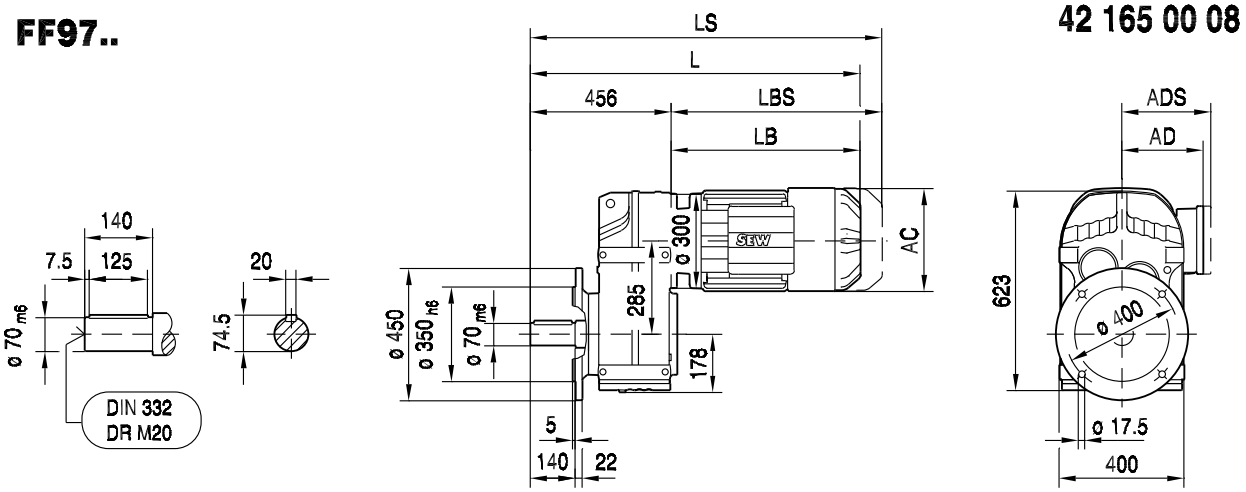

FAF97..

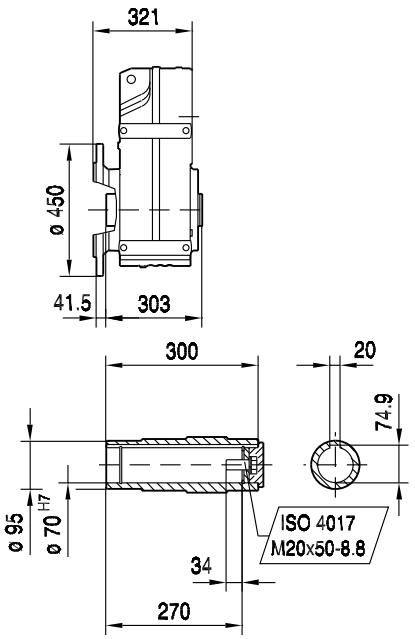

FHF97..

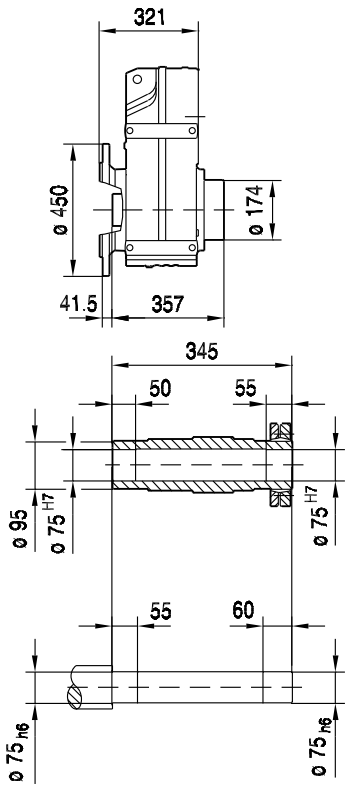

FVF97..

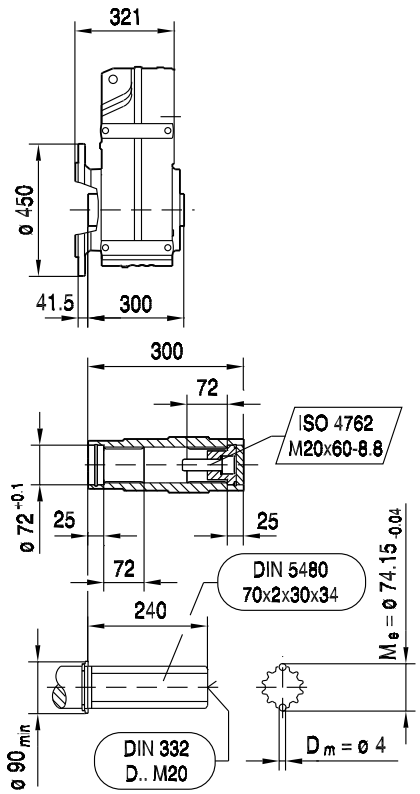

(→ 📖 129)	DRL80 S	DRL80 M	DRL90 L	DRL100L	DRL132S	DRL132MC	DRL160..	DRL180S/M	DRL180L/LC	DRL225S	DRL225MC
AC	156	156	179	197	221	221	270	316	316	394	394
AD	128	128	140	157	170	170	228	253	253	283	283
ADS	139	139	150	158	172	172	228	253	253	283	283
L	765	796	810	869	950	1000	1004	1073	1133	1206	1256
LS	845	876	896	956	1058	1108	1141	1262	1322	1411	1461
LB	309	340	354	413	494	544	548	617	677	750	800
LBS	389	420	440	500	602	652	685	806	866	955	1005

F..DRL
F..Nm

FA97..

42 166 00 08

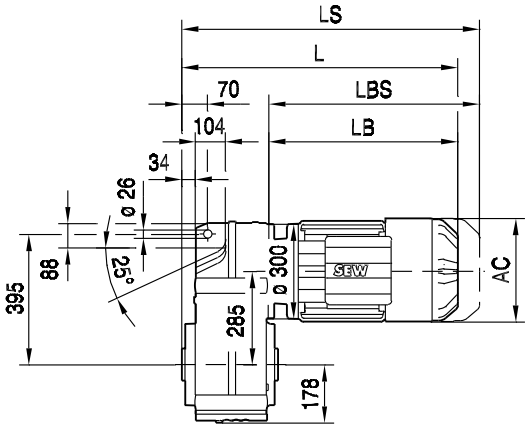

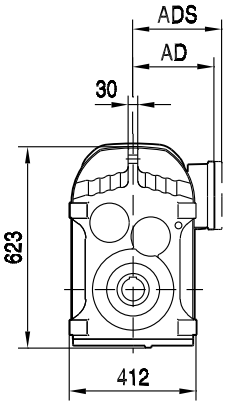

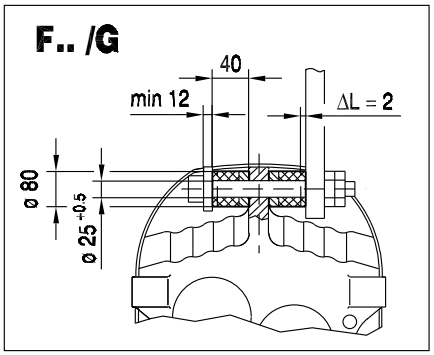

FA97..

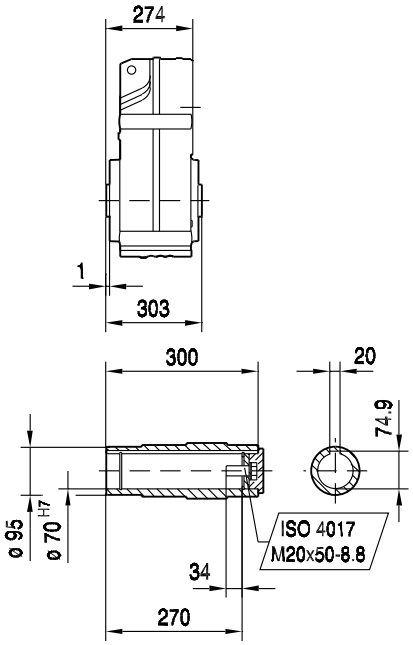

FH97..

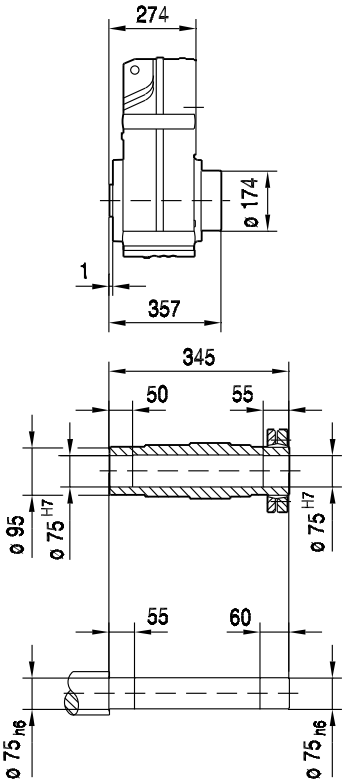

FV97..

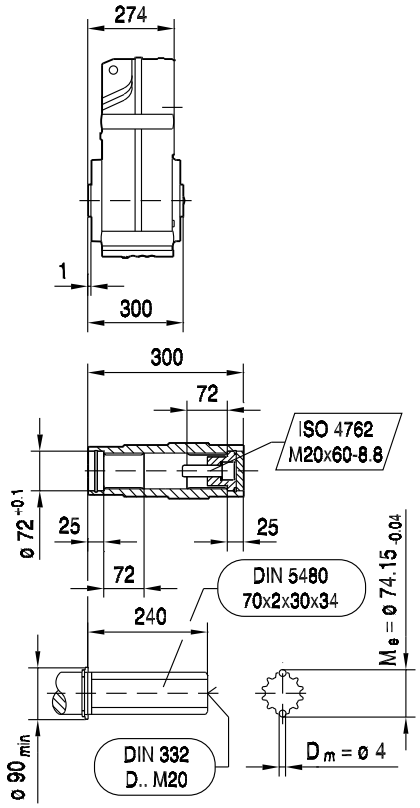

(→ 📖 129)	DRL80 S	DRL80 M	DRL90 L	DRL100L	DRL132S	DRL132MC	DRL160..	DRL180S/M	DRL180L/LC	DRL225S	DRL225MC
AC	156	156	179	197	221	221	270	316	316	394	394
AD	128	128	140	157	170	170	228	253	253	283	283
ADS	139	139	150	158	172	172	228	253	253	283	283
L	583	614	628	687	768	818	822	891	951	1024	1074
LS	663	694	714	774	876	926	959	1080	1140	1229	1279
LB	309	340	354	413	494	544	548	617	677	750	800
LBS	389	420	440	500	602	652	685	806	866	955	1005

42 167 00 08

FAZ97..

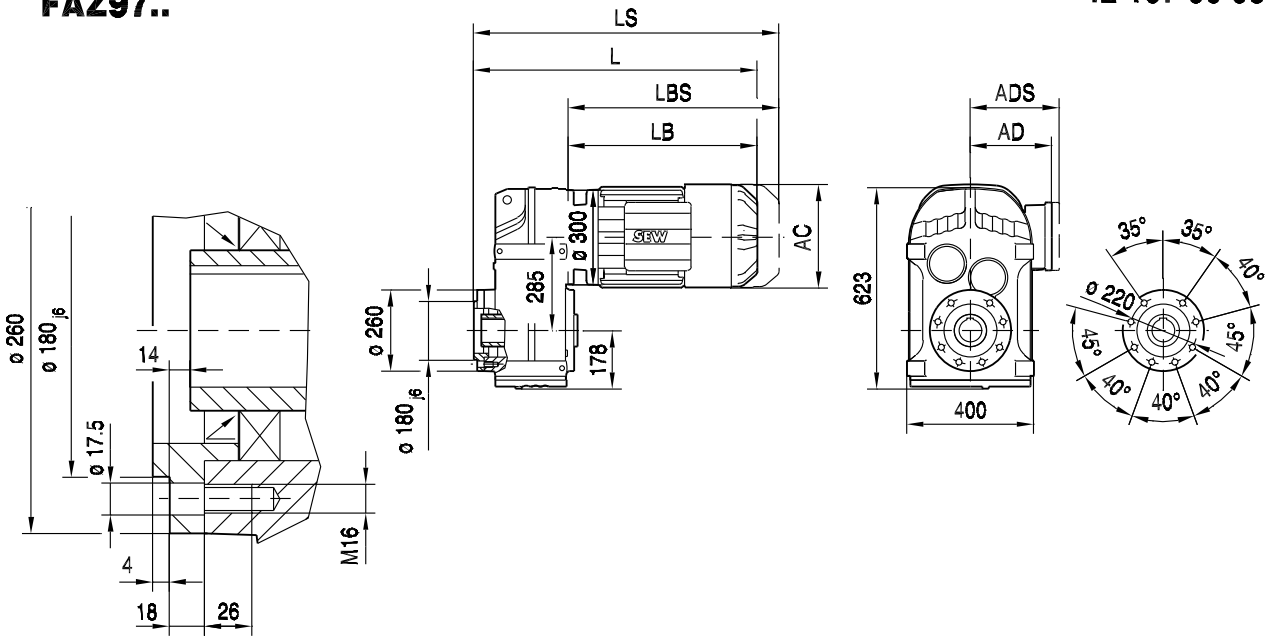

FAZ97..

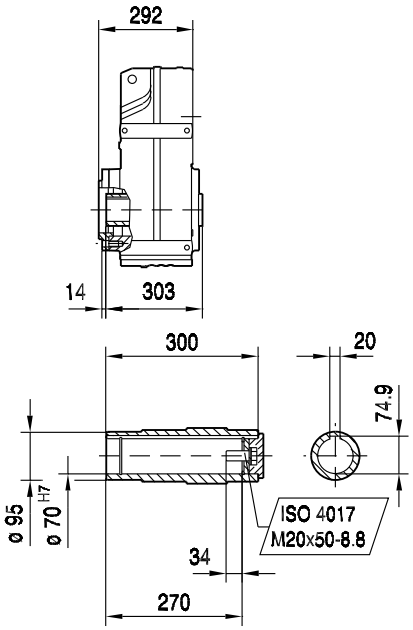

FHZ97..

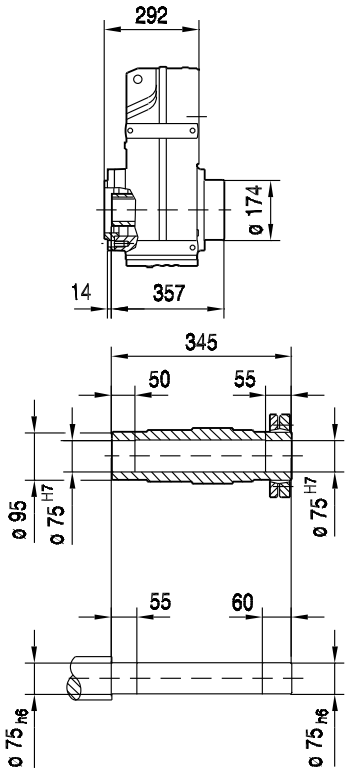

FVZ97..

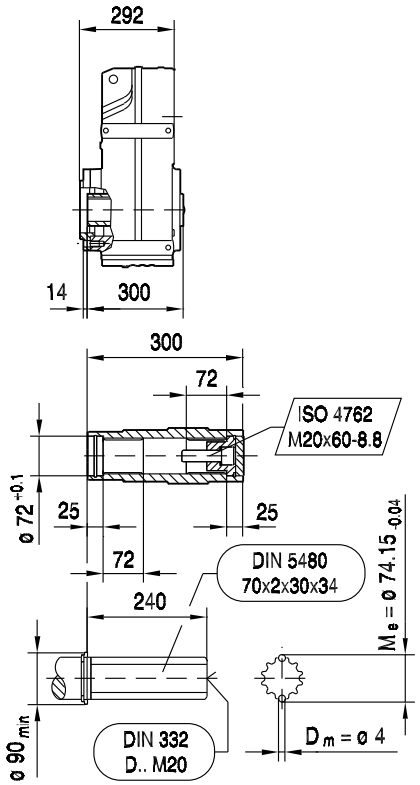

(→ 📖 129)	DRL80 S	DRL80 M	DRL90 L	DRL100L	DRL132S	DRL132MC	DRL160..	DRL180S/M	DRL180L/LC	DRL225S	DRL225MC
AC	156	156	179	197	221	221	270	316	316	394	394
AD	128	128	140	157	170	170	228	253	253	283	283
ADS	139	139	150	158	172	172	228	253	253	283	283
L	601	632	646	705	786	836	840	909	969	1042	1092
LS	681	712	732	792	894	944	977	1098	1158	1247	1297
LB	309	340	354	413	494	544	548	617	677	750	800
LBS	389	420	440	500	602	652	685	806	866	955	1005

F..DRL
F..Nm

FT97..

42 168 00 08

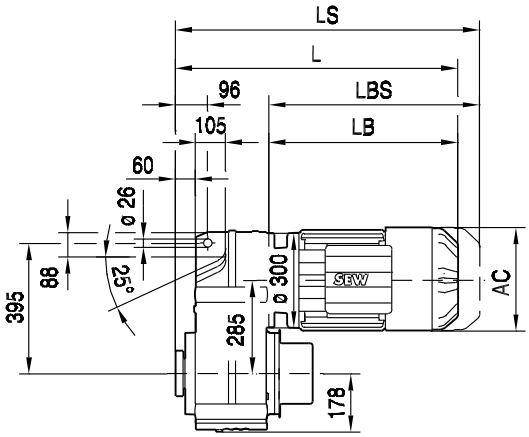

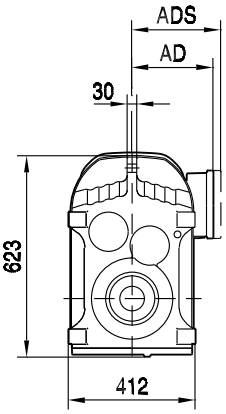

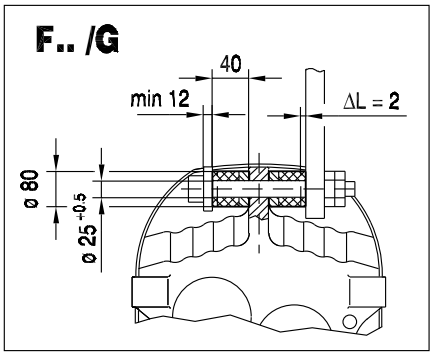

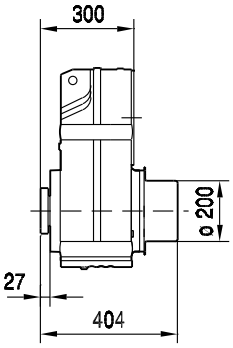

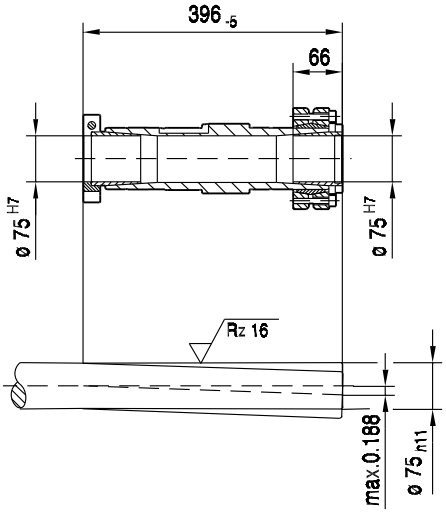

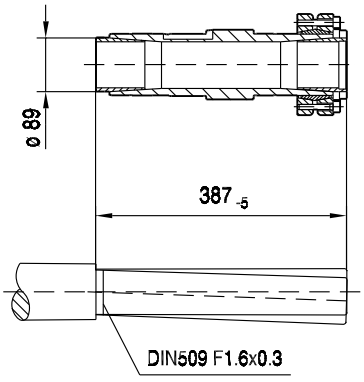

(→ 📖 129)	DRL80 S	DRL80 M	DRL90 L	DRL100L	DRL132S	DRL132MC	DRL160..	DRL180S/M	DRL180L/LC	DRL225S	DRL225MC
AC	156	156	179	197	221	221	270	316	316	394	394
AD	128	128	140	157	170	170	228	253	253	283	283
ADS	139	139	150	158	172	172	228	253	253	283	283
L	609	640	654	713	794	844	848	917	977	1050	1100
LS	689	720	740	800	902	952	985	1106	1166	1255	1305
LB	309	340	354	413	494	544	548	617	677	750	800
LBS	389	420	440	500	602	652	685	806	866	955	1005

Diese Seite bleibt aus drucktechnischen Gründen frei.

9.2.9 F 107

M_{aDyn} Nm	i	DRL 90L D1	90L D2	100L D1	100L D2	132S D1	132S D2	132MC D1	132MC D2	160M D1	160M D2	160MC D1	160MC D2	180S D1	180S D2
FA107 2	5.03								970		1360		1560	1020	1850
	6.22						900	780	1200	990	1680	1110	1930	1260	2290
	7.40				610	570	1070	930	1430	1180	2000	1320	2290	1500	2720
	8.37				690	645	1210	1050	1620	1330	2270	1500	2590	1700	3080
	9.69				795	750	1400	1220	1870	1550	2630	1730	3000	1970	3570
	9.96								1930		2700		3090	2020	3670
	12.33						1790	1550	2390	1970	3340	2210	3820	2510	4540
	14.67				1200	1130	2130	1840	2840	2340	3980	2630	4550	2980	5400
	16.58				1360	1280	2410	2090	3210	2650	4500	2970	5140	3370	6110
	19.20				1580	1480	2790	2420	3720	3070	5210	3440	5950	3910	7070
	21.76	525	970	735	1790	1680	3160	2740	4220	3480	5910	3900	6750	4430	8020
	25.14	605	1120	850	2070	1950	3650	3170	4870	4020	6820	4510	7800	5120	>8860
	27.57	665	1230	930	2270	2130	4010	3470	5340	4410	7480	4940	8550	5610	>8860
	33.79	810	1500	1140	2780	2620	4910	4260	6550	5400	>8860	6060	>8860	6880	
FA107 3	31.80						4530	3920	6040	4980	8450	5580	>8860	6340	>8860
	37.61				3030	2850	5350	4640	7140	5890	>8860	6600	>8860	7500	>8860
	43.03				3470	3270	6130	5310	8170	6740	>8860	7560	>8860	8580	>8860
	50.73				4090	3850	7220	6260	>8860	7950	>8860	>8860	>8860	>8860	>8860
	58.12	1390	2560	1950	4740	4460	8360	7250	>8860	>8860	>8860	>8860	>8860	>8860	>8860
	67.62	1620	2980	2270	5510	5190	>8860	8430	>8860	>8860	>8860	>8860	>8860	>8860	>8860
	74.52	1780	3290	2500	6080	5720	>8860	>8860	>8860	>8860	>8860	>8860	>8860	>8860	>8860
	83.99	2010	3700	2820	6850	6450	>8860	>8860	>8860	>8860	>8860	>8860	>8860	>8860	
	88.49				7140	6720	>8860	>8860	>8860	>8860	>8860	>8860	>8860	>8860	>8860
	92.47	2210	4080	3100	7540	7100	>8860	>8860	>8860	>8860	>8860	>8860	>8860	>8860	
	101.38	2400	4430	3370	8180	7700	>8860	>8860	>8860	>8860	>8860	>8860	>8860	>8860	>8860
	117.94	2800	5150	3920	>8860	>8860	>8860	>8860	>8860	>8860	>8860	>8860	>8860	>8860	>8860
	129.97	3080	5670	4320	>8860	>8860	>8860	>8860	>8860	>8860	>8860	>8860	>8860	>8860	>8860
	146.49	3470	6400	4870	>8860	>8860	>8860	>8860	>8860	>8860	>8860	>8860	>8860	>8860	
	161.28	3830	7040	5360	>8860	>8860	>8860	>8860	>8860	>8860	>8860	>8860	>8860	>8860	
	178.64	4240	7800	5930	>8860	>8860	>8860	>8860		>8860		>8860			
	199.31	4730	8700	6620	>8860	>8860	>8860	>8860		>8860		>8860			
	215.37	5060	>8860	7080	>8860	>8860									
	254.40	5970	>8860	8360	>8860	>8860									

→ 124

m kg	s	DRL 90L	100L	132S	132MC	160M	160MC	180S
FA107	2	240	250	265	280	300	305	335
FA107	3	250	260	275	290	310	315	345
FAF: + 21.0 kg / F: + 16.6 kg / FF: + 43.9 kg								

M_{aDyn} Nm	i	DRL										
		180M		180L		180LC		200L		225S		225MC
		D1	D2	D1	D2	D1	D2	D1	D2	D1	D2	D1
FA107 2	5.03	1210	2090	1560	2530	2040	2920	2310	3310	2530	3750	3750
	6.22	1500	2590	1930	3130	2530	3620	2860	4100	3130	4640	4640
	7.40	1790	3080	2290	3730	3010	4300	3400	4880	3730	5520	5520
	8.37	2020	3490	2590	4220	3400	4870	3850	5520	4220	>6240	>6240
	9.69	2340	4040	3000	4880	3940	5630	4460	>6240	4880	>6240	>6240
	9.96	2410	4150	3090	5020	4050	5790	4580	6560	5020	7430	7430
	12.33	2990	5140	3820	6210	5020	7170	5680	8130	6210	>8860	>8860
	14.67	3550	6110	4550	7390	5970	8530	6750	>8860	7390	>8860	>8860
	16.58	4020	6910	5140	8360	6750	>8860	7630	>8860	8360	>8860	>8860
	19.20	4650	8000	5950	>8860	7820	>8860	8840	>8860	>8860	>8860	>8860
	21.76	5270	>8860	6750	>8860	>8860	>8860	>8860	>8860	>8860	>8860	>8860
	25.14	6090	>8860	7800	>8860	>8860		>8860		>8860		
	27.57	6680	>8860	8550	>8860	>8860		>8860		>8860		
	33.79	8190		>8860								
FA107 3	31.80	7550	>8860	>8860	>8860	>8860	>8860	>8860	>8860	>8860	>8860	>8860
	37.61	>8860	>8860	>8860	>8860	>8860	>8860	>8860	>8860	>8860	>8860	>8860
	43.03	>8860	>8860	>8860	>8860	>8860	>8860	>8860	>8860	>8860	>8860	>8860
	50.73	>8860	>8860	>8860	>8860	>8860	>8860	>8860	>8860	>8860	>8860	>8860
	58.12	>8860	>8860	>8860	>8860	>8860	>8860	>8860	>8860	>8860	>8860	>8860
	67.62	>8860	>8860	>8860	>8860	>8860		>8860		>8860		
	74.52	>8860	>8860	>8860	>8860	>8860		>8860		>8860		
	83.99	>8860		>8860								
	88.49	>8860	>8860	>8860	>8860	>8860	>8860	>8860	>8860	>8860	>8860	>8860
	92.47	>8860		>8860								
	101.38	>8860	>8860	>8860	>8860	>8860	>8860	>8860	>8860	>8860	>8860	>8860
	117.94	>8860	>8860	>8860	>8860	>8860		>8860		>8860		
	129.97	>8860	>8860	>8860	>8860	>8860		>8860		>8860		
	146.49	>8860		>8860								
	161.28	>8860		>8860								
	178.64											
	199.31											
	215.37											
	254.40											

→ 124

m kg	s	DRL					
		180M	180L	180LC	200L	225S	225MC
FA107	2	350	365	375	470	500	540
FA107	3	360	375	385	480	510	550
FAF: + 21.0 kg / F: + 16.6 kg / FF: + 43.9 kg							

F..DRL
F..Nm

DRL..	i	n_{epk} 1/min	η %	c_{TG} FA Nm/'	FAF Nm/'	F Nm/'	FF Nm/'	φ /R '
FA107 2	5.03	2797	97	1359	1359	722	666	7
	6.22	3197	97	1359	1359	722	666	7
	7.40	3597	97	1359	1359	722	666	7
	8.37	3924	97	1359	1359	722	666	7
	9.69	4500	97	1359	1359	722	666	7
	9.96	4500	97	1612	1612	788	722	5
	12.33	4500	97	1612	1612	788	722	5
	14.67	4500	97	1612	1612	788	722	5
	16.58	4500	97	1612	1612	788	722	5
	19.20	4500	97	1612	1612	788	722	5
	21.76	4500	97	1612	1612	788	722	5
	25.14	4500	97	1612	1612	788	722	5
	27.57	4500	97	1612	1612	788	722	5
	33.79	4500	97	1612	1612	788	722	5
FA107 3	31.80	3197	95	1806	1806	832	758	6
	37.61	3597	95	1806	1806	832	758	6
	43.03	3924	95	1806	1806	832	758	6
	50.73	4378	95	1806	1806	832	758	6
	58.12	4500	96	1806	1806	832	758	6
	67.62	4500	96	1806	1806	832	758	6
	74.52	4500	96	1806	1806	832	758	6
	83.99	4500	96	1806	1806	832	758	6
	88.49	4378	95	1823	1823	836	761	5
	92.47	4500	96	1806	1806	832	758	6
	101.38	4500	95	1823	1823	836	761	5
	117.94	4500	95	1823	1823	836	761	5
	129.97	4500	95	1823	1823	836	761	5
	146.49	4500	95	1823	1823	836	761	5
	161.28	4500	95	1823	1823	836	761	5
	178.64	4500	95	1823	1823	836	761	5
	199.31	4500	95	1823	1823	836	761	5
	215.37	4500	94	1823	1823	836	761	5
	254.40	4500	94	1823	1823	836	761	5

DRL.. n_e = 1400	i	M_{amax} Nm	M_{apk} Nm	$M_{aNotaus}$ Nm	n_{ak} 1/min	J_G 10^{-4} kgm^2	F_{Ramax} FA N	FAF N	F N	FF N	F_{Rapk} FA N	FAF N	F N	FF N
FA107 2	5.03	4600	6240	7820	417	439	4520	39000	16400	19200	65000	65000	52500	55300
	6.22	4600	6240	7820	498	311	6920	42600	19000	22200	65000	65000	52500	55300
	7.40	4600	6240	7820	541	236	8400	45800	21300	24800	65000	65000	52500	55300
	8.37	4800	6240	8160	490	195	8720	47400	22000	25600	65000	65000	52500	55300
	9.69	4910	6240	8347	485	154	9670	50000	23500	27300	65000	65000	52500	55300
	9.96	6500	8860	11050	171	280	6200	47000	21500	25300	65000	65000	46500	45600
	12.33	7000	8860	11900	138	209	6580	49800	22600	26600	65000	65000	46500	45600
	14.67	7680	8860	13056	102	164	6050	51500	22400	26500	65000	65000	46500	45600
	16.58	7840	8860	13328	97	138	6870	53800	23900	28200	65000	65000	46500	45600
	19.20	7840	8860	13328	94	112	8600	57400	26500	31200	65000	65000	46500	45600
	21.76	7840	8860	13328	92	92	10100	60600	28800	33800	65000	65000	46500	45600
	25.14	7840	8860	13328	88	76	12000	64500	31500	36800	65000	65000	46500	45600
	27.57	7840	8860	13328	87	66	13200	65000	33300	38800	65000	65000	46500	45600
	33.79	7400	8860	12580	104	43	17700	65000	38300	44900	65000	65000	46500	45600
FA107 3	31.80	7680	8860	13056	69	125	15800	65000	36500	42700	65000	65000	46500	45600
	37.61	7680	8860	13056	74	94	18300	65000	39500	46300	65000	65000	46500	45600
	43.03	7680	8860	13056	79	77	20300	65000	42000	49000	65000	65000	46500	45600
	50.73	7680	8860	13056	85	62	23000	65000	45100	51100	65000	65000	46500	45600
	58.12	7680	8860	13056	88	51	25300	65000	47800	51100	65000	65000	46500	45600
	67.62	7680	8860	13056	92	42	28000	65000	49800	51100	65000	65000	46500	45600
	74.52	7680	8860	13056	94	37	29900	65000	49800	51100	65000	65000	46500	45600
	83.99	7680	8860	13056	83	31	32200	65000	49800	51100	65000	65000	46500	45600
	88.49	7680	8860	13056	79	56	33200	65000	49800	51100	65000	65000	46500	45600
	92.47	7680	8860	13056	76	27	34100	65000	49800	51100	65000	65000	46500	45600
	101.38	7680	8860	13056	69	47	36000	65000	49800	51100	65000	65000	46500	45600
	117.94	7680	8860	13056	59	39	39300	65000	49800	51100	65000	65000	46500	45600
	129.97	7680	8860	13056	54	34	41400	65000	49800	51100	65000	65000	46500	45600
	146.49	7680	8860	13056	48	29	44200	65000	49800	51100	65000	65000	46500	45600
	161.28	7680	8860	13056	43	25	46600	65000	49800	51100	65000	65000	46500	45600
	178.64	7680	8860	13056	39	19	49100	65000	49800	51100	65000	65000	46500	45600
	199.31	7680	8860	13056	35	16	52000	65000	49800	51100	65000	65000	46500	45600
	215.37	7680	8860	13056	33	15	54000	65000	49800	51100	65000	65000	46500	45600
	254.40	7680	8860	13056	28	12	58600	65000	49800	51100	65000	65000	46500	45600

F..DRL
F..Nm

F107..

42 169 00 08

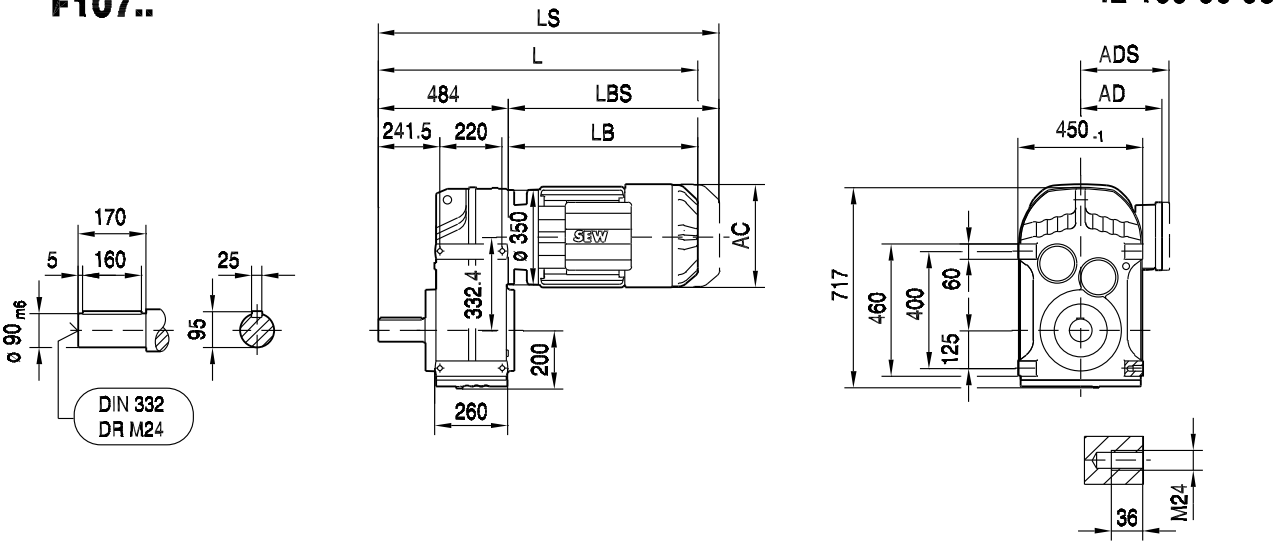

FA107B..

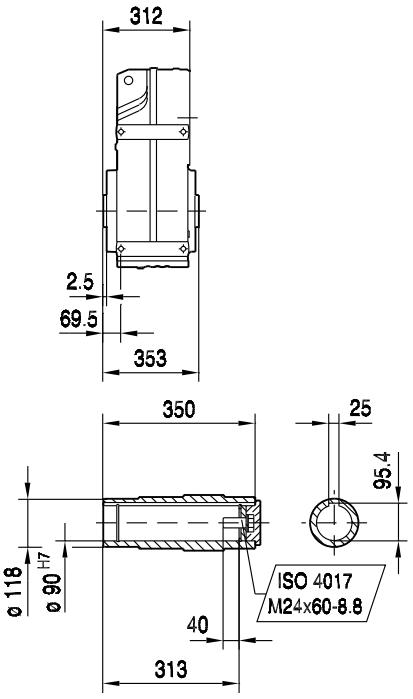

FH107B..

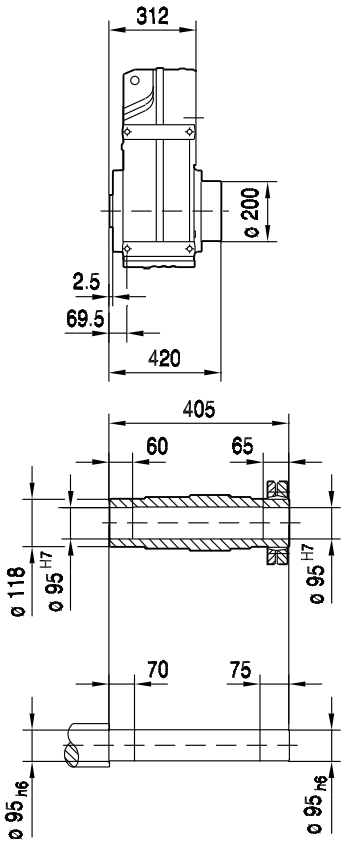

FV107B..

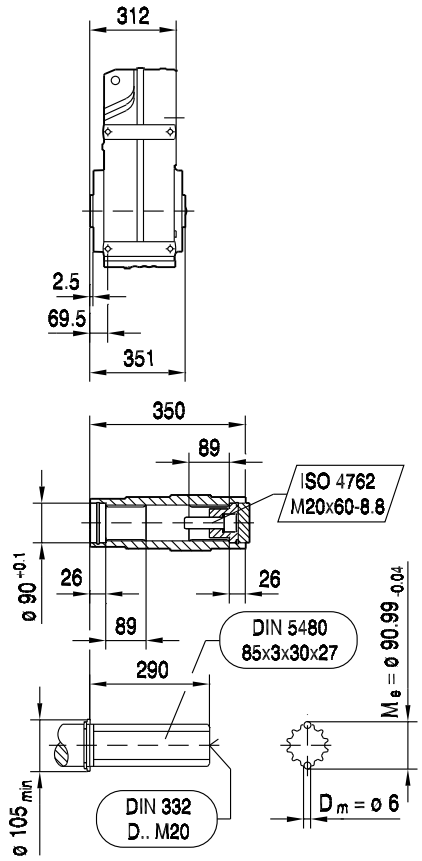

(→ 📖 129)	DRL90L	DRL100L	DRL132S	DRL132MC	DRL160..	DRL180S/M	DRL180L/LC	DRL225S	DRL225MC
AC	179	197	221	221	270	316	316	394	394
AD	140	157	170	170	228	253	253	283	283
ADS	150	158	172	172	228	253	253	283	283
L	832	891	972	1022	1026	1095	1155	1228	1278
LS	918	978	1080	1130	1163	1284	1344	1433	1483
LB	348	407	488	538	542	611	671	744	794
LBS	434	494	596	646	679	800	860	949	999

FF107..

42 170 00 08

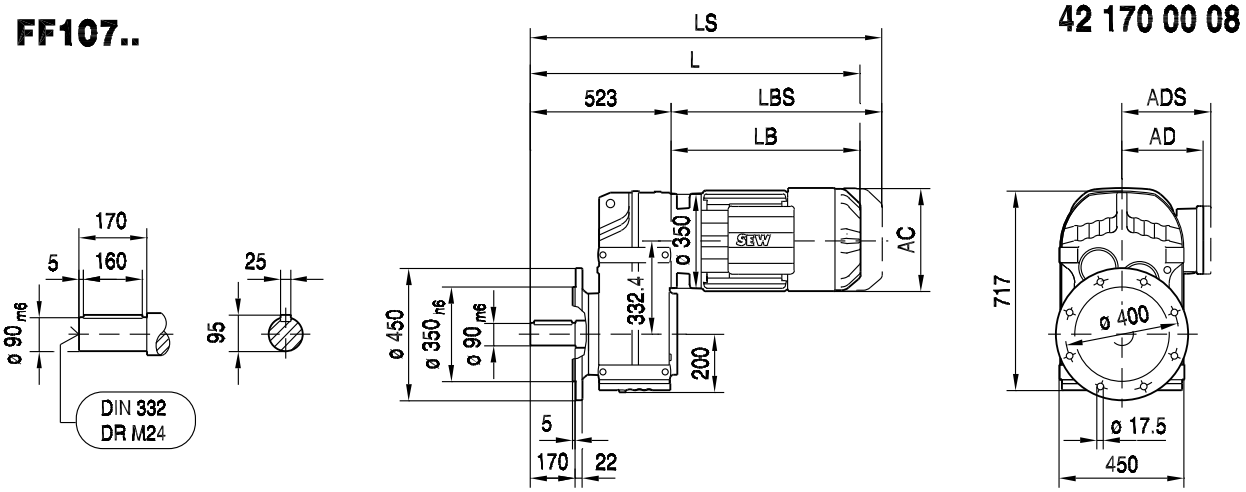

FAF107..

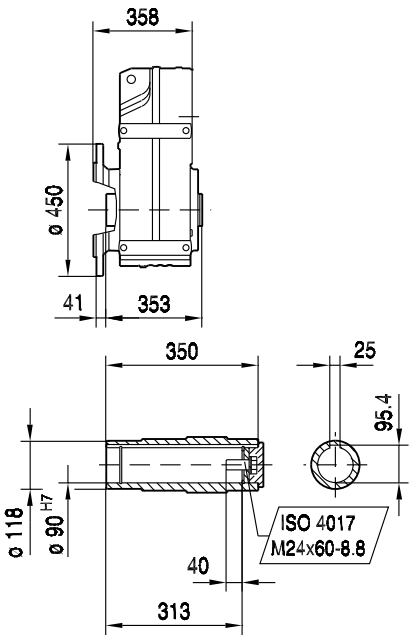

FHF107..

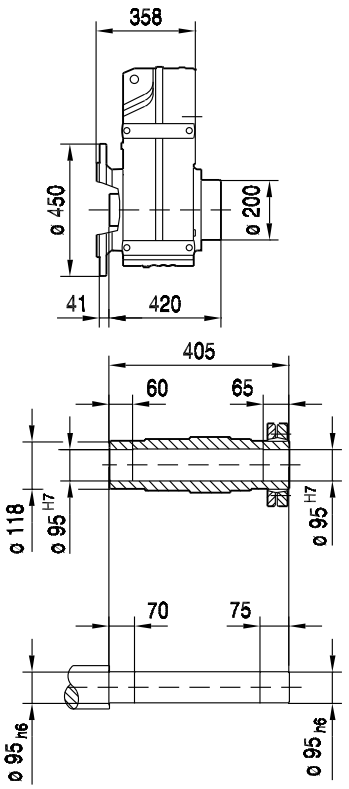

FVF107..

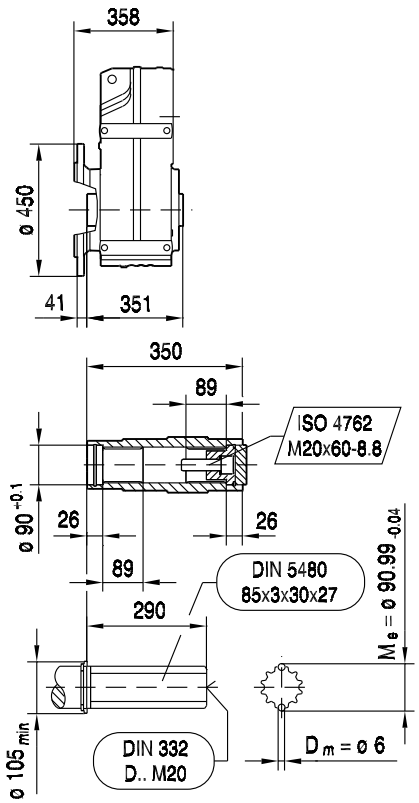

(→ 📖 129)	DRL90L	DRL100L	DRL132S	DRL132MC	DRL160..	DRL180S/M	DRL180L/LC	DRL225S	DRL225MC
AC	179	197	221	221	270	316	316	394	394
AD	140	157	170	170	228	253	253	283	283
ADS	150	158	172	172	228	253	253	283	283
L	871	930	1011	1061	1065	1134	1194	1267	1317
LS	957	1017	1119	1169	1202	1323	1383	1472	1522
LB	348	407	488	538	542	611	671	744	794
LBS	434	494	596	646	679	800	860	949	999

FA107..

42 171 00 08

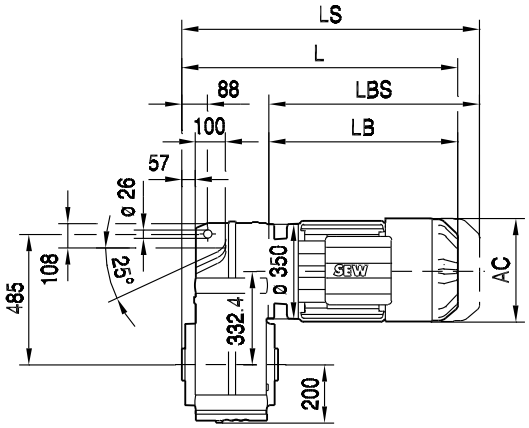

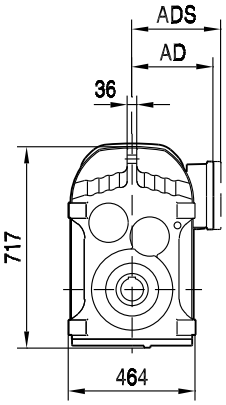

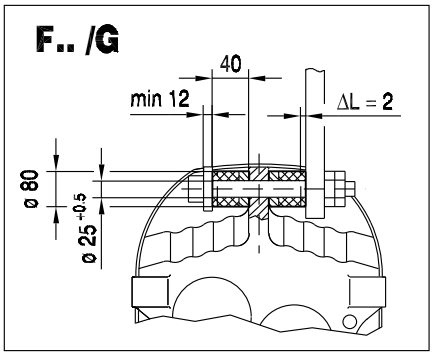

FA107..

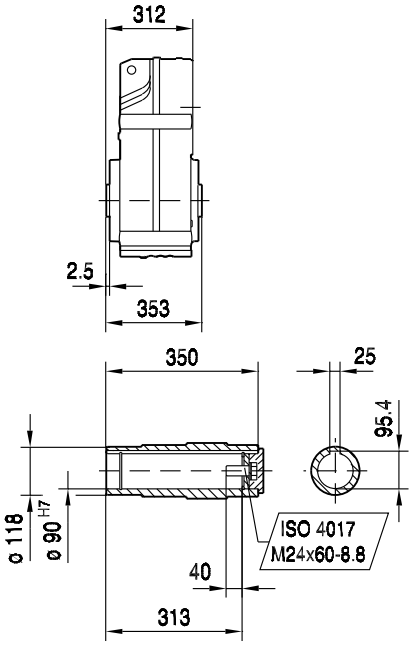

FH107..

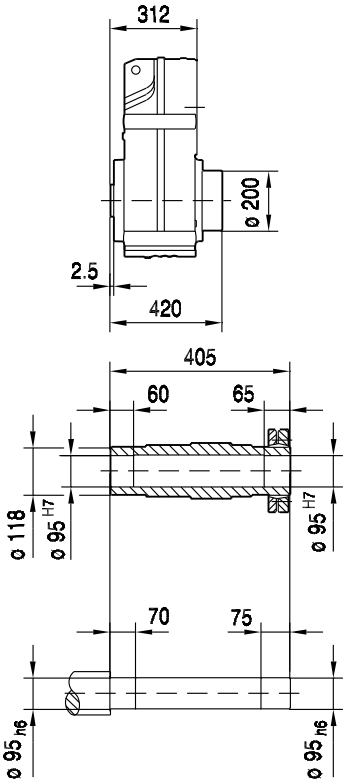

FV107..

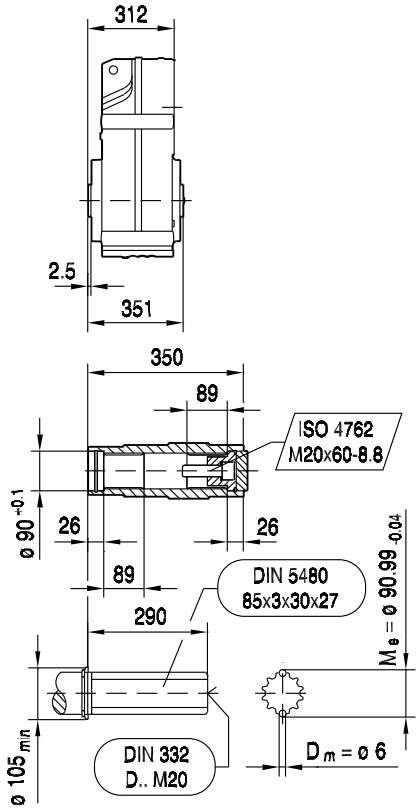

(→ 📖 129)	DRL90L	DRL100L	DRL132S	DRL132MC	DRL160..	DRL180S/M	DRL180L/LC	DRL225S	DRL225MC
AC	179	197	221	221	270	316	316	394	394
AD	140	157	170	170	228	253	253	283	283
ADS	150	158	172	172	228	253	253	283	283
L	660	719	800	850	854	923	983	1056	1106
LS	746	806	908	958	991	1112	1172	1261	1311
LB	348	407	488	538	542	611	671	744	794
LBS	434	494	596	646	679	800	860	949	999

FAZ107..

42 172 00 08

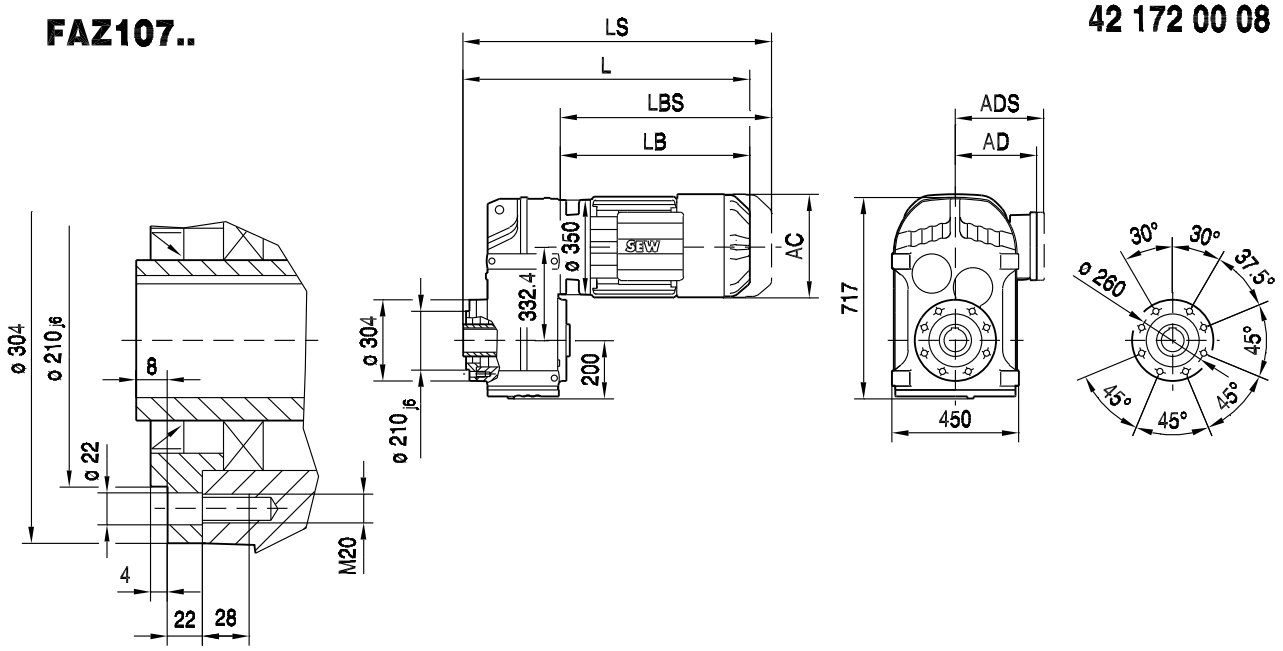

FAZ107..

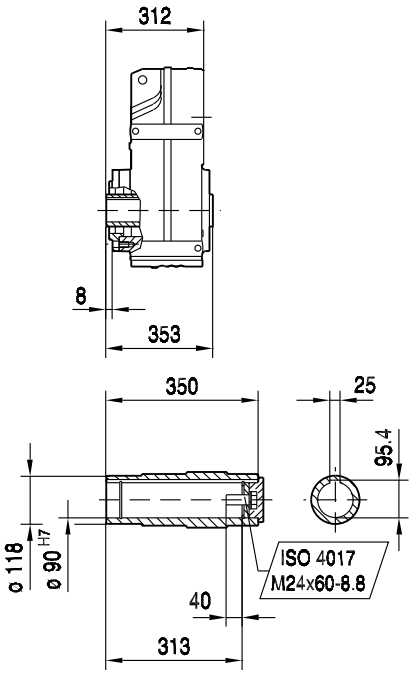

FHZ107..

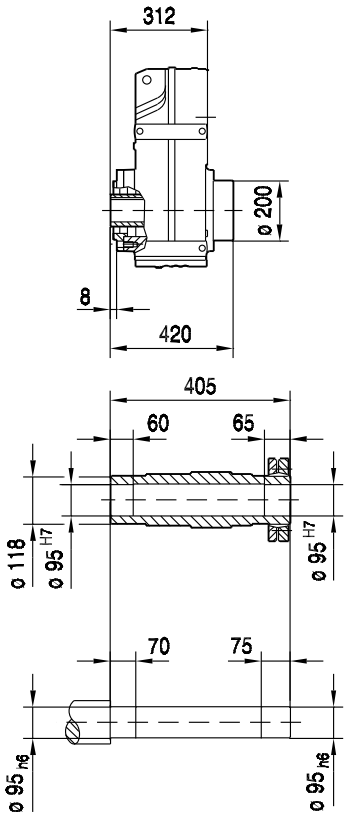

FVZ107..

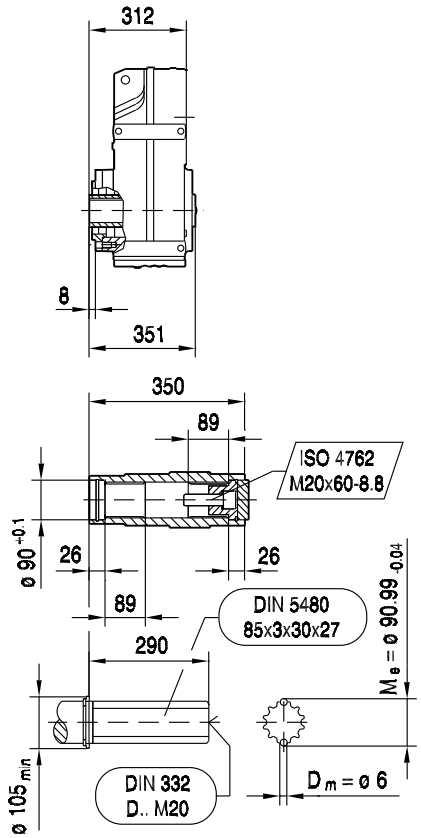

(→ 📖 129)	DRL90L	DRL100L	DRL132S	DRL132MC	DRL160..	DRL180S/M	DRL180L/LC	DRL225S	DRL225MC
AC	179	197	221	221	270	316	316	394	394
AD	140	157	170	170	228	253	253	283	283
ADS	150	158	172	172	228	253	253	283	283
L	660	719	800	850	854	923	983	1056	1106
LS	746	806	908	958	991	1112	1172	1261	1311
LB	348	407	488	538	542	611	671	744	794
LBS	434	494	596	646	679	800	860	949	999

FT107..

42 173 00 08

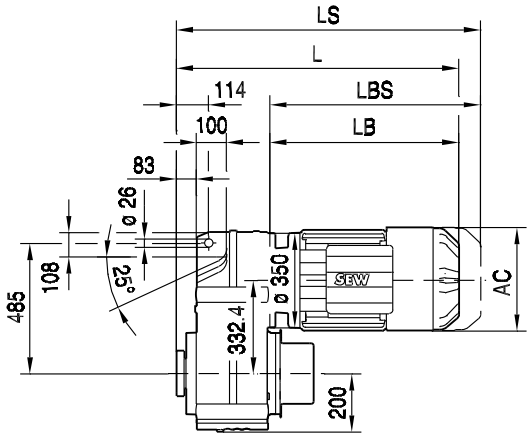

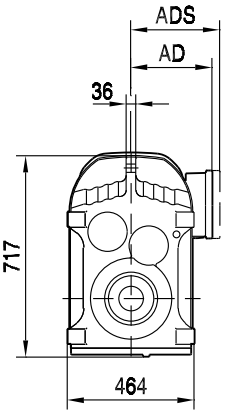

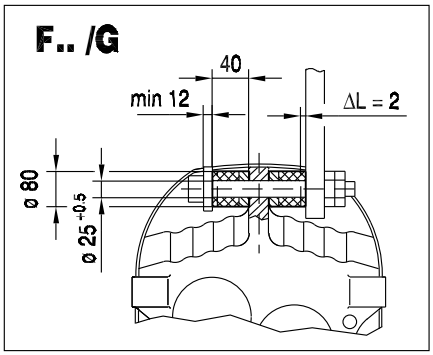

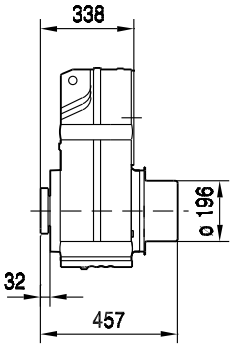

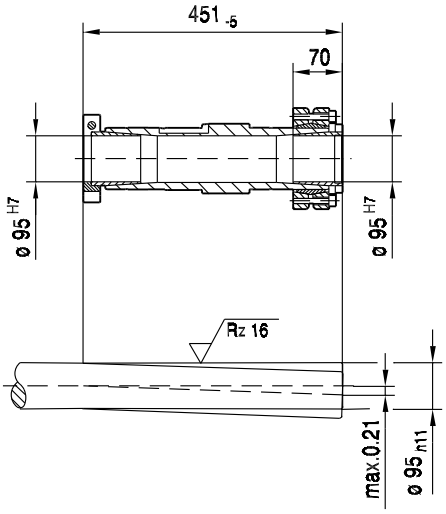

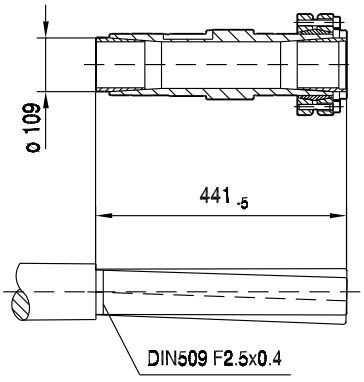

(→ 📖 129)	DRL90L	DRL100L	DRL132S	DRL132MC	DRL160..	DRL180S/M	DRL180L/LC	DRL225S	DRL225MC
AC	179	197	221	221	270	316	316	394	394
AD	140	157	170	170	228	253	253	283	283
ADS	150	158	172	172	228	253	253	283	283
L	686	745	826	876	880	949	1009	1082	1132
LS	772	832	934	984	1017	1138	1198	1287	1337
LB	348	407	488	538	542	611	671	744	794
LBS	434	494	596	646	679	800	860	949	999

Diese Seite bleibt aus drucktechnischen Gründen frei.

F..DRL
F..Nm

9.2.10 F 127

M_{aDyn} Nm	i	DRL 132S D1	132S D2	132MC D1	132MC D2	160M D1	160M D2	160MC D1	160MC D2	180S D1	180S D2	180M D1	180M D2	180L D1	180L D2
FA127 2	4.68										1720		1950		2360
	5.52				1070		1490		1710	1120	2030	1330	2300	1710	2780
	6.80		980	850	1310	1080	1840	1220	2110	1380	2500	1640	2830	2110	3420
	7.88	610	1140	990	1520	1260	2140	1410	2440	1600	2900	1910	3280	2440	3970
	8.86	685	1280	1110	1710	1410	2400	1580	2750	1800	3260	2140	3690	2750	4460
	10.19				1970		2760		3160	2070	3750	2470	4250	3160	5130
	12.54		1820	1580	2430	2000	3400	2250	3890	2550	4620	3040	5230	3890	6320
	14.55	1120	2110	1830	2820	2320	3950	2610	4510	2960	5360	3520	6060	4510	7330
	16.36	1260	2380	2060	3170	2610	4440	2930	5070	3330	6030	3960	6820	5070	8250
	18.87	1460	2740	2370	3660	3020	5120	3380	5850	3840	6950	4570	7870	5850	9510
	21.38	1650	3110	2690	4140	3420	5800	3830	6630	4350	7880	5180	8910	6630	10700
	24.57	1900	3570	3090	4760	3930	6670	4400	7620	5000	9050	5950	10200	7620	12300
	26.86	2080	3900	3380	5210	4290	7290	4820	8330	5470	9900	6510	11200	8330	>12600
FA127 3	25.30				4850		6800		7770	5100	9220	6070	10400	7770	12600
	31.33		4510	3900	6010	4960	8420	5560	9620	6310	11400	7510	>12900	9620	>12900
	37.28	2860	5360	4650	7150	5900	10000	6620	11400	7510	>12900	8940	>12900	11400	>12900
	42.15	3230	6060	5260	8090	6670	11300	7480	>12900	8490	>12900	10100	>12900	>12900	>12900
	48.80	3740	7020	6090	9360	7720	>12900	8660	>12900	9830	>12900	11700	>12900	>12900	>12900
	55.31	4240	7960	6900	10600	8760	>12900	9820	>12900	11100	>12900	>12900	>12900	>12900	>12900
	63.91	4900	9200	7970	12200	10100	>12900	11300	>12900	12800	>12900	>12900	>12900	>12900	>12900
	70.07	5380	10000	8740	>12900	11000	>12900	12400	>12900	>12900	>12900	>12900	>12900	>12900	>12900
	75.41	5730	10700	9310	>13000	11800	>13000	>13000	>13000	>13000	>13000	>13000	>13000	>13000	>13000
	87.31	6630	12400	10700	>13000	>13000	>13000	>13000	>13000	>13000	>13000	>13000	>13000	>13000	>13000
	98.95	7520	>13000	12200	>13000	>13000	>13000	>13000	>13000	>13000	>13000	>13000	>13000	>13000	>13000
	114.34	8680	>13000	>13000	>13000	>13000	>13000	>13000	>13000	>13000	>13000	>13000	>13000	>13000	>13000
	125.37	9520	>13000	>13000	>13000	>13000	>13000	>13000	>13000	>13000	>13000	>13000	>13000	>13000	>13000
	153.67	11600	>13000	>13000	>13000	>13000	>13000	>13000	>13000	>13000		>13000		>13000	
	170.83	12900	>13000	>13000		>13000		>13000							

→ 124

m kg	s	DRL 132S	132MC	160M	160MC	180S	180M	180L
FA127	2	415	430	445	450	475	495	500
FA127	3	425	440	455	460	490	510	520
FAF: + 37.4 kg / F: + 36.5 kg / FF: + 81.1 kg								

M_{aDyn} Nm	i	DRL							
		180LC		200L		225S		225MC	
		D1	D2	D1	D2	D1	D2	D1	D2
FA127 2	4.68	1900	2720	2150	3080	2360	3490	3490	4990
	5.52	2240	3210	2540	3640	2780	4120	4120	5880
	6.80	2770	3950	3130	4480	3420	5070	5070	7250
	7.88	3210	4580	3630	5190	3970	5880	5880	8400
	8.86	3600	5150	4080	5840	4460	6610	6610	9450
	10.19	4150	5930	4690	6720	5130	7610	7610	10800
	12.54	5100	7290	5770	8270	6320	9360	9360	>13000
	14.55	5920	8460	6700	9590	7330	10800	10800	>13000
	16.36	6660	9520	7530	10700	8250	12200	12200	>13000
	18.87	7680	10900	8690	12400	9510	>13000	>13000	
	21.38	8710	12400	9850	>13000	10700	>13000	>13000	
	24.57	10000		11300		12300			
	26.86	10900		12300		>12600			
FA127 3	25.30	10200	>12900	11500	>12900	12600	>12900	>12900	>12900
	31.33	12600	>12900	>12900	>12900	>12900	>12900	>12900	>12900
	37.28	>12900	>12900	>12900	>12900	>12900	>12900	>12900	>12900
	42.15	>12900	>12900	>12900	>12900	>12900	>12900	>12900	>12900
	48.80	>12900	>12900	>12900	>12900	>12900	>12900	>12900	
	55.31	>12900	>12900	>12900	>12900	>12900	>12900	>12900	
	63.91	>12900		>12900		>12900			
	70.07	>12900		>12900		>12900			
	75.41	>13000	>13000	>13000	>13000	>13000	>13000	>13000	>13000
	87.31	>13000	>13000	>13000	>13000	>13000	>13000	>13000	
	98.95	>13000	>13000	>13000	>13000	>13000	>13000	>13000	
	114.34	>13000		>13000		>13000			
	125.37	>13000		>13000		>13000			
	153.67								
	170.83								

→ 124

m kg	s	DRL			
		180LC	200L	225S	225MC
FA127	2	520	610	640	680
FA127	3	530	620	650	700
FAF: + 37.4 kg / F: + 36.5 kg / FF: + 81.1 kg					

F..DRL
F..Nm

DRL..	i	n_{epk} 1/min	η %	c_{TG} FA Nm/'	FAF Nm/'	F Nm/'	FF Nm/'	φ /R '
FA127 2	4.68	2518	97	1988	1988	1174	1092	7
	5.52	2797	97	1988	1988	1174	1092	7
	6.80	3197	97	1988	1988	1174	1092	7
	7.88	3597	97	1988	1988	1174	1092	6
	8.86	3924	97	1988	1988	1174	1092	6
	10.19	4500	97	2523	2523	1342	1236	5
	12.54	4500	97	2523	2523	1342	1236	5
	14.55	4500	97	2523	2523	1342	1236	5
	16.36	4500	97	2523	2523	1342	1236	5
	18.87	4500	97	2523	2523	1342	1236	5
	21.38	4500	97	2523	2523	1342	1236	5
	24.57	4500	97	2523	2523	1342	1236	5
	26.86	4500	97	2523	2523	1342	1236	5
FA127 3	25.30	4500	96	2861	2861	1432	1312	5
	31.33	4500	96	2861	2861	1432	1312	5
	37.28	3597	96	2861	2861	1432	1312	5
	42.15	3924	96	2861	2861	1432	1312	5
	48.80	4378	96	2861	2861	1432	1312	5
	55.31	4500	96	2861	2861	1432	1312	5
	63.91	4500	96	2861	2861	1432	1312	5
	70.07	4500	96	2861	2861	1432	1312	5
	75.41	3924	95	2898	2898	1442	1320	5
	87.31	4378	95	2898	2898	1442	1320	5
	98.95	4500	95	2898	2898	1442	1320	5
	114.34	4500	95	2898	2898	1442	1320	5
	125.37	4500	95	2898	2898	1442	1320	5
	153.67	4500	95	2898	2898	1442	1320	5
	170.83	4500	95	2898	2898	1442	1320	5

DRL.. n_e = 1400	i	M_{amax} Nm	M_{apk} Nm	$M_{aNotaus}$ Nm	n_{ak} 1/min	J_G 10^{-4} kgm^2	F_{Ramax} FA N	FAF N	F N	FF N	F_{Rapk} FA N	FAF N	F N	FF N
FA127 2	4.68	6000	9000	10200	299	971	5630	50000	29500	34700	90000	90000	90000	90000
	5.52	6000	9000	10200	344	733	7110	53500	31700	37100	90000	90000	90000	90000
	6.80	7000	9890	11900	235	524	5670	55000	32200	38100	90000	90000	90000	90000
	7.88	6000	9000	10200	419	400	10600	61800	37000	42800	90000	90000	90000	90000
	8.86	7000	9910	11900	271	329	8410	61400	36400	42600	90000	90000	90000	90000
	10.19	9500	13000	16150	157	483	1090	58900	30900	36300	90000	90000	88500	90000
	12.54	10000	13000	17000	120	359	2670	63000	33300	39100	90000	90000	88500	90000
	14.55	11000	13000	18700	96	278	475	64200	32600	38500	90000	90000	88500	90000
	16.36	11000	13000	18700	86	232	3190	67700	35400	41600	90000	90000	88500	90000
	18.87	11000	13000	18700	79	185	6620	72100	38800	45500	90000	90000	88500	90000
	21.38	12000	13000	20400	65	152	4380	73100	38000	44800	90000	90000	88500	90000
	24.57	8500	12750	14450	187	124	18400	88300	53300	61300	90000	90000	89000	90000
	26.86	8500	12600	14450	186	108	19800	90000	55300	63500	90000	90000	89300	90000
FA127 3	25.30	12000	12900	20400	59	284	7720	78800	42400	49800	90000	90000	88700	90000
	31.33	12000	12900	20400	61	212	11100	86400	48300	56300	90000	90000	88700	90000
	37.28	12000	12900	20400	62	166	14000	90000	53200	61900	90000	90000	88700	90000
	42.15	12000	12900	20400	62	140	16200	90000	56800	66000	90000	90000	88700	90000
	48.80	12000	12900	20400	61	113	18900	90000	61300	71000	90000	90000	88700	90000
	55.31	12000	12900	20400	61	93	21400	90000	65200	75500	90000	90000	88700	90000
	63.91	12000	12900	20400	61	77	24300	90000	69400	80300	90000	90000	88700	90000
	70.07	12000	12900	20400	61	67	26300	90000	72100	83200	90000	90000	88700	90000
	75.41	12000	13000	20400	60	119	27900	90000	74300	85600	90000	90000	88500	90000
	87.31	12000	13000	20400	60	98	31200	90000	79000	90000	90000	90000	88500	90000
	98.95	12000	13000	20400	61	82	34100	90000	83000	90000	90000	90000	88500	90000
	114.34	12000	13000	20400	61	68	37700	90000	88000	90000	90000	90000	88500	90000
	125.37	12000	13000	20400	56	60	40000	90000	90000	90000	90000	90000	88500	90000
	153.67	12000	13000	20400	46	39	45500	90000	90000	90000	90000	90000	88500	90000
	170.83	12000	13000	20400	41	34	48500	90000	90000	90000	90000	90000	88500	90000

F127..

42 174 00 08

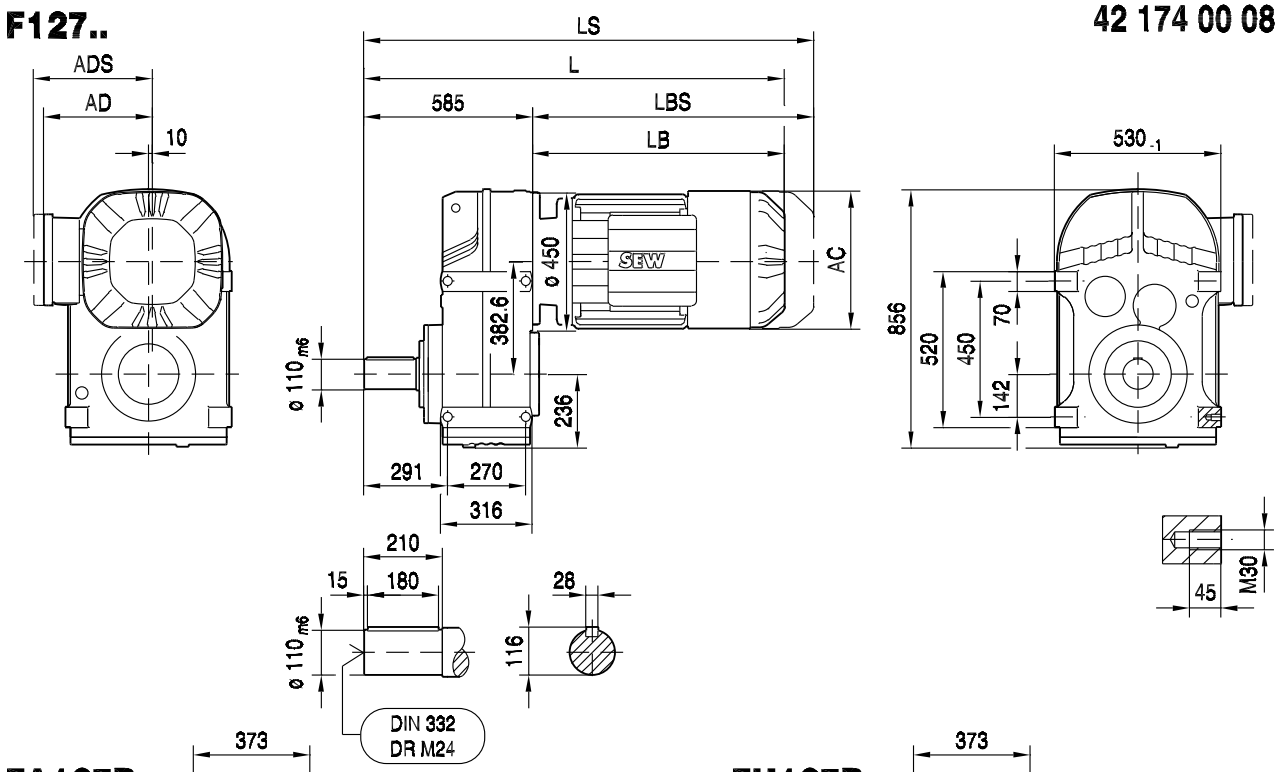

FA127B..

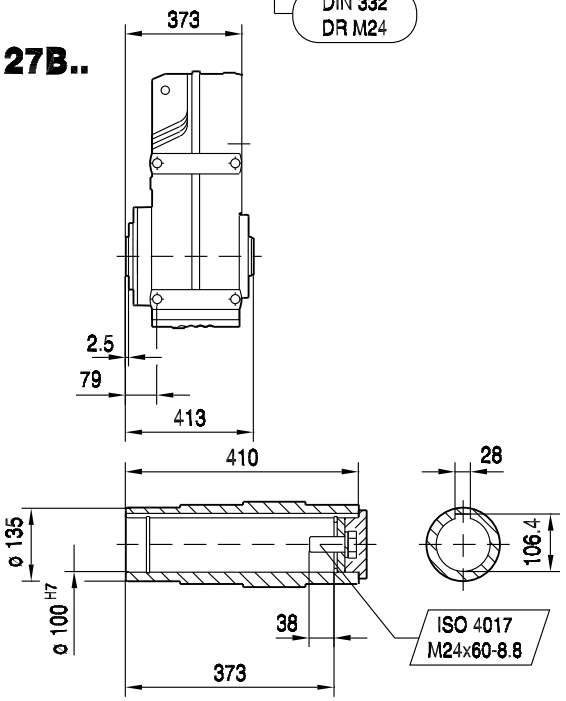

FH127B..

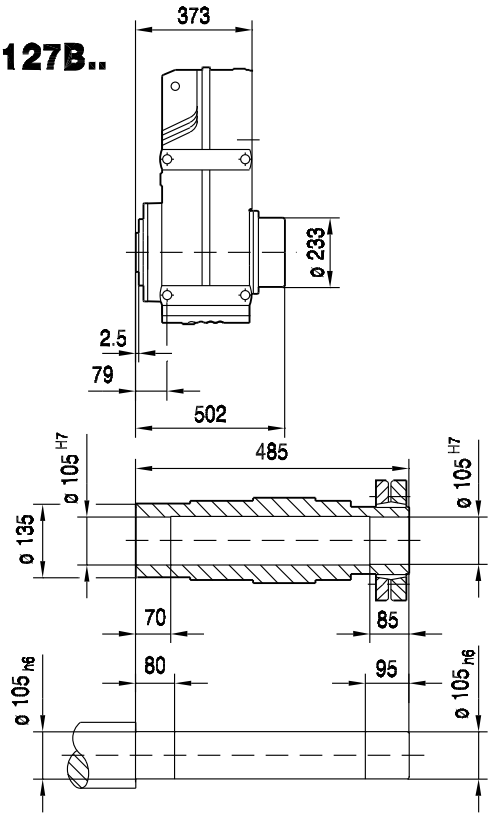

(→ 📖 129)	DRL132S	DRL132MC	DRL160..	DRL180S/M	DRL180L/LC	DRL225S	DRL225MC	
AC	221	221	270	316	316	394	394	
AD	170	170	228	253	253	283	283	
ADS	172	172	228	253	253	283	283	
L	1058	1108	1112	1181	1241	1314	1364	
LS	1166	1216	1249	1370	1430	1519	1569	
LB	473	523	527	596	656	729	779	
LBS	581	631	664	785	845	934	984	

42 175 00 08

FF127..

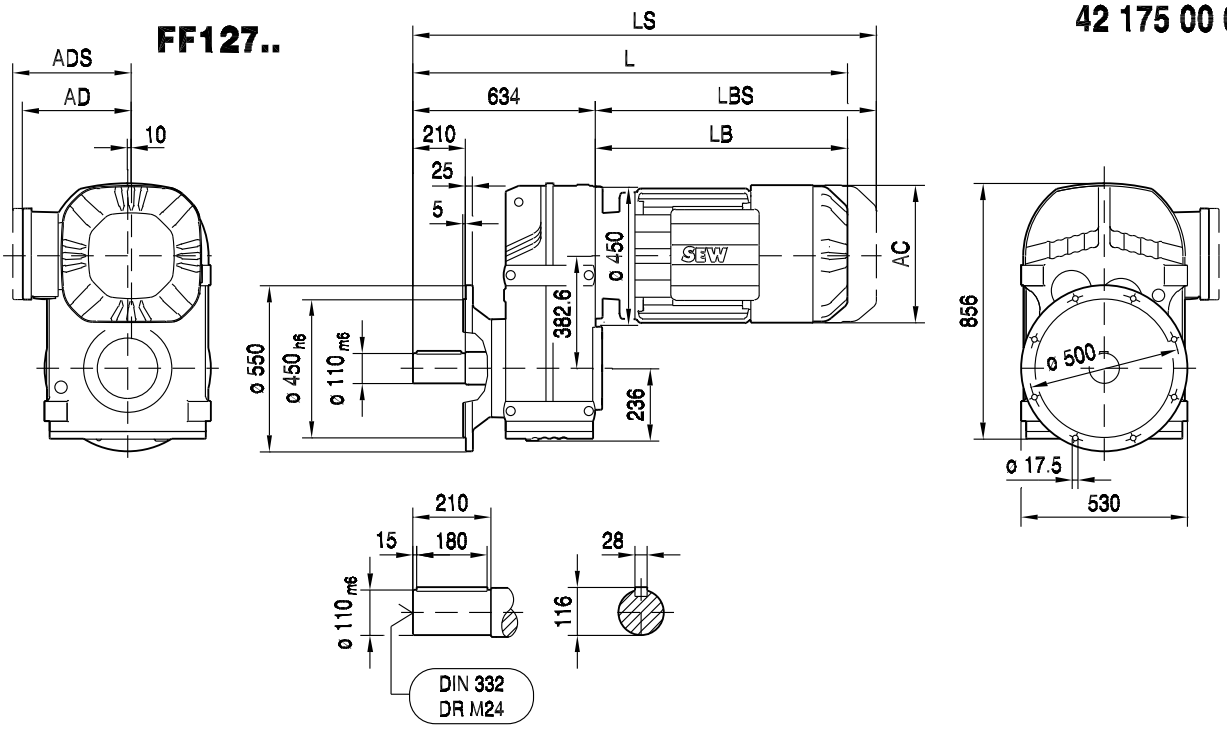

FAF127..

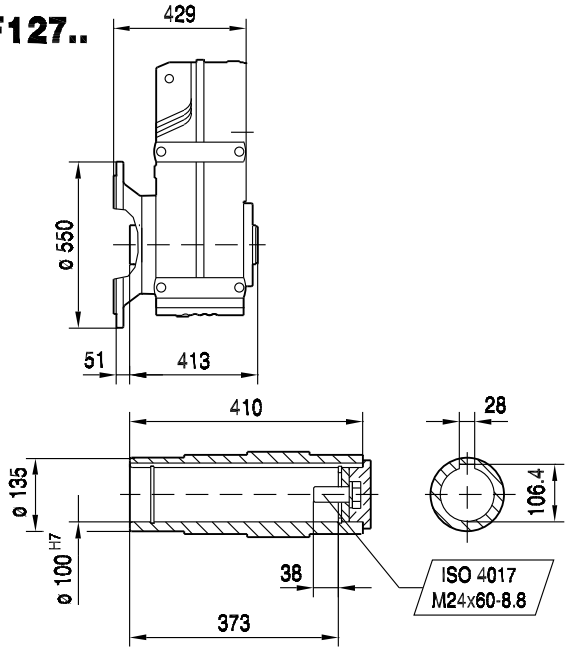

FHF127..

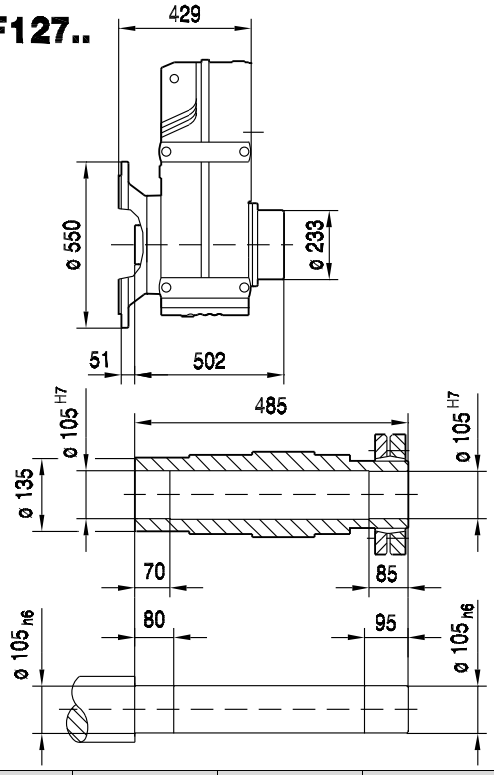

(→ 📖 129)	DRL132S	DRL132MC	DRL160..	DRL180S/M	DRL180L/LC	DRL225S	DRL225MC	
AC	221	221	270	316	316	394	394	
AD	170	170	228	253	253	283	283	
ADS	172	172	228	253	253	283	283	
L	1107	1157	1161	1230	1290	1363	1413	
LS	1215	1265	1298	1419	1479	1568	1618	
LB	473	523	527	596	656	729	779	
LBS	581	631	664	785	845	934	984	

FA127..

42 176 00 08

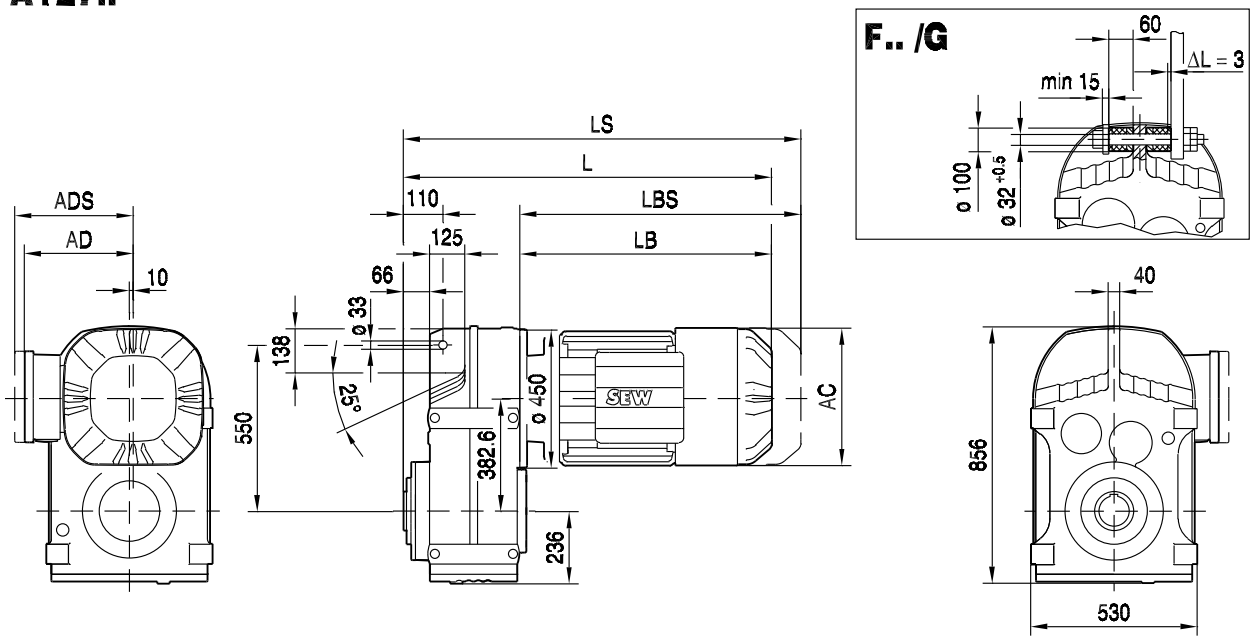

FA127..

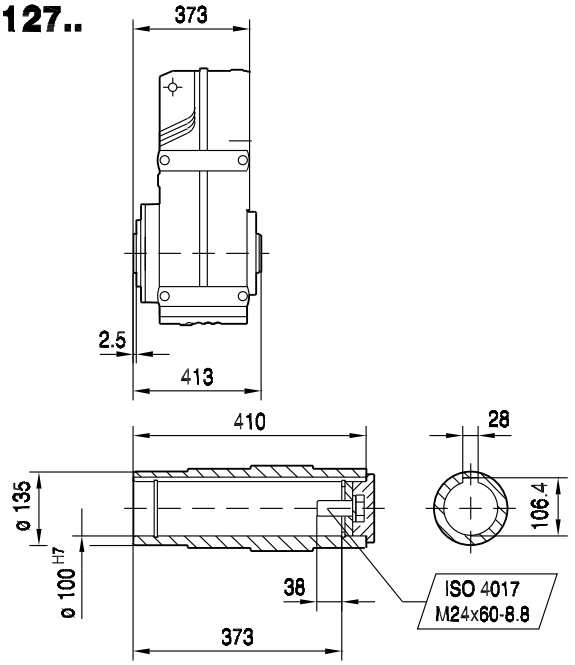

FH127..

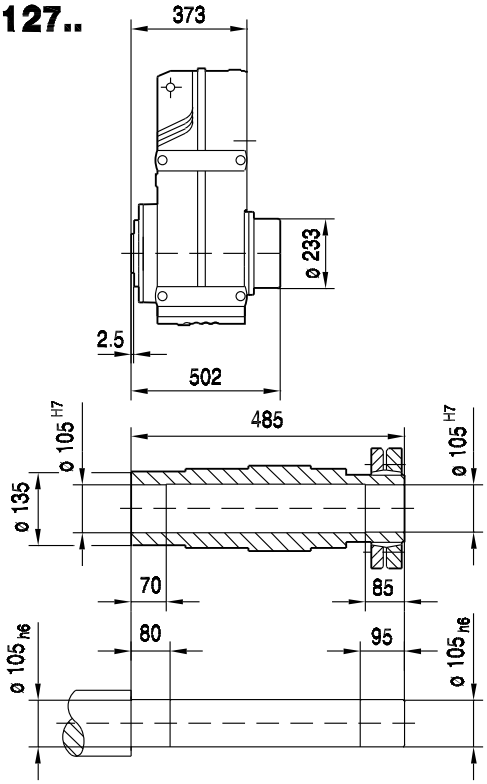

(→ 📖 129)	DRL132S	DRL132MC	DRL160..	DRL180S/M	DRL180L/LC	DRL225S	DRL225MC	
AC	221	221	270	316	316	394	394	
AD	170	170	228	253	253	283	283	
ADS	172	172	228	253	253	283	283	
L	846	896	900	969	1029	1102	1152	
LS	954	1004	1037	1158	1218	1307	1357	
LB	473	523	527	596	656	729	779	
LBS	581	631	664	785	845	934	984	

FAZ127..

42 177 00 08

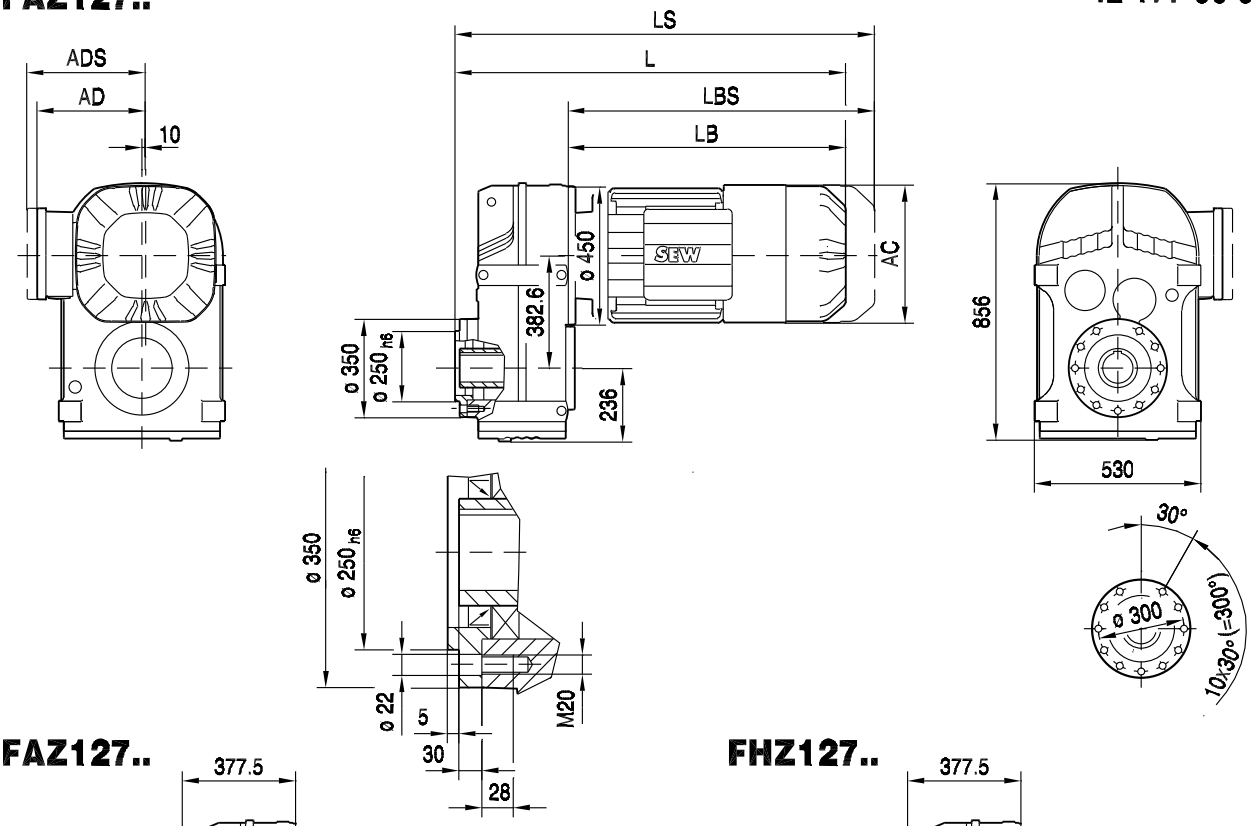

FAZ127..

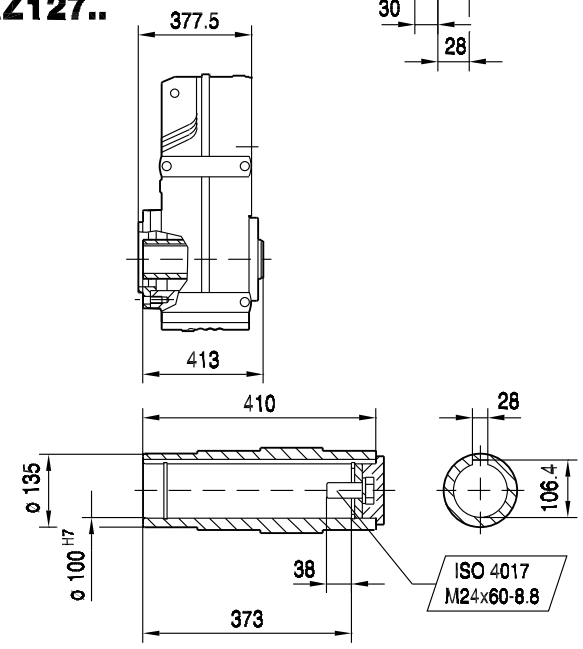

FHZ127..

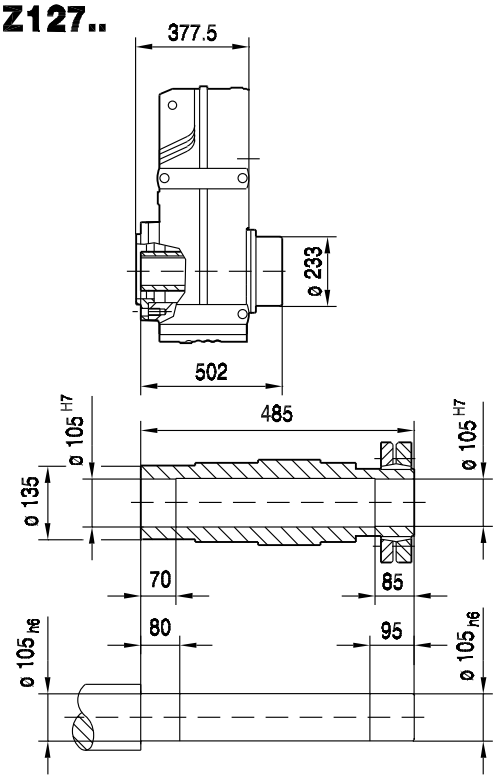

(→ 📖 129)	DRL132S	DRL132MC	DRL160..	DRL180S/M	DRL180L/LC	DRL225S	DRL225MC	
AC	221	221	270	316	316	394	394	
AD	170	170	228	253	253	283	283	
ADS	172	172	228	253	253	283	283	
L	851	901	904	973	1033	1106	1156	
LS	958	1008	1041	1162	1222	1311	1361	
LB	473	523	527	596	656	729	779	
LBS	581	631	664	785	845	934	984	

FT127..

42 178 00 08

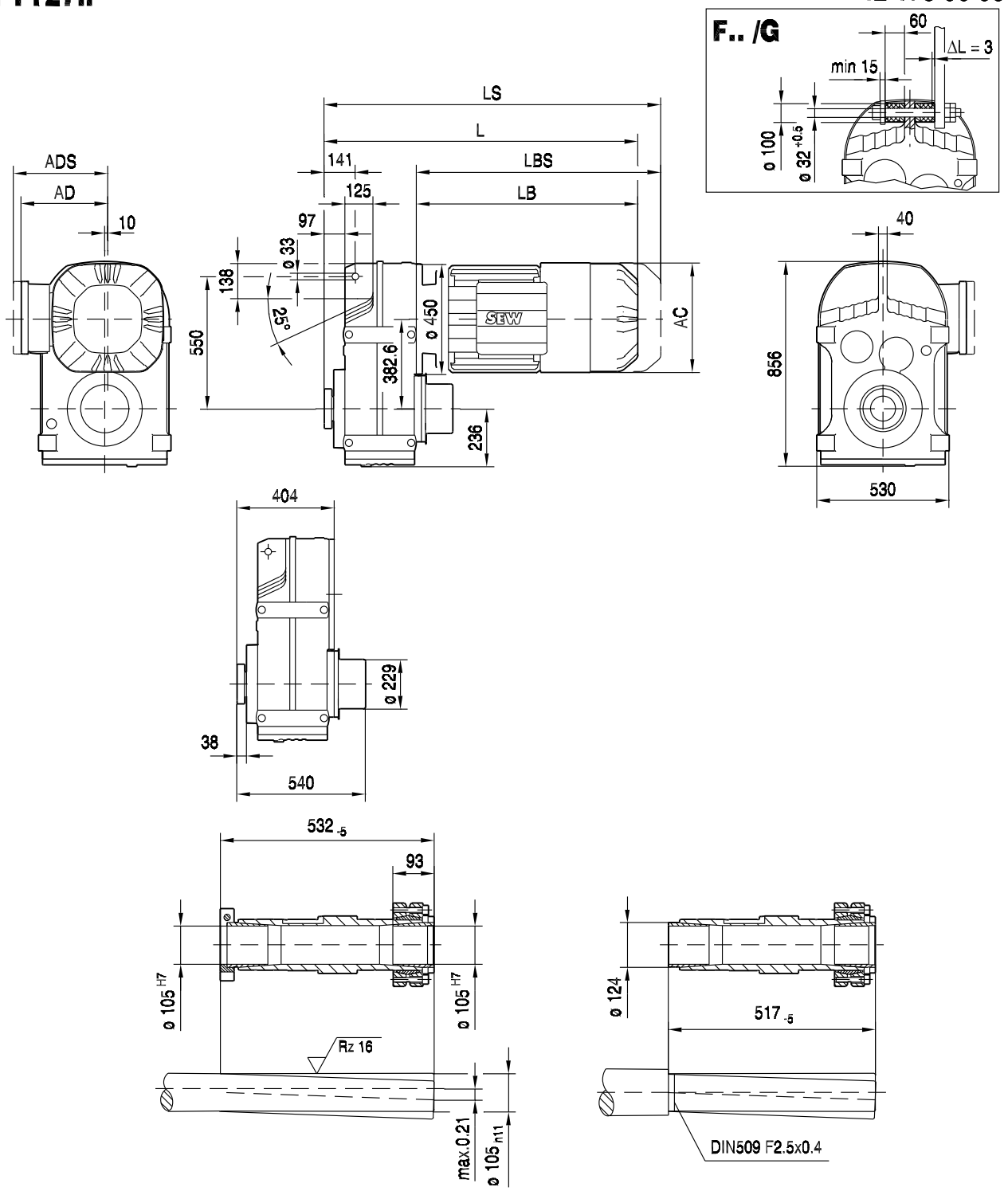

(→ 📖 129)	DRL132S	DRL132MC	DRL160..	DRL180S/M	DRL180L/LC	DRL225S	DRL225MC	
AC	221	221	270	316	316	394	394	
AD	170	170	228	253	253	283	283	
ADS	172	172	228	253	253	283	283	
L	877	927	931	1000	1060	1133	1183	
LS	985	1035	1068	1189	1249	1338	1388	
LB	473	523	527	596	656	729	779	
LBS	581	631	664	785	845	934	984	

Diese Seite bleibt aus drucktechnischen Gründen frei.

9.2.11 F 157

M_{aDyn} Nm	i	DRL 160M D1	160M D2	160MC D1	160MC D2	180S D1	180S D2	180M D1	180M D2	180L D1	180L D2
FA157 2	11.92						4390		4970		6010
	13.96		3790		4330	2840	5140	3380	5820	4330	7040
	16.85	2690	4570	3020	5230	3430	6210	4080	7020	5230	8490
	19.77	3160	5360	3540	6130	4020	7280	4790	8240	6130	9970
	22.16	3540	6010	3970	6870	4510	8160	5370	9240	6870	11100
	25.43	4070	6900	4560	7890	5180	9370	6160	10600	7890	12800
	28.60	4570	7760	5130	8870	5820	10500	6930	11900	8870	14400
	35.75	5720	9700	6410	11000	7280	13100	8660	14900	11000	>16500
	43.94	7030	11900	7880	13600	8950		10600		13600	
	53.55	8570		9600							
FA157 3	27.60						10000		11300		13700
	32.55		8740		9990	6560	11800	7810	13400	9990	16200
	40.06	6340	10700	7110	12300	8070	14600	9610	16500	12300	>18000
	46.48	7360	12400	8250	14200	9370	16900	11100	>18000	14200	>18000
	52.24	8270	14000	9270	16000	10500	>18000	12500	>18000	16000	>18000
	60.25	9540	16100	10700	>18000	12100	>18000	14400	>18000	>18000	>18000
	68.28	10800	>18000	12100	>18000	13700	>18000	16300	>18000	>18000	>18000
	78.46	12400	>18000	13900	>18000	15800	>18000	>18000	>18000	>18000	>18000
	85.80	13500	>18000	15200	>18000	17200	>18000	>18000	>18000	>18000	>18000
	96.53	15100	>18000	16900	>18000	>18000	>18000	>18000	>18000	>18000	>18000
	108.49	17000	>18000	>18000	>18000	>18000	>18000	>18000	>18000	>18000	>18000
	125.14	>18000	>18000	>18000	>18000	>18000	>18000	>18000	>18000	>18000	>18000
	141.80	>18000	>18000	>18000	>18000	>18000	>18000	>18000	>18000	>18000	>18000
	162.96	>18000	>18000	>18000	>18000	>18000	>18000	>18000	>18000	>18000	>18000
	178.20	>18000	>18000	>18000	>18000	>18000	>18000	>18000	>18000	>18000	>18000
	217.62	>18000	>18000	>18000	>18000	>18000		>18000		>18000	
	267.43	>18000		>18000							

	→ 124

m kg	s	DRL 160M	160MC	180S	180M	180L
FA157	2	710	710	740	750	760
FA157	3	710	720	740	760	770
FAF: + 58.6 kg / F: + 20.6 kg / FF: + 127.5 kg						

M_{aDyn} Nm	i	DRL							
		180LC		200L		225S		225MC	
		D1	D2	D1	D2	D1	D2	D1	D2
FA157 2	11.92	4850	6930	5490	7860	6010	8900	8900	12700
	13.96	5680	8120	6430	9200	7040	10400	10400	14800
	16.85	6860	9800	7760	11100	8490	12500	12500	17900
	19.77	8050	11500	9100	13000	9970	14700	14700	>18000
	22.16	9020	12800	10200	14600	11100	16500	16500	>18000
	25.43	10300	14800	11700	16700	12800	>18000	>18000	
	28.60	11600	16600	13100	>18000	14400	>18000	>18000	
	35.75	14500		16400		>16500			
	43.94								
	53.55								
FA157 3	27.60	11100	15800	12500	>18000	13700	>18000	>18000	>18000
	32.55	13100	>18000	14800	>18000	16200	>18000	>18000	>18000
	40.06	16100	>18000	>18000	>18000	>18000	>18000	>18000	>18000
	46.48	>18000	>18000	>18000	>18000	>18000	>18000	>18000	>18000
	52.24	>18000	>18000	>18000	>18000	>18000	>18000	>18000	>18000
	60.25	>18000	>18000	>18000	>18000	>18000	>18000	>18000	
	68.28	>18000	>18000	>18000	>18000	>18000	>18000	>18000	
	78.46	>18000		>18000		>18000			
	85.80	>18000		>18000		>18000			
	96.53	>18000	>18000	>18000	>18000	>18000	>18000	>18000	>18000
	108.49	>18000	>18000	>18000	>18000	>18000	>18000	>18000	>18000
	125.14	>18000	>18000	>18000	>18000	>18000	>18000	>18000	
	141.80	>18000	>18000	>18000	>18000	>18000	>18000	>18000	
	162.96	>18000		>18000		>18000			
	178.20	>18000		>18000		>18000			
	217.62								
	267.43								

→ 124

m kg	s	DRL			
		180LC	200L	225S	225MC
FA157	2	780	870	900	950
FA157	3	780	880	910	950
FAF: + 58.6 kg / F: + 20.6 kg / FF: + 127.5 kg					

F..DRL
F..Nm

DRL..	i	n_{epk} 1/min	η %	c_{TG} FA Nm/'	FAF Nm/'	F Nm/'	FF Nm/'	φ /R '
FA157 2	11.92	4500	97	3723	3723	1982	1790	5
	13.96	4500	97	3723	3723	1982	1790	5
	16.85	4500	97	3723	3723	1982	1790	5
	19.77	4500	97	3723	3723	1982	1790	4
	22.16	4500	97	3723	3723	1982	1790	4
	25.43	4500	97	3723	3723	1982	1790	4
	28.60	4500	97	3723	3723	1982	1790	4
	35.75	4500	97	3723	3723	1982	1790	4
	43.94	4500	97	3723	3723	1982	1790	4
	53.55	4500	97	3723	3723	1982	1790	4
FA157 3	27.60	4500	96	4368	4368	2151	1926	5
	32.55	2797	96	4368	4368	2151	1926	5
	40.06	3197	96	4368	4368	2151	1926	5
	46.48	3597	96	4368	4368	2151	1926	5
	52.24	3924	96	4368	4368	2151	1926	5
	60.25	4378	96	4368	4368	2151	1926	5
	68.28	4500	96	4368	4368	2151	1926	5
	78.46	4500	96	4368	4368	2151	1926	5
	85.80	4500	96	4368	4368	2151	1926	5
	96.53	3597	95	4471	4471	2176	1946	5
	108.49	3924	95	4471	4471	2176	1946	5
	125.14	4500	95	4471	4471	2176	1946	5
	141.80	4500	95	4471	4471	2176	1946	5
	162.96	4500	95	4471	4471	2176	1946	5
	178.20	4500	95	4471	4471	2176	1946	5
	217.62	4500	95	4471	4471	2176	1946	5
	267.43	4500	94	4471	4471	2176	1946	5

DRL.. n_e = 1400	i	M_{amax} Nm	M_{apk} Nm	$M_{aNotaus}$ Nm	n_{ak} 1/min	J_G 10^{-4} kgm^2	F_{Ramax} FA N	FAF N	F N	FF N	F_{Rapk} FA N	FAF N	F N	FF N
FA157 2	11.92	16000	18000	27200	151	781	51400	51400	40900	47800	120000	120000	100300	100300
	13.96	17000	18000	28900	115	605	53400	53400	42500	49700	120000	120000	100300	100300
	16.85	18000	18000	30600	89	445	56400	56400	44900	52600	120000	120000	100300	100300
	19.77	17000	18000	28900	106	339	63900	63900	50900	58500	120000	120000	100300	100300
	22.16	18000	18000	30600	86	285	65100	65100	51800	59800	120000	120000	100300	100300
	25.43	15000	18000	25500	157	228	77100	77100	61500	69000	120000	120000	100300	100300
	28.60	17000	18000	28900	101	188	76300	76300	60800	68900	120000	120000	100300	100300
	35.75	11000	16500	18700	196	133	99300	99300	79300	86400	120000	120000	104400	104400
	43.94	10000	14800	17000	159	88	109900	109900	87800	95000	120000	120000	108600	108600
	53.55	8000	12000	13600	131	63	120000	120000	98400	105400	120000	120000	114100	114100
FA157 3	27.60	18000	18000	30600	94	536	72600	72600	57800	66100	120000	120000	100300	100300
	32.55	18000	18000	30600	92	420	78500	78500	62500	71000	120000	120000	100300	100300
	40.06	18000	18000	30600	92	317	86400	86400	68900	77700	120000	120000	100300	100300
	46.48	18000	18000	30600	93	247	92400	92400	73600	82700	120000	120000	100300	100300
	52.24	18000	18000	30600	94	207	97200	97200	77500	86700	120000	120000	100300	100300
	60.25	18000	18000	30600	93	166	103400	103400	82500	91900	120000	120000	100300	100300
	68.28	18000	18000	30600	94	138	109100	109100	87000	96700	120000	120000	100300	100300
	78.46	18000	18000	30600	89	114	115700	115700	92300	100300	120000	120000	100300	100300
	85.80	18000	18000	30600	82	99	120000	120000	95800	100300	120000	120000	100300	100300
	96.53	18000	18000	30600	73	202	120000	120000	100300	100300	120000	120000	100300	100300
	108.49	18000	18000	30600	65	172	120000	120000	100300	100300	120000	120000	100300	100300
	125.14	18000	18000	30600	56	142	120000	120000	100300	100300	120000	120000	100300	100300
	141.80	18000	18000	30600	49	120	120000	120000	100300	100300	120000	120000	100300	100300
	162.96	18000	18000	30600	43	100	120000	120000	100300	100300	120000	120000	100300	100300
	178.20	18000	18000	30600	39	88	120000	120000	100300	100300	120000	120000	100300	100300
	217.62	18000	18000	30600	32	57	120000	120000	100300	100300	120000	120000	100300	100300
	267.43	18000	18000	30600	26	42	120000	120000	100300	100300	120000	120000	100300	100300

F157..

42 179 00 08

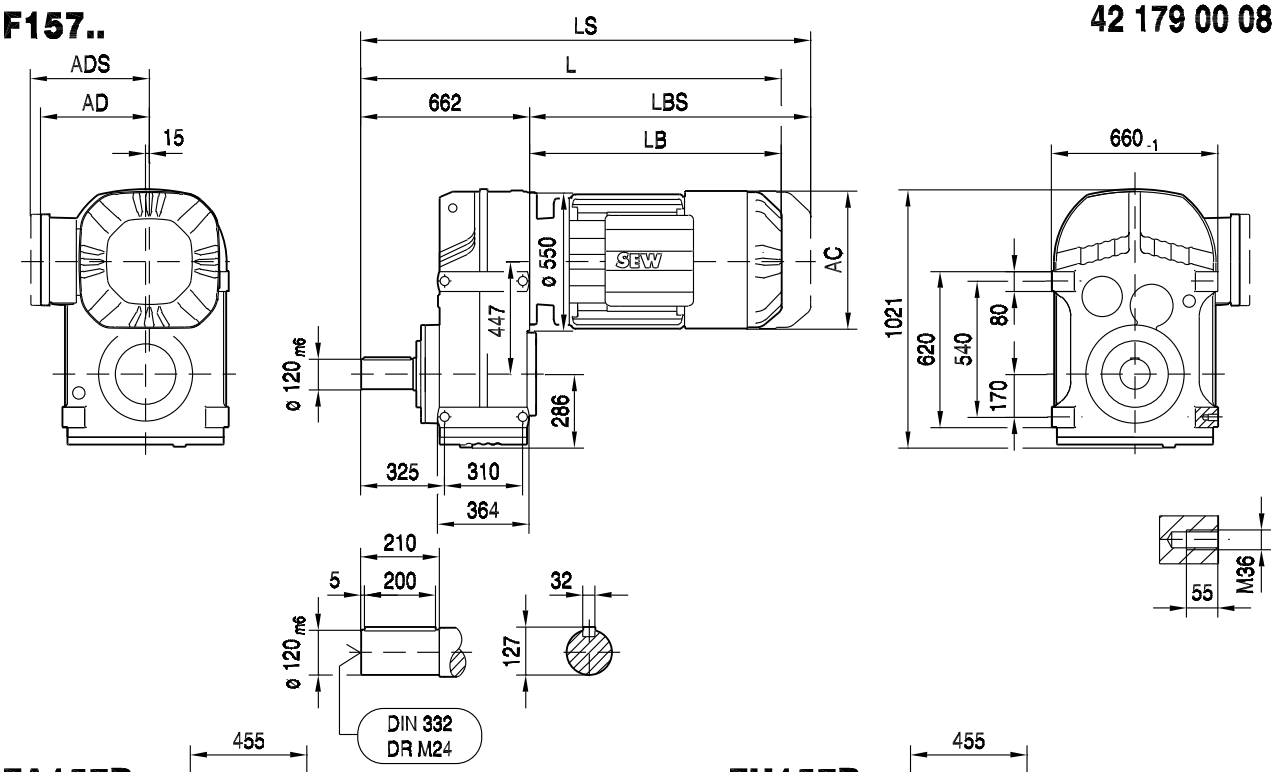

FA157B..

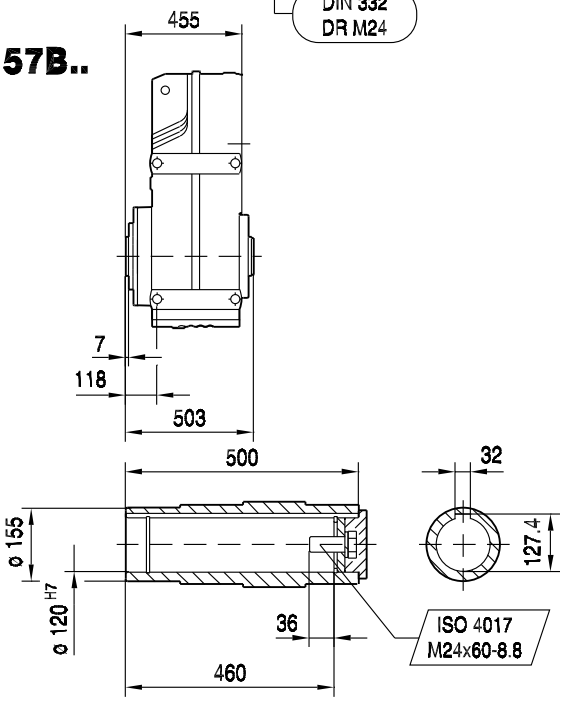

FH157B..

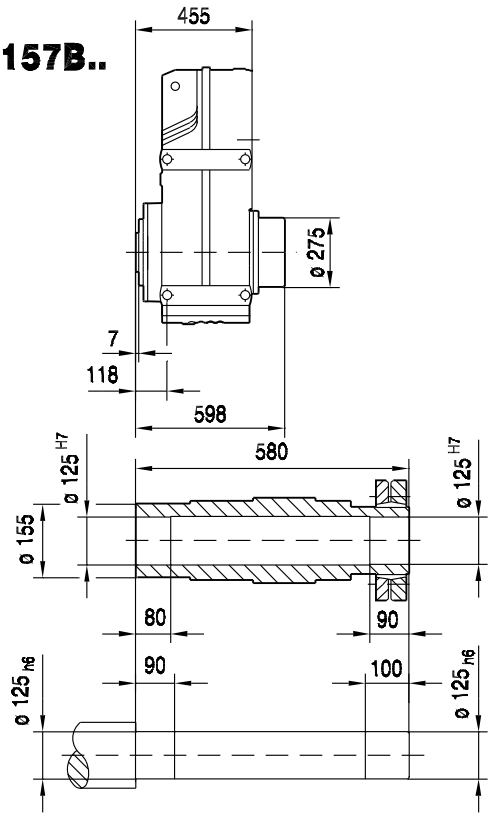

(→ 📖 129)	DRL160..	DRL180S/M	DRL180L/LC	DRL225S	DRL225MC			
AC	270	316	316	394	394			
AD	228	253	253	283	283			
ADS	228	253	253	283	283			
L	1181	1250	1310	1383	1433			
LS	1318	1439	1499	1588	1638			
LB	519	588	648	721	771			
LBS	656	777	837	926	976			

42 180 00 08

FF157..

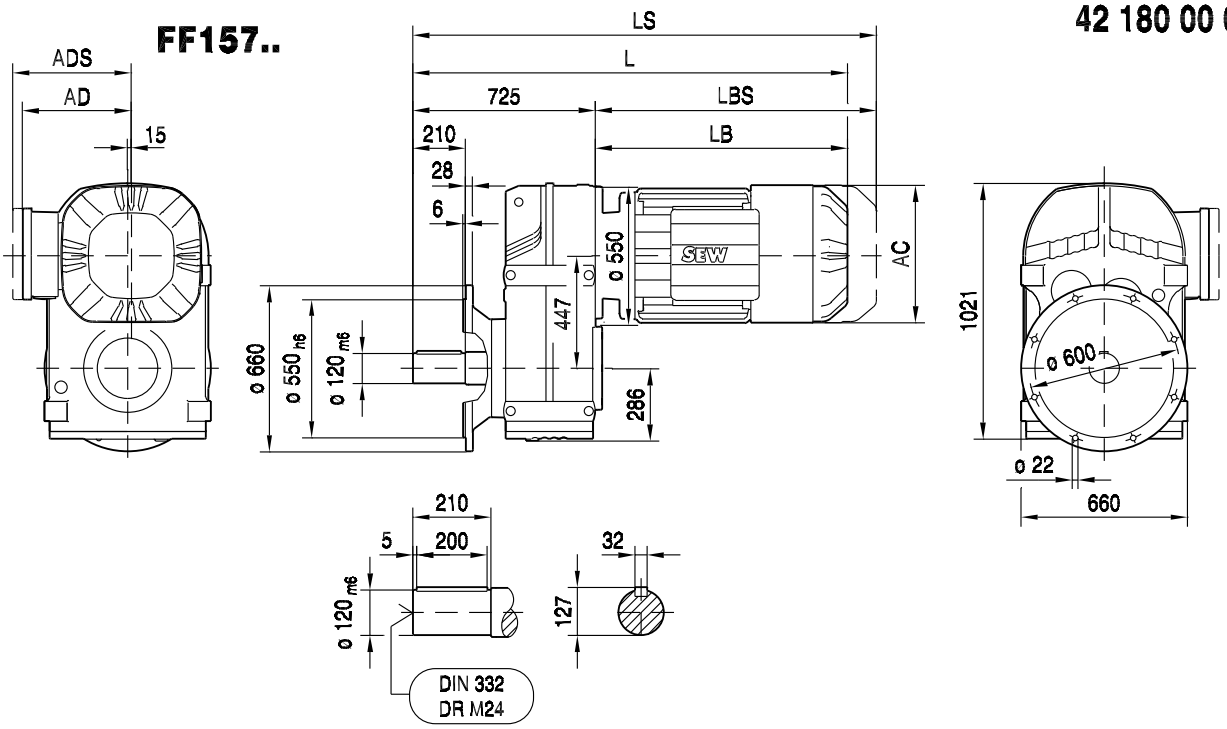

FAF157..

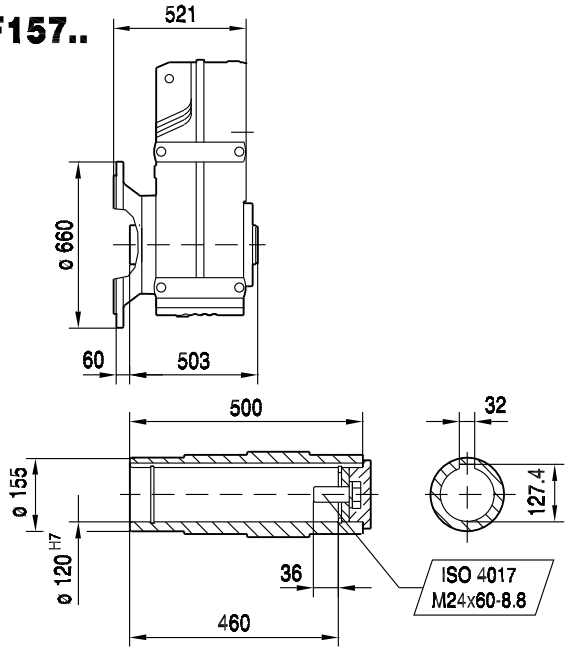

FHF157..

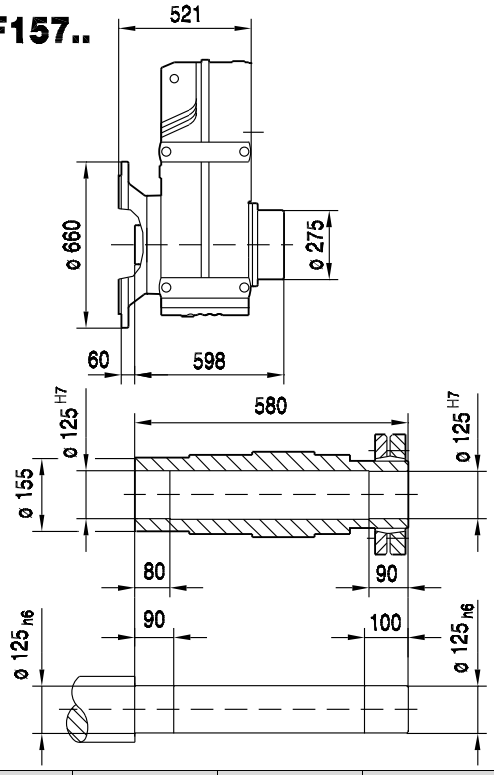

(→ 📖 129)	DRL160..	DRL180S/M	DRL180L/LC	DRL225S	DRL225MC			
AC	270	316	316	394	394			
AD	228	253	253	283	283			
ADS	228	253	253	283	283			
L	1244	1313	1373	1446	1496			
LS	1381	1502	1562	1651	1701			
LB	519	588	648	721	771			
LBS	656	777	837	926	976			

FA157..

42 181 00 08

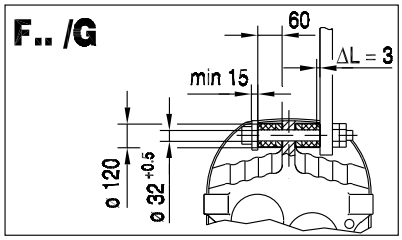

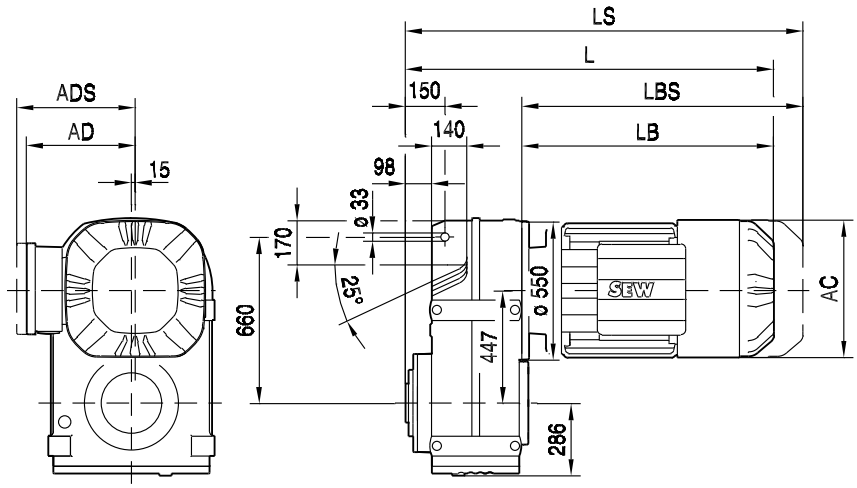

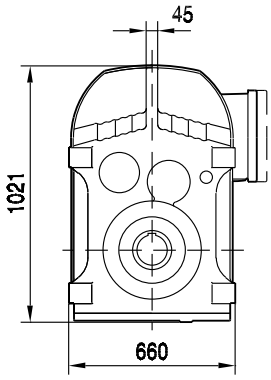

FA157..

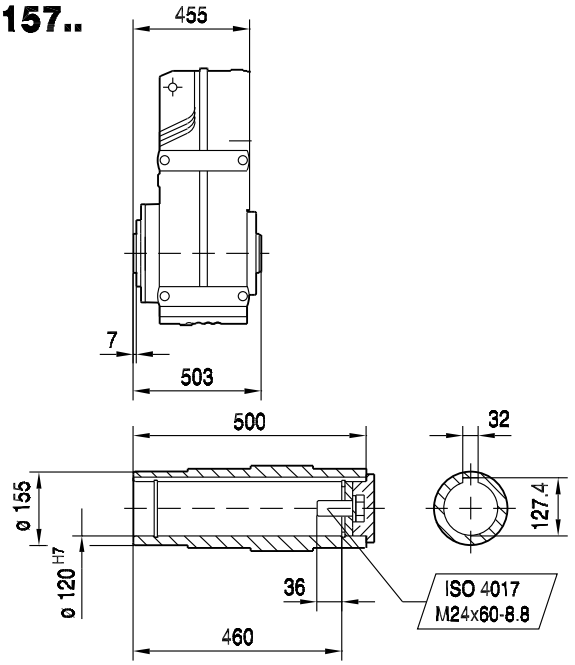

FH157..

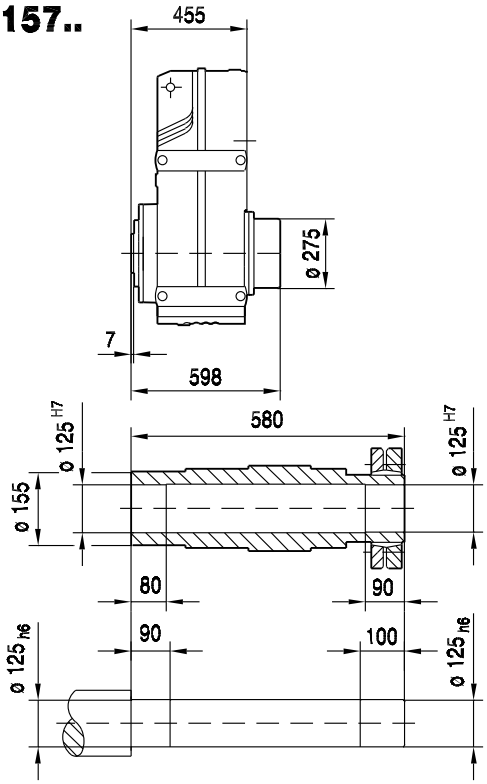

(→ 📖 129)	DRL160..	DRL180S/M	DRL180L/LC	DRL225S	DRL225MC			
AC	270	316	316	394	394			
AD	228	253	253	283	283			
ADS	228	253	253	283	283			
L	974	1043	1103	1176	1226			
LS	1111	1232	1292	1381	1431			
LB	519	588	648	721	771			
LBS	656	777	837	926	976			

F..DRL
F..Nm

FAZ157..

42 182 00 08

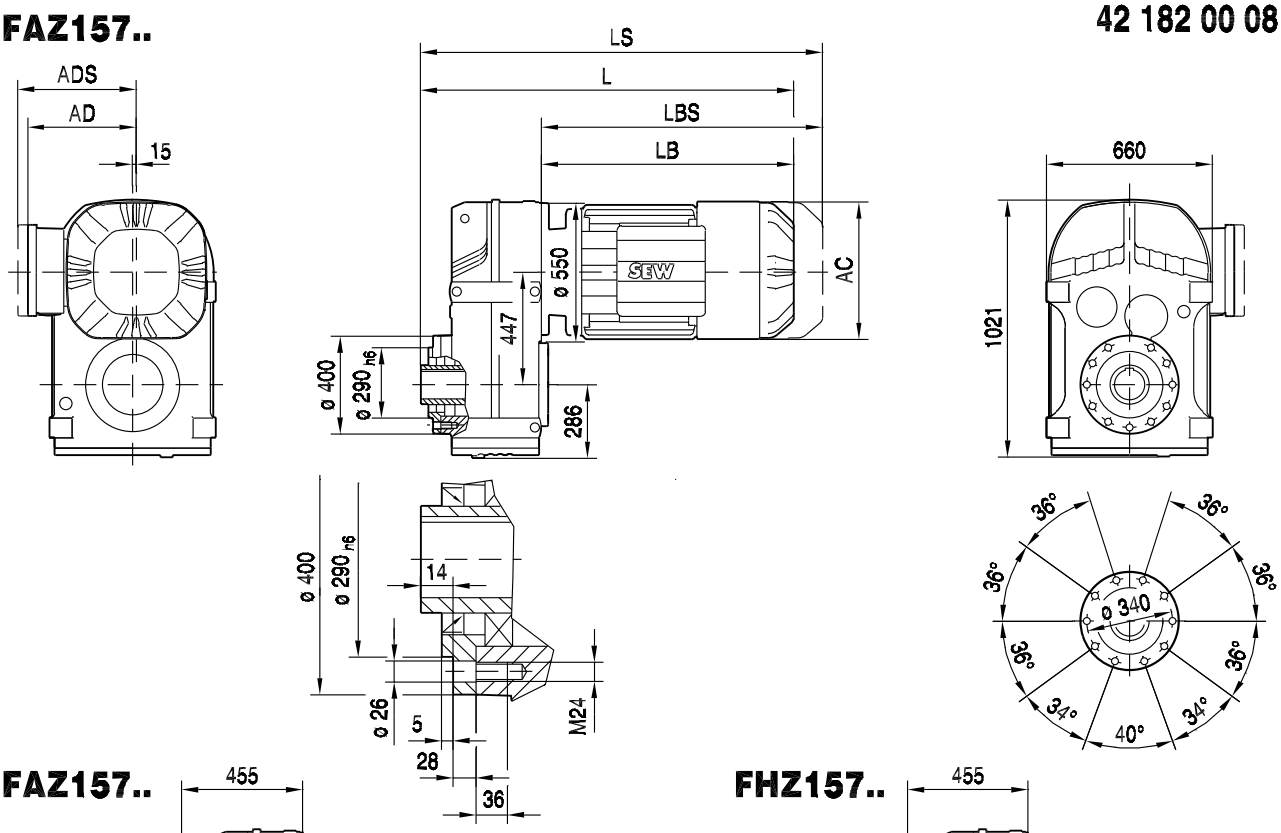

FAZ157..

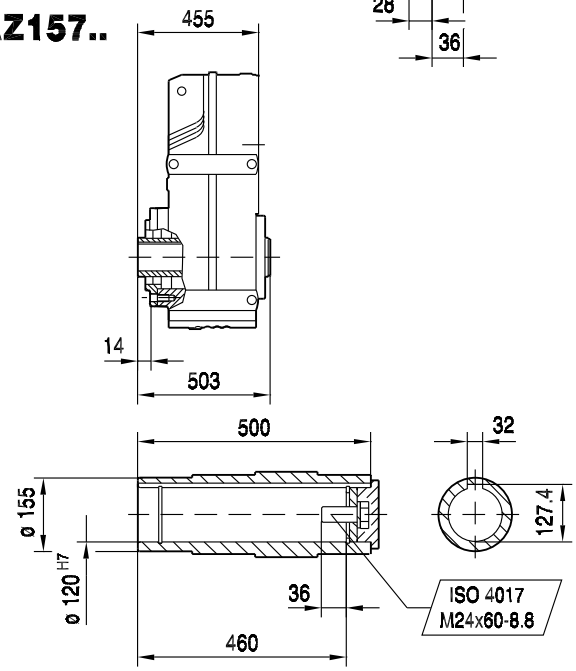

FHZ157..

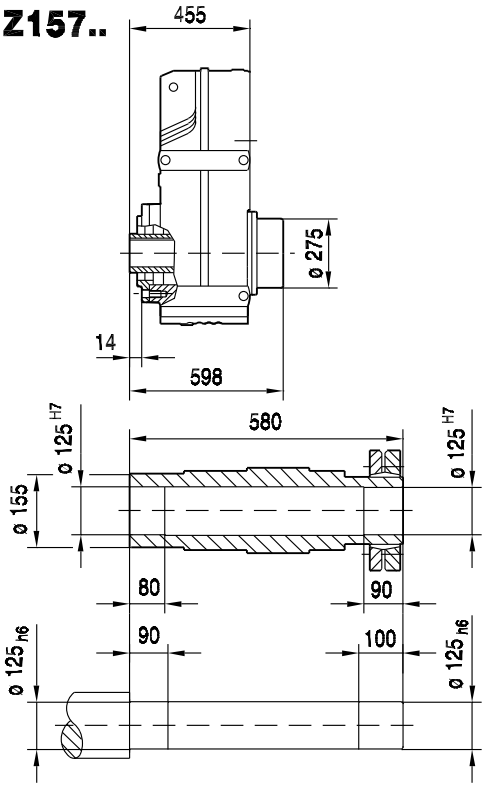

(→ 📖 129)	DRL160..	DRL180S/M	DRL180L/LC	DRL225S	DRL225MC			
AC	270	316	316	394	394			
AD	228	253	253	283	283			
ADS	228	253	253	283	283			
L	974	1043	1103	1176	1226			
LS	1111	1232	1292	1381	1431			
LB	519	588	648	721	771			
LBS	656	777	837	926	976			

FT157..

42 183 00 08

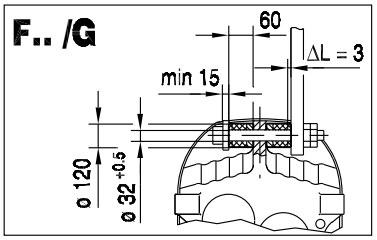

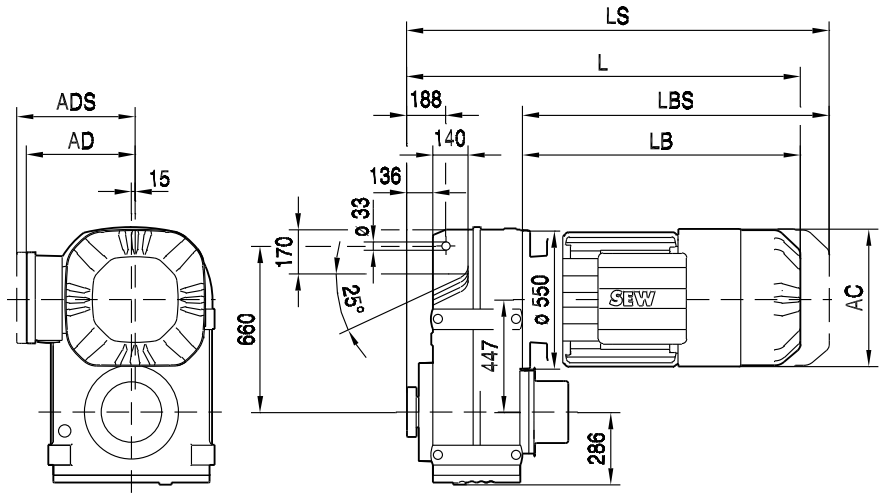

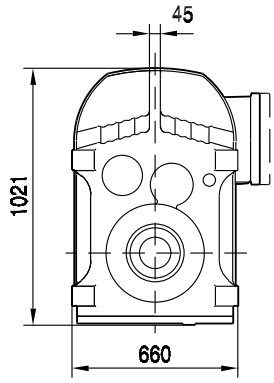

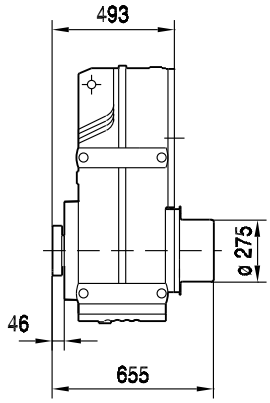

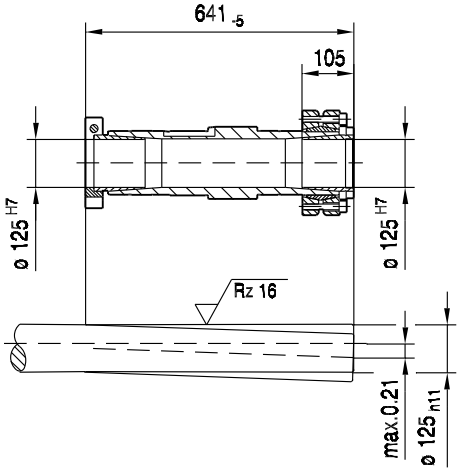

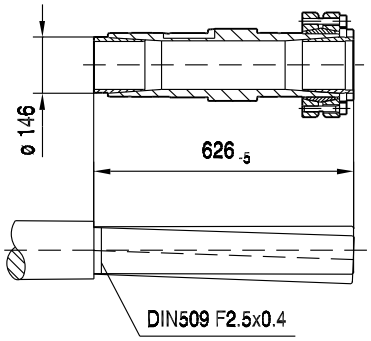

(→ 📖 129)	DRL160..	DRL180S/M	DRL180L/LC	DRL225S	DRL225MC			
AC	270	316	316	394	394			
AD	228	253	253	283	283			
ADS	228	253	253	283	283			
L	1012	1081	1141	1214	1264			
LS	1149	1270	1330	1419	1469			
LB	519	588	648	721	771			
LBS	656	777	837	926	976			

10 K..DRL

10.1 K, KA, KV, KH, KF, KAF, KAV, KHF, KA../T, KV../T, KH../T, KAZ, KVZ, KHZ..DRL

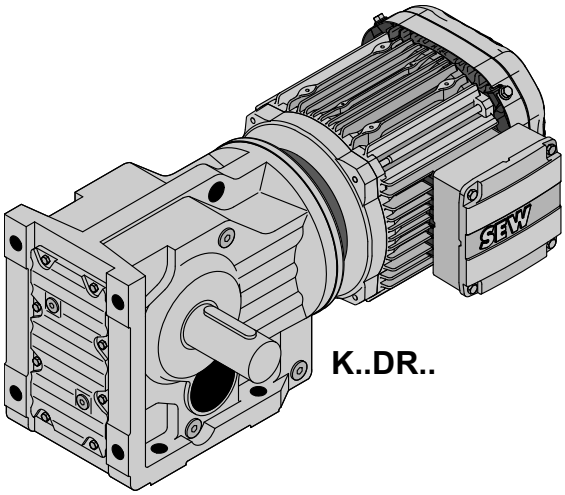

K..DR..

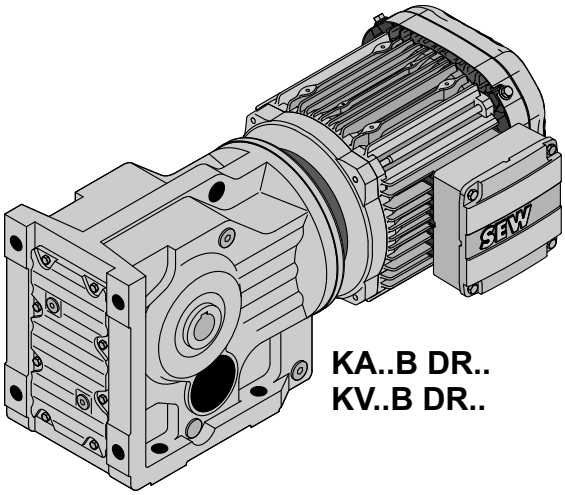

KA..B DR..
KV..B DR..

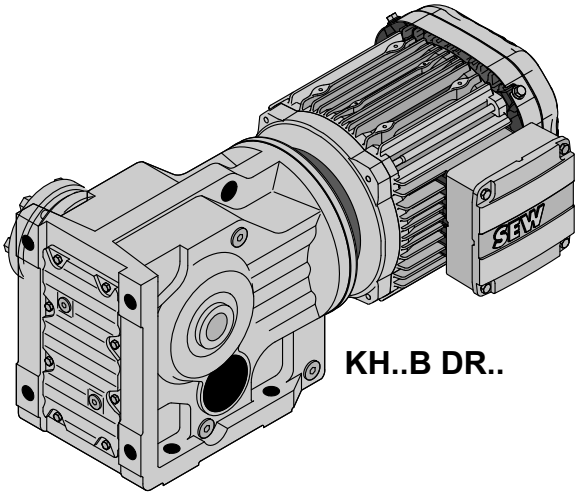

KH..B DR..

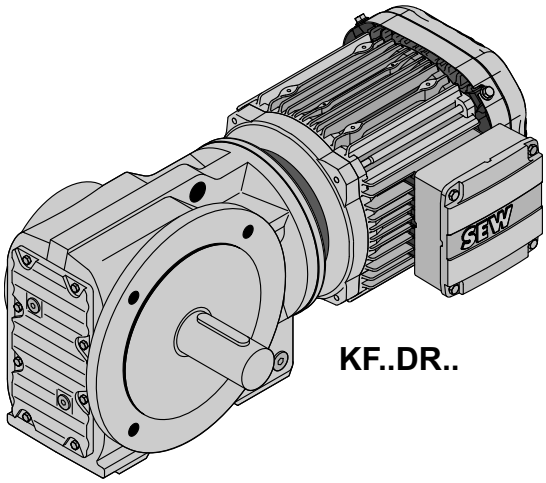

KF..DR..

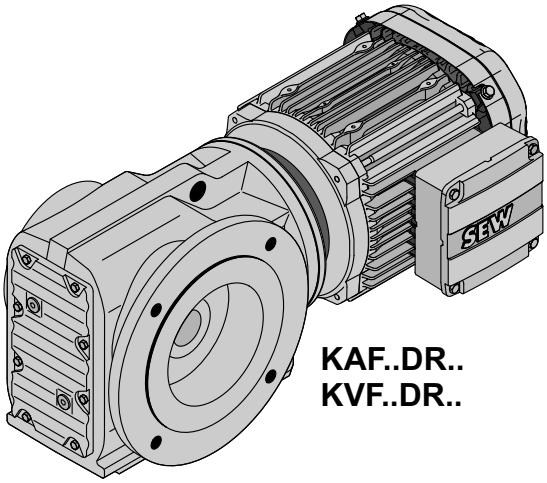

KAF..DR..
KVF..DR..

60405axx

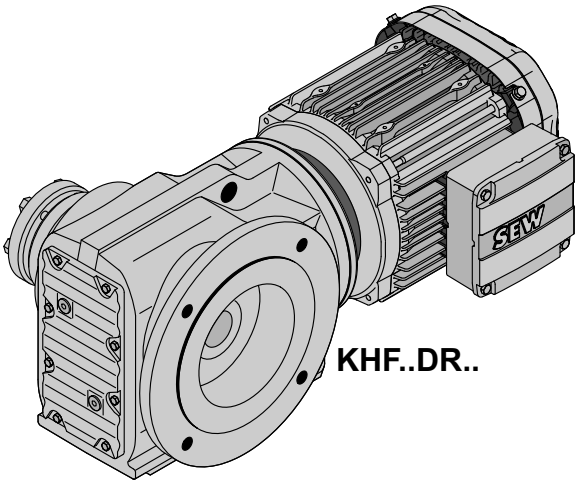

KHF..DR..

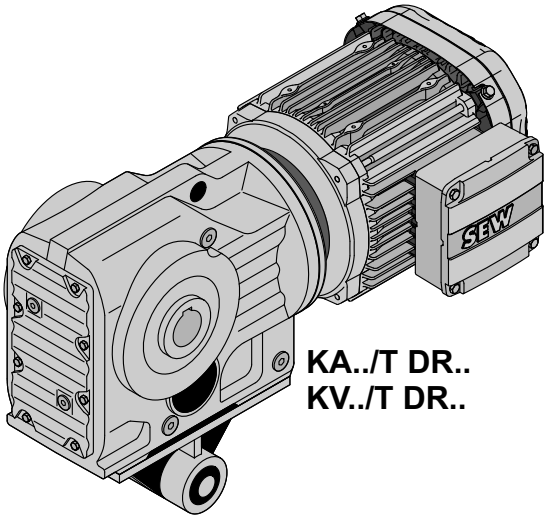

KA../T DR..
KV../T DR..

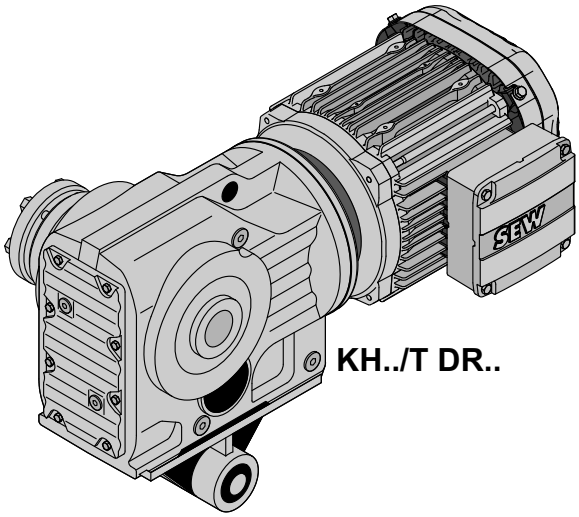

KH../T DR..

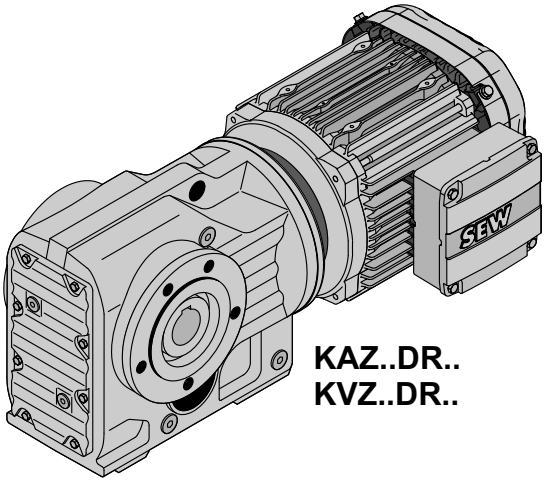

KAZ..DR..
KVZ..DR..

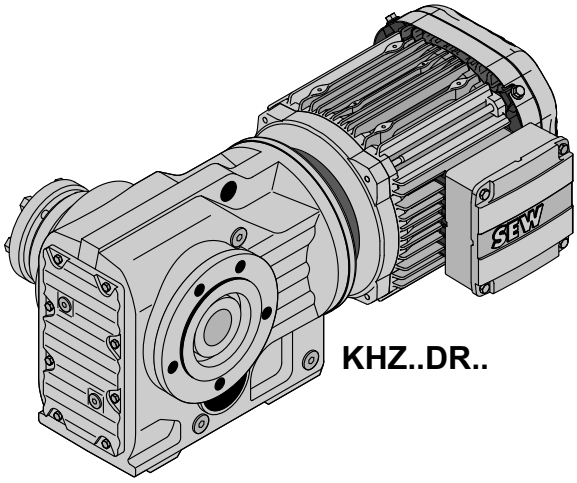

KHZ..DR..

60411axx

10.2 K..Nm

10.2.1 K 37

M_{aDyn} Nm	i	DRL 71S D1	71S D2	71M D1	71M D2	80S D1	80S D2	80M D1	90L D1	100L D1
K37 3	3.98	19	32	27	53	38	96	50	96	134
	5.36	26	44	36	72	51	129	67	129	180
	6.37	31	52	43	86	61	153	79	153	>199
	6.80	33	55	46	91	65	163	85	163	>199
	7.96	38	65	53	107	76	191	99	191	>199
	8.91	43	73	60	120	86	>199	111	>199	>199
	10.49	50	86	70	141	101	>199	131	>199	>199
	12.14	58	99	82	163	117	>199	152		
	13.08	63	107	88	176	126	>240	163	>240	>240
	15.31	73	125	103	205	147	>240	191	>240	>240
	17.15	82	140	115	230	165	>240	210	>240	>240
	20.19	97	165	136	>240	194	>240	>240	>240	>240
	23.36	112	191	157	>240	220	>240	>240		
	24.99	120	200	168	>240	235	>240	>240		
	28.83	138	235	194		>240		>240		
	29.96	141	>230	197	>230	>230	>230	>230	>230	>230
	35.57	167	>230	>230	>230	>230	>230	>230	>230	>230
	37.97	178	>230	>230	>230	>230	>230	>230	>230	>230
	44.46	205	>230	>230	>230	>230	>230	>230	>230	>230
	49.79	>230	>230	>230	>230	>230	>230	>230	>230	>230
	58.60	>230	>230	>230	>230	>230	>230	>230	>230	>230
	67.80	>230	>230	>230	>230	>230	>230	>230		
	72.54	>230	>230	>230	>230	>230	>230	>230		
	83.69	>230	>230	>230		>230		>230		
	97.81	>230		>230						
	106.38	>230		>230						

	→ 124

m kg	s	DRL 71S	71M	80S	80M	90L	100L
K37	3	19	21	23	26	33	41
KF: + 2.3 kg / KA: + -0.2 kg / KAF: + 1.5 kg							

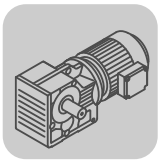

DRL..	i	n_{epk} 1/min	η %	c_{TG} K Nm/'	KF Nm/'	KA Nm/'	KAF Nm/'	φ /R '
K37 3	3.98	4500	96	13	13	29	29	13
	5.36	4500	96	13	13	29	29	13
	6.37	4500	96	13	13	29	29	13
	6.80	4500	96	13	13	29	29	13
	7.96	4500	96	13	13	29	29	13
	8.91	4500	96	13	13	29	29	12
	10.49	4500	96	13	13	29	29	12
	12.14	4500	96	13	13	29	29	12
	13.08	4500	96	17	17	63	63	9
	15.31	4500	96	17	17	63	63	9
	17.15	4500	96	17	17	63	63	8
	20.19	4500	96	17	17	63	63	8
	23.36	4500	96	17	17	63	63	8
	24.99	4500	96	17	17	63	63	8
	28.83	4500	96	17	17	63	63	8
	29.96	4500	94	18	19	85	85	7
	35.57	4500	94	18	19	85	85	7
	37.97	4500	94	18	19	85	85	7
	44.46	4500	94	18	19	85	85	7
	49.79	4500	94	18	19	85	85	7
	58.60	4500	94	18	19	85	85	7
	67.80	4500	94	18	19	85	85	7
	72.54	4500	94	18	19	85	85	7
	83.69	4500	93	18	19	85	85	7
	97.81	4500	93	18	19	85	85	7
	106.38	4500	93	18	19	85	85	7

DRL.. n_e = 1400	i	M_{amax} Nm	M_{apk} Nm	$M_{aNotaus}$ Nm	n_{ak} 1/min	J_G 10^{-4} kgm^2	F_{Ramax} K N	KF N	KA N	KAF N	F_{Rapk} K N	KF N	KA N	KAF N
K37 3	3.98	125	187	213	377	2.6	1660	2130	2310	2310	5780	5710	7000	7000
	5.36	140	199	238	317	1.7	1810	2340	2530	2530	5650	5640	7000	7000
	6.37	145	199	247	314	1.3	1950	2500	2720	2720	5650	5640	7000	7000
	6.80	150	199	255	294	1.1	1980	2540	2760	2760	5650	5640	7000	7000
	7.96	155	199	264	276	0.85	2110	2700	2940	2940	5650	5640	7000	7000
	8.91	160	199	272	258	0.70	2200	2810	3070	3070	5650	5640	7000	7000
	10.49	160	199	272	276	0.51	2410	3030	3340	3340	5650	5640	7000	7000
	12.14	160	199	272	297	0.40	2600	3240	3600	3600	5650	5640	7000	7000
	13.08	165	240	281	420	1.0	2650	3310	3660	3660	4100	4100	7000	7000
	15.31	175	240	298	346	0.76	2780	3480	3850	3850	4100	4100	7000	7000
	17.15	180	240	306	315	0.62	2900	3630	4020	4020	4100	4100	7000	7000
	20.19	185	240	315	287	0.46	3110	3870	4300	4300	4100	4100	7000	7000
	23.36	195	240	332	240	0.37	3260	4060	4510	4510	4100	4100	7000	7000
	24.99	200	240	340	220	0.33	3330	4150	4600	4600	4100	4100	7000	7000
	28.83	200	240	340	222	0.26	3580	4420	4940	4940	4100	4100	7000	7000
	29.96	200	230	340	157	0.76	3650	4500	5030	5030	5140	5140	7000	7000
	35.57	200	230	340	157	0.60	3970	4860	5460	5460	5140	5140	7000	7000
	37.97	200	230	340	158	0.54	4100	5000	5630	5630	5140	5140	7000	7000
	44.46	200	230	340	157	0.42	4420	5350	6060	6060	5140	5140	7000	7000
	49.79	200	230	340	141	0.36	4660	5610	6380	6380	5140	5140	7000	7000
	58.60	200	230	340	119	0.27	5020	5630	6860	6860	5140	5140	7000	7000
	67.80	200	230	340	103	0.23	5360	5630	7000	7000	5140	5140	7000	7000
	72.54	200	230	340	96	0.21	5520	5630	7000	7000	5140	5140	7000	7000
	83.69	200	230	340	84	0.17	5640	5630	7000	7000	5140	5140	7000	7000
	97.81	200	230	340	72	0.13	5640	5630	7000	7000	5140	5140	7000	7000
	106.38	200	230	340	66	0.12	5640	5630	7000	7000	5140	5140	7000	7000

33 152 00 08

K37..

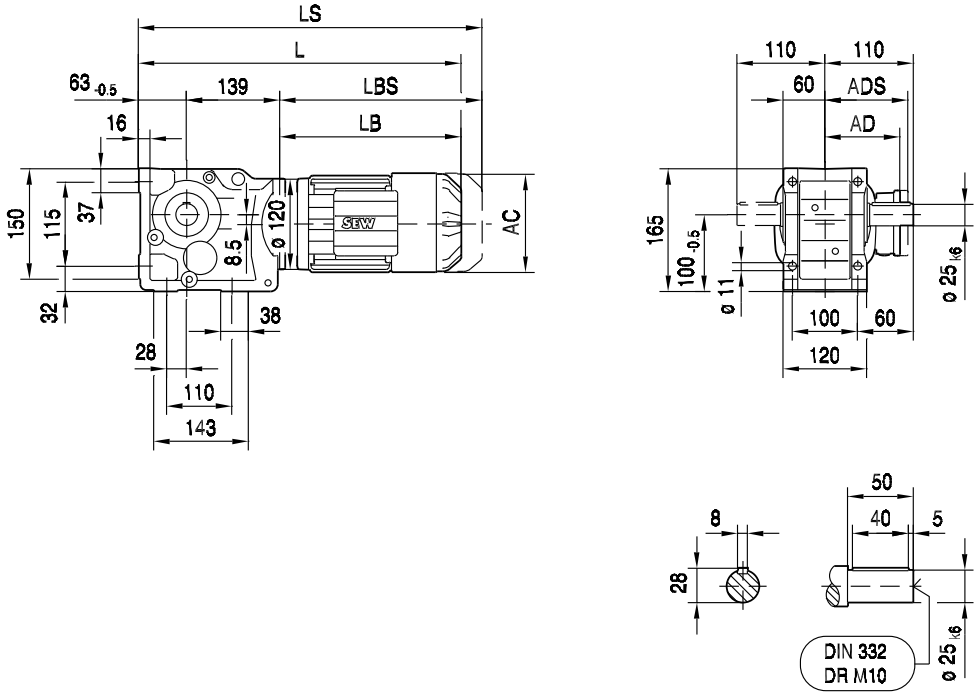

(→ 📖 129)	DRL71S	DRL71M	DRL80S	DRL80M	DRL90L	DRL100L		
AC	139	139	156	156	179	197		
AD	119	119	128	128	140	157		
ADS	129	129	139	139	150	158		
L	490	515	534	565	582	641		
LS	554	579	614	645	668	728		
LB	288	313	332	363	380	439		
LBS	352	377	412	443	466	526		

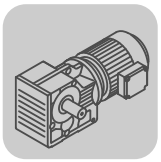

33 153 00 08

KF37..

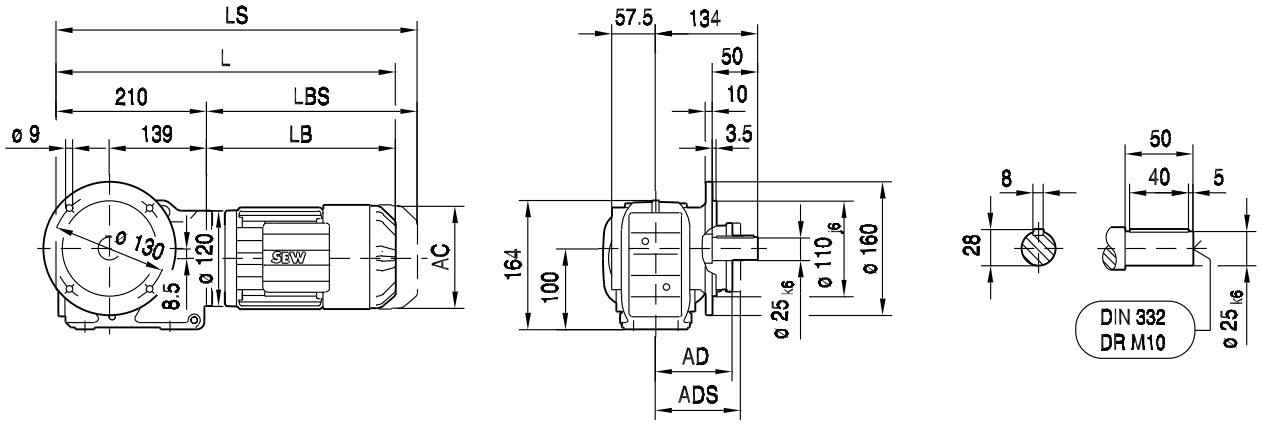

10

KAF37..

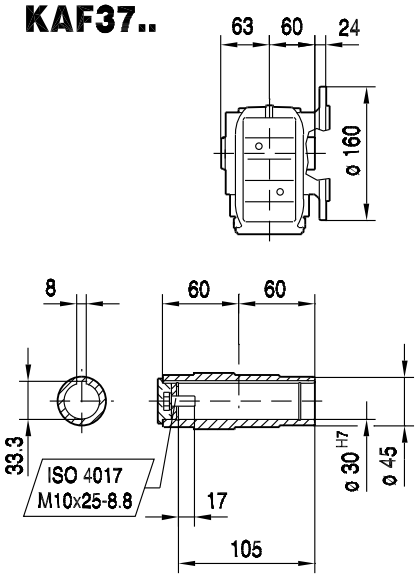

KHF37..

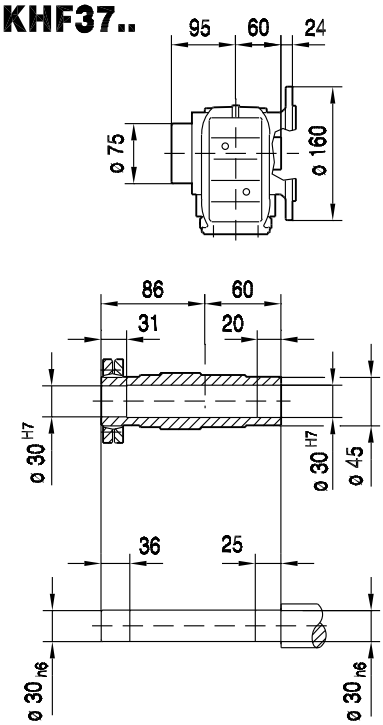

KVF37..

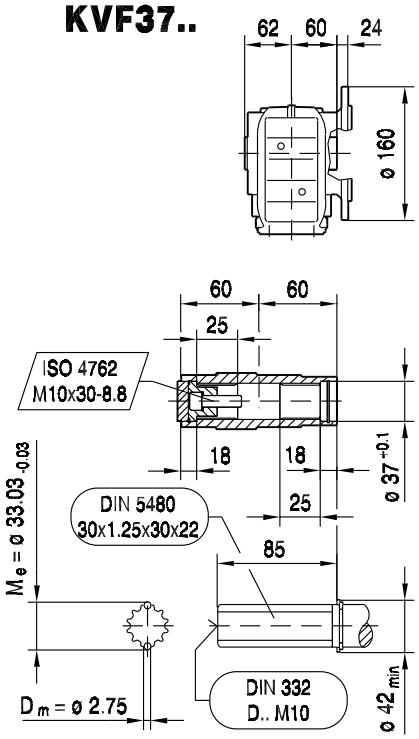

(→ 📖 129)	DRL71S	DRL71M	DRL80S	DRL80M	DRL90L	DRL100L		
AC	139	139	156	156	179	197		
AD	119	119	128	128	140	157		
ADS	129	129	139	139	150	158		
L	498	523	542	573	590	649		
LS	562	587	622	653	676	736		
LB	288	313	332	363	380	439		
LBS	352	377	412	443	466	526		

33 154 00 08

KA37..

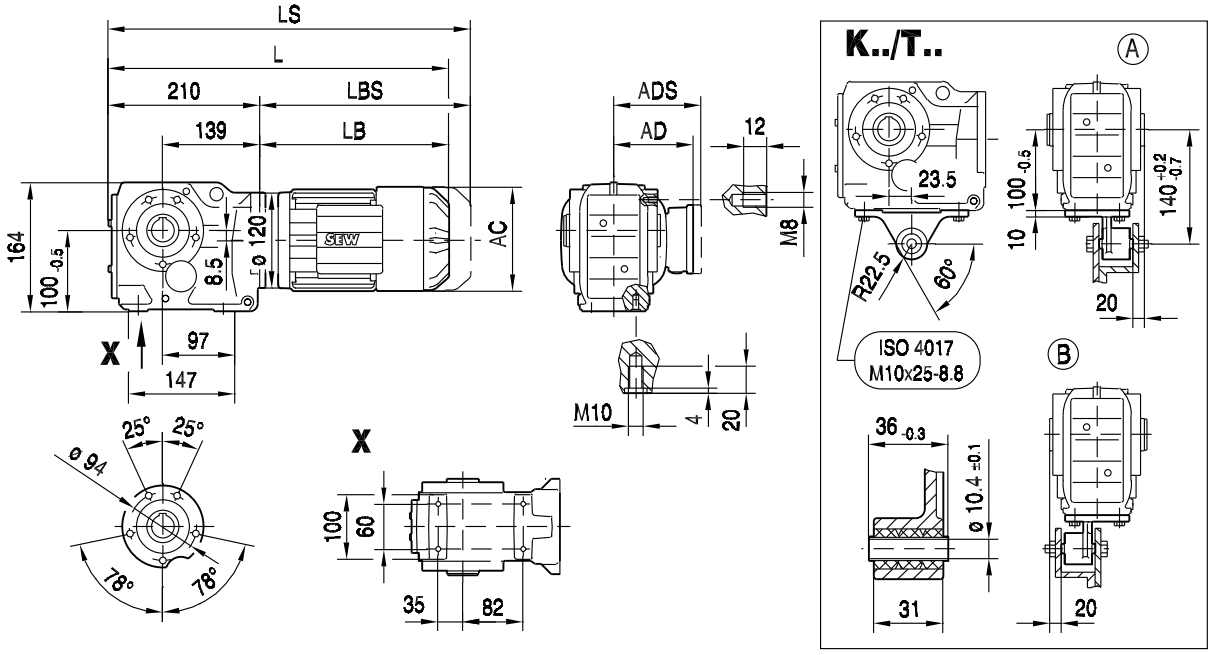

KA37..

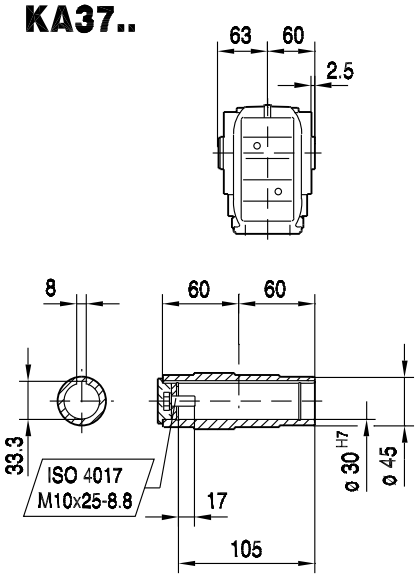

KH37..

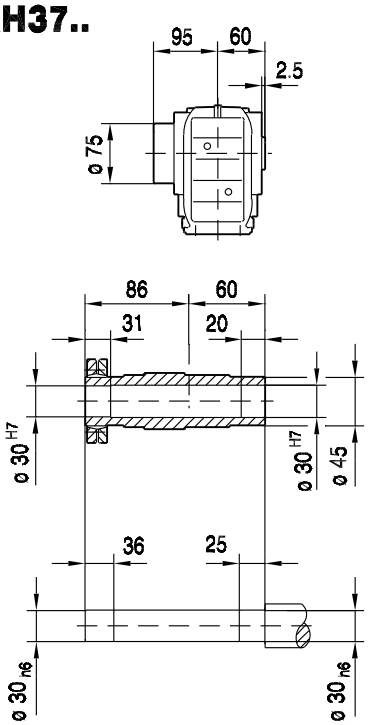

KV37..

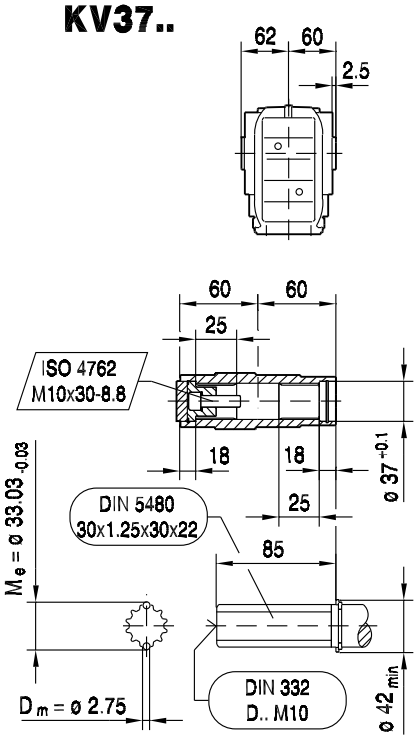

(→ 📖 129)	DRL71S	DRL71M	DRL80S	DRL80M	DRL90L	DRL100L		
AC	139	139	156	156	179	197		
AD	119	119	128	128	140	157		
ADS	129	129	139	139	150	158		
L	498	523	542	573	590	649		
LS	562	587	622	653	676	736		
LB	288	313	332	363	380	439		
LBS	352	377	412	443	466	526		

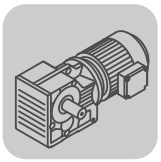

33 155 00 08

KAZ37..

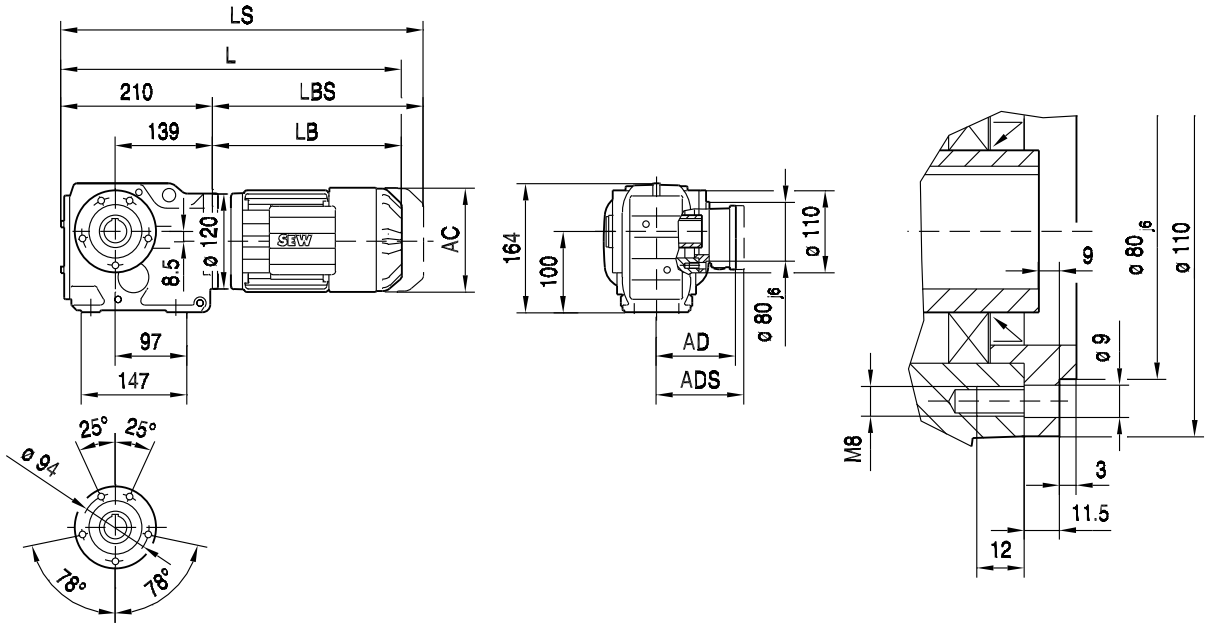

10

KAZ37..

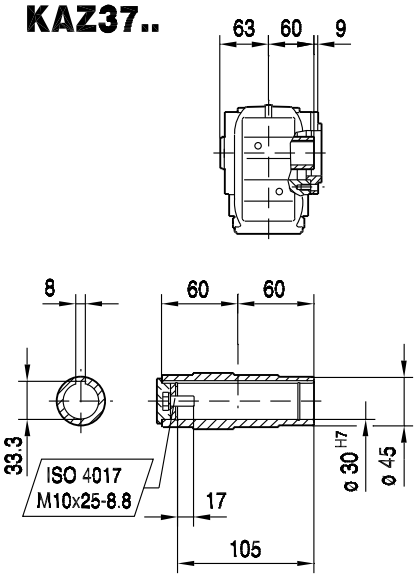

KHZ37..

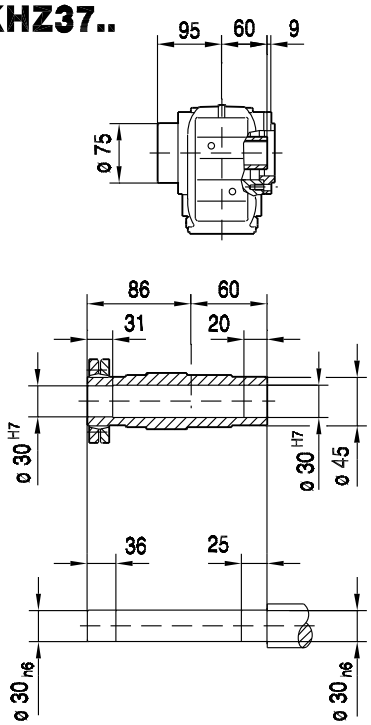

KVZ37..

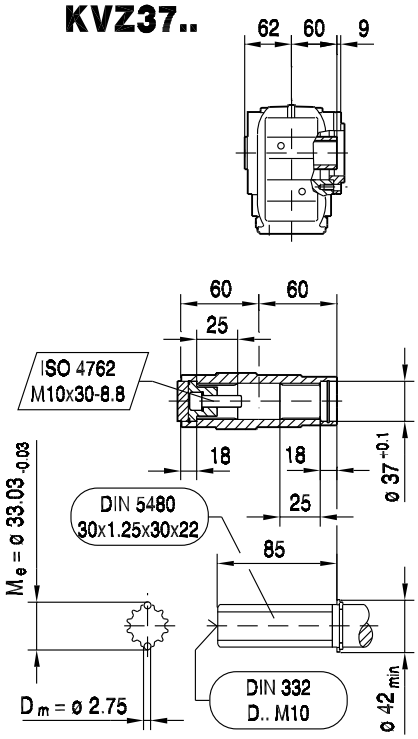

(→ 📖 129)	DRL71S	DRL71M	DRL80S	DRL80M	DRL90L	DRL100L		
AC	139	139	156	156	179	197		
AD	119	119	128	128	140	157		
ADS	129	129	139	139	150	158		
L	498	523	542	573	590	649		
LS	562	587	622	653	676	736		
LB	288	313	332	363	380	439		
LBS	352	377	412	443	466	526		

KT37..

33 156 00 08

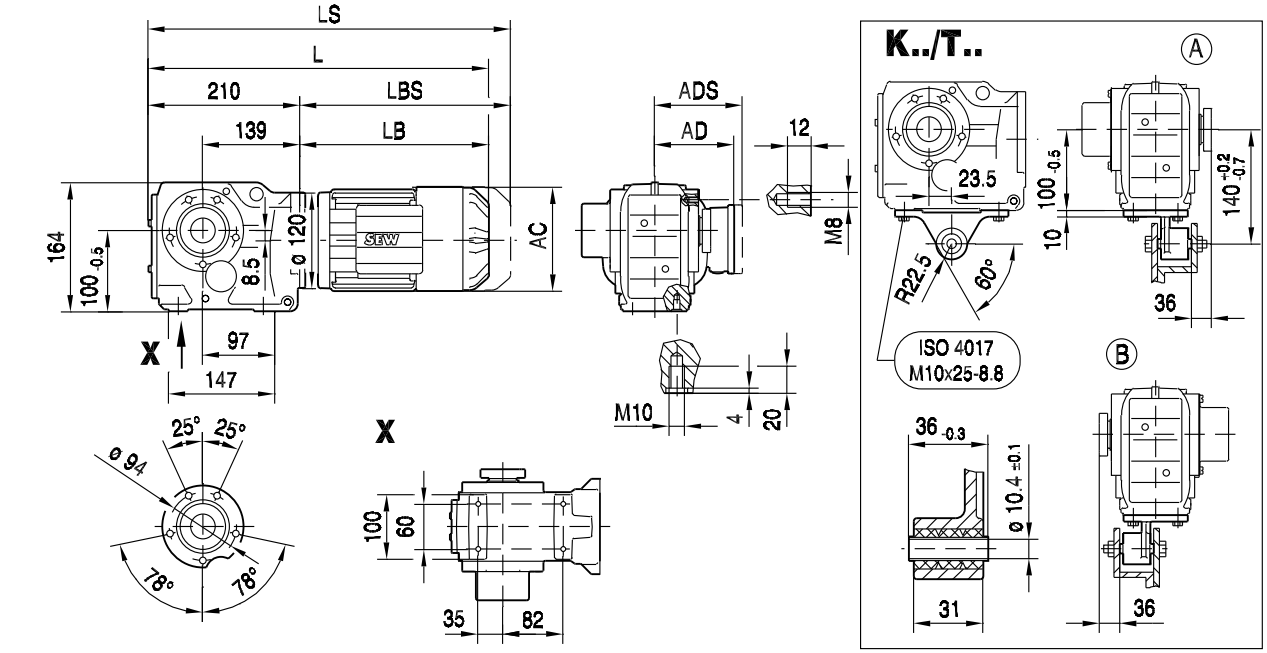

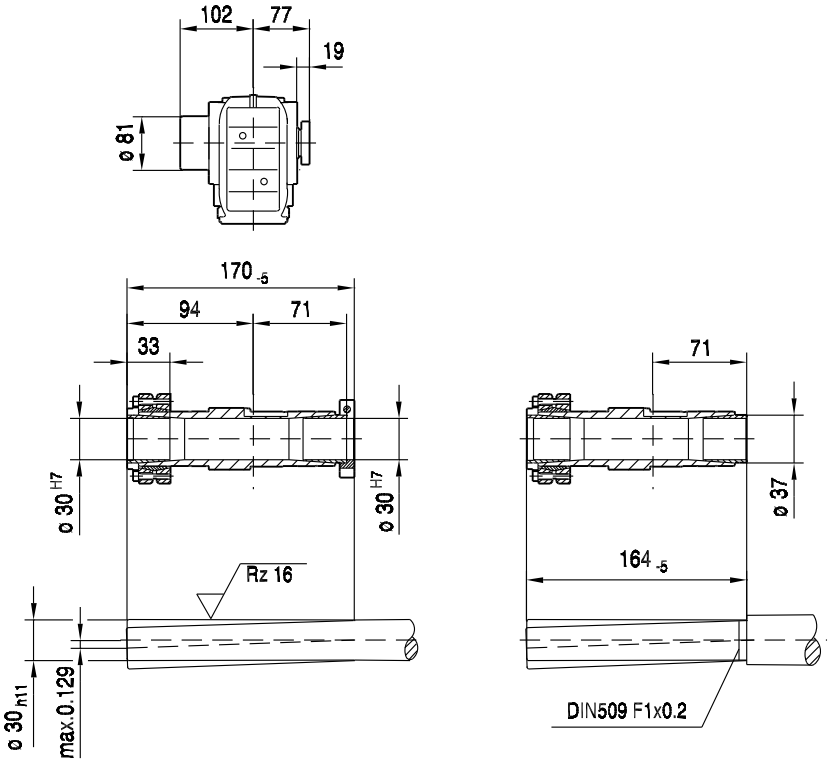

(→ 📖 129)	DRL71S	DRL71M	DRL80S	DRL80M	DRL90L	DRL100L		
AC	139	139	156	156	179	197		
AD	119	119	128	128	140	157		
ADS	129	129	139	139	150	158		
L	498	523	542	573	590	649		
LS	562	587	622	653	676	736		
LB	288	313	332	363	380	439		
LBS	352	377	412	443	466	526		

10.2.2 K 47

M_{aDyn} Nm	i	DRL										
		71S		71M		80S		80M		90L		100L
		D1	D2	D1	D2	D1	D2	D1	D2	D1	D2	D1
	4.64		38		62	45	111	58	147	111	200	156
	5.81	28	47	39	78	56	139	73	184	139	255	195
	6.58	32	54	44	88	63	158	82	205	158	290	220
	7.36	35	60	49	99	71	177	92	230	177	>310	245
	8.56	41	70	58	115	82	205	107	270	205	>310	285
	9.10	44	74	61	122	87	215	114	285	215	>310	305
	10.56	51	86	71	142	101	250	132	>315	250	>315	>315
	11.77	56	96	79	158	113	280	147	>315	280	>315	>315
	12.19	59	99	82	164	117	290	152	385	290	>435	405
	13.65	66	111	92	183	131	325	170	430	325	>435	>435
	15.86	76	129	107	210	152	380	198	>435	380	>435	>435
	16.86	81	138	113	225	162	400	210	>435	400	>435	>435
	19.58	94	160	132	260	188	>435	240	>435	>435	>435	>435
	21.81	105	178	147	290	205	>435	270	>435	>435	>435	>435
K47	24.06	115	196	162	320	230	>435	300				
3	25.91	124	210	174	345	245	>435	320	>435	>435		>435
	29.32	141	235	197	390	280	>435	365				
	31.30	150	255	210	420	300	>435	390				
	35.39	166	280	230	>435	330	>435	430	>435	>435	>435	>435
	39.61	186	315	260	>435	370	>435	>435	>435	>435	>435	>435
	46.03	215	365	300	>435	430	>435	>435	>435	>435	>435	>435
	48.95	230	390	320	>435	>435	>435	>435	>435	>435	>435	>435
	56.83	265	>435	370	>435	>435	>435	>435	>435	>435	>435	>435
	63.30	295	>435	415	>435	>435	>435	>435	>435	>435	>435	>435
	69.84	325	>435	>435	>435	>435	>435	>435				
	75.20	350	>435	>435	>435	>435	>435	>435	>435	>435		>435
	85.12	400	>435	>435	>435	>435	>435	>435				
	90.86	425	>435	>435	>435	>435	>435	>435				
	104.37	>435	>435	>435		>435		>435				
	121.48	>435		>435								
	131.87	>435		>435								

→ 124

m kg	s	DRL					
		71S	71M	80S	80M	90L	100L
K47	3	26	27	29	32	40	47
KF: + 3.2 kg / KA: + -0.9 kg / KAF: + 2.0 kg							

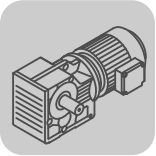

K..DRL
K..Nm

DRL..	i	n_{epk} 1/min	η %	c_{TG} K Nm/'	KF Nm/'	KA Nm/'	KAF Nm/'	φ /R '
K47 3	4.64	4500	96	26	23	50	50	12
	5.81	4500	96	26	23	50	50	12
	6.58	4500	96	26	23	50	50	12
	7.36	4500	96	26	23	50	50	11
	8.56	4500	96	26	23	50	50	11
	9.10	4500	96	26	23	50	50	11
	10.56	4500	96	26	23	50	50	11
	11.77	4500	96	26	23	50	50	10
	12.19	4500	96	33	29	90	90	8
	13.65	4500	96	33	29	90	90	8
	15.86	4500	96	33	29	90	90	8
	16.86	4500	96	33	29	90	90	8
	19.58	4500	96	33	29	90	90	8
	21.81	4500	96	33	29	90	90	8
	24.06	4500	96	33	29	90	90	8
	25.91	4500	96	33	29	90	90	8
	29.32	4500	96	33	29	90	90	8
	31.30	4500	96	33	29	90	90	7
	35.39	4500	94	36	32	117	117	7
	39.61	4500	94	36	32	117	117	7
	46.03	4500	94	36	32	117	117	7
	48.95	4500	94	36	32	117	117	7
	56.83	4500	94	36	32	117	117	7
	63.30	4500	94	36	32	117	117	7
	69.84	4500	94	36	32	117	117	6
	75.20	4500	94	36	32	117	117	6
	85.12	4500	94	36	32	117	117	6
	90.86	4500	94	36	32	117	117	6
	104.37	4500	93	36	32	117	117	6
	121.48	4500	93	36	32	117	117	6
	131.87	4500	93	36	32	117	117	6

DRL..							F_{Ramax}				F_{Rapk}			
n_e = 1400	i	M_{amax} Nm	M_{apk} Nm	$M_{aNotaus}$ Nm	n_{ak} 1/min	J_G 10^{-4} kgm^2	K N	KF N	KA N	KAF N	K N	KF N	KA N	KAF N
K47 3	4.64	205	300	349	302	4.4	2980	2970	2040	2040	7060	7060	10000	10000
	5.81	230	305	391	258	3.6	3140	3140	2100	2100	7020	7020	10000	10000
	6.58	240	310	408	228	2.8	3270	3270	2190	2190	6970	6970	10000	10000
	7.36	250	310	425	217	2.3	3380	3390	2270	2270	6970	6970	10000	10000
	8.56	270	310	459	175	1.8	3500	3520	2310	2310	6970	6970	10000	10000
	9.10	280	310	476	165	1.6	3540	3560	2310	2310	6970	6970	10000	10000
	10.56	280	315	476	170	1.2	3830	3840	2580	2580	6920	6920	10000	10000
	11.77	280	315	476	178	1.0	4060	4050	2770	2770	6920	6920	10000	10000
	12.19	350	435	595	279	2.4	3720	3770	2330	2330	900	900	10000	10000
	13.65	360	435	612	249	2.0	3890	3940	2450	2450	900	900	10000	10000
	15.86	380	435	646	208	1.6	4080	4130	2570	2570	900	900	10000	10000
	16.86	380	435	646	214	1.4	4220	4270	2690	2690	900	900	10000	10000
	19.58	400	435	680	179	1.1	4440	4480	2820	2820	900	900	10000	10000
	21.81	400	435	680	179	0.91	4710	4740	3070	3070	900	900	10000	10000
	24.06	400	435	680	179	0.75	4970	4990	3300	3300	900	900	10000	10000
	25.91	400	435	680	178	0.68	5170	5180	3470	3470	900	900	10000	10000
	29.32	400	435	680	177	0.55	5520	5500	3780	3780	900	900	10000	10000
	31.30	400	435	680	179	0.50	5700	5680	3940	3940	900	900	10000	10000
	35.39	400	435	680	93	1.3	5920	5920	4270	4270	900	900	10000	10000
	39.61	400	435	680	96	1.1	5920	5920	4580	4580	900	900	10000	10000
	46.03	400	435	680	100	0.88	5920	5920	5000	5000	900	900	10000	10000
	48.95	400	435	680	100	0.80	5920	5920	5190	5190	900	900	10000	10000
	56.83	400	435	680	104	0.64	5920	5920	5640	5640	900	900	10000	10000
	63.30	400	435	680	104	0.54	5920	5920	5990	5990	900	900	10000	10000
	69.84	400	435	680	100	0.45	5920	5920	6320	6320	900	900	10000	10000
	75.20	400	435	680	93	0.42	5920	5920	6570	6570	900	900	10000	10000
	85.12	400	435	680	82	0.35	5920	5920	7000	7000	900	900	10000	10000
	90.86	400	435	680	77	0.32	5920	5920	7240	7240	900	900	10000	10000
	104.37	400	435	680	67	0.26	5920	5920	7760	7760	900	900	10000	10000
	121.48	400	435	680	58	0.21	5920	5920	8360	8360	900	900	10000	10000
	131.87	400	435	680	53	0.18	5920	5920	8700	8700	900	900	10000	10000

33 157 00 08

K47..

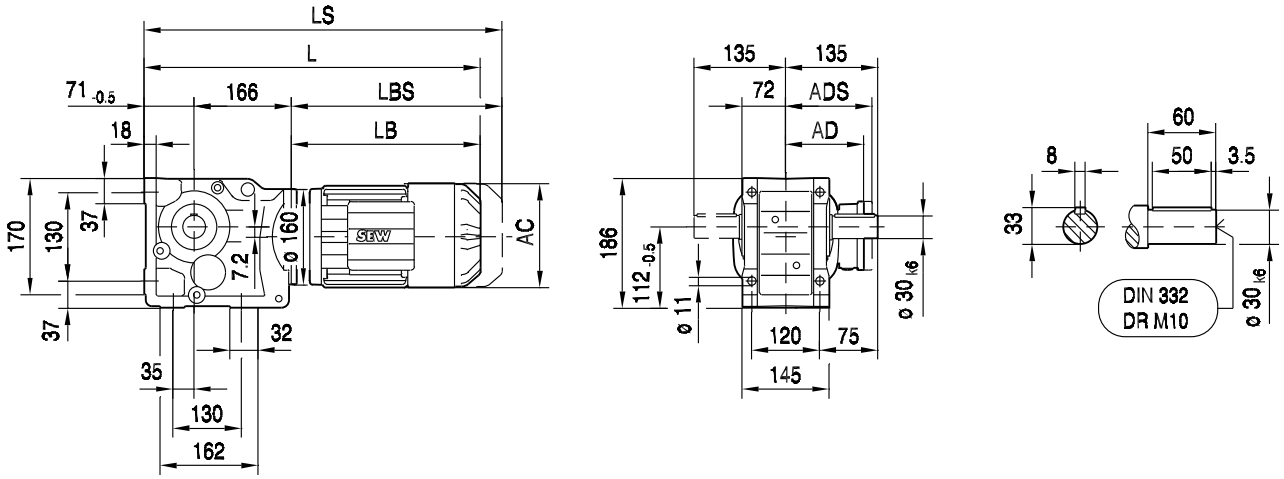

KA47B..

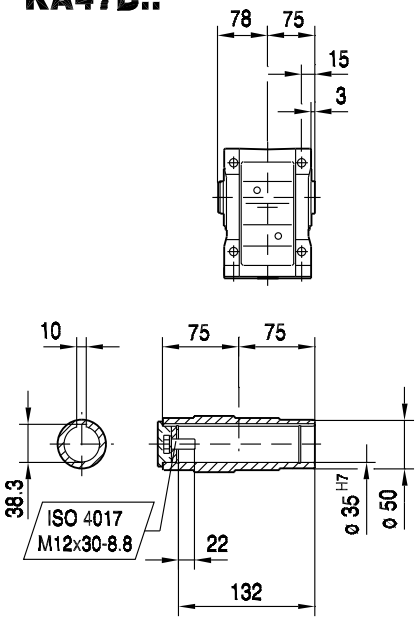

KH47B..

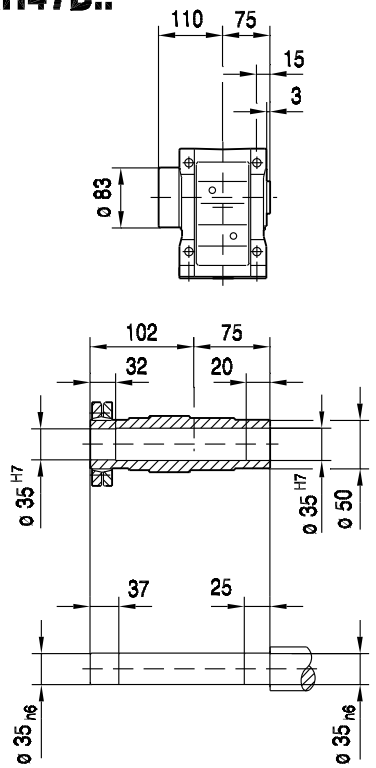

KV47B..

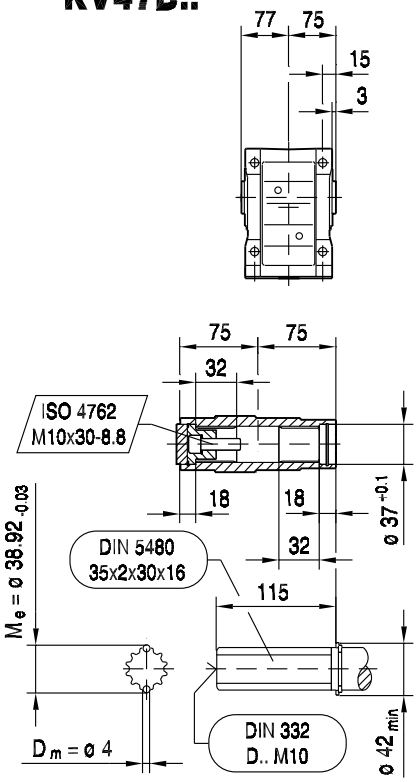

(→ 📖 129)	DRL71S	DRL71M	DRL80S	DRL80M	DRL90L	DRL100L		
AC	139	139	156	156	179	197		
AD	119	119	128	128	140	157		
ADS	129	129	139	139	150	158		
L	517	542	563	594	608	667		
LS	582	607	643	674	694	754		
LB	280	305	326	357	371	430		
LBS	345	370	406	437	457	517		

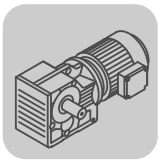

33 158 00 08

KF47..

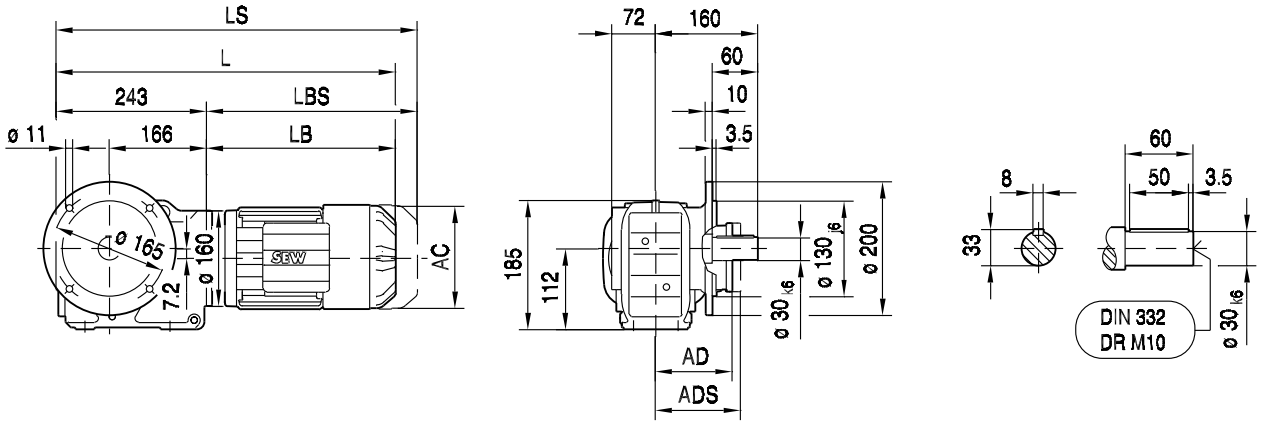

10

KAF47..

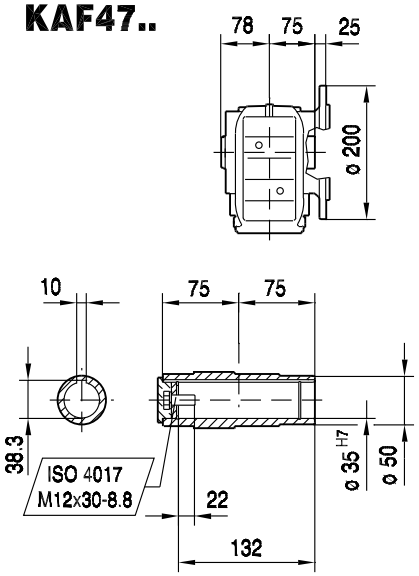

KHF47..

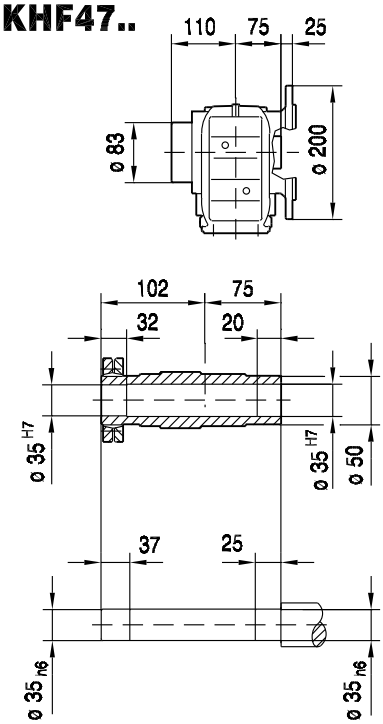

KVF47..

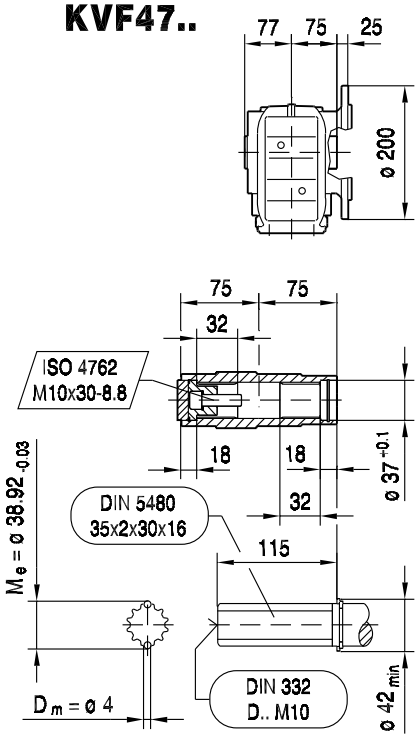

(→ 📖 129)	DRL71S	DRL71M	DRL80S	DRL80M	DRL90L	DRL100L		
AC	139	139	156	156	179	197		
AD	119	119	128	128	140	157		
ADS	129	129	139	139	150	158		
L	523	548	569	600	614	673		
LS	588	613	649	680	700	760		
LB	280	305	326	357	371	430		
LBS	345	370	406	437	457	517		

33 159 00 08

KA47..

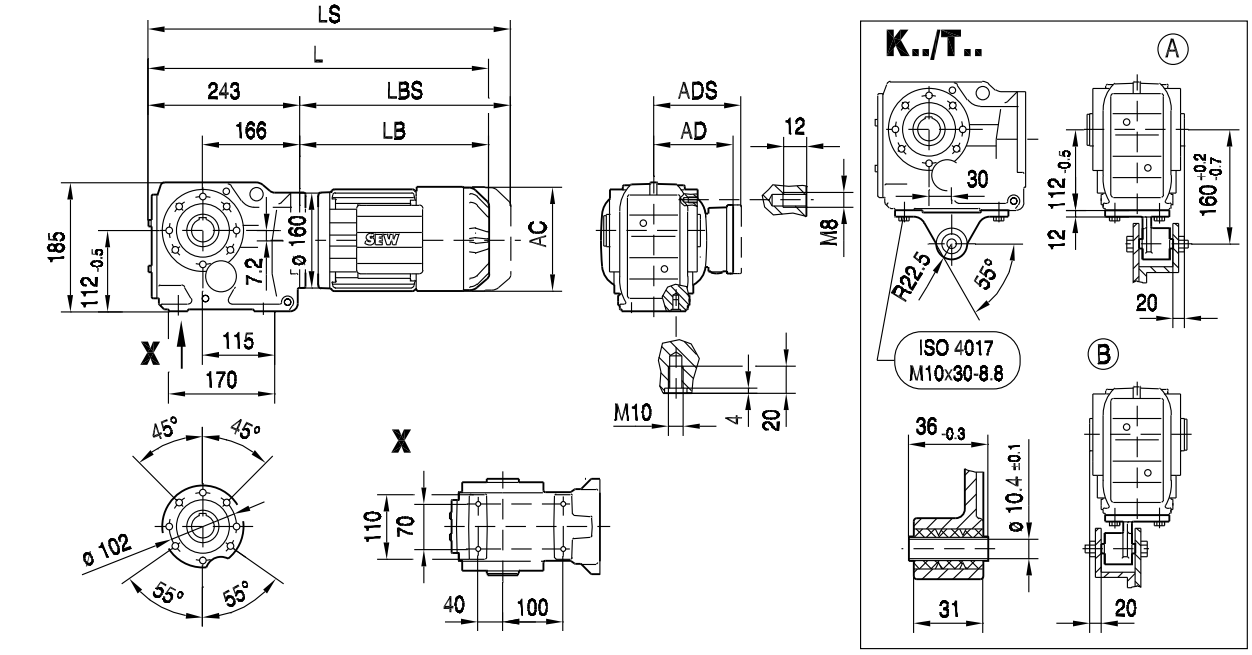

KA47..

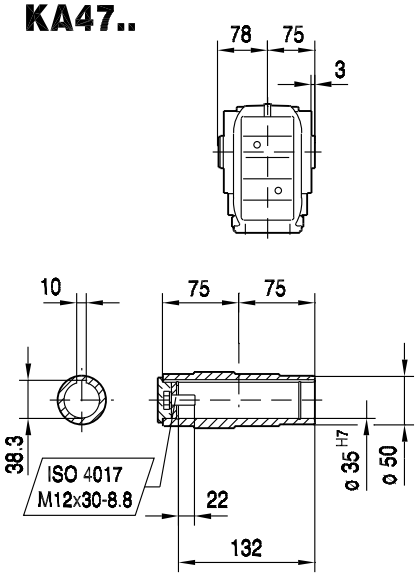

KH47..

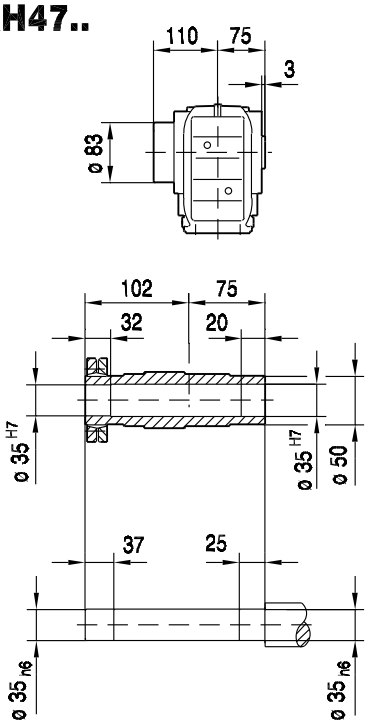

KV47..

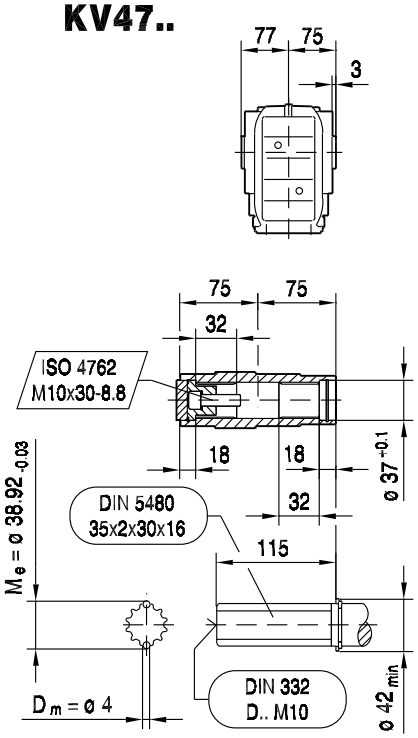

(→ 📖 129)	DRL71S	DRL71M	DRL80S	DRL80M	DRL90L	DRL100L		
AC	139	139	156	156	179	197		
AD	119	119	128	128	140	157		
ADS	129	129	139	139	150	158		
L	523	548	569	600	614	673		
LS	588	613	649	680	700	760		
LB	280	305	326	357	371	430		
LBS	345	370	406	437	457	517		

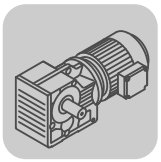

33 160 00 08

KAZ47..

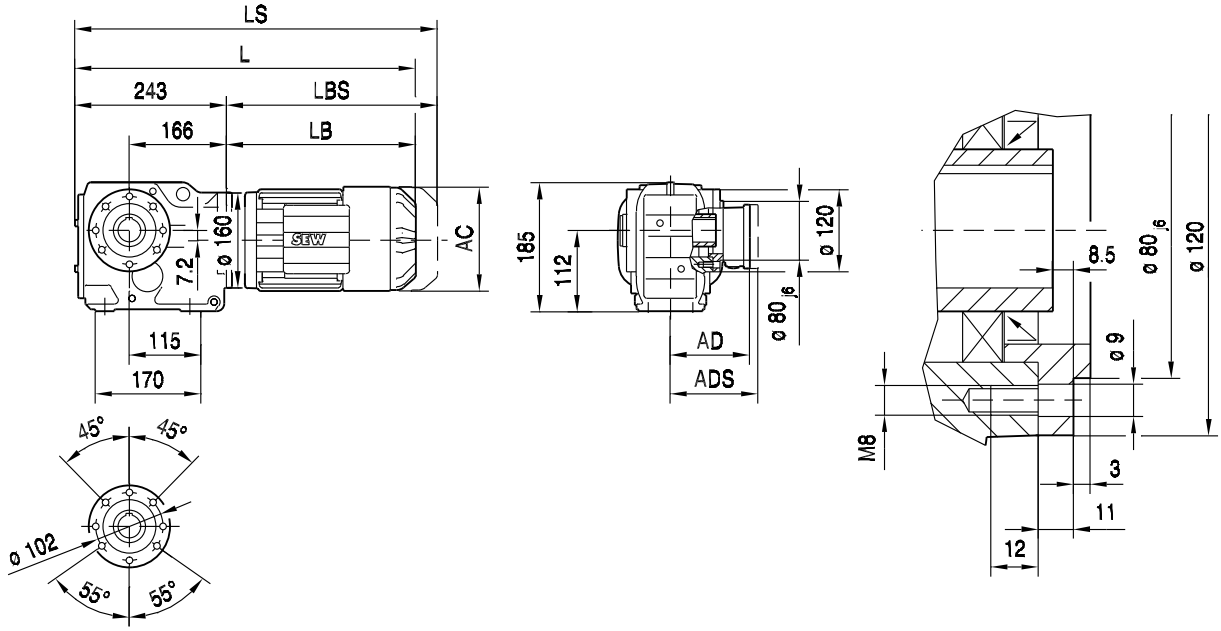

KAZ47..

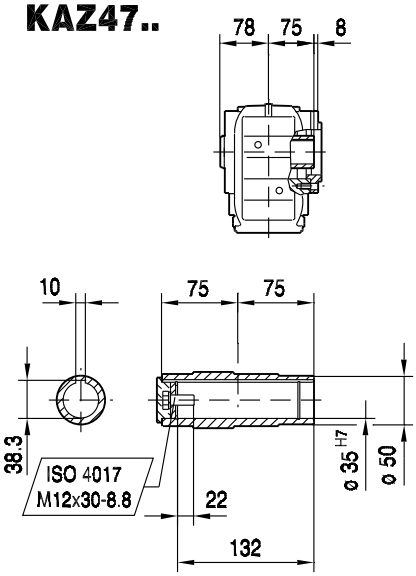

KHZ47..

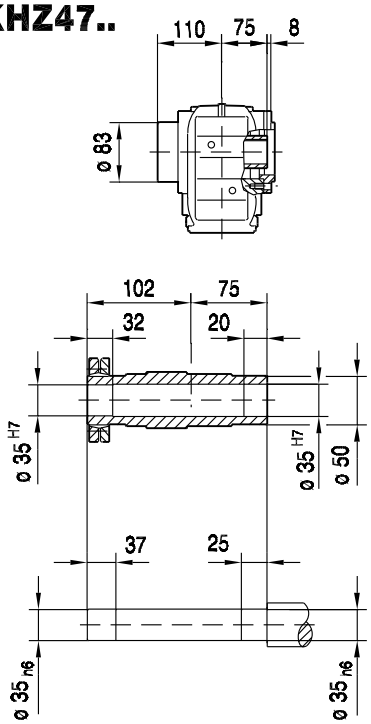

KVZ47..

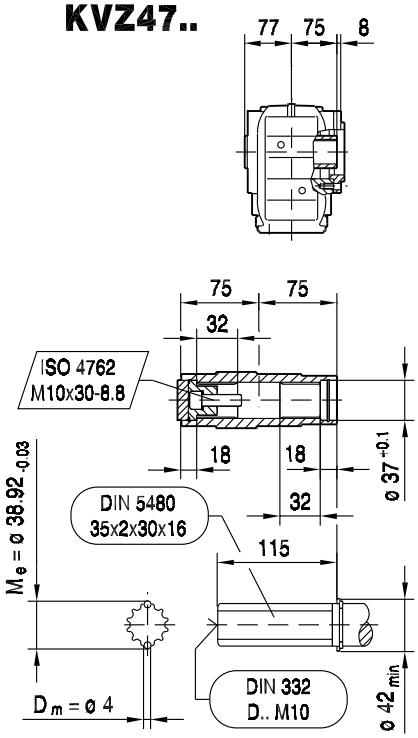

(→ 📖 129)	DRL71S	DRL71M	DRL80S	DRL80M	DRL90L	DRL100L		
AC	139	139	156	156	179	197		
AD	119	119	128	128	140	157		
ADS	129	129	139	139	150	158		
L	523	548	569	600	614	673		
LS	588	613	649	680	700	760		
LB	280	305	326	357	371	430		
LBS	345	370	406	437	457	517		

KT47..

33 161 00 08

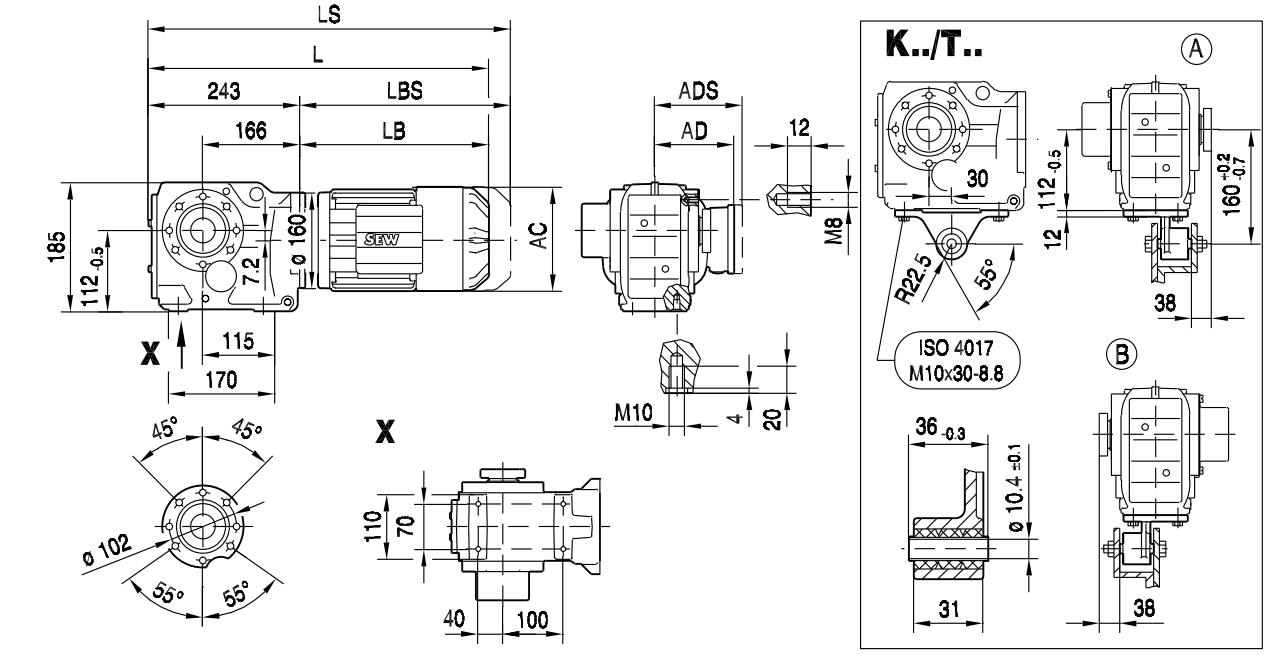

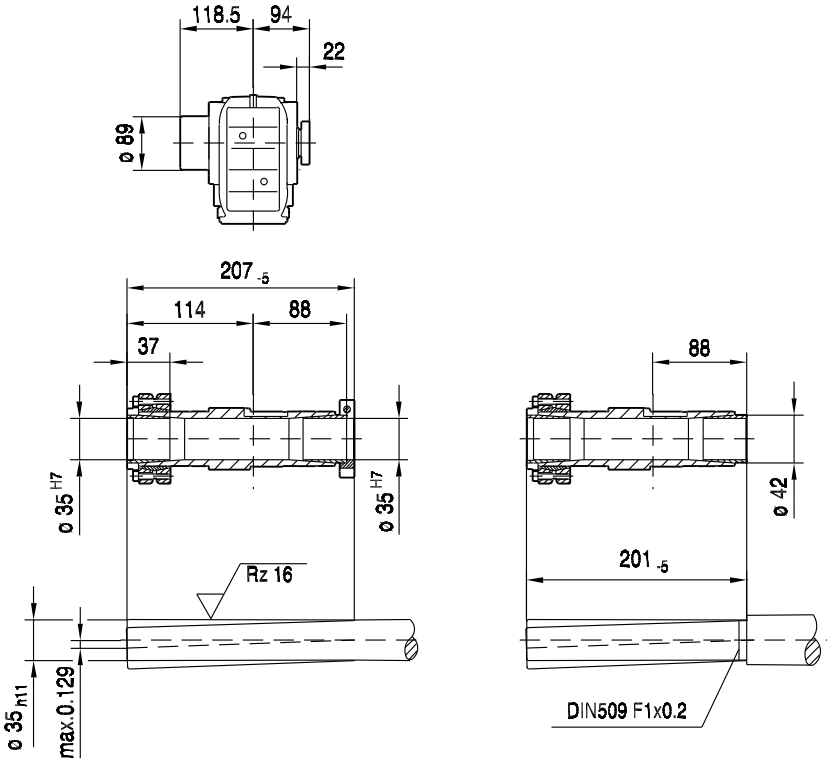

(→ 📖 129)	DRL71S	DRL71M	DRL80S	DRL80M	DRL90L	DRL100L		
AC	139	139	156	156	179	197		
AD	119	119	128	128	140	157		
ADS	129	129	139	139	150	158		
L	523	548	569	600	614	673		
LS	588	613	649	680	700	760		
LB	280	305	326	357	371	430		
LBS	345	370	406	437	457	517		

10.2.3 K 57

M_{aDyn} Nm	i	DRL											
		71S		71M		80S		80M		90L		100L	132S
		D1	D2	D1	D2	D1	D2	D1	D2	D1	D2	D1	D1
K57 3	4.69		38		63	45	113	59	149	113	205	158	360
	6.57		54		88	63	158	82	205	158	290	220	500
	7.55	36	62	51	101	72	181	94	235	181	330	250	>545
	8.71	42	71	59	117	84	205	109	275	205	380	290	>585
	9.59	46	78	64	129	92	230	120	300	230	420	320	>585
	11.26	54	92	76	151	108	270	141	355	270	495	375	>585
	11.92	57	97	80	160	114	285	149	375	285	525	400	>585
	13.25		108		178	127	315	165	415	315	585	445	>665
	15.22	73	124	102	200	146	365	190	480	365	>665	510	>665
	17.57	84	143	118	235	169	420	215	555	420	>665	590	>665
	19.34	93	158	130	255	186	460	240	610	460	>665	645	>665
	22.71	109	185	153	305	215	545	280	>665	545	>665	>665	>665
	24.05	115	196	162	320	230	575	300	>665	575	>665	>665	>665
	27.34	131	220	184	365	260	655	340	>665	655	>665	>665	
	30.28	145	245	200	405	290	>665	375	>665	>665	>665	>665	
	35.70	171	290	235	475	340	>665	445	>665	>665		>665	
	38.49	181	305	250	505	360	>665	470	>665	>665	>665	>665	>665
	44.43	205	350	290	580	415	>665	540	>665	>665	>665	>665	>665
	48.89	225	390	320	640	455	>665	595	>665	>665	>665	>665	>665
	57.42	265	455	375	>665	535	>665	>665	>665	>665	>665	>665	>665
	60.81	285	485	400	>665	570	>665	>665	>665	>665	>665	>665	>665
	69.12	320	550	450	>665	645	>665	>665	>665	>665	>665	>665	
	76.56	355	610	500	>665	>665	>665	>665	>665	>665	>665	>665	
	90.26	420	>665	590	>665	>665	>665	>665	>665	>665		>665	
	102.88	480	>665	>665	>665	>665	>665	>665					
	108.29	505	>665	>665	>665	>665	>665	>665					
	123.85	575	>665	>665		>665		>665					
	145.14	>665		>665									

→ 124

m kg	s	DRL						
		71S	71M	80S	80M	90L	100L	132S
K57	3	31	33	35	38	46	53	69
KF: + 4.7 kg / KA: + -2.1 kg / KAF: + 3.6 kg								

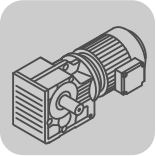

K..DRL
K..Nm

DRL..	i	n_{epk} 1/min	η %	c_{TG} K Nm/'	KF Nm/'	KA Nm/'	KAF Nm/'	φ /R '
K57 3	4.69	4045	96	34	33	81	81	11
	6.57	4500	96	34	33	81	81	10
	7.55	4500	96	34	33	81	81	10
	8.71	4500	96	34	33	81	81	10
	9.59	4500	96	34	33	81	81	10
	11.26	4500	96	34	33	81	81	9
	11.92	4500	96	34	33	81	81	9
	13.25	4500	96	41	39	135	135	7
	15.22	4500	96	41	39	135	135	7
	17.57	4500	96	41	39	135	135	7
	19.34	4500	96	41	39	135	135	7
	22.71	4500	96	41	39	135	135	7
	24.05	4500	96	41	39	135	135	7
	27.34	4500	96	41	39	135	135	7
	30.28	4500	96	41	39	135	135	7
	35.70	4500	96	41	39	135	135	7
	38.49	4500	94	43	40	150	150	6
	44.43	4500	94	43	40	150	150	6
	48.89	4500	94	43	40	150	150	6
	57.42	4500	94	43	40	150	150	6
	60.81	4500	94	43	40	150	150	6
	69.12	4500	94	43	40	150	150	6
	76.56	4500	94	43	40	150	150	6
	90.26	4500	94	43	40	150	150	6
	102.88	4500	94	43	40	150	150	6
	108.29	4500	94	43	40	150	150	6
	123.85	4500	93	43	40	150	150	6
	145.14	4500	93	43	40	150	150	6

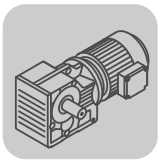

DRL..							F_{Ramax}				F_{Rapk}			
n_e = 1400	i	M_{amax} Nm	M_{apk} Nm	$M_{aNotaus}$ Nm	n_{ak} 1/min	J_G 10^{-4} kgm^2	K N	KF N	KA N	KAF N	K N	KF N	KA N	KAF N
K57 3	4.69	300	450	510	320	9.0	3800	3980	2580	2580	8520	8520	11500	11500
	6.57	345	517	587	244	5.6	4180	4400	2800	2800	7990	8110	11500	11500
	7.55	365	547	621	225	4.4	4360	4580	2900	2900	7740	7920	11500	11500
	8.71	390	585	663	195	3.5	4520	4760	2980	2980	7420	7660	11500	11500
	9.59	405	585	689	177	3.0	4650	4900	3050	3050	7420	7660	11500	11500
	11.26	415	585	706	178	2.3	4990	5250	3340	3340	7420	7660	11500	11500
	11.92	415	585	706	176	2.1	5150	5400	3470	3470	7420	7660	11500	11500
	13.25	510	665	867	226	4.8	5190	5350	3240	3240	4700	4700	11500	11500
	15.22	535	665	910	197	3.8	5430	5600	3390	3390	4700	4700	11500	11500
	17.57	555	665	944	171	3.0	5740	5910	3610	3610	4700	4700	11500	11500
	19.34	575	665	978	155	2.6	5910	6080	3710	3710	4700	4700	11500	11500
	22.71	600	665	1020	132	2.0	6280	6460	3970	3970	4700	4700	11500	11500
	24.05	600	665	1020	133	1.9	6480	6650	4140	4140	4700	4700	11500	11500
	27.34	600	665	1020	132	1.5	6930	7090	4550	4550	4700	4700	11500	11500
	30.28	600	665	1020	132	1.2	7300	7460	4880	4880	4700	4700	11500	11500
	35.70	600	665	1020	134	0.95	7630	7720	5440	5440	4700	4700	11500	11500
	38.49	600	665	1020	70	2.3	7630	7720	5710	5710	4700	4700	11500	11500
	44.43	600	665	1020	72	1.9	7630	7720	6240	6240	4700	4700	11500	11500
	48.89	600	665	1020	74	1.6	7630	7720	6610	6610	4700	4700	11500	11500
	57.42	600	665	1020	75	1.3	7630	7720	7260	7260	4700	4700	11500	11500
	60.81	600	665	1020	76	1.2	7630	7720	7490	7490	4700	4700	11500	11500
	69.12	600	665	1020	77	0.98	7630	7720	8040	8040	4700	4700	11500	11500
	76.56	600	665	1020	78	0.85	7630	7720	8500	8500	4700	4700	11500	11500
	90.26	600	665	1020	78	0.67	7630	7720	9260	9260	4700	4700	11500	11500
	102.88	600	665	1020	68	0.46	7630	7720	9900	9900	4700	4700	11500	11500
	108.29	600	665	1020	65	0.41	7630	7720	10200	10200	4700	4700	11500	11500
	123.85	600	665	1020	57	0.33	7630	7720	10900	10900	4700	4700	11500	11500
	145.14	600	665	1020	48	0.27	7630	7720	11500	11500	4700	4700	11500	11500

33 162 00 08

K57..

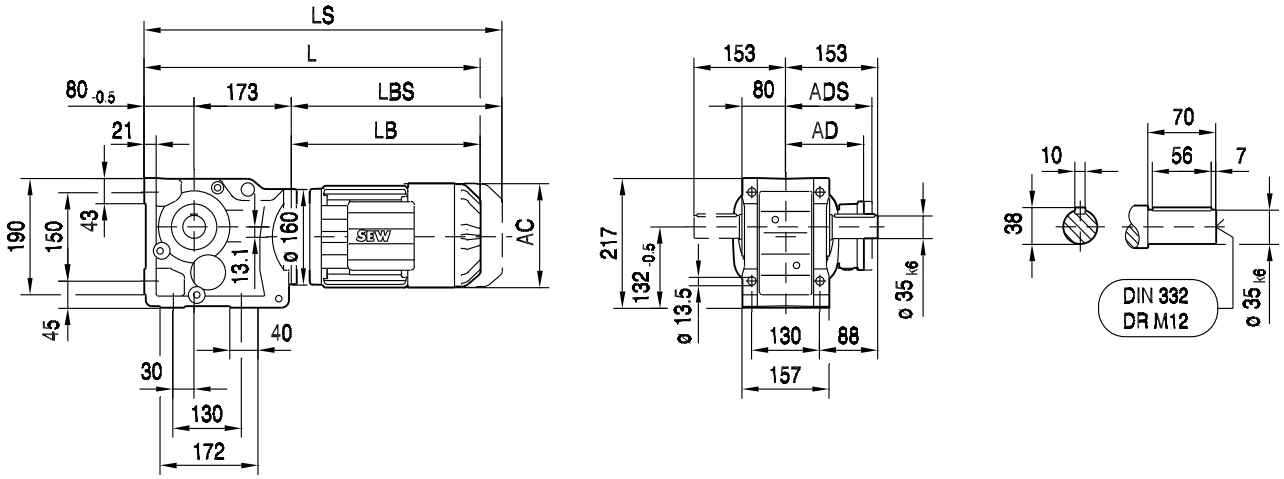

KA57B..

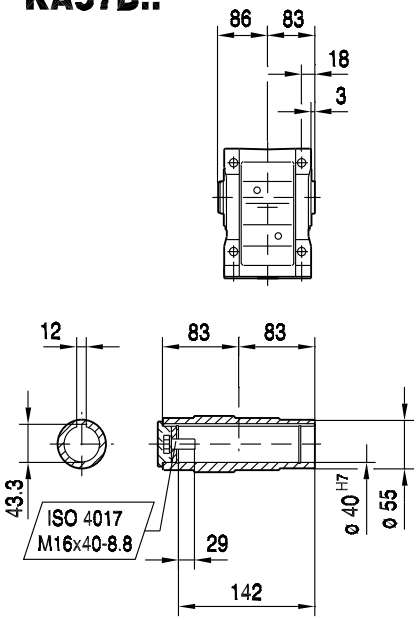

KH57B..

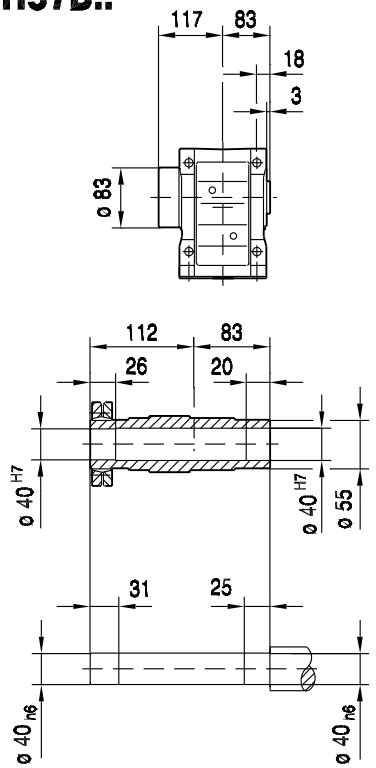

KV57B..

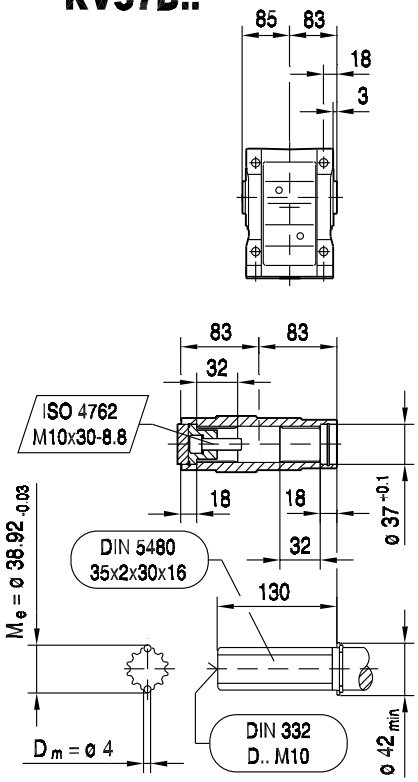

(→ 📖 129)	DRL71S	DRL71M	DRL80S	DRL80M	DRL90L	DRL100L	DRL132S	
AC	139	139	156	156	179	197	221	
AD	119	119	128	128	140	157	170	
ADS	129	129	139	139	150	158	172	
L	533	558	579	610	624	683	768	
LS	598	623	659	690	710	770	876	
LB	280	305	326	357	371	430	515	
LBS	345	370	406	437	457	517	623	

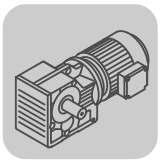

33 163 00 08

KF57..

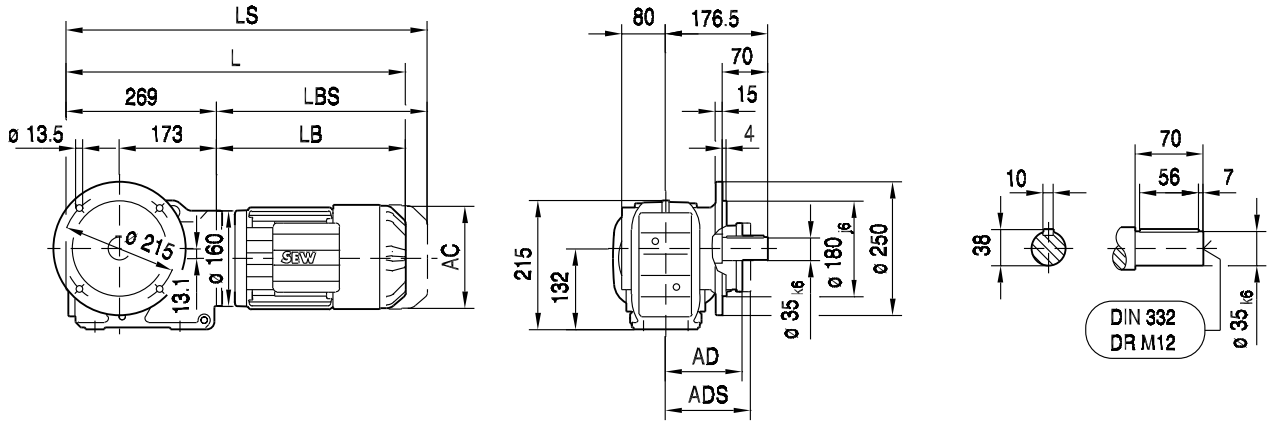

KAF57..

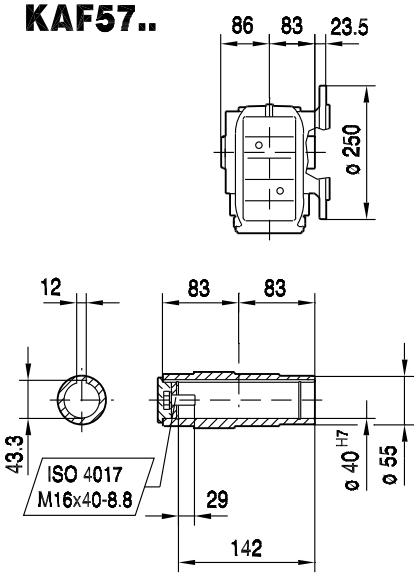

KHF57..

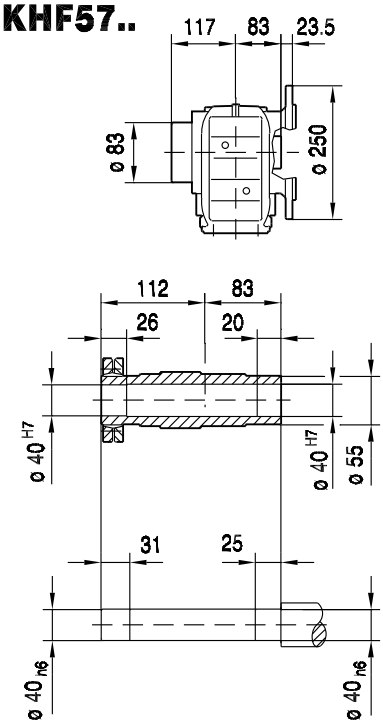

KVF57..

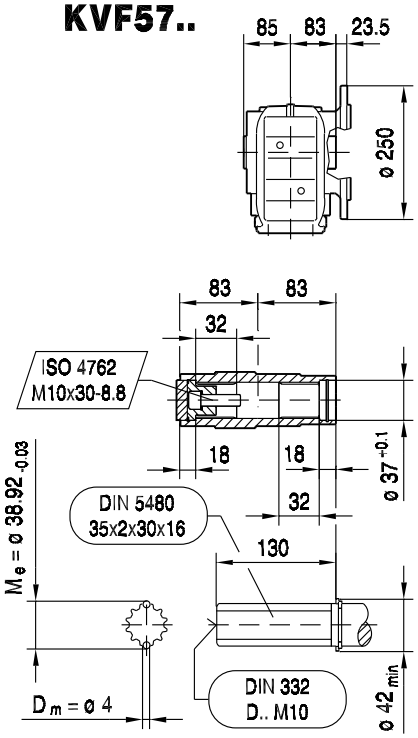

(→ 📖 129)	DRL71S	DRL71M	DRL80S	DRL80M	DRL90L	DRL100L	DRL132S	
AC	139	139	156	156	179	197	221	
AD	119	119	128	128	140	157	170	
ADS	129	129	139	139	150	158	172	
L	549	574	595	626	640	699	784	
LS	614	639	675	706	726	786	892	
LB	280	305	326	357	371	430	515	
LBS	345	370	406	437	457	517	623	

33 164 00 08

KA57..

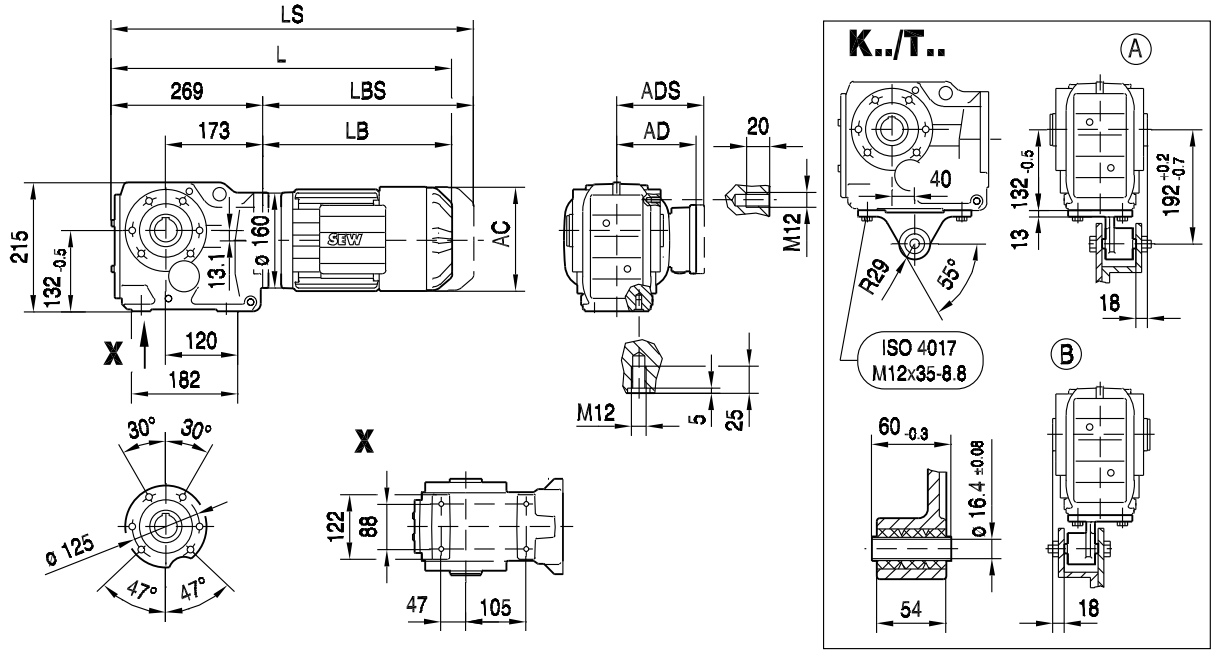

KA57..

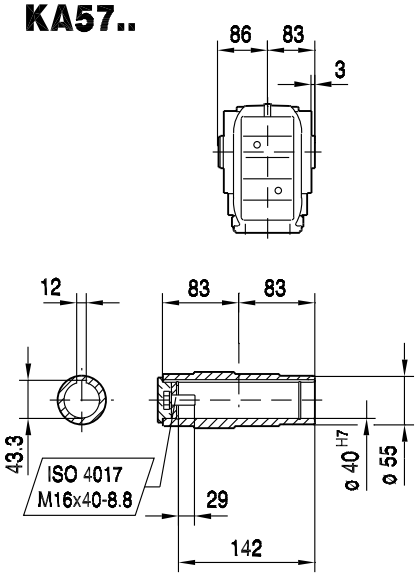

KH57..

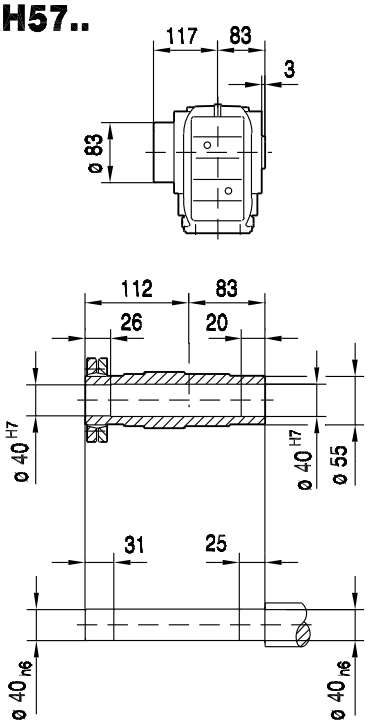

KV57..

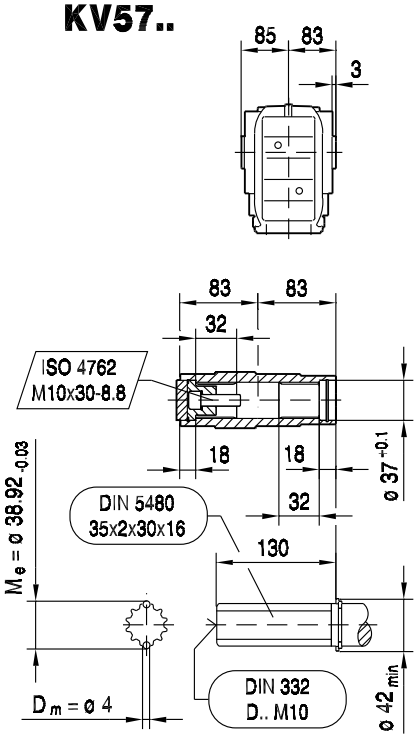

(→ 📖 129)	DRL71S	DRL71M	DRL80S	DRL80M	DRL90L	DRL100L	DRL132S	
AC	139	139	156	156	179	197	221	
AD	119	119	128	128	140	157	170	
ADS	129	129	139	139	150	158	172	
L	549	574	595	626	640	699	784	
LS	614	639	675	706	726	786	892	
LB	280	305	326	357	371	430	515	
LBS	345	370	406	437	457	517	623	

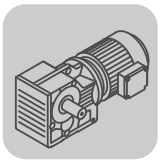

33 165 00 08

KAZ57..

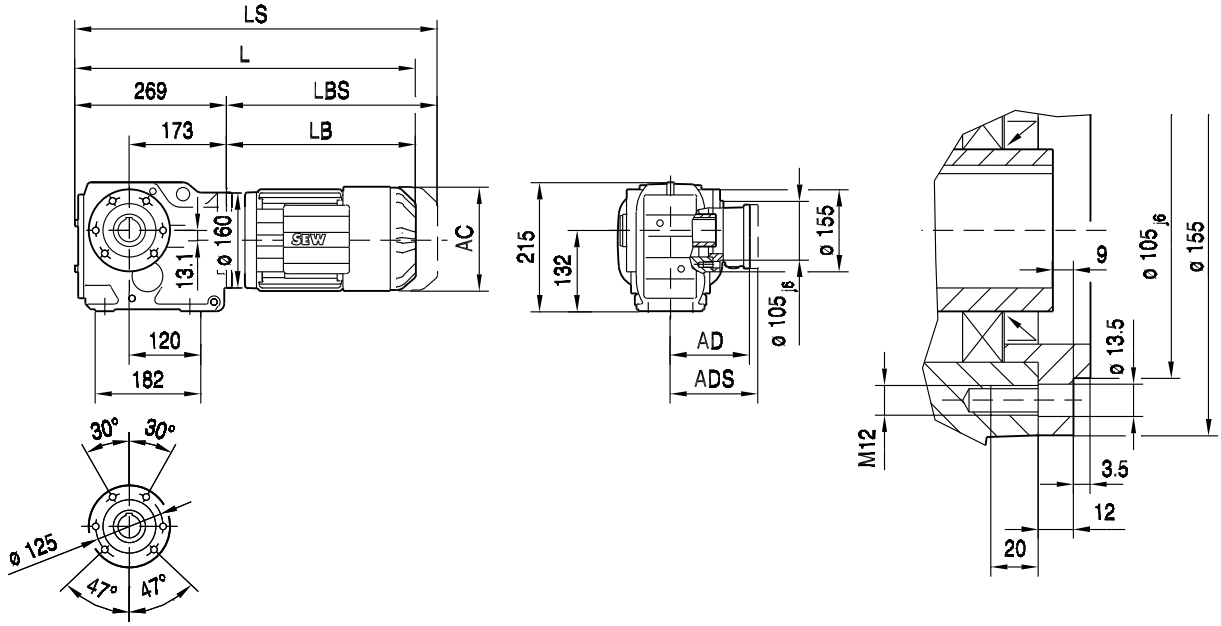

KAZ57..

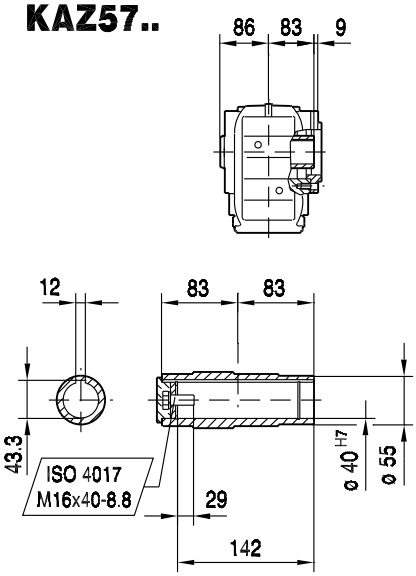

KHZ57..

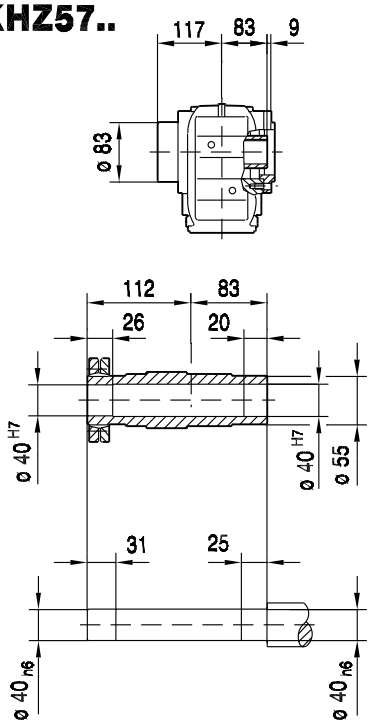

KVZ57..

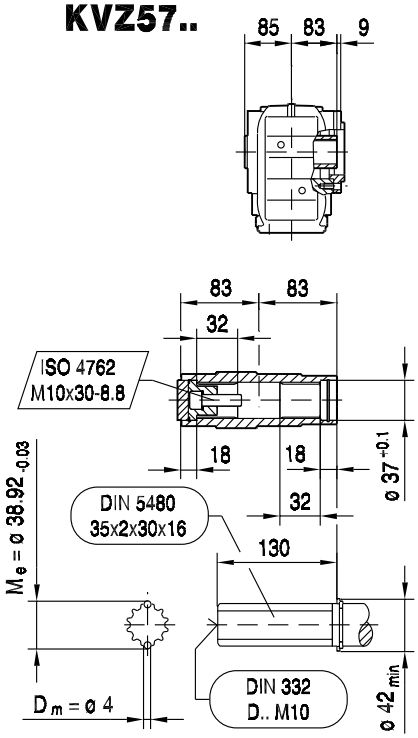

(→ 📖 129)	DRL71S	DRL71M	DRL80S	DRL80M	DRL90L	DRL100L	DRL132S	
AC	139	139	156	156	179	197	221	
AD	119	119	128	128	140	157	170	
ADS	129	129	139	139	150	158	172	
L	549	574	595	626	640	699	784	
LS	614	639	675	706	726	786	892	
LB	280	305	326	357	371	430	515	
LBS	345	370	406	437	457	517	623	

KT57..

33 166 00 08

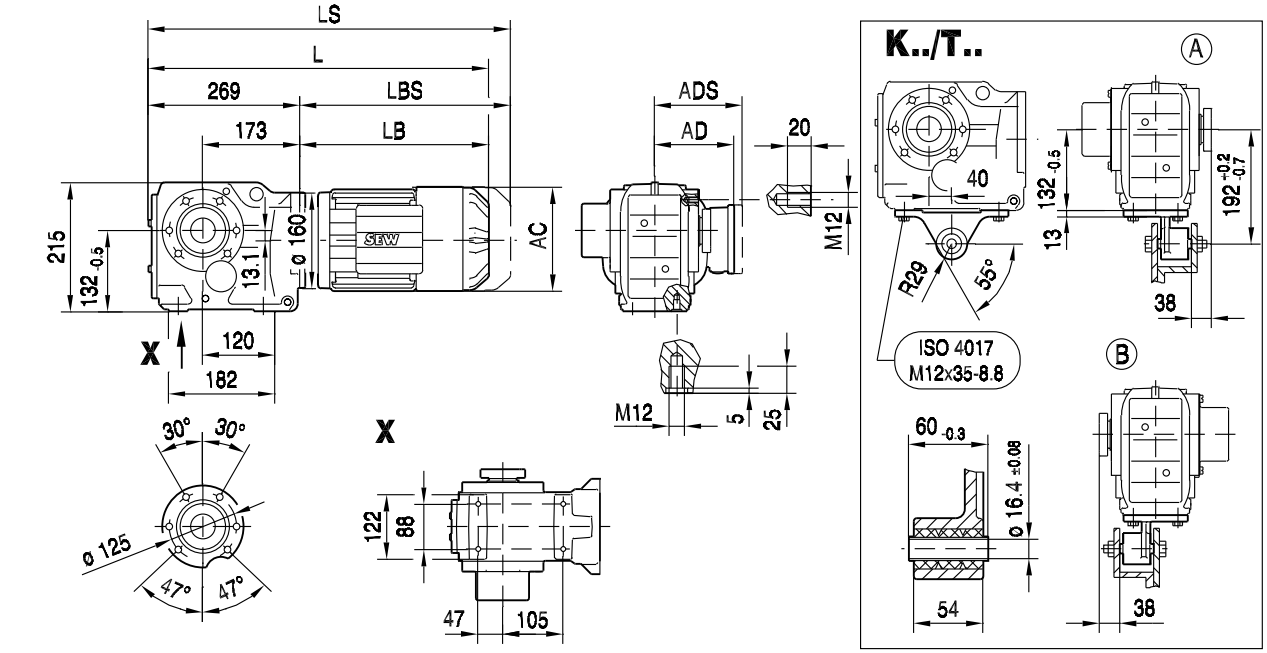

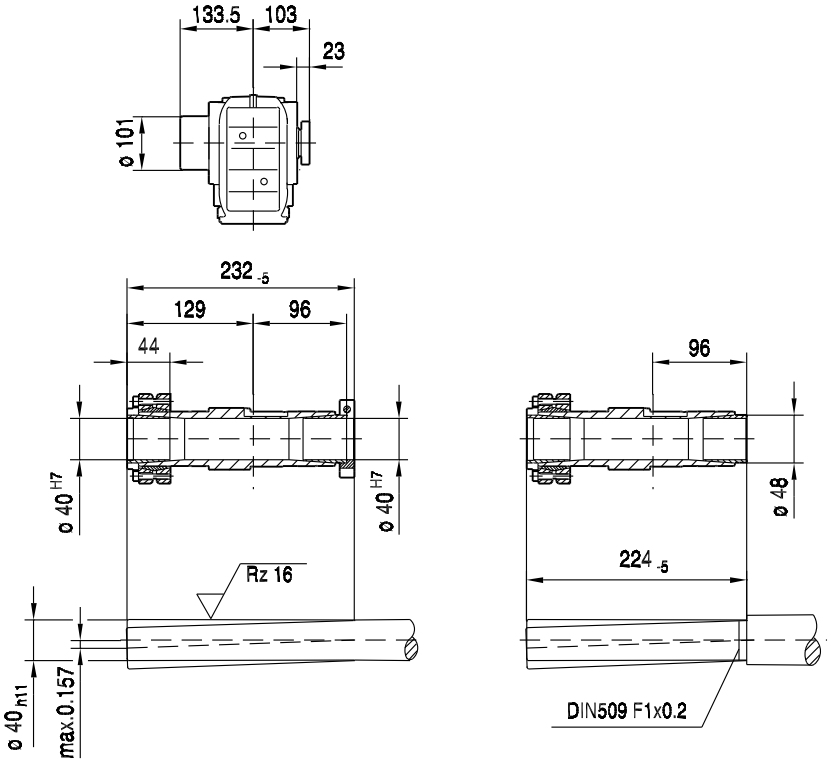

(→ 📖 129)	DRL71S	DRL71M	DRL80S	DRL80M	DRL90L	DRL100L	DRL132S	
AC	139	139	156	156	179	197	221	
AD	119	119	128	128	140	157	170	
ADS	129	129	139	139	150	158	172	
L	549	574	595	626	640	699	784	
LS	614	639	675	706	726	786	892	
LB	280	305	326	357	371	430	515	
LBS	345	370	406	437	457	517	623	

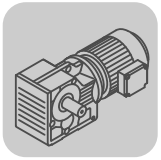

10.2.4 K 67

M_{aDyn} Nm	i	DRL 71S D1	71S D2	71M D1	71M D2	80S D1	80S D2	80M D1	80M D2	90L D1	90L D2	100L D1	132S D1	132S D2	132MC D1
K67 3	5.20		42		70	50	125	65	165	125	225	175	395		
	7.28		59		98	70	175	91	230	175	320	240	555	>630	>630
	8.37	40	68	56	112	80	200	104	265	200	365	280	640	>660	>660
	9.66	46	79	65	130	93	230	121	305	230	425	320	>685	>685	>685
	10.63	51	87	71	143	102	255	133	335	255	465	355	>690		
	12.48	60	102	84	168	120	295	156	395	295	550	415	>695		
	13.22		108		178	127	315	165	415	315	580	440	>920	>920	>920
	15.19	73	124	102	200	146	360	190	480	360	670	510	>920	>920	>920
	17.54	84	143	118	235	168	420	215	555	420	770	585	>920	>920	>920
	19.30	93	157	130	255	185	460	240	610	460	850	645	>920		
	22.66	109	185	152	300	215	540	280	715	540	>920	760	>920		
	24.00	115	196	161	320	230	575	295	760	575	>920	800	>920		
	27.28	131	220	183	365	260	650	340	860	650	>920	910			
	30.22	145	245	200	405	290	725	375	>920	725	>920	>920			
	35.62	171	290	235	475	340	850	440	>920	850		>920			
	38.39	180	305	250	505	360	900	465	>920	900	>920	>920	>920	>920	>920
	44.32	205	350	290	580	415	>920	540	>920	>920	>920	>920	>920	>920	>920
	48.77	225	385	320	640	455	>920	595	>920	>920	>920	>920	>920		
	57.28	265	455	375	750	535	>920	695	>920	>920	>920	>920	>920		
	60.66	285	480	395	795	570	>920	740	>920	>920	>920	>920	>920		
	68.95	325	555	455	910	655	>920	850	>920	>920	>920	>920			
	76.37	360	615	505	>920	725	>920	>920	>920	>920	>920	>920			
	90.04	420	715	590	>920	840	>920	>920	>920	>920		>920			
	102.62	480	810	675	>920	>920	>920	>920							
	108.03	505	860	710	>920	>920	>920	>920							
	123.54	580	>920	810		>920		>920							
	144.79	680		>920											

→ 124

m kg	s	DRL 71S	71M	80S	80M	90L	100L	132S	132MC
K67	3	37	39	41	44	51	59	75	91
KF: + 5.6 kg / KA: + -2.7 kg / KAF: + 3.0 kg									

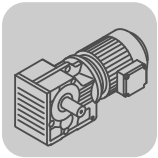

K..DRL
K..Nm

DRL..	i	n_{epk} 1/min	η %	c_{TG} K Nm/'	KF Nm/'	KA Nm/'	KAF Nm/'	φ /R '
K67 3	5.20	3862	96	58	54	96	96	10
	7.28	4500	96	58	54	96	96	9
	8.37	4500	96	58	54	96	96	9
	9.66	4500	96	58	54	96	96	9
	10.63	4500	96	58	54	96	96	9
	12.48	4500	96	58	54	96	96	9
	13.22	4500	96	73	66	146	146	8
	15.19	4500	96	73	66	146	146	8
	17.54	4500	96	73	66	146	146	7
	19.30	4500	96	73	66	146	146	7
	22.66	4500	96	73	66	146	146	7
	24.00	4500	96	73	66	146	146	7
	27.28	4500	96	73	66	146	146	7
	30.22	4500	96	73	66	146	146	7
	35.62	4500	96	73	66	146	146	7
	38.39	4500	94	77	70	165	165	6
	44.32	4500	94	77	70	165	165	6
	48.77	4500	94	77	70	165	165	6
	57.28	4500	94	77	70	165	165	6
	60.66	4500	94	77	70	165	165	6
	68.95	4500	95	77	70	165	165	6
	76.37	4500	95	77	70	165	165	6
	90.04	4500	94	77	70	165	165	6
	102.62	4500	94	77	70	165	165	6
	108.03	4500	94	77	70	165	165	6
	123.54	4500	94	77	70	165	165	6
	144.79	4500	94	77	70	165	165	6

DRL.. n_e = 1400	i	M_{amax} Nm	M_{apk} Nm	$M_{aNotaus}$ Nm	n_{ak} 1/min	J_G 10^{-4} kgm^2	F_{Ramax} K N	KF N	KA N	KAF N	F_{Rapk} K N	KF N	KA N	KAF N
K67 3	5.20	350	525	595	192	11	9860	10000	2450	2450	12300	12300	13000	13000
	7.28	420	630	714	206	6.3	10700	10900	2480	2480	11700	11700	13000	13000
	8.37	440	660	748	179	4.9	11100	11400	2590	2590	11500	11500	13000	13000
	9.66	480	685	816	155	3.8	11500	11700	2550	2550	11400	11400	13000	13000
	10.63	500	690	850	141	3.2	11800	12000	2590	2590	11300	11300	13000	13000
	12.48	530	695	901	120	2.5	12300	12300	2710	2710	11300	11300	13000	13000
	13.22	670	920	1139	113	5.6	11500	11500	2420	2420	9310	9310	13000	13000
	15.19	700	920	1190	105	4.4	11300	11300	2550	2550	9310	9310	13000	13000
	17.54	740	920	1258	97	3.4	11000	11000	2630	2630	9310	9310	13000	13000
	19.30	760	920	1292	93	2.9	10800	10800	2740	2740	9310	9310	13000	13000
	22.66	780	920	1326	93	2.2	10700	10700	3070	3070	9310	9310	13000	13000
	24.00	800	920	1360	88	2.0	10500	10500	3090	3090	9310	9310	13000	13000
	27.28	820	920	1394	84	1.6	10300	10300	3340	3340	9310	9310	13000	13000
	30.22	820	920	1394	86	1.3	10300	10300	3680	3680	9310	9310	13000	13000
	35.62	820	920	1394	90	1.0	10300	10300	4260	4260	9310	9310	13000	13000
	38.39	800	920	1360	52	2.4	10500	10500	4690	4690	9310	9310	13000	13000
	44.32	820	920	1394	50	1.9	10300	10300	5070	5070	9310	9310	13000	13000
	48.77	820	920	1394	49	1.7	10300	10300	5440	5440	9310	9310	13000	13000
	57.28	820	920	1394	52	1.4	10300	10300	6100	6100	9310	9310	13000	13000
	60.66	820	920	1394	53	1.2	10300	10300	6340	6340	9310	9310	13000	13000
	68.95	820	920	1394	52	1.0	10300	10300	6900	6900	9310	9310	13000	13000
	76.37	820	920	1394	54	0.87	10300	10300	7360	7360	9310	9310	13000	13000
	90.04	820	920	1394	54	0.68	10300	10300	8140	8140	9310	9310	13000	13000
	102.62	820	920	1394	56	0.47	10300	10300	8800	8800	9310	9310	13000	13000
	108.03	820	920	1394	56	0.42	10300	10300	9060	9060	9310	9310	13000	13000
	123.54	820	920	1394	56	0.34	10300	10300	9770	9770	9310	9310	13000	13000
	144.79	820	920	1394	48	0.28	10300	10300	10700	10700	9310	9310	13000	13000

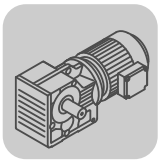

33 167 00 08

K67..

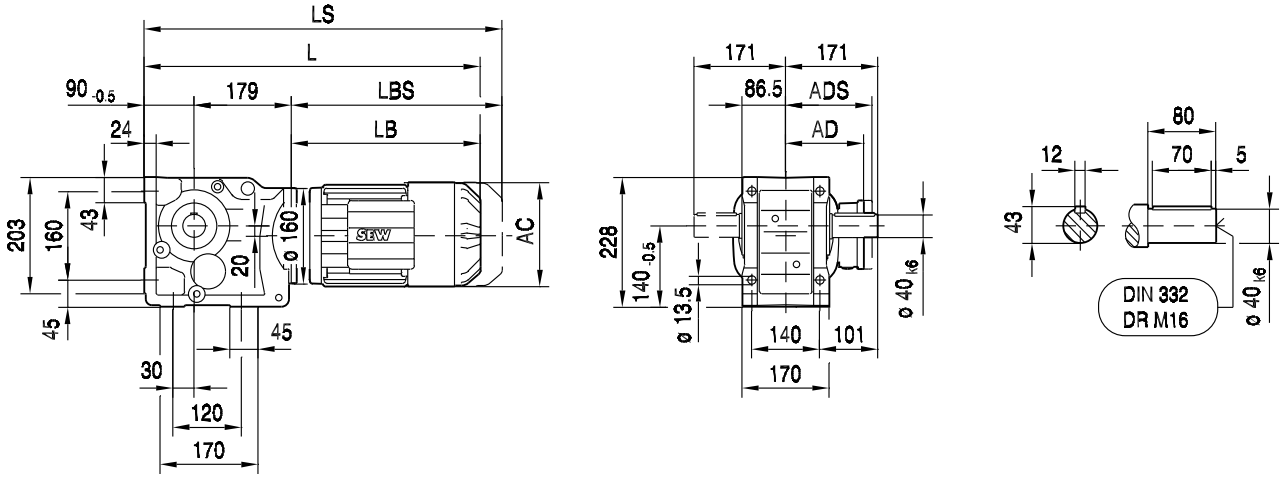

KA67B..

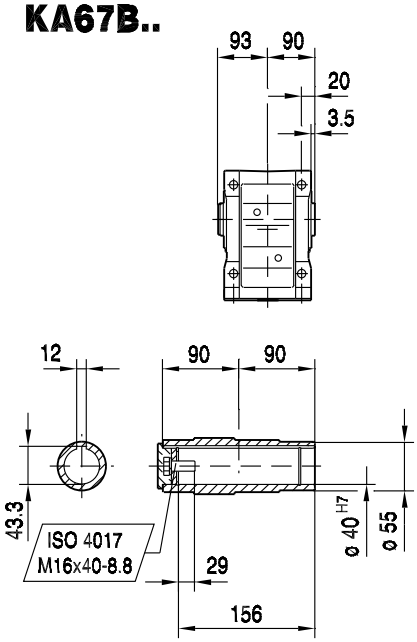

KH67B..

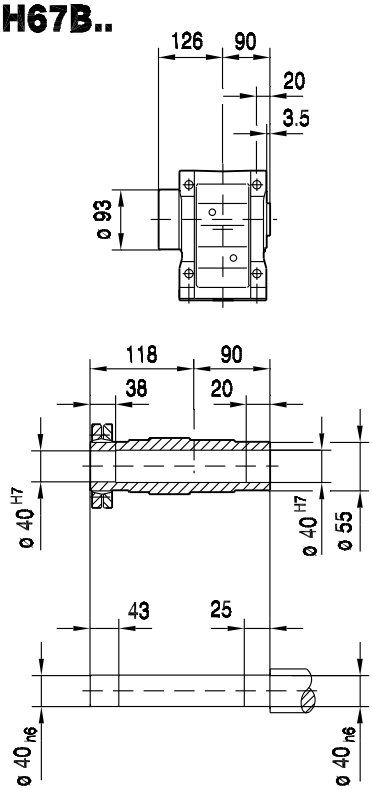

KV67B..

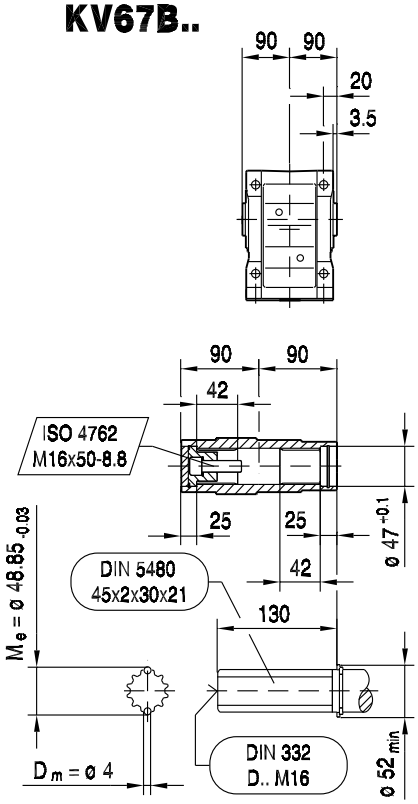

(→ 📖 129)	DRL71S	DRL71M	DRL80S	DRL80M	DRL90L	DRL100L	DRL132S	DRL132MC
AC	139	139	156	156	179	197	221	221
AD	119	119	128	128	140	157	170	170
ADS	129	129	139	139	150	158	172	172
L	549	574	595	626	640	699	784	834
LS	614	639	675	706	726	786	892	942
LB	280	305	326	357	371	430	515	565
LBS	345	370	406	437	457	517	623	673

33 168 00 08

KF67..

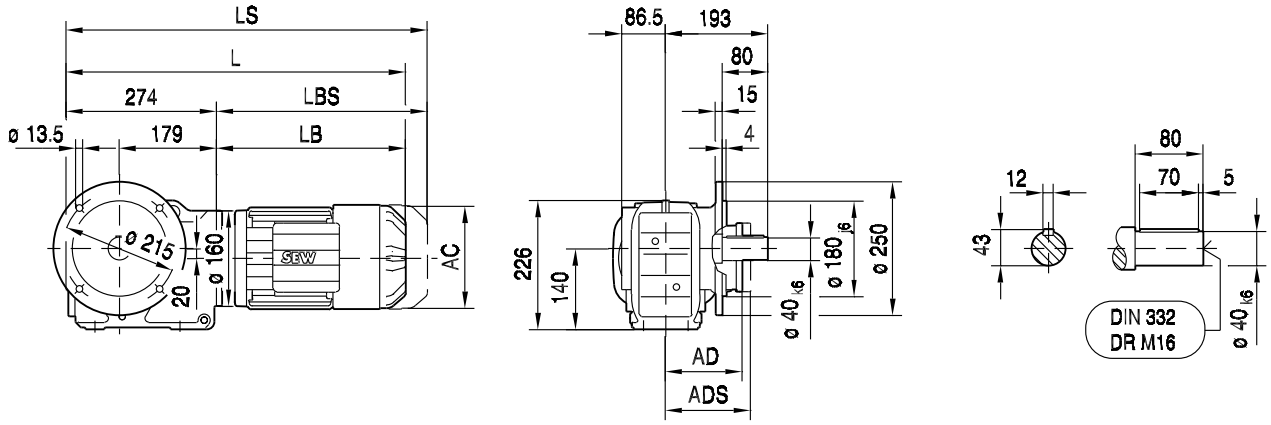

KAF67..

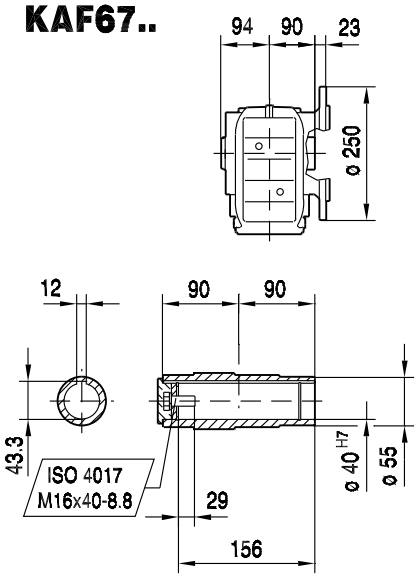

KHF67..

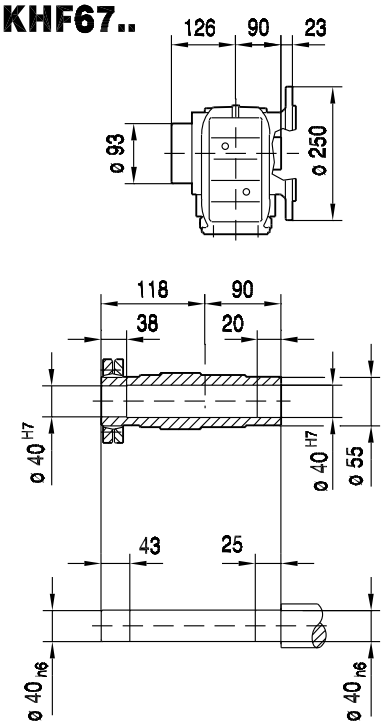

KVF67..

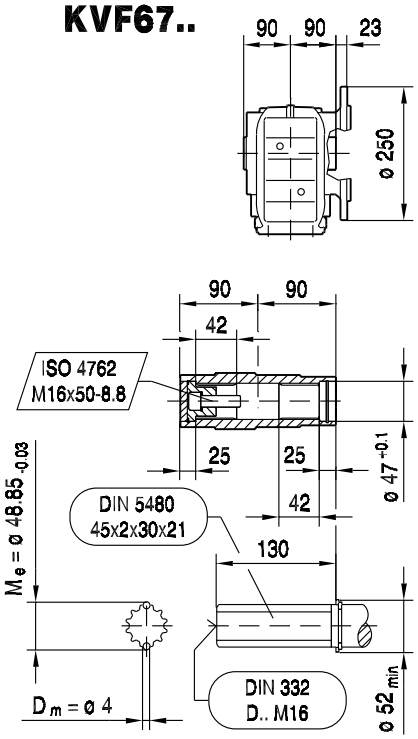

(→ 📖 129)	DRL71S	DRL71M	DRL80S	DRL80M	DRL90L	DRL100L	DRL132S	DRL132MC
AC	139	139	156	156	179	197	221	221
AD	119	119	128	128	140	157	170	170
ADS	129	129	139	139	150	158	172	172
L	554	579	600	631	645	704	789	839
LS	619	644	680	711	731	791	897	947
LB	280	305	326	357	371	430	515	565
LBS	345	370	406	437	457	517	623	673

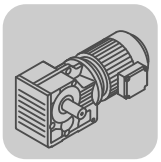

33 169 00 08

KA67..

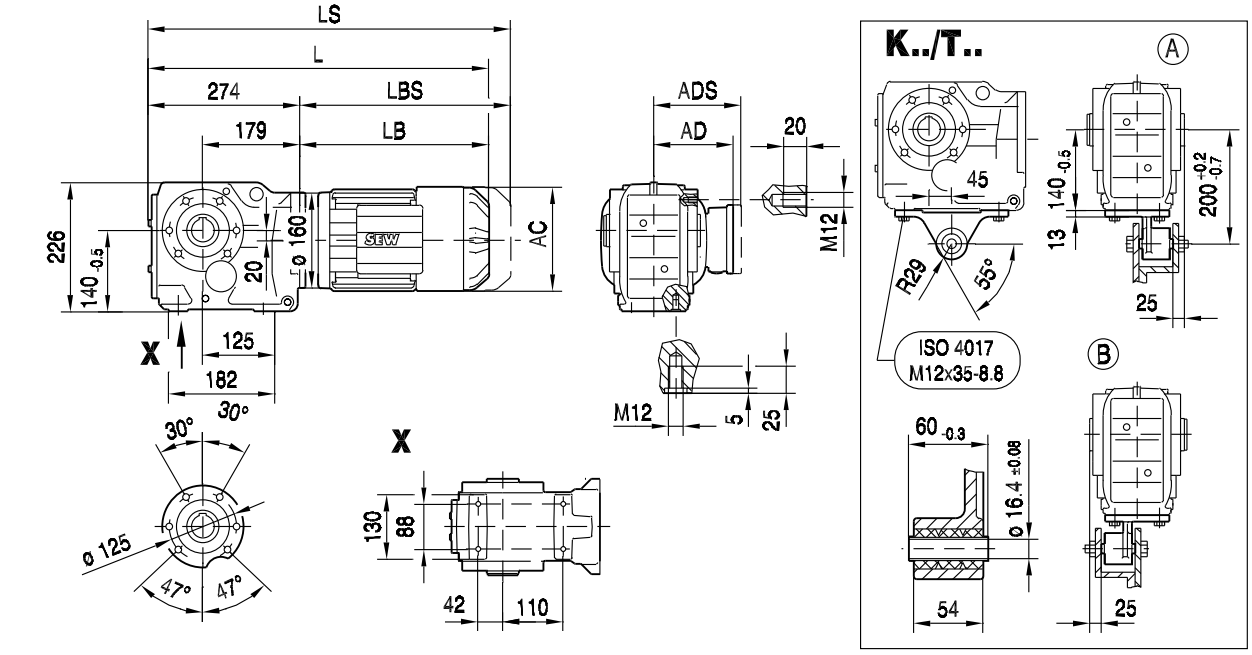

KA67..

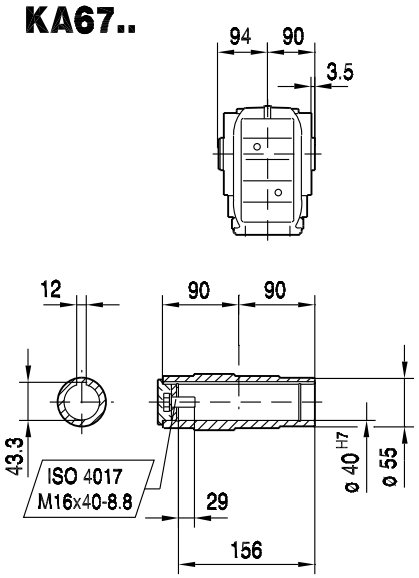

KH67..

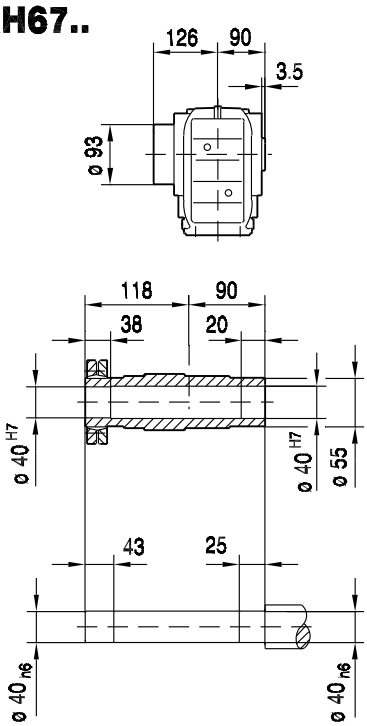

KV67..

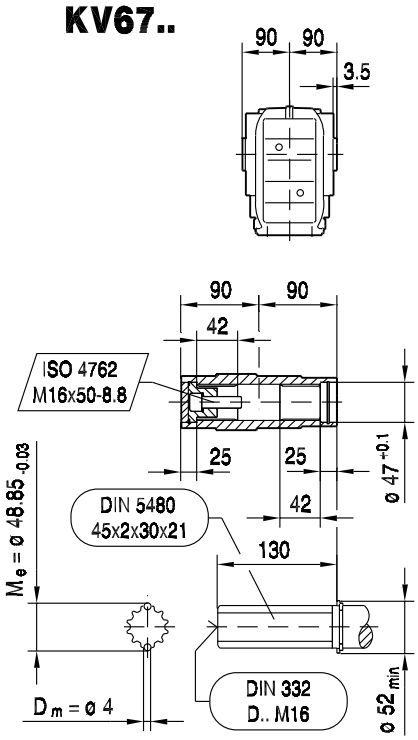

(→ 📖 129)	DRL71S	DRL71M	DRL80S	DRL80M	DRL90L	DRL100L	DRL132S	DRL132MC
AC	139	139	156	156	179	197	221	221
AD	119	119	128	128	140	157	170	170
ADS	129	129	139	139	150	158	172	172
L	554	579	600	631	645	704	789	839
LS	619	644	680	711	731	791	897	947
LB	280	305	326	357	371	430	515	565
LBS	345	370	406	437	457	517	623	673

KAZ67..

33 170 00 08

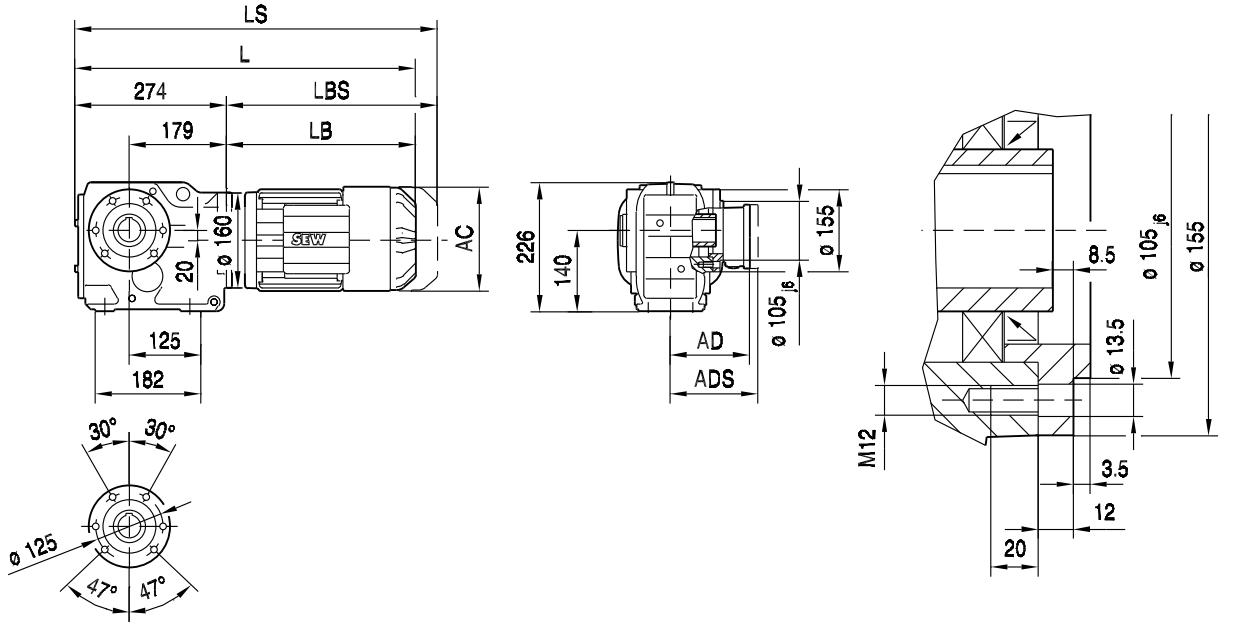

KAZ67..

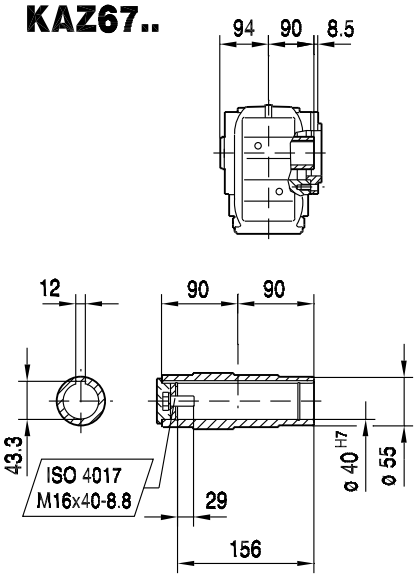

KHZ67..

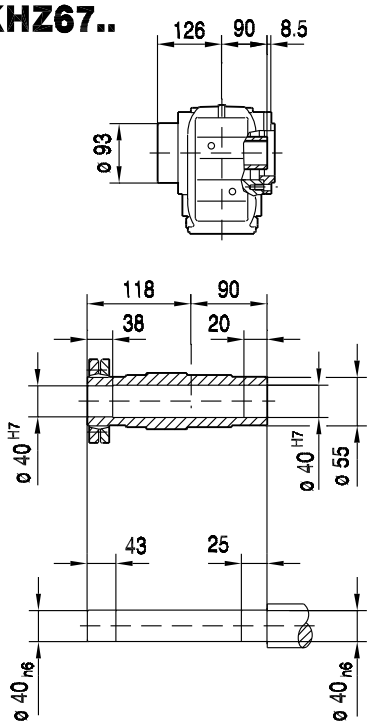

KVZ67..

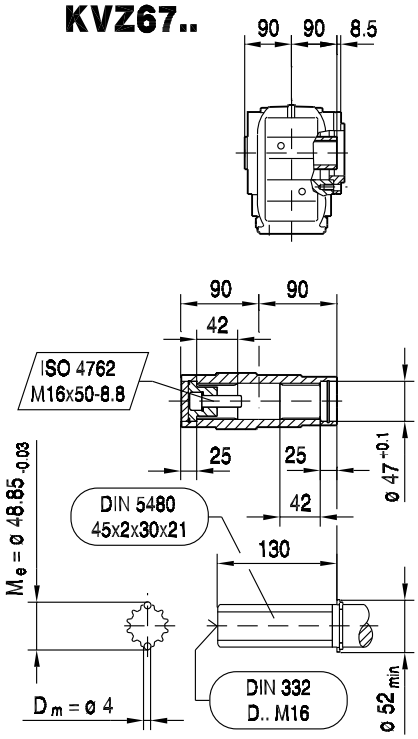

(→ 📖 129)	DRL71S	DRL71M	DRL80S	DRL80M	DRL90L	DRL100L	DRL132S	DRL132MC
AC	139	139	156	156	179	197	221	221
AD	119	119	128	128	140	157	170	170
ADS	129	129	139	139	150	158	172	172
L	554	579	600	631	645	704	789	839
LS	619	644	680	711	731	791	897	947
LB	280	305	326	357	371	430	515	565
LBS	345	370	406	437	457	517	623	673

KT67..

33 171 00 08

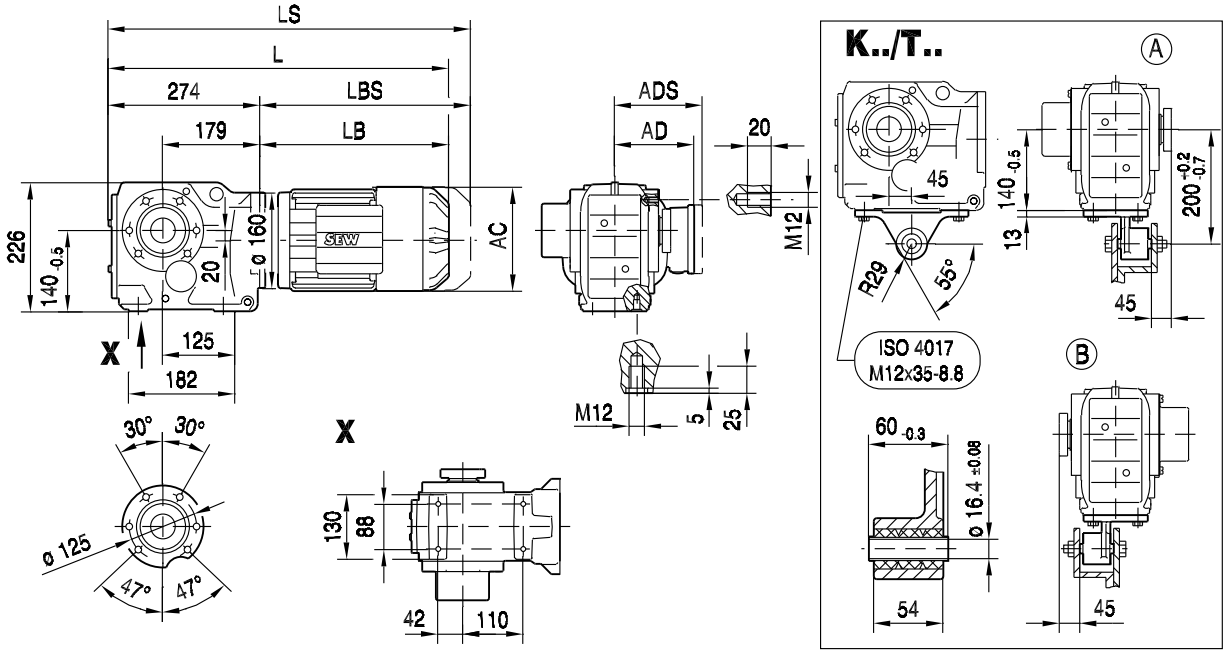

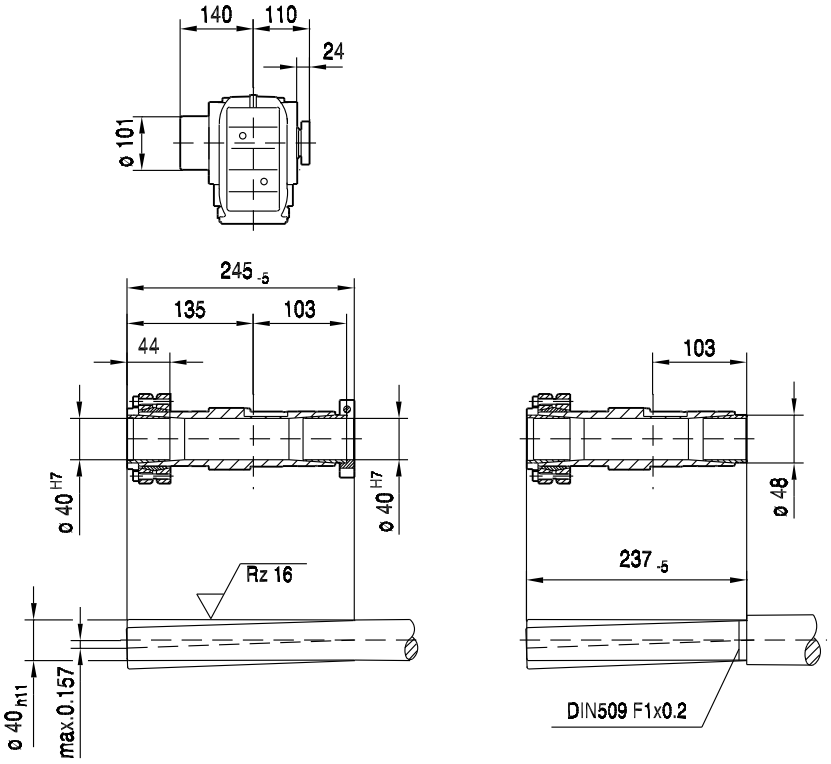

(→ 📖 129)	DRL71S	DRL71M	DRL80S	DRL80M	DRL90L	DRL100L	DRL132S	DRL132MC
AC	139	139	156	156	179	197	221	221
AD	119	119	128	128	140	157	170	170
ADS	129	129	139	139	150	158	172	172
L	554	579	600	631	645	704	789	839
LS	619	644	680	711	731	791	897	947
LB	280	305	326	357	371	430	515	565
LBS	345	370	406	437	457	517	623	673

10.2.5 K 77

M_{aDyn} Nm	i	DRL 71S D1	71S D2	71M D1	71M D2	80S D1	80S D2	80M D1	80M D2	90L D1	90L D2
K77 3	7.24		59		97	70	174	90	225	174	315
	8.48		69		114	81	200	106	265	200	370
	9.56		78		128	92	225	119	300	225	420
	10.84	52	88	73	146	104	260	135	340	260	475
	12.36	59	101	83	166	119	295	154	390	295	545
	13.52		110		182	130	320	169	425	320	595
	15.84		129		210	152	380	198	500	380	695
	17.87		146		240	172	425	220	565	425	785
	20.25	97	165	136	270	194	485	250	640	485	890
	23.08	111	188	155	310	220	550	285	730	550	1010
	25.62	123	205	172	340	245	610	315	810	610	1130
	29.27	140	235	197	390	280	700	365	920	700	1290
	30.89	148	250	205	415	295	740	385	970	740	1360
	35.20	169	285	235	470	335	840	435	1110	840	>1550
	38.39	184	310	255	515	365	920	475	1210	920	>1550
	40.04		320		530	380	950	490	1250	950	>1550
	45.16		360		600	425	1070	555	1410	1070	>1550
	51.18	240	410	340	680	485	1210	630	>1550	1210	>1550
	58.34	275	470	385	775	550	1380	720	>1550	1380	>1550
	64.75	305	520	430	860	615	1530	795	>1550	1530	>1550
	73.99	350	595	490	980	700	>1550	910	>1550	>1550	>1550
	78.07	370	630	515	1030	740	>1550	960	>1550	>1550	>1550
	88.97	420	715	590	1180	840	>1550	1090	>1550	>1550	>1550
	97.05	460	780	645	1290	920	>1550	1190	>1550	>1550	>1550
	113.56	530	900	745	1490	1060	>1550	1380	>1550	>1550	
	128.52	600	1020	840	>1550	1200	>1550	>1550			
	135.28	635	1080	890	>1550	1270	>1550	>1550			
	154.02	720	1230	1010		1440		>1550			
	179.37	840		1180							
	192.18	890		1250							

→ 124

m kg	s	DRL 71S	71M	80S	80M	90L
K77	3	63	64	67	70	76
KF: + 8.3 kg / KA: + -7.5 kg / KAF: + 0.4 kg						

M_{aDyn} Nm	i	DRL									
		100L		132S		132MC		160M		160MC	
		D1	D2	D1	D2	D1	D2	D1	D2	D1	D2
K77 3	7.24	240	590	555	1040	900	>1150	1140	>1150	>1150	>1150
	8.48	280	690	650	>1160	1050	>1160	>1160	>1160	>1160	>1160
	9.56	320	780	730	>1160	>1160	>1160	>1160	>1160	>1160	>1160
	10.84	360	880	830	>1170	>1170		>1170		>1170	
	12.36	415	1000	940	>1170	>1170		>1170		>1170	
	13.52	450	1100	1030	>1550	>1550	>1550	>1550	>1550	>1550	>1550
	15.84	530	1290	1210	>1550	>1550	>1550	>1550	>1550	>1550	>1550
	17.87	600	1450	1370	>1550	>1550	>1550	>1550	>1550	>1550	>1550
	20.25	680	>1550	>1550	>1550	>1550		>1550		>1550	
	23.08	775	>1550	>1550	>1550	>1550		>1550		>1550	
	25.62	860	>1550	>1550							
	29.27	980	>1550	>1550							
	30.89	1030	>1550	>1550							
	35.20	1180									
	38.39	1280									
	40.04	1330	>1550	>1550	>1550	>1550	>1550	>1550	>1550	>1550	>1550
	45.16	1500	>1550	>1550	>1550	>1550	>1550	>1550	>1550	>1550	>1550
	51.18	>1550	>1550	>1550	>1550	>1550		>1550		>1550	
	58.34	>1550	>1550	>1550	>1550	>1550		>1550		>1550	
	64.75	>1550	>1550	>1550							
	73.99	>1550	>1550	>1550							
	78.07	>1550	>1550	>1550							
	88.97	>1550									
	97.05	>1550									
	113.56	>1550									
	128.52										
	135.28										
	154.02										
	179.37										
	192.18										

→ 124

m kg	s	DRL				
		100L	132S	132MC	160M	160MC
K77	3	84	99	115	135	140
KF: + 8.3 kg / KA: + -7.5 kg / KAF: + 0.4 kg						

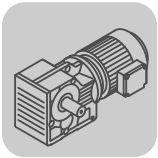

K..DRL
K..Nm

DRL..	i	n_{epk} 1/min	η %	c_{TG} K Nm/'	KF Nm/'	KA Nm/'	KAF Nm/'	φ /R '
K77 3	7.24	4500	96	110	91	188	188	8
	8.48	4500	96	110	91	188	188	8
	9.56	4500	96	110	91	188	188	8
	10.84	4500	96	110	91	188	188	8
	12.36	4500	96	110	91	188	188	8
	13.52	4500	96	141	112	300	300	7
	15.84	4500	96	141	112	300	300	6
	17.87	4500	96	141	112	300	300	6
	20.25	4500	96	141	112	300	300	6
	23.08	4500	96	141	112	300	300	6
	25.62	4500	96	141	112	300	300	6
	29.27	4500	96	141	112	300	300	6
	30.89	4500	96	141	112	300	300	6
	35.20	4500	96	141	112	300	300	6
	38.39	4500	96	141	112	300	300	6
	40.04	4500	95	150	118	348	348	6
	45.16	4500	95	150	118	348	348	6
	51.18	4500	95	150	118	348	348	6
	58.34	4500	95	150	118	348	348	6
	64.75	4500	95	150	118	348	348	5
	73.99	4500	95	150	118	348	348	5
	78.07	4500	95	150	118	348	348	5
	88.97	4500	95	150	118	348	348	5
	97.05	4500	95	150	118	348	348	5
	113.56	4500	94	150	118	348	348	5
	128.52	4500	94	150	118	348	348	5
	135.28	4500	94	150	118	348	348	5
	154.02	4500	94	150	118	348	348	5
	179.37	4500	94	150	118	348	348	5
	192.18	4500	93	150	118	348	348	5

DRL..							F_{Ramax}				F_{Rapk}			
n_e = 1400	i	M_{amax} Nm	M_{apk} Nm	$M_{aNotaus}$ Nm	n_{ak} 1/min	J_G 10^{-4} kgm^2	K N	KF N	KA N	KAF N	K N	KF N	KA N	KAF N
K77 3	7.24	820	1150	1394	207	17	13100	13800	2490	2490	17700	17700	20000	20000
	8.48	890	1160	1513	177	13	13500	14300	2430	2430	17600	17700	20000	20000
	9.56	940	1160	1598	157	10	13900	14700	2430	2430	17600	17700	20000	20000
	10.84	990	1170	1683	138	8.2	14400	15200	2460	2460	17600	17700	20000	20000
	12.36	1000	1170	1700	121	6.5	15100	16000	2820	2820	17600	17700	20000	20000
	13.52	1340	1550	2278	155	15	14800	15800	1850	1850	15400	16600	20000	20000
	15.84	1400	1550	2380	145	11	15500	16600	2030	2030	15400	16600	20000	20000
	17.87	1450	1550	2465	140	9.0	16100	16900	2160	2160	15400	16600	20000	20000
	20.25	1500	1550	2550	128	7.2	15700	16800	2330	2330	15400	16600	20000	20000
	23.08	1550	1550	2635	126	5.8	15400	16600	2550	2550	15400	16600	20000	20000
	25.62	1550	1550	2635	133	5.0	15400	16600	2990	2990	15400	16600	20000	20000
	29.27	1550	1550	2635	137	4.0	15400	16600	3590	3590	15400	16600	20000	20000
	30.89	1550	1550	2635	142	3.6	15400	16600	3840	3840	15400	16600	20000	20000
	35.20	1550	1550	2635	142	2.9	15400	16600	4460	4460	15400	16600	20000	20000
	38.39	1500	1550	2550	159	2.5	15700	16800	5210	5210	15400	16600	20000	20000
	40.04	1550	1550	2635	37	6.0	15400	16600	5100	5100	15400	16600	20000	20000
	45.16	1550	1550	2635	33	4.9	15400	16600	5720	5720	15400	16600	20000	20000
	51.18	1550	1550	2635	29	4.1	15400	16600	6390	6390	15400	16600	20000	20000
	58.34	1550	1550	2635	31	3.3	15400	16600	7130	7130	15400	16600	20000	20000
	64.75	1550	1550	2635	31	3.0	15400	16600	7740	7740	15400	16600	20000	20000
	73.99	1550	1550	2635	31	2.4	15400	16600	8550	8550	15400	16600	20000	20000
	78.07	1550	1550	2635	32	2.3	15400	16600	8890	8890	15400	16600	20000	20000
	88.97	1550	1550	2635	33	1.9	15400	16600	9730	9730	15400	16600	20000	20000
	97.05	1550	1550	2635	32	1.6	15400	16600	10300	10300	15400	16600	20000	20000
	113.56	1550	1550	2635	33	1.3	15400	16600	11400	11400	15400	16600	20000	20000
	128.52	1550	1550	2635	33	0.90	15400	16600	12300	12300	15400	16600	20000	20000
	135.28	1550	1550	2635	33	0.81	15400	16600	12700	12700	15400	16600	20000	20000
	154.02	1550	1550	2635	33	0.66	15400	16600	13700	13700	15400	16600	20000	20000
	179.37	1450	1550	2465	39	0.53	16100	16900	15600	15600	15400	16600	20000	20000
	192.18	1450	1550	2465	36	0.46	16100	16900	16200	16200	15400	16600	20000	20000

33 172 00 08

K77..

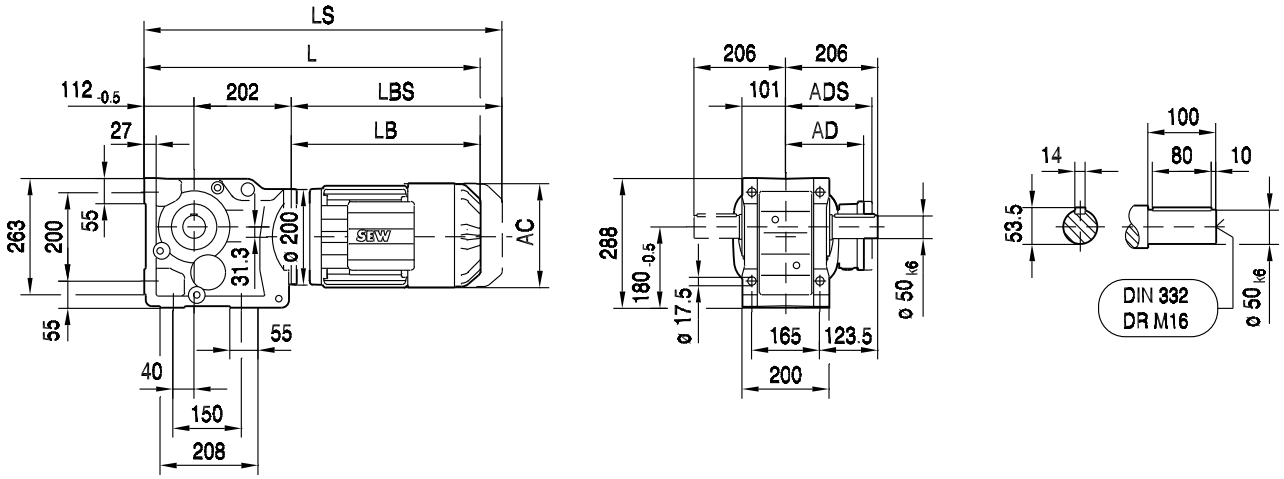

KA77B..

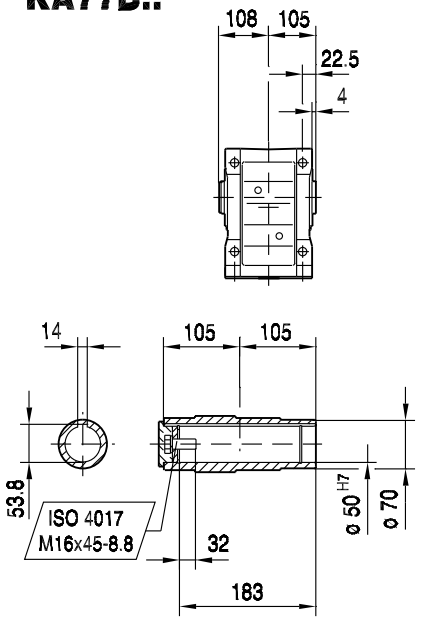

KH77B..

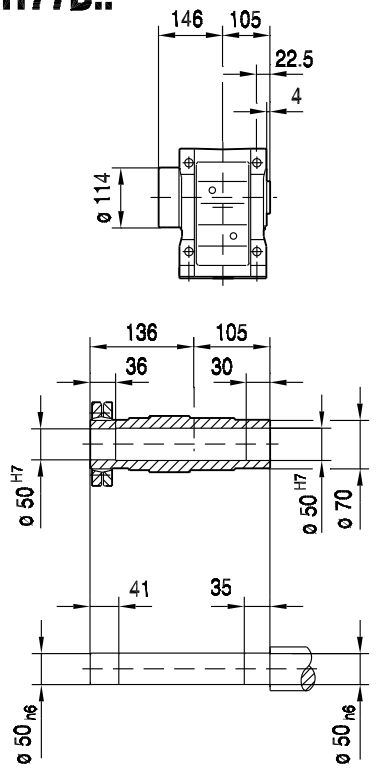

KV77B..

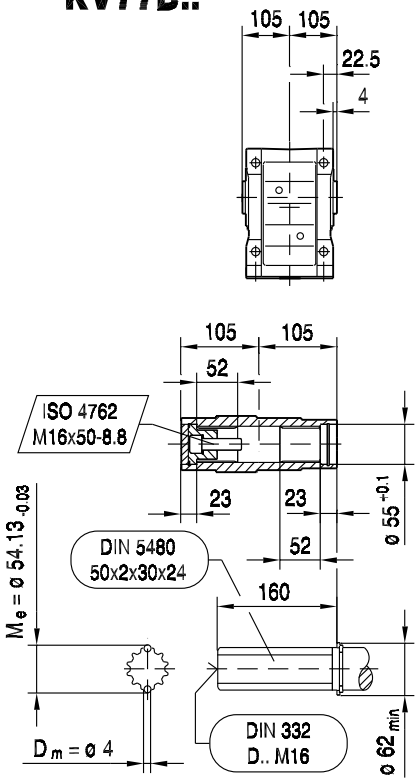

(→ 📖 129)	DRL71S	DRL71M	DRL80S	DRL80M	DRL90L	DRL100L	DRL132S	DRL132MC	DRL160..
AC	139	139	156	156	179	197	221	221	270
AD	119	119	128	128	140	157	170	170	228
ADS	129	129	139	139	150	158	172	172	228
L	587	612	633	664	678	737	818	868	872
LS	652	677	713	744	764	824	926	976	1009
LB	273	298	319	350	364	423	504	554	558
LBS	338	363	399	430	450	510	612	662	695

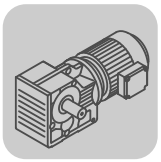

33 173 00 08

KF77..

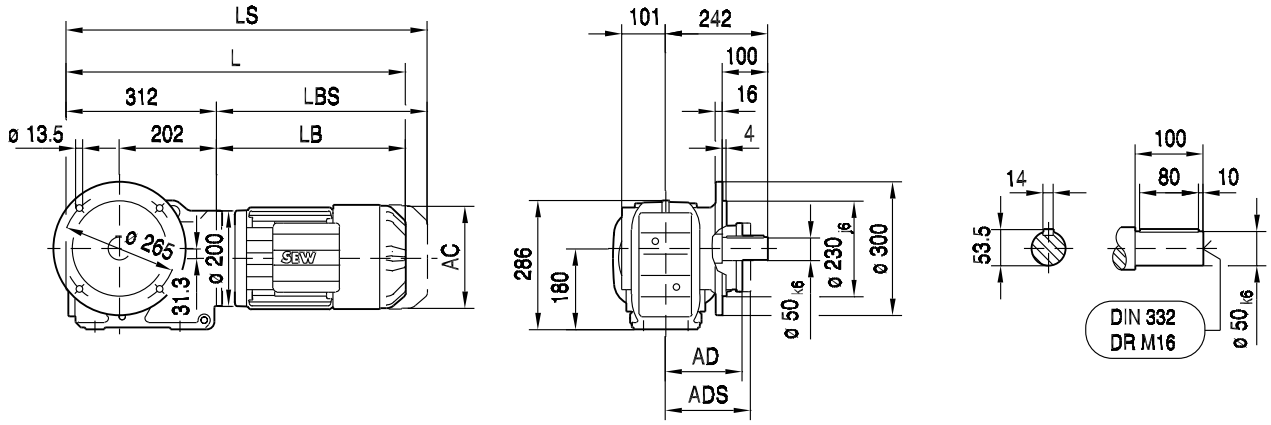

10

KAF77..

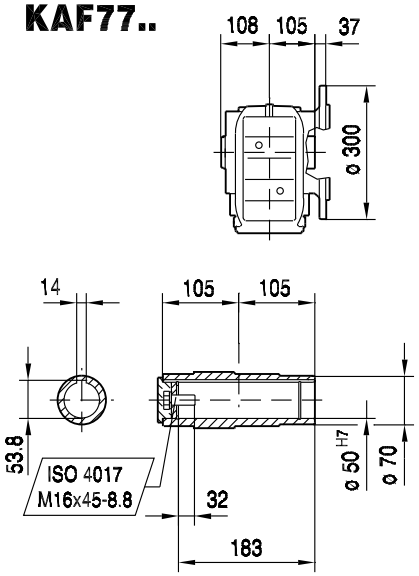

KHF77..

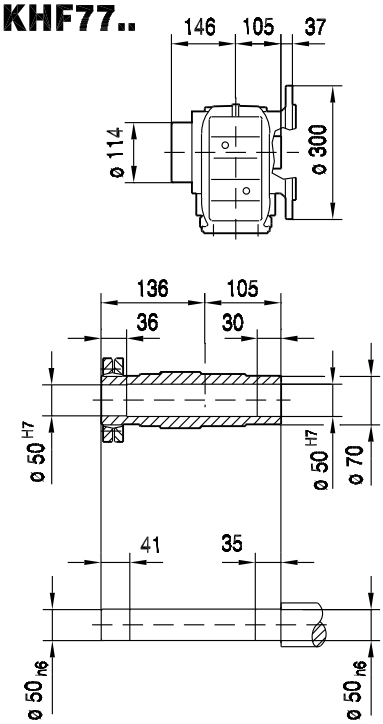

KVF77..

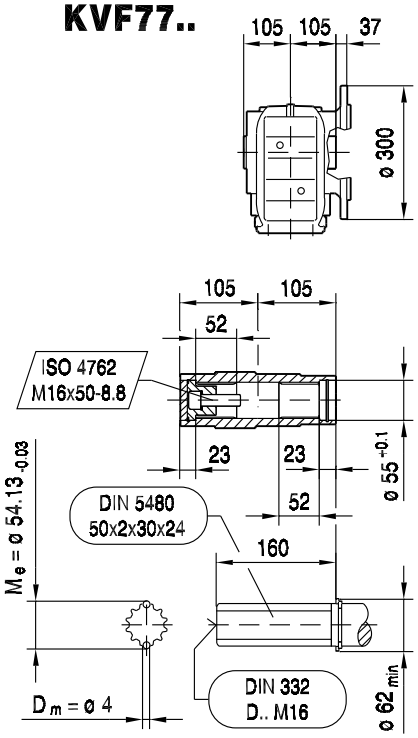

(→ 📖 129)	DRL71S	DRL71M	DRL80S	DRL80M	DRL90L	DRL100L	DRL132S	DRL132MC	DRL160..
AC	139	139	156	156	179	197	221	221	270
AD	119	119	128	128	140	157	170	170	228
ADS	129	129	139	139	150	158	172	172	228
L	585	610	631	662	676	735	816	866	870
LS	650	675	711	742	762	822	924	974	1007
LB	273	298	319	350	364	423	504	554	558
LBS	338	363	399	430	450	510	612	662	695

33 174 00 08

KA77..

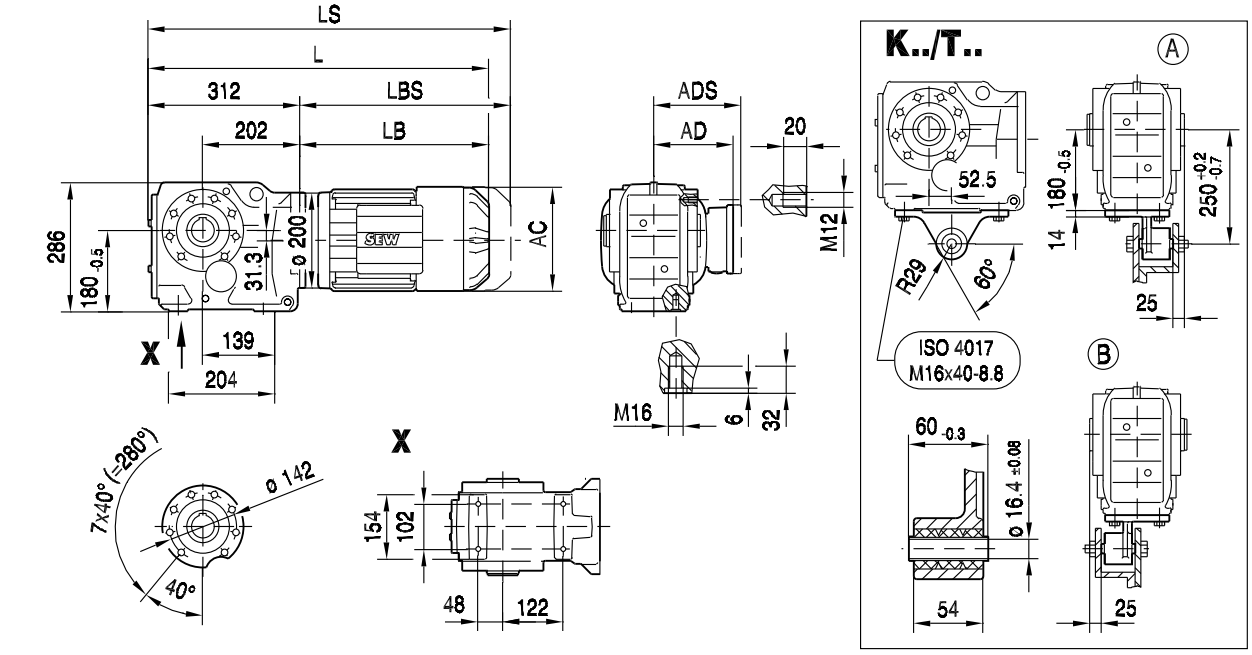

KA77..

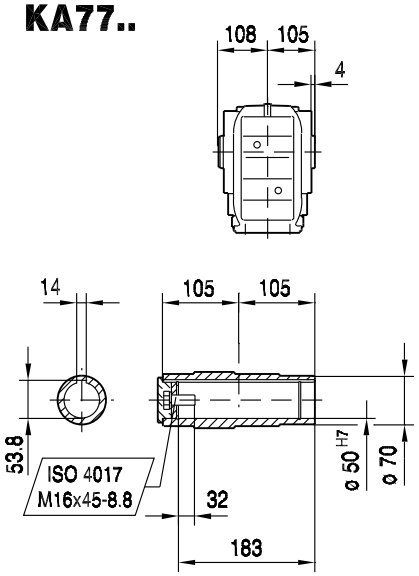

KH77..

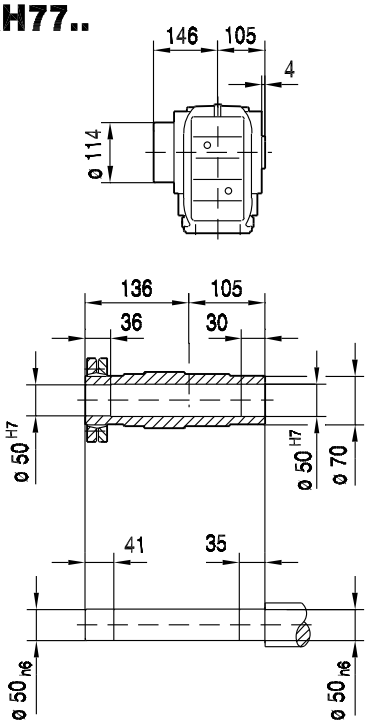

KV77..

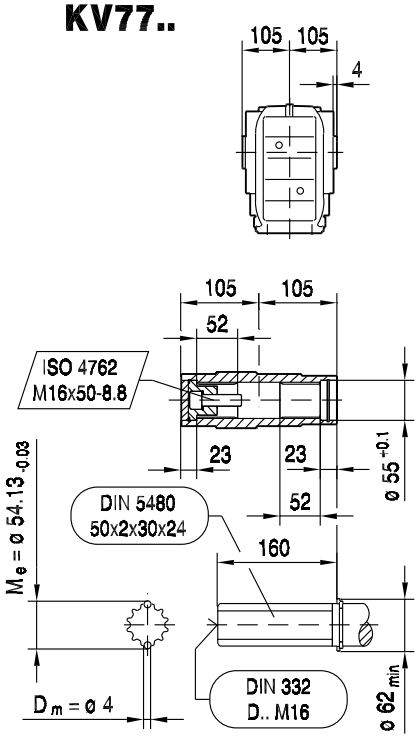

(→ 📖 129)	DRL71S	DRL71M	DRL80S	DRL80M	DRL90L	DRL100L	DRL132S	DRL132MC	DRL160..
AC	139	139	156	156	179	197	221	221	270
AD	119	119	128	128	140	157	170	170	228
ADS	129	129	139	139	150	158	172	172	228
L	585	610	631	662	676	735	816	866	870
LS	650	675	711	742	762	822	924	974	1007
LB	273	298	319	350	364	423	504	554	558
LBS	338	363	399	430	450	510	612	662	695

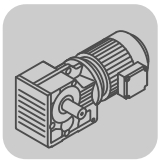

33 175 00 08

KAZ77..

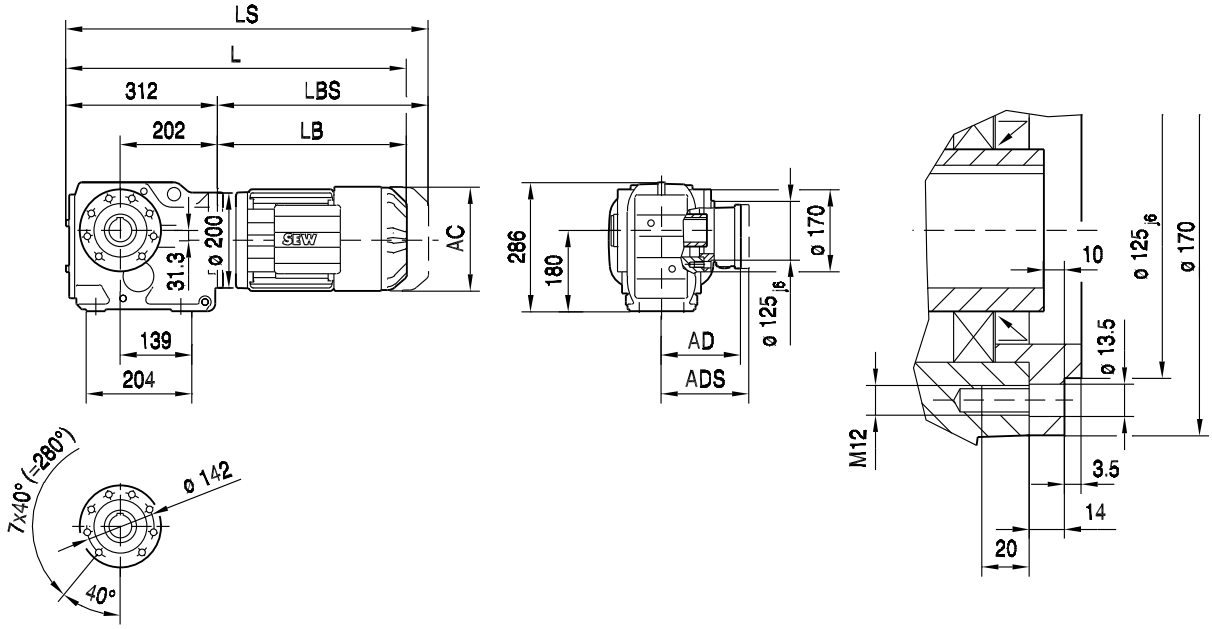

KAZ77..

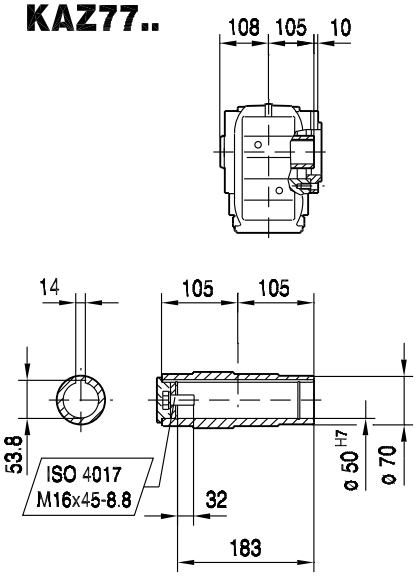

KHZ77..

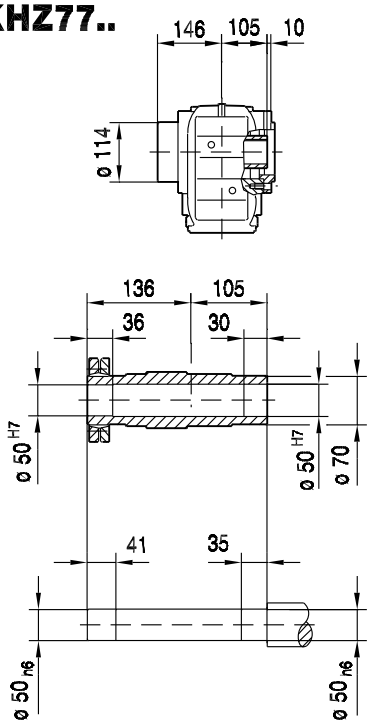

KVZ77..

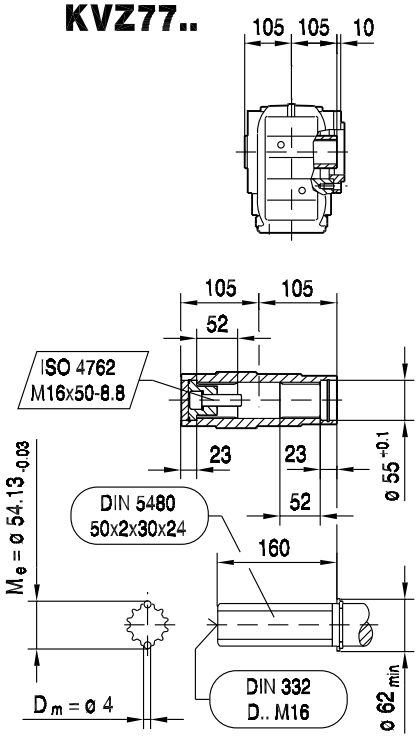

(→ 📖 129)	DRL71S	DRL71M	DRL80S	DRL80M	DRL90L	DRL100L	DRL132S	DRL132MC	DRL160..
AC	139	139	156	156	179	197	221	221	270
AD	119	119	128	128	140	157	170	170	228
ADS	129	129	139	139	150	158	172	172	228
L	585	610	631	662	676	735	816	866	870
LS	650	675	711	742	762	822	924	974	1007
LB	273	298	319	350	364	423	504	554	558
LBS	338	363	399	430	450	510	612	662	695

KT77..

33 176 00 08

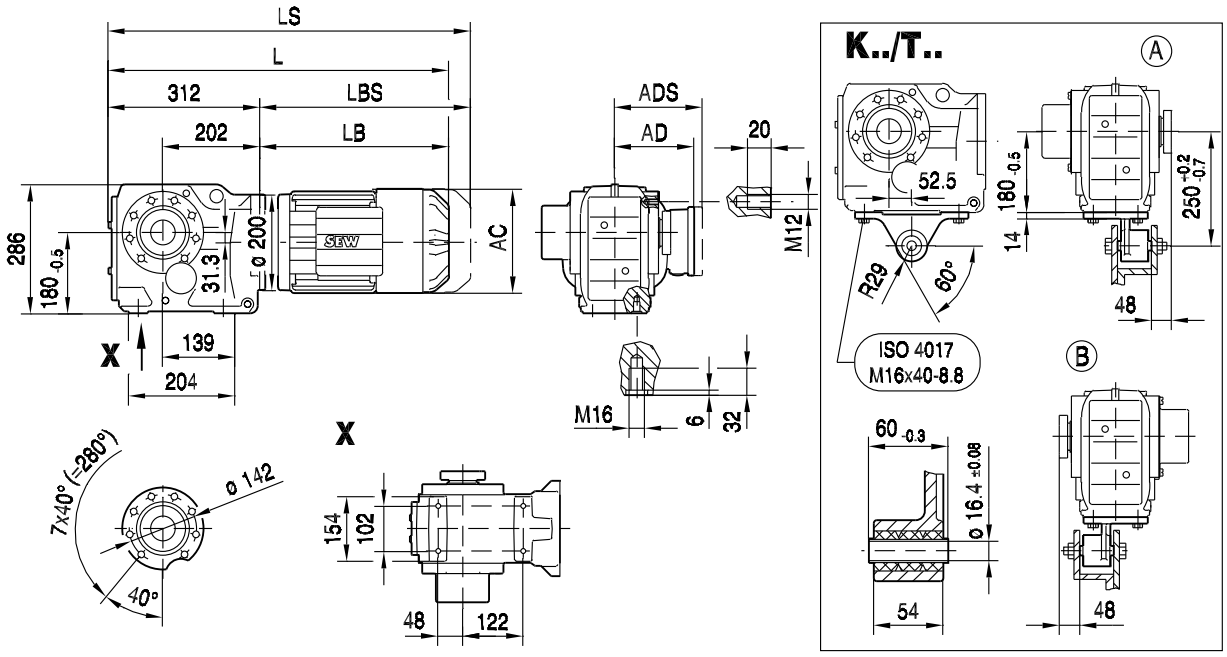

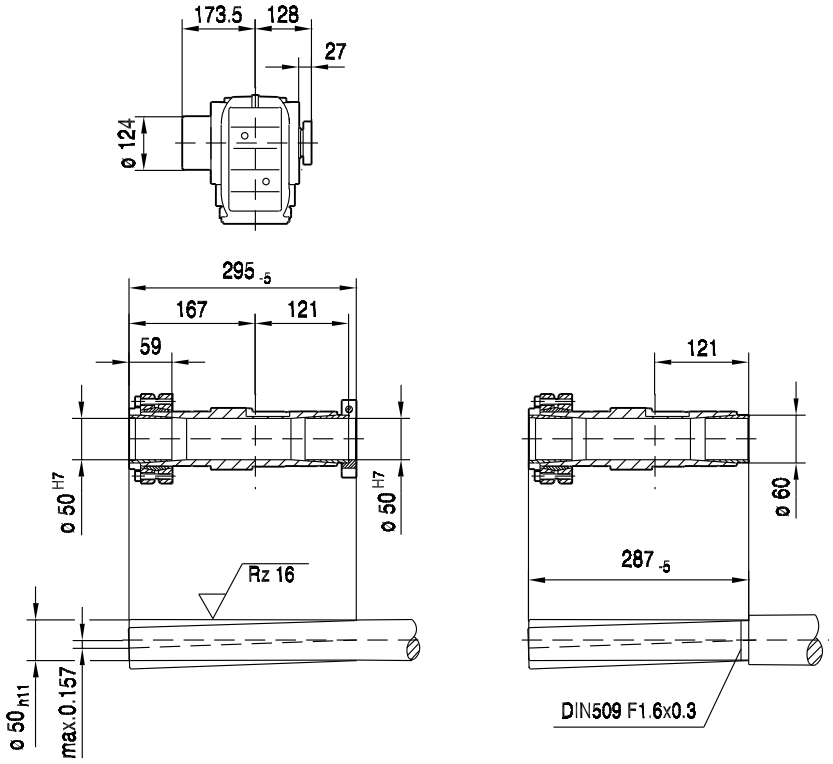

(→ 📖 129)	DRL71S	DRL71M	DRL80S	DRL80M	DRL90L	DRL100L	DRL132S	DRL132MC	DRL160..
AC	139	139	156	156	179	197	221	221	270
AD	119	119	128	128	140	157	170	170	228
ADS	129	129	139	139	150	158	172	172	228
L	585	610	631	662	676	735	816	866	870
LS	650	675	711	742	762	822	924	974	1007
LB	273	298	319	350	364	423	504	554	558
LBS	338	363	399	430	450	510	612	662	695

Diese Seite bleibt aus drucktechnischen Gründen frei.

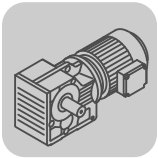

10.2.6 K 87

M_{aDyn} Nm	i	DRL 71M D1	71M D2	80S D1	80S D2	80M D1	80M D2	90L D1	90L D2	100L D1	100L D2	132S D1	132S D2	132MC D1	132MC D2
K87 3	7.21										585	550	1030	890	1380
	8.29						260	199	365	275	675	635	1190	1030	1590
	10.00						315	240	440	335	810	765	1440	1240	1920
	11.17		150	107	265	139	350	265	490	375	910	850	1600	1390	2140
	12.56										1020	960	1800	1560	2410
	14.45						455	345	635	485	1170	1100	2080	1800	2770
	16.00	108	215	154	380	200	505	380	705	535	1300	1220	>2270	1990	
	17.42						550	415	765	585	1420	1330	2500	2170	>3240
	19.45		260	187	465	240	615	465	850	650	1580	1490	2800	2420	>3240
	22.41		300	215	535	275	705	535	980	750	1820	1720	3220	2790	>3240
	24.92		330	235	595	310	785	595	1100	830	2030	1910	>3240	3110	>3240
	27.88	187	370	265	665	345	880	665	1230	930	2270	2140	>3240	>3240	
	31.39	210	420	300	750	390	990	750	1380	1050	2560	2410	>3240	>3240	
	36.52						1140	860	1590	1210	2940	2770	>3240	>3240	>3240
	44.02						1380	1040	1920	1460	>3240	>3240	>3240	>3240	>3240
	49.16		650	465	1160	605	1540	1160	2140	1630	>3240	>3240	>3240	>3240	>3240
	56.64		750	535	1340	695	1770	1340	2470	1880	>3240	>3240	>3240	>3240	>3240
	63.00		830	595	1490	775	1970	1490	2750	2090	>3240	>3240	>3240	>3240	>3240
	70.46	465	930	665	1670	870	2200	1670	3070	2340	>3240	>3240	>3240	>3240	
	79.34	525	1050	750	1880	970	2480	1880	>3240	2630	>3240	>3240	>3240	>3240	
	86.34	570	1140	820	2050	1060	2700	2050	>3240	2870	>3240	>3240			
	102.71	680	1360	970	2430	1260	3210	2430	>3240	>3240	>3240	>3240			
	115.82	770	1540	1100	2750	1430	>3240	2750	>3240	>3240					
	126.91	840	1680	1200	3010	1560	>3240	3010	>3240	>3240					
	147.32	960	1930	1380	>3240	1800	>3240	>3240		>3240					
	164.34	1080	2160	1540	>3240	2000									
	174.19	1140	2290	1630	>3240	2120									
	197.37	1290		1850		2410									

→ 124

m kg	s	DRL 71M	80S	80M	90L	100L	132S	132MC
K87	3	100	105	105	110	120	135	150
KF: + 9.2 kg / KA: + -12.1 kg / KAF: + 1.1 kg								

M_{aDyn} Nm	i	DRL										
		160M		160MC		180S		180M		180L		180LC
		D1	D2	D1	D2	D1	D2	D1	D2	D1	D2	D1
	7.21	1140	1930	1280	>1950	1450	>1950	1730	>1950	>1950	>1950	>1950
	8.29	1310	>2100	1470	>2100	1670	>2100	1980	>2100	>2100	>2100	>2100
	10.00	1580	>2240	1770	>2240	2010	>2240	>2240	>2240	>2240	>2240	>2240
	11.17	1760	>2250	1980	>2250	>2250	>2250	>2250	>2250	>2250	>2250	>2250
	12.56	1980	>3000	2230	>3000	2530	>3000	>3000	>3000	>3000	>3000	>3000
	14.45	2280	>3150	2560	>3150	2910	>3150	>3150	>3150	>3150	>3150	>3150
	16.00	>2270		>2270								
	17.42	2750	>3240	3090	>3240	>3240	>3240	>3240	>3240	>3240	>3240	>3240
	19.45	3080	>3240	>3240	>3240	>3240	>3240	>3240	>3240	>3240	>3240	>3240
	22.41	>3240	>3240	>3240	>3240	>3240		>3240		>3240		
	24.92	>3240	>3240	>3240	>3240	>3240		>3240		>3240		
	27.88	>3240		>3240								
	31.39	>3240		>3240								
K87	36.52	>3240	>3240	>3240	>3240	>3240	>3240	>3240	>3240	>3240	>3240	>3240
3	44.02	>3240	>3240	>3240	>3240	>3240	>3240	>3240	>3240	>3240	>3240	>3240
	49.16	>3240	>3240	>3240	>3240	>3240	>3240	>3240	>3240	>3240	>3240	>3240
	56.64	>3240	>3240	>3240	>3240	>3240		>3240		>3240		
	63.00	>3240	>3240	>3240	>3240	>3240		>3240		>3240		
	70.46	>3240		>3240								
	79.34	>3240		>3240								
	86.34											
	102.71											
	115.82											
	126.91											
	147.32											
	164.34											
	174.19											
	197.37											

→ 124

m kg	s	DRL					
		160M	160MC	180S	180M	180L	180LC
K87	3	175	180	205	220	235	245
KF: + 9.2 kg / KA: + -12.1 kg / KAF: + 1.1 kg							

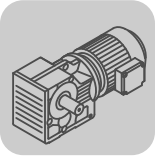

K..DRL
K..Nm

DRL..	i	n_{epk} 1/min	η %	c_{TG} K Nm/'	KF Nm/'	KA Nm/'	KAF Nm/'	φ /R '
K87 3	7.21	4378	96	169	156	411	411	7
	8.29	4500	96	169	156	411	411	7
	10.00	4500	96	169	156	411	411	7
	11.17	4500	96	169	156	411	411	7
	12.56	4378	96	198	181	640	640	6
	14.45	4500	96	198	181	640	640	6
	16.00	4500	96	169	156	411	411	6
	17.42	4500	96	198	181	640	640	6
	19.45	4500	96	198	181	640	640	6
	22.41	4500	96	198	181	640	640	6
	24.92	4500	96	198	181	640	640	6
	27.88	4500	96	198	181	640	640	6
	31.39	4500	96	198	181	640	640	6
	36.52	4500	95	207	188	744	744	6
	44.02	4500	95	207	188	744	744	6
	49.16	4500	95	207	188	744	744	5
	56.64	4500	95	207	188	744	744	5
	63.00	4500	95	207	188	744	744	5
	70.46	4500	95	207	188	744	744	5
	79.34	4500	95	207	188	744	744	5
	86.34	4500	95	207	188	744	744	5
	102.71	4500	95	207	188	744	744	5
	115.82	4500	95	207	188	744	744	5
	126.91	4500	95	207	188	744	744	5
	147.32	4500	94	207	188	744	744	5
	164.34	4500	94	207	188	744	744	5
	174.19	4500	94	207	188	744	744	5
	197.37	4500	94	207	188	744	744	5

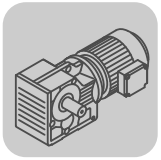

DRL..							F_{Ramax}				F_{Rapk}			
n_e = 1400	i	M_{amax} Nm	M_{apk} Nm	$M_{aNotaus}$ Nm	n_{ak} 1/min	J_G 10^{-4} kgm^2	K N	KF N	KA N	KAF N	K N	KF N	KA N	KAF N
	7.21	1300	1950	2210	250	46	13200	15100	4970	4970	28100	27000	30000	30000
	8.29	1400	2100	2380	205	35	13500	15600	4960	4960	27900	26900	30000	30000
	10.00	1500	2240	2550	180	26	14200	16400	5210	5210	27800	26700	30000	30000
	11.17	1500	2250	2550	188	22	14900	17100	5770	5770	27800	26700	30000	30000
	12.56	2000	3000	3400	223	42	14800	17000	5030	5030	26900	25900	30000	30000
	14.45	2100	3150	3570	201	32	15300	17700	5240	5240	26700	25700	30000	30000
	16.00	1800	2270	3060	119	12	16000	18500	5810	5810	27700	26700	30000	30000
	17.42	2200	3240	3740	189	24	16300	18800	5770	5770	26500	25600	30000	30000
	19.45	2300	3240	3910	170	20	16800	19300	5890	5890	26500	25600	30000	30000
	22.41	2300	3240	3910	178	16	17900	20600	6790	6790	26500	25600	30000	30000
	24.92	2500	3240	4250	140	14	18000	20700	6390	6390	26500	25600	30000	30000
	27.88	2600	3240	4420	122	12	18500	21400	6600	6600	26500	25600	30000	30000
	31.39	2700	3240	4590	108	9.6	19200	22100	6900	6900	26500	25600	30000	30000
K87	36.52	2500	3240	4250	41	20	21400	24500	9140	9140	26500	25600	30000	30000
3	44.02	2600	3240	4420	39	16	22800	26000	10100	10100	26500	25600	30000	30000
	49.16	2700	3240	4590	35	14	23500	26300	10400	10400	26500	25600	30000	30000
	56.64	2700	3240	4590	35	11	25000	26300	11600	11600	26500	25600	30000	30000
	63.00	2700	3240	4590	35	9.8	26200	26300	12600	12600	26500	25600	30000	30000
	70.46	2700	3240	4590	35	8.4	27300	26300	13700	13700	26500	25600	30000	30000
	79.34	2700	3240	4590	37	7.1	27300	26300	14800	14800	26500	25600	30000	30000
	86.34	2700	3240	4590	37	6.3	27300	26300	15700	15700	26500	25600	30000	30000
	102.71	2700	3240	4590	38	4.9	27300	26300	17500	17500	26500	25600	30000	30000
	115.82	2700	3240	4590	38	4.0	27300	26300	18800	18800	26500	25600	30000	30000
	126.91	2700	3240	4590	39	3.5	27300	26300	19900	19900	26500	25600	30000	30000
	147.32	2700	3240	4590	39	2.8	27300	26300	21600	21600	26500	25600	30000	30000
	164.34	2700	3240	4590	39	1.8	27300	26300	23000	23000	26500	25600	30000	30000
	174.19	2700	3240	4590	39	1.6	27300	26300	23700	23700	26500	25600	30000	30000
	197.37	2700	3240	4590	35	1.3	27300	26300	25400	25400	26500	25600	30000	30000

33 177 00 08

K87..

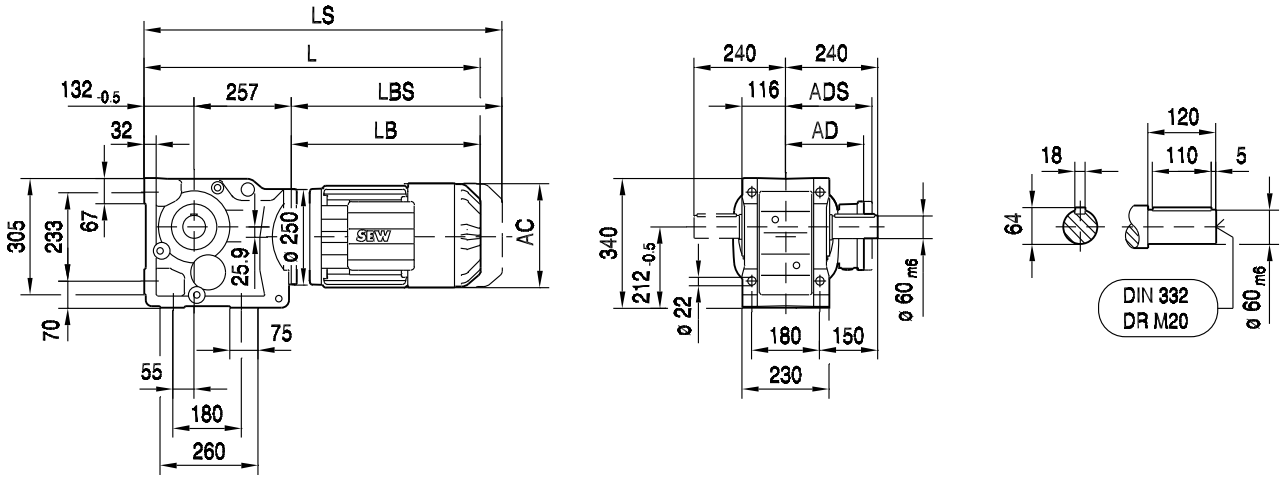

KA87B..

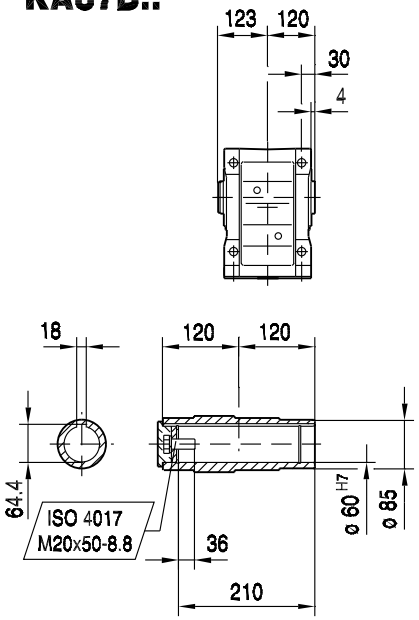

KH87B..

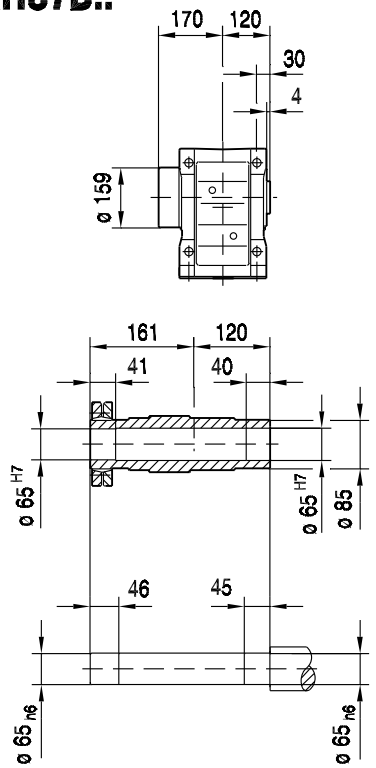

KV87B..

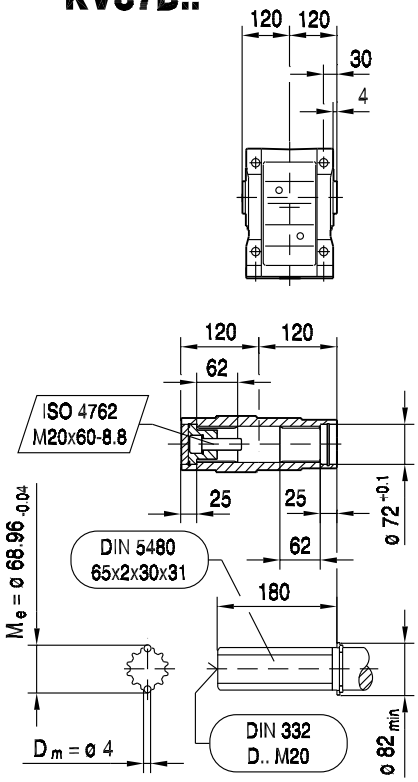

(→ 📖 129)	DRL71M	DRL80S	DRL80M	DRL90L	DRL100L	DRL132S	DRL132MC	DRL160..	DRL180S/M	DRL180L/LC
AC	139	156	156	179	197	221	221	270	316	316
AD	119	128	128	140	157	170	170	228	253	253
ADS	129	139	139	150	158	172	172	228	253	253
L	682	703	734	748	807	888	938	942	1011	1071
LS	747	783	814	834	894	996	1046	1079	1200	1260
LB	293	314	345	359	418	499	549	553	622	682
LBS	358	394	425	445	505	607	657	690	811	871

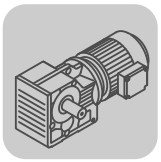

33 178 00 08

KF87..

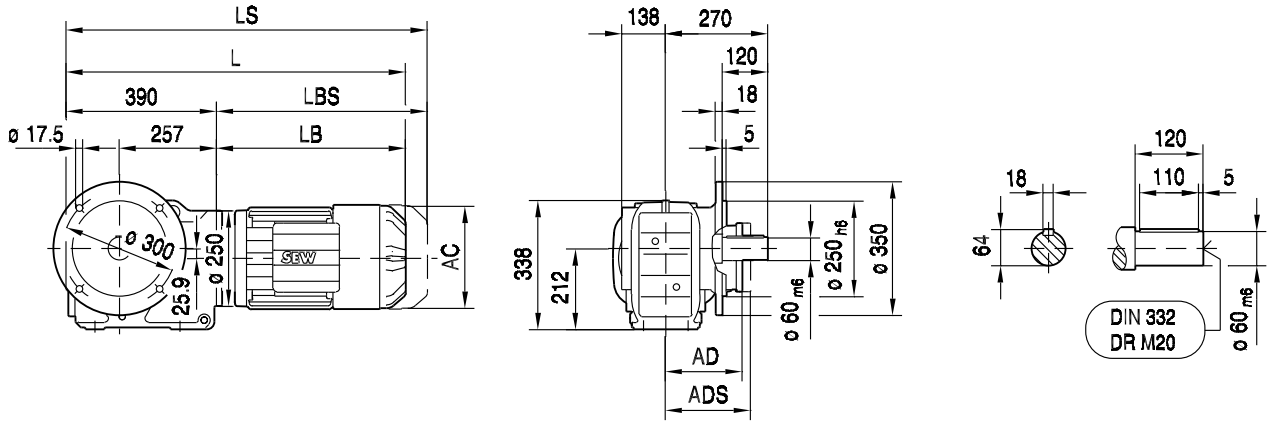

10

KAF87..

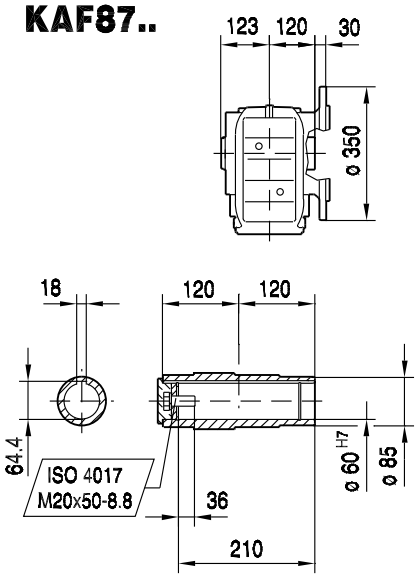

KHF87..

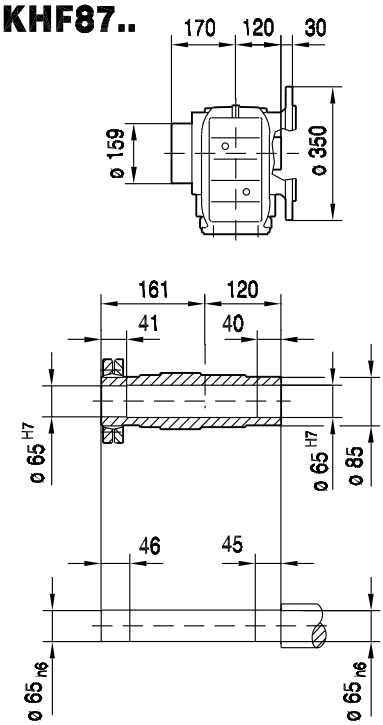

KVF87..

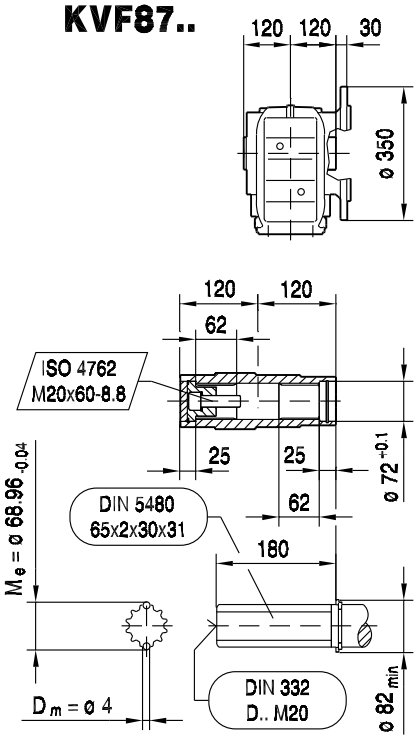

(→ 📖 129)	DRL71M	DRL80S	DRL80M	DRL90L	DRL100L	DRL132S	DRL132MC	DRL160..	DRL180S/M	DRL180L/LC
AC	139	156	156	179	197	221	221	270	316	316
AD	119	128	128	140	157	170	170	228	253	253
ADS	129	139	139	150	158	172	172	228	253	253
L	683	704	735	749	808	889	939	943	1012	1072
LS	748	784	815	835	895	997	1047	1080	1201	1261
LB	293	314	345	359	418	499	549	553	622	682
LBS	358	394	425	445	505	607	657	690	811	871

33 179 00 08

KA87..

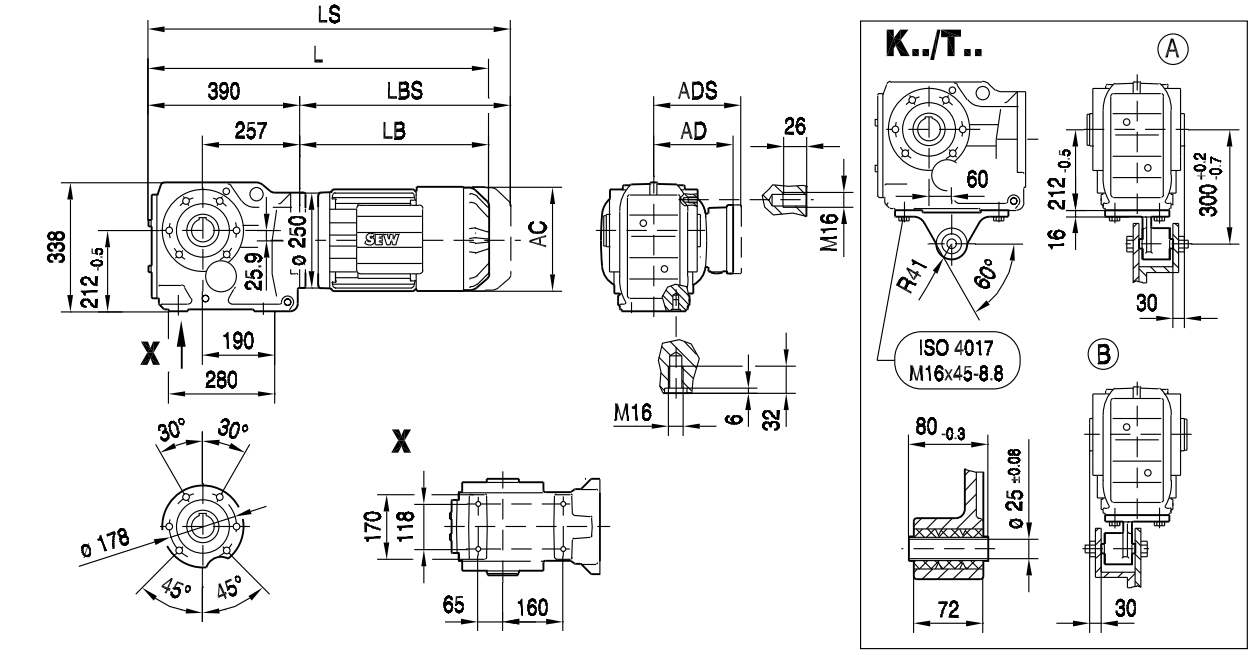

KA87..

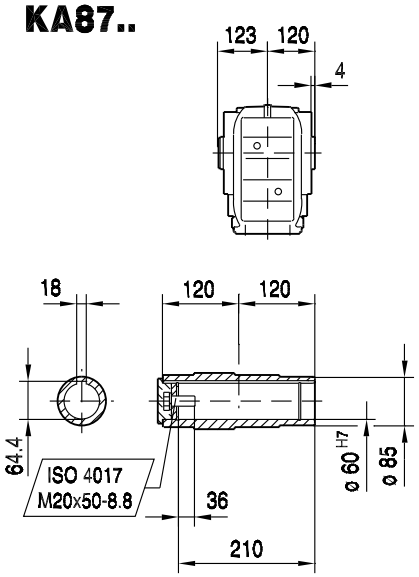

KH87..

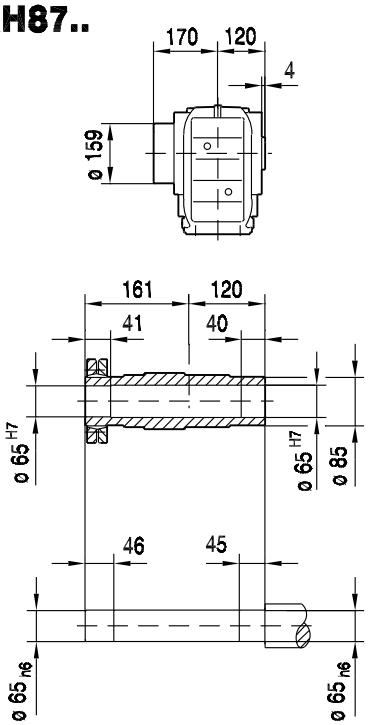

KV87..

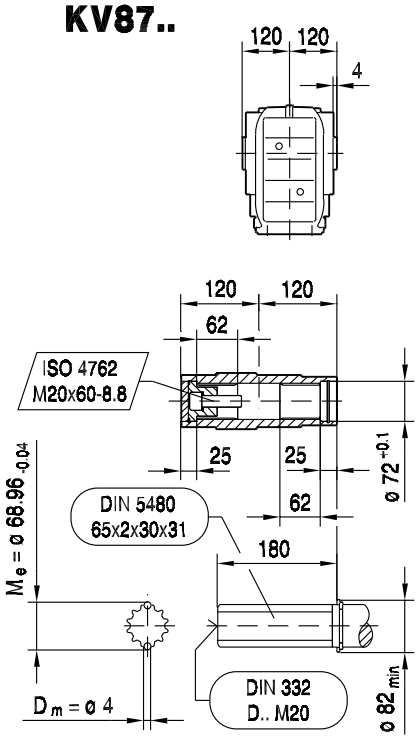

(→ 📖 129)	DRL71M	DRL80S	DRL80M	DRL90L	DRL100L	DRL132S	DRL132MC	DRL160..	DRL180S/M	DRL180L/LC
AC	139	156	156	179	197	221	221	270	316	316
AD	119	128	128	140	157	170	170	228	253	253
ADS	129	139	139	150	158	172	172	228	253	253
L	683	704	735	749	808	889	939	943	1012	1072
LS	748	784	815	835	895	997	1047	1080	1201	1261
LB	293	314	345	359	418	499	549	553	622	682
LBS	358	394	425	445	505	607	657	690	811	871

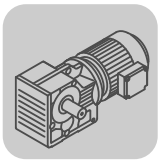

33 180 00 08

KAZ87..

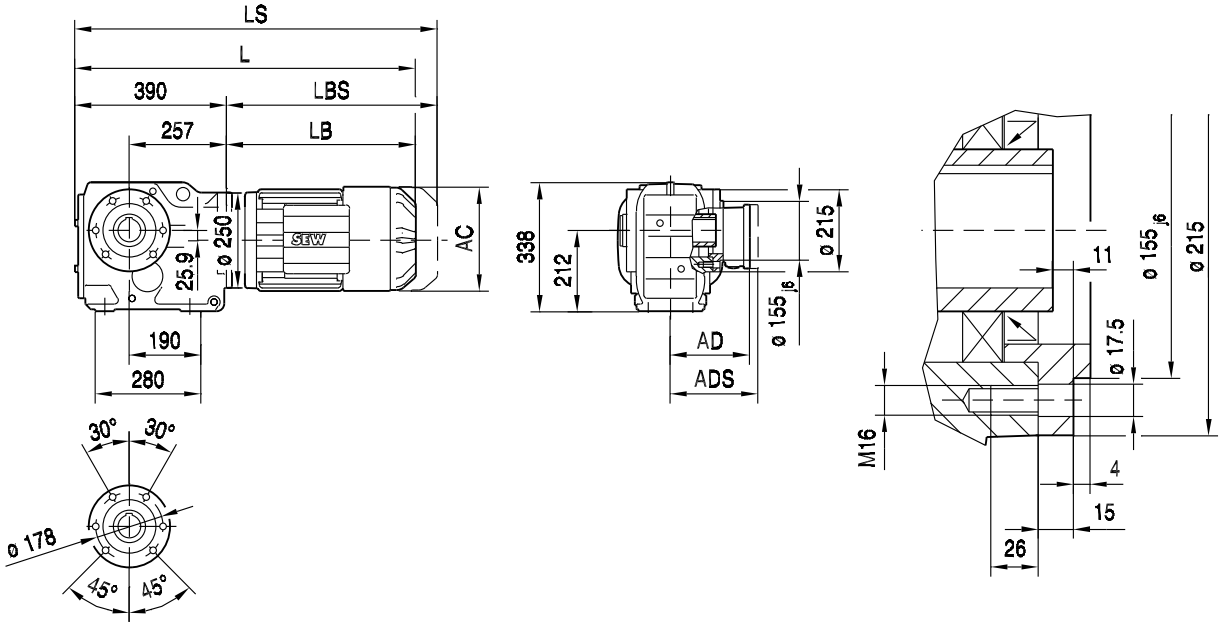

KAZ87..

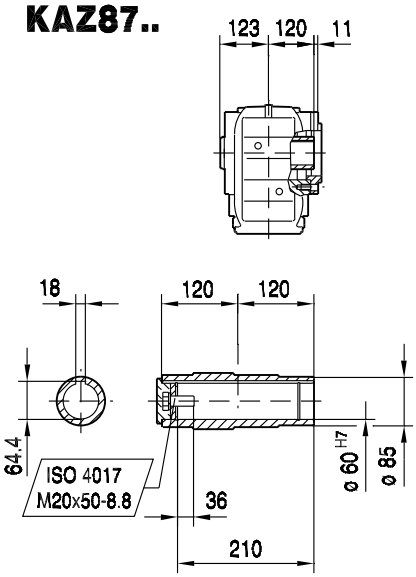

KHZ87..

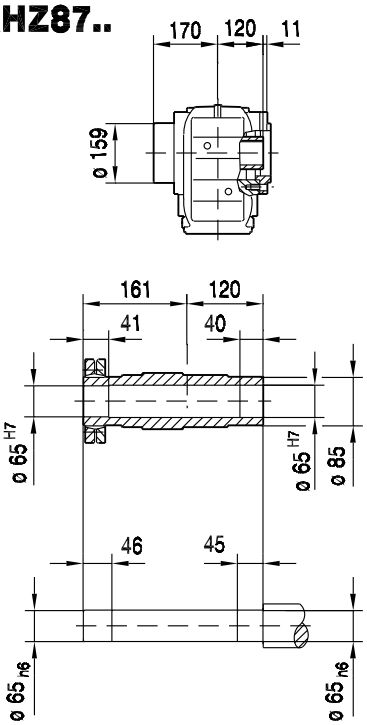

KVZ87..

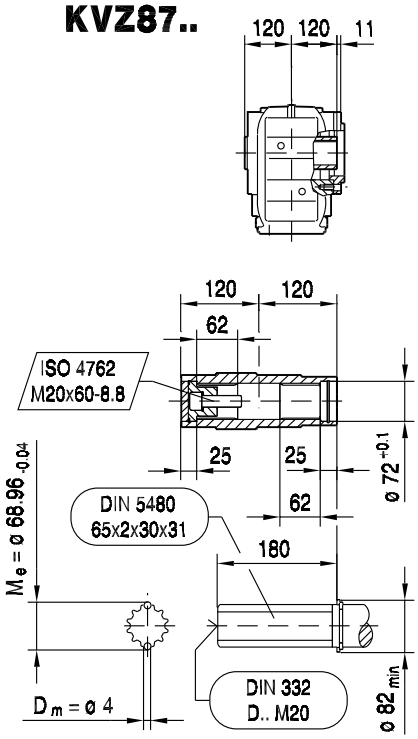

(→ 📖 129)	DRL71M	DRL80S	DRL80M	DRL90L	DRL100L	DRL132S	DRL132MC	DRL160..	DRL180S/M	DRL180L/LC
AC	139	156	156	179	197	221	221	270	316	316
AD	119	128	128	140	157	170	170	228	253	253
ADS	129	139	139	150	158	172	172	228	253	253
L	683	704	735	749	808	889	939	943	1012	1072
LS	748	784	815	835	895	997	1047	1080	1201	1261
LB	293	314	345	359	418	499	549	553	622	682
LBS	358	394	425	445	505	607	657	690	811	871

KT87..

33 181 00 08

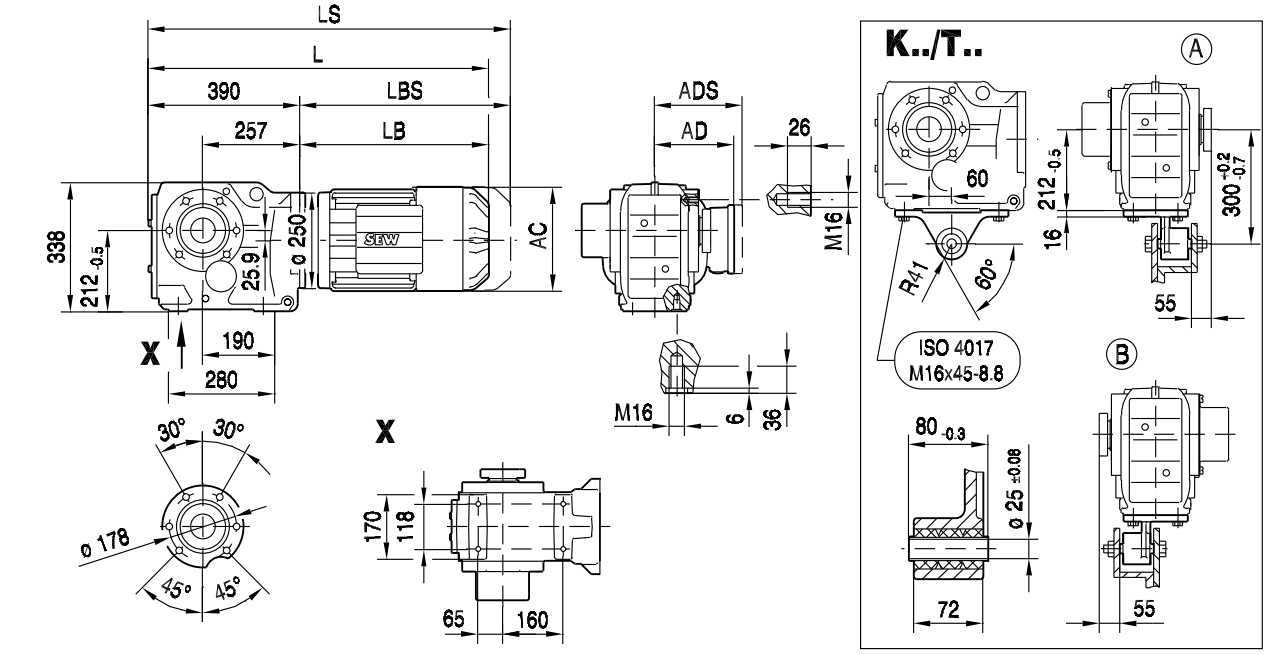

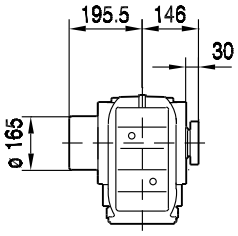

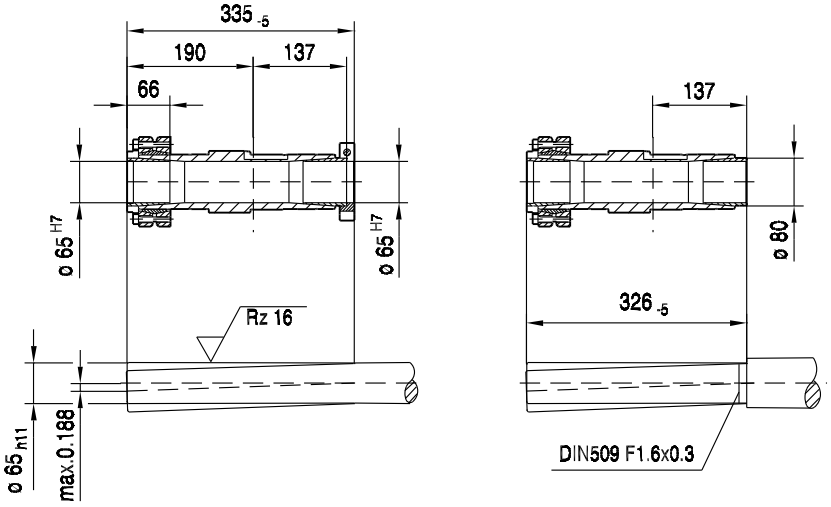

(→ 📖 129)	DRL71M	DRL80S	DRL80M	DRL90L	DRL100L	DRL132S	DRL132MC	DRL160..	DRL180S/M	DRL180L/LC
AC	139	156	156	179	197	221	221	270	316	316
AD	119	128	128	140	157	170	170	228	253	253
ADS	129	139	139	150	158	172	172	228	253	253
L	683	704	735	749	808	889	939	943	1012	1072
LS	748	784	815	835	895	997	1047	1080	1201	1261
LB	293	314	345	359	418	499	549	553	622	682
LBS	358	394	425	445	505	607	657	690	811	871

Diese Seite bleibt aus drucktechnischen Gründen frei.

10.2.7 K 97

M_{aDyn} Nm	i	DRL												
		71M	80S		80M		90L		100L		132S		132MC	
		D2	D1	D2	D1	D2	D1	D2	D1	D2	D1	D2	D1	D2
K97 3	7.54									615	575	1080	940	1440
	8.71									710	665	1250	1080	1670
	10.41									840	795	1490	1290	1990
	11.99									970	920	1720	1490	2300
	13.85									1130	1060	1990	1720	2650
	16.56									1350	1270	2380	2060	3170
	18.96					600	455	830	635	1540	1450	2730	2360	3640
	22.37					705	535	980	750	1820	1710	3220	2790	4290
	24.75	330	235	590	305	780	590	1090	830	2010	1900	3560	3080	>4710
	27.91	375	265	665	345	880	665	1230	930	2270	2140	4010	3480	>4710
	30.82	410	295	735	380	970	735	1360	1030	2510	2360	4430	3840	>4710
	34.23	460	325	820	425	1080	820	1510	1150	2790	2620	>4710	4270	
	38.30	510	365	910	475	1210	910	1690	1280	3120	2940	>4710	>4710	
	41.87									3300	3110	>4710	>4710	>4710
	47.93					1480	1120	2070	1570	3820	3600	>4710	>4710	>4710
	56.55					1750	1320	2440	1860	4510	4250	>4710	>4710	>4710
	62.55	820	585	1460	760	1940	1460	2700	2050	>4710	4700	>4710	>4710	>4710
	70.54	920	660	1650	860	2180	1650	3050	2320	>4710	>4710	>4710	>4710	>4710
	77.89	1020	730	1830	950	2410	1830	3360	2560	>4710	>4710	>4710	>4710	>4710
	86.52	1130	810	2030	1050	2680	2030	3740	2840	>4710	>4710	>4710	>4710	
	96.80	1270	900	2270	1180	3000	2270	4180	3180	>4710	>4710	>4710	>4710	
	105.13	1380	980	2470	1280	3260	2470	4540	3450	>4710	>4710			
	123.93	1630	1160	2910	1510	3840	2910	>4710	4070	>4710	>4710			
	140.28	1840	1310	3290	1710	4350	3290	>4710	4610					
	153.21	2010	1440	3600	1870	>4710	3600	>4710	>4710					
	176.05	2310	1650	4130	2150	>4710	4130		>4710					

→ 124

m kg	s	DRL						
		71M	80S	80M	90L	100L	132S	132MC
K97	3	160	160	165	170	180	195	210
KF: + 20.1 kg / KA: + -18.2 kg / KAF: + 6.7 kg								

M_{aDyn} Nm	i	DRL 160M D1	160M D2	160MC D1	160MC D2	180S D1	180S D2	180M D1	180M D2	180L D1	180L D2	180LC D1	180LC D2	200L D1	200L D2	225S D1	225S D2	225MC D1
	7.54	1190	2020	1330	2310	1520	2750	1800	3110	2310	>3560	3040	>3560	3430	>3560	>3560	>3560	>3560
	8.71	1370	2340	1540	2670	1750	3170	2090	>3590	2670	>3590	3510	>3590	>3590	>3590	>3590	>3590	>3590
	10.41	1640	2790	1840	3190	2090	>3610	2490	>3610	3190	>3610	>3610	>3610	>3610	>3610	>3610	>3610	>3610
	11.99	1890	3220	2120	3680	2410	4370	2870	>4710	3680	>4710	>4710	>4710	>4710	>4710	>4710	>4710	>4710
	13.85	2190	3720	2450	4250	2790	>4710	3320	>4710	4250	>4710	>4710	>4710	>4710	>4710	>4710	>4710	>4710
	16.56	2620	4450	2940	>4710	3330	>4710	3970	>4710	>4710	>4710	>4710	>4710	>4710	>4710	>4710	>4710	>4710
	18.96	3000	>4710	3360	>4710	3820	>4710	4550	>4710	>4710	>4710	>4710	>4710	>4710	>4710	>4710	>4710	>4710
	22.37	3540	>4710	3970	>4710	4500	>4710	>4710	>4710	>4710	>4710	>4710		>4710		>4710		
	24.75	3920	>4710	4390	>4710	>4710	>4710	>4710	>4710	>4710	>4710	>4710		>4710		>4710		
	27.91	4420	>4710	>4710	>4710	>4710		>4710		>4710								
	30.82	>4710	>4710	>4710	>4710	>4710		>4710		>4710								
	34.23	>4710		>4710														
K97	38.30	>4710		>4710														
3	41.87	>4710	>4710	>4710	>4710	>4710	>4710	>4710	>4710	>4710	>4710	>4710	>4710	>4710	>4710	>4710	>4710	>4710
	47.93	>4710	>4710	>4710	>4710	>4710	>4710	>4710	>4710	>4710	>4710	>4710	>4710	>4710	>4710	>4710	>4710	>4710
	56.55	>4710	>4710	>4710	>4710	>4710	>4710	>4710	>4710	>4710	>4710	>4710		>4710		>4710		
	62.55	>4710	>4710	>4710	>4710	>4710	>4710	>4710	>4710	>4710	>4710	>4710		>4710		>4710		
	70.54	>4710	>4710	>4710	>4710	>4710		>4710		>4710								
	77.89	>4710	>4710	>4710	>4710	>4710		>4710		>4710								
	86.52	>4710		>4710														
	96.80	>4710		>4710														
	105.13																	
	123.93																	
	140.28																	
	153.21																	
	176.05																	

→ 124

m kg	s	DRL 160M	160MC	180S	180M	180L	180LC	200L	225S	225MC
K97	3	230	235	265	280	295	305	400	430	475
KF: + 20.1 kg / KA: + -18.2 kg / KAF: + 6.7 kg										

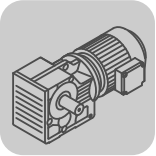

K..DRL
K..Nm

DRL..	i	n_{epk} 1/min	η %	c_{TG} K Nm/'	KF Nm/'	KA Nm/'	KAF Nm/'	φ /R '
K97 3	7.54	3597	96	264	237	581	581	10
	8.71	4500	96	264	237	581	581	10
	10.41	4500	96	264	237	581	581	10
	11.99	4500	96	301	267	791	791	8
	13.85	4500	96	301	267	791	791	8
	16.56	4500	96	301	267	791	791	8
	18.96	4500	96	301	267	791	791	8
	22.37	4500	96	301	267	791	791	8
	24.75	4500	96	301	267	791	791	8
	27.91	4500	96	301	267	791	791	8
	30.82	4500	96	301	267	791	791	7
	34.23	4500	96	301	267	791	791	7
	38.30	4500	96	301	267	791	791	7
	41.87	4378	93	314	278	892	892	7
	47.93	4500	94	314	278	892	892	7
	56.55	4500	94	314	278	892	892	7
	62.55	4500	94	314	278	892	892	7
	70.54	4500	94	314	278	892	892	7
	77.89	4500	94	314	278	892	892	7
	86.52	4500	94	314	278	892	892	7
	96.80	4500	94	314	278	892	892	7
	105.13	4500	94	314	278	892	892	7
	123.93	4500	94	314	278	892	892	7
	140.28	4500	94	314	278	892	892	7
	153.21	4500	94	314	278	892	892	7
	176.05	4500	94	314	278	892	892	7

DRL.. n_e = 1400	i	M_{amax} Nm	M_{apk} Nm	$M_{aNotaus}$ Nm	n_{ak} 1/min	J_G 10^{-4} kgm^2	F_{Ramax} K N	KF N	KA N	KAF N	F_{Rapk} K N	KF N	KA N	KAF N
K97 3	7.54	2400	3560	4080	279	120	15700	18100	10200	10200	40000	39300	40000	40000
	8.71	2660	3590	4522	218	94	15800	18200	9930	9930	40000	39300	40000	40000
	10.41	2870	3610	4879	183	71	16400	19000	10300	10300	40000	39300	40000	40000
	11.99	3890	4710	6613	167	115	16200	18800	9100	9100	40000	38300	40000	40000
	13.85	4300	4710	7310	130	91	16100	18900	8520	8520	40000	38300	40000	40000
	16.56	4300	4710	7310	139	69	17800	20700	10300	10300	40000	38300	40000	40000
	18.96	4300	4710	7310	148	55	19100	22100	11700	11700	40000	38300	40000	40000
	22.37	4300	4710	7310	156	43	20900	24000	13500	13500	40000	38300	40000	40000
	24.75	4300	4710	7310	166	37	22000	25200	14700	14700	40000	38300	40000	40000
	27.91	4300	4710	7310	168	30	23300	26600	16100	16100	40000	38300	40000	40000
	30.82	4300	4710	7310	172	26	24500	27800	17300	17300	40000	38300	40000	40000
	34.23	4300	4710	7310	178	22	25700	29200	18600	18600	40000	38300	40000	40000
	38.30	4300	4710	7310	183	18	27100	30700	20100	20100	40000	38300	40000	40000
	41.87	4300	4710	7310	36	42	28300	31900	21300	21300	40000	38300	40000	40000
	47.93	4300	4710	7310	31	35	30000	33800	23300	23300	40000	38300	40000	40000
	56.55	4300	4710	7310	30	28	32300	36300	25700	25700	40000	38300	40000	40000
	62.55	4300	4710	7310	30	25	33800	37800	27300	27300	40000	38300	40000	40000
	70.54	4300	4710	7310	31	21	35600	38700	29200	29200	40000	38300	40000	40000
	77.89	4300	4710	7310	32	18	37100	38700	30900	30900	40000	38300	40000	40000
	86.52	4300	4710	7310	32	16	38800	38700	32700	32700	40000	38300	40000	40000
	96.80	4300	4710	7310	33	13	40000	38700	34700	34700	40000	38300	40000	40000
	105.13	4300	4710	7310	33	12	40000	38700	36300	36300	40000	38300	40000	40000
	123.93	4300	4710	7310	33	9.3	40000	38700	39500	39500	40000	38300	40000	40000
	140.28	4300	4710	7310	34	5.9	40000	38700	40000	40000	40000	38300	40000	40000
	153.21	4300	4710	7310	34	5.2	40000	38700	40000	40000	40000	38300	40000	40000
	176.05	4300	4710	7310	34	4.0	40000	38700	40000	40000	40000	38300	40000	40000

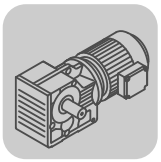

33 182 00 08

K97..

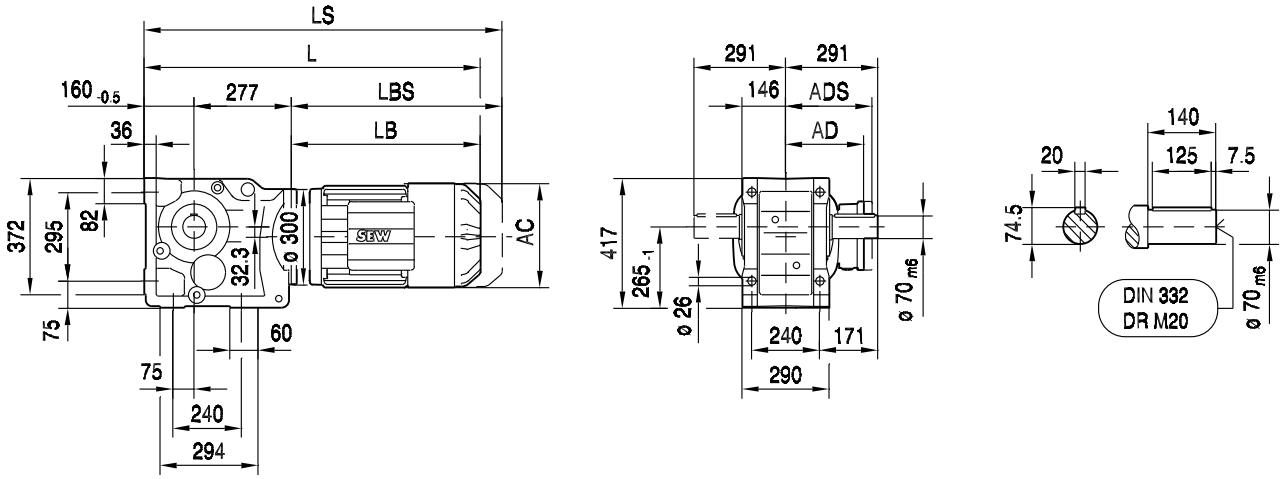

KA97B..

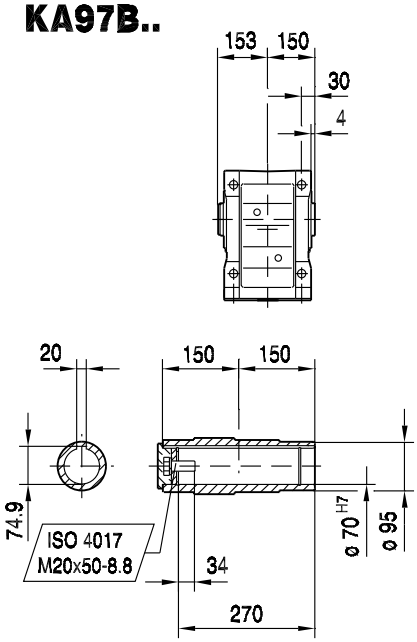

KH97B..

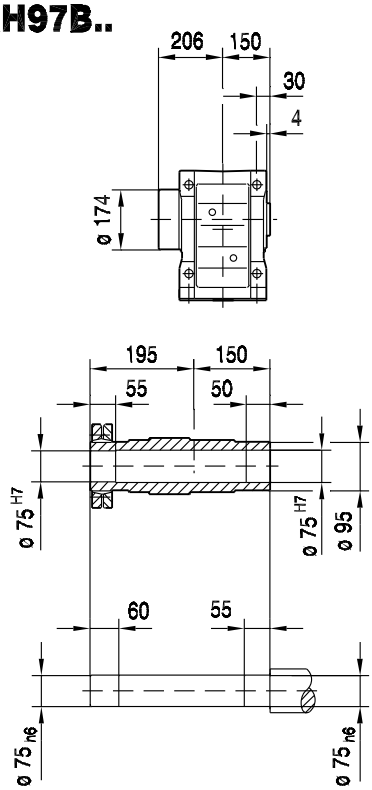

KV97B..

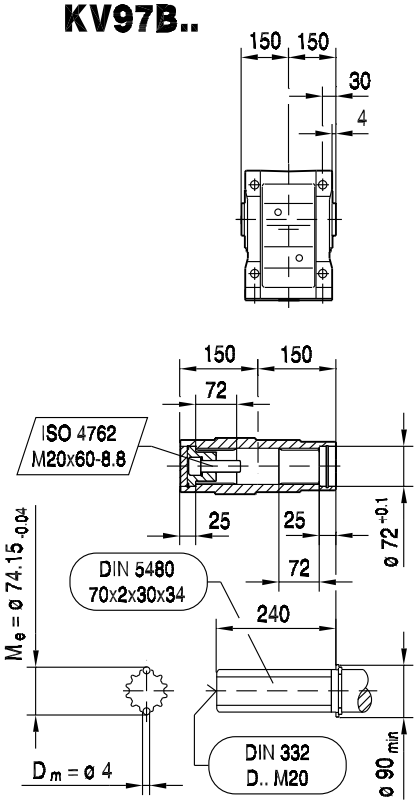

(→ 📖 129)	DRL80 S	DRL80 M	DRL90 L	DRL100L	DRL132S	DRL132MC	DRL160..	DRL180S/M	DRL180L/LC	DRL225S	DRL225MC
AC	156	156	179	197	221	221	270	316	316	394	394
AD	128	128	140	157	170	170	228	253	253	283	283
ADS	139	139	150	158	172	172	228	253	253	283	283
L	746	777	791	850	931	981	985	1054	1114	1187	1237
LS	826	857	877	937	1039	1089	1122	1243	1303	1392	1442
LB	309	340	354	413	494	544	548	617	677	750	800
LBS	389	420	440	500	602	652	685	806	866	955	1005

KF97..

33 183 00 08

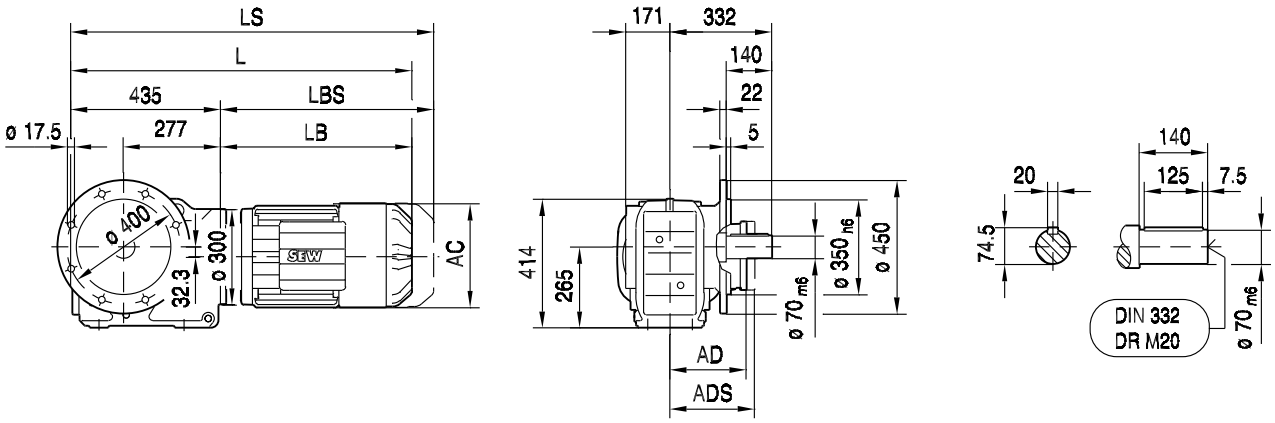

KAF97..

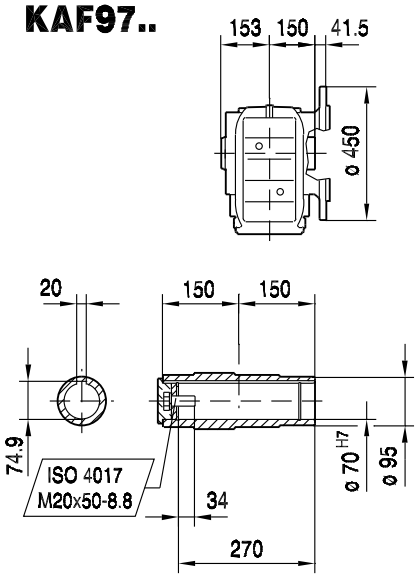

KHF97..

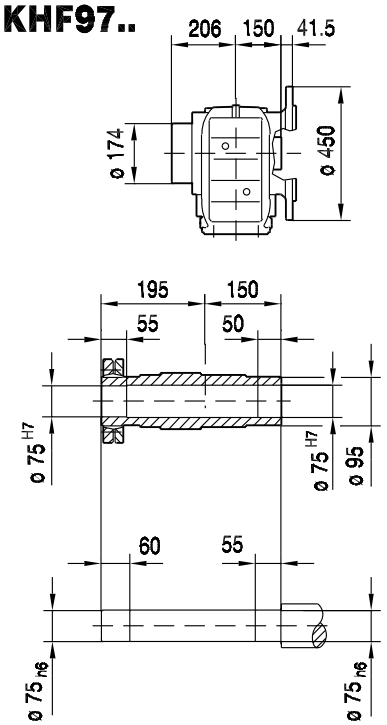

KVF97..

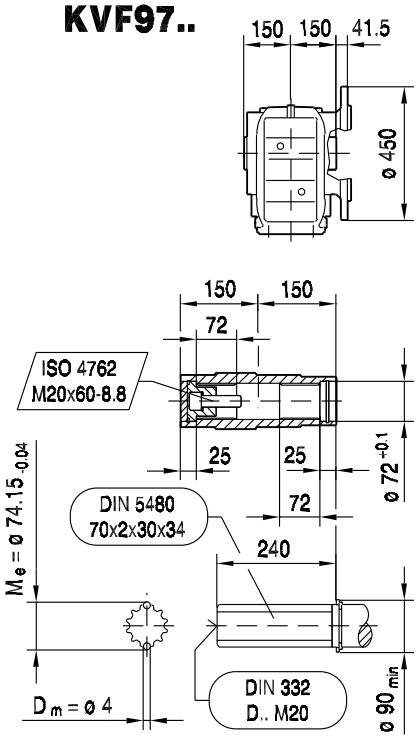

(→ 📖 129)	DRL80 S	DRL80 M	DRL90 L	DRL100L	DRL132S	DRL132MC	DRL160..	DRL180S/M	DRL180L/LC	DRL225S	DRL225MC
AC	156	156	179	197	221	221	270	316	316	394	394
AD	128	128	140	157	170	170	228	253	253	283	283
ADS	139	139	150	158	172	172	228	253	253	283	283
L	744	775	789	848	929	979	983	1052	1112	1185	1235
LS	824	855	875	935	1037	1087	1120	1241	1301	1390	1440
LB	309	340	354	413	494	544	548	617	677	750	800
LBS	389	420	440	500	602	652	685	806	866	955	1005

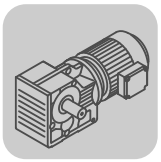

33 184 00 08

KA97..

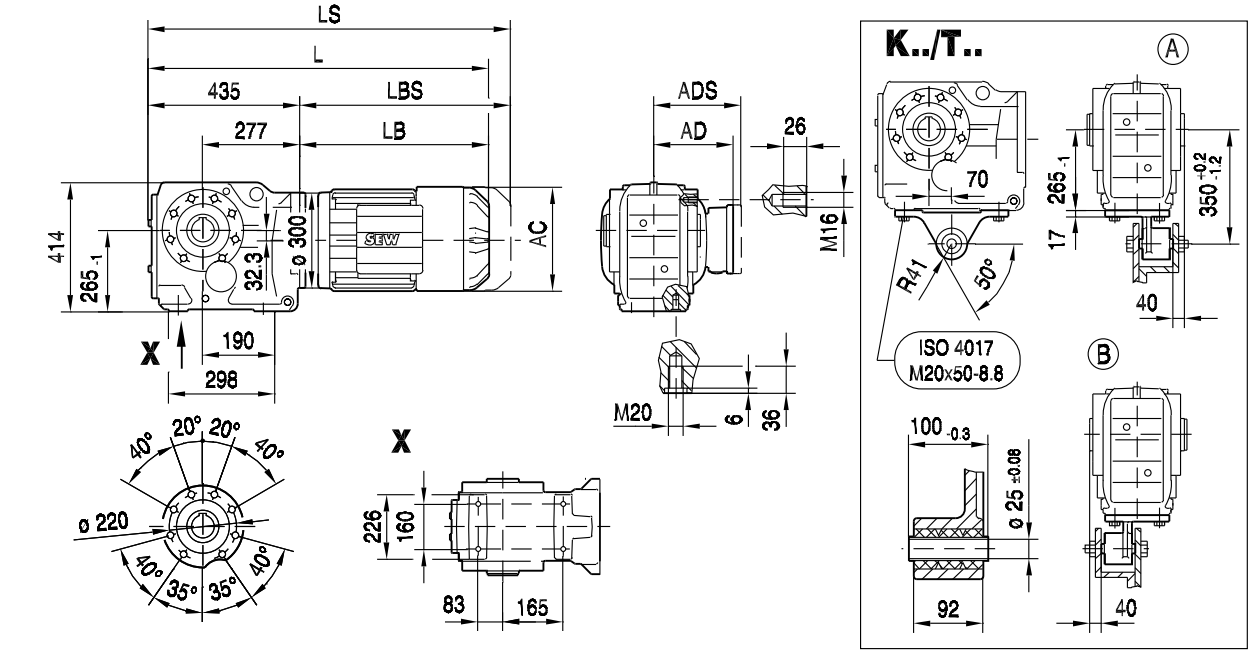

10

KA97..

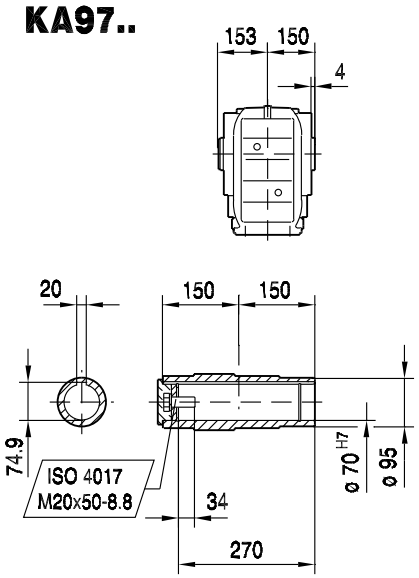

KH97..

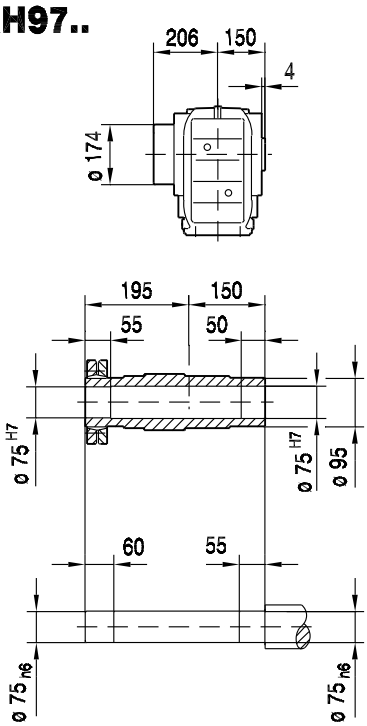

KV97..

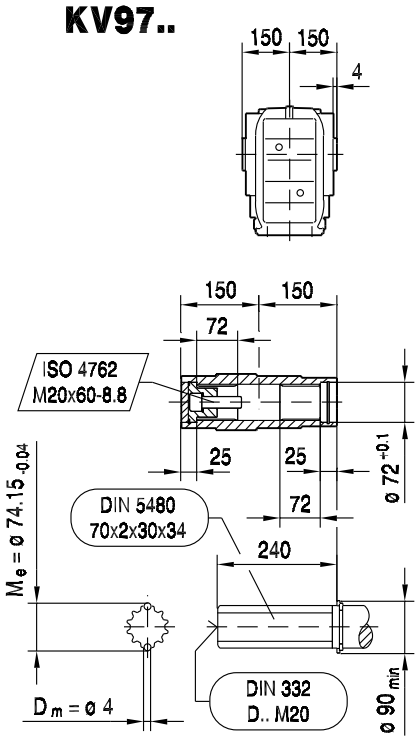

(→ 📖 129)	DRL80 S	DRL80 M	DRL90 L	DRL100L	DRL132S	DRL132MC	DRL160..	DRL180S/M	DRL180L/LC	DRL225S	DRL225MC
AC	156	156	179	197	221	221	270	316	316	394	394
AD	128	128	140	157	170	170	228	253	253	283	283
ADS	139	139	150	158	172	172	228	253	253	283	283
L	744	775	789	848	929	979	983	1052	1112	1185	1235
LS	824	855	875	935	1037	1087	1120	1241	1301	1390	1440
LB	309	340	354	413	494	544	548	617	677	750	800
LBS	389	420	440	500	602	652	685	806	866	955	1005

KAZ97..

33 185 00 08

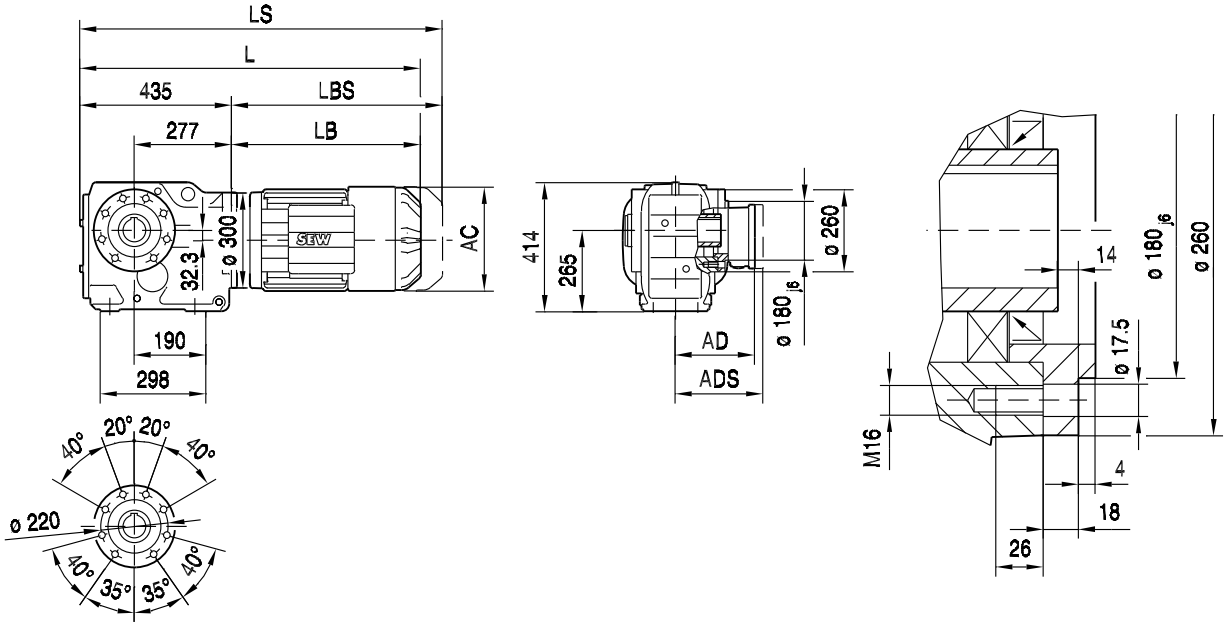

KAZ97..

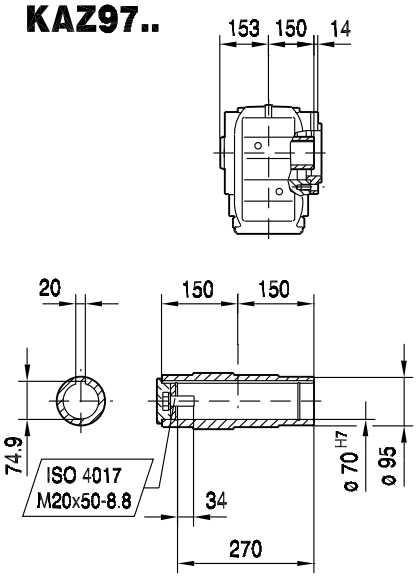

KHZ97..

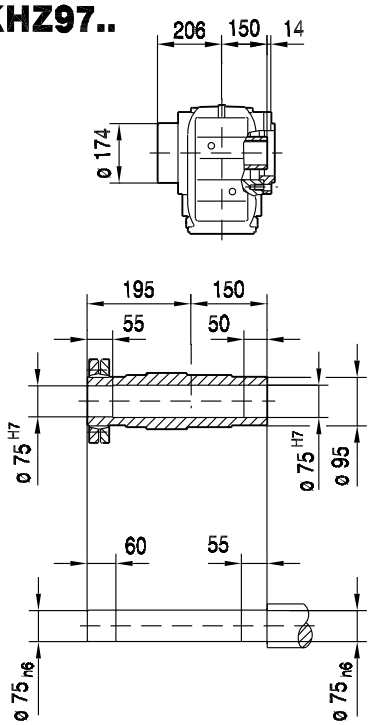

KVZ97..

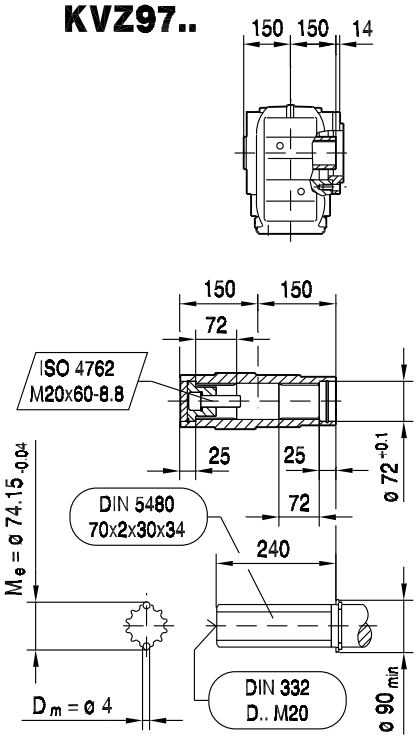

(→ 📖 129)	DRL80 S	DRL80 M	DRL90 L	DRL100L	DRL132S	DRL132MC	DRL160..	DRL180S/M	DRL180L/LC	DRL225S	DRL225MC
AC	156	156	179	197	221	221	270	316	316	394	394
AD	128	128	140	157	170	170	228	253	253	283	283
ADS	139	139	150	158	172	172	228	253	253	283	283
L	744	775	789	848	929	979	983	1052	1112	1185	1235
LS	824	855	875	935	1037	1087	1120	1241	1301	1390	1440
LB	309	340	354	413	494	544	548	617	677	750	800
LBS	389	420	440	500	602	652	685	806	866	955	1005

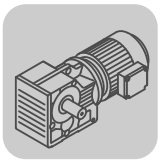

33 186 00 08

KT97..

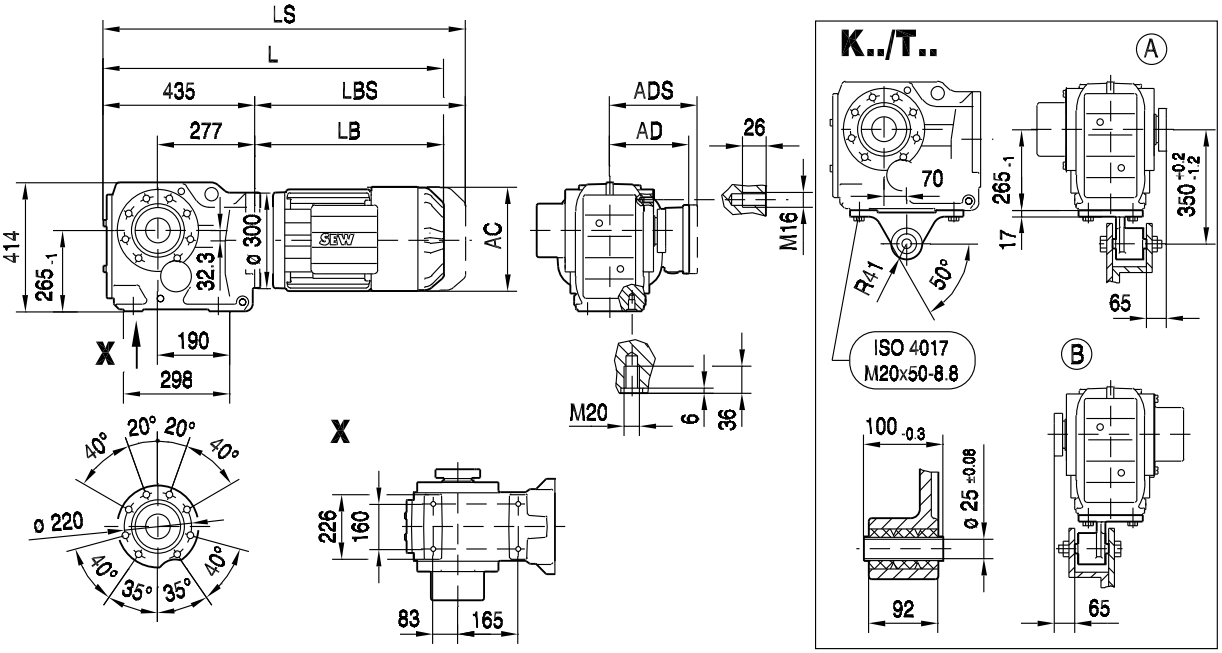

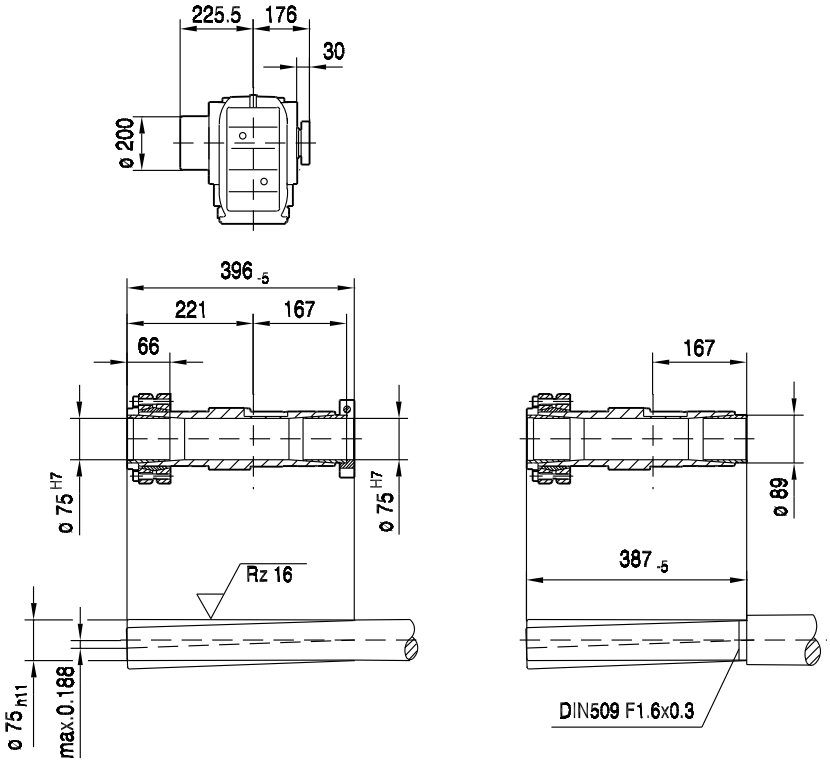

(→ 📖 129)	DRL80 S	DRL80 M	DRL90 L	DRL100L	DRL132S	DRL132MC	DRL160..	DRL180S/M	DRL180L/LC	DRL225S	DRL225MC
AC	156	156	179	197	221	221	270	316	316	394	394
AD	128	128	140	157	170	170	228	253	253	283	283
ADS	139	139	150	158	172	172	228	253	253	283	283
L	744	775	789	848	929	979	983	1052	1112	1185	1235
LS	824	855	875	935	1037	1087	1120	1241	1301	1390	1440
LB	309	340	354	413	494	544	548	617	677	750	800
LBS	389	420	440	500	602	652	685	806	866	955	1005

10.2.8 K 107

M_{aDyn} Nm	i	DRL													
		90L		100L		132S		132MC		160M		160MC		180S	
		D1	D2	D1	D2	D1	D2	D1	D2	D1	D2	D1	D2	D1	D2
	7.35						1050	910	1410	1160	1970	1300	2250	1480	2680
	8.69				705	665	1250	1080	1660	1370	2330	1540	2660	1750	3170
	9.94				810	760	1430	1240	1900	1570	2670	1760	3050	2000	3620
	11.73				950	900	1680	1460	2250	1850	3150	2080	3600	2360	4270
	13.43	320	590	450	1090	1030	1930	1670	2570	2120	3600	2380	4120	2700	4890
	14.64				1190	1120	2100	1820	2810	2310	3930	2600	4490	2950	5340
	16.75				1360	1280	2410	2090	3210	2650	4500	2970	5140	3370	6110
	19.74				1610	1510	2840	2460	3790	3120	5300	3500	6060	3970	7200
	22.62	540	990	760	1840	1730	3250	2820	4340	3580	6080	4010	6940	4560	8250
	26.32	630	1160	880	2140	2020	3790	3280	5050	4160	7070	4670	8080	5300	>8370
	29.00	695	1280	970	2360	2220	4170	3610	5560	4590	7790	5150	>8400	5840	>8400
K107	31.28						4410	3820	5880	4850	8230	5430	>9090	6170	>9090
3	32.69	780	1440	1090	2660	2510	4700	4070	6270	5170	>8430	5800	>8430	6590	
	37.00				2950	2780	5210	4520	6950	5730	>9090	6430	>9090	7300	>9090
	42.33				3380	3180	5960	5170	7950	6560	>9090	7360	>9090	8350	>9090
	49.90				3980	3750	7030	6090	>9090	7730	>9090	8670	>9090	>9090	>9090
	57.17	1340	2470	1880	4560	4290	8060	6980	>9090	8860	>9090	>9090	>9090	>9090	>9090
	66.52	1560	2870	2180	5310	5000	>9090	8120	>9090	>9090	>9090	>9090	>9090	>9090	>9090
	73.30	1720	3160	2410	5850	5510	>9090	8950	>9090	>9090	>9090	>9090	>9090	>9090	>9090
	82.61	1940	3570	2710	6600	6210	>9090	>9090	>9090	>9090	>9090	>9090	>9090	>9090	
	90.96	2130	3930	2990	7260	6840	>9090	>9090	>9090	>9090	>9090	>9090	>9090	>9090	
	100.75	2360	4350	3310	8040	7570	>9090	>9090		>9090		>9090			
	112.41	2640	4860	3690	8980	8450	>9090	>9090		>9090		>9090			
	121.46	2850	5250	3990	>9090	>9090									
	143.47	3370	6200	4720	>9090	>9090									

→ 124

m kg		DRL						
	s	90L	100L	132S	132MC	160M	160MC	180S
K107	3	285	295	310	325	345	350	380
KF: + 12.1 kg / KA: + -27.2 kg / KAF: + -3.2 kg								

M_{aDyn} Nm	i	DRL										
		180M		180L		180LC		200L		225S		225MC
		D1	D2	D1	D2	D1	D2	D1	D2	D1	D2	D1
K107 3	7.35	1760	3030	2250	3660	2960	4230	3350	>4720	3660	>4720	>4720
	8.69	2080	3580	2660	4330	3500	>4780	3960	>4780	4330	>4780	>4780
	9.94	2380	4100	3050	>4840	4000	>4840	4530	>4840	>4840	>4840	>4840
	11.73	2810	4840	3600	>4910	4720	>4910	>4910	>4910	>4910	>4910	>4910
	13.43	3220	>4940	4120	>4940	>4940	>4940	>4940	>4940	>4940	>4940	>4940
	14.64	3510	6040	4490	7300	5900	>8060	6670	>8060	7300	>8060	>8060
	16.75	4020	6910	5140	>8160	6750	>8160	7630	>8160	>8160	>8160	>8160
	19.74	4730	8140	6060	>8270	7950	>8270	>8270	>8270	>8270	>8270	>8270
	22.62	5420	>8320	6940	>8320	>8320	>8320	>8320	>8320	>8320	>8320	>8320
	26.32	6310	>8370	8080	>8370	>8370		>8370		>8370		
	29.00	6960	>8400	>8400	>8400	>8400		>8400		>8400		
	31.28	7350	>9090	>9090	>9090	>9090	>9090	>9090	>9090	>9090	>9090	>9090
	32.69	7840		>8430								
	37.00	8690	>9090	>9090	>9090	>9090	>9090	>9090	>9090	>9090	>9090	>9090
	42.33	>9090	>9090	>9090	>9090	>9090	>9090	>9090	>9090	>9090	>9090	>9090
	49.90	>9090	>9090	>9090	>9090	>9090	>9090	>9090	>9090	>9090	>9090	>9090
	57.17	>9090	>9090	>9090	>9090	>9090	>9090	>9090	>9090	>9090	>9090	>9090
	66.52	>9090	>9090	>9090	>9090	>9090		>9090		>9090		
	73.30	>9090	>9090	>9090	>9090	>9090		>9090		>9090		
	82.61	>9090		>9090								
	90.96	>9090		>9090								
	100.75											
	112.41											
	121.46											
	143.47											

	→ 📖 **124**

m kg		DRL					
	s	180M	180L	180LC	200L	225S	225MC
K107	3	395	405	420	520	550	590
KF: + 12.1 kg / KA: + -27.2 kg / KAF: + -3.2 kg							

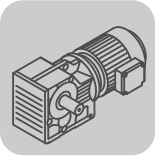

K..DRL
K..Nm

DRL..	i	n_{epk} 1/min	η %	c_{TG} K Nm/'	KF Nm/'	KA Nm/'	KAF Nm/'	φ /R '
K107 3	7.35	3197	96	519	488	862	862	9
	8.69	3597	96	519	488	862	862	9
	9.94	4500	96	519	488	862	862	9
	11.73	4500	96	519	488	862	862	9
	13.43	4500	96	519	488	862	862	9
	14.64	4500	96	661	612	1341	1341	7
	16.75	4500	96	661	612	1341	1341	7
	19.74	4500	96	661	612	1341	1341	6
	22.62	4500	96	661	612	1341	1341	6
	26.32	4500	96	661	612	1341	1341	6
	29.00	4500	96	661	612	1341	1341	6
	31.28	3197	94	730	670	1660	1660	6
	32.69	4500	96	661	612	1341	1341	6
	37.00	3597	94	730	670	1660	1660	6
	42.33	3924	94	730	670	1660	1660	6
	49.90	4378	94	730	670	1660	1660	6
	57.17	4500	94	730	670	1660	1660	6
	66.52	4500	94	730	670	1660	1660	6
	73.30	4500	94	730	670	1660	1660	6
	82.61	4500	94	730	670	1660	1660	6
	90.96	4500	94	730	670	1660	1660	6
	100.75	4500	94	730	670	1660	1660	6
	112.41	4500	94	730	670	1660	1660	6
	121.46	4500	94	730	670	1660	1660	6
	143.47	4500	94	730	670	1660	1660	6

DRL.. n_e = 1400	i	M_{amax} Nm	M_{apk} Nm	$M_{aNotaus}$ Nm	n_{ak} 1/min	J_G 10^{-4} kgm^2	F_{Ramax} K N	KF N	KA N	KAF N	F_{Rapk} K N	KF N	KA N	KAF N
K107 3	7.35	3600	4720	6120	286	231	24400	28500	9900	47100	65000	65000	65000	65000
	8.69	4070	4780	6919	207	170	24600	29100	9270	48300	65000	65000	65000	65000
	9.94	4190	4840	7123	201	136	25800	30500	10000	50500	65000	65000	65000	65000
	11.73	4300	4910	7310	196	104	27500	32300	11100	53500	65000	65000	65000	65000
	13.43	4300	4940	7310	201	82	29200	34200	12600	56500	65000	65000	65000	65000
	14.64	6890	8060	11713	123	163	19500	23000	6180	51700	65000	65000	65000	65000
	16.75	7050	8160	11985	119	131	21000	24800	7080	54200	65000	65000	65000	65000
	19.74	7200	8270	12240	117	100	23200	27300	8440	57700	65000	65000	65000	65000
	22.62	7200	8320	12240	124	80	25800	30300	10100	61200	65000	65000	65000	65000
	26.32	7200	8370	12240	129	63	28800	33600	12100	65000	65000	65000	65000	65000
	29.00	7200	8400	12240	134	54	30700	35800	13400	65000	65000	65000	65000	65000
	31.28	6800	9090	11560	48	112	34200	39700	16100	65000	65000	65000	65000	65000
	32.69	7200	8430	12240	138	45	33200	38600	15100	65000	65000	65000	65000	65000
	37.00	7200	9090	12240	41	86	35800	41500	17000	65000	65000	65000	65000	65000
	42.33	7360	9090	12512	38	72	37900	44000	18400	65000	65000	65000	65000	65000
	49.90	7840	9090	13328	30	58	39300	45600	19200	65000	65000	65000	65000	65000
	57.17	8000	9090	13600	30	48	41700	48400	20900	65000	65000	65000	65000	65000
	66.52	8000	9090	13600	30	40	45400	52500	23600	65000	65000	65000	65000	65000
	73.30	8000	9090	13600	30	35	47900	55300	25400	65000	65000	65000	65000	65000
	82.61	8000	9090	13600	30	29	50900	58700	27700	65000	65000	65000	65000	65000
	90.96	8000	9090	13600	31	25	53500	61600	29600	65000	65000	65000	65000	65000
	100.75	8000	9090	13600	32	20	56200	64700	31700	65000	65000	65000	65000	65000
	112.41	8000	9090	13600	32	17	59300	65000	34000	65000	65000	65000	65000	65000
	121.46	8000	9090	13600	32	15	61500	65000	35700	65000	65000	65000	65000	65000
	143.47	8000	9090	13600	32	12	65000	65000	39600	65000	65000	65000	65000	65000

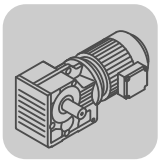

33 187 00 08

K107..

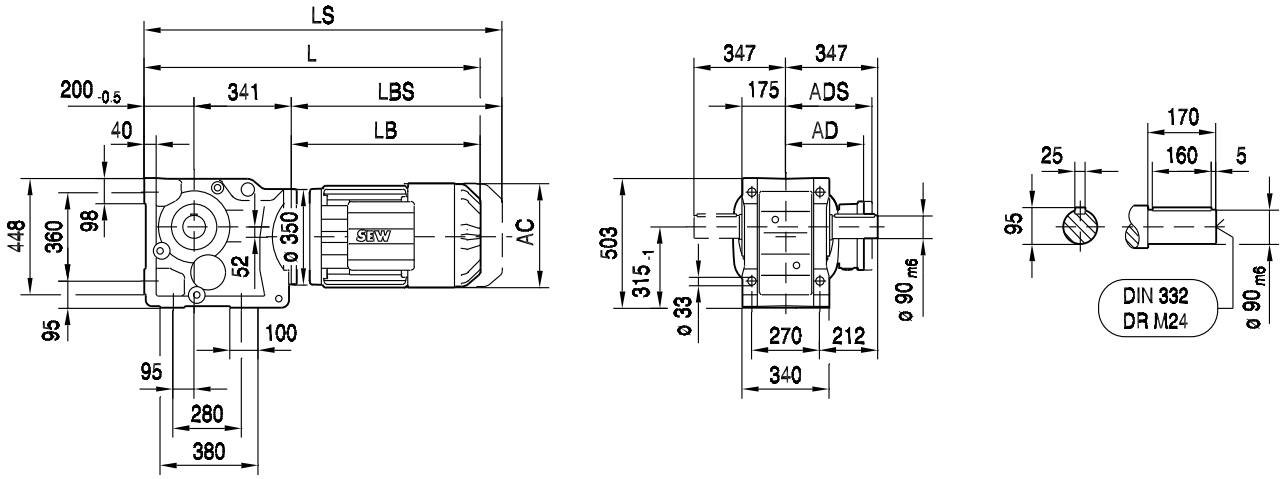

KA107B..

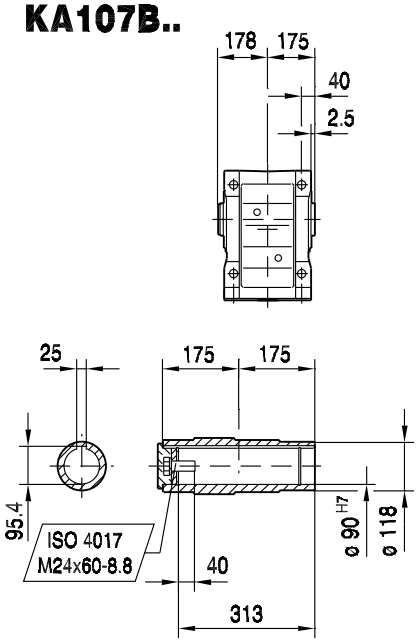

KH107B..

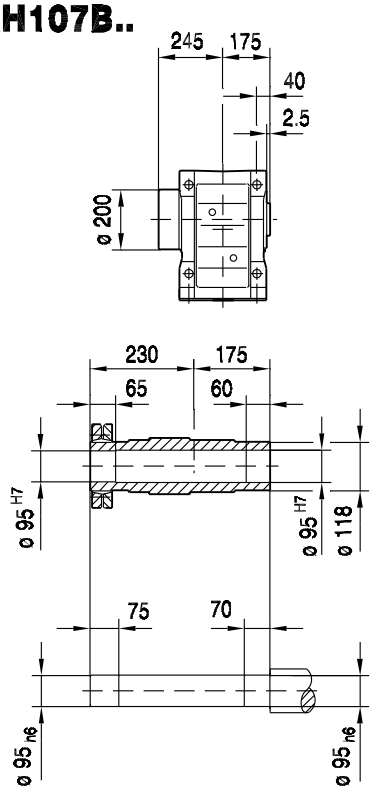

KV107B..

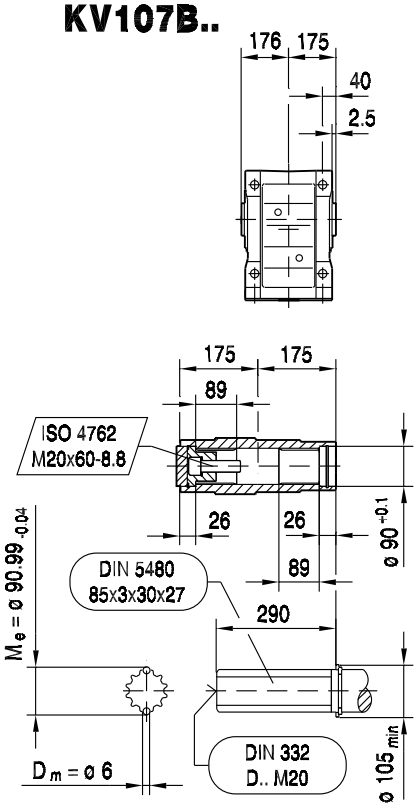

(→ 📖 129)	DRL90L	DRL100L	DRL132S	DRL132MC	DRL160..	DRL180S/M	DRL180L/LC	DRL225S	DRL225MC
AC	179	197	221	221	270	316	316	394	394
AD	140	157	170	170	228	253	253	283	283
ADS	150	158	172	172	228	253	253	283	283
L	889	948	1029	1079	1083	1152	1212	1285	1335
LS	975	1035	1137	1187	1220	1341	1401	1490	1540
LB	348	407	488	538	542	611	671	744	794
LBS	434	494	596	646	679	800	860	949	999

KF107..

33 188 00 08

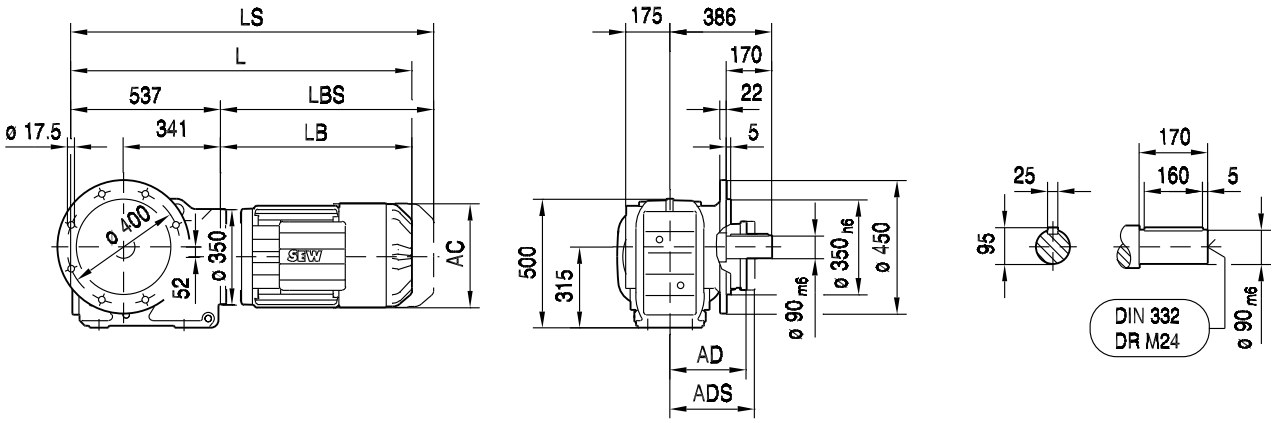

KAF107..

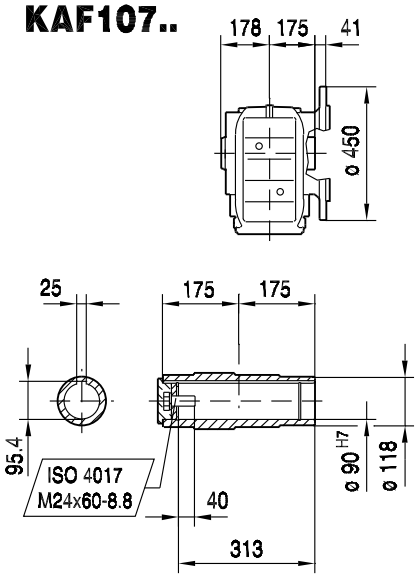

KHF107..

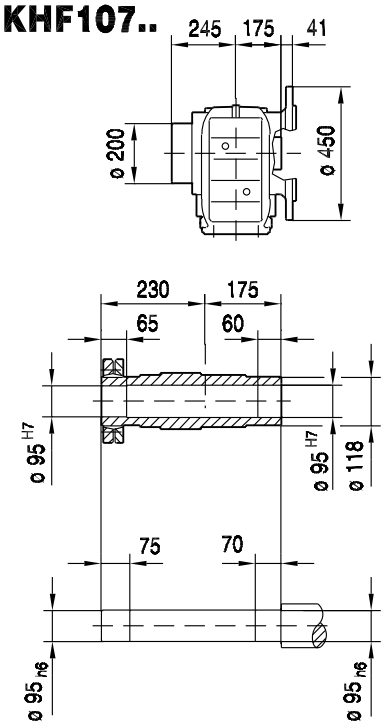

KVF107..

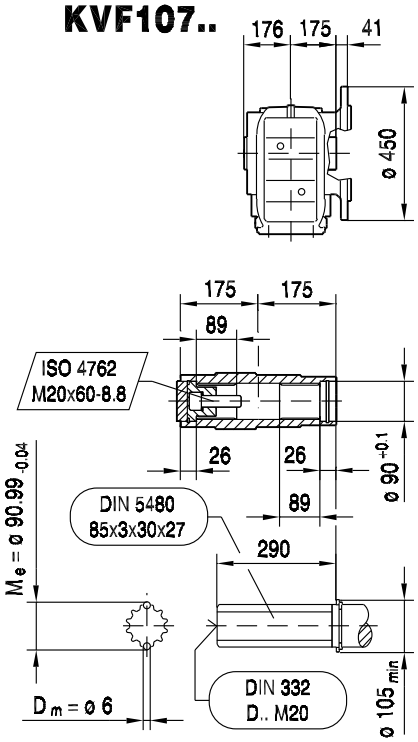

(→ 📖 129)	DRL90L	DRL100L	DRL132S	DRL132MC	DRL160..	DRL180S/M	DRL180L/LC	DRL225S	DRL225MC
AC	179	197	221	221	270	316	316	394	394
AD	140	157	170	170	228	253	253	283	283
ADS	150	158	172	172	228	253	253	283	283
L	885	944	1025	1075	1079	1148	1208	1281	1331
LS	971	1031	1133	1183	1216	1337	1397	1486	1536
LB	348	407	488	538	542	611	671	744	794
LBS	434	494	596	646	679	800	860	949	999

33 189 00 08

KA107..

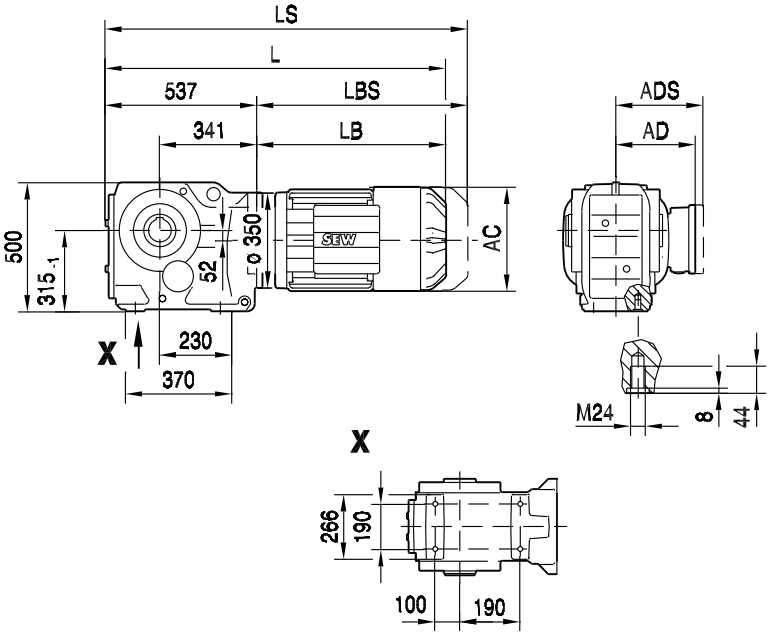

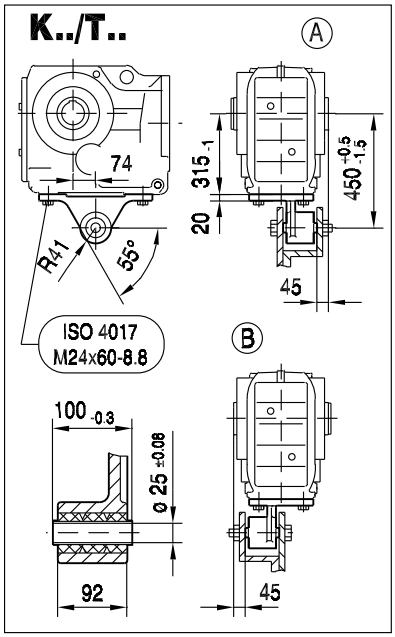

10

KA107..

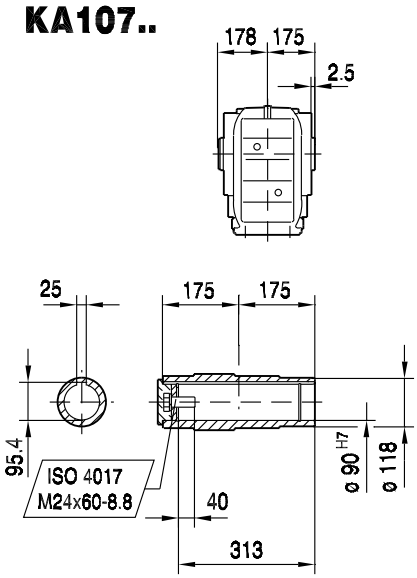

KH107..

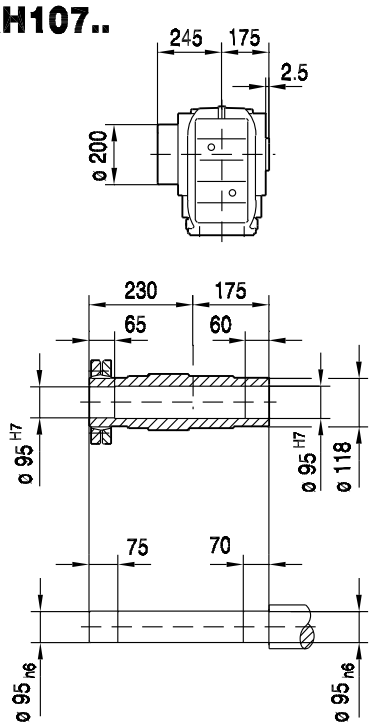

KV107..

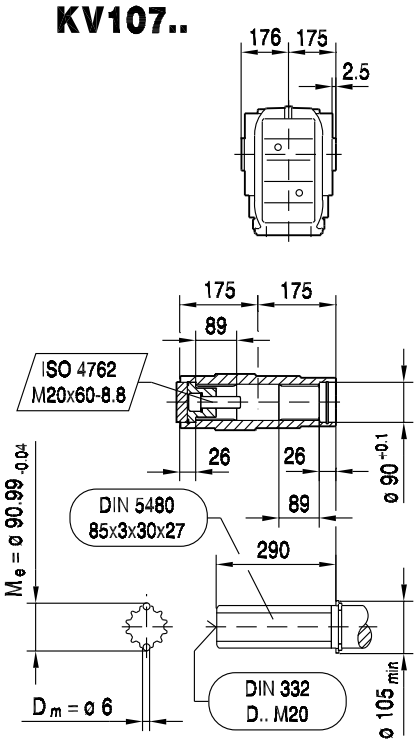

(→ 📖 129)	DRL90L	DRL100L	DRL132S	DRL132MC	DRL160..	DRL180S/M	DRL180L/LC	DRL225S	DRL225MC
AC	179	197	221	221	270	316	316	394	394
AD	140	157	170	170	228	253	253	283	283
ADS	150	158	172	172	228	253	253	283	283
L	885	944	1025	1075	1079	1148	1208	1281	1331
LS	971	1031	1133	1183	1216	1337	1397	1486	1536
LB	348	407	488	538	542	611	671	744	794
LBS	434	494	596	646	679	800	860	949	999

KAZ107..

33 190 00 08

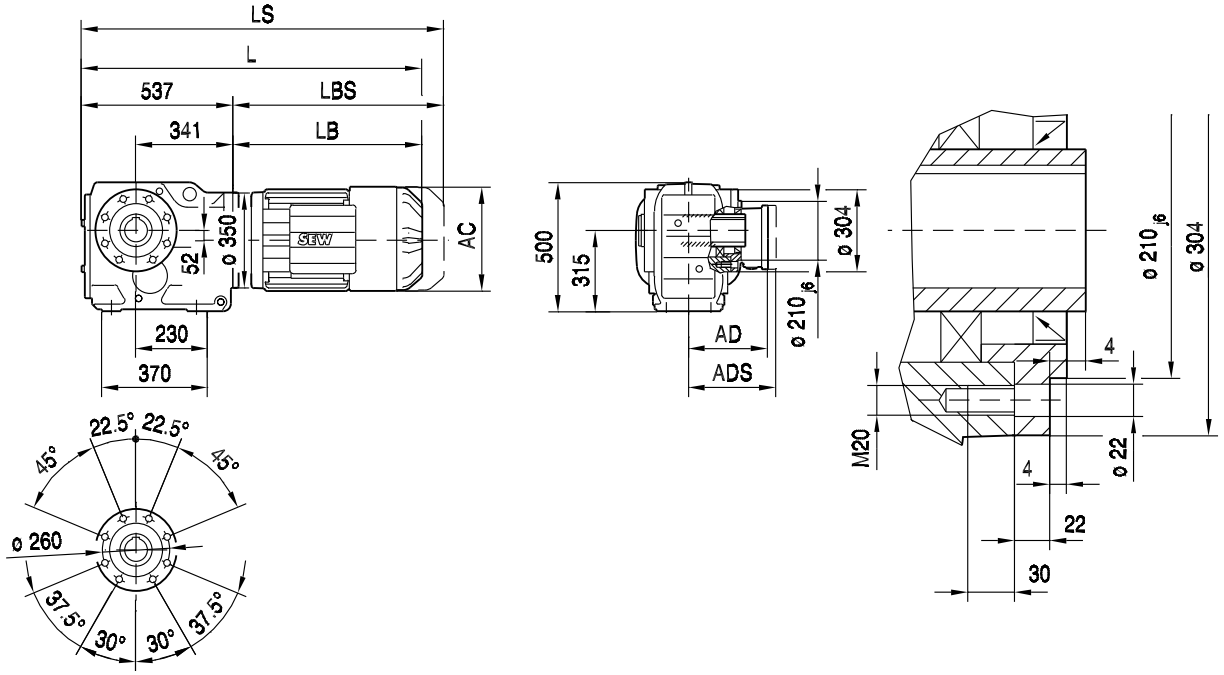

KAZ107..

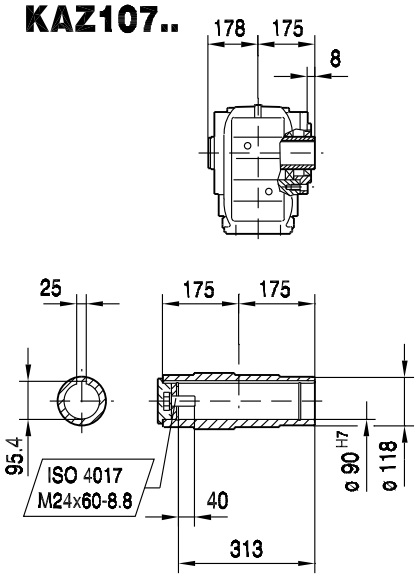

KHZ107..

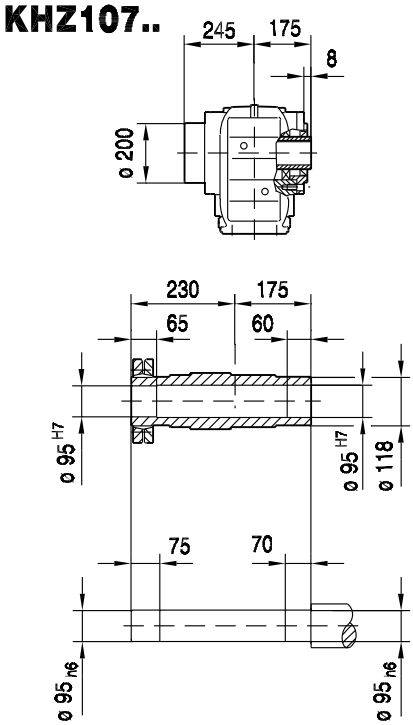

KVZ107..

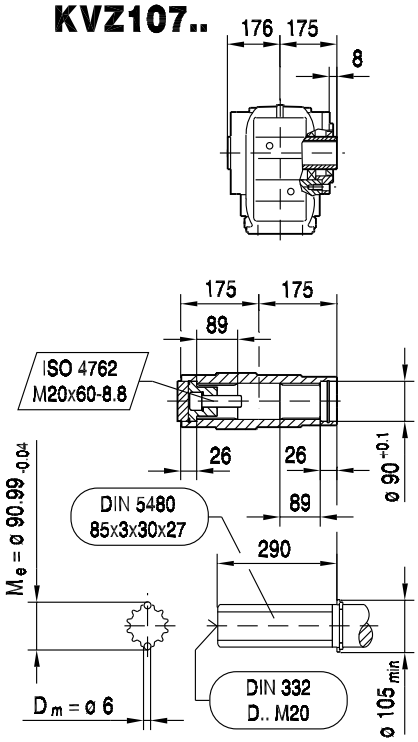

(→ 📖 129)	DRL90L	DRL100L	DRL132S	DRL132MC	DRL160..	DRL180S/M	DRL180L/LC	DRL225S	DRL225MC
AC	179	197	221	221	270	316	316	394	394
AD	140	157	170	170	228	253	253	283	283
ADS	150	158	172	172	228	253	253	283	283
L	885	944	1025	1075	1079	1148	1208	1281	1331
LS	971	1031	1133	1183	1216	1337	1397	1486	1536
LB	348	407	488	538	542	611	671	744	794
LBS	434	494	596	646	679	800	860	949	999

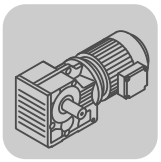

33 191 00 08

KT107..

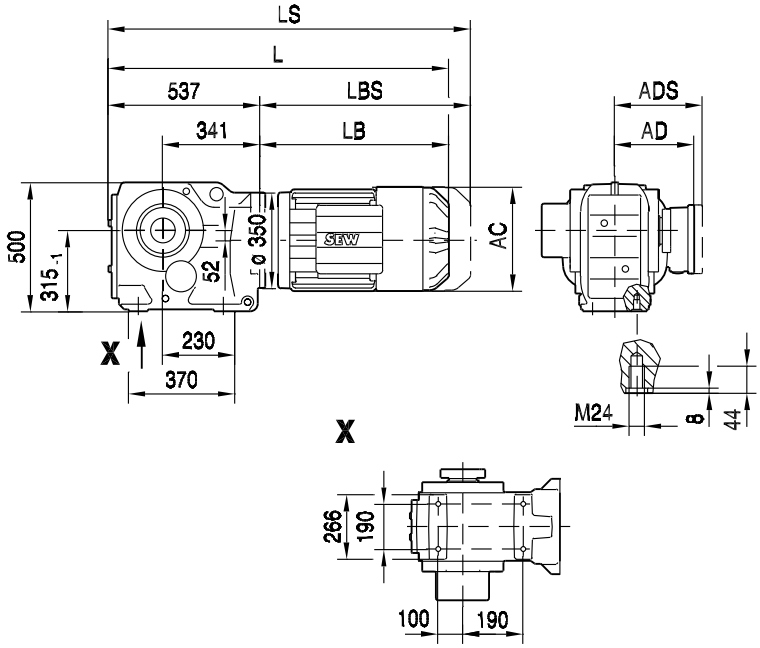

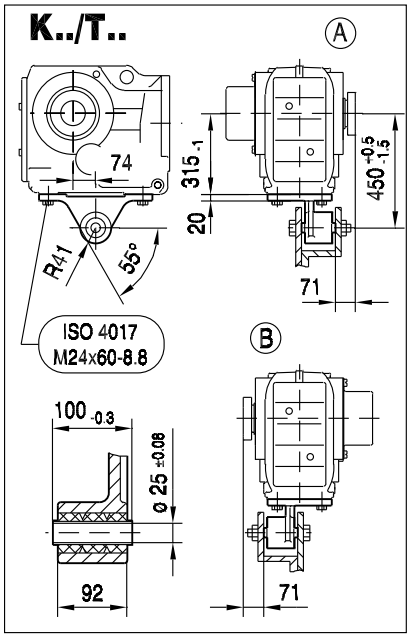

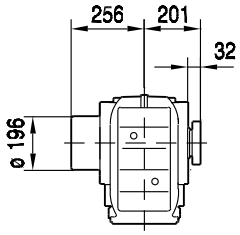

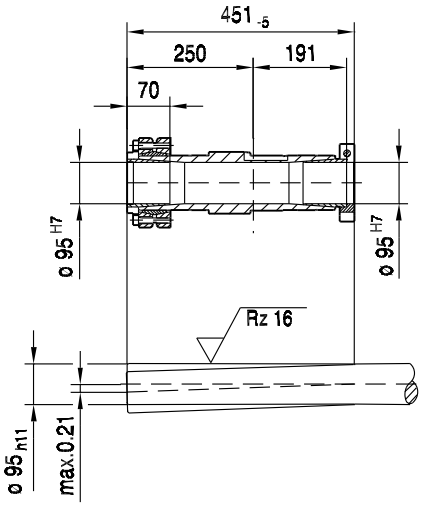

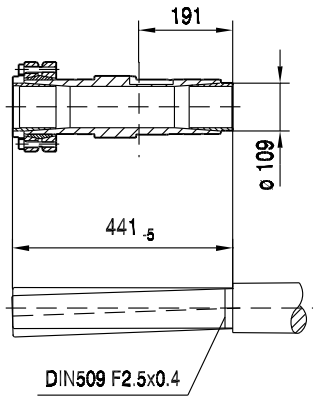

(→ 📖 129)	DRL90L	DRL100L	DRL132S	DRL132MC	DRL160..	DRL180S/M	DRL180L/LC	DRL225S	DRL225MC
AC	179	197	221	221	270	316	316	394	394
AD	140	157	170	170	228	253	253	283	283
ADS	150	158	172	172	228	253	253	283	283
L	885	944	1025	1075	1079	1148	1208	1281	1331
LS	971	1031	1133	1183	1216	1337	1397	1486	1536
LB	348	407	488	538	542	611	671	744	794
LBS	434	494	596	646	679	800	860	949	999

10.2.9 K 127

M_{aDyn} Nm	i	DRL													
		132S		132MC		160M		160MC		180S		180M		180L	
		D1	D2	D1	D2	D1	D2	D1	D2	D1	D2	D1	D2	D1	D2
K127 3	8.68				1660		2330		2660	1740	3160	2080	3580	2660	4330
	10.74		1540	1340	2060	1700	2880	1900	3290	2160	3910	2570	4430	3290	5360
	12.79	980	1840	1590	2450	2020	3430	2270	3920	2570	4660	3060	5270	3920	6380
	14.35				2750		3850		4400	2890	5230	3440	5920	4400	7160
	17.77		2550	2210	3410	2810	4770	3150	5450	3580	6480	4260	7330	5450	8870
	21.15	1620	3040	2630	4060	3350	5680	3750	6490	4260	7710	5070	8730	6490	10500
	23.91	1830	3440	2980	4590	3780	6420	4240	7340	4820	8720	5730	9870	7340	11900
	27.68	2120	3980	3450	5310	4380	7440	4910	8500	5580	10000	6640	11400	8500	13800
	31.37	2400	4510	3910	6020	4960	8430	5570	9630	6320	11400	7520	12900	9630	>14800
	36.25	2780	5220	4520	6960	5740	9740	6430	11100	7300	13200	8700	>14800	11100	>14800
	40.19		5660	4910	7550	6230	10500	6980	12000	7930	14300	9440	>14800	12000	>14800
	47.82	3590	6740	5840	8990	7410	12500	8310	14300	9430	>14800	11200	>14800	14300	>14800
	54.07	4060	7620	6600	10100	8380	14200	9400	>14800	10600	>14800	12700	>14800	>14800	>14800
	62.60	4700	8820	7640	11700	9700	>14800	10800	>14800	12300	>14800	14700	>14800	>14800	>14800
	70.95	5330	10000	8670	13300	11000	>14800	12300	>14800	14000	>14800	>14800	>14800	>14800	>14800
	81.98	6160	11500	10000	>14800	12700	>14800	14200	>14800	>14800	>14800	>14800	>14800	>14800	>14800
	89.89	6750	12600	10900	>14800	13900	>14800	>14800	>14800	>14800	>14800	>14800	>14800	>14800	>14800
	110.18	8280	>14800	13400	>14800	>14800	>14800	>14800	>14800	>14800		>14800		>14800	
	122.48	9210	>14800	>14800		>14800		>14800							
	136.14	10200	>14800	>14800		>14800		>14800							
	146.07	10900													

→ 124

m kg	s	DRL						
		132S	132MC	160M	160MC	180S	180M	180L
K127	3	470	485	500	510	530	550	560
KF: + 42.3 kg / KA: + -28.2 kg / KAF: + 9.2 kg								

M_{aDyn} Nm	i	DRL							
		180LC		200L		225S		225MC	
		D1	D2	D1	D2	D1	D2	D1	D2
K127 3	8.68	3490	4990	3950	5660	4330	6410	6410	9160
	10.74	4330	6180	4890	7010	5360	7930	7930	>9560
	12.79	5150	7360	5830	8340	6380	9450	9450	>9680
	14.35	5780	8260	6540	9360	7160	10600	10600	>14800
	17.77	7160	10200	8100	11600	8870	13100	13100	>14800
	21.15	8520	12100	9640	13800	10500	>14800	>14800	>14800
	23.91	9640	13700	10900	>14800	11900	>14800	>14800	>14800
	27.68	11100	>14800	12600	>14800	13800	>14800	>14800	
	31.37	12600	>14800	14300	>14800	>14800	>14800	>14800	
	36.25	14600		>14800		>14800			
	40.19	>14800	>14800	>14800	>14800	>14800	>14800	>14800	>14800
	47.82	>14800	>14800	>14800	>14800	>14800	>14800	>14800	>14800
	54.07	>14800	>14800	>14800	>14800	>14800	>14800	>14800	>14800
	62.60	>14800	>14800	>14800	>14800	>14800	>14800	>14800	
	70.95	>14800	>14800	>14800	>14800	>14800	>14800	>14800	
	81.98	>14800		>14800		>14800			
	89.89	>14800		>14800		>14800			
	110.18								
	122.48								
	136.14								
	146.07								

	→ 124

m kg	s	DRL			
		180LC	200L	225S	225MC
K127	3	570	670	700	740
KF: + 42.3 kg / KA: + -28.2 kg / KAF: + 9.2 kg					

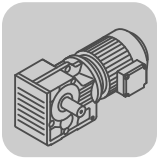

K..DRL
K..Nm

DRL..	i	n_{epk} 1/min	η %	c_{TG} K Nm/'	KF Nm/'	KA Nm/'	KAF Nm/'	φ /R '
K127 3	8.68	2797	96	1033	967	1784	1784	8
	10.74	4500	96	1033	967	1784	1784	8
	12.79	4500	96	1033	967	1784	1784	8
	14.35	4500	96	1157	1075	2481	2481	6
	17.77	4500	96	1157	1075	2481	2481	6
	21.15	4500	96	1157	1075	2481	2481	6
	23.91	4500	96	1157	1075	2481	2481	6
	27.68	4500	96	1157	1075	2481	2481	6
	31.37	4500	96	1157	1075	2481	2481	6
	36.25	4500	96	1157	1075	2481	2481	6
	40.19	3197	94	1223	1131	2803	2803	5
	47.82	3597	94	1223	1131	2803	2803	5
	54.07	3924	94	1223	1131	2803	2803	5
	62.60	4378	94	1223	1131	2803	2803	5
	70.95	4500	94	1223	1131	2803	2803	5
	81.98	4500	94	1223	1131	2803	2803	5
	89.89	4500	94	1223	1131	2803	2803	5
	110.18	4500	94	1223	1131	2803	2803	5
	122.48	4500	94	1223	1131	2803	2803	5
	136.14	4500	94	1223	1131	2803	2803	5
	146.07	4500	94	1223	1131	2803	2803	5

DRL.. n_e = 1400	i	M_{amax} Nm	M_{apk} Nm	$M_{aNotaus}$ Nm	n_{ak} 1/min	J_G 10^{-4} kgm^2	F_{Ramax} K N	KF N	KA N	KAF N	F_{Rapk} K N	KF N	KA N	KAF N
K127 3	8.68	7230	9390	12291	230	450	32500	39100	3750	56600	80900	82700	90000	90000
	10.74	8000	9560	13600	177	318	33900	41000	3100	59300	80800	82600	90000	90000
	12.79	8530	9680	14501	149	240	35400	42900	3080	62100	80800	82600	90000	90000
	14.35	12100	14800	20570	132	431	31000	36700	35	58100	76400	75700	90000	90000
	17.77	13000	14800	22100	113	305	32600	38600	39	61600	76400	75700	90000	90000
	21.15	13000	14800	22100	123	226	37200	44000	39	67200	76400	75700	90000	90000
	23.91	13000	14800	22100	125	187	39800	47900	575	71300	76400	75700	90000	90000
	27.68	13000	14800	22100	130	148	43000	52600	2830	76300	76400	75700	90000	90000
	31.37	13000	14800	22100	137	120	45900	55800	4840	80900	76400	75700	90000	90000
	36.25	13000	14800	22100	141	97	49400	59600	7280	86300	76400	75700	90000	90000
	40.19	13000	14800	22100	55	184	52000	62400	9090	90000	76400	75700	90000	90000
	47.82	13000	14800	22100	56	146	56500	67300	12300	90000	76400	75700	90000	90000
	54.07	13000	14800	22100	57	124	59800	70900	14700	90000	76400	75700	90000	90000
	62.60	13000	14800	22100	58	101	64000	75500	17600	90000	76400	75700	90000	90000
	70.95	13000	14800	22100	59	84	67700	79500	20300	90000	76400	75700	90000	90000
	81.98	13000	14800	22100	60	70	72100	80900	23400	90000	76400	75700	90000	90000
	89.89	13000	14800	22100	61	61	75100	80900	25600	90000	76400	75700	90000	90000
	110.18	13000	14800	22100	62	40	79200	80900	30500	90000	76400	75700	90000	90000
	122.48	13000	14800	22100	57	35	79200	80900	33200	90000	76400	75700	90000	90000
	136.14	13000	14800	22100	51	29	79200	80900	36000	90000	76400	75700	90000	90000
	146.07	13000	14800	22100	48	26	79200	80900	37900	90000	76400	75700	90000	90000

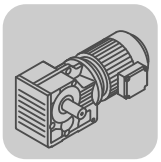

33 192 00 08

K127..

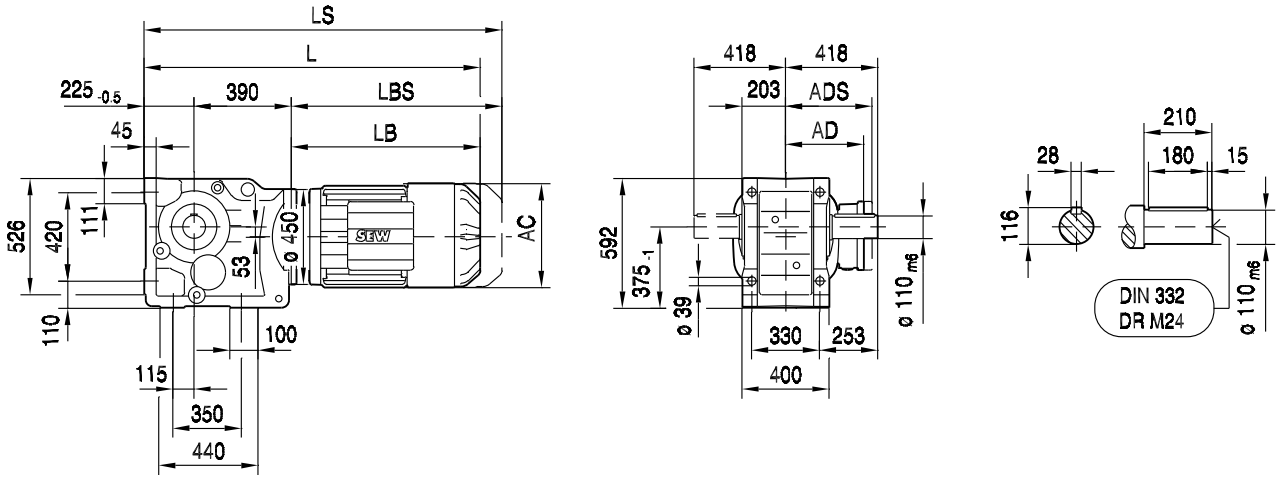

KA127B..

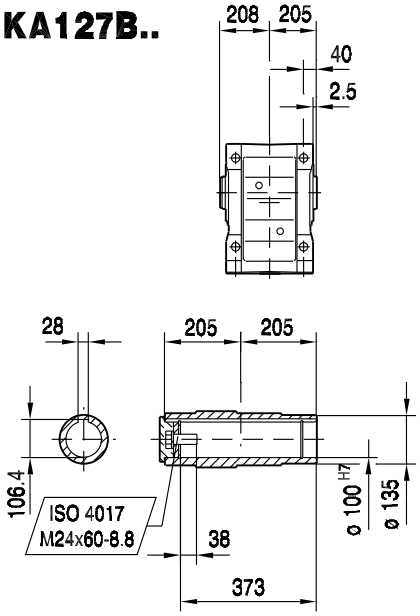

KH127B..

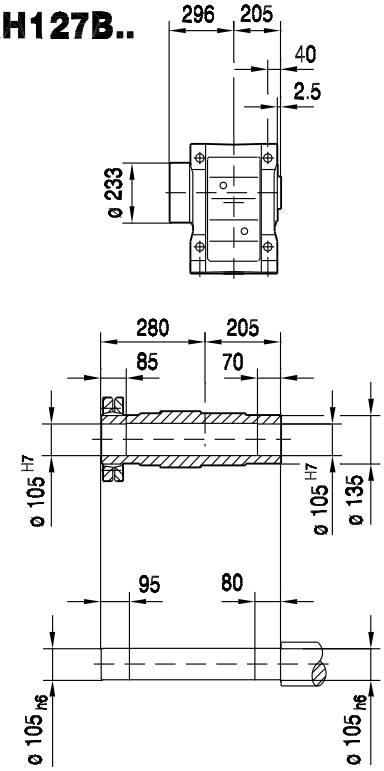

(→ 📖 129)	DRL132S	DRL132MC	DRL160..	DRL180S/M	DRL180L/LC	DRL225S	DRL225MC	
AC	221	221	270	316	316	394	394	
AD	170	170	228	253	253	283	283	
ADS	172	172	228	253	253	283	283	
L	1088	1138	1142	1211	1271	1344	1394	
LS	1196	1246	1279	1400	1460	1549	1599	
LB	473	523	527	596	656	729	779	
LBS	581	631	664	785	845	934	984	

33 193 00 08

KF127..

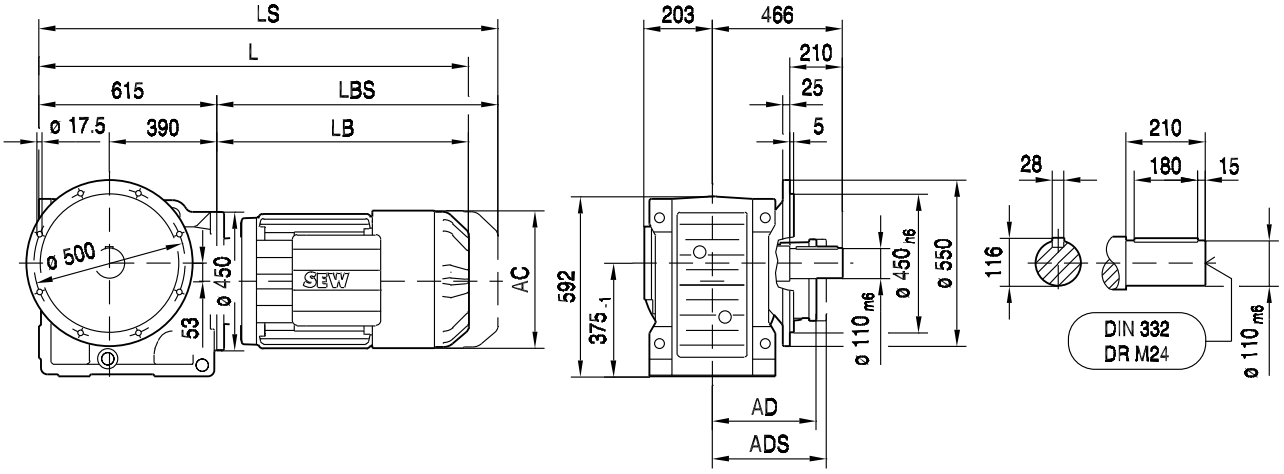

KAF127..

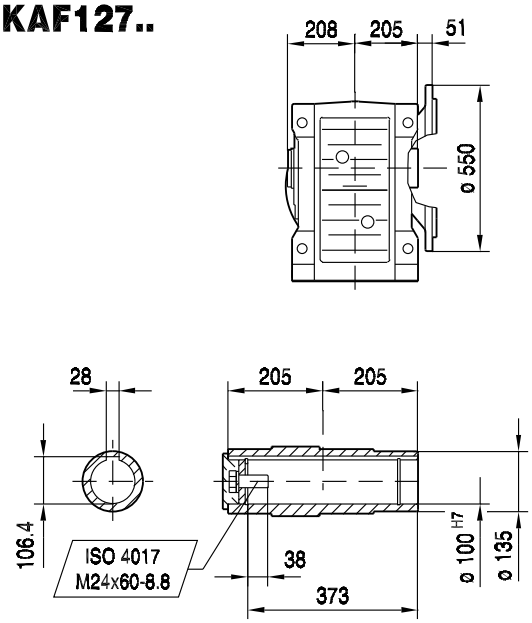

KHF127..

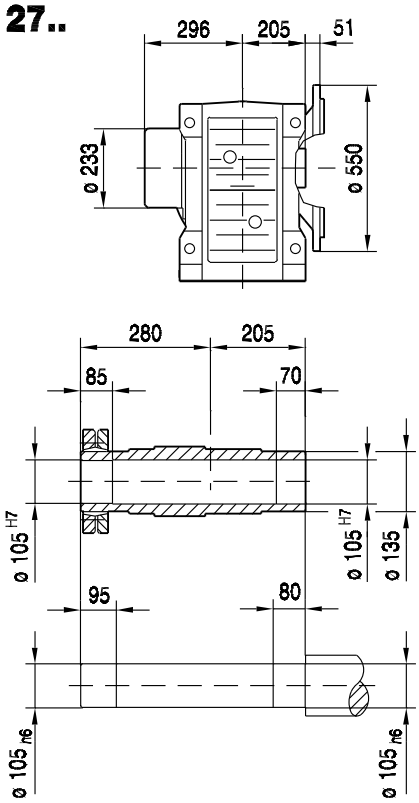

(→ 📖 129)	DRL132S	DRL132MC	DRL160..	DRL180S/M	DRL180L/LC	DRL225S	DRL225MC	
AC	221	221	270	316	316	394	394	
AD	170	170	228	253	253	283	283	
ADS	172	172	228	253	253	283	283	
L	1088	1138	1142	1211	1271	1344	1394	
LS	1196	1246	1279	1400	1460	1549	1599	
LB	473	523	527	596	656	729	779	
LBS	581	631	664	785	845	934	984	

33 194 00 08

KA127..

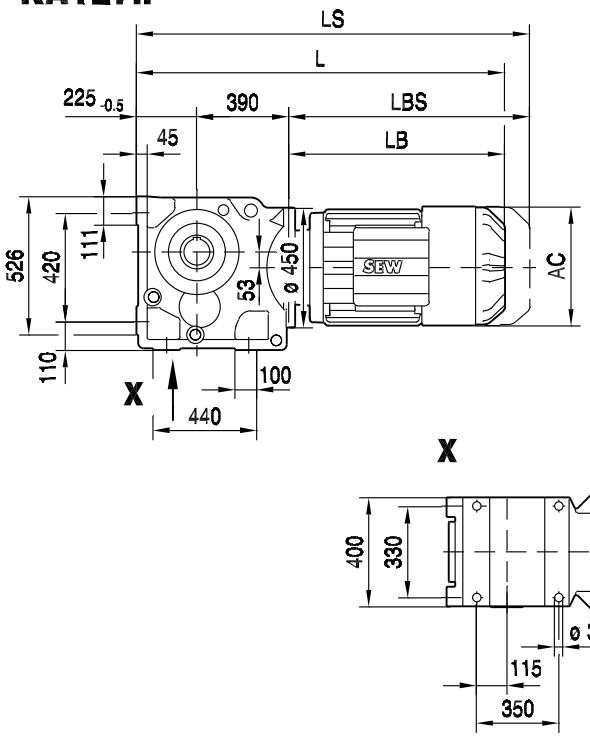

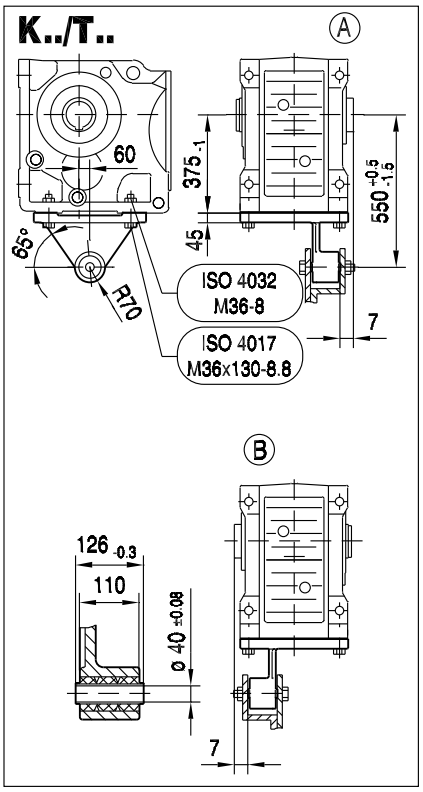

KA127..

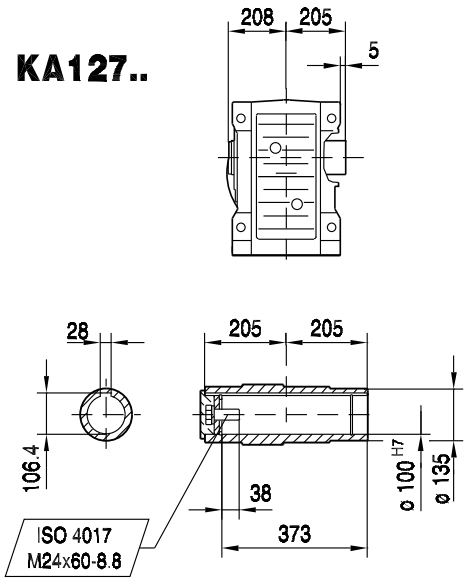

KH127..

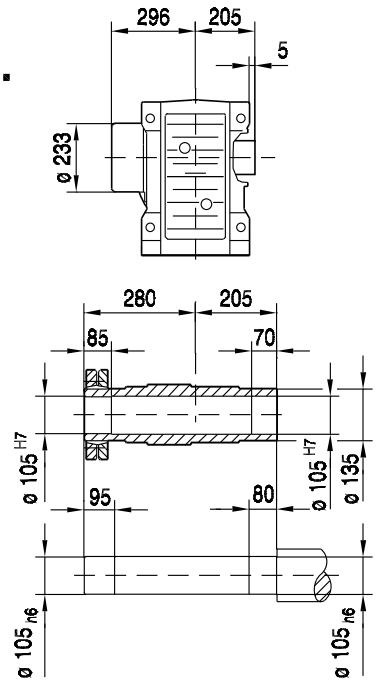

(→ 📖 129)	DRL132S	DRL132MC	DRL160..	DRL180S/M	DRL180L/LC	DRL225S	DRL225MC	
AC	221	221	270	316	316	394	394	
AD	170	170	228	253	253	283	283	
ADS	172	172	228	253	253	283	283	
L	1088	1138	1142	1211	1271	1344	1394	
LS	1196	1246	1279	1400	1460	1549	1599	
LB	473	523	527	596	656	729	779	
LBS	581	631	664	785	845	934	984	

KAZ127..

33 195 00 08

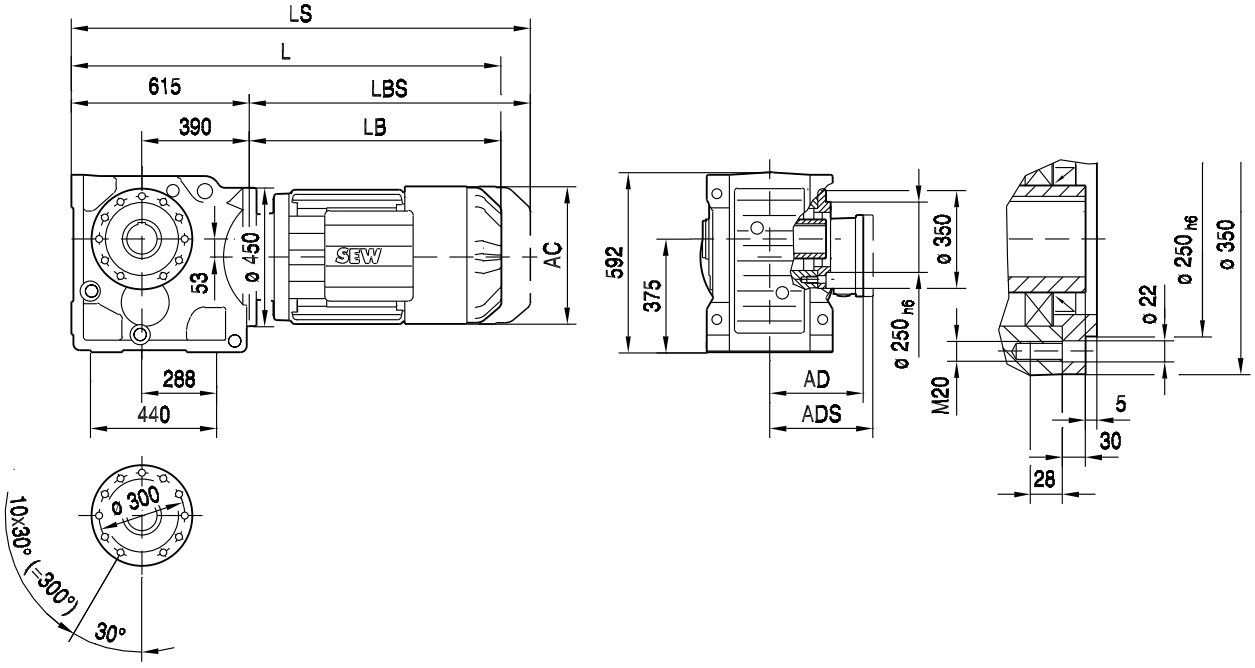

KAZ127..

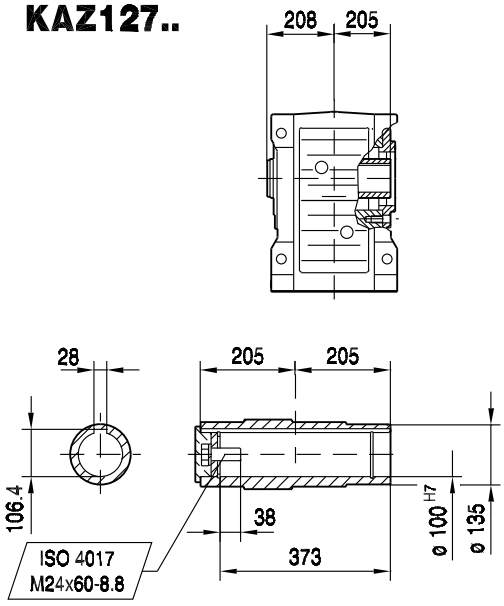

KHZ127..

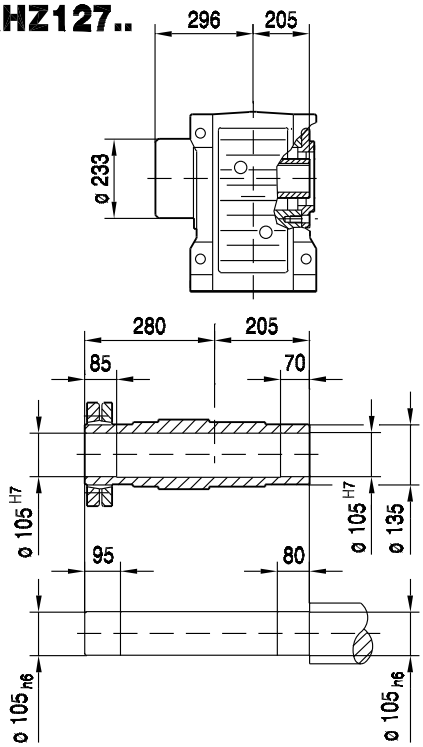

(→ 📖 129)	DRL132S	DRL132MC	DRL160..	DRL180S/M	DRL180L/LC	DRL225S	DRL225MC	
AC	221	221	270	316	316	394	394	
AD	170	170	228	253	253	283	283	
ADS	172	172	228	253	253	283	283	
L	1088	1138	1142	1211	1271	1344	1394	
LS	1196	1246	1279	1400	1460	1549	1599	
LB	473	523	527	596	656	729	779	
LBS	581	631	664	785	845	934	984	

33 196 00 08

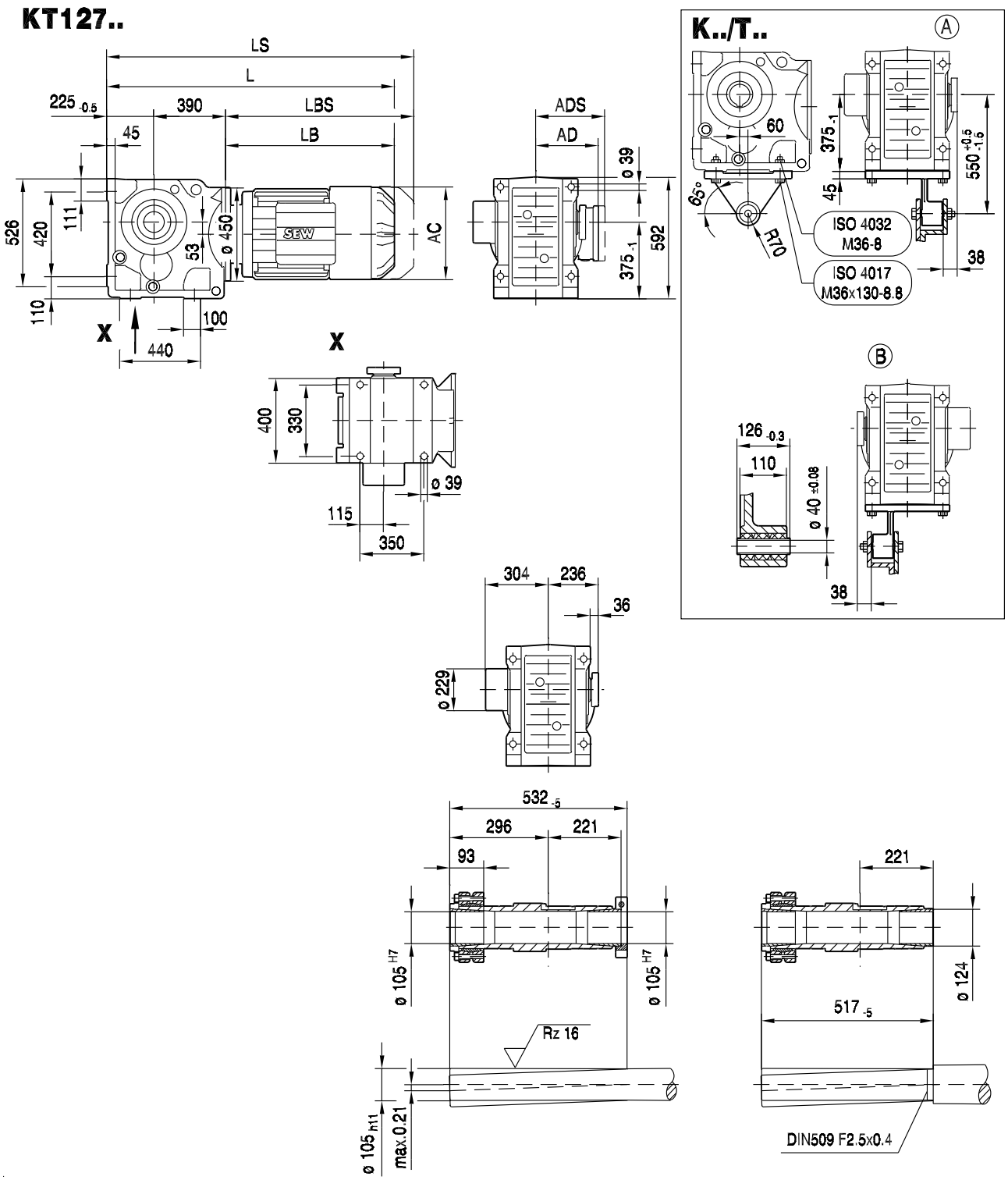

(→ 📖 129)	DRL132S	DRL132MC	DRL160..	DRL180S/M	DRL180L/LC	DRL225S	DRL225MC	
AC	221	221	270	316	316	394	394	
AD	170	170	228	253	253	283	283	
ADS	172	172	228	253	253	283	283	
L	1088	1138	1142	1211	1271	1344	1394	
LS	1196	1246	1279	1400	1460	1549	1599	
LB	473	523	527	596	656	729	779	
LBS	581	631	664	785	845	934	984	

10.2.10 K 157

M_{aDyn} Nm	i	DRL 160M D1	160M D2	160MC D1	160MC D2	180S D1	180S D2	180M D1	180M D2	180L D1	180L D2
K157 3	12.65						4610		5220		6310
	14.92		4010		4580	3000	5440	3580	6150	4580	7440
	18.37	2900	4930	3260	5640	3700	6700	4400	7580	5640	9170
	21.31	3370	5720	3780	6540	4290	7770	5110	8790	6540	10600
	23.95	3790	6430	4250	7350	4820	8730	5740	9880	7350	11900
	27.62	4370	7420	4900	8480	5560	10000	6620	11400	8480	13700
	31.30	4950	8410	5550	9610	6310	11400	7510	12900	9610	15600
	38.02		10000		11400	7500	13500	8930	15300	11400	18500
	46.79	7250	12300	8130	14000	9230	16700	10900	18900	14000	>21800
	54.29	8420	14200	9440	16300	10700	19300	12700	>21800	16300	>21800
	61.02	9460	16000	10600	18300	12000	21700	14300	>21800	18300	>21800
	70.38	10900	18500	12200	21100	13800	>21800	16500	>21800	21100	>21800
	79.75	12300	20900	13800	>21800	15700	>21800	18700	>21800	>21800	>21800
	91.65	14200	>21800	15900	>21800	18000	>21800	21500	>21800	>21800	>21800
	100.22	15500	>21800	17400	>21800	19700	>21800	>21800	>21800	>21800	>21800
	122.39	19100	>21800	21500	>21800	>21800		>21800		>21800	
	150.41	>21800		>21800							

	→ 124

m kg	s	DRL 160M	160MC	180S	180M	180L
K157	3	730	740	770	780	790
KF: + 78.4 kg / KA: + -36.9 kg / KAF: + 21.7 kg						

M_{aDyn} Nm	i	DRL							
		180LC		200L		225S		225MC	
		D1	D2	D1	D2	D1	D2	D1	D2
K157 3	12.65	5100	7280	5760	8250	6310	9350	9350	13300
	14.92	6010	8590	6800	9730	7440	11000	11000	15700
	18.37	7400	10500	8370	11900	9170	13500	13500	19300
	21.31	8590	12200	9710	13900	10600	15700	15700	>21800
	23.95	9650	13700	10900	15600	11900	17700	17700	>21800
	27.62	11100	15900	12500	18000	13700	20400	20400	
	31.30	12600	18000	14200	20400	15600	>21800	>21800	
	38.02	15000	21400	16900	>21800	18500	>21800	>21800	>21800
	46.79	18400	>21800	20800	>21800	>21800	>21800	>21800	>21800
	54.29	21400	>21800	>21800	>21800	>21800	>21800	>21800	>21800
	61.02	>21800	>21800	>21800	>21800	>21800	>21800	>21800	>21800
	70.38	>21800	>21800	>21800	>21800	>21800	>21800	>21800	
	79.75	>21800	>21800	>21800	>21800	>21800	>21800	>21800	
	91.65	>21800		>21800		>21800			
	100.22	>21800		>21800		>21800			
	122.39								
	150.41								

→ 124

m kg	s	DRL			
		180LC	200L	225S	225MC
K157	3	800	900	930	970
KF: + 78.4 kg / KA: + -36.9 kg / KAF: + 21.7 kg					

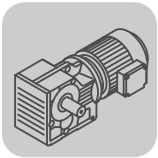

K..DRL
K..Nm

DRL..	i	n_{epk} 1/min	η %	c_{TG} K Nm/'	KF Nm/'	KA Nm/'	KAF Nm/'	φ /R '
K157 3	12.65	4500	96	1755	1609	3541	3541	6
	14.92	4500	96	1755	1609	3541	3541	6
	18.37	4500	96	1755	1609	3541	3541	6
	21.31	4500	96	1755	1609	3541	3541	6
	23.95	4500	96	1755	1609	3541	3541	6
	27.62	4500	96	1755	1609	3541	3541	6
	31.30	4500	96	1755	1609	3541	3541	6
	38.02	2797	94	1903	1733	4202	4202	5
	46.79	3197	94	1903	1733	4202	4202	5
	54.29	3597	94	1903	1733	4202	4202	5
	61.02	3924	94	1903	1733	4202	4202	5
	70.38	4378	94	1903	1733	4202	4202	5
	79.75	4500	94	1903	1733	4202	4202	5
	91.65	4500	94	1903	1733	4202	4202	5
	100.22	4500	94	1903	1733	4202	4202	5
	122.39	4500	95	1903	1733	4202	4202	5
	150.41	4500	95	1903	1733	4202	4202	5

DRL.. n_e = 1400	i	M_{amax} Nm	M_{apk} Nm	$M_{aNotaus}$ Nm	n_{ak} 1/min	J_G 10^{-4} kgm^2	F_{Ramax} K N	KF N	KA N	KAF N	F_{Rapk} K N	KF N	KA N	KAF N
K157 3	12.65	17000	21800	28900	142	1096	36700	44200	44800	44800	110000	106200	120000	120000
	14.92	18000	21800	30600	127	817	38200	46200	46700	46700	110000	106200	120000	120000
	18.37	18000	21800	30600	136	574	43200	51400	52900	52900	110000	106200	120000	120000
	21.31	18000	21800	30600	141	428	47000	55400	57700	57700	110000	106200	120000	120000
	23.95	18000	21800	30600	146	351	50000	58600	61500	61500	110000	106200	120000	120000
	27.62	18000	21800	30600	156	274	54000	62700	66400	66400	110000	106200	120000	120000
	31.30	18000	21800	30600	160	222	57500	66400	70900	70900	110000	106200	120000	120000
	38.02	18000	21800	30600	76	364	63400	72500	78200	78200	110000	106200	120000	120000
	46.79	18000	21800	30600	81	280	70000	79500	86500	86500	110000	106200	120000	120000
	54.29	18000	21800	30600	81	215	74900	84700	92700	92700	110000	106200	120000	120000
	61.02	18000	21800	30600	84	183	79000	89000	97900	97900	110000	106200	120000	120000
	70.38	18000	21800	30600	85	150	84200	94400	104400	104400	110000	106200	120000	120000
	79.75	18000	21800	30600	85	125	88900	99300	110300	110300	110000	106200	120000	120000
	91.65	18000	21800	30600	76	104	94400	105100	117100	117100	110000	106200	120000	120000
	100.22	18000	21800	30600	70	91	98000	108200	120000	120000	110000	106200	120000	120000
	122.39	18000	21800	30600	57	59	106500	108200	120000	120000	110000	106200	120000	120000
	150.41	18000	21800	30600	47	44	112200	108200	120000	120000	110000	106200	120000	120000

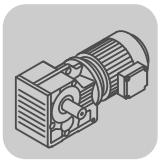

33 197 00 08

K157..

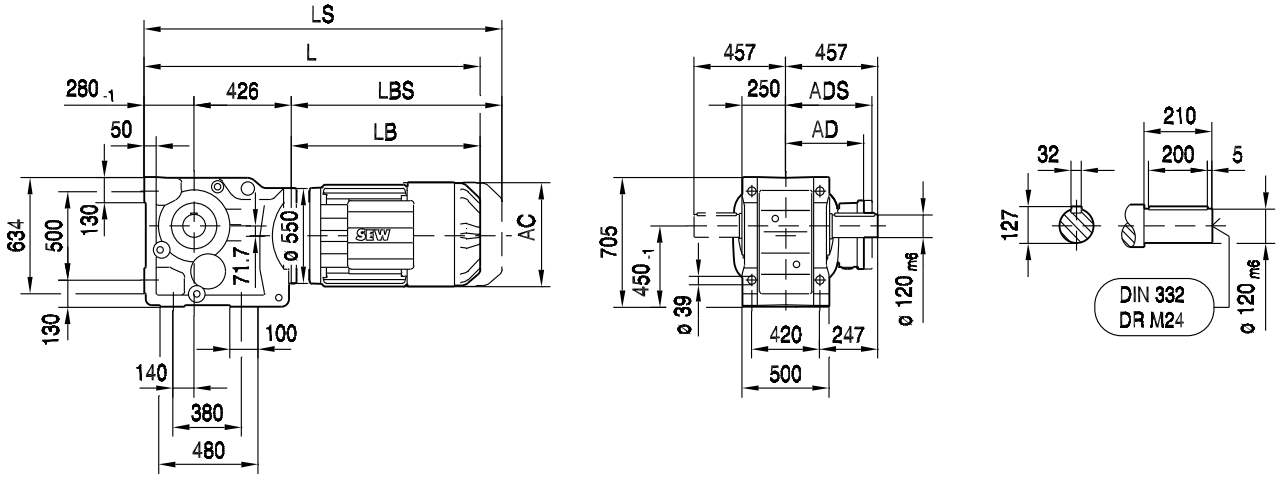

KA157B..

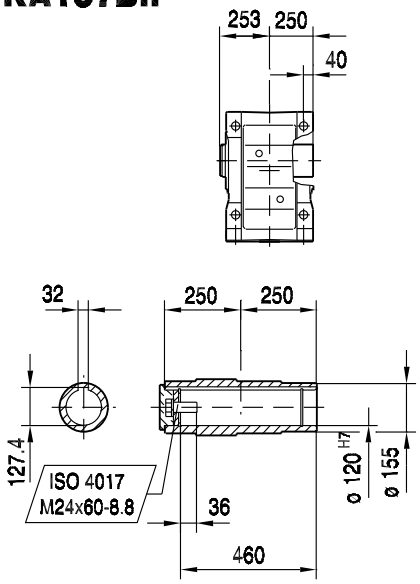

KH157B..

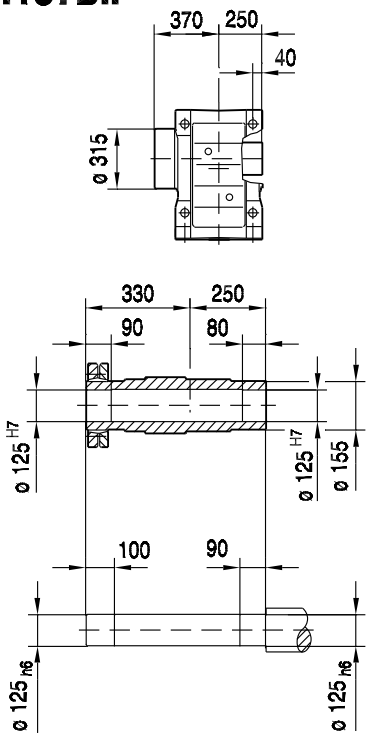

(→ 📖 129)	DRL160..	DRL180S/M	DRL180L/LC	DRL225S	DRL225MC			
AC	270	316	316	394	394			
AD	228	253	253	283	283			
ADS	228	253	253	283	283			
L	1225	1294	1354	1427	1477			
LS	1362	1483	1543	1632	1682			
LB	519	588	648	721	771			
LBS	656	777	837	926	976			

33 198 00 08

KF157..

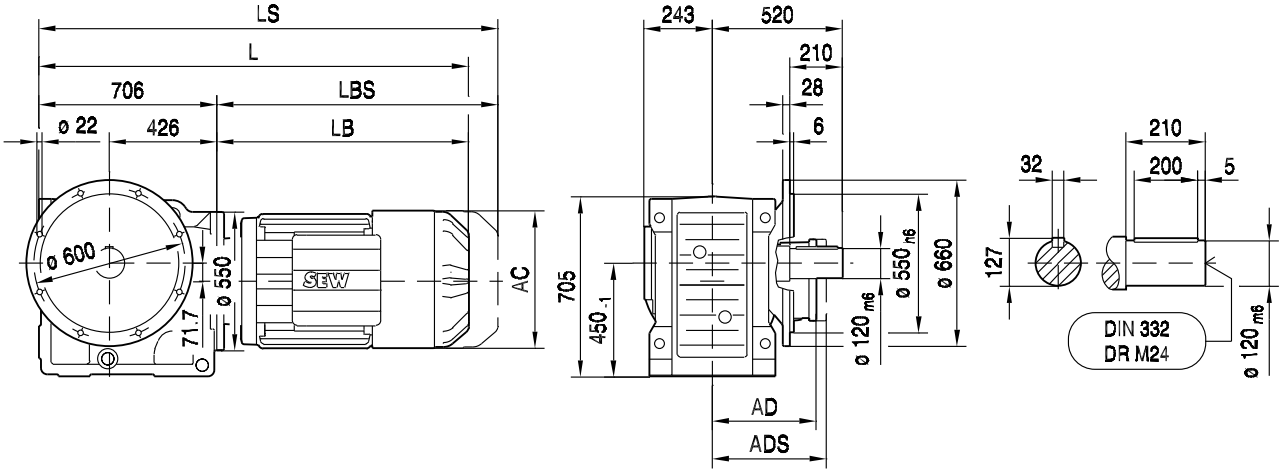

KAF157..

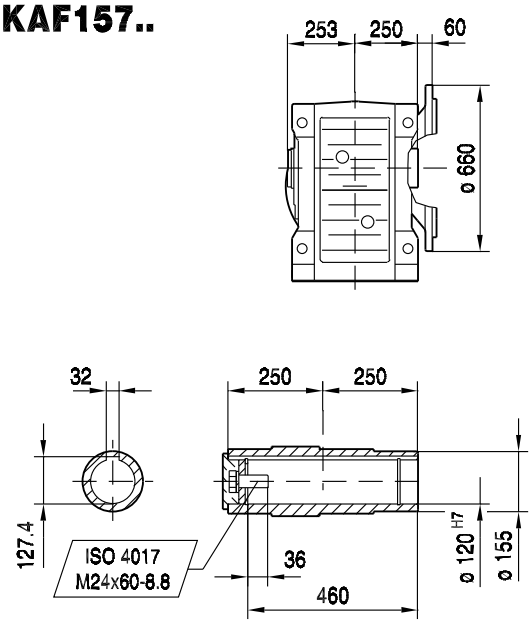

KHF157..

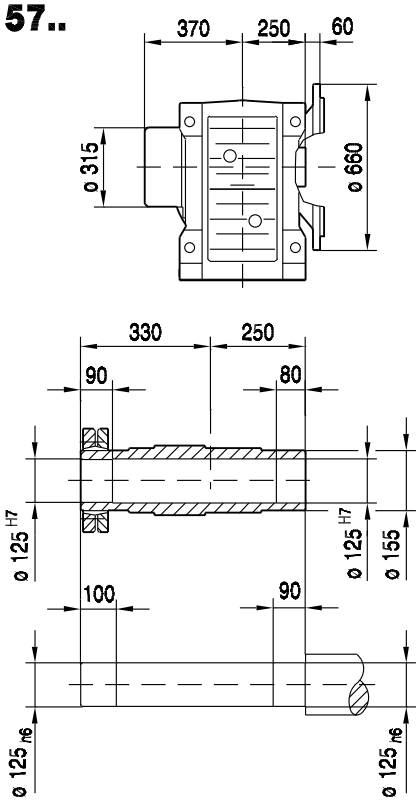

(→ 📖 129)	DRL160..	DRL180S/M	DRL180L/LC	DRL225S	DRL225MC			
AC	270	316	316	394	394			
AD	228	253	253	283	283			
ADS	228	253	253	283	283			
L	1225	1294	1354	1427	1477			
LS	1362	1483	1543	1632	1682			
LB	519	588	648	721	771			
LBS	656	777	837	926	976			

33 199 00 08

KA157..

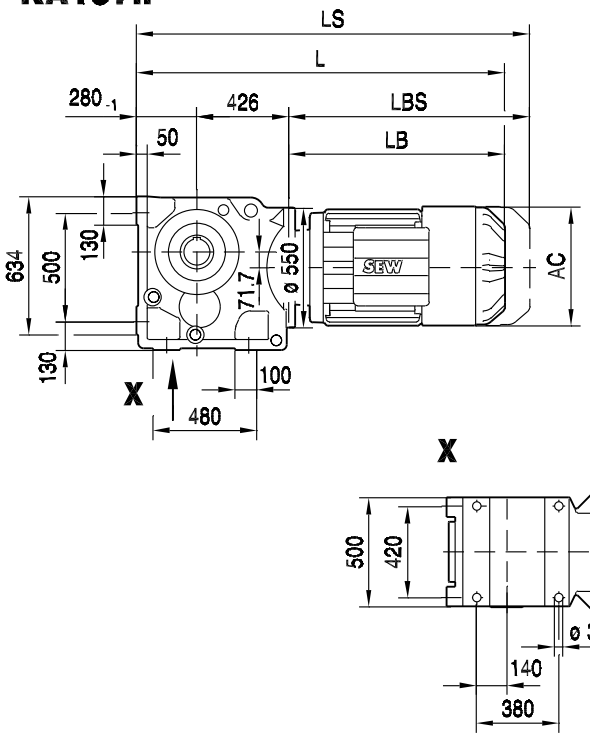

K../T..

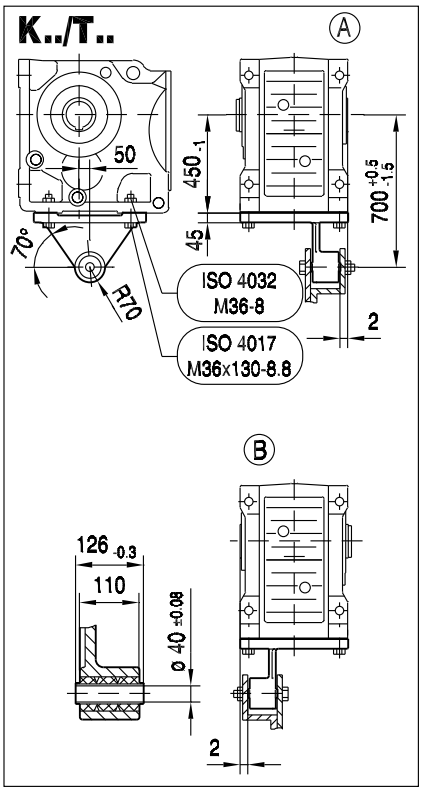

KA157..

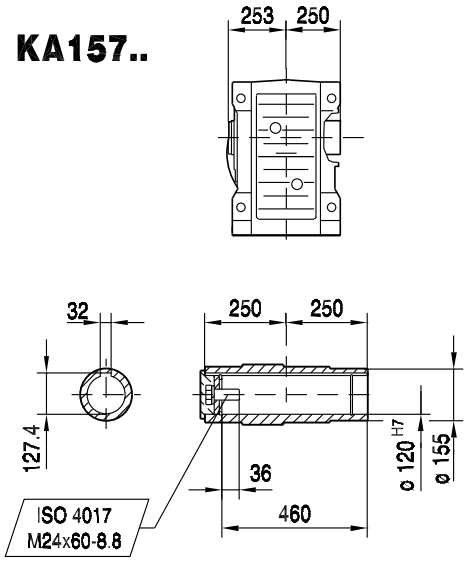

KH157..

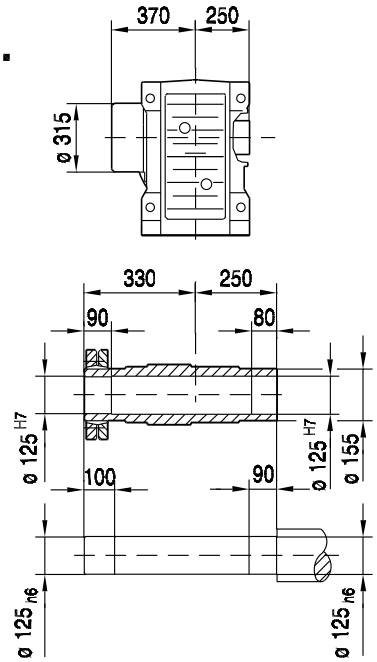

(→ 📖 129)	DRL160..	DRL180S/M	DRL180L/LC	DRL225S	DRL225MC			
AC	270	316	316	394	394			
AD	228	253	253	283	283			
ADS	228	253	253	283	283			
L	1225	1294	1354	1427	1477			
LS	1362	1483	1543	1632	1682			
LB	519	588	648	721	771			
LBS	656	777	837	926	976			

KAZ157..

33 200 00 08

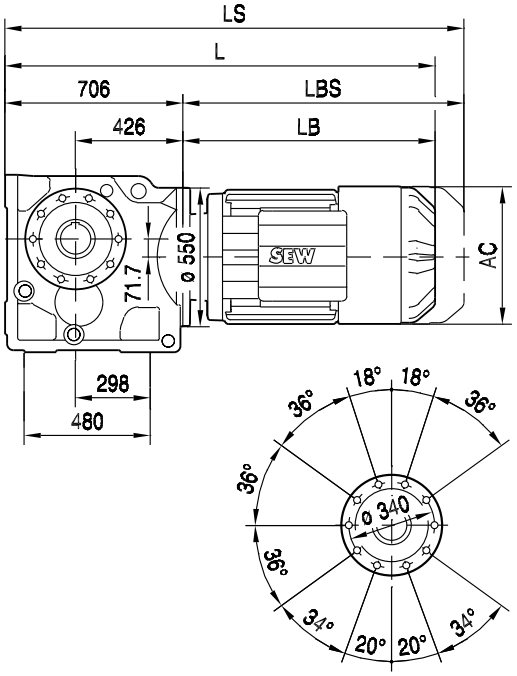

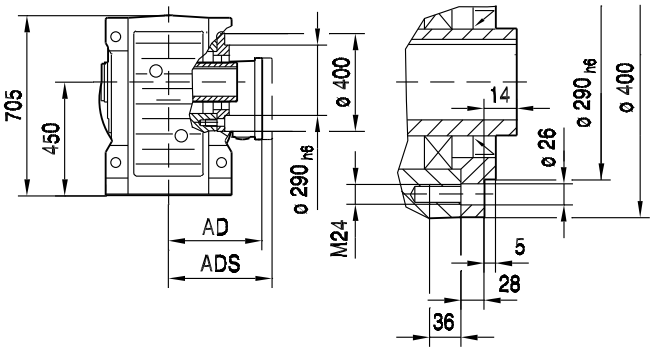

KAZ157..

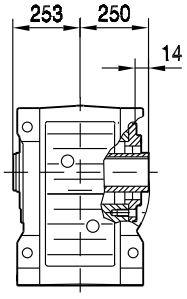

KHZ157..

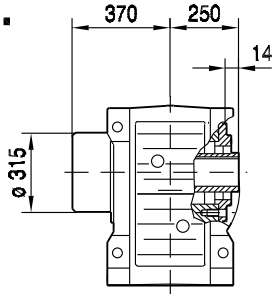

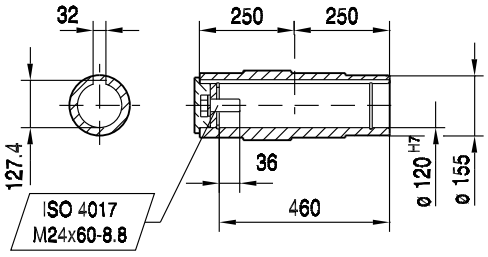

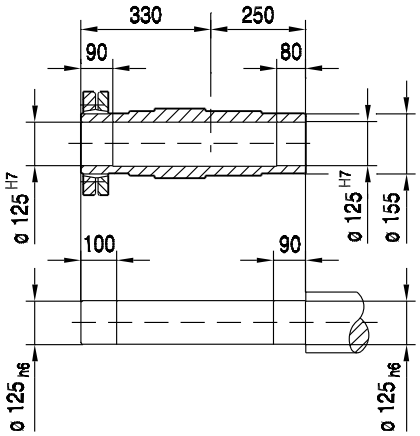

(→ 📖 129)	DRL160..	DRL180S/M	DRL180L/LC	DRL225S	DRL225MC			
AC	270	316	316	394	394			
AD	228	253	253	283	283			
ADS	228	253	253	283	283			
L	1225	1294	1354	1427	1477			
LS	1362	1483	1543	1632	1682			
LB	519	588	648	721	771			
LBS	656	777	837	926	976			

33 201 00 08

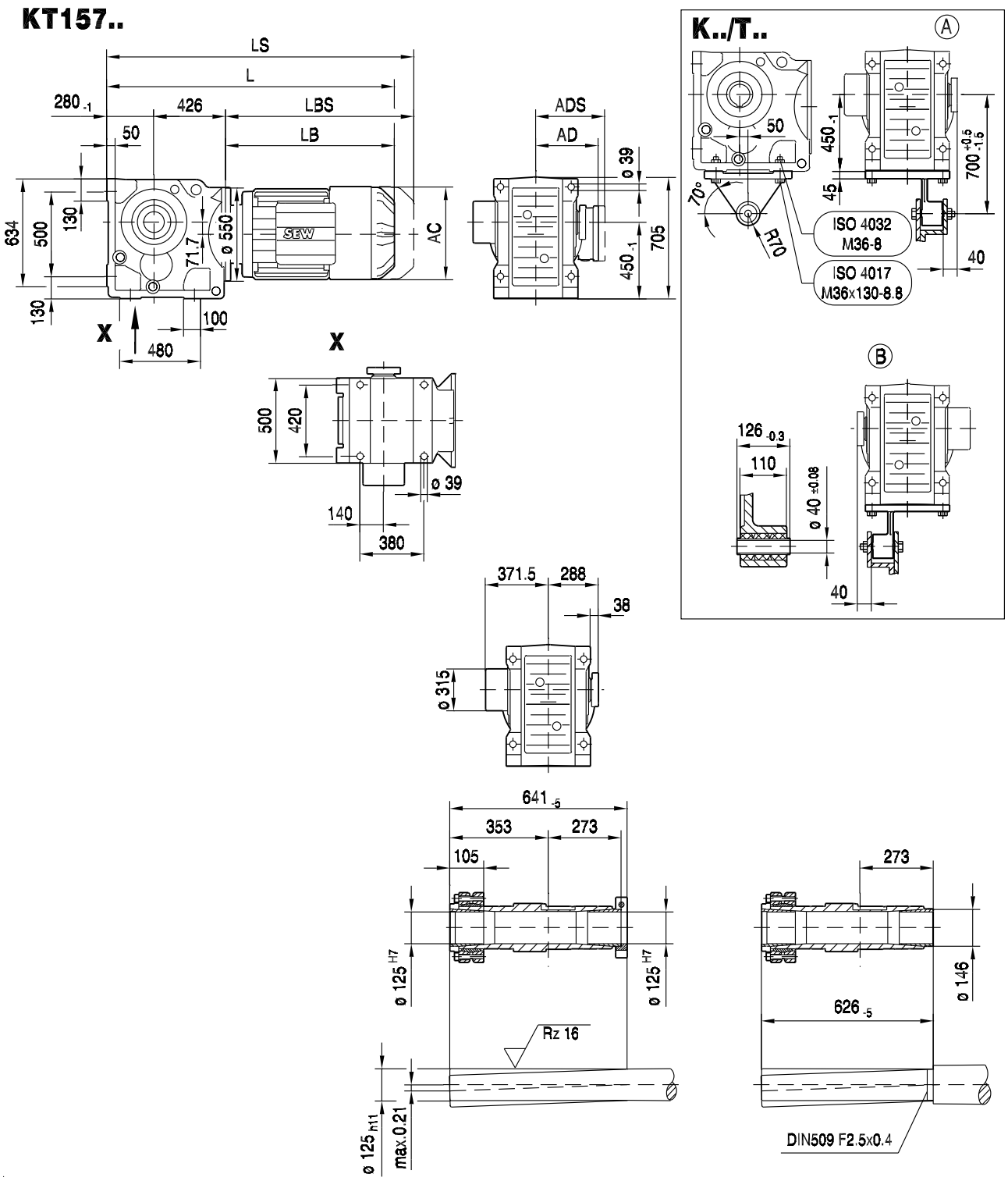

(→ 📖 129)	DRL160..	DRL180S/M	DRL180L/LC	DRL225S	DRL225MC			
AC	270	316	316	394	394			
AD	228	253	253	283	283			
ADS	228	253	253	283	283			
L	1225	1294	1354	1427	1477			
LS	1362	1483	1543	1632	1682			
LB	519	588	648	721	771			
LBS	656	777	837	926	976			

10.2.11 K 167

M_{aDyn} Nm	i	DRL 160M D1	160M D2	160MC D1	160MC D2	180S D1	180S D2	180M D1	180M D2	180L D1	180L D2
K167 3	17.34						6320		7150		8650
	20.32		5460		6240	4090	7410	4870	8380	6240	10100
	24.52	3880	6590	4350	7530	4940	8940	5880	10100	7530	12200
	28.77	4550	7730	5100	8830	5800	10400	6900	11800	8830	14300
	32.25	5100	8660	5720	9900	6500	11700	7740	13300	9900	16000
	36.61						13000		14700		17800
	42.89		11200		12900	8460	15300	10000	17300	12900	20900
	51.77	8110	13700	9090	15700	10300	18600	12200	21100	15700	25500
	60.74	9520	16100	10600	18400	12100	21900	14400	24800	18400	30000
	68.07	10600	18100	11900	20600	13500	24500	16100	27800	20600	>32100
	78.14	12200	20700	13700	23700	15500	28200	18500	31900	23700	>32100
	87.86	13700	23300	15400	26700	17500	31700	20800	>32100	26700	>32100
	109.83	17200	29200	19300	>32100	21900	>32100	26000	>32100	>32100	>32100
	134.99	21100	>32100	23700	>32100	26900		32000		>32100	
	164.50	25700		28900							

m kg	s	DRL 160M	160MC	180S	180M	180L
K167	3	1130	1130	1160	1180	1190
KH: + -38.0 kg						

M_{aDyn} Nm	i	DRL 180LC D1	180LC D2	200L D1	200L D2	225S D1	225S D2	225MC D1	225MC D2
K167 3	17.34	6990	9980	7900	11300	8650	12800	12800	18300
	20.32	8190	11700	9260	13200	10100	15000	15000	21400
	24.52	9880	14100	11100	16000	12200	18100	18100	25800
	28.77	11600	16500	13100	18700	14300	21200	21200	30300
	32.25	13000	18500	14700	21000	16000	23800	23800	>32100
	36.61	14400	20600	16300	23400	17800	26400	26400	>32100
	42.89	16900	24100	19100	27400	20900	31000	31000	>32100
	51.77	20600	29500	23300	>32100	25500	>32100	>32100	>32100
	60.74	24200	>32100	27400	>32100	30000	>32100	>32100	>32100
	68.07	27100	>32100	30700	>32100	>32100	>32100	>32100	>32100
	78.14	31100	>32100	>32100	>32100	>32100	>32100	>32100	
	87.86	>32100	>32100	>32100	>32100	>32100	>32100	>32100	
	109.83	>32100		>32100		>32100			
	134.99								
	164.50								

m kg	s	DRL 180LC	200L	225S	225MC
K167	3	1200	1300	1330	1370
KH: + -38.0 kg					

→ 124

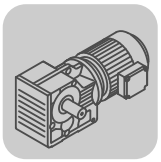

DRL..	i	n_{epk} 1/min	η %	c_{TG} K Nm/'	KH Nm/'	φ /R '
K167 3	17.34	4500	96	4094	3081	5
	20.32	4500	96	4094	3081	5
	24.52	4500	96	4094	3081	5
	28.77	4500	96	4094	3081	5
	32.25	4500	96	4094	3081	5
	36.61	2518	94	4504	3308	5
	42.89	2797	94	4504	3308	5
	51.77	3197	95	4504	3308	5
	60.74	3597	95	4504	3308	5
	68.07	3924	95	4504	3308	5
	78.14	4378	95	4504	3308	5
	87.86	4500	95	4504	3308	5
	109.83	4500	95	4504	3308	5
	134.99	4500	95	4504	3308	5
	164.50	4500	95	4504	3308	4

DRL.. n_e = 1400	i	M_{amax} Nm	M_{apk} Nm	$M_{aNotaus}$ Nm	n_{ak} 1/min	J_G 10^{-4} kgm^2	F_{Ramax} K N	KH N	F_{Rapk} K N	KH N
K167 3	17.34	32000	32100	54400	98	1210	67900	84500	150000	150000
	20.32	32000	32100	54400	108	917	74000	92300	150000	150000
	24.52	32000	32100	54400	114	660	81700	102000	150000	150000
	28.77	32000	32100	54400	122	495	88600	110600	150000	150000
	32.25	32000	32100	54400	124	409	93700	117100	150000	150000
	36.61	32000	32100	54400	74	667	99700	124500	150000	150000
	42.89	32000	32100	54400	77	522	107400	134200	150000	150000
	51.77	32000	32100	54400	81	376	117000	146300	150000	150000
	60.74	32000	32100	54400	82	298	125600	150000	150000	150000
	68.07	32000	32100	54400	85	252	132000	150000	150000	150000
	78.14	32000	32100	54400	86	203	140100	150000	150000	150000
	87.86	32000	32100	54400	80	168	147200	150000	150000	150000
	109.83	32000	32100	54400	64	121	150000	150000	150000	150000
	134.99	32000	32100	54400	52	80	150000	150000	150000	150000
	164.50	32000	32100	54400	43	58	150000	150000	150000	150000

33 202 00 08

K167..

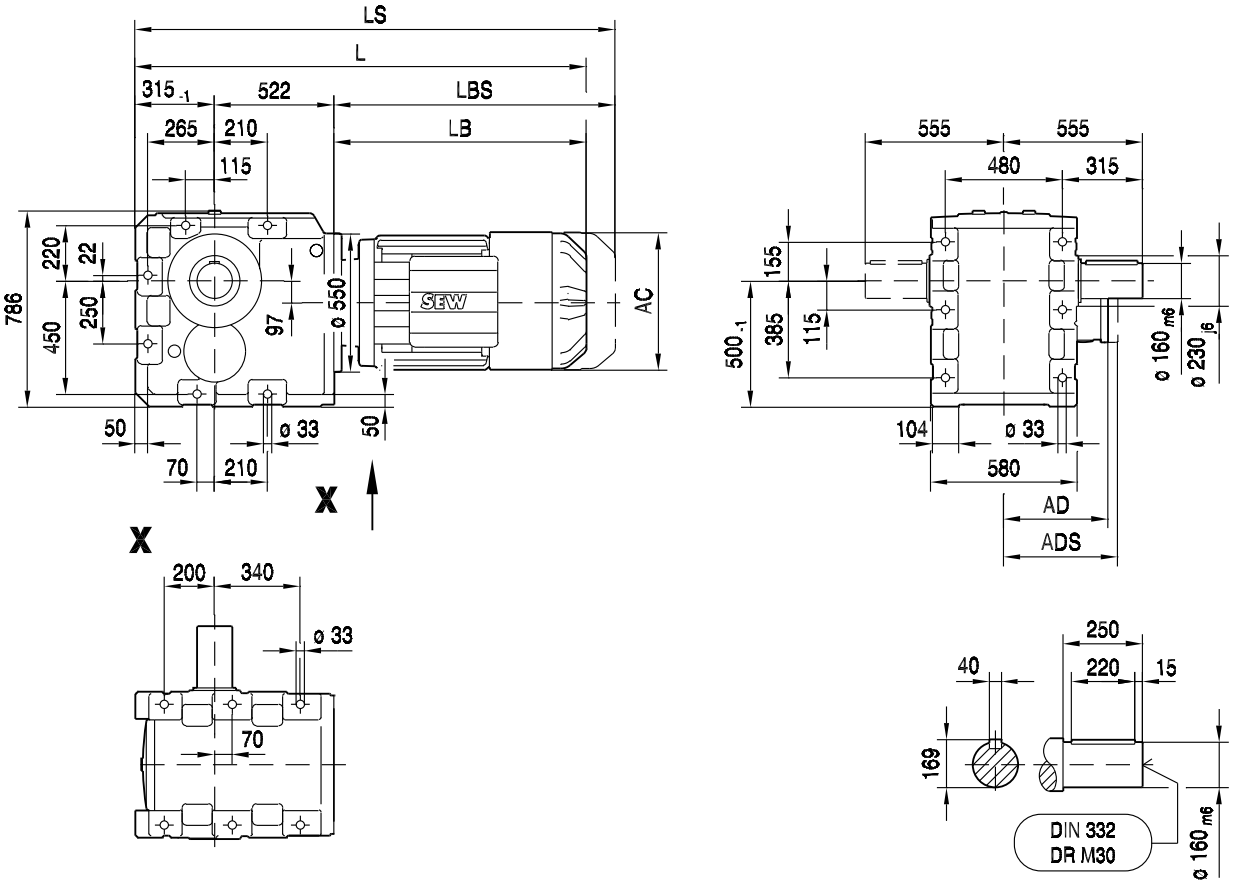

KH167B..

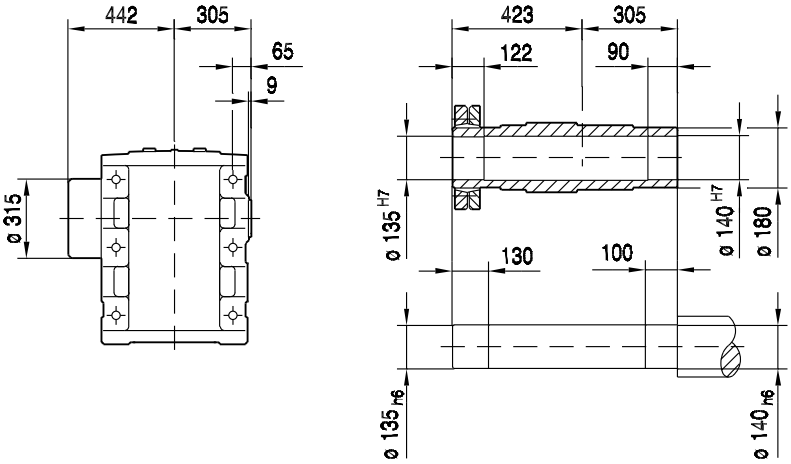

(→ 📖 129)	DRL160..	DRL180S/M	DRL180L/LC	DRL225S	DRL225MC			
AC	270	316	316	394	394			
AD	228	253	253	283	283			
ADS	228	253	253	283	283			
L	1356	1425	1485	1558	1608			
LS	1493	1614	1674	1763	1813			
LB	519	588	648	721	771			
LBS	656	777	837	926	976			

33 203 00 08

KH167..

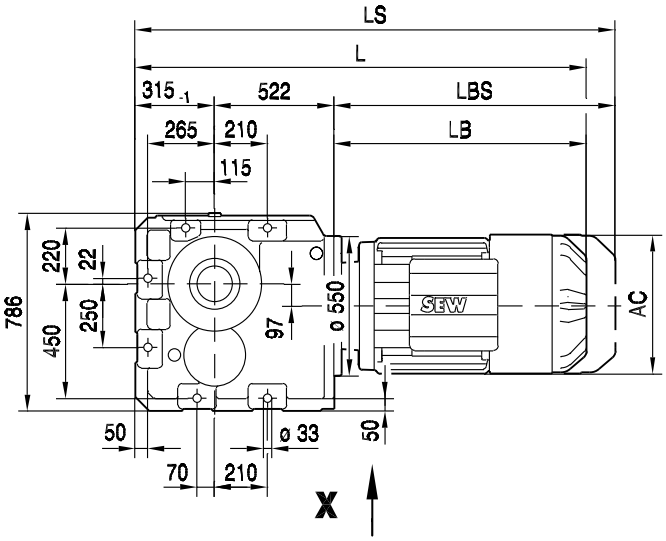

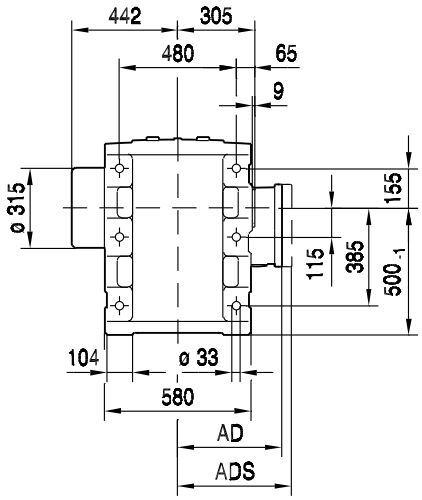

X

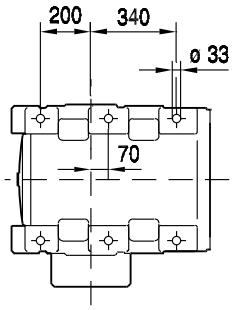

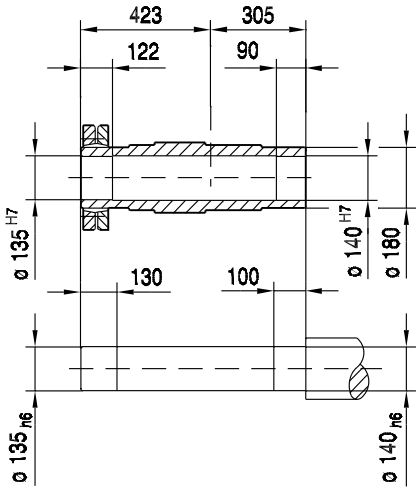

(→ 📖 129)	DRL160..	DRL180S/M	DRL180L/LC	DRL225S	DRL225MC			
AC	270	316	316	394	394			
AD	228	253	253	283	283			
ADS	228	253	253	283	283			
L	1356	1425	1485	1558	1608			
LS	1493	1614	1674	1763	1813			
LB	519	588	648	721	771			
LBS	656	777	837	926	976			

10.2.12 K 187

M_{aDyn} Nm	i	DRL 160M D1	160M D2	160MC D1	160MC D2	180S D1	180S D2	180M D1	180M D2	180L D1	180L D2
K187 3	17.18						6260		7090		8570
	20.15						7350		8310		10000
	24.18						8820		9980		12000
	27.92		7500		8570	5620	10100	6700	11500	8570	13900
	33.23	5260	8930	5900	10200	6690	12100	7970	13700	10200	16500
	38.57	6100	10300	6850	11800	7770	14000	9250	15900	11800	19200
	42.51	6730	11400	7540	13000	8570	15500	10200	17500	13000	21200
	45.50						16200		18300		22200
	53.36						19000		21500		26000
	64.04						22800		25800		31300
	73.96		19400		22200	14500	26400	17300	29800	22200	36100
	88.00	13600	23100	15300	26400	17300	31400	20600	35500	26400	43000
	102.16	15800	26800	17700	30700	20100	36400	24000	41200	30700	49900
	112.60	17400	29600	19500	33800	22200	40200	26400	45500	33800	55000
	129.69	20100	34100	22500	39000	25600	46300	30400	52400	39000	>55600
	144.59	22400	38000	25100	43400	28500	51600	33900	>55600	43400	>55600
	165.21	25800	43900	29000	50200	32900	>55600	39200	>55600	50200	>55600
	179.86	28100	47800	31600	54600	35800	>55600	42700	>55600	54600	>55600

m kg	s	DRL 160M	160MC	180S	180M	180L
K187	3	1710	1720	1740	1760	1770
KH: + -67.0 kg						

M_{aDyn} Nm	i	DRL 180LC D1	180LC D2	200L D1	200L D2	225S D1	225S D2	225MC D1	225MC D2
K187 3	17.18	6920	9890	7830	11200	8570	12600	12600	18100
	20.15	8120	11600	9180	13100	10000	14800	14800	21200
	24.18	9740	13900	11000	15700	12000	17800	17800	25500
	27.92	11200	16000	12700	18200	13900	20600	20600	29400
	33.23	13300	19100	15100	21600	16500	24500	24500	35000
	38.57	15500	22200	17500	25100	19200	28500	28500	40700
	42.51	17100	24400	19300	27700	21200	31400	31400	44800
	45.50	17900	25600	20300	29000	22200	32900	32900	47000
	53.36	21000	30000	23800	34100	26000	38600	38600	55100
	64.04	25200	36100	28500	40900	31300	46300	46300	>55600
	73.96	29100	41700	33000	47200	36100	53500	53500	>55600
	88.00	34700	49600	39200	>55600	43000	>55600	>55600	>55600
	102.16	40300	>55600	45600	>55600	49900	>55600	>55600	>55600
	112.60	44400	>55600	50200	>55600	55000	>55600	>55600	>55600
	129.69	51200	>55600	>55600	>55600	>55600	>55600	>55600	
	144.59	>55600	>55600	>55600	>55600	>55600	>55600	>55600	
	165.21	>55600		>55600		>55600			
	179.86	>55600		>55600		>55600			

m kg	s	DRL 180LC	200L	225S	225MC
K187	3	1780	1880	1910	1950
KH: + -67.0 kg					

→ 124

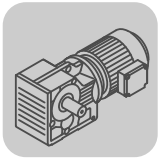

DRL..	i	n_{epk} 1/min	η %	c_{TG} K Nm/'	KH Nm/'	φ /R '
K187 3	17.18	4500	96	6149	4246	4
	20.15	4500	96	6149	4246	4
	24.18	4500	96	6149	4246	4
	27.92	4500	96	6149	4246	4
	33.23	4500	96	6149	4246	4
	38.57	4500	96	6149	4246	4
	42.51	4500	96	6149	4246	4
	45.50	2014	94	6900	4591	4
	53.36	2238	94	6900	4591	4
	64.04	2518	94	6900	4591	4
	73.96	2797	94	6900	4591	4
	88.00	3197	94	6900	4591	4
	102.16	3597	94	6900	4591	4
	112.60	3924	94	6900	4591	4
	129.69	4378	94	6900	4591	4
	144.59	4500	94	6900	4591	4
	165.21	4500	95	6900	4591	4
	179.86	4500	95	6900	4591	4

DRL.. n_e = 1400	i	M_{amax} Nm	M_{apk} Nm	$M_{aNotaus}$ Nm	n_{ak} 1/min	J_G 10^{-4} kgm^2	F_{Ramax} K N	KH N	F_{Rapk} K N	KH N
K187 3	17.18	41400	55600	70380	93	3276	80800	103800	190000	190000
	20.15	43900	55600	74630	79	2495	84000	107900	190000	190000
	24.18	47600	55600	80920	66	1864	86800	111500	190000	190000
	27.92	50000	55600	85000	61	1464	90200	115800	190000	190000
	33.23	50000	55600	85000	63	1090	99100	127400	190000	190000
	38.57	50000	55600	85000	65	842	107200	137800	190000	190000
	42.51	50000	55600	85000	66	703	112700	144800	190000	190000
	45.50	50000	55600	85000	31	1586	116600	149800	190000	190000
	53.36	50000	55600	85000	32	1266	126100	162100	190000	190000
	64.04	50000	55600	85000	33	1011	137600	176800	190000	190000
	73.96	50000	55600	85000	34	824	147000	189000	190000	190000
	88.00	50000	55600	85000	35	626	159000	190000	190000	190000
	102.16	50000	55600	85000	36	507	169900	190000	190000	190000
	112.60	50000	55600	85000	36	427	177200	190000	190000	190000
	129.69	50000	55600	85000	37	354	188200	190000	190000	190000
	144.59	50000	55600	85000	37	267	190000	190000	190000	190000
	165.21	50000	55600	85000	38	222	190000	190000	190000	190000
	179.86	50000	55600	85000	38	194	190000	190000	190000	190000

33 204 00 08

K187..

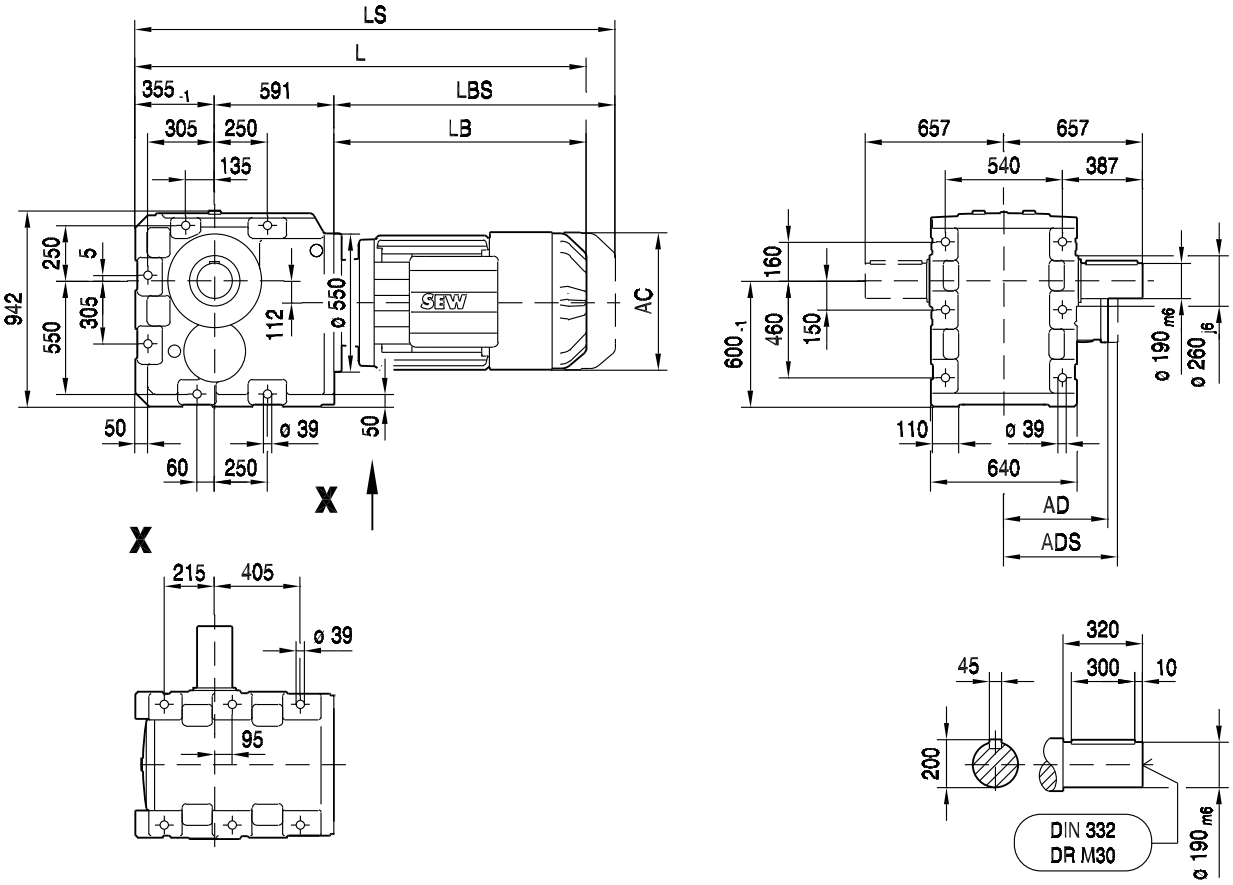

KH187B..

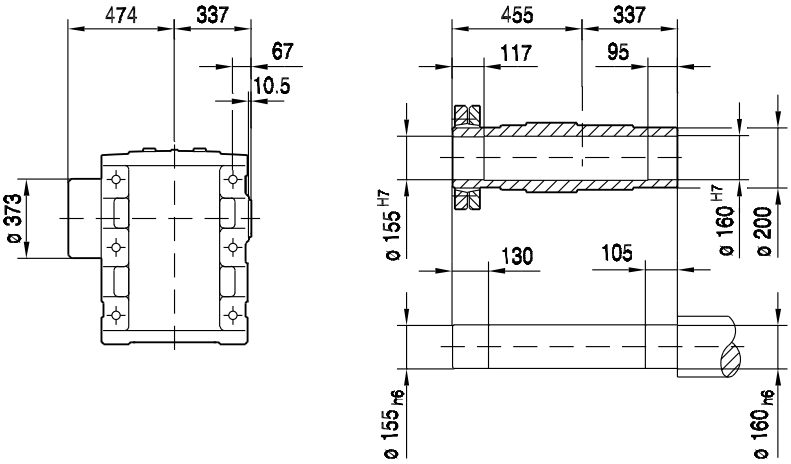

(→ 📖 129)	DRL160..	DRL180S/M	DRL180L/LC	DRL225S	DRL225MC			
AC	270	316	316	394	394			
AD	228	253	253	283	283			
ADS	228	253	253	283	283			
L	1465	1534	1594	1667	1717			
LS	1602	1723	1783	1872	1922			
LB	519	588	648	721	771			
LBS	656	777	837	926	976			

33 205 00 08

KH187..

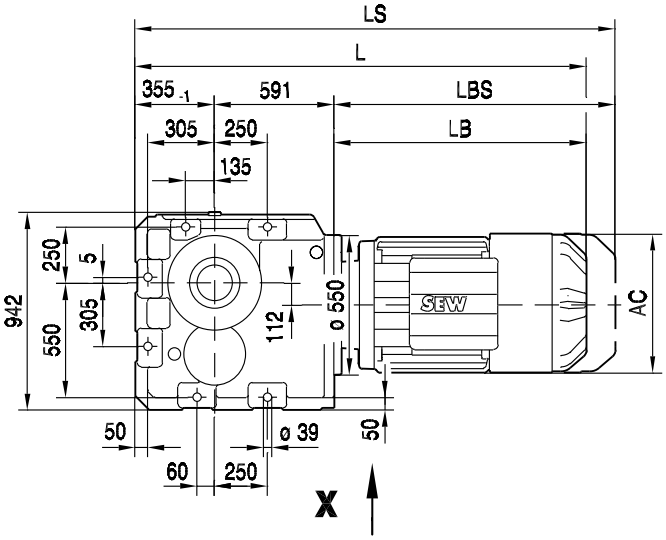

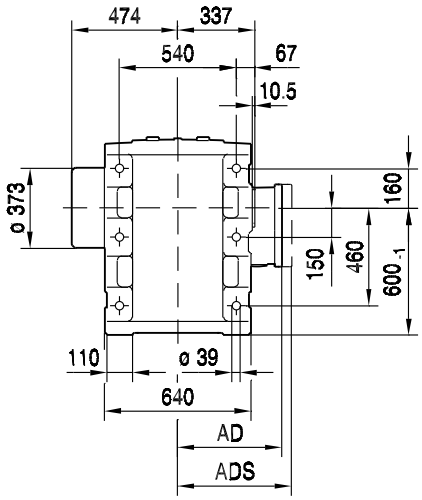

X

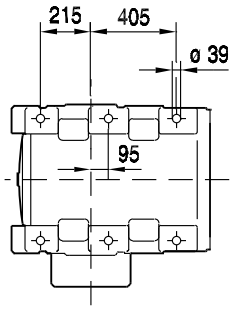

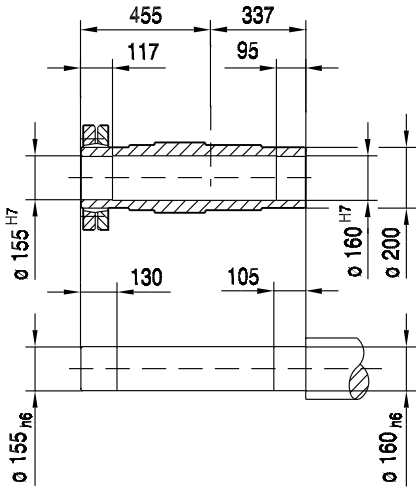

(→ 📖 129)	DRL160..	DRL180S/M	DRL180L/LC	DRL225S	DRL225MC			
AC	270	316	316	394	394			
AD	228	253	253	283	283			
ADS	228	253	253	283	283			
L	1465	1534	1594	1667	1717			
LS	1602	1723	1783	1872	1922			
LB	519	588	648	721	771			
LBS	656	777	837	926	976			

11 S..DRL

11.1 S, SF, SAF, SHF, SA../T, SH, SAZ, SHZ..DRL

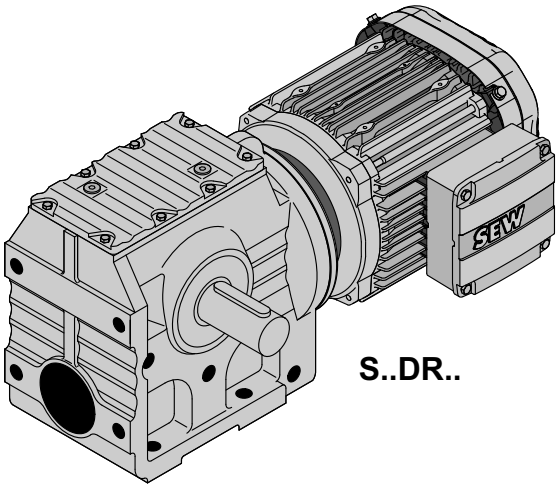

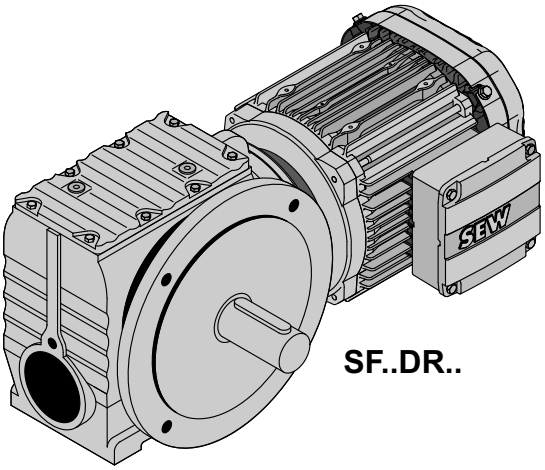

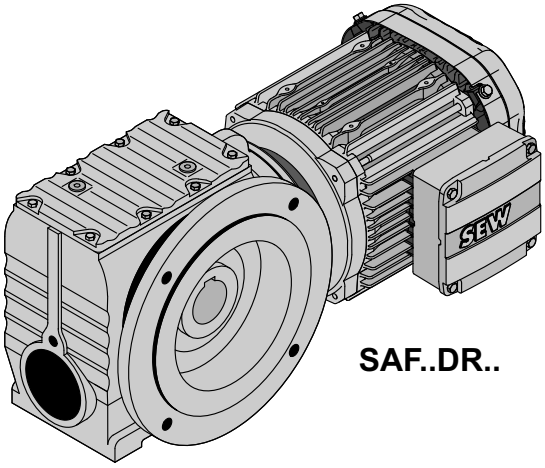

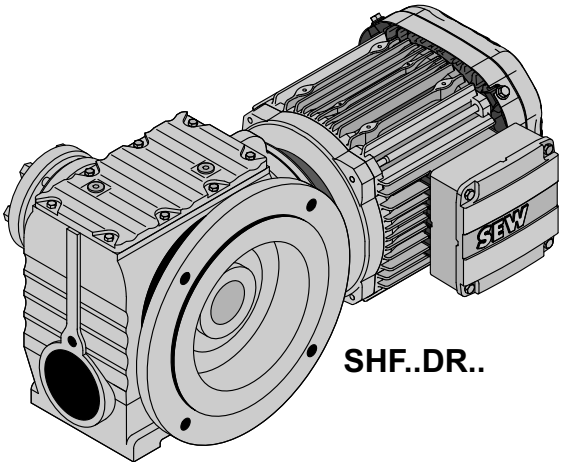

60406axx

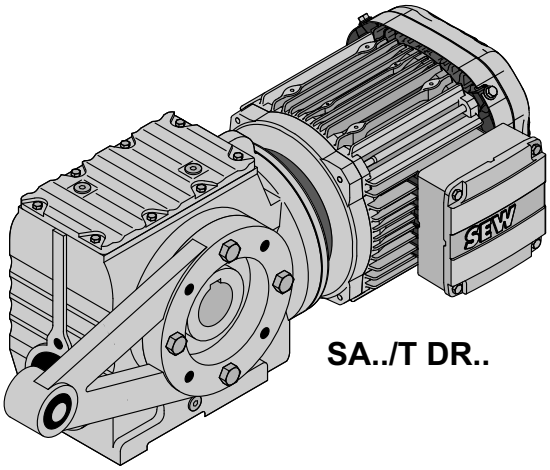

SA../T DR..

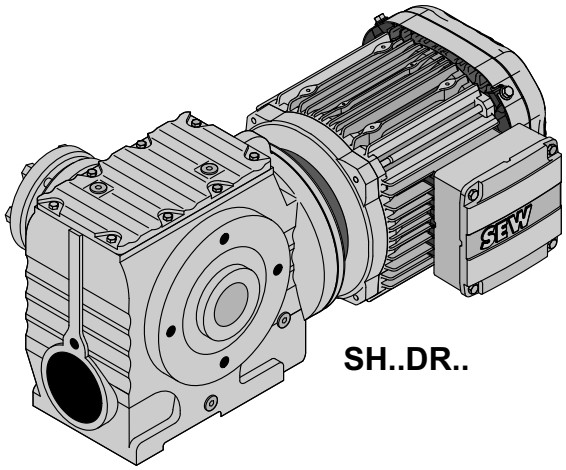

SH..DR..

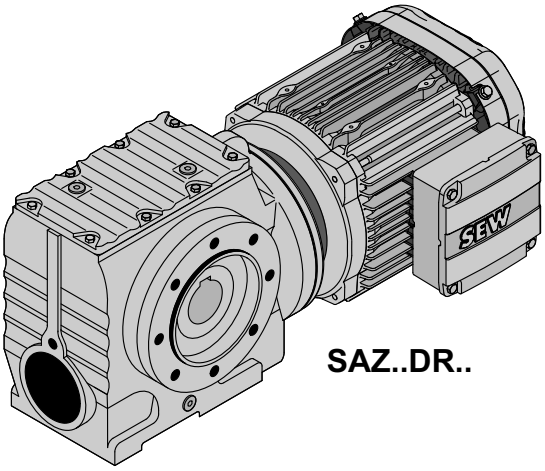

SAZ..DR..

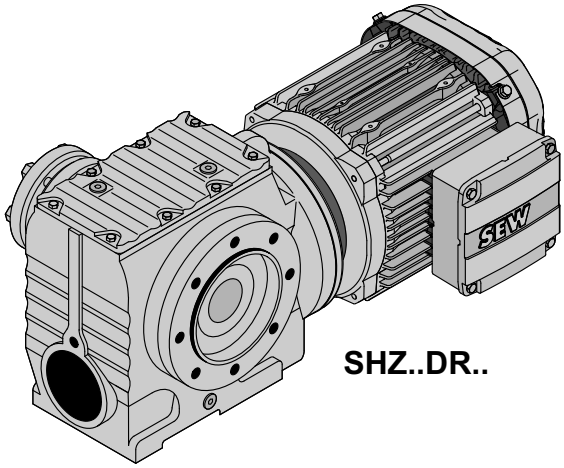

SHZ..DR..

60412axx

11.2 S..Nm

11.2.1 S 37

M_{aDyn} Nm	i	DRL						
		71S		71M		80S		80M
		D1	D2	D1	D2	D1	D2	D1
S37 2	3.97	17	30	24	>48	35	>48	45
	4.86	21	36	30	>49	43	>49	>49
	5.38	24	40	33	>51	47	>51	>51
	6.33	28	47	39	>52	>52	>52	>52
	6.80	30	50	41	>60	59	>60	>60
	8.00	34	58	48	>61	>61	>61	>61
	9.02	39	>62	54	>62	>62	>62	>62
	10.23	44	>63	62	>63	>63	>63	>63
	10.91	47	>64	>64	>64	>64	>64	>64
	12.48	53	>64	>64	>64	>64	>64	>64
	13.39	57	>65	>65	>65	>65	>65	>65
	15.53	65	>66	>66		>66		>66
	18.24	>67		>67				
	19.13	75	>93	>93	>93	>93	>93	>93
	19.89	>68		>68				
	22.50	87	>95	>95	>95	>95	>95	>95
	25.38	>96	>96	>96	>96	>96	>96	>96
	28.76	>97	>97	>97	>97	>97	>97	>97
	30.68	>98	>98	>98	>98	>98	>98	>98
	35.10	>99	>99	>99	>99	>99	>99	>99
	37.66	>100	>100	>100	>100	>100	>100	>100
	43.68	>101	>101	>101		>101		>101
	51.30	>103		>103				
	55.93	>104		>104				

→ 124

m kg		DRL			
	s	71S	71M	80S	80M
S37	2	14	15	17	20
SF: + 1.3 kg / SA: + -0.3 kg / SAF: + 1.3 kg					

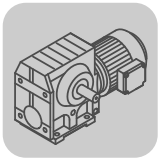

DRL..	i	n_{epk} 1/min	η %	c_{TG} S Nm/'	SF Nm/'	SA Nm/'	SAF Nm/'
S37 2	3.97	4500	88	-	-	-	-
	4.86	4500	88	-	-	-	-
	5.38	4500	88	-	-	-	-
	6.33	4500	87	-	-	-	-
	6.80	4500	87	-	-	-	-
	8.00	4500	86	-	-	-	-
	9.02	4500	86	-	-	-	-
	10.23	4500	86	-	-	-	-
	10.91	4500	86	-	-	-	-
	12.48	4500	85	-	-	-	-
	13.39	4500	85	-	-	-	-
	15.53	4500	84	-	-	-	-
	18.24	4500	84	-	-	-	-
	19.13	4500	78	-	-	-	-
	19.89	4500	84	-	-	-	-
	22.50	4500	77	-	-	-	-
	25.38	4500	76	-	-	-	-
	28.76	4500	76	-	-	-	-
	30.68	4500	76	-	-	-	-
	35.10	4500	75	-	-	-	-
	37.66	4500	75	-	-	-	-
	43.68	4500	74	-	-	-	-
	51.30	4500	73	-	-	-	-
	55.93	4500	73	-	-	-	-

DRL.. n_e = 1400	i	M_{amax} Nm	M_{apk} Nm	$M_{aNotaus}$ Nm	n_{ak} 1/min	J_G 10^{-4} kgm^2	F_{Ramax} S N	SF N	SA N	SAF N	F_{Rapk} S N	SF N	SA N	SAF N
S37 2	3.97	32	48	72	277	0.92	1400	1570	2010	2010	3000	3000	4000	4000
	4.86	33	49	74	226	0.67	1520	1700	2180	2180	3000	3000	4000	4000
	5.38	34	51	76	204	0.59	1570	1760	2260	2260	3000	3000	4000	4000
	6.33	35	52	78	174	0.44	1670	1870	2400	2400	3000	3000	4000	4000
	6.80	43	60	90	29	0.47	1630	1840	2360	2360	3000	3000	4000	4000
	8.00	45	61	77	25	0.36	1730	1950	2500	2500	3000	3000	4000	4000
	9.02	46	62	78	22	0.30	1810	2040	2610	2610	3000	3000	4000	4000
	10.23	47	63	80	20	0.24	1900	2140	2740	2740	3000	3000	4000	4000
	10.91	48	64	82	18	0.22	1940	2190	2800	2800	3000	3000	4000	4000
	12.48	48	64	82	16	0.18	2060	2320	2970	2970	3000	3000	4000	4000
	13.39	49	65	83	15	0.16	2110	2370	3040	3040	3000	3000	4000	4000
	15.53	50	66	85	13	0.13	2240	2510	3220	3220	3000	3000	4000	4000
	18.24	52	67	88	11	0.10	2380	2660	3410	3410	3000	3000	4000	4000
	19.13	71	93	121	10	0.43	2380	2670	3420	3420	3000	3000	4000	4000
	19.89	52	68	88	10	0.090	2470	2760	3540	3540	3000	3000	4000	4000
	22.50	73	95	124	9	0.32	2530	2840	3630	3630	3000	3000	4000	4000
	25.38	74	96	126	8	0.27	2660	2980	3810	3810	3000	3000	4000	4000
	28.76	75	97	128	7	0.22	2800	3000	4000	4000	3000	3000	4000	4000
	30.68	76	98	129	16	0.20	2860	3000	4000	4000	3000	3000	4000	4000
	35.10	78	99	133	14	0.16	3000	3000	4000	4000	3000	3000	4000	4000
	37.66	79	100	134	13	0.15	3000	3000	4000	4000	3000	3000	4000	4000
	43.68	81	101	138	16	0.12	3000	3000	4000	4000	3000	3000	4000	4000
	51.30	81	103	138	14	0.090	3000	3000	4000	4000	3000	3000	4000	4000
	55.93	81	104	138	13	0.080	3000	3000	4000	4000	3000	3000	4000	4000

02 098 00 08

S37..

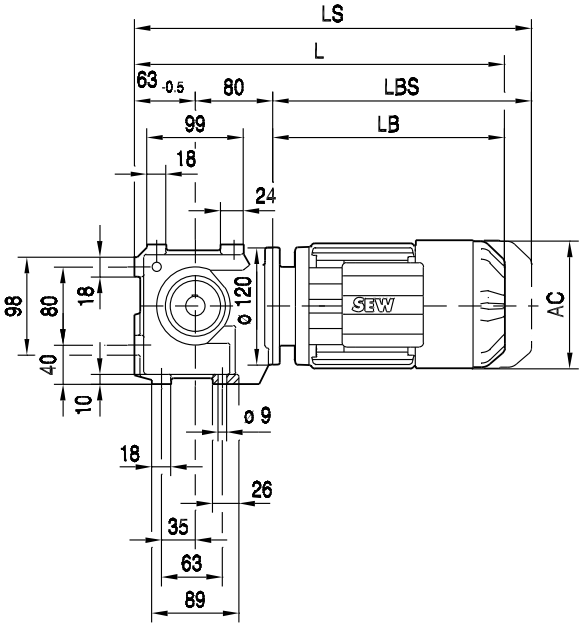

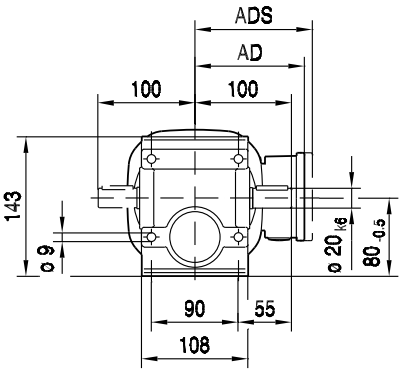

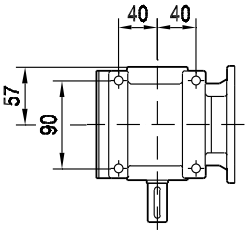

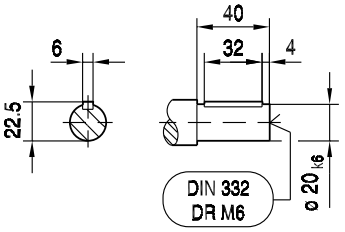

(→ 📖 129)	DRL71S	DRL71M	DRL80S	DRL80M				
AC	139	139	156	156				
AD	119	119	128	128				
ADS	129	129	139	139				
L	431	456	475	506				
LS	495	520	555	586				
LB	288	313	332	363				
LBS	352	377	412	443				

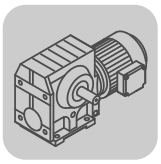

02 099 00 08

SF37..

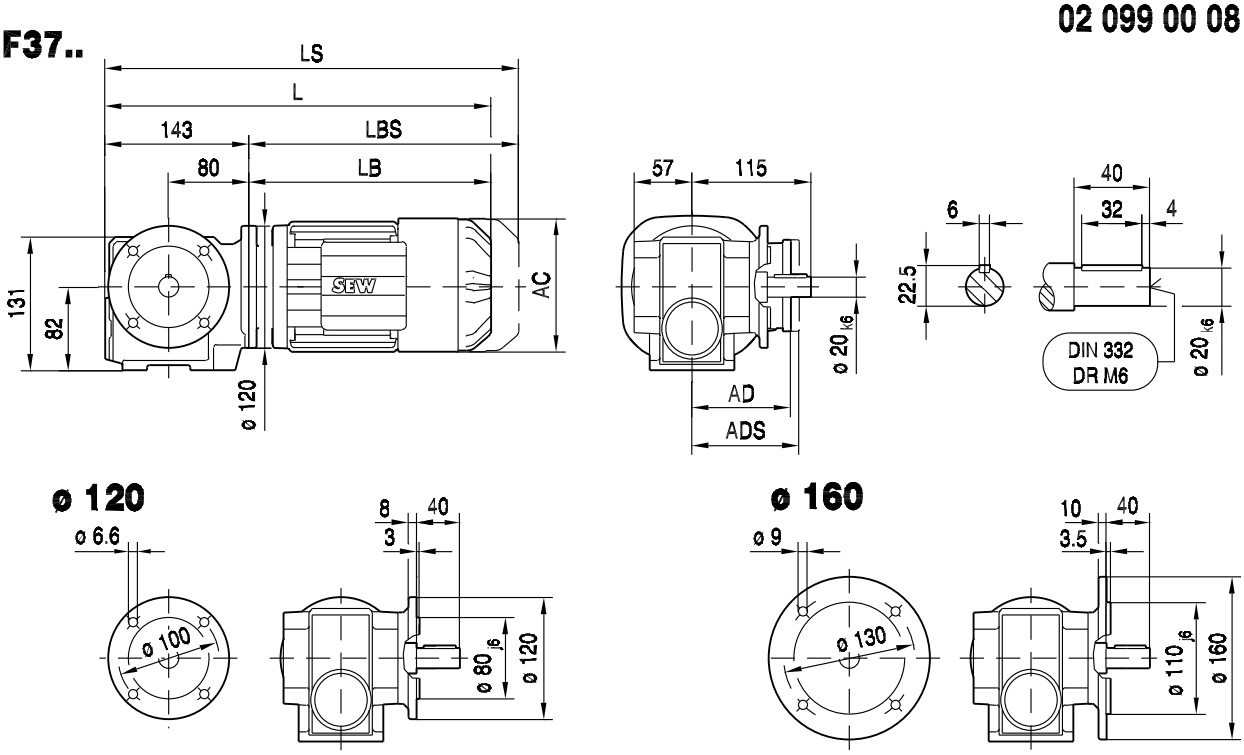

SAF37..

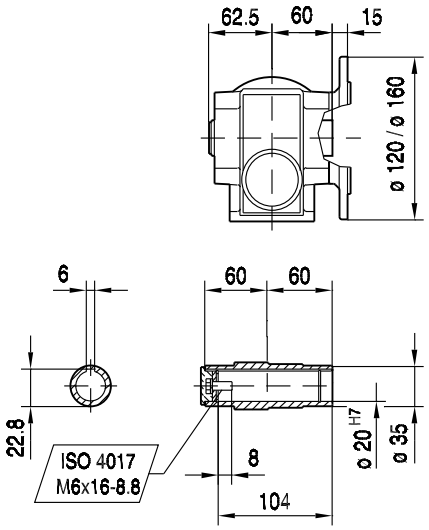

SHF37..

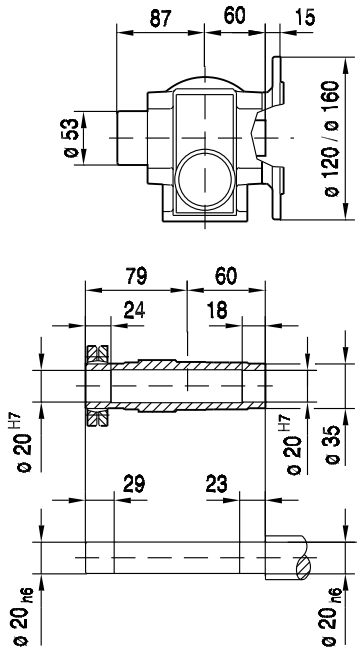

(→ 📖 129)	DRL71S	DRL71M	DRL80S	DRL80M				
AC	139	139	156	156				
AD	119	119	128	128				
ADS	129	129	139	139				
L	431	456	475	506				
LS	495	520	555	586				
LB	288	313	332	363				
LBS	352	377	412	443				

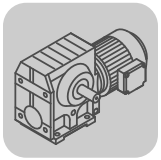

S..DRL
S..Nm

02 100 00 08

SA37..

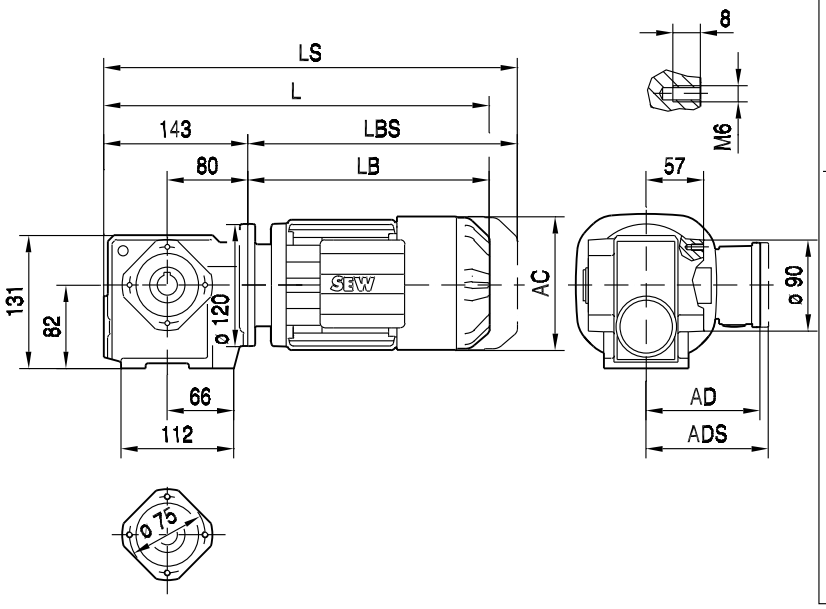

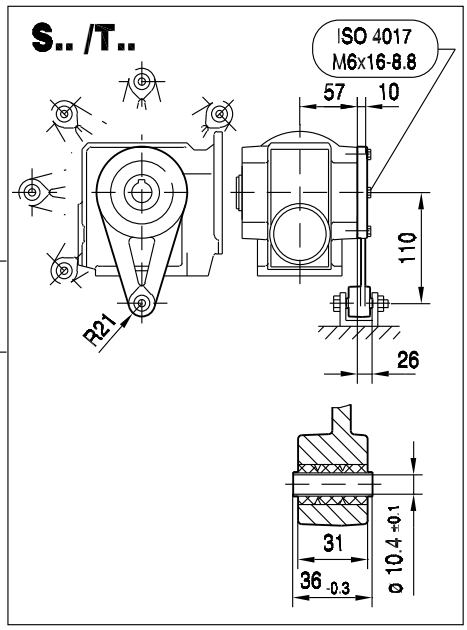

SA37..

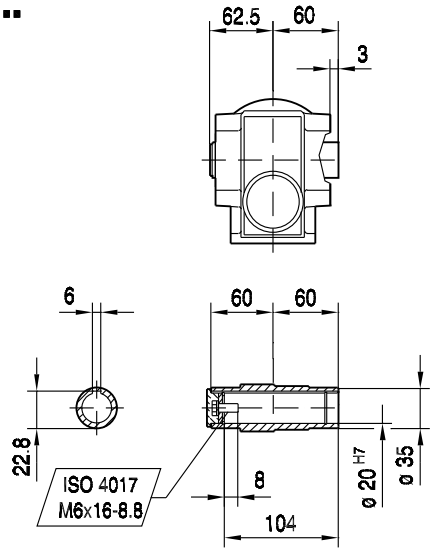

SH37..

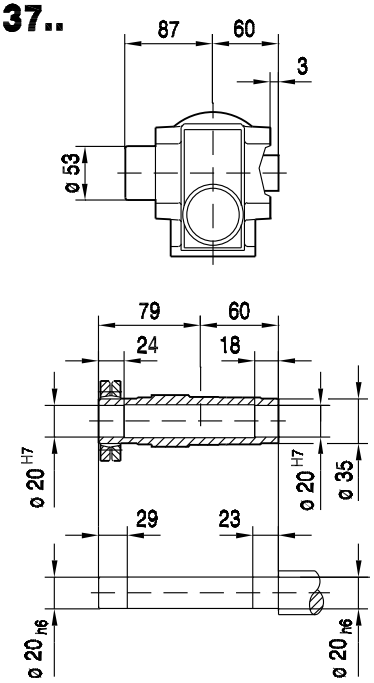

(→ 📖 129)	DRL71S	DRL71M	DRL80S	DRL80M				
AC	139	139	156	156				
AD	119	119	128	128				
ADS	129	129	139	139				
L	431	456	475	506				
LS	495	520	555	586				
LB	288	313	332	363				
LBS	352	377	412	443				

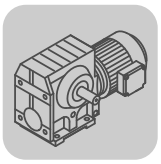

02 101 00 08

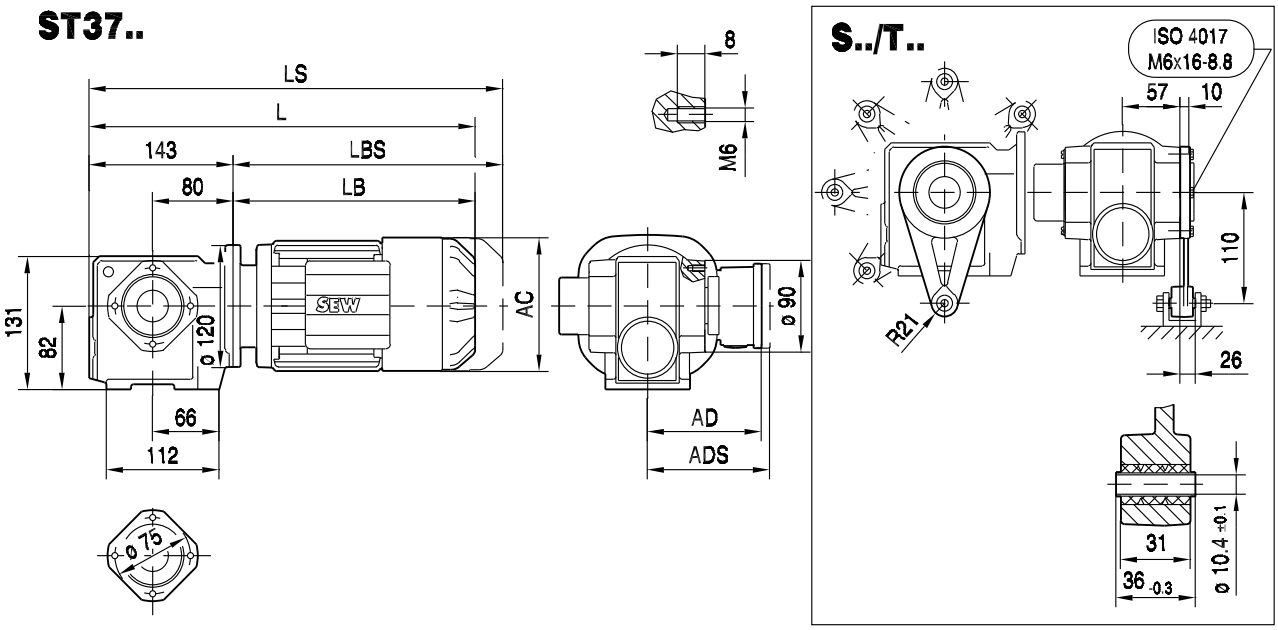

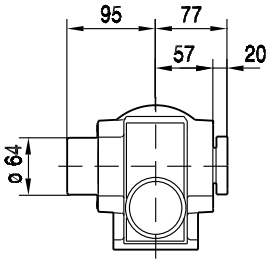

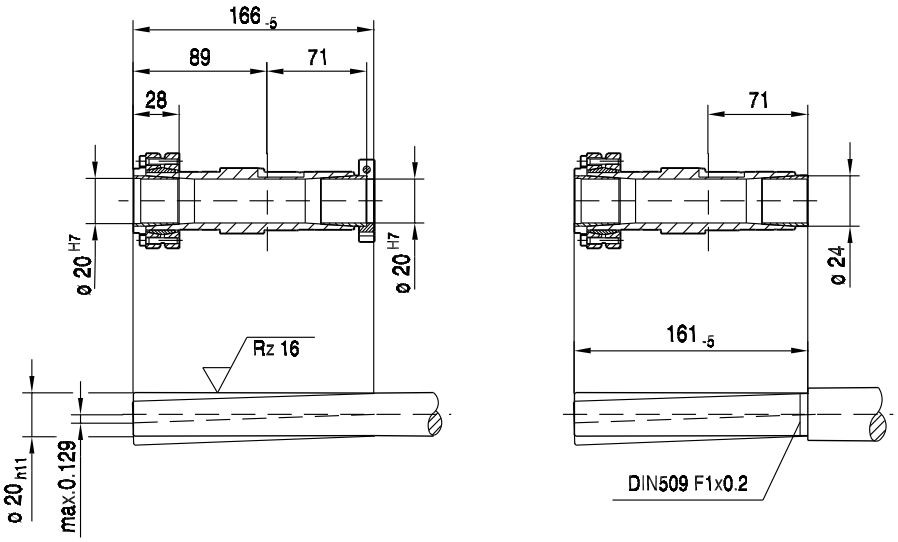

(→ 📖 129)	DRL71S	DRL71M	DRL80S	DRL80M				
AC	139	139	156	156				
AD	119	119	128	128				
ADS	129	129	139	139				
L	431	456	475	506				
LS	495	520	555	586				
LB	288	313	332	363				
LBS	352	377	412	443				

11.2.2 S 47

M_{aDyn} Nm	i	DRL								
		71S		71M		80S		80M	90L	100L
		D1	D2	D1	D2	D1	D2	D1	D1	D1
	4.00	18	31	25	50	36	>72	47	>72	>72
	4.76	21	36	30	60	43	>87	56	>87	>87
	5.39	24	41	34	67	48	>97	62	>97	>97
	6.40	28	48	40	80	57	>114	74	>114	>114
	6.83	30	52	43	85	61	>117	79	>117	>117
	7.28	32	54	44	89	63	>129	82	>129	>129
	8.64	38	64	53	105	75	>146	98	>146	>146
	9.23	40	68	56	112	80	>146	104	>146	>146
	10.80	47	80	66	132	94	>145	122	>145	>145
	12.10	53	89	74	>145	105	>145	137	>145	>145
	14.24	61	104	86	>144	122	>144	>144	>144	>144
S47	16.47	71	120	99	>144	142	>144	>144		
2	17.62	76	129	106	>144	>144	>144	>144		
	19.54		131		>184	154	>184	>184	>184	>184
	20.33	86	>143	121		>143		>143		
	23.20	92	156	128	>200	183	>200	>200	>200	>200
	24.77	98	166	137	>205	196	>205	>205	>205	>205
	29.00	113	192	158	>215	>215	>215	>215	>215	>215
	32.48	125	210	175	>215	>215	>215	>215	>215	>215
	38.23	147	>215	205	>215	>215	>215	>215	>215	>215
	44.22	168	>210	>210	>210	>210	>210	>210		
	47.32	177	>210	>210	>210	>210	>210	>210		
	54.59	200	>210	>210		>210		>210		
	63.80	>210		>210						
	69.39	>210		>210						

→ 124

m kg		DRL					
	s	71S	71M	80S	80M	90L	100L
S47	2	17	18	20	23	31	38
SF: + 3.6 kg / SA: + 1.1 kg / SAF: + 2.8 kg							

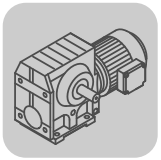

DRL..	i	n_{epk} 1/min	η %	c_{TG} S Nm/'	SF Nm/'	SA Nm/'	SAF Nm/'
S47 2	4.00	4500	90	-	-	-	-
	4.76	4500	90	-	-	-	-
	5.39	4500	89	-	-	-	-
	6.40	4500	89	-	-	-	-
	6.83	4500	89	-	-	-	-
	7.28	4500	87	-	-	-	-
	8.64	4500	87	-	-	-	-
	9.23	4500	87	-	-	-	-
	10.80	4500	87	-	-	-	-
	12.10	4500	87	-	-	-	-
	14.24	4500	86	-	-	-	-
	16.47	4500	86	-	-	-	-
	17.62	4500	86	-	-	-	-
	19.54	4500	79	-	-	-	-
	20.33	4500	85	-	-	-	-
	23.20	4500	79	-	-	-	-
	24.77	4500	79	-	-	-	-
	29.00	4500	78	-	-	-	-
	32.48	4500	77	-	-	-	-
	38.23	4500	77	-	-	-	-
	44.22	4500	76	-	-	-	-
	47.32	4500	75	-	-	-	-
	54.59	4500	75	-	-	-	-
	63.80	4500	74	-	-	-	-
	69.39	4500	73	-	-	-	-

DRL.. n_e = 1400	i	M_{amax} Nm	M_{apk} Nm	$M_{aNotaus}$ Nm	n_{ak} 1/min	J_G 10^{-4} kgm^2	F_{Ramax} S N	SF N	SA N	SAF N	F_{Rapk} S N	SF N	SA N	SAF N
S47 2	4.00	61	72	108	225	2.5	1980	2420	2740	2740	5660	6140	7000	7000
	4.76	72	87	130	231	1.8	2010	2490	2780	2780	5580	6070	7000	7000
	5.39	74	97	146	204	1.5	2110	2600	2920	2920	5530	6030	7000	7000
	6.40	76	114	171	172	1.1	2260	2780	3120	3120	5440	5940	7000	7000
	6.83	78	117	176	161	1.0	2300	2840	3190	3190	5420	5930	7000	7000
	7.28	103	129	175	27	1.1	2110	2690	2940	2940	5360	5870	7000	7000
	8.64	109	146	185	23	0.83	2230	2840	3110	3110	5260	5780	7000	7000
	9.23	109	146	185	22	0.74	2310	2930	3210	3210	5260	5780	7000	7000
	10.80	109	145	185	19	0.57	2500	3150	3480	3480	5270	5790	7000	7000
	12.10	109	145	185	17	0.47	2650	3310	3670	3670	5270	5790	7000	7000
	14.24	110	144	187	14	0.35	2850	3540	3950	3950	5270	5790	7000	7000
	16.47	110	144	187	12	0.28	3060	3770	4230	4230	5270	5790	7000	7000
	17.62	110	144	187	11	0.26	3160	3880	4360	4360	5270	5790	7000	7000
	19.54	144	184	245	10	0.94	3370	4120	4660	4660	5200	5710	7000	7000
	20.33	110	143	187	10	0.20	3370	4130	4650	4650	5280	5800	7000	7000
	23.20	152	200	258	9	0.72	3570	4360	4940	4940	5110	5620	7000	7000
	24.77	155	205	264	8	0.65	3650	4460	5050	5050	5080	5590	7000	7000
	29.00	155	215	264	7	0.49	3920	4760	5420	5420	5020	5530	7000	7000
	32.48	155	215	264	6	0.41	4120	4990	5690	5690	5020	5530	7000	7000
	38.23	155	215	264	5	0.31	4420	5330	6100	6100	5020	5530	7000	7000
	44.22	155	210	264	5	0.25	4710	5660	6490	6490	5050	5560	7000	7000
	47.32	155	210	264	4	0.23	4850	5810	6680	6680	5050	5560	7000	7000
	54.59	155	210	264	9	0.18	5150	5870	7000	7000	5050	5560	7000	7000
	63.80	155	210	264	8	0.15	5370	5870	7000	7000	5050	5560	7000	7000
	69.39	155	210	264	7	0.13	5370	5870	7000	7000	5050	5560	7000	7000

02 102 00 08

S47..

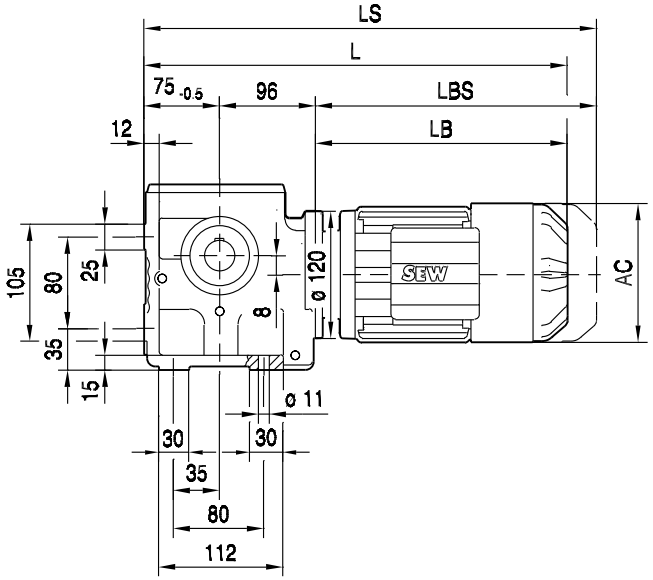

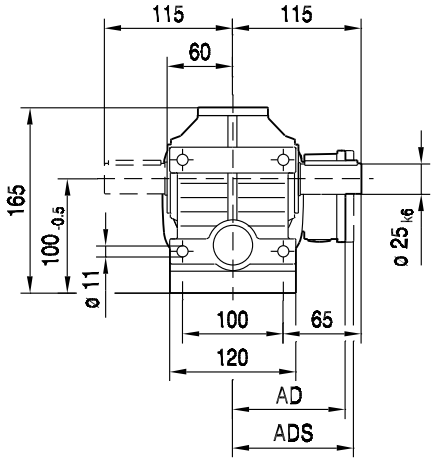

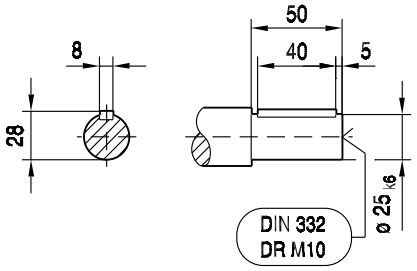

(→ 📖 129)	DRL71S	DRL71M	DRL80S	DRL80M	DRL90L	DRL100L		
AC	139	139	156	156	179	197		
AD	119	119	128	128	140	157		
ADS	129	129	139	139	150	158		
L	459	484	503	534	551	610		
LS	523	548	583	614	637	697		
LB	288	313	332	363	380	439		
LBS	352	377	412	443	466	526		

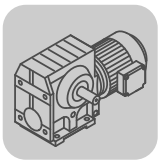

02 103 00 08

SF47..

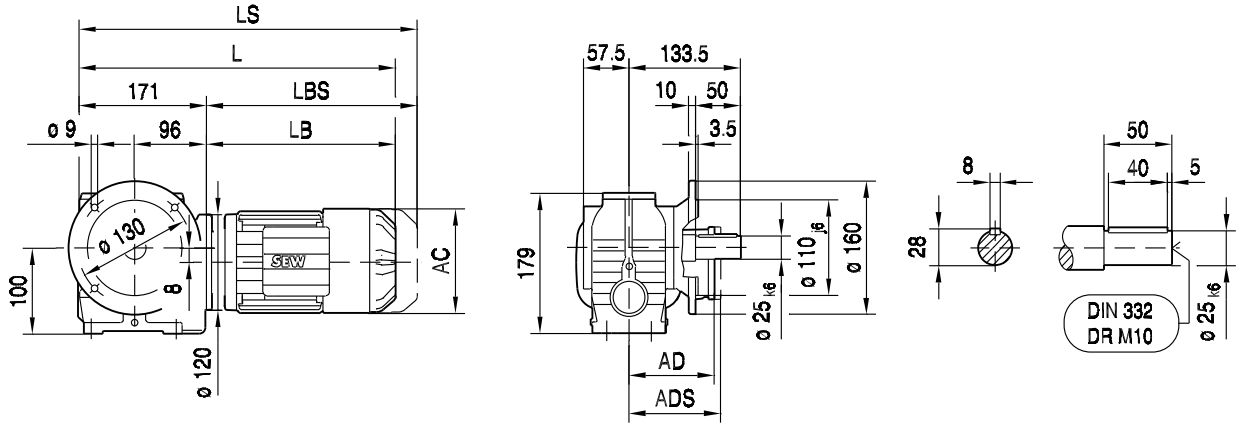

SAF47..

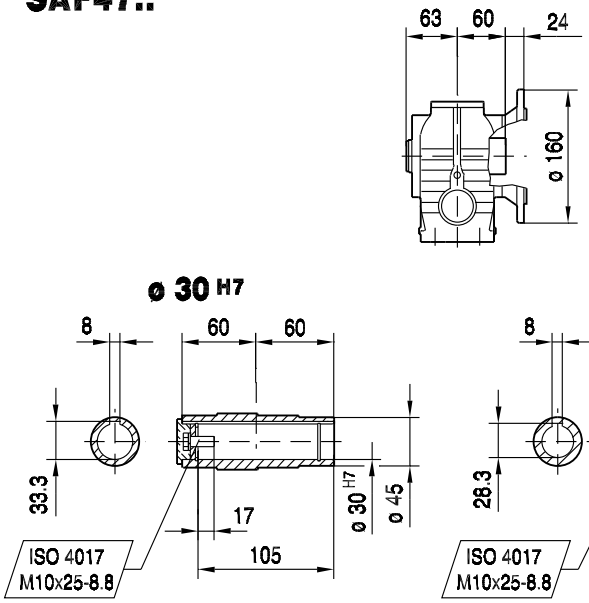

SHF47..

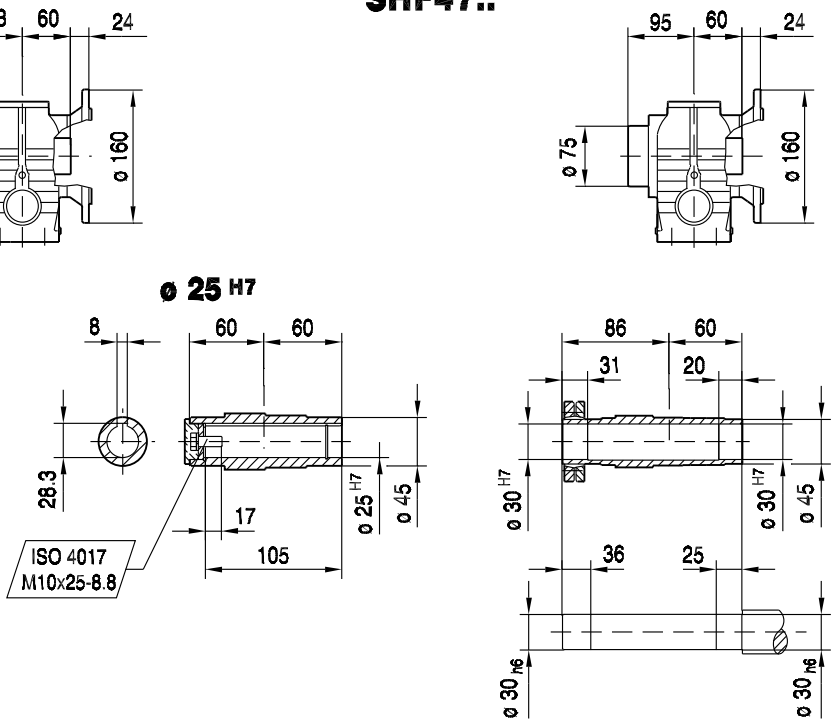

(→ 📖 129)	DRL71S	DRL71M	DRL80S	DRL80M	DRL90L	DRL100L		
AC	139	139	156	156	179	197		
AD	119	119	128	128	140	157		
ADS	129	129	139	139	150	158		
L	459	484	503	534	551	610		
LS	523	548	583	614	637	697		
LB	288	313	332	363	380	439		
LBS	352	377	412	443	466	526		

02 104 00 08

SA47..

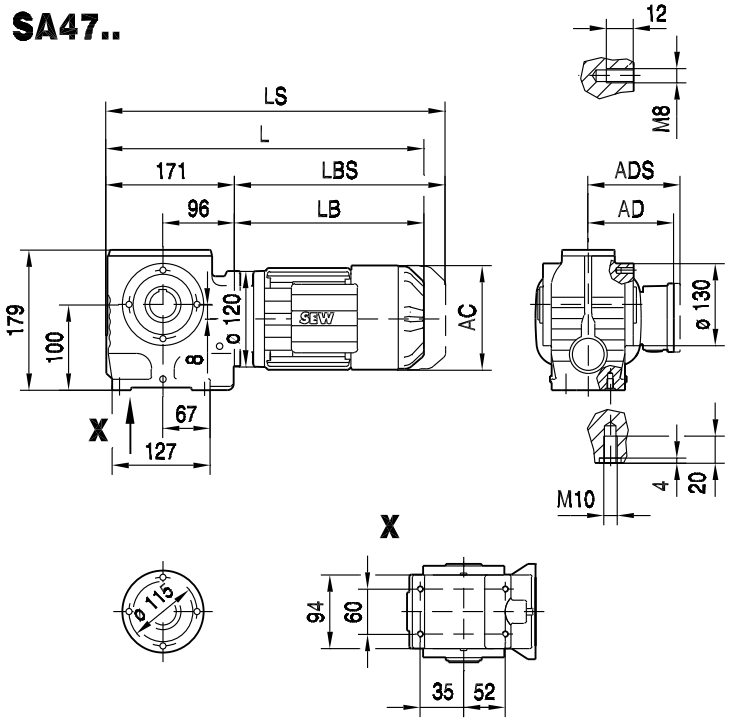

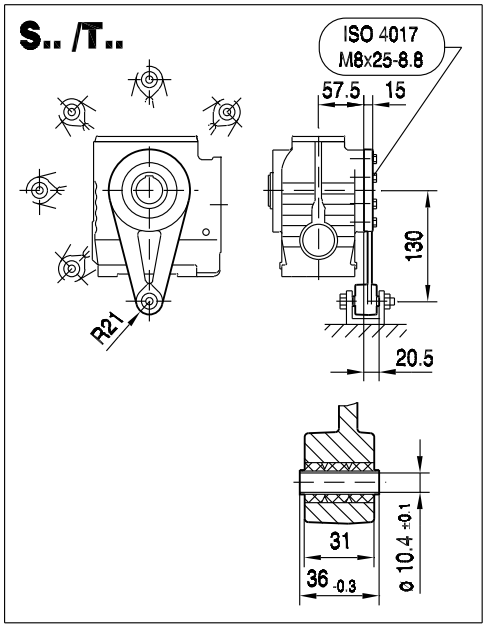

SA47..

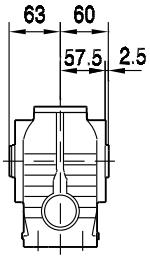

SH47..

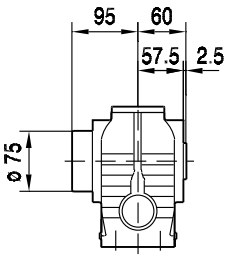

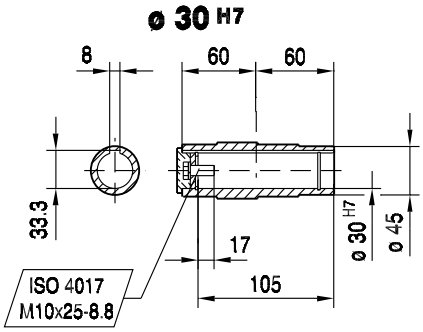

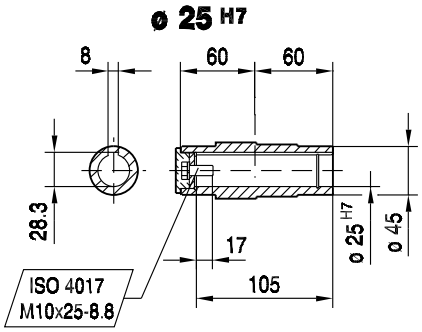

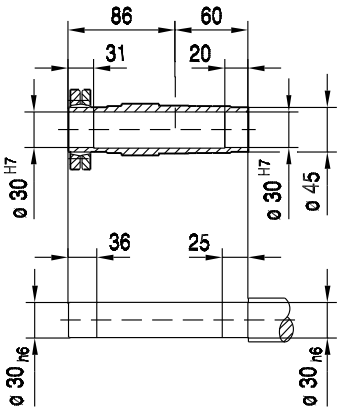

(→ 📖 129)	DRL71S	DRL71M	DRL80S	DRL80M	DRL90L	DRL100L		
AC	139	139	156	156	179	197		
AD	119	119	128	128	140	157		
ADS	129	129	139	139	150	158		
L	459	484	503	534	551	610		
LS	523	548	583	614	637	697		
LB	288	313	332	363	380	439		
LBS	352	377	412	443	466	526		

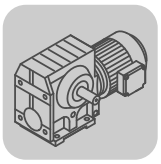

02 105 00 08

SAZ47..

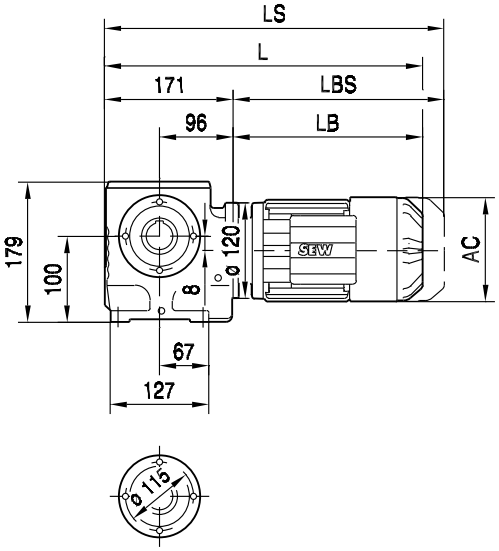

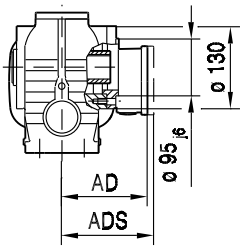

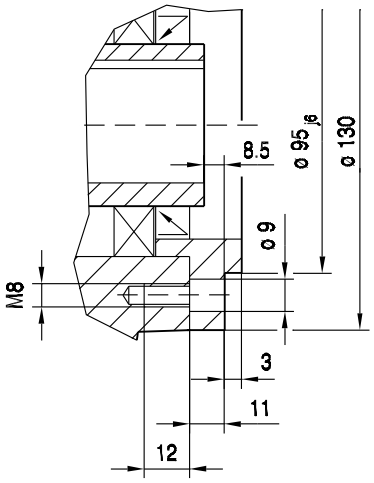

SAZ47..

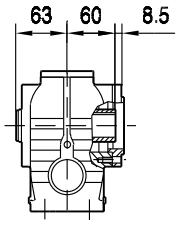

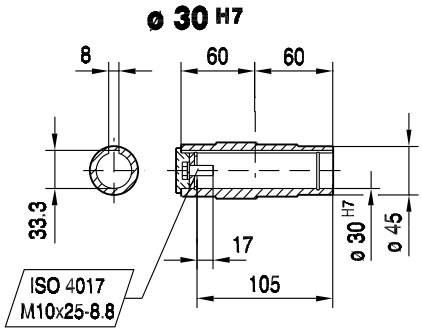

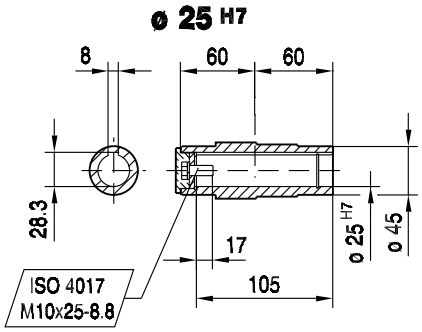

SHZ47..

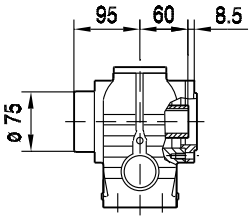

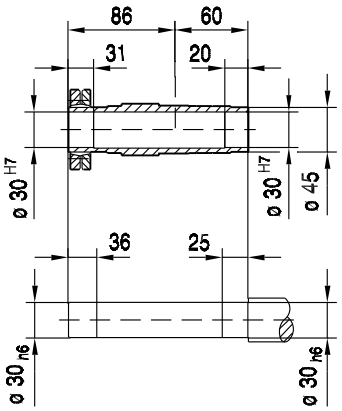

(→ 📖 129)	DRL71S	DRL71M	DRL80S	DRL80M	DRL90L	DRL100L		
AC	139	139	156	156	179	197		
AD	119	119	128	128	140	157		
ADS	129	129	139	139	150	158		
L	459	484	503	534	551	610		
LS	523	548	583	614	637	697		
LB	288	313	332	363	380	439		
LBS	352	377	412	443	466	526		

ST47..

02 106 00 08

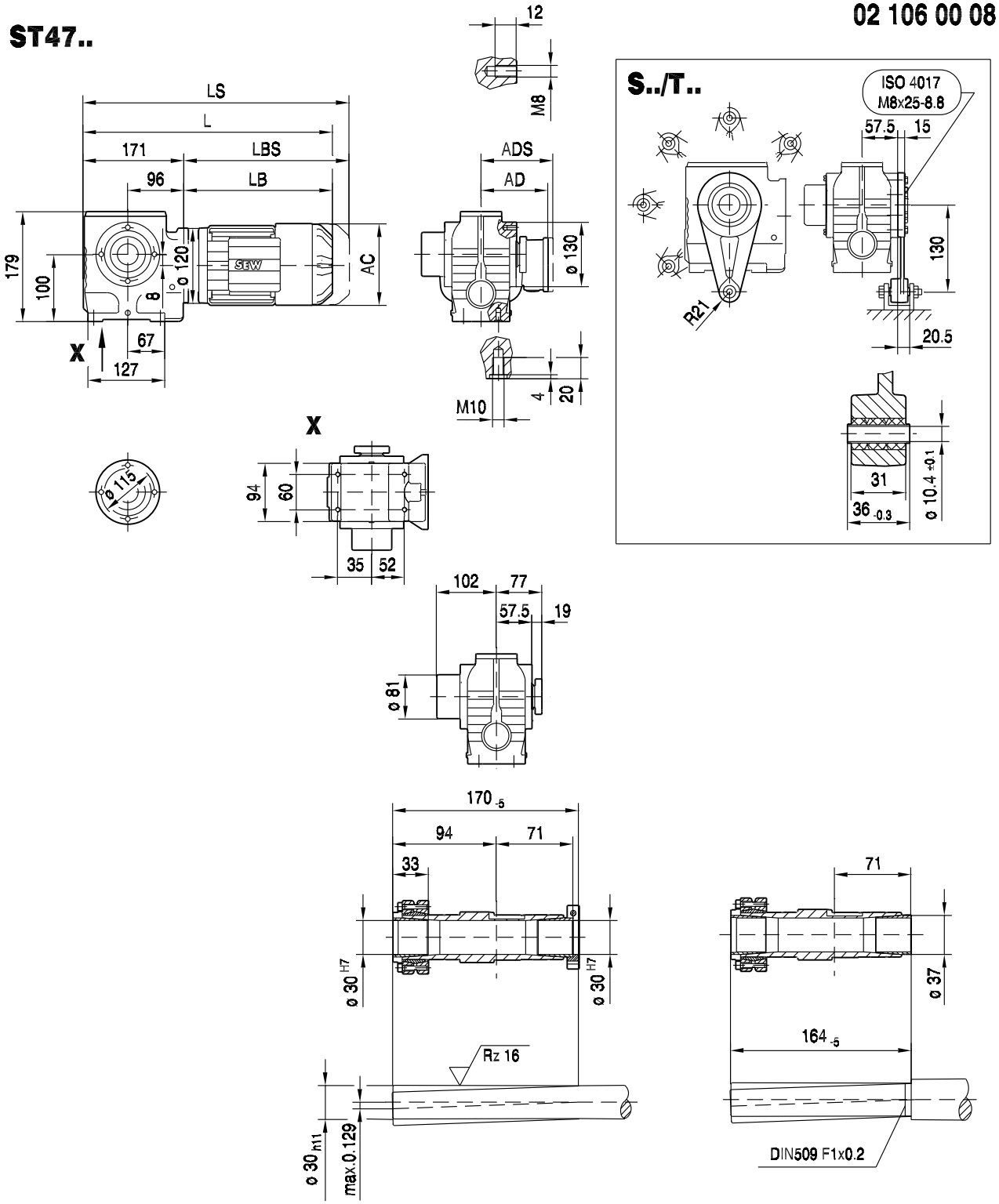

(→ 📖 129)	DRL71S	DRL71M	DRL80S	DRL80M	DRL90L	DRL100L		
AC	139	139	156	156	179	197		
AD	119	119	128	128	140	157		
ADS	129	129	139	139	150	158		
L	459	484	503	534	551	610		
LS	523	548	583	614	637	697		
LB	288	313	332	363	380	439		
LBS	352	377	412	443	466	526		

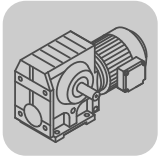

11.2.3 S 57

M_{aDyn} Nm	i	DRL 71S D1	71S D2	71M D1	71M D2	80S D1	80S D2	80M D1	90L D1	90L D2	100L D1
	4.00	18	31	25	50	36	90	47	90	>106	>106
	4.76	21	36	30	60	43	107	56	107	>126	>126
	5.39	24	41	34	68	49	121	63	121	>142	>142
	6.40	28	48	40	80	57	142	74	142	>147	>147
	6.83	30	52	43	85	61	>150	79	>150	>150	>150
	7.28	32	55	45	91	65	162	84	162	>183	>183
	8.64	38	65	53	106	76	190	99	190	>210	>210
	9.23	41	69	57	114	81	200	106	200	>220	>220
	10.80	48	81	67	133	95	>220	124	>220	>220	>220
	12.10	53	91	75	149	106	>220	138	>220	>220	>220
	14.24	62	105	87	173	124	>220	161	>220		>220
S57	16.47	72	122	100	200	143	>220	186			
2	17.62	76	129	106	210	152	>215	197			
	19.54		135		220	158	>270	205	>270	>270	>270
	20.33	87	149	122		175		>215			
	23.20	94	160	132	260	188	>315	240	>315	>315	>315
	24.77	99	168	139	275	198	>330	255	>330	>330	>330
	29.00	116	197	162	320	230	>360	300	>360	>360	>360
	32.48	128	215	180	355	255	>365	330	>365	>365	>365
	38.23	149	250	205	>365	295	>365	>365	>365		>365
	44.22	172	290	240	>365	340	>365	>365			
	47.32	182	305	255	>365	360	>365	>365			
	54.59	210	355	290		>365		>365			
	63.80	240		335							
	69.39	260		>360							

→ 124

m kg	s	DRL 71S	71M	80S	80M	90L	100L
S57	2	21	22	24	27	34	42
SF: + 3.8 kg / SA: + -0.3 kg / SAF: + 2.6 kg							

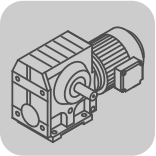

S..DRL
S..Nm

DRL..	i	n_{epk} 1/min	η %	c_{TG} S Nm/'	SF Nm/'	SA Nm/'	SAF Nm/'
S57 2	4.00	4500	90	-	-	-	-
	4.76	4500	90	-	-	-	-
	5.39	4500	90	-	-	-	-
	6.40	4500	89	-	-	-	-
	6.83	4500	89	-	-	-	-
	7.28	4500	89	-	-	-	-
	8.64	4500	88	-	-	-	-
	9.23	4500	88	-	-	-	-
	10.80	4500	88	-	-	-	-
	12.10	4500	88	-	-	-	-
	14.24	4500	87	-	-	-	-
	16.47	4500	87	-	-	-	-
	17.62	4500	86	-	-	-	-
	19.54	4500	81	-	-	-	-
	20.33	4500	86	-	-	-	-
	23.20	4500	81	-	-	-	-
	24.77	4500	80	-	-	-	-
	29.00	4500	80	-	-	-	-
	32.48	4500	79	-	-	-	-
	38.23	4500	78	-	-	-	-
	44.22	4500	78	-	-	-	-
	47.32	4500	77	-	-	-	-
	54.59	4500	77	-	-	-	-
	63.80	4500	76	-	-	-	-
	69.39	4500	75	-	-	-	-

DRL.. n_e = 1400	i	M_{amax} Nm	M_{apk} Nm	$M_{aNotaus}$ Nm	n_{ak} 1/min	J_G 10^{-4} kgm^2	F_{Ramax} S N	SF N	SA N	SAF N	F_{Rapk} S N	SF N	SA N	SAF N
S57 2	4.00	88	106	159	275	4.5	3380	3320	2730	2730	8170	8170	10000	10000
	4.76	93	126	189	231	3.3	3590	3520	2900	2900	8110	8110	10000	10000
	5.39	95	142	210	204	2.6	3760	3690	3040	3040	8060	8060	10000	10000
	6.40	98	147	220	172	1.9	4010	3930	3250	3250	8040	8040	10000	10000
	6.83	100	150	225	161	1.7	4100	4010	3330	3330	8030	8030	10000	10000
	7.28	146	183	248	27	1.7	3790	3770	2620	2620	7880	7880	10000	10000
	8.64	166	211	282	23	1.3	3900	3890	2430	2430	7730	7730	10000	10000
	9.23	169	223	287	22	1.1	3990	3980	2530	2530	7660	7660	10000	10000
	10.80	169	220	287	19	0.85	4290	4270	3000	3000	7680	7680	10000	10000
	12.10	169	220	287	17	0.70	4520	4490	3360	3360	7680	7680	10000	10000
	14.24	169	220	287	14	0.51	4860	4820	3810	3810	7680	7680	10000	10000
	16.47	168	220	286	12	0.40	5200	5130	4120	4120	7680	7680	10000	10000
	17.62	168	215	286	11	0.36	5350	5280	4260	4260	7710	7710	10000	10000
	19.54	215	274	366	26	1.3	5720	5620	4610	4610	7300	7300	10000	10000
	20.33	168	215	286	10	0.28	5690	5600	4560	4560	7710	7710	10000	10000
	23.20	245	315	417	9	0.95	5930	5840	4710	4710	6950	6950	10000	10000
	24.77	245	330	417	8	0.85	6100	6000	4870	4870	6800	6800	10000	10000
	29.00	245	360	417	7	0.65	6520	6410	5250	5250	6470	6470	10000	10000
	32.48	245	367	417	6	0.54	6840	6710	5540	5540	6380	6380	10000	10000
	38.23	245	367	417	5	0.39	7320	7170	5970	5970	6380	6380	10000	10000
	44.22	245	367	417	11	0.32	7520	7520	6380	6380	6380	6380	10000	10000
	47.32	245	367	417	11	0.28	7520	7520	6580	6580	6380	6380	10000	10000
	54.59	245	367	417	9	0.23	7520	7520	7000	7000	6380	6380	10000	10000
	63.80	245	360	417	8	0.18	7520	7520	7500	7500	6470	6470	10000	10000
	69.39	245	360	417	7	0.15	7520	7520	7770	7770	6470	6470	10000	10000

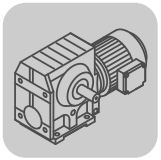

02 107 00 08

S57..

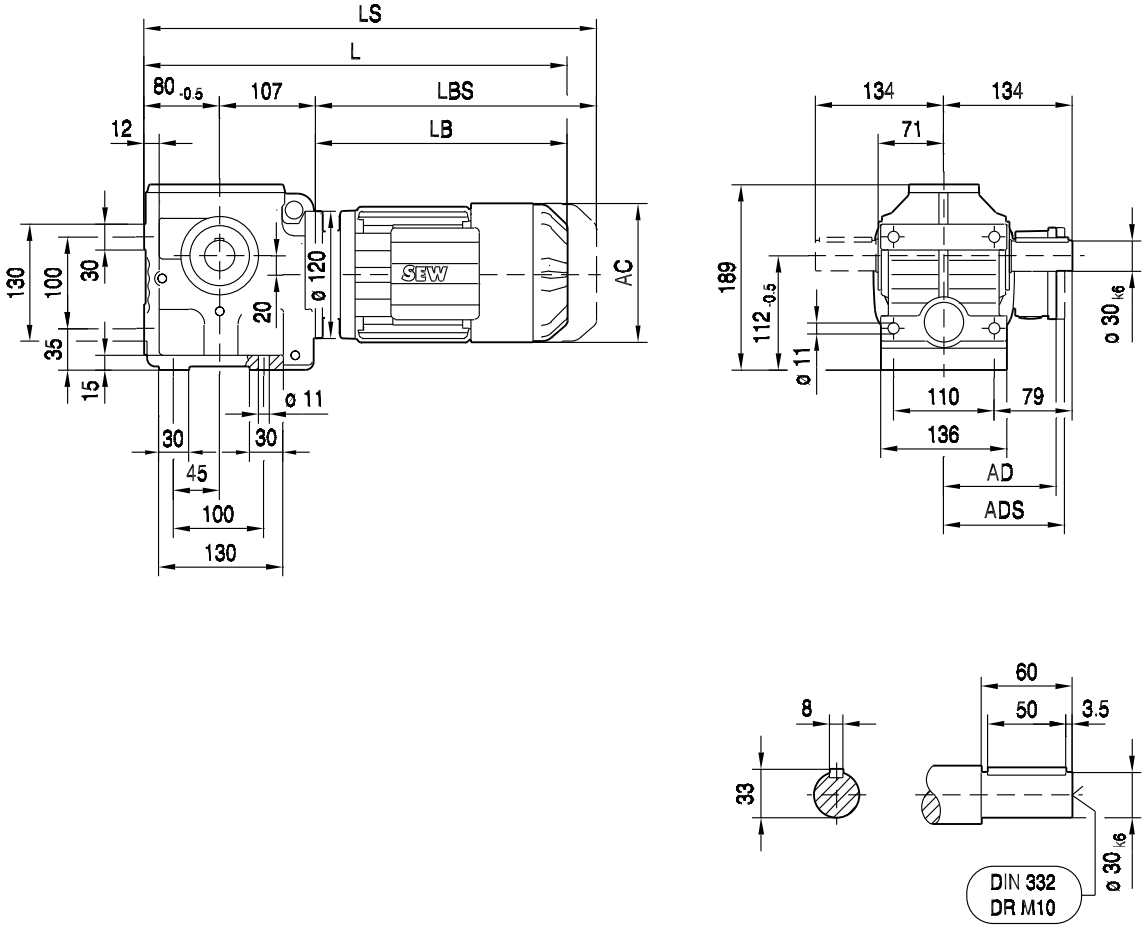

(→ 📖 129)	DRL71S	DRL71M	DRL80S	DRL80M	DRL90L	DRL100L		
AC	139	139	156	156	179	197		
AD	119	119	128	128	140	157		
ADS	129	129	139	139	150	158		
L	475	500	519	550	567	626		
LS	539	564	599	630	653	713		
LB	288	313	332	363	380	439		
LBS	352	377	412	443	466	526		

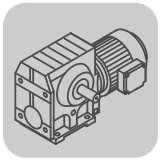

02 108 00 08

SF57..

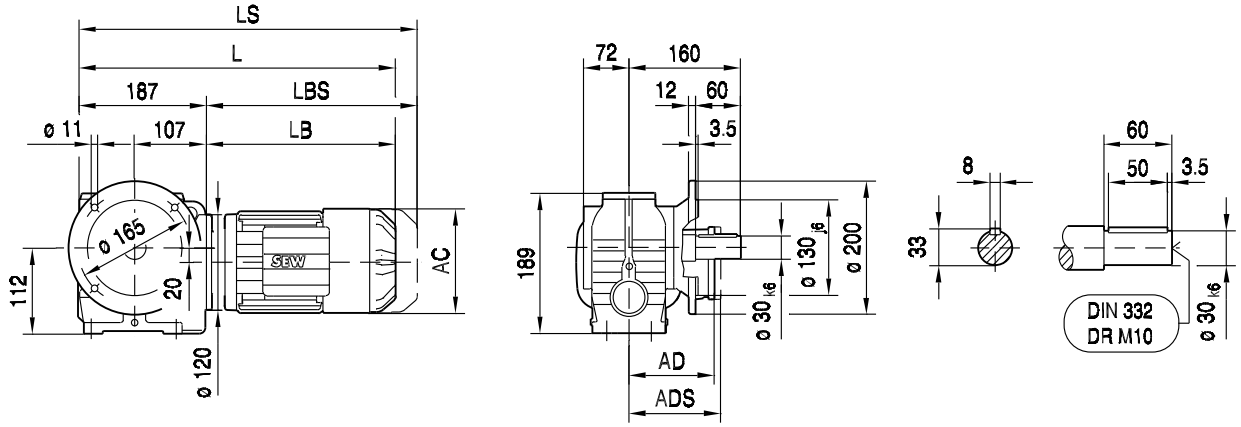

SAF57..

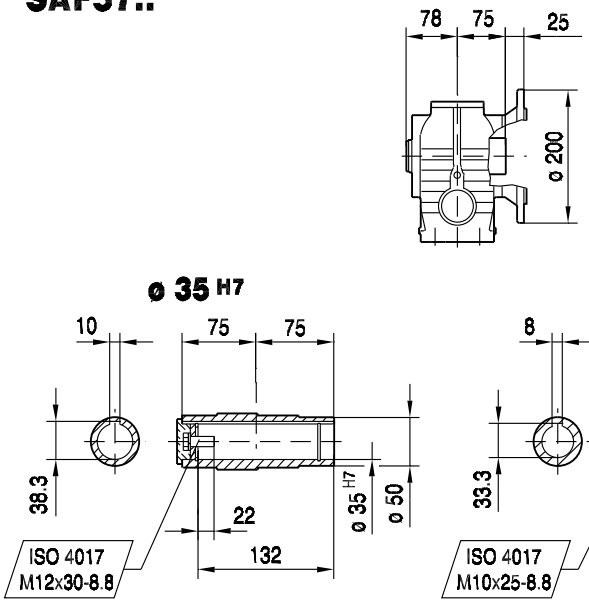

SHF57..

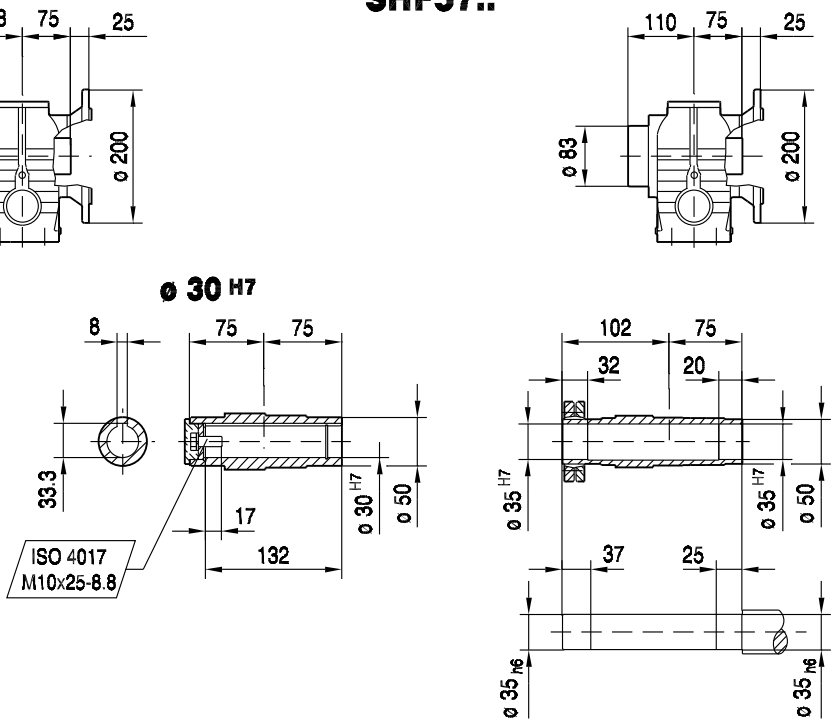

(→ 📖 129)	DRL71S	DRL71M	DRL80S	DRL80M	DRL90L	DRL100L		
AC	139	139	156	156	179	197		
AD	119	119	128	128	140	157		
ADS	129	129	139	139	150	158		
L	475	500	519	550	567	626		
LS	539	564	599	630	653	713		
LB	288	313	332	363	380	439		
LBS	352	377	412	443	466	526		

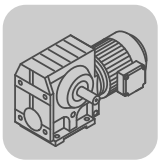

02 109 00 08

SA57..

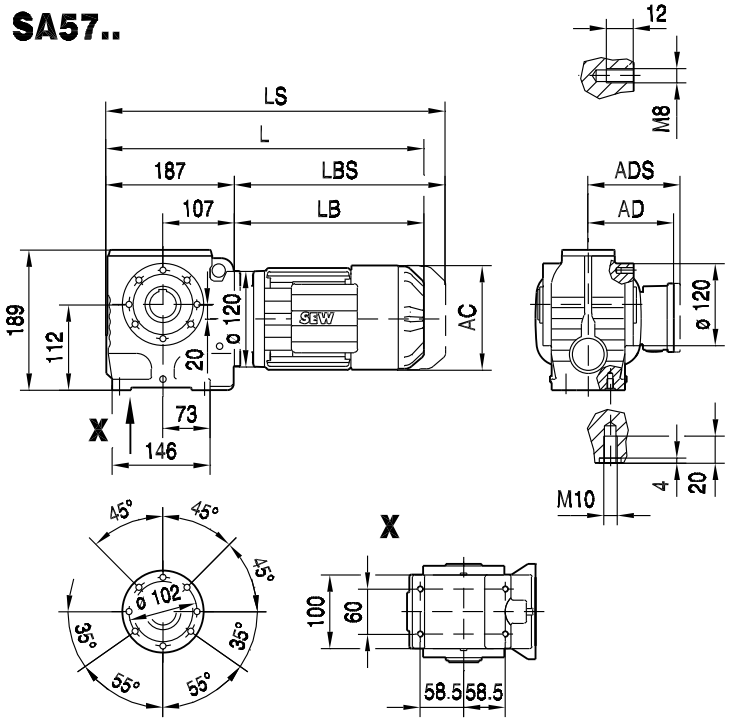

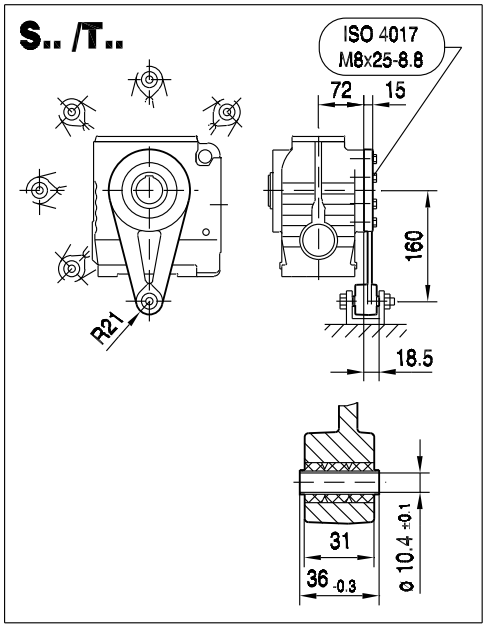

SA57..

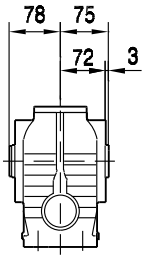

SH57..

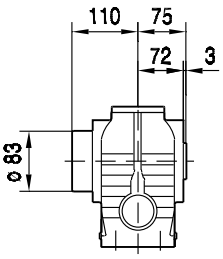

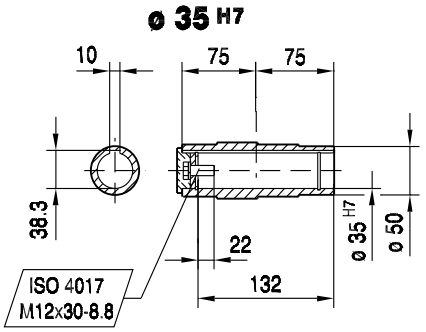

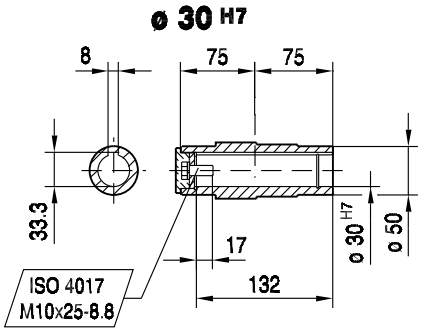

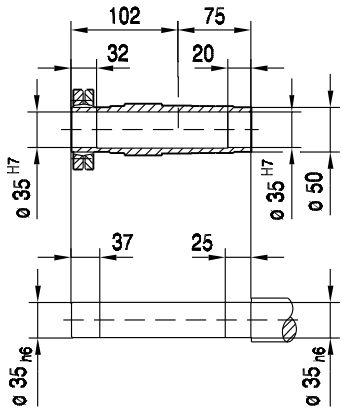

(→ 📖 129)	DRL71S	DRL71M	DRL80S	DRL80M	DRL90L	DRL100L		
AC	139	139	156	156	179	197		
AD	119	119	128	128	140	157		
ADS	129	129	139	139	150	158		
L	475	500	519	550	567	626		
LS	539	564	599	630	653	713		
LB	288	313	332	363	380	439		
LBS	352	377	412	443	466	526		

02 110 00 08

SAZ57..

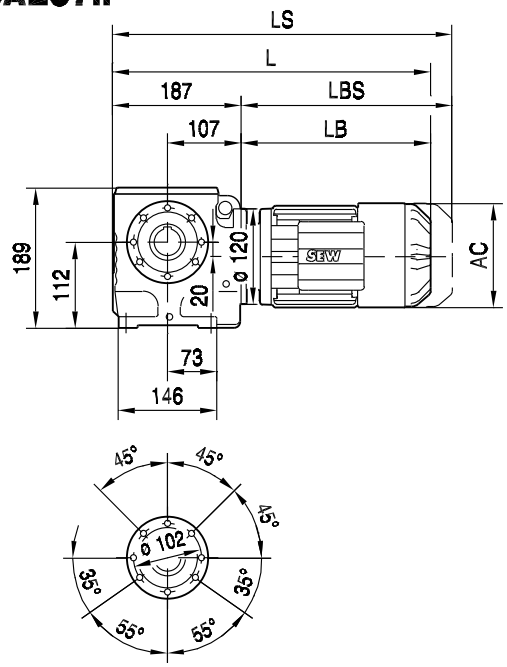

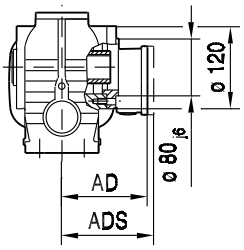

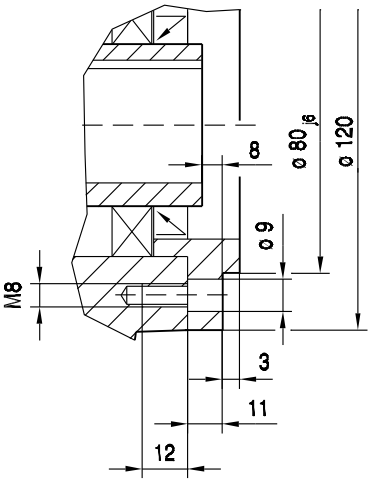

SAZ57..

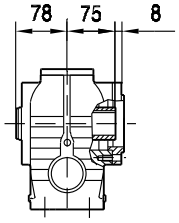

SHZ57..

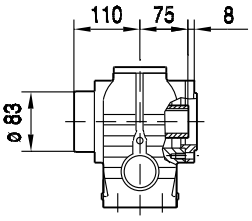

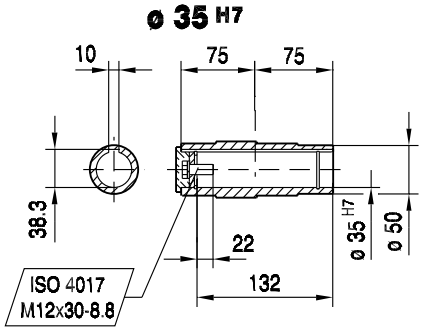

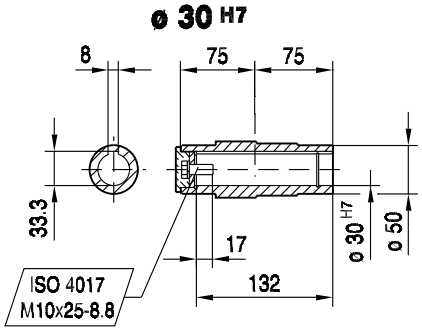

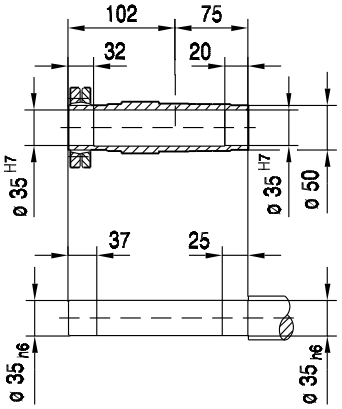

(→ 📖 129)	DRL71S	DRL71M	DRL80S	DRL80M	DRL90L	DRL100L		
AC	139	139	156	156	179	197		
AD	119	119	128	128	140	157		
ADS	129	129	139	139	150	158		
L	475	500	519	550	567	626		
LS	539	564	599	630	653	713		
LB	288	313	332	363	380	439		
LBS	352	377	412	443	466	526		

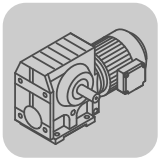

02 111 00 08

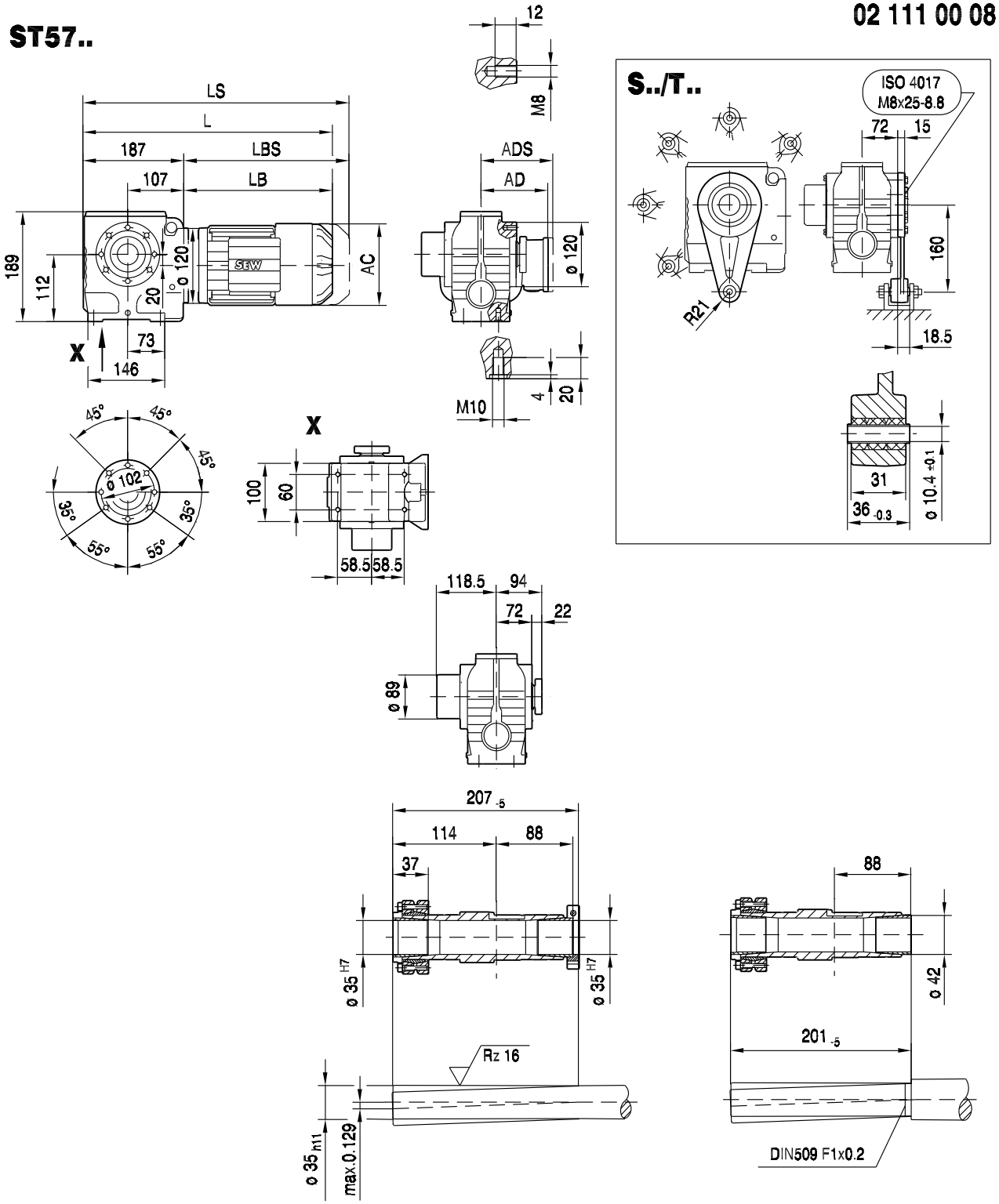

(→ 📖 129)	DRL71S	DRL71M	DRL80S	DRL80M	DRL90L	DRL100L		
AC	139	139	156	156	179	197		
AD	119	119	128	128	140	157		
ADS	129	129	139	139	150	158		
L	475	500	519	550	567	626		
LS	539	564	599	630	653	713		
LB	288	313	332	363	380	439		
LBS	352	377	412	443	466	526		

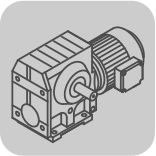

11.2.4 S 67

M_{aDyn} Nm	i	DRL											
		71S		71M		80S		80M		90L		100L	132S
		D1	D2	D1	D2	D1	D2	D1	D2	D1	D2	D1	D1
	7.56		57		94	67	168	87	220	168	305	235	>375
	8.69	39	66	54	108	77	193	101	255	193	355	270	>420
	10.03	45	76	62	125	89	220	116	290	220	410	310	>450
	11.03	49	83	69	137	98	245	128	320	245	450	340	>455
	12.96	58	98	81	161	115	285	150	380	285	>455	400	>455
	13.73	61	104	86	171	122	305	159	400	305	>455	425	>455
	15.60	69	117	96	192	137	340	178	450	340	>455	>455	
	17.28	76	129	106	210	152	380	198	>455	380	>455	>455	
	20.30										>490		>490
	20.37	89	151	124	245	177	440	230	>450	440		>450	
S67	23.22	101	172	141	280	200	>450	260					
2	23.33								>515	475	>515	>515	>515
	24.44	106	181	149	295	210	>450	275					
	26.93	109	185	153	305	215	>535	280	>535	>535	>535	>535	>535
	29.63	120	200	168	335	240	>550	310	>550	>550	>550	>550	>550
	34.80	139	235	195	385	275	>575	360	>575	>575	>575	>575	>575
	36.85	147	250	205	410	290	>580	380	>580	>580	>580	>580	>580
	41.89	168	280	230	465	335	>595	435	>595	>595	>595	>595	
	46.40	183	310	255	510	365	>610	475	>610	>610	>610	>610	
	54.70	210	360	295	595	425	>625	550	>625	>625		>625	
	62.35	240	410	340	>640	485	>640	630					
	65.63	255	435	355	>645	510	>645	>645					
	75.06	285	490	400		575		>655					

→ 124

m kg	s	DRL						
		71S	71M	80S	80M	90L	100L	132S
S67	2	31	33	35	38	46	53	69
SF: + 6.5 kg / SA: + 1.0 kg / SAF: + 5.5 kg								

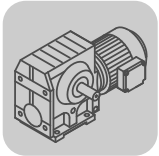

DRL..	i	n_{epk} 1/min	η %	c_{TG} S Nm/'	SF Nm/'	SA Nm/'	SAF Nm/'
S67 2	7.56	4500	89	-	-	-	-
	8.69	4500	89	-	-	-	-
	10.03	4500	89	-	-	-	-
	11.03	4500	89	-	-	-	-
	12.96	4500	89	-	-	-	-
	13.73	4500	89	-	-	-	-
	15.60	4500	88	-	-	-	-
	17.28	4500	88	-	-	-	-
	20.30	4500	82	-	-	-	-
	20.37	4500	87	-	-	-	-
	23.22	4500	87	-	-	-	-
	23.33	4500	82	-	-	-	-
	24.44	4500	87	-	-	-	-
	26.93	4500	81	-	-	-	-
	29.63	4500	81	-	-	-	-
	34.80	4500	80	-	-	-	-
	36.85	4500	80	-	-	-	-
	41.89	4500	80	-	-	-	-
	46.40	4500	79	-	-	-	-
	54.70	4500	78	-	-	-	-
	62.35	4500	78	-	-	-	-
	65.63	4500	78	-	-	-	-
	75.06	4500	77	-	-	-	-

DRL.. n_e = 1400	i	M_{amax} Nm	M_{apk} Nm	$M_{aNotaus}$ Nm	n_{ak} 1/min	J_G 10^{-4} kgm^2	F_{Ramax} S N	SF N	SA N	SAF N	F_{Rapk} S N	SF N	SA N	SAF N
S67 2	7.56	295	375	502	26	5.4	3220	3890	2540	2540	9740	9740	12000	12000
	8.69	335	420	570	23	4.3	2860	3590	2020	2020	9460	9460	12000	12000
	10.03	340	450	578	20	3.3	3290	4050	2480	2480	9250	9250	12000	12000
	11.03	340	455	578	18	2.8	3660	4430	2890	2890	9210	9210	12000	12000
	12.96	340	455	578	15	2.2	4310	5110	3610	3610	9210	9210	12000	12000
	13.73	340	455	578	15	2.0	4510	5310	3870	3870	9210	9210	12000	12000
	15.60	340	455	578	13	1.5	4820	5640	4480	4480	9210	9210	12000	12000
	17.28	340	455	578	12	1.3	5080	5910	4990	4990	9210	9210	12000	12000
	20.30	425	490	723	10	4.0	5760	6650	6090	6090	8940	8940	12000	12000
	20.37	340	450	578	34	0.99	5520	6360	5700	5700	9250	9250	12000	12000
	23.22	340	450	578	47	0.71	5890	6740	6110	6110	9250	9250	12000	12000
	23.33	480	515	816	9	3.2	5810	6800	6120	6120	8720	8720	12000	12000
	24.44	340	450	578	45	0.63	6040	6900	6270	6270	9250	9250	12000	12000
	26.93	480	535	816	7	2.6	6240	7240	6590	6590	8540	8540	12000	12000
	29.63	480	550	816	7	2.2	6540	7540	6920	6920	8390	8390	12000	12000
	34.80	480	575	816	14	1.8	7060	8080	7490	7490	8140	8140	12000	12000
	36.85	480	580	816	14	1.6	7250	8280	7710	7710	8080	8080	12000	12000
	41.89	480	595	816	12	1.3	7690	8740	8200	8200	7920	7920	12000	12000
	46.40	480	610	816	11	1.1	8060	9020	8600	8600	7740	7740	12000	12000
	54.70	480	625	816	9	0.84	8670	9020	9280	9280	7560	7560	12000	12000
	62.35	480	640	816	8	0.59	9020	9020	9850	9850	7370	7370	12000	12000
	65.63	480	645	816	8	0.53	9020	9020	10100	10100	6930	7300	12000	12000
	75.06	480	655	816	7	0.43	9020	9020	10700	10700	5930	7170	12000	12000

02 112 00 08

S67..

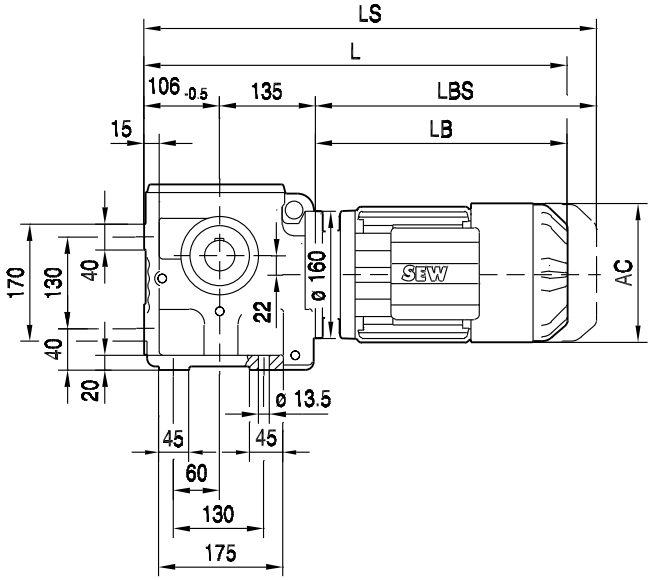

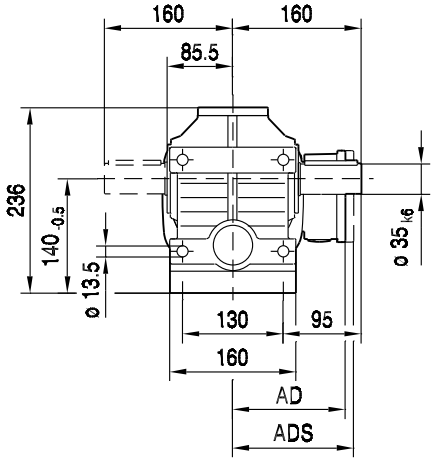

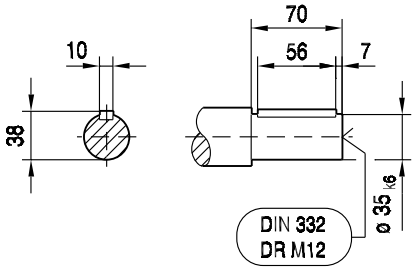

(→ 📖 129)	DRL71S	DRL71M	DRL80S	DRL80M	DRL90L	DRL100L	DRL132S	
AC	139	139	156	156	179	197	221	
AD	119	119	128	128	140	157	170	
ADS	129	129	139	139	150	158	172	
L	521	546	567	598	612	671	756	
LS	586	611	647	678	698	758	864	
LB	280	305	326	357	371	430	515	
LBS	345	370	406	437	457	517	623	

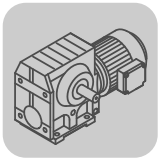

02 113 00 08

SF67..

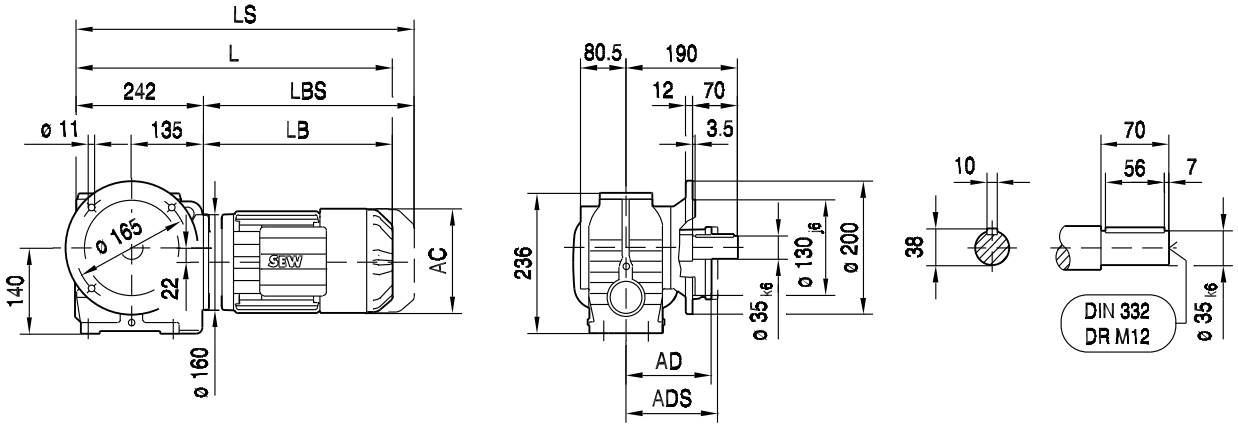

SAF67..

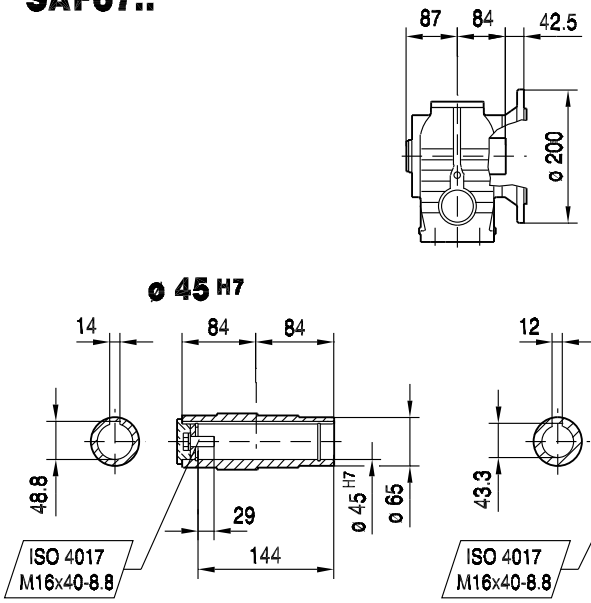

SHF67..

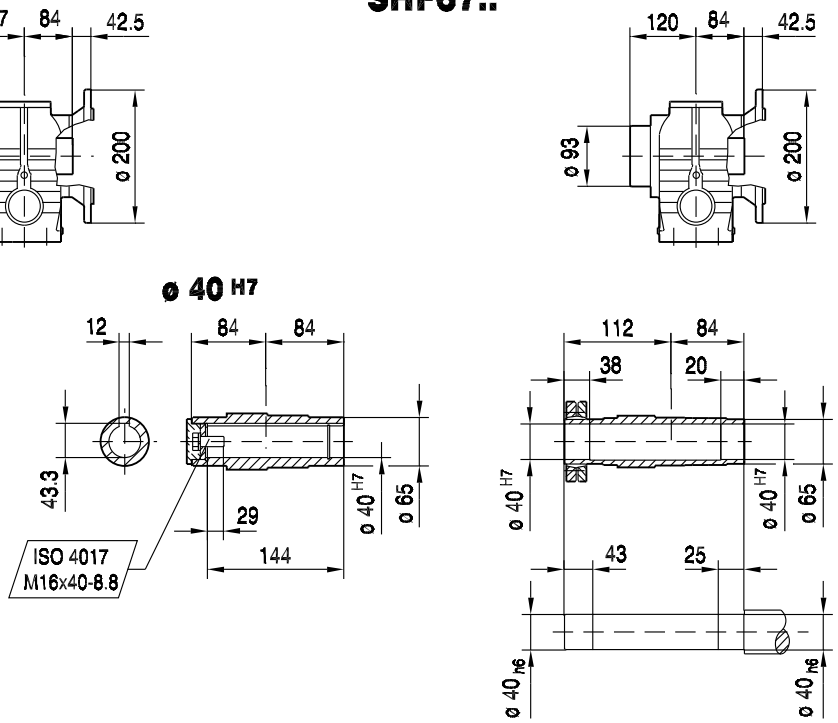

(→ 📖 129)	DRL71S	DRL71M	DRL80S	DRL80M	DRL90L	DRL100L	DRL132S	
AC	139	139	156	156	179	197	221	
AD	119	119	128	128	140	157	170	
ADS	129	129	139	139	150	158	172	
L	522	547	568	599	613	672	757	
LS	587	612	648	679	699	759	865	
LB	280	305	326	357	371	430	515	
LBS	345	370	406	437	457	517	623	

02 114 00 08

SA67..

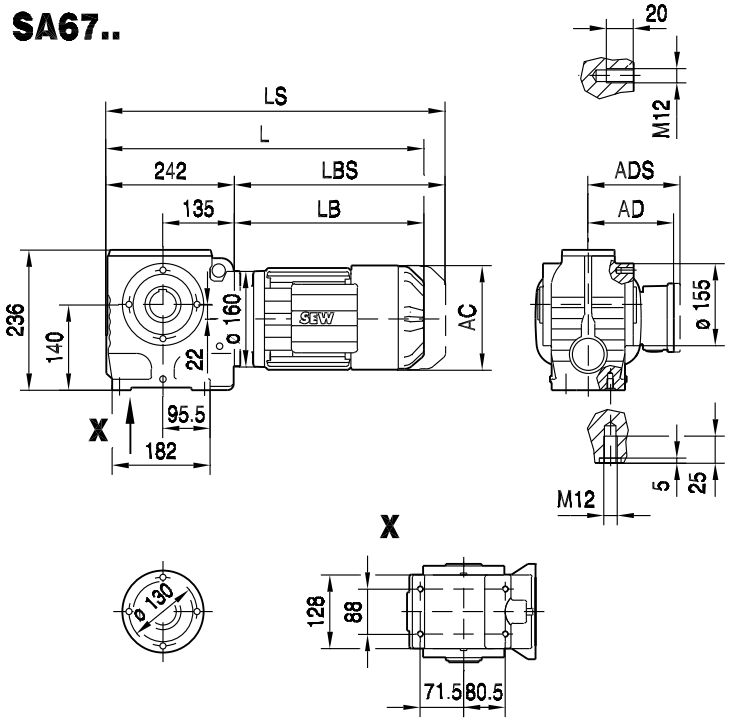

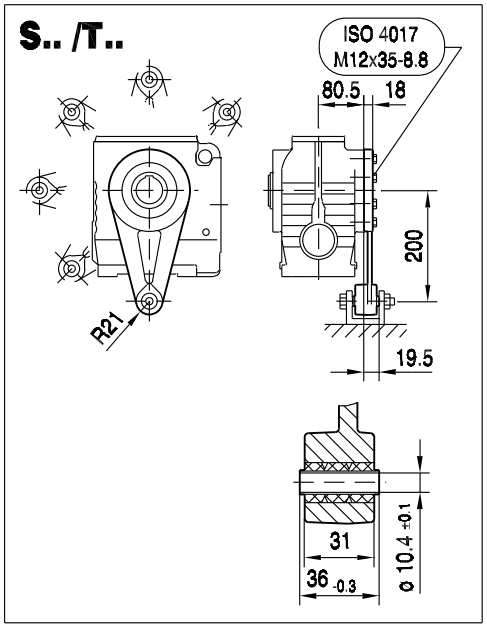

SA67..

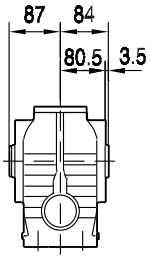

SH67..

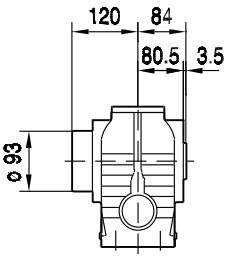

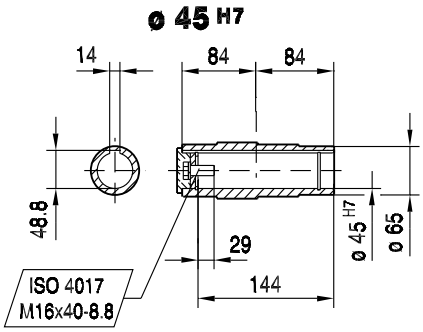

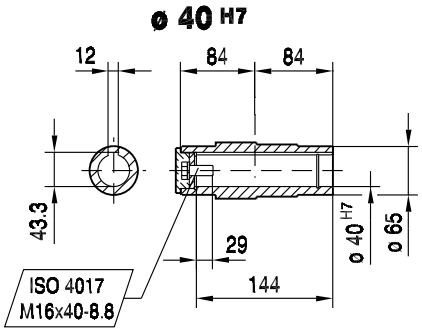

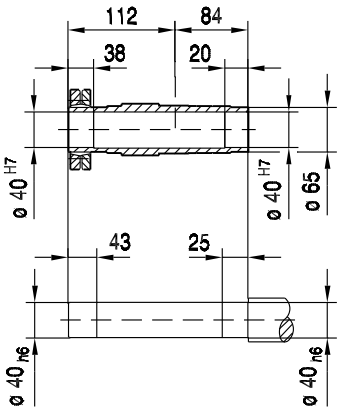

(→ 📖 129)	DRL71S	DRL71M	DRL80S	DRL80M	DRL90L	DRL100L	DRL132S	
AC	139	139	156	156	179	197	221	
AD	119	119	128	128	140	157	170	
ADS	129	129	139	139	150	158	172	
L	522	547	568	599	613	672	757	
LS	587	612	648	679	699	759	865	
LB	280	305	326	357	371	430	515	
LBS	345	370	406	437	457	517	623	

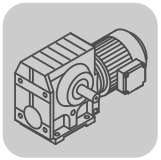

02 115 00 08

SAZ67..

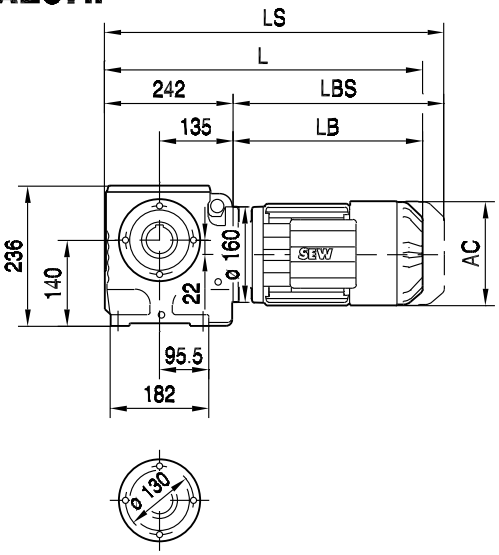

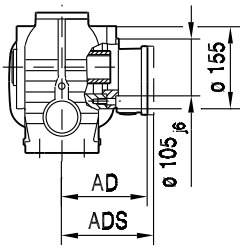

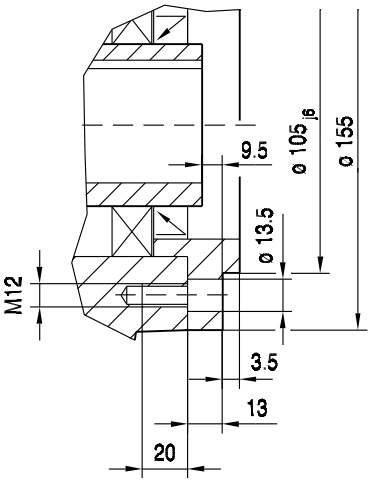

SAZ67..

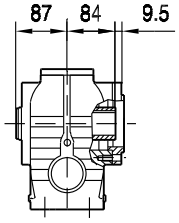

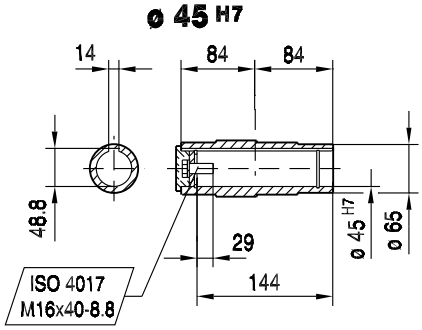

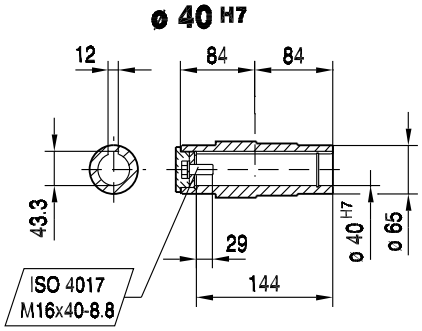

SHZ67..

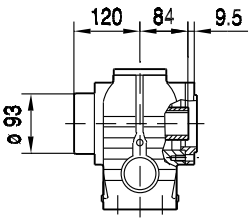

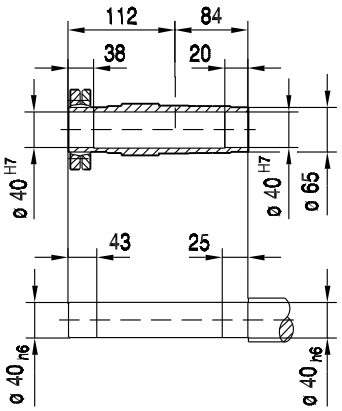

(→ 📖 129)	DRL71S	DRL71M	DRL80S	DRL80M	DRL90L	DRL100L	DRL132S	
AC	139	139	156	156	179	197	221	
AD	119	119	128	128	140	157	170	
ADS	129	129	139	139	150	158	172	
L	522	547	568	599	613	672	757	
LS	587	612	648	679	699	759	865	
LB	280	305	326	357	371	430	515	
LBS	345	370	406	437	457	517	623	

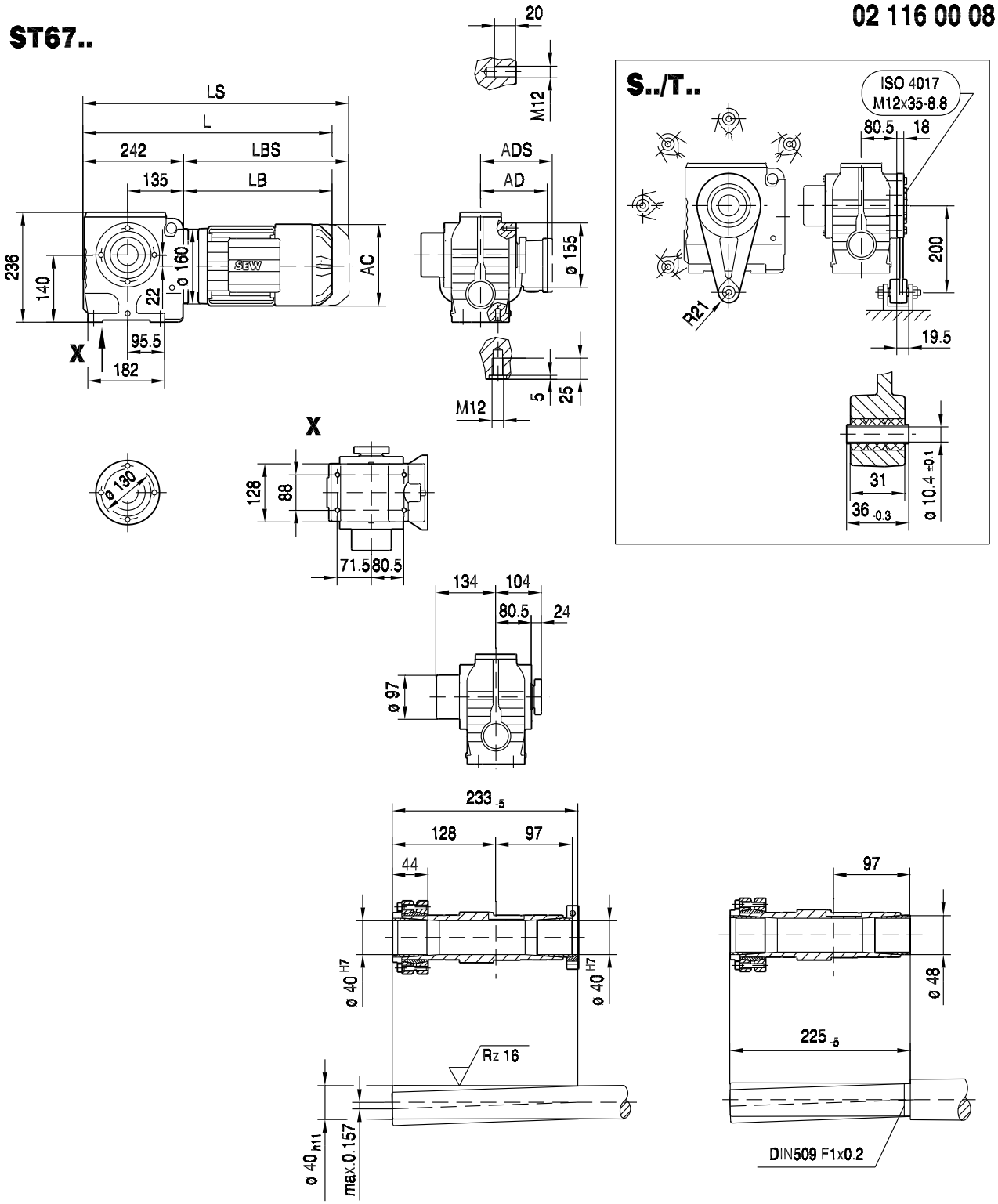

(→ 📖 129)	DRL71S	DRL71M	DRL80S	DRL80M	DRL90L	DRL100L	DRL132S	
AC	139	139	156	156	179	197	221	
AD	119	119	128	128	140	157	170	
ADS	129	129	139	139	150	158	172	
L	522	547	568	599	613	672	757	
LS	587	612	648	679	699	759	865	
LB	280	305	326	357	371	430	515	
LBS	345	370	406	437	457	517	623	

12 W..DRL

12.1 W, WA, WF, WAF..DRL

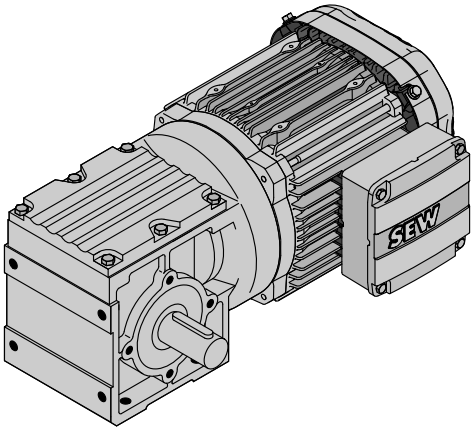

W..DR..

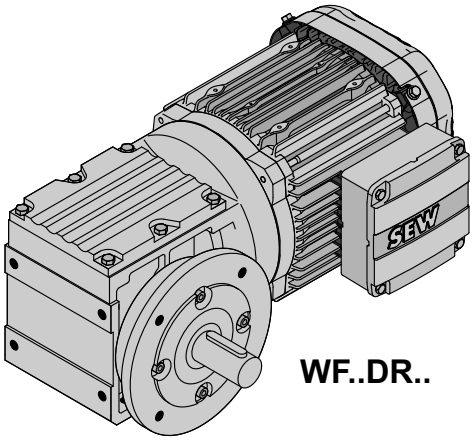

WF..DR..

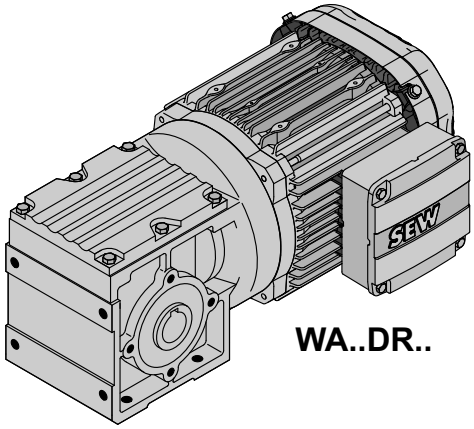

WA..DR..

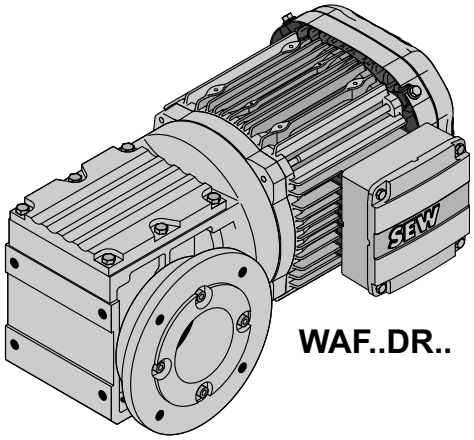

WAF..DR..

60407axx

12.2 W..Nm

12.2.1 W 37

M_{aDyn} Nm	i	DRL 71S D1	71S D2	71M D1	71M D2	80S D1	80S D2	80M D1	90L D1
W37 2	3.20	15	25	21	42	30	74	39	74
	3.93	18	31	25	51	36	>84	47	>84
	5.11	24	40	33	66	47	>84	61	>84
	5.77	27	45	37	74	53	>84	69	>84
	6.97	32	55	45	>84	64	>84	83	>84
	8.55	39	66	54	>84	78	>84	>84	
	9.92	45	77	63		>84		>84	
	10.67	46	79	65	>108	93	>108	>108	>108
	11.65	53		74					
	12.70	58		81					
	13.89	60	102	84	>108	>108	>108	>108	>108
	15.67	67	>108	94	>108	>108	>108	>108	>108
	18.94	80	>108	>108	>108	>108	>108	>108	>108
	21.33	81	>110	>110	>110	>110	>110	>110	>110
	23.25	98	>108	>108	>108	>108	>108	>108	
	26.96	>108	>108	>108		>108		>108	
	27.78	103	>111	>111	>111	>111	>111	>111	>111
	31.33	114	>117	>117	>117	>117	>117	>117	>117
	31.67	>108		>108					
	34.52	>108		>108					
	37.88	>126	>126	>126	>126	>126	>126	>126	>126
	46.49	>130	>130	>130	>130	>130	>130	>130	
	53.92	>130	>130	>130		>130		>130	
	63.33	>126		>126					
	69.05	>130		>130					

→ 124

m kg	s	DRL 71S	71M	80S	80M	90L
W37	2	14	15	17	20	27
WF: + 0.0 kg / WA: + 0.0 kg / WAF: + 0.0 kg						

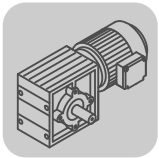

DRL..	i	n_{epk} 1/min	η %	c_{TG} W Nm/'	WF Nm/'	WA Nm/'	WAF Nm/'
W37 2	3.20	4500	93	-	-	-	-
	3.93	4500	92	-	-	-	-
	5.11	4500	92	-	-	-	-
	5.77	4500	92	-	-	-	-
	6.97	4500	92	-	-	-	-
	8.55	4500	91	-	-	-	-
	9.92	4500	91	-	-	-	-
	10.67	4500	87	-	-	-	-
	11.65	4500	91	-	-	-	-
	12.70	4500	91	-	-	-	-
	13.89	4500	86	-	-	-	-
	15.67	4500	86	-	-	-	-
	18.94	4500	85	-	-	-	-
	21.33	4500	76	-	-	-	-
	23.25	4500	84	-	-	-	-
	26.96	4500	83	-	-	-	-
	27.78	4500	74	-	-	-	-
	31.33	4500	73	-	-	-	-
	31.67	4500	82	-	-	-	-
	34.52	4500	81	-	-	-	-
	37.88	4500	72	-	-	-	-
	46.49	4500	70	-	-	-	-
	53.92	4500	69	-	-	-	-
	63.33	4500	67	-	-	-	-
	69.05	4500	67	-	-	-	-

DRL.. n_e = 1400	i	M_{amax} Nm	M_{apk} Nm	$M_{aNotaus}$ Nm	n_{ak} 1/min	J_G 10^{-4} kgm^2	F_{Ramax} W N	WF N	WA N	WAF N	F_{Rapk} W N	WF N	WA N	WAF N
W37 2	3.20	70	84	119	2188	2.3	2220	2350	2050	2050	3690	3690	5000	5000
	3.93	70	84	119	1781	1.6	2410	2550	2240	2240	3690	3690	5000	5000
	5.11	70	84	119	1370	0.96	2680	2820	2490	2490	3690	3690	5000	5000
	5.77	70	84	119	1213	0.77	2810	2950	2620	2620	3690	3690	5000	5000
	6.97	70	84	119	1004	0.54	3020	3170	2830	2830	3690	3690	5000	5000
	8.55	70	84	119	819	0.37	3270	3420	3070	3070	3690	3690	5000	5000
	9.92	70	84	119	706	0.28	3460	3620	3250	3250	3690	3690	5000	5000
	10.67	90	108	153	150	0.80	2880	3140	2530	2530	3360	3360	5000	5000
	11.65	70	84	119	601	0.21	3680	3830	3460	3460	3690	3690	5000	5000
	12.70	70	84	119	551	0.18	3800	3830	3580	3580	3690	3690	5000	5000
	13.89	90	108	153	151	0.52	3250	3510	2890	2890	3360	3360	5000	5000
	15.67	90	108	153	147	0.42	3430	3610	3070	3070	3360	3360	5000	5000
	18.94	90	108	153	148	0.30	3610	3610	3360	3360	3360	3360	5000	5000
	21.33	110	110	144	66	0.71	3320	3320	2940	2940	3320	3320	5000	5000
	23.25	90	108	153	146	0.21	3610	3610	3690	3690	3360	3360	5000	5000
	26.96	90	108	153	145	0.16	3610	3610	3950	3950	3360	3360	5000	5000
	27.78	110	111	158	50	0.46	3320	3320	3400	3400	3300	3300	5000	5000
	31.33	110	117	166	45	0.38	3320	3320	3620	3620	2960	2960	5000	5000
	31.67	90	108	153	145	0.13	3610	3610	4240	4240	3360	3360	5000	5000
	34.52	90	108	153	145	0.11	3610	3610	4410	4410	3360	3360	5000	5000
	37.88	110	126	178	37	0.27	3320	3320	3990	3990	2080	2080	5000	5000
	46.49	110	130	187	32	0.19	3320	3320	4410	4410	1490	1490	5000	5000
	53.92	110	130	187	32	0.15	3320	3320	4730	4730	1490	1490	5000	5000
	63.33	110	126	178	36	0.12	3320	3320	5000	5000	2080	2080	5000	5000
	69.05	110	130	187	32	0.10	3320	3320	5000	5000	1490	1490	5000	5000

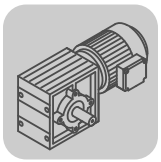

W..DRL
W..Nm

W37..

20 068 00 08

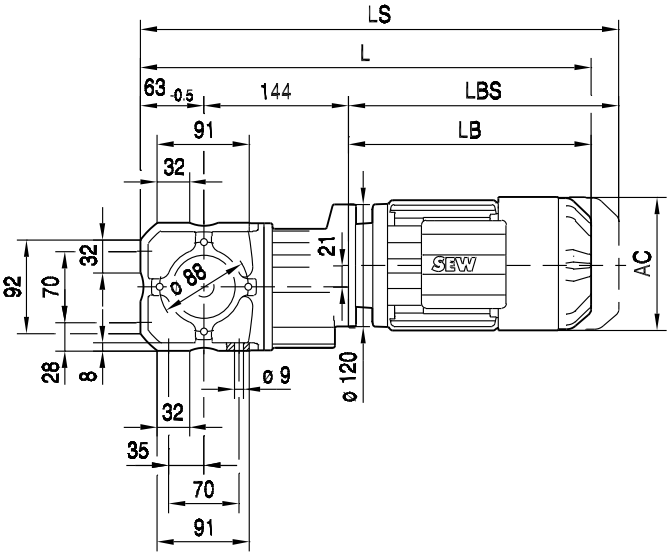

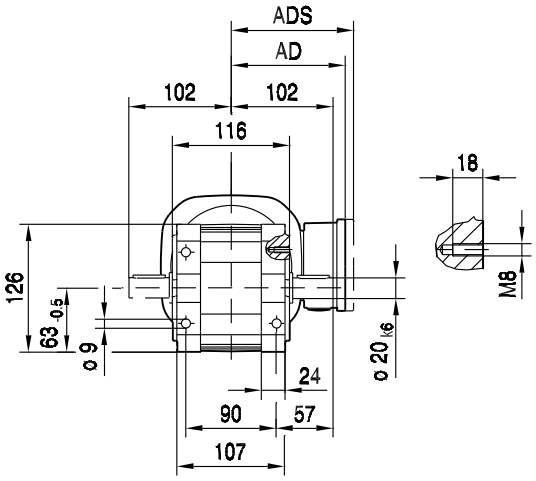

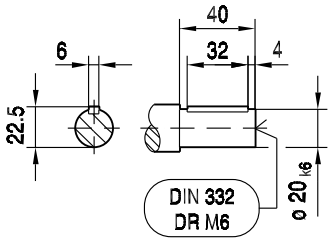

WA37B..

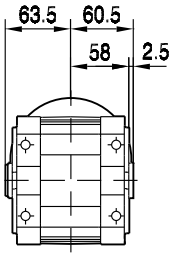

WH37B..

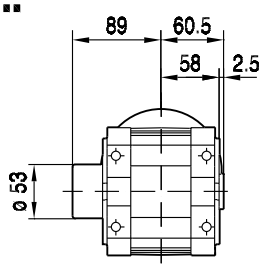

ø 25 H7

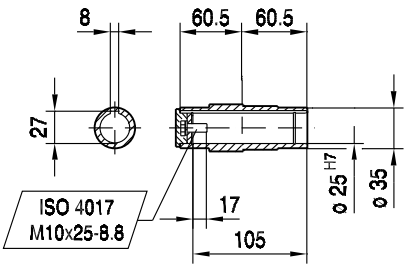

ø 20 H7

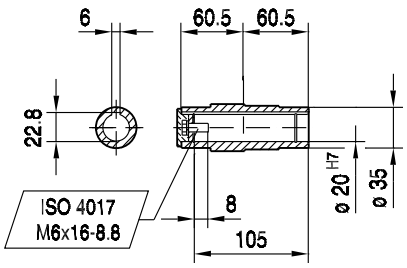

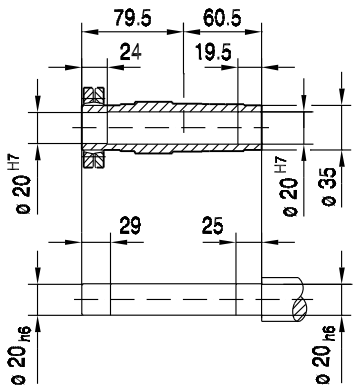

(→ 📖 129)	DRL71S	DRL71M	DRL80S	DRL80M	DRL90L			
AC	139	139	156	156	179			
AD	119	119	128	128	140			
ADS	129	129	139	139	150			
L	495	520	539	570	587			
LS	559	584	619	650	673			
LB	288	313	332	363	380			
LBS	352	377	412	443	466			

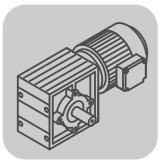

20 069 00 08

WF37..

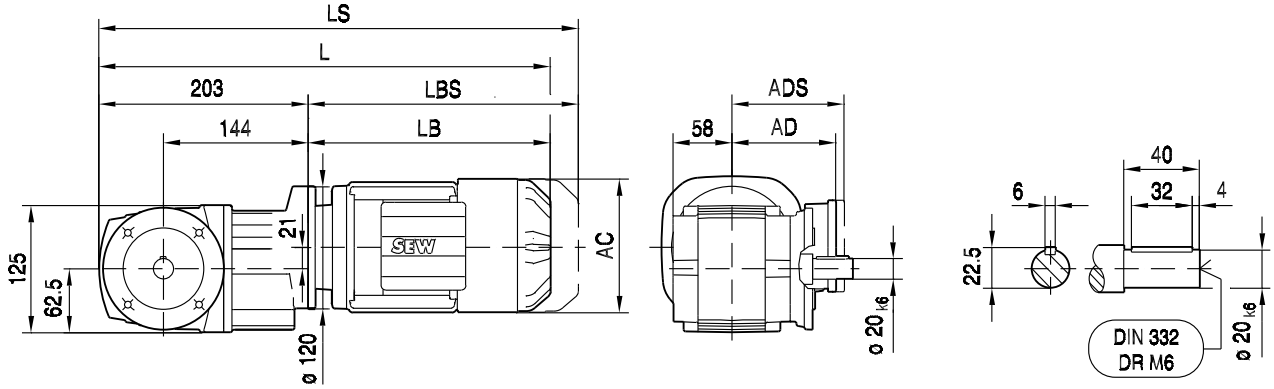

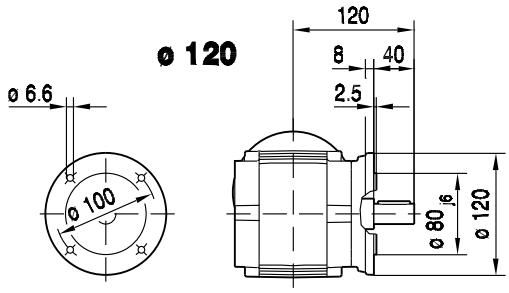

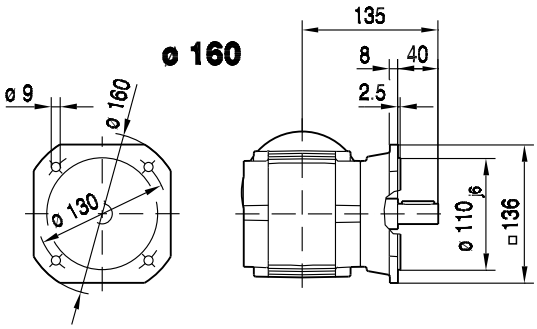

WAF37..

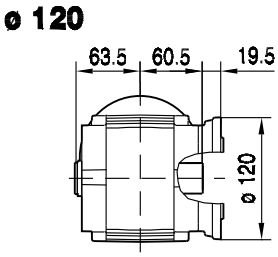

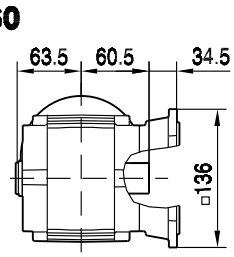

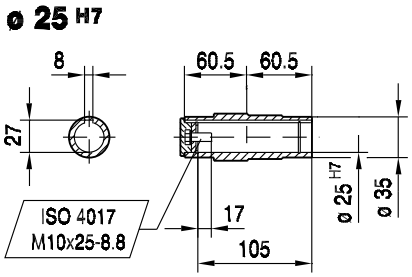

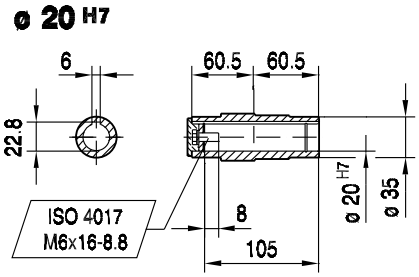

(→ 📖 129)	DRL71S	DRL71M	DRL80S	DRL80M	DRL90L			
AC	139	139	156	156	179			
AD	119	119	128	128	140			
ADS	129	129	139	139	150			
L	491	516	535	566	583			
LS	555	580	615	646	669			
LB	288	313	332	363	380			
LBS	352	377	412	443	466			

20 070 00 08

WHF37..

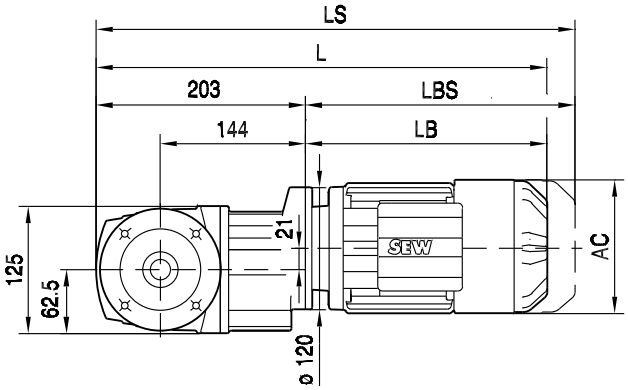

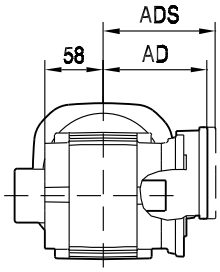

ø 120

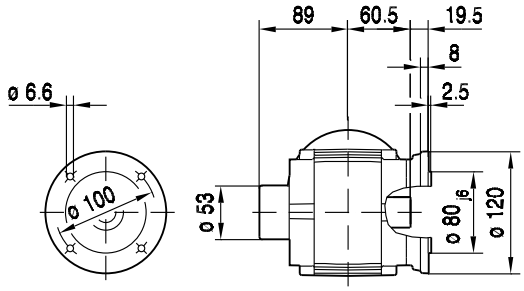

ø 160

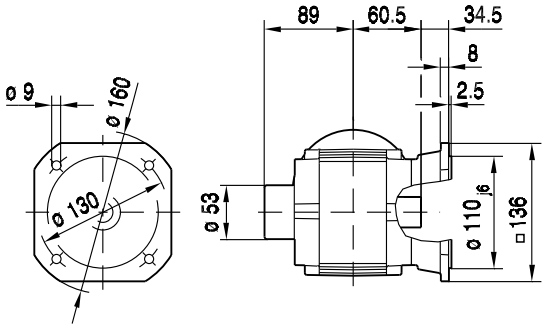

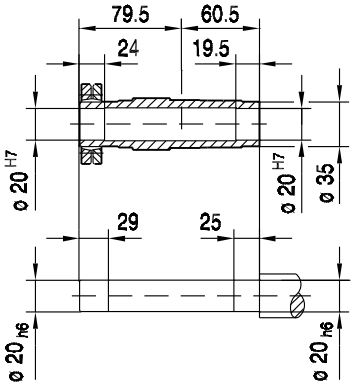

(→ 📖 129)	DRL71S	DRL71M	DRL80S	DRL80M	DRL90L			
AC	139	139	156	156	179			
AD	119	119	128	128	140			
ADS	129	129	139	139	150			
L	491	516	535	566	583			
LS	555	580	615	646	669			
LB	288	313	332	363	380			
LBS	352	377	412	443	466			

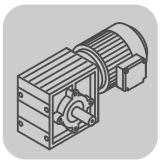

20 071 00 08

WA37..

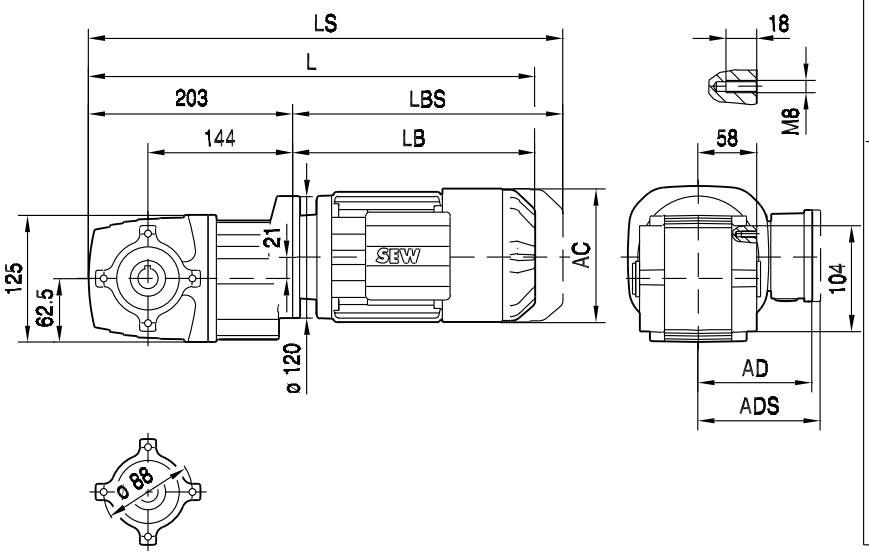

W../T..

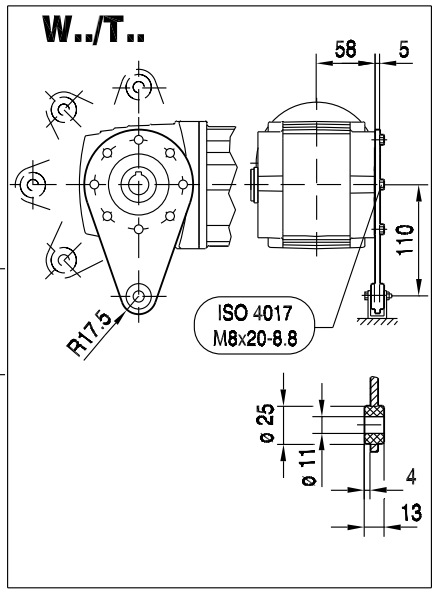

WA37..

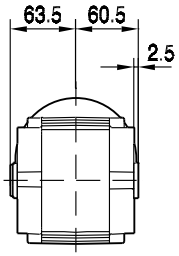

WH37..

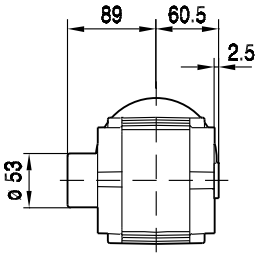

ø 25 H7

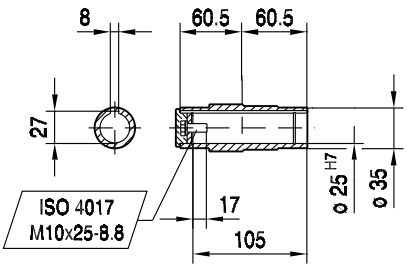

ø 20 H7

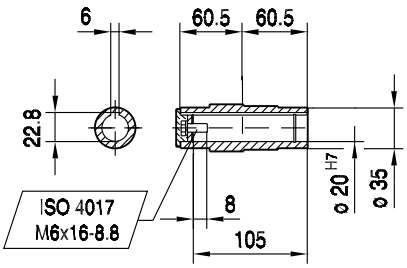

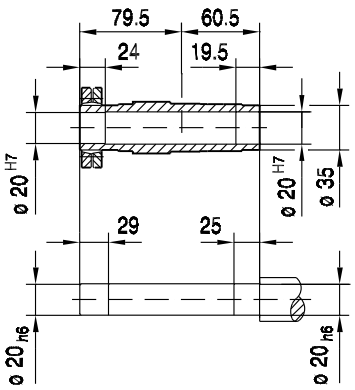

(→ 📖 129)	DRL71S	DRL71M	DRL80S	DRL80M	DRL90L			
AC	139	139	156	156	179			
AD	119	119	128	128	140			
ADS	129	129	139	139	150			
L	491	516	535	566	583			
LS	555	580	615	646	669			
LB	288	313	332	363	380			
LBS	352	377	412	443	466			

20 072 00 08

WT37..

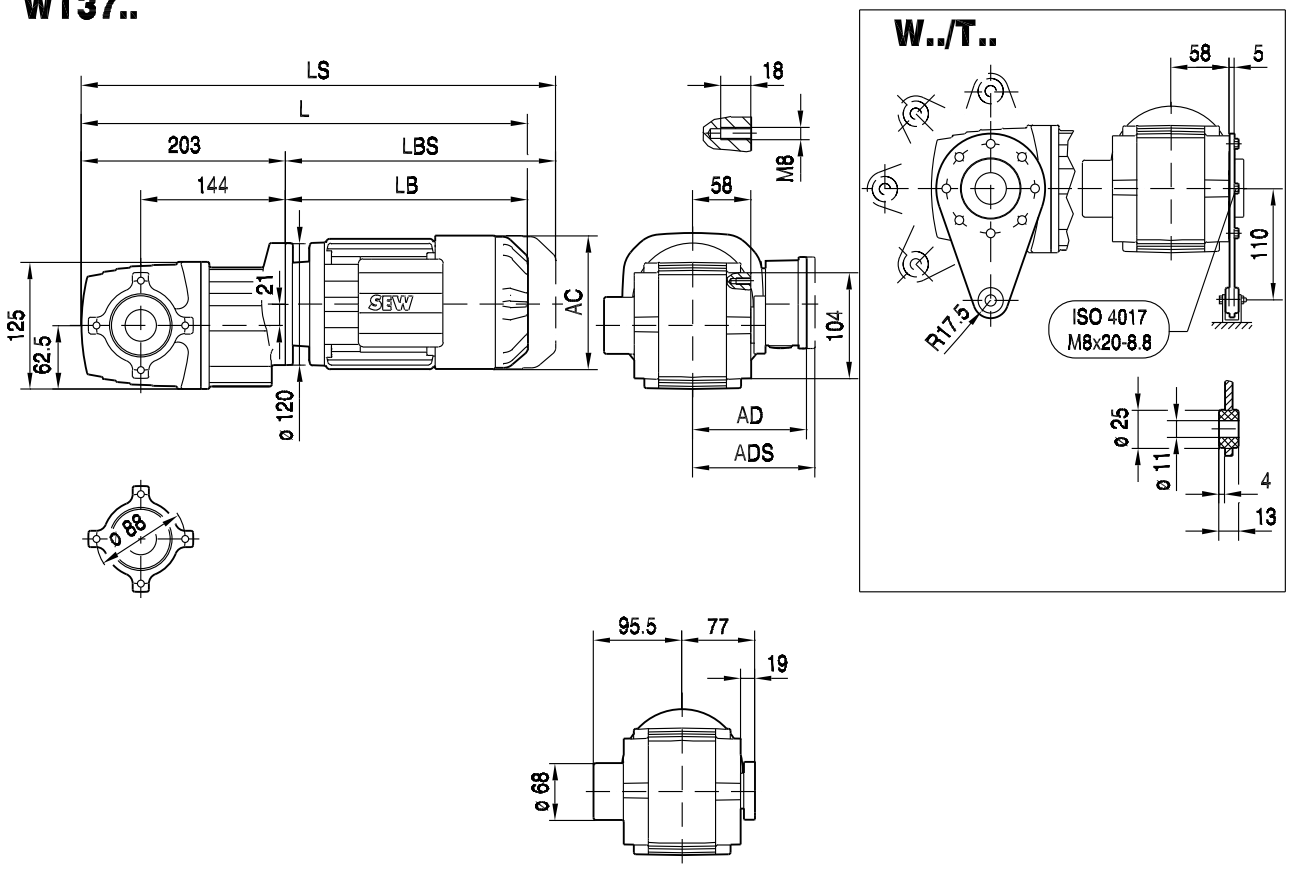

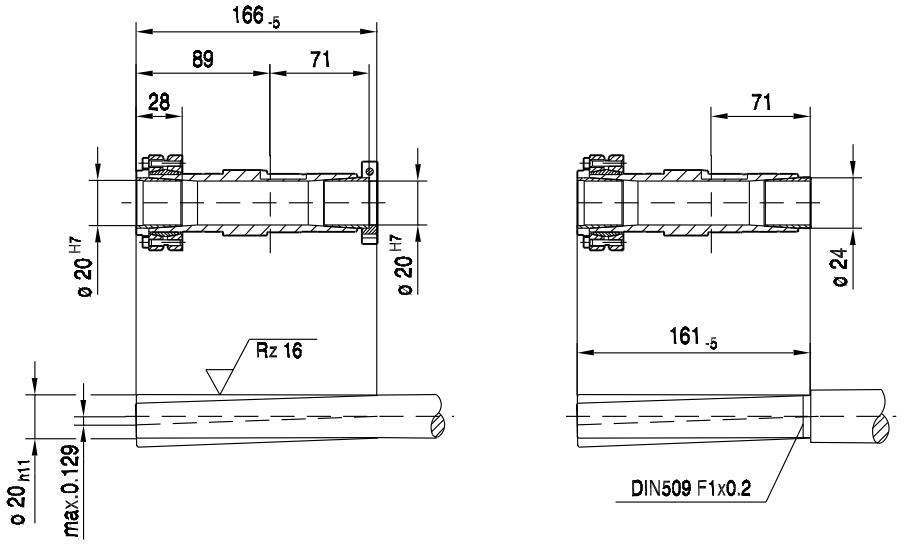

(→ 📖 129)	DRL71S	DRL71M	DRL80S	DRL80M	DRL90L			
AC	139	139	156	156	179			
AD	119	119	128	128	140			
ADS	129	129	139	139	150			
L	491	516	535	566	583			
LS	555	580	615	646	669			
LB	288	313	332	363	380			
LBS	352	377	412	443	466			

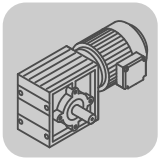

12.2.2 W 47

M_{aDyn} Nm	i	DRL										
		71S		71M		80S		80M		90L		100L
		D1	D2	D1	D2	D1	D2	D1	D2	D1	D2	D1
W47 2	3.27	16	26	22	43	31	78	40	103	78	>132	109
	3.89	18	31	26	52	37	92	48	122	92	>132	129
	4.40	21	36	29	59	42	105	54	>132	105	>132	>132
	5.23	25	42	35	70	50	124	65	>132	124	>132	>132
	5.58	27	45	37	74	53	>132	69	>132	>132	>132	>132
	6.53	31	52	43	86	61	>132	80	>132	>132	>132	>132
	7.32	34	58	48	96	69	>132	89	>132	>132	>132	>132
	8.61	40	69	57	113	81	>132	105	>132	>132		>132
	9.96	47	80	66	131	94	>132	122				
	10.66	50	85	70	>132	100	>132	130				
	11.32	50	85	70	139	100	>192	130	>192	>192	>192	>192
	12.30	57	97	80		114		>132				
	13.44	59	101	83	166	118	>192	154	>192	>192	>192	>192
	14.35	62	106	87	175	125	>192	162	>192	>192	>192	>192
	16.80	73	124	102	>192	146	>192	190	>192	>192	>192	>192
	18.82	81	138	113	>192	162	>192	>192	>192	>192	>192	>192
	22.15	95	162	133	>192	190	>192	>192	>192	>192		>192
	25.07	99	168	139	>215	198	>215	>215	>215	>215	>215	>215
	25.62	109	185	152	>192	>192	>192	>192				
	26.76	106	180	148	>215	210	>215	>215	>215	>215	>215	>215
	27.41	116	>192	163	>192	>192	>192	>192				
	31.33	122	205	171	>215	>215	>215	>215	>215	>215	>215	>215
	31.62	133	>192	186		>192		>192				
	35.09	135	>215	189	>215	>215	>215	>215	>215	>215	>215	>215
	41.30	157	>215	>215	>215	>215	>215	>215	>215	>215		>215
	47.78	179	>215	>215	>215	>215	>215	>215				
	51.12	189	>215	>215	>215	>215	>215	>215				
	58.98	>215	>215	>215		>215		>215				
	68.93	>215		>215								
	74.98	>215		>215								

→ 124

m kg	s	DRL					
		71S	71M	80S	80M	90L	100L
W47	2	19	20	23	25	33	41
WF: + 0.5 kg / WA: + -1.5 kg / WAF: + -0.7 kg							

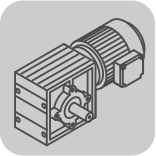

W..DRL
W..Nm

DRL..	i	n_{epk} 1/min	η %	c_{TG} W Nm/'	WF Nm/'	WA Nm/'	WAF Nm/'
W47 2	3.27	4500	95	-	-	-	-
	3.89	4500	95	-	-	-	-
	4.40	4500	95	-	-	-	-
	5.23	4500	95	-	-	-	-
	5.58	4500	95	-	-	-	-
	6.53	4500	94	-	-	-	-
	7.32	4500	94	-	-	-	-
	8.61	4500	94	-	-	-	-
	9.96	4500	94	-	-	-	-
	10.66	4500	94	-	-	-	-
	11.32	4500	88	-	-	-	-
	12.30	4500	93	-	-	-	-
	13.44	4500	88	-	-	-	-
	14.35	4500	87	-	-	-	-
	16.80	4500	87	-	-	-	-
	18.82	4500	86	-	-	-	-
	22.15	4500	86	-	-	-	-
	25.07	4500	79	-	-	-	-
	25.62	4500	85	-	-	-	-
	26.76	4500	79	-	-	-	-
	27.41	4500	85	-	-	-	-
	31.33	4500	78	-	-	-	-
	31.62	4500	84	-	-	-	-
	35.09	4500	77	-	-	-	-
	41.30	4500	76	-	-	-	-
	47.78	4500	75	-	-	-	-
	51.12	4500	74	-	-	-	-
	58.98	4500	73	-	-	-	-
	68.93	4500	72	-	-	-	-
	74.98	4500	71	-	-	-	-

DRL..							F_{Ramax}				F_{Rapk}			
n_e = 1400	i	M_{amax} Nm	M_{apk} Nm	$M_{aNotaus}$ Nm	n_{ak} 1/min	J_G 10^{-4} kgm^2	W N	WF N	WA N	WAF N	W N	WF N	WA N	WAF N
	3.27	110	132	198	2141	8.3	2660	3170	2440	2440	6990	7910	8000	8000
	3.89	110	132	198	1799	5.9	2860	3390	2640	2640	6990	7910	8000	8000
	4.40	110	132	198	1591	4.7	3020	3560	2790	2790	6990	7910	8000	8000
	5.23	110	132	198	1338	3.3	3240	3810	3010	3010	6990	7910	8000	8000
	5.58	110	132	198	1254	2.9	3320	3900	3090	3090	6990	7910	8000	8000
	6.53	110	132	198	1072	2.1	3540	4140	3310	3310	6990	7910	8000	8000
	7.32	110	132	198	956	1.7	3710	4330	3470	3470	6990	7910	8000	8000
	8.61	110	132	198	813	1.2	3960	4600	3720	3720	6990	7910	8000	8000
	9.96	110	132	198	703	0.96	4190	4860	3950	3950	6990	7910	8000	8000
	10.66	110	132	198	657	0.84	4300	4980	4060	4060	6990	7910	8000	8000
	11.32	160	192	285	292	1.6	3460	4350	2980	2980	6470	7600	8000	8000
	12.30	110	132	198	569	0.65	4550	5250	4300	4300	6990	7910	8000	8000
	13.44	160	192	285	171	1.2	3760	4680	3280	3280	6470	7600	8000	8000
	14.35	160	192	285	453	1.1	3880	4810	3400	3400	6470	7600	8000	8000
W47	16.80	160	192	285	286	0.77	4180	5140	3690	3690	6470	7600	8000	8000
2	18.82	160	192	285	197	0.63	4410	5390	3920	3920	6470	7600	8000	8000
	22.15	160	192	285	307	0.46	4750	5770	4250	4250	6470	7600	8000	8000
	25.07	180	215	320	68	0.93	4430	5610	3800	3800	6160	7430	8000	8000
	25.62	160	192	285	195	0.37	5070	6120	4570	4570	6470	7600	8000	8000
	26.76	180	215	320	67	0.82	4580	5770	3940	3940	6160	7430	8000	8000
	27.41	160	192	285	157	0.33	5220	6290	4720	4720	6470	7600	8000	8000
	31.33	180	215	320	54	0.60	4950	6180	4310	4310	6160	7430	8000	8000
	31.62	160	192	285	221	0.26	5560	6660	5050	5050	6470	7600	8000	8000
	35.09	180	215	320	125	0.49	5230	6490	4580	4580	6160	7430	8000	8000
	41.30	180	215	320	77	0.36	5650	6950	4990	4990	6160	7430	8000	8000
	47.78	180	215	320	48	0.29	6040	7380	5380	5380	6160	7430	8000	8000
	51.12	180	215	320	102	0.26	6230	7580	5570	5570	6160	7430	8000	8000
	58.98	180	215	320	66	0.21	6400	7580	5980	5980	6160	7430	8000	8000
	68.93	180	215	320	41	0.16	6400	7580	6450	6450	6160	7430	8000	8000
	74.98	180	215	320	32	0.14	6400	7580	6710	6710	6160	7430	8000	8000

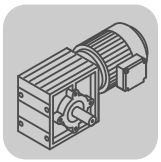

W..DRL
W..Nm

W47..

20 073 00 08

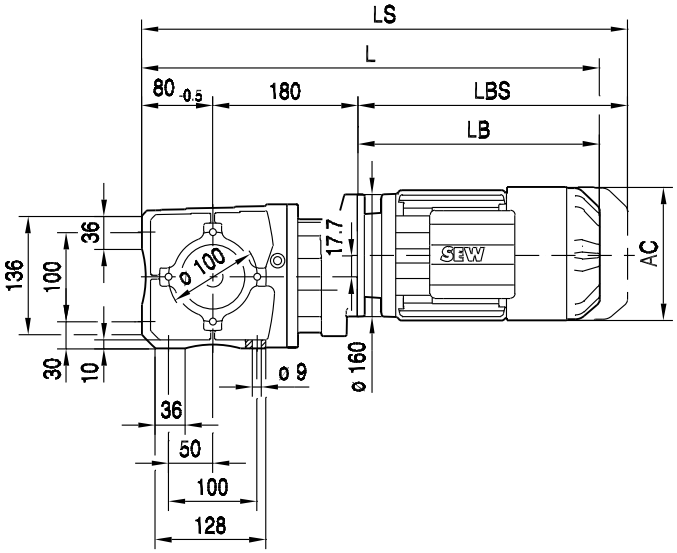

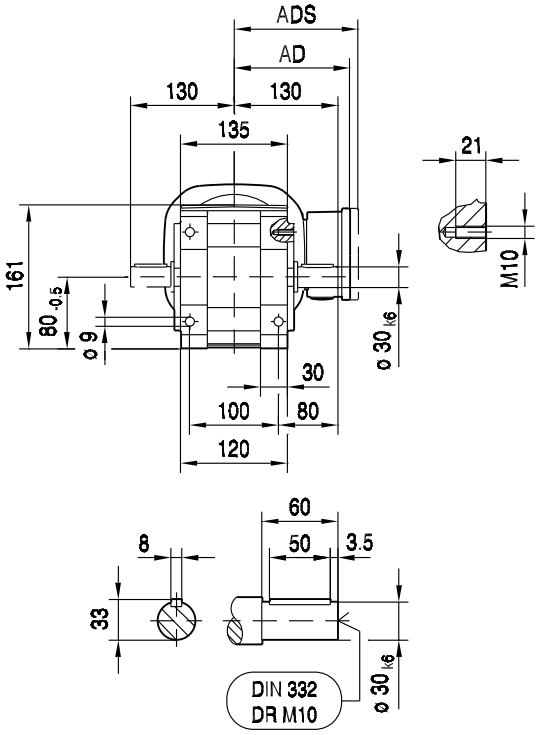

WA47B..

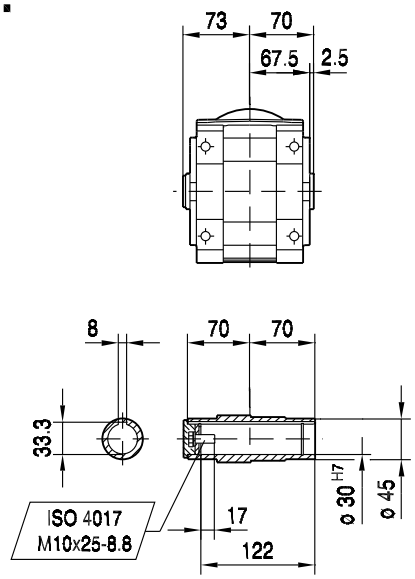

WH47B..

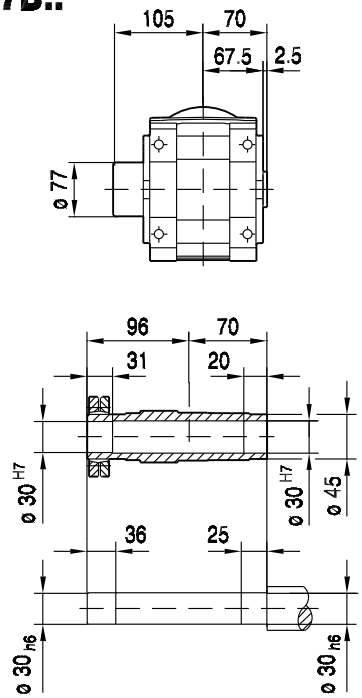

(→ 📖 129)	DRL71S	DRL71M	DRL80S	DRL80M	DRL90L	DRL100L	DRL132S	
AC	139	139	156	156	179	197	221	
AD	119	119	128	128	140	157	170	
ADS	129	129	139	139	150	158	172	
L	541	566	587	618	632	691	776	
LS	606	631	667	698	718	778	884	
LB	280	305	326	357	371	430	515	
LBS	345	370	406	437	457	517	623	

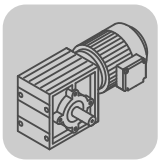

20 074 00 08

WF47..

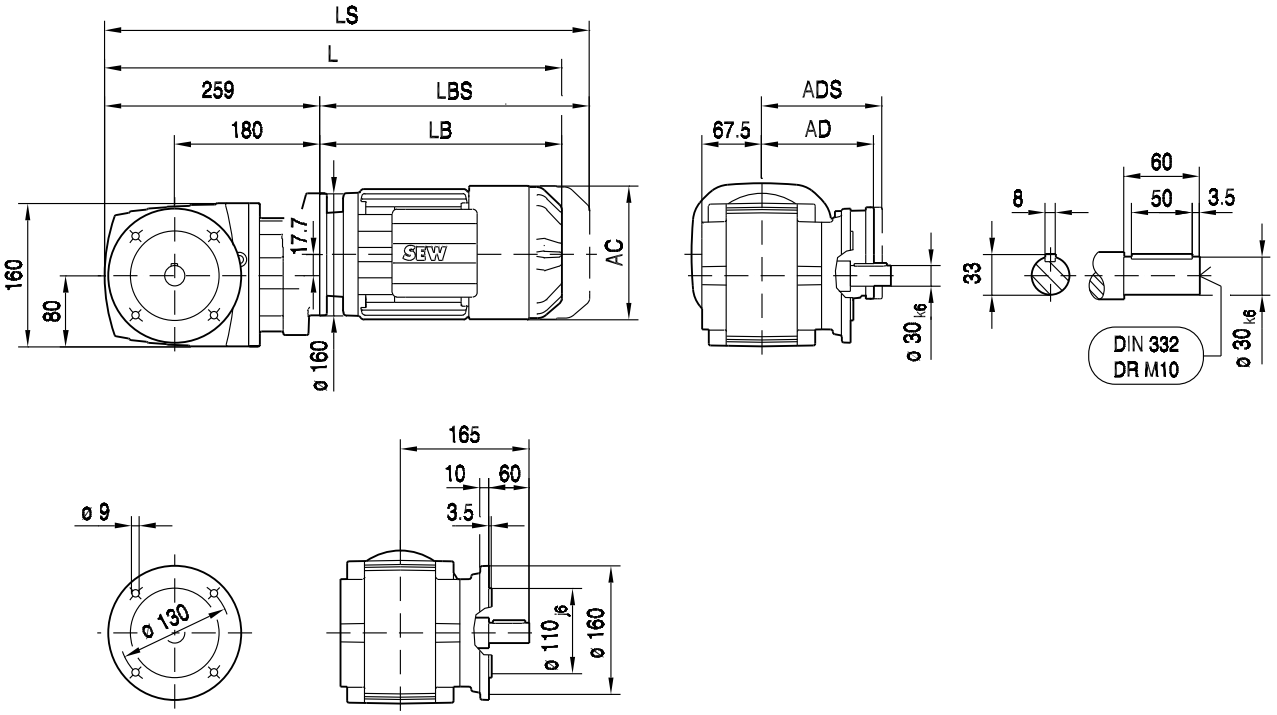

WAF47..

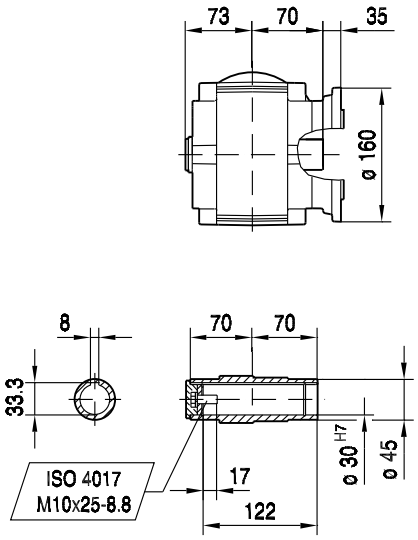

WHF47..

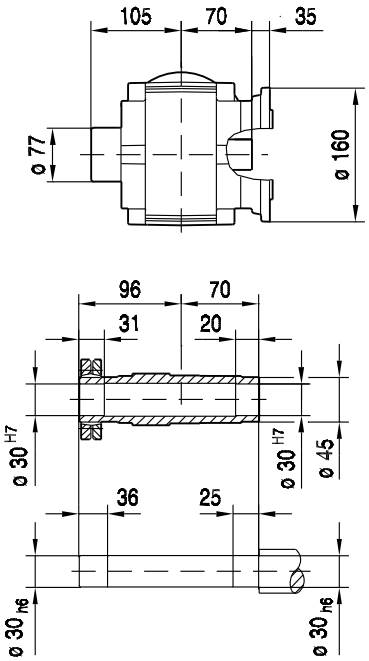

(→ 📖 129)	DRL71S	DRL71M	DRL80S	DRL80M	DRL90L	DRL100L	DRL132S	
AC	139	139	156	156	179	197	221	
AD	119	119	128	128	140	157	170	
ADS	129	129	139	139	150	158	172	
L	540	565	586	617	631	690	775	
LS	605	630	666	697	717	777	883	
LB	280	305	326	357	371	430	515	
LBS	345	370	406	437	457	517	623	

20 075 00 08

WA47..

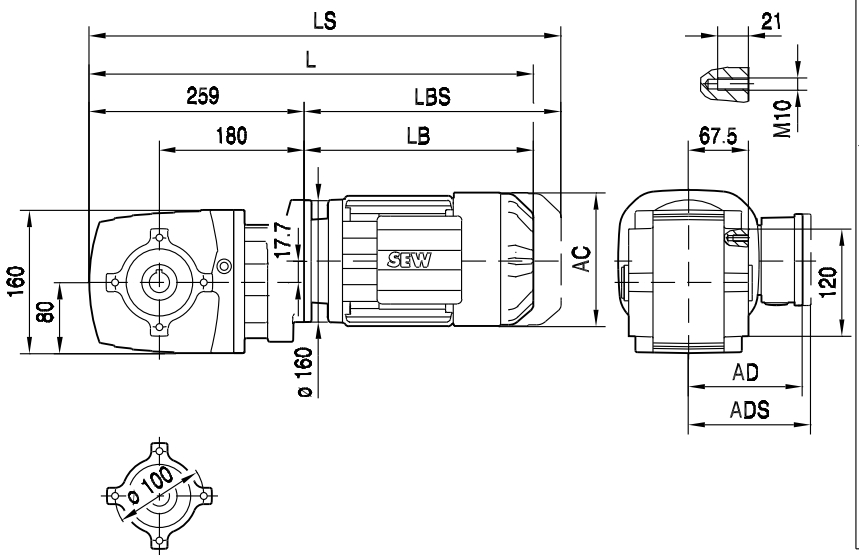

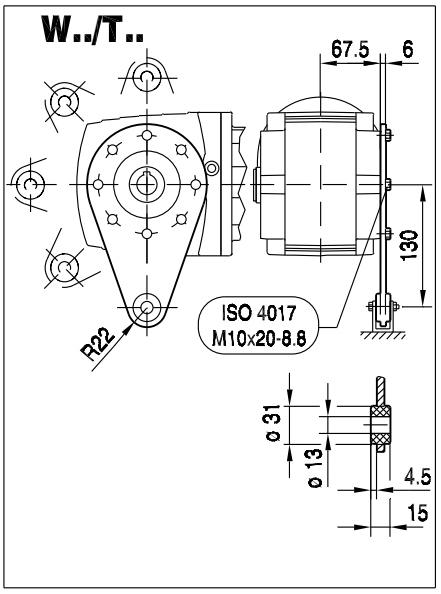

WA47..

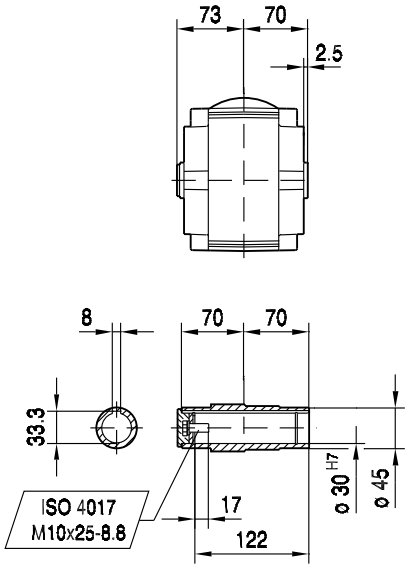

WH47..

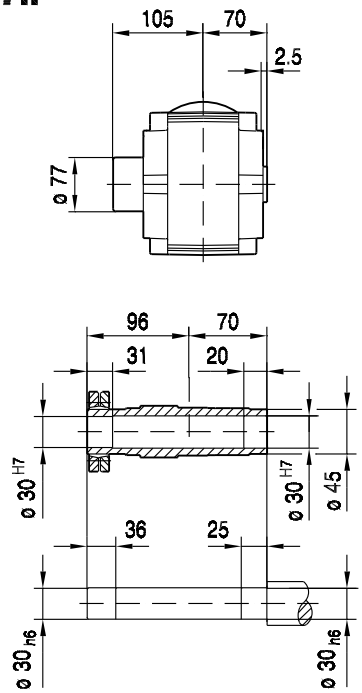

(→ 📖 129)	DRL71S	DRL71M	DRL80S	DRL80M	DRL90L	DRL100L	DRL132S	
AC	139	139	156	156	179	197	221	
AD	119	119	128	128	140	157	170	
ADS	129	129	139	139	150	158	172	
L	540	565	586	617	631	690	775	
LS	605	630	666	697	717	777	883	
LB	280	305	326	357	371	430	515	
LBS	345	370	406	437	457	517	623	

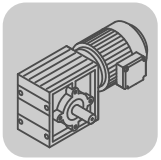

20 076 00 08

WT47..

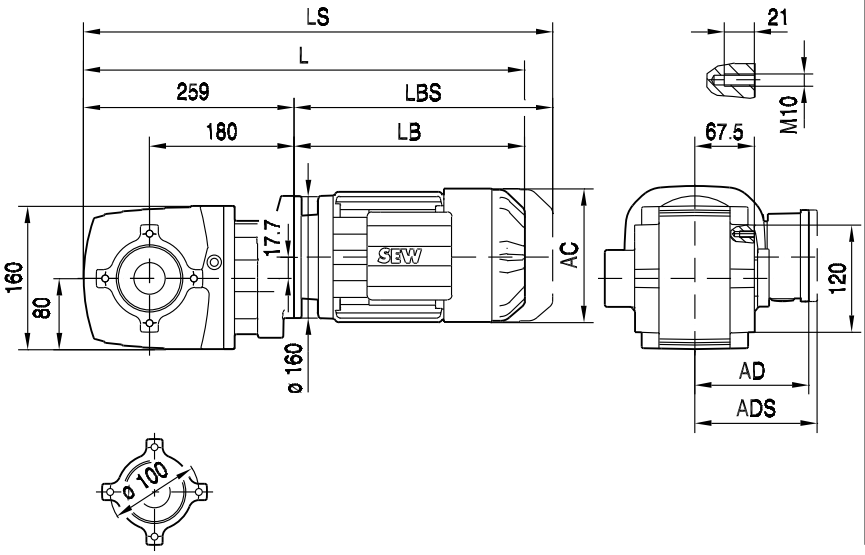

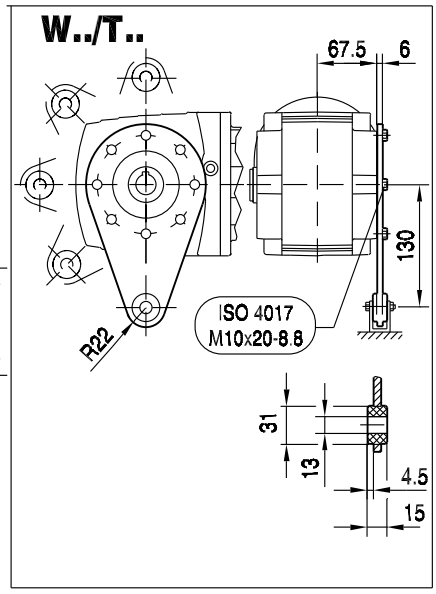

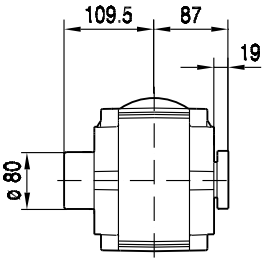

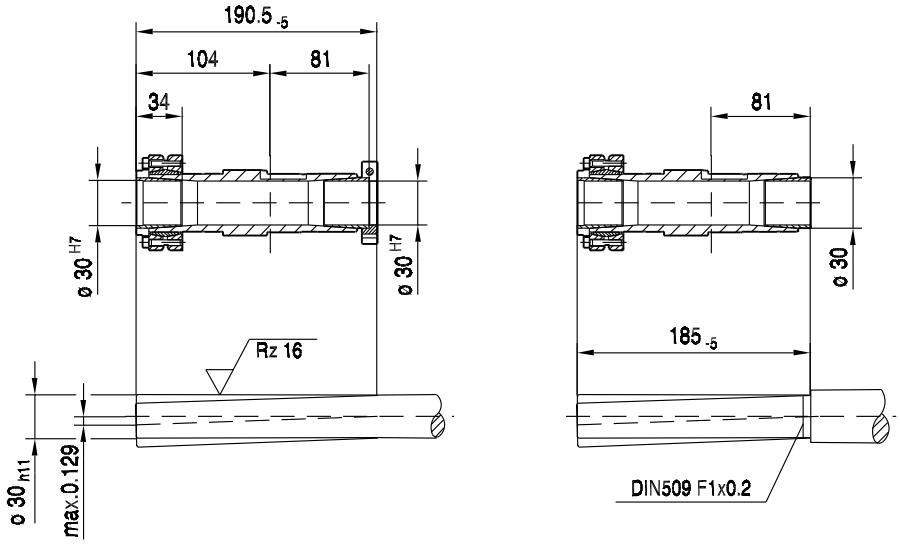

(→ 📖 129)	DRL71S	DRL71M	DRL80S	DRL80M	DRL90L	DRL100L	DRL132S	
AC	139	139	156	156	179	197	221	
AD	119	119	128	128	140	157	170	
ADS	129	129	139	139	150	158	172	
L	540	565	586	617	631	690	775	
LS	605	630	666	697	717	777	883	
LB	280	305	326	357	371	430	515	
LBS	345	370	406	437	457	517	623	

Diese Seite bleibt aus drucktechnischen Gründen frei.

13 Main Technical Data of Asynchronous DRL Servomotors

Key to the technical data

n_N	Rated speed
M_N	Rated torque
I_N	Rated current
M_{pk} Dyn1	Maximum limit torque (dynamics package 1)
M_{pk} Dyn2	Maximum limit torque (dynamics package 2)
m	Mass of the motor
J_{mot}	Mass moment of inertia of the motor
BE..	Brake used
M_B Dyn1	Braking torque (dynamics package 1)
M_B Dyn2	Braking torque (dynamics package 2)
m	Mass of the brakemotor
J_{MOT_BE}	Mass moment of inertia of the brakemotor

Technical data of asynchronous servomotors/DRL servo brakemotors, 400 V system voltage

n_N	Motor type	M_N Nm	I_N A	M_{pk} Dyn1 Nm	M_{pk} Dyn2 Nm	m kg	J_{Mot} 10^{-4} kgm^2
1200	DRL71S4	2.7	1.18	5	8.5	8.6	4.9
	DRL71M4	4	1.6	7	14	10	7.1
	DRL80S	6.5	2.15	10	25	11.5	14.9
	DRL80M4	9.5	2.9	14	30	15.2	21.5
	DRL90L4	15	4.8	25	46	22.5	43.5
	DRL100L4	26	8.5	40	85	30	68
	DRL132S4	42	12.6	80	150	45.5	190
	DRL132MC4	56	17.6	130	200	65	340
	DRL160M4	85	25.5	165	280	93	450
	DRL160MC4	90	28	185	320	95	590
	DRL180S	120	34.5	210	380	122	900
	DRL180M4	135	38	250	430	143	1110
	DRL180L4	165	47	320	520	154	1300
	DRL180LC4	175	52	420	600	163	1680
	DRL200L	200	58.5	475	680	260	2360
	DRL225S4	250	72	520	770	295	2930
	DRL225MC4	290	89	770	1100	330	4330
1700	DRL71S4	2.7	1.63	5	8.5	8.6	4.9
	DRL71M4	4	2.2	7	14	10	7.1
	DRL80S	6.5	2.96	10	25	11.5	14.9
	DRL80M4	9.5	4	14	30	15.2	21.5
	DRL90L4	15	6.6	25	46	22.5	43.5
	DRL100L4	26	11.4	40	85	30	68
	DRL132S4	42	17.8	80	150	45.5	190
	DRL132MC4	56	24.9	130	200	65	340
	DRL160M4	85	35	165	280	93	450
	DRL160MC4	90	36	185	320	95	590
	DRL180S	120	47.5	210	380	122	900
	DRL180M4	135	52	250	430	143	1110
	DRL180L4	165	63	320	520	154	1300
	DRL180LC4	175	72	420	600	163	1680
	DRL200S	200	80.6	475	680	260	2360
	DRL225S4	245	97	520	770	295	2930
	DRL225MC4	280	130	770	1100	330	4330
2100	DRL71S4	2.6	2	5	8.5	8.6	4.9
	DRL71M4	3.8	2.7	7	14	10	7.1
	DRL80S	6.2	3.59	10	25	11.5	14.9
	DRL80M4	9.5	5	14	30	15.2	21.5
	DRL90L4	15	8.4	25	46	22.5	43.5
	DRL100L4	25	14	40	85	30	68
	DRL132S4	41	21.4	80	150	45.5	190
	DRL132MC4	52	28.8	130	200	65	340
	DRL160M4	85	44	165	280	93	450
	DRL160MC4	88	48	185	320	95	590
	DRL180S	110	55.3	210	380	122	900
	DRL180M4	130	64	250	430	143	1110
	DRL180L4	160	78	320	520	154	1300
	DRL180LC4	170	87	420	600	163	1680
	DRL200L	195	99	475	680	260	2360
	DRL225S4	235	119	520	770	295	2930
	DRL225MC4	265	142	770	1100	330	4330

Table continued on next page

n_N	Motor type	M_N Nm	I_N A	M_{pk} Dyn1 Nm	M_{pk} Dyn2 Nm	m kg	J_{Mot} 10^{-4} kgm^2
3000	**DRL71S4**	2.5	2.68	5	8.5	8.6	4.9
	DRL71M4	3.6	3.55	7	14	10	7.1
	DRL80S	6	4.82	10	25	11.5	14.9
	DRL80M4	8.8	6.5	14	30	15.2	21.5
	DRL90L4	14	11	25	46	22.5	43.5
	DRL100L4	21	16.6	40	85	30	68
	DRL132S4	35	25.5	80	150	45.5	190
	DRL132MC4	42	34.8	130	200	65	340
	DRL160M4	79	57	165	280	93	450
	DRL160MC4	83	59	185	320	95	590
	DRL180S	100	70.1	210	380	122	900
	DRL180M4	105	73	250	430	143	1110
	DRL180L4	130	90	320	520	154	1300
	DRL180LC4	140	105	420	600	163	1680
	DRL200S	165	118	475	680	260	2360
	DRL225S4	195	139	520	770	295	2930
	DRL225MC4	220	188	770	1100	330	4330

n_N	Motor type	M_N Nm	I_N A	BE..	M_B Dyn1 Nm	M_B Dyn2 Nm	m_B kg[1)]	J_{Mot_BE} 10^{-4} kgm^2
1200	**DRL71S4**	2.7	1.18	BE05	5	5	11	6,2
	DRL71M4	4	1.6	BE1	7	10	12,6	8,4
	DRL80S	6.5	2.15	BE2	10	20	15.2	19.4
	DRL80M4	9.5	2.9	BE2	14	20	18,9	26
	DRL90L4	15	4.8	BE5	20	40	28,5	49,5
	DRL100L4	26	8.5	BE5	40	55	36	74
	DRL132S4	42	12.6	BE11	80	110	60	200
	DRL132MC4	56	17.6	BE11	110	110	79	355
	DRL160M4	85	25.5	BE20	150	200	120	500
	DRL160MC4	90	28	BE20	150	200	122	640
	DRL180S	120	34.5	BE30	200	300	162	1030
	DRL180M4	135	38	BE30	200	300	183	1250
	DRL180L4	165	47	BE30	300	300	194	1440
	DRL180LC4	175	52	BE32	400	400	210	1910
	DRL200L	200	58.5	BE32	400	600	315	2590
	DRL225S4	250	72	BE32	500	500	350	3160
	DRL225MC4	290	89	BE32	600	600	385	4560
1700	**DRL71S4**	2.7	1.63	BE05	5	5	11	6,2
	DRL71M4	4	2.2	BE1	7	10	12,6	8,4
	DRL80S	6.5	2.96	BE2	10	20	15.2	19.4
	DRL80M4	9.5	4	BE2	14	20	18,9	26
	DRL90L4	15	6.6	BE5	20	40	28,5	49,5
	DRL100L4	26	11.4	BE5	40	55	36	74
	DRL132S4	42	17.8	BE11	80	110	60	200
	DRL132MC4	56	24.9	BE11	110	110	79	355
	DRL160M4	85	35	BE20	150	200	120	500
	DRL160MC4	90	36	BE20	150	200	122	640
	DRL180S	120	47.5	BE30	200	300	162	1030
	DRL180M4	135	52	BE30	200	300	183	1250
	DRL180L4	165	63	BE30	300	300	194	1440
	DRL180LC4	175	72	BE32	400	400	210	1910
	DRL200S	200	80.6	BE32	400	600	315	2590
	DRL225S4	245	97	BE32	500	500	350	3160
	DRL225MC4	280	130	BE32	600	600	385	4560
2100	**DRL71S4**	2.6	2	BE05	5	5	11	6,2
	DRL71M4	3.8	2.7	BE1	7	10	12,6	8,4
	DRL80S	6.2	3.59	BE2	10	20	15.2	19.4
	DRL80M4	9.5	5	BE2	14	20	18,9	26
	DRL90L4	15	8.4	BE5	20	40	28,5	49,5
	DRL100L4	25	14	BE5	40	55	36	74
	DRL132S4	41	21.4	BE11	80	110	60	200
	DRL132MC4	52	28.8	BE11	110	110	79	355
	DRL160M4	85	44	BE20	150	200	120	500
	DRL160MC4	88	48	BE20	150	200	122	640
	DRL180S	110	55.3	BE30	200	300	162	1030
	DRL180M4	130	64	BE30	200	300	183	1250
	DRL180L4	160	78	BE30	300	300	194	1440
	DRL180LC4	170	87	BE32	400	400	210	1910
	DRL200L	195	99	BE32	400	600	315	2590
	DRL225S4	235	119	BE32	500	500	350	3160
	DRL225MC4	265	142	BE32	600	600	385	4560

Table continued on next page. Foot note on next page.

n_N	Motor type	M_N Nm	I_N A	BE..	M_B Dyn1 Nm	M_B Dyn2 Nm	m_B kg[1)]	J_{Mot_BE} 10^{-4} kgm^2
3000	**DRL71S4**	2.5	2.68	BE05	5	5	11	6,2
	DRL71M4	3.6	3.55	BE1	7	10	12,6	8,4
	DRL80S	6	4.82	BE2	10	20	15.2	19.4
	DRL80M4	8.8	6.5	BE2	14	20	18,9	26
	DRL90L4	14	11	BE5	20	40	28,5	49,5
	DRL100L4	21	16.6	BE5	40	55	36	74
	DRL132S4	35	25.5	BE11	80	110	60	200
	DRL132MC4	42	34.8	BE11	110	110	79	355
	DRL160M4	79	57	BE20	150	200	120	500
	DRL160MC4	83	59	BE20	150	200	122	640
	DRL180S	100	70.1	BE30	200	300	162	1030
	DRL180M4	105	73	BE30	200	300	183	1250
	DRL180L4	130	90	BE30	300	300	194	1440
	DRL180LC4	140	105	BE32	400	400	210	1910
	DRL200S	165	118	BE32	400	600	315	2590
	DRL225S4	195	139	BE32	500	500	350	3160
	DRL225MC4	220	188	BE32	600	600	385	4560

1) Applies to foot-mounted motor with brake (DRL...BE../FI..)

14 Abbreviation Key and Index

14.1 Abbreviation key

For a detailed list of abbreviations used, refer to chapter 4 "Project Planning Notes for Servo Gearmotors".

14.2 Index

A

Abbreviation key 38, 484
Abbreviation key and index 484
Additional documentation 7, 8, 37
Ambient temperature
R, F, K, S, W gear units 16
Assembly of gear units with hollow shaft and key 92
Asynchronous servomotors 10
ATEX, explosion protection 19
Available torque arms 106

B

Brakemotors 9
Breather 127

C

Change of mounting position 66
Changing the mounting position 66
Churning losses 45, 68
Coating 9
Condition monitoring
Technical data 113
Content of this publication 7
Corrosion protection 9, 12
Covers, fixed 111

D

Data for drive and gear unit selection 38
declaration of conformity 21
Design and operating notes 91
Diagnostic unit
DUV10A vibration sensor 115
Oil aging sensor DUO10A 113
Disassembly of gear units with hollow shaft and key 92
Dividing explosion-proof equipment into categories 20
Documentation
Additional 37
Documentation, additional 7, 8

E

Efficiency of R, F, K, S, W gear units 44
Explosion protection according to ATEX 19
Extended storage 14
Eyebolts, lifting eyes 127

F

Fastening the gear unit 106
Flange block shaft 98
Flange contours FAF.., KAF.., SAF.. and WAF.. 110
Flange contours FF.., KF.., SF.. and WF.. 108
Flange contours of RF.. and R..F 107
Force application, definition 48

G

Gear units
Extended storage 14
Gear units with hollow shaft 96
Gearmotor dimensions 129
EN 50347 129
Motor dimension designations 129
Motor options 129
Special designs 129
Gearmotor variants 25
General notes
R, F, K, S, W gear units 16

H

Helical gear units
Type designation 22
Helical gearmotors
Mounting positions 69
Helical-bevel gear units
Type designation 23
Helical-worm gear units
Type designation 23
Higher permitted overhung loads 48
Hollow shaft 96
Hollow shaft, shouldered with shrink disk 99

I

Important information on selection tables and dimension sheets 124
Information 126
Information on mounting positions 63
Information on selection tables 124
Installation altitude 16
Installation of gear units with hollow shaft and key
Supplied fastening parts 92
International markets 10
Inverter combinations 11

K

Key to the mounting position sheets 67
KS corrosion protection 12

L

Lubricant fill quantities
R, F, K, S, W gear units 119
Lubricant table 118
Lubricants 116
General information 116
Lubricant table 118
Lubricants and fill quantities 116

M

Main technical data of servomotors
Key 479
Main technical data of the servomotors 479

Motor variants and options 34
Mounting positions 63
Mounting positions of helical gearmotors 69
Mounting positions of helical-bevel gearmotors ..77
Mounting positions of helical-worm gearmotors ..82
Mounting positions of parallel shaft helical gearmotors 74
Mounting positions of SPIROPLAN® 88
Mounting system
TorqLOC® 97

N

NOCO® fluid 14
Noise 17

O

Oil aging sensor
Technical data and part numbers 113
Oil expansion tank 46
Order information
Output direction of rotation with backstop 64
Position of the motor terminal box and the cable entry 66
Order information for servo gearmotors - gear units 64
Order information for servo gearmotors - motors 66
OS Surface protection
Definition 13
OS surface protection
NOCO® 14
Output shafts without keyway 126
Overhung load conversion 50
Overhung load conversion for off-center force application 49
Overhung loads 47
Overview of explosion-proof equipment 20
Overview of servo gearmotors 36
Overview of types and type designation 22
Helical gearmotors 25
R, F, K, S, W gear units 22

P

Parallel shaft helical gear units
Type designation 22
Permitted axial load 48
Permitted overhung load 47
Position of output end in right-angle gear units ...65
Position of output shaft and output flange 65
Potentially explosive atmospheres 20
Product description
Input components 18
Inverter operation 9
R, F, K, S, W gear units 16
SPIROPLAN® 18
Swing base 18
Product description, asynchronous servomotors 10
Product groups 6
Product names and trademarks 8
Project planning example 51
Project planning information 44
Project planning of gear units
Off-center force application, overhung l oad conversion 49
Project planning procedure 40
Part 1, servo gear units 40
Part 2, servo gear units 41
Part 3, servomotors 42
Part 4, servomotors 43
Protection measures 13
Protection types 21
Protection types and categories 21

R

Rated speeds 11
Reduced backlash gear units 17, 91
Rolling bearing greases 117
Rubber buffer for FA/FH/FV/FT 128
Run-in phase of helical-worm and SPIROPLAN® gear units 45

S

Self-locking helical-worm or SPIROPLAN® gear units 44
Servo gearmotor nameplate 35
SEW-EURODRIVE
Group of companies 5
Products 6
Systems 6
Shaft heights 126
Shafts without keyway 126
Shouldered hollow shaft with shrink disk 99
Shrink disk connection 127
Size of terminal box 129
Special protection measures 13
SPIROPLAN® 18, 24
SPIROPLAN® gearmotor variants 32
Splined hollow shaft 128
Storage conditions 15
Surface and corrosion protection 9
Surface protection 12

T

Tolerances 126
Flanges 127
Hollow shafts 127
Multiple-spline shafts 127
Shaft ends 126
TorqLOC® mounting system 97
Torque 106
Torque arm 128
Torque arms 106
Transportation fixtures 127
Type designation
Condition monitoring 24
Helical gear units 22

Helical-bevel gear units 23
Helical-worm gear units 23
Options 24
Parallel shaft helical gear units 22
SPIROPLAN® 24

V

Variants 25, 26, 28, 30
Helical gearmotors 25
Helical-bevel gearmotors 28
Helical-worm gearmotors 30
Parallel shaft helical gearmotors 26
SPIROPLAN® 32
Variants, possible
Reduced backlash 17
SPIROPLAN® 18
Vibration sensor
Technical data and part numbers 115

W

Weight specifications 9

Z

Zones in potentially explosive atmospheres 19

15 Address Directory

Germany			
Headquarters **Production** **Sales**	**Bruchsal**	SEW-EURODRIVE GmbH & Co KG Ernst-Blickle-Straße 42 D-76646 Bruchsal P.O. Box Postfach 3023 • D-76642 Bruchsal	Tel. +49 7251 75-0 Fax +49 7251 75-1970 http://www.sew-eurodrive.de sew@sew-eurodrive.de
Production / Industrial Gears	**Bruchsal**	SEW-EURODRIVE GmbH & Co KG Christian-Pähr-Str.10 D-76646 Bruchsal	Tel. +49 7251 75-0 Fax +49 7251 75-2970
Production	**Graben**	SEW-EURODRIVE GmbH & Co KG Ernst-Blickle-Straße 1 D-76676 Graben-Neudorf P.O. Box Postfach 1220 • D-76671 Graben-Neudorf	Tel. +49 7251 75-0 Fax +49 7251 75-2970
	Östringen	SEW-EURODRIVE Östringen GmbH Franz-Gurk-Straße 2 D-76684 Östringen P.O. Box Postfach 1174 • D-76677 Östringen	Tel. +49 7253 92540 Fax +49 7253 925490 oestringen@sew-eurodrive.de
Service Competence Center	**Central**	SEW-EURODRIVE GmbH & Co KG Ernst-Blickle-Straße 1 D-76676 Graben-Neudorf	Tel. +49 7251 75-1710 Fax +49 7251 75-1711 sc-mitte@sew-eurodrive.de
	North	SEW-EURODRIVE GmbH & Co KG Alte Ricklinger Straße 40-42 D-30823 Garbsen (near Hannover)	Tel. +49 5137 8798-30 Fax +49 5137 8798-55 sc-nord@sew-eurodrive.de
	East	SEW-EURODRIVE GmbH & Co KG Dänkritzer Weg 1 D-08393 Meerane (near Zwickau)	Tel. +49 3764 7606-0 Fax +49 3764 7606-30 sc-ost@sew-eurodrive.de
	South	SEW-EURODRIVE GmbH & Co KG Domagkstraße 5 D-85551 Kirchheim (near München)	Tel. +49 89 909552-10 Fax +49 89 909552-50 sc-sued@sew-eurodrive.de
	West	SEW-EURODRIVE GmbH & Co KG Siemensstraße 1 D-40764 Langenfeld (near Düsseldorf)	Tel. +49 2173 8507-30 Fax +49 2173 8507-55 sc-west@sew-eurodrive.de
	Electronics	SEW-EURODRIVE GmbH & Co KG Ernst-Blickle-Straße 42 D-76646 Bruchsal	Tel. +49 7251 75-1780 Fax +49 7251 75-1769 sc-elektronik@sew-eurodrive.de
	Drive Service Hotline / 24 Hour Service		+49 180 5 SEWHELP +49 180 5 7394357
Technical Offices	**Augsburg**	SEW-EURODRIVE GmbH & Co KG August-Wessels-Straße 27 D-86156 Augsburg	Tel. +49 821 22779-10 Fax +49 821 22779-50 tb-augsburg@sew-eurodrive.de
	Berlin	SEW-EURODRIVE GmbH & Co KG Lilienthalstraße 3a D-12529 Schönefeld	Tel. +49 306331131-30 Fax +49 306331131-36 tb-berlin@sew-eurodrive.de
	Bodensee	SEW-EURODRIVE GmbH & Co KG Burgbergring 91 D-88662 Überlingen	Tel. +49 7551 9226-30 Fax +49 7551 9226-56 tb-bodensee@sew-eurodrive.de
	Bremen	SEW-EURODRIVE GmbH & Co KG Bornstr.19 ... 22 D-28195 Bremen	Tel. +49 421 33918-10 Fax +49 421 33918-22 tb-bremen@sew-eurodrive.de
	Dortmund	SEW-EURODRIVE GmbH & Co KG Hildastraße 10 D-44145 Dortmund	Tel. +49 231 912050-10 Fax +49 231 912050-20 tb-dortmund@sew-eurodrive.de

Germany			
	Dresden	SEW-EURODRIVE GmbH & Co KG Hauptstraße 32 D-01445 Radebeul	Tel. +49 351 26338-0 Fax +49 351 26338-38 tb-dresden@sew-eurodrive.de
	Erfurt	SEW-EURODRIVE GmbH & Co KG Dubliner Straße 12 D-99091 Erfurt	Tel. +49 361 21709-70 Fax +49 361 21709-79 tb-erfurt@sew-eurodrive.de
	Güstrow	SEW-EURODRIVE GmbH & Co KG Am Gewerbegrund 3 D-18273 Güstrow P.O. Box Postfach 1216 • D-18262 Güstrow	Tel. +49 3843 8557-80 Fax +49 3843 8557-88 tb-guestrow@sew-eurodrive.de
	Hamburg	SEW-EURODRIVE GmbH & Co KG Bramfelder Straße 119 D-22305 Hamburg	Tel. +49 40 298109-60 Fax +49 40 298109-70 tb-hamburg@sew-eurodrive.de
	Hannover/ Garbsen	SEW-EURODRIVE GmbH & Co KG Alte Ricklinger Str.40-42 D-30823 Garbsen P.O. Box Postfach 1104 53 • D-30804 Garbsen	Tel. +49 5137 8798-10 Fax +49 5137 8798-50 tb-hannover@sew-eurodrive.de
	Heilbronn	SEW-EURODRIVE GmbH & Co KG Zeppelinstraße 7 D-74357 Bönnigheim	Tel. +49 7143 8738-0 Fax +49 7143 8738-25 tb-heilbronn@sew-eurodrive.de
	Herford	SEW-EURODRIVE GmbH & Co KG Radewiger Straße 21 D-32052 Herford P.O. Box Postfach 4108 • D-32025 Herford	Tel. +49 5221 9141-0 Fax +49 5221 9141-20 tb-herford@sew-eurodrive.de
	Karlsruhe	SEW-EURODRIVE GmbH & Co KG Ettlinger Weg 2 D-76467 Bietigheim P.O. Box Postfach 43 • D-76463 Bietigheim	Tel. +49 7245 9190-10 Fax +49 7245 9190-20 tb-karlsruhe@sew-eurodrive.de
	Kassel	SEW-EURODRIVE GmbH & Co KG Lange Straße 14 D-34253 Lohfelden	Tel. +49 561 95144-80 Fax +49 561 95144-90 tb-kassel@sew-eurodrive.de
	Koblenz	SEW-EURODRIVE GmbH & Co KG Bahnstraße 17a D-56743 Mendig	Tel. +49 2652 9713-30 Fax +49 2652 9713-40 tb-koblenz@sew-eurodrive.de
	Lahr	SEW-EURODRIVE GmbH & Co KG Europastraße 3/1 D-77933 Lahr / Schwarzwald	Tel. +49 7821 90999-60 Fax +49 7821 90999-79 tb-lahr@sew-eurodrive.de
	Langenfeld	SEW-EURODRIVE GmbH & Co KG Siemensstraße 1 D-40764 Langenfeld	Tel. +49 2173 8507-10 Fax +49 2173 8507-50 tb-langenfeld@sew-eurodrive.de
	Magdeburg	SEW-EURODRIVE GmbH & Co KG Breiteweg 53 D-39179 Barleben	Tel. +49 39203 7577-1 Fax +49 39203 7577-9 tb-magdeburg@sew-eurodrive.de
	Mannheim	SEW-EURODRIVE GmbH & Co KG Besselstraße 26 D-68219 Mannheim	Tel. +49 621 71683-10 Fax +49 621 71683-22 tb-mannheim@sew-eurodrive.de
	München	SEW-EURODRIVE GmbH & Co KG Domagkstraße 5 D-85551 Kirchheim	Tel. +49 89 90955-110 Fax +49 89 90955-150 tb-muenchen@sew-eurodrive.de
	Münster	SEW-EURODRIVE GmbH & Co KG Hafenplatz 4 D-48155 Münster	Tel. +49 251 41475-11 Fax +49 251 41475-50 tb-muenster@sew-eurodrive.de

Germany			
	Nürnberg	SEW-EURODRIVE GmbH & Co KG Plattenäckerweg 6 D-90455 Nürnberg	Tel. +49 911 98884-50 Fax +49 911 98884-60 tb-nuernberg@sew-eurodrive.de
	Regensburg	SEW-EURODRIVE GmbH & Co KG Im Gewerbepark A15 D-93059 Regensburg	Tel. +49 941 46668-68 Fax +49 941 46668-66 tb-regensburg@sew-eurodrive.de
	Rhein-Main	SEW-EURODRIVE GmbH & Co KG Niederstedter Weg 5 D-61348 Bad Homburg	Tel. +49 6172 9617-0 Fax +49 6172 9617-50 tb-rheinmain@sew-eurodrive.de
	Stuttgart	SEW-EURODRIVE GmbH & Co KG Friedrich-List-Straße 46 D-70771 Leinfelden-Echterdingen	Tel. +49 711 16072-0 Fax +49 711 16072-72 tb-stuttgart@sew-eurodrive.de
	Ulm	SEW-EURODRIVE GmbH & Co KG Dieselstraße 14 D-89160 Dornstadt	Tel. +49 7348 9885-0 Fax +49 7348 9885-90 tb-ulm@sew-eurodrive.de
	Würzburg	SEW-EURODRIVE GmbH & Co KG Nürnbergerstraße 118 D-97076 Würzburg-Lengfeld	Tel. +49 931 27886-60 Fax +49 931 27886-66 tb-wuerzburg@sew-eurodrive.de
	Zwickau / Meerane	SEW-EURODRIVE GmbH & Co KG Dänkritzer Weg1 D-08393 Meerane	Tel. +49 3764 7606-0 Fax +49 3764 7606-20 tb-zwickau@sew-eurodrive.de

France			
Production **Sales** **Service**	**Haguenau**	SEW-USOCOME 48-54 route de Soufflenheim B. P. 20185 F-67506 Haguenau Cedex	Tel. +33 3 88 73 67 00 Fax +33 3 88 73 66 00 http://www.usocome.com sew@usocome.com
Production	**Forbach**	SEW-USOCOME Zone industrielle Technopôle Forbach Sud B. P. 30269 F-57604 Forbach Cedex	Tel. +33 3 87 29 38 00
Assembly **Sales** **Service**	**Bordeaux**	SEW-USOCOME Parc d'activités de Magellan 62 avenue de Magellan - B. P. 182 F-33607 Pessac Cedex	Tel. +33 5 57 26 39 00 Fax +33 5 57 26 39 09
	Lyon	SEW-USOCOME Parc d'affaires Roosevelt Rue Jacques Tati F-69120 Vaulx en Velin	Tel. +33 4 72 15 37 00 Fax +33 4 72 15 37 15
	Nantes	SEW-USOCOME Parc d'activités de la forêt 4 rue des Fontenelles F-44140 Le Bignon	Tel. +33 2 40 78 42 00 Fax +33 2 40 78 42 20
	Paris	SEW-USOCOME Zone industrielle 2 rue Denis Papin F-77390 Verneuil l'Etang	Tel. +33 1 64 42 40 80 Fax +33 1 64 42 40 88
Technical Offices	**Alsace**	SEW-USOCOME 1 rue Auguste Gasser F-68360 Soultz	Tel. +33 3 89 74 51 62 Fax +33 3 89 76 58 71
	Aquitaine / Charentes	SEW-USOCOME Parc d'activités de Magellan 62 avenue de Magellan B. P. 182 F-33607 Pessac Cedex	Tel. +33 5 57 26 39 00 Fax +33 5 57 26 39 09

France			
	Auvergne / Limousin	SEW-USOCOME Farges F-19600 Chasteaux	Tel. +33 5 55 20 12 10 Fax +33 5 55 20 12 11
	Lower Normandy	SEW-USOCOME 5 rue de la Limare F-14250 Brouay	Tel. +33 2 31 37 92 86 Fax +33 2 31 74 68 15
	Bourgogne	SEW-USOCOME 10 rue de la poste F-71350 Saint Loup Géanges	Tel. +33 3 85 49 92 18 Fax +33 3 85 49 92 19
	Brittany	SEW-USOCOME Parc d'activités de la forêt 4 rue des Fontenelles F-44140 Le Bignon	Tel. +33 2 40 78 42 04 Fax +33 2 40 78 42 20
	Centre / Poitou	SEW-USOCOME Parc d'activités de la forêt 4 rue des Fontenelles F-44140 Le Bignon	Tel. +33 2 40 78 42 11 Fax +33 2 40 78 42 20
	Champagne-Ardenne	SEW-USOCOME Impasse des Ouises F-10120 Saint André les Vergers	Tel. +33 3 25 79 63 24 Fax +33 3 25 79 63 25
	Franche-Comté	SEW-USOCOME Chemin des saules F-25870 Venise	Tel. +33 3 81 60 20 47 Fax +33 3 81 87 75 93
	Île-de-France East / Aisne	SEW-USOCOME 45 rue des Cinelles F-77700 Bailly Romainvilliers	Tel. +33 1 64 17 02 47 Fax +33 1 64 17 66 49
	Île-de-France North / Picardy	SEW-USOCOME 25bis rue Kléber F-92300 Levallois Perret	Tel. +33 1 41 05 92 74 Fax +33 1 41 05 92 75
	Île-de-France South	SEW-USOCOME 6 chemin des bergers Lieu-dit Marchais F-91410 Roinville sous Dourdan	Tel. +33 1 60 81 10 56 Fax +33 1 60 81 10 57
	Lorraine / Alsace North	SEW-USOCOME 1 rue de la forêt F-54250 Champigneulles	Tel. +33 3 83 96 28 04 Fax +33 3 83 96 28 07
	Midi-Pyrénées / Roussillon	SEW-USOCOME 179 route de Grazac F-31190 Caujac	Tel. +33 5 61 08 15 85 Fax +33 5 61 08 16 44
	Nord-Pas-de-Calais	SEW-USOCOME 209 route d'Hesdigneul F-62360 Hesdin l'Abbé	Tel. +33 3 21 10 86 86 Fax +33 3 21 10 86 87
	Paris / Île-de-France West	SEW-USOCOME 42 avenue Jean Jaurès F-78580 Maule	Tel. +33 1 30 90 89 86 Fax +33 1 30 90 93 15
	Pays de Loire	SEW-USOCOME Parc d'activités de la forêt 4 rue des Fontenelles F-44140 Le Bignon	Tel. +33 2 40 78 42 03 Fax +33 2 40 78 42 20
	Provence-Alpes-Côte d'Azur	SEW-USOCOME Résidence Les Hespérides Bât. B2 67 boulevard des Alpes F-13012 Marseille	Tel. +33 4 91 18 00 11 Fax +33 4 91 18 00 12
	Rhône-Alpes East	SEW-USOCOME Montée de la Garenne F-26750 Génissieux	Tel. +33 4 75 05 65 95 Fax +33 4 75 05 65 96

France			
	Rhône-Alpes North	SEW-USOCOME Parc d'affaires Roosevelt Rue Jacques Tati F-69120 Vaulx en Velin	Tel. +33 4 72 15 37 03 Fax +33 4 72 15 37 15
	Rhône-Alpes West	SEW-USOCOME Parc d'affaires Roosevelt Rue Jacques Tati F-69120 Vaulx en Velin	Tel. +33 4 72 15 37 04 Fax +33 4 72 15 37 15

Algeria			
Sales	**Alger**	REDUCOM Sarl 16, rue des Frères Zaghnoune Bellevue 16200 El Harrach Alger	Tel. +213 21 8214-91 Fax +213 21 8222-84 info@reducom-dz.com http://www.reducom-dz.com

Argentina			
Assembly **Sales** **Service**	**Buenos Aires**	SEW EURODRIVE ARGENTINA S.A. Centro Industrial Garin, Lote 35 Ruta Panamericana Km 37,5 1619 Garin	Tel. +54 3327 4572-84 Fax +54 3327 4572-21 sewar@sew-eurodrive.com.ar http://www.sew-eurodrive.com.ar

Australia			
Assembly **Sales** **Service**	**Melbourne**	SEW-EURODRIVE PTY. LTD. 27 Beverage Drive Tullamarine, Victoria 3043	Tel. +61 3 9933-1000 Fax +61 3 9933-1003 http://www.sew-eurodrive.com.au enquires@sew-eurodrive.com.au
	Sydney	SEW-EURODRIVE PTY. LTD. 9, Sleigh Place, Wetherill Park New South Wales, 2164	Tel. +61 2 9725-9900 Fax +61 2 9725-9905 enquires@sew-eurodrive.com.au
Sales **Service**	**Adelaide**	SEW-EURODRIVE PTY. LTD. 9C Park Way Mawson Lakes, SA 5095	Tel. +61 8 8161 4000 Fax +61 8 8161 4002 enquires@sew-eurodrive.com.au
	Brisbane	SEW-EURODRIVE PTY.LTD. 1 /34 Collinsvale St Rocklea, Queensland, 4106	Tel. +61 7 3276 5100 Fax +61 7 3276 5102 enquires@sew-eurodrive.com.au
	Perth	SEW-EURODRIVE PTY. LTD. 10 Colin Jamieson Drive Welshpool, WA 6106	Tel. +61 8 9251-4900 Fax +61 8 9251-4903 enquires@sew-eurodrive.com.au
Technical Office	**Townsville**	SEW-EURODRIVE PTY. LTD. 12 Leyland Street Garbutt, QLD 4814	Tel. +61 7 4779 4333 Fax +61 7 4779 5333 enquires@sew-eurodrive.com.au

Austria			
Assembly **Sales** **Service**	**Wien**	SEW-EURODRIVE Ges.m.b.H. Richard-Strauss-Strasse 24 A-1230 Wien	Tel. +43 1 617 55 00-0 Fax +43 1 617 55 00-30 http://www.sew-eurodrive.at sew@sew-eurodrive.at
Technical Offices	**Linz**	SEW-EURODRIVE Ges.m.b.H. Reuchlinstr. 6/3 A-4020 Linz	Tel. +43 732 655 109-0 Fax +43 732 655 109-20 tb-linz@sew-eurodrive.at
	Graz	SEW-EURODRIVE Ges.m.b.H. Grabenstraße 231 A-8045 Graz	Tel. +43 316 685 756-0 Fax +43 316 685 755 tb-graz@sew-eurodrive.at
	Dornbirn	SEW-EURODRIVE Ges.m.b.H. Lustenauerstraße 27/1 A-6850 Dornbirn	Tel. +43 5572 3725 99-0 Fax +43 5572 3725 99-20 tb-dornbirn@sew-eurodrive.at

Bangladesh			
Sales	**Dhaka**	Jainex Industrial and Engineering Ltd B 12 Apon Nibash East Nasirabad Bangladesh	Tel. +880 1713103502 Fax +880 31 613041 jainexbd@onlinectg.net

Belarus			
Sales	**Minsk**	SEW-EURODRIVE BY RybalkoStr. 26 BY-220033 Minsk	Tel.+375 17 298 47 56 / 298 47 58 Fax +375 17 298 47 54 http://www.sew.by sales@sew.by

Belgium			
Assembly **Sales** **Service**	**Brussels**	**SEW Caron-Vector** Research park Haasrode Evenementenlaan 7 BE-3001 Leuven	Tel. +32 16 386-311 Fax +32 16 386-336 http://www.sew-eurodrive.be info@sew-eurodrive.be
Service Competence Center	**Industrial Gears**	**SEW Caron-Vector** Rue de Parc Industriel, 31 BE-6900 Marche-en-Famenne	Tel. +32 84 219-878 Fax +32 84 219-879 http://www.sew-eurodrive.be service-wallonie@sew-eurodrive.be
	Antwerp	**SEW Caron-Vector** Glasstraat, 19 BE-2170 Merksem	Tel. +32 3 64 19 333 Fax +32 3 64 19 336 http://www.sew-eurodrive.be service-antwerpen@sew-eurodrive.be

Brazil			
Production **Sales** **Service**	**Sao Paulo**	SEW-EURODRIVE Brasil Ltda. Avenida Amâncio Gaiolli, 152 - Rodovia Presidente Dutra Km 208 Guarulhos - 07251-250 - SP SAT - SEW ATENDE - 0800 7700496	Tel. +55 11 2489-9133 Fax +55 11 2480-3328 http://www.sew-eurodrive.com.br sew@sew.com.br

Bulgaria			
Sales	**Sofia**	BEVER-DRIVE GmbH Bogdanovetz Str.1 BG-1606 Sofia	Tel. +359 2 9151160 Fax +359 2 9151166 bever@bever.bg

Cameroon			
Sales	**Douala**	Electro-Services Rue Drouot Akwa B.P. 2024 Douala	Tel. +237 33 431137 Fax +237 33 431137 electrojemba@yahoo.fr

Canada			
Assembly **Sales** **Service**	**Toronto**	SEW-EURODRIVE CO. OF CANADA LTD. 210 Walker Drive Bramalea, ON L6T 3W1	Tel. +1 905 791-1553 Fax +1 905 791-2999 http://www.sew-eurodrive.ca l.watson@sew-eurodrive.ca
	Vancouver	SEW-EURODRIVE CO. OF CANADA LTD. Tilbury Industrial Park 7188 Honeyman Street Delta, BC V4G 1G1	Tel. +1 604 946-5535 Fax +1 604 946-2513 b.wake@sew-eurodrive.ca
	Montreal	SEW-EURODRIVE CO. OF CANADA LTD. 2555 Rue Leger Lasalle, PQ H8N 2V9	Tel. +1 514 367-1124 Fax +1 514 367-3677 a.peluso@sew-eurodrive.ca
	Additional addresses for service in Canada provided on request!		

Chile			
Assembly **Sales** **Service**	**Santiago de Chile**	SEW-EURODRIVE CHILE LTDA. Las Encinas 1295 Parque Industrial Valle Grande LAMPA RCH-Santiago de Chile P.O. Box Casilla 23 Correo Quilicura - Santiago - Chile	Tel. +56 2 75770-00 Fax +56 2 75770-01 http://www.sew-eurodrive.cl ventas@sew-eurodrive.cl

China			
Production **Assembly** **Sales** **Service**	**Tianjin**	SEW-EURODRIVE (Tianjin) Co., Ltd. No. 46, 7th Avenue, TEDA Tianjin 300457	Tel. +86 22 25322612 Fax +86 22 25323273 info@sew-eurodrive.cn http://www.sew-eurodrive.com.cn
Assembly **Sales** **Service**	**Suzhou**	SEW-EURODRIVE (Suzhou) Co., Ltd. 333, Suhong Middle Road Suzhou Industrial Park Jiangsu Province, 215021	Tel. +86 512 62581781 Fax +86 512 62581783 suzhou@sew-eurodrive.cn
	Guangzhou	SEW-EURODRIVE (Guangzhou) Co., Ltd. No. 9, JunDa Road East Section of GETDD Guangzhou 510530	Tel. +86 20 82267890 Fax +86 20 82267922 guangzhou@sew-eurodrive.cn
	Shenyang	SEW-EURODRIVE (Shenyang) Co., Ltd. 10A-2, 6th Road Shenyang Economic Technological Development Area Shenyang, 110141	Tel. +86 24 25382538 Fax +86 24 25382580 shenyang@sew-eurodrive.cn
	Wuhan	SEW-EURODRIVE (Wuhan) Co., Ltd. 10A-2, 6th Road No. 59, the 4th Quanli Road, WEDA 430056 Wuhan	Tel. +86 27 84478388 Fax +86 27 84478389 wuhan@sew-eurodrive.cn
	Xi'An	SEW-EURODRIVE (Xi'An) Co., Ltd. No. 12 Jinye 2nd Road Xi'An High-Technology Industrial Development Zone Xi'An 710065	Tel. +86 29 68686262 Fax +86 29 68686311 xian@sew-eurodrive.cn

Colombia			
Assembly **Sales** **Service**	**Bogotá**	SEW-EURODRIVE COLOMBIA LTDA. Calle 22 No. 132-60 Bodega 6, Manzana B Santafé de Bogotá	Tel. +57 1 54750-50 Fax +57 1 54750-44 http://www.sew-eurodrive.com.co sewcol@sew-eurodrive.com.co

Croatia			
Sales **Service**	**Zagreb**	KOMPEKS d. o. o. Zeleni dol 10 HR 10 000 Zagreb	Tel. +385 1 4613-158 Fax +385 1 4613-158 kompeks@inet.hr

Czech Republic			
Sales	**Prague**	SEW-EURODRIVE CZ S.R.O. Business Centrum Praha Lužná 591 CZ-16000 Praha 6 - Vokovice	Tel. +420 255 709 601 Fax +420 220 121 237 http://www.sew-eurodrive.cz sew@sew-eurodrive.cz
Assembly **Service**	**Plzeň**	SEW-EURODRIVE CZ S.R.O. Areal KRPA a.s. Zahradni 173/2 CZ-32600 Plzeň	Tel. +420 378 775 300 Fax +420 377 970 710

Czech Republic			
Technical Offices	**Brno**	SEW-EURODRIVE CZ S.R.O. Křenová 52 CZ -60200 Brno	Tel. +420 543 256 151 +420 543 256 163 Fax +420 543 256 845
	Hradec Králové	SEW-EURODRIVE CZ S.R.O. Čechova 498 CZ-50202 Hradec Králové	Tel. +420 495 510 141 Fax +420 495 521 313
	Ostrava	SEW-EURODRIVE CZ S.R.O. Studentská 6202/17 CZ-708 00 Ostrava-Poruba	Tel. +420 597 329 044 Mobile +420 724 889 965
	Klatovy	SEW-EURODRIVE CZ S.R.O. Technická kancelář Klatovy Domažlická 800 CZ-33901 Klatovy	Tel. +420 376 310 729 Fax +420 376 310 725

Denmark			
Assembly **Sales** **Service**	**Copenhagen**	SEW-EURODRIVEA/S Geminivej 28-30 DK-2670 Greve	Tel. +45 43 9585-00 Fax +45 43 9585-09 http://www.sew-eurodrive.dk sew@sew-eurodrive.dk

Egypt			
Sales **Service**	**Cairo**	Copam Egypt for Engineering & Agencies 33 El Hegaz ST, Heliopolis, Cairo	Tel +20 2 22566-299 + 1 23143088 Fax +20 2 22594-757 http://www.copam-egypt.com/ copam@datum.com.eg

Estonia			
Sales	**Tallin**	ALAS-KUUL AS Reti tee 4 EE-75301 Peetri küla, Rae vald, Harjumaa	Tel. +372 6593230 Fax +372 6593231 veiko.soots@alas-kuul.ee

Finland			
Assembly **Sales** **Service**	**Lahti**	SEW-EURODRIVE OY Vesimäentie 4 FIN-15860 Hollola 2	Tel. +358 201 589-300 Fax +358 3 780-6211 http://www.sew-eurodrive.fi sew@sew.fi
Technical Offices	**Helsinki**	SEW-EURODRIVE OY Luutnantintie 5 FIN-00410 Helsinki	Tel. +358 201 589-300 Fax + 358 9 5666-311 sew@sew.fi
	Vaasa	SEW-EURODRIVE OY Hietasaarenkatu 18 FIN-65100 Vaasa	Tel. +358 201 589-300 Fax +358 6 3127-470 sew@sew.fi
	Kuopio	SEW-EURODRIVE OY Viestikatu 3 FIN-70600 Kuopio	Tel. +358 201 589-300 sew@sew.fi
	Rovaniemi	SEW-EURODRIVE OY Valtakatu 4 A FIN-96100 Rovaniemi	Tel. +358 201 589-300 Fax +358 201 589-239 sew@sew.fi
Production **Assembly**	**Karkkila**	SEW Industrial Gears Oy Valurinkatu 6, PL 8 FI-03600 Karkkila, 03601 Karkkila	Tel. +358 201 589-300 Fax +358 201 589-310 sew@sew.fi http://www.sew-eurodrive.fi

Gabon			
Sales	**Libreville**	ESG Electro Services Gabun Feu Rouge Lalala 1889 Libreville Gabun	Tel. +241 741059 Fax +241 741059 esg_services@yahoo.fr

Great Britain			
Assembly **Sales** **Service**	**Normanton**	SEW-EURODRIVE Ltd. Beckbridge Industrial Estate Normanton West Yorkshire WF6 1QR	Tel. +44 1924 893-855 Fax +44 1924 893-702 http://www.sew-eurodrive.co.uk info@sew-eurodrive.co.uk
	Drive Service Hotline / 24 Hour Service		Tel. 01924 896911
Service Competence Center	**Southern England**	SEW-EURODRIVE Ltd. Unit 41 Easter Park Benyon Road Silchester Reading Berkshire RG7 2PQ	Tel. +44 1189 701-699 Fax +44 1189 701-021
Technical Offices	**Midlands**	SEW-EURODRIVE Ltd. 5 Sugar Brook court Aston Road Bromsgrove Worcs. B60 3EX	Tel. +44 1527 877-319 Fax +44 1527 575-245
	Scotland	SEW-EURODRIVE Ltd. No 37 Enterprise House Springkerse Business Park Stirling FK7 7UF	Tel. +44 17 8647-8730 Fax +44 17 8645-0223

Greece			
Sales **Service**	**Athens**	Christ. Boznos & Son S.A. 12, K. Mavromichali Street P.O. Box 80136 GR-18545 Piraeus	Tel. +30 2 1042 251-34 Fax +30 2 1042 251-59 http://www.boznos.gr info@boznos.gr
Technical Office	**Thessaloniki**	Christ. Boznos & Son S.A. Asklipiou 26 562 24 Evosmos, Thessaloniki	Tel. +30 2 310 7054-00 Fax +30 2 310 7055-15 info@boznos.gr

Hong Kong			
Assembly **Sales** **Service**	**Hong Kong**	SEW-EURODRIVE LTD. Unit No. 801-806, 8th Floor Hong Leong Industrial Complex No. 4, Wang Kwong Road Kowloon, Hong Kong	Tel. +852 36902200 Fax +852 36902211 contact@sew-eurodrive.hk

Hungary			
Sales **Service**	**Budapest**	SEW-EURODRIVE Kft. H-1037 Budapest Kunigunda u. 18	Tel. +36 1 437 06-58 Fax +36 1 437 06-50 office@sew-eurodrive.hu

Iceland			
Sales	**Reykjavik**	VARMA & VELAVERK EHF Dalshrauni 5 IS-220 Hafnarjördur	Tel. +354 585 1070 Fax +354 585)1071 varmaverk@varmaverk.is http://www.varmaverk.is

India			
Registered Office **Assembly** **Sales** **Service**	**Vadodara**	SEW-EURODRIVE India Private Limited Plot No. 4, GIDC POR Ramangamdi • Vadodara - 391 243 Gujarat	Tel. +91 265 3045200, +91 265 2831086 Fax +91 265 3045300, +91 265 2831087 http://www.seweurodriveindia.com sales@seweurodriveindia.com subodh.ladwa@seweurodriveindia.com
Assembly **Sales** **Service**	**Chennai**	SEW-EURODRIVE India Private Limited Plot No. K3/1, Sipcot Industrial Park Phase II Mambakkam Village Sriperumbudur - 602105 Kancheepuram Dist, Tamil Nadu	Tel. +91 44 37188888 Fax +91 44 37188811 c.v.shivkumar@seweurodriveindia.com
Technical Offices	**Ahmedabad**	SEW-EURODRIVE India Private Limited 306, Shaan office complex, Behind Sakar-IV, Ellisebridge, Ashram Road Ahmedabad – Gujarat	Tel. +91 79 40072067/68 Fax +91 79 40072069 subodh.ladwa@seweurodriveindia.com
	Bengaluru	SEW-EURODRIVE India Private Limited 308, Prestige Centre Point 7, Edward Road Bengaluru - 560052 - Karnataka	Tel. +91 80 22266565 Fax +91 80 22266569 salesbang@seweurodriveindia.com ganesh@seweurodriveindia.com
	Chennai	SEW-EURODRIVE India Private Limited 2nd Floor, Josmans Complex, No. 5, McNichols Road, Chetpet Chennai - 600031 - Tamil Nadu	Tel. +91 44 42849813 Fax +91 44 42849816 saleschen@seweurodriveindia.com c.v.shivkumar@seweurodriveindia.com
	Coimbatore	SEW-EURODRIVE India Private Limited Office No 60 Arpee Centre (Opp Annapoorna Hotel) 420 N, NSR Road, Saibaba Colony Coimbatore 641 0111 - Tamil Nadu	Tel. +91 422 2455420 Fax +91 422 2443988 salescmb@seweurodriveindia.com p.selvakumar@seweurodriveindia.com
	Cuttack	SEW-EURODRIVE India Private Limited Plot No.- 1764, Nuasahi, Nayapalli Bhubaneswar-12 Orissa	Tel. +91 9937446333 manoranjan.sahoo@seweurodriveindia.com
	Hyderabad	SEW-EURODRIVE India Private Limited 408, 4th Floor, Meridian Place Green Park Road Amerpeet Hyderabad - 500016 - Andhra Pradesh	Tel. +91 40 23414698 Fax +91 40 23413884 saleshyd@seweurodriveindia.com ma.choudary@seweurodriveindia.com
	Jamshedpur	SEW-EURODRIVE India Private Limited Flat No.: B/2, B.S. Apartment Road No.: 4, Contractor's area, Bistupur Jamshedpur 831 001 - Chhattisgarh	Tel. +91 9934123671 siddaratha.mishra@seweurodriveindia.com
	Kolkata	SEW EURODRIVE India Private Limited 2nd floor, Room No. 35 Chowringhee Court 55, Chowringhee Road Kolkata - 700 071 - West Bengal	Tel. +91 33 22827457 Fax +91 33 22894204 saleskal@seweurodriveindia.com a.j.biswas@seweurodriveindia.com
	Lucknow	SEW-EURODRIVE India Private Limited 69, Shiv Vihar Colony Vikas Nagar-5 Lucknow 226022 - Uttar Pradesh	Tel. +91 9793627333 amit.nigam@seweurodriveindia.com
	Mumbai	SEW-EURODRIVE India Private Limited 312 A, 3rd Floor, Acme Plaza, J.B. Nagar, Andheri Kurla Road, Andheri (E) Mumbai - 400059 - Maharashtra	Tel. +91 22 28348440 Fax +91 22 28217858 salesmumbai@seweurodriveindia.com p.s.ray@seweurodriveindia.com

India			
	Nagpur	SEW-EURODRIVE India Private Limited Piyush S .Kudawale Ganga Residency, 204, Shahu Nagar, Manewada-Besa Road, Post- Mhalgi Nagar, Nagpur - 440034	Tel. +91 9561089525 piyush.kudawale@seweurodriveindia.com
	New Delhi	SEW-EURODRIVE India Private Limited 418-419, Suneja Tower-1 District Centre, Janak Puri New Delhi 110 058	Tel. +91 11 25544111 Fax +91 11 25544113 salesdelhi@seweurodriveindia.com vikram.juneja@seweurodriveindia.com
	Pune	SEW-EURODRIVE India Private Limited Lunawat Prism 4th floor, S. No. 148, Neena Co-Operative Housing Society, Paud Road, Pune 411038 - Maharashtra	Tel. +91 20 25380730 / 735 Fax +91 20 25380721 salespune@seweurodriveindia.com praveen.hosur@seweurodriveindia.com
	Raipur	SEW-EURODRIVE India Private Limited A-42, Ashoka Millenium Complex, Ring Road-1, Raipur 492 001 - Chhattisgarh	Tel. +91 771 4090765 Fax +91 771 4090765 sutanu.sarkar@seweurodriveindia.com

Indonesia			
Sales	**Medan II**	PT. Serumpun Indah Lestari Jl. Pulau Solor NO. 8 Kawasan Industri Medan II	Tel. +62 61 687 1221 Fax +62 61 687 1429 serumpunindah@yahoo.com

Ireland			
Sales **Service**	**Dublin**	Alperton Engineering Ltd. 48 Moyle Road Dublin Industrial Estate Glasnevin, Dublin 11	Tel. +353 1 830-6277 Fax +353 1 830-6458 info@alperton.ie http://www.alperton.ie

Israel			
Sales	**Tel-Aviv**	Liraz Handasa Ltd. Ahofer Str 34B / 228 58858 Holon	Tel. +972 3 5599511 Fax +972 3 5599512 http://www.liraz-handasa.co.il office@liraz-handasa.co.il

Italy			
Assembly **Sales** **Service**	**Solaro**	SEW-EURODRIVE di R. Blickle & Co.s.a.s. Via Bernini,14 I-20020 Solaro (Milano)	Tel. +39 02 96 9801 Fax +39 02 96 799781 http://www.sew-eurodrive.it sewit@sew-eurodrive.it
Technical Offices	**Bologna**	SEW-EURODRIVE di R. Blickle & Co.s.a.s. Via della Grafica, 47 I-40064 Ozzano dell'Emilia (Bo)	Tel. +39 051 65-23-801 Fax +39 051 796-595
	Caserta	SEW-EURODRIVE di R. Blickle & Co.s.a.s. Viale Carlo III Km. 23,300 I-81020 S. Nicola la Strada (Caserta)	Tel. +39 0823 219011 Fax +39 0823 421414
	Milan	SEW-EURODRIVE di R. Blickle & Co.s.a.s. Via Bernini,14 I-20020 Solaro (Milano)	Tel. +39 02 96 980229 Fax +39 02 96 799781
	Pescara	SEW-EURODRIVE di R. Blickle & Co.s.a.s. Viale Europa,132 I-65010 Villa Raspa di Spoltore (PE)	Tel. +39 085 41-59-427 Fax +39 085 41-59-643
	Torino	SEW-EURODRIVE di R. Blickle & Co.s.a.s. Filiale Torino c.so Unione Sovietica 612/15 - int. C I-10135 Torino	Tel. +39 011 3473780 Fax +39 011 3473783

Italy			
	Verona	SEW-EURODRIVE di R. Blickle & Co.s.a.s. Via P. Sgulmero, 27/A I-37132 Verona	Tel. +39 045 89-239-11 Fax +39 045 97-6079

Ivory Coast			
Sales	**Abidjan**	SICA Société industrielle & commerciale pour l'Afrique 165, Boulevard de Marseille 26 BP 1115 Abidjan 26	Tel. +225 21 25 79 44 Fax +225 21 25 88 28 sicamot@aviso.ci

Japan			
Assembly **Sales** **Service**	**Iwata**	SEW-EURODRIVE JAPAN CO., LTD 250-1, Shimoman-no, Iwata Shizuoka 438-0818	Tel. +81 538 373811 Fax +81 538 373855 http://www.sew-eurodrive.co.jp sewjapan@sew-eurodrive.co.jp
Technical Offices	**Fukuoka**	SEW-EURODRIVE JAPAN CO., LTD. C-go, 5th-floor, Yakuin-Hiruzu-Bldg. 1-5-11, Yakuin, Chuo-ku Fukuoka, 810-0022	Tel. +81 92 713-6955 Fax +81 92 713-6860 sewkyushu@jasmine.ocn.ne.jp
	Osaka	SEW-EURODRIVE JAPAN CO., LTD. Higobashi Shimizu Bldg. 10th flor 1-3-7 Tosabori, Nishi-ku Osaka, 550-0001	Tel. +81 6 6444--8330 Fax +81 6 6444--8338 sewosaka@crocus.ocn.ne.jp
	Tokyo	SEW-EURODRIVE JAPAN CO., LTD. Omarimon Yusen Bldg. 13th floor 3-23-5 Nishinbashi, Minato-ku Tokyo 105-0003	Tel. +81 3 3239-0469 Fax +81 3 3239-0943 sewtokyo@basil.ocn.ne.jp

Kazakhstan			
Sales	**Almaty**	ТОО "СЕВ-ЕВРОДРАЙВ" пр.Райымбека, 348 050061 г. Алматы Республика Казахстан	Тел. +7 (727) 334 1880 Факс +7 (727) 334 1881 http://www.sew-eurodrive.kz sew@sew-eurodrive.kz

Latvia			
Sales	**Riga**	SIA Alas-Kuul Katlakalna 11C LV-1073 Riga	Tel. +371 6 7139253 Fax +371 6 7139386 http://www.alas-kuul.com info@alas-kuul.com

Lebanon			
Sales	**Beirut**	Gabriel Acar & Fils sarl B. P. 80484 Bourj Hammoud, Beirut	Tel. +961 1 510 532 Fax +961 1 494 971 ssacar@inco.com.lb
Jordan Kuwait Saudi Arabia Syria	**Beirut**	Middle East Drives S.A.L. (offshore) Sin El Fil. B. P. 55-378 Beirut	Tel. +961 1 494 786 Fax +961 1 494 971 info@medrives.com http://www.medrives.com

Lithuania			
Sales	**Alytus**	UAB Irseva Statybininku 106C LT-63431 Alytus	Tel. +370 315 79204 Fax +370 315 56175 info@irseva.lt http://www.sew-eurodrive.lt

Luxembourg			
Assembly **Sales** **Service**	**Brussels**	**SEW Caron-Vector** Research park Haasrode Evenementenlaan 7 BE-3001 Leuven	Tel. +32 16 386-311 Fax +32 16 386-336 http://www.sew-eurodrive.be info@sew-eurodrive.be

Malaysia			
Assembly **Sales** **Service**	**Johore**	SEW-EURODRIVE SDN BHD No. 95, Jalan Seroja 39, Taman Johor Jaya 81000 Johor Bahru, Johor West Malaysia	Tel. +60 7 3549409 Fax +60 7 3541404 sales@sew-eurodrive.com.my
Technical Offices	**Kota Kinabalu**	SEW-EURODRIVE Sdn Bhd (Kota Kinabalu Branch) Lot No. 2,1st Floor, Inanam Baru Phase III, Miles 5.1 /2, Jalan Tuaran, Inanam 89350 Kota Kinabalu Sabah, Malaysia	Tel. +60 88 424792 Fax +60 88 424807
	Kuala Lumpur	SEW-EURODRIVE Sdn. Bhd. No. 2, Jalan Anggerik Mokara 31/46 Kota Kemuning Seksyen 31 40460 Shah Alam Selangor Darul Ehsan	Tel. +60 3 5229633 Fax +60 3 5229622 sewpjy@po.jaring.my
	Kuching	SEW-EURODRIVE Sdn. Bhd. Lot 268, Section 9 KTLD Lorong 9, Jalan Satok 93400 Kuching, Sarawak East Malaysia	Tel. +60 82 232380 Fax +60 82 242380
	Penang	SEW-EURODRIVE Sdn. Bhd. No. 38, Jalan Bawal Kimsar Garden 13700 Prai, Penang	Tel. +60 4 3999349 Fax +60 4 3999348 seweurodrive@po.jaring.my

Mauritania			
Sales	**Zouérate**	AFRICOM - SARL En Face Marché Dumez P.B. 88 Zouérate	Tel. +222 544 0 314 Fax +222 544 0 538 contact@africom-sarl.com

Mexico			
Assembly **Sales** **Service**	**Quéretaro**	SEW-EURODRIVE MEXICO SA DE CV SEM-981118-M93 Tequisquiapan No. 102 Parque Industrial Quéretaro C.P. 76220 Quéretaro, México	Tel. +52 442 1030-300 Fax +52 442 1030-301 http://www.sew-eurodrive.com.mx scmexico@seweurodrive.com.mx

Morocco			
Sales	**Casablanca**	Afit Route D'El Jadida KM 14 RP8 Province de Nouaceur Commune Rurale de Bouskoura MA 20300 Casablanca	Tel. +212 522633700 Fax +212 522621588 fatima.haquiq@premium.net.ma http://www.groupe-premium.com

Netherlands			
Assembly **Sales** **Service**	**Rotterdam**	VECTOR Aandrijftechniek B.V. Industrieweg 175 NL-3044 AS Rotterdam Postbus 10085 NL-3004 AB Rotterdam	Tel. +31 10 4463-700 Fax +31 10 4155-552 http://www.vector.nu info@vector.nu

New Zealand			
Assembly **Sales** **Service**	**Auckland**	SEW-EURODRIVE NEW ZEALAND LTD. P.O. Box 58-428 82 Greenmount drive East Tamaki Auckland	Tel. +64 9 2745627 Fax +64 9 2740165 http://www.sew-eurodrive.co.nz sales@sew-eurodrive.co.nz
	Christchurch	SEW-EURODRIVE NEW ZEALAND LTD. 10 Settlers Crescent, Ferrymead Christchurch	Tel. +64 3 384-6251 Fax +64 3 384-6455 sales@sew-eurodrive.co.nz
Technical Office	**Palmerston North**	SEW-EURODRIVE NEW ZEALAND LTD. C/-Grant Shearman, RD 5, Aronui Road Palmerston North	Tel. +64 6 355-2165 Fax +64 6 355-2316 sales@sew-eurodrive.co.nz

Norway			
Assembly **Sales** **Service**	**Moss**	SEW-EURODRIVE A/S Solgaard skog 71 N-1599 Moss	Tel. +47 69 24 10 20 Fax +47 69 24 10 40 http://www.sew-eurodrive.no sew@sew-eurodrive.no

Pakistan			
Sales	**Karachi**	Industrial Power Drives Al-Fatah Chamber A/3, 1st Floor Central Commercial Area, Sultan Ahmed Shah Road, Block 7/8, Karachi	Tel. +92 21 452 9369 Fax +92-21-454 7365 seweurodrive@cyber.net.pk

Peru			
Assembly **Sales** **Service**	**Lima**	SEW DEL PERU MOTORES REDUCTORES S.A.C. Los Calderos, 120-124 Urbanizacion Industrial Vulcano, ATE, Lima	Tel. +51 1 3495280 Fax +51 1 3493002 http://www.sew-eurodrive.com.pe sewperu@sew-eurodrive.com.pe

Poland			
Assembly **Sales** **Service**	**Lodz**	SEW-EURODRIVE Polska Sp.z.o.o. ul. Techniczna 5 PL-92-518 Łódź	Tel. +48 42 676 53 00 Fax +48 42 676 53 45 http://www.sew-eurodrive.pl sew@sew-eurodrive.pl
	24 Hour Service		Tel. +48 602 739 739 (+48 602 SEW SEW) serwis@sew-eurodrive.pl
Technical Office	**Tychy**	SEW-EURODRIVE Polska Sp.z.o.o. ul. Fabryczna 5 PL-43-100 Tychy	Tel. +48 32 32 32 610 Fax +48 32 32 32 647
	Bydgoszcz	SEW-EURODRIVE Polska Sp.z.o.o. ul. Fordońska 246 PL-85-959 Bydgoszcz	Tel. +48 52 3606590 Fax +48 52 3606591
	Poznan	SEW-EURODRIVE Polska Sp.z.o.o. ul. Romana Maya 1 PL-61-371 Poznań	Tel. +48 61 8741640 Fax +48 61 8741641
	Radom	SEW-EURODRIVE Polska Sp.z.o.o. ul. Słowackiego 84 PL-26-600 Radom	Tel. +48 48 365 40 50 Fax +48 48 365 40 51

Portugal			
Assembly **Sales** **Service**	**Coimbra**	SEW-EURODRIVE, LDA. Apartado 15 P-3050-901 Mealhada	Tel. +351 231 20 9670 Fax +351 231 20 3685 http://www.sew-eurodrive.pt infosew@sew-eurodrive.pt

Portugal			
Service Competence Center	**Lisboa**	SEW-EURODRIVE, LDA. Núcleo Empresarial I de São Julião do Tojal Rua de Entremuros, 54 Fracção I P-2660-533 São Julião do Tojal	Tel. +351 21 958-0198 Fax +351 21 958-0245 esc.lisboa@sew-eurodrive.pt
Technical Office	**Porto**	SEW-EURODRIVE, LDA. Av. 25 de Abril, 68 4440-502 Valongo	Tel. +351 229 350 383 Fax +351 229 350 384 MobilTel. +351 9 32559110 esc.porto@sew-eurodrive.pt

Romania			
Sales **Service**	**Bucharest**	Sialco Trading SRL str. Madrid nr.4 011785 Bucuresti	Tel. +40 21 230-1328 Fax +40 21 230-7170 sialco@sialco.ro

Russia			
Assembly **Sales** **Service**	**St. Petersburg**	ZAO SEW-EURODRIVE P.O. Box 36 195220 St. Petersburg Russia	Tel. +7 812 3332522 +7 812 5357142 Fax +7 812 3332523 http://www.sew-eurodrive.ru sew@sew-eurodrive.ru
Technical Office	**Yekaterinburg**	ZAO SEW-EURODRIVE Kominterna Str. 16 Office 614 RUS-620078 Ekaterinburg	Tel. +7 343 310 3977 Fax +7 343 310 3978 eso@sew-eurodrive.ru
	Irkutsk	ZAO SEW-EURODRIVE 5-Armii Str., 31 RUS-664011 Irkutsk	Tel. +7 3952 25 5880 Fax +7 3952 25 5881 iso@sew-eurodrive.ru
	Moskau	ZAO SEW-EURODRIVE Malaja Semjonowskaja Str. д. 9, корпус 2 RUS-107023 Moskau	Tel. +7 495 9337090 Fax +7 495 9337094 mso@sew-eurodrive.ru
	Novosibirsk	ZAO SEW-EURODRIVE pr. K Marksa 30 RUS-630087 Novosibirsk	Tel. +7 383 3350200 Fax +7 383 3462544 nso@sew-eurodrive.ru
	Togliatti	ZAO SEW-EURODRIVE Sportivnaya Str. 4B, office 2 Samarskaya obl. RUS-445057 Togliatti	Tel. +7 8482 710529 Fax +7 8482 810590

Senegal			
Sales	**Dakar**	SENEMECA Mécanique Générale Km 8, Route de Rufisque B.P. 3251, Dakar	Tel. +221 338 494 770 Fax +221 338 494 771 senemeca@sentoo.sn http://www.senemeca.com

Serbia			
Sales	**Beograd**	DIPAR d.o.o. Ustanicka 128a PC Košum, IV floor SCG-11000 Beograd	Tel. +381 11 347 3244 / +381 11 288 0393 Fax +381 11 347 1337 office@dipar.rs

Singapore			
Assembly **Sales** **Service**	**Singapore**	SEW-EURODRIVE PTE. LTD. No 9, Tuas Drive 2 Jurong Industrial Estate Singapore 638644	Tel. +65 68621701 Fax +65 68612827 http://www.sew-eurodrive.com.sg sewsingapore@sew-eurodrive.com

Slovakia			
Sales	**Bratislava**	SEW-Eurodrive SK s.r.o. Rybničná 40 SK-831 06 Bratislava	Tel. +421 2 33595 202 Fax +421 2 33595 200 sew@sew-eurodrive.sk http://www.sew-eurodrive.sk
	Žilina	SEW-Eurodrive SK s.r.o. Industry Park - PChZ ulica M.R.Štefánika 71 SK-010 01 Žilina	Tel. +421 41 700 2513 Fax +421 41 700 2514 sew@sew-eurodrive.sk
	Banská Bystrica	SEW-Eurodrive SK s.r.o. Rudlovská cesta 85 SK-974 11 Banská Bystrica	Tel. +421 48 414 6564 Fax +421 48 414 6566 sew@sew-eurodrive.sk
	Košice	SEW-Eurodrive SK s.r.o. Slovenská ulica 26 SK-040 01 Košice	Tel. +421 55 671 2245 Fax +421 55 671 2254 sew@sew-eurodrive.sk

Slovenia			
Sales **Service**	**Celje**	Pakman - Pogonska Tehnika d.o.o. Ul. XIV. divizije 14 SLO - 3000 Celje	Tel. +386 3 490 83-20 Fax +386 3 490 83-21 pakman@siol.net

South Africa			
Assembly **Sales** **Service**	**Johannesburg**	SEW-EURODRIVE (PROPRIETARY) LIMITED Eurodrive House Cnr. Adcock Ingram and Aerodrome Roads Aeroton Ext. 2 Johannesburg 2013 P.O.Box 90004 Bertsham 2013	Tel. +27 11 248-7000 Fax +27 11 494-3104 http://www.sew.co.za info@sew.co.za
	Cape Town	SEW-EURODRIVE (PROPRIETARY) LIMITED Rainbow Park Cnr. Racecourse & Omuramba Road Montague Gardens Cape Town P.O.Box 36556 Chempet 7442 Cape Town	Tel. +27 21 552-9820 Fax +27 21 552-9830 Telex 576 062 cfoster@sew.co.za
	Durban	SEW-EURODRIVE (PROPRIETARY) LIMITED 2 Monaco Place Pinetown Durban P.O. Box 10433, Ashwood 3605	Tel. +27 31 700-3451 Fax +27 31 700-3847 cdejager@sew.co.za
	Nelspruit	SEW-EURODRIVE (PTY) LTD. 7 Christie Crescent Vintonia P.O.Box 1942 Nelspruit 1200	Tel. +27 13 752-8007 Fax +27 13 752-8008 robermeyer@sew.co.za
Technical Offices	**Port Elizabeth**	SEW-EURODRIVE PTY LTD. 8 Ruan Access Park Old Cape Road Greenbushes 6000 Port Elizabeth	Tel. +27 41 3722246 Fax +27 41 3722247 dtait@sew.co.za
	Richards Bay	SEW-EURODRIVE PTY LTD. 103 Bulion Blvd Richards Bay P.O. Box 458 Richards Bay, 3900	Tel. +27 35 797-3805 Fax +27 35 797-3819 jswart@sew.co.za

South Korea			
Assembly **Sales** **Service**	**Ansan-City**	SEW-EURODRIVE KOREA CO., LTD. B 601-4, Banweol Industrial Estate 1048-4, Shingil-Dong Ansan 425-120	Tel. +82 31 492-8051 Fax +82 31 492-8056 http://www.sew-korea.co.kr master.korea@sew-eurodrive.com
	Busan	SEW-EURODRIVE KOREA Co., Ltd. No. 1720 - 11, Songjeong - dong Gangseo-ku Busan 618-270	Tel. +82 51 832-0204 Fax +82 51 832-0230 master@sew-korea.co.kr
Technical Offices	**Daegu**	SEW-EURODRIVE KOREA Co., Ltd. No.1108 Sungan officetel 87-36, Duryu 2-dong, Dalseo-ku Daegu 704-712	Tel. +82 53 650-7111 Fax +82 53 650-7112
	DaeJeon	SEW-EURODRIVE KOREA Co., Ltd. No. 1502, Hongin officetel 536-9, Bongmyung-dong, Yusung-ku Daejeon 305-301	Tel. +82 42 828-6461 Fax +82 42 828-6463
	Kwangju	SEW-EURODRIVE KOREA Co., Ltd. 4fl., Dae-Myeong B/D 96-16 Unam-dong, Buk-ku Kwangju 500-170	Tel. +82 62 511-9172 Fax +82 62 511-9174
	Seoul	SEW-EURODRIVE KOREA Co., Ltd. No.504 Sunkyung officetel 106-4 Kuro 6-dong, Kuro-ku Seoul 152-054	Tel. +82 2 862-8051 Fax +82 2 862-8199

Spain			
Assembly **Sales** **Service**	**Bilbao**	SEW-EURODRIVE ESPAÑA, S.L. Parque Tecnológico, Edificio, 302 E-48170 Zamudio (Vizcaya)	Tel. +34 94 43184-70 Fax +34 94 43184-71 http://www.sew-eurodrive.es sew.spain@sew-eurodrive.es
Technical Offices	**Barcelona**	Delegación Barcelona Avenida Francesc Maciá 40-44 Oficina 4.2 E-08208 Sabadell (Barcelona)	Tel. +34 93 7162200 Fax +34 93 7233007
	Lugo	Delegación Noroeste Apartado, 1003 E-27080 Lugo	Tel. +34 639 403348 Fax +34 982 202934
	Madrid	Delegación Madrid Gran Via. 48-2° A-D E-28220 Majadahonda (Madrid)	Tel. +34 91 6342250 Fax +34 91 6340899
	Seville	MEB Pólogono Calonge, C/A Nave 2 - C E-41.077 Sevilla	Tel. +34 954 356 361 Fax +34 954 356 274 mebsa.sevilla@mebsa.com
	Valencia	MEB Músico Andreu i Piqueres, 4 E-46.900 Torrente (Valencia)	Tel. +34 961 565 493 Fax +34 961 566 688 mebsa.valencia@mebsa.com

Sri Lanka			
Sales	**Colombo**	SM International (Pte) Ltd 254, Galle Raod Colombo 4, Sri Lanka	Tel. +94 1 2584887 Fax +94 1 2582981

Sweden			
Assembly **Sales** **Service**	**Jönköping**	SEW-EURODRIVE AB Gnejsvägen 6-8 S-55303 Jönköping Box 3100 S-55003 Jönköping	Tel. +46 36 3442 00 Fax +46 36 3442 80 http://www.sew-eurodrive.se jonkoping@sew.se

Sweden			
Sales	**Göteborg**	SEW-EURODRIVE AB Gustaf Werners gata 8 S-42132 Västra Frölunda	Tel. +46 31 70968 80 Fax +46 31 70968 93 goteborg@sew.se
	Stockholm	SEW-EURODRIVE AB Björkholmsvägen 10 S-14146 Huddinge	Tel. +46 8 44986 80 Fax +46 8 44986 93 stockholm@sew.se
	Malmö	SEW-EURODRIVE AB Borrgatan 5 S-21124 Malmö	Tel. +46 40 68064 80 Fax +46 40 68064 93 malmo@sew.se
	Skellefteå	SEW-EURODRIVE AB Trädgårdsgatan 8 S-93131 Skellefteå	Tel. +46 910 7153 80 Fax +46 910 7153 93 skelleftea@sew.se

Switzerland			
Assembly **Sales** **Service**	**Basel**	Alfred Imhof A.G. Jurastrasse 10 CH-4142 Münchenstein bei Basel	Tel. +41 61 417 1717 Fax +41 61 417 1700 http://www.imhof-sew.ch info@imhof-sew.ch
Technical Offices	**Rhaetian Switzerland**	André Gerber Es Perreyres CH-1436 Chamblon	Tel. +41 24 445 3850 Fax +41 24 445 4887
	Bern / Solothurn	Rudolf Bühler Muntersweg 5 CH-2540 Grenchen	Tel. +41 32 652 2339 Fax +41 32 652 2331
	Central Switzerland, Aargau	Armin Pfister Stierenweid CH-4950 Huttwill, BE	Tel. +41 62 962 54 55 Fax +41 62 962 54 56
	Zürich, Ticino	Gian-Michele Muletta Fischerstrasse 61 CH-8132 Egg bei Zürich	Tel. +41 44 994 81 15 Fax +41 44 994 81 16
	Bodensee and East Switzerland	Markus Künzle Eichweg 4 CH-9403 Goldach	Tel. +41 71 845 2808 Fax +41 71 845 2809

Taiwan (R.O.C.)			
Sales	**Nan Tou**	Ting Shou Trading Co., Ltd. No. 55 Kung Yeh N. Road Industrial District Nan Tou 540	Tel. +886 49 255353 Fax +886 49 257878
	Taipei	Ting Shou Trading Co., Ltd. 6F-3, No. 267, Sec. 2 Tung Hwa South Road, Taipei	Tel. +886 2 27383535 Fax +886 2 27368268 Telex 27 245 sewtwn@ms63.hinet.net

Thailand			
Assembly **Sales** **Service**	**Chonburi**	SEW-EURODRIVE (Thailand) Ltd. 700/456, Moo.7, Donhuaroh Muang Chonburi 20000	Tel. +66 38 454281 Fax +66 38 454288 sewthailand@sew-eurodrive.com
Technical Offices	**Bangkok**	SEW-EURODRIVE (Thailand) Ltd. 6th floor, TPS Building 1023, Phattanakarn Road Suanluang Bangkok,10250	Tel. +66 2 7178149 Fax +66 2 7178152 sewthailand@sew-eurodrive.com

Thailand			
	Hadyai	SEW-EURODRIVE (Thailand) Ltd. Hadyai Country Home Condominium 59/101 Soi.17/1 Rachas-Utid Road. Hadyai, Songkhla 90110	Tel. +66 74 359441 Fax +66 74 359442 sewthailand@sew-eurodrive.com
	Khonkaen	SEW-EURODRIVE (Thailand) Ltd. 4th Floor, Kaow-U-HA MOTOR Bldg, 359/2, Mitraphab Road. Muang District Khonkaen 40000	Tel. +66 43 225745 Fax +66 43 324871 sew-thailand@sew-eurodrive.com

Tunisia			
Sales	**Tunis**	T. M.S. Technic Marketing Service Zone Industrielle Mghira 2 Lot No. 39 2082 Fouchana	Tel. +216 79 40 88 77 Fax +216 79 40 88 66 http://www.tms.com.tn tms@tms.com.tn

Turkey			
Assembly **Sales** **Service**	**Istanbul**	SEW-EURODRIVE Hareket Sistemleri San. ve Tic. Ltd. Sti. Bagdat Cad. Koruma Cikmazi No. 3 TR-34846 Maltepe ISTANBUL	Tel. +90 216 4419163 / 4419164 Fax +90 216 3055867 http://www.sew-eurodrive.com.tr sew@sew-eurodrive.com.tr
Technical Offices	**Adana**	SEW-EURODRIVE Hareket Sistemleri San. ve Tic. Ltd. Sti. Kizilay Caddesi 8 Sokak No 6 Daðtekin Is Merkezi Kat 4 Daire 2 TR-01170 SEYHAN / ADANA	Tel. +90 322 359 94 15 Fax +90 322 359 94 16
	Ankara	SEW-EURODRIVE Hareket Sistemleri San. ve Tic. Ltd. Sti. Özcelik Is Merkezi, 14. Sok, No. 4/42 TR-06370 Ostim/Ankara	Tel. +90 312 385 33 90 Fax +90 312 385 32 58
	Bursa	SEW-EURODRIVE Hareket Sistemleri San. ve Tic. Ltd. Sti. Üçevler Mah. Bayraktepe Sok. Akay İş Merkezi Kat:3 No: 7/6 TR Nilüfer/Bursa	Tel. +90 224 443 45 60 Fax +90 224 443 45 58
	Izmir	SEW-EURODRIVE Hareket Sistemleri San. ve Tic. Ltd. Sti. 1203/11 Sok. No. 4/613 Hasan Atli Is Merkezi TR-35110 Yenisehir-İzmir	Tel. +90 232 469 62 64 Fax +90 232 433 61 05

Ukraine			
Sales **Service**	**Dnepropetrovsk**	SEW-EURODRIVE Str. Rabochaja 23-B, Office 409 49008 Dnepropetrovsk	Tel. +380 56 370 3211 Fax +380 56 372 2078 http://www.sew-eurodrive.ua sew@sew-eurodrive.ua
Sales	**Kiev**	SEW-EURODRIVE GmbH S. Oleynika str. 21 02068 Kiev	Tel. +380 44 503 95 77 Fax +380 44 503 95 78 kso@sew-eurodrive.ua
	Donetsk	SEW-EURODRIVE GmbH 25th anniversary of RKKA av. 1-B, of. 805 Donetsk 83000	Tel. +380 62 38 80 545 Fax +380 62 38 80 533 dso@sew-eurodrive.ua

United Arab Emirates			
Sales **Service**	**Sharjah**	Copam Middle East (FZC) Sharjah Airport International Free Zone P.O. Box 120709 Sharjah	Tel. +971 6 5578-488 Fax +971 6 5578-499 copam_me@eim.ae

Uruguay			
Sales	**Montevideo**	SEW-EURODRIVE Uruguay, S. A. Jose Serrato 3569 Esqina Corumbe CP 12000 Montevideo	Tel. +598 2 21181-89 Fax +598 2 21181-89 sewuy@sew-eurodrive.com.uy

USA			
Production **Assembly** **Sales** **Service** **Corporate Offices**	**Southeast Region**	SEW-EURODRIVE INC. 1295 Old Spartanburg Highway P.O. Box 518 Lyman, S.C. 29365	Tel. +1 864 439-7537 Fax Sales +1 864 439-7830 Fax Manufacturing +1 864 439-9948 Fax Assembly +1 864 439-0566 Fax Confidential/HR +1 864 949-5557 http://www.seweurodrive.com cslyman@seweurodrive.com
Assembly **Sales** **Service**	**Northeast Region**	SEW-EURODRIVE INC. Pureland Ind. Complex 2107 High Hill Road, P.O. Box 481 Bridgeport, New Jersey 08014	Tel. +1 856 467-2277 Fax +1 856 845-3179 csbridgeport@seweurodrive.com
	Midwest Region	SEW-EURODRIVE INC. 2001 West Main Street Troy, Ohio 45373	Tel. +1 937 335-0036 Fax +1 937 332-0038 cstroy@seweurodrive.com
	Southwest Region	SEW-EURODRIVE INC. 3950 Platinum Way Dallas, Texas 75237	Tel. +1 214 330-4824 Fax +1 214 330-4724 csdallas@seweurodrive.com
	Western Region	SEW-EURODRIVE INC. 30599 San Antonio St. Hayward, CA 94544	Tel. +1 510 487-3560 Fax +1 510 487-6433 cshayward@seweurodrive.com
	Additional addresses for service in the USA provided on request!		

Venezuela			
Assembly **Sales** **Service**	**Valencia**	SEW-EURODRIVE Venezuela S.A. Av. Norte Sur No. 3, Galpon 84-319 Zona Industrial Municipal Norte Valencia, Estado Carabobo	Tel. +58 241 832-9804 Fax +58 241 838-6275 http://www.sew-eurodrive.com.ve ventas@sew-eurodrive.com.ve sewfinanzas@cantv.net

Vietnam			
Sales	**Ho Chi Minh City**	Nam Trung Co., Ltd 91 - 93 Tran Minh Quyen Street, District 10, HCMC	Tel. +84 8 8301026 Fax +84 8 8392223 namtrungco@hcm.vnn.vn

Inquiry/Order

Customer data:

Company: _____ Customer no.: _____
Department: _____
Name: _____ Phone: _____
Street/P.O. Box: _____ Fax: _____
_____ Email: _____
ZIP code/city: _____

Your contact partner at SEW:

Name: _____ Phone: _____
Technical Office: _____ Fax: _____

Technical data:

Quantity: _____ Requested delivery date: _____
Catalog designation: _____

Gear unit type:

☐ Helical ☐ Parallel shaft helical ☐ Helical-bevel ☐ Helical-worm ☐ Spiroplan®
☐ Multi-stage ☐ Servo ☐ Variable speed ☐ EMS ☐ Other: _____

Power: _____ kW **Output speed:** _____ rpm **Output torque:** _____ Nm

Cycles/h: _____ c/h **Cyclic duration factor:** S _____ / _____ % cdf

☐ 1-shift operation ☐ 2-shift operation ☐ 3-shift operation
☐ Uniform ☐ Non-uniform ☐ Extremely non-uniform

Mounting position:

M1	M2	M3	M4	M5	M6	Pivoting
☐	☐	☐	☐	☐	☐	☐

Housing type:

☐ Foot-mounted ☐ Flange (bore) ☐ Flange (thread)
☐ Torque arm ☐ Other: _____

Shaft type:

☐ Solid shaft with key ☐ Shrink disk Shaft/hollow shaft ∅: _____ mm
☐ Hollow shaft with key ☐ TorqLOC® Flange ∅: _____ mm

Shaft position (right-angle units): ☐ A | ☐ B | ☐ AB

Terminal box position: ☐ 0°(R) ☐ 90°(B) | ☐ 180°(L) | ☐ 270°(T)

Cable entry: ☐X ☐1 | ☐2 | ☐3

Degree of protection:

IP54	IP55	IP56	IP65	IP66	IP69K
☐	☐	☐	☐	☐	☐

Thermal class:

130(B)	155(F)	180(H)
☐	☐	☐

Surface/corrosion protection:

KS	OS1	OS2	OS3	OS4
☐	☐	☐	☐	☐

Mains voltage: _____ V
Mains frequency: ☐ 50Hz ☐ 60Hz

Connection type: ☐ Δ ☐ Y ☐ YY ☐ Y/Y

☐ For inverter operation: Max. frequency: _____ Hz | **Control range:** _____

Required options:

☐ Brake: voltage _____ V Braking torque: _____ Nm
☐ Manual brake release: ☐ HR or ☐ HF
☐ Forced cooling fan: Forced cooling fan voltage: _____ V
☐ Motor protection: ☐ TF or ☐ TH
☐ Encoder: _____
☐ Plug connection: _____
☐ Inverter: _____
☐ RAL 7031 or ☐ RAL _____

Other options:

Special ambient conditions:

Temperature from _____ °C to _____ °C | ☐ Outdoor use | ☐ Installation >1000m above msl
Other ambient conditions: _____
Other: _____

Place, date _____ **Signature:** _____

SEW-EURODRIVE GmbH & Co KG / P.O. Box 30 23 / D-76642 Bruchsal / Tel. +49 7251 75-0 / Fax +49 7251 75-1970
www.sew-eurodrive.com / sew@sew-eurodrive.com

Lage des Klemmenkastens und der Kabeleinführung

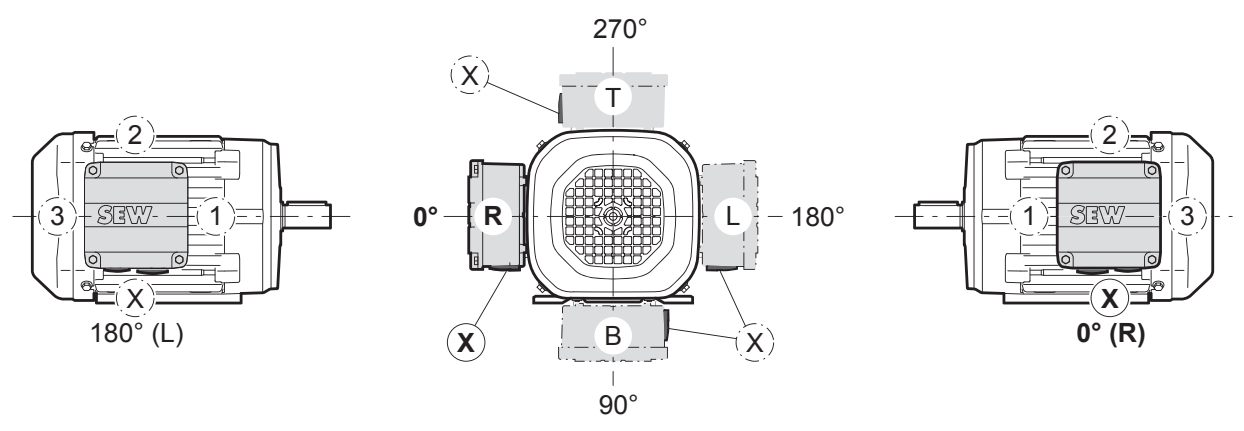

Ohne spezielle Angabe zum Klemmenkasten wird die Ausführung 0° (R) mit Kabeleinführung "X" geliefert.
Bei der Bauform M3 empfiehlt SEW-EURODRIVE, die Kabeleinführung "2" zu wählen.

SEW-EURODRIVE
Driving the world

SEW-EURODRIVE GmbH & Co KG
P.O. Box 3023
D-76642 Bruchsal/Germany
Phone +49 7251 75-0
Fax +49 7251 75-1970
sew@sew-eurodrive.com

→ www.sew-eurodrive.com

Mounting positions of R, F, K, S and W gear units

SEW-EURODRIVE differentiates between six mounting positions M1 – M6 for gear units and gearmotors. The following figure shows the spatial orientation of the gearmotor in mounting positions M1 – M6.

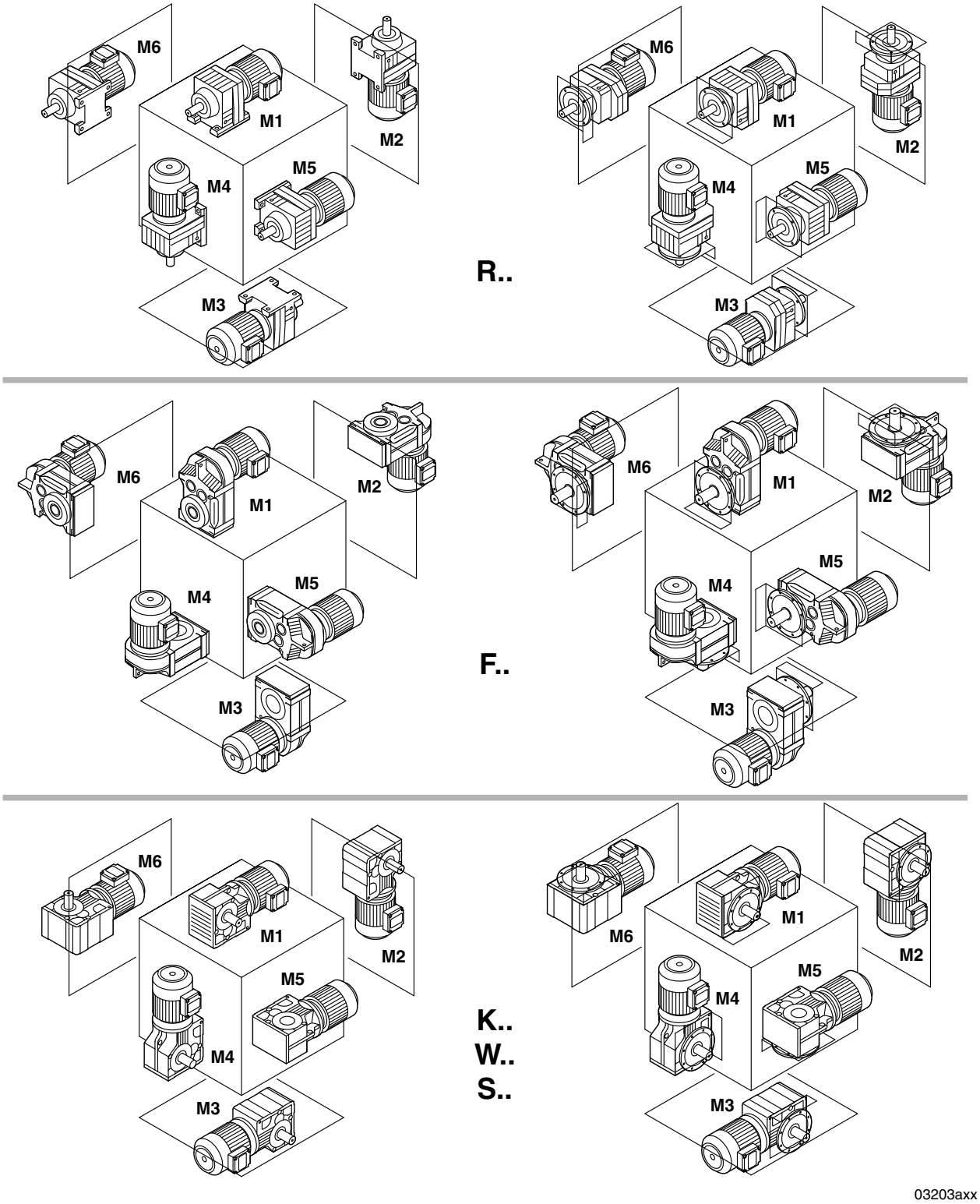

Information on the selection tables

M_{aDyn} Nm	i	DRL												
		71M	80S		80M		90L		100L		132S		132MC	
		D2	D1	D2	D1	D2	D1	D2	D1	D2	D1	D2	D1	D2
FA97 3	58.06	780	555	1390	720	1830	1390	2560	1950	>4360	>4360	>4360	>4360	>4360
	65.47	870	625	1570	810	2070	1570	2890	2190	>4360	>4360	>4360	>4360	>4360
	72.29	970	690	1730	900	2290	1730	3190	2420	>4360	>4360	>4360	>4360	>4360
	75.63									>4360	>4360	>4360	>4360	>4360
	80.31	1060	760	1900	990	2510	1900	3500	2670	>4360	>4360	>4360	>4360	

Dynamic output torque of the drive M_{aDyn} in dynamics package D1 or D2

Gear unit reduction ratio

Gear unit size with number of gear unit stages

	The dark-gray fields indicate the preferred combinations
	LIght-gray fields mean: Consult SEW-EURODRIVE
	White fields mean: Combination not possible

INFORMATION

In fields marked with ">...", M_{aDyn} must not exceed the maximum permitted torque M_{apk} in short-term duty because the motor may overload the gear unit. The motor current I_{max} must be limited during startup.

Dimension designations of gearmotors

The dimensions of the gearmotors are described below:

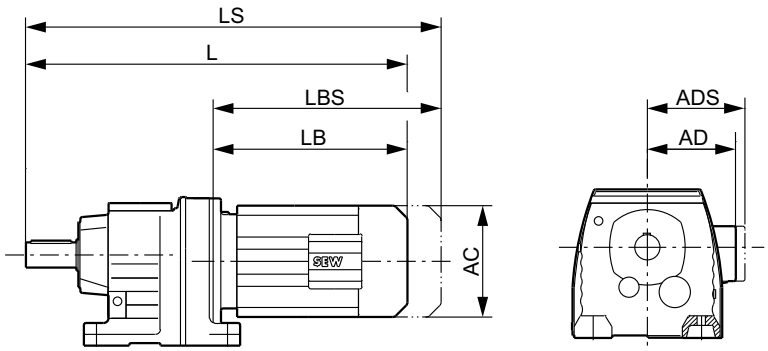

59251axx

L	Total length of gearmotor	AC	Diameter of motor
LS	Total length of gearmotor including brake	AD	Center of motor shaft to top part of terminal box
LB	Length of motor	ADS	Center of brakemotor shaft to top part of terminal box
LBS	Length of brakemotor		

INFORMATION

Motors with other encoder systems than resolvers might be longer. For more information, refer to the "AC Motors" catalog.