SEW EURODRIVE

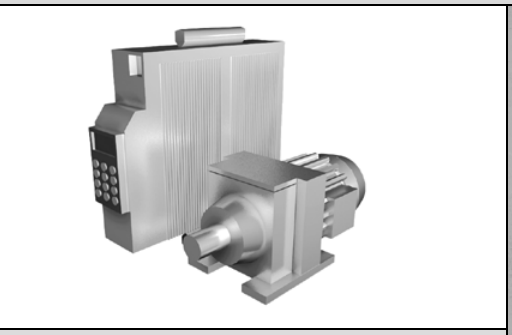

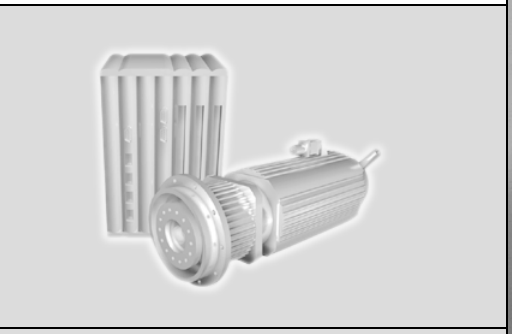

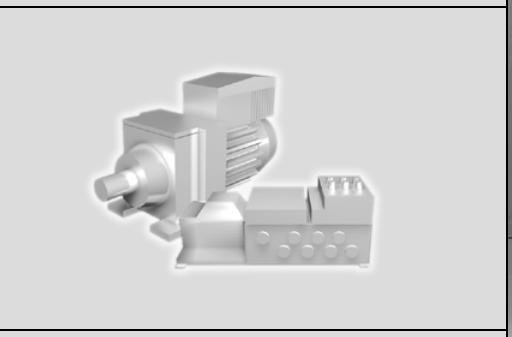

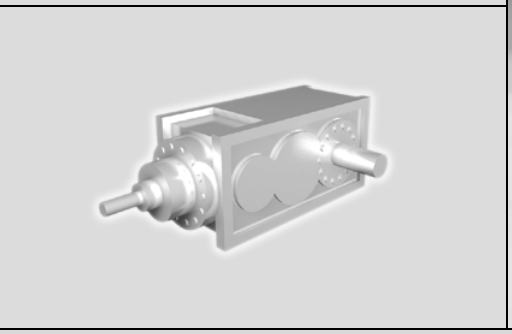

MOVIDRIVE® MDX61B
DRS11B Synchronous Operation Card

Edition 10/2007
11671815 / EN

Manual

SEW
EURODRIVE

1 General Information 4
1.1 Structure of the safety notes 4
1.2 Right to claim under warranty 4
1.3 Exclusion of liability 4

2 Safety Notes 5
2.1 Other applicable documentation 5
2.2 Safety functions 5
2.3 Hoist applications 5
2.4 Product names and trademarks 5
2.5 Waste disposal 5

3 Introduction 6
3.1 System description 6

4 Project Planning 8
4.1 Application examples 8
4.2 Project planning information 10
4.3 Synchronous operation with wire-break monitoring of encoder connection 11
4.4 Synchronous start/stop 12
4.5 Synchronous operation with synchronous encoder 13

5 Assembly and Installation Notes 14
5.1 Mounting the DRS11B option card 14
5.2 Connection and terminal description of the DRS11B option 16
5.3 Installation notes 17
5.4 Connection example MDX61B master - MDX61B slave 20
5.5 Connection of incremental encoder as master 21

6 Startup 22
6.1 Introduction 22
6.2 Brief description of the startup process 23
6.3 Preliminary work 24
6.4 Activating synchronous operation 24
6.5 Testing synchronous operation with mounted drives 25
6.6 Examples for calculating P221 and P222 26

7 Parameter 29
7.1 Relationship between parameter values and output speed 29
7.2 Signaling functions 30
7.3 Parameter descriptions 32

8 Fault Messages and List of Faults 39
8.1 DRS1B synchronous operation card option 39

9 Technical Data 41
9.1 DRS11B synchronous operation card option 41

1 General Information

1.1 Structure of the safety notes

The safety notes in this manual are designed as follows:

Symbol	SIGNAL WORD
	Nature and source of hazard. Possible consequence(s) if disregarded. • Measure(s) to avoid the hazard.

Symbol	Signal word	Meaning	Consequences if disregarded
Example: General hazard Specific hazard, e.g. electric shock	**HAZARD!**	Imminent hazard	Severe or fatal injuries
	WARNING	Possible hazardous situation	Severe or fatal injuries
	CAUTION!	Possible hazardous situation	Minor injuries
	STOP!	Possible damage to property	Damage to the drive system or its environment
	NOTE	Useful information or tip Simplifies drive system handling	

1.2 Right to claim under warranty

A requirement of fault-free operation and fulfillment of any rights to claim under limited warranty is that you adhere to the information in the documentation. Therefore, read the manual before you start operating the device!

Make sure that the manual is available to persons responsible for the plant and its operation, as well as to persons who work independently on the device. You must also ensure that the documentation is legible.

1.3 Exclusion of liability

You must comply with the information contained in the MOVIDRIVE® documentation to ensure safe operation and to achieve the specified product characteristics and performance requirements. SEW-EURODRIVE assumes no liability for injury to persons or damage to equipment or property resulting from non-observance of these operating instructions. In such cases, any liability for defects is excluded.

2 Safety Notes

2.1 Other applicable documentation

- Only electrical specialists are allowed to perform installation and startup observing relevant accident prevention regulations and the "MOVIDRIVE® MDX60B/61B" operating instructions!
- Read through these documents carefully before you commence installation and startup of the DRS11B option.
- As a prerequisite to fault-free operation and fulfillment of warranty claims, you must adhere to the information in the documentation.

2.2 Safety functions

The MOVIDRIVE® MDX61B drive inverters may not perform safety functions without higher-level safety systems. Use higher-level safety systems to ensure protection of equipment and personnel.

For safety applications, refer to the information in the following publications.

- Safe disconnection for MOVIDRIVE® B

2.3 Hoist applications

MOVIDRIVE® MDX60B/61B may not be used as a safety device in hoist applications.

Use monitoring systems or mechanical protection devices as safety equipment to avoid possible damage to property or injury to people.

2.4 Product names and trademarks

The brands and product names in this manual are trademarks or registered trademarks of the titleholders.

2.5 Waste disposal

Please follow the current national regulations.

Dispose of the following materials separately in accordance with the country-specific regulations in force, as:

- Electronics scrap
- Plastics
- Sheet metal
- Copper

etc.

3 Introduction

3.1 System description

The "DRS11B synchronous operation card" enables a group of motors to be operated at a synchronous angle in relation to one another or with an adjustable proportional relationship (electronic gear).

The drive that specifies the position is known as the "master." This can also be an incremental encoder. The drive that follows the position specification is known as the "slave".

To be able to function in this way, the master and slave motors must be equipped with encoders. MOVIDRIVE® MDX61B with the "DRS11B synchronous operation card" option is used as the slave drive.

The "DRS11B synchronous operation card" option must be plugged into the expansion slot and can only be operated in conjunction with the DEH11B or DER11B option.

STOP!

The slave inverter must be equipped with a braking resistor for synchronous operation of master and slave. The master inverter may also have to be equipped with a braking resistor for regenerative operation, depending on the application.

The master and slave pulses counted are converted for the output side using parameter P221/P222 (master and slave gear ratio factor). They are a measure for the pulses counted per travel unit.

The system determines the difference of the distance information from master and slave and stores this value in the form of incremental encoder signals in an internal differential counter. Binary messages are set, e.g. "DRS SLAVE IN POS," "LAG ERROR," etc. depending on the difference. The counter is evaluated differently for the various operating modes (P223) (→ section 7.3).

The controller calculates the speed correction value for the slave drive to minimize the angle differential between the master and slave. To do so, the current angle differential is multiplied by the parameter *P220 P gain*. The result is a correction value for the slave speed.

- Master and slave run synchronously, differential value = 0 → correction value = 0
- Slave follows master, differential value > 0 → correction value > 0, slave accelerates
- Slave runs ahead of master, differential value < 0 → correction value < 0, slave decelerates

The value of the P gain (P220) is a significant factor for determining the movement characteristics of synchronous operation control.

- If the P gain is set too high, the system tends to oscillate.
- If the P gain is set too low, the angle differential cannot be reduced in a transient state (acceleration or deceleration).

Block circuit diagram for synchronous operation control

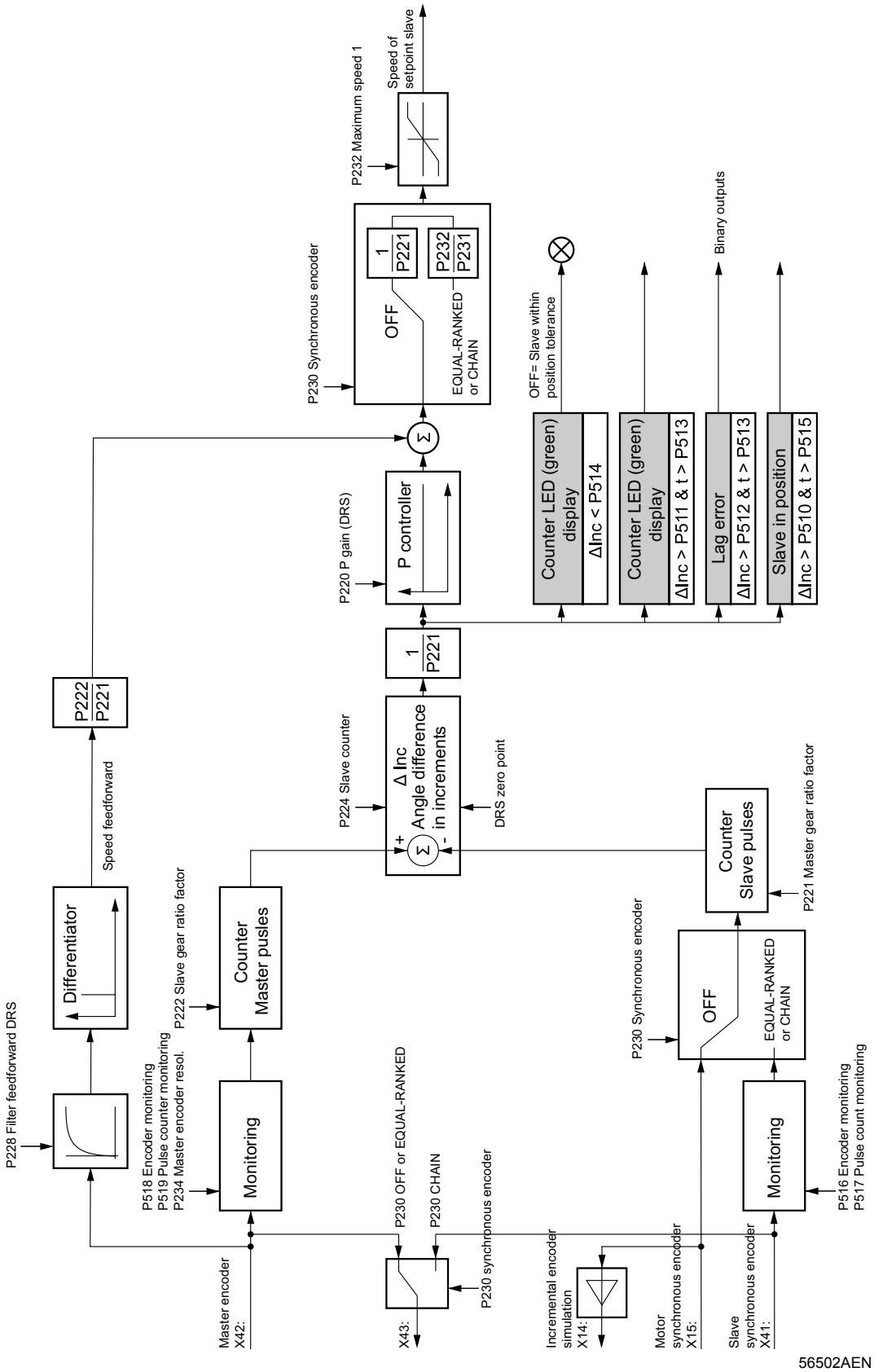

4 Project Planning

4.1 Application examples

Example 1 Group configuration: Master and equal-ranked slaves, e.g. multiple column hoist.

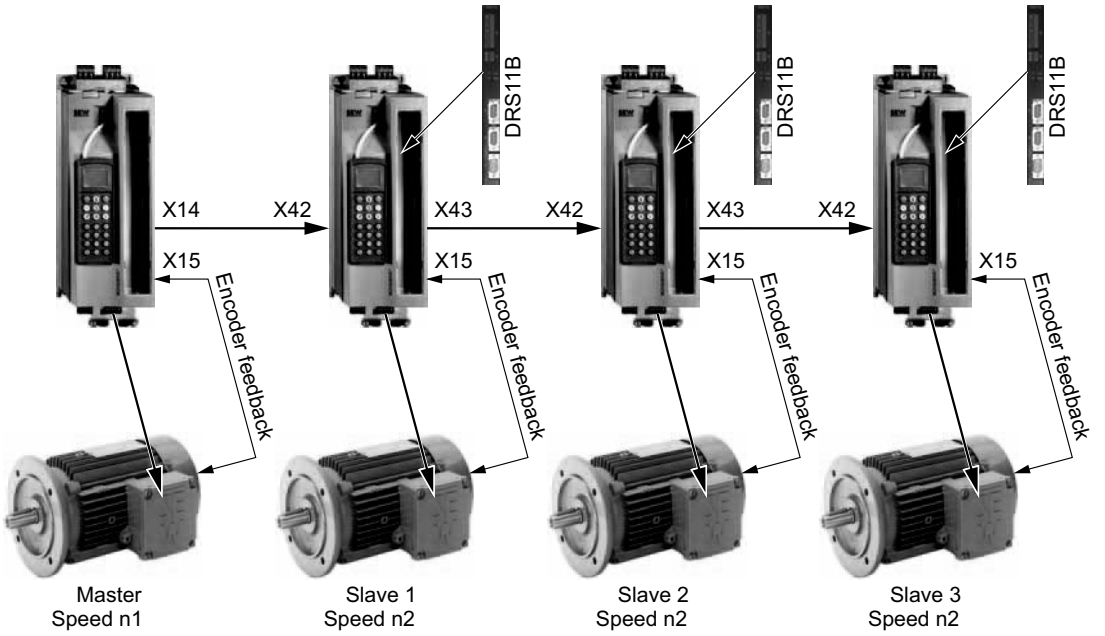

Example 2 Master/slave chain: e.g. conveyor belts connected in succession.

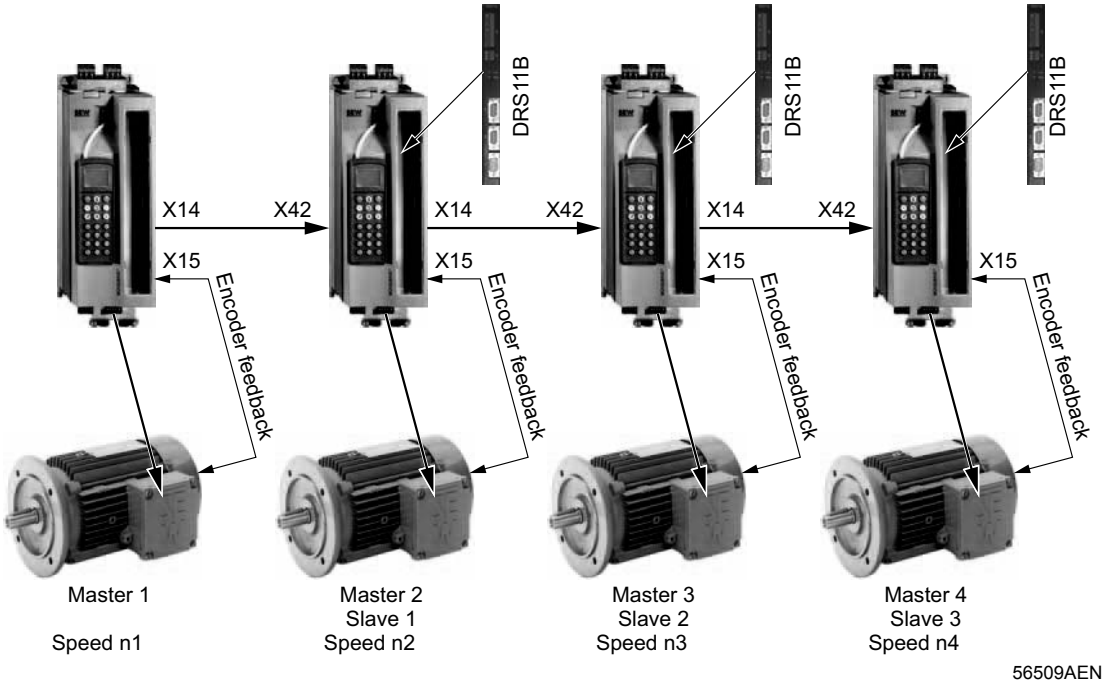

Example 3 Master/slave chain with external master incremental encoder:

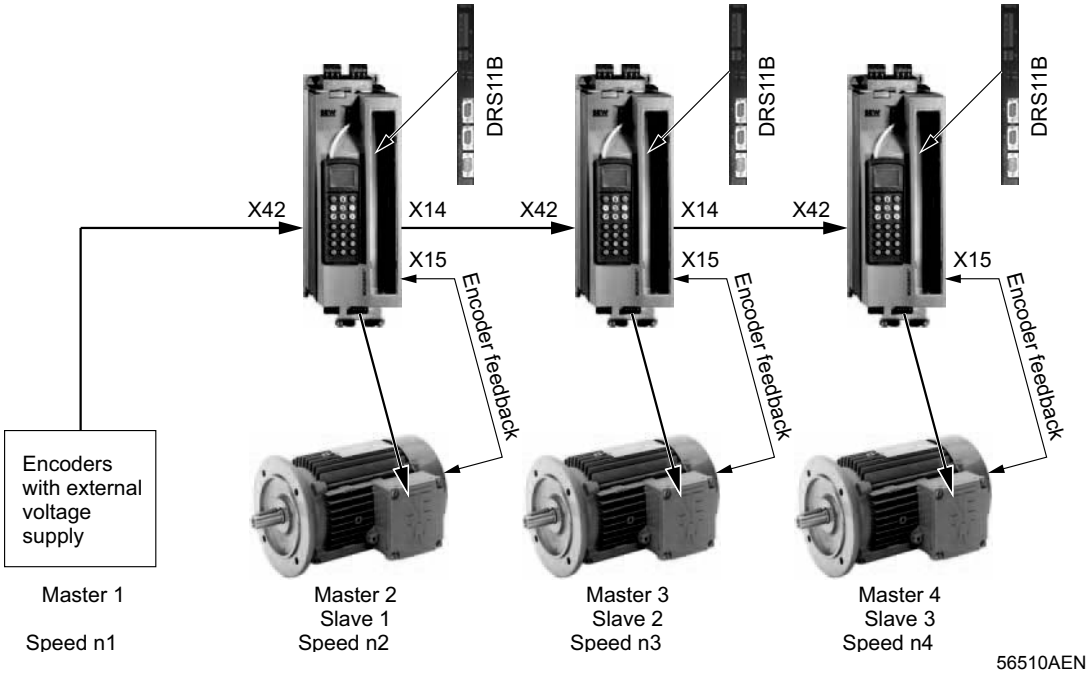

Example 4 Master/slave chain with additional synchronous encoders:

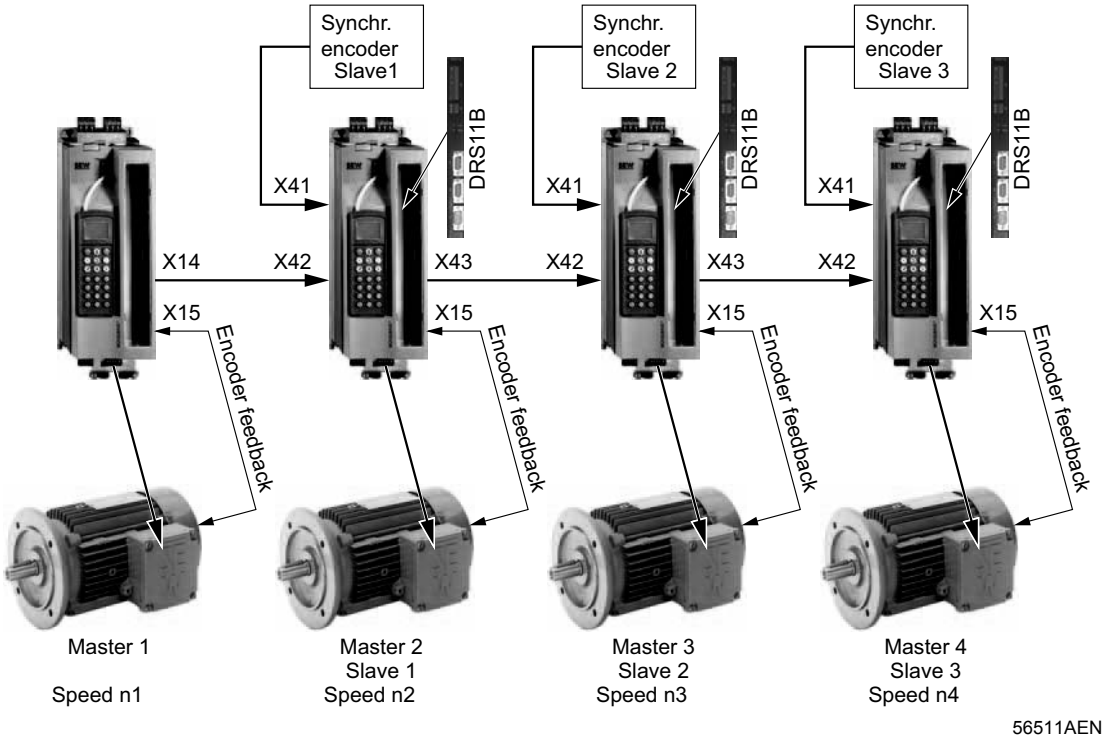

4.2 Project planning information

Observe the following project planning instructions:

- Do not use synchronous operation with systems that have a rigid mechanical connection.
- Equip slave inverters with a braking resistor.
- They must activate an offset only if a previous angular offset has been processed.
- During project planning for a synchronous operation application, bear in mind that the slave must be able to reduce the angle differential between itself and the master at any time. For this reason, set the maximum speed (P302) of the slave to a value greater than the maximum speed of the master.

  If you set the maximum speed higher than the rated motor speed in the case of AC asynchronous motors, the full motor torque is no longer available in the field weakening range. This can lead to lag errors (F42) in certain master/slave combinations.

  Furthermore, synchronization during the transition from free-running to synchronous operation can be performed at maximum acceleration or using an adjustable ramp (P24_ Synchronous operation with synchronization).
- Always activate the wire-break monitoring function with synchronous operation (→Sec. 4.3).
- If possible, always use the same type of drives for synchronous operation.
- In the case of multiple column hoists, always use the same motors and the same gear units (identical ratios).
- In the case of group configuration (1 master and x equal-ranked slaves), a maximum of 5 binary inputs on the slave inverter can be connected to one binary output on the master.
- If the master is stationary when the power supply is switched on and the power to the slave is switched off and on again, the slave has the operating status "NO ENABLE."
- If the master is moving when the power supply is switched on and the power to the slave is switched off, the master issues the fault "EXTERNAL TERMINAL" (F26). When the slave is reconnected to the power supply, the slave can detect the fault "LAG ERROR" (F42) depending on the lag error limit set (P512).
- Observe the MOVIDRIVE® MDX60B/61B operating instructions when connecting a motor encoder to the EH11B / DER11B:X15 option.
- Note the following during operation with the option DEH11B / DER11B:
  - DEH11B: The number of pulses (X14) is identical to X15 motor encoder input
  - DER11B: The number of pulses is always 1024 pulses per revolution
- The following encoders can be connected at the inputs X41 and X42:
  - DC 5 V TTL encoders, encoders with RS422 signal properties, sin/cos encoders
- The maximum permitted input frequency of the encoder inputs is 200 kHz
- When using synchronous encoders, the ratio of the position resolutions between the motor encoder and synchronous encoder should lie within the range 0.1 ... 10.
- Install the encoder on the moving machine component with a positive connection (slip-free).
- If the master is an external incremental encoder, use incremental encoders with as high a resolution as possible. However, the maximum input frequency of 200 kHz must not be exceeded.

- Parameter *P350 Change direction of rotation 1*:

  When synchronous operation control is activated, P350 must be set to NO. If the master and slave are to operate in opposite directions, the connection sequence of the A/$\overline{A}$ and B/$\overline{B}$ tracks at the slave input (DRS11B:X42) must be swapped over in each pair.
- The -24 V DC connection at DRS11B:X44 is mandatory in the following cases:
  - The encoder voltage supply is connected via option DRS11B
  - The binary outputs (X40:9, X40:10) or DRS11B are used.
  - X40:8 is used as voltage output
- Encoder monitoring at X41/X42 is only possible with TTL encoders.

4.3 Synchronous operation with wire-break monitoring of encoder connection

For fault-free synchronous operation between master and slave, wire-break monitoring is required for the connection between master DEH11B/DER11B:X14 (incremental encoder simulation) and slave RS11B:X42. The following functions are available:

- "MOTOR STANDSTILL" and "DRS MAST. STOPPED"
- "/EXT. FAULT" and "/ERROR"

The only time when encoder pulses are not transferred to the slave is when the master is at a standstill. Therefore, this status is communicated to the slave via a binary connection. If the master does not report a standstill and the slave does not count any encoder pulses, there is either a cable break or the master encoder is defect. As a result, the slave switches off and communicates its status to the master via an additional connection.

Required connections

- Program one binary output of the master to the function "MOTOR STANDSTILL". Connect this output to a binary input on the slave, that is programmed to the function "DRS MAST. STOPPED.".
- Program one binary input of the master to the function "/EXT. FAULT". Connect this input to a binary output on the slave, that is programmed to the function "/ERROR."

	NOTE
	Additional encoder monitoring can be activated with P516 or P519 (→ Sec. 6).

4.4 Synchronous start/stop

For MOVIDRIVE® synchronous operation, the following mixed mode is possible:

- Master is less dynamic or as dynamic as the slave
- Master is an incremental encoder

	NOTE The master and slave(s) must be able to start / stop synchronously in both options. This is the prerequisite for correct operation. As a result, combinations in which the master is more dynamic than the slave are not permitted.

- Brake function OFF:

  No controller inhibit (DI00 "/CONTROLLER INHIBIT" = "1") and no ENABLE (DI03 = "0") → slave is at a standstill at speed 0 subject to speed control

  No controller inhibit (DI00 "/CONTROLLER INHIBIT" = "1") and ENABLE (DI03 = "1") → slave synchronizes itself with the master position.

- Brake function ON:

  When both master and slave are at a standstill at speed 0, the slave brake is applied.

The following table lists the settings or cable connections for the above master/slave combinations with regard to synchronous starting/stopping and activated wire-break monitoring.

Master parameters	Slave parameters	Comment
Wire-break monitoring: DO01 = "MOTOR STANDSTILL" Synchronous start/stop: DO02 = "OUTPUT STAGE ON"	Wire-break monitoring: DI terminal = "DRS MAST. STOPPED" Synchronous start/stop: DI terminal = "DRS SLAVE START"	Enable slave permanently. Binary outputs DO01 and DO02 are no longer available on the master.

	STOP! When the brake function is activated, the slave terminal "DRS SLAVE START" must always be programmed and wired up. This also applies when the master is only an incremental encoder; in this case, an external controller must give the signal DRS "SLAVE START". When the brake function is deactivated, the position is held subject to position control when the signal "DRS SLAVE START" is revoked or if the drive reaches the stop area (P510).

4.5 Synchronous operation with synchronous encoder

Position measurement has to be carried out via an extra incremental encoder in all applications in which power transmission between the motor shaft and the machine is non-positive and thus slip is to be expected. This incremental encoder must be installed on the moving machine component with a positive connection. In the following section, this encoder is referred to as a synchronous encoder. The synchronous encoder is needed to record the current position of the slave (G2). The encoder installed on the motor shaft is still used to record the current speed (G1) of the drive.

The higher the resolution of the encoder (number of pulses counter per travel unit), the:

- more accurately the slave can follow the master
- more rigidly the synchronous operation control can be set (large P factor)
- smaller the angle error will be during acceleration and deceleration

However, due to the calculation accuracy of the synchronous operation controller, the ratio of the position resolutions (incr./mm) between the motor encoder and synchronous encoder should lie in the range 0.1 ... 10 . If the ratio is outside of this range, in many cases a different synchronous encoder additional gear can be used for a more favorable ratio.

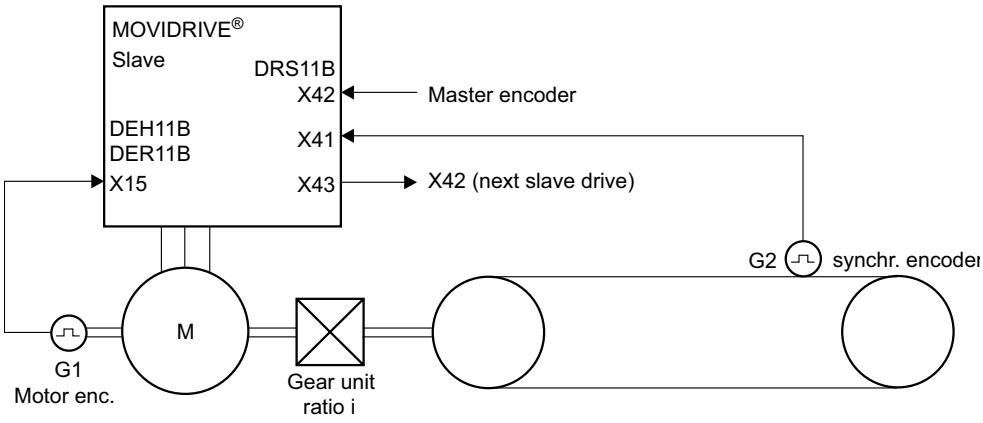

Figure 1: Synchronous operation with synchronous encoder; equal-ranked or chain

- Setting the master / slave gear ratio factor → Sec. 6.3
- Setting the slave encoder / slave synchronous encoder factor

  A mechanical gear ratio can be set between the incremental encoder to record the motor speed (G1) and between the incremental encoder for position measurement (G2). This gear ratio is set with parameter P231 (factor slave encoder) / P232 (Factor slave sync. encoder).

  – Equal-ranked:
    The signal of the master encoder at X42 is passed to the next slave via X43. In this way, all slaves receive identical master encoder signals.
  – Chain:
    The signal of the synchronous encoder at X41 is passed to the following slaves via X43. In this way, the synchronous encoder signal becomes the master encoder signal of the following slave.

5 Assembly and Installation Notes

5.1 Mounting the DRS11B option card

	NOTE
	The DRS11B option card can only be installed in MOVIDRIVE® MDX61B sizes 1 to 6.

Before you begin The DRS11B option card must be inserted in expansion slot [1].

Read the following notes before installing or removing an option card:

- Disconnect the inverter from the power. Switch off the DC 24 V and the supply voltage.
- Take appropriate measures to protect the option card from electrostatic charge (use discharge strap, conductive shoes, etc.) before touching it.
- **Before installing** the option card, remove the keypad and the front cover.
- **After installing** the option card, replace the front cover and the keypad.
- Keep the option card in its original packaging until immediately before you are ready to install it.
- Hold the option card by its edges only. Do not touch any components.

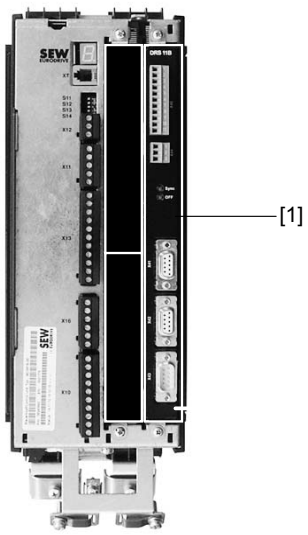

62416AXX

Basic procedure for installing/removing an option card (MDX61B, sizes 1 - 6)

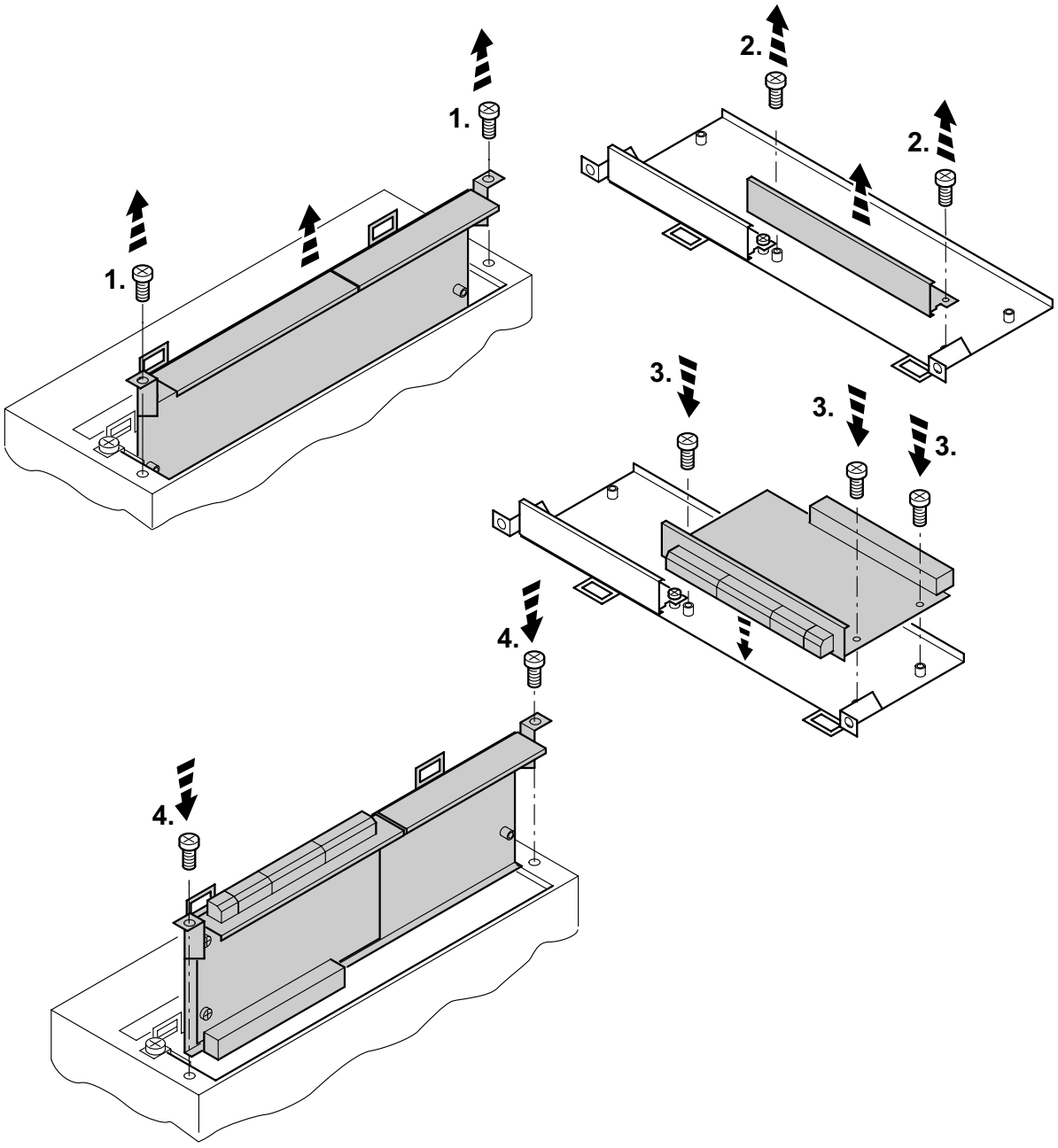

60039AXX

1. Remove the two retaining screws holding the card retaining bracket. Pull the card retaining bracket out evenly from the slot (do not twist!).
2. Remove the two retaining screws of the black cover plates on the card retaining bracket. Remove the black cover plate.
3. Position the option card onto the retaining bracket so that the three retaining screws fit into the corresponding bores on the card retaining bracket.
4. Insert the retaining bracket with installed option card into the slot, pressing slightly so it is seated properly. Secure the card retaining bracket with the retaining screws.
5. To remove the option card, follow the instructions in reverse order.

5.2 Connection and terminal description of the DRS11B option

Part number Synchronous operation card type DRS11B: 824 672 6

NOTES
The DRS11B option can only be installed in connection with MOVIDRIVE® MDX61B sizes 1 to 6. The DRS11B option must be inserted in the expansion slot.

Front view of DRS11B	Description	Terminal	Function
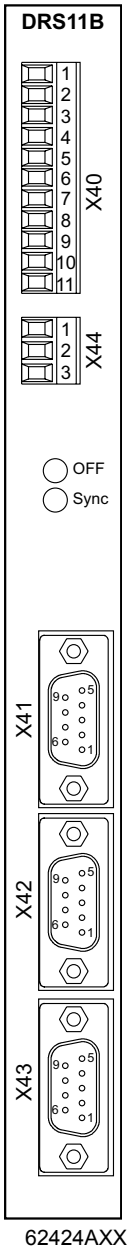	**X40: Connection binary inputs**	**X40:1 EING0: Free running mode** **X40:2 EING1: Offset 1** **X40:3 EING2: Offset 2** **X40:4 EING3: Offset 3** **X40:5 EING4: IPOS variable H477.0** **X40:6 EING5: IPOS variable H477.1** **X40:7 DCOM** **X40:8 VO24** **X40:9 AUSG0: IPOS variable H476.0** **X40:10 AUSG1: IPOS variable H476.1** **X4011 DGND**	"0" signal = synchronous operation, "1" signal = free-running "0" signal= no offset, a "1" signal at EING1, EING2 or EING3 activates offset 1, 2 or 3 (P225, P226 or P227). The signal level of EING4 and EING5 can be read with IPOS variable H477. Reference potential for X40:1 ... X40:6. Voltage output DC +24 V, max. DC 100 mA. Binary outputs X40:9 and X40:10: max. DC 50 mA, short-circuit proof and protected against external voltage up to DC 30 V. The signal level of AUSG0 and AUSG1 can be read and set with IPOS variable H476. Reference potential for binary signals.
	X41: Connection synchronous encoder **X42:Connection master encoder**	**X41/X42:1 signal track A** **X41/X42:2 signal track B** **X41/X42:3 signal track C** **X41/X42:4 reference potential DGND** **X41/X42:5 reference potential DGND** **X41/X42:6 signal track $\overline{A}$** **X41/X42:7 signal track $\overline{B}$** **X41/X42:8 signal track C** **X41/X42:9 VO24**	Incremental encoder input for synchronous encoder (X41) or master encoder (X42). Only use 5 V TTL encoders, encoders with RS422 signal properties or sin/cos encoders. Encoders with DC 24 V voltage supply can by supplied directly from X41:9 or X42:9. For encoders with DC 5 V voltage supply, the option "5 V encoder supply type DWI11A" must be connected between X41X42 and the encoder. -24 V DC voltage supply for encoders, max. DC 650 mA
	X43: Incremental encoder output	**X43:1 signal track A** **X43:2 signal track B** **X43:3 signal track C** **X43:4 Not assigned.** **X43:5 reference potential DGND** **X43:6 signal track $\overline{A}$** **X43:7 signal track $\overline{B}$** **X43:8 signal track C** **X43:9 Not assigned.**	Incremental encoder output When P230 "Synchronous encoder = OFF" or "EQUAL-RANKED", number of pulses as at encoder connection X42. When P230 "Synchronous encoder = CHAIN," number of pulses as at encoder connection X41.
	X44: 24 V voltage input	**X44:1 GND** **X44:2 24 V DC** **X44:3 GND**	DC -24 V voltage supply • of the encoders connected to X41/X42 (max. load X41 **and** X42: ≤ DC 650 mA) • Of the binary outputs X40:9 and X40:10 (max. load: DC 50 mA) • for reference output X40:8: DC 24 V (max. load: DC 100 mA)
62424AXX	**LED OFF (red)** **LED Sync (green)**		ON = Free-running OFF = Synchronous operation ON = Angle difference > value of P514 OFF = Angle difference < value of P514

5.3 Installation notes

- Maximum permitted cable lengths:
  - Between the master inverter and the slave inverters: 10 m
  - Between the inverters and the encoders: 100 m

- Only use shielded encoder cables with twisted pair conductors (A and $\overline{A}$, B and $\overline{B}$, C and $\overline{C}$) to connect:
  - Motor encoders and synchronous encoders
  - Incremental encoder simulations
  - Encoder input of master encoder

- If necessary, connect a 24 V DC voltage supply to X44. This is used to supply encoders connected to X41 and X42, the binary inputs X40:9 and X40:10 and voltage output X40:8. Note that the total current load at X41 and X42 must be ≤ 650 mA.

- Note the following when connecting incremental encoders to an external supply:
  - Connect the reference potential of the encoder to the connection X10:2 DGND or X10:10 DGND on the MOVIDRIVE® basic unit.

- Enable command on slave inverter for synchronous operation (with standard default assignment of DI01, DI02 and DI03):
  - DI00 (X13:1)= "1" (/Controller inhibit), DI03 (X13:4) = "1" (Enable) and
  - DI01 (X13:2) = "1" (CW) or DI02 (X13:3) = "1" (CCW)

  Important: During synchronous operation, the direction of rotation of the slave is determined by the direction of rotation data of the setpoint pulses passing from the master to the slave.

- If the **master and slave drives turn in the same direction** (CW direction for master = CW direction for slave), the tracks are wired 1:1 (→ following figure).

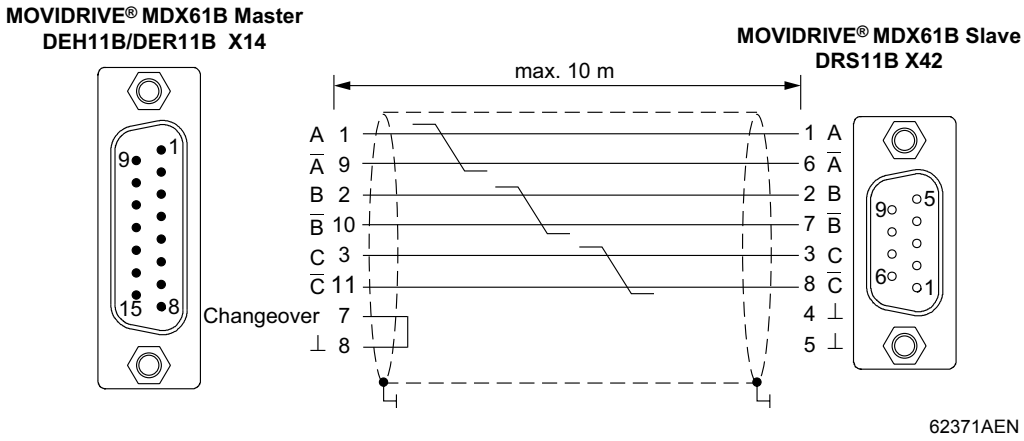

  - Part number of the prefabricated cable: 818 166 7

- If the **master and slave drives turn in the opposite direction** (e.g. output shafts of gearmotors with same number of gear ratio steps are opposite each other):
  - Swap the connection sequence of tracks A/$\overline{A}$ and B/$\overline{B}$ in pairs between the master output "incremental encoder simulation" and slave input "Master encoder" (→ following figure).

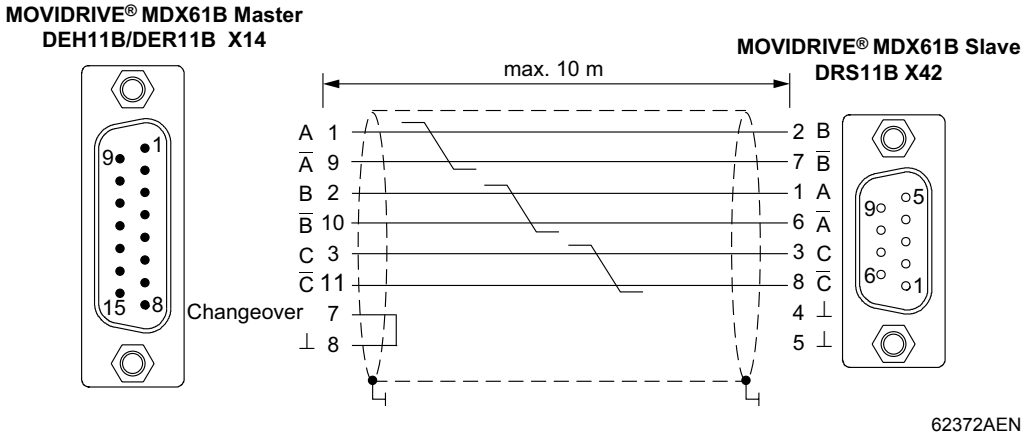

  - Part number of the prefabricated cable: 818 167 5

- If **two slave drives turn in the same direction** (CW direction for slave n = CW direction for n+1), the tracks are wired 1:1 (→ following figure).

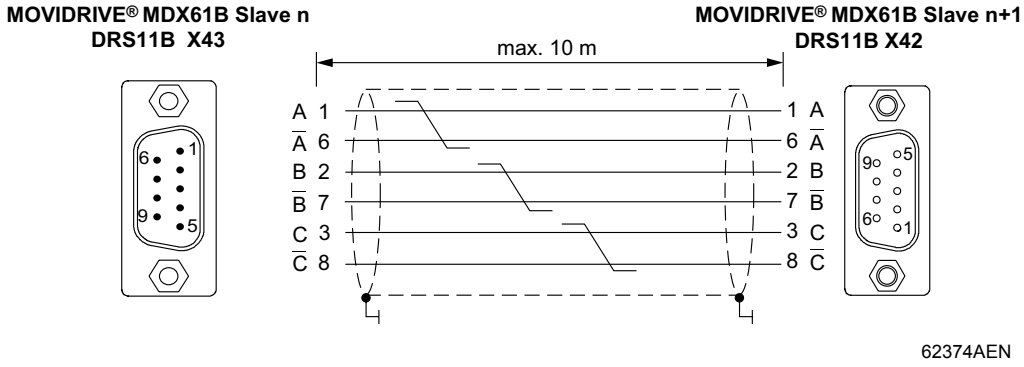

  - Part number of the prefabricated cable: 814 344 7

- If **two slave drives turn in the opposite direction** (e.g. output shafts of gearmotors with same number of gear ratio steps are opposite each other):
  - Swap the connection sequence of tracks A/$\overline{A}$ and B/$\overline{B}$ in pairs between the slave output "incremental encoder simulation (X43)" and slave input "master encoder (X42)" (→ following figure).

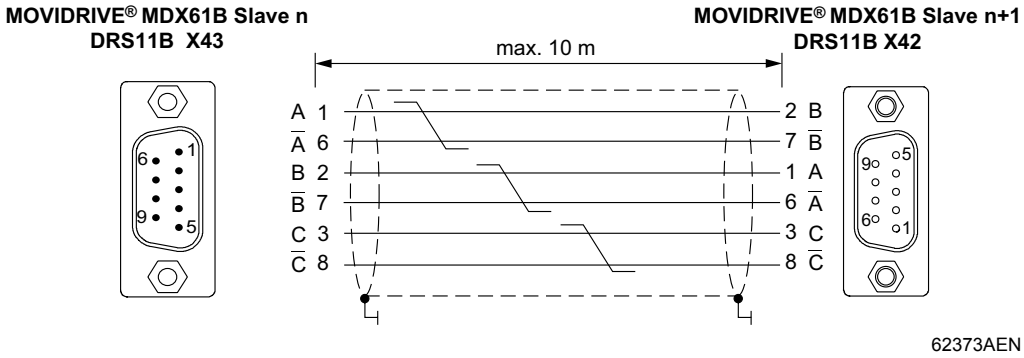

62373AEN

  - Part number of the prefabricated cable: 818 774 6

5.4 Connection example MDX61B master - MDX61B slave

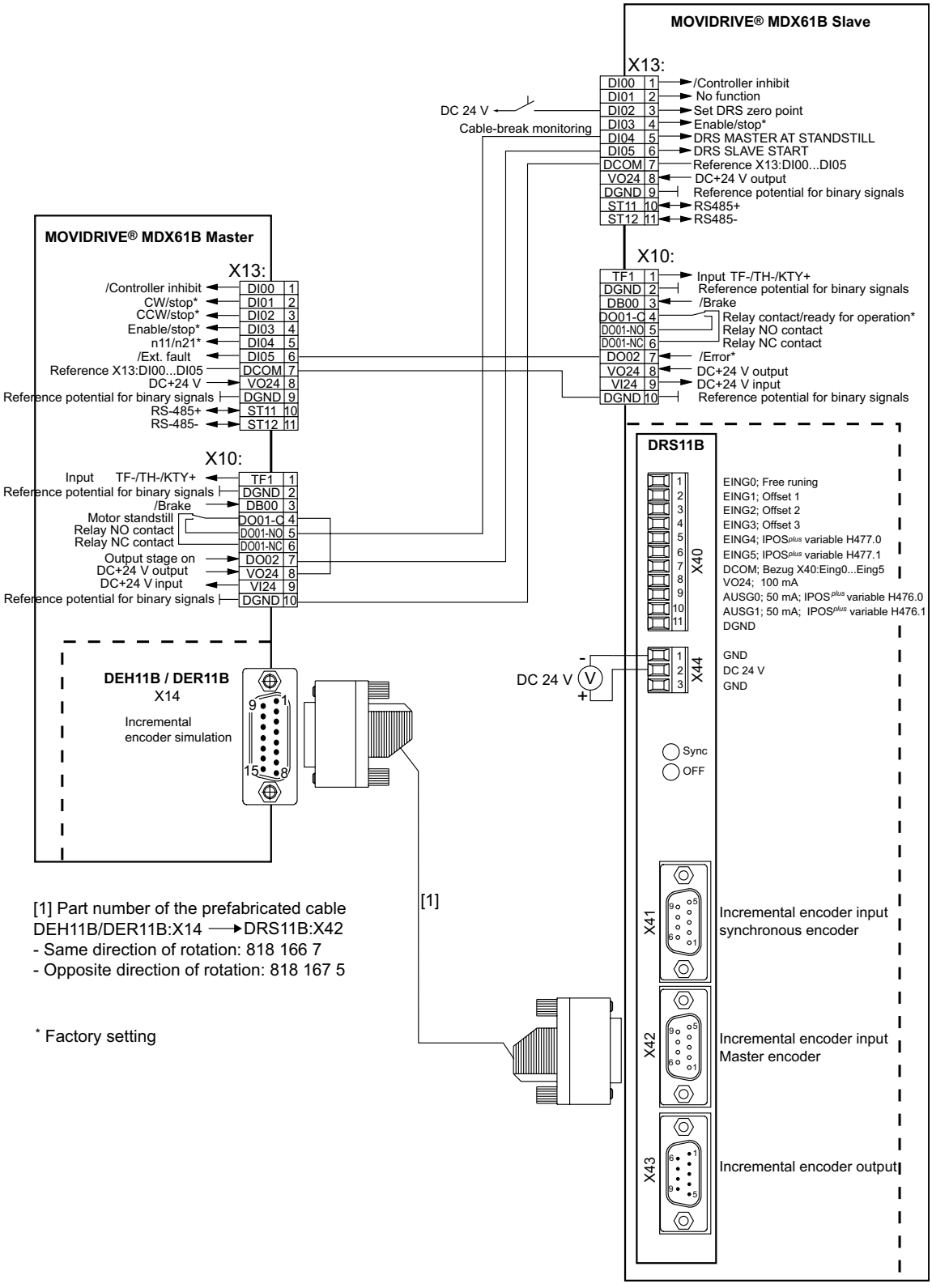

[1] Part number of the prefabricated cable
DEH11B/DER11B:X14 ⟶ DRS11B:X42
- Same direction of rotation: 818 166 7
- Opposite direction of rotation: 818 167 5

* Factory setting

62375AEN

5.5 Connection of incremental encoder as master

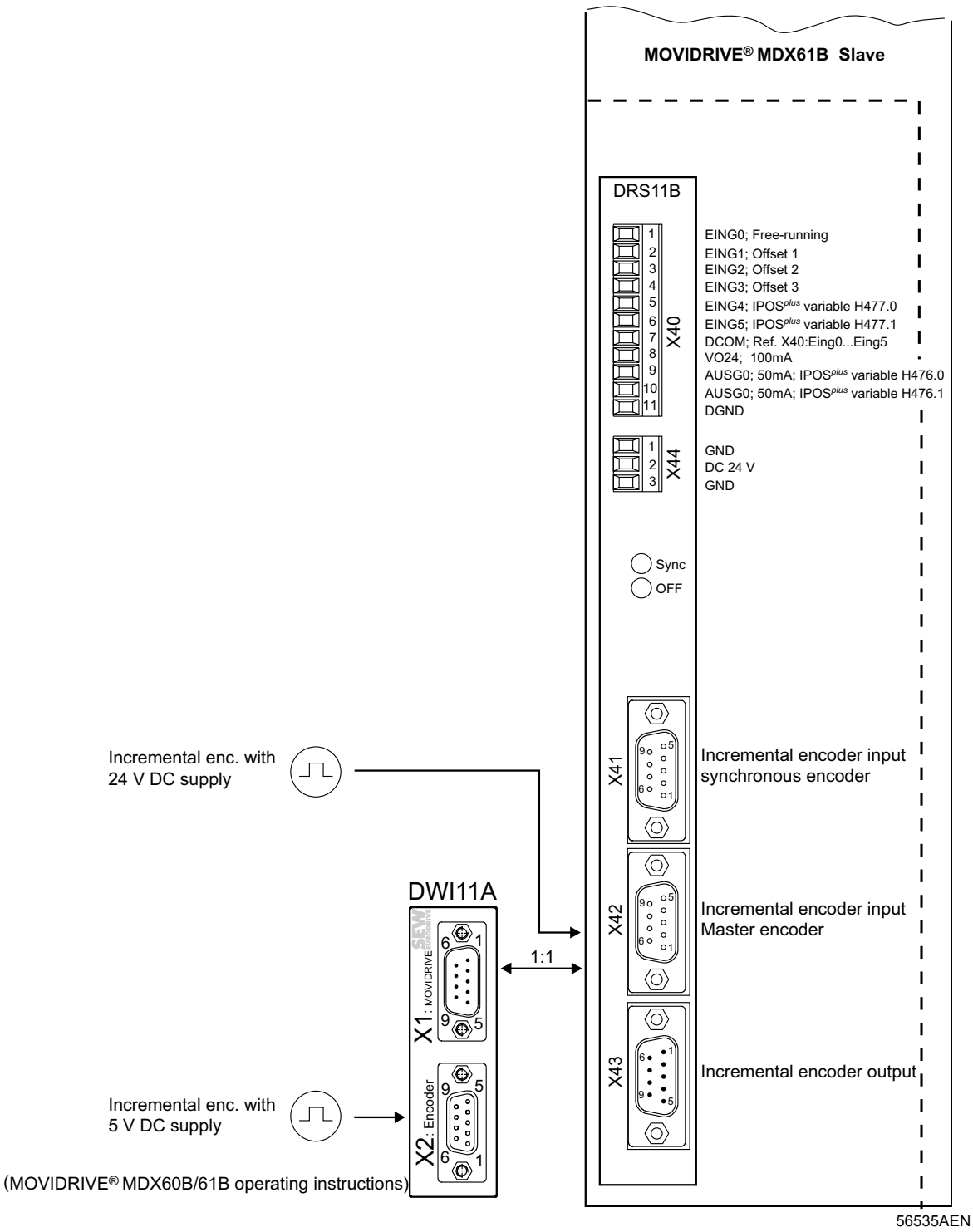

6 Startup

6.1 Introduction

The following section describes startup of synchronous operation for a two-column hoist (→ following figure).

Both drives are equipped with identical gear units with identical ratios; the rated power of the motors and inverters are the same. For both drives, clockwise rotation on the motor stands for upward movement on the hoist. Therefore, the prefabricated master/slave cable (part number 818 166 7) from SEW-EURODRIVE can be used to connect master X14 to slave X42.

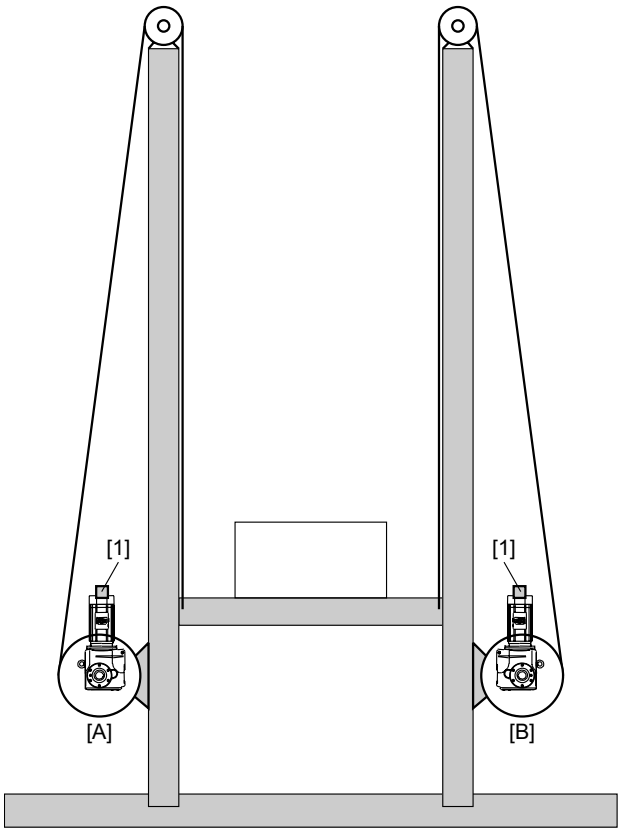

56513AEN

[1] Incremental encoder

[A] Master drive

[B] Slave drive

- **Master drive:**

  Motor with encoder and brake.

- **Master inverter:**

  MOVIDRIVE® MDX61B with encoder card option, operating mode with encoder feedback,

  (e.g. VFC-n CONTROL / CFC / SERVO).

- **Slave drive:**

  Motor with encoder and brake.
- **Slave inverter:**

  MOVIDRIVE® MDX61B with encoder option card, operating mode with encoder feedback and synchronous operation, e.g. VFC-n CTRL.&SYNC / CFC&SYNC / SERVO&SYNC with synchronous operation card option DRS11B.

6.2 Brief description of the startup process

Preliminary work

- Check wiring, terminal assignment and safety cut-outs.
- Disconnect the drives from the machines.
- Startup master and slave separately with speed control.
- Program binary inputs and binary outputs as necessary for the specific application.
- Start master and slave and test speed control operation.

Test encoder signals

- Delete angle error between master and slave using "Set DRS zero point."
- Set slave operating mode P700 to "Synchronous operation."
  - Asynchronous motors: VFC-n CTRL&SYNC or CFC&SYNC
  - Synchronous motors: SERVO&SYNC
- Lock slave (/CONTROLLER INHIBIT DI00 = "0") and turn master.
- LED SYNC (green) must light up. If not check the encoder connection between the master and slave.
- If necessary, switch on encoder monitoring.

Synchronous operation of master and slave with disassembled drives

- Delete angle error between master and slave using "Set DRS zero point."
- Enable slave and start the master drive. The slave follows the master.

Set synchronous operation parameters

- Master gear ratio factor (P221) and slave gear unit factor (P222) in accordance with the gear unit reduction ratios.

Synchronous operation of master and slave with assembled drives

- Assemble and align drives.
- Delete angle error between master and slave using "Set DRS zero point."
- Release drives.
- Check whether the angle error during acceleration processes is within the permitted range (→ MOVITOOLS® SCOPE or green LED SYNC).

	NOTE
	If option DRS11B for the slave drive is replaced in MOVIDRIVE® MDX61B, the drives must be realigned.

6.3 Preliminary work

	STOP!
	Make sure that • the cabling • the terminal assignment and • Safety cut-outs have been configured correctly and are suited to the application. **Separate the drives from the machine so that both drives can be operated mechanically, independent of each other. This prevents the system from being damaged during startup of synchronous operation due to unintentional movements.**

- Startup the master and slave drives **separately** in operating mode (→ P700) VFC-n CTRL., CFC or SERVO, in accordance with the the instructions in the MOVIDRIVE® MDX60B/61B operating instructions.
- Program the terminal assignment of the master and slave according to the requirements of your application.
- Activate and test the speed controlled operation of both drives.

6.4 Activating synchronous operation

Test of encoder signals

- Delete any angle error (→ green LED "SYNC" lights up) between the master and slave:
  - Set one binary input of the slave inverter to the function "Set DRS zero point." The signal is set to "1" active.
  - Change this binary input "0"→"1"→"0." The green LED "SYNC" goes out.
- Activate synchronous operation control for the slave by setting an operating mode with encoder feedback and synchronous operation (e.g. VFC-n CONTROL&SYNC, CFC&SYNC, SERVO&SYNC). Initially, leave all the parameters of the synchronous operation controller set to the default values.
- Lock the slave drive by setting DI00 to "0" (controller inhibit).
- Move the master drive and watch the green LED "SYNC" on DRS11B while doing so. Following a short movement of the master drive, the LED should light up.
- If the green LED "SYNC" does not light up, check the encoder connection between the master and slave. In this case, the slave drive does not receive any travel information from the master.

Synchronous operation of both drives when disassembled

- Delete any angle error (→ green LED "SYNC" lights up) between the master and slave:
  - Set one binary input of the slave inverter to the function "Set DRS zero point." The signal is set to "1" active.
  - Change this binary input "0"→"1"→"0." The green LED "SYNC" goes out.
- You can release the slave as follows:
  - With DI00 = "1" (no controller inhibit)
  - With DI01 = "1" (CW) or DI02 = "1" (CCW)
  - With DI03 = "1" (enable)
  - With X40:1 ="0" (no free-running)
- If you start the master drive now, the slave drive will follow.

Parameter settings for synchronous operation

- Parameter settings for master and slave gear ratio factors (P221 and P222):
  - If the drive configuration is identical (encoder, gear unit, etc.), accept the default values for P221 and P222.
  - For any other configuration, you can determine the settings for P221 and P222 according to the following formula:

$$\frac{P221}{P222} = \frac{A_M \times i_M}{A_S \times i_S} \times \frac{iv_M}{iv_S} \times \frac{U_S}{U_M}$$

56534AXX

A_M, A_S Resolution of the encoder master, slave

i_M, i_S Gear unit reduction ratio of master, slave

iv_M, iv_S Additional gear ratio of master, slave

U_M, U_S Circumference of master, slave output elements

- Enable the master and slave drive. Both drives should now run at a synchronous angle.

6.5 Testing synchronous operation with mounted drives

- Mount both drives to your machine and align the drives mechanically.
- Delete the angle error using the "Set DRS zero point" function.
- Enable both drives in accordance with the wiring diagram.
- During travel, observe the LED "SYNC" on the synchronous operation card. This allows you to determine the current angel error between the master and slave:
  - If LED "SYNC" lights up during acceleration and deceleration, the angle error exceeds the tolerance set in parameter P514.
  - You can record and determine the exact angle error using the "SCOPE" function integrated in MOVITOOLS®.
- Optimize the P gain of synchronous operation control (P220) as follows:
  - Run the system with the maximum permitted load for operation.
  - Increase P220 in small steps from 1 - 2. While doing so, observe the control response of the slave.
  - Increase P220 until the slave drive tends to oscillate.
  - Now reduce P220 by 15 % and take the result as the value for P220.

  You can optimize the value even further using the "SCOPE" function integrated in MOVITOOLS®.
- Adapt the parameters for monitoring synchronous operation control according to your requirements.

6.6 Examples for calculating P221 and P222

Example 1: Chain conveyor

In this example, two chain conveyors are to be run in synchronous operation (→ following figure). It is an application with positive connection and different gear unit reduction ratios. A synchronous encoder is not required; for applications with positive connection, the travel information can be calculated from the signal of the motor encoder [1].

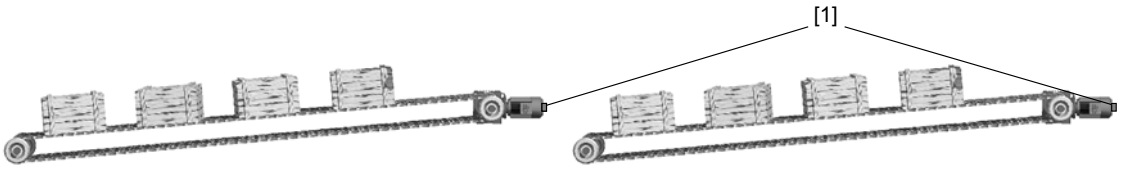

56514AXX

The goal of the following calculation is to determine the ratio of the position resolution for master and slave. You can obtain the numbers of teeth in the gear pairs from SEW-EURODRIVE on request.

Data

Master drive: K87 DT100L4 BM ES1 (with motor encoder)

- Gear unit reduction ratio:

$$i_M = \frac{40 \text{ x } 33 \text{ x } 83}{25 \text{ x } 8 \text{ x } 15} = 36.52$$

62383AEN

- Resolution of the incremental encoder (master and slave drive):

  A_M = 1024 incr./rev.

  Incremental encoders supply 1024 pulses/revolution. The encoder pulses are quadrupled in the inverter.
- Position resolution of master:

  $(A_M \times i_M) / (\Pi \times m_M \times Z_M)$

  Module m_M = 5

  No. of teeth Z_M = 15

  $U_M = m_M \times Z_M$

Slave drive: KA67 DT100LS4 BM ES1 (with motor encoder)

- Gear unit reduction ratio:

$$i_S = \frac{47 \text{ x } 33 \text{ x } 81}{23 \text{ x } 8 \text{ x } 14} = 48.77$$

62382AEN

- Resolution of the incremental encoder (master and slave drive):

  A_S = 1024 incr./rev.

  Incremental encoders supply 1024 pulses/revolution. The encoder pulses are quadrupled in the inverter.
- Position resolution of master:

  $(A_S \times i_S) / (\Pi \times m_S \times Z_S)$

  Module m_S = 4

  No. of teeth Z_S = 20

  $U_S = m_S \times Z_S$

Calculation

The following values must be entered for this example:

$$\frac{\boldsymbol{P221}}{\boldsymbol{P222}} = \frac{\frac{A_M \times i_M}{\pi \times m_M \times Z_M}}{\frac{A_S \times i_S}{\pi \times m_S \times Z_S}} = \frac{A_M \times i_M}{A_S \times i_S} \times \frac{m_S \times Z_S}{m_M \times Z_M}$$

$$\frac{\boldsymbol{P221}}{\boldsymbol{P222}} = \frac{1024 \times \frac{40 \times 33 \times 83}{25 \times 8 \times 15}}{1024 \times \frac{47 \times 33 \times 81}{23 \times 8 \times 14}} \times \frac{4 \times 20}{5 \times 15} = \frac{85523200}{107071875}$$

$$\frac{\boldsymbol{P221}}{\boldsymbol{P222}} = \frac{3420928}{4282875}$$

56531AXX

Result:

- P221 = 3420928
- P222 = 4282875

Example 2: Synchronous encoder application

In this example, two belt conveyors are to be run in synchronous operation. It is an application with non-positive connection and identical gear unit reduction ratios. In applications with non-positive connection, the position information cannot be determined faultlessly from the signal of the motor encoder. Therefore, a master encoder is required on the first belt and a synchronous encoder on the second. The motor encoder and synchronous encoder have different resolutions.

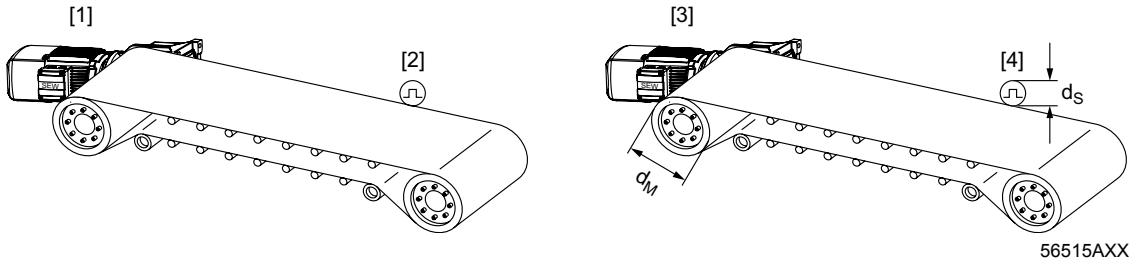

56515AXX

[1] Master drive

[2] Master encoder

[3] Slave drive with motor encoder:

[4] Synchronous encoder

To take the synchronous encoder into account, you must set *P230 Synchronous encoder* to the value "EQUAL-RANKED" or "CHAIN." The synchronous encoder is then evaluated for synchronous operation control of the slave drive. This means that the slave motor encoder is not required for synchronous operation control. It is, however, still required for speed control of the slave drive.

The master encoder and synchronous encoder are both mounted directly on the belt. Identical encoders with identical additional gears are used. The diameters of the belt pulleys of the two belt conveyors are identical, which means that the position resolutions (incr./mm) of the master encoder and synchronous encoder are also identical. Parameters P221 and P222 must both be set to the value "1."

For an application with synchronous encoder, the position resolutions of the slave motor encoder and synchronous encoder have to be adjusted. This is done using parameters *P231 Factor slave encoder* and *P232 Factor slave sync. encoder*.

Data

Slave motor encoder: K47 DT100L4 BM ES1

- Gear unit reduction ratio:

$$i_M = \frac{38 \text{ x } 27 \text{ x } 69}{23 \text{ x } 19 \text{ x } 22} = 7.36$$

62381AEN

- Resolution of incremental encoder (motor encoder):

  A_M = 1024 incr./rev.

  The motor encoder supplies 1024 pulses/revolution. The encoder pulses are quadrupled in the inverter.
- Belt pulley of the belt conveyor:

  d_M = 200 mm

  $U_M = \Pi \times d_M$
- Position resolution of slave motor encoder:

  $(A_M \times i_M) / (\Pi \times d_M)$

Synchronous encoder:

- Additional gear:

  i_{V_S} = 2
- Resolution of incremental encoder (synchronous encoder):

  A_S = 2048 incr./rev.

  The synchronous encoder supplies 2048 pulses/revolution. The encoder pulses are quadrupled in the inverter.
- Belt pulley of the synchronous encoder:

  d_S = 150 mm

  $U_S = \Pi \times d_S$
- Position resolution of synchronous encoder:

  $(A_S \times i_{V\_S}) / (\Pi \times d_S)$

Calculation

The following values must be entered for this example:

$$\frac{\boldsymbol{P232}}{\boldsymbol{P231}} = \frac{\frac{A_S \text{ x } i_{V\_S}}{\pi \text{ x } d_S}}{\frac{A_M \text{ x } i_M}{\pi \text{ x } d_M}} = \frac{A_S \text{ x } i_{V\_S}}{A_M \text{ x } i_M} \text{ x } \frac{d_M}{d_S}$$

$$\frac{\boldsymbol{P232}}{\boldsymbol{P231}} = \frac{2048 \text{ x } 2}{1024 \text{ x } \frac{38 \text{ x } 27 \text{ x } 69}{23 \text{ x } 19 \text{ x } 22}} \text{ x } \frac{200}{150} = \frac{769120}{1061910}$$

$$\frac{\boldsymbol{P232}}{\boldsymbol{P231}} = \frac{\boldsymbol{176}}{\boldsymbol{243}}$$

56532AXX

7 Parameter

Explanation of the parameters

The parameter names correspond to those displayed in MOVITOOLS® SHELL. The factory setting is indicated by underline.

Symbol

These parameters can only be changed with INHIBITED inverter status (= output stage at high resistance).

7.1 Relationship between parameter values and output speed

In the case of adjustable parameters (P224, P225, P226, P227, P510, P511, P512, P514), you must enter increments which relate to an angle offset (e.g. as a permitted deviation or offset) between the master and slave drives. They refer to the value that the inverter calculates on the basis of the encoder pulses. The number of encoder pulses is multiplied by a factor of 4 in the inverter.

The number of increments that you have to enter for parameters is calculated from the angular offset of the motor according to the following formula:

Incremental value to be entered = motor revolutions $\times$ 4 $\times$ number of pulses of incremental encoder

Example

If the fault message "/DRS LAG ERROR" is to be generated for a deviation of 5 motor revolutions and incremental encoders with a resolution of 1024 increments/revolution between the master and slave drives are used, enter the following as the increment value in *P512 Lag error limit*.

Counter value to be entered = 5 $\times$ 4 $\times$ 1024 = 20480

This value can also be applied to the gear unit output side:

Motor revolutions = Gear unit output revolutions $\times$ $i_{gear\ unit}$

In addition to the motor speed and the gear unit reduction ratio, the additional gear also has an effect on the effective output speed at the output machine. In this case, you can calculate the motor revolutions as follows:

Motor revolutions = Gear unit output revolutions $\times$ $i_{gear\ unit}$ $\times$ $i_{add.gear}$

7.2 Signaling functions

The following operating statuses are output:

- Optical display via LED "SYNC" (green) "Counter LED display" (P514):

  LED "SYNC" can be used to visualize the current maximum difference between the master and slave drives during startup:

  – ON = Angle difference > value of P514
  – OFF = Angle difference < value of P514

- Optical display of operating mode via LED "OFF" (red) "SLAVE FREE RUNNING":

  – ON = Slave drive is in free-running mode
  – OFF = Slave drive is in synchronous mode

- Status signal "DRS SLAVE IN POS":

  – On one of the programmed binary outputs (P60_/P61_)

- Message "/DRS PREWARN.":

  – On one of the programmed binary outputs (P60_/P61_)

- Fault message "/DRS LAG ERROR":

  – On one of the programmed binary outputs (P60_/P61_)
  – With selectable fault response of the drive (P834)

The following parameters are available for synchronous operation.

Parameter	Name	Setting range / Factory setting
22x	**Synchronous operation control (not in effect for BG0)**	
220	P-gain DRS	1 ... 10 ... 200
221	Master gear unit factor	1 ... 3 999 999 999
222	Slave gear unit factor	1 ... 3 999 999 999
223	Mode selection	Mode 1 ... Mode 8
224	Slave counter	–99 999 999 ... 10 ... 99 999 999
225	Offset 1	–32 767 ... 10 ... 32 767
226	Offset 2	–32 767 ... 10 ... 32 767
227	Offset 3	–32 767 ... 10 ... 32 767
228	Filter precontrol DRS	0 ... 100 ms
23x	**Synchronous operation with synchronous encoder**	
230	Synchronous encoder	OFF / EQUAL-RANKING / CHAIN
231	Factor slave encoder	1 ... 1000
232	Factor slave synchronous encoder	1 ... 1000
233	Synchronous encoder resolution	128 / 256 / 512 / 1024 / 2048
234	Master encoder resolution	128 / 256 / 512 / 1024 / 2048
24x	**Synchronous operation with catch up**	
240	Synchronous speed	–6000 ... 1500 ... 6000 1/min
241	Synchronous ramp	0 ... 2 ... 50 s
51x	**Synchronous operation monitoring**	
510	Positional tolerance slave	10 ... 25 ... 32 768 inc
511	Prewarning lag error	50 ... 99 999 999 inc.
512	Lag error limit	100 ... 4000 ... 99 999 999
513	Delay lag error signal	0 ... 1 ... 99 s
514	Counter LED display	10 ... 100 ... 32 768 inc.
515	Delay in-position signal	5 ... 10 ... 2000 ms
516	X41 Encoder monitoring	NO / YES
517	X41 Pulse count monitoring	NO / YES
518	X42 Encoder monitoring	NO / YES
519	X42 Pulse count monitoring	NO / YES
60x	**Binary inputs basic unit**	The following signals can be programmed: • SET DRS ZERO PT • START DRS SLAVE • DRS TEACH IN • DRS MASTER STOP
61x	**Binary inputs option**	
62x	**Binary outputs basic unit**	The following signals can be programmed: • /DRS PREWARNING • /DRS LAG ERROR • DRS SLAVE IN POS
63x	**Binary outputs option**	
83x	**Fault responses**	
834	LAG ERROR response	EMERG.STOP/FAULT

NOTE

For the complete parameter list, refer to the MOVIDRIVE® MDX60B/61B operating instructions.

7.3 Parameter descriptions

P22x synchronous operation control **Synchronous operation control (only in parameter set 1).**

P220 P gain DRS

Setting range: 1 ... 10 ... 200

Gain of the synchronous operation controller in the slave. This determines the control response of the slave drive depending on the angle differentials in relation to the master drive.

P221 / P222 Master gear ratio factor / Slave gear ratio factor

Setting range: 1 ... 3 999 999 999

These settings are only required with the slave inverter. These parameters set the position measurement ratio between the master and slave. The ratio is entered as the quotient of master to slave to include non-integer ratios.

Note that position measurement of the master and slave can only occur using the motor encoders if there is **positive power transmission (without slip)**. Position measurement has to be via an **additional encoder (external encoder)** in all applications in which power transmission between motor shaft and machine is **by friction** and thus slip is to be expected. The encoder must be installed on the moving machine component with a positive connection.

P223 Mode selection

Setting range: 1 / 2 / 3 / 4 / 5 / 6 / 7 / 8

Mode selection determines how the slave drive reacts to a free running signal.

- Mode 1: Free-running unlimited, new reference point
  - Free-running is active when a "1" signal is set at X40:1.
  - The input terminals and setpoints of the slave drive are effective in free-running mode.
  - An angular offset generated in free-running mode is not processed when synchronization is started again.
- Mode 2: Free-running unlimited, offset is processed
  - Free-running is active when a "1" signal is set at X40:1.
  - The input terminals and setpoints of the slave drive are effective in free-running mode.
  - An angular offset generated during free-running mode is reduced to zero when synchronization is started again.
- Mode 3: Free-running unlimited, offset generated is processed + P224
  - Free-running is active when a "1" signal is set at X40:1.
  - The input terminals and setpoints of the slave drive are effective in free-running mode.
  - During resynchronization, in addition to the offset, the old synchronous position of the signed position offset in P224 is also reduced to zero.
- Mode 4: Free-running limited by *P224 Slave counter*, generated offset is processed
  - Free-running is activated via a "1" signal (>100 ms) at X40:1.
  - The input terminals and setpoints of the slave drive are effective during free-running.
  - Free-running ends when the angle differential entered in P224 has been reached. The angular offset is then reduced to zero.

- Mode 5: Free-running limited by *P224 Slave counter*, new reference point
  - Free-running is activated via a "1" signal (>100 ms) at X40:1.
  - The input terminals and setpoints of the slave drive are effective during free-running.
  - Free-running ends when the angle differential entered in P224 has been reached.
  - If another HIGH signal is applied at X40:1 before free-running has ended, the value at which free-running is to end increases to the value entered in P224.
  - The slave drive synchronizes with the new angle differential.
- Mode 6: Temporary angular offset, new reference point
  - Free-running is active when a "1" signal is set at X40:1.
  - The input terminals and setpoints of the slave drive are effective in free-running mode.
  - An angular offset generated in free-running mode is not processed when synchronization is started again.
  - A "1" signal at 40:2, X40:3 or X40:4 on DRS11B activates an angular offset. Each angular offset is stored in parameters P225, P226 and P227.
  - If a "0" signal is applied again at one of the input terminals X40:2, X40:3 or X40:4, the angular offset is eliminated again.
- Mode 7: Permanent angular offset (phase trimming), new reference point
  - Free-running is active when a "1" signal is set at X40:1.
  - The input terminals and setpoints of the slave drive are effective in free-running mode.
  - An angular offset generated in free-running mode is not processed when synchronization is started again.
  - A "1" signal at 40:2, X40:3 or X40:4 on DRS11B activates an angular offset. Each angular offset is stored in parameters P225, P226 and P227.
  - If a "0" signal is applied again at one of the input terminals X40:2, X40:3 or X40:4, the angular offset is maintained.
  - If the input signal lasts longer than 3 seconds, the value is corrected at four steps per second.
- Mode 8: Free-running unlimited, new reference point + P224
  - Free-running is active when a "1" signal is set at X40:1.
  - The input terminals and setpoints of the slave drive are effective in free-running mode.
  - If a "0" signal is applied at input terminal X40:1, the slave drive synchronizes with the current position of the master drive plus the position offset stored in P224.

	NOTE
	They must activate an offset only if a previous angular offset has been processed.

P224 Slave counter

Setting range: –99 999 999 ... 10 ... 99 999 999 Inc

The angular offset in relation to the master drive, which can be activated in mode 3, 4, 5 and 8, is referred to as the slave counter. In contrast to the offset, this offset angle can be set using the "Teach In" function. Depending on the mode, it functions as a limit value for free running or specifies a permanent angular offset for the slave drive in relation to the master drive (= new reference point).

P225 / P226 / P227 Offset 1 / 2 / 3

Setting range: –32 767 ... 10 ... 32 767 inc; only effective in mode 6 or mode 7!

Three separately adjustable angle differentials to which the slave drive sets itself for the duration of the 1“ signal on X40:2 ” X40:3 ” X40:4.

P228 Filter precontrol DRS

Setting range: 0 ... 100 ms

Setpoint filter for precontrol of synchronous operation control DRS11B. The master speed (determined on the DRS) must be filtered for optimum slave acceleration feedforward. Filtering requires the filter time constant. Value 0 indicates an unfiltered master speed.

P23x Synchronous operation with synchronous encoder

Synchronous operation with synchronous encoder (only in parameter set 1)

Position measurement has to be performed via an external encoder (=synchronous encoder) in all applications in which power transmission between the motor shaft and the machine is non-positive, which means that slip is to be expected.

P230 Synchronous encoder

Setting range: OFF .. EQUAL-RANKING ... CHAIN

- OFF: Synchronous operation using the signals of the connected motor encoder. P231 and P232 have no effect.
- EQUAL-RANKING: Forwarding of X42 signals: "Master encoder" at X43: "Incremental encoder output." Evaluation of P231 and P232.
- CHAIN: Forwarding of X41 signals: "Input synchronous encoder" at X43: "Incremental encoder output." Evaluation of P231 and P232.

P231 / P232 Factor slave encoder / Factor slave sync. encoder

Setting range: 1 .. 1000

In most cases there is a mechanical gear ratio between both encoders. This gear ratio must be set using the parameters.

P233 Synchronous encoder resolution

Setting range: 128 / 256 / 512 / 1024 / 2048

Setting the resolution of the connected synchronous encoder.

P234 Master encoder resolution

Setting range: 128 / 256 / 512 / 1024 / 2048

Setting the resolution of the connected master encoder.

P24x Synchr. operation with catch up

Synchronous operation with catch up (only in parameter set 1)

When the slave drive is switched to synchronous operation, the current angle offset in relation to the master is reduced to zero, depending on the operation mode selected. For this catch up procedure to be performed in a controlled manner, it is possible to set parameters for both the synchronization speed and the synchronization ramp.

P240 synchronous speed

Setting range: 0 ... 1500 ... 6000 1/min

This parameter indicates the duration of the synchronization procedure.

P241 Synchronization ramp

Setting range: 0 ... 2 ... 50 s

Value of the acceleration ramp for synchronizing the slave drive with the master drive. A value of 0 means maximum possible acceleration.

	NOTE
	Acceleration or deceleration of the slave drive from synchronous operation to free-running mode is set using parameters P130 ... P134.

P51x Synchronous operation monitoring

Synchr. operation monitoring.

P510 Positioning tolerance slave

Setting range: 10 ... 25 ... 32 768 inc

Various conditions must be met to allow for precise positioning of the slave drive. The brake of the slave drive is applied if all of the following conditions are met:

- Brake function of the slave drive is activated
- Master drive has stopped
- Master drive is de-energized (= inverter status INHIBITED)
- Slave drive is at standstill and is located within the positioning window

P511 Prewarning lag error

Setting range: 50 ... 99 999 999 inc

A prewarning is issued if the angular offset exceeds the value set here. The prewarning is issued regardless of the operating mode of the slave drive.

P512 lag error limit

Setting range: 100 ... 4000 ... 99 999 999 inc

Error message F42 “Lag error” is issued if the angular misalignment exceeds the value set here. The error message is issued regardless of whether the slave drive is operating in free running or synchronous running mode.

P513 Delay time lag error signal

Setting range: 0 ... 1 ... 99 s

It is possible to suppress the 'Prewarning lag error' and 'Lag error limit' signals from being output as an error message or onto a binary output for an adjustable skip time when switching over from free running to synchronous operation.

P514 Counter LED display

Setting range: 10 ... 100 ... 32 768 inc

The LED V1 (green) lights up if the angular offset exceeds the set value. This permits an immediate visual display of the maximum differential between the master and slave drives during operation. This is helpful during startup.

P515 Delay in-position signal

Setting range: 5 ... 10 ... 2000 ms

The DRS SLAVE IN POS binary output message is not issued unless the master and slave are located within the *P510 Positioning tol. slave* for the time set here.

P516 X41 Encoder monitoring

Setting range: NO / YES

- NO: Wire breakage between the frequency inverter and a TTL encoder connected at X41 is not recognized directly. In case of a defective connection, error F42 Lag error will be issued in enabled state unless it has been deactivated.
- YES: Wire breakage between the frequency inverter and a TTL encoder connected at X41 is recognized directly. The error message F48 "Hardware DRS" will be issued in case of an error. This fault will also be generated in inhibited state.

NOTE

Encoder monitoring is not a safety function!

P517 X41 Pulse count monitoring

Setting range: NO / YES

The number of pulses of the encoder connected at X41 is checked using the resolution set in P233 through evaluation of the C track. If increments are lost, the error message F48 "Hardware DRS" is generated.

- NO: Pulse counter monitoring is not active.
- ON: Pulse counter monitoring is active.

P518 X42 Encoder monitoring

Setting range: NO / YES

- NO: Wire breakage between the frequency inverter and a TTL encoder connected at X42 is not recognized directly. In case of a defective connection, error F42 Lag error will be issued in enabled state unless it has been deactivated.
- YES: Wire breakage between the frequency inverter and a TTL encoder connected at X42 is recognized directly. The error message F48 "Hardware DRS" will be issued in case of an error. This fault will also be generated in inhibited state.

NOTE

Encoder monitoring is not a safety function!

P519 X42 Pulse count monitoring

Setting range: NO / YES

The number of pulses of the encoder connected at X42 is checked using the resolution set in P234 through evaluation of the C track. If increments are lost, the error message F48 "Hardware DRS" is generated.

- NO: Pulse counter monitoring is not active.
- YES: Pulse counter monitoring is active.

P6xx Terminal assignment

P60x Binary inputs basic unit

Binary input DIØØ with fixed assignment "/CONTROL. INHIBIT."

P61x Binary inputs option

P610 ... P617 Binary input DI1Ø ... DI17

The binary inputs can be programmed to the following synchronous operation functions:

Function	In effect at		Effective in Inverter status	
	"0" signal	"1" signal	Inhibited	re-leased
SET DRS ZERO PT.	"1" to "0": sets new zero point	Delete angular offset	Yes	Yes
START DRS SLAVE	No enable	Enable	No	Yes
DRS TEACH IN	–	Adopt angular offset in P224	Yes	Yes
DRS MASTER STOP	Master drive is turning	Master drive has stopped	Yes	Yes

P62x Binary outputs basic unit

Use binary output DBØØ for controlling the brake. This binary output has the fixed assignment of the “/BRAKE” function. The “BRAKE RELEASED” and “BRAKE APPLIED” signals are intended to be passed on to a master controller.

Important: The binary signals are only valid if the inverter has signaled “Ready” after switch-on and there is no error display. Binary signals have “0“ status while MOVIDRIVE® is being initialized. Several terminals can be assigned the same function.

P63x Binary outputs option

P630 ... P637 Binary output DO1Ø ... DO17

The following functions can be assigned to the binary outputs:

Function	Binary output has	
	"0" signal	"1" signal
/DRS PREWARNING	Value for prewarning lag error (P511) exceeded	–
/DRS LAG ERROR	Lag error limit (P512) exceeded	–
DRS SLAVE IN POS	Position not reached	Position reached

NOTE

The binary signals are only valid if the inverter has signaled "READY" after switch-on and there is no error display. Binary signals have "0" status while MOVIDRIVE® is being initialized.

Several terminals can be assigned the same function.

P83x Fault responses

The following responses can be programmed:

Response	Description
NO RESPONSE	No fault is displayed and no fault response is triggered. The fault which is signaled is completely ignored.
DISPLAY ERROR	The fault is displayed (in 7-segment display and SHELL), the fault output is set (if programmed). The unit has no other fault responses. The fault can be reset (terminal, RS485, fieldbus, auto-reset).
IMM. STOP/FAULT	The inverter performs an immediate switch-off and a fault is signaled. The output stage is inhibited and the brake is applied. The ready signal is revoked and the error output is set, if programmed. A restart is only possible after an error reset has been performed during which the inverter is reinitialized.
EMERG.STOP/ FAULT	The drive is braked with the set emergency stop ramp. Once the stop speed is reached, the output stage is inhibited and the brake is applied. The fault is signaled immediately. The ready signal is revoked and the fault output is set, if programmed. A restart is only possible after a fault reset has been performed during which the inverter is reinitialized.
RAPID STOP/FAULT	The drive is braked with the set rapid stop ramp. Once the stop speed is reached, the output stage is inhibited and the brake is applied. The fault is signaled immediately. The ready signal is revoked and the fault output is set, if programmed. A restart is only possible after a fault reset has been performed during which the inverter is reinitialized.
IMM. STOP/WARN.	The inverter performs an immediate switch-off and a fault is signaled. The output stage is inhibited and the brake is applied. The error is signaled via the terminal, if programmed. The ready signal is not revoked. The drive restarts without unit re-initialization if the fault is rectified by an internal procedure or by a fault reset.
EMERG. STOP/ WARNG	The drive is braked with the set emergency stop ramp. Once the stop speed is reached, the output stage is inhibited and the brake applied. The fault is signaled immediately. The error is signaled via the terminal, if programmed. The ready signal is not revoked. The drive restarts without unit re-initialization if the fault is rectified by an internal procedure or by a fault reset.
RAPID STOP/WARNG	The drive is braked with the set rapid stop ramp. Once the stop speed is reached, the output stage is inhibited and the brake applied. The fault is signaled immediately. The error is signaled via the terminal, if programmed. The ready signal is not revoked. The drive restarts without unit re-initialization if the fault is rectified by an internal procedure or by a fault reset.

P834 response LAG ERROR

Response lag error with DRS11B and IPOS$^{plus®}$ only.

Factory setting: EMERG.STOP/FAULT

P834 is used to program the error response, which is triggered by lag error monitoring of the synchronous operation option (DRS11B) and of the positioning mode with IPOS$^{plus®}$. Different settings are available in *P51x Synchronous operation monitoring*.

8 Fault Messages and List of Faults

8.1 DRS1B synchronous operation card option

The following fault messages can occur specifically in synchronous operation. The factory set error response appears in the "Response (P)" column. (P) indicates that the response is programmable (P83_ Fault response).

Fault code	Designation	Response (P)	Sub-error code	Designation	Possible cause	Measure
14	Encoder	Immediate switch-off	0	Fault "Encoder". Encoder not connected, encoder is faulty	• Encoder cable or shield not connected correctly • Short circuit/encoder cable has broken wire • Encoder defective	Check encoder cable and shield for correct connection, short circuit and broken wire
			25	Fault "Encoder" Encoder fault X15 - Speed range exceeded. Encoder at X15 turns faster than 6542 1/min.		
			26	Fault "Encoder". Encoder fault X15 - Card is faulty. Error in the quadrant evaluation.		
			27	Fault "Encoder" Encoder connection or encoder is faulty.		
			28	Fault "Encoder" Encoder error X15 - Communication error RS485 channel.		
			29	Fault "Encoder" Encoder error X14 - Communication error RS485 channel.		
			30	Fault "Encoder" Unknown encoder type at X14/X15.		
			31	Fault "Encoder" Error plausibility check Hiperface X14/X15. Increments were lost.		
			32	Fault "Encoder" Encoder error X15 Hiperface. Hiperface encoder at X15 reports error..		
			33	Fault "Encoder" Encoder error X14 Hiperface. Hiperface encoder at X14 reports error..		
			34	Fault "Encoder" Encoder error X15 Resolver. Encoder connection or encoder is faulty..		
36	Option missing	Immediate switch-off	0	Fault "Option missing" Hardware is missing or not permitted.	• Type of option card not allowed • Setpoint source, control signal source or operating mode not permitted for this option card • Incorrect encoder type set for DIP11B	• Use correct option card • Set correct setpoint source (P100) • Set correct control signal source (P101) • Set correct operating mode (P700 or P701) • Set the correct encoder type
			2	Fault "Option missing" Fault encoder slot.		
			3	Fault "Option missing" Fault fieldbus slot.		
			4	Fault "Option missing" Fault expansion slot.		

Fault code	Designation	Response (P)	Sub-error code	Designation	Possible cause	Measure
40	Boot synchronization	Immediate switch-off	0	Fault "Boot synchronization" Timeout at boot synchronization with option.	Error during boot synchronization between inverter and option.	Install a new option card if this fault reoccurs.
41	Watchdog option IPOS watchdog	Immediate switch-off	0	Fault "Option". Fault Watchdog timer from/to option.	• Error in communication between system software and option software • Watchdog in the IPOS$^{plus®}$ program • An application module without the application version has been loaded in a MOVIDRIVE® B unit • The wrong technology function has been set if an application module is used	• Contact SEW Service. • Check IPOS program • Check whether the unit has been activated for the application version (P079) • Check the selected technology function (P078)
			17	Fault "Option". Fault Watchdog IPOS.		
42	Lag error	Immediate switch-off (P)	0	Fault "Lag errorpositioning"	• Encoder connected incorrectly • Acceleration ramps too short • P component of positioning controller too small • Incorrectly set speed controller parameters • Value for lag error tolerance too small	• Check encoder connection • Extend ramps • Set P component to higher value • Reset speed controller parameters • Increase lag fault tolerance • Check encoder wiring, motor and mains phase wiring. • Check whether mechanical system components can move freely or if they are blocked
48	Hardware DRS	Immediate switch-off	0	Fault "Hardware synchronous operation"	• Encoder signal from master/synchronous encoder faulty • Hardware required for synchronous operation is faulty • Number of pulses incorrect	• Check encoder signals of master/synchronous encoder • Check encoder wiring • Install a new synchronous operation card • Wire breakage, short circuit • Incorrectly set resolution of master synchronous encoder • EMC problems

NOTE

For the complete fault list, refer to the MOVIDRIVE® MDX60B/61B operating instructions.

9 Technical Data

9.1 DRS11B synchronous operation card option

DRS11B synchronous operation card option		
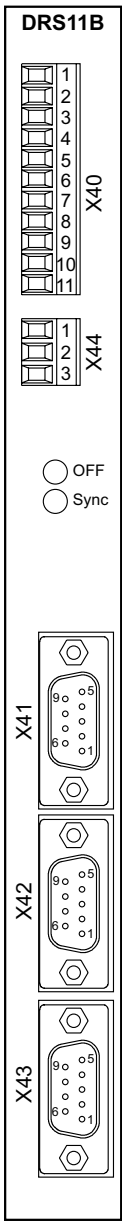 62424AXX	Part number	824 672 6
	Binary inputs X40:1...X40:6	EINGØ...EING5: isolated (opto-coupler) PLC compatible (EN 61131), sampling time 5 ms
	Internal resistance	$R_i \approx 3\ k\Omega$, $I_E \approx 10$ mA
	Signal level	DC+13 V...+30 V= "1" = Contact closed DC–3 V...+5 V = "0" = Contact open
	Function	Fixed assignment with: • EINGØ = Free-running • EING1 = Offset 1 • EING2 = Offset 2 • EING3 = Offset 3 • EING4 = IPOS$^{plus®}$ variable H477.0 • EING5 = IPOS$^{plus®}$ variable H477.1
	Binary outputs X40:9/X40:10	AUSGØ/AUSG1: PLC compatible (EN 61131-2) Response time 5 ms
	Signal level	"0" = DC 0 V "1" = DC+24 V **Important:**Do not apply external voltage!
	Function	Fixed assignment with: • AUSGØ = IPOS$^{plus®}$ variable H476.0 • AUSG1 = IPOS$^{plus®}$ variable H476.1 I_{max} = 50 mA, short-circuit proof, protected against external voltage to DC 30 V
	Reference terminals X40:11 X40:7	DGND: Reference potential for binary signals DCOM: Reference potential for binary inputs X40:1...X40:6 (EINGØ...EING5)
	Voltage output X40:8	DC 24 V, max. DC 100 mA
	Synchronous encoder input X41: Encoder power supply	Max. 200 kHz, signal level according to RS422 or sin/cos DC+24 V, I_{max} = DC 650 mA[1)] 9-pin Sub-D socket
	Master encoder input X42: Encoder power supply	Max. 200 kHz, signal level according to RS422 or sin/cos DC+24 V, I_{max} = DC 650 mA[1)] 9-pin Sub-D socket
	Incremental encoder output X43:	Signal level to RS422 9-pin D-sub connector
	Voltage input X44:1 X44:2 X44:3	GND DC+24 V supply voltage for binary outputs X40:9/X40:10 and encoder connected at X41/X42 GND
	Permitted cable cross-section	One core per terminal: 0.08...1.5 mm^2 Two cores per terminal: 0.25...1 mm^2
	LED OFF (red)	ON = Free-running OFF = Synchronous operation
	Sync (green)	ON = Angle difference > value of P514 OFF = Angle difference < value of P514

1) Total current load (X41 **and** X42) of the DC 24 V encoder supply ≤ DC 650 mA

Index

A

Activating synchronous operation 24
Application examples 8
Assembly and installation notes 14

B

Brief description of the startup process 23

C

Calculation examples P221 and P222 26

D

DRS11B
- *Fault list* 39
- *Installation notes* 17
- *Technical data* 41
- *Terminal description* 16

E

Exclusion of liability 4

F

Fault messages 39
- *Fault list* 39

G

General information
- *Exclusion of liability* 4

General notes
- *Right to claim under warranty* 4
- *Structure of the safety notes* 4

I

Installation
- *Mounting notes before installing or removing option cards* 14
- *Mounting the DRS11B* 14
- *Terminal description of DRS11B* 16
- *Wiring diagram MOVIDRIVE® MDX61B master - MOVIDRIVE® MDX61B slave* 20
- *Wiring diagram of incremental encoder as master* 21

M

Mounting notes before installing or removing option cards 14

O

Other applicable documentation 5

P

Parameter descriptions 32
Parameter list 31
Project planning 8
Project planning
- *Application examples* 8
- *Project planning information* 10
- *Synchronous operation with wire-break monitoring of encoder connection* 11
- *Synchronous operation with synchronous encoder* 13
- *Synchronous start/stop* 12

Project planning information 10

R

Relationship between parameter values and output speed 29
Right to claim under warranty 4

S

Safety notes
- *Hoist applications* 5

Signaling functions 30
Startup 22
- *Activating synchronous operation* 24
- *Brief description* 23
- *Calculation examples P221 and P222* 26
- *Preliminary work* 24
- *Testing synchronous operation with mounted drives* 25

Structure of the safety notes 4
Synchronous operation with wire-break monitoring of the encoder connection 11
Synchronous operation with synchronous encoder 13
Synchronous start/stop 12
System description 6
System description
- *Block circuit diagram for synchronous operation control* 7

T

Technical data 41
Terminal description of DRS11B 16

W

Wiring diagram
- *Incremental encoder as master* 21
- *Master and slave drive turning in the opposite direction* 18, 19
- *Master and slave drive turning in the same direction* 17, 18
- *MOVIDRIVE® MDX61B master - MOVIDRIVE® MDX61B slave* 20

Address List

Germany			
Headquarters **Production** **Sales**	**Bruchsal**	SEW-EURODRIVE GmbH & Co KG Ernst-Blickle-Straße 42 D-76646 Bruchsal P.O. Box Postfach 3023 • D-76642 Bruchsal	Tel. +49 7251 75-0 Fax +49 7251 75-1970 http://www.sew-eurodrive.de sew@sew-eurodrive.de
Service Competence Center	**Central**	SEW-EURODRIVE GmbH & Co KG Ernst-Blickle-Straße 1 D-76676 Graben-Neudorf	Tel. +49 7251 75-1710 Fax +49 7251 75-1711 sc-mitte@sew-eurodrive.de
	North	SEW-EURODRIVE GmbH & Co KG Alte Ricklinger Straße 40-42 D-30823 Garbsen (near Hannover)	Tel. +49 5137 8798-30 Fax +49 5137 8798-55 sc-nord@sew-eurodrive.de
	East	SEW-EURODRIVE GmbH & Co KG Dänkritzer Weg 1 D-08393 Meerane (near Zwickau)	Tel. +49 3764 7606-0 Fax +49 3764 7606-30 sc-ost@sew-eurodrive.de
	South	SEW-EURODRIVE GmbH & Co KG Domagkstraße 5 D-85551 Kirchheim (near München)	Tel. +49 89 909552-10 Fax +49 89 909552-50 sc-sued@sew-eurodrive.de
	West	SEW-EURODRIVE GmbH & Co KG Siemensstraße 1 D-40764 Langenfeld (near Düsseldorf)	Tel. +49 2173 8507-30 Fax +49 2173 8507-55 sc-west@sew-eurodrive.de
	Electronics	SEW-EURODRIVE GmbH & Co KG Ernst-Blickle-Straße 42 D-76646 Bruchsal	Tel. +49 7251 75-1780 Fax +49 7251 75-1769 sc-elektronik@sew-eurodrive.de
	Drive Service Hotline / 24 Hour Service		+49 180 5 SEWHELP +49 180 5 7394357
	Additional addresses for service in Germany provided on request!		

France			
Production **Sales** **Service**	**Haguenau**	SEW-USOCOME 48-54, route de Soufflenheim B. P. 20185 F-67506 Haguenau Cedex	Tel. +33 3 88 73 67 00 Fax +33 3 88 73 66 00 http://www.usocome.com sew@usocome.com
Production	**Forbach**	SEW-EUROCOME Zone Industrielle Technopôle Forbach Sud B. P. 30269 F-57604 Forbach Cedex	Tel. +33 3 87 29 38 00
Assembly **Sales** **Service**	**Bordeaux**	SEW-USOCOME Parc d'activités de Magellan 62, avenue de Magellan - B. P. 182 F-33607 Pessac Cedex	Tel. +33 5 57 26 39 00 Fax +33 5 57 26 39 09
	Lyon	SEW-USOCOME Parc d'Affaires Roosevelt Rue Jacques Tati F-69120 Vaulx en Velin	Tel. +33 4 72 15 37 00 Fax +33 4 72 15 37 15
	Paris	SEW-USOCOME Zone industrielle 2, rue Denis Papin F-77390 Verneuil l'Etang	Tel. +33 1 64 42 40 80 Fax +33 1 64 42 40 88
	Additional addresses for service in France provided on request!		

Algeria			
Sales	**Alger**	Réducom 16, rue des Frères Zaghnoun Bellevue El-Harrach 16200 Alger	Tel. +213 21 8222-84 Fax +213 21 8222-84 reducom_sew@yahoo.fr

Argentina			
Assembly **Sales** **Service**	**Buenos Aires**	SEW EURODRIVE ARGENTINA S.A. Centro Industrial Garin, Lote 35 Ruta Panamericana Km 37,5 1619 Garin	Tel. +54 3327 4572-84 Fax +54 3327 4572-21 sewar@sew-eurodrive.com.ar

Australia			
Assembly **Sales** **Service**	**Melbourne**	SEW-EURODRIVE PTY. LTD. 27 Beverage Drive Tullamarine, Victoria 3043	Tel. +61 3 9933-1000 Fax +61 3 9933-1003 http://www.sew-eurodrive.com.au enquires@sew-eurodrive.com.au
	Sydney	SEW-EURODRIVE PTY. LTD. 9, Sleigh Place, Wetherill Park New South Wales, 2164	Tel. +61 2 9725-9900 Fax +61 2 9725-9905 enquires@sew-eurodrive.com.au
	Townsville	SEW-EURODRIVE PTY. LTD. 12 Leyland Street Garbutt, QLD 4814	Tel. +61 7 4779 4333 Fax +61 7 4779 5333 enquires@sew-eurodrive.com.au

Austria			
Assembly **Sales** **Service**	**Wien**	SEW-EURODRIVE Ges.m.b.H. Richard-Strauss-Strasse 24 A-1230 Wien	Tel. +43 1 617 55 00-0 Fax +43 1 617 55 00-30 http://sew-eurodrive.at sew@sew-eurodrive.at

Belarus			
Sales	**Minsk**	SEW-EURODRIVE BY RybalkoStr. 26 BY-220033 Minsk	Tel.+375 (17) 298 38 50 Fax +375 (17) 29838 50 sales@sew.by

Belgium			
Assembly **Sales** **Service**	**Brüssel**	SEW Caron-Vector S.A. Avenue Eiffel 5 B-1300 Wavre	Tel. +32 10 231-311 Fax +32 10 231-336 http://www.sew-eurodrive.be info@caron-vector.be
Service Competence Center	**Industrial Gears**	SEW Caron-Vector S.A. Rue de Parc Industriel, 31 BE-6900 Marche-en-Famenne	Tel. +32 84 219-878 Fax +32 84 219-879 http://www.sew-eurodrive.be service-wallonie@sew-eurodrive.be

Brazil			
Production **Sales** **Service**	**Sao Paulo**	SEW-EURODRIVE Brasil Ltda. Avenida Amâncio Gaiolli, 50 Caixa Postal: 201-07111-970 Guarulhos/SP - Cep.: 07251-250	Tel. +55 11 6489-9133 Fax +55 11 6480-3328 http://www.sew.com.br sew@sew.com.br
	Additional addresses for service in Brazil provided on request!		

Bulgaria			
Sales	**Sofia**	BEVER-DRIVE GmbH Bogdanovetz Str.1 BG-1606 Sofia	Tel. +359 2 9151160 Fax +359 2 9151166 bever@fastbg.net

Cameroon			
Sales	**Douala**	Electro-Services Rue Drouot Akwa B.P. 2024 Douala	Tel. +237 33 431137 Fax +237 33 431137

Canada			
Assembly **Sales** **Service**	**Toronto**	SEW-EURODRIVE CO. OF CANADA LTD. 210 Walker Drive Bramalea, Ontario L6T3W1	Tel. +1 905 791-1553 Fax +1 905 791-2999 http://www.sew-eurodrive.ca marketing@sew-eurodrive.ca
	Vancouver	SEW-EURODRIVE CO. OF CANADA LTD. 7188 Honeyman Street Delta. B.C. V4G 1 E2	Tel. +1 604 946-5535 Fax +1 604 946-2513 marketing@sew-eurodrive.ca
	Montreal	SEW-EURODRIVE CO. OF CANADA LTD. 2555 Rue Leger LaSalle, Quebec H8N 2V9	Tel. +1 514 367-1124 Fax +1 514 367-3677 marketing@sew-eurodrive.ca
	Additional addresses for service in Canada provided on request!		

Chile			
Assembly **Sales** **Service**	**Santiago de Chile**	SEW-EURODRIVE CHILE LTDA. Las Encinas 1295 Parque Industrial Valle Grande LAMPA RCH-Santiago de Chile P.O. Box Casilla 23 Correo Quilicura - Santiago - Chile	Tel. +56 2 75770-00 Fax +56 2 75770-01 http://www.sew-eurodrive.cl ventas@sew-eurodrive.cl

China			
Production **Assembly** **Sales** **Service**	**Tianjin**	SEW-EURODRIVE (Tianjin) Co., Ltd. No. 46, 7th Avenue, TEDA Tianjin 300457	Tel. +86 22 25322612 Fax +86 22 25322611 info@sew-eurodrive.cn http://www.sew-eurodrive.cn
Assembly **Sales** **Service**	**Suzhou**	SEW-EURODRIVE (Suzhou) Co., Ltd. 333, Suhong Middle Road Suzhou Industrial Park Jiangsu Province, 215021	Tel. +86 512 62581781 Fax +86 512 62581783 suzhou@sew-eurodrive.cn
	Guangzhou	SEW-EURODRIVE (Guangzhou) Co., Ltd. No. 9, JunDa Road East Section of GETDD Guangzhou 510530	Tel. +86 20 82267890 Fax +86 20 82267891 guangzhou@sew-eurodrive.cn
	Shenyang	SEW-EURODRIVE (Shenyang) Co., Ltd. 10A-2, 6th Road Shenyang Economic Technological Development Area Shenyang, 110141	Tel. +86 24 25382538 Fax +86 24 25382580 shenyang@sew-eurodrive.cn
	Additional addresses for service in China provided on request!		

Colombia			
Assembly **Sales** **Service**	**Bogotá**	SEW-EURODRIVE COLOMBIA LTDA. Calle 22 No. 132-60 Bodega 6, Manzana B Santafé de Bogotá	Tel. +57 1 54750-50 Fax +57 1 54750-44 http://www.sew-eurodrive.com.co sewcol@sew-eurodrive.com.co

Croatia			
Sales **Service**	**Zagreb**	KOMPEKS d. o. o. PIT Erdödy 4 II HR 10 000 Zagreb	Tel. +385 1 4613-158 Fax +385 1 4613-158 kompeks@net.hr

Czech Republic			
Sales	**Praha**	SEW-EURODRIVE CZ S.R.O. Business Centrum Praha Lužná 591 CZ-16000 Praha 6 - Vokovice	Tel. +420 220121234 Fax +420 220121237 http://www.sew-eurodrive.cz sew@sew-eurodrive.cz

Denmark			
Assembly **Sales** **Service**	**Kopenhagen**	SEW-EURODRIVEA/S Geminivej 28-30 DK-2670 Greve	Tel. +45 43 9585-00 Fax +45 43 9585-09 http://www.sew-eurodrive.dk sew@sew-eurodrive.dk

Egypt			
Sales **Service**	**Cairo**	Copam Egypt for Engineering & Agencies 33 El Hegaz ST, Heliopolis, Cairo	Tel. +20 2 22566-299 + 1 23143088 Fax +20 2 22594-757 http://www.copam-egypt.com/ copam@datum.com.eg

Estonia			
Sales	**Tallin**	ALAS-KUUL AS Reti tee 4 EE-75301 Peetri küla, Rae vald, Harjumaa	Tel. +372 6593230 Fax +372 6593231 veiko.soots@alas-kuul.ee

Finland			
Assembly **Sales** **Service**	**Lahti**	SEW-EURODRIVE OY Vesimäentie 4 FIN-15860 Hollola 2	Tel. +358 201 589-300 Fax +358 3 780-6211 sew@sew.fi http://www.sew-eurodrive.fi
Production **Assembly** **Service**	**Karkkila**	SEW Industrial Gears OY Valurinkatu 6 FIN-03600 Karkkila	Tel. +358 201 589-300 Fax +358 201 589-310 sew@sew.fi http://www.sew-eurodrive.fi

Gabon			
Sales	**Libreville**	Electro-Services B.P. 1889 Libreville	Tel. +241 7340-11 Fax +241 7340-12

Great Britain			
Assembly **Sales** **Service**	**Normanton**	SEW-EURODRIVE Ltd. Beckbridge Industrial Estate P.O. Box No.1 GB-Normanton, West- Yorkshire WF6 1QR	Tel. +44 1924 893-855 Fax +44 1924 893-702 http://www.sew-eurodrive.co.uk info@sew-eurodrive.co.uk

Greece			
Sales **Service**	**Athen**	Christ. Boznos & Son S.A. 12, Mavromichali Street P.O. Box 80136, GR-18545 Piraeus	Tel. +30 2 1042 251-34 Fax +30 2 1042 251-59 http://www.boznos.gr info@boznos.gr

Hong Kong			
Assembly **Sales** **Service**	**Hong Kong**	SEW-EURODRIVE LTD. Unit No. 801-806, 8th Floor Hong Leong Industrial Complex No. 4, Wang Kwong Road Kowloon, Hong Kong	Tel. +852 2 7960477 + 79604654 Fax +852 2 7959129 contact@sew-eurodrive.hk

Hungary			
Sales **Service**	**Budapest**	SEW-EURODRIVE Kft. H-1037 Budapest Kunigunda u. 18	Tel. +36 1 437 06-58 Fax +36 1 437 06-50 office@sew-eurodrive.hu

India			
Assembly **Sales** **Service**	**Vadodara**	SEW-EURODRIVE India Pvt. Ltd. Plot No. 4, GIDC POR Ramangamdi • Vadodara - 391 243 Gujarat	Tel. +91 265 2831086 Fax +91 265 2831087 http://www.seweurodriveindia.com sales@seweurodriveindia.com

Ireland			
Sales **Service**	**Dublin**	Alperton Engineering Ltd. 48 Moyle Road Dublin Industrial Estate Glasnevin, Dublin 11	Tel. +353 1 830-6277 Fax +353 1 830-6458 info@alperton.ie

Israel			
Sales	**Tel-Aviv**	Liraz Handasa Ltd. Ahofer Str 34B / 228 58858 Holon	Tel. +972 3 5599511 Fax +972 3 5599512 http://www.liraz-handasa.co.il office@liraz-handasa.co.il

Italy			
Assembly **Sales** **Service**	**Milano**	SEW-EURODRIVE di R. Blickle & Co.s.a.s. Via Bernini,14 I-20020 Solaro (Milano)	Tel. +39 02 96 9801 Fax +39 02 96 799781 http://www.sew-eurodrive.it sewit@sew-eurodrive.it

Ivory Coast			
Sales	**Abidjan**	SICA Ste industrielle et commerciale pour l'Afrique 165, Bld de Marseille B.P. 2323, Abidjan 08	Tel. +225 2579-44 Fax +225 2584-36

Japan			
Assembly **Sales** **Service**	**Iwata**	SEW-EURODRIVE JAPAN CO., LTD 250-1, Shimoman-no, Iwata Shizuoka 438-0818	Tel. +81 538 373811 Fax +81 538 373814 http://www.sew-eurodrive.co.jp sewjapan@sew-eurodrive.co.jp

Korea			
Assembly **Sales** **Service**	**Ansan-City**	SEW-EURODRIVE KOREA CO., LTD. B 601-4, Banweol Industrial Estate 1048-4, Shingil-Dong Ansan 425-120	Tel. +82 31 492-8051 Fax +82 31 492-8056 http://www.sew-korea.co.kr master@sew-korea.co.kr
	Busan	SEW-EURODRIVE KOREA Co., Ltd. No. 1720 - 11, Songjeong - dong Gangseo-ku Busan 618-270	Tel. +82 51 832-0204 Fax +82 51 832-0230 master@sew-korea.co.kr

Latvia			
Sales	**Riga**	SIA Alas-Kuul Katlakalna 11C LV-1073 Riga	Tel. +371 7139253 Fax +371 7139386 http://www.alas-kuul.com info@alas-kuul.com

Lebanon			
Sales	**Beirut**	Gabriel Acar & Fils sarl B. P. 80484 Bourj Hammoud, Beirut	Tel. +961 1 4947-86 +961 1 4982-72 +961 3 2745-39 Fax +961 1 4949-71 gacar@beirut.com

Lithuania			
Sales	**Alytus**	UAB Irseva Naujoji 19 LT-62175 Alytus	Tel. +370 315 79204 Fax +370 315 56175 info@irseva.lt http://www.sew-eurodrive.lt

Luxembourg			
Assembly **Sales** **Service**	**Brüssel**	CARON-VECTOR S.A. Avenue Eiffel 5 B-1300 Wavre	Tel. +32 10 231-311 Fax +32 10 231-336 http://www.sew-eurodrive.lu info@caron-vector.be

Malaysia			
Assembly **Sales** **Service**	**Johore**	SEW-EURODRIVE SDN BHD No. 95, Jalan Seroja 39, Taman Johor Jaya 81000 Johor Bahru, Johor West Malaysia	Tel. +60 7 3549409 Fax +60 7 3541404 sales@sew-eurodrive.com.my

Mexico			
Assembly **Sales** **Service**	**Queretaro**	SEW-EURODRIVE MEXIKO SA DE CV SEM-981118-M93 Tequisquiapan No. 102 Parque Industrial Queretaro C.P. 76220 Queretaro, Mexico	Tel. +52 442 1030-300 Fax +52 442 1030-301 http://www.sew-eurodrive.com.mx scmexico@seweurodrive.com.mx

Morocco			
Sales	**Casablanca**	Afit 5, rue Emir Abdelkader MA 20300 Casablanca	Tel. +212 22618372 Fax +212 22618351 ali.alami@premium.net.ma

Netherlands			
Assembly **Sales** **Service**	**Rotterdam**	VECTOR Aandrijftechniek B.V. Industrieweg 175 NL-3044 AS Rotterdam Postbus 10085 NL-3004 AB Rotterdam	Tel. +31 10 4463-700 Fax +31 10 4155-552 http://www.vector.nu info@vector.nu

New Zealand			
Assembly **Sales** **Service**	**Auckland**	SEW-EURODRIVE NEW ZEALAND LTD. P.O. Box 58-428 82 Greenmount drive East Tamaki Auckland	Tel. +64 9 2745627 Fax +64 9 2740165 http://www.sew-eurodrive.co.nz sales@sew-eurodrive.co.nz
	Christchurch	SEW-EURODRIVE NEW ZEALAND LTD. 10 Settlers Crescent, Ferrymead Christchurch	Tel. +64 3 384-6251 Fax +64 3 384-6455 sales@sew-eurodrive.co.nz

Norway			
Assembly **Sales** **Service**	**Moss**	SEW-EURODRIVE A/S Solgaard skog 71 N-1599 Moss	Tel. +47 69 24 10 20 Fax +47 69 24 10 40 http://www.sew-eurodrive.no sew@sew-eurodrive.no

Peru			
Assembly **Sales** **Service**	**Lima**	SEW DEL PERU MOTORES REDUCTORES S.A.C. Los Calderos, 120-124 Urbanizacion Industrial Vulcano, ATE, Lima	Tel. +51 1 3495280 Fax +51 1 3493002 http://www.sew-eurodrive.com.pe sewperu@sew-eurodrive.com.pe

Poland			
Assembly **Sales** **Service**	**Lodz**	SEW-EURODRIVE Polska Sp.z.o.o. ul. Techniczna 5 PL-92-518 Łódź	Tel. +48 42 67710-90 Fax +48 42 67710-99 http://www.sew-eurodrive.pl sew@sew-eurodrive.pl
		24 Hour Service	Tel. +48 602 739 739 (+48 602 SEW SEW) serwis@sew-eurodrive.pl

Portugal			
Assembly **Sales** **Service**	**Coimbra**	SEW-EURODRIVE, LDA. Apartado 15 P-3050-901 Mealhada	Tel. +351 231 20 9670 Fax +351 231 20 3685 http://www.sew-eurodrive.pt infosew@sew-eurodrive.pt

Romania			
Sales **Service**	**Bucureşti**	Sialco Trading SRL str. Madrid nr.4 011785 Bucuresti	Tel. +40 21 230-1328 Fax +40 21 230-7170 sialco@sialco.ro

Russia			
Assembly **Sales** **Service**	**St. Petersburg**	ZAO SEW-EURODRIVE P.O. Box 36 195220 St. Petersburg Russia	Tel. +7 812 3332522 +7 812 5357142 Fax +7 812 3332523 http://www.sew-eurodrive.ru sew@sew-eurodrive.ru

Senegal			
Sales	**Dakar**	SENEMECA Mécanique Générale Km 8, Route de Rufisque B.P. 3251, Dakar	Tel. +221 338 494 770 Fax +221 338 494 771 senemeca@sentoo.sn

Serbia			
Sales	**Beograd**	DIPAR d.o.o. Ustanicka 128a PC Košum, IV floor SCG-11000 Beograd	Tel. +381 11 347 3244 / +381 11 288 0393 Fax +381 11 347 1337 dipar@yubc.net

Singapore			
Assembly **Sales** **Service**	**Singapore**	SEW-EURODRIVE PTE. LTD. No 9, Tuas Drive 2 Jurong Industrial Estate Singapore 638644	Tel. +65 68621701 Fax +65 68612827 http://www.sew-eurodrive.com.sg sewsingapore@sew-eurodrive.com

Slovakia			
Sales	**Bratislava**	SEW-Eurodrive SK s.r.o. Rybničná 40 SK-83554 Bratislava	Tel. +421 2 49595201 Fax +421 2 49595200 sew@sew-eurodrive.sk http://www.sew-eurodrive.sk
	Žilina	SEW-Eurodrive SK s.r.o. ul. Vojtecha Spanyola 33 SK-010 01 Žilina	Tel. +421 41 700 2513 Fax +421 41 700 2514 sew@sew-eurodrive.sk

Slovakia			
	Banská Bystrica	SEW-Eurodrive SK s.r.o. Rudlovská cesta 85 SK-97411 Banská Bystrica	Tel. +421 48 414 6564 Fax +421 48 414 6566 sew@sew-eurodrive.sk

Slovenia			
Sales **Service**	**Celje**	Pakman - Pogonska Tehnika d.o.o. UI. XIV. divizije 14 SLO - 3000 Celje	Tel. +386 3 490 83-20 Fax +386 3 490 83-21 pakman@siol.net

South Africa			
Assembly **Sales** **Service**	**Johannesburg**	SEW-EURODRIVE (PROPRIETARY) LIMITED Eurodrive House Cnr. Adcock Ingram and Aerodrome Roads Aeroton Ext. 2 Johannesburg 2013 P.O.Box 90004 Bertsham 2013	Tel. +27 11 248-7000 Fax +27 11 494-3104 http://www.sew.co.za dross@sew.co.za
	Capetown	SEW-EURODRIVE (PROPRIETARY) LIMITED Rainbow Park Cnr. Racecourse & Omuramba Road Montague Gardens Cape Town P.O.Box 36556 Chempet 7442 Cape Town	Tel. +27 21 552-9820 Fax +27 21 552-9830 Telex 576 062 dswanepoel@sew.co.za
	Durban	SEW-EURODRIVE (PROPRIETARY) LIMITED 2 Monaceo Place Pinetown Durban P.O. Box 10433, Ashwood 3605	Tel. +27 31 700-3451 Fax +27 31 700-3847 dtait@sew.co.za

Spain			
Assembly **Sales** **Service**	**Bilbao**	SEW-EURODRIVE ESPAÑA, S.L. Parque Tecnológico, Edificio, 302 E-48170 Zamudio (Vizcaya)	Tel. +34 94 43184-70 Fax +34 94 43184-71 http://www.sew-eurodrive.es sew.spain@sew-eurodrive.es

Sweden			
Assembly **Sales** **Service**	**Jönköping**	SEW-EURODRIVE AB Gnejsvägen 6-8 S-55303 Jönköping Box 3100 S-55003 Jönköping	Tel. +46 36 3442-00 Fax +46 36 3442-80 http://www.sew-eurodrive.se info@sew-eurodrive.se

Switzerland			
Assembly **Sales** **Service**	**Basel**	Alfred Imhof A.G. Jurastrasse 10 CH-4142 Münchenstein bei Basel	Tel. +41 61 417 1717 Fax +41 61 417 1700 http://www.imhof-sew.ch info@imhof-sew.ch

Thailand			
Assembly **Sales** **Service**	**Chonburi**	SEW-EURODRIVE (Thailand) Ltd. 700/456, Moo.7, Donhuaroh Muang Chonburi 20000	Tel. +66 38 454281 Fax +66 38 454288 sewthailand@sew-eurodrive.com

Tunisia			
Sales	**Tunis**	T. M.S. Technic Marketing Service 5, Rue El Houdaibiah 1000 Tunis	Tel. +216 71 4340-64 + 71 4320-29 Fax +216 71 4329-76 tms@tms.com.tn

Turkey			
Assembly **Sales** **Service**	**Istanbul**	SEW-EURODRIVE Hareket Sistemleri San. ve Tic. Ltd. Sti. Bagdat Cad. Koruma Cikmazi No. 3 TR-34846 Maltepe ISTANBUL	Tel. +90 216 4419164, 3838014, 3738015 Fax +90 216 3055867 http://www.sew-eurodrive.com.tr sew@sew-eurodrive.com.tr

Ukraine			
Sales **Service**	**Dnepropetrovsk**	SEW-EURODRIVE Str. Rabochaja 23-B, Office 409 49008 Dnepropetrovsk	Tel. +380 56 370 3211 Fax +380 56 372 2078 http://www.sew-eurodrive.ua sew@sew-eurodrive.ua

USA			
Production **Assembly** **Sales** **Service**	**Greenville**	SEW-EURODRIVE INC. 1295 Old Spartanburg Highway P.O. Box 518 Lyman, S.C. 29365	Tel. +1 864 439-7537 Fax Sales +1 864 439-7830 Fax Manuf. +1 864 439-9948 Fax Ass. +1 864 439-0566 Telex 805 550 http://www.seweurodrive.com cslyman@seweurodrive.com
Assembly **Sales** **Service**	**San Francisco**	SEW-EURODRIVE INC. 30599 San Antonio St. Hayward, California 94544-7101	Tel. +1 510 487-3560 Fax +1 510 487-6433 cshayward@seweurodrive.com
	Philadelphia/PA	SEW-EURODRIVE INC. Pureland Ind. Complex 2107 High Hill Road, P.O. Box 481 Bridgeport, New Jersey 08014	Tel. +1 856 467-2277 Fax +1 856 845-3179 csbridgeport@seweurodrive.com
	Dayton	SEW-EURODRIVE INC. 2001 West Main Street Troy, Ohio 45373	Tel. +1 937 335-0036 Fax +1 937 440-3799 cstroy@seweurodrive.com
	Dallas	SEW-EURODRIVE INC. 3950 Platinum Way Dallas, Texas 75237	Tel. +1 214 330-4824 Fax +1 214 330-4724 csdallas@seweurodrive.com
	Additional addresses for service in the USA provided on request!		

Venezuela			
Assembly **Sales** **Service**	**Valencia**	SEW-EURODRIVE Venezuela S.A. Av. Norte Sur No. 3, Galpon 84-319 Zona Industrial Municipal Norte Valencia, Estado Carabobo	Tel. +58 241 832-9804 Fax +58 241 838-6275 http://www.sew-eurodrive.com.ve ventas@sew-eurodrive.com.ve sewfinanzas@cantv.net

How we're driving the world

With people who think fast and develop the future with you.

With a worldwide service network that is always close at hand.

With drives and controls that automatically improve your productivity.

With comprehensive knowledge in virtually every branch of industry today.

With uncompromising quality that reduces the cost and complexity of daily operations.

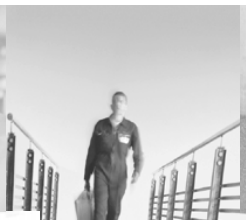

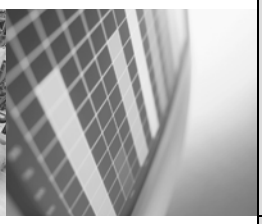

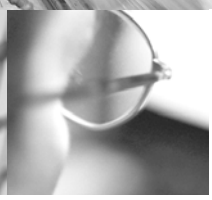

SEW-EURODRIVE
Driving the world

With a global presence that offers responsive and reliable solutions. Anywhere.

With innovative technology that solves tomorrow's problems today.

With online information and software updates, via the Internet, available around the clock.

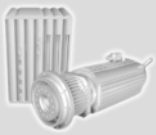
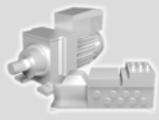
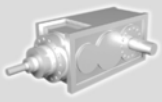

SEW EURODRIVE

SEW-EURODRIVE GmbH & Co KG
P.O. Box 3023 · D-76642 Bruchsal / Germany
Phone +49 7251 75-0 · Fax +49 7251 75-1970
sew@sew-eurodrive.com

→ **www.sew-eurodrive.com**