SEW EURODRIVE

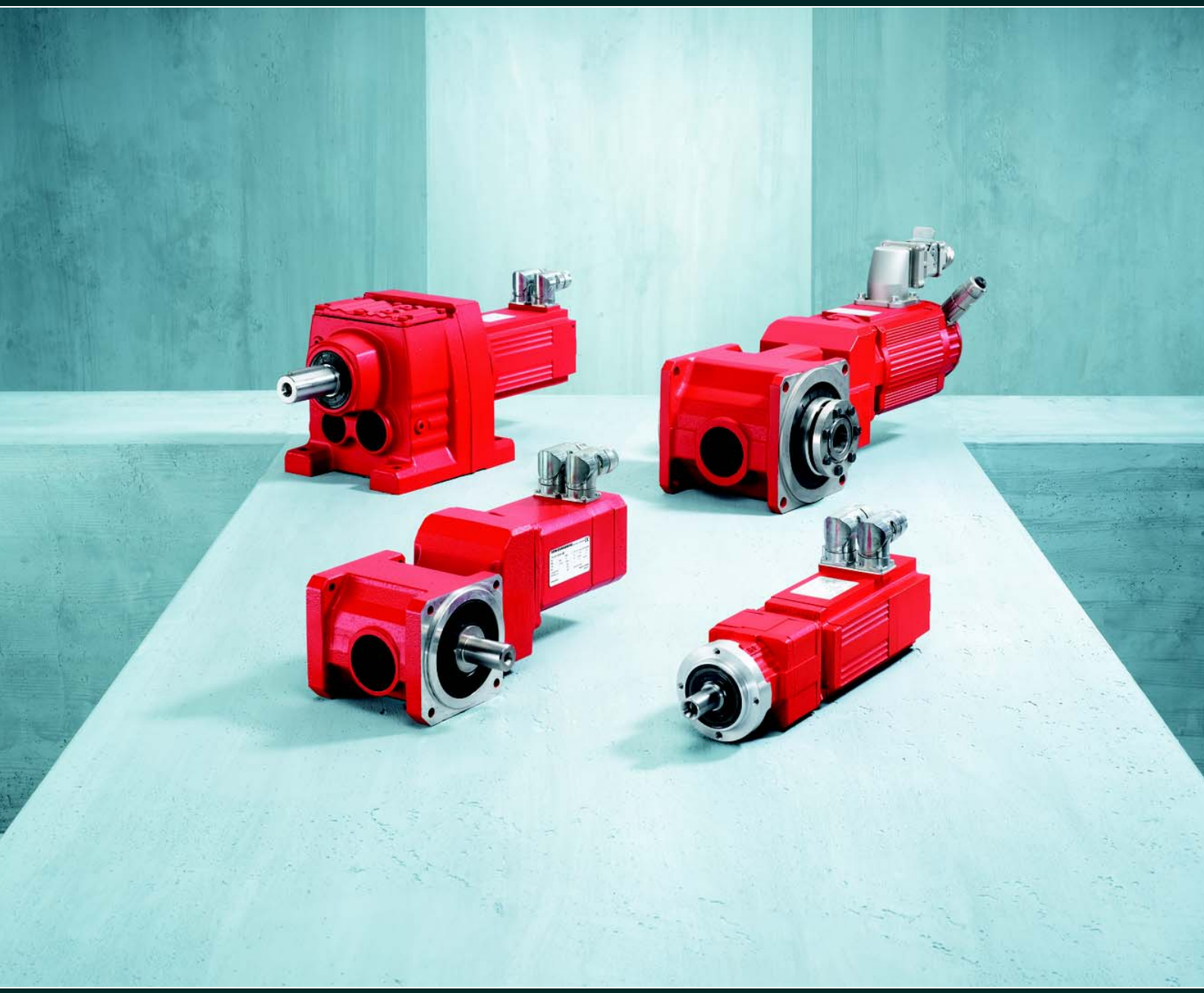

Synchronous Servo Gearmotors

Edition 04/2008
11499028 / EN

Catalog

Color code system for catalogs and system manuals

Our catalogs and system manuals are identified by a color code system at the back to make it easier to work with these publications. The short designation of the publication is indicated as well. In this way you can immediately recognize the publication even if it is standing on a shelf together with other publications. The following overview shows an exemplary assignment of colors to product groups and products.

Mechanics

DR-GM 2008	GSE1 2008	GSE2 2008	GK 2008
DR gearmotors	Synchronous servo gearmotors	Asynchronous servo gearmotors	Gear units

Electromechanics

MOT1 2008	MOT2 2008
DR series AC motors	DT/DV/CT/CV series AC motors

Explosion-proof drives

EXG 2008	EXS 2008	EXM 2008
Explosion-proof gearmotors	Explosion-proof servo gearmotors	Explosion-proof motors

Control cabinet inverters, control technology and HMI

MDX 2008	MC 2008	MX 2008	PLC 2008	HMI 2008
MOVIDRIVE®	MOVITRAC®	MOVIAXIS®	MOVI-PLC®	DOP11B®

Decentralized technology

MM 2008	DI 2007	MG 2008
MOVIMOT® gearmotors	Decentralized installation	MOVIGEAR®

Industrial gear units

IGX1 2008	IGX2 2008
X series horizontal industrial gear units	X series vertical industrial gear units

1 Introduction 6
1.1 The SEW-EURODRIVE Group of Companies 6
1.2 Products and systems from SEW-EURODRIVE 7
1.3 Additional documentation 9
1.4 Copyright notice 9

2 Product Description of Gear Units and Gearmotors 10
2.1 General information 10
2.2 Corrosion and surface protection 11
2.3 Extended storage – R, F, K, S, W gear units 13
2.4 General product description – R, F, K, S, W gear units 15
2.5 General product description – BS.F, PS.F, PS.C gear units 18

3 Overview of Types and Unit Designation 20
3.1 Design variants and options – R, F, K, S, W gear units 20
3.2 Design variants and options of – BS.F, PS.F and PS.C gear units 32
3.3 Unit designation of servo gearmotors 36
3.4 Servo gearmotor nameplate 37
3.5 Servo gearmotors at a glance 38

4 Project Planning Notes for Servo Gearmotors 39
4.1 Additional documentation 39
4.2 Data for drive and gear unit selection 40
4.3 Project planning procedure 41
4.4 Project planning notes – R, F, K, S, W gear units 46
4.5 Project planning notes – BS.F, PS.F, PS.C gear units 51
4.6 Project planning example: Gantry with servo drives 55

5 Gear Unit Mounting Positions 66
5.1 General notes on mounting positions – R, F, K, S, W gear units 66
5.2 Order information for servo gearmotors – R, F, K, S, W gear units 67
5.3 General notes on mounting positions – BS.F, PS.F, PS.C gear units 69
5.4 Order information for servo gearmotors – BS.F, PS.F, PS.C gear units 70
5.5 Order information for servomotors 72
5.6 Key to the mounting position sheets 80
5.7 Mounting positions of helical gearmotors 82
5.8 Parallel shaft helical gearmotors 87
5.9 Mounting positions of helical-bevel gearmotors 90
5.10 Mounting positions of helical-worm gearmotors 95
5.11 Mounting positions of Spiroplan® gearmotors 101
5.12 Mounting positions of BS.F helical-bevel gearmotors 104
5.13 Mounting positions of PS.F, PS.C planetary gearmotors 113

6 Design and Operating Notes 115
6.1 Installation / removal of gear units with hollow shafts and keys 115
6.2 Gear units with hollow shaft 119
6.3 TorqLOC® mounting system for gear units with hollow shaft 120
6.4 Gear unit with flange block shaft 121
6.5 Shouldered hollow shaft with shrink disc option 122
6.6 Fastening the gear unit 129
6.7 Torque arms 129
6.8 Flange contours of RF.. and R..F gear units 130
6.9 Flange contours of FF.., KF.., SF.. and WF.. gear units 131
6.10 Flange contours of FAF.., KAF.., SAF.. and WAF.. gear units 132
6.11 Fixed covers 133
6.12 Condition monitoring: Oil-aging and vibration sensor – R, F, K, S, W 135
6.13 Lubricants and fill quantities – R, F, K, S, W gear units 138
6.14 Lubricants and fill quantities – BS.F, PS.F gear units 145

7 Important Notes on Selection Tables an Dimension Sheets 149
7.1 Notes on the selection tables 149
7.2 Notes on the dimension sheets 150
7.3 Gearmotor dimensions 153

8 Helical Gearmotors – R Gear Units 154
8.1 Design variants 154
8.2 RX 57-107 / CMP / DS / CM – Selection tables, dimension sheets 155
8.14 R 07-107 / CMP – Selection tables, dimension sheets 181

9 Parallel Shaft Helical Gearmotors – F Gear Units 254
9.1 Design variants 254
9.2 F 27-107 / CMP / DS / CM – Selection tables, dimension sheets 256

10 Helical-Bevel Gearmotors – K Gear Units 352
10.1 Design variants 352
10.2 K 37-107 / CMP / DS / CM – Selection tables, dimension sheets 354

11 Helical-Worm Gearmotors – S Gear Units 438
11.1 Design variants 438
11.2 S 37-67 / CMP / DS / CM – Selection tables, dimension sheets 440

12 Spiroplan® Gearmotors – W Gear Units 486
12.1 Design variants 486
12.2 W37 / CMP / DS / CM – Selection tables, dimension sheets 488

13 Helical-Bevel Gearmotors – BS.F Gear Units 500
13.1 Design variants 500
13.2 BS.F 202-802 / CMP / DS – Selection tables, dimension sheets 502
13.14 Front-end mounting – Dimension sheet 563
13.15 Torque arm – Dimension sheet 564
13.16 Tolerances and chamfers for flange block gear unit – Dimension sheet ... 565

14 Planetary Gearmotors – PS.F Gear Units 566
14.1 Design variants 566
14.2 PS.F 121/122-921/922 / CMP / DS – Selection tables, dimension sheets. 567
14.18 PSBF 221/222-821/822 / CMP / DS – Selection tables, dimension sheets 601
14.30 Tolerances and chamfers for flange block gear unit – Dimension sheet ... 628

15 Planetary Gearmotors – PS.C Gear Units 629
15.1 Design variants 629
15.2 PS.C221/222-621/622 / CMP / DS – Selection tables, dimension sheets . 630

16 Main Technical Data of the Servomotors 658
16.1 Technical data of DFS/CFM motors 659
16.2 Technical data of CMP motors 663

17 Abbreviation Key and Index 664
18.1 Abbreviation key 664
18.2 Index 665

18 Address Directory 668

1 Introduction

1.1 The SEW-EURODRIVE Group of Companies

Global presence

Driving the world with innovative drive solutions for all branches and for every application. Products and systems from SEW-EURODRIVE are used in a multitude of applications – worldwide. Be it in the automotive, building materials, food and beverage or metal-processing industry – The decision to use drive technology 'made by SEW-EURODRIVE' stands for reliability for both functionality and investment.

Not only are we represented in all important branches of industry today – we are found all over the world: with 12 manufacturing plants, 64 assembly plants in 46 countries and our comprehensive range of services, which we consider an integrative service that continues our commitment to outstanding quality.

Always the right drive

The SEW-EURODRIVE modular concept offers millions of combinations. This wide selection enables you to choose the correct drive for all applications, each based on the required speed and torque range, space available and the ambient conditions. Gear units and gearmotors offering a unique and finely tuned performance range and the best economic prerequisites to face your drive challenges.

The gearmotors are electronically empowered by MOVITRAC® frequency inverters, MOVIDRIVE® drive and MOVIAXIS® multi-axis servo drives, a combination that blends perfectly with the existing SEW-EURODRIVE systems program. As is the case with the mechanical systems, development, production and assembly is carried out completely by SEW-EURODRIVE. In combination with our drive electronics, these drives will provide the utmost in flexibility.

Products of the servo drive system, such as low backlash servo gear units, compact servomotors or MOVIAXIS® multi-axis servo drives provide precision and dynamics. From single-axis or multi-axis applications all the way to synchronized process sequences, servo drive systems by SEW-EURODRIVE offer a flexible and customized implementation of your application.

For economical, decentralized installations, SEW-EURODRIVE offers components from its decentralized drive system, such as MOVIMOT®, the gearmotor with integrated frequency inverter or MOVI-SWITCH®, the gearmotor with integrated switching and protection function. SEW-EURODRIVE has developed hybrid cables to provide cost-effective functional solutions, independent of the philosophy behind or the size of the system. The latest developments from SEWEURODRIVE: MOVITRANS® – system components for contactless energy transfer, MOVIPRO® – the decentralized drive control and MOVIFIT® – the new decentralized intelligence.

Power, quality and sturdy design combined in one standard product: with SEW-EURODRIVE, high-torque industrial gear units achieve large movements. The modular concept once again provides optimum adaptation of industrial gear units to meet a wide range of the most varying applications.

Your ideal partner

Its global presence, extensive product range and broad spectrum of services make SEW-EURODRIVE the ideal partner for the machinery and plant construction industry when it comes to providing drive systems for demanding applications in all applications and branches of industry.

1.2 Products and systems from SEW-EURODRIVE

The products and systems from SEW-EURODRIVE are divided into four product groups. These four product groups are:

1. Gearmotors and frequency inverters
2. Servo Drive Systems
3. Decentralized drive systems
4. Industrial gear units

Products and systems used in several group applications are listed in a separate group "Products and systems covering several product groups." Consult the following tables to locate the products and systems included in the respective product group:

1. Gearmotors and frequency inverters		
Gear units / gearmotors	**Motors**	**Frequency inverters**
• Helical gear units/ helical gearmotors • Parallel shaft helical gear units / parallel shaft helical gearmotors • Helical-bevel gear units / helical-bevel gearmotors • Helical-worm gear units/ helical-worm gearmotors • Spiroplan® right-angle gearmotors • Drives for electrified monorail systems • Geared torque motors • Pole-changing gearmotors • Variable speed gear units / variable speed gearmotors • Aseptic gearmotors • Gear units / gearmotors to ATEX standard • Variable speed gear units / variable speed gearmotors to ATEX standard	• Asynchronous AC motors / AC brake motors • Pole-changing AC motors / AC brakemotors • Energy efficient motors • Explosion-proof AC motors / AC brakemotors • Torque motors • Single-phase motors / single-phase brakemotors • Asynchronous linear motors	• MOVITRAC® frequency inverters • MOVIDRIVE® inverters • Control, technology and communication options for inverters

2. Servo Drive Systems		
Servo gear units/servo gearmotors	**Servomotors**	**Servo drive inverters/servo inverters**
• Low backlash planetary servo gear units/planetary gearmotors • Low backlash helical-bevel servo gear units/helical-bevel gearmotors • R, F, K, S, W gear units/gearmotors • Explosion-proof servo gear units/servo gearmotors	• Asynchronous servomotors/servo brakemotors • Synchronous servomotors/servo brakemotors • Explosion-proof servomotors/servo brakemotors • Synchronous linear motors	• MOVIDRIVE® servo inverters • MOVIAXIS® multi-axis servo inverter • Control, technology and communication options for servo drive inverters and servo inverters

3. Decentralized drive systems		
Decentralized drives	**Communication and installation**	**Contactless energy transfer**
• MOVIMOT® gearmotors with integrated frequency inverter • MOVIMOT® motors/brakemotors with integrated frequency inverter • MOVI-SWITCH® gearmotors with integrated switching and protection function • MOVI-SWITCH® motors/brakemotors with integrated switching and protection function • Explosion-proof MOVIMOT® and MOVI-SWITCH® gearmotors	• Fieldbus interfaces • Field distributors for decentralized installation • MOVIFIT® product range – MOVIFIT® MC for controlling MOVIMOT® drives – MOVIFIT®-SC with integrated electronic motor switch – MOVIFIT® FC with integrated frequency inverter	• MOVITRANS® system – Stationary components for energy supply – Mobile components for energy absorption – Line cables and installation material

4. Industrial gear units
• Helical gear units • Bevel-helical gear units • Planetary gear units

Products and systems covering several product groups
• Operator terminals • MOVI-PLC® drive-based control system

In addition to its products and systems, SEW-EURODRIVE offers a comprehensive range of services. These include:

- Technical consulting
- Application software
- Seminars and training
- Extensive technical documentation
- International customer service

Visit our home page:

→ **www.sew-eurodrive.com**

The website offers a great deal of information and services.

1.3 Additional documentation

Content of this publication

This "Synchronous Servo Gearmotors" catalog provides a detailed description of the following product groups from SEW-EURODRIVE:

- The combination of synchronous servomotors DS, CM and CMP with
  - R, F, K, S, W gear units
  - BS.F gear units
  - PS.F gear units
  - PS.C gear units

The descriptions include:

- Product descriptions
- Type overviews
- Project planning information
- Visual representation of mounting positions
- Explanation on the order information
- Combination overviews and technical data
- Dimension sheets

For details on motor options, refer to the "AC Motors" catalog/price catalog.

For details on gear unit options and adapters, refer to the "Gear Units" catalog/price catalog.

Additional documentation

The following price catalogs and catalogs are available from SEW-EURODRIVE in addition to this "Synchronous Servo Gearmotors" catalog:

- AC motors
- Gear unit catalog

These price catalogs and catalogs offer the following information:

- Product descriptions
- Technical data and inverter assignments
- Important information on tables and dimension sheets
- Visual representation of the different types
- Selection tables
- Dimension sheets
- Technical data
- Notes on adapter mounting

1.4 Copyright notice

Copyright © 2008 – All rights reserved.

Any reproduction, modification, distribution or unintended use, in whole or in part, is prohibited.

2 Product Description of Gear Units and Gearmotors

2.1 General information

Coating

The gear units, synchronous servomotors and servo gearmotors from SEW-EURODRIVE are coated as follows:

Type	Coating according to DIN 1843
Synchronous gearmotor with BS.F../PS.F../..PS.C..	RAL 9005 black
Synchronous gearmotor with R, F, K, S, W gear unit	RAL 7031 blue gray

Special coatings are available on request.

Weight specifications

Please note that all weights shown in the catalogs exclude the oil fill for the gear units and gearmotors. The weights vary according to gear unit design and gear unit size. The lubricant fill depends on the mounting position selected, which means that in this case no universally applicable information can be given. For approximate lubricant fill volumes depending on the mounting position, refer to the gear unit catalog. For the exact weight, refer to the order confirmation.

Brakemotors

On request, motors and gearmotors can be supplied with an integrated mechanical brake. The SEW-EURODRIVE brakes can be divided into 3 categories:

- Type 1: DC-operated electromagnetic disk brake that is released electrically and applied with spring force, with working capacity and emergency stop properties.
- Type 2: DC-operated electromagnetic disk brake that is released electrically and applied with spring force, with the typical properties of a holding brake for highly dynamic servomotors.
- Type 3: DC-operated permanent-magnet disk brake that is released electrically and applied with solenoid force, with the typical properties of a holding brake for highly dynamic servomotors. This brake type is only used for the DS56.

Due to their operating principle, all brake types are applied if the power fails. This means they meet the basic safety requirements. A type 1 brake can also be released mechanically if equipped with manual brake release. All brake types are controlled by a control element that is either installed in the motor wiring space or the control cabinet.

Type 2 or type 3 brakes can also be controlled directly by a suitable inverter/servo inverter (e.g. MOVIAXIS®).

A characteristic feature of the brakes is their very short design. The brake bearing end shield is a part of both the motor and the brake. The integral construction of the SEW-EURODRIVE brakemotor permits particularly compact and sturdy solutions.

International markets

On request, SEW-EURODRIVE supplies UL registered motors or CSA certified motors with connection conditions according to CSA and NEMA standard.

For the Japanese market, SEW-EURODRIVE offers motors conforming to JIS standard. Contact your sales representative to assist you in such cases.

2.2 Corrosion and surface protection

General information

SEW-EURODRIVE offers various optional protective measures for operation of motors and gearmotors under special ambient conditions.

The protective measures comprise two groups:

- Corrosion protection KS for motors
- Surface protection OS for motors and gear units

For motors, optimum protection is offered by a combination of corrosion protection KS and surface protection OS.

In addition, special optional protective measures for the output shafts are also available.

KS corrosion protection

The KS corrosion protection for motors comprises the following measures:

- All retaining screws that are loosened during operation are made of stainless steel.
- The nameplates are made of stainless steel.
- A top coating is applied to various motor parts.
- The flange contact surfaces and shaft ends are treated with a temporary anti-corrosion agent.
- Additional measures for brakemotors.

A sticker labeled "KORROSIONSSCHUTZ" (corrosion protection) indicates that special treatment has been applied.

	NOTE
	Motors with forced cooling fan are not available with KS corrosion protection.

Surface protection OS

In addition to standard surface protection, motors and gear units also available with surface protection OS1 to OS4. The special procedure Z can also be performed in addition. The special procedure Z means that large surface recesses are sprayed with a rubber filling prior to painting.

Surface protection	Permutation of layers	NDFT[1] on gray-cast iron [µm]	Suitable for
Standard	1 × Dip primer 1 × One-pack top coat	Approx. 50-70	• Normal ambient conditions • Relative humidity below 90% • Surface temperature up to max. 120 °C • Corrosivity category C1[2]
OS1	1 × Dip primer 1 × Two-pack base coat 1 × Two-pack top coat	Approx. 120-150	• Low environmental impact • Relative humidity max. 95% • Surface temperature up to max. 120 °C • Corrosivity category C2[2]
OS2	1 × Dip primer 2 × Two-pack base coat 1 × Two-pack top coat	Approx. 170-210	• Medium environmental impact • Relative humidity up to 100% • Surface temperature up to max. 120 °C • Corrosivity category C3[2]
OS3	1 × Dip primer 2 × Two-pack base coat 2 × Two-pack top coat	Approx. 220-270	• High environmental impact • Relative humidity up to 100% • Surface temperature up to max. 120 °C • Corrosivity category C4[2]
OS4	1 × Dip primer 2 × Two-pack epoxy base layer 2 × Two-pack top coat	Approx. 320	• Very high environmental impact • Relative humidity up to 100% • Surface temperature up to max. 120 °C • Corrosivity category C5-1[2]

1) NDFT (**n**ominal **d**ry **f**ilm **t**hickness) = Required coating thickness; Minimum thickness = 80 % NDFT; Maximum thickness = 3 x NDFT (DIN EN ISO 12944-5)

2) To DIN EN ISO 12,944-2

Special protection measures

Gearmotor output shafts can be treated with special optional protective measures for operation subject to severe environmental pollution or in particularly demanding applications.

Gear unit type	Measure	Protection principle	Suitable for
R, F, K, S, W BS.F202 ... 602	**FKM oil seal (Viton)[1]**	High quality material	Drives subject to chemical contamination
R, F, K, S, W	**surface coating of the contact surface of the oil seal**	Protective layer	Severe environmental impact and in conjunction with FKM oil seal (Viton)
R, F, K, S, W	**Stainless steel output shaft**	Surface protection with high-quality material	Particularly demanding applications in terms of surface protection

1) For PS.F, PS.C and BS.F802, FKM oil seals (Viton) are used as standard.

NOCO® fluid

As standard, SEW-EURODRIVE supplies NOCO® fluid corrosion protection and lubricant with every hollow shaft gear unit. Use NOCO® fluid when installing hollow shaft gear units. Using this fluid helps prevent contact corrosion and makes it easier to assemble the drive at a later date.

NOCO® fluid is also suitable for protecting machined metal surfaces that do not have corrosion protection, such as parts of shaft ends or flanges. You can also order larger quantities of NOCO® fluid from SEW-EURODRIVE.

NOCO® fluid is food grade according to USDA-H1. You can tell that NOCO® fluid is a food grade oil by the USDA-H1 identification label on its packaging.

2.3 Extended storage – R, F, K, S, W gear units

Design

You can also order gear units prepared for "extended storage." SEW-EURODRIVE recommends the "extended storage" type for storage periods longer than 9 months.

In this case, a VCI corrosion inhibitor (**v**olatile **c**orrosion **i**nhibitor) is added to the lubricant in these gear units. Please note that this VCI is only effective in a temperature range of -25 °C ... +50 °C. The flange contact surfaces and shaft ends are also treated with an anti-corrosion agent. If not specified otherwise in your order, the gear unit will be supplied with OS1 surface protection. You can order OS2, OS3 or OS4 instead of OS1.

Surface protection	Suitable for
OS1	Low environmental impact
OS2	Medium environmental impact
OS3	High environmental impact
OS4	Very high environmental impact

	NOTE
	The gear units must remain tightly sealed until taken into operation to prevent the VCI corrosion protection agent from evaporating. Gear units will be supplied with an oil fill according to the mounting position (M1 ... M6) and are ready for operation. Check the oil level before you start operating the gear unit for the first time!

Storage conditions

Observe the storage conditions specified in the following table for extended storage:

Climate zone	Packaging[1)]	Storage location[2)]	Storage duration
Temperate (Europe, USA, Canada, China and Russia, excluding tropical zones)	Packed in containers, with desiccant and moisture indicator sealed in the plastic wrap.	With roof, protected against rain and snow, no shock loads.	Up to 3 years with regular checks of the packaging and moisture indicator (rel. humidity < 50 %).
	open	Under roof, enclosed at constant temperature and atmospheric humidity (5°C < ϑ< 60°C, < 50% relative atmospheric humidity). No sudden temperature fluctuations. Controlled ventilation with filter (free from dust and dirt). Protected against aggressive vapors and shocks.	2 years or more with regular inspections. Check for cleanliness and mechanical damage during inspection. Check corrosion protection.
Tropical (Asia, Africa, Central and South America, Australia, New Zealand excluding temperate zones)	Packed in containers, with desiccant and moisture indicator sealed in the plastic wrap. Protected against insect damage and mildew by chemical treatment.	Under roof, protected against rain and shocks.	Up to 3 years with regular checks of the packaging and moisture indicator (rel. humidity < 50 %).
	open	Under roof, enclosed at constant temperature and atmospheric humidity (5°C < ϑ< 50°C, < 50% relative atmospheric humidity). No sudden temperature fluctuations. Controlled ventilation with filter (free from dust and dirt). Protected against aggressive vapors and shocks. Protected against insect damage.	2 years or more with regular inspections. Check for cleanliness and mechanical damage during inspection. Check corrosion protection.

1) Packaging must be carried out by an experienced company using the packaging materials that have been explicitly specified for the particular application.

2) SEW-EURODRIVE recommends to store the gear units according to the mounting position.

2.4 General product description – R, F, K, S, W gear units

Ambient temperature

Gear units and gearmotors from SEW-EURODRIVE can be operated in a wide ambient temperature range. The following standard temperature ranges are permitted for filling the gear units according to the lubricant table:

Gear unit	Filled with	Permitted standard temperature range
Helical, parallel shaft helical and helical-bevel gear units	CLP(CC) VG220	-10 °C ... +40 °C
Helical-worm gear unit	CLP(CC) VG680	0 °C ... +40 °C
Spiroplan® gear units	CLP(SEW-PG) VG460	-10 °C ... +40 °C

The rated data of the gear units and gearmotors specified in the catalog/price catalog refer to an ambient temperature of +25 °C.

Gear units and gearmotors from SEW-EURODRIVE can be operated outside the standard temperature range if project planning is adapted to ambient temperatures from as low as -40 °C in the intensive cooling range until up to +60 °C. Project planning must take special operating conditions into account and adapt the drive to the ambient conditions by selecting suitable lubricants and seals. This kind of project planning is generally recommended for increased ambient temperatures as of size 97 and for helical-worm gear units with small gear ratios. SEW-EURODRIVE will gladly perform this project planning for you.

If the drive is to be operated on a frequency inverter, you must also consider the project planning notes of the inverter and take into account the thermal effects of inverter operation.

Installation altitude

Due to the low air density at high installation altitudes, heat dissipation on the surface of motors and gear units decreases. The rated data listed in the catalog/price catalog applies to an installation altitude of maximum 1000 m above sea level. Installation altitudes of more than 1000 m asl must be taken into account for project planning of gear units and gearmotors.

Power and torque

The power and torque ratings listed in the catalogs refer to mounting position M1 and similar mounting positions in which the input stage is not completely submerged in oil. In addition, the gearmotors are assumed to be standard versions with standard lubrication and under normal ambient conditions.

Please note that the motor power shown in the selection tables for gearmotors is subject to selection. However, the output torque and the desired output speed are essential for the application and need to be checked.

Speed

The quoted output speeds of the gearmotors are recommended values. You can calculate the rated output speed based on the rated motor speed and the gear unit ratio. Please note that the actual output speed depends on the motor load and the supply system conditions.

Noises

The noise levels of all SEW-EURODRIVE gear units, motors and gearmotors are well within the maximum permitted noise levels set forth in the VDI guideline 2159 for gear units and IEC/EN 60034 for motors.

Weights

Please note that all weights shown in the catalogs exclude the oil fill for the gear units and gearmotors. The weights vary according to gear unit design and gear unit size. The lubricant fill depends on the mounting position selected, which means that in this case no universally applicable information can be given. Please refer to "Lubricants" in the "Design and Operating Notes" section for recommended lubricant fill quantities depending on the mounting position. For the exact weight, refer to the order confirmation.

Air admission and accessibility

The gearmotors/brakemotors must be mounted on the driven machine in such a way that both axially and radially there is enough space left for unimpeded air admission, for maintenance work on the brake and, if required, for the MOVIMOT® inverter. Please also refer to the notes in the motor dimension sheets.

Multi-stage gearmotors

You can achieve particularly low output speeds by using multi-stage gear units or multi-stage gearmotors. Such a setup requires a helical gear unit or gearmotor on the input end as a second gear unit.

When doing this, it is necessary to limit the motor power depending on the maximum permitted output torque of the gear unit.

Reduced backlash design

Helical, parallel shaft helical and helical-bevel gear units with reduced backlash are available as of gear unit size 37. The circumferential backlash of these gear units is considerably less than that of the standard versions so that positioning tasks can be solved with great precision. The circumferential backlash is specified in angular minutes [’] in the technical data. The circumferential backlash for the output shaft is specified without load (max. 1% of the rated output torque); the gear unit input end is blocked. The dimension drawings for the standard versions are applicable.

RM gear units, RM gearmotors

RM gear units and RM gearmotors are a special type of helical gear units with an extended output bearing hub. They were designed especially for agitating applications and allow for high overhung and axial loads and bending moments. The other data are the same as for standard helical gear units and standard helical gearmotors.

Spiroplan® right-angle gearmotors

Spiroplan® right-angle gearmotors are robust, single- and two-stage right-angle gearmotors with Spiroplan® gearing. The difference to the helical-worm gear units is the material combination of the steel-on-steel gearing, the special tooth meshing relationships and the aluminum housing. As a result, Spiroplan® right-angle gearmotors are wear-free, very quiet-running and lightweight.

The particularly short design and the aluminum housing make for very compact and lightweight drive solutions.

After the running-in period, Spiroplan® right-angle gearmotors are below the following sound pressure level in 4-pole motor operation on a 50 Hz supply system:

- Spiroplan® W..10 to W..30: 55 dB(A)
- Spiroplan® W..37: 60 dB(A)

The sound-pressure level may be 3 to 5 dB(A) higher at time of delivery than after hours of regular operation.

The wear-free gearing and the life-long lubrication facilitate long periods of maintenance-free operation. The oil filling being independent of the mounting position (except for Spiroplan® W..37 in mounting position M4) makes any mounting position possible for Spiroplan® right-angle gearmotors without altering the quantity of oil. The identical hole spacing in the foot and face as well as the same shaft height to both makes for a number of mounting options.

Two different flange diameters are available. On request, Spiroplan® right-angle gearmotors can be equipped with a torque arm.

Components on the input side

The following components on the input side are available for the gear units from SEW-EURODRIVE:

- **Input covers with input shaft extension, optionally with**
  - Centering shoulder
  - Backstop
  - Motor mounting platform
- **Adapter**
  - for mounting IEC or NEMA motors with the option of a backstop
  - for mounting servomotors with a square flange
  - with torque limiting safety couplings and speed or slip monitor
  - with hydraulic centrifugal coupling, also with disc brake or backstop

Swing base

A swing base is a drive unit consisting of helical-bevel gear unit, hydraulic centrifugal coupling and electric motor. The complete arrangement is mounted to a rigid mounting rail.

Motor swings are available with the following optional accessories:

- Torque arm
- Mechanical thermal monitoring unit
- Contactless thermal monitoring unit

2.5 General product description – BS.F, PS.F, PS.C gear units

Ambient temperature

Servo gear units can be operated at ambient temperatures between - 20 °C and + 40 °C. It is essential that you contact SEW-EURODRIVE if ambient temperatures exceed this temperature range.

Installation altitude

Due to the low air density at high installation altitudes, heat dissipation on the surface of motors and gear units decreases. The rated data listed in the catalog/price catalog applies to an installation altitude of maximum 1000 m above sea level. Installation altitudes of more than 1000 m asl must be taken into account for project planning of gear units and gearmotors.

Power and torque

The power and torque values listed in the catalogs apply to normal environmental conditions.

Please note that the motor torques shown in the selection tables for gearmotors is subject to selection. However, the output torque and the desired output speed are essential for the application and need to be checked.

Noises

The noise levels of all SEW geared servomotors and servomotors are well within the maximum permitted noise levels laid down by the VDI guideline 2159 for gear units and EN 60034 for motors.

Heat dissipation and accessibility

Servo gearmotors and brakes can reach surface temperatures > 100 °C during operation. Make sure to maintain adequate distance from heat-sensitive components when installing gearmotors / brakemotors to the driven machine.

Direct motor mounting

The servo gearmotors from SEW-EURODRIVE make it possible to mount servo gear units directly to the synchronous servomotors from SEW-EURODRIVE without an adapter. These integrated servo gearmotors feature shaft-hub connections that are all positive and free from backlash.

Motor mounting with adapter

Use the modular motor adapters to connect all other commercial servomotors in a simple and time-efficient manner to the servo gear units from SEW-EURODRIVE.

Low backlash and positioning accuracy

The optimum gearing geometry paired with precisely manufactured components and careful assembly make for low circumferential backlash.

The BS.F and PS.F gear units ensure low backlash already for standard designs. The circumferential backlash can be further reduced for all types and even minimized for PS.F gear units. Circumferential backlash will remain constantly low for the entire gear unit life due to the wear-free operating performance and high-endurance design of the running gears.

Wide gear ratio range with finely-graduated steps

All ratios from i=3 to i=100 are integers and finely graduated. This means that the gear units are especially suitable for use with controllers that require integer resolution ratios.

Reliability, longevity and low maintenance

The high reliability of servo gear units from SEW-EURODRIVE in the system is ensured by the use of high-strength materials, high-quality anti-friction bearings, long-lived oil seals and synthetic lubricants.

High overload capacity

Exactly matched components as well as backlash-free and positively connected drive elements ensure that highest torques can be transferred and that large axial and radial forces can be absorbed.

Torsionally rigid

The special design of SEW-EURODRIVE servo gear units in conjunction with large shaft diameters ensures high torsional rigidity.

3 Overview of Types and Unit Designation

3.1 Design variants and options – R, F, K, S, W gear units

The unit designations for the R, F, K, S, and W gear units and their options are listed below.

Helical gear unit

Designation	
RX..	Single-stage foot-mounted design
RXF..	Single-stage B5 flange-mounted design
R..	Foot-mounted design
R..F	Foot-mounted and B5 flange-mounted design
RF..	B5 flange-mounted design
RZ..	B14 flange-mounted design
RM..	B5 flange-mounted design with extended bearing housing

Parallel shaft helical gear unit

Designation	
F..	Foot-mounted design
FA..B	Foot-mounted design and hollow shaft
FH..B	Foot-mounted and hollow shaft with shrink disk
FV..B	Foot-mounted design and hollow shaft with splined hollow shaft to DIN 5480
FF..	B5 flange-mounted design
FAF..	B5 flange-mounted design and hollow shaft
FHF..	B5 flange-mounted and hollow shaft with shrink disk
FVF..	B5 flange-mounted design and hollow shaft with splined hollow shaft to DIN 5480
FA..	Hollow shaft
FH..	Hollow shaft with shrink disk
FT..	Hollow shaft with TorqLOC® hollow shaft mounting system
FV..	Hollow shaft with splined hollow shaft to DIN 5480
FAZ..	B14 flange-mounted design and hollow shaft
FHZ..	B14 flange-mounted and hollow shaft with shrink disk
FVZ..	B14 flange-mounted design and hollow shaft with splined hollow shaft to DIN 5480

Helical-bevel gear unit

Designation	
K..	Foot-mounted design
KA..B	Foot-mounted design and hollow shaft
KH..B	Foot-mounted and hollow shaft with shrink disk
KV..B	Foot-mounted design and hollow shaft with splined hollow shaft to DIN 5480
KF..	B5 flange-mounted design
KAF..	B5 flange-mounted design and hollow shaft
KHF..	B5 flange-mounted and hollow shaft with shrink disk
KVF..	B5 flange-mounted design and hollow shaft with splined hollow shaft to DIN 5480
KA..	Hollow shaft
KH..	Hollow shaft with shrink disk
KT..	Hollow shaft with TorqLOC® hollow shaft mounting system
KV..	Hollow shaft with splined hollow shaft to DIN 5480
KAZ..	B14 flange-mounted design and hollow shaft
KHZ..	B14 flange-mounted and hollow shaft with shrink disk
KVZ..	B14 flange-mounted design and hollow shaft with splined hollow shaft to DIN 5480

Helical-worm gear unit

Designation	
S..	Foot-mounted design
SF..	B5 flange-mounted design
SAF..	B5 flange-mounted design and hollow shaft
SHF..	B5 flange-mounted and hollow shaft with shrink disk
SA..	Hollow shaft
SH..	Hollow shaft with shrink disk
ST..	Hollow shaft with TorqLOC® hollow shaft mounting system
SAZ..	B14 flange-mounted design and hollow shaft
SHZ..	B14 flange-mounted and hollow shaft with shrink disk

Spiroplan® gear unit

For all gear unit sizes (W..10 to W..37):

Designation	
W..	Foot-mounted design
WF..	Flange-mounted design
WAF..	Flange-mounted design and hollow shaft
WA..	Hollow shaft

Only for gear unit size 37 (W..37):

Designation	
WA37B	Foot-mounted design and hollow shaft
WH37B	Foot-mounted and hollow shaft with shrink disk
WHF37	Flange-mounted and hollow shaft with shrink disk
WH37	Hollow shaft with shrink disk
WT37	Hollow shaft with TorqLOC® hollow shaft mounting system

Options

R, F and K gear units:

Designation	
/R	Reduced backlash

K, S and W gear units:

Designation	
/T	With torque arm

F gear units:

Designation	
/G	With rubber buffer

Condition monitoring

Designation	Option
/DUO	Diagnostic Unit Oil = Oil aging sensor
/DUV	Diagnostic Unit Vibration = Vibration sensor

	NOTE
	The design variants described in this section refer to DS, CM, CMP gearmotors from SEW-EURODRIVE. They also apply to gear units without motors.

Helical gearmotors

The following variants of helical gearmotors can be supplied:

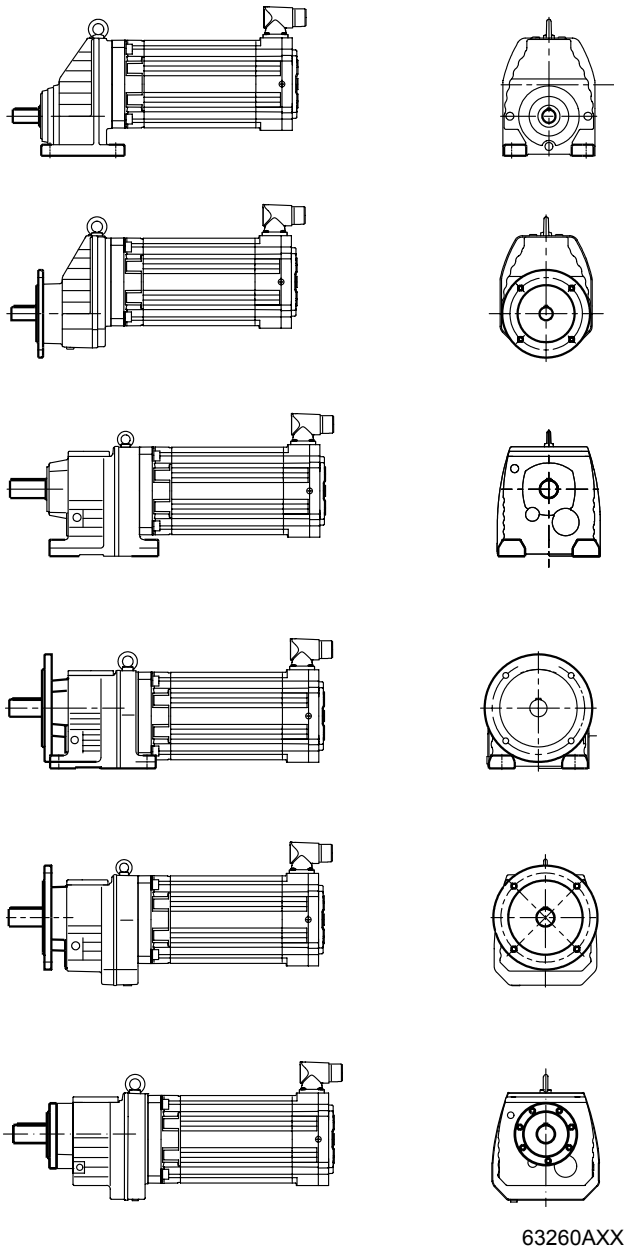

RX..DS../ CM../ CMP..
Single-stage helical gearmotor in foot-mounted design

RXF..DS../ CM../ CMP..
Single-stage helical gearmotor in B5 flange-mounted design

R..DS../ CM../ CMP..
Foot-mounted helical gearmotor

R..F DS../ CM../ CMP..
Foot and B5 flange-mounted helical gearmotor

RF..DS../ CM../ CMP..
Helical gearmotor in B5 flange-mounted design

RZ..DS../ CM../ CMP..
Helical gearmotor in B14 flange-mounted design

63260AXX

Parallel shaft helical gearmotors

The following variants of parallel shaft helical gearmotors can be supplied:

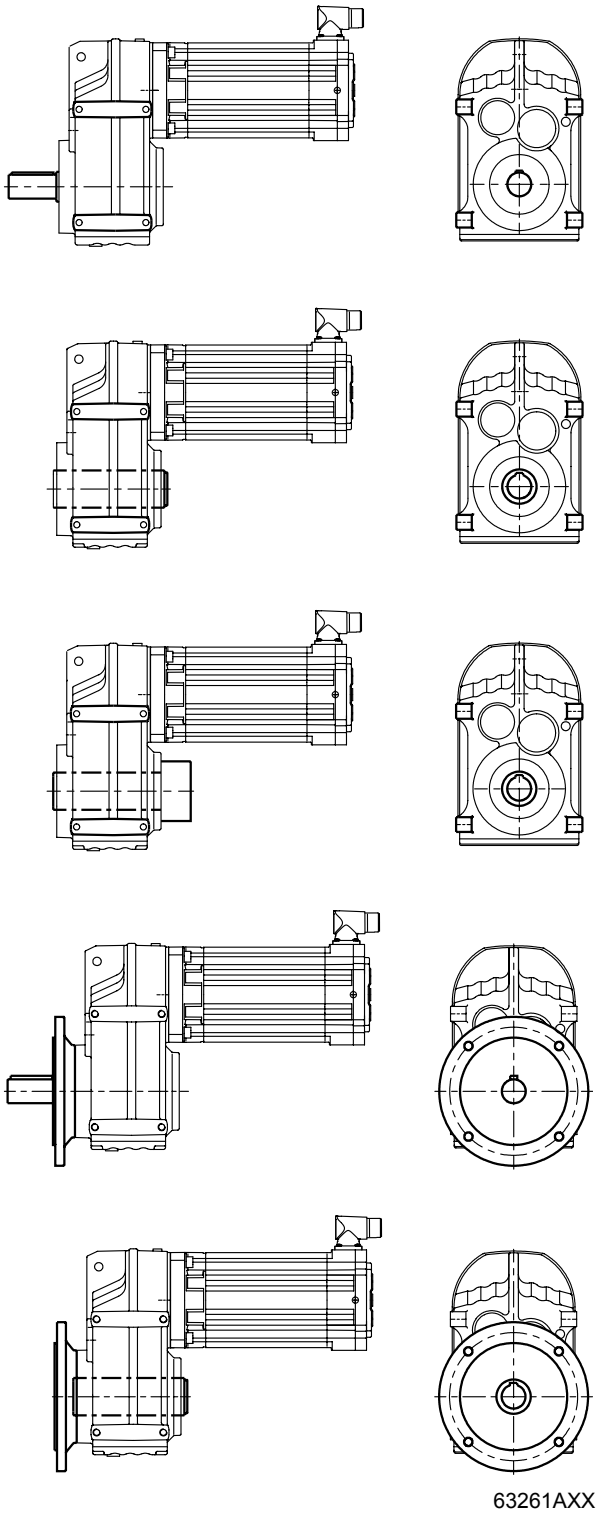

F..DS../ CM../ CMP..
Foot-mounted parallel shaft helical gearmotor

FA..B DS../ CM../ CMP..
Foot-mounted parallel shaft helical gearmotor with hollow shaft

FV..B DS../ CM../ CMP..
Foot-mounted parallel shaft helical gearmotor with hollow shaft and splined hollow shaft to DIN 5480

FH..B DS../ CM../ CMP..
Foot-mounted parallel shaft helical gearmotor with hollow shaft and shrink disk

FF..DS../ CM../ CMP..
B5 flange-mounted parallel shaft helical gearmotor

FAF..DS../ CM../ CMP..
Parallel shaft helical gearmotor in B5 flange-mounted design with hollow shaft

FVF..DS../ CM../ CMP..
Parallel shaft helical gearmotor in B5 flange-mounted design with hollow shaft and splined hollow shaft to DIN 5480

63261AXX

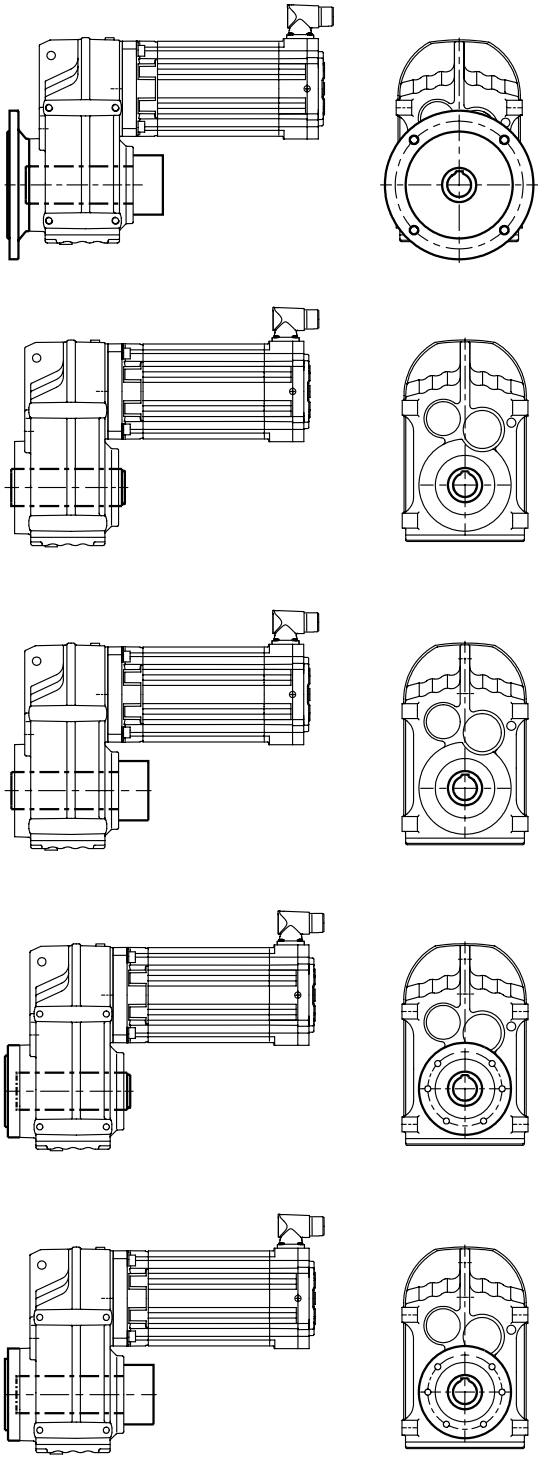

63262AXX

FHF..DS../ CM../ CMP..
Parallel shaft helical gearmotor in B5 flange-mounted design with hollow shaft and shrink disk

FA..DS../ CM../ CMP..
Parallel shaft helical gearmotor with hollow shaft

FV..DS../ CM../ CMP..
Parallel shaft helical gearmotor with hollow shaft and splined hollow shaft to DIN 5480

FH..DS../ CM../ CMP..
Parallel shaft helical gearmotor with hollow shaft and shrink disk

FT..DS../ CM../ CMP..
Parallel shaft helical gearmotor with hollow shaft and TorqLOC® hollow shaft mounting system

FAZ..DS../ CM../ CMP..
Parallel shaft helical gearmotor in B14 flange-mounted design with hollow shaft

FVZ..DS../ CM../ CMP..
Parallel shaft helical gearmotor in B14 flange-mounted design with hollow shaft and splined hollow shaft to DIN 5480

FHZ..DS../ CM../ CMP..
Parallel shaft helical gearmotor in B14 flange-mounted design with hollow shaft and shrink disk

Helical-bevel gearmotors

The following variants of helical-bevel gearmotors can be supplied:

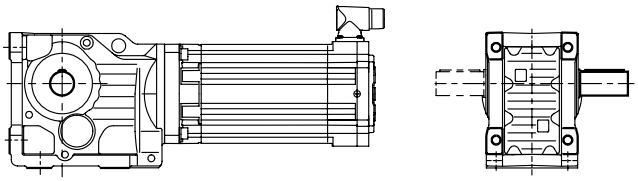

K..DS../ CM../ CMP..
Foot-mounted helical-bevel gearmotor

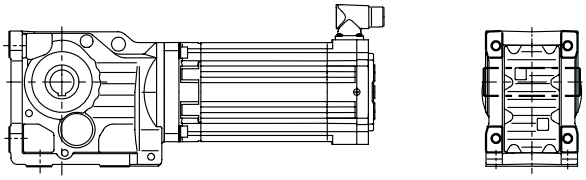

KA..B DS../ CM../ CMP..
Helical-bevel gearmotor in foot-mounted design with hollow shaft

KV..B DS../ CM../ CMP..
Foot-mounted helical-bevel gearmotor with hollow shaft and splined hollow shaft to DIN 5480

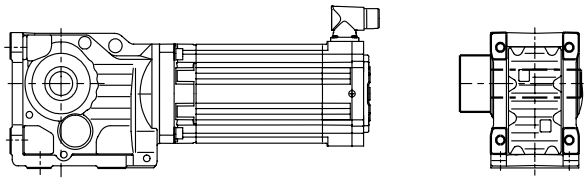

KH..B DS../ CM../ CMP..
Foot-mounted helical-bevel gearmotor with hollow shaft and shrink disk

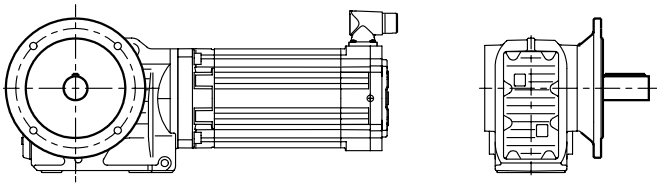

KF..DS../ CM../ CMP..
Helical-bevel gearmotor in B5 flange-mounted design

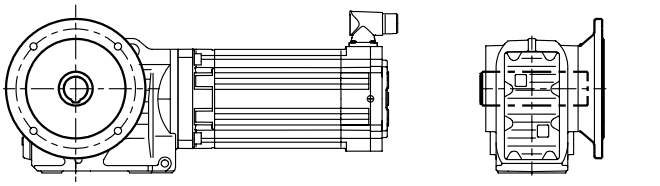

KAF..DS../ CM../ CMP..
Helical-bevel gearmotor in B5 flange-mounted design with hollow shaft

KVF..DS../ CM../ CMP..
Helical-bevel gearmotor in B5 flange-mounted design with hollow shaft and splined hollow shaft to DIN 5480

63263AXX

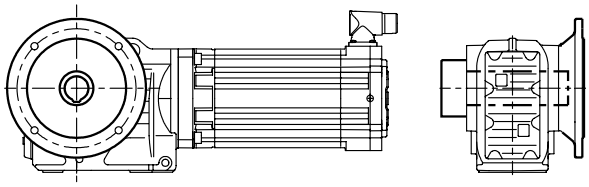

KHF..DS../ CM../ CMP..
Helical-bevel gearmotor in B5 flange-mounted design with hollow shaft and shrink disk

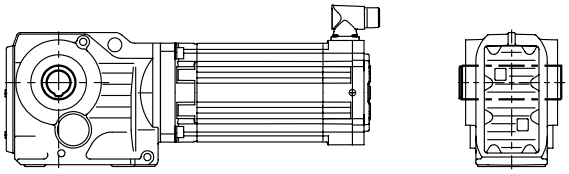

KA..DS../ CM../ CMP..
Helical-bevel gearmotor with hollow shaft

KV..DS../ CM../ CMP..
Helical-bevel gearmotor with hollow shaft and splined hollow shaft to DIN 5480

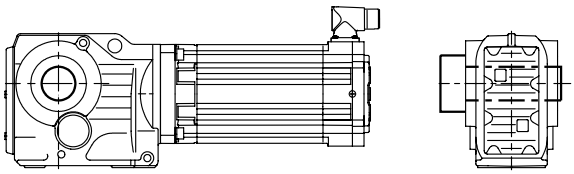

KH..DS../ CM../ CMP..
Helical-bevel gearmotor with hollow shaft and shrink disk

KT..DS../ CM../ CMP..
Helical-bevel gearmotor with hollow shaft and TorqLOC® hollow shaft mounting system

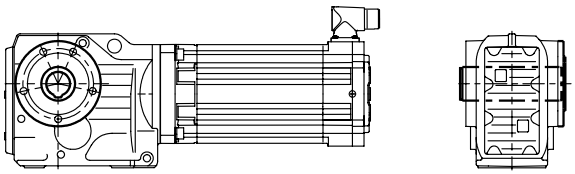

KAZ..DS../ CM../ CMP..
Helical-bevel gearmotor in B14 flange-mounted design with hollow shaft

KVZ..DS../ CM../ CMP..
Helical-bevel gearmotor in B14 flange-mounted design with hollow shaft and splined hollow shaft to DIN 5480

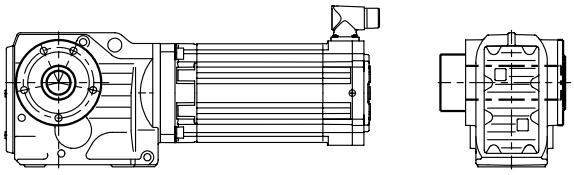

KHZ..DS../ CM../ CMP..
Helical-bevel gearmotor in B14 flange-mounted design with hollow shaft and shrink disk

63264AXX

Helical-worm gearmotors

The following variants of helical-worm gearmotors can be supplied:

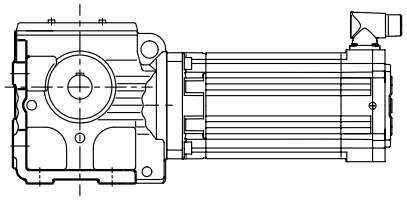
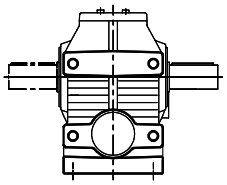

S..DS../ CM../ CMP..
Foot-mounted helical-worm gearmotor

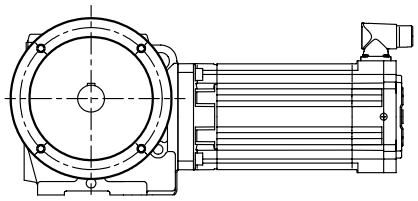
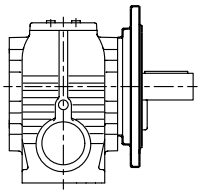

SF..DS../ CM../ CMP..
Helical-worm gearmotor in B5 flange-mounted design

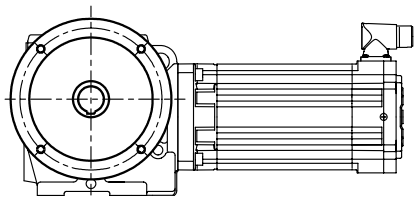
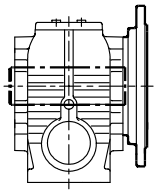

SAF..DS../ CM../ CMP..
Helical-worm gearmotor in B5 flange-mounted design with hollow shaft

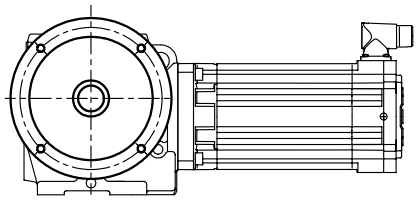
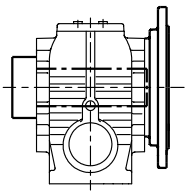

SHF..DS../ CM../ CMP..
Helical-worm gearmotor in B5 flange-mounted design with hollow shaft and shrink disk

63265AXX

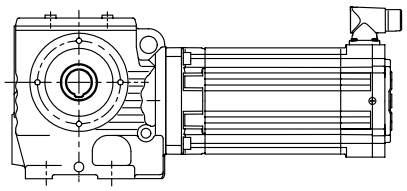

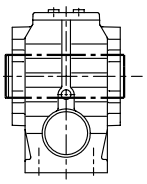

SA..DS../ CM../ CMP..
Helical-worm gearmotor with hollow shaft

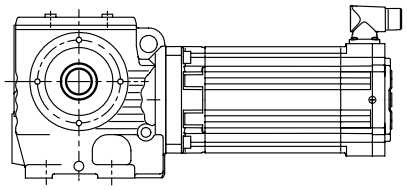

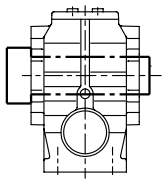

SH..DS../ CM../ CMP..
Helical-worm gearmotor with hollow shaft and shrink disk

ST..DS../ CM../ CMP..
Helical-worm gearmotor with hollow shaft and TorqLOC® hollow shaft mounting system

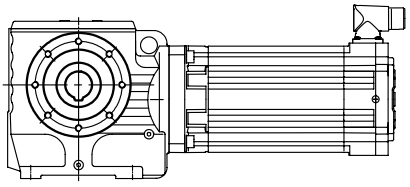

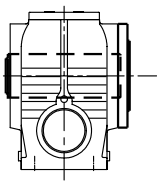

SAZ..DS../ CM../ CMP..
Helical-worm gearmotor in B14 flange-mounted design with hollow shaft

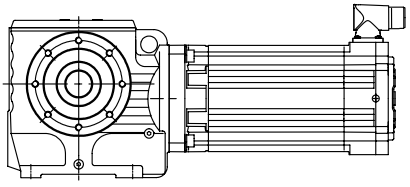

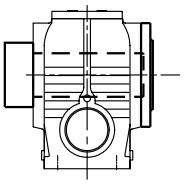

SHZ..DS../ CM../ CMP..
Helical-worm gearmotor in B14 flange-mounted design with hollow shaft and shrink disk

63266AXX

Spiroplan® gearmotors

The following variants of Spiroplan® gearmotors size W..10 to W..37 can be supplied:

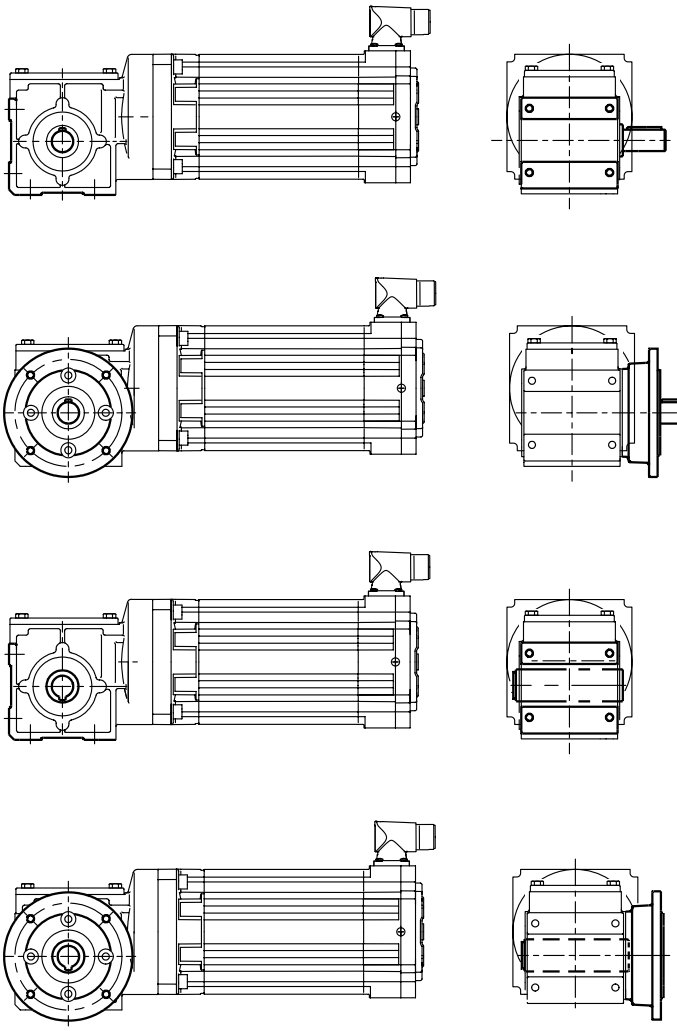

W..DS../ CM../ CMP..
Spiroplan® gearmotor in foot-mounted design

WF..DS../ CM../ CMP..
Spiroplan® gearmotor in flange-mounted design

WA..DS../ CM../ CMP..
Spiroplan® gearmotor with hollow shaft

WAF..DS../ CM../ CMP..
Spiroplan® gearmotor in flange-mounted design with hollow shaft

663267AXX

The following variants of Spiroplan® gearmotors size W..37 can be supplied in addition:

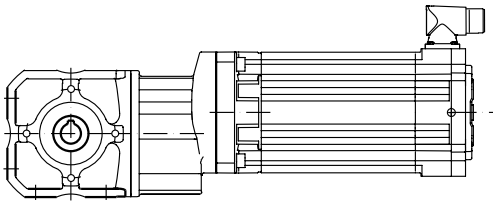

WA37B DS../ CM../ CMP..
Spiroplan® gearmotor in foot-mounted design with hollow shaft

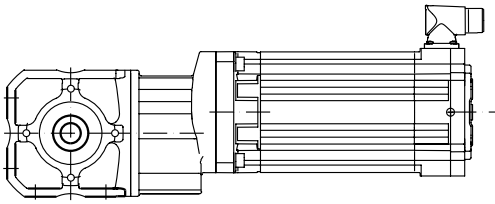

WH37B DS../ CM../ CMP..
Spiroplan® gearmotor in foot-mounted design with hollow shaft and shrink disk

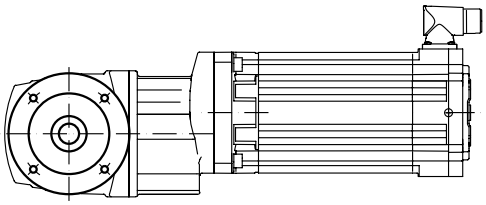

WHF37 DS../ CM../ CMP..
Spiroplan® gearmotor in flange-mounted design with hollow shaft and shrink disk

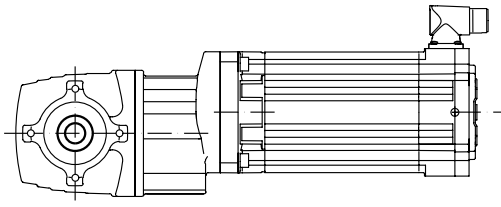

WH37 DS../ CM../ CMP..
Spiroplan® gearmotor with hollow shaft and shrink disk

WT37 DS../ CM../ CMP..
Spiroplan® gearmotor with hollow shaft and TorqLOC®

63268AXX

3.2 Design variants and options of – BS.F, PS.F and PS.C gear units

Helical-bevel gear units BS.F

Designation	
BSKF..	Solid shaft with key
BSBF..	Solid shaft with flange block shaft
BSHF..	Hollow shaft with shrink disk
BS.F..B	Foot and face mounting
BSKF..B	Solid shaft with key
BSBF..B	Solid shaft with flange block shaft
BSHF..B	Hollow shaft with shrink disk
BSAF..	Hollow shaft with keyway

Planetary gear unit PS.F

Designation	
PSKF..	Solid shaft with key
PSBF..	Solid shaft with flange block shaft

Planetary gear unit PS.C

Designation	
PSKC..	B5 output flange, solid shaft with key
PSCZ..	B14 output flange, solid shaft
PSKCZ..	B14 output flange, solid shaft with key

Options

BS.F gear units

Designation	
../R	Reduced backlash
../T	Torque arm
../I	Hollow shaft and shrink disk at the output end

PS.F gear units

Designation	
../R	Reduced backlash
../M	Minimized backlash

BS.F helical-bevel gearmotors

The following variants of BS.F helical-bevel gear units can be supplied:

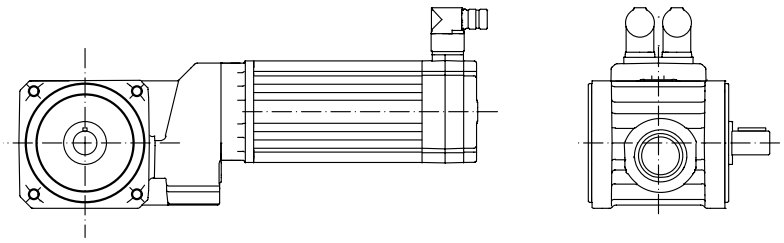

BSF.. DS../ CM../ CMP..
Gear motor with solid shaft, B5 output flange

BSKF.. DS../ CM../ CMP..
Gear motor with solid shaft and key, B5 output flange

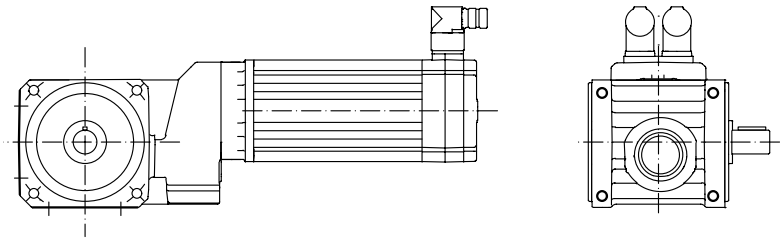

BSF..B DS../ CM../ CMP..
Gearmotor with solid shaft and front-end mounting

BSKF..B DS../ CM../ CMP..
Gearmotor with solid shaft, key and front-end mounting

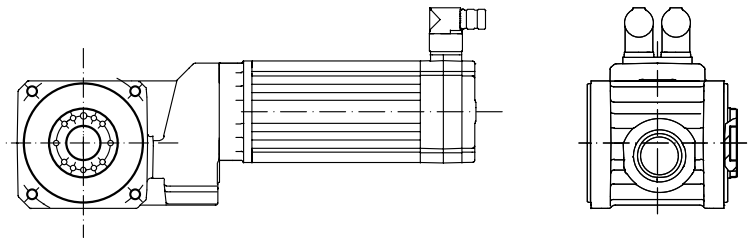

BSBF.. DS../ CM../ CMP..
Gear motor with flange block shaft, B5 output flange

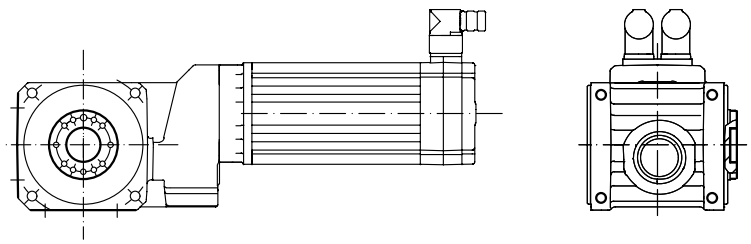

BSBF..B DS../ CM../ CMP..
Gearmotor with flange block shaft and front-end mounting

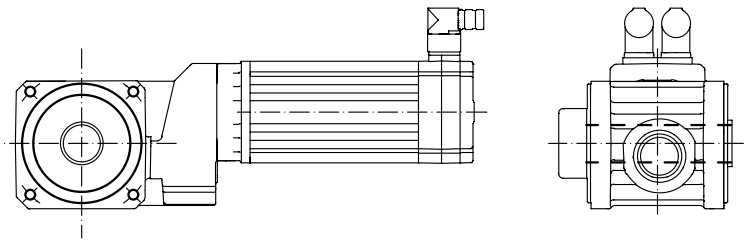

BSHF.. DS../ CM../ CMP..
Gear motor with hollow shaft and shrink disk, B5 output flange

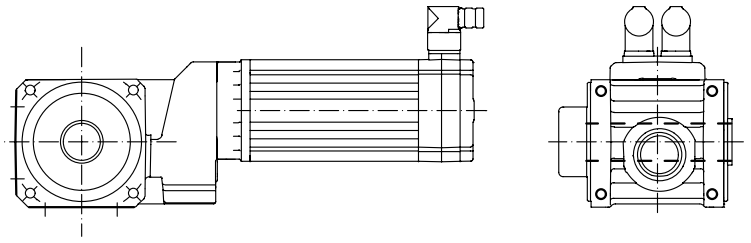

BSHF..B DS../ CM../ CMP..
Gearmotor with hollow shaft, shrink disk and front-end mounting

63269AXX

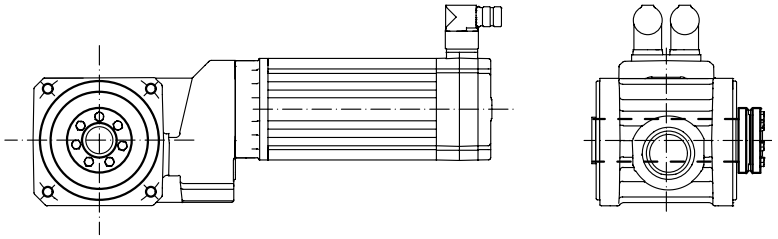

BSHF../I DS../ CM../ CMP..
Gearmotor with hollow shaft and shrink disk at the output end

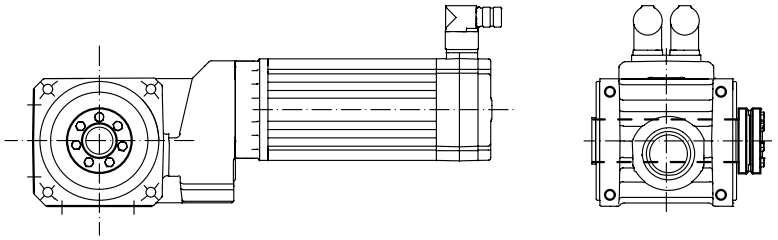

BSHF..B /I DS../ CM../ CMP..
Gearmotor with hollow shaft and shrink disk at the output end

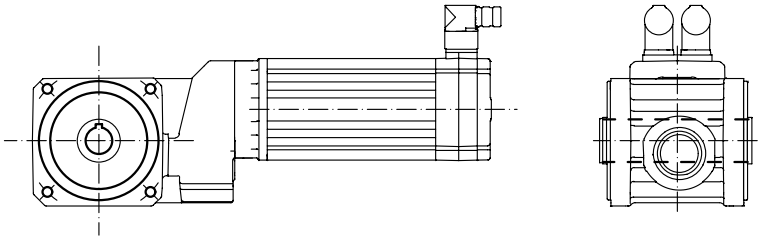

BSAF.. DS../ CM../ CMP..
Gear motor with hollow shaft and keyway, B5 output flange

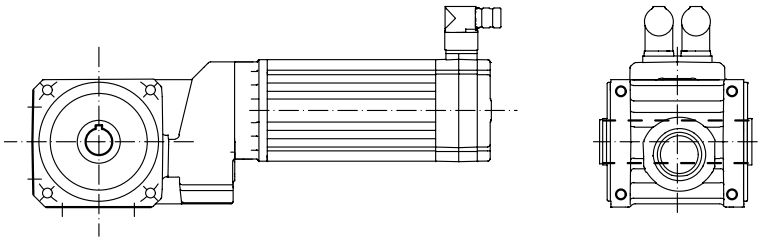

BSAF..B DS../ CM../ CMP..
Gear motor with hollow shaft and keyway, B5 output flange

63289AXX

PS.F planetary gearmotors

The following variants of PS.F.. planetary gear units can be supplied:

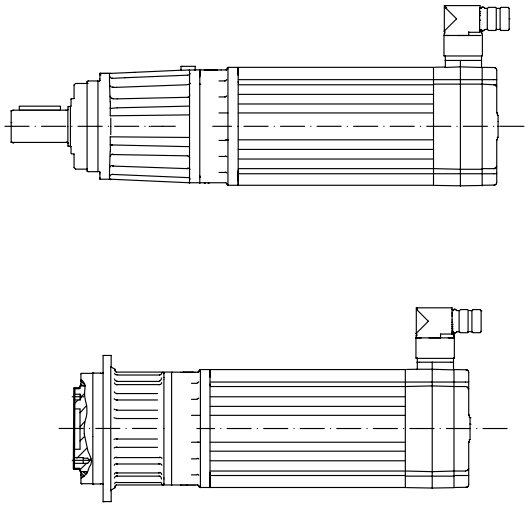

PSF DS../ CM../ CMP..
Gearmotor with solid shaft, B5 output flange

PSKF DS../ CM../ CMP..
Gearmotor with solid shaft and key, B5 output flange

PSBF DS../ CM../ CMP..
Gear motor with flange block shaft, B5 output flange

63271AXX

PS.C planetary gearmotors

The following variants of PS.C.. planetary gear units can be supplied:

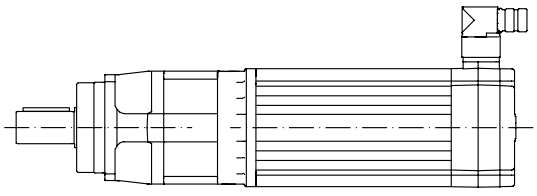

PSC DS../ CM../ CMP..
Gearmotor with solid shaft, B5 output flange

PSKC DS../ CM../ CMP..
Gear motor with solid shaft and key, B5 output flange

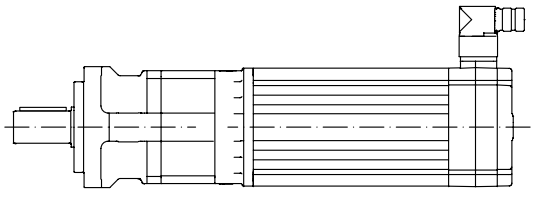

PSCZ DS../ CM../ CMP..
Gearmotor with solid shaft, B14 output flange

PSKCZ DS../ CM../ CMP..
Gear motor with solid shaft and key, B14 output flange

63270AXX

3.3 Unit designation of servo gearmotors

Example: Order code for PS.C.. servo gearmotors

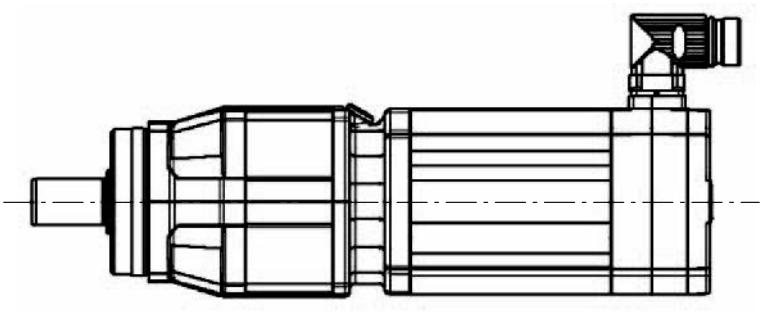

62824axx

Figure 1: Example for a PS.C.. servo gearmotor

For example, a servo gearmotor with brake, manual brake release, positive temperature coefficient thermistor and plug connector has the following unit designation:

PSC	321	CMP	50M	/BP	/KTY	/AS1H	/SB

- /SB: Plug connector for motor and brake, plug housing with axial encoder cable entry
- /AS1H: Motor option: Absolute encoder multi-turn
- /KTY: Temperature sensor
- /BP: Brake
- 50M: Motor size
- CMP: Motor series
- 321: Gear unit size: e.g. 321
- PSC: Gear unit type: PSC

3.4 Servo gearmotor nameplate

Example: Nameplate for PS.C.. servo gearmotor

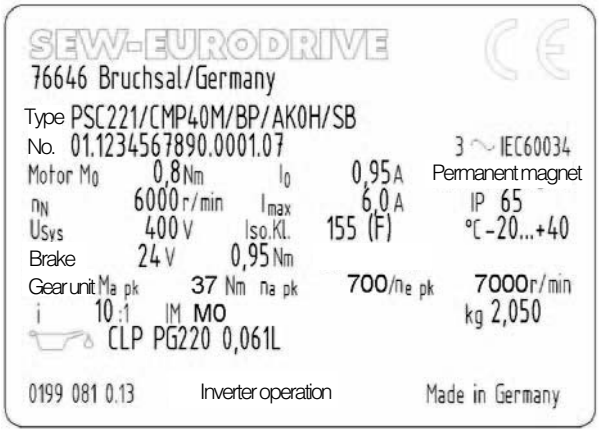

62865aen

Key

i		Gear unit reduction ratio	n_N	[rpm]	Rated speed
IM		Mounting position	M_o	[Nm]	Rated torque
IP		Degree of protection	I_o	[A]	Rated current
n_{epk}	[rpm]	Maximum permitted input speed	I_{max}	[A]	Maximum permitted current
n_{apk}	[rpm]	Maximum permitted output speed	f_N	[Hz]	Rated frequency
M_{apk}	[Nm]	Maximum permitted output torque	U_{max}	[V]	Maximum permitted voltage

	NOTE
	The nameplate of servo gearmotors is fixed to the servomotor!

3.5 Servo gearmotors at a glance

Axially parallel gear units

Gear unit type For details, refer to		RX.. page 155	R.. page 181	F.. page 256	PS.C.. page 630	PS.F.. page 567
Technical data		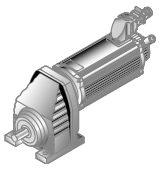	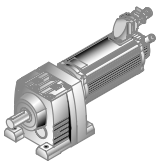	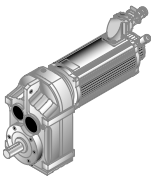	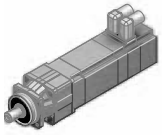	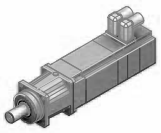
Peak torque	M_{apk} [Nm]	54-1150	46-4360	130-8860	37-427	26-4200
Max. continuous torque	M_{amax} [Nm]	36-830	31-4300	87-7840	29-347	20-3000
Selected max. speed	n_{epk} [1/min]	Up to 4500	Up to 4500	Up to 4500	Up to 7000	Up to 8000
Peak overhung load	F_{rapk} [N]	3970-30000	1220-32100	4500-65000	2000-11000	1900-83000
Gear ratio	i	1.3-8.23	3.21-216.28	3.77-276.77	3-100	3-100
Option with reduced backl.	/R	x	x	x	-	x
Option w. minimized backl.	/M	-	-	-	-	x
Mechanical data						
Hollow shaft		-	-	x	-	-
Flange mounting		x	x	x	x	x
Foot mounting		x	x	-	-	-
Flange block		-	-	-	-	x
B5 flange		x	x	x	x	x
B14 flange		-	x	x	x	-

Right-angle gear units

Gear unit type For details, refer to		K.. page 354	S.. page 440	W37 page 488	BS.F.. page 502
Technical data		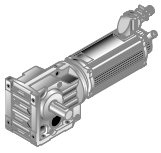	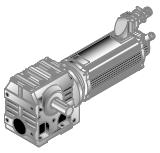	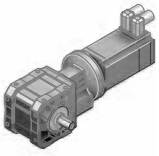	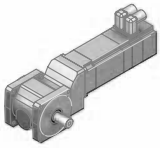
Peak torque	M_{apk} [Nm]	187-9090	60-655	91-155	51-1910
Max. continuous torque	M_{amax} [Nm]	125-8000	43-480	70-110	40-1500
Selected max. speed	n_{epk} [1/min]	4500	4500	4500	4500
Peak overhung load	F_{rapk} [N]	5140-65000	300-12000	2950-5000	2380-36000
Gear ratio	i	3.98-176.05	6.8-75.06	3.2-69.05	3-40
Option with reduced backl.	/R	x	x	-	x
Option w. minimized backl.	/M	-	-	-	-
Mechanical data					
Hollow shaft		x	x	x	x
Flange mounting		x	x	x	x
Foot mounting		x	x	x	x
Flange block		-	-	-	x
B5 flange		x	x	x	x
B14 flange		x	x	-	-

For information on all available options and variants, refer to page 20 ff.

4 Project Planning Notes for Servo Gearmotors

4.1 Additional documentation

In addition to the information in this catalog, SEW-EURODRIVE offers extensive documentation covering the entire topic of electrical drive engineering. These are mainly the publications in the "Drive Engineering – Practical Implementation" series as well as the manuals and catalogs for electronically controlled drives.

You will find additional links to a wide selection of our documentation in many languages for download on the SEW-EURODRIVE homepage (http://www.sew-eurodrive.com). The list below includes other documents that are of interest in terms of project planning. You can order these publications from SEW-EURODRIVE.

Technical data for motors and gear units

The following price catalogs and catalogs are available from SEW-EURODRIVE in addition to this "Synchronous Servo Gearmotors" catalog:

- AC motors
- Gear unit catalog

Drive Engineering – Practical Implementation

- Drive Planning
- Controlled AC Drives
- Servo Technology.
- EMC in Drive Engineering.
- Explosion-Proof Drives to EU Directive 94/9/EC.
- SEW Disc Brakes.

Electronics documentation

- MOVIDRIVE® MDX60/61B system manual
- MOVIAXIS® MX project planning manual

Mechanical brakes

- "Brakes and Accessories" manual

4.2 Data for drive and gear unit selection

The data of the application must be known for projecting a drive. The abbreviations used for project planning are summarized in the following table:

Designation	Meaning	Unit
φ	Circumferential backlash	[`]
η	Gear unit efficiency for M_{apk}	
a, b, f	Gear unit constants as regards the overhung load conversion	[mm]
c	Gear unit constants as regards the overhung load conversion	[Nmm]
a_0, a_1, a_2	Gear unit constants as regards the rise in temperature in the gear unit	
F_A	Axial load (tension and compression) on the output shaft	[N]
f_k	Speed ratio	
F_R	Overhung load on the output shaft	[N]
F_{Rapk}	Maximum permitted overhung load at the output shaft for short-time duty (load application point is the middle of the shaft end)	[N]
F_{Ramax}	Maximum permitted overhung load at the output shaft for continuous duty (load application point is the middle of the shaft end)	[N]
F_{Repk}	Maximum permitted overhung load at the input shaft for short-time duty (load application point is the middle of the shaft end)	[N]
F_{Remax}	Maximum permitted overhung load at the input shaft for continuous duty (load application point is the middle of the shaft end)	[N]
H	Installation altitude	[m above sea level]
I_0	Current consumption of the motor at M_0	[A]
I_{max}	Maximum permitted motor current (root-mean-square value)	[A]
Ins.Cl.	Thermal classification of the motor	
i	Gear unit reduction ratio	
IM	Mounting position of gear unit (international mounting position) M1...M6	
IP..	Degree of protection according to IEC60034-5	
J_A	Mass moment of inertia of the adapter	[kgm^2]
J_G	Mass moment of inertia of the gear unit	[kgm^2]
J_{ext}	Mass moment of inertia (external) reduced on motor shaft	[kgm^2]
J_{Mot}	Mass moment of inertia of the motor	[kgm^2]
J_L	Mass moment of inertia of the load	[kgm^2]
k	Inertia ratio J_{ext} / / J_{Mot}	
l	Length of output shaft	
M_1 … M_n	Output torque in time period t_1 to t_n	[Nm]
M_0	Thermally permitted output torque of the motor in continuous duty at low speed (not to be confused with standstill torque)	[Nm]
M_a^{DYN}	Dynamic output torque assumed for the drive in project planning	[Nm]
M_{aeff}	Effective torque for component testing calculated in project planning	[Nm]
M_{akub}	Effective torque for bearing testing calculated in project planning	[Nm]
M_{amax}	Maximum permitted output torque for continuous duty	[Nm]
M_{apk}	Maximum permitted torque for short-time duty	[Nm]
$M_{aNOTAUS}$	Maximum permitted emergency stop torque, max. 1000 emergency stops	[Nm]
M_{ath}	Effective torque for thermal testing calculated in project planning	[Nm]
M_B	Rated brake torque	[Nm]
M_{pk}	Dynamic limit torque of the servomotor	[Nm]

Table continued on next page.

Designation	Meaning	Unit
M_{eff}	Effective torque requirement (in relation to the motor)	[Nm]
M_{max}	Maximum output torque assumed for the drive in project planning	[Nm]
ML	Mounting location (UL)	
n_{apk}	Maximum permitted output speed for short-time duty	[rpm]
n_{epk}	Maximum permitted input speed for short-time duty	
n_{em}	Mean input speed	[rpm]
n_{am}	Mean output speed	[rpm]
n_{ak}	Breakpoint speed (output)	[rpm]
n_N	Rated speed	[rpm]
$n_1...n_n$	Output speed in time period t_1 to t_n	[rpm]
n_{etn_pk}	Maximum input speed in section	[rpm]
P_{Br}	Braking power	[W]
P_{Br_pk}	Peak braking power	[W]
P_{Br_eff}	Effective braking power	[W]
P_{Br_tn}	Braking power in section t_n	[W]
S.., ..% cdf	Duty type and cyclic duration factor (cdf) or exact load cycle can be entered.	[s]
$t_1...t_n$	Time period 1 to n	[s]
t_z	Cycle time	[s]
T_{Amb}	Ambient temperature	[°C]
U_{sys}	System voltage, voltage of the supplying inverter	[V]
U_{Br}	Operating voltage of the brake	[V]
x	Distance between overhung load application point and shaft shoulder	[mm]
F_{Rmax}	Calculated auxiliary variable	
F_{Rkub}	Calculated auxiliary variable	

Determining the application data

It is necessary to have data on the machine to be driven (mass, speed, setting range, etc.) to project the drive correctly.

This data helps to determine the required power, torque and speed. Refer to the SEW publication "Drive Engineering - Practical Implementation / Drive Planning" or the SEW project planning tool SEW Workbench for assistance.

Selecting the correct drive

The appropriate drive can be selected once the power and speed of the drive have been calculated and with regard to mechanical requirements.

4.3 Project planning procedure

The following flowcharts show a schematic view of the project planning procedure of a servo gear unit for a positioning drive in S3 operation.

Project planning procedure part 1, servo gear units

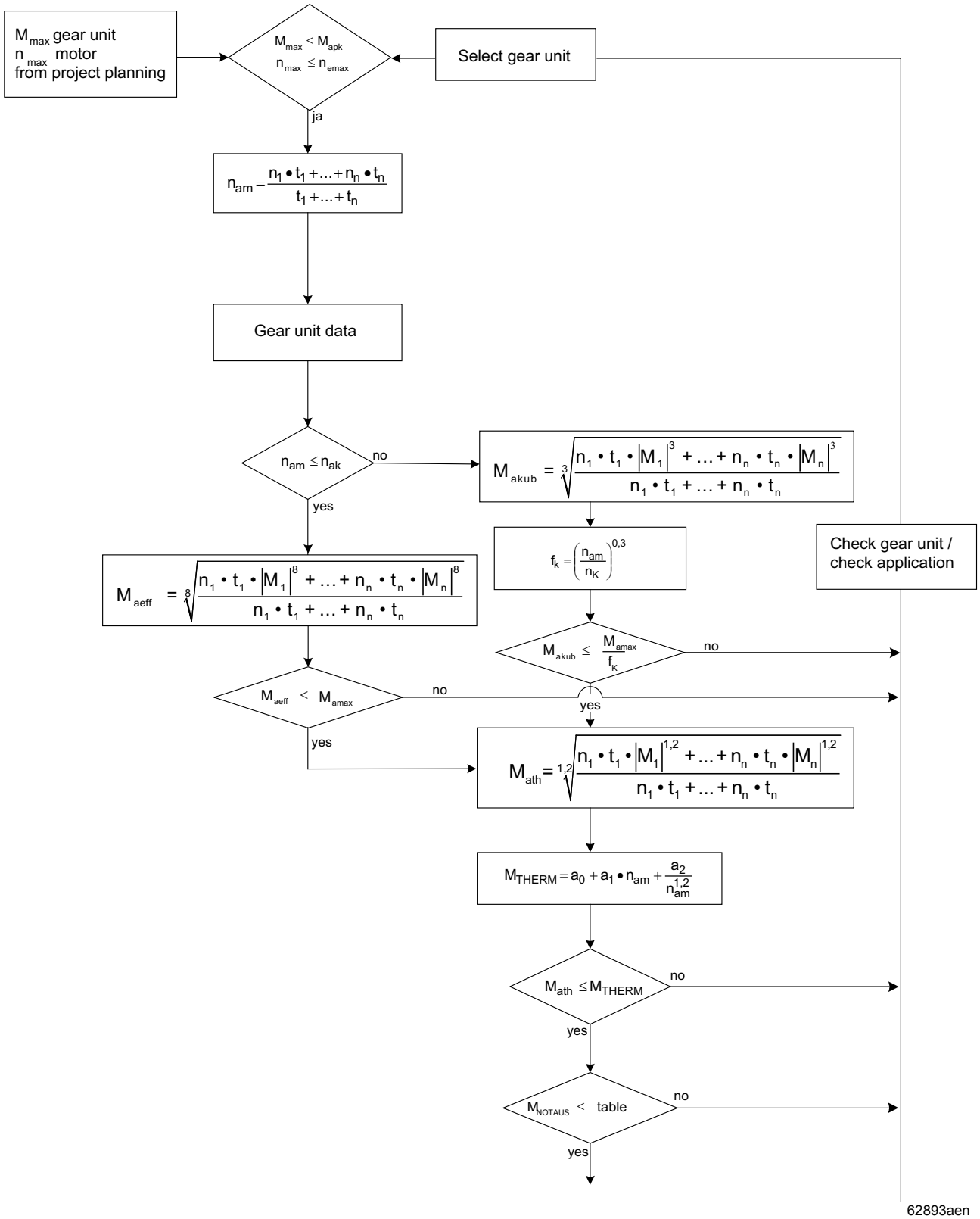

* For thermal project planning of R, F, K, S, W gear units, please contact SEW-EURODRIVE.

Project planning procedure part 2, servo gear units

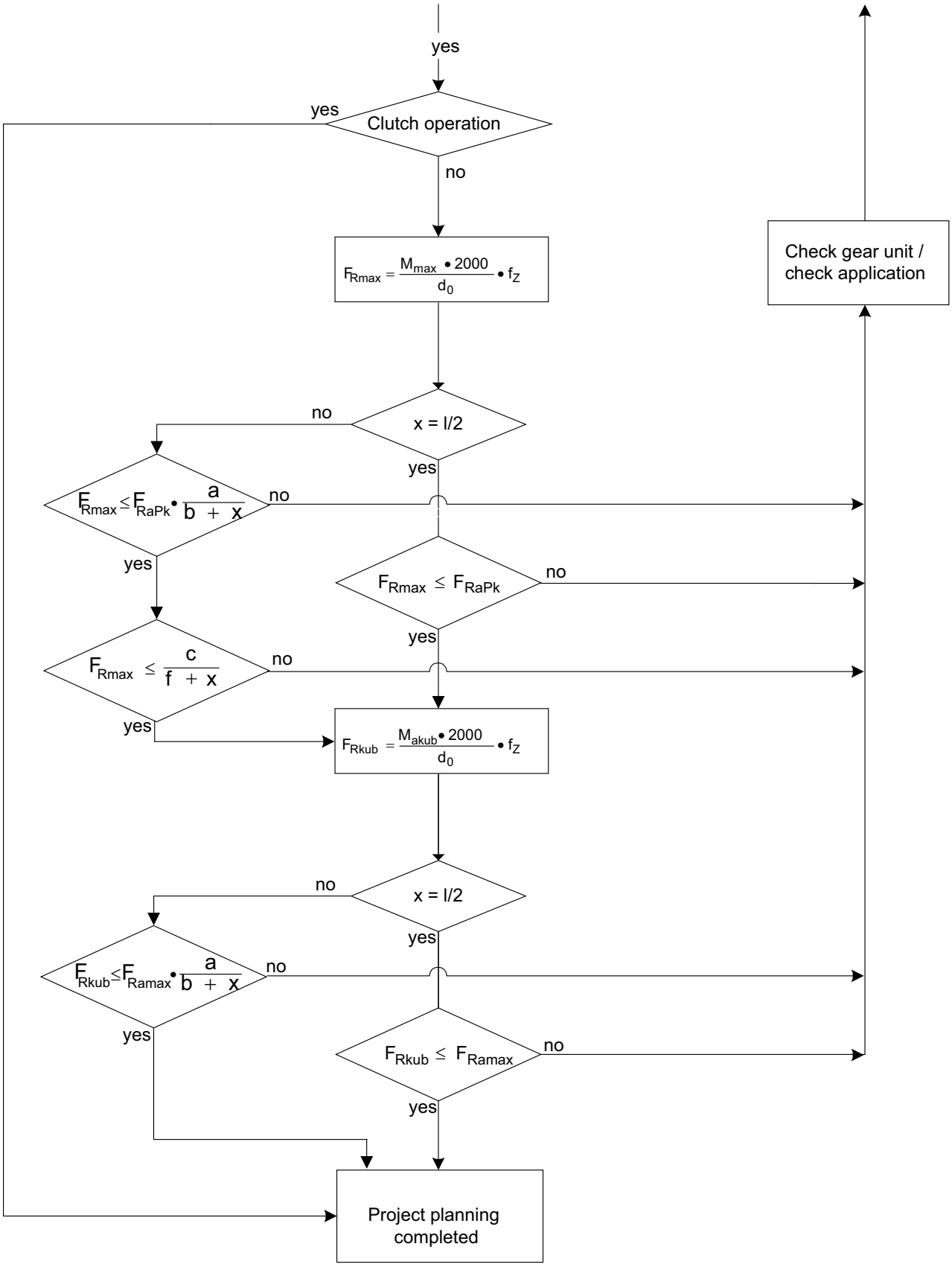

62783aen

Project planning procedure part 3, servomotors

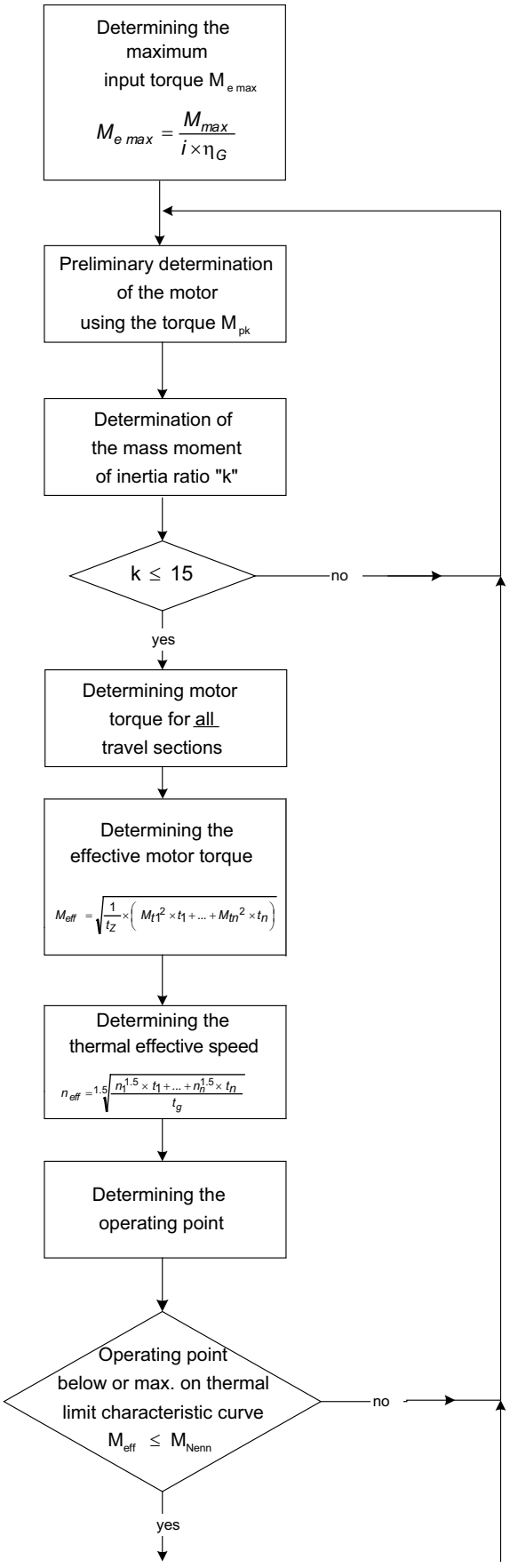

Project planning procedure part 4, servomotors

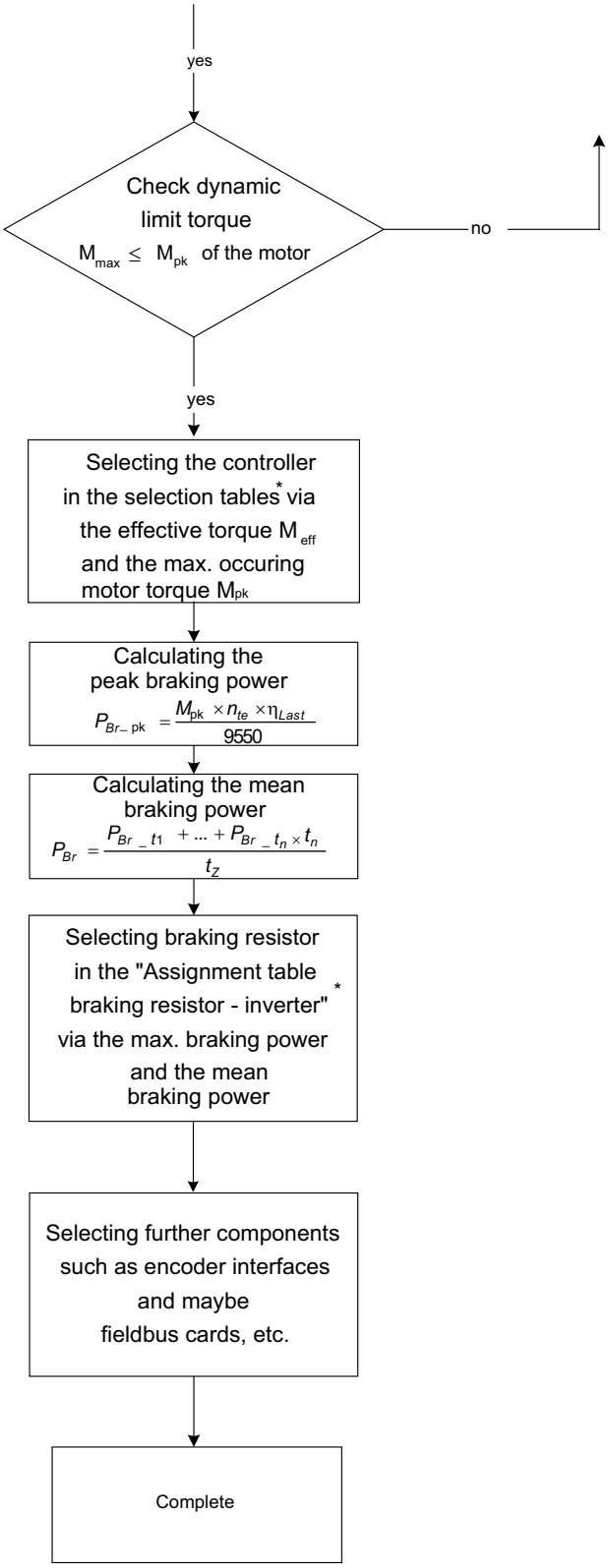

62890aen

* MOVIDRIVE® system manual, MOVIAXIS® project planning manual

4.4 Project planning notes – R, F, K, S, W gear units

Efficiency of the gear units

General information

The efficiency of gear units is mainly determined by the gearing and bearing friction. Keep in mind that the starting efficiency of a gear unit is always less than its efficiency at operating speed. This factor is especially pronounced in the case of helical-worm and Spiroplan® right-angle gearmotors.

R, F, K gear units

The efficiency of helical, parallel shaft and helical-bevel gear units varies with the number of gear stages, between 96% (3-stage), 97% (2-stage) and 98 % (1-stage).

S and W gear units

The gearing in helical-worm and Spiroplan® gear units produces a high proportion of sliding friction. As a result, these gear units have higher gearing losses than R, F or K gear units and thus be less efficient.

The efficiency depends on the following factors:

- Gear ratio of the helical-worm or Spiroplan® stage
- Input speed
- Gear unit temperature

Helical-worm gear units from SEW-EURODRIVE are helical gear/worm combinations that are significantly more efficient than plain worm gear units.

The efficiency may reach $\eta < 0.5$ if the helical-worm gear stage has a very high gear ratio.

The Spiroplan® gear unit W37 from SEW-EURODRIVE has an efficiency of up to 93%, which drops only slightly even for large gear unit ratios.

Self-locking

Retrodriving torques on helical-worm or Spiroplan® gear units produce an efficiency of $\eta' = 2 - 1/\eta$, which is significantly less favorable than the forward efficiency η. The helical-worm or Spiroplan® gear unit is self-locking if the forward efficiency $\eta \leq 0.5$. Some Spiroplan® gear units are also dynamically self-locking. Contact SEW-EURODRIVE if you wish to make technical use of the braking effect of self-locking characteristics.

	NOTE
	Note that the self-locking effect of helical-worm and ® gear units is not permitted as the sole safety function for hoists.

Run-in phase

The tooth flanks of new helical-worm and Spiroplan® gear units are not yet completely smooth. That fact makes for a greater friction angle and less efficiency than during later operation. This effect intensifies with increasing gear unit ratio. Subtract the following values from the listed efficiency during the running-in phase:

	Worm	
	i range	**η reduction**
1 start	approx. 50 ... 280	approx. 12 %
2 start	approx. 20 ... 75	approx. 6 %
3 start	approx. 20 ... 90	approx. 3 %
5 start	approx. 6 ... 25	approx. 3 %
6 start	approx. 7 ... 25	approx. 2 %

Spiroplan® W37	
i range	**η reduction**
approx. 30 ... 70	approx. 8 %
approx. 10 ... 30	approx. 5 %
approx. 3 ... 10	approx. 3 %

The run-in phase usually lasts 48 hours. Helical-worm and Spiroplan® gear units achieve their listed rated efficiency values when:

- the gear unit has been completely run-in,
- the gear unit has reached nominal operating temperature,
- the recommended lubricant has been filled in and
- the gear unit is operating in the rated load range.

Churning losses

In certain gear unit mounting positions (→ chapter "Gear Unit Mounting Positions"), the first gearing stage is completely immersed in the lubricant. When the circumferential velocity of the input stage is high, considerable churning losses occur in larger gear units that must be taken into account. Contact SEW-EURODRIVE if you wish to use gear units of this type.

If possible, use mounting position M1 for R, K and S gear units to keep the churning losses low.

Overhung and axial loads

Determining overhung loads

An important factor for determining the resulting overhung load is the type of transmission element mounted to the shaft end. The following transmission element factors f_Z have to be considered for various transmission elements.

Transmission element	Transmission element factor f_Z	Comments
Gears	1.15	< 17 teeth
Chain sprockets	1.40	< 13 teeth
Chain sprockets	1.25	< 20 teeth
Narrow V-belt pulleys	1.75	Influence of the pre-tensioning
Flat belt pulleys	2.50	Influence of the pre-tensioning
Toothed belt pulleys	2.00 - 2.50	Influence of the pre-tensioning
Gear rack pinion, prestressed:	2.00	Influence of the pre-tensioning

Permitted overhung load

The basis for determining the permitted overhung loads is the computation of the rated bearing service life L_{10h} of the anti-friction bearings (according to ISO 281).

For special operating conditions, the permitted overhung loads can be determined with regard to the modified service life L_{na} on request.

NOTE

The values refer to force applied to the center of the shaft end (in right-angle gear units as viewed onto drive end). The values for the force application angle α and direction of rotation are based on the most unfavorable conditions.

NOTE

Reduction of overhung loads

- Only 50 % of the F_{Ramax} and F_{Rapk} values specified in the selection tables are permitted in mounting positions M1 and M3 with wall attachment on the front face for K and S gear units.
- Helical-bevel gearmotors K167 and K187 in mounting positions M1 to M4: A maximum of 50 % of the overhung load F_{Ramax} specified in the selection tables in the case of gear unit mounting other than as shown in the mounting position sheets.
- Foot and flange-mounted helical gearmotors (R..F): A maximum of 50 % of the overhung load F_{Ramax} specified in the selection tables in the case of torque transmission via the flange mounting.

Higher permitted overhung loads

Exactly considering the force application angle α and the direction of rotation makes it possible to achieve a higher overhung load than listed in the selection tables.

Furthermore, higher output shaft loads are permitted if heavy duty bearings are installed, especially with R, F and K gear units.

Contact SEW-EURODRIVE in such cases.

Definition of force application point

Force application is defined according to the following figure:

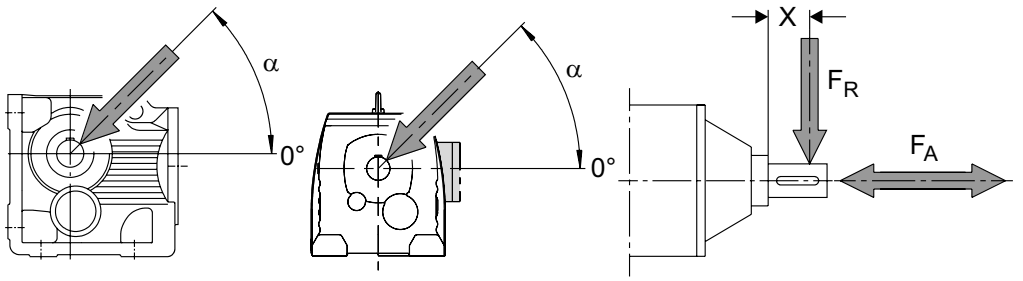

63214axx

Figure 2: Definition of force application

Permitted axial loads

If there is no overhung load, then an axial force F_A (tension or compression) amounting to 50 % of the overhung load given in the selection tables is permitted. This condition applies to the following gearmotors:

- Helical gearmotors except for R..137... to R..167...
- Parallel shaft and helical-bevel gearmotors with solid shaft except for F97...
- Helical-worm gearmotors with solid shaft

	NOTE
	Contact SEW-EURODRIVE for all other types of gear units and in the event of significantly greater axial forces or combinations of overhung load and axial force.

On the output side: Overhung load conversion for off-center force application

The permitted overhung loads F_{Ramax} and F_{Rapk} listed in the data tables apply for force application at l / 2 (solid shaft) or for force application at the shaft end face (hollow shaft). If the distance between the force application point an the gear unit is different, the overhung load must be determined anew using the project planning procedure page 42.

$$F_R \le F_{Ra\max} \cdot \frac{a}{b+x}\ [N] \qquad F_R \le \frac{c}{f+x}\ [N]$$

F_{Ramax} = Permitted overhung load [N]
x = Distance from the shaft shoulder to the force application point in [mm]
a, b, f = Gear unit constant for overhung load conversion [mm]
c = Gear unit constant for overhung load conversion [mm]

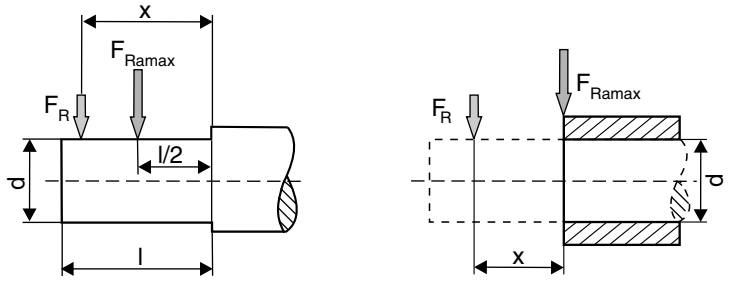

63215axx

Figure 3: Overhung load F_R with increased distance x to the gear unit

Gear unit constants for overhung load conversion

Gear unit type	a [mm]	b [mm]	c [Nmm]	f [mm]	d [mm]	l [mm]
RX57	43.5	23.5	1.51×10^5	34.2	20	40
RX67	52.5	27.5	2.42×10^5	39.7	25	50
RX77	60.5	30.5	1.95×10^5	0	30	60
RX87	73.5	33.5	7.69×10^5	48.9	40	80
RX97	86.5	36.5	1.43×10^6	53.9	50	100
RX107	102.5	42.5	2.47×10^6	62.3	60	120
R07	72.0	52.0	4.67×10^4	11	20	40
R17	88.5	68.5	6.527×10^4	17	20	40
R27	106.5	81.5	1.56×10^5	11.8	25	50
R37	118	93	1.24×10^5	0	25	50
R47	137	107	2.44×10^5	15	30	60
R57	147.5	112.5	3.77×10^5	18	35	70
R67	168.5	133.5	2.65×10^5	0	35	70
R77	173.7	133.7	3.97×10^5	0	40	80
R87	216.7	166.7	8.47×10^5	0	50	100
R97	255.5	195.5	1.06×10^6	0	60	120
R107	285.5	215.5	2.06×10^6	0	70	140
R137	343.5	258.5	4.58×10^6	0	90	170
R147	402	297	8.65×10^6	33	110	210
R167	450	345	1.26×10^7	0	120	210
F27	109.5	84.5	1.13×10^5	0	25	50
F37	123.5	98.5	1.07×10^5	0	25	50
F47	153.5	123.5	1.40×10^5	0	30	60
F57	170.7	135.7	2.70×10^5	0	35	70
F67	181.3	141.3	4.12×10^5	0	40	80
F77	215.8	165.8	7.87×10^5	0	50	100
F87	263	203	1.06×10^6	0	60	120
F97	350	280	2.09×10^6	0	70	140
F107	373.5	288.5	4.23×10^6	0	90	170
F127	442.5	337.5	9.45×10^6	0	110	210
F157	512	407	1.05×10^7	0	120	210
K37	123.5	98.5	1.30×10^5	0	25	50
K47	153.5	123.5	1.40×10^5	0	30	60
K57	169.7	134.7	2.70×10^5	0	35	70
K67	181.3	141.3	4.12×10^5	0	40	80
K77	215.8	165.8	7.69×10^5	0	50	100
K87	252	192	1.64×10^6	0	60	120
K97	319	249	2.8×10^6	0	70	140
K107	373.5	288.5	5.53×10^6	0	90	170
K127	443.5	338.5	8.31×10^6	0	110	210
K157	509	404	1.18×10^7	0	120	210
K167	621.5	496.5	1.88×10^7	0	160	250
K187	720.5	560.5	3.04×10^7	0	190	320
W10	84.8	64.8	3.6×10^4	0	16	40
W20	98.5	78.5	4.4×10^4	0	20	40
W30	109.5	89.5	6.0×10^4	0	20	40
W37	121.1	101.1	6.95×10^4	0	20	40
S37	118.5	98.5	6.0×10^4	0	20	40
S47	130	105	1.33×10^5	0	25	50
S57	150	120	2.14×10^5	0	30	60
S67	184	149	3.04×10^5	0	35	70
S77	224	179	5.26×10^5	0	45	90
S87	281.5	221.5	1.68×10^6	0	60	120
S97	326.3	256.3	2.54×10^6	0	70	140

Values for types not listed are available on request.

4.5 Project planning notes – BS.F, PS.F, PS.C gear units

Efficiency of gear units

General information

The efficiency of gear units is mainly determined by the gearing and bearing friction. Keep in mind that the starting efficiency of a gear unit is always less than its efficiency at operating speed.

BS.F gear units

The efficiency of BS.F gear units is up to 94% (2-stage).

PS.F, PS.C gear units

The efficiency of planetary gear units varies with the number of gear stages, between 98 % (2-stage) and 99 % (1-stage).

NOTE

For PS.F gear units with circumferential backlash option "M" used in operating mode S1, please contact SEW-EURODRIVE.

NOTE

When input and output elements are mounted on **servo gear units**, the **shaft shoulder can be used as a stop** for transmission elements (belt pulley, pinion gear, etc.).

Overhung and axial loads

Overhung load calculation

An important factor for determining the resulting overhung load is the type of transmission element mounted to the shaft end. The following transmission element factors f_Z also have to be considered for various transmission elements according to the following formula:

$$f_Z = f_{Z1} \times f_{Z2}$$

Transmission element	Transmission element factor f_{Z1}	Comments
Gears	1.15	< 17 teeth
Chain sprockets	1.40	< 13 teeth
Chain sprockets	1.25	< 20 teeth
Narrow V-belt pulleys	1.75	Influence of the pre-tensioning
Flat belt pulleys	2.50	Influence of the pre-tensioning
Toothed belt pulleys	2.00 - 2.50	Influence of the pre-tensioning
Gear rack pinion, prestressed:	2.00	Influence of the pre-tensioning

NOTE

Factor f_{Z2} only applies to helical output elements.

Helical output elements		
Gear unit	**Helix angle β [1) 2)]**	**f_{Z2}**
BS.F502-802 PS.F621-922, PSBF321-521 PS.C221 - PS.C622	≤ 11 °	1.00
	20 °	1.20

1) For 11 ° < β < 20 °, f_Z must be interpolated linearly.

2) For helix angles > 20 °, please contact SEW-EURODRIVE.

Permitted overhung load

The basis for determining the permitted overhung loads is the computation of the rated bearing service life L_{H10} of the anti-friction bearings (according to ISO 281).

For special operating conditions, the permitted overhung loads can be determined with regard to the modified bearing service life L_{na} on request.

NOTE

The values refer to force applied to the center of the shaft end (in right-angle gear units as viewed onto drive end). The values for the force application angle α and direction of rotation are based on the most unfavorable conditions.

NOTE

Reduction of overhung loads

- Only 50 % of the F_{Ramax} and F_{Rapk} values specified in the selection tables are permitted in mounting positions M1 and M3 with wall attachment on the front face for BS.F gear units.

Higher permitted overhung loads

Exactly considering the force application angle α and the direction of rotation makes it possible to achieve a higher overhung load than listed in the selection tables.

Contact SEW-EURODRIVE in such cases.

Definition of force application point

Force application is defined according to the following diagram:

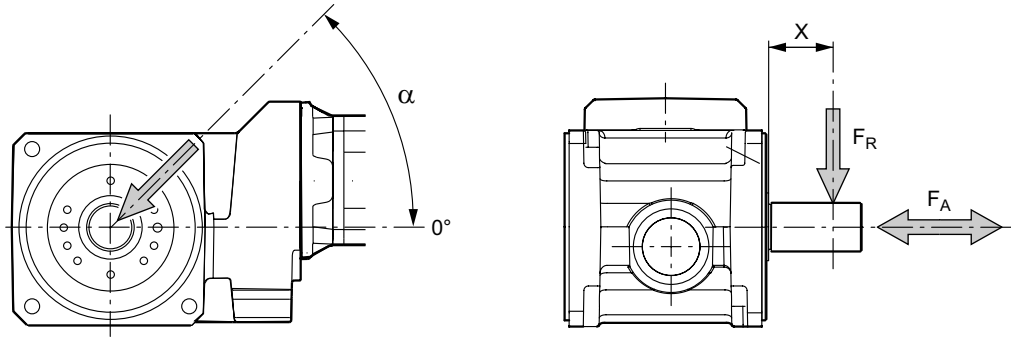

Figure 4: Definition of force application

Permitted axial loads

If there is no overhung load, then an axial force F_A (tension or compression) amounting to 50 % of the overhung load given in the selection tables is permitted.

Output end: Overhung load conversion for off-center force application

The permitted overhung loads F_{Ramax} and F_{Rapk} listed in the data tables apply for force application at l / 2 (solid shaft) or for force application at the shaft end face (hollow shaft, flange block). If the distance between the force application point an the gear unit is different, the overhung loads must be determined anew according to the project planning procedure page 42 .

$$F_R \leq F_{Ra\max} \cdot \frac{a}{b+x}\ [N] \qquad F_R \leq \frac{c}{f+x}\ [N]$$

F_{Ramax} = Permitted overhung load [N]
x = Distance from the shaft shoulder to the force application point in [mm]
a, b, f = Gear unit constant for overhung load conversion [mm]
c = Gear unit constant for overhung load conversion [mm]

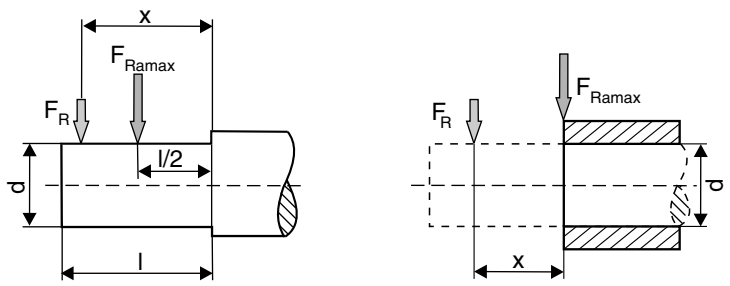

63215axx

Figure 5: Overhung load F_R with increased distance x to the gear unit

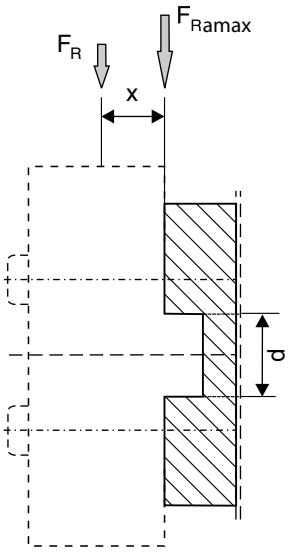

63102axx

Figure 6: Overhung load F_R with increased distance x to the gear unit

Gear unit constants for overhung load conversion

Gear unit type	a [mm]	b [mm]	c [Nmm]	f [mm]	d [mm]	l [mm]
BSF / BSKF202	113.1	95.6	7.35×10^4	0	20	35
BSHF / BSAF202	116.6	116.6	8.40×10^4	20	--	--
BSBF202	101.5	101.5	--	--	--	--
BSF / BSKF302	122.6	104.6	8.61×10^4	0	22	36
BSHF / BSAF302	126.6	126.6	1.20×10^5	22	--	--
BSBF302	111.0	111.0	--	--	--	--
BSF / BSKF402	152.2	123.2	2.56×10^5	0	32	58
BSHF / BSAF402	143.7	143.7	3.85×10^5	0	--	--
BSBF402	132.0	132.0	--	--	--	--
BSF / BSKF502	175.4	134.4	4.92×10^5	0	40	82
BSHF / BSAF502	162.4	162.4	4.75×10^5	28	--	--
BSBF502	145.3	145.3	--	--	--	--
BSF / BSKF602	195.9	154.9	9.84×10^5	0	55	82
BSHF / BSAF602	189.9	189.9	9.54×10^5	0	--	--
BSBF602	170.8	170.8	--	--	--	--
BSF / BSKF802	242.7	190.2	1.89×10^6	0	75	105
BSHF / BSAF802	243.2	243.2	2.70×10^6	0	--	--
BSBF802	206.0	206.0	--	--	--	--

Gear unit type	a [mm]	b [mm]	c [Nmm]	f [mm]	d [mm]	l [mm]
PSF / PSKF121/122.	47.6	36.6	2.08×10^4	0	14	22
PSF / PSKF221/222	53.6	39.6	2.41×10^4	0	16	28
PSBF221/222	64.1	64.1	--	--	--	--
PSF / PSKF321/322	65.0	47.0	7.97×10^4	0	22	36
PSBF321/322	72.5	72.5	--	--	--	--
PSF / PSKF521/522	83.1	54.1	2.52×10^5	0	32	58
PSBF521/522	87.5	87.5	--	--	--	--
PSF / PSKF621/622	113.6	72.3	5.48×10^5	0	40	82
PSBF621/622	105.0	105.0	--	--	--	--
PSF / PSKF721/722	126.6	85.6	1.42×10^6	0	55	82
PSBF721/722	138.5	138.5	--	--	--	--
PSF / PSKF821/822	153.2	100.7	3.21×10^6	0	75	105
PSBF821/822	156.0	156.0	--	--	--	--
PSF / PSKF921/922	170.7	105.7	5.30×10^6	0	85	130

Gear unit type	a [mm]	b [mm]	c [Nmm]	f [mm]	d [mm]	l [mm]
PS.C220	57	43	3.41×10^4	0	16	28
PS.C320	63.5	45.5	7.55×10^4	0	22	36
PS.C520	95.5	66.5	2.13×10^4	0	32	58
PS.C620	107.5	66.5	3.68×10^4	0	40	82

4.6 Project planning example: Gantry with servo drives

X-axis planning (travel axis)

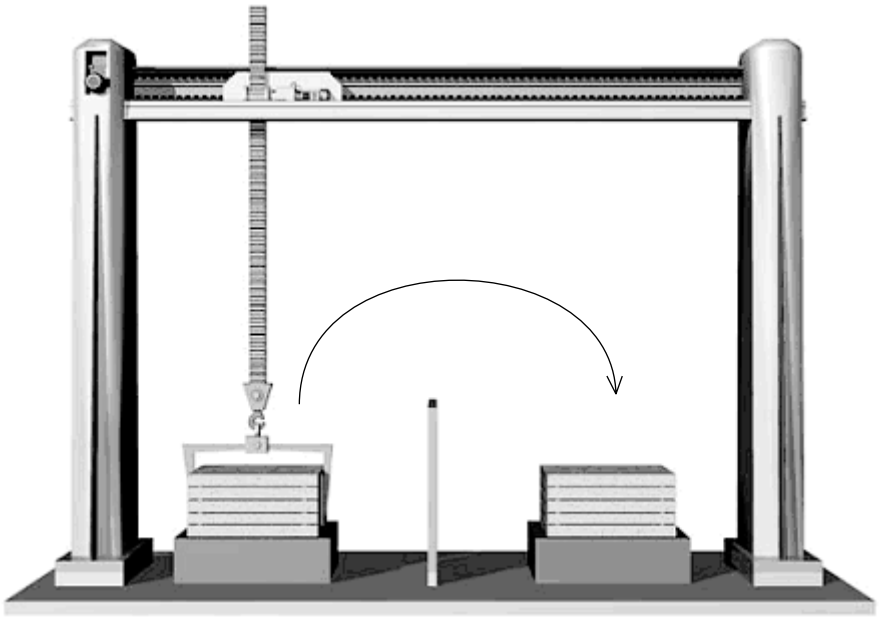

61220axx

Figure 7: Project planning example: Gantry with servo drives travel axis

Reference data:

- Total moved mass: m_L = 50 kg
- Diameter of the belt pulley: d_0 = 75 mm
- Friction coefficient of the axis: μ = 0.01
- Traveling velocity: v_{max} = 2 m/s
- Maximum occurring acceleration/deceleration: a_{max} = 10 m/s^2
- Cycle time: t_z = 3 s
- Rest period: t_p = 1.8 s
- Load efficiency: η_L = 0.9
- Mounting position of the gear unit: IM = M1

For the drive, a PC.C gear unit is designed to be mounted directly to a CMP servomotor.
The overhung load is to act on the shaft center.
Power is transmitted via a belt pulley.

Travel sections

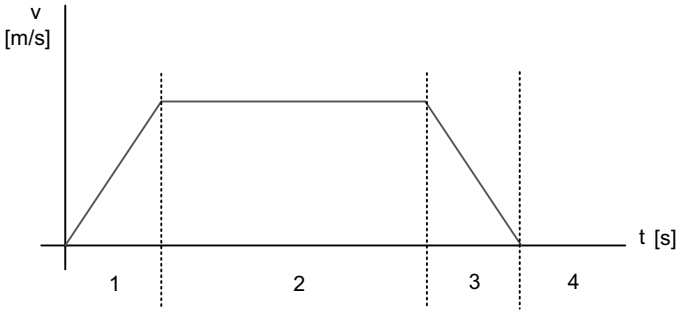

61222axx

Figure 8: Travel sections 1 - 4

Acceleration time in travel section 1, deceleration time in travel section 3

$$t_1 = t_3 = \frac{v_{max}}{a_{max}} = \frac{2\ m/s}{10\ m/s^2} = 0.2\,s$$

Travel time for constant travel in travel section 2

$$t_2 = t_z - t_p - t_1 - t_3$$
$$t_2 = 3\,s - 1.8\,s - 0.2\,s - 0$$
$$t_2 = 0.8s$$

M_{stat} for all travel sections

$$M_{stat} = \frac{(m \cdot g \cdot \mu) \cdot \frac{d_0}{2}}{\eta_L}$$
$$M_{stat} = \frac{50kg \cdot 9.81\frac{m}{s^2} \cdot 0.01 \cdot \frac{0.075m}{2}}{0.9}$$
$$M_{stat} = 0.2043Nm$$

M_{dyn} during acceleration in travel section 1

$$M_{dyn} = \frac{(m \cdot a) \cdot \frac{d_0}{2}}{\eta_L}$$
$$M_{dyn} = \frac{50kg \cdot 10\frac{m}{s^2} \cdot \frac{0.075m}{2}}{0,9}$$
$$M_{dyn} = 20.83Nm$$

M_{dyn} during deceleration in travel section 3

$$M_{dyn} = m \cdot a \cdot \frac{d_0}{2} \cdot \eta_L$$

$$M_{dyn} = 50kg \cdot (-10\frac{m}{s^2}) \cdot \frac{0.075m}{2} \cdot 0.9$$

$$M_{dyn} = -16.875Nm$$

M_{max} during acceleration in travel section 1

$$M_{\max} = M_{stat} + M_{dyn1}$$

$$M_{\max} = 0.2043Nm + 20.8333Nm$$

$$M_{\max} = 21.04Nm$$

M_{max} during deceleration in travel section 3

$$M_{\max} = M_{stat} + M_{dyn3}$$

$$M_{\max} = 0.2043Nm + (-16.87Nm)$$

$$M_{\max} = -16.6657Nm$$

Output speed

$$n_{a\max} = \frac{v_{\max}}{d_0 \cdot \pi} \cdot 60$$

$$n_{a\max} = \frac{2\frac{m}{s}}{0.075m \cdot \pi} \cdot 60$$

$$n_{a\max} = 506.295\frac{1}{\min}$$

Gear ratio including 10% motor speed reserve

n_N = 4500 1/min is an assumption

$$i = \frac{n_N \cdot 0.9}{n_{a\max}}$$

$$i = \frac{4500\frac{1}{\min} \cdot 0.9}{509.295\frac{1}{\min}}$$

$$i = 7.95$$

Maximum input speed

$$n_{max} = n_{a\,max} \cdot i$$

$$n_{max} = 509.295 \frac{1}{min} \cdot 7$$

$$n_{max} = 3565.065 \frac{1}{min}$$

Servo gear unit project planning

Project planning follows the project planning procedure on page 42 ff.

The gear unit is selected on the basis of the table below:

	i	M_{amax} [Nm]	M_{apk} [Nm]	$M_{aNotaus}$ [Nm]	n_{ak} [rpm]	J_G 10^{-4} kgm^2	c_T PSC [Nm/']	F_{Ra} PSC [N]	F_{Rapk} PSC [N]
PSC221 1	3	29	40	60	1500	0.172	3.46	1170	2000
	5	34	42	63	720	0.0578	3.44	1390	2000
	7	32	**39**	59	800	**0.03**	3.28	1550	2000
	10	30	37	56	700	0.0144	2.92	1750	2000

	i	n_{epk} [rpm]	η [%]	M1;M3;M5-6 a_0	M1;M3;M5-6 a_1	M1;M3;M5-6 a_2	M2 a_0	M2 a_1	M2 a_2	M4 a_0	M4 a_1	M4 a_2	φ [']
PSC221 1	3	7000	99	101.00	-0.093	0	106.00	-0.104	0	109.00	-0.110	0	10
	5	7000	99	160.00	-0.181	0	163.00	-0.190	0	167.00	-0.200	0	10
	7	**7000**	**99**	186.00	-0.257	0	187.00	-0.264	0	186.00	-0.267	0	10
	10	7000	99	158.00	-0.178	0	161.00	-0.184	0	164.00	-0.194	0	10

Selection condition:

$$M_{max} \le M_{apk}$$

$$21.04 Nm \le 39 Nm$$

$$n_{max} \le n_{epk}$$

$$3565 \frac{1}{min} \le 7000 \frac{1}{min}$$

Condition is fulfilled.

Mean output speed

$$n_{am} = \frac{n_1 \cdot t_1 + ... + ...n_n \cdot t_n}{t_1 + ... + ..t_n}$$

$$n_{am} = \frac{\frac{509.295\frac{1}{\text{min}}}{2} \cdot 0.2s + 509.295\frac{1}{\text{min}} \cdot 0.8s + \frac{509.295\frac{1}{\text{min}}}{2} \cdot 0.2s}{0.2s + 0.8s + 0.2s + 1.8s}$$

$$n_{am} = 169.765\frac{1}{\text{min}}$$

Selection condition:

$$n_{am} \leq n_{ak}$$

$$169.765\frac{1}{\text{min}} \leq 809\frac{1}{\text{min}}$$

Condition is fulfilled.

Effective torque of servo gear unit

$$M_{aeff} = \sqrt[8]{\frac{n_1 \cdot t_1 \cdot |M_1|^8 + ... + ...n_n \cdot t_n \cdot |M_n|^8}{n_1 \cdot t_1 + ... + n_n \cdot t_n}}$$

$$M_{aeff} = \sqrt[8]{\frac{\frac{509.295\frac{1}{\text{min}}}{2} \cdot 0.2s \cdot |21.04Nm|^8 + 509.295\frac{1}{\text{min}} \cdot 0.8s \cdot |0.2043Nm|^8 + \frac{506.295\frac{1}{\text{min}}}{2} \cdot 0.2s \cdot |-16.67Nm|^8}{0.2s \cdot 254.64\frac{1}{\text{min}} + 0.8s \cdot 509.295\frac{1}{\text{min}} + 0.2s \cdot 254.64\frac{1}{\text{min}}}}$$

$$M_{aeff} = 16.065Nm$$

Selection condition:

$$M_{aeff} \leq M_{a\max}$$

$$16.065Nm \leq 32Nm$$

Condition is fulfilled.

Thermal torque of servo gear unit

$$M_{ath} = \sqrt[1.2]{\frac{n_1 \cdot t_1 \cdot |M_1|^{1.2} + \ldots + \ldots n_n \cdot t_n \cdot |M_n|^{1.2}}{n_1 \cdot t_1 + \ldots + n_n \cdot t_n}}$$

$$M_{ath} = \sqrt[1.2]{\frac{\frac{509.295 \frac{1}{\min}}{2} \cdot 0.2s \cdot |21.04Nm|^{1.2} + 509.295 \frac{1}{\min} \cdot 0.8s \cdot |0.2043Nm|^{1.2} + \frac{506.295 \frac{1}{\min}}{2} \cdot 0.2s \cdot |-16.67Nm|^{1.2}}{0.2s \cdot 254.64 \frac{1}{\min} + 0.8s \cdot 509.295 \frac{1}{\min} + 0.2s \cdot 254.64 \frac{1}{\min}}}$$

$$M_{ath} = 5.009Nm$$

Thermal factors for mounting position M1

a_0=186

a_1=-0.257

a_3=0

$$M_{Therm} = a_0 + a_1 \cdot n_{am} + \frac{a_2}{n_{am}^{1.2}}$$

$$M_{Therm} = 186 + (-0.257 \cdot 169.765 \frac{1}{\min}) + \frac{0}{169.765^{1,2}}$$

$$M_{Therm} = 142.37Nm$$

Selection condition:

$$M_{ath} \leq M_{Therm}$$

$$5.035Nm \leq 142.37Nm$$

Condition is fulfilled.

Overhung load calculation

For transmission element factors for overhung loads of different transmission elements at the output shaft, refer to page 48 and to 51.

$$F_{R\max} = \frac{M_{\max}}{\frac{d_0}{2}} \cdot f_z$$

$$F_{R\max} = \frac{21.04Nm}{\frac{0.075m}{2}} \cdot 2.5$$

$$F_{R\max} = 1402N$$

The force application point is the center of the output shaft.

Selection condition:

$$F_{R\max} \leq F_{RaPk}$$

$$1402N \leq 2000N$$

Condition is fulfilled.

Calculating the bearing force

$$M_{akub} = \sqrt[3]{\frac{n_1 \cdot t_1 \cdot |M_1|^3 + ... + ...n_n \cdot t_n \cdot |M_n|^3}{n_1 \cdot t_1 + ... + n_n \cdot t_n}}$$

$$M_{akub} = \sqrt[3]{\frac{\frac{509.295\frac{1}{\min}}{2} \cdot 0.2s \cdot |21.04Nm|^3 + 509.295\frac{1}{\min} \cdot 0.8s \cdot |0.2043Nm|^3 + \frac{506.295\frac{1}{\min}}{2} \cdot 0.2s \cdot |-16.67Nm|^3}{0.2s \cdot 254.64\frac{1}{\min} + 0.8s \cdot 509.295\frac{1}{\min} + 0.2s \cdot 254.64\frac{1}{\min}}}$$

$$M_{akub} = 11.172Nm$$

$$F_{Rkub} = \frac{M_{akub}}{\frac{d_0}{2}} \cdot f_z$$

$$F_{Rkub} = \frac{11.12Nm}{\frac{0.075m}{2}} \cdot 2.5$$

$$F_{Rkub} = 744.8N$$

Selection condition:

$$F_{Rkub} \le F_{R\max}$$

$$744.8N \le 1402N$$

Condition is fulfilled.

Load torques in travel sections 1 to 3

Travel section 1

$$M_{e\max 1} = \frac{M_{dyn1}}{i \cdot \eta_G}$$

$$M_{e\max 1} = \frac{21.04Nm}{7 \cdot 0.99}$$

$$M_{e\max 1} = 3.036Nm$$

Travel section 2

$$M_{e\max 2} = \frac{M_{stat}}{i \cdot \eta_G}$$

$$M_{e\max 2} = \frac{0.2043Nm}{7 \cdot 0.99}$$

$$M_{e\max 2} = 0.0294Nm$$

Travel section 3

$$M_{e\max 3} = \frac{M_{dyn3} \cdot \eta_G}{i}$$

$$M_{e\max 3} = \frac{-16.67Nm \cdot 0.99}{7}$$

$$M_{e\max 3} = -2.357Nm$$

Motor selection Preliminary determination of motor using torque M_{pk}.

n_N	Motor	M_0	I_0	M_{pk}	I_{max}	M_{0VR}	I_{0VR}	J_{mot}	J_{bmot}	M_{B1}	M_{B2}	L_1	R_1	U_{p0} cold
[min^{-1}]		[Nm]	[A]	[Nm]	[A]	[Nm]	[A]	[kgcm^2]		[Nm]		[mH]	Ω	[V]
4500	CMP40S	0.5	1.2	1.9	6.1	-	-	0.1	0.13	0.85	--	23	11.94	27.5
	CMP40M	0.8	0.95	3.8	6.0	-	-	0.15	0.18	0.95	--	45.5	19.92	56
	CMP50S	1.3	1.32	5.2	7.0	1.7	1.7	0.42	0.48	3.1	4.3	37	11.6	62
	CMP50M	2.4	2.3	10.3	13.1	3.5	3.35	0.67	0.73	4.3	3.1	20.5	5.29	66
	CMP50L	3.3	3.15	15.4	19.5	4.8	4.6	0.92	0.99	4.3	3.1	14.6	3.56	68
	CMP63S	2.9	3.05	11.1	18.3	4	4.2	1.15	1.49	7	9.3	18.3	3.34	64
	CMP63M	5.3	5.4	21.4	32.4	7.5	7.6	1.92	2.26	9.3	7	9.8	1.49	67
	CMP63L	7.1	6.9	30.4	41.4	10.3	10	2.69	3.03	9.3	7	7.2	1.07	71

Selected motor:

CMP63M

M_{pk}= 21.4 Nm

J_{mot}= 1.92×10^{-4} kgm^2

Determining the inertia ratio "k"

$$J_{ext} = 91.2 \cdot m \cdot \left(\frac{v_{\max}}{n_{\max}}\right)^2 + J_G$$

$$J_{ext} = 91.2 \cdot 50kg \cdot \frac{\left(2\frac{m}{s}\right)^2}{3565.065\frac{1}{\min}} + 0.03 \cdot 10^{-4} kgm^2$$

$$J_{ext} = 14.38125 \cdot 10^{-4} kgm^2$$

J_{ext} is thus in relation to the motor shaft.

$$k = \frac{J_{ext}}{J_{Motor}}$$

$$k = \frac{14.38125 \cdot 10^{-4} kgm^2}{1.92 \cdot 10^{-4} kgm^2}$$

$$k = 7.49$$

Selection condition:

$$k \le 15$$

$$7.49 \le 15$$

Condition is fulfilled.

Intrinsic acceleration or deceleration of motor in sections 1 and 3

$$M_{Eigen} = \left(J_G + J_{Mot}\right) \cdot \frac{n_{\max}}{9.55 \cdot t}$$

$$M_{Eigen} = \left(0.03 \cdot 10^{-4}\, kgm^2 + 1.92 \cdot 10^{-4}\, kgm^2\right) \cdot \frac{3565.065 \frac{1}{\min}}{9.55 \cdot 0.2s}$$

$$M_{Eigen} = 0.3639 Nm$$

Maximum motor torques in sections 1 and 3

Travel section 1

$$M_{t1} = M_{e\max 1} + M_{Eigen}$$

$$M_{t1} = 3.036 Nm + 0.3639 Nm$$

$$M_{t1} = 3.3999 Nm$$

Travel section 2

$$M_{t3} = M_{e\max 3} + M_{Eigen}$$

$$M_{t3} = -2.357 Nm + 0.3639 Nm$$

$$M_{t3} = -1.9931 Nm$$

Effective motor torque

$$M_{eff} = \sqrt{\frac{1}{t_z}\left(M_{t1}^2 \cdot t_1 + \ldots + M_{tn}^2 \cdot t_n\right)}$$

$$M_{eff} = \sqrt{\frac{\left(3.399 Nm\right)^2 \cdot 0.2s + \left(0.0294 Nm\right)^2 \cdot 0.8s + \left(-1.9931 Nm\right)^2 \cdot 0.2s}{3s}}$$

$$M_{eff} = 1.0174 Nm$$

Thermal effective motor speed

$$n_{eff} = \sqrt[1.5]{\frac{n_1^{1.5} \cdot t_1 + \ldots + n_n^{1.5} \cdot t_n}{t_g}}$$

$$n_{eff} = \sqrt[1.5]{\frac{\left(\frac{3565.065 \frac{1}{\min}}{2}\right)^{1.5} \cdot 0.2s + \left(3565.065 \frac{1}{\min}\right)^{1.5} \cdot 0.8s + \left(\frac{3565.065 \frac{1}{\min}}{2}\right)^{1.5} \cdot 0.2s}{3s}}$$

$$n_{eff} = 1646.3 \frac{1}{\min}$$

Determining the dynamic and thermal motor operating points

- The thermal operating point must be below or exactly on the thermal limit characteristic curve:

$$M_{eff} \leq M_{Nenn}$$

- The dynamic limit torque must be checked:

$$M_{\max Mot} \leq M_{pk}$$

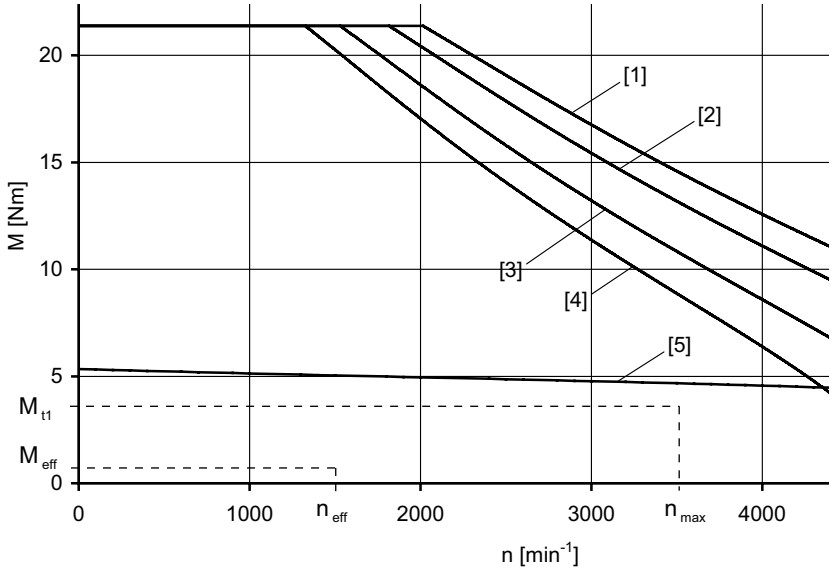

[1] $M_{dynamic}$ (n) 500 V
[2] $M_{dynamic}$ (n) 460 V
[3] $M_{dynamic}$ (n) 400 V
[4] $M_{dynamic}$ (n) 360 V
[5] $M\ S1_{thermal}$ (derating)

Inverter assignment

The inverter assignment of CMP servomotors to MOVIAXIS® and MOVIDRIVE® can be found in the "CMP40/50/63 Synchronous Servomotors" catalog.

Calculating the braking resistor

Peak braking power in travel section 3

$$P_{Br_pk} = \frac{M_{tn} \cdot n_{tn} \cdot \eta_{Last}}{9550}$$

$$P_{Br_pk} = \frac{1.9931Nm \cdot 3565\frac{1}{\text{min}} \cdot 0.9}{9550}$$

$$P_{Br_pk} = 0.6696kW$$

Mean braking power in travel section 3

$$P_{Br} = \frac{M_{tn} \cdot n_{tn} \cdot \eta_{Last}}{9550}$$

$$P_{Br} = \frac{1.9931Nm \cdot \frac{3565\frac{1}{\text{min}}}{2} \cdot 0.9}{9550}$$

$$P_{Br} = 0.3348kW$$

Effective braking power

$$P_{Br_eff} = \frac{P_{Br} \cdot t_3}{t_g}$$

$$P_{Br_eff} = \frac{0.3348kW \cdot 0.2s}{3s}$$

$$P_{Br_eff} = 0.223kW$$

The selection of the braking resistor depends, among other factors, on which braking resistor may be connected to the respective inverter. If you use a MOVIDRIVE® inverter, refer to the system manual for relevant notes.

If you use a MOVIAXIS® servo inverter, a suitable braking resistor must be determined using "SEW Workbench".

5 Gear Unit Mounting Positions

5.1 General notes on mounting positions – R, F, K, S, W gear units

SEW-EURODRIVE differentiates between six mounting positions M1 ... M6 for gear units and gearmotors. The following figure shows the position of the gear unit in mounting positions M1 ... M6

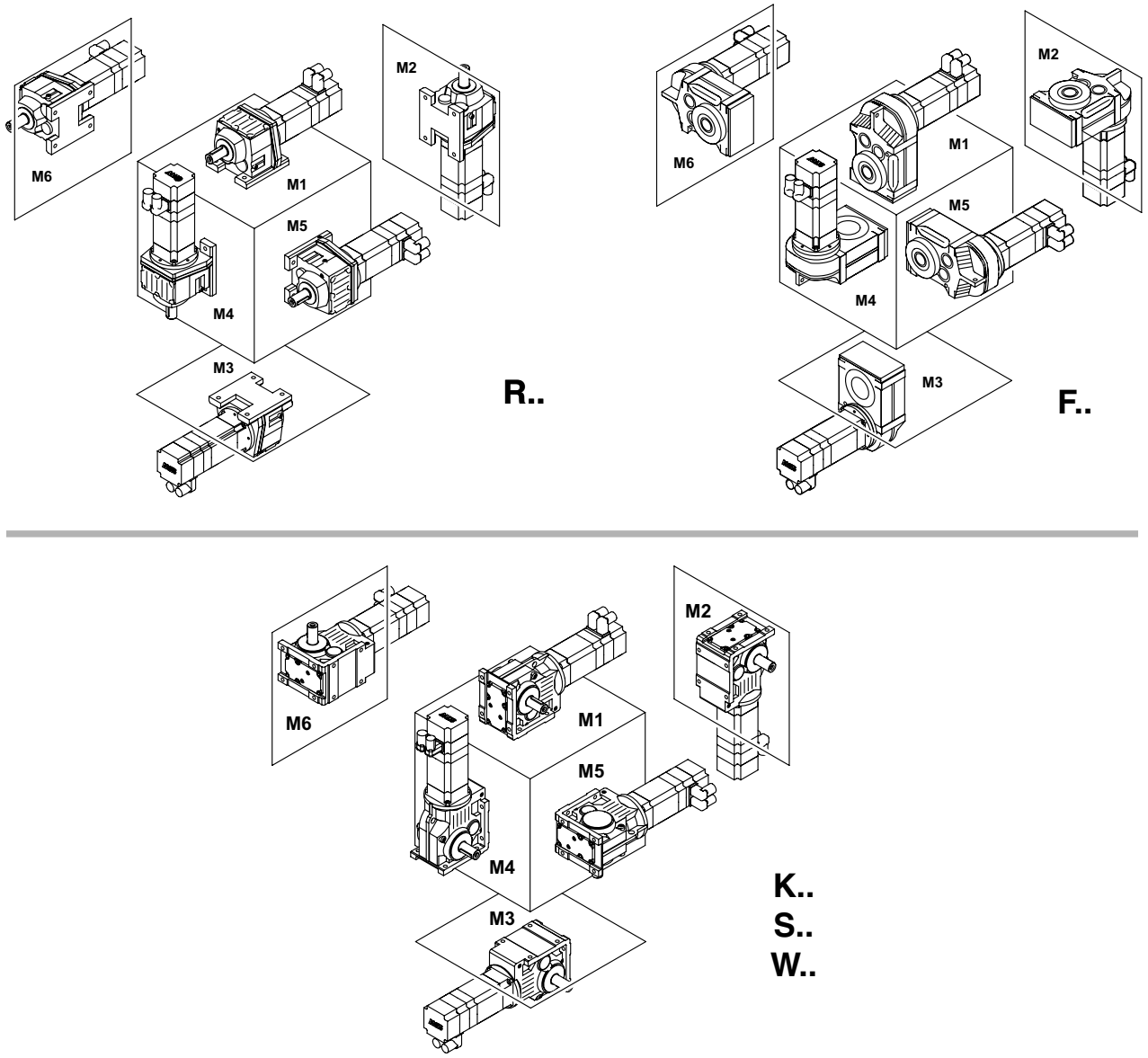

Figure 9: Depiction of mounting positions M1 ... M6

5.2 Order information for servo gearmotors – R, F, K, S, W gear units

	NOTE
	The following order information is required for R, F, K and S gear units and gearmotors in addition to the mounting position to exactly determine the design of the drive. This information is also required for Spiroplan® gearmotors (W gearmotors) that do not depend on a particular mounting position.

Direction of rotation of the output shaft

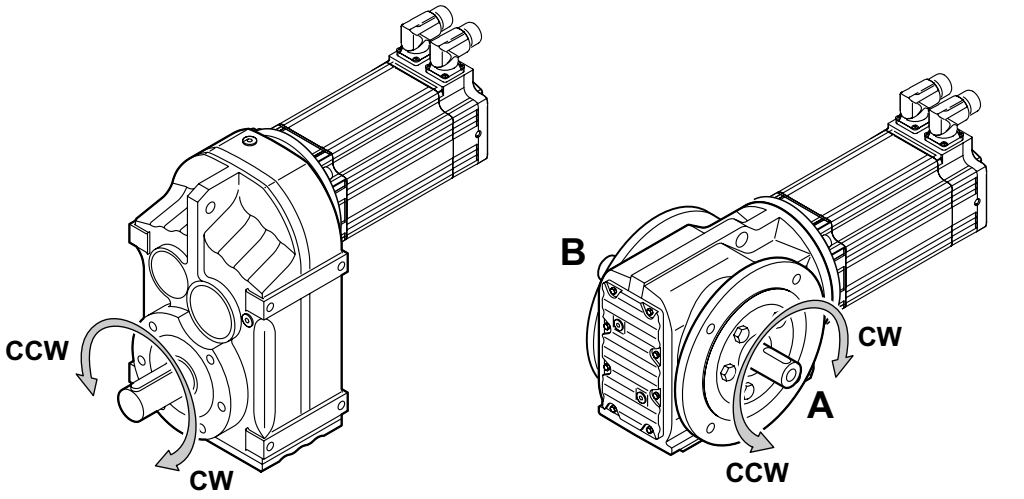

Figure 10: Output direction of rotation

As viewed at the output shaft: Clockwise (CW) = Rotating clockwise
Counterclockwise (CCW) = Rotating counterclockwise

Position of the output shaft and output flange

In right-angle gear units, you also have to indicate the position of the output shaft and the output flange:

- A or B or AB

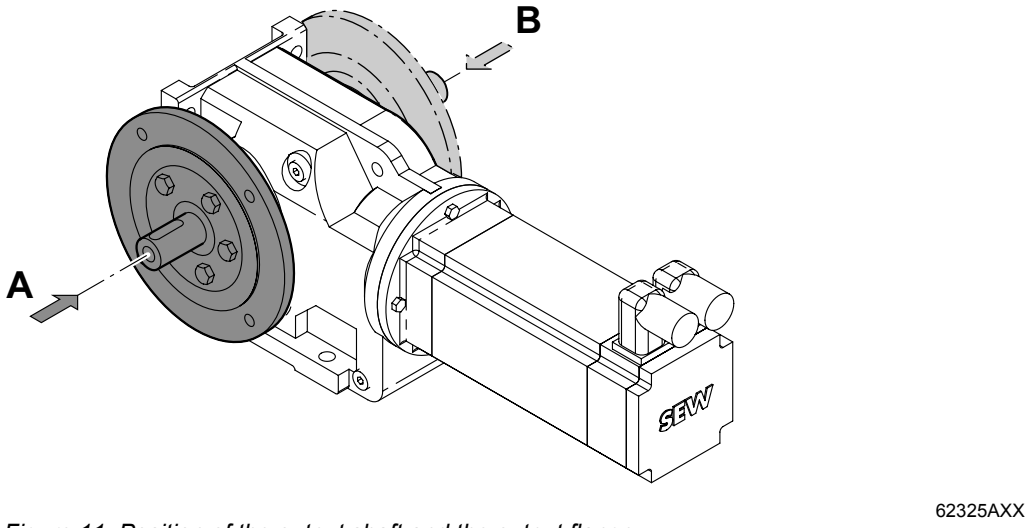

Figure 11: Position of the output shaft and the output flange

Position of output end in right-angle gear units

In shaft mounted right-angle gear units with a shrink disc, you also have to indicate whether the A or B side is the output end. In Figure 12 , the B side is the output end. The shrink disc is located opposite the output end, here on the A side.

In shaft mounted right-angle gear units, the "output end" is equivalent to the "shaft position" of right-angle gear units with solid shaft.

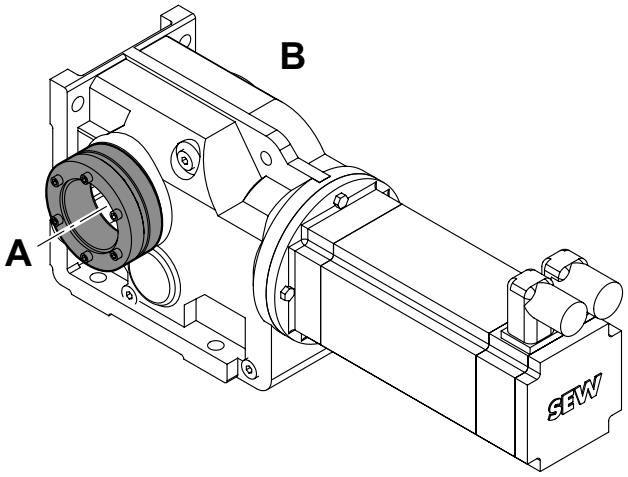

63236AXX

Figure 12: Example: Position of the output end

	NOTE
	You will find the permitted mounting surfaces (= hatched area) in the mounting position sheets (page 82 ff). **Example:** Only the mounting surface at the bottom is possible with helical-bevel gear units K167/K187 in mounting positions M5 and M6.

Changing the mounting position

Make sure to read the following information when you operate the gearmotor in a mounting position other than the one indicated in the order:

- Adjust lubricant fill quantity to match the new mounting position
- Adjust position of breather valve
- For helical-bevel gearmotors: Contact the SEW-EURODRIVE customer service prior to changing to mounting position M5 or M6 and when changing from M5 to M6 or vice versa.
- For helical-worm gearmotors: Contact the SEW-EURODRIVE customer service when changing to mounting position M2 or M3.

5.3 General notes on mounting positions – BS.F, PS.F, PS.C gear units

Mounting position designations for BS.F.. helical-bevel gear units

In the case of gear units, SEW-EURODRIVE distinguishes between mounting positions M1 to M6. The following figure shows the spatial orientation of the gear unit in mounting positions M1 to M6 with the output end A.

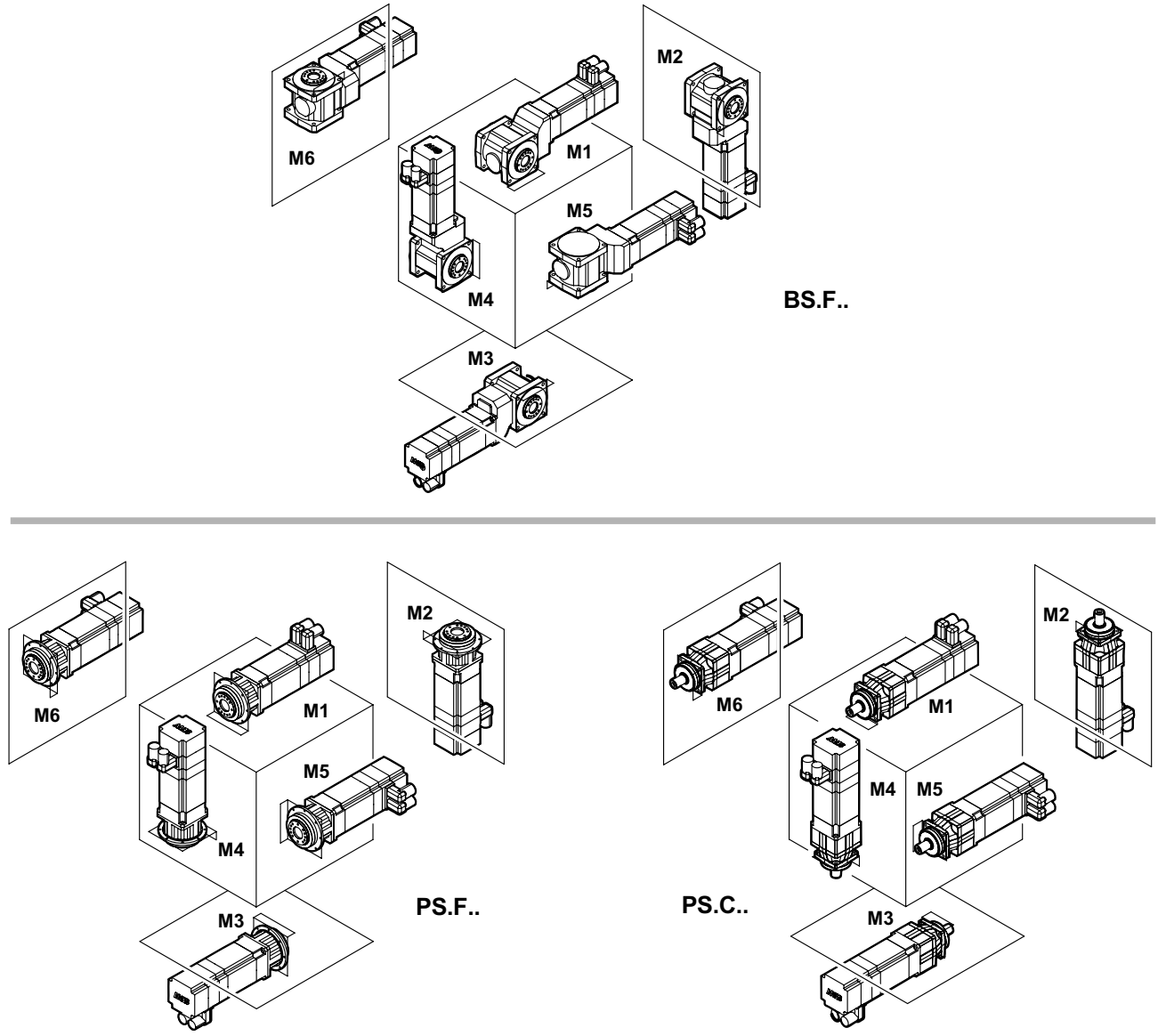

Figure 13: Visual representation of mounting positions

5.4 Order information for servo gearmotors – BS.F, PS.F, PS.C gear units

Definition of sides A and B for the output shafts

When installing the gear unit via one of the output flanges, the gear unit must be attached to the shaft output side via the B5 output flange.

Gear unit type	Position		Installation
	of the output shaft	of the shrink disc	
BSF.. / BSKF.. / BSBF	A side	--	Mounting via B5 flange on the A end
	B side	--	Mounting via B5 flange on the B side
BSHF..	--	B side	Mounting via B5 flange on the A side
	--	A side	Mounting via B5 flange on the B side
BSHF.. /I	--	A side	Mounting via B5 flange on the A side
	--	B side	Mounting via B5 flange on the B side
BSAF..	A side		Mounting via B5 flange on the A side
	B side		Mounting via B5 flange on the B side
BSF../BSKF..	AB	--	--

For BSF.. helical-bevel servo gear units, the position of the output shaft A, B or AB (→Figure 14) must be specified.

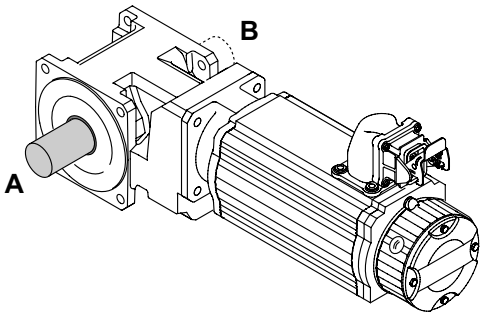

54669AXX

Figure 14: Position of the output shaft of B.F.., BSKF.., BSAF.., BSBF.. helical-bevel gear units

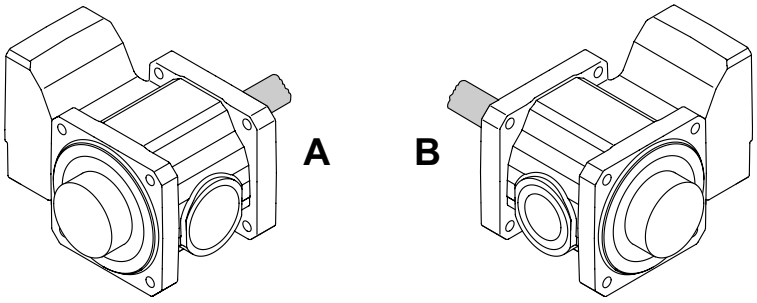

54671AXX

Figure 15: Position of output shaft and output flange for BSHF.. helical-bevel gear units

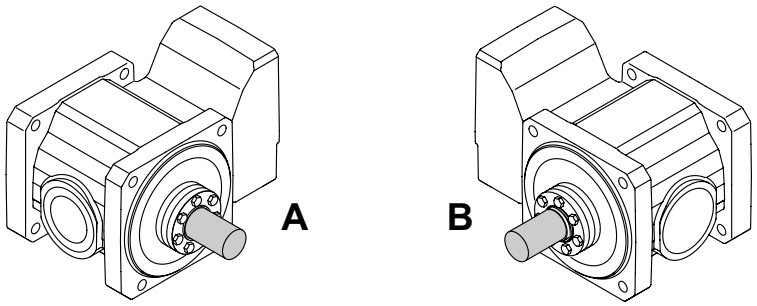

54672AXX

Figure 16: Position of output shaft and output flange for BSHF../I helical-bevel gear units

Direction of rotation of the output shaft

For a definition of the output shaft, see page 67.

5.5 Order information for servomotors

Plug connectors for CFM motors

Position of the power plug connector and the cable entry of CFM motors

Possible positions of the power plug connector are 0°, 90°, 180° or 270° as viewed onto the non-drive end of the motor (onto the fan end).

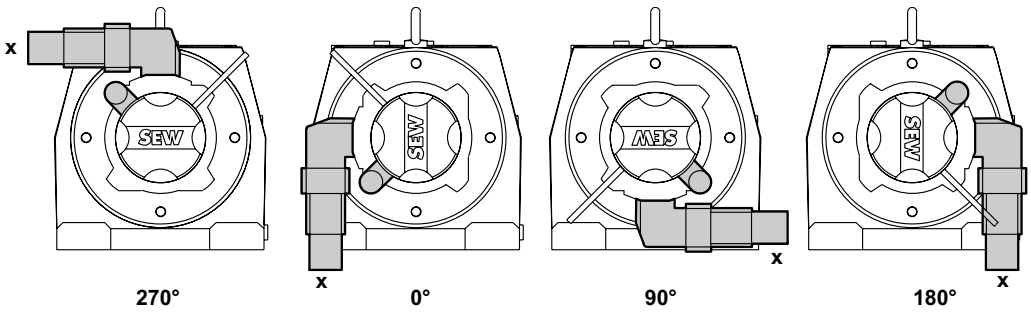

62884axx

Figure 17: Position "X" of the power plug connector of CFM motors

Position of the cable entry of CFM motors

Positions "X", "1", "2" or "3" are possible with CFM motors ("X" = standard).

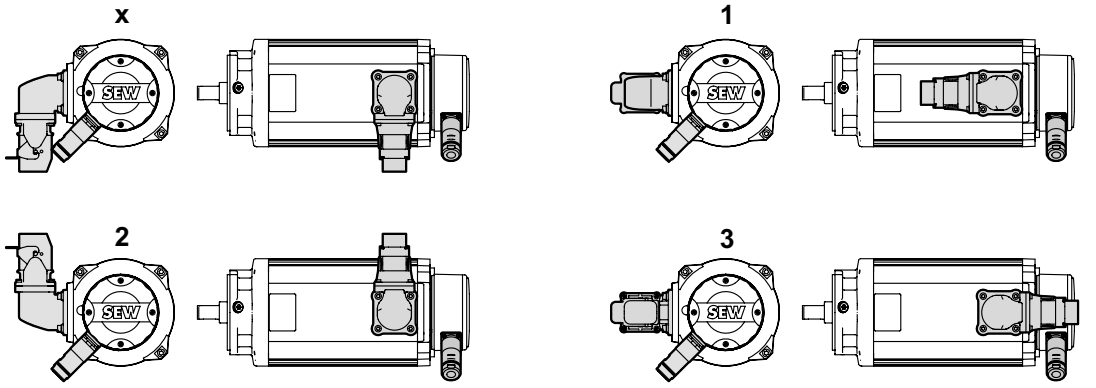

63248AXX

Figure 18: Cable entry position for CM..S.5

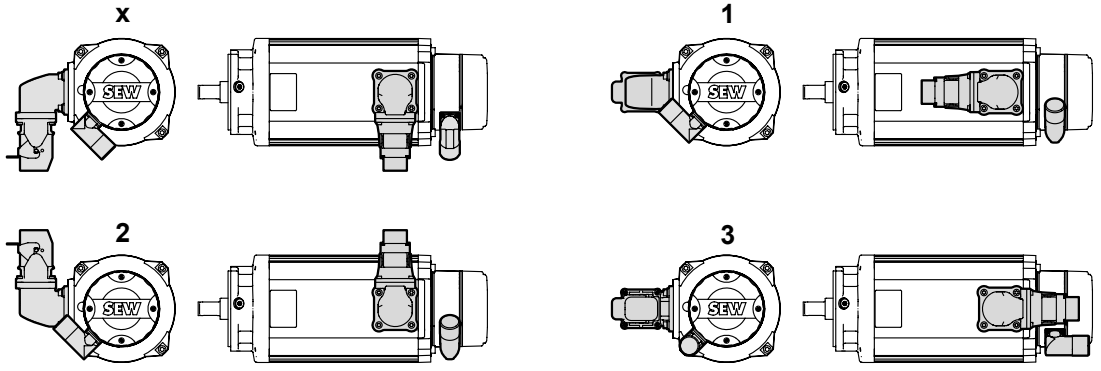

63249AXX

Figure 19: Cable entry position for CM..S.6

Unless indicated otherwise, you will receive the power plug connector type 270° position with cable entry "3" and radial encoder plug (CM..S.5).

Cable entry of CFM motors with plug connector

	R27	R37	R47	R57	R67	R77	R87	R97	R107
CM71S	D	D	G	G	G	G	-	-	-
CM71M	D	D	G	G	G	G	-	-	-
CM71L	D	D	D	F	G	G	-	-	-
CM90S	D	D	D	D	E	F	G	G	-
CM90M	-	-	D	D	D	F	G	G	-
CM90L	-	-	D	D	D	D	F	G	-
CM112S	-	-	D	D	D	D	F	G	G
CM112M	-	-	-	-	D	D	F	G	G
CM112L	-	-	-	-	-	D	D	D	G

	F27	F37	F47	F57	F67	F77	F87	F97	F107
CM71S	E	E	F	F	F	G	-	-	-
CM71M	E	E	E	F	F	G	-	-	-
CM71L	E	E	E	F	F	G	-	-	-
CM90S	E	E	F	E	E	F	G	G	-
CM90M	-	-	-	E	E	E	G	G	-
CM90L	-	-	-	E	E	E	G	G	-
CM112S	-	-	-	E	E	E	F	G	G
CM112M	-	-	-	-	E	E	F	G	G
CM112L	-	-	-	-	-	E	E	F	G

	K37	K47	K57	K67	K77	K87	K97	K107
CM71S	E	E	E	F	G	-	-	-
CM71M	E	E	E	F	G	-	-	-
CM71L	D	E	E	E	G	-	-	-
CM90S	D	E	E	E	F	G	G	-
CM90M	-	D	E	E	E	G	G	-
CM90L	-	-	D	D	D	E	G	-
CM112S	-	-	D	D	E	E	G	G
CM112M	-	-	-	D	D	E	G	G
CM112L	-	-	-	-	D	D	E	G

	S37	S47	S57	S67
CM71S	D	E	G	G
CM71M	D	E	G	G
CM71L		D	D	G
CM90S	-	D	D	E
CM90M	-	-	-	E
CM90L	-	-	-	D
CM112S	-	-	-	D

The key for the tables is listed on the following page.

	**NOTE**
	There may be collisions depending on what the customer has installed on the output end.

"-" means:

- Gear unit/motor combination not possible.

D means:

- Cable entry positions "1", "2", "3", "X" are possible.

E means:

- Cable entry positions "2", "3", "X" are possible.
- Cable entry position "1" only possible at 0°, 180°, 270°.

F means:

- Cable entry positions "2", "3", "X" are possible.
- Cable entry position "1" only possible at 270°.

G means:

- Cable entry positions "2", "3", "X" are possible.
- Cable entry position "1" is not possible.

Cable entry position is defined on page 72 .

NOTE

Caution: Not all connector positions are possible when mounting BS.F helical-bevel gear units.

All cable entry positions are possible when mounting PS.F planetary gear units.

	BS.F302	BS.F402	BS.F502	BS.F602	BS.F802
CM71S	D	D	D	D	-
CM71M	D	D	D	D	-
CM71L	-	D	D	D	-
CM90S	-	C	D	D	D
CM90M	-	C	D	D	D
CM90L	-	C	C	D	D
CM112S	-	-	C	D	D
CM112M	-	-	-	D	D
CM112L	-	-	-	C	D

"-" means:

- Gear unit/motor combination not possible.

C means:

- Cable entry positions "3", "2", "1", "X" are possible.

D means:

- Cable entry positions "3", "2", "X" are possible.
- Cable entry position "1" at 90° is not possible.

Cable entry position is defined on page 72 .

NOTE

Caution: It is not possible to mount a forced cooling fan to motors with axial encoder plug SM6./SB6.

Plug connectors for DFS motors

Position of the power plug connector and the cable entry of DFS motors

Possible positions of the power plug connector are 0°, 90°, 180° or 270° as viewed onto the non-drive end of the motor (onto the fan end).

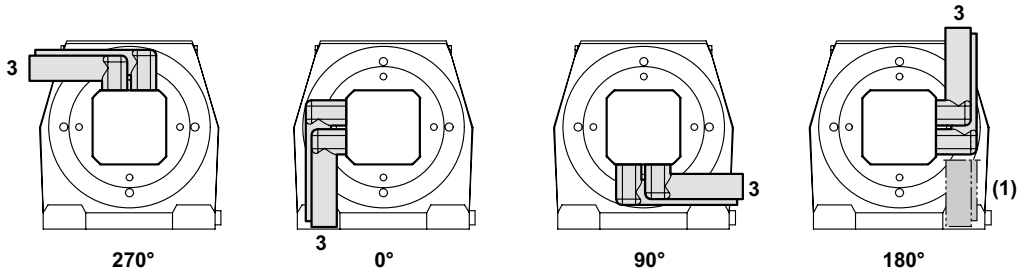

62883axx

Figure 20: Position "3" of the power plug connector of DFS56H motors and DFS56 brakemotors

	NOTE
	If connector position "3" is unfavorable at 180° (cables on top), position "1" can be selected instead.

Position of the cable entry of DFS motors

Positions "2" and "X" are possible for DFS56M and DFS56L motors ("X" = standard).

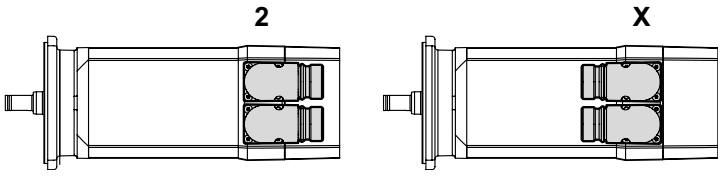

63241AXX

Figure 21: Cable entry position for DS56M/L

Positions "1", "2", "3" and "X" are possible for DFS56H and DFS brake motors.

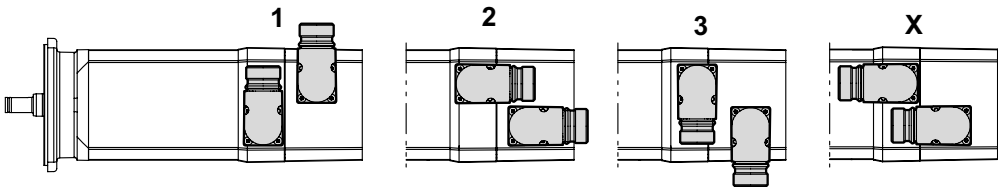

63242AXX

Figure 22: Cable entry position for DS56H

Unless indicated otherwise, you will receive the power plug connector type 270° position with cable entry "2".

Cable entry of DFS motors with plug connector

R F K S	R27 F27	R37 F37 K37 S37	R47-R67	F57-F67	K47-K67	F47 S47	S57	S67
DS56M	A	A	-	-	-	A	A	-
DS56L	A	A	-	-	-	A	A	-
DS56H	B	B	C	C	C	B	B	C

NOTE

There may be collisions depending on what the customer has installed on the output end.

"-" means:

- Gear unit/motor combination not possible.

A means:

- Cable entry position "2" is possible.
- Cable entry positions "1" and "3" are possible for brake motors.

B means:

- Cable entry positions "1", "2", "3" are possible.
- Cable entry position "X" only possible at 270°.

C means:

- Cable entry positions "1", "2", "3" are possible.
- Cable entry position "X" is not possible.

Cable entry position is defined on page 76 .

	NOTE
	Caution: Not all connector positions are possible when mounting BS.F helical-bevel gear units. All cable entry positions are possible when mounting PS.F planetary gear units.

	BS.F202	BS.F302	BS.F402
DS56M	A	A	A
DS56L	A	A	A
DS56H	B	B	B

A means:

- Cable entry positions "2" and "X" are possible.
- Cable entry positions "1" and "3" are possible for brake motors.
- Cable entry position "X" at 90° is not possible.

B means:

- Cable entry positions "3", "2", "1", "X" are possible.
- Cable entry position "X" at 90° is not possible.

Cable entry position is defined on page 76 .

Terminal box

Position of motor terminal box and cable entry

The product standard EN 60034 specifies that the following designations have to be used for terminal box positions:

- As viewed onto the output shaft = A-end
- Designation as R (right), B (bottom), L (left) and T (top)

This new designation applies to motors without a gear unit in mounting position B3 (= M1). The previous designation is retained for gearmotors.

The position of the motor terminal box has so far been specified indicated with 0°, 90°, 180° or 270° as viewed onto the fan guard = B-end.

Figure 23 shows both designations. Where the mounting position of the motor changes, "R", "B", "L" and "T" are rotated accordingly.

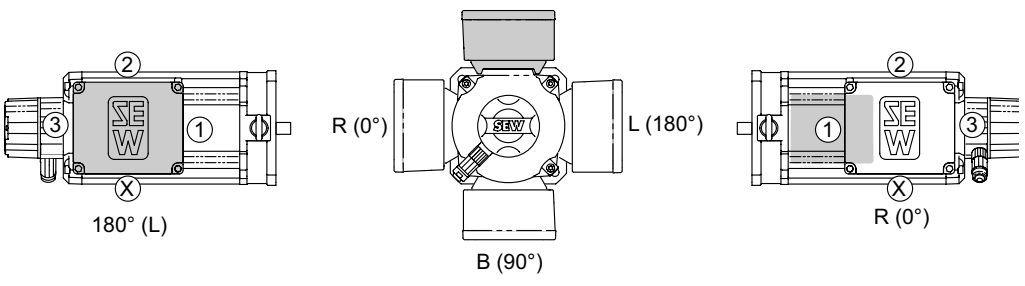

Figure 23: Position of terminal box and cable entry

Unless indicated otherwise, you will receive the terminal box type 0° with "X" cable entry, see page 72.

We recommend selecting cable entry "2" with mounting position M3.

NOTE

- The terminal box can only be rotated with the entire motor: 0°, 90° and 180°.
- The terminal box has a cable entry with positions "2", "3" and "X".
- The CM112H synchronous servomotor can only be ordered with terminal box.

Terminal box position	R (0°)	B (90°)	L (180°)	T (270°)
Possible cable entries	X, 3	X, 1, 3	1, 2	X, 1, 3

Plug connectors of CMP servomotors

Servomotors of the CMP series are equipped with adjustable or radial connectors. There is no variant with a terminal box.

Position of the cable entry of CMP motors

Position "adjustable" has been defined for right-angle, rotatable connectors. This is the standard connector position. It corresponds to connector position "3".

Position "radial" has been defined for the straight connector housing (radial output). Radial connectors are optional.

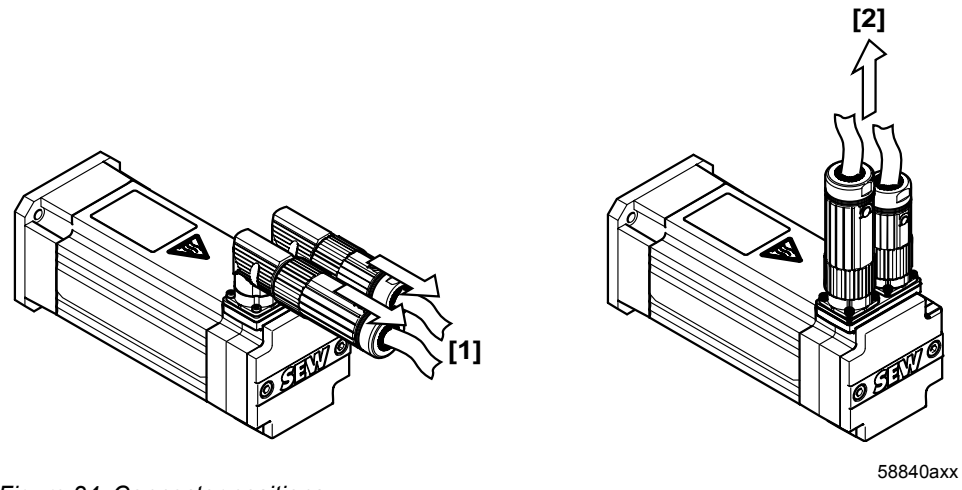

Figure 24: Connector positions

[1] Connector position "adjustable"

[2] Connector position "radial"

The CMP motors are supplied with right-angle connectors in position "adjustable" as standard.

The right-angle connectors can be rotated to achieve all position.

NOTE

The connector should only be rotated to install and connect the motor. Do not turn the connector regularly once it has been installed.

5.6 Key to the mounting position sheets

Symbols used

The following table shows the symbols used in the mounting position sheets and their meaning:

Symbol	Meaning
	Breather valve
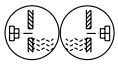	Oil level plug[1)]
	Oil drain plug
③	Cable entry position "3"

1) Does not apply to the first gear unit (larger gear unit) of multi-stage gear units.

NOTE

Notes on the shafts displayed in the mounting position sheets!

Note the following information regarding display of shafts in the mounting position sheets:

- **For gear units with solid shaft:** The displayed shaft is always on the A end.
- **For shaft mounted gear units:** The shaft with dashed lines represents the customer shaft. The output end (= shaft position) is always shown on the A end.

NOTE

The Spiroplan® gearmotors are not dependant on the mounting position, except for W..37 in mounting position M4. However, mounting positions M1 to M6 are also shown for Spiroplan® gearmotors to assist you in working with this documentation.

Important! Please note:

Spiroplan® gearmotors W..10 to W..30 cannot be equipped with breather valves, oil level plugs or drain plugs.

Spiroplan® gearmotors W..37 can be equipped with breather valves in mounting position M4 and with oil drain plugs in mounting position M2.

NOTE

Notes on the displayed motors.

Motors are only represented symbolically in the mounting position sheets.

Churning losses

* → page XX

Churning losses may occur in some mounting positions. Contact SEW-EURODRIVE in case of the following combinations:

Mounting position	Gear unit type	Gear unit size	Input speed [rpm]
M2, M4	R	97 ... 107	> 2500
		> 107	>1500
M2, M3, M4, M5, M6	F	97 ... 107	> 2500
		> 107	> 1500
	K	77 ... 107	> 2500
		> 107	> 1500
	S	77 ... 97	> 2500

5.7 Mounting positions of helical gearmotors

RX57...RX107

04 043 02 00

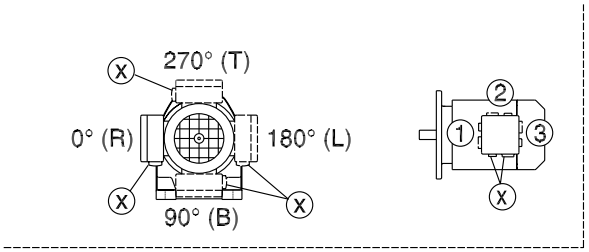

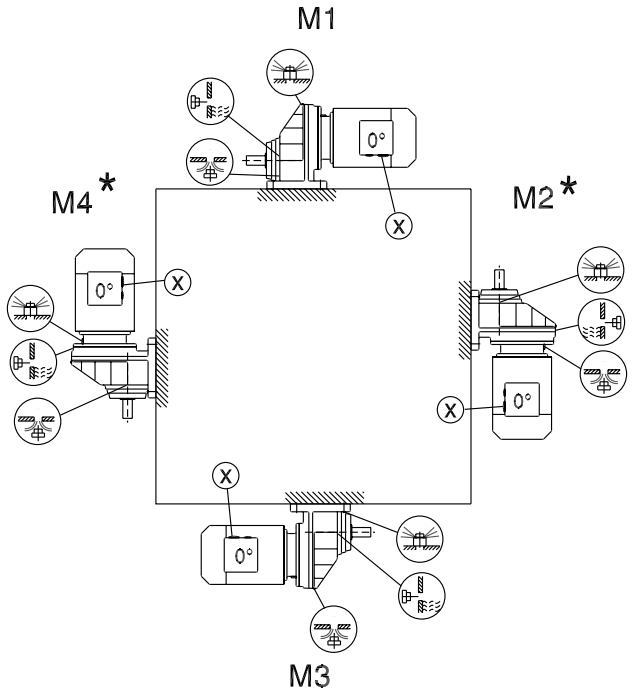

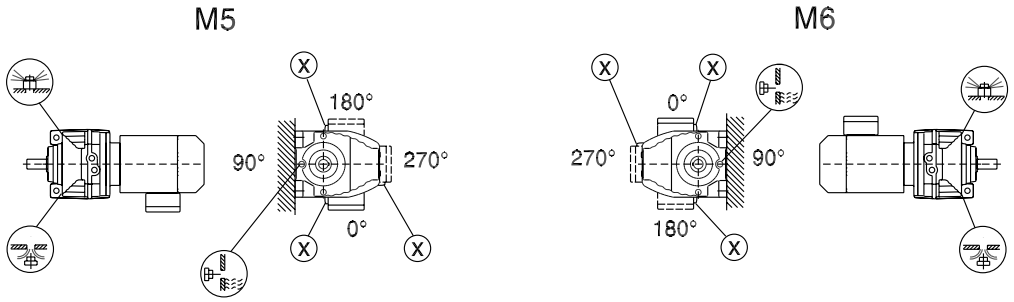

* → page 81

RXF57...RXF107

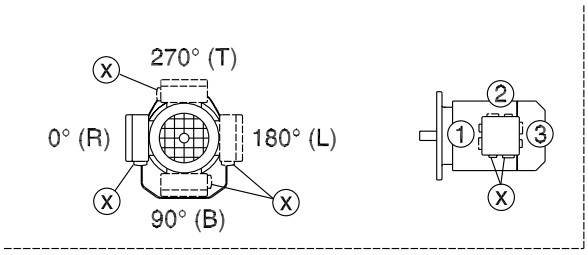

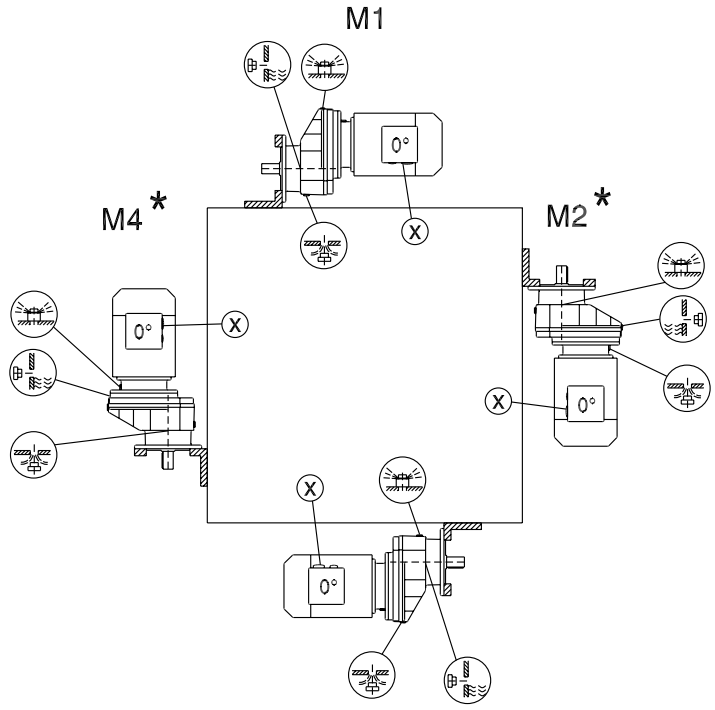

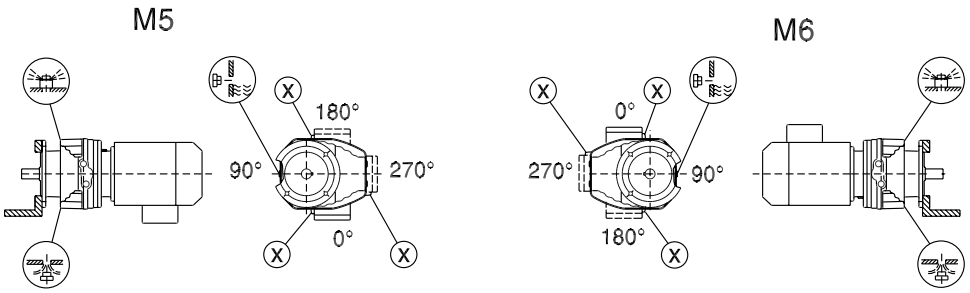

* → page 81

R07 ... R167

04 040 03 00

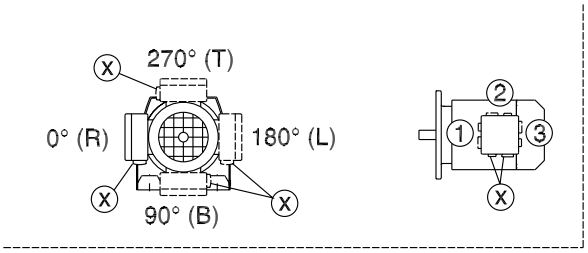

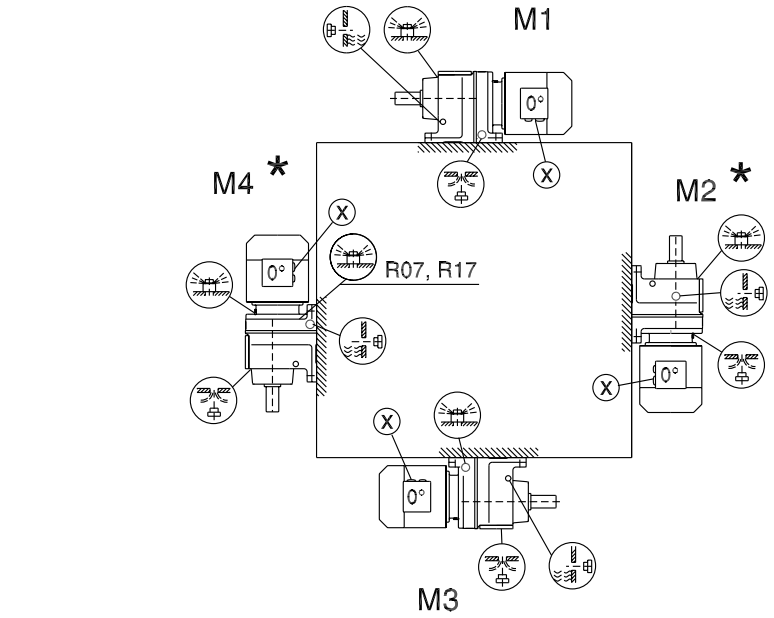

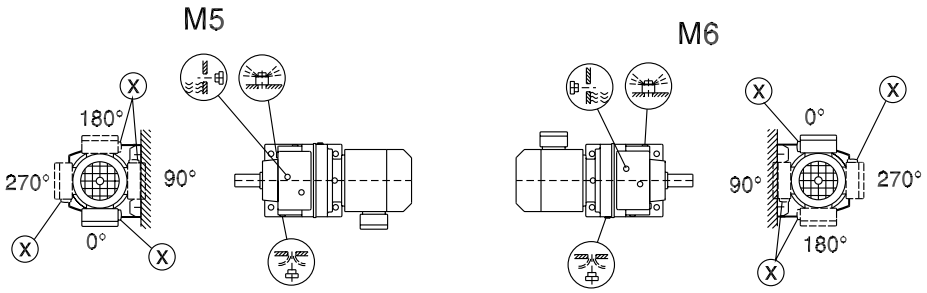

R07		M1, M2 , M3 , M5 , M6
R17, R27		M1, M3 , M5 , M6
R07, R17, R27		
R47, R57		M5

* → page 81

RF07...RF167, RZ07...RZ87

04 041 03 00

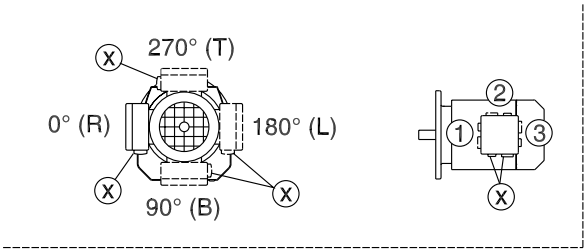

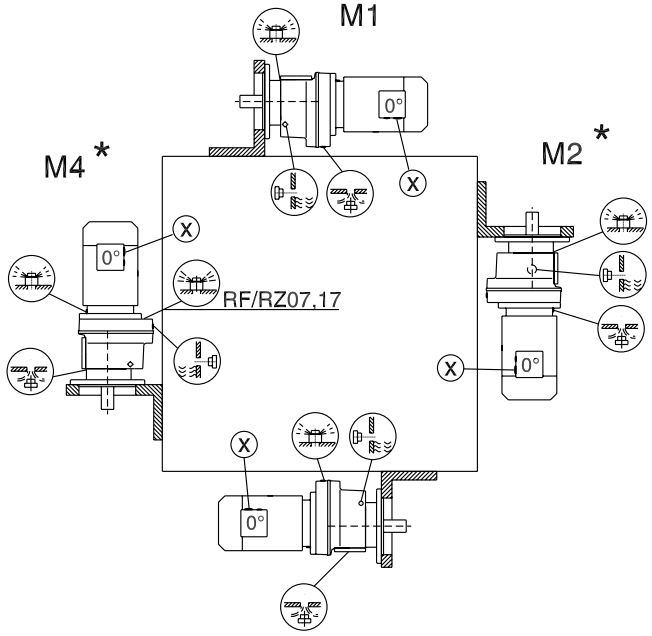

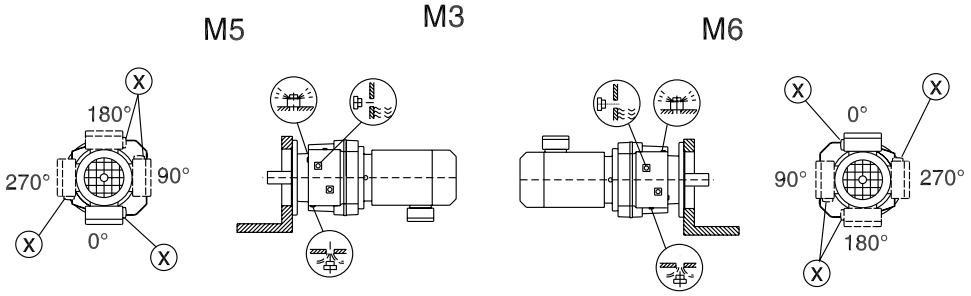

RF/RZ07		M1, M2 , M3 , M5 , M6
RF/RZ17,27		M1, M3 , M5 , M6
RF/RZ07, 17, 27		
RF/RZ47, 57		M5

* → page 81

R07F...R87F

04 042 03 00

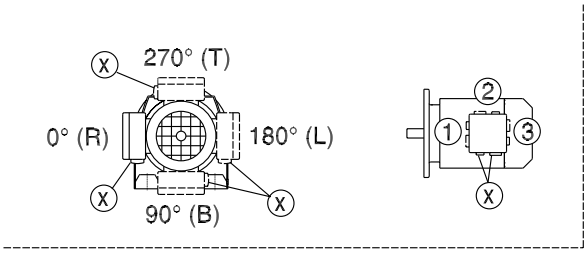

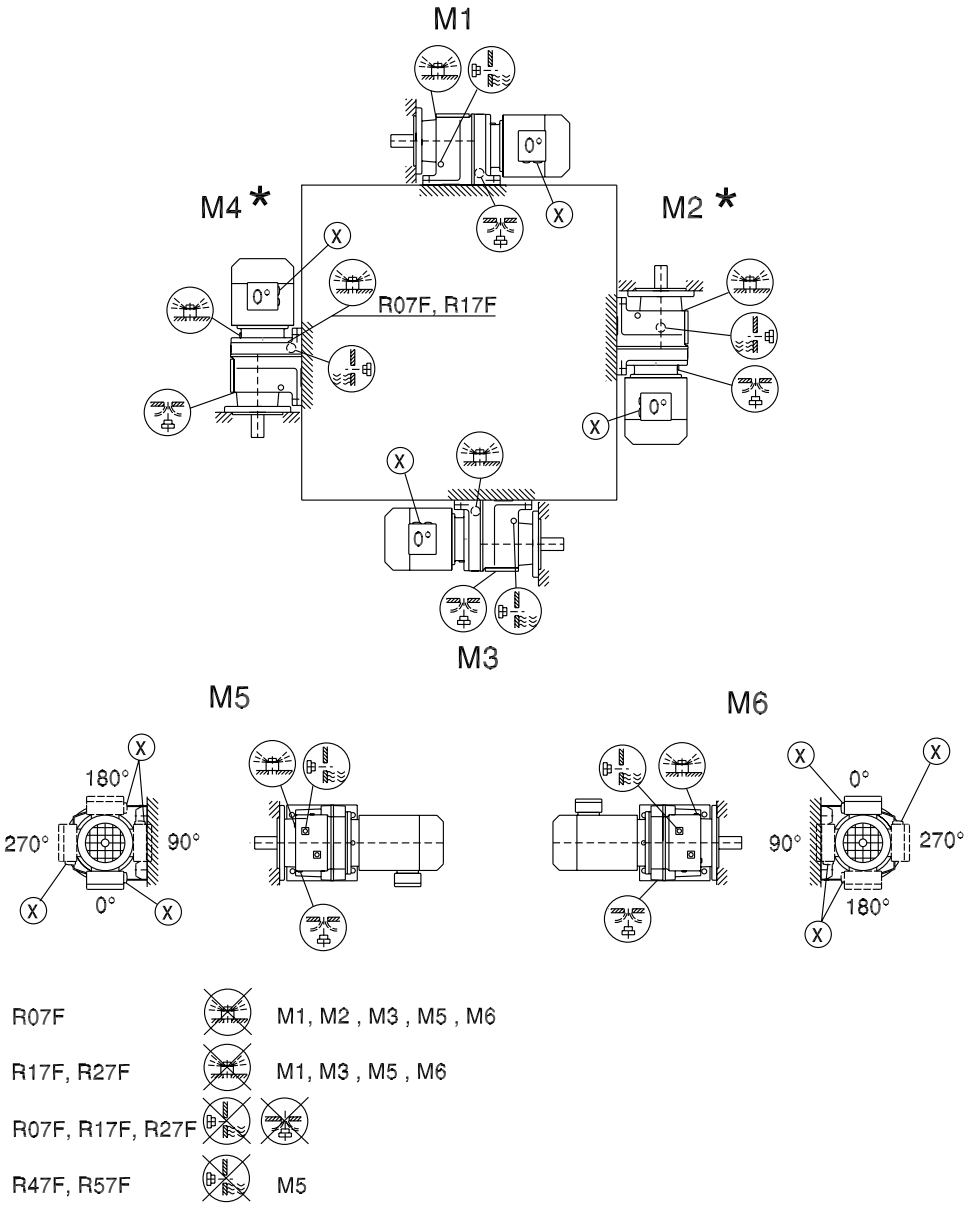

R07F		M1, M2 , M3 , M5 , M6
R17F, R27F		M1, M3 , M5 , M6
R07F, R17F, R27F		
R47F, R57F		M5

* → page 81

Caution: See the ⓘ notes in chapter "Project planning / Overhung and axial loads" (page 48).

5.8 Parallel shaft helical gearmotors

F/FA..B/FH27B...157B, FV27B...107B

42 042 03 00

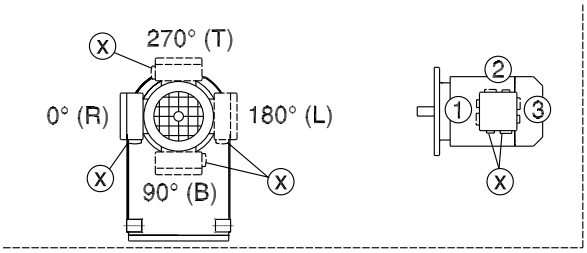

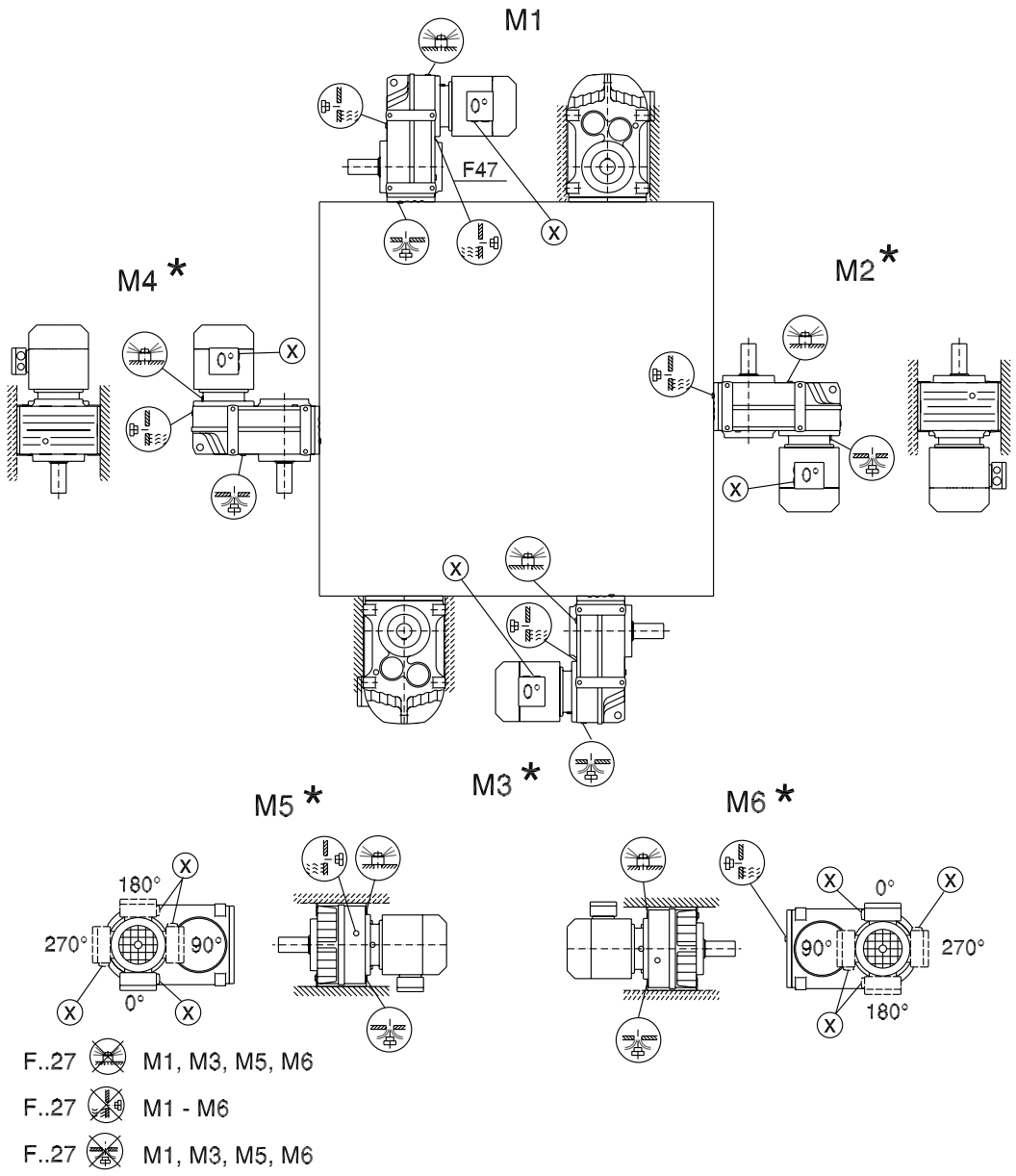

F..27 M1, M3, M5, M6

F..27 M1 - M6

F..27 M1, M3, M5, M6

* → page 81

FF/FAF/FHF/FAZ/FHZ27...157, FVF/FVZ27...107

42 043 03 00

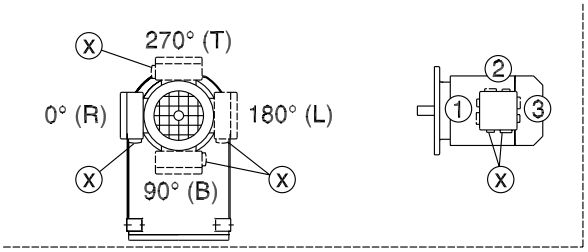

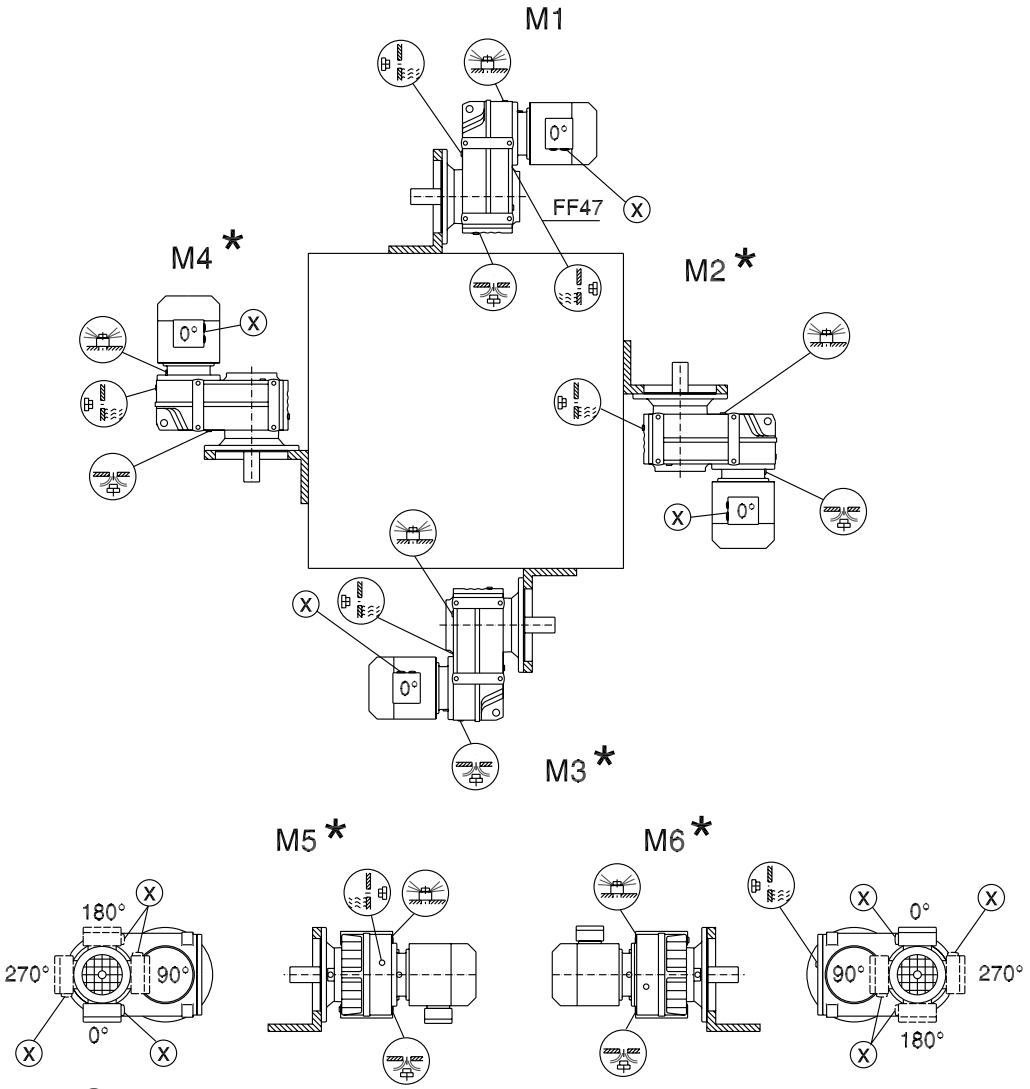

F..27 M1, M3, M5, M6

F..27 M1 - M6

F..27 M1, M3, M5, M6

* → page 81

FA/FH27...157, FV27...107, FT37...97

42 044 03 00

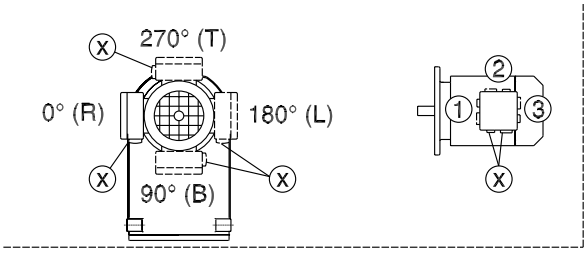

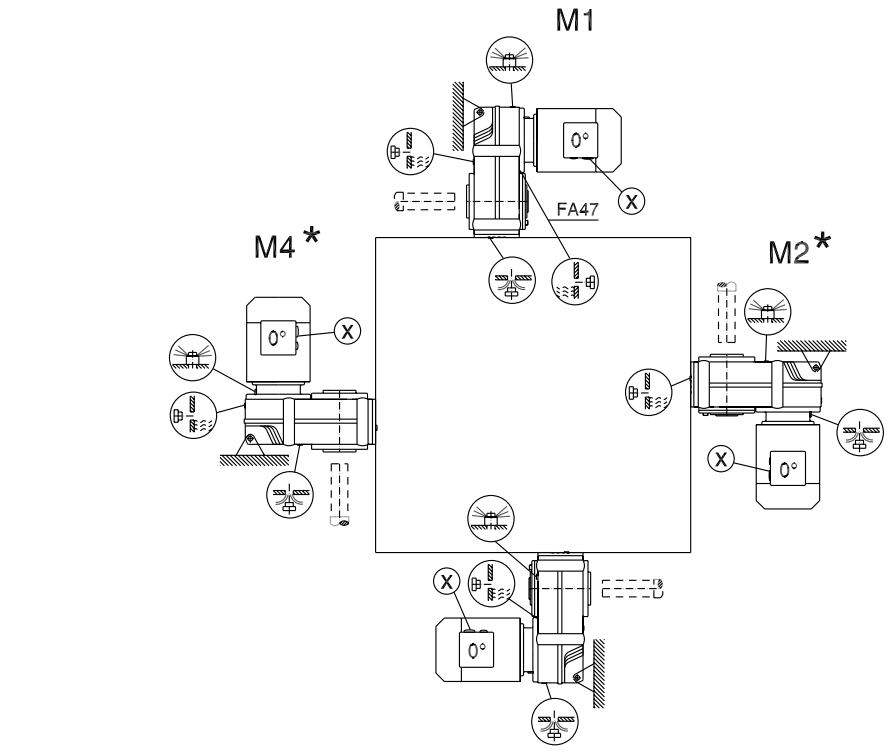

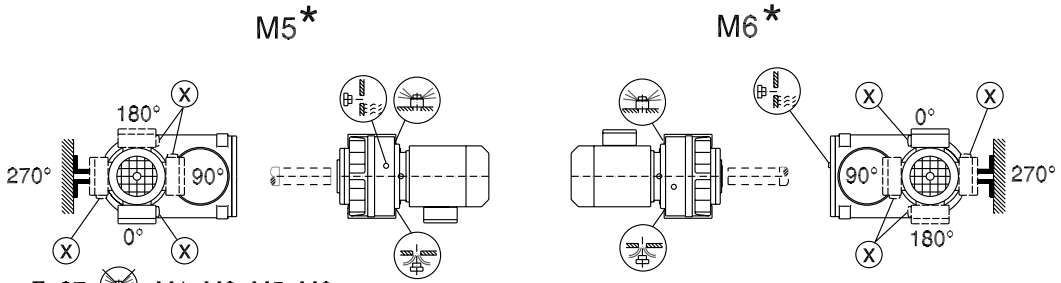

F..27 M1, M3, M5, M6

F..27 M1 - M6

F..27 M1, M3, M5, M6

* → page 81

5.9 Mounting positions of helical-bevel gearmotors

K/KA..B/KH37B...157B, KV37B...107B

34 025 03 00

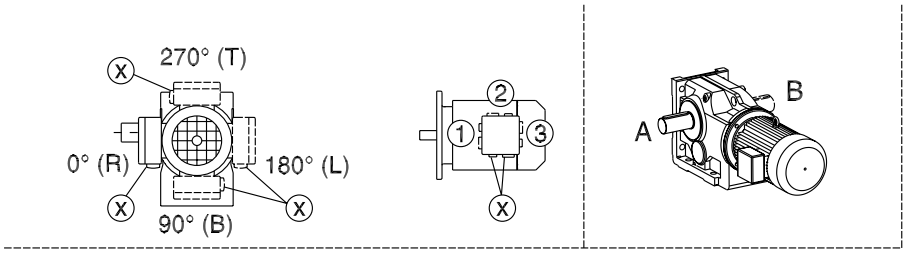

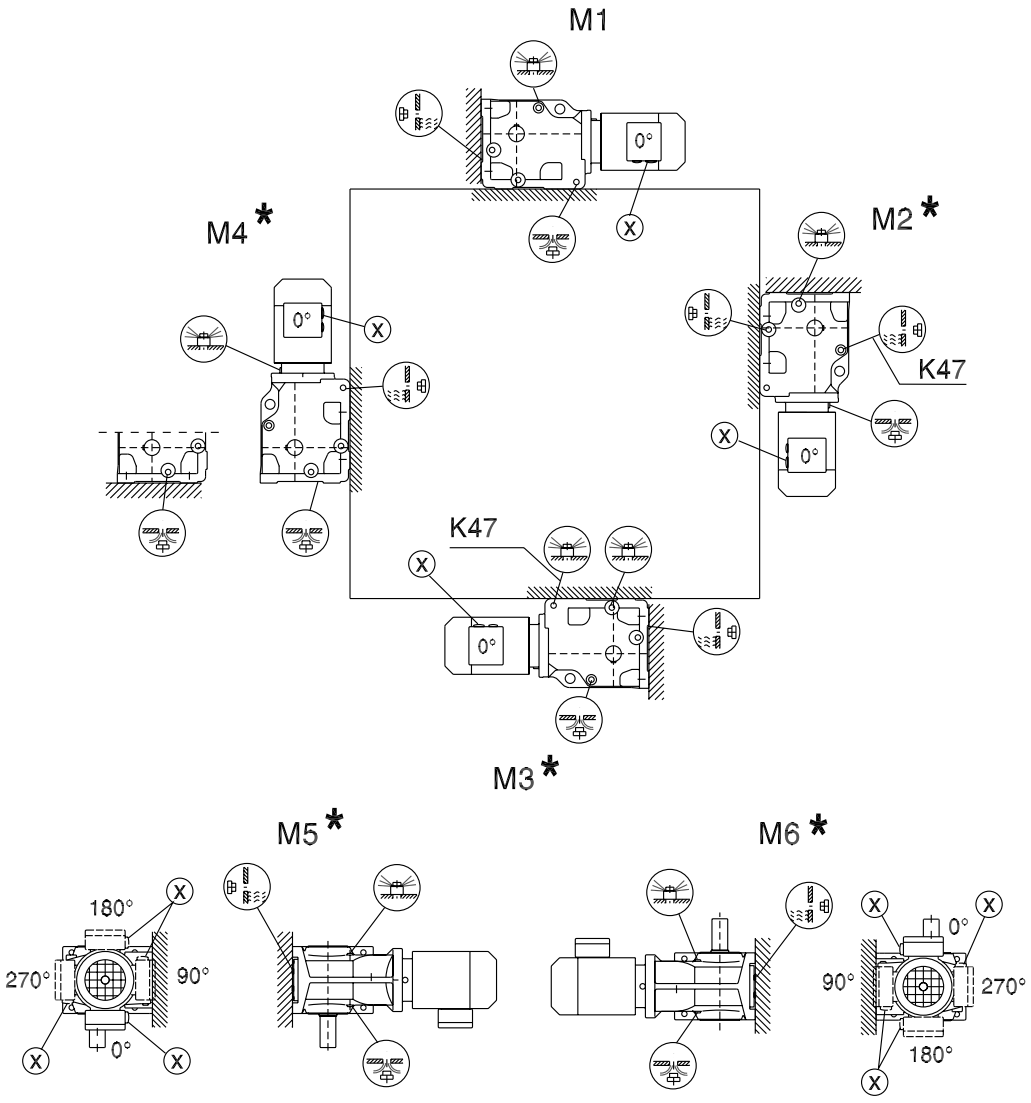

* → page 81

Caution: See the (i) notes in chapter "Project planning / Overhung and axial loads" (page 48).

K167...187, KH167B...187B

34 026 03 00

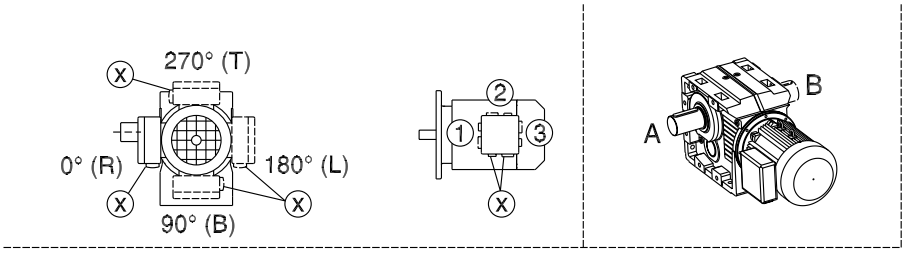

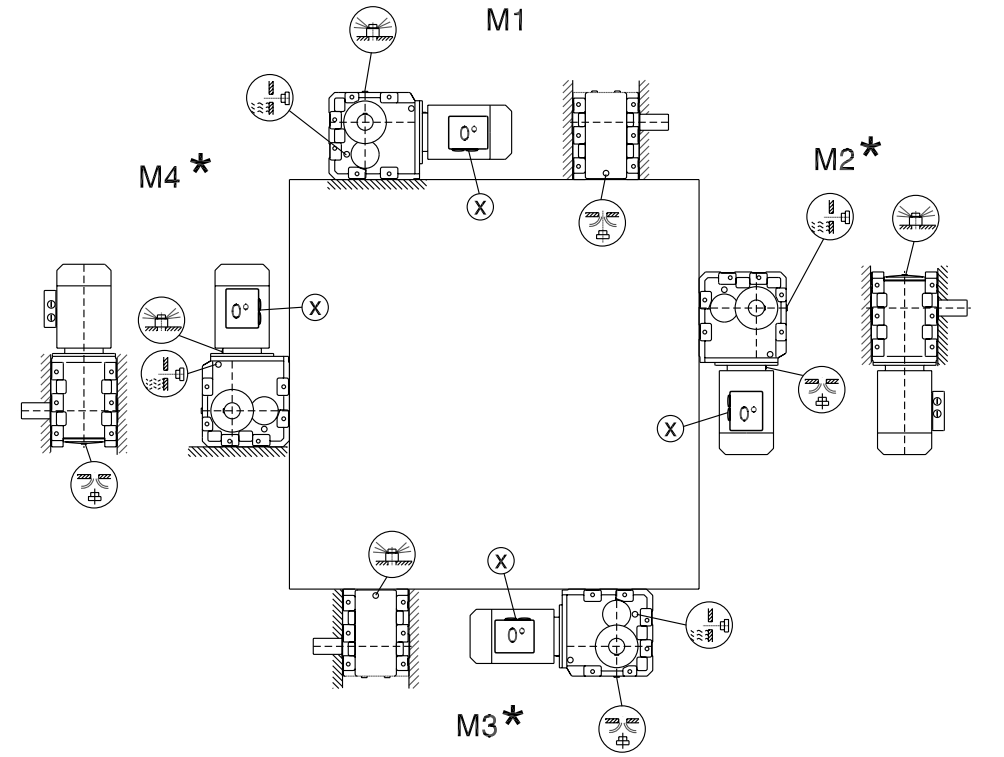

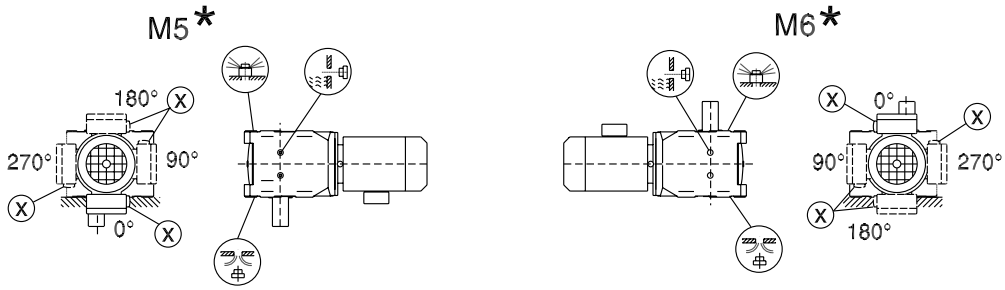

* → page 81

Caution: See the (i) notes in chapter "Project planning / Overhung and axial loads" (page 48).

KF/KAF/KHF/KAZ/KHZ37...157, KVF/KVZ37...107

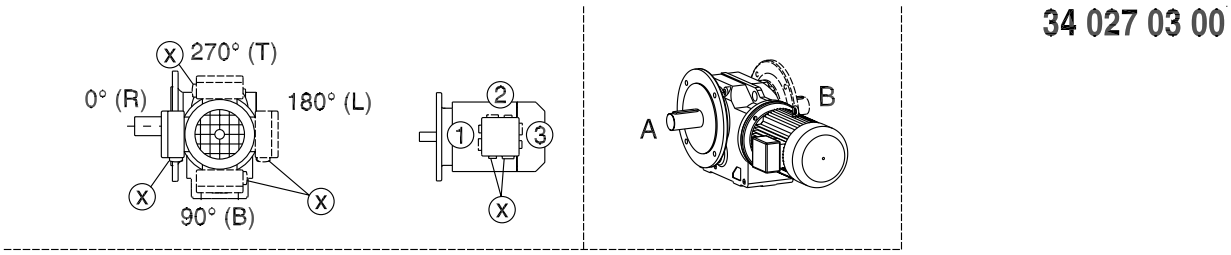

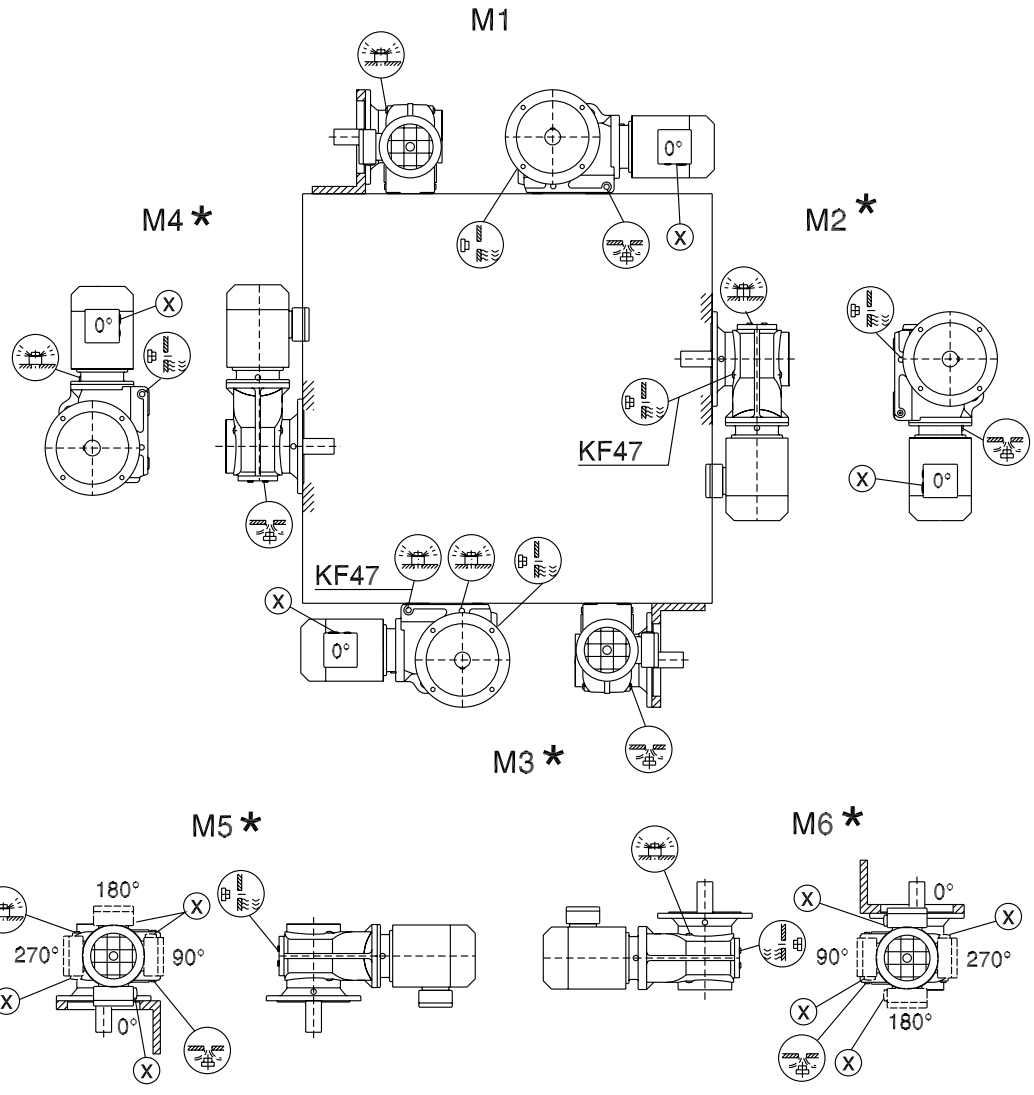

* → page 81

KA/KH37...157, KV37...107, KT37...97

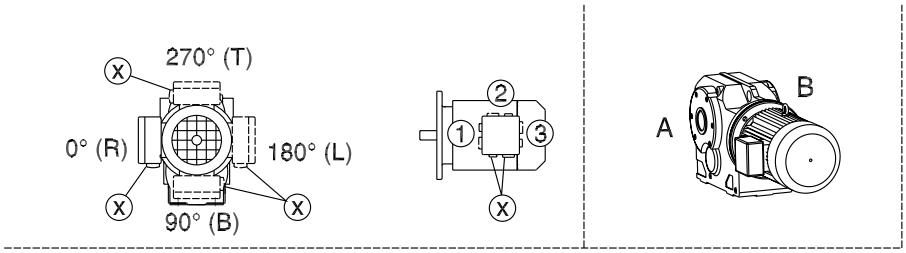

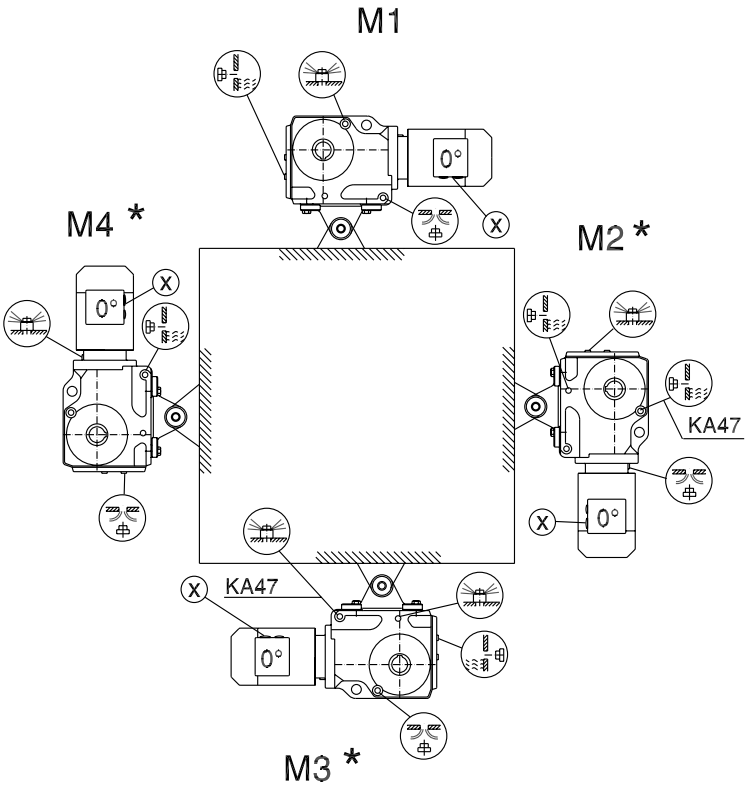

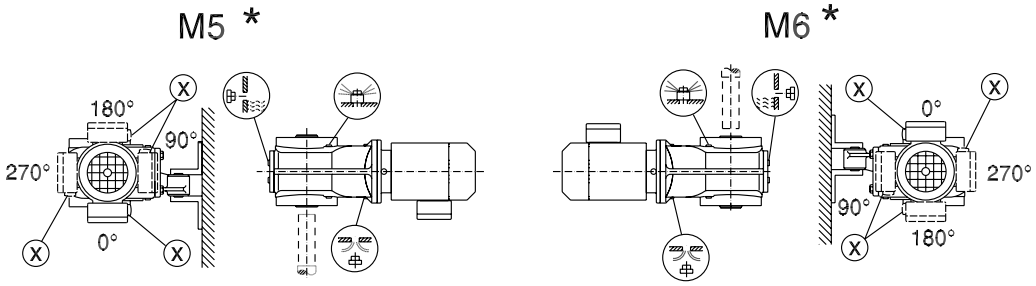

* → page 81

KH167...187

39 026 04 00

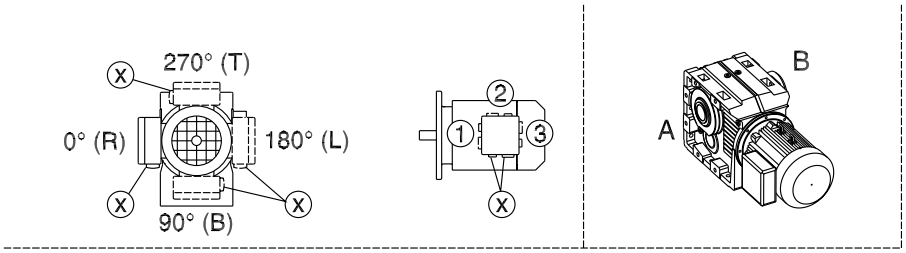

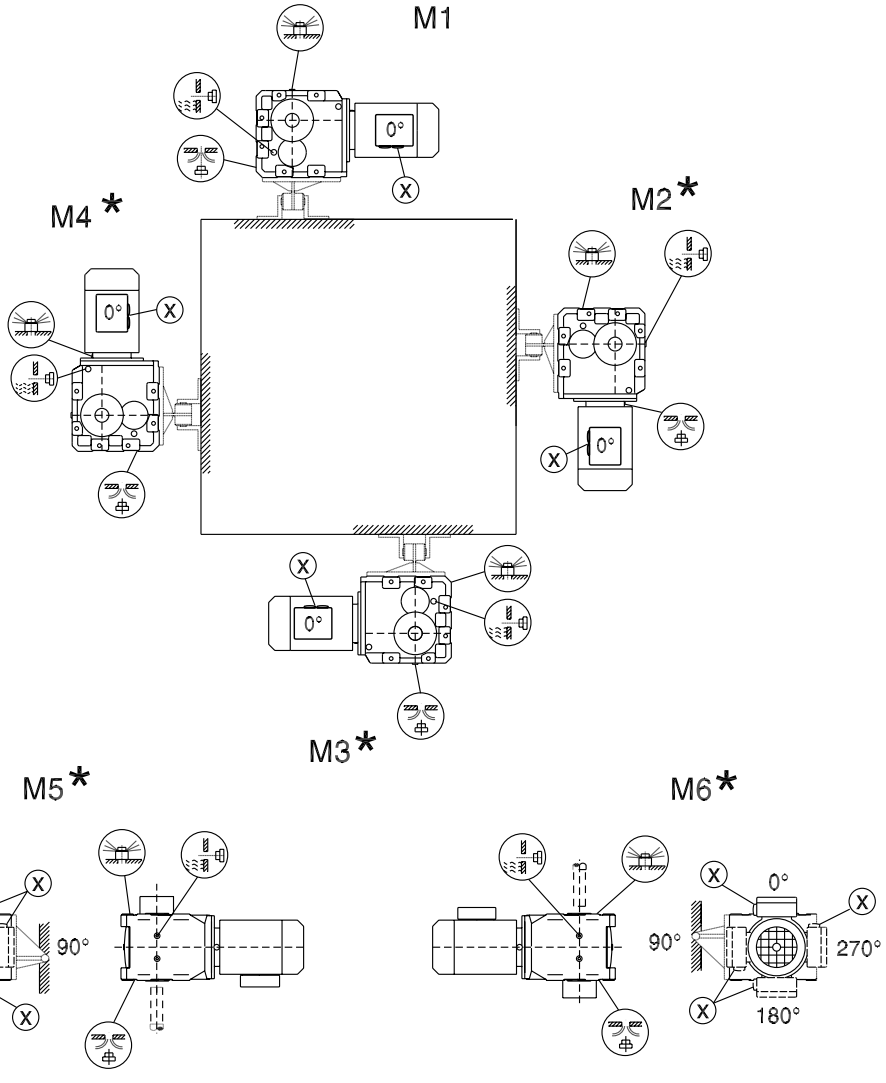

* → page 81

5.10 Mounting positions of helical-worm gearmotors

S37

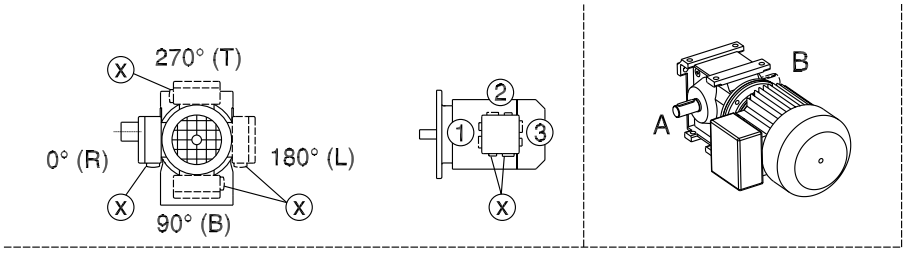

05 025 03 00

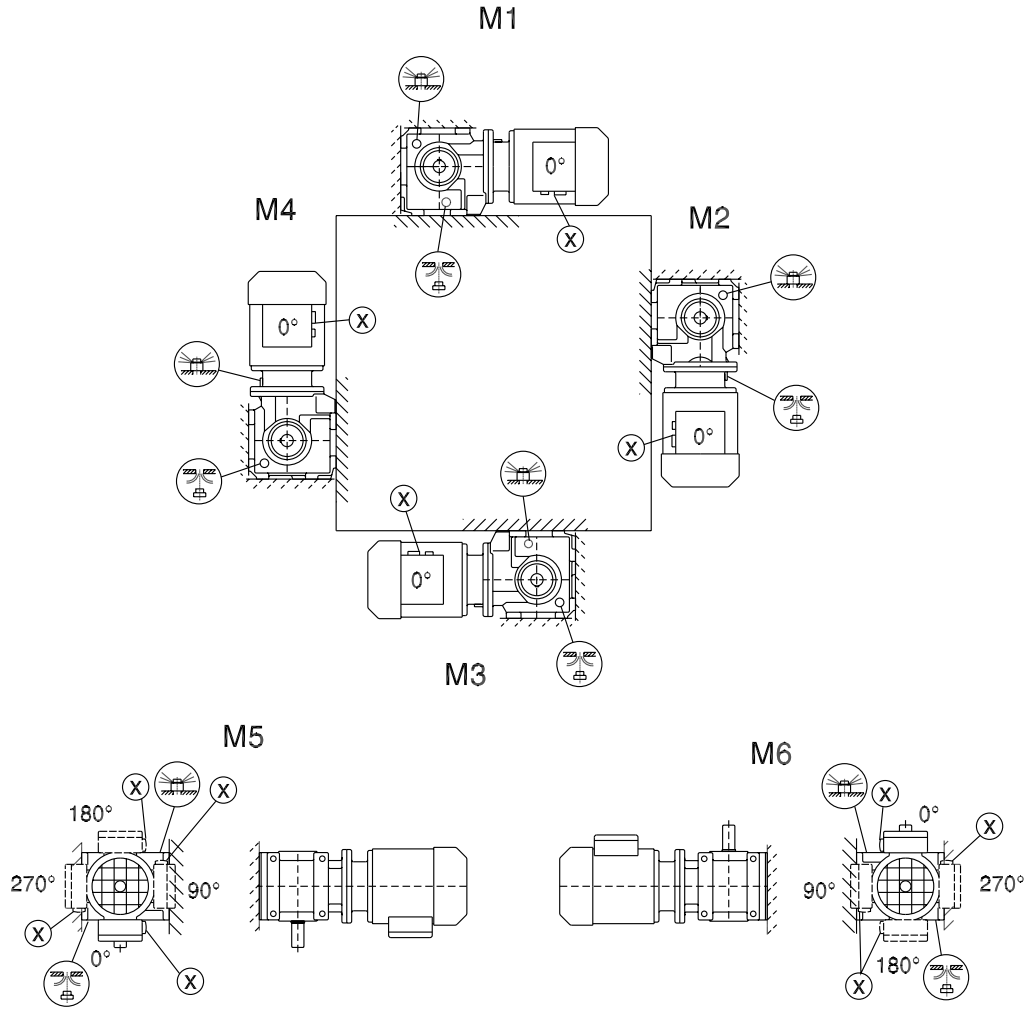

* → page 81

Caution: See the (i) notes in chapter "Project planning / Overhung and axial loads" (page 48).

S47...S97

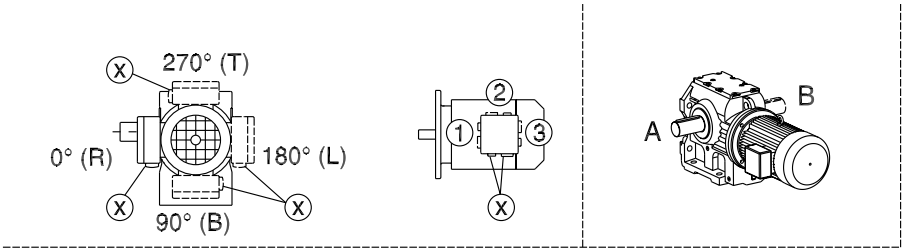

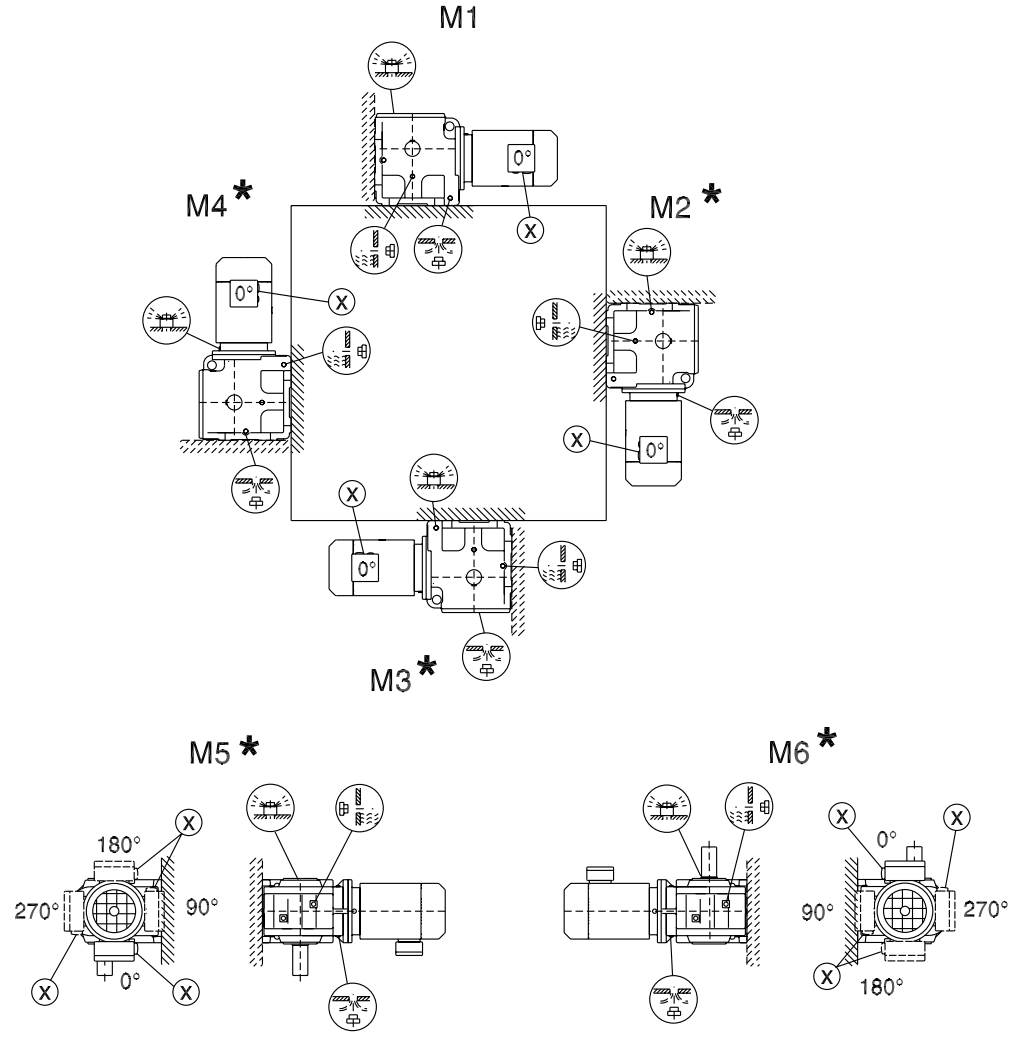

* → page 81

Caution: See the ⓘ notes in chapter "Project planning / Overhung and axial loads" (page 48).

SF/SAF/SHF37

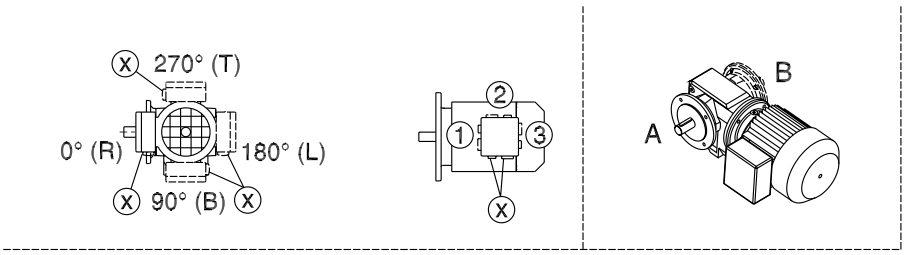

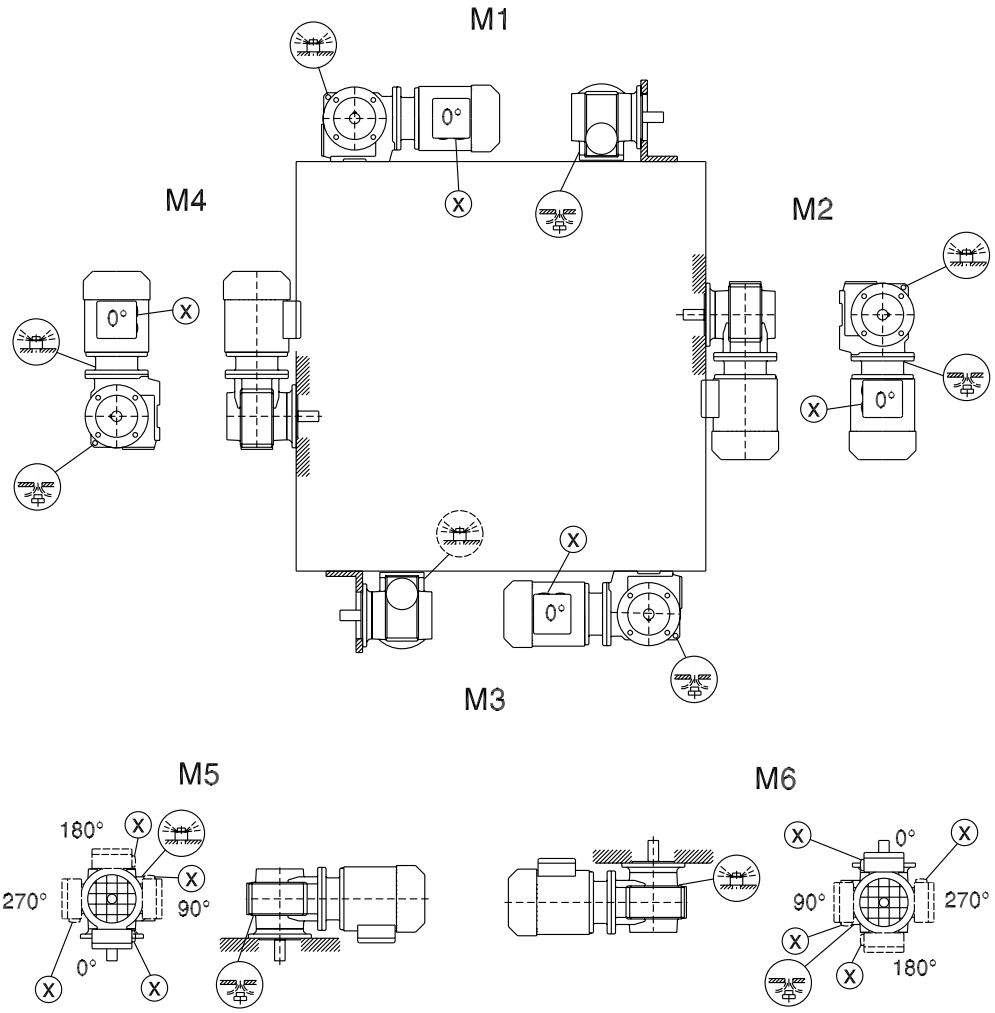

* → page 81

SF/SAF/SHF/SAZ/SHZ47...97

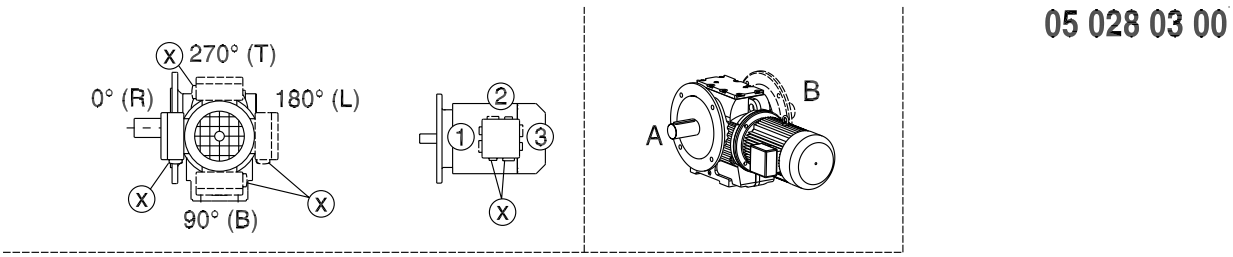

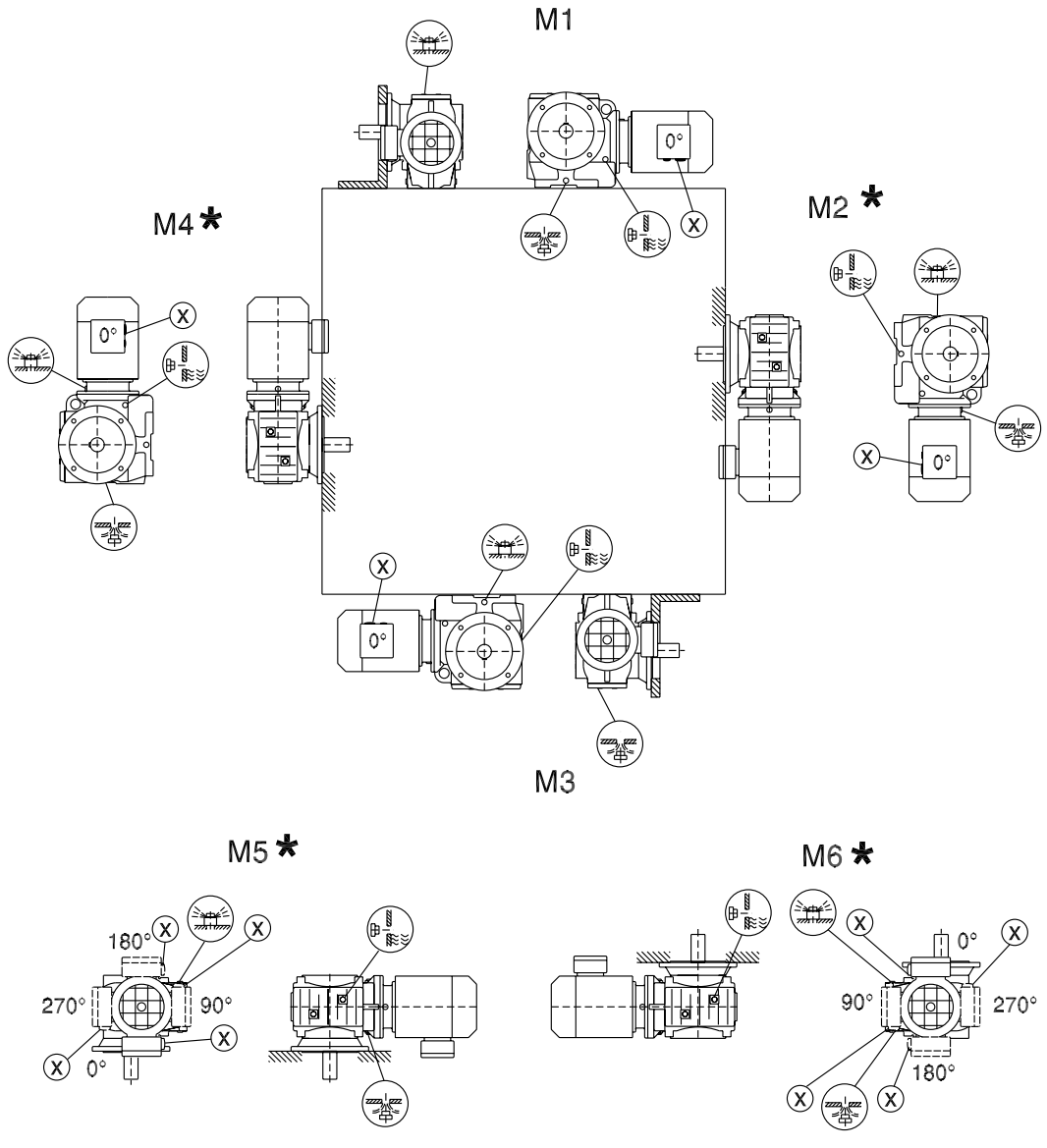

* → page 81

SA/SH/ST37

28 020 04 00

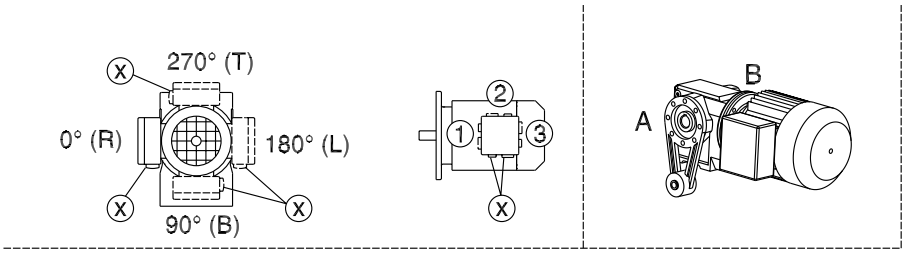

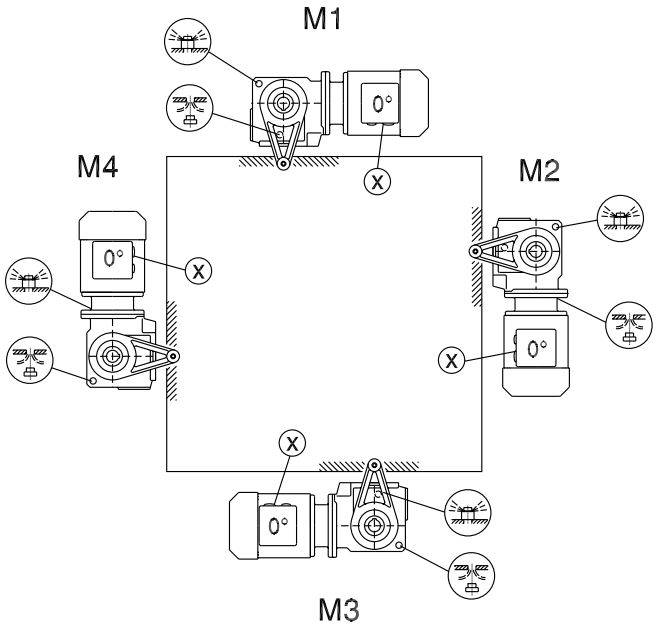

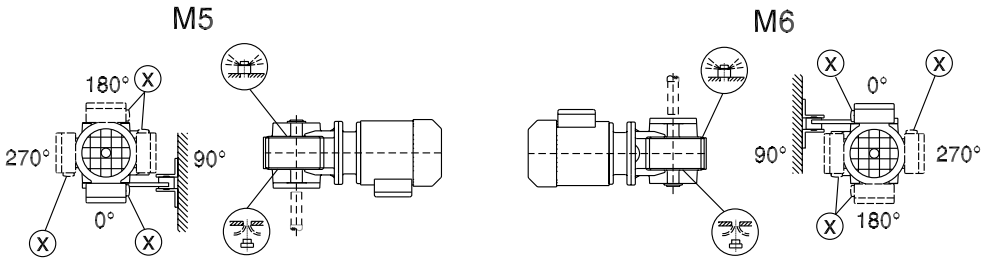

* → page 81

SA/SH/ST47...97

28 021 03 00

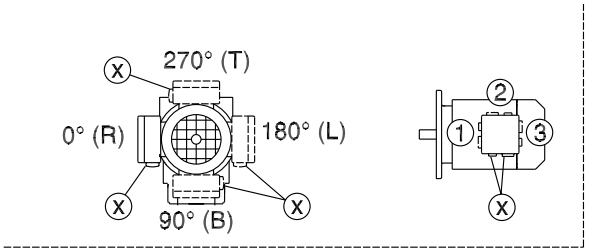

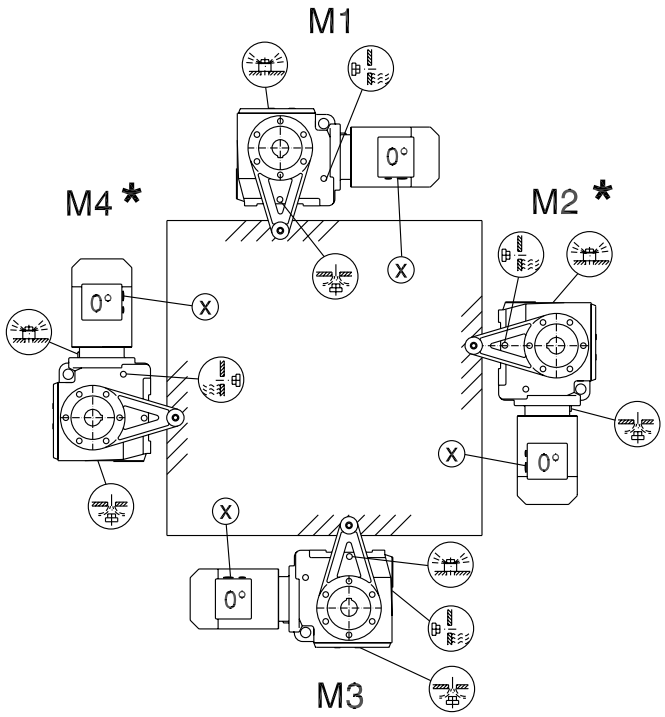

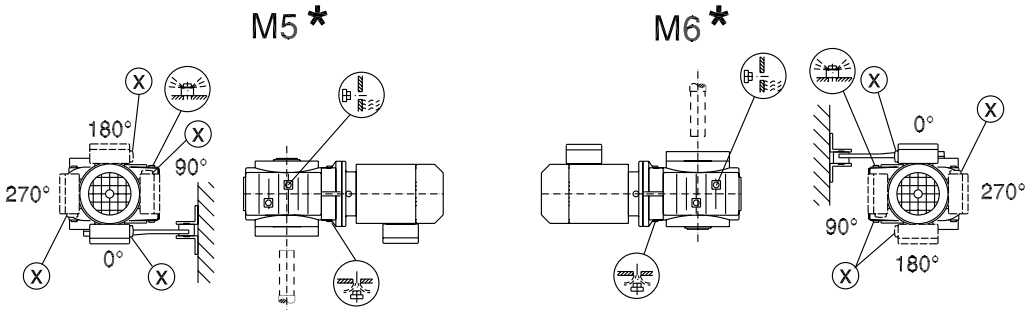

* → page 81

5.11 Mounting positions of Spiroplan® gearmotors

W/WA37B/WH37B

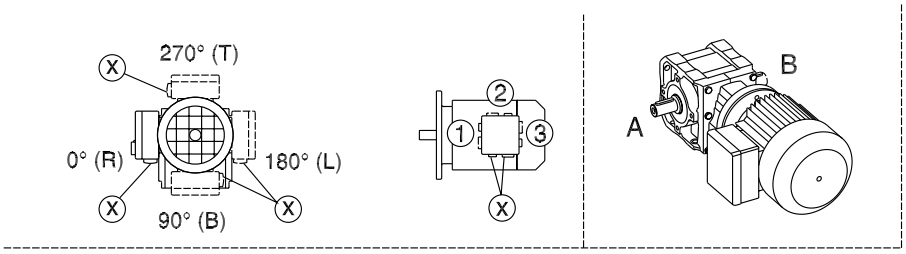

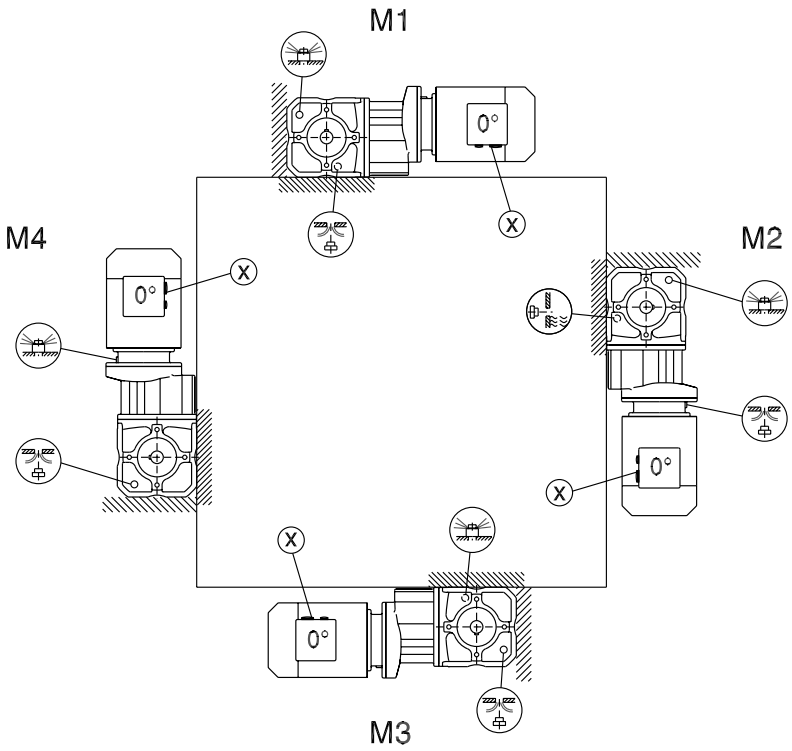

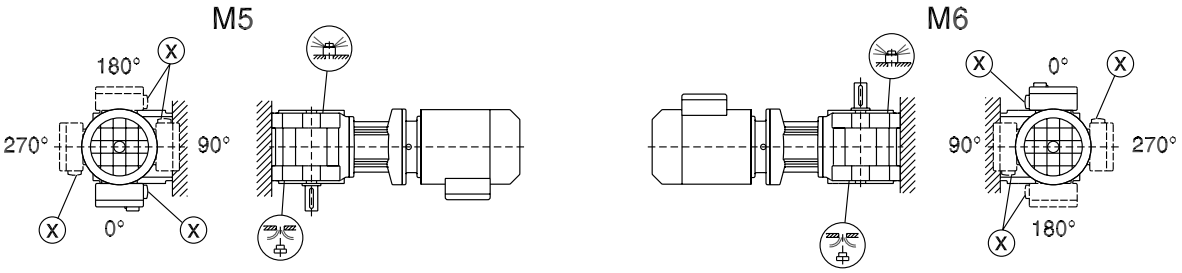

→ page 81

WF/WAF/WHF37

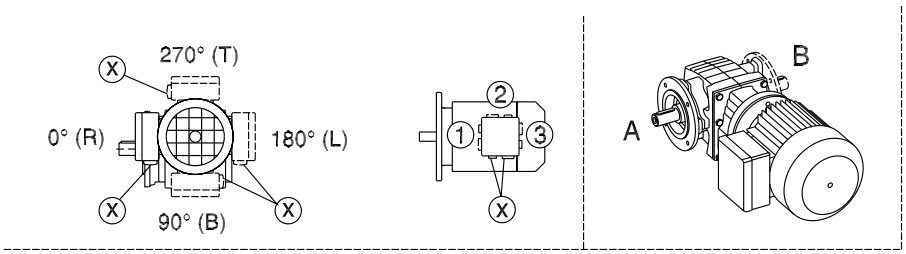

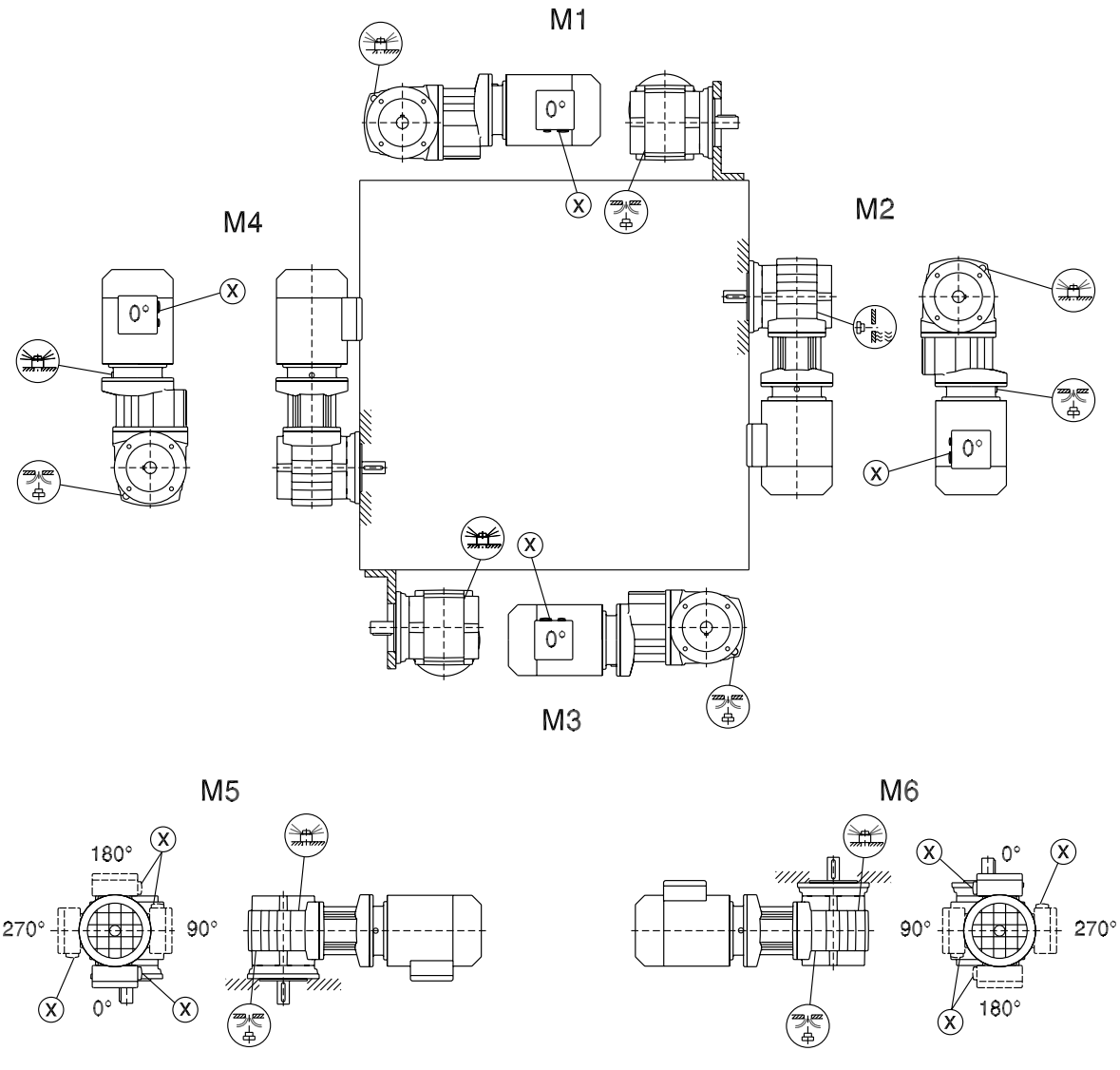

→ page 81

WA/WH/WT37

20 014 00 07

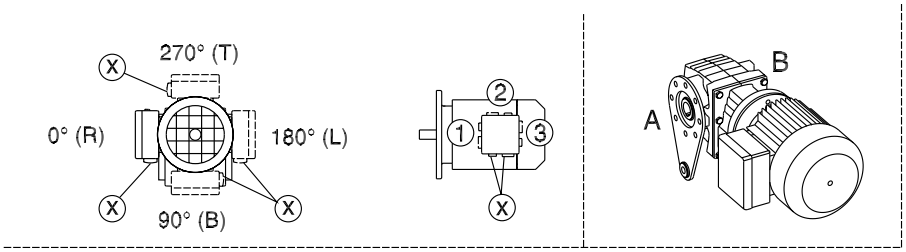

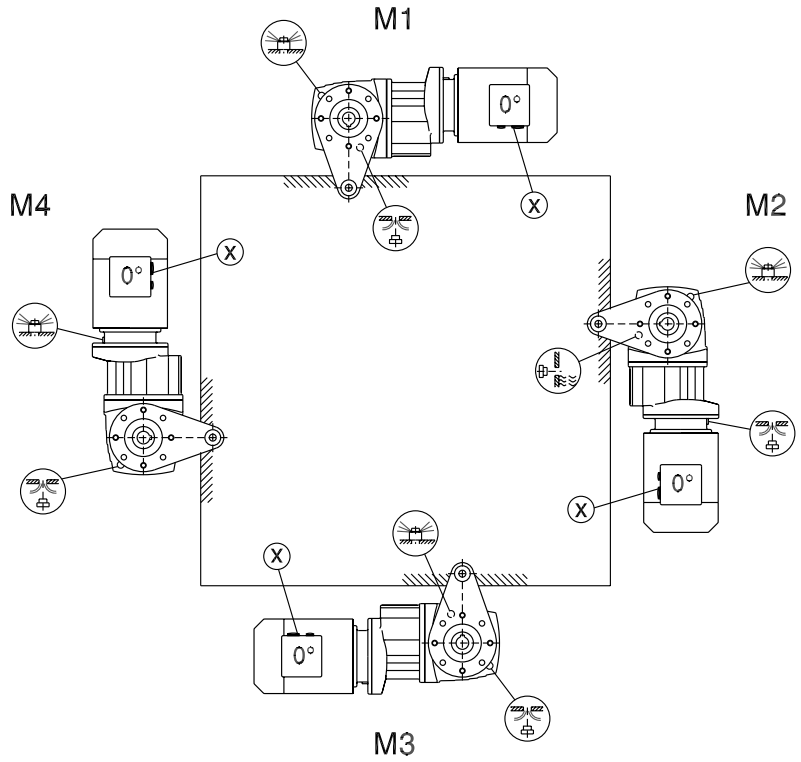

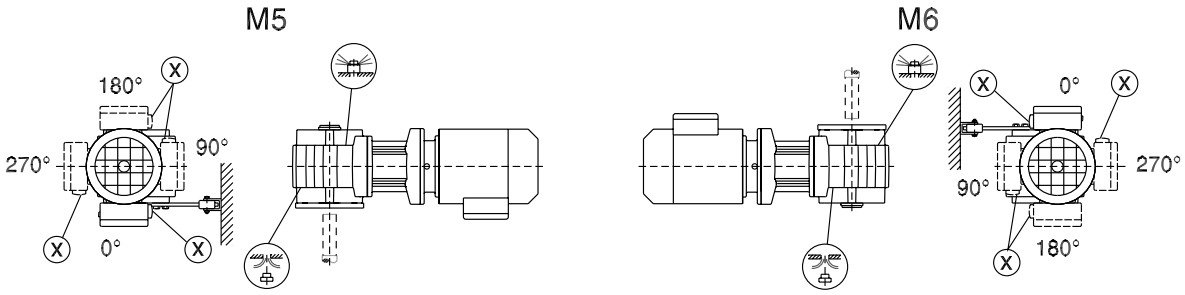

→ page 81

5.12 Mounting positions of BS.F helical-bevel gearmotors

BS.F202...802

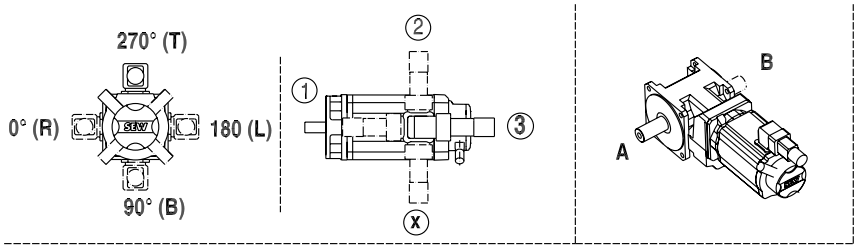

56 037 00 03

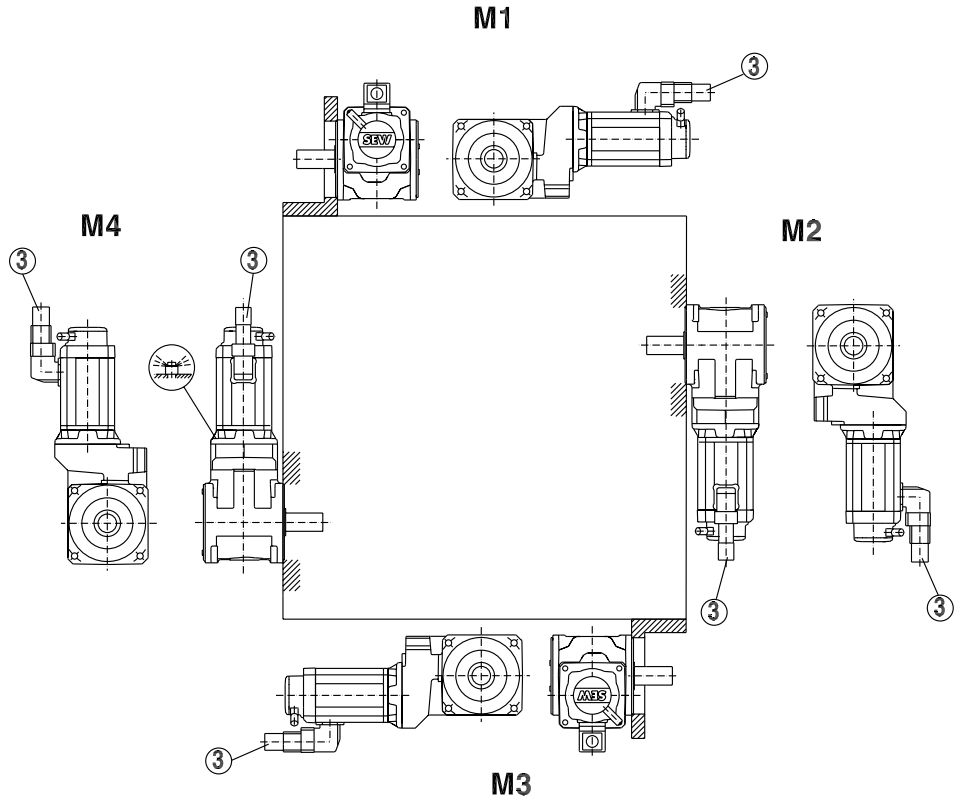

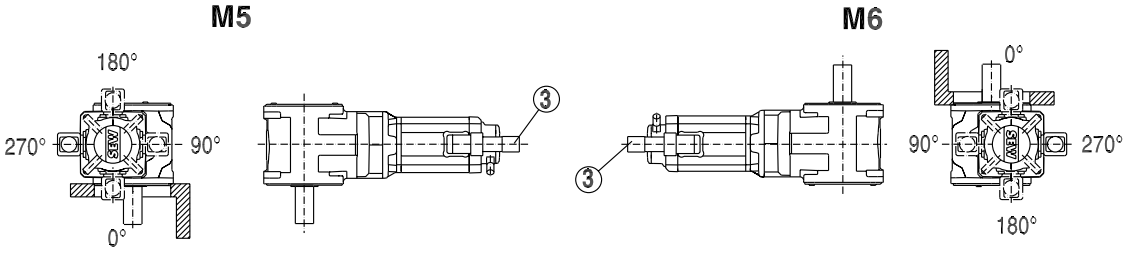

3 → page 80

BSBF202...802

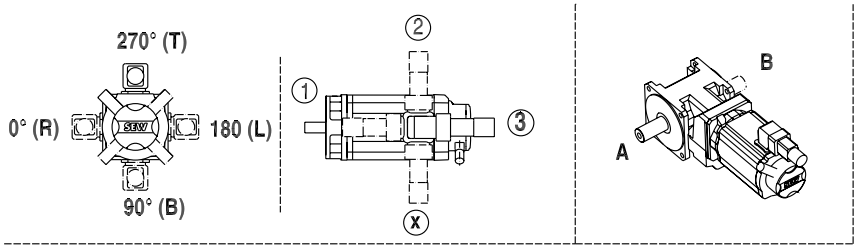

56 038 00 03

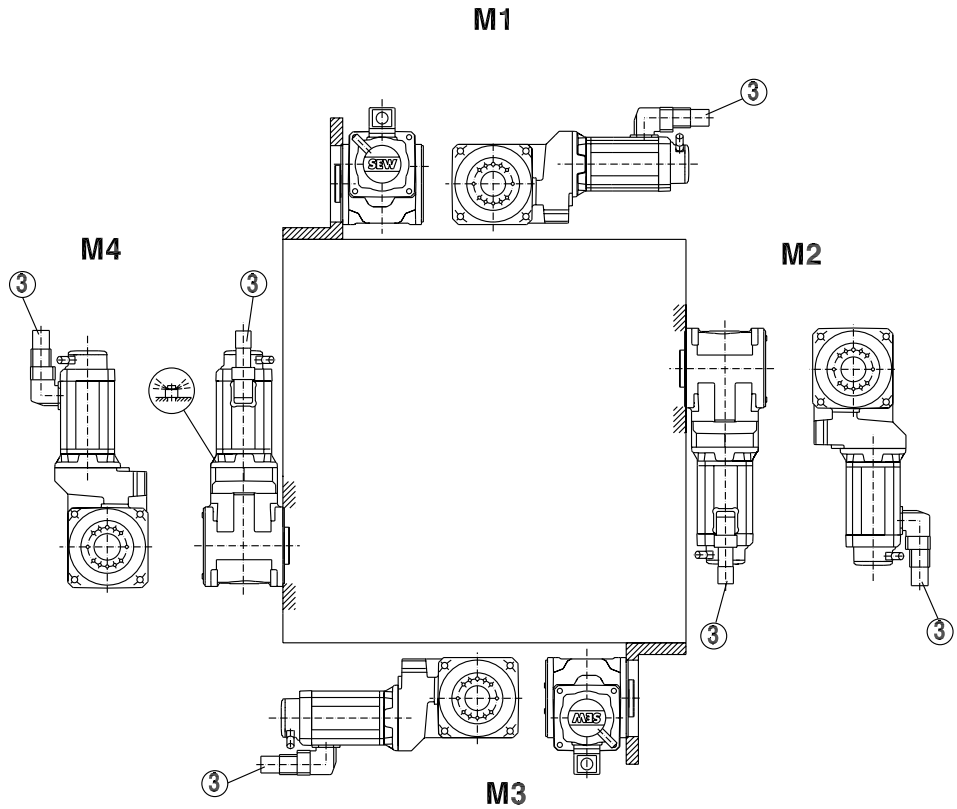

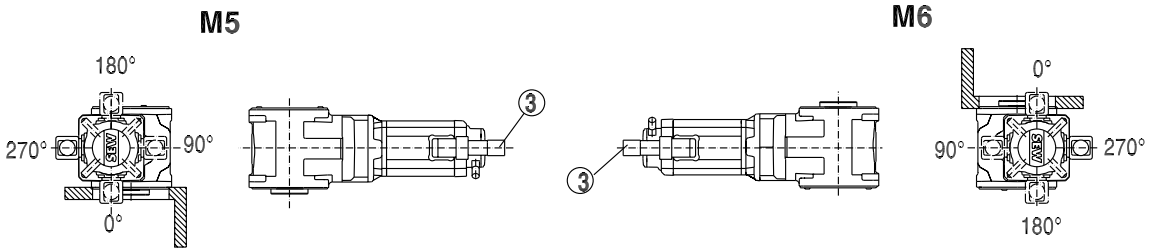

3 → page 80

BSHF202...802

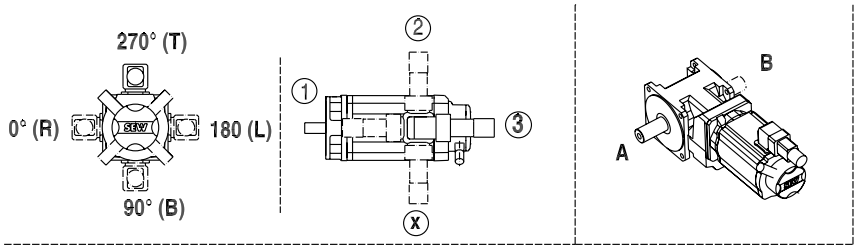

56 056 00 03

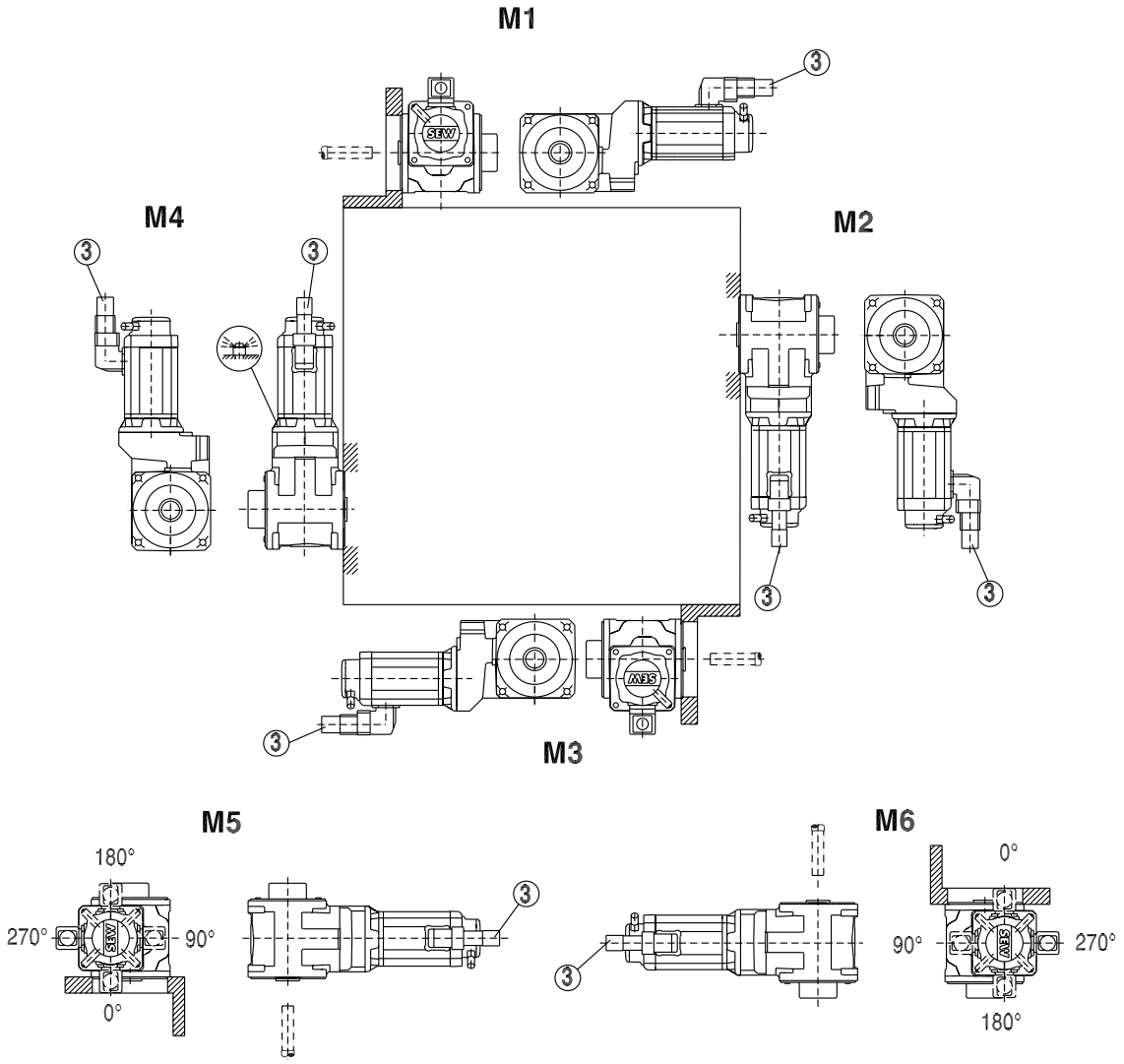

3 → page 80

BSHF202...802 /I

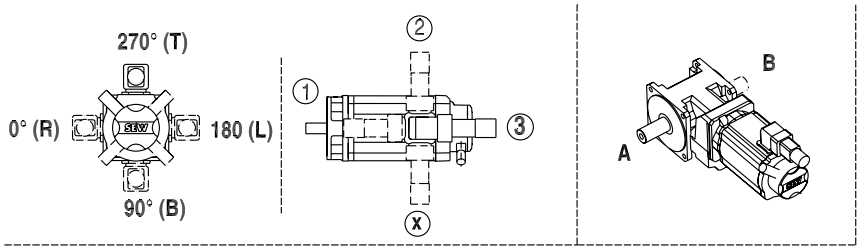

56 039 00 03

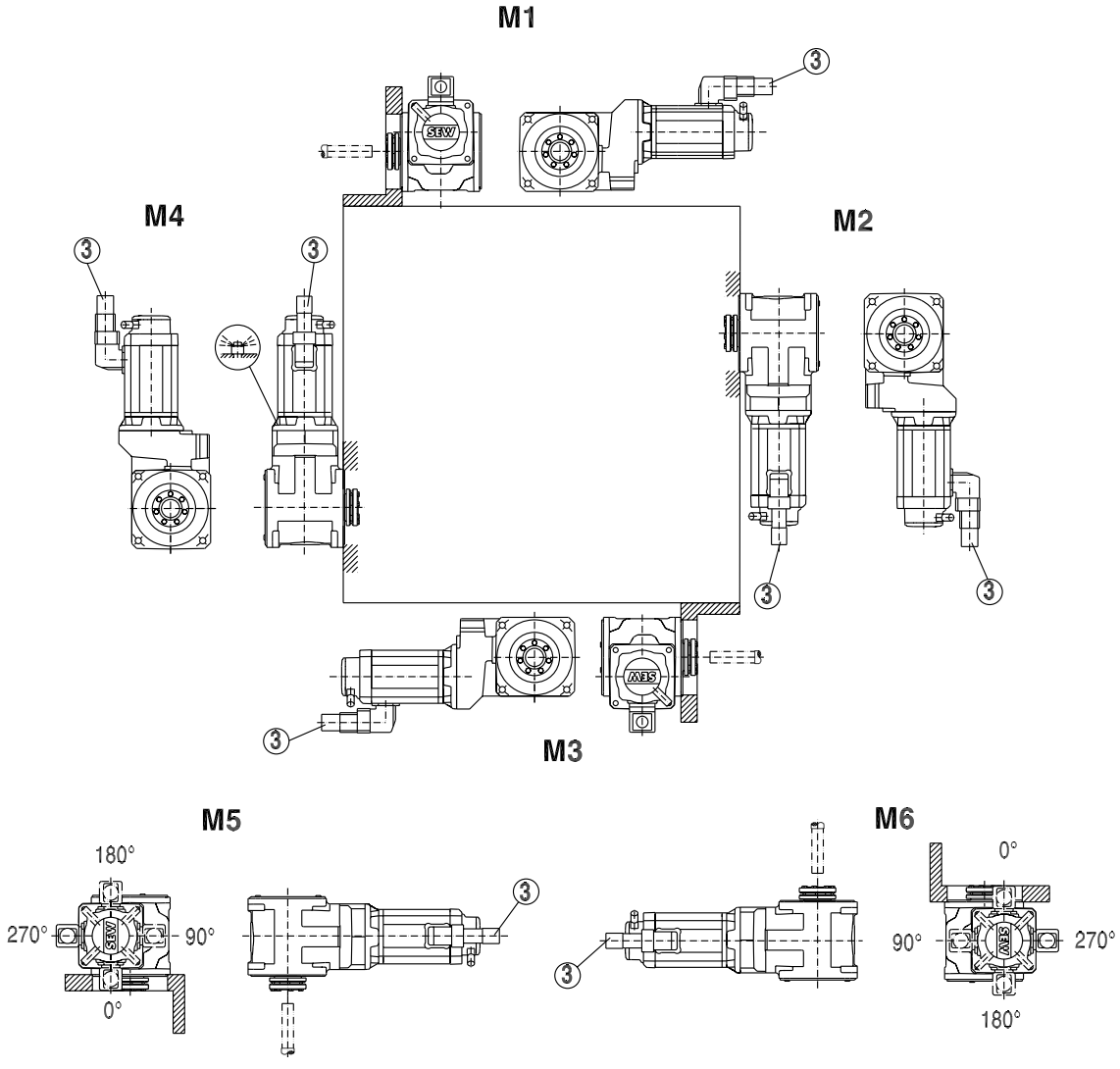

3 → page 80

BSHF202...802 /T

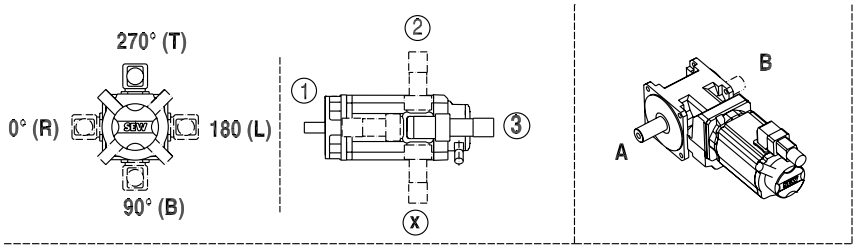

56 043 00 03

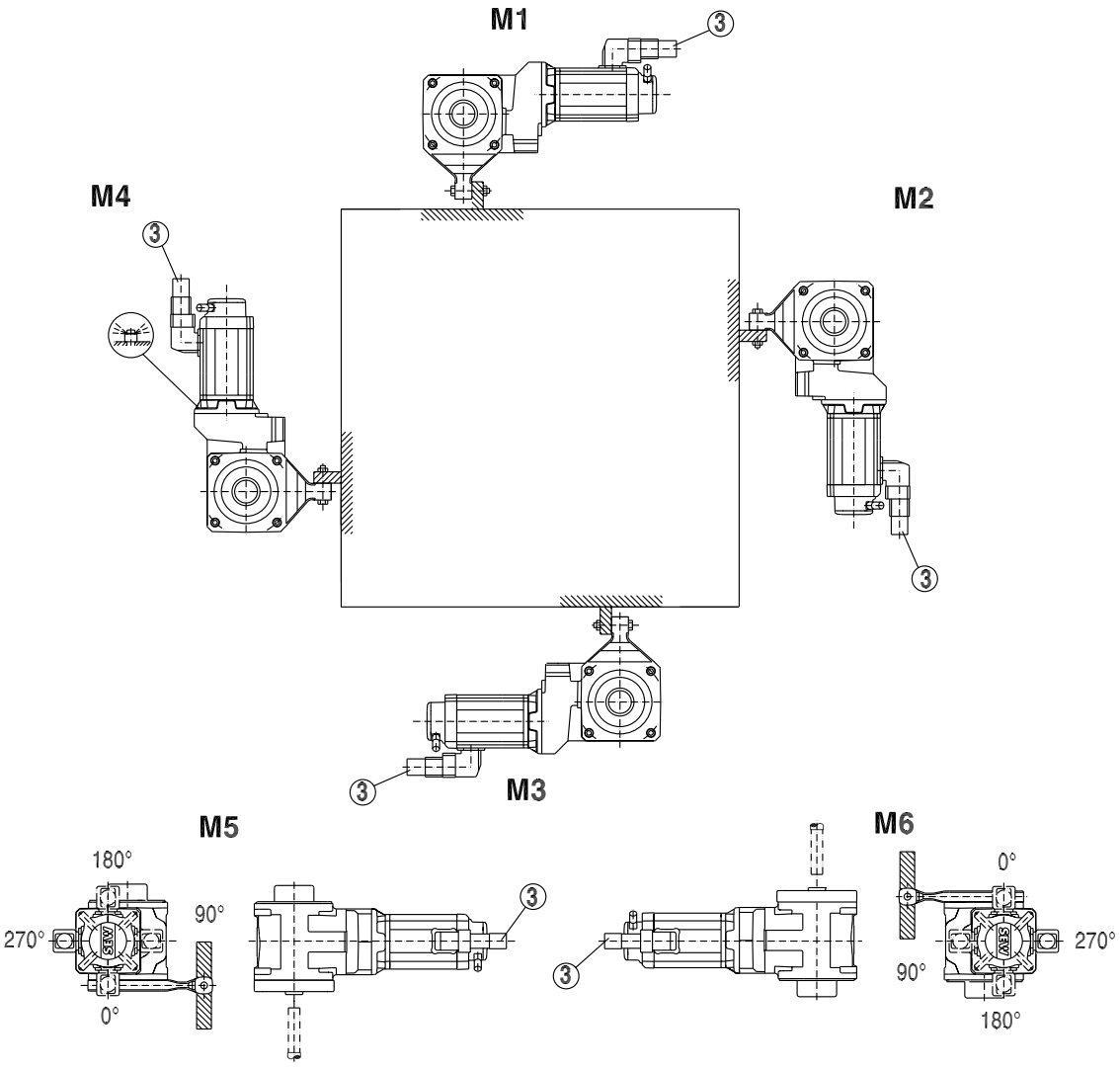

3 → page 80

BS.F202...802B

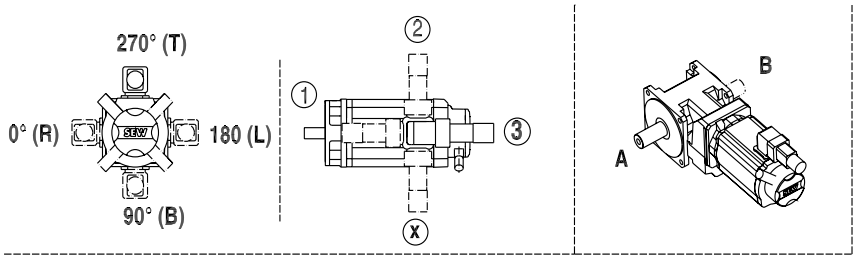

56 040 00 03

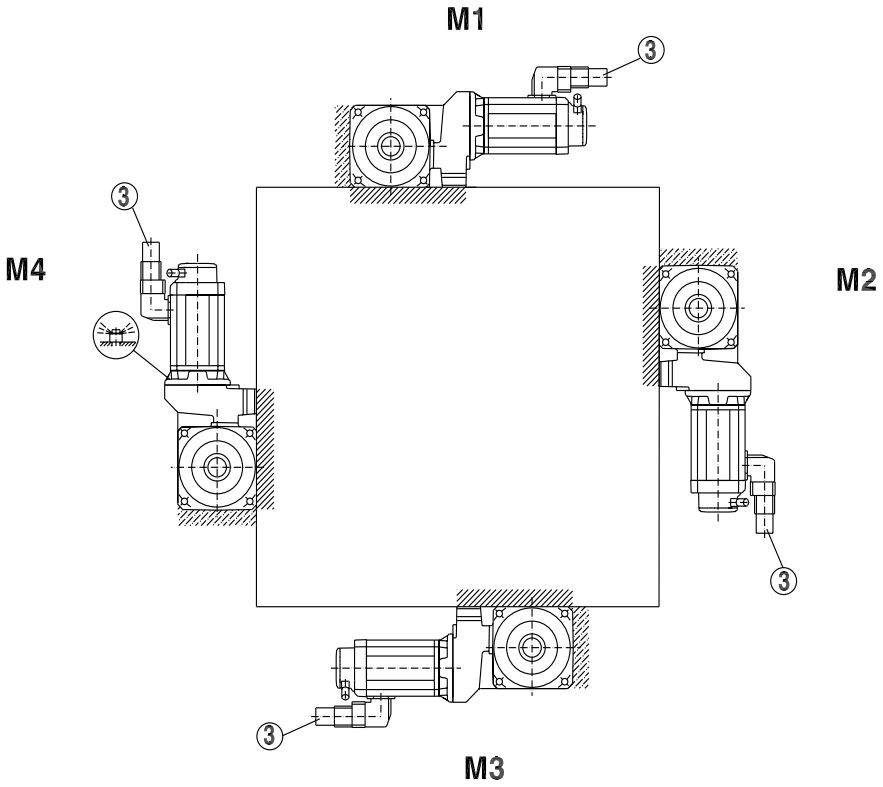

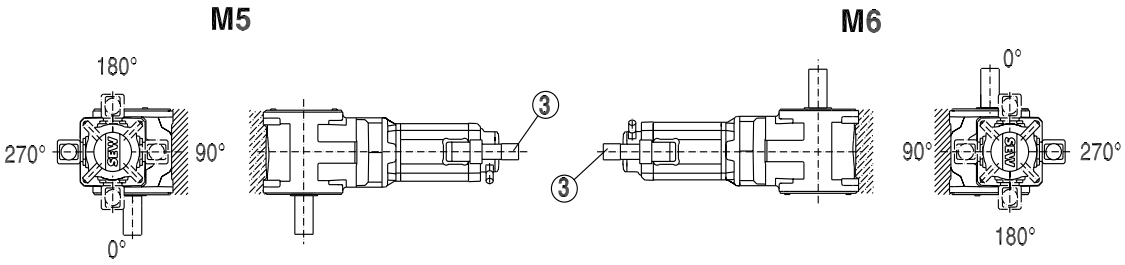

3 → page 80

BSBF202...802B

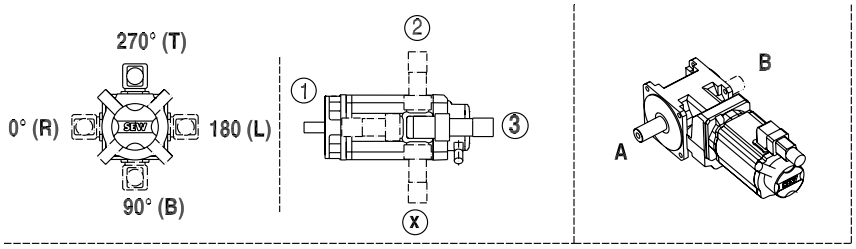

56 041 00 03

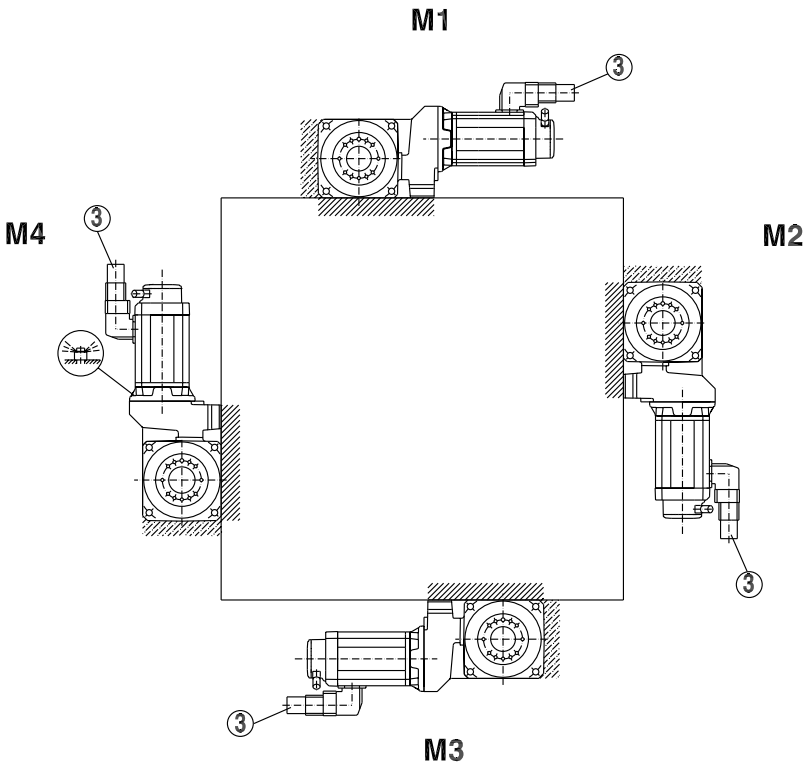

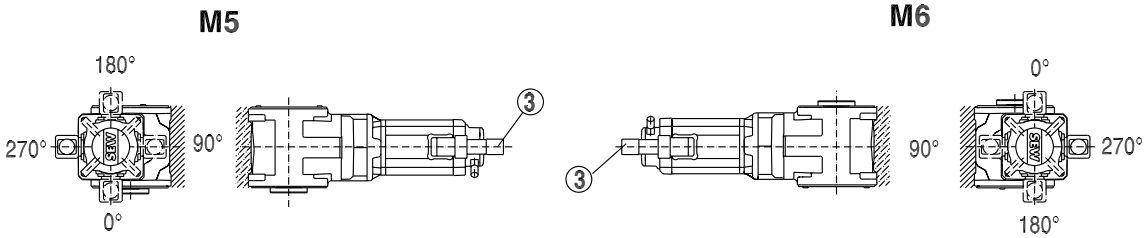

3 → page 80

BSHF202...802B

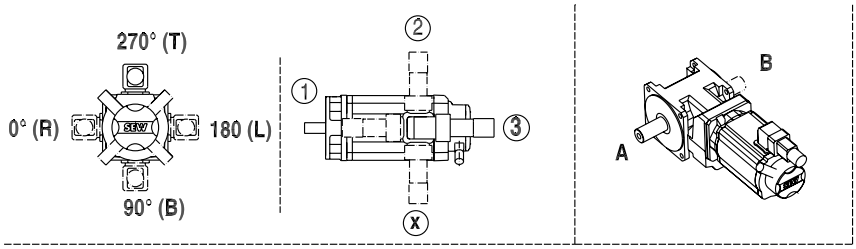

56 057 00 03

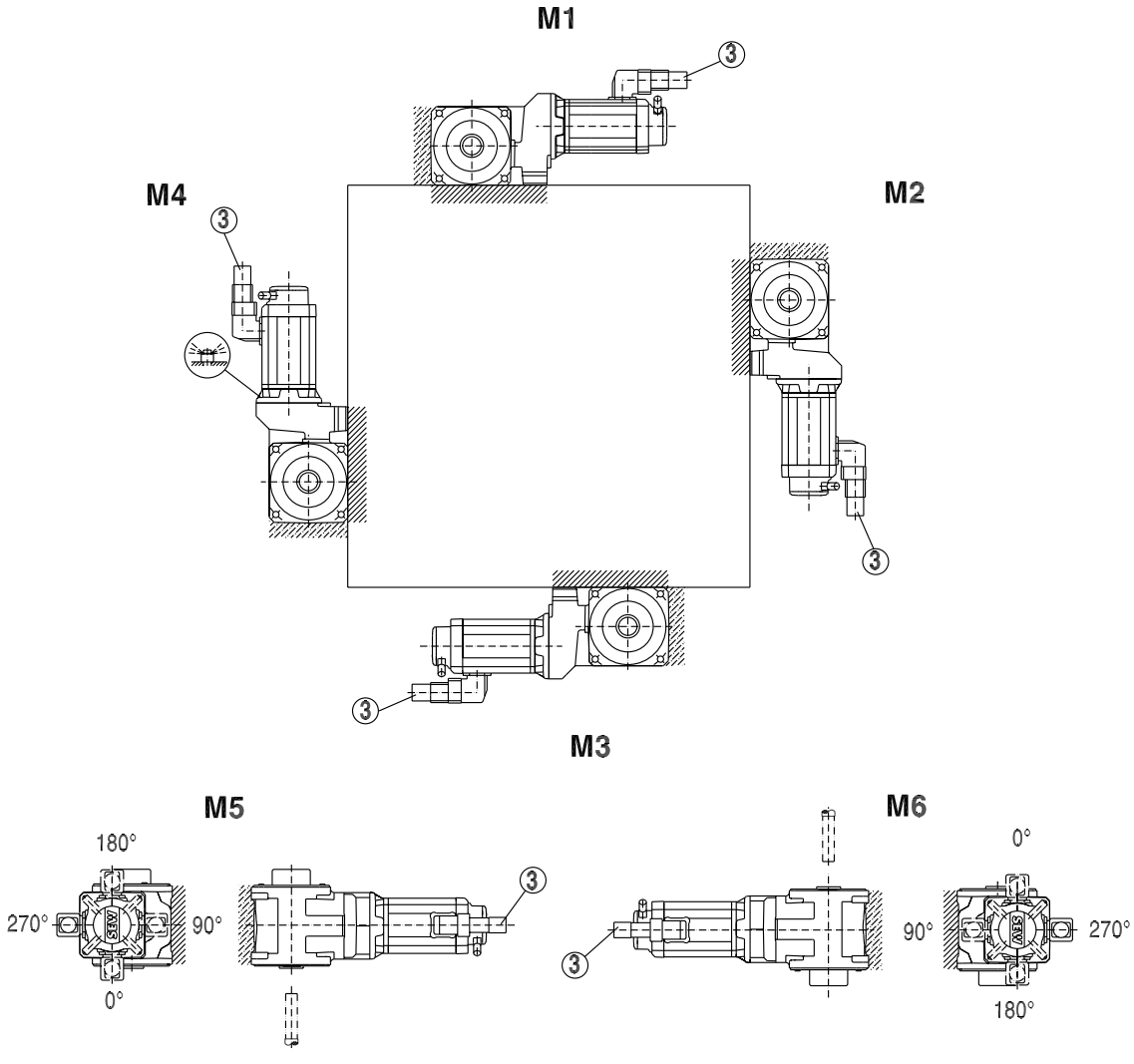

3 → page 80

BSHF202...802B /I

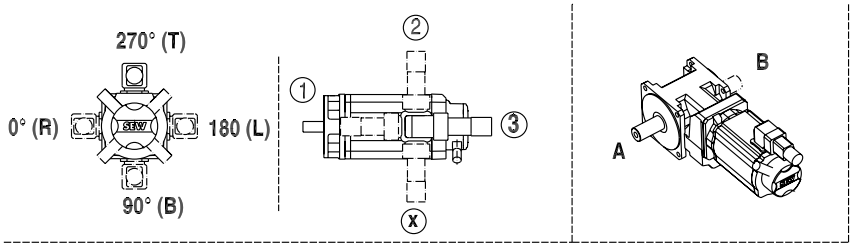

56 042 00 03

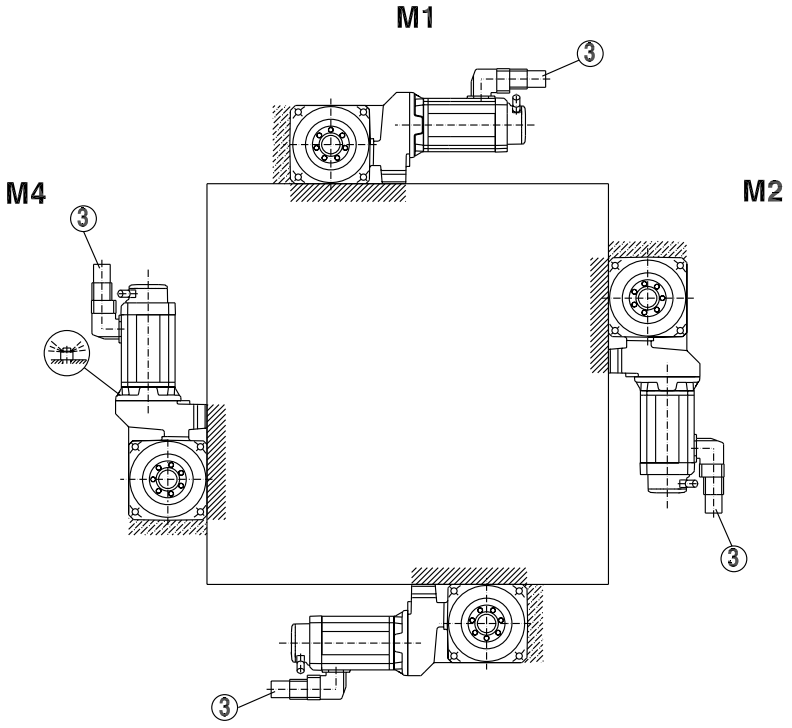

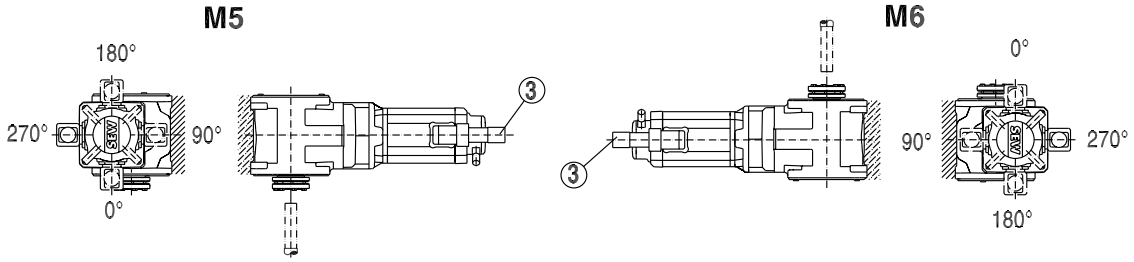

3 → page 80

5.13 Mounting positions of PS.F, PS.C planetary gearmotors

PS.F121...922,
PS.C221...622

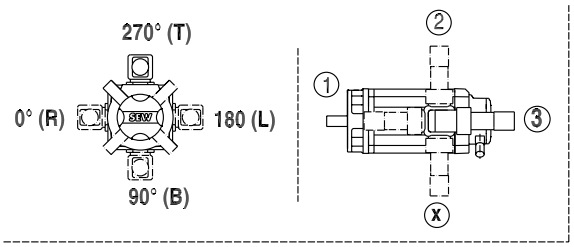

58 001 00 03

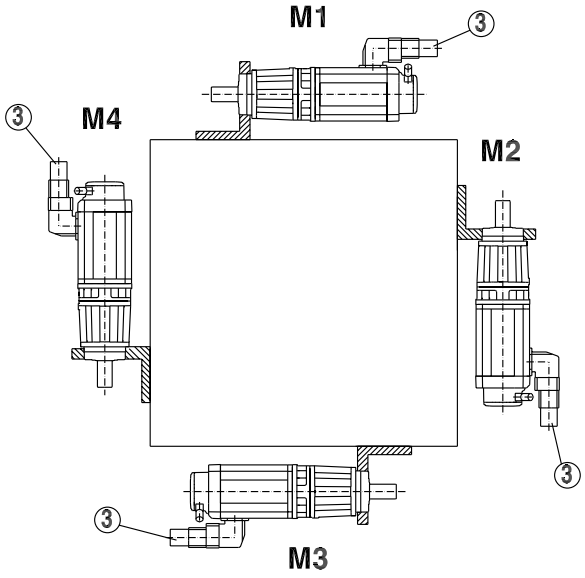

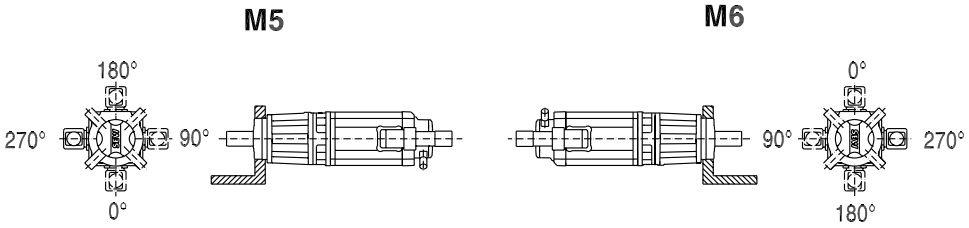

3 → page 80

PSBF121-922

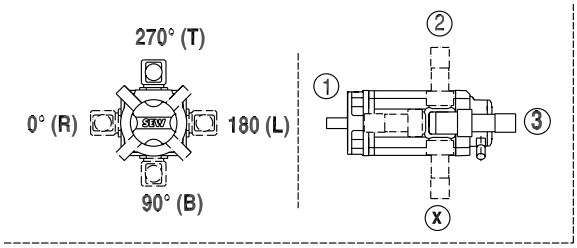

58 002 00 03

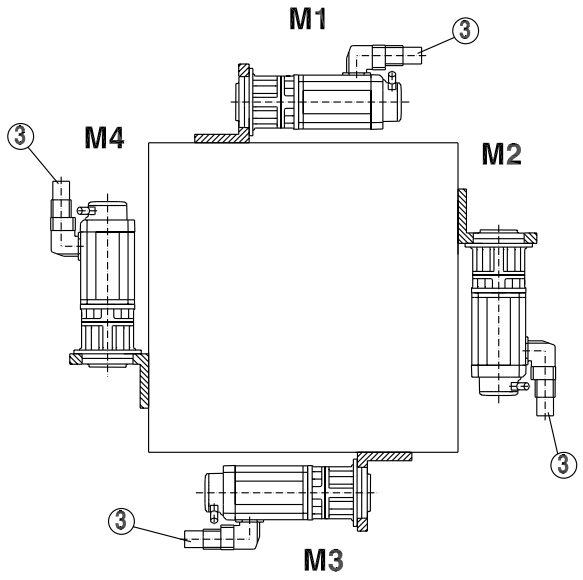

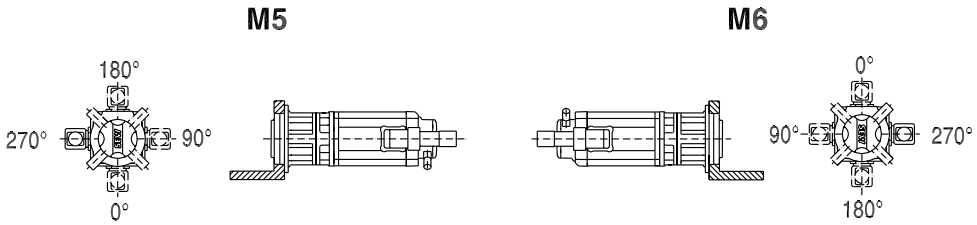

3 → page 80

6 Design and Operating Notes

6.1 Installation / removal of gear units with hollow shafts and keys

	NOTE
	• Always use the supplied NOCO® fluid for installation. The fluid prevents contact corrosion and facilitates subsequent disassembly. • The key dimension X is specified by the customers, but X > DK must apply, see Figure 25.

Assembly

SEW-EURODRIVE recommends two variants for installation of gear units with hollow shaft and key onto the input shaft of the driven machine (= customer shaft):

1. Use the provided fastening parts for installation.
2. Use the optional installation / removal kit for installation.

1) Supplied fastening parts

The following fastening parts are provided as standard:

- Retaining screw with washer (2)
- Circlip (3)

Note the following points concerning the customer shaft:

- The installation length of the customer shaft with contact shoulder (A) must be L8 - 1 mm.
- The installation length of the customer shaft without contact shoulder (B) must equal L8.

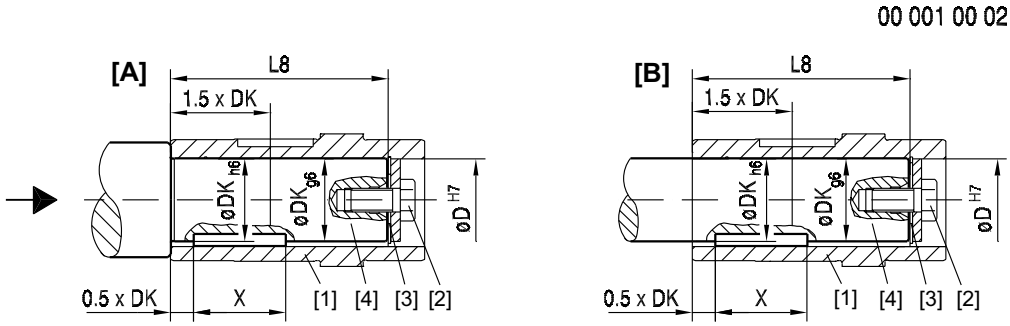

Figure 25: Customer shaft with contact shoulder (A) and without contact shoulder (B)

[1]	Hollow shaft	[3]	Circlip
[2]	Retaining screw with washer	[4]	Customer shaft

Dimensions and tightening torque:

The retaining screw (2) must be tightened to the tightening torque MS given in the following table.

Gear unit type	D^{H7} [mm]	DK [mm]	L8 [mm]	MS [Nm]
WA..10	16	16	69	8
WA..20	18	18	84	8
WA..20, WA..30, WA..37, SA..37, BASF202	20	20	84, 105 104	8
FA..27, SA..47, BASF302	25	25	88, 105, 118	20
FA..37, KA..37, SA..47 SA..57 BASF402	30	30	105 132 138	20
FA..47, KA..47, SA..57	35	35	132	20
FA..57, KA..57 FA..67, KA..67 SA..67 BSAF502	40	40	142 156 144 158	40
SA..67	45	45	144	40
FA..77, KA..77, SA..77	50	50	183	40
FA..87, KA..87 SA..77, SA..87 BSAF802	60	60	210 180, 220 222	80
FA..97, KA..97 SA..87, SA..97	70	70	270 220, 260	80
FA..107, KA..107, SA..97	90	90	313, 313, 255	200
FA..127, KA..127	100	100	373	200
FA..157, KA..157	120	120	460	200
BSAF602	55	55	179	80

2) Installation / removal set

You can also use the optional installation / removal kit for installation. You order the kit for the specific gear unit type(s) by quoting the part numbers in the table below. The delivery includes:

- Spacer tube for installation without contact shoulder (5)
- Retaining screw for installation (2)
- Forcing washer for removal (7)
- Locked nut for removal (8)

The short retaining screw delivered as standard is not required.

Note the following points concerning the customer shaft:

- The installation length of the customer shaft must be LK2. Do not use the spacer if the customer shaft **has a contact shoulder (A)**.
- The installation length of the customer shaft must be LK2. Use the spacer if the customer shaft **has a contact shoulder (B)**.

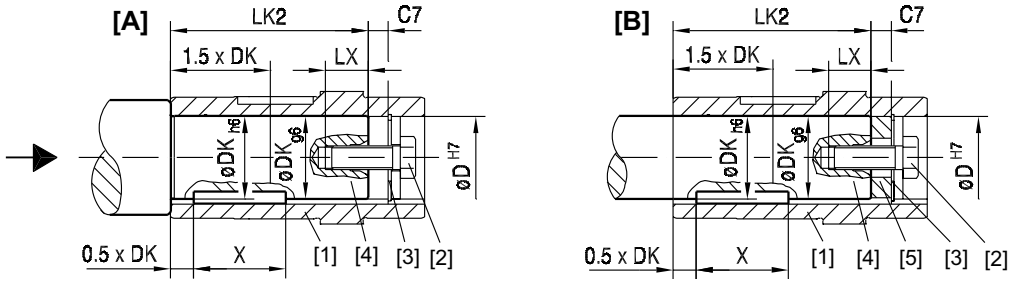

Figure 26: Customer shaft with contact shoulder (A) and without contact shoulder (B)

[1]	Hollow shaft	[4]	Customer shaft
[2]	Retaining screw with washer	[5]	Spacer tube
[3]	Circlip		

Dimensions, tightening torques and part numbers:

The retaining screw (2) must be tightened to the tightening torque MS given in the following table.

Type	D^{H7} [mm]	DK [mm]	LK2 [mm]	LX^{+2} [mm]	C7 [mm]	MS [Nm]	Part number of installation removal set
WA..10	16	16	57	12.5	11	8	643 712 5
WA..20	18	18	72	16	12	8	643,682 X
WA..20, WA..30, WA..37 SA..37	20	20	72, 93 92	16	12	8	643 683 8
FA..27, SA..47	25	25	72, 89	22	16	20	643 684 6
FA..37, KA..37 SA..47, SA..57	30	30	89 89, 116	22	16	20	643 685 4
FA..47, KA..47, SA..57	35	35	114	28	18	20	643 686 2
FA..57, KA..57 FA..67, KA..67, SA..67	40	40	124 138, 138, 126	36	18	40	643 687 0
SA..67	45	45	126	36	18	40	643 688 9
FA..77, KA..77, SA..77	50	50	165	36	18	40	643 689 7
FA..87, KA..87 SA..77, SA..87	60	60	188 158, 198	42	22	80	643 690 0
FA..97, KA..97 SA..87, SA..97	70	70	248 198, 238	42	22	80	643 691 9
FA..107, KA..107 SA..97	90	90	287 229	50	26	200	643 692 7
FA..127, KA..127	100	100	347	50	26	200	643 693 5
FA..157, KA..157	120	120	434	50	26	200	643 694 3

Removal

Applies only if installation / removal kit was previously used for installation (see Figure 26).

Proceed as follows for removal:

1. Loosen the retaining screw (6).
2. Remove the circlip (3) and, if used, the spacer tube (5).
3. According to Figure 27 place the forcing washer (7) and the locked nut (8) between the customer shaft (4) and circlip (3).
4. Re-install the circlip (3).
5. Re-install the retaining screw (6). Now you can force the gear unit off the shaft.

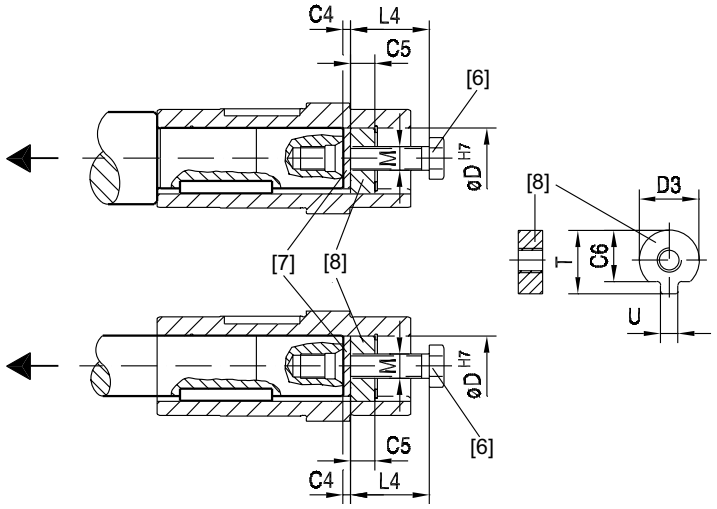

Figure 27: Removal

[6]	Retaining screw	[8]	Locked nut for removal
[7]	Forcing washer		

Dimensions and part numbers:

Type	D^{H7} [mm]	M	C4 [mm]	C5 [mm]	C6 [mm]	$U^{-0.5}$ [mm]	$T^{-0.5}$ [mm]	$D3^{-0.5}$ [mm]	L4 [mm]	Part number of installation/ removal kit
WA..10	16	M5	5	5	12	4.5	18	15.7	50	643 712 5
WA..20	18	M6	5	6	13.5	5.5	20.5	17.7	25	643,682 X
WA..20, WA..30, WA..37, SA..37	20	M6	5	6	15.5	5.5	22.5	19.7	25	643 683 8
FA27.., SA..47	25	M10	5	10	20	7.5	28	24.7	35	643 684 6
FA..37, KA..37, SA..47, SA..57	30	M10	5	10	25	7.5	33	29.7	35	643 685 4
FA..47, KA..47, SA..57	35	M12	5	12	29	9.5	38	34.7	45	643 686 2
FA..57, KA..57, FA..67, KA..67, SA..67	40	M16	5	12	34	11.5	41.9	39.7	50	643 687 0
SA..67	45	M16	5	12	38.5	13.5	48.5	44.7	50	643 688 9
FA..77, KA..77, SA..77	50	M16	5	12	43.5	13.5	53.5	49.7	50	643 689 7
FA..87, KA..87, SA..77, SA..87	60	M20	5	16	56	17.5	64	59.7	60	643 690 0
FA..97, KA..97, SA..87, SA..97	70	M20	5	16	65.5	19.5	74.5	69.7	60	643 691 9
FA..107, KA..107, SA..97	90	M24	5	20	80	24.5	95	89.7	70	643 692 7
FA..127, KA..127	100	M24	5	20	89	27.5	106	99.7	70	643 693 5
FA..157, KA..157	120	M24	5	20	107	31	127	119.7	70	643 694 3

6.2 Gear units with hollow shaft

Chamfers on hollow shafts

The following illustration shows the chamfers on parallel shaft helical, helical-bevel, helical-worm and Spiroplan® gear units with hollow shaft:

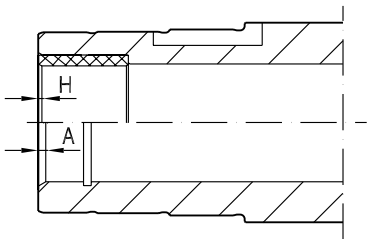

59845AXX

Figure 28: Chamfers on hollow shafts

Gear units	Design	
	with hollow shaft (A)	with hollow shaft and shrink disc (H)
W..10 - W..30	2 × 30°	-
F..27	2 × 30°	0.5 × 45°
F../K../S../W..37	2 × 30°	0.5 × 45°
F../K../S..47	2 × 30°	0.5 × 45°
S..57	2 × 30°	0.5 × 45°
F../K..57	2 × 30°	3 × 2°
F../K../S..67	2 × 30°	3 × 2°
F../K../S..77	2 × 30°	3 × 2°
F../K../S..87	3 × 30°	3 × 2°
F../K../S..97	3 × 30°	3 × 2°
F../K..107	3 × 30°	3 × 2°
F../K..127	5 × 30°	1.5 × 30°
F../K..157	5 × 30°	1.5 × 30°
KH167	-	1.5 × 30°
KH187	-	1.5 × 30°
BS.F202...402	2 × 30°	0.5 × 45°
BS.F502...802	2 × 30°	3 × 2°

Special motor/gear unit combinations

Please note for parallel shaft helical gearmotors with hollow shaft (FA..B, FV..B, FH..B, FAF, FVF, FHF, FA, FV, FH, FT, FAZ, FVZ, FHZ):

- If you are using a customer shaft pushed through on the motor end, there may be a collision when a "small gear unit" is used in combination with a "large motor".
- Check the motor dimension AC to decide whether there will be a collision with a pushed-through customer shaft.

6.3 TorqLOC® mounting system for gear units with hollow shaft

Description of TorqLOC®

The TorqLOC® hollow shaft mounting system is used for achieving a non-positive connection between customer shaft and the hollow shaft in the gear unit. As a result, the TorqLOC® hollow shaft mounting system is an alternative to the hollow shaft with shrink disc, the hollow shaft with key and the splined hollow shaft that have been used so far.

The TorqLOC® hollow shaft mounting system consists of the following components:

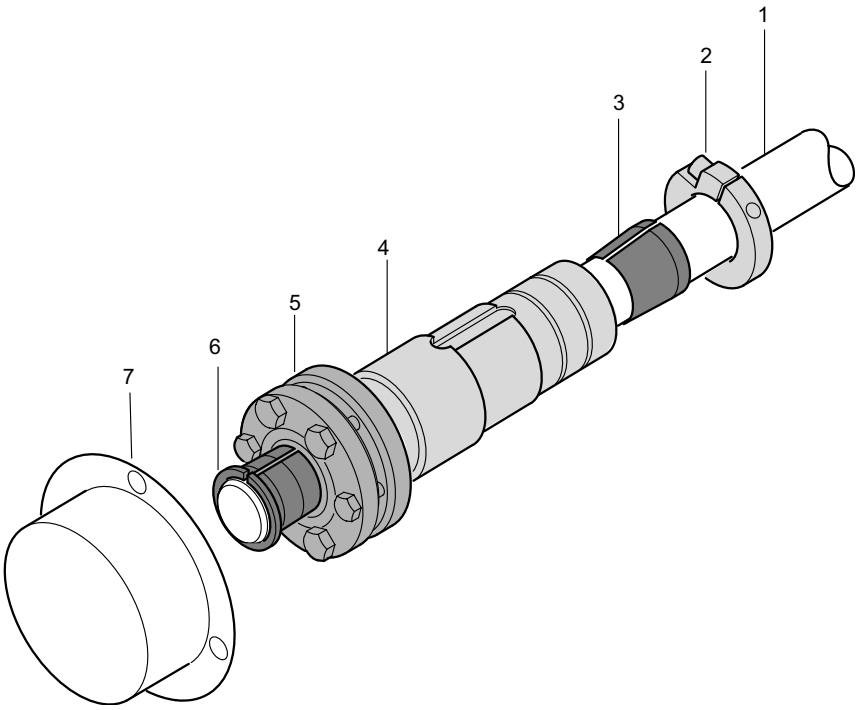

Figure 29: Components of the TorqLOC® hollow shaft mounting system

[1]	Customer shaft	[5]	Shrink disc
[2]	Locking collar	[6]	Conical steel bushing
[3]	Conical bronze bushing	[7]	Fixed cover
[4]	Hollow shaft in gear unit		

Advantages of TorqLOC®

The TorqLOC® hollow shaft mounting system is characterized by the following advantages:

- Cost saving because the customer shaft can be made from drawn material up to quality h11.
- Cost saving because different customer shaft diameters can be covered by one hollow shaft diameter and different bushings.
- Simple installation since there is no need to accommodate any shaft connections.
- Simple removal even after many hours of operation because the formation of contact corrosion has been reduced and the conical connections can easily be released.

Technical data

The TorqLOC® hollow shaft mounting system is approved for input torques of 92 Nm to 18 000 Nm.

The following gear units are available with TorqLOC® hollow shaft mounting system:

- Parallel shaft helical gear units in gear unit sizes 37 to 157 (FT37 ... FT157)
- Helical-bevel gear units in gear unit sizes 37 to 157 (KT37 ... KT157)
- Helical-worm gear units in gear unit sizes 37 to 97 (ST37 ... ST97)
- Spiroplan® gear unit of size 37 (WT37)

Available options

The following options are available for gear units with TorqLOC® hollow shaft mounting system:

- Helical-bevel, helical-worm and Spiroplan® gear units with TorqLOC® (KT.., ST.., WT37): The "torque arm" (../T) option is available.
- Parallel shaft helical gear units with TorqLOC® (FT..): The "rubber buffer" (../G) option is available.

6.4 Gear unit with flange block shaft

	NOTE
	Only use screws in **strength class 12.9** to fasten the output elements onto the flange block shaft of the gear unit.

6.5 Shouldered hollow shaft with shrink disc option

As an option, gear units with hollow shaft and shrink disc (parallel shaft helical gear units FH/FHF/FHZ37-157, helical-bevel gear units KH/KHF/KHZ37-157 and helical-worm gear units SH/SHF47-97) can be supplied with a larger bore diameter D'.

As standard, D' = D.

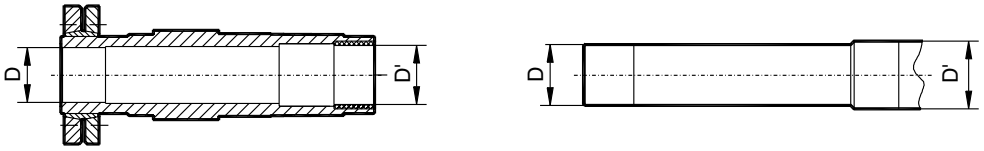

Figure 30: Optional bore diameter D'

Gear units	Bore diameter D / optionally D' [mm]
FH/FHF/FHZ37, KH/KHF/KHZ37, SH/SHF/SHZ47	30 / 32
FH/FHF/FHZ47, KH/KHF/KHZ47, SH/SHF/SHZ57	35 / 36
FH/FHF/FHZ57, KH/KHF/KHZ57	40 / 42
FH/FHF/FHZ67, KH/KHF/KHZ67, SH/SHF/SHZ67	40 / 42
FH/FHF/FHZ77, KH/KHF/KHZ77, SH/SHF/SHZ77	50 / 52
FH/FHF/FHZ87, KH/KHF/KHZ87, SH/SHF/SHZ87	65 / 66
FH/FHF/FHZ97, KH/KHF/KHZ97, SH/SHF/SHZ97	75 / 76
FH/FHF/FHZ107, KH/KHF/KHZ107	95 / 96
FH/FHF/FHZ127, KH/KHF/KHZ127	105 / 106
FH/FHF/FHZ157, KH/KHF/KHZ157	125 / 126

Diameter D / D' must be specified when ordering gear units with a shouldered hollow shaft (optional bore diameter D').

Order example FH37 DRS80M4 with hollow shaft 30 / 32 mm

Parallel shaft helical gear units with shouldered hollow shaft (dimensions in mm):

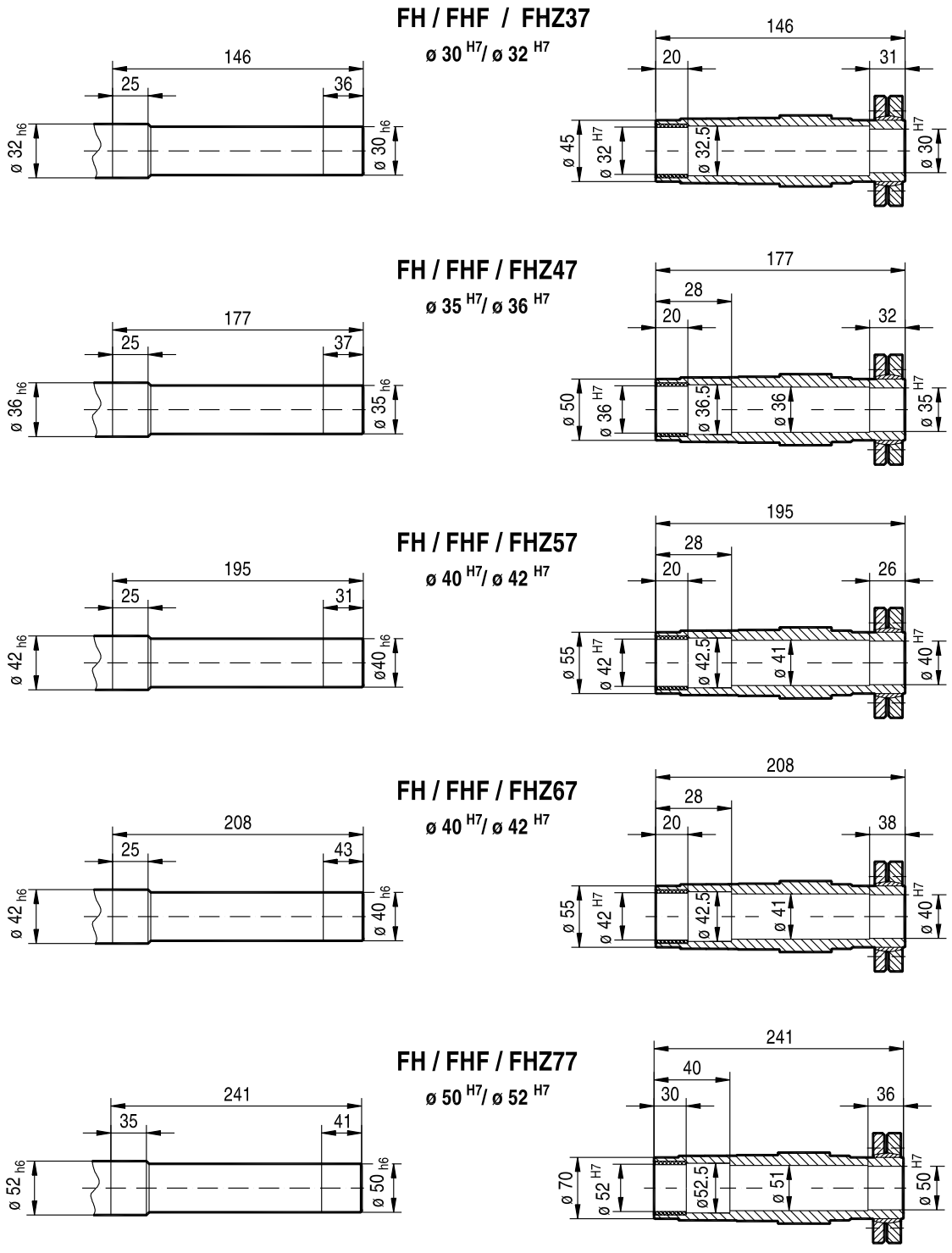

04341AXX

Figure 31: Shouldered hollow shaft FH/FHF/FHZ37...77

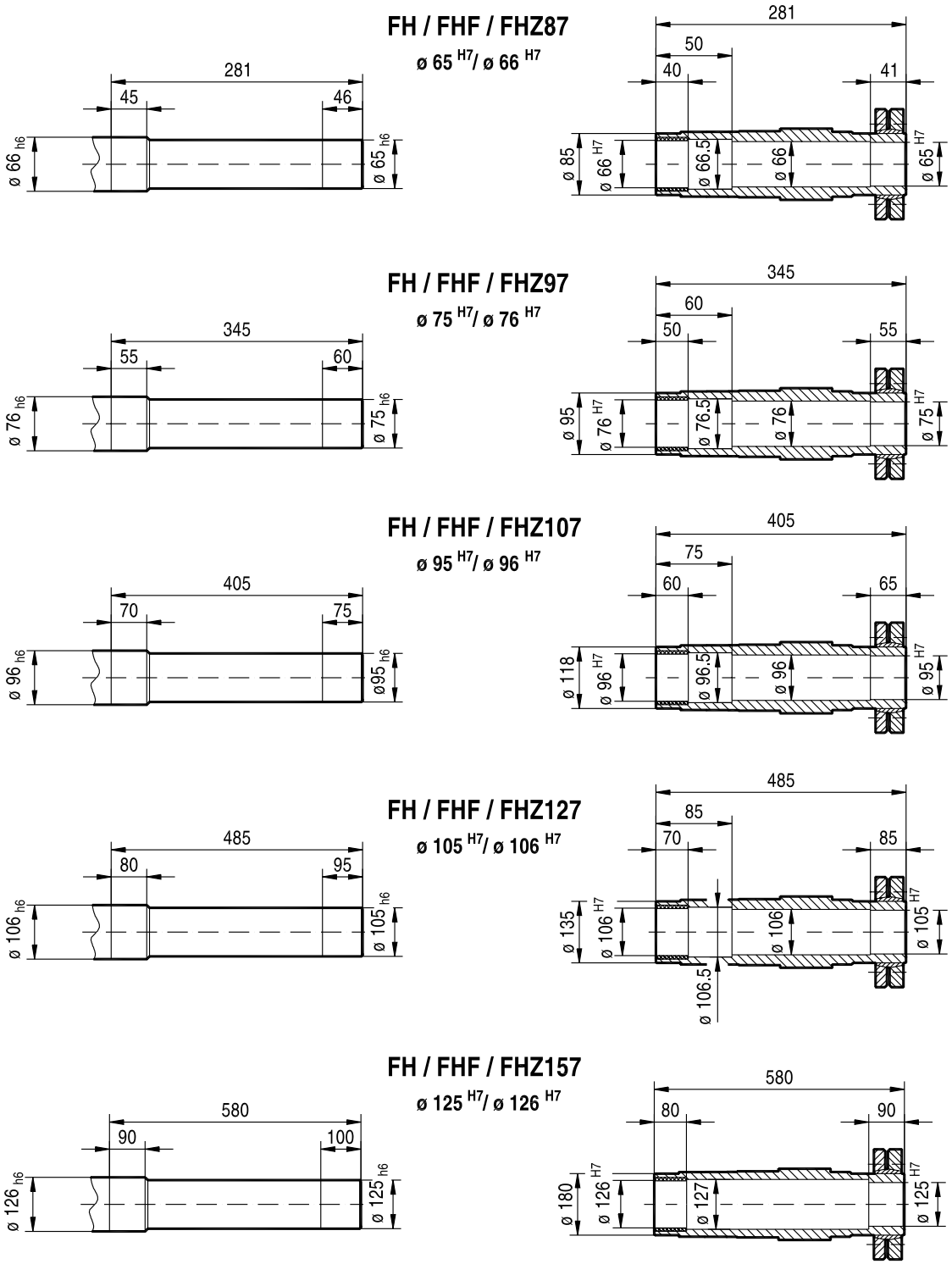

04342AXX

Figure 32: Shouldered hollow shaft FH/FHF/FHZ87...157

Helical-bevel gear unit with shouldered hollow shaft (dimensions in mm):

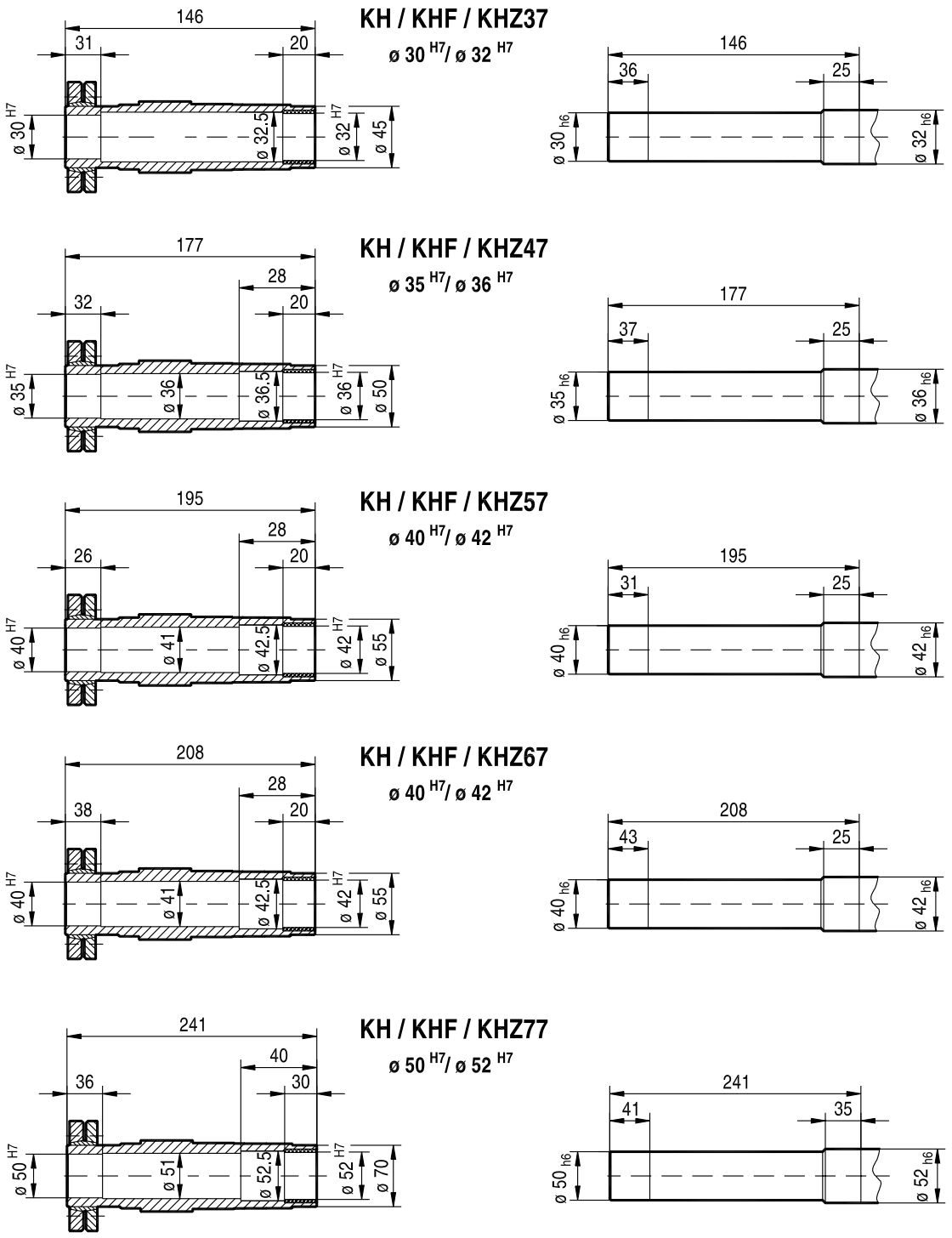

04343AXX

Figure 33: Shouldered hollow shaft KH/KHF/KHZ37...77

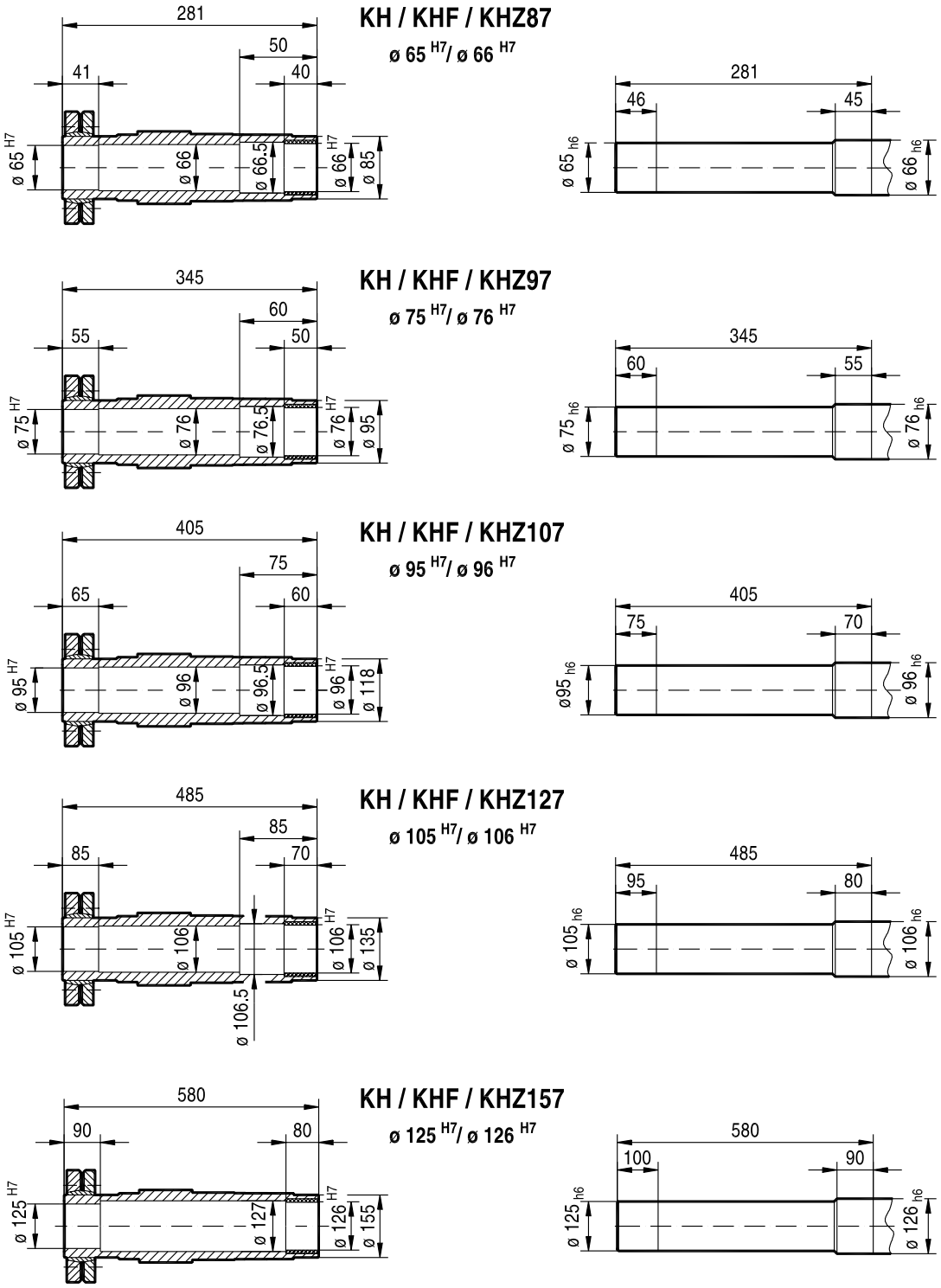

04344AXX

Figure 34: Shouldered hollow shaft KH/KHF/KHZ87...157

Helical-worm gear units with shouldered hollow shaft (dimensions in mm):

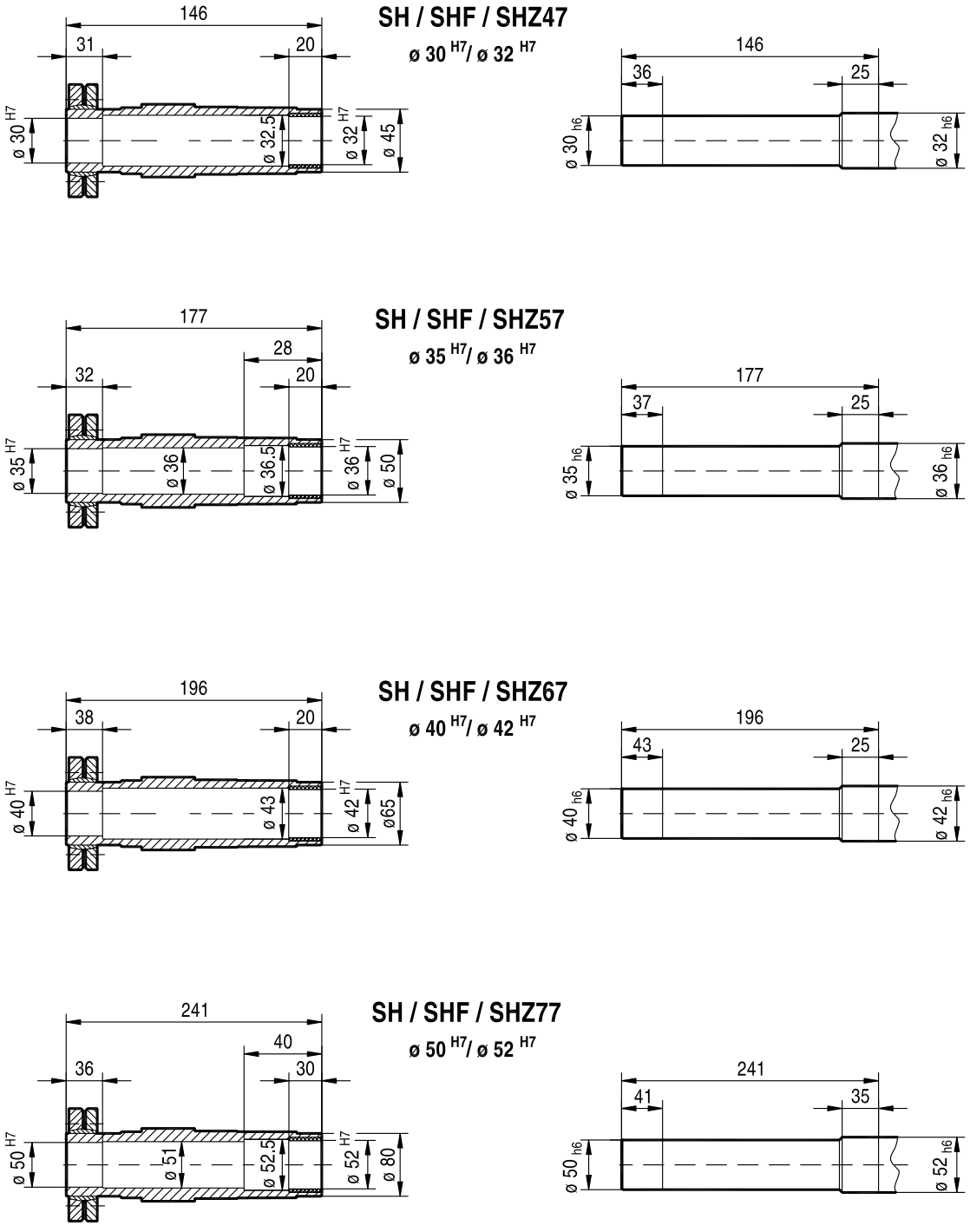

04345AXX

Figure 35: Shouldered hollow shaft SH/SHF/SHZ47...77

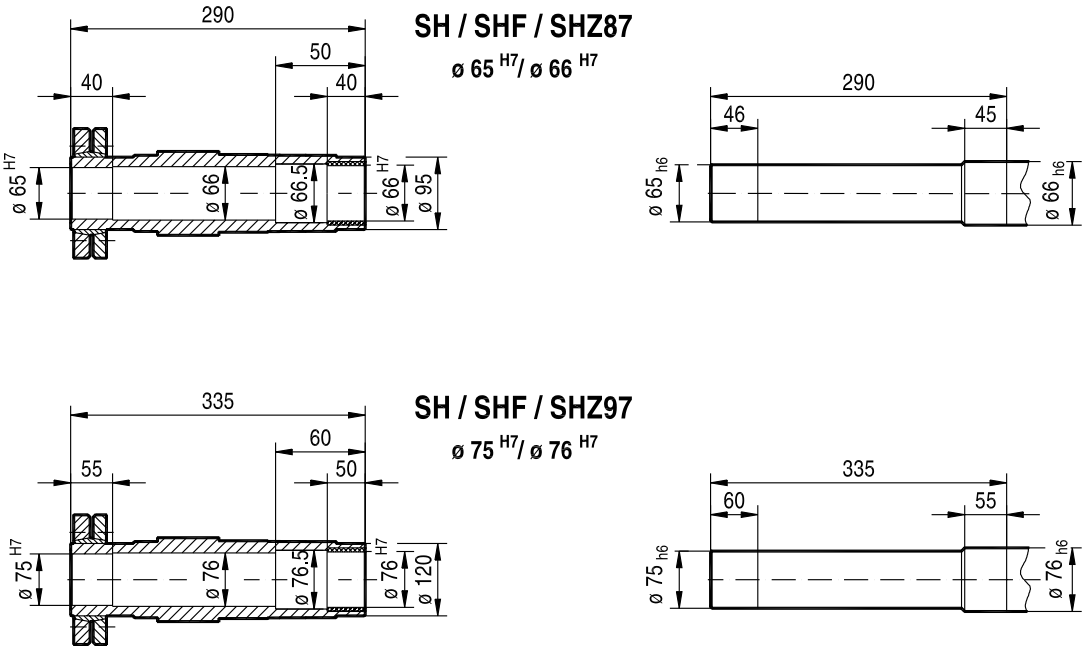

04346AXX

Figure 36: Shouldered hollow shaft SH/SHF/SHZ87...97

6.6 Fastening the gear unit

Use bolts of quality 8.8 to fasten gear units and gearmotors.

Exception

Use bolts of **quality 10.9** to fasten the customer flange to transmit the rated torques for the following flange-mounted gearmotors (RF ../RZ..) and foot/flange-mounted versions (R..F, BS.F..B):

- RF37, R37F with flange ∅ 120 mm
- RF47, R47F with flange ∅ 140 mm
- RF57, R57F with flange ∅ 160 mm
- RZ37 ... RZ87
- BS.F502B ... BS.F802B

6.7 Torque arms

Available torque arms

Gear units	Size					
	27	37	47	57	67	77
KA, KH, KV, KT	-	643 425 8	643 428 2	643 431 2	643 431 2	643 434 7
SA, SH, ST	-	126 994 1	644 237 4	644 240 4	644 243 9	644 246 3
FA, FH, FV, FT Rubber buffer (2 pieces)	013 348 5	013 348 5	013 348 5	013 348 5	013 348 5	013 349 3

Gear units	Size				
	87	97	107	127	157
KA, KH, KV, KT	643 437 1	643 440 1	643 443 6	643 294 8	-
SA, SH, ST	644 249 8	644 252 8	-	-	-
FA, FH, FV, FT Rubber buffer (2 pieces)	013 349 3	013 350 7	013 350 7	013 351 5	013 347 7

Gear unit	Size				
	10	20	30	37	
WA	1 061 021 9	1 68 073 0	1 68 011 0	1 061 129 0	

Gear units	Size					
	202	302	402	502	602	802
BSHF, BSAF	1 063 098 8	1 063 100 3	1 063 103 8	1 063 105 4	1 063 107 0	1 063 109 7

Torque arms for KH167.., KH187..

As standard, torque arms are not available for gear unit sizes KH167.. and KH187... Please contact SEW-EURODRIVE for design proposals if you require torque arms for these gear units.

6.8 Flange contours of RF.. and R..F gear units

04355AXX

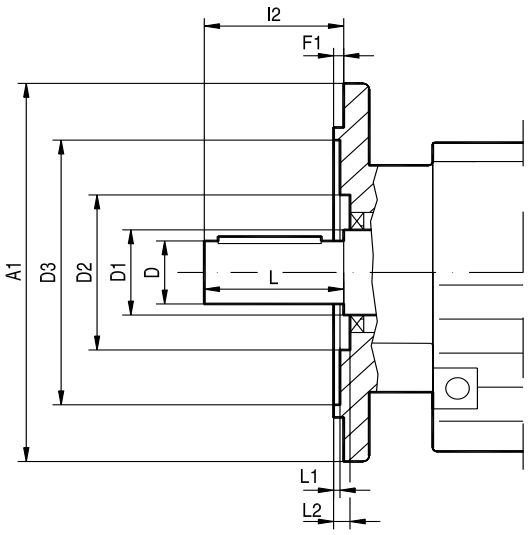

Check dimensions L1 and L2 for selection and installation of output elements.

Type	Dimensions in mm											
	A1	D	D1	D2		D3	F1	I2	L	L1		L2
				RF	R..F					RF	R..F	
RF07, R07F	120	20	22	38	38	72	3	40	40	2	2	6
	140[1)]				-	85	3			2	-	6
	160[1)]				-	100	3.5			2.5	-	6.5
RF17, R17F	120	20	25	46	46	65	3	40	40	1	1	5
	140				-	78	3			1	-	5
	160[1)]				-	95	3.5			1	-	6
RF27, R27F	120	25	30	54	54	66	3	50	50	1	1	6
	140				-	79	3			3	-	7
	160				-	92	3.5			3	-	7
RF37, R37F	120	25	35	60	63	70	3	50	50	5	4	7
	160				-	96	3.5			1	-	7.5
	200[1)]				-	119	3.5			1	-	7.5
RF47, R47F	140	30	35	72	64	82	3	60	60	4	1	6
	160				-	96	3.5			0.5	-	6.5
	200				-	116	3.5			0.5	-	6.5
RF57, R57F	160	35	40	76	75	96	3.5	70	70	4	2.5	5
	200				-	116	3.5			0	-	5
	250[1)]				-	160	4			0.5	-	5.5
RF67, R67F	200	35	50	90	90	118	3.5	70	70	2	4	7
	250				-	160	4			1	-	7.5
RF77, R77F	250	40	52	112	100	160	4	80	80	0.5	2.5	7
	300[1)]				-	210	4			0.5	-	7
RF87, R87F	300	50	62	123	122	210	4	100	100	0	1.5	8
	350				-	226	5			1	-	9
RF97	350	60	72	136		236	5	120	120	0		9
	450					320						
RF107	350	70	82	157		232	5	140	140	0		11
	450			186		316						
RF137	450	90	108	180		316	5	170	170	0		10
	550					416						
RF147	450	110	125	210		316	5	210	210	0		10
	550					416						
RF167	550	120	145	290		416	5	210	210	1		10
	660					517	6			2		11

1) The flange contour protrudes from under the base surface.

6.9 Flange contours of FF.., KF.., SF.. and WF.. gear units

59720AXX

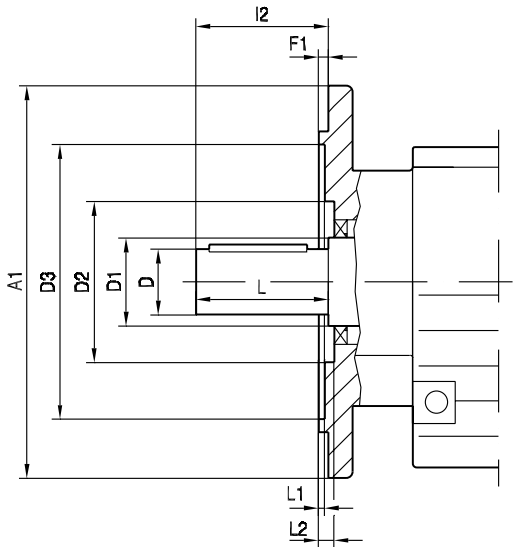

Check dimensions L1 and L2 for selection and installation of output elements.

Type	Dimensions in mm									
	A1	D	D1	D2	D3	F1	I2	L	L1	L2
FF27	160	25	40	66	96	3.5	50	50	3	18.5
FF37	160	25	30	70	94	3.5	50	50	2	6
FF47	200	30	40	72	115	3.5	60	60	3.5	7.5
FF57	250	35	40	84	155	4	70	70	4	9
FF67	250	40	50	84	155	4	80	80	4	9
FF77	300	50	55	82	205	4	100	100	5	9
FF87	350	60	65	115	220	5	120	120	5	9
FF97	450	70	75	112	320	5	140	140	8	10
FF107	450	90	100	159	318	5	170	170	16	9
FF127	550	110	118	-	420	5	210	210	10	-
FF157	660	120	135	190	520	6	210	210	8	14
KF37	160	25	30	70	94	3.5	50	50	2	6
KF47	200	30	40	72	115	3.5	60	60	3.5	7.5
KF57	250	35	40	84	155	4	70	70	4	9
KF67	250	40	50	84	155	4	80	80	4	9
KF77	300	50	55	82	205	4	100	100	5	9
KF87	350	60	65	115	220	5	120	120	5	9
KF97	450	70	75	112	320	5	140	140	8	10
KF107	450	90	100	159	318	5	170	170	16	9
KF127	550	110	118	-	420	5	210	210	10	-
KF157	660	120	135	190	520	6	210	210	8	14
SF37	120	20	25	-	68	3	40	40	6	-
SF37	160	20	25	-	96	3.5	40	40	5.5	-
SF47	160	25	30	70	94	3.5	50	50	2	6
SF57	200	30	40	72	115	3.5	60	60	3.5	7.5
SF67	200	35	45	-	115	3.5	70	70	8.5	-
SF77	250	45	55	108	160	4	90	90	8	9
SF87	350	60	65	130	220	5	120	120	6	10
SF97	450	70	75	150	320	5	140	140	8.5	10
WF10	80	16	25	-	39	2.5	40	40	30	-
WF10	120	16	25	39	74	3	40	40	5	30
WF20	110	20	30	44	53	-4	40	40	27	35
WF20	120	20	30	-	45	2.5	40	40	37.5	-
WF30	120	20	30	48	63	2.5	40	40	18	27
WF30	160	20	30	48	63	2.5	40	40	33	42
WF37	120	20	30	-	70	2.5	40	40	-	10.5
WF37	160	20	30	-	70	2.5	40	40	-	25.5

6.10 Flange contours of FAF.., KAF.., SAF.. and WAF.. gear units

59719AXX

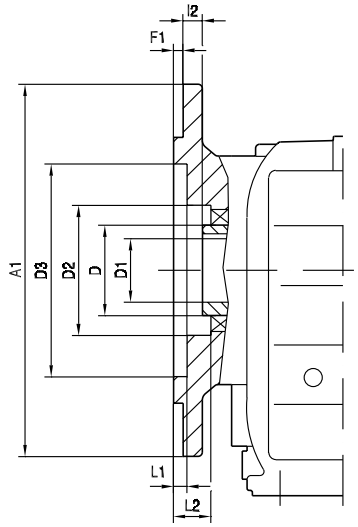

Check dimensions L1 and L2 for selection and installation of output elements.

Type	Dimensions in mm									
	A1	D	D1	D2	D3	F1	I2	L	L1	L2
FF27	160	25	40	66	96	3.5	50	50	3	18.5
FF37	160	25	30	70	94	3.5	50	50	2	6
FF47	200	30	40	72	115	3.5	60	60	3.5	7.5
FF57	250	35	40	84	155	4	70	70	4	9
FF67	250	40	50	84	155	4	80	80	4	9
FF77	300	50	55	82	205	4	100	100	5	9
FF87	350	60	65	115	220	5	120	120	5	9
FF97	450	70	75	112	320	5	140	140	8	10
FF107	450	90	100	159	318	5	170	170	16	9
FF127	550	110	118	-	420	5	210	210	10	-
FF157	660	120	135	190	520	6	210	210	8	14
KF37	160	25	30	70	94	3.5	50	50	2	6
KF47	200	30	40	72	115	3.5	60	60	3.5	7.5
KF57	250	35	40	84	155	4	70	70	4	9
KF67	250	40	50	84	155	4	80	80	4	9
KF77	300	50	55	82	205	4	100	100	5	9
KF87	350	60	65	115	220	5	120	120	5	9
KF97	450	70	75	112	320	5	140	140	8	10
KF107	450	90	100	159	318	5	170	170	16	9
KF127	550	110	118	-	420	5	210	210	10	-
KF157	660	120	135	190	520	6	210	210	8	14
SF37	120	20	25	-	68	3	40	40	6	-
SF37	160	20	25	-	96	3.5	40	40	5.5	-
SF47	160	25	30	70	94	3.5	50	50	2	6
SF57	200	30	40	72	115	3.5	60	60	3.5	7.5
SF67	200	35	45	-	115	3.5	70	70	8.5	-
SF77	250	45	55	108	160	4	90	90	8	9
SF87	350	60	65	130	220	5	120	120	6	10
SF97	450	70	75	150	320	5	140	140	8.5	10
WF10	80	16	25	-	39	2.5	40	40	30	-
WF10	120	16	25	39	74	3	40	40	5	30
WF20	110	20	30	44	53	-4	40	40	27	35
WF20	120	20	30	-	45	2.5	40	40	37.5	-
WF30	120	20	30	48	63	2.5	40	40	18	27
WF30	160	20	30	48	63	2.5	40	40	33	42
WF37	120	20	30	-	70	2.5	40	40	-	10.5
WF37	160	20	30	-	70	2.5	40	40	-	25.5

6.11 Fixed covers

Parallel shaft helical gear units, helical-bevel gear units, helical-worm and Spiroplan® gear units with hollow shafts and shrink discs of size 37 up to size 97 come equipped with a rotating cover as standard. If for safety reasons fixed covers are required for these gear units, you can order them for the respective gear unit types by quoting the part numbers in the following tables. Parallel shaft helical gear units and helical-bevel gear units with hollow shafts and shrink disks of size 107 and higher as well as parallel shaft helical gear units of size 27 come equipped with a fixed cover as standard.

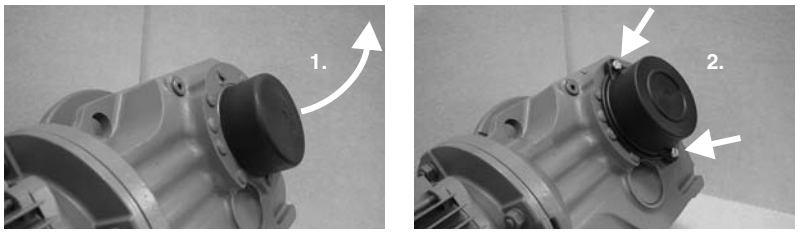

03190AXX

Figure 37: Replacing a rotating cover with a fixed cover

[1] Pull off the rotating cover

[2] Install and fasten fixed cover

Part numbers and dimensions

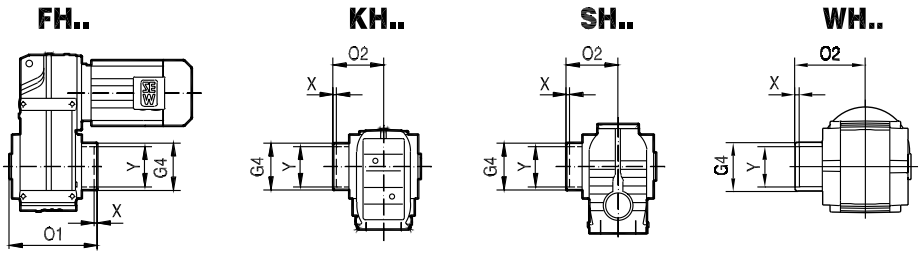

62664AXX

Parallel shaft helical gearmotors	FH..37	FH..47	FH..57	FH..67	FH..77	FH..87	FH..97
Part number	643 513 0	643 514 9	643 515 7	643 515 7	643 516 5	643 517 3	643 518 1
Max. size of CM motor that can be mounted	CM71L	CM71L	CM90L	CM112M	CM112L	CM112H	CM112H
G4	78	88	100	100	121	164	185
O1	157	188.5	207.5	221.5	255	295	363.5
X	2	4.5	7.5	6	6	4	6.5
Y	75	83	83	93	114	159	174

Helical-bevel gearmotors[1)]	KH..37	KH..47	KH..57	KH..67	KH..77	KH..87	KH..97
Part number	643 513 0	643 514 9	643 515 7	643 515 7	643 516 5	643 517 3	643 518 1
G4 [mm]	78	88	100	100	121	164	185
O2 [mm]	95	111.5	122.5	129	147	172	210.5
X [mm]	0	1.5	5.5	3	1	2	4.5
Y [mm]	75	83	83	93	114	159	174

1) Not possible in foot-mounted helical-bevel gear units with hollow shafts and shrink discs (KH..B).

Helical-worm gearmotors	SH..37	SH..47	SH..57	SH..67	SH..77	SH..87	SH..97
Part number	643 512 2	643 513 0	643 514 9	643 515 7	643 516 5	643 517 3	643 518 1
G4 [mm]	59	78	88	100	121	164	185
O2 [mm]	88	95	111.5	123	147	176	204.5
X [mm]	1	0	1.5	3	1	0	0.5
Y [mm]	53	75	83	93	114	159	174

Spiroplan® gearmotors	WH..37						
Part number	1 061 136 3						
G4 [mm]	68						
O2 [mm]	95.5						
X [mm]	11						
Y [mm]	50						

6.12 Condition monitoring: Oil-aging and vibration sensor – R, F, K, S, W

Technical data for oil aging sensor

DUO10A diagnostic unit

/DUO10A	Technical data		
Preset oil grades	OIL1	CLP mineral oil.	T_{max} = 100 °C
		Bio oil	T_{max} = 100 °C
	OIL2	CLP HC synthetic oil:	T_{max} = 130 °C
		CLP PAO oil	T_{max} = 130 °C
	OIL3	CLP PG poly glycol	T_{max} = 130 °C
	OIL4	Food grade oil	T_{max} = 100 °C
Switch outputs	1: Early warning (time to next oil change can be set to between 2 and 100 days) 2: Main alarm (time to oil change 0 days) 3: Exceeded temperature T_{max} 4: DUO10A is ready for operation		
Permitted oil temperature	-40 °C to +130°C		
Permitted temperature sensors	PT1000		
EMC	IEC1000-4-2/3/4/6		
Ambient temperature	-25 °C to +70°C		
Operating voltage	DC 18-28 V		
Current consumption at DC 24 V	< 90 mA		
Protection class	III		
Degree of protection	IP67 (optionally IP69k)		
Housing materials	Evaluation unit: V2A, EPDM/X, PBT, FPM Temperature sensor: V4A		
Electrical connection	Evaluation unit: M12 plug connector PT1000 temperature sensor: M12 plug connector		

Designations and part numbers

Designation	Description	Part number
DUO10A 	Evaluation unit (basic unit)	1 343 875 1
DUO10A-PUR-M12-5m	5 m PUR cable with 1 connector	1 343 877 8
DUO10A-PVC-M12-5m	5 m PVC cable with 1 connector	1 343 878 6
DUO10A	Angle bracket	1 343 880 8
DUO10A D = 34	Installation clamp	1 343 879 4

Designation	Description	Part number
W4843 PT1000 	PT1000 temperature sensor	1 343 881 6
W4843_4x0.34-2m-PUR	2 m PUR cable for PT1000[1)]	1 343 882 4
W4843_4x0.34-2m-PVC	2 m PVC cable for PT1000[2)]	1 343 883 2
DUO10A 	Protection cap (for Aseptic, IP69K)	1 343 902 2

1) PUR cables are particularly suited for use in oil-contaminated environments.

2) PVC cables are particularly suited for use in wet environments.

Mounting on standard gear units (R, F, K, S, W)

Adapter for mounting the PT1000 temperature sensor in screw plug holes:

Complete adapter for PT1000 sensor	Part number
M10×1	1 343 903 0
M12 × 1.5	1 343 904 9
M22 × 1.5	1 343 905 7
M33 × 2	1 343 906 5
M42 × 2	1 343 907 3

Mounting base for installing the diagnostic unit at the gear unit with an angle bracket:

Mounting base with sealing ring	Part number
M10×1	1 343 441 1
M12 × 1.5	1 343 827 1
M22 × 1.5	1 343 829 8
M33 × 2	1 343 830 1
M42 × 2	1 343 832 8

Technical data for vibration sensor

DUV10A diagnostic unit

/DUV10A	Technical data
Measuring range	± 20 g
Frequency range	0.125 ... 500 Hz
Spectral resolution	0.125 Hz
Diagnostic processes	FFT, envelope-FFT, trend analysis
Minimum measuring period	8.0 s
Speed range	12 ... 3500 rpm
Switch outputs	1: Early warning 2: Main alarm
Operating voltage	DC 10-32 V
Current consumption at DC 24 V	100 mA
Protection class	III
EMC	IEC1000-4-2/3/4/6
Overload capacity	100 g
Ambient temperature	-30 °C to +60°C
Degree of protection	IP67
Housing materials	Zinc die-casting, coating based on epoxy finish, polyester membrane keypad
Electrical connection for supply and switching output	M12 plug connector
Electrical connection RS-232 for communication	M8 plug connector
Certificates and standards	CE, UL

Designations and part numbers

Designation	Description	Part number
DUV10A 	Diagnostic unit (basic unit)	1 406 629 7
DUV10A-S	Configuration software	1 406 630 0
DUV10A-K-RS232-M8	Communication cable	1 406 631 9
DUV10A-N24DC	DC 24 V power supply unit	1 406 632 7
DUV10A-I	Impulse tester	1 406 633 5
DUV10A-K-M12-2m PUR	2 m PUR cable with 1 connector[1)]	1 406 634 3
DUV10A-K-M12-5m PUR	5 m PUR cable with 1 connector[1)]	1 406 635 1
DUV10A-K-M12-2m PVC	2 m PVC cable with 1 connector[2)]	1 326 620 9
DUV10A-K-M12-5m PVC	5 m PVC cable with 1 connector[2)]	1 326 621 7

1) PUR cables are particularly suited for use in oil-contaminated environments.

2) PVC cables are particularly suited for use in wet environments.

Mounting on standard gear units (R, F, K, S)

Mounting base for installing the diagnostic unit at the gear unit:

Mounting base with sealing ring	Part number
M10×1	1 343 441 1
M12 × 1.5	1 343 827 1
M22 × 1.5	1 343 829 8
M33 × 2	1 343 830 1
M42 × 2	1 343 832 8

6.13 Lubricants and fill quantities – R, F, K, S, W gear units

General information

Unless a special arrangement is made, SEW-EURODRIVE supplies the drives with a lubricant fill adapted for the specific gear unit and mounting position. The decisive factor is the mounting position (M1...M6, → chp. "Gear Unit Mounting Positions") specified when ordering the drive. You must adapt the lubricant fill in case of any subsequent changes made to the mounting position (→ Lubricant fill quantities).

	NOTE
	SEW-EURODRIVE fills the gear units with the amount of oil specified for the specific mounting positions. If the mounting position is changed, the amount of oil must be adapted as required. Consequently, a **mounting position may only be changed** after consultation with SEW-EURODRIVE, otherwise your right to claim under warranty **no longer applies**.

Lubricant table

The lubricant table on the following page shows the permitted lubricants for SEW-EURODRIVE gear units. Observe the following legend with regards to the lubricant table.

Key to the lubricant table

Abbreviations used, meaning of shading, and notes:

CLP	= Mineral oil
CLP PG	= Polyglycol (W gear units, conforms to USDA-H1)
CLP HC	= synthetic hydrocarbons
E	= Ester oil (water hazard class 1 (German regulation))
HCE	= synthetic hydrocarbons + ester oil (USDA - H1 certification)
HLP	= Hydraulic oil
	= synthetic lubricant (= synthetic-based roller bearing grease)
	= Mineral lubricant (= mineral-based rolling bearing grease)
1)	Helical-worm gear units with PG oil: please contact SEW-EURODRIVE.
2)	Special lubricant for Spiroplan® gear units only
3)	SEW-$f_B \geq 1.2$ required
4)	Pay attention to critical starting behavior at low temperatures!
5)	Low-viscosity grease
6)	Ambient temperature
	Lubricant for the food industry (food grade oil)
	Biodegradable oil (lubricant for agriculture, forestry, and fisheries)

Rolling bearing greases

The rolling bearings in gear units and motors are given a factory-fill with the greases listed below. SEW-EURODRIVE recommends regreasing rolling bearings with a grease fill at the same time as changing the oil or replacing the rolling bearings.

	Ambient temperature	Manufacturer	Type
Gear unit roller bearings	-40 °C ... +80 °C	Fuchs	Renolit CX-TOM15[1)]
Motor rolling bearings[2)]	-20 °C ... +80 °C	Esso	Polyrex EM
	+20 °C ... +100 °C	Klüber	Barrierta L55/2
	-40 °C ... +60 °C	Kyodo Yushi	Multemp SRL[3)]
Special greases for gear unit rolling bearings:			
	-30 °C ... +40 °C	Aral	Aral Eural Grease EP 2
	-20 °C ... +40 °C	Aral	Aral Aralube BAB EP2

1) Roller bearing grease based on partly synthetic base oil.

2) The motor rolling bearings are covered on both sides and cannot be regreased.

3) Recommended for continuous operation at ambient temperatures below 0°C, for example in a cold storage.



NOTE

The following grease quantities are required:

- For fast-running bearings (gear unit input end): Fill the cavities between the rolling elements one-third full with grease.
- For slow-running bearings (in gear units and at gear unit output end): Fill the cavities between the rolling elements two-thirds full with grease.

Lubricant table

01 805 10 92

	6) °C -50 0 +50 +100	DIN (ISO)	ISO,NLGI	Mobil®	Shell	Klüber	ARAL	bp	TEXACO	Castrol Tribol	Castrol Optimol	FUCHS	TOTAL
R...	Standard -10 +40	CLP(CC)	VG 220	Mobilgear 600 XP 220	Shell Omala 220	Klüberoil GEM 1-220 N	Aral Degol BG 220	BP Energol GR-XP 220	Meropa 220	Tribol 1100/220	Alpha SP 220 Optigear BM 220	Renolin CLP 220	Carter EP 220
	-25 +80	CLP PG	VG 220	Mobil Glygoyle 30	Shell Tivela S 220	Klübersynth GH 6-220	Aral Degol GS 220	BP Enersyn SG-XP 220	Synlube CLP 220	Tribol 800/220	Alphasyn PG 220 Optiflex A 220		Carter SY 220
K...(HK...)	4) -40 +80	CLP HC	VG 220	Mobil SHC 630	Shell Omala HD 220	Klübersynth GEM 4-220 N	Aral Degol PAS 220		Pinnacle EP 220	Tribol 1510/220	Alphasyn T 220 Optigear Synthetic X 220	Renolin Unisyn CLP 220	
	4) -40 +40		VG 150	Mobil SHC 629	Shell Omala HD 150	Klübersynth GEM 4-150 N			Pinnacle EP 150		Alphasyn T 150 Optigear Synthetic X 150		Carter SH 150
	-20 +25	CLP (CC)	VG 150 VG 100	Mobilgear 600 XP 100	Shell Omala 100	Klüberoil GEM 1-150 N	Aral Degol BG 100	BP Energol GR-XP 100	Meropa 150	Tribol 1100/100	Alpha SP/100/150 Optigear BM 100	Renolin CLP 150	Carter EP 100
F...	-30 +10	HLP (HM)	VG 68-46 VG 32	Mobil D.T.E. 13M	Shell Tellus T 32	Klüberoil GEM 1-68 N	Aral Degol BG 46		Rando EP Ashless 46	Tribol 1100/68	Hyspin AWS 32 Optigear 32	Renolin B 46 HVI	Equivis ZS 46
	4) -40 +20	CLP HC	VG 68	Mobil SHC 626									
	-40 +10	CLP HC	VG 32	Mobil SHC 624		Klüber-Summit HySyn FG-32					Alphasyn T32 Optileb HY 32		Dacnis SH 32
	4) -40 -20	HLP (HM)	VG 22 VG 15	Mobil D.T.E. 11M	Shell Tellus T 15	Isoflex MT 30 ROT		BP Energol HLP-HM 15	Rando HDZ 15		Hyspin AWS 22		Equivis ZS 15
	Standard 0 +40	CLP (CC)	VG 680	Mobilgear 600 XP 680	Shell Omala 680	Klüberoil GEM 1-680 N	Aral Degol BG 680	BP Energol GR-XP 680	Meropa 680	Tribol 1100/680	Alpha SP 680 Optigear BM 680	Renolin SEW 680	Carter EP 680
	-20 +60	CLP PG	VG 680 1)		Shell Tivela S 680	Klübersynth GH 6-680		BP Enersyn SG-XP 680	Synlube CLP 680	Tribol 800/680	Optiflex A 680		
S...(HS...)	4) -30 +80	CLP HC	VG 460	Mobil SHC 634	Shell Omala HD 460	Klübersynth GEM 4-460 N			Pinnacle EP 460		Optigear Synthetic X 460		
	4) -40 +20		VG 150	Mobil SHC 629	Shell Omala HD 150	Klübersynth GEM 4-150 N			Pinnacle EP 150		Optigear Synthetic X 150		Carter SH 150
	-20 +10	CLP (CC)	VG 150 VG 100	Mobilgear 600 XP 100	Shell Omala 100	Klüberoil GEM 1-150 N	Aral Degol BG 100	BP Energol GR-XP 100	Meropa 150	Tribol 1100/100	Alpha SP/100/150 Optigear BM 100	Renolin CLP 150	Carter EP 100
	-25 +20	CLP PG	VG 220 1)	Mobil Glygoyle 30	Shell Tivela S 220	Klübersynth GH 6-220	Aral Degol GS 220	BP Enersyn SG-XP 220	Synlube CLP 220	Tribol 800/220	Alphasyn PG 220 Optiflex A 220		Carter SY 220
	4) -40 +20	CLP HC	VG 68	Mobil SHC 626									
	4) -40 0	CLP HC	VG 32	Mobil SHC 624		Klüber-Summit HySyn FG-32			Cetus PAO 46		Alphasyn T32		Dacnis SH 32
R...,K...(HK...), F...,S...(HS...)	4) -30 +40	HCE	VG 460		Shell Cassida Fluid GL 460	Klüberoil 4UH1-460 N	Aral Eural Gear 460					Optileb GT 460	
	-20 +40	E	VG 460			Klüberbio CA2-460	Aral Degol BAB 460			Tribol Bio Top 1418/460			
W...(HW...)	Standard -20 +40	SEW PG	VG 460 2)			Klüber SEW HT-460-5							
	4) -40 +10	API GL5	SAE 75W90 (~VG 100)	Delvac Synth. GearOil LS 75 W90									
	-20 +40	CLP PG	VG 460 3)			Klübersynth UH1 6-460							
R32 R302	-25 +60	DIN 51 818	00	Glygoyle Grease 00	Shell Tivela GL 00	Klübersynth GE 46-1200			Multifak 6833 EP 00		Spheerol EPL 0		Marson SY 00
	Standard -15 +40 5)		000 - 0	Mobilux EP 004	Shell Alvania GL 00		Aralub MFL 00	BP Energrease LS-EP 00	Multifak EP 000		CLS Grease Longtime PD 00	Renolin SF 7 - 041	Multis EP 00

Lubricant fill quantities

The specified fill quantities are **recommended values**. The precise values vary depending on the number of stages and gear ratio. When filling, it is essential to check the **oil level plug since it indicates the precise oil capacity**.

The following tables show guide values for lubricant fill quantities in relation to the mounting position M1 ... M6.

Helical (R) gear units

RX..

Gear units	Fill quantity in liters					
	M1	M2	M3	M4	M5	M6
RX57	0.60	0.80	1.30	1.30	0.90	0.90
RX67	0.80	0.80	1.70	1.90	1.10	1.10
RX77	1.10	1.50	2.60	2.70	1.60	1.60
RX87	1.70	2.50	4.80	4.80	2.90	2.90
RX97	2.10	3.40	7.4	7.0	4.80	4.80
RX107	3.90	5.6	11.6	11.9	7.7	7.7

RXF..

Gear units	Fill quantity in liters					
	M1	M2	M3	M4	M5	M6
RXF57	0.50	0.80	1.10	1.10	0.70	0.70
RXF67	0.70	0.80	1.50	1.40	1.00	1.00
RXF77	0.90	1.30	2.40	2.00	1.60	1.60
RXF87	1.60	1.95	4.90	3.95	2.90	2.90
RXF97	2.10	3.70	7.1	6.3	4.80	4.80
RXF107	3.10	5.7	11.2	9.3	7.2	7.2

R.., R..F

Gear units	Fill quantity in liters					
	M1[1)]	M2[1)]	M3	M4	M5	M6
R07	0.12	0.20	0.20	0.20	0.20	0.20
R17	0.25	0.55	0.35	0.55	0.35	0.40
R27	0.25/0.40	0.70	0.50	0.70	0.50	0.50
R37	0.30/0.95	0.85	0.95	1.05	0.75	0.95
R47	0.70/1.50	1.60	1.50	1.65	1.50	1.50
R57	0.80/1.70	1.90	1.70	2.10	1.70	1.70
R67	1.10/2.30	2.40/3.20	2.80	2.90	1.80	2.00
R77	1.20/3.00	3.30/4.20	3.60	3.80	2.50	3.40
R87	2.30/6.0	6.4/8.1	7.2	7.2	6.3	6.5
R97	4.60/9.8	11.7/14.0	11.7	13.4	11.3	11.7
R107	6.0/13.7	16.3	16.9	19.2	13.2	15.9
R137	10.0/25.0	28.0	29.5	31.5	25.0	25.0
R147	15.4/40.0	46.5	48.0	52.0	39.5	41.0
R167	27.0/70.0	82.0	78.0	88.0	66.0	69.0

1) The larger gear unit of multi-stage gear units must be filled with the larger oil volume.

RF..

Gear units	Fill quantity in liters					
	M1[1)]	M2[1)]	M3	M4	M5	M6
RF07	0.12	0.20	0.20	0.20	0.20	0.20
RF17	0.25	0.55	0.35	0.55	0.35	0.40
RF27	0.25/0.40	0.70	0.50	0.70	0.50	0.50
RF37	0.35/0.95	0.90	0.95	1.05	0.75	0.95
RF47	0.65/1.50	1.60	1.50	1.65	1.50	1.50
RF57	0.80/1.70	1.80	1.70	2.00	1.70	1.70
RF67	1.20/2.50	2.50/3.20	2.70	2.80	1.90	2.10
RF77	1.20/2.60	3.10/4.10	3.30	3.60	2.40	3.00
RF87	2.40/6.0	6.4/8.2	7.1	7.2	6.3	6.4
RF97	5.1/10.2	11.9/14.0	11.2	14.0	11.2	11.8
RF107	6.3/14.9	15.9	17.0	19.2	13.1	15.9
RF137	9.5/25.0	27.0	29.0	32.5	25.0	25.0
RF147	16.4/42.0	47.0	48.0	52.0	42.0	42.0
RF167	26.0/70.0	82.0	78.0	88.0	65.0	71.0

1) The larger gear unit of multi-stage gear units must be filled with the larger oil volume.

Parallel shaft helical (F) gear units

F.., FA..B, FH..B, FV..B

Gear units	Fill quantity in liters					
	M1	M2	M3	M4	M5	M6
F..27	0.60	0.80	0.65	0.70	0.60	0.60
F..37	0.95	1.25	0.70	1.25	1.00	1.10
F..47	1.50	1.80	1.10	1.90	1.50	1.70
F..57	2.60	3.50	2.10	3.50	2.80	2.90
F..67	2.70	3.80	1.90	3.80	2.90	3.20
F..77	5.9	7.3	4.30	8.0	6.0	6.3
F..87	10.8	13.0	7.7	13.8	10.8	11.0
F..97	18.5	22.5	12.6	25.2	18.5	20.0
F..107	24.5	32.0	19.5	37.5	27.0	27.0
F..127	40.5	54.5	34.0	61.0	46.3	47.0
F..157	69.0	104.0	63.0	105.0	86.0	78.0

FF..

Gear units	Fill quantity in liters					
	M1	M2	M3	M4	M5	M6
FF27	0.60	0.80	0.65	0.70	0.60	0.60
FF37	1.00	1.25	0.70	1.30	1.00	1.10
FF47	1.60	1.85	1.10	1.90	1.50	1.70
FF57	2.80	3.50	2.10	3.70	2.90	3.00
FF67	2.70	3.80	1.90	3.80	2.90	3.20
FF77	5.9	7.3	4.30	8.1	6.0	6.3
FF87	10.8	13.2	7.8	14.1	11.0	11.2
FF97	19.0	22.5	12.6	25.6	18.9	20.5
FF107	25.5	32.0	19.5	38.5	27.5	28.0
FF127	41.5	55.5	34.0	63.0	46.3	49.0
FF157	72.0	105.0	64.0	106.0	87.0	79.0

FA.., FH.., FV.., FAF.., FAZ.., FHF.., FHZ.., FVF.., FVZ.., FT..

Gear units	Fill quantity in liters					
	M1	M2	M3	M4	M5	M6
F..27	0.60	0.80	0.65	0.70	0.60	0.60
F..37	0.95	1.25	0.70	1.25	1.00	1.10
F..47	1.50	1.80	1.10	1.90	1.50	1.70
F..57	2.70	3.50	2.10	3.40	2.90	3.00
F..67	2.70	3.80	1.90	3.80	2.90	3.20
F..77	5.9	7.3	4.30	8.0	6.0	6.3
F..87	10.8	13.0	7.7	13.8	10.8	11.0
F..97	18.5	22.5	12.6	25.2	18.5	20.0
F..107	24.5	32.0	19.5	37.5	27.0	27.0
F..127	39.0	54.5	34.0	61.0	45.0	46.5
F..157	68.0	103.0	62.0	104.0	85.0	77.0

Helical-bevel (K) gear units

K.., KA..B, KH..B, KV..B

Gear units	Fill quantity in liters					
	M1	M2	M3	M4	M5	M6
K..37	0.50	1.00	1.00	1.25	0.95	0.95
K..47	0.80	1.30	1.50	2.00	1.60	1.60
K..57	1.10	2.20	2.20	2.80	2.30	2.10
K..67	1.10	2.40	2.60	3.45	2.60	2.60
K..77	2.20	4.10	4.40	5.8	4.20	4.40
K..87	3.70	8.0	8.7	10.9	8.0	8.0
K..97	7.0	14.0	15.7	20.0	15.7	15.5
K..107	10.0	21.0	25.5	33.5	24.0	24.0
K..127	21.0	41.5	44.0	54.0	40.0	41.0
K..157	31.0	62.0	65.0	90.0	58.0	62.0
K..167	33.0	95.0	105.0	123.0	85.0	84.0
K..187	53.0	152.0	167.0	200	143.0	143.0

KF..

Gear units	Fill quantity in liters					
	M1	M2	M3	M4	M5	M6
KF37	0.50	1.10	1.10	1.50	1.00	1.00
KF47	0.80	1.30	1.70	2.20	1.60	1.60
KF57	1.20	2.20	2.40	3.15	2.50	2.30
KF67	1.10	2.40	2.80	3.70	2.70	2.70
KF77	2.10	4.10	4.40	5.9	4.50	4.50
KF87	3.70	8.2	9.0	11.9	8.4	8.4
KF97	7.0	14.7	17.3	21.5	15.7	16.5
KF107	10.0	21.8	25.8	35.1	25.2	25.2
KF127	21.0	41.5	46.0	55.0	41.0	41.0
KF157	31.0	66.0	69.0	92.0	62.0	62.0

KA.., KH.., KV.., KAF.., KHF.., KVF.., KAZ.., KHZ.., KVZ.., KT..

Gear units	Fill quantity in liters					
	M1	M2	M3	M4	M5	M6
K..37	0.50	1.00	1.00	1.40	1.00	1.00
K..47	0.80	1.30	1.60	2.15	1.60	1.60
K..57	1.20	2.20	2.40	3.15	2.70	2.40
K..67	1.10	2.40	2.70	3.70	2.60	2.60
K..77	2.10	4.10	4.60	5.9	4.40	4.40
K..87	3.70	8.2	8.8	11.1	8.0	8.0
K..97	7.0	14.7	15.7	20.0	15.7	15.7
K..107	10.0	20.5	24.0	32.4	24.0	24.0
K..127	21.0	41.5	43.0	52.0	40.0	40.0
K..157	31.0	66.0	67.0	87.0	62.0	62.0

Helical-worm (S) gear units

S

Gear units	Fill quantity in liters					
	M1	M2	M3[1)]	M4	M5	M6
S..37	0.25	0.40	0.50	0.55	0.40	0.40
S..47	0.35	0.80	0.70/0.90	1.00	0.80	0.80
S..57	0.50	1.20	1.00/1.20	1.45	1.30	1.30
S..67	1.00	2.00	2.20/3.10	3.10	2.60	2.60
S..77	1.90	4.20	3.70/5.4	5.9	4.40	4.40
S..87	3.30	8.1	6.9/10.4	11.3	8.4	8.4
S..97	6.8	15.0	13.4/18.0	21.8	17.0	17.0

1) The larger gear unit of multi-stage gear units must be filled with the larger oil volume.

SF..

Gear units	Fill quantity in liters					
	M1	M2	M3[1)]	M4	M5	M6
SF37	0.25	0.40	0.50	0.55	0.40	0.40
SF47	0.40	0.90	0.90/1.05	1.05	1.00	1.00
SF57	0.50	1.20	1.00/1.50	1.55	1.40	1.40
SF67	1.00	2.20	2.30/3.00	3.20	2.70	2.70
SF77	1.90	4.10	3.90/5.8	6.5	4.90	4.90
SF87	3.80	8.0	7.1/10.1	12.0	9.1	9.1
SF97	7.4	15.0	13.8/18.8	22.6	18.0	18.0

1) The larger gear unit of multi-stage gear units must be filled with the larger oil volume.

SA.., SH.., SAF.., SHZ.., SAZ.., SHF.., ST..

Gear units	Fill quantity in liters					
	M1	M2	M3[1)]	M4	M5	M6
S..37	0.25	0.40	0.50	0.50	0.40	0.40
S..47	0.40	0.80	0.70/0.90	1.00	0.80	0.80
S..57	0.50	1.10	1.00/1.50	1.50	1.20	1.20
S..67	1.00	2.00	1.80/2.60	2.90	2.50	2.50
S..77	1.80	3.90	3.60/5.0	5.8	4.50	4.50
S..87	3.80	7.4	6.0/8.7	10.8	8.0	8.0
S..97	7.0	14.0	11.4/16.0	20.5	15.7	15.7

1) The larger gear unit of multi-stage gear units must be filled with the larger oil volume.

Spiroplan® (W-) gear units

The fill quantity of Spiroplan® gear units W..10 to W..30 does not vary, irrespective of their mounting position. Only the fill quantity of Spiroplan® gear unit W..37 in mounting position M4 is different from that of other mounting positions.

Gear units	Fill quantity in liters					
	M1	M2	M3	M4	M5	M6
W..10	0.16					
W..20	0.24					
W..30	0.40					
W..37	0.50			0.70	0.50	

6.14 Lubricants and fill quantities – BS.F, PS.F gear units

General information

Unless a special arrangement is made, SEW-EURODRIVE supplies the gear units with a lubricant fill adapted for the specific mounting position. The decisive factor is the mounting position (M1...M6) specified when ordering the drive. The standard synthetic lubricant has a service life of approximately 5 years under normal operating conditions.

NOTE

SEW-EURODRIVE fills the gear units with the amount of oil specified for the specific mounting positions. If the mounting position is changed, the amount of oil must be adapted as required. Consequently, a **mounting position may only be changed** after consultation with SEW-EURODRIVE, otherwise your right to claim under warranty **no longer applies**.

NOTE

The BS.F helical-bevel and PS.F planetary gear units from SEW-EURODRIVE are supplied exclusively with synthetic lubricants.

Food-grade lubricants are available from SEW-EURODRIVE on request.

The following lubricant tables show the permitted standard lubricants for BS.F.. helical-bevel gear units and PS.F planetary gear units from SEW-EURODRIVE.

Lubricant table for gear unit oil for BS.F helical-bevel gear units

BSF..	Ambient temperature ° C -20 0 +20 +40 +60	API class	ISO	Oil	Anti-friction bearing grease
	–20 +40	GL5	VG ~ 100	Mobillube SHC 75W-90 LS	Mobiltemp 100

57358AEN

Lubricant table for the food industry

BSF..	Ambient temperature ° C -20 0 +20 +40 +60	ISO	Oil	Anti-friction bearing grease
	–20 +40	VG 460	Klübersynth UH1 6-460	Aral Eural Grease EP2

57976AEN

Fill quantities depending on the mounting positions

The following tables show guide values for lubricant fill quantities in relation to the mounting position M1 ... .

Fill quantities for BS.F helical-bevel gear units

BSF.. helical-bevel gear units	Fill quantity in liters					
	M1	M2	M3	M4	M5	M6
BSF202	0.15	0.25	0.25	0.30	0.25	0.25
BSF302	0.25	0.50	0.50	0.55	0.35	0.35
BSF402	0.45	0.80	0.80	1.05	0.65	0.65
BSF502	1.00	1.80	1.80	2.50	1.50	1.50
BSF602	1.60	2.50	2.80	4.10	2.00	2.60
BSF802	3.30	5.30	5.70	7.90	4.50	4.50

Fill quantity tolerance for BSF..

Fill quantity in liter [l]	Tolerance
Up to 1 l	0.01 l
> 1 l	1% of the fill quantity

Lubricant table for gear unit oil for PS.F planetary gear units

PSF..	Ambient temperature	DIN ISO	ISO	Oil	Anti-friction bearing grease
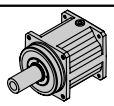	° C -20 0 +20 +40 +60 - 20 + 40	CLP PG 220[1)]	VG 220	Klübersynth GH6-220	Klüber Petamo GHY 133 N

57375AEN

1) CLP PG = Polyglycol

Lubricant table for the food industry

PSF..	Ambient temperature	ISO	Oil	Anti-friction bearing grease
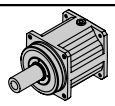	° C -20 0 +20 +40 +60 –20 +40	VG 460	Klübersynth UH1 6-460	Aral Eural Grease EP2

57980AEN

Fill quantities depending on the mounting positions

The following tables show guide values for lubricant fill quantities in relation to the mounting position M1 ... .

Fill quantities for PS.F planetary gear units

PSF.. planetary gear units	Adapter mounting - Fill quantity in liters [l]			Direct mounting Fill quantity in liters [l]		
	M1 (M3, M5, M6)	M2	M4	M1 (M3, M5, M6)	M2	M4
PSF121	0.023	0.025	0.023	0.023	0.037	0.023
PSF122	0.035	0.056	0.054	0.035	0.068	0.054
PSF221	0.035	0.052	0.035	0.035	0.063	0.035
PSF222	0.045	0.075	0.085	0.045	0.085	0.085
PSF321	0.070	0.100	0.070	0.070	0.120	0.070
PSF322	0.095	0.170	0.190	0.095	0.185	0.190
PSF521	0.140	0.215	0.150	0.140	0.245 (0.270)*	0.150
PSF522	0.200	0.360	0.395	0.200	0.380	0.395
PSF621	0.300	0.465	0.320	0.300	0.500 (0.550)*	0.320
PSF622	0.410	0.680	0.780	0.410	0.710	0.780
PSF721	0.600	0.930	0.650	0.600	1.060	0.650
PSF722	0.750	1.230	1.645	0.750	1.280	1.645
PSF821	1.000	1.750	1.350	-	-	-
PSF822	1.550	2.550	3.350	1.550	2.640	3.350
PSF921	1.400	2.450	1.900	-	-	-
PSF922	2.050	3.500	4.350	2.050	3.650	4.350

PSBF.. planetary gear unit	Adapter mounting - Fill quantity in liters [l]			Direct mounting Fill quantity in liters [l]		
	M1 (M3, M5, M6)	M2	M4	M1 (M3, M5, M6)	M2	M4
PSBF221	0.025	0.040	0.025	0.025	0.051	0.025
PSBF222	0.035	0.061	0.060	0.035	0.074	0.060
PSBF321	0.045	0.068	0.050	0.045	0.085	0.050
PSBF322	0.070	0.135	0.130	0.070	0.145	0.130
PSBF521	0.093	0.143	0.103	0.093	0.168 (0.193)*	0.103
PSBF522	0.143	0.288	0.273	0.143	0.308	0.273
PSBF621	0.198	0.318	0.188	0.198	0.358 (0.408)*	0.188
PSBF622	0.298	0.538	0.498	0.298	0.568	0.498
PSBF721	0.474	0.684	0.314	0.404	0.544	0.314
PSBF722	0.564	0.884	1.004	0.544	0.834	1.004
PSBF821	0.495	0.995	0.695	-	-	-
PSBF822	0.995	1.795	1.995	0.995	1.895	1.995

*) Fill quantities for direct mounting of CFM90 servomotors

Fill quantity tolerances for PS.F

Planetary gear units	Fill quantity tolerance in liters [l]
PS.F121/122	± 0.001
PS.F221/222	± 0.001
PS.F321/322	± 0.002
PS.F521/522	± 0.005
PS.F621/622	± 0.005
PS.F721/722	± 0.010
PS.F821/822	± 0.010
PS.F921/922	± 0.010

7 Important Notes on Selection Tables an Dimension Sheets

7.1 Notes on the selection tables

M_{aDyn} [Nm]		CMP							DS		
	i	40M	50S	50M	50L	63S	63M	63L	56M	56L	56H
PSC221 1	3	11	15	31	>40	33	>40	>40	11	23	>40
	5	19	26	>42	>42	>42	>42	>42	19	38	>42
	7	26	36	>39	>39	>39	>39		26	>39	>39
	10	>37	>37						>37	>37	

Dynamic output torque M_{aDyn} of the drive

Gear unit reduction ratio

Gear unit size with number of gear unit stages

	The dark-gray fields contain preferred combinations
	Please contact SEW-EURODRIVE for more information about the light-gray fields.
	White fields mean: Combination not possible

NOTE

In fields marked with ">...", M_{aDyn} must not exceed the maximum permitted torque M_{apk} in short-term duty because the motor may overload the gear unit. The motor current I_{max} must be limited during startup.

m [kg]		CMP							DS		
	s	40M	50S	50M	50L	63S	63M	63L	56M	56L	56H
PSC221	1	3.2	4.0	5.0	5.9	6.3	7.8	9.3	4.2	5.2	5.9
PSC222	2	3.8	4.7	5.6	6.5	7.0	8.5	10.0	4.8	5.8	6.5

? Mass of the drive

s Number of gear unit stages

				M1;M3;M5-6			M2			M4			φ
	i	n_{epk} [rpm]	η [%]	a_0	a_1	a_2	a_0	a_1	a_2	a_0	a_1	a_2	[']
PSC221 1	3	7000	99	101.00	-0.093	0	106.00	-0.104	0	109.00	-0.110	0	10
	5	7000	99	160.00	-0.181	0	163.00	-0.190	0	167.00	-0.200	0	10
	7	7000	99	186.00	-0.257	0	187.00	-0.264	0	186.00	-0.267	0	10
	10	7000	99	158.00	-0.178	0	161.00	-0.184	0	164.00	-0.194	0	10

i Gear unit reduction ratio

n_{epk} Maximum permitted input speed for short-time duty

η Efficiency of the gear unit (at M_{apk}, n_e=1500 rpm, mounting position M1, S1 operation)

φ Circumferential backlash

a_0, a_1, a_2 Gear unit constants as regards the rise in temperature in the gear unit

CMP / DS	i	M_{amax} [Nm]	M_{apk} [Nm]	$M_{aNotaus}$ [Nm]	n_{ak} [rpm]	J_G 10^{-4} kgm^2	c_T PSC [Nm/']	F_{Ramax} PSC [N]	F_{Rapk} PSC [N]
PSC221 1	3	29	40	60	1500	0.17	3.46	1170	2000
	5	34	42	63	720	0.058	3.44	1390	2000
	7	32	39	59	800	0.030	3.28	1550	2000
	10	30	37	56	700	0.014	2.92	1750	2000

i	Gear unit reduction ratio
M_{amax}	Maximum permitted output torque for continuous duty
M_{apk}	Maximum permitted output torque for short-time duty
$M_{aNotaus}$	Maximum permitted output emergency stop torque, max. 1000 emergency stops
n_{ak}	Breakpoint speed (output)
J_G	Mass moment of inertia of the gear unit with reference to the input shaft
c_T	Torsional rigidity of the gear unit / gear unit with adapter
F_{Ramax}	Maximum permitted overhung load at the output shaft for continuous duty, load application point is the center of the shaft end
F_{Rapk}	Maximum permitted overhung load at the output shaft for short-time duty, load application point is the center of the shaft end

7.2 Notes on the dimension sheets

Scope of delivery

= Standard parts supplied by SEW-EURODRIVE.

= Standard parts not supplied by SEW-EURODRIVE.

Tolerances

Shaft heights

The following tolerances apply to the indicated dimensions:

h ≤ 250 mm → -0.5 mm
h > 250 mm → -1 mm

Foot-mounted gear units: Check the mounted motor because it may project below the mounting surface.

Shaft ends

Diameter tolerance:

∅ ≤ 50 mm → ISO k6
∅ > 50 mm → ISO m6

Center bores according to DIN 332, shape DR:

∅	= 7...10 mm	→ M3	∅	> 30...38 mm	→ M12
∅	> 10...13 mm	→ M4	∅	> 38...50 mm	→ M16
∅	> 13...16 mm	→ M5	∅	> 50...85 mm	→ M20
∅	> 16...21 mm	→ M6	∅	> 85...130 mm	→ M24
∅	> 21...24 mm	→ M8	∅	> 130 mm	→ M30
∅	> 24...30 mm	→ M10			

Keys: according to DIN 6885 (domed type)

Hollow shafts

Diameter tolerance:

∅ → ISO H7 measured with plug gauge

Keys: according to DIN 6885 (domed type)

Exception: Key for WA37 with shaft ∅ 25 mm according to DIN 6885-3 (low form)

Multiple-spline shafts

Dm = Measuring roller diameter

Me = Check size

Flanges

Centering shoulder tolerance:

∅ ≤ 230 mm (flange sizes A120...A300) → ISO j6

∅ > 230 mm (flange sizes A350...A660) → ISO h6

Up to three different flange dimensions are available for each size of helical gear unit, Spiroplan® gear unit, AC (brake) motor and explosion-proof AC (brake) motor. The respective dimension drawings will show the flanges approved for each size.

Eyebolts, suspension eye lugs

R07...R27 helical gear units and the Spiroplan® gearmotors W..10 to W..30 are delivered without special transportation fixtures. All other gear units and motors are equipped with cast-on suspension eye lugs, screw-on suspension eye lugs or screw-on eyebolts.

Gear unit/motor type	Screw-on,		cast-on suspension eye lugs
	lifting eyebolts	Eyebolts	
R..37-R..57	-	•	-
R..67-R..107	•	-	-
RX57-RX67	-	•	-
RX77-RX107	•	-	-
F..27-F..157	-	-	•
K..37-K..157	-	-	•
K..167-K..187	•	-	-
W..37	-	•	-
S..37-S..47	-	•	-
S..57-S..97	-	-	•
BS.F502..802	-	•	-
PS.F621..921	-	•	-
PS.F622..922	-	•	-

Breather valves

The gear unit dimension drawings always show the screw plugs. The corresponding screw plug is replaced by an activated breather valve at the factory depending on the ordered mounting position M1...M6. The result may be slightly altered contour dimensions.

Shrink disk connection

Hollow shaft gear unit with shrink disk connection: If required, please request a detailed data sheet on shrink discs, data sheet no. 33 753 ..95.

Splined hollow shaft

FV.. hollow shaft gear units in sizes 27 ... 107 and KV.. in sizes 37 ... 107 are delivered with a splined hollow shaft according to DIN 5480.

Rubber buffer for FA/FH/FV/FT

Preload rubber buffer by the indicated value mL. The characteristic curve of spring for the rubber buffers is available at SEW-EURODRIVE on request.

Position of the torque arm

The following illustration shows the possible torque arm positions for helical-worm, Spiroplan® and BS.F gear units as well as the respective angles:

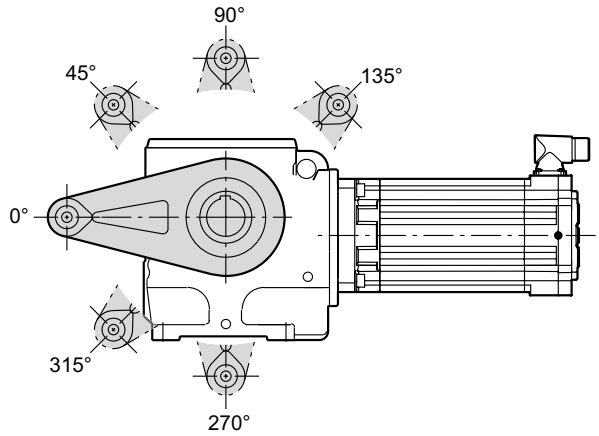

63237AXX

Figure 38: Position of the torque arm for S and W gear units

Specifications regarding torque arms of helical-worm gearmotors are found in the dimension sheets from page 440, specifications regarding the torque arms of Spiroplan® gearmotors are found in the dimension sheets from page 488.

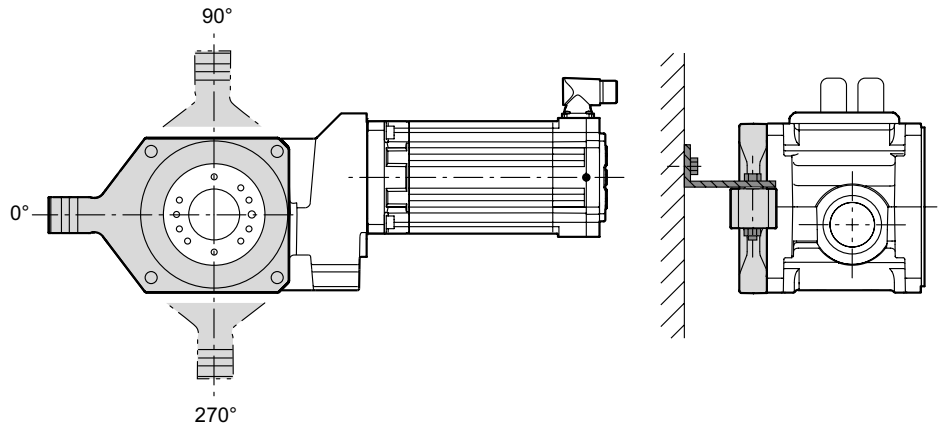

63240AXX

Figure 39: Position of the torque arm of BS.F gear units

Specifications regarding the torque arms of helical-bevel gearmotors are found on page 564.

Tolerances and chamfers of flange block gear units

Internal centering	→ ISO H7
External centering	→ ISO h7

For additional information turn to page 565 or page 628.

Front and foot-end mounting of BS.F..B gear units

For detailed information, refer to page 563.

7.3 Gearmotor dimensions

Motor options

The motor dimensions may change when installing motor options. Refer to the dimension drawings of the motor options.

Special designs

The terminal box dimensions in special designs might vary from the standard.

EN 50347

European standard EN 50347 became effective in August 2001. This standard adopts the dimension designations for three-phase AC motors for sizes 56 to 315M and flange sizes 65 to 740 from the IEC 72-1 standard.

The new dimension designations given in EN 50347 / IEC 72-1 are used for the dimensions in question in the dimension tables of the dimensions sheets.

Gearmotor dimensions

The following is an overview of the gearmotor dimensions:

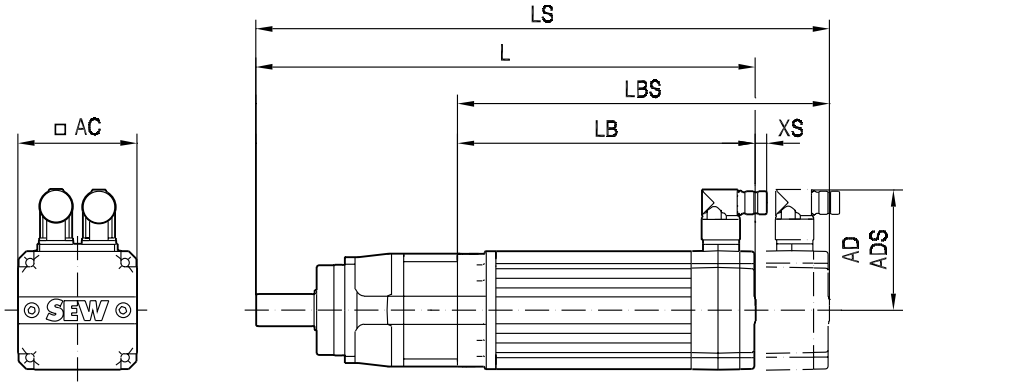

63003axx

L	Total length of gearmotor	AC	Diameter of motor
LS	Total length of gearmotor including brake	AD	Center of motor shaft to top part of terminal box
LB	Length of motor	ADS	Center of brakemotor shaft to top part of terminal box
LBS	Length of brakemotor	XS	Projecting length of the plug connector beyond the motor housing

	NOTE
	For motors with other feedback systems than resolvers, possible additional lengths must be considered.

8 R..CMP, DS, CM

8.1 R, RF, R..F, RX, RXF..CMP / DS / CM

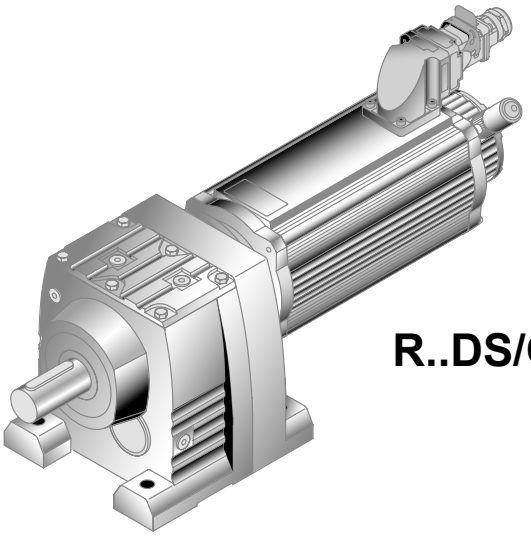

R..DS/CM..

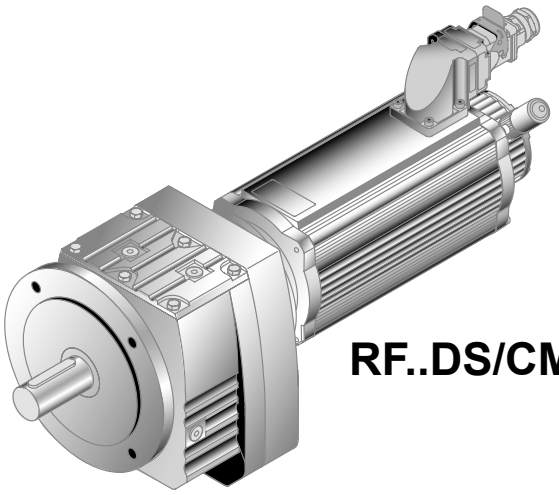

RF..DS/CM..

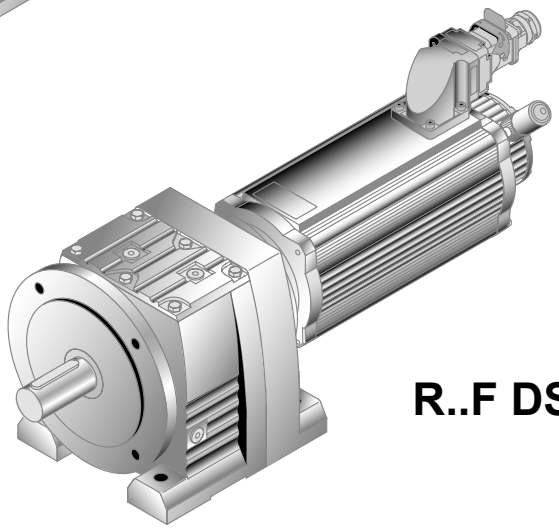

R..F DS/CM..

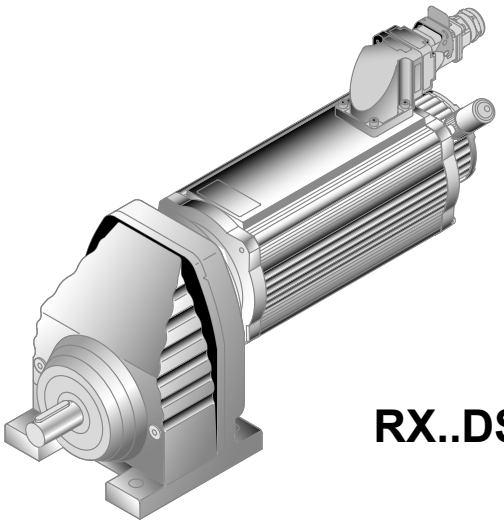

RX..DS/CM..

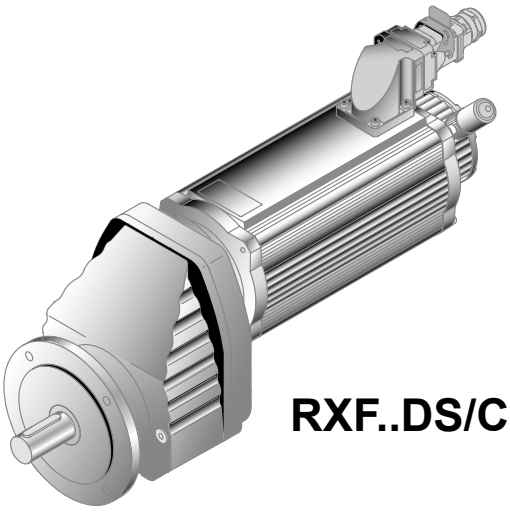

RXF..DS/CM..

52490AXX

8.2 RX 57 / CMP / DS / CM [Nm]

M_{aDyn} [Nm]		CMP						DS			CM							
	i	50S	50M	50L	63S	63M	63L	56M	56L	56H	71S	71M	71L	90S	90M	90L	112S	112M
RX57 1	1.3	6.6	13	20	14	27	39	4.8	9.7	19	21	27	40	50	67	>90	>90	>90
	1.48	7.5	15	22	16	31	44	5.5	11	22	24	31	46	57	76	>90	>90	>90
	1.65	8.4	17	25	18	35	49	6.1	12	25	27	35	51	64	84	>90	>90	
	1.92	9.8	19	29	21	40	57	7.2	14	29	31	40	59	75	>90	>90	>90	
	2.04	10	21	31	22	43	61	7.6	15	30	33	43	63	79	>90	>90	>90	
	2.37	12	24	36	26	50	71	8.8	18	35	38	50	73	>90	>90			
	2.64	13	27	40	29	55	79	9.8	20	39	43	56	81	>90	>90			
	2.91	15	29	44	32	61		11	22	43	47	61						
	3.14	16	32	47	34	66	>90	12	23	47	51	66	>90	>90				
	3.55	18	36	54	39	74		13	26	53	57	75						
	3.79	19	38	57	41	79		14	28	56	61	80						
	4.35	22	44		47			16	32	65								
	5.07	26						19	37									
	5.5	28						20	41									

m [kg]		CMP						DS			CM							
	s	50S	50M	50L	63S	63M	63L	56M	56L	56H	71S	71M	71L	90S	90M	90L	112S	112M
RX57	1	13	14	14	15	16	18	12	13	13	18	19	23	27	29	34	36	40
RXF: + 1.9 kg																		

CMP.. / DS.. / CM..				c_T	
	i	n_{epk} [1/min]	η [%]	RX [Nm/"]	RXF [Nm/"]
RX57 1	1.3	2483	98	4.22	4.22
	1.48	2827	98	4.22	4.22
	1.65	3151	98	4.22	4.22
	1.92	3667	98	4.22	4.22
	2.04	3896	98	4.22	4.22
	2.37	4500	98	4.22	4.22
	2.64	4500	98	4.22	4.22
	2.91	4500	98	4.22	4.22
	3.14	4500	98	4.22	4.22
	3.55	4500	98	4.22	4.22
	3.79	4500	98	4.22	4.22
	4.35	4500	98	4.22	4.22
	5.07	4500	97	4.22	4.22
	5.5	4500	97	4.22	4.22

CMP.. / DS.. / CM..							F_{Ramax}		F_{Rapk}	
	i	M_{amax} [Nm]	M_{apk} [Nm]	$M_{aNotaus}$ [Nm]	n_{ak} [1/min]	J_G 10^{-4} [kgm^2]	RX [N]	RXF [N]	RX [N]	RXF [N]
RX57 1	1.3	63	90	107	1154	1.9	132	132	3940	3940
	1.48	68	90	116	1014	1.4	112	112	3950	3950
	1.65	69	90	117	1091	1.2	430	430	3960	3960
	1.92	69	90	117	1250	0.94	880	880	3970	3970
	2.04	69	90	117	1324	0.85	1070	1070	3970	3970
	2.37	69	90	117	1477	0.64	1500	1500	3980	3980
	2.64	69	90	117	1629	0.55	1810	1810	3980	3980
	2.91	67	90	114	1856	0.44	2170	2170	3980	3980
	3.14	65	90	111	2197	0.42	2320	2320	3990	3990
	3.55	69	90	117	1972	0.35	2420	2420	3990	3990
	3.79	69	90	117	1847	0.32	2480	2480	3990	3990
	4.35	68	90	116	1609	0.26	2640	2640	4000	4000
	5.07	36	54	61	1381	0.21	3030	3030	4210	4210
	5.5	39	58	66	1273	0.18	3100	3100	4190	4190

8.3 RX 57 / CMP / DS / CM [mm]

01 013 00 07

RX57..

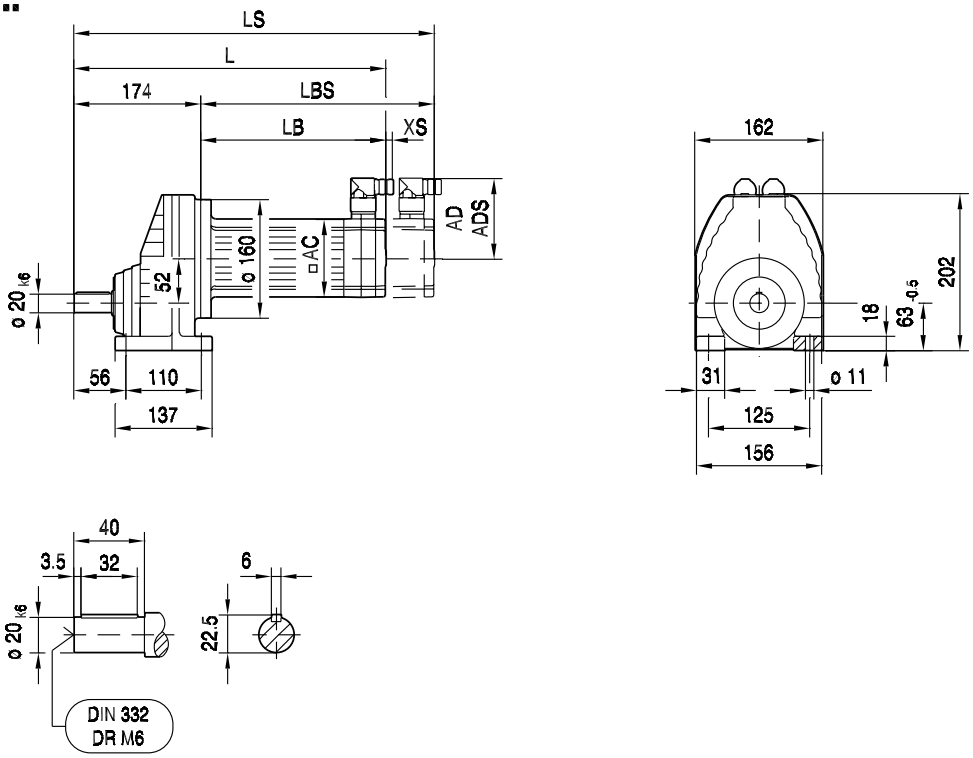

(→ 📖 150)	CMP50S	CMP50M	CMP50L	CMP63S	CMP63M	CMP63L		
AC	73	73	73	88	88	88		
AD	82	82	82	89	89	89		
ADS	82	82	82	89	89	89		
L	313	352	391	347	397	447		
LS	342	381	420	376	426	476		
LB	139	178	217	173	223	273		
LBS	168	207	246	202	252	302		
XS	18	18	18	14	14	14		

01 014 00 07

RXF57..

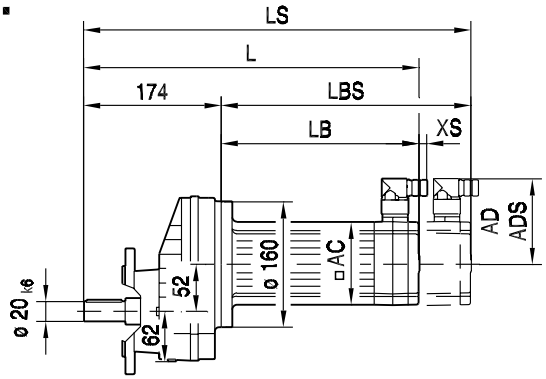

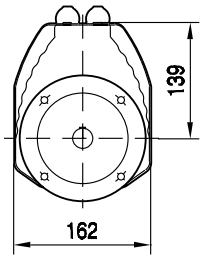

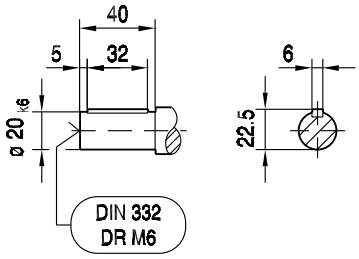

ø 140

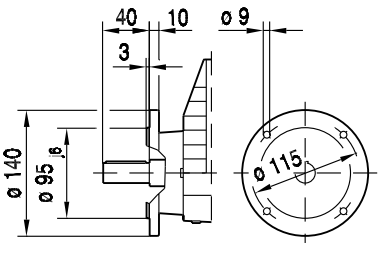

ø 160

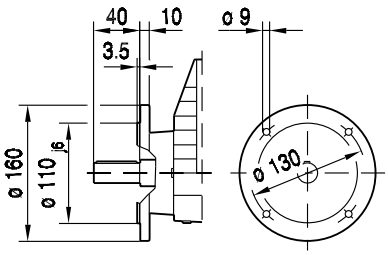

ø 200

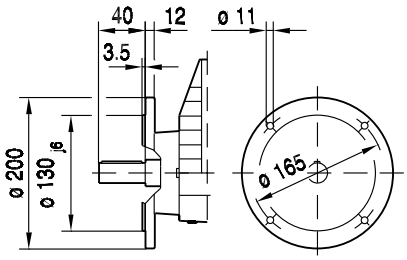

(→ 📖 150)	CMP50S	CMP50M	CMP50L	CMP63S	CMP63M	CMP63L		
AC	73	73	73	88	88	88		
AD	82	82	82	89	89	89		
ADS	82	82	82	89	89	89		
L	313	352	391	347	397	447		
LS	342	381	420	376	426	476		
LB	139	178	217	173	223	273		
LBS	168	207	246	202	252	302		
XS	18	18	18	14	14	14		

RX57..

DS56..

04 050 01 01

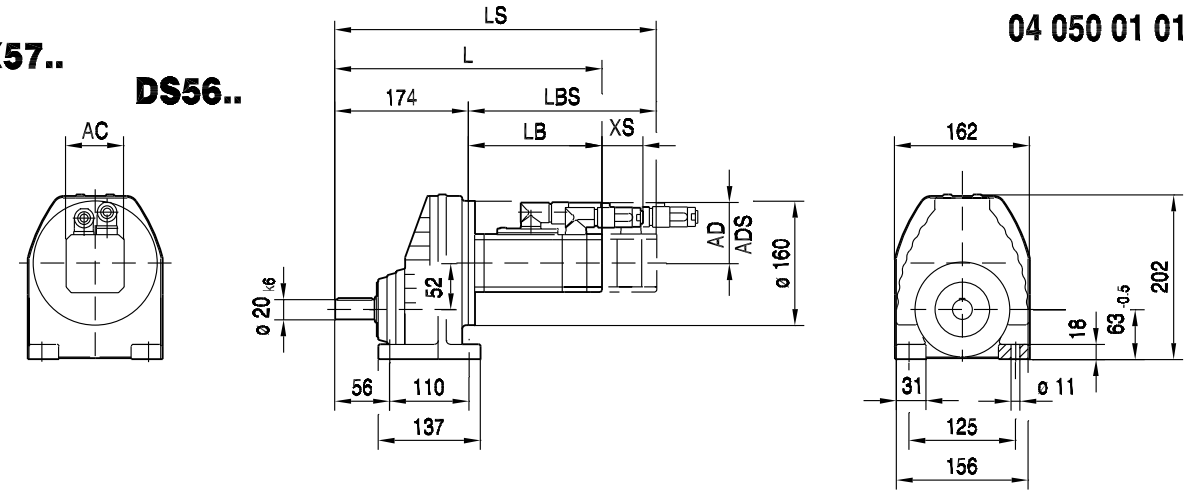

CM..

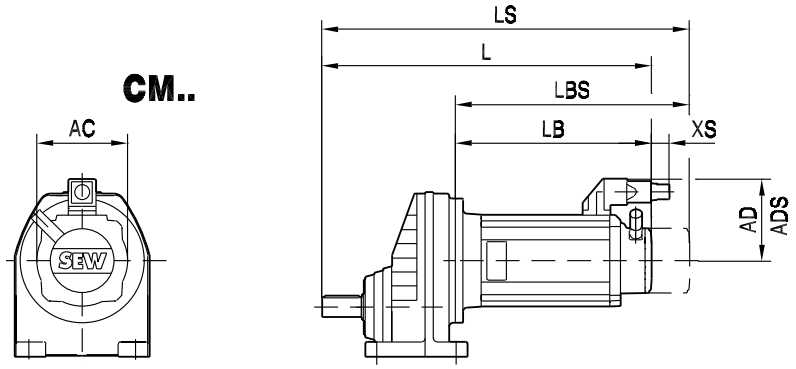

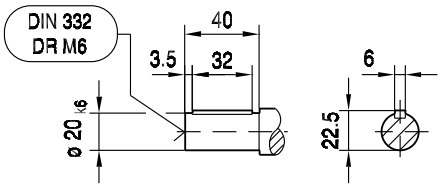

(→ 📖 150)	DS56H	CM71S	CM71M	CM71L	CM90S	CM90M	CM90L	CM112S	CM112M		
AC	73	117	117	117	142	142	142	186	186		
AD	77	122	122	122	140	140	140	162	162		
ADS	77	122	122	122	140	140	140	162	162		
L	440	406	426	466	458	485	543	498	522		
LS	440	488	508	548	554	581	639	588	612		
LB	266	232	252	292	284	311	369	324	348		
LBS	266	314	334	374	380	407	465	414	438		
XS	51	45	45	45	50	50	50	36	36		

04 051 01 01

RXF57..

DS56..

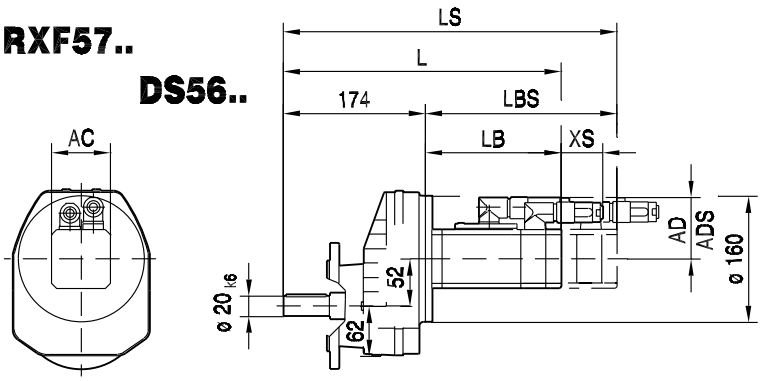

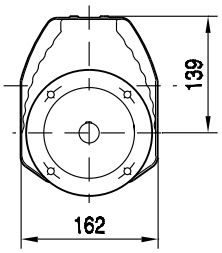

CM..

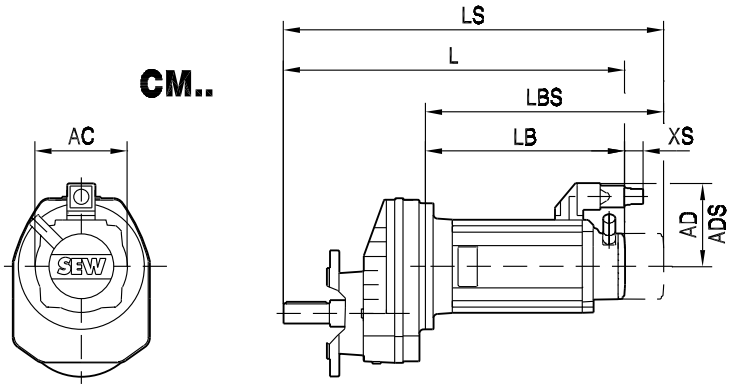

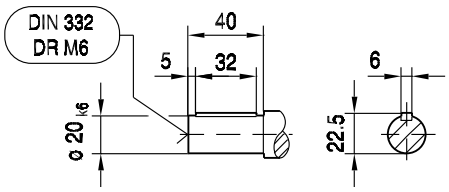

ø 140

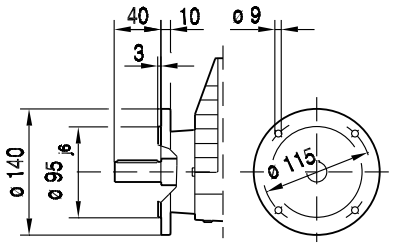

ø 160

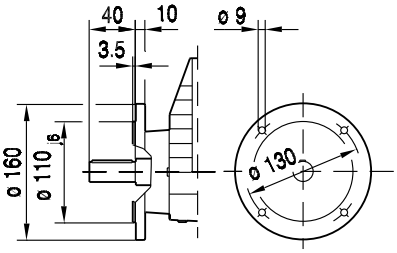

ø 200

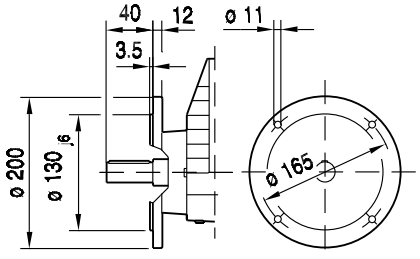

(→ 📖 150)	DS56H	CM71S	CM71M	CM71L	CM90S	CM90M	CM90L	CM112S	CM112M		
AC	73	117	117	117	142	142	142	186	186		
AD	77	122	122	122	140	140	140	162	162		
ADS	77	122	122	122	140	140	140	162	162		
L	440	406	426	466	458	485	543	498	522		
LS	440	488	508	548	554	581	639	588	612		
LB	266	232	252	292	284	311	369	324	348		
LBS	266	314	334	374	380	407	465	414	438		
XS	51	45	45	45	50	50	50	36	36		

8.4 RX 67 / CMP / DS / CM [Nm]

M_{aDyn} [Nm]		CMP						DS			CM							
	i	50S	50M	50L	63S	63M	63L	56M	56L	56H	71S	71M	71L	90S	90M	90L	112S	112M
RX67 1	1.4		14	21	15	29	42			21	23	29	43	54	72	104	113	149
	1.61	8.2	16	24	18	34	48	6.0	12	24	26	34	50	62	82	119	130	>171
	1.86	9.5	19	28	20	39	55	6.9	14	28	30	39	57	72	95	138	150	>187
	2.04	10	21	31	22	43	61	7.6	15	30	33	43	63	79	104	151	165	
	2.4	12	24	36	26	50	72	8.9	18	36	39	51	74	93	123	>163	>163	
	2.54	13	26	38	28	53	76	9.5	19	38	41	54	78	99	130	>162	>162	
	2.89	15	29	44	31	61	86	11	22	43	47	61	89	112	>142			
	3.2	16	32	48	35	67	95	12	24	48	52	67	98	124	>142			
	3.77	19	38	57	41	79	112	14	28	56	61	79	116	>130				
	4.3	22	43	65	47	90		16	32	64	70	91						
	4.53	23	46	68	49	95		17	34	67	73	95						
	5.18	26	52		56			19	39	77								
	6.07	31						22	45									

m [kg]		CMP						DS			CM							
	s	50S	50M	50L	63S	63M	63L	56M	56L	56H	71S	71M	71L	90S	90M	90L	112S	112M
RX67	1	15	16	17	17	19	20	15	16	16	21	22	25	30	32	37	38	43
RXF: + 4.0 kg																		

CMP.. / DS.. / CM..		n_{epk}	η	c_T	
	i	[1/min]	[%]	RX [Nm/°]	RXF [Nm/°]
RX67 1	1.4	2507	98	8.13	8.13
	1.61	2883	98	8.13	8.13
	1.86	3330	98	8.13	8.13
	2.04	3653	98	8.13	8.13
	2.4	4297	98	8.13	8.13
	2.54	4500	98	8.13	8.13
	2.89	4500	98	8.13	8.13
	3.2	4500	98	8.13	8.13
	3.77	4500	98	8.13	8.13
	4.3	4500	98	8.13	8.13
	4.53	4500	98	8.13	8.13
	5.18	4500	98	8.13	8.13
	6.07	4500	97	8.13	8.13

CMP.. / DS.. / CM..							F_{Ramax}		F_{Rapk}	
	i	M_{amax} [Nm]	M_{apk} [Nm]	$M_{aNotaus}$ [Nm]	n_{ak} [1/min]	J_G 10^{-4} [kgm^2]	RX [N]	RXF [N]	RX [N]	RXF [N]
RX67 1	1.4	104	156	177	1071	3.2	205	205	5450	5450
	1.61	114	171	194	932	2.6	245	245	5380	5380
	1.86	126	187	214	806	2.1	225	225	5300	5300
	2.04	134	186	228	735	1.8	230	230	5310	5310
	2.4	123	163	209	1125	1.4	1530	1530	5460	5460
	2.54	118	162	201	1339	1.3	2000	2000	5470	5470
	2.89	106	142	180	1972	1.0	2640	2640	5590	5590
	3.2	100	142	170	2188	0.88	2800	2800	5590	5590
	3.77	87	130	148	1857	0.69	3090	3090	5660	5660
	4.3	80	109	136	1628	0.47	3300	3300	5770	5770
	4.53	82	110	139	1545	0.42	3350	3350	5760	5760
	5.18	75	110	128	1351	0.34	3580	3580	5760	5760
	6.07	43	64	73	1153	0.28	4000	4000	5970	5970

8.5 RX 67 / CMP / DS / CM [mm]

01 015 00 07

RX67..

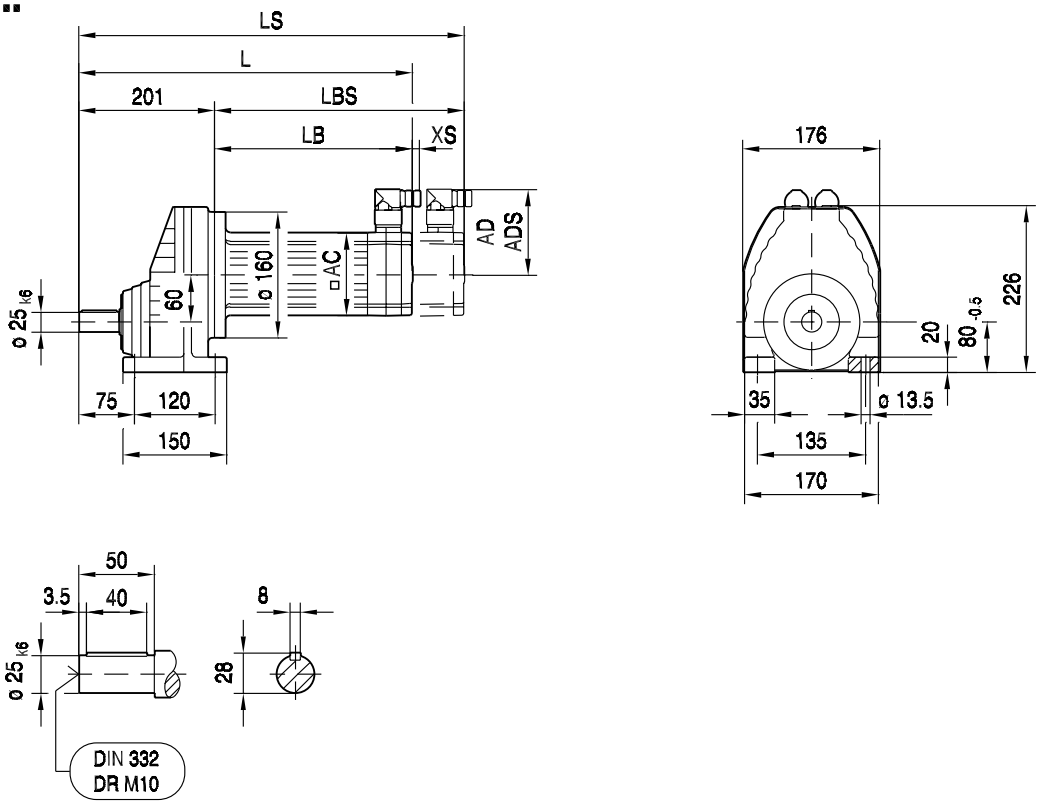

(→ 📖 150)	CMP50S	CMP50M	CMP50L	CMP63S	CMP63M	CMP63L		
AC	73	73	73	88	88	88		
AD	82	82	82	89	89	89		
ADS	82	82	82	89	89	89		
L	340	379	418	374	424	474		
LS	369	408	447	403	453	503		
LB	139	178	217	173	223	273		
LBS	168	207	246	202	252	302		
XS	18	18	18	14	14	14		

01 016 00 07

RXF67..

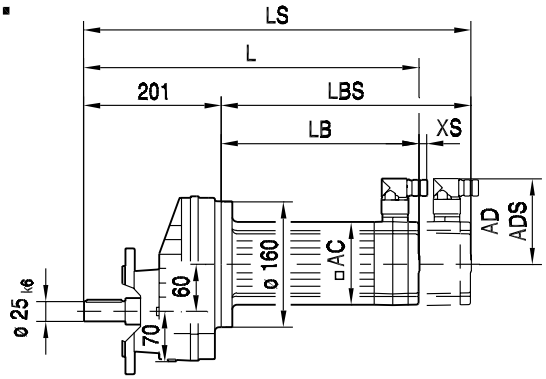

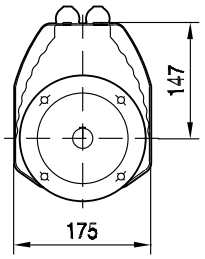

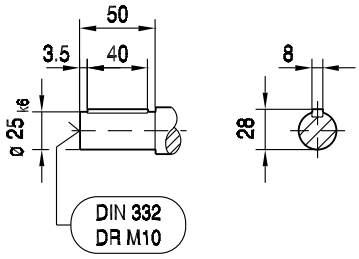

ø 160

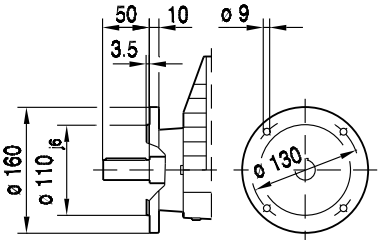

ø 200

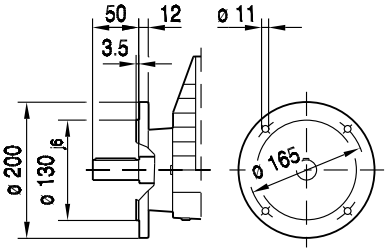

ø 250

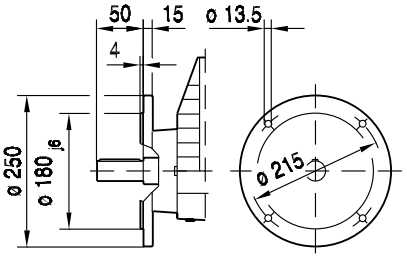

(→ 📖 150)	CMP50S	CMP50M	CMP50L	CMP63S	CMP63M	CMP63L		
AC	73	73	73	88	88	88		
AD	82	82	82	89	89	89		
ADS	82	82	82	89	89	89		
L	340	379	418	374	424	474		
LS	369	408	447	403	453	503		
LB	139	178	217	173	223	273		
LBS	168	207	246	202	252	302		
XS	18	18	18	14	14	14		

RX67..

DS56..

04 052 01 01

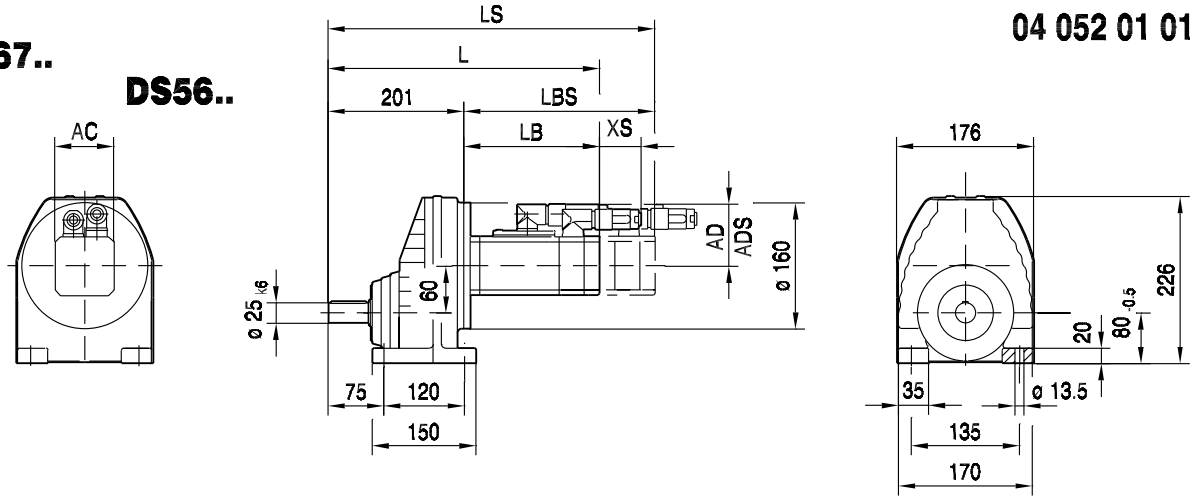

CM..

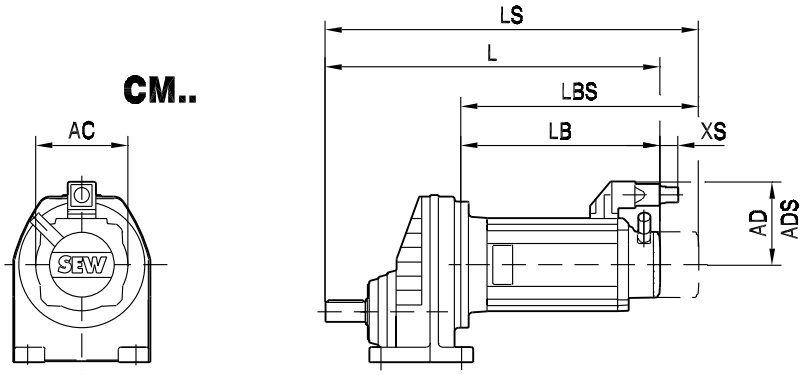

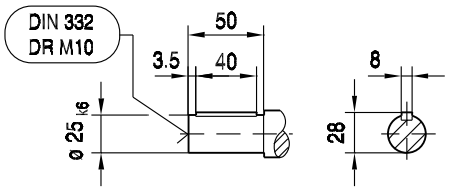

(→ 📖 150)	DS56H	CM71S	CM71M	CM71L	CM90S	CM90M	CM90L	CM112S	CM112M		
AC	73	117	117	117	142	142	142	186	186		
AD	77	122	122	122	140	140	140	162	162		
ADS	77	122	122	122	140	140	140	162	162		
L	467	433	453	493	485	512	570	525	549		
LS	467	515	535	575	581	608	666	615	639		
LB	266	232	252	292	284	311	369	324	348		
LBS	266	314	334	374	380	407	465	414	438		
XS	51	45	45	45	50	50	50	36	36		

04 053 01 01

RXF67..

DS56..

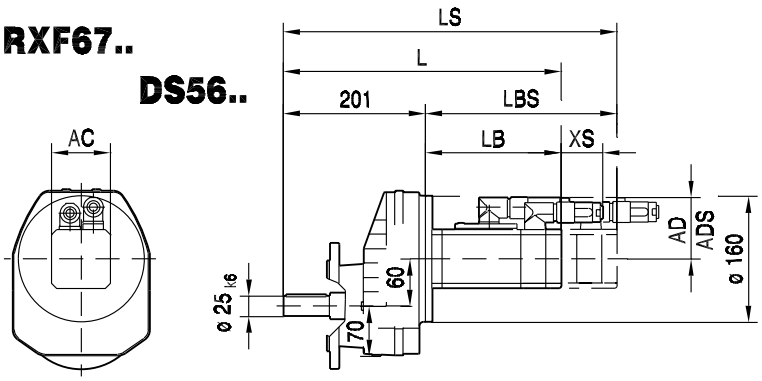

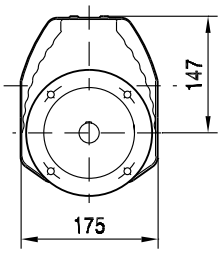

CM..

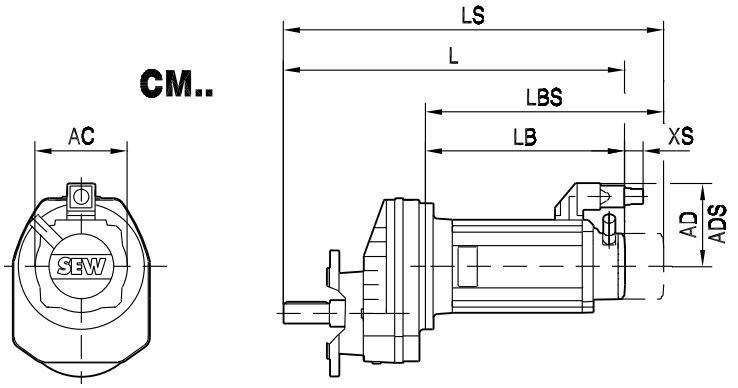

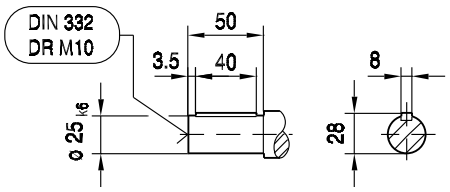

ø 160

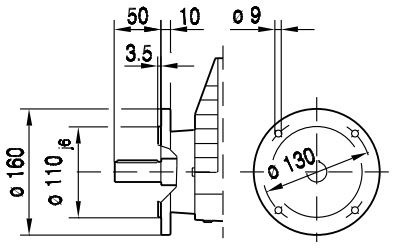

ø 200

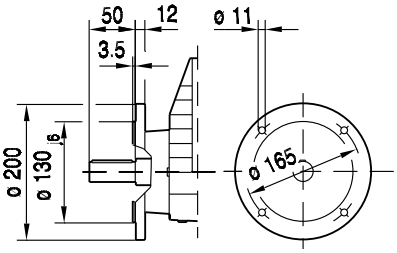

ø 250

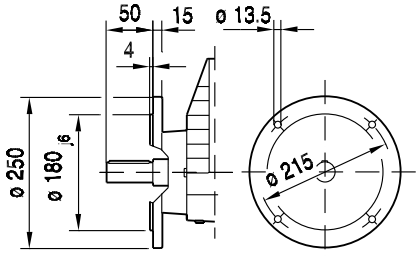

(→ 📖 150)	DS56H	CM71S	CM71M	CM71L	CM90S	CM90M	CM90L	CM112S	CM112M		
AC	73	117	117	117	142	142	142	186	186		
AD	77	122	122	122	140	140	140	162	162		
ADS	77	122	122	122	140	140	140	162	162		
L	467	433	453	493	485	512	570	525	549		
LS	467	515	535	575	581	608	666	615	639		
LB	266	232	252	292	284	311	369	324	348		
LBS	266	314	334	374	380	407	465	414	438		
XS	51	45	45	45	50	50	50	36	36		

8.6 RX 77 / CMP / CM [Nm]

M_{aDyn} [Nm]		CMP			CM								
	i	63S	63M	63L	71S	71M	71L	90S	90M	90L	112S	112M	112L
RX77 1	1.42	15	30	42	23	30	44	55	73	105	115	151	219
	1.67	18	35	50	27	35	51	65	85	124	135	178	258
	1.88	20	39	56	30	40	58	73	96	139	152	200	>280
	2.13	23	45	63	34	45	66	83	109	158	172	226	>300
	2.43	26	51	72	39	51	75	94	124	180	196	258	>305
	2.7	29	57	80	44	57	83	105	138	200	218		
	3.08	34	65	92	50	65	95	120	158	228	248		
	3.25	35	68	97	53	68	100	126	166	241	>260		
	3.7	40	78	110	60	78	114	144	189				
	4.04	44	85	120	65	85	124	157	207				
	4.73	51	99	141	76	100	146	184					
	5.35	58	112		87	113							
	5.63	61	118		91	119							
	6.41	70											
	7.47												
	8												

m [kg]		CMP			CM								
	s	63S	63M	63L	71S	71M	71L	90S	90M	90L	112S	112M	112L
RX77	1	26	28	29	30	31	35	39	42	47	48	52	67
RXF: + 2.3 kg													

CMP.. / CM..				c_T	
	i	n_{epk} [1/min]	η [%]	RX [Nm/']	RXF [Nm/']
RX77 1	1.42	2164	98	16.83	16.83
	1.67	2545	98	16.83	16.83
	1.88	2865	98	16.83	16.83
	2.13	3246	98	16.83	16.83
	2.43	3703	98	16.83	16.83
	2.7	4114	98	16.83	16.83
	3.08	4500	98	16.83	16.83
	3.25	4500	98	16.83	16.83
	3.7	4500	98	16.83	16.83
	4.04	4500	98	16.83	16.83
	4.73	4500	98	16.83	16.83
	5.35	4500	98	16.83	16.83
	5.63	4500	98	16.83	16.83
	6.41	4500	98	16.83	16.83
	7.47	4500	97	16.83	16.83
	8	4500	97	16.83	16.83

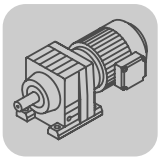

R..CMP, DS, CM
RX 77 / CMP / CM [Nm]

CMP.. / CM..							F_{Ramax}		F_{Rapk}	
	i	M_{amax} [Nm]	M_{apk} [Nm]	$M_{aNotaus}$ [Nm]	n_{ak} [1/min]	$J_G\ 10^{-4}$ [kgm^2]	RX [N]	RXF [N]	RX [N]	RXF [N]
RX77 1	1.42	155	232	264	1056	7.6	315	315	10000	10000
	1.67	173	259	294	898	6.0	315	315	10000	10000
	1.88	187	280	318	798	5.0	335	335	10000	10000
	2.13	200	300	340	704	4.1	435	435	10000	10000
	2.43	215	305	366	658	3.4	510	510	10000	10000
	2.7	215	285	366	741	3.0	1110	1110	10000	10000
	3.08	193	260	328	1104	2.5	2560	2560	10000	10000
	3.25	182	260	309	1385	2.3	3200	3200	10000	10000
	3.7	153	215	260	1892	1.9	4290	4290	10000	10000
	4.04	143	214	243	1733	1.6	4500	4500	10000	10000
	4.73	123	184	209	1480	1.3	4900	4900	10000	10000
	5.35	103	154	175	1308	0.90	5240	5240	10000	10000
	5.63	110	165	187	1243	0.81	5300	5300	10000	10000
	6.41	103	154	175	1092	0.66	5600	5600	10000	10000
	7.47	53	79	90	937	0.53	6200	6200	10000	10000
	8	57	85	97	875	0.46	6330	6330	10000	10000

8.7 RX 77 / CMP / CM [mm]

01 017 00 07

RX77..

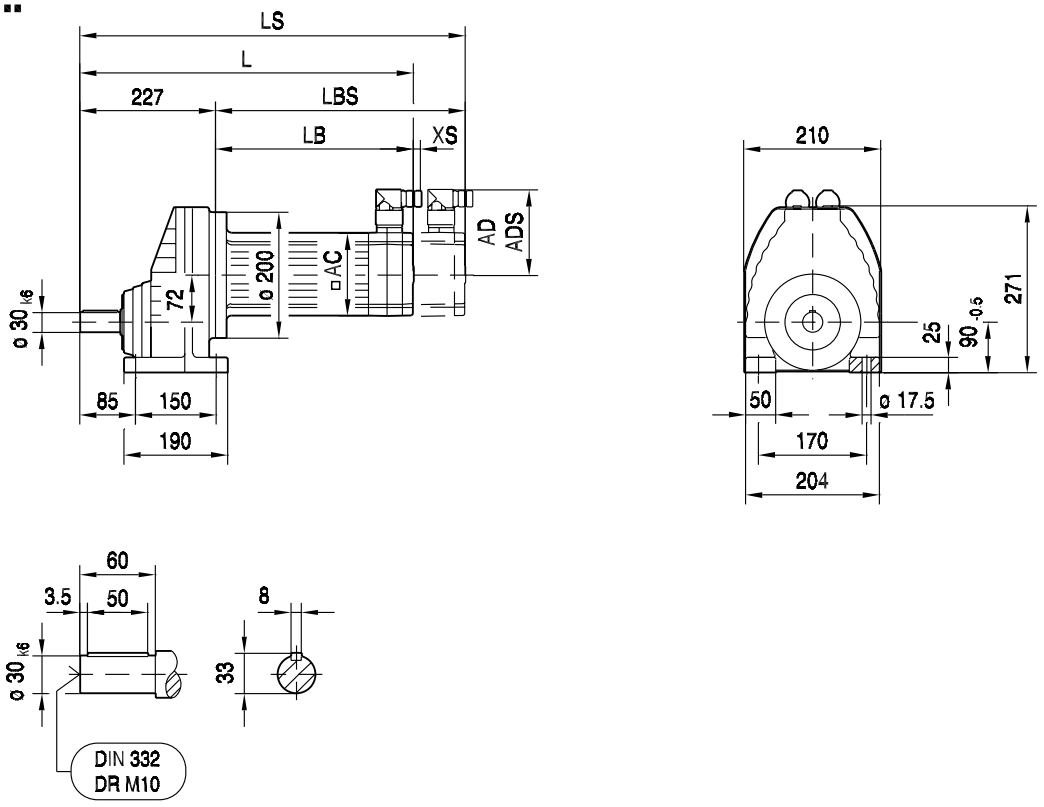

(→ 📖 150)	CMP63S	CMP63M	CMP63L					
AC	88	88	88					
AD	89	89	89					
ADS	89	89	89					
L	394	444	494					
LS	423	473	523					
LB	167	217	267					
LBS	196	246	296					
XS	14	14	14					

01 018 00 07

RXF77..

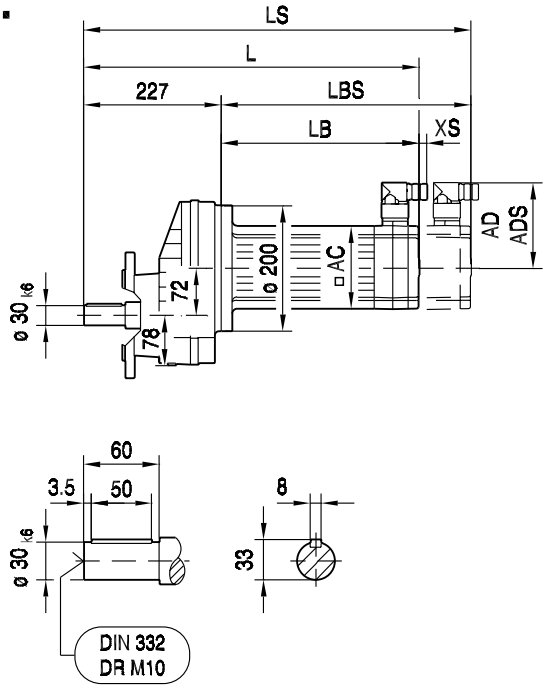

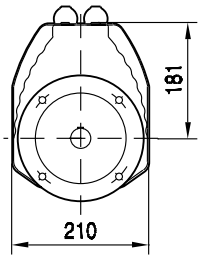

ø 200

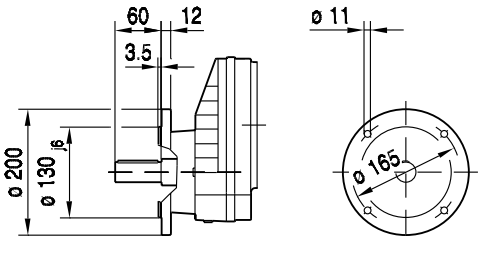

ø 250

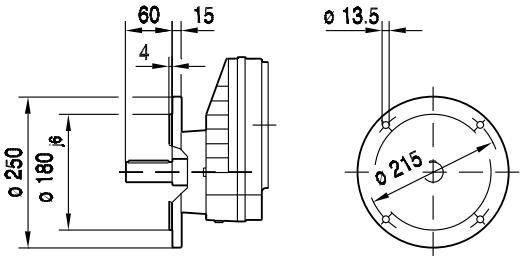

(→ 150)	CMP63S	CMP63M	CMP63L					
AC	88	88	88					
AD	89	89	89					
ADS	89	89	89					
L	394	444	494					
LS	423	473	523					
LB	167	217	267					
LBS	196	246	296					
XS	14	14	14					

RX77..

04 054 01 01

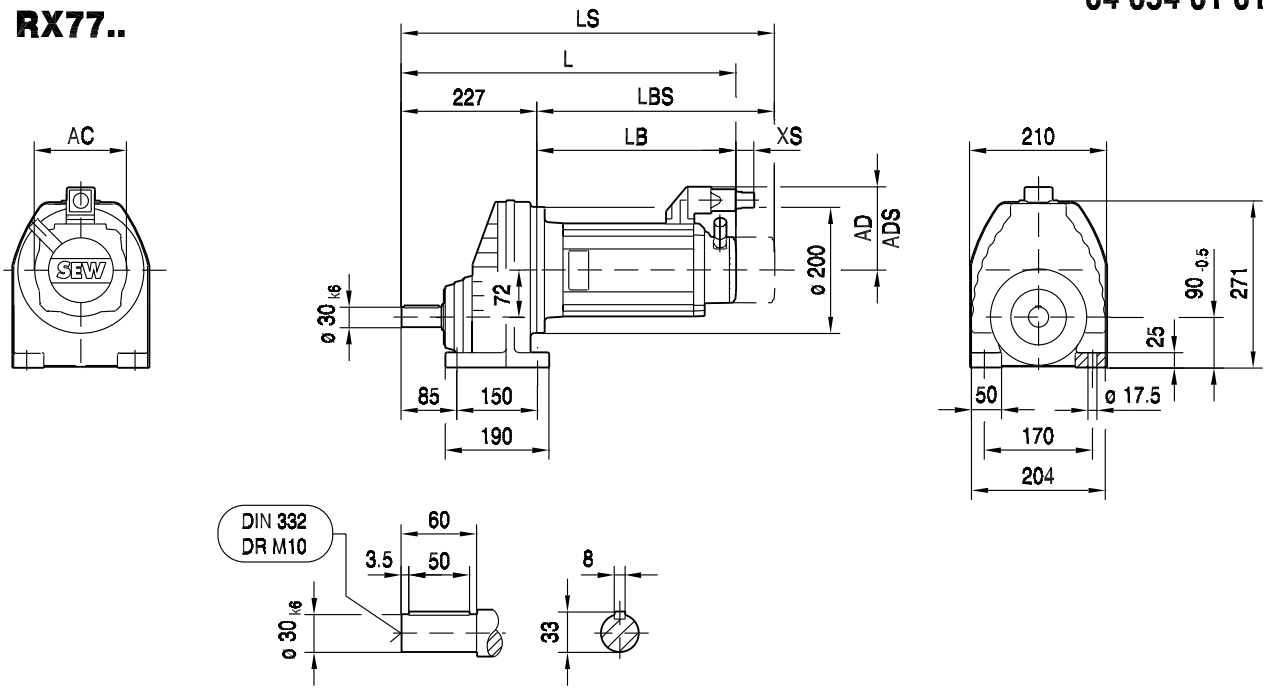

(→ 150)	CM71S	CM71M	CM71L	CM90S	CM90M	CM90L	CM112S	CM112M	CM112L		
AC	117	117	117	142	142	142	186	186	186		
AD	122	122	122	140	140	140	162	162	162		
ADS	122	122	122	140	140	140	162	162	162		
L	453	473	512	503	530	584	539	566	628		
LS	535	555	594	599	626	680	629	656	718		
LB	226	246	285	276	303	357	312	339	401		
LBS	308	328	367	372	399	453	402	429	491		
XS	45	45	45	50	50	50	36	36	36		

RXF77..

04 055 01 01

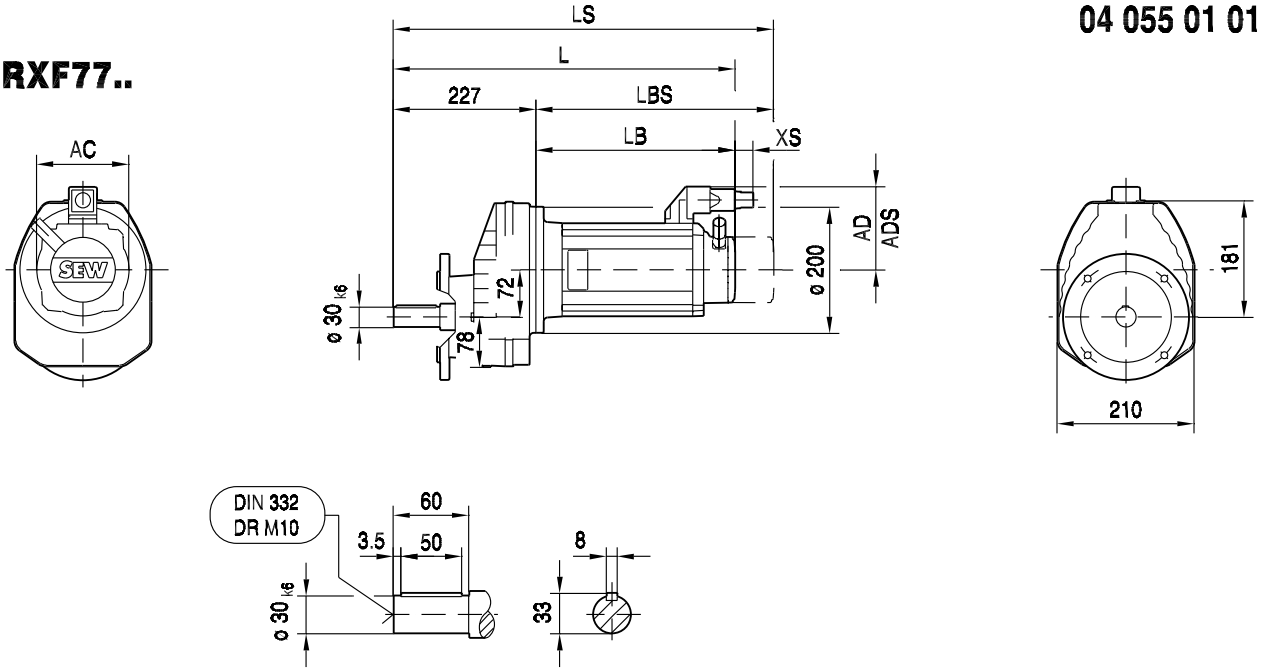

ø 200

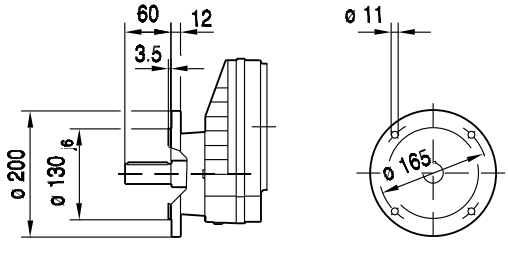

ø 250

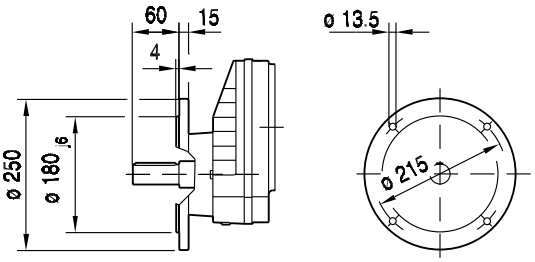

(→ 📖 150)	CM71S	CM71M	CM71L	CM90S	CM90M	CM90L	CM112S	CM112M	CM112L		
AC	117	117	117	142	142	142	186	186	186		
AD	122	122	122	140	140	140	162	162	162		
ADS	122	122	122	140	140	140	162	162	162		
L	453	473	512	503	530	584	539	566	628		
LS	535	555	594	599	626	680	629	656	718		
LB	226	246	285	276	303	357	312	339	401		
LBS	308	328	367	372	399	453	402	429	491		
XS	45	45	45	50	50	50	36	36	36		

8.8 RX 87 / CM [Nm]

M_{aDyn} [Nm]		CM						
	i	90S	90M	90L	112S	112M	112L	112H
RX87 1	1.39			103	112	148	215	324
	1.6	62	82	119	129	170	247	373
	1.93	75	99	143	156	205	298	450
	2.15	83	110	159	173	229	332	501
	2.48	96	127	184	200	264	383	>540
	2.76	107	141	204	223	293	426	>535
	3.09	120	158	229	249	329	477	
	3.48	135	178	258	281	370	537	
	3.78	147	193	280	305			
	4.5	175	230	333	363			
	5.07	197	259					
	5.56	216	284					
	6.45	250						
	7.2							
	7.63							
	8.65							

m [kg]		CM						
	s	90S	90M	90L	112S	112M	112L	112H
RX87	1	57	59	64	64	68	83	90
RXF: + 5.0 kg								

CM..		n_{epk}	η	c_T	
	i	[1/min]	[%]	RX [Nm/']	RXF [Nm/']
RX87 1	1.39	2170	98	33.62	33.62
	1.6	2498	98	33.62	33.62
	1.93	3013	98	33.62	33.62
	2.15	3356	98	33.62	33.62
	2.48	3871	98	33.62	33.62
	2.76	4308	98	33.62	33.62
	3.09	4500	98	33.62	33.62
	3.48	4500	98	33.62	33.62
	3.78	4500	98	33.62	33.62
	4.5	4500	98	33.62	33.62
	5.07	4500	98	33.62	33.62
	5.56	4500	98	33.62	33.62
	6.45	4500	98	33.62	33.62
	7.2	4500	98	33.62	33.62
	7.63	4500	98	33.62	33.62
	8.65	4500	98	33.62	33.62

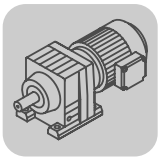

R..CMP, DS, CM
RX 87 / CM [Nm]

CM..	i	M_{amax} [Nm]	M_{apk} [Nm]	$M_{aNotaus}$ [Nm]	n_{ak} [1/min]	$J_G\ 10^{-4}$ [kgm^2]	F_{Ramax} RX [N]	F_{Ramax} RXF [N]	F_{Rapk} RX [N]	F_{Rapk} RXF [N]
RX87 1	1.39	290	435	493	1007	25	74	74	12700	12700
	1.6	315	472	536	875	19	74	74	12500	12500
	1.93	355	532	604	725	15	185	185	12300	12300
	2.15	385	540	655	651	13	42	42	12300	12300
	2.48	405	540	689	605	11	470	470	12300	12300
	2.76	405	535	689	652	9.4	1200	1200	12400	12400
	3.09	405	540	689	744	8.1	1950	1950	12400	12400
	3.48	405	540	689	805	6.9	2730	2730	12400	12400
	3.78	305	457	519	1852	6.2	5030	5030	12700	12700
	4.5	290	435	493	1556	4.8	5500	5500	12800	12800
	5.07	250	375	425	1381	3.9	5980	5980	13000	13000
	5.56	225	337	383	1259	3.4	6320	6320	13000	13000
	6.45	192	288	326	1085	2.7	6850	6850	13000	13000
	7.2	140	210	238	972	1.8	7380	7380	13000	13000
	7.63	149	223	253	917	1.6	7490	7490	13000	13000
	8.65	139	208	236	809	1.3	7890	7890	13000	13000

8.9 RX 87 / CM [mm]

04 056 01 01

RX87..

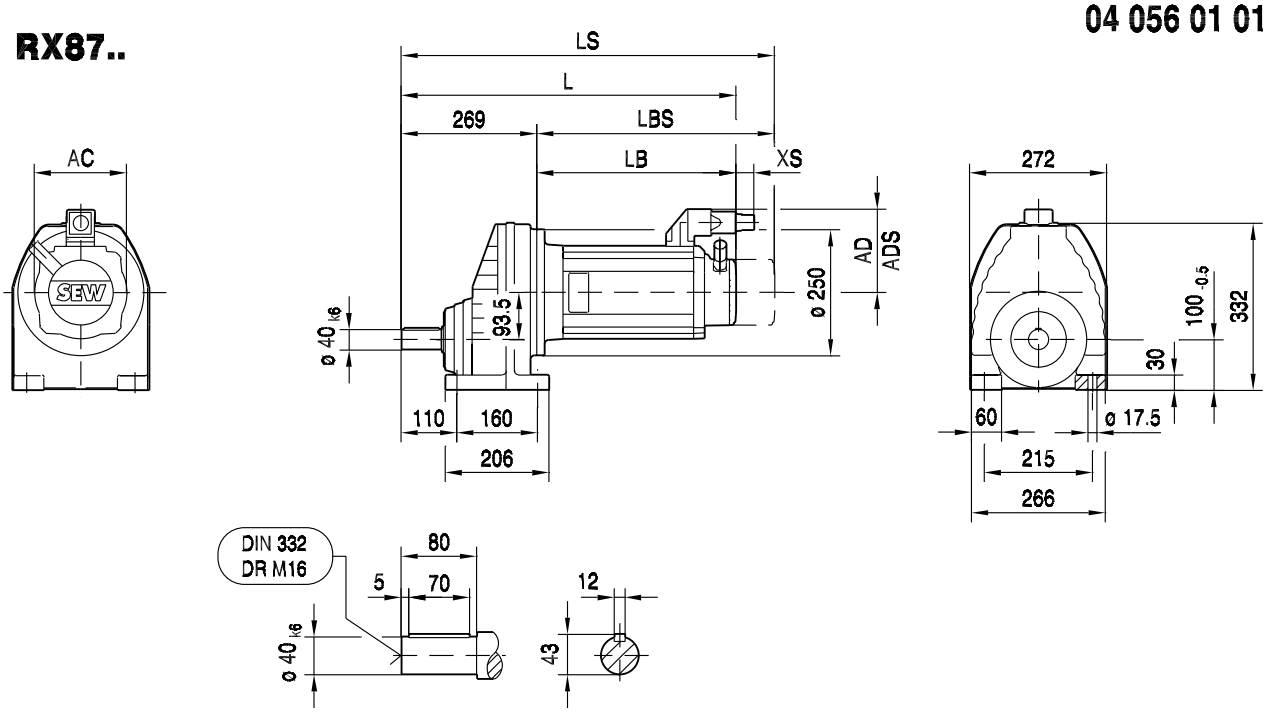

(→ 150)	CM90S	CM90M	CM90L	CM112S	CM112M	CM112L	CM112H				
AC	142	142	142	186	186	186	186				
AD	140	140	140	162	162	162	162				
ADS	140	140	140	162	162	162	162				
L	541	568	622	576	603	665	795				
LS	637	664	718	666	693	755	860				
LB	272	299	353	307	334	396	526				
LBS	368	395	449	397	424	486	591				
XS	50	50	50	36	36	36	36				

04 057 01 01

RXF87..

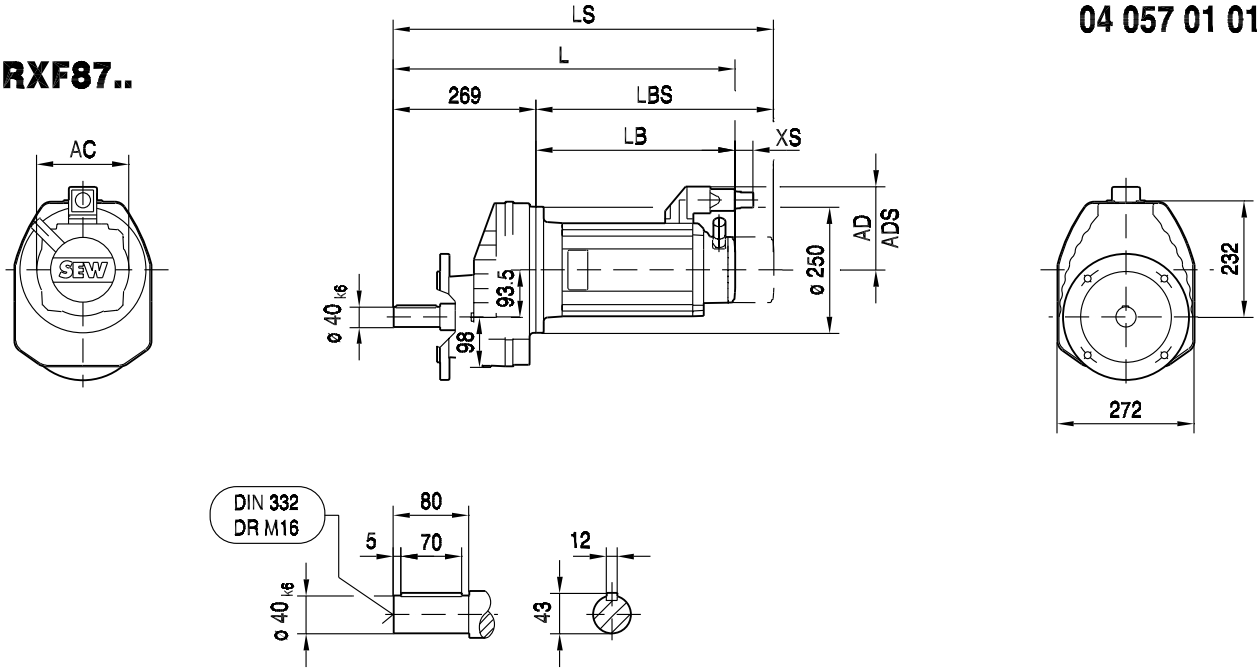

ø 250

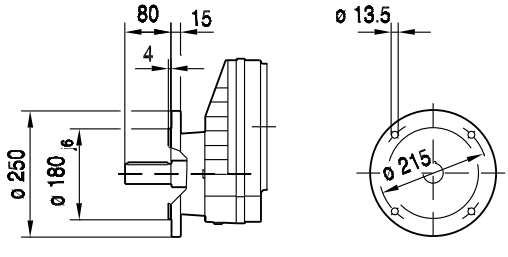

ø 300

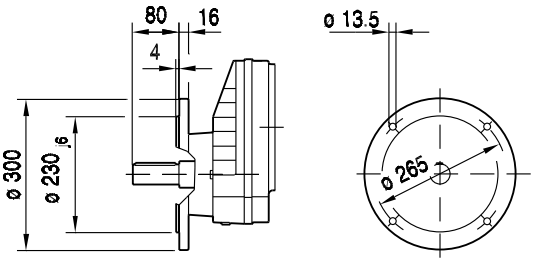

(→ 📖 150)	CM90S	CM90M	CM90L	CM112S	CM112M	CM112L	CM112H				
AC	142	142	142	186	186	186	186				
AD	140	140	140	162	162	162	162				
ADS	140	140	140	162	162	162	162				
L	541	568	622	576	603	665	795				
LS	637	664	718	666	693	755	860				
LB	272	299	353	307	334	396	526				
LBS	368	395	449	397	424	486	591				
XS	50	50	50	36	36	36	36				

8.10 RX 97 / CM [Nm]

M_{aDyn} [Nm]		CM						
	i	90S	90M	90L	112S	112M	112L	112H
RX97 1	1.42			105	115	151	219	331
	1.64			122	132	174	253	383
	1.96			145	158	208	303	457
	2.24	87	115	166	181	238	346	522
	2.64	102	135	196	213	281	407	616
	2.92	113	149	216	236	310	451	681
	3.3	128	169	244	266	351	509	770
	3.64	141	186	270	294	387	562	>800
	4.04	157	207	299	326	430	624	
	4.52	175	231	335	365	481	698	
	4.91	191	251	364	396			
	5.79	225	296	429	467			
	6.56	255	336					
	7.16	278	366					
	8.23	319						

m [kg]		CM						
	s	90S	90M	90L	112S	112M	112L	112H
RX97	1	81	83	88	88	92	105	115
RXF: + 8.6 kg								

CM..				c_T	
	i	n_{epk} [1/min]	η [%]	RX [Nm/']	RXF [Nm/']
RX97 1	1.42	2187	98	58.39	58.39
	1.64	2526	98	58.39	58.39
	1.96	3019	98	58.39	58.39
	2.24	3450	98	58.39	58.39
	2.64	4066	98	58.39	58.39
	2.92	4497	98	58.39	58.39
	3.3	4500	98	58.39	58.39
	3.64	4500	98	58.39	58.39
	4.04	4500	98	58.39	58.39
	4.52	4500	98	58.39	58.39
	4.91	4500	98	58.39	58.39
	5.79	4500	98	58.39	58.39
	6.56	4500	98	58.39	58.39
	7.16	4500	98	58.39	58.39
	8.23	4500	98	58.39	58.39

CM..							F_{Ramax}		F_{Rapk}	
	i	M_{amax} [Nm]	M_{apk} [Nm]	$M_{aNotaus}$ [Nm]	n_{ak} [1/min]	J_G 10^{-4} [kgm^2]	RX [N]	RXF [N]	RX [N]	RXF [N]
RX97 1	1.42	455	682	774	986	61	132	132	20000	20000
	1.64	505	757	859	854	51	51	51	20000	20000
	1.96	570	800	969	714	41	19	19	20000	20000
	2.24	595	800	1012	670	33	495	495	20000	20000
	2.64	595	800	1012	795	28	1980	1980	20000	20000
	2.92	595	800	1012	856	24	2810	2810	20000	20000
	3.3	595	800	1012	909	20	3730	3730	20000	20000
	3.64	595	800	1012	962	18	4530	4530	20000	20000
	4.04	595	800	1012	1015	15	5380	5380	20000	20000
	4.52	595	800	1012	1062	13	6180	6180	20000	20000
	4.91	395	592	672	1426	12	7220	7220	20000	20000
	5.79	420	630	714	1209	9.2	7630	7630	20000	20000
	6.56	300	450	510	1067	5.8	8500	8500	20000	20000
	7.16	260	390	442	978	5.1	8950	8950	20000	20000
	8.23	225	337	383	851	4.0	9560	9560	20000	20000

8.11 RX 97 / CM [mm]

04 058 01 01

RX97..

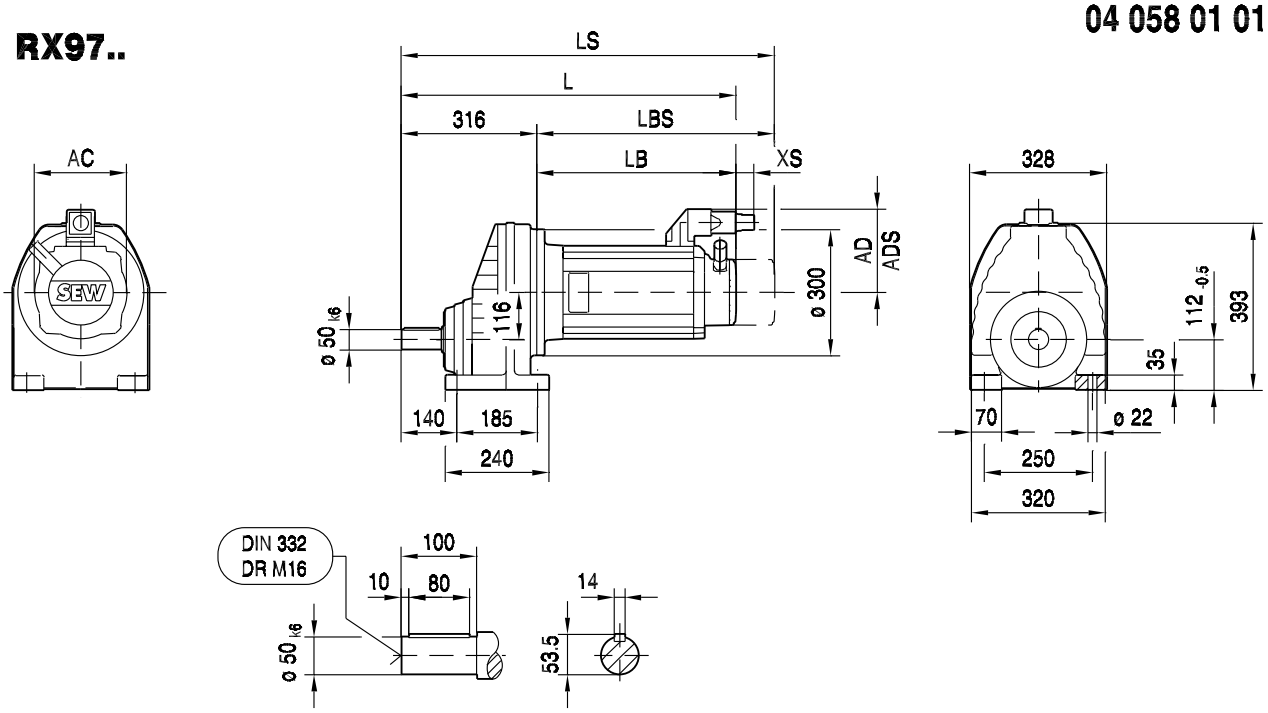

(→ 150)	CM90S	CM90M	CM90L	CM112S	CM112M	CM112L	CM112H				
AC	142	142	142	186	186	186	186				
AD	140	140	140	162	162	162	162				
ADS	140	140	140	162	162	162	162				
L	582	609	663	618	645	707	837				
LS	678	705	759	708	735	797	902				
LB	266	293	347	302	329	391	521				
LBS	362	389	443	392	419	481	586				
XS	50	50	50	36	36	36	36				

RXF97..

04 059 01 01

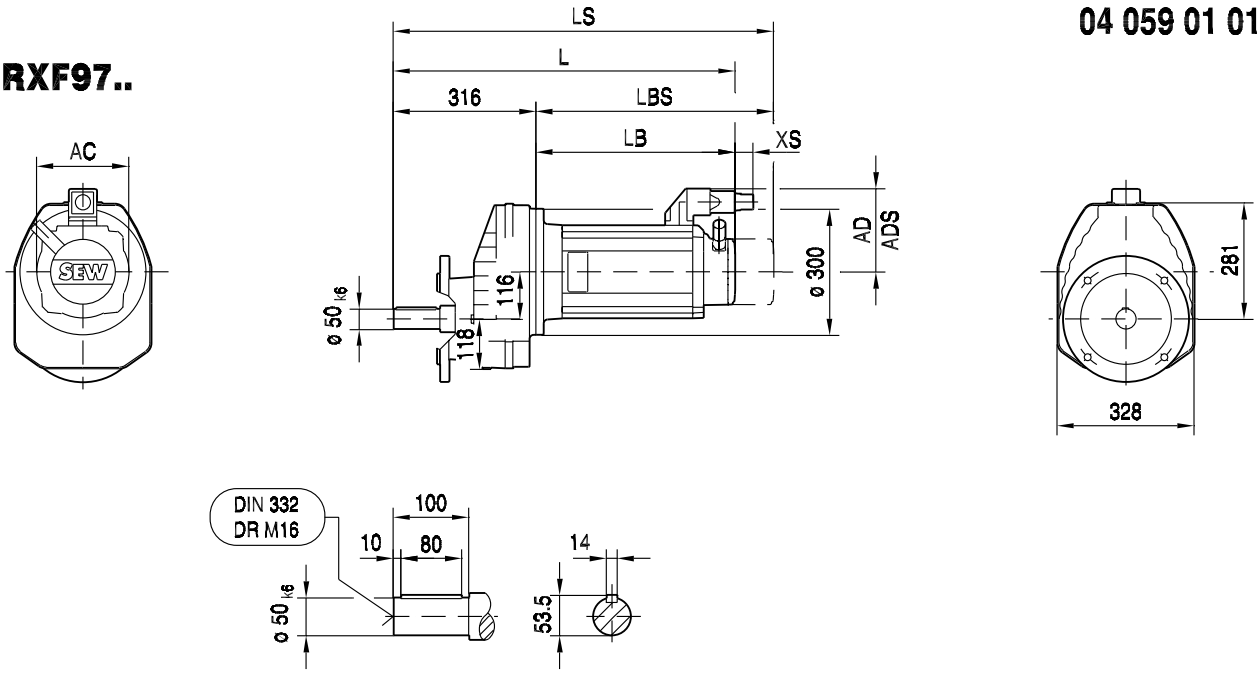

ø 300

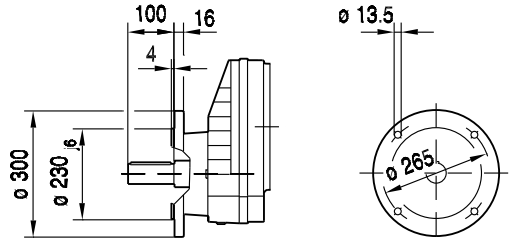

ø 350

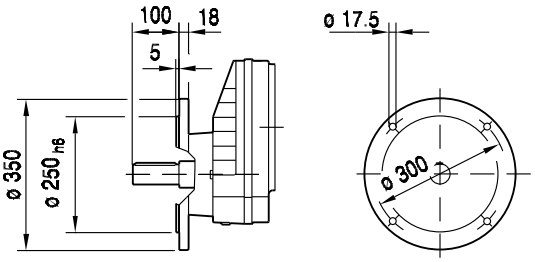

(→ 📖 150)	CM90S	CM90M	CM90L	CM112S	CM112M	CM112L	CM112H				
AC	142	142	142	186	186	186	186				
AD	140	140	140	162	162	162	162				
ADS	140	140	140	162	162	162	162				
L	582	609	663	618	645	707	837				
LS	678	705	759	708	735	797	902				
LB	266	293	347	302	329	391	521				
LBS	362	389	443	392	419	481	586				
XS	50	50	50	36	36	36	36				

8.12 RX 107 / CM [Nm]

M_{aDyn} [Nm]		CM			
	i	112S	112M	112L	112H
RX107 1	1.44		153	222	336
	1.71	138	182	264	399
	1.95	157	207	301	455
	2.3	186	245	355	536
	2.64	213	281	407	616
	3.07	248	326	474	716
	3.38	273	359	522	788
	3.81	307	405	588	889
	4.2	339	447	648	980
	4.65	375	494	718	
	5.19	419	552	801	
	5.61	452			
	6.63	535			

m [kg]		CM			
	s	112S	112M	112L	112H
RX107	1	125	125	140	145
RXF: + 16.8 kg					

CM..				c_T	
	i	n_{epk} [1/min]	η [%]	RX [Nm/°]	RXF [Nm/°]
RX107 1	1.44	2101	98	92.86	92.86
	1.71	2495	98	92.86	92.86
	1.95	2845	98	92.86	92.86
	2.3	3356	98	92.86	92.86
	2.64	3852	98	92.86	92.86
	3.07	4479	98	92.86	92.86
	3.38	4500	98	92.86	92.86
	3.81	4500	98	92.86	92.86
	4.2	4500	98	92.86	92.86
	4.65	4500	98	92.86	92.86
	5.19	4500	98	92.86	92.86
	5.61	4500	98	92.86	92.86
	6.63	4500	98	92.86	92.86

CM..							F_{Ramax}		F_{Rapk}	
	i	M_{amax} [Nm]	M_{apk} [Nm]	$M_{aNotaus}$ [Nm]	n_{ak} [1/min]	J_G 10^{-4} [kgm^2]	RX [N]	RXF [N]	RX [N]	RXF [N]
RX107 1	1.44	645	967	1097	972	111	315	315	30000	30000
	1.71	705	1057	1199	819	84	480	480	30000	30000
	1.95	765	1090	1301	769	70	555	555	30000	30000
	2.3	830	1110	1411	696	57	900	900	30000	30000
	2.64	830	1120	1411	720	47	2160	2160	30000	30000
	3.07	830	1130	1411	814	39	3600	3600	30000	30000
	3.38	830	1130	1411	858	34	4490	4490	30000	30000
	3.81	830	1140	1411	919	29	5550	5550	30000	30000
	4.2	830	1150	1411	952	25	6420	6420	30000	30000
	4.65	695	1042	1182	1505	19	7450	7450	30000	30000
	5.19	695	1042	1182	1349	17	7850	7850	30000	30000
	5.61	455	682	774	1248	15	9080	9080	30000	30000
	6.63	460	690	782	1056	12	9700	9700	30000	30000

8.13 RX 107 / CM [mm]

04 060 01 01

RX107..

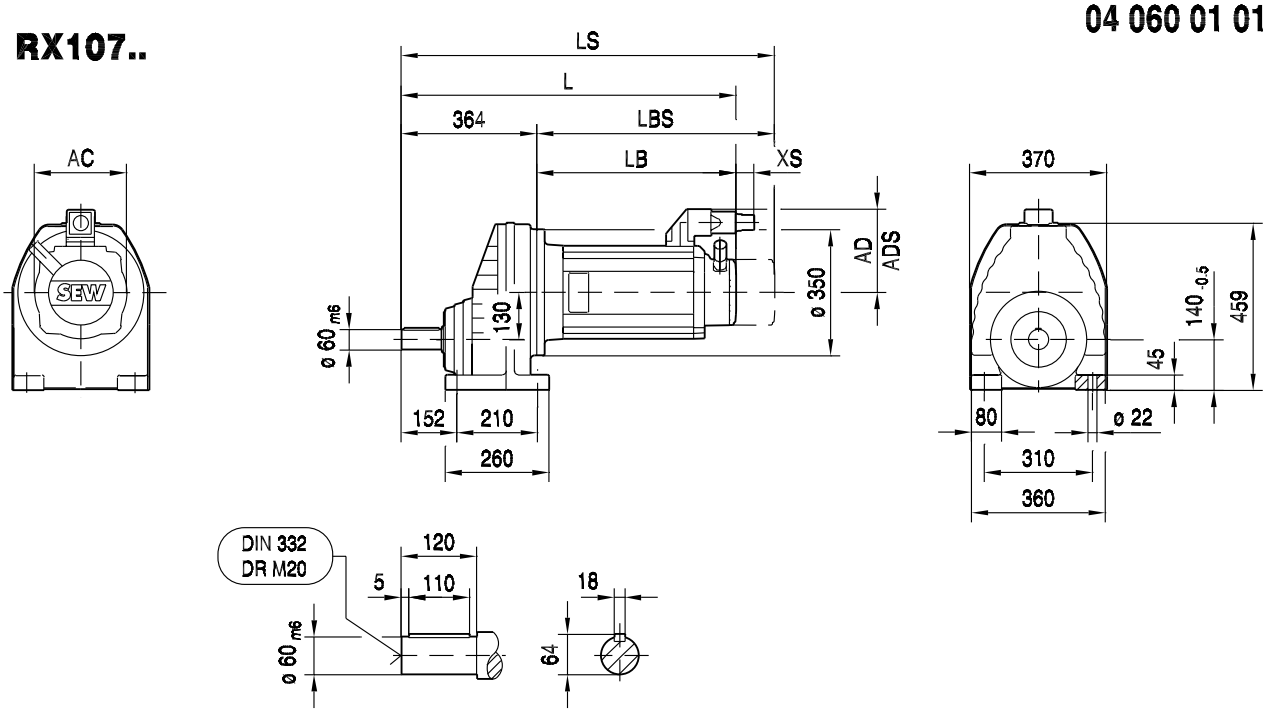

(→ 150)	CM112S	CM112M	CM112L	CM112H							
AC	186	186	186	186							
AD	162	162	162	162							
ADS	162	162	162	162							
L	660	687	749	879							
LS	750	777	839	944							
LB	296	323	385	515							
LBS	386	413	475	580							
XS	36	36	36	36							

RXF107..

04 061 01 01

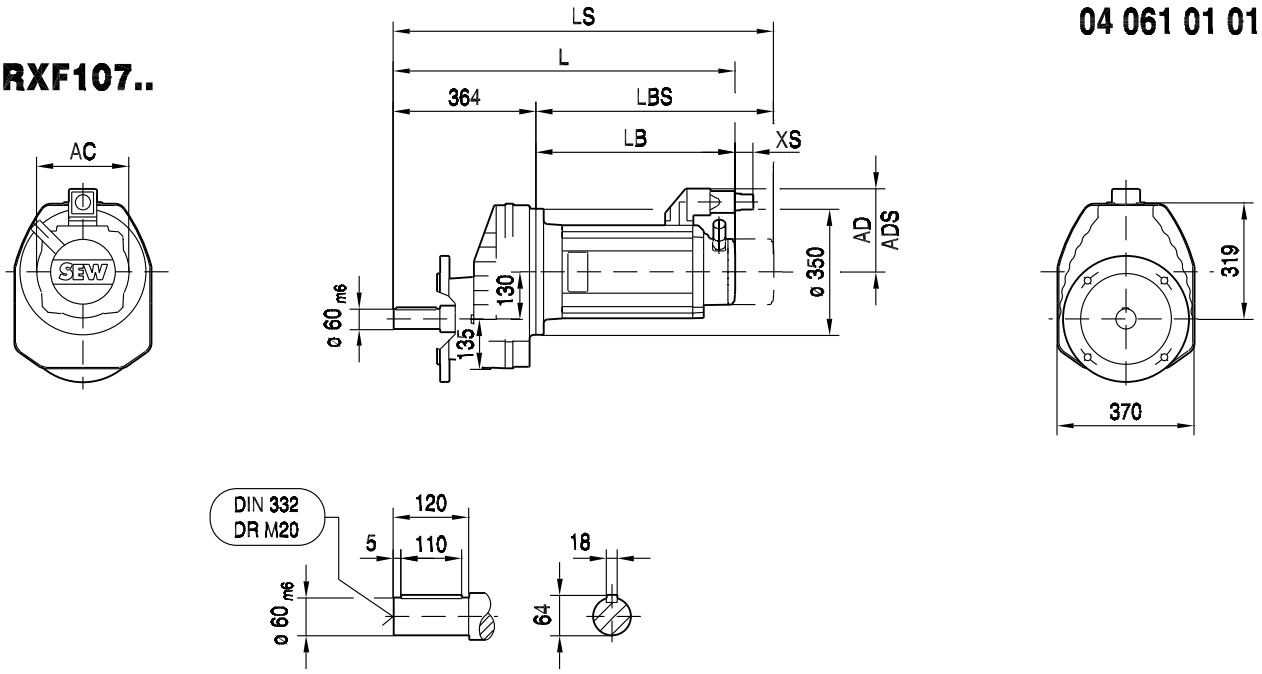

ø 350

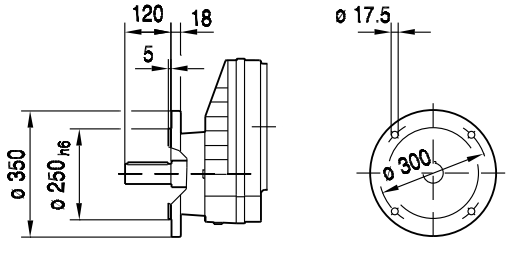

ø 450

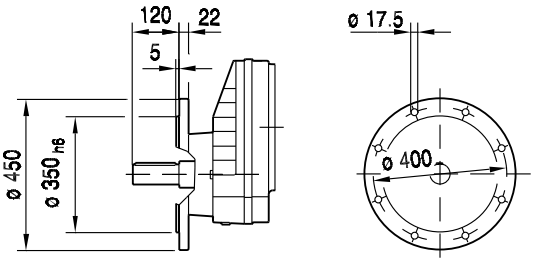

(→ 📖 150)	CM112S	CM112M	CM112L	CM112H							
AC	186	186	186	186							
AD	162	162	162	162							
ADS	162	162	162	162							
L	660	687	749	879							
LS	750	777	839	944							
LB	296	323	385	515							
LBS	386	413	475	580							
XS	36	36	36	36							

8.14 R 07 / CMP [Nm]

M_{aDyn} [Nm]	i	CMP 40M
R07 2	3.21	12
	3.68	14
	3.95	15
	4.57	17
	4.92	18
	5.76	21
	6.83	25
	7.48	28
	7.85	29
	9.01	33
	9.67	35
	11.18	41
	12.06	44
	14.12	>51
	16.73	>51
	18.31	>51
R07 3	21.73	>51
	23.32	>51
	26.97	>51
	29.08	>51
	34.05	>51
	38.51	>51
	40.34	>51
	41.31	>51
	44.16	>51
	47.78	>51
	51.52	>51
	60.32	>51
	71.47	>51
	78.24	>51

m [kg]	s	CMP 40M
R07	2	4.2
R07	3	4.3
RF: + 0.0 kg		

CMP..	i	n_{epk} [1/min]	η [%]	c_T R [Nm/']	c_T RF [Nm/']
R07 2	3.21	3872	97	2.78	2.68
	3.68	4439	97	2.78	2.68
	3.95	4500	97	2.78	2.68
	4.57	4500	97	2.78	2.68
	4.92	4500	97	2.78	2.68
	5.76	4500	97	2.78	2.68
	6.83	4500	97	2.78	2.68
	7.48	4500	97	2.78	2.68
	7.85	4500	96	3.92	3.73
	9.01	4500	96	3.92	3.73
	9.67	4500	96	3.92	3.73
	11.18	4500	96	3.92	3.73
	12.06	4500	96	3.92	3.73
	14.12	4500	96	3.92	3.73
	16.73	4500	96	3.92	3.73
	18.31	4500	96	3.92	3.73

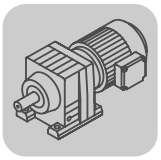

R..CMP, DS, CM
R 07 / CMP [Nm]

CMP..	i	n_{epk} [1/min]	η [%]	c_T R [Nm/"]	c_T RF [Nm/"]
R07 3	21.73	4500	93	4.06	3.85
	23.32	4500	93	4.06	3.85
	26.97	4500	93	4.06	3.85
	29.08	4500	93	4.06	3.85
	34.05	4500	93	4.06	3.85
	38.51	4500	91	4.06	3.86
	40.34	4500	92	4.06	3.85
	41.31	4500	91	4.06	3.86
	44.16	4500	92	4.06	3.85
	47.78	4500	90	4.06	3.86
	51.52	4500	90	4.06	3.86
	60.32	4500	90	4.06	3.86
	71.47	4500	89	4.06	3.86
	78.24	4500	88	4.06	3.86

CMP..	i	M_{amax} [Nm]	M_{apk} [Nm]	$M_{aNotaus}$ [Nm]	n_{ak} [1/min]	$J_G\ 10^{-4}$ [kgm^2]	F_{Ramax} R [N]	F_{Ramax} RF [N]	F_{Rapk} R [N]	F_{Rapk} RF [N]
R07 2	3.21	31	46	53	561	0.24	495	415	1530	1250
	3.68	33	46	56	516	0.19	500	420	1530	1250
	3.95	34	46	58	506	0.17	505	425	1530	1250
	4.57	36	46	61	460	0.13	520	435	1530	1250
	4.92	37	46	63	427	0.12	530	445	1530	1250
	5.76	40	46	68	365	0.090	530	440	1530	1250
	6.83	43	46	73	307	0.070	535	450	1530	1250
	7.48	43	46	73	321	0.060	595	500	1530	1250
	7.85	49	51	83	166	0.20	645	585	1500	1220
	9.01	50	51	85	166	0.16	685	620	1500	1220
	9.67	50	51	85	165	0.14	710	645	1500	1220
	11.18	50	51	85	179	0.11	760	695	1500	1220
	12.06	50	51	85	182	0.10	790	720	1500	1220
	14.12	50	51	85	184	0.080	850	780	1500	1220
	16.73	50	51	85	191	0.060	920	840	1500	1220
	18.31	50	51	85	191	0.050	960	880	1500	1220
R07 3	21.73	50	51	85	161	0.16	1040	950	1500	1220
	23.32	50	51	85	163	0.14	1080	980	1500	1220
	26.97	50	51	85	163	0.11	1150	1050	1500	1220
	29.08	50	51	85	162	0.10	1190	1080	1500	1220
	34.05	50	51	85	162	0.080	1270	1160	1500	1220
	38.51	50	51	85	171	0.14	1340	1220	1500	1220
	40.34	50	51	85	164	0.060	1370	1230	1500	1220
	41.31	50	51	85	169	0.13	1380	1230	1500	1220
	44.16	50	51	85	159	0.050	1420	1230	1500	1220
	47.78	50	51	85	147	0.10	1470	1230	1500	1220
	51.52	50	51	85	136	0.090	1510	1230	1500	1220
	60.32	50	51	85	116	0.070	1510	1230	1500	1220
	71.47	50	51	85	98	0.060	1510	1230	1500	1220
	78.24	50	51	85	89	0.050	1510	1230	1500	1220

8.15 R 07 / CMP [mm]

01 026 00 07

RF07..

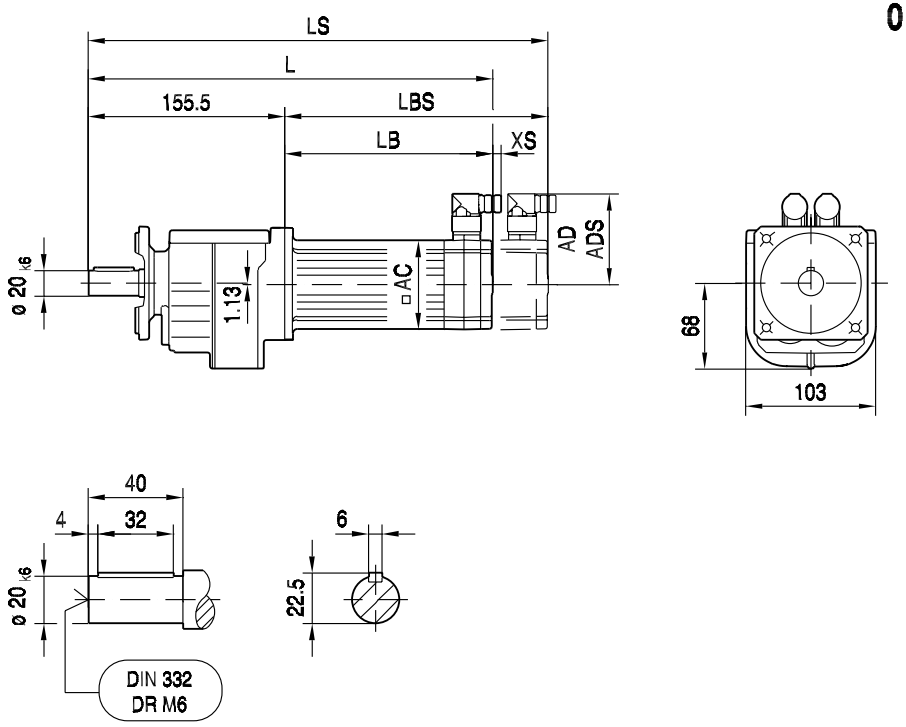

ø 120

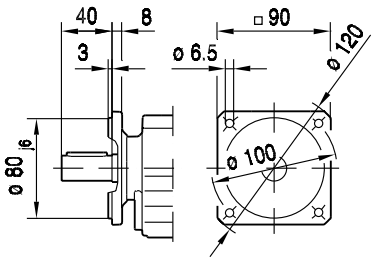

ø 140

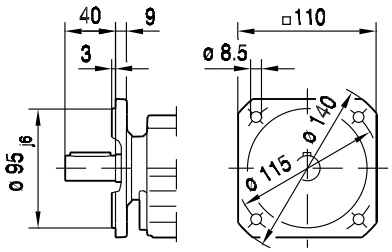

ø 160

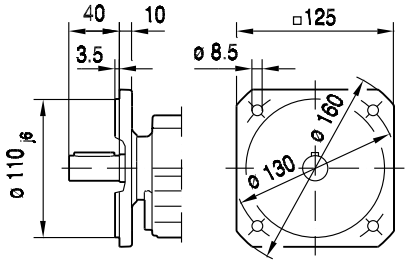

(→ 📖 150)	CMP40M							
AC	57							
AD	75							
ADS	75							
L	291							
LS	321							
LB	136							
LBS	166							
XS	19							

01 027 00 07

RZ07..

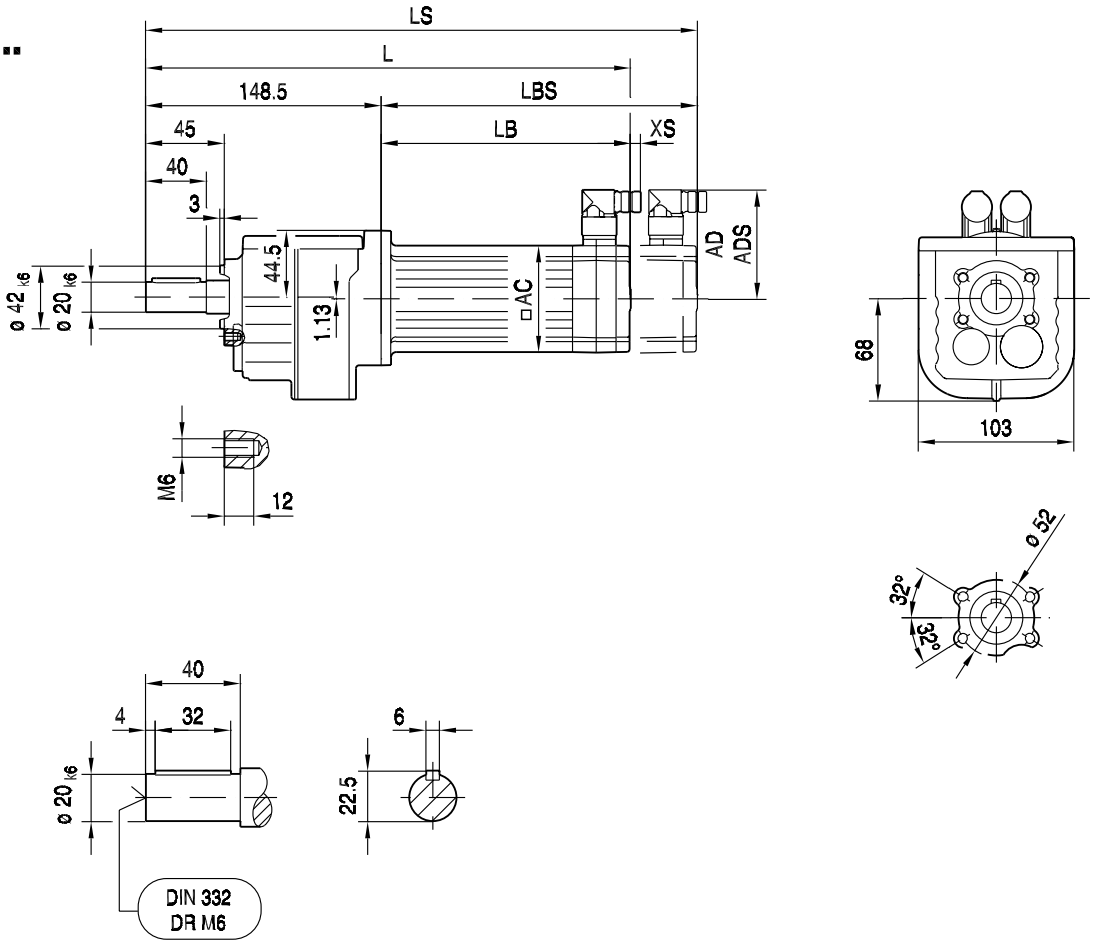

(→ 📖 150)	CMP40M							
AC	57							
AD	75							
ADS	75							
L	273							
LS	303							
LB	136							
LBS	166							
XS	19							

8.16 R 17 / CMP / DS [Nm]

M_{aDyn} [Nm]	i	CMP	DS	
		50S	56M	56L
R17 2	3.83	19	14	28
	4.51	23	17	33
	5.09	26	19	38
	5.76	29	21	42
	6.15	31	23	45
	7.04	36	26	52
	7.55	38	28	56
	8.63	43	31	63
	10.15	51	37	74
	11.45	57	42	84
	12.98	65	47	>86
	13.84	69	50	>86
	15.84	79	58	>86
	16.99	85	62	>86
	19.71	>86	72	>86
	23.15	>86	84	>86
	25.23	>86	>86	>86
R17 3	24.07	>86	85	>86
	28.32	>86	>86	>86
	31.94	>86	>86	>86
	36.2	>86	>86	>86
	38.61	>86	>86	>86
	44.18	>86	>86	>86
	47.44	>86	>86	>86
	53.76	>86	>86	>86
	57.35	>86	>86	>86
	65.61	>86	>86	>86
	70.39	>86	>86	>86
	81.64	>86	>86	>86

m [kg]	s	CMP	DS	
		50S	56M	56L
R17	2	6.8	5.7	6.7
R17	3	7.1	6.0	7.0
RF: + -0.1 kg				

CMP.. / DS..	i	n_{epk} [1/min]	η [%]	c_T R [Nm/"]	c_T RF [Nm/"]
R17 2	3.83	4500	97	3.04	2.96
	4.51	4500	97	3.04	2.96
	5.09	4500	97	3.04	2.96
	5.76	4500	97	3.04	2.96
	6.15	4500	97	3.04	2.96
	7.04	4500	97	3.04	2.96
	7.55	4500	97	3.04	2.96
	8.63	4500	96	4.43	4.26
	10.15	4500	96	4.43	4.26
	11.45	4500	96	4.43	4.26
	12.98	4500	96	4.43	4.26
	13.84	4500	96	4.43	4.26
	15.84	4500	96	4.43	4.26
	16.99	4500	96	4.43	4.26
	19.71	4500	96	4.43	4.26
	23.15	4500	96	4.43	4.26
	25.23	4500	96	4.43	4.26

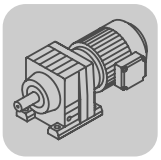

R..CMP, DS, CM
R 17 / CMP / DS [Nm]

CMP.. / DS..	i	n_{epk} [1/min]	η [%]	c_T R [Nm/"]	c_T RF [Nm/"]
R17 3	24.07	4500	93	4.61	4.43
	28.32	4500	93	4.61	4.43
	31.94	4500	93	4.61	4.43
	36.2	4500	93	4.61	4.43
	38.61	4500	93	4.61	4.43
	44.18	4500	93	4.61	4.43
	47.44	4500	92	4.62	4.44
	53.76	4500	92	4.62	4.44
	57.35	4500	92	4.62	4.44
	65.61	4500	92	4.62	4.44
	70.39	4500	91	4.62	4.44
	81.64	4500	91	4.62	4.44

CMP.. / DS..	i	M_{amax} [Nm]	M_{apk} [Nm]	$M_{aNotaus}$ [Nm]	n_{ak} [1/min]	J_G 10^{-4} [kgm^2]	F_{Ramax} R [N]	F_{Ramax} RF [N]	F_{Rapk} R [N]	F_{Rapk} RF [N]
R17 2	3.83	45	52	77	366	0.46	820	755	2500	2200
	4.51	48	54	82	310	0.35	870	795	2500	2200
	5.09	51	55	87	275	0.29	890	820	2500	2190
	5.76	53	59	90	243	0.24	930	860	2500	2180
	6.15	54	57	92	228	0.22	950	880	2500	2190
	7.04	55	58	94	227	0.18	1010	930	2500	2180
	7.55	56	59	95	225	0.16	1040	950	2500	2180
	8.63	72	86	122	162	0.39	1090	1000	1700	1510
	10.15	77	86	131	138	0.30	1140	1050	1700	1510
	11.45	81	86	138	122	0.26	1180	1080	1700	1510
	12.98	85	86	145	108	0.21	1230	1130	1700	1510
	13.84	85	86	145	108	0.20	1270	1160	1700	1510
	15.84	85	86	145	114	0.16	1350	1240	1700	1510
	16.99	85	86	145	112	0.15	1400	1280	1700	1510
	19.71	85	86	145	117	0.12	1500	1380	1700	1510
	23.15	85	86	145	117	0.090	1620	1480	1700	1510
	25.23	85	86	145	119	0.080	1680	1540	1700	1510
R17 3	24.07	85	86	145	104	0.41	1650	1510	1700	1510
	28.32	85	86	145	106	0.32	1770	1560	1700	1510
	31.94	85	86	145	103	0.27	1770	1560	1700	1510
	36.2	85	86	145	105	0.22	1770	1560	1700	1510
	38.61	85	86	145	104	0.20	1770	1560	1700	1510
	44.18	85	86	145	104	0.17	1770	1560	1700	1510
	47.44	85	86	145	110	0.25	1770	1560	1700	1510
	53.76	85	86	145	108	0.21	1770	1560	1700	1510
	57.35	85	86	145	108	0.19	1770	1560	1700	1510
	65.61	85	86	145	107	0.16	1770	1560	1700	1510
	70.39	85	86	145	99	0.14	1770	1560	1700	1510
	81.64	85	86	145	86	0.11	1770	1560	1700	1510

8.17 R 17 / CMP / DS [mm]

01 028 00 07

R17..

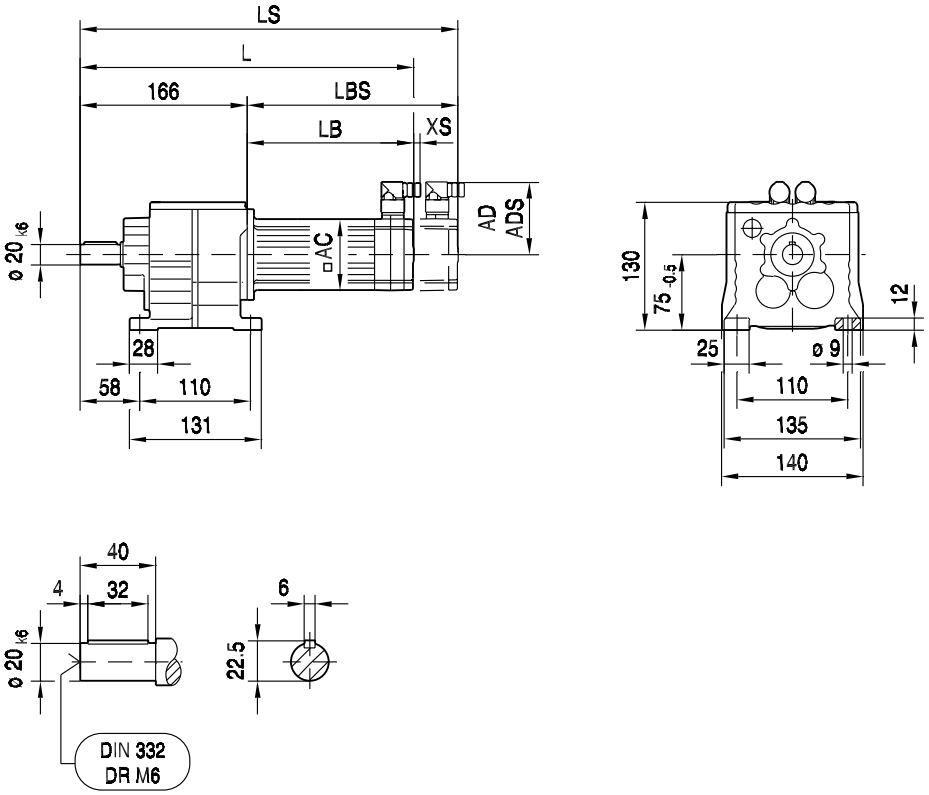

R17F..

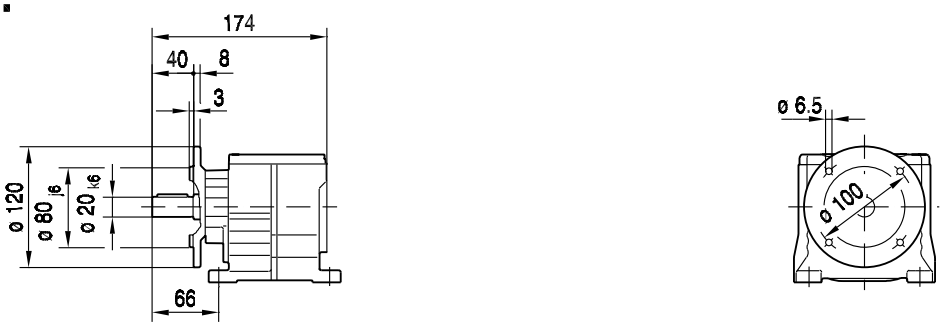

(→ 📖 150)	CMP50S							
AC	73							
AD	82							
ADS	82							
L	319							
LS	348							
LB	153							
LBS	182							
XS	18							

01 029 00 07

RF17..

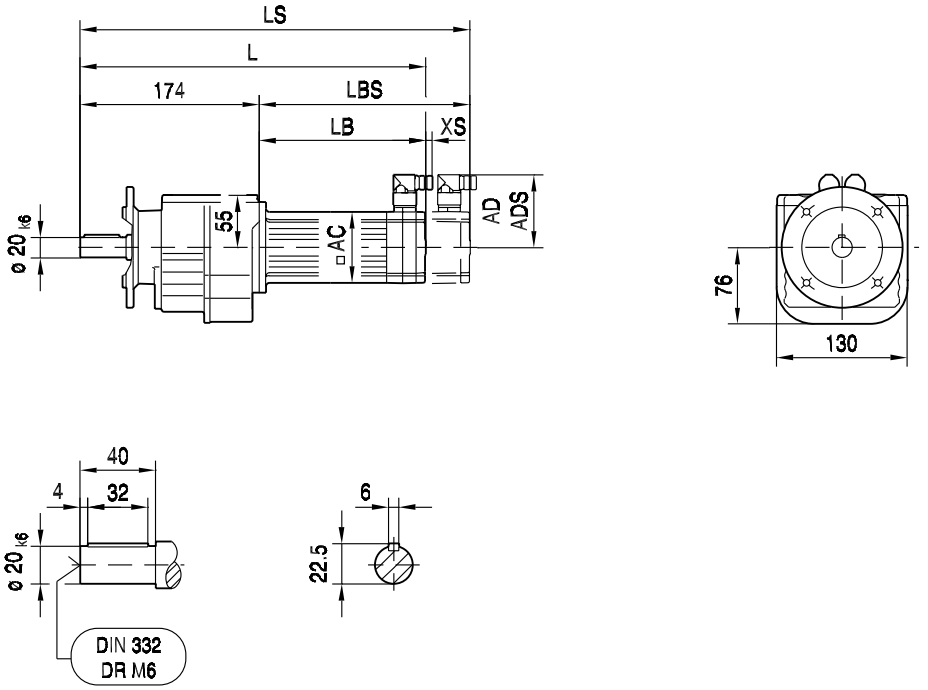

ø 120

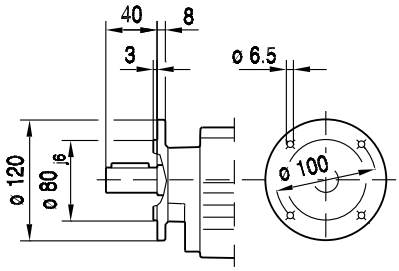

ø 140

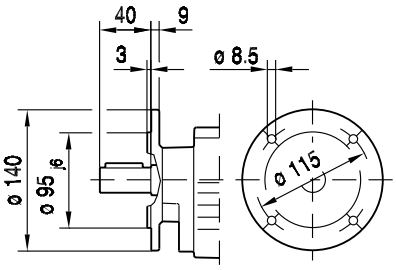

ø 160

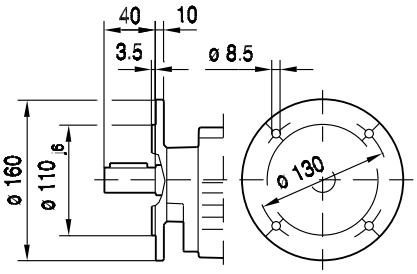

(→ 📖 150)	CMP50S							
AC	73							
AD	82							
ADS	82							
L	327							
LS	356							
LB	153							
LBS	182							
XS	18							

01 030 00 07

RZ17..

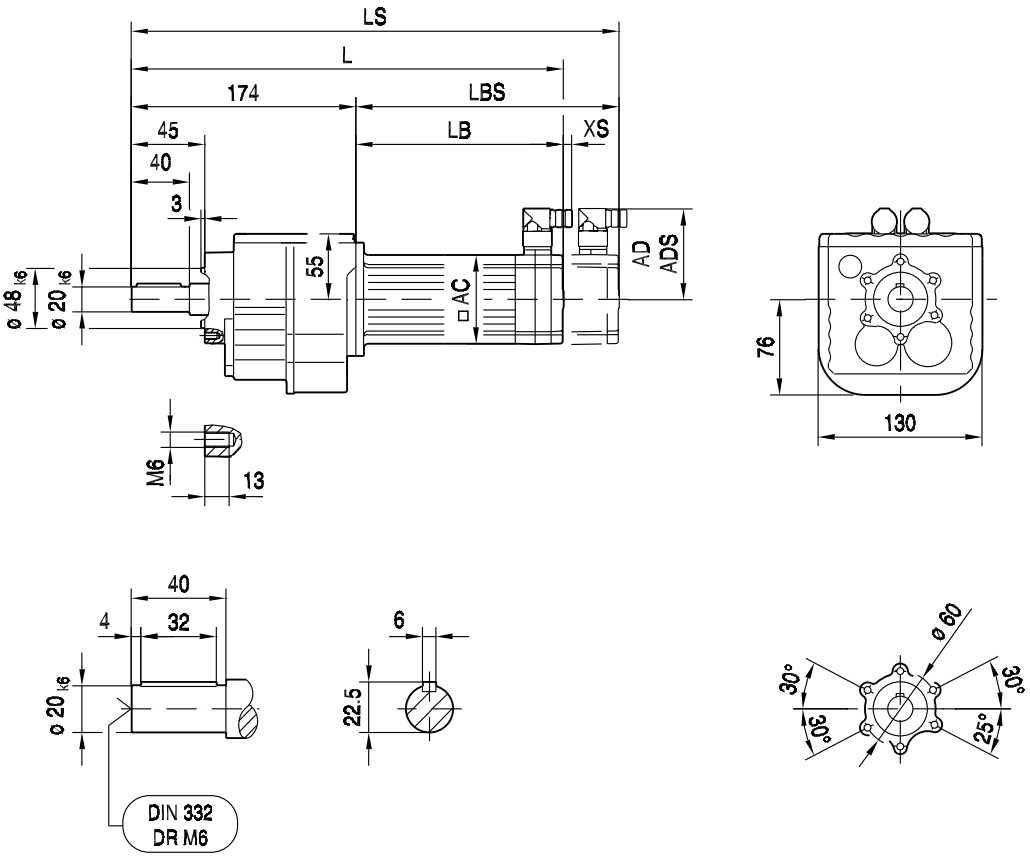

(→ 150)	CMP50S							
AC	73							
AD	82							
ADS	82							
L	319							
LS	348							
LB	153							
LBS	182							
XS	18							

01 052 00 08

R17..

DS56..

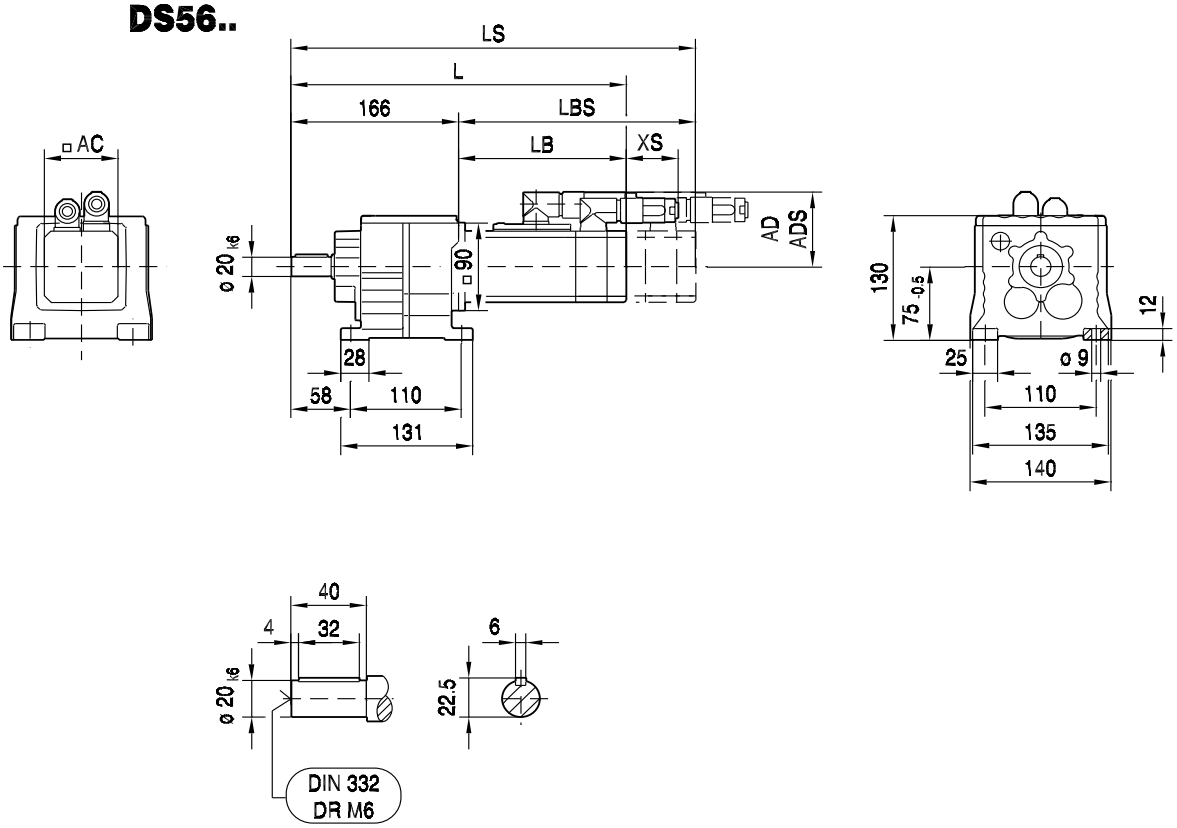

R17F..

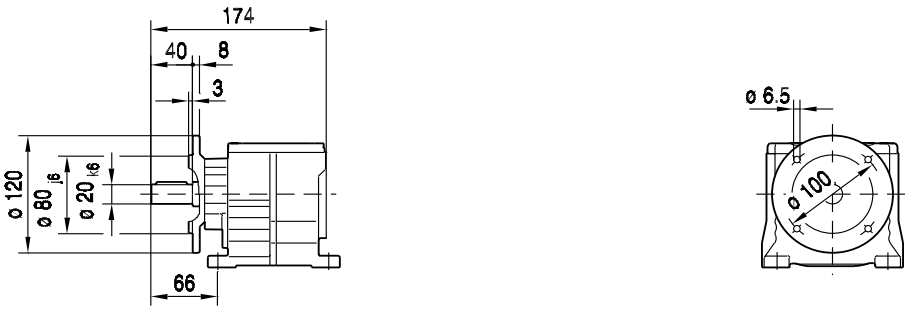

(→ 📖 150)	DS56M	DS56L						
AC	73	73						
AD	71	71						
ADS	77	77						
L	305	337						
LS	335	367						
LB	139	171						
LBS	169	201						
XS	70	70						

01 053 00 08

RF17..

DS56..

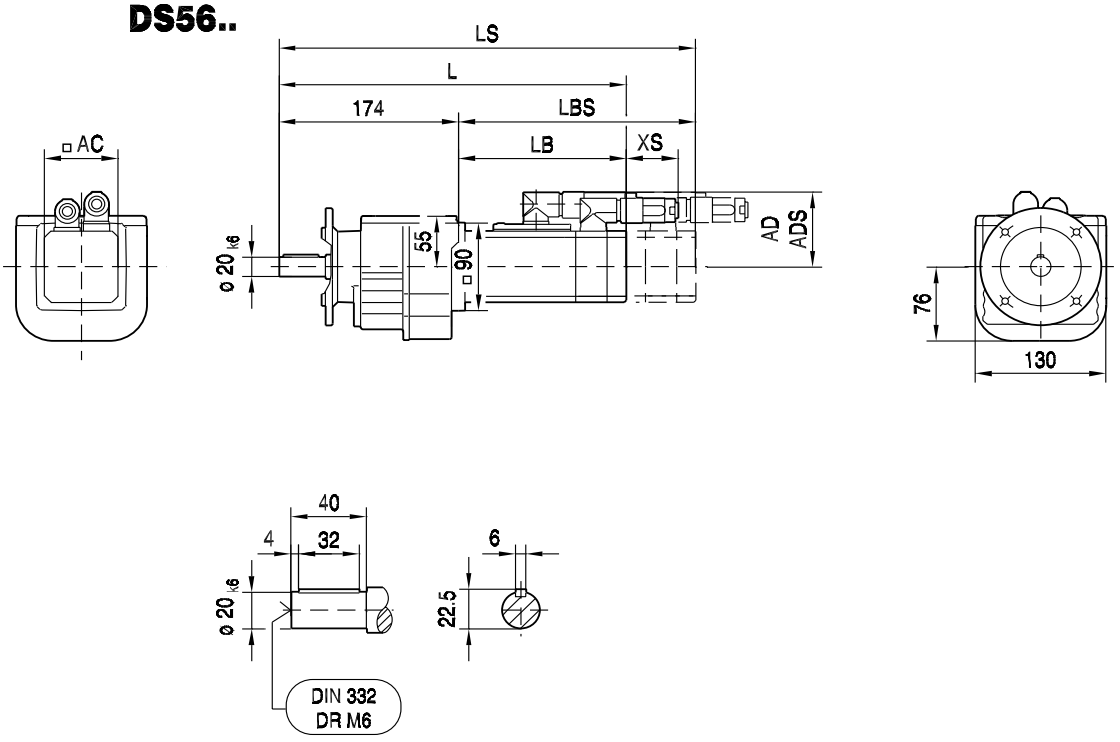

ø 120

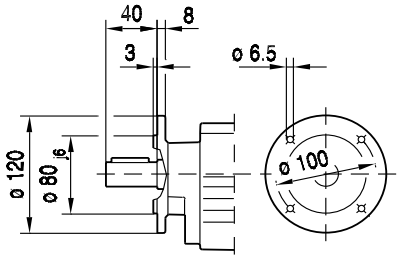

ø 140

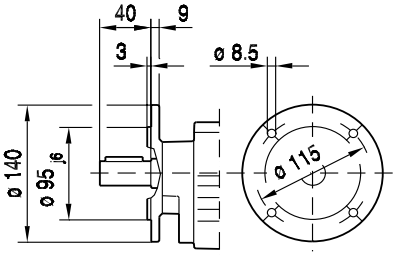

ø 160

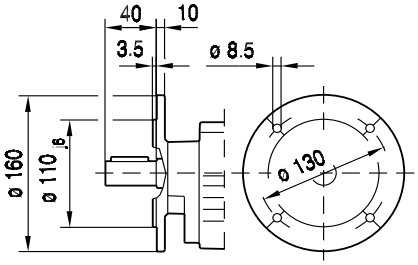

(→ 150)	DS56M	DS56L						
AC	73	73						
AD	71	71						
ADS	77	77						
L	313	345						
LS	343	375						
LB	139	171						
LBS	169	201						
XS	70	70						

01 054 00 08

RZ17..

DS56..

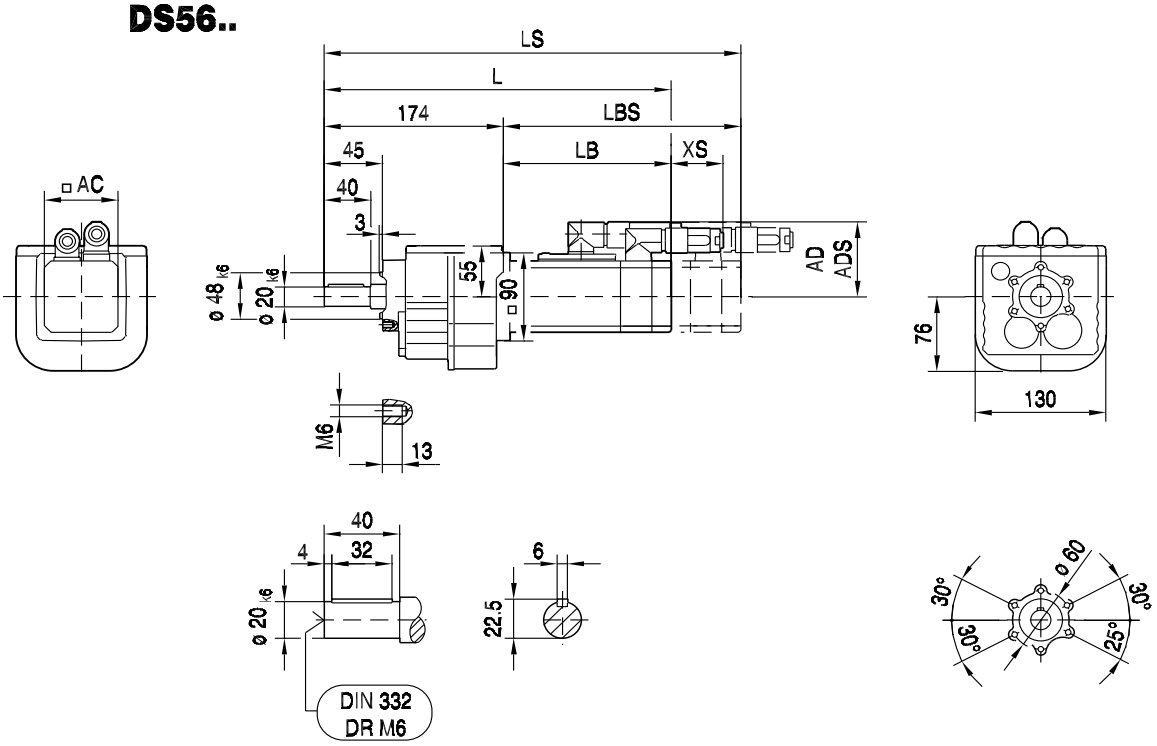

(→ 📖 150)	DS56M	DS56L						
AC	73	73						
AD	71	71						
ADS	77	77						
L	305	337						
LS	335	367						
LB	139	171						
LBS	169	201						
XS	70	70						

8.18 R 27 / CMP / DS / CM [Nm]

M_{aDyn} [Nm]		CMP							DS			CM			
	i	40M	50S	50M	50L	63S	63M	63L	56M	56L	56H	71S	71M	71L	90S
R27 2	3.37	12	17	33	50	36	69	98	12	25	49	53	70	102	>118
	4	15	20	40	59	43	82	117	15	29	58	63	83	121	>127
	4.27	16	21	42	63	46	88	125	16	31	62	68	88	129	>130
	5	18	25	49	74	53	103	>142	18	36	73	79	103	>142	>142
	5.6	20	28	55	83	60	115	>144	20	41	82	89	116	>144	>144
	6.59	24	33	65	97	70	135	>145	24	48	96	104	136	>145	>145
	7.63	28	38	75	113	81	>148		28	56	111	121	>148		
	8.16	30	41	81	121	87	>148		30	60	119	129	>148		
	9.41	34	47	93		100			34	69	137				
	10.13	37	51	100	>136	108	>136	>136	37	74	>136	>136	>136	>136	>136
	11.86	43	59	117	>136	126	>136	>136	43	87	>136	>136	>136	>136	>136
	13.28	48	66	131	>136	>136	>136	>136	48	97	>136	>136	>136	>136	>136
	15.63	57	78	>136	>136	>136	>136	>136	57	114	>136	>136	>136	>136	>136
	18.08	66	90	>136	>136	>136	>136		66	132	>136	>136	>136		
	19.35	71	97	>136	>136	>136	>136		71	>136	>136	>136	>136		
	22.32	81	111	>136		>136			81	>136	>136				
	26.09	95	130						95	>136					
	28.37	103	>136						103	>136					
R27 3	24.47	86	118	>136	>136	>136	>136	>136	86	>136	>136	>136	>136	>136	>136
	28.78	102	>136	>136	>136	>136	>136	>136	102	>136	>136	>136	>136	>136	>136
	32.47	115	>136	>136	>136	>136	>136	>136	115	>136	>136	>136	>136	>136	>136
	36.79	130	>136	>136	>136	>136	>136		130	>136	>136	>136	>136		
	39.25	>136	>136	>136	>136	>136	>136	>136	>136	>136	>136	>136	>136	>136	>136
	44.9	>136	>136	>136	>136	>136	>136		>136	>136	>136	>136	>136		
	48.17	>136	>136	>136	>136	>136	>136		>136	>136	>136	>136	>136		
	55.87	>136	>136	>136		>136			>136	>136	>136				
	61.3	>136	>136	>136	>136	>136	>136	>136	>136	>136	>136	>136	>136	>136	>136
	69.47	>136	>136	>136	>136	>136	>136		>136	>136	>136	>136	>136		
	74.11	>136	>136	>136	>136	>136	>136	>136	>136	>136	>136	>136	>136	>136	>136
	84.78	>136	>136	>136	>136	>136	>136		>136	>136	>136	>136	>136		
	90.96	>136	>136	>136	>136	>136	>136		>136	>136	>136	>136	>136		
	105.49	>136	>136	>136		>136			>136	>136	>136				
	123.91	>136	>136						>136	>136					
	135.09	>136	>136						>136	>136					

m [kg]		CMP							DS			CM			
	s	40M	50S	50M	50L	63S	63M	63L	56M	56L	56H	71S	71M	71L	90S
R27	2	5.5	7.2	8.1	9.0	9.2	11	12	5.8	6.8	7.5	12	13	17	21
R27	3	5.7	7.4	8.3	9.2	9.5	11	12	6.1	7.1	7.8	12	13	17	21
RF: + -0.1 kg															

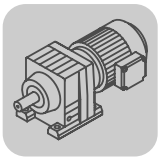

R..CMP, DS, CM
R 27 / CMP / DS / CM [Nm]

CMP.. / DS.. / CM..	i	n_{epk} [1/min]	η [%]	c_T R [Nm/"]	c_T RF [Nm/"]
R27 2	3.37	4500	96	7.24	7.07
	4	4500	96	7.24	7.07
	4.27	4500	96	7.24	7.07
	5	4500	96	7.24	7.07
	5.6	4500	96	7.24	7.07
	6.59	4500	96	7.24	7.07
	7.63	4500	96	7.24	7.07
	8.16	4500	96	7.24	7.07
	9.41	4500	96	7.24	7.07
	10.13	4500	96	9.0	8.75
	11.86	4500	96	9.0	8.75
	13.28	4500	96	9.0	8.75
	15.63	4500	96	9.0	8.75
	18.08	4500	96	9.0	8.75
	19.35	4500	96	9.0	8.75
	22.32	4500	96	9.0	8.75
	26.09	4500	96	9.0	8.75
	28.37	4500	96	9.0	8.75
R27 3	24.47	4500	93	9.03	8.77
	28.78	4500	93	9.03	8.77
	32.47	4500	93	9.03	8.77
	36.79	4500	93	9.03	8.77
	39.25	4500	93	9.03	8.77
	44.9	4500	93	9.03	8.77
	48.17	4500	93	9.03	8.77
	55.87	4500	92	9.03	8.77
	61.3	4500	91	9.07	8.81
	69.47	4500	91	9.07	8.81
	74.11	4500	91	9.07	8.81
	84.78	4500	90	9.07	8.81
	90.96	4500	90	9.07	8.81
	105.49	4500	90	9.07	8.81
	123.91	4500	89	9.07	8.81
	135.09	4500	89	9.07	8.81

CMP.. / DS.. / CM..	i	M_{amax} [Nm]	M_{apk} [Nm]	$M_{aNotaus}$ [Nm]	n_{ak} [1/min]	J_G 10^{-4} [kgm^2]	F_{Ramax} R [N]	F_{Ramax} RF [N]	F_{Rapk} R [N]	F_{Rapk} RF [N]
R27 2	3.37	79	118	134	415	1.1	900	790	4290	3690
	4	85	127	145	350	0.85	900	800	4250	3660
	4.27	87	130	148	328	0.76	920	810	4230	3640
	5	95	142	162	280	0.58	860	760	4180	3590
	5.6	99	144	168	250	0.48	880	775	4170	3580
	6.59	106	145	180	212	0.36	880	775	4160	3580
	7.63	112	148	190	183	0.29	900	795	4150	3570
	8.16	116	148	197	172	0.26	870	770	4150	3570
	9.41	122	149	207	149	0.21	900	795	4140	3560
	10.13	122	136	207	138	0.61	1890	1670	4210	3620
	11.86	129	136	219	118	0.47	1980	1750	4210	3620
	13.28	130	136	221	120	0.39	2140	1910	4210	3620
	15.63	130	136	221	122	0.29	2290	2170	4210	3620
	18.08	130	136	221	122	0.24	2440	2310	4210	3620
	19.35	130	136	221	124	0.22	2510	2380	4210	3620
	22.32	130	136	221	125	0.18	2660	2520	4210	3620
	26.09	130	136	221	126	0.14	2840	2690	4210	3620
	28.37	130	136	221	130	0.12	2940	2780	4210	3620

CMP.. / DS.. / CM..							F_{Ramax}		F_{Rapk}	
	i	M_{amax} [Nm]	M_{apk} [Nm]	$M_{aNotaus}$ [Nm]	n_{ak} [1/min]	J_G 10^{-4} [kgm^2]	R [N]	RF [N]	R [N]	RF [N]
R27 3	24.47	130	136	221	98	0.49	2760	2620	4210	3620
	28.78	130	136	221	97	0.37	2950	2800	4210	3620
	32.47	130	136	221	99	0.31	3100	2940	4210	3620
	36.79	130	136	221	98	0.25	3260	3090	4210	3620
	39.25	130	136	221	97	0.22	3350	3170	4210	3620
	44.9	130	136	221	98	0.18	3530	3340	4210	3620
	48.17	130	136	221	98	0.16	3630	3430	4210	3620
	55.87	130	136	221	98	0.13	3840	3640	4210	3620
	61.3	130	136	221	106	0.26	3980	3640	4210	3620
	69.47	130	136	221	101	0.22	4180	3640	4210	3620
	74.11	130	136	221	94	0.20	4230	3640	4210	3620
	84.78	130	136	221	83	0.16	4230	3640	4210	3620
	90.96	130	136	221	77	0.15	4230	3640	4210	3620
	105.49	130	136	221	66	0.12	4230	3640	4210	3620
	123.91	130	136	221	56	0.090	4230	3640	4210	3620
	135.09	130	136	221	52	0.080	4230	3640	4210	3620

8.19 R 27 / CMP / DS / CM [mm]

01 031 00 07

R27..

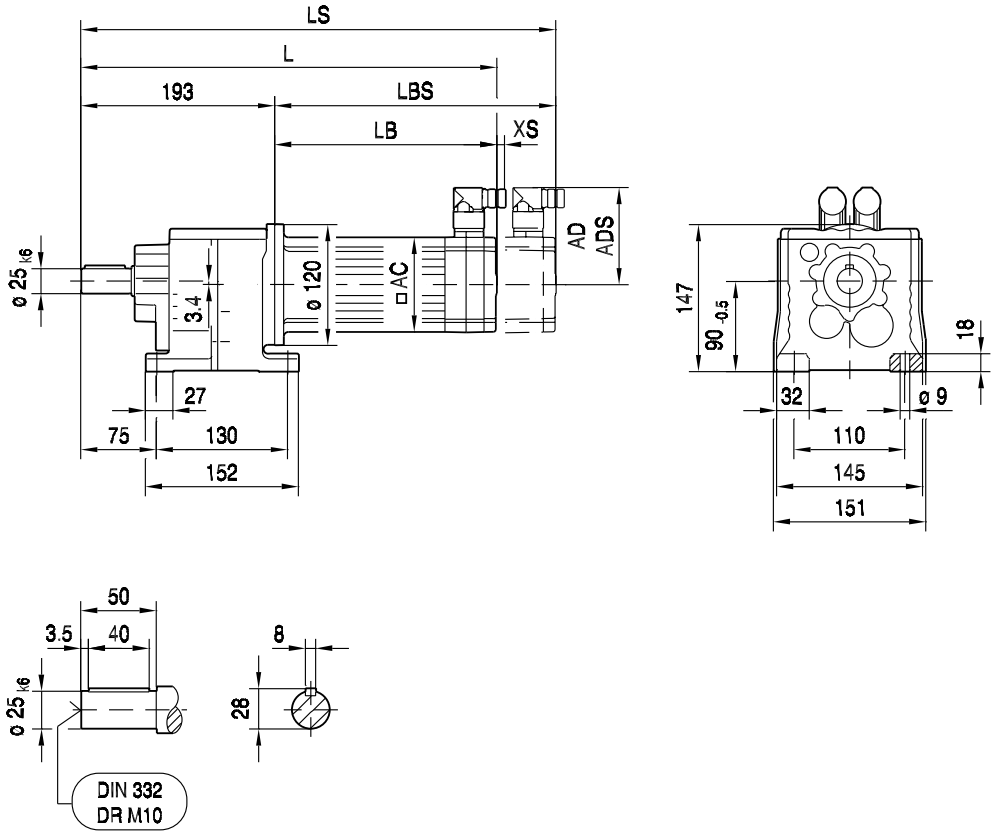

R27F..

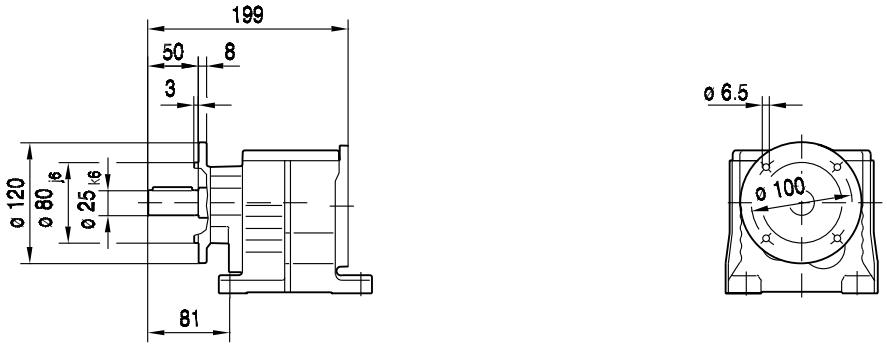

(→ 📖 150)	CMP40M	CMP50S	CMP50M	CMP50L	CMP63S	CMP63M	CMP63L	
AC	57	73	73	73	88	88	88	
AD	75	82	82	82	89	89	89	
ADS	75	82	82	82	89	89	89	
L	336	338	377	416	373	423	476	
LS	366	367	406	445	401	451	505	
LB	143	145	184	223	180	230	283	
LBS	173	174	213	252	208	258	312	
XS	19	18	18	18	14	14	14	

01 032 00 07

RF27..

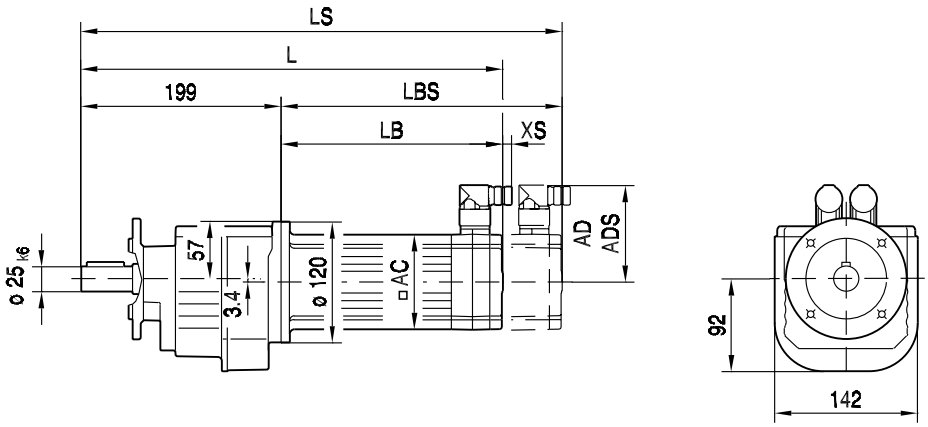

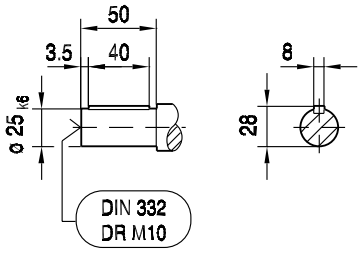

ø 120

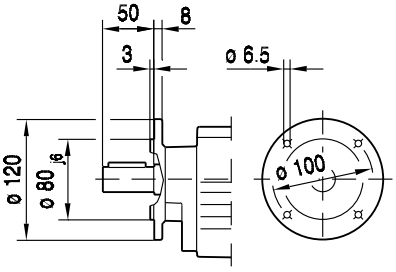

ø 140

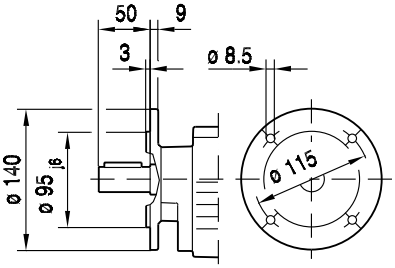

ø 160

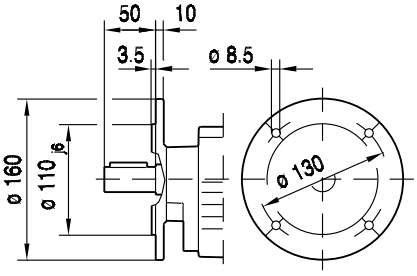

(→ 📖 150)	CMP40M	CMP50S	CMP50M	CMP50L	CMP63S	CMP63M	CMP63L	
AC	57	73	73	73	88	88	88	
AD	75	82	82	82	89	89	89	
ADS	75	82	82	82	89	89	89	
L	342	344	383	422	379	429	482	
LS	372	373	412	451	407	457	511	
LB	143	145	184	223	180	230	283	
LBS	173	174	213	252	208	258	312	
XS	19	18	18	18	14	14	14	

01 033 00 07

RZ27..

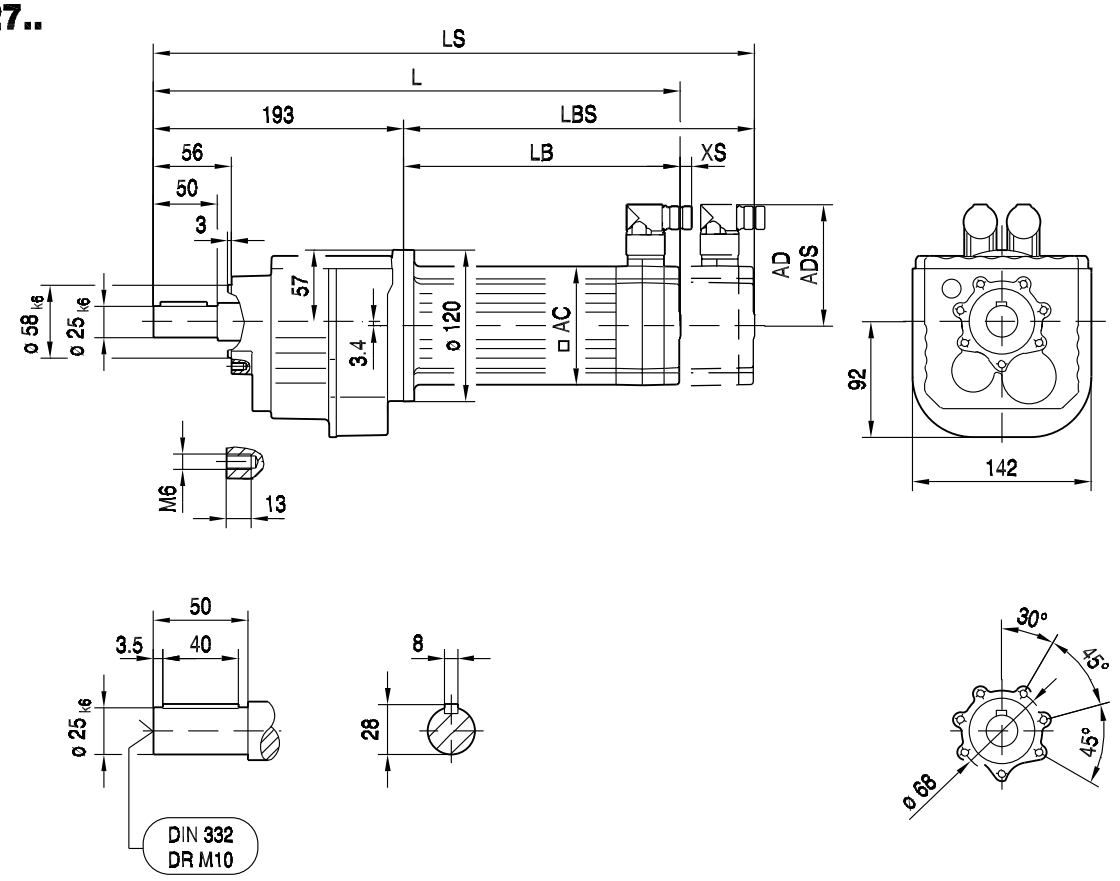

(→ 📖 150)	CMP40M	CMP50S	CMP50M	CMP50L	CMP63S	CMP63M	CMP63L	
AC	57	73	73	73	88	88	88	
AD	75	82	82	82	89	89	89	
ADS	75	82	82	82	89	89	89	
L	336	338	377	416	373	423	476	
LS	366	367	406	445	401	451	505	
LB	143	145	184	223	180	230	283	
LBS	173	174	213	252	208	258	312	
XS	19	18	18	18	14	14	14	

R27..
DS56..

04 062 01 01

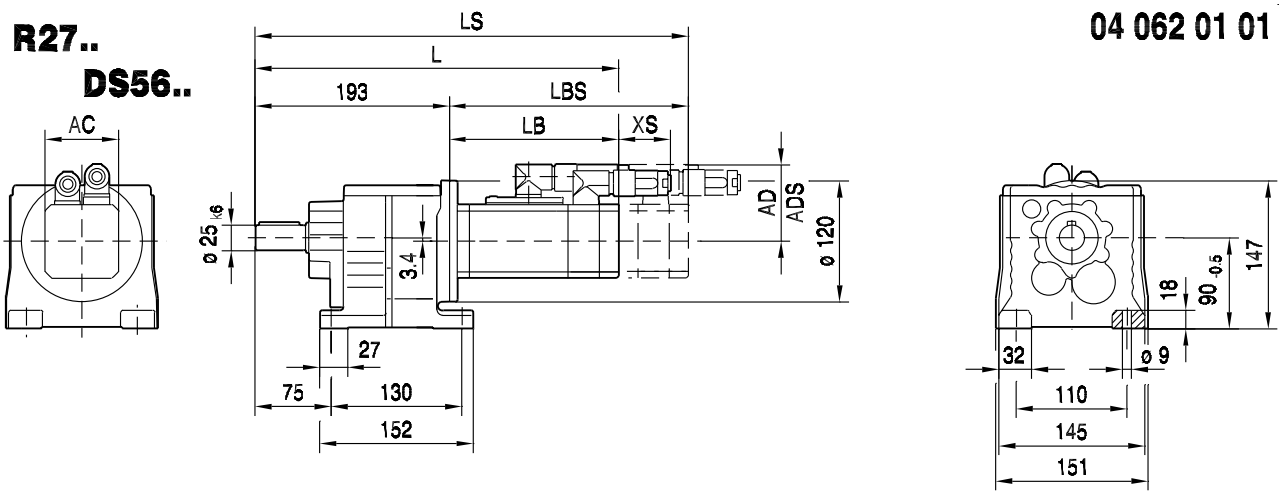

CM..

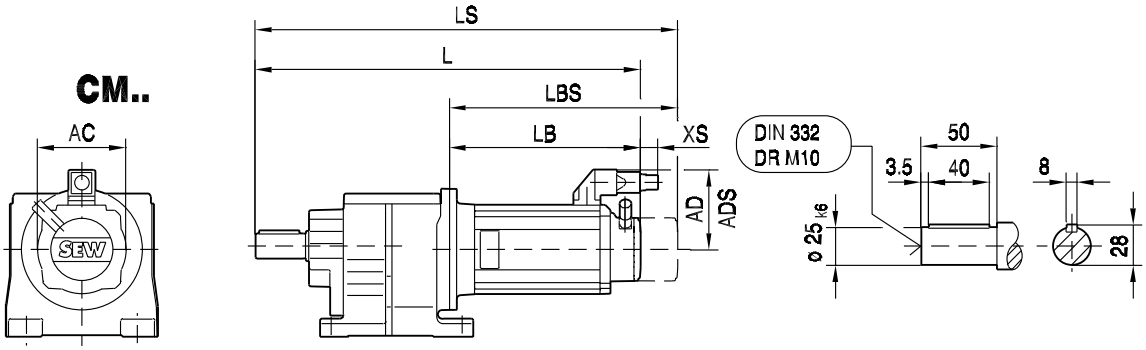

R27F..

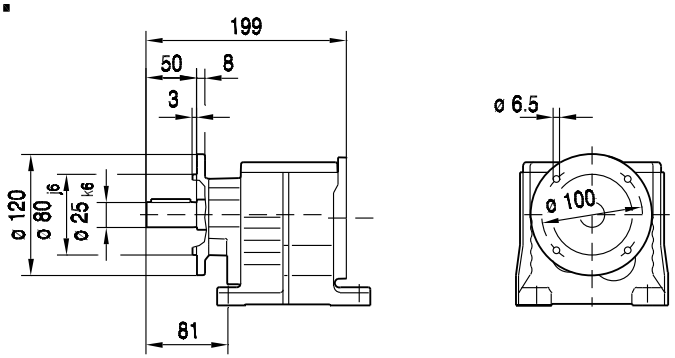

(→ 150)	DS56M	DS56L	DS56H	CM71S	CM71M	CM71L	CM90S				
AC	73	73	73	117	117	117	142				
AD	71	71	77	122	122	122	140				
ADS	77	77	77	122	122	122	140				
L	330	362	465	431	451	494	486				
LS	360	392	465	513	533	576	582				
LB	137	169	272	238	258	301	293				
LBS	167	199	272	320	340	383	389				
XS	70	70	51	45	45	45	50				

04 063 01 01

RF27..

DS56..

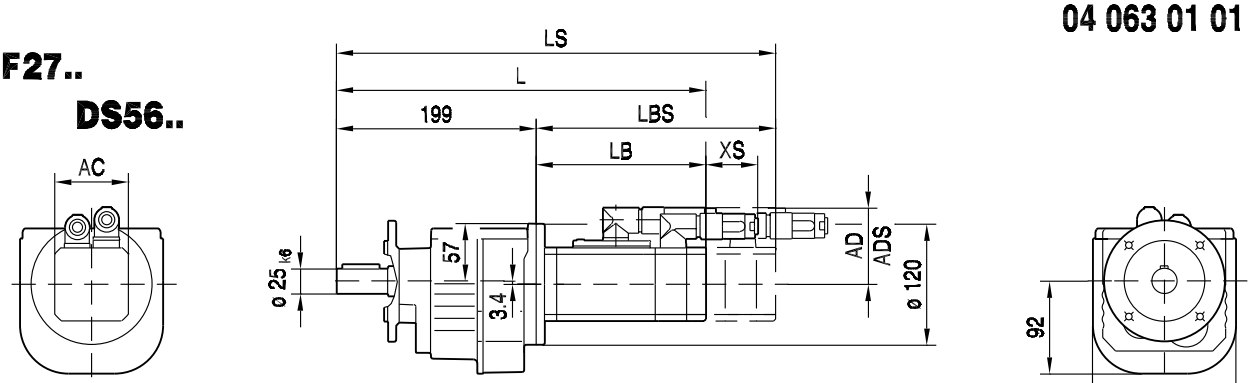

CM..

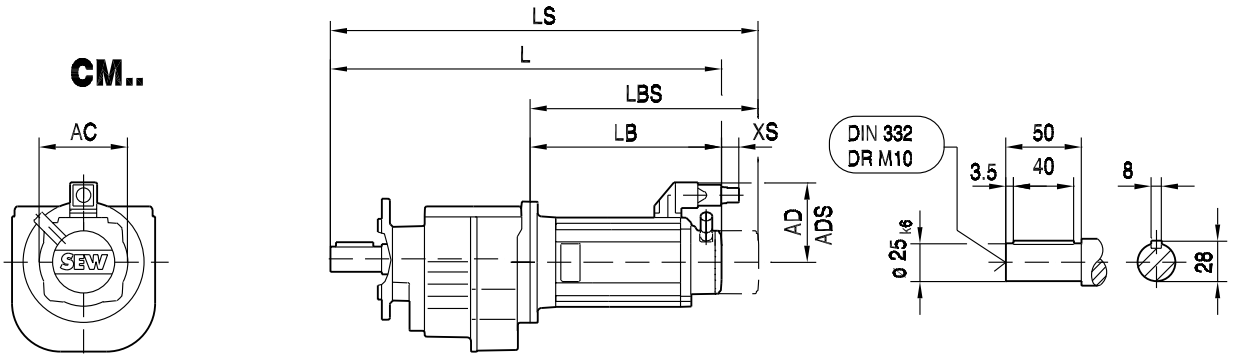

ø 120

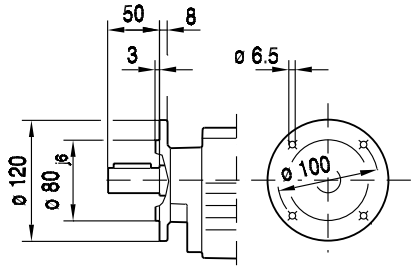

ø 140

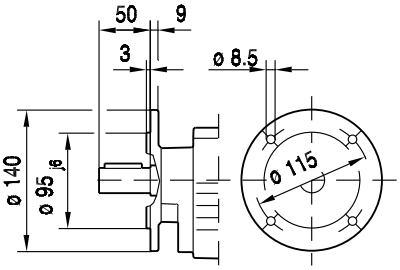

ø 160

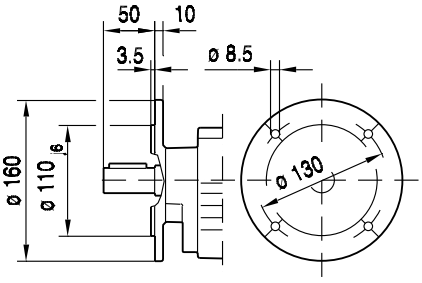

(→ 📖 150)	DS56M	DS56L	DS56H	CM71S	CM71M	CM71L	CM90S				
AC	73	73	73	117	117	117	142				
AD	71	71	77	122	122	122	140				
ADS	77	77	77	122	122	122	140				
L	336	368	471	437	457	500	492				
LS	366	398	471	519	539	582	588				
LB	137	169	272	238	258	301	293				
LBS	167	199	272	320	340	383	389				
XS	70	70	51	45	45	45	50				

8.20 R 37 / CMP / DS / CM [Nm]

M_{aDyn} [Nm]		CMP							DS			CM			
	i	40M	50S	50M	50L	63S	63M	63L	56M	56L	56H	71S	71M	71L	90S
R37 2	3.41	13	17	34	51	37	71	101	13	25	50	55	71	104	131
	4.05	15	20	40	60	44	84	119	15	30	60	65	84	123	>153
	4.32	16	22	43	65	47	90	127	16	32	64	69	90	132	>155
	5.06	19	26	51	76	54	105	149	19	37	75	81	106	154	>156
	5.67	21	29	57	85	61	118	>156	21	42	84	91	118	>156	>156
	6.67	25	34	67	100	72	138	>166	25	49	98	107	139	>166	>166
	7.97	29	40	79	118	85	164	>205	29	58	116	126	165	>205	>205
	9.47	35	47	94	140	101	195	>205	35	69	138	150	195	>205	>205
	10.11	37	50	100	149	108	>205	>205	37	74	148	160	>205	>205	>205
	11.83	43	59	117	175	126	>205	>205	43	86	173	187	>205	>205	>205
	13.25	48	66	131	196	141	>205	>205	48	97	193	>205	>205	>205	>205
	15.6	57	78	154	>205	166	>205	>205	57	114	>205	>205	>205	>205	>205
	18.05	66	90	178	>205	192	>205		66	132	>205	>205	>205		
	19.31	70	96	191	>205	>205	>205		70	141	>205	>205	>205		
	22.27	81	111	>205		>205			81	162	>205				
	26.03	95	130						95	190					
	28.32	103	141						103	>205					
R37 3	24.42	87	119	>205	>205	>205	>205	>205	87	174	>205	>205	>205	>205	>205
	28.73	103	140	>205	>205	>205	>205	>205	103	>205	>205	>205	>205	>205	>205
	32.4	116	158	>205	>205	>205	>205	>205	116	>205	>205	>205	>205	>205	>205
	36.72	131	179	>205	>205	>205	>205		131	>205	>205	>205	>205		
	39.17	140	191	>205	>205	>205	>205	>205	140	>205	>205	>205	>205	>205	>205
	44.81	160	>205	>205	>205	>205	>205		160	>205	>205	>205	>205		
	48.08	172	>205	>205	>205	>205	>205		172	>205	>205	>205	>205		
	55.76	199	>205	>205		>205			199	>205	>205				
	61.18	>205	>205	>205	>205	>205	>205	>205	>205	>205	>205	>205	>205	>205	>205
	69.33	>205	>205	>205	>205	>205	>205		>205	>205	>205	>205	>205		
	73.96	>205	>205	>205	>205	>205	>205	>205	>205	>205	>205	>205	>205	>205	>205
	84.61	>205	>205	>205	>205	>205	>205		>205	>205	>205	>205	>205		
	90.77	>205	>205	>205	>205	>205	>205		>205	>205	>205	>205	>205		
	105.28	>205	>205	>205		>205			>205	>205	>205				
	123.66	>205	>205						>205	>205					
	134.82	>205	>205						>205	>205					

m [kg]		CMP							DS			CM			
	s	40M	50S	50M	50L	63S	63M	63L	56M	56L	56H	71S	71M	71L	90S
R37	2	11	13	14	15	15	17	18	12	13	13	18	19	22	27
R37	3	12	13	14	15	15	17	18	12	13	14	18	19	23	27
RF: + 1.5 kg															

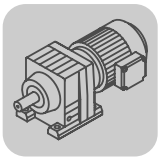

R..CMP, DS, CM
R 37 / CMP / DS / CM [Nm]

CMP.. / DS.. / CM..	i	n_{epk} [1/min]	η [%]	c_T R [Nm/']	c_T RF [Nm/']	φ /R [']
R37 2	3.41	3587	97	9.66	9.5	14
	4.05	4261	97	9.66	9.5	13
	4.32	4500	97	9.66	9.5	13
	5.06	4500	97	9.66	9.5	13
	5.67	4500	97	9.66	9.5	12
	6.67	4500	97	9.66	9.5	12
	7.97	4500	96	12.68	12.41	8
	9.47	4500	96	12.68	12.41	8
	10.11	4500	96	12.68	12.41	8
	11.83	4500	96	12.68	12.41	8
	13.25	4500	96	12.68	12.41	8
	15.6	4500	96	12.68	12.41	8
	18.05	4500	96	12.68	12.41	8
	19.31	4500	96	12.68	12.41	7
	22.27	4500	96	12.68	12.41	7
	26.03	4500	96	12.68	12.41	7
	28.32	4500	96	12.68	12.41	7
R37 3	24.42	4500	94	12.77	12.49	9
	28.73	4500	94	12.77	12.49	9
	32.4	4500	94	12.77	12.49	9
	36.72	4500	94	12.77	12.49	9
	39.17	4500	94	12.77	12.49	9
	44.81	4500	94	12.77	12.49	9
	48.08	4500	94	12.77	12.49	9
	55.76	4500	94	12.77	12.49	9
	61.18	4500	93	12.85	12.57	8
	69.33	4500	92	12.85	12.57	8
	73.96	4500	92	12.85	12.57	8
	84.61	4500	92	12.85	12.57	8
	90.77	4500	92	12.85	12.57	8
	105.28	4500	92	12.85	12.57	8
	123.66	4500	92	12.85	12.57	8
	134.82	4500	91	12.85	12.57	8

CMP.. / DS.. / CM..	i	M_{amax} [Nm]	M_{apk} [Nm]	$M_{aNotaus}$ [Nm]	n_{ak} [1/min]	J_G 10^{-4} [kgm^2]	F_{Ramax} R [N]	F_{Ramax} RF [N]	F_{Rapk} R [N]	F_{Rapk} RF [N]
R37 2	3.41	112	147	190	411	1.4	900	800	5500	5500
	4.05	122	153	207	346	1.1	840	750	5440	5440
	4.32	126	155	214	324	0.95	820	725	5430	5430
	5.06	135	156	230	277	0.72	790	700	5420	5420
	5.67	142	156	241	247	0.59	760	675	5420	5420
	6.67	144	166	245	210	0.43	1000	890	5320	5320
	7.97	156	205	265	176	0.96	1720	1520	4880	4880
	9.47	167	205	284	148	0.74	1760	1560	4880	4880
	10.11	170	205	289	138	0.66	1820	1620	4880	4880
	11.83	183	205	311	118	0.51	1810	1610	4880	4880
	13.25	190	205	323	106	0.43	1880	1670	4880	4880
	15.6	200	205	340	90	0.31	2010	1780	4880	4880
	18.05	200	205	340	94	0.26	2390	2120	4880	4880
	19.31	200	205	340	93	0.23	2570	2280	4880	4880
	22.27	200	205	340	99	0.19	2970	2640	4880	4880
	26.03	185	205	315	127	0.15	3860	3420	4880	4880
	28.32	200	205	340	99	0.13	3690	3270	4880	4880

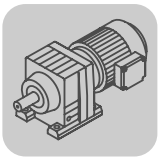

CMP.. / DS.. / CM..							F_{Ramax}		F_{Rapk}	
	i	M_{amax} [Nm]	M_{apk} [Nm]	$M_{aNotaus}$ [Nm]	n_{ak} [1/min]	$J_G\ 10^{-4}$ [kgm^2]	R [N]	RF [N]	R [N]	RF [N]
R37 3	24.42	200	205	340	70	0.53	3240	2870	4880	4880
	28.73	200	205	340	70	0.39	3740	3310	4880	4880
	32.4	200	205	340	71	0.31	4120	3650	4880	4880
	36.72	200	205	340	71	0.25	4540	4020	4880	4880
	39.17	200	205	340	71	0.23	4760	4220	4880	4880
	44.81	200	205	340	71	0.19	4940	4640	4880	4880
	48.08	200	205	340	73	0.17	4940	4870	4880	4880
	55.76	200	205	340	74	0.13	4940	4940	4880	4880
	61.18	200	205	340	75	0.26	4940	4940	4880	4880
	69.33	200	205	340	75	0.22	4940	4940	4880	4880
	73.96	200	205	340	76	0.20	4940	4940	4880	4880
	84.61	200	205	340	76	0.16	4940	4940	4880	4880
	90.77	200	205	340	76	0.15	4940	4940	4880	4880
	105.28	200	205	340	66	0.12	4940	4940	4880	4880
	123.66	200	205	340	57	0.090	4940	4940	4880	4880
	134.82	200	205	340	52	0.080	4940	4940	4880	4880

8.21 R 37 / CMP / DS / CM [mm]

01 034 00 07

R37..

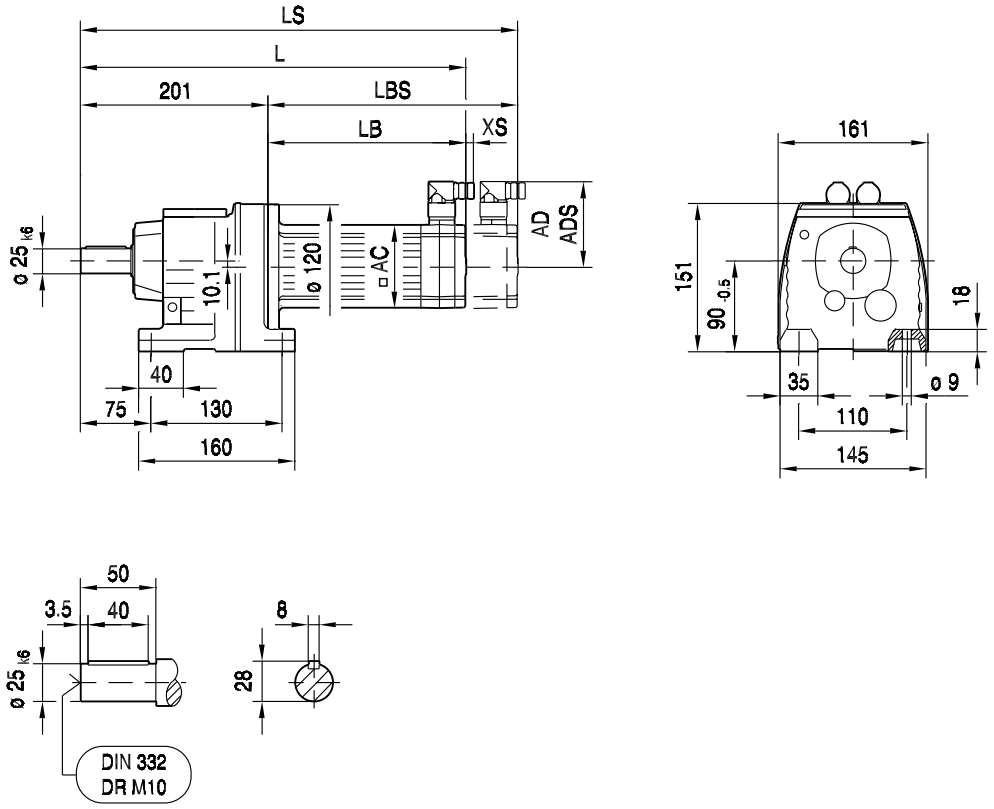

R37F..

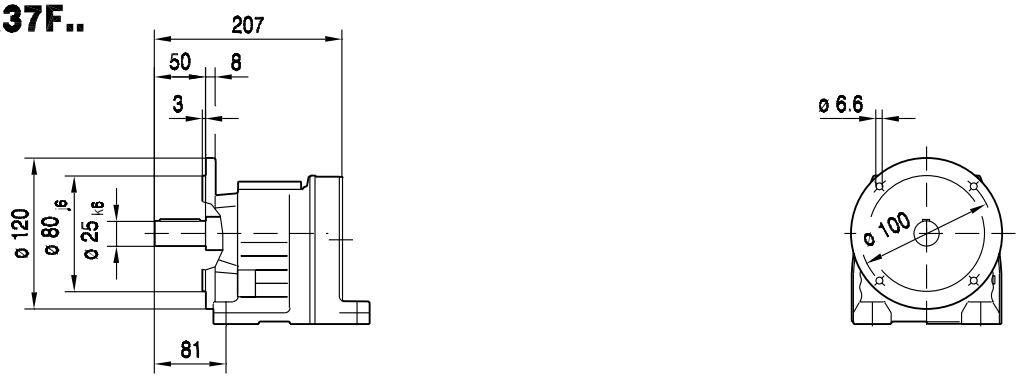

(→ 📖 150)	CMP40M	CMP50S	CMP50M	CMP50L	CMP63S	CMP63M	CMP63L	
AC	57	73	73	73	88	88	88	
AD	75	82	82	82	89	89	89	
ADS	75	82	82	82	89	89	89	
L	344	346	385	424	381	431	484	
LS	374	375	414	453	409	459	513	
LB	143	145	184	223	180	230	283	
LBS	173	174	213	252	208	258	312	
XS	19	18	18	18	14	14	14	

01 035 00 07

RF37..

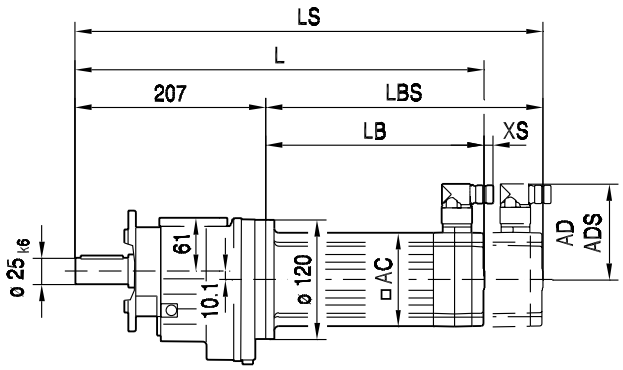

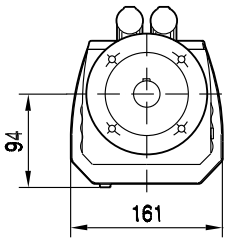

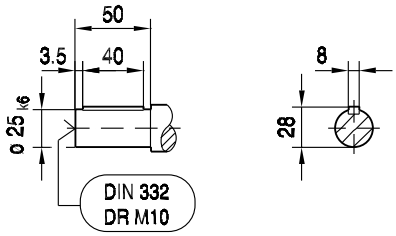

8

ø 120

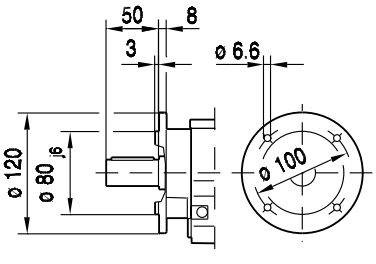

ø 160

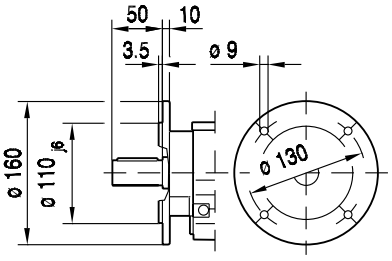

ø 200

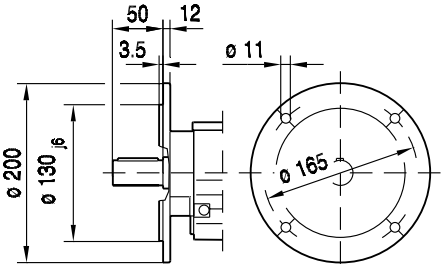

(→ 📖 150)	CMP40M	CMP50S	CMP50M	CMP50L	CMP63S	CMP63M	CMP63L	
AC	57	73	73	73	88	88	88	
AD	75	82	82	82	89	89	89	
ADS	75	82	82	82	89	89	89	
L	350	352	391	430	387	437	490	
LS	380	381	420	459	415	465	519	
LB	143	145	184	223	180	230	283	
LBS	173	174	213	252	208	258	312	
XS	19	18	18	18	14	14	14	

RZ37..

01 036 00 07

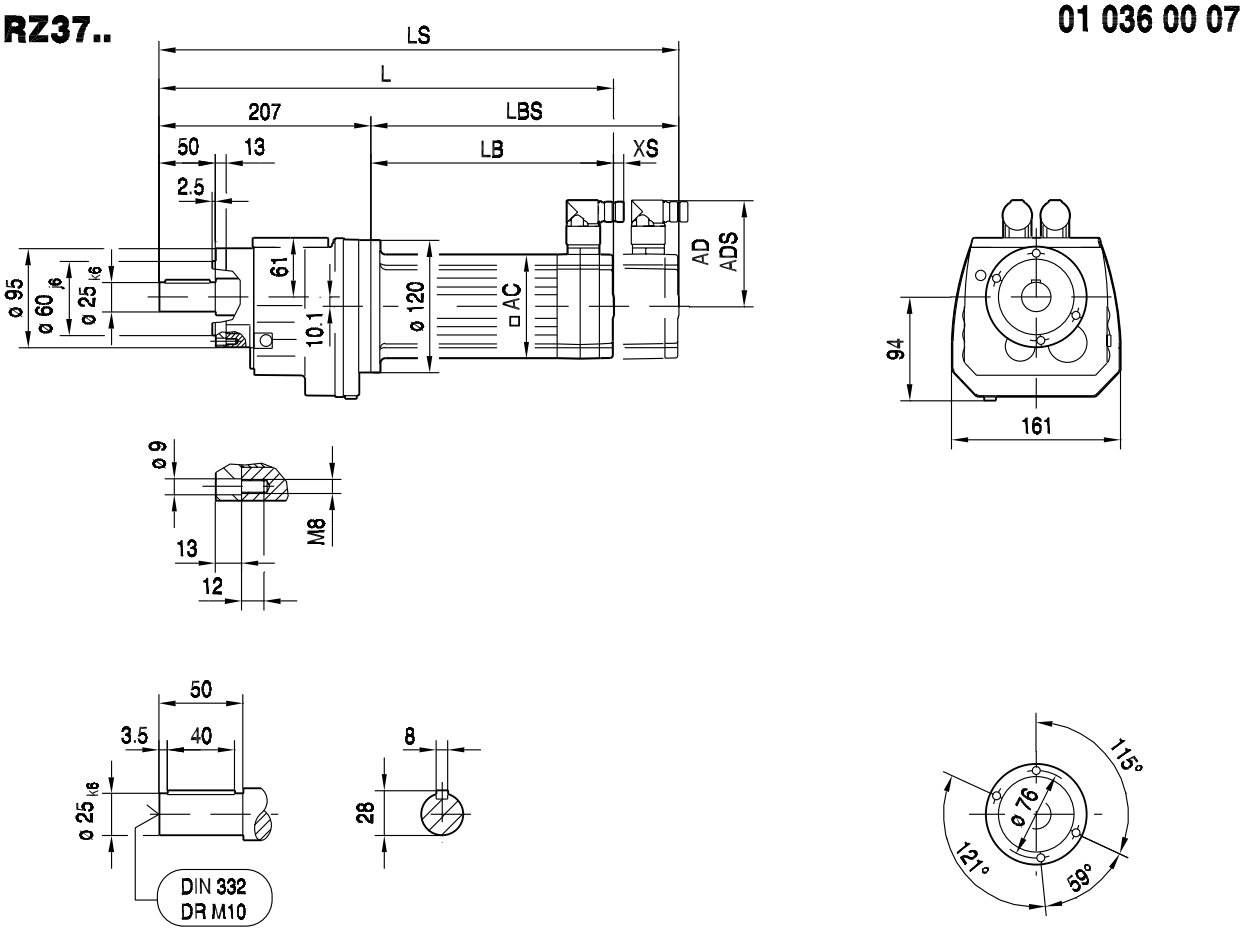

(→ 📖 150)	CMP40M	CMP50S	CMP50M	CMP50L	CMP63S	CMP63M	CMP63L	
AC	57	73	73	73	88	88	88	
AD	75	82	82	82	89	89	89	
ADS	75	82	82	82	89	89	89	
L	350	352	391	430	387	437	490	
LS	380	381	420	459	415	465	519	
LB	143	145	184	223	180	230	283	
LBS	173	174	213	252	208	258	312	
XS	19	18	18	18	14	14	14	

04 064 01 01

R37.. DS56..

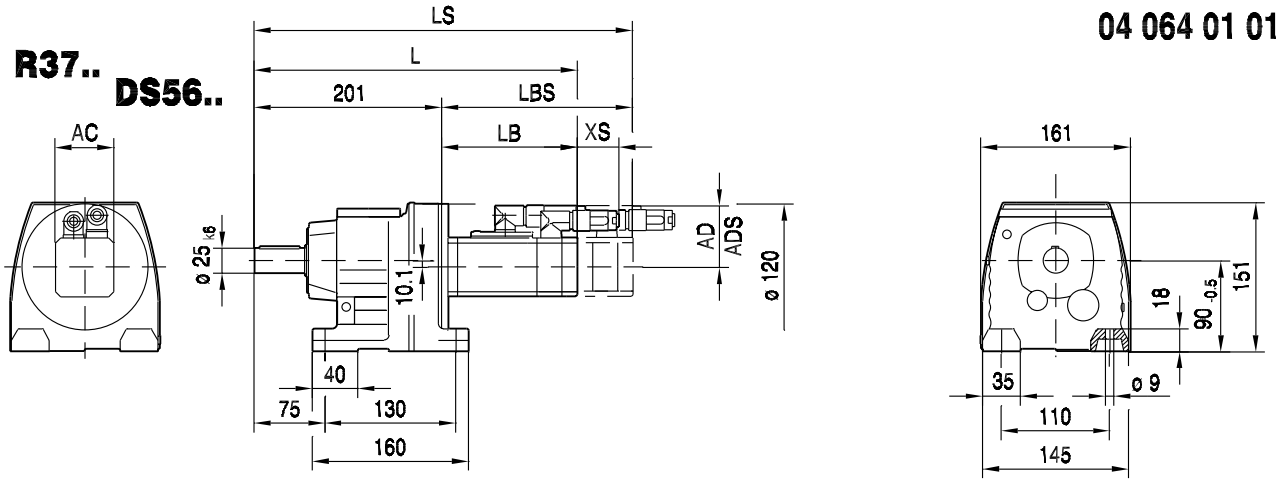

CM..

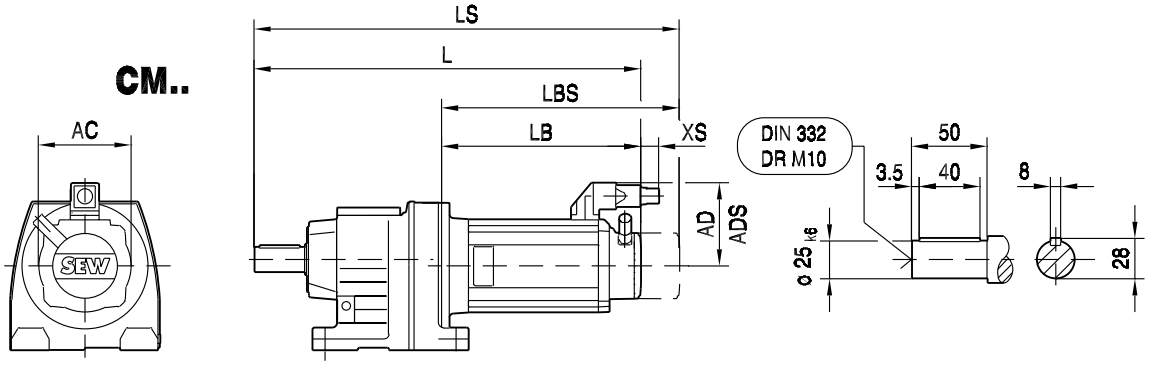

R37F..

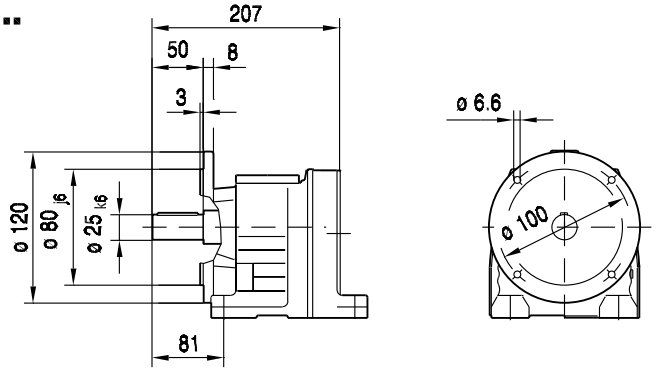

(→ 📖 150)	DS56M	DS56L	DS56H	CM71S	CM71M	CM71L	CM90S				
AC	73	73	73	117	117	117	142				
AD	71	71	77	122	122	122	140				
ADS	77	77	77	122	122	122	140				
L	338	370	473	439	459	502	494				
LS	368	400	473	521	541	584	590				
LB	137	169	272	238	258	301	293				
LBS	167	199	272	320	340	383	389				
XS	70	70	51	45	45	45	50				

04 065 01 01

RF37.. **DS56..**

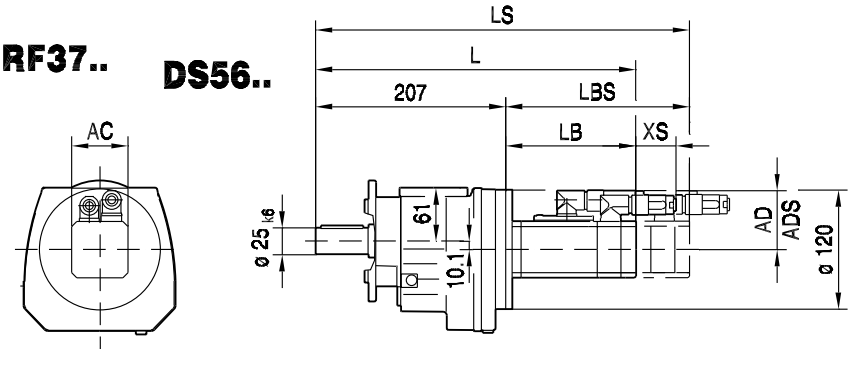

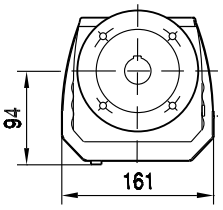

CM..

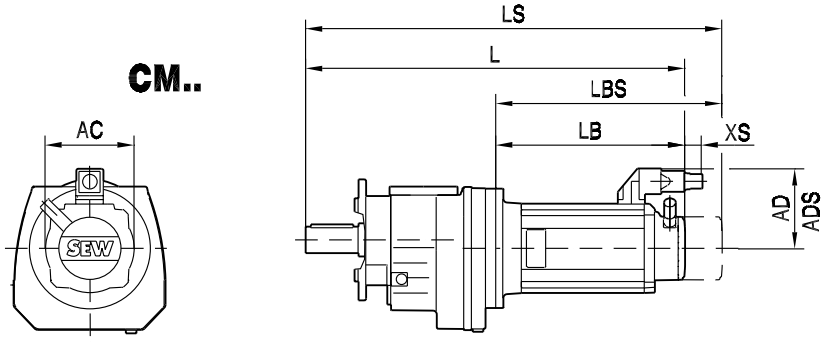

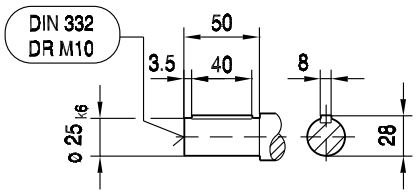

ø 120

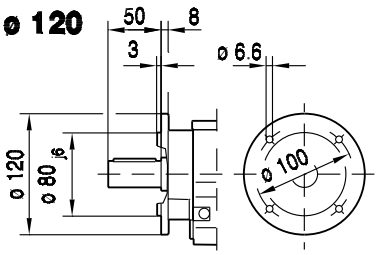

ø 160

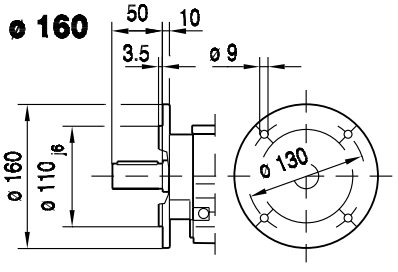

ø 200

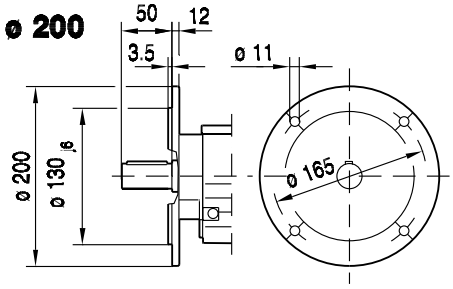

(→ 📖 150)	DS56M	DS56L	DS56H	CM71S	CM71M	CM71L	CM90S				
AC	73	73	73	117	117	117	142				
AD	71	71	77	122	122	122	140				
ADS	77	77	77	122	122	122	140				
L	344	376	479	445	465	508	500				
LS	374	406	479	527	547	590	596				
LB	137	169	272	238	258	301	293				
LBS	167	199	272	320	340	383	389				
XS	70	70	51	45	45	45	50				

8.22 R 47 / CMP / DS / CM [Nm]

M_{aDyn} [Nm]		CMP						DS			CM						
	i	50S	50M	50L	63S	63M	63L	56M	56L	56H	71S	71M	71L	90S	90M	90L	112S
R47 2	3.83	19	38	57	41	80	113	14	28	56	61	80	117	147	>166	>166	>166
	4.34	22	43	65	47	90	128	16	32	64	69	91	132	167	>170	>170	>170
	4.85	24	48	72	52	101	143	18	36	72	78	101	148	>175	>175	>175	>175
	5.64	28	56	84	61	117	166	21	42	83	90	118	172	>180	>180	>180	>180
	6	30	59	89	64	123	175	22	44	88	95	124	181	>182	>182	>182	>182
	6.96	35	69	103	74	143	>187	25	51	102	110	144	>187	>187	>187		
	7.76	39	77	115	83	159	>190	28	57	113	123	160	>190	>190	>190		
	8.01	40	79	118	85	165	234	29	58	117	127	165	241	>300	>300	>300	>300
	9.07	45	90	134	97	186	265	33	66	132	144	187	273	>305	>305	>305	>305
	10.15	51	100	150	108	209	296	37	74	148	161	209	>305	>305	>305	>305	>305
	11.79	59	117	174	126	242	>305	43	86	172	187	243	>305	>305	>305	>305	>305
	12.54	63	124	185	134	258	>305	46	91	183	199	259	>305	>305	>305	>305	>305
	14.56	73	144	215	155	299	>305	53	106	212	231	301	>305	>305	>305		
	16.22	81	160	240	173	>305	>305	59	118	237	257	>305	>305	>305	>305		
	17.89	89	177	264	191	>305		65	131	261	283	>305					
	19.27	96	191	285	205	>305	>305	70	141	281	>305	>305	>305	>305			
	21.81	109	216	>305	232	>305		80	159	>305	>305	>305					
	23.28	116	230	>305	248	>305		85	170	>305	>305	>305					
	26.74	133	264		285			98	195	>305							
	31.12	155						114	227								
	33.79	169						123	247								
R47 3	23.59	115	228	>305	246	>305	>305	84	169	>305	>305	>305	>305	>305			
	26.7	131	259	>305	279	>305	>305	95	191	>305	>305	>305	>305	>305			
	29.88	146	289	>305	>305	>305	>305	107	213	>305	>305	>305	>305	>305			
	34.73	170	>305	>305	>305	>305	>305	124	248	>305	>305	>305	>305	>305			
	36.93	181	>305	>305	>305	>305	>305	132	264	>305	>305	>305	>305	>305			
	42.87	210	>305	>305	>305	>305	>305	153	>305	>305	>305	>305	>305	>305			
	47.75	233	>305	>305	>305	>305	>305	171	>305	>305	>305	>305	>305	>305			
	52.69	258	>305	>305	>305	>305		188	>305	>305	>305	>305					
	56.73	277	>305	>305	>305	>305	>305	203	>305	>305	>305	>305	>305	>305			
	64.21	>305	>305	>305	>305	>305		227	>305	>305	>305	>305					
	68.54	>305	>305	>305	>305	>305		242	>305	>305	>305	>305					
	76.23	>305	>305	>305	>305	>305		267	>305	>305	>305	>305					
	84.9	>305	>305	>305	>305	>305		297	>305	>305	>305	>305					
	93.68	>305	>305	>305	>305	>305		>305	>305	>305	>305	>305					
	100.86	>305	>305	>305	>305	>305		>305	>305	>305	>305	>305					
	114.17	>305	>305	>305	>305	>305		>305	>305	>305	>305	>305					
	121.87	>305	>305	>305	>305	>305		>305	>305	>305	>305	>305					
	139.99	>305	>305		>305			>305	>305	>305							
	162.94	>305						>305	>305								
	176.88	>305						>305	>305								

m [kg]		CMP						DS			CM						
	s	50S	50M	50L	63S	63M	63L	56M	56L	56H	71S	71M	71L	90S	90M	90L	112S
R47	2	16	17	18	18	20	21	16	17	17	22	23	26	31	33	38	39
R47	3	17	18	19	19	20	22	16	17	18	22	23	27	31	34	39	40
RF: + 0.1 kg																	

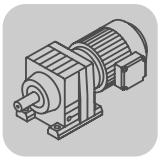

R..CMP, DS, CM
R 47 / CMP / DS / CM [Nm]

CMP.. / DS.. / CM..	i	n_{epk} [1/min]	η [%]	c_T R [Nm/']	c_T RF [Nm/']	φ /R [']
R47 2	3.83	3657	97	11.15	11.15	11
	4.34	4144	97	11.15	11.15	11
	4.85	4500	97	11.15	11.15	10
	5.64	4500	97	11.15	11.15	10
	6	4500	96	11.15	11.15	10
	6.96	4500	96	11.15	11.15	10
	7.76	4500	96	11.15	11.15	10
	8.01	4500	96	14.61	14.61	8
	9.07	4500	96	14.61	14.61	8
	10.15	4500	96	14.61	14.61	7
	11.79	4500	96	14.61	14.61	7
	12.54	4500	96	14.61	14.61	7
	14.56	4500	96	14.61	14.61	7
	16.22	4500	96	14.61	14.61	7
	17.89	4500	96	14.61	14.61	7
	19.27	4500	96	14.61	14.61	7
	21.81	4500	96	14.61	14.61	7
	23.28	4500	96	14.61	14.61	7
	26.74	4500	96	14.61	14.61	7
	31.12	4500	96	14.61	14.61	7
	33.79	4500	96	14.61	14.61	7
R47 3	23.59	4500	94	15.16	15.16	8
	26.7	4500	94	15.16	15.16	8
	29.88	4500	94	15.16	15.16	8
	34.73	4500	94	15.16	15.16	8
	36.93	4500	94	15.16	15.16	8
	42.87	4500	94	15.16	15.16	8
	47.75	4500	94	15.16	15.16	8
	52.69	4500	94	15.16	15.16	8
	56.73	4500	94	15.16	15.16	8
	64.21	4500	93	15.16	15.16	8
	68.54	4500	93	15.16	15.16	8
	76.23	4500	92	15.19	15.19	7
	84.9	4500	92	15.19	15.19	7
	93.68	4500	92	15.19	15.19	7
	100.86	4500	92	15.19	15.19	7
	114.17	4500	92	15.19	15.19	7
	121.87	4500	92	15.19	15.19	7
	139.99	4500	92	15.19	15.19	7
	162.94	4500	91	15.19	15.19	7
	176.88	4500	91	15.19	15.19	7

CMP.. / DS.. / CM..							F_{Ramax}		F_{Rapk}	
	i	M_{amax} [Nm]	M_{apk} [Nm]	$M_{aNotaus}$ [Nm]	n_{ak} [1/min]	J_G 10^{-4} [kgm^2]	R [N]	RF [N]	R [N]	RF [N]
R47 2	3.83	144	166	245	392	2.6	2080	2080	5960	5960
	4.34	146	170	248	415	2.0	2190	2190	5940	5940
	4.85	150	175	255	392	1.7	2280	2280	5930	5930
	5.64	155	180	264	372	1.3	2410	2410	5920	5920
	6	156	182	265	383	1.2	2470	2470	5910	5910
	6.96	159	187	270	374	0.93	2620	2620	5890	5890
	7.76	163	190	277	361	0.77	2720	2720	5880	5880
	8.01	205	300	349	200	2.0	2690	2690	5420	5420
	9.07	220	305	374	165	1.6	2780	2780	5390	5390
	10.15	230	305	391	158	1.3	2880	2880	5390	5390
	11.79	245	305	417	136	1.0	3020	3020	5390	5390
	12.54	250	305	425	128	0.95	3080	3080	5390	5390
	14.56	265	305	451	110	0.74	3230	3230	5390	5390
	16.22	275	305	468	99	0.63	3350	3350	5390	5390
	17.89	290	305	493	84	0.51	3390	3390	5390	5390
	19.27	295	305	502	83	0.48	3530	3530	5390	5390
	21.81	300	305	510	78	0.39	3710	3710	5390	5390
	23.28	300	305	510	82	0.36	3820	3820	5390	5390
	26.74	300	305	510	82	0.29	4050	4050	5390	5390
	31.12	220	305	374	212	0.23	4610	4610	5390	5390
	33.79	240	305	408	163	0.20	4680	4680	5390	5390
R47 3	23.59	300	305	510	85	1.7	3840	3840	5390	5390
	26.7	300	305	510	86	1.4	4050	4050	5390	5390
	29.88	300	305	510	84	1.2	4240	4240	5390	5390
	34.73	300	305	510	84	0.93	4520	4520	5390	5390
	36.93	300	305	510	84	0.85	4630	4630	5390	5390
	42.87	300	305	510	86	0.67	4930	4930	5390	5390
	47.75	300	305	510	86	0.56	5140	5140	5390	5390
	52.69	300	305	510	85	0.47	5350	5350	5390	5390
	56.73	300	305	510	85	0.44	5420	5420	5390	5390
	64.21	300	305	510	86	0.37	5420	5420	5390	5390
	68.54	300	305	510	86	0.33	5420	5420	5390	5390
	76.23	300	305	510	89	0.60	5420	5420	5390	5390
	84.9	300	305	510	82	0.52	5420	5420	5390	5390
	93.68	300	305	510	75	0.43	5420	5420	5390	5390
	100.86	300	305	510	69	0.41	5420	5420	5390	5390
	114.17	300	305	510	61	0.34	5420	5420	5390	5390
	121.87	300	305	510	57	0.31	5420	5420	5390	5390
	139.99	300	305	510	50	0.25	5420	5420	5390	5390
	162.94	300	305	510	43	0.20	5420	5420	5390	5390
	176.88	300	305	510	40	0.18	5420	5420	5390	5390

8.23 R 47 / CMP / DS / CM [mm]

01 037 00 07

R47..

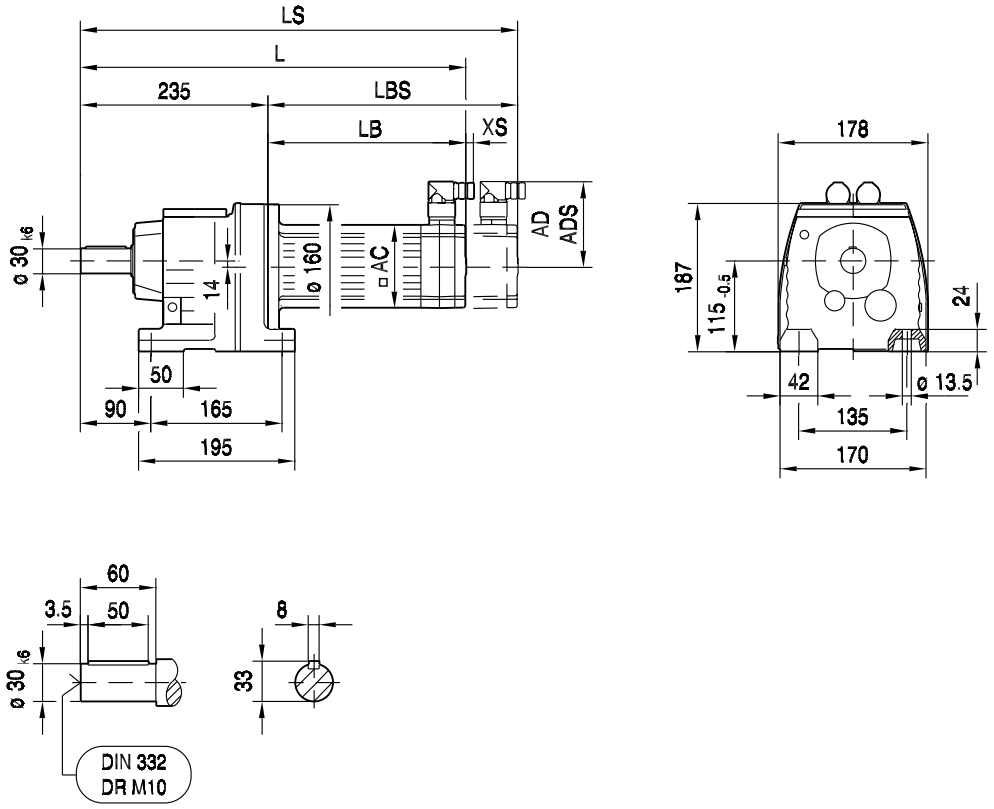

R47F..

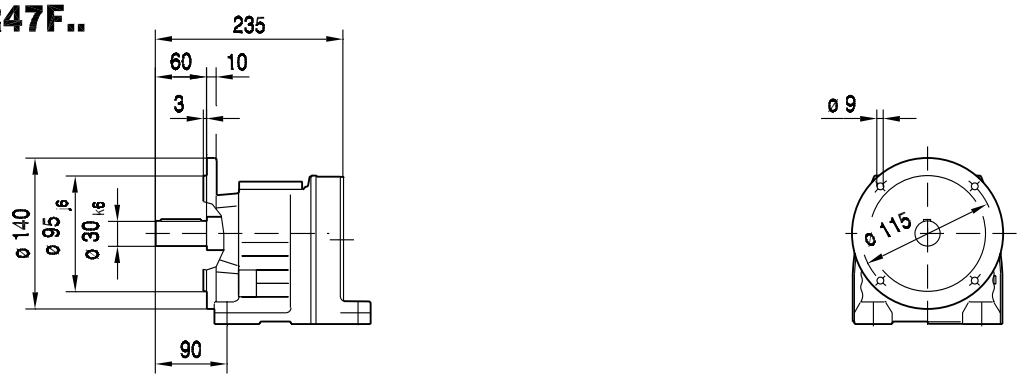

(→ 📖 150)	CMP50S	CMP50M	CMP50L	CMP63S	CMP63M	CMP63L		
AC	73	73	73	88	88	88		
AD	82	82	82	89	89	89		
ADS	82	82	82	89	89	89		
L	374	413	452	408	458	508		
LS	403	442	481	437	487	537		
LB	139	178	217	173	223	273		
LBS	168	207	246	202	252	302		
XS	18	18	18	14	14	14		

01 038 00 07

RF47..

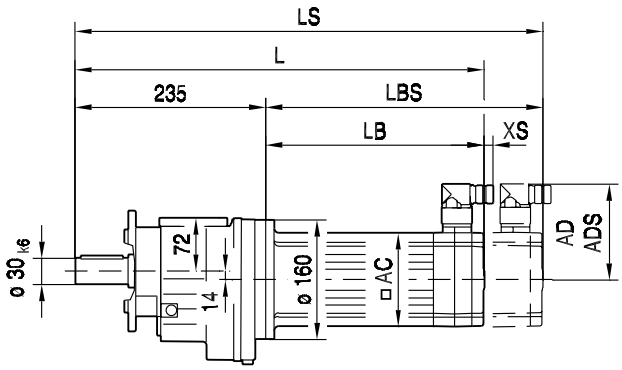

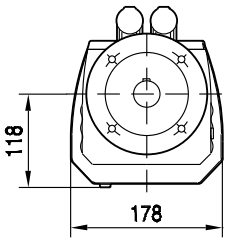

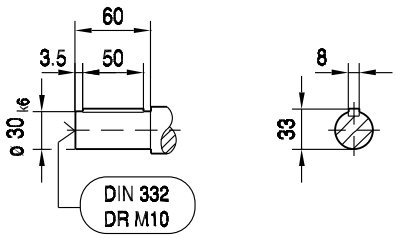

8

ø 140

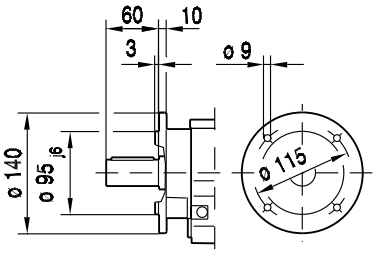

ø 160

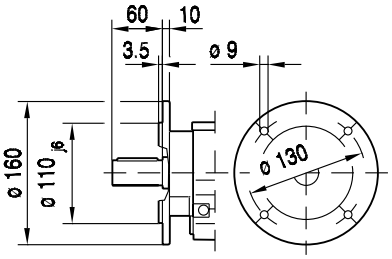

ø 200

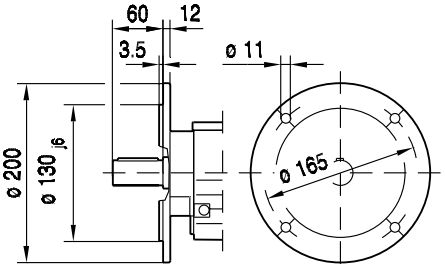

(→ 150)	CMP50S	CMP50M	CMP50L	CMP63S	CMP63M	CMP63L		
AC	73	73	73	88	88	88		
AD	82	82	82	89	89	89		
ADS	82	82	82	89	89	89		
L	374	413	452	408	458	508		
LS	403	442	481	437	487	537		
LB	139	178	217	173	223	273		
LBS	168	207	246	202	252	302		
XS	18	18	18	14	14	14		

RZ47..

01 039 00 07

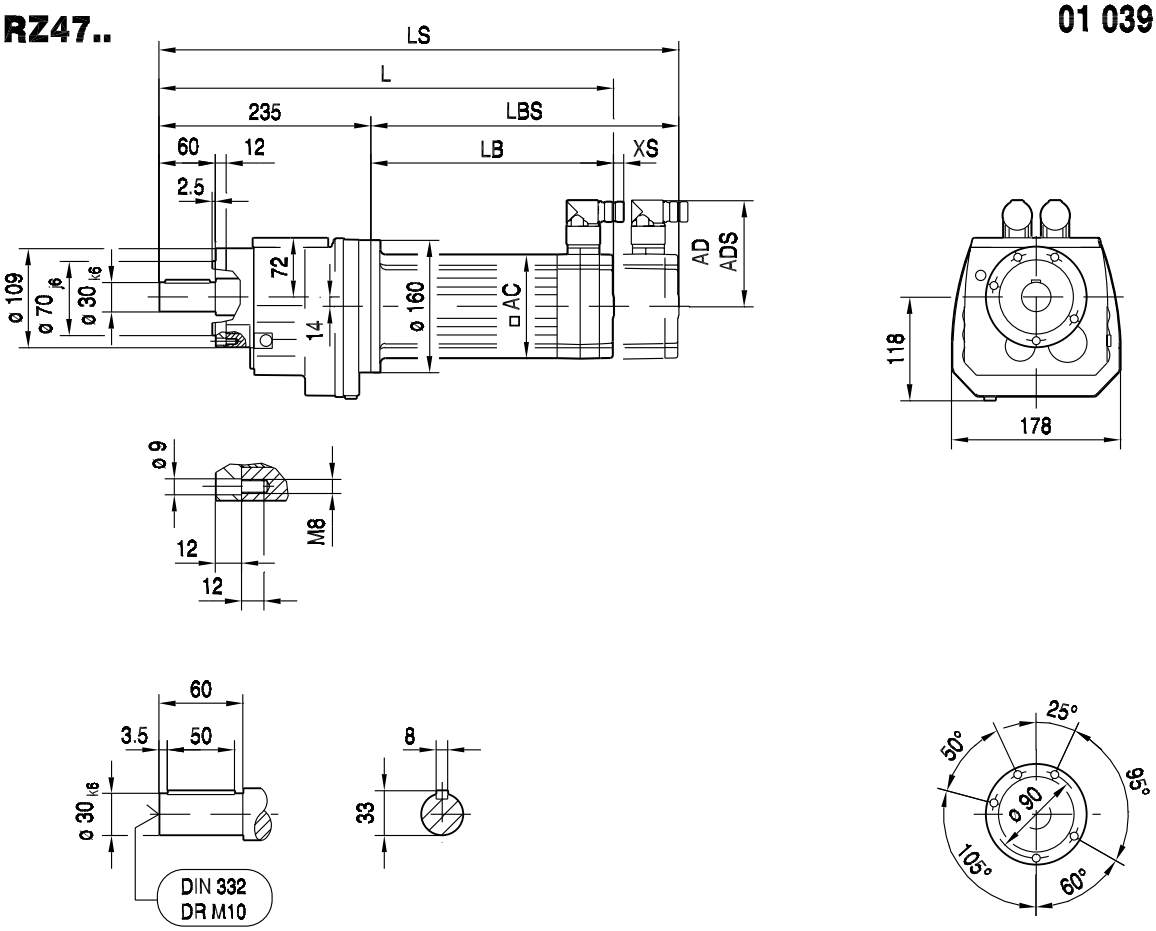

(→ 📖 150)	CMP50S	CMP50M	CMP50L	CMP63S	CMP63M	CMP63L		
AC	73	73	73	88	88	88		
AD	82	82	82	89	89	89		
ADS	82	82	82	89	89	89		
L	374	413	452	408	458	508		
LS	403	442	481	437	487	537		
LB	139	178	217	173	223	273		
LBS	168	207	246	202	252	302		
XS	18	18	18	14	14	14		

04 066 01 01

R47.. DS56..

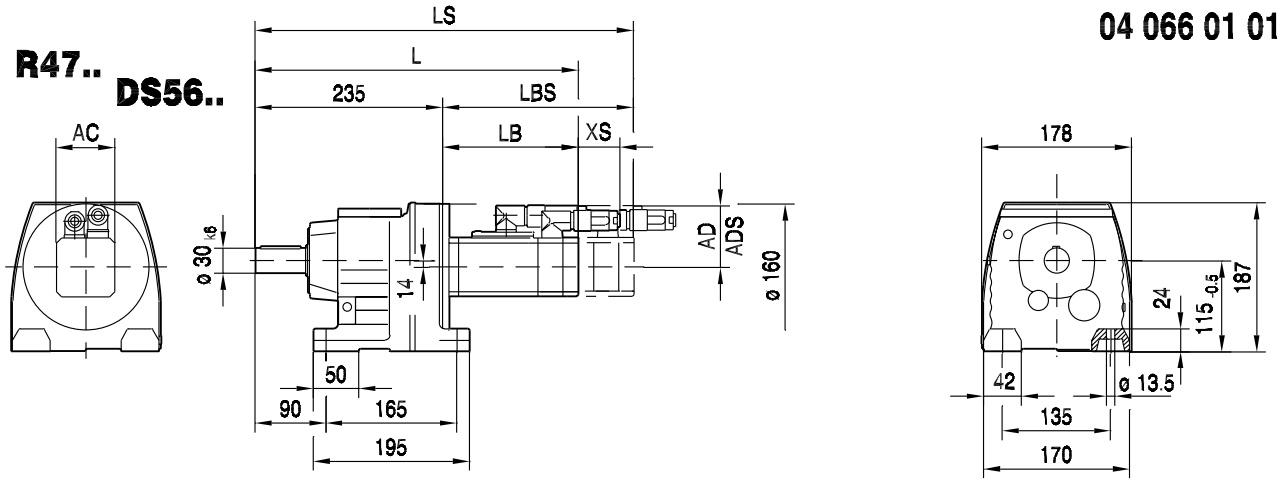

CM..

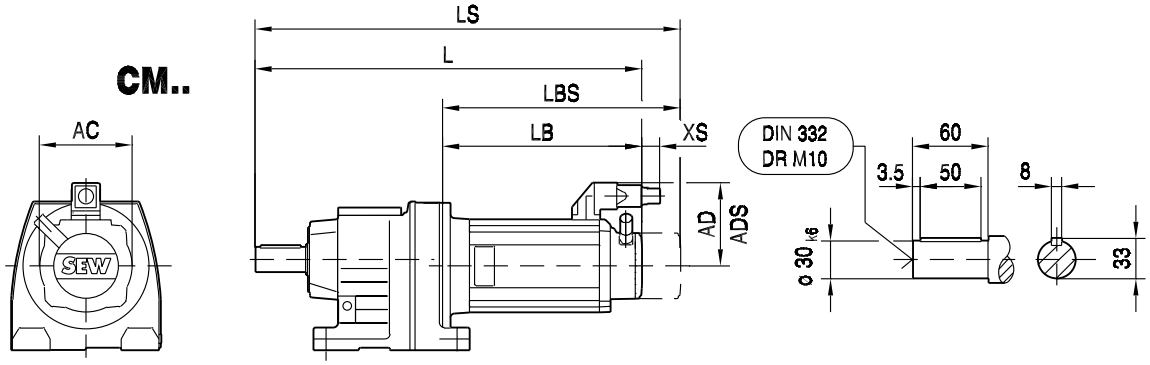

R47F..

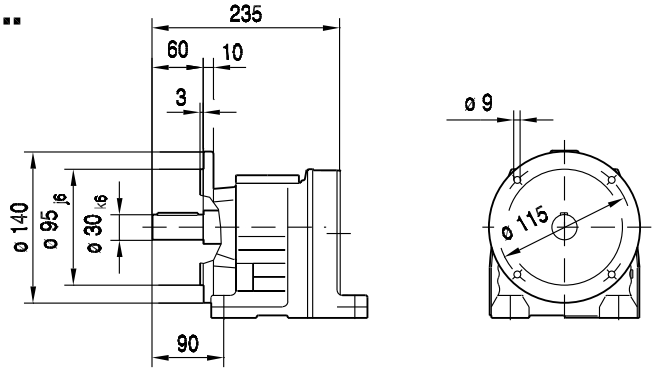

(→ 150)	DS56H	CM71S	CM71M	CM71L	CM90S	CM90M	CM90L	CM112S			
AC	73	117	117	117	142	142	142	186			
AD	77	122	122	122	140	140	140	162			
ADS	77	122	122	122	140	140	140	162			
L	501	467	487	527	519	546	604	559			
LS	501	549	569	609	615	642	700	649			
LB	266	232	252	292	284	311	369	324			
LBS	266	314	334	374	380	407	465	414			
XS	51	45	45	45	50	50	50	36			

04 067 01 01

RF47.. **DS56..**

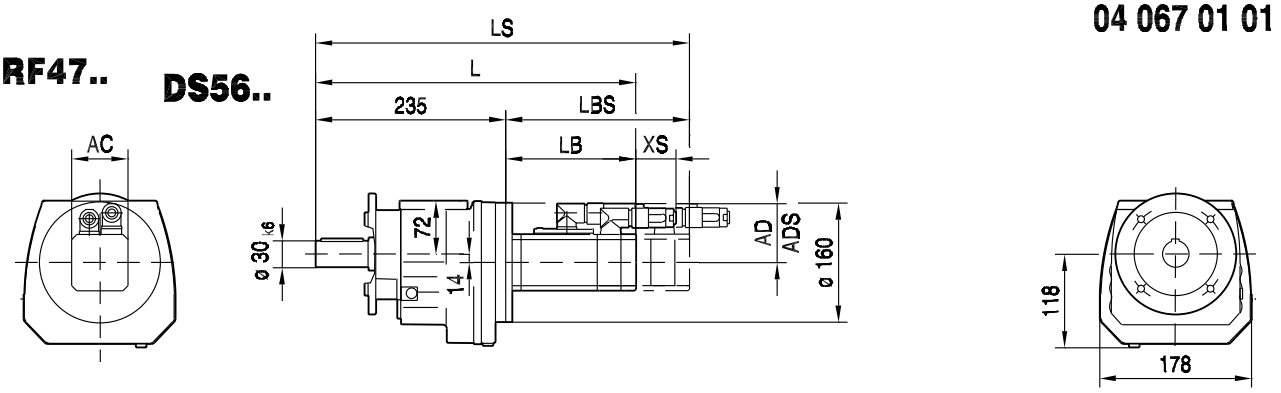

CM..

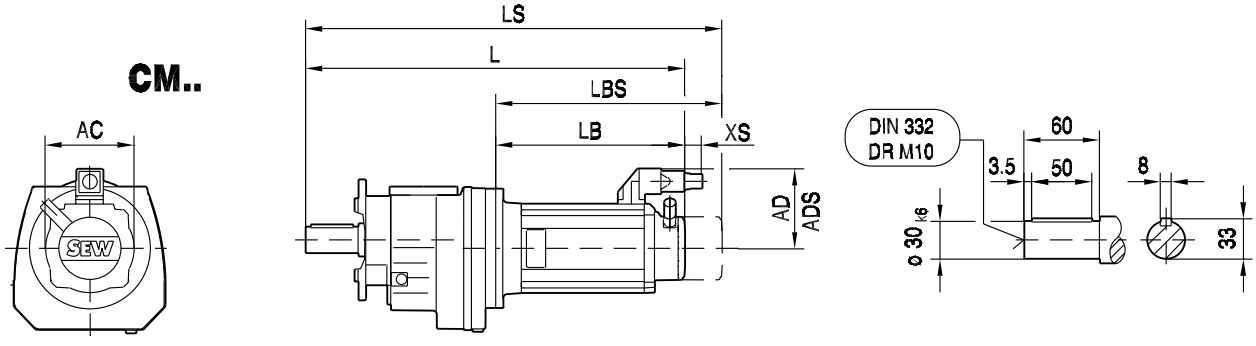

ø 140

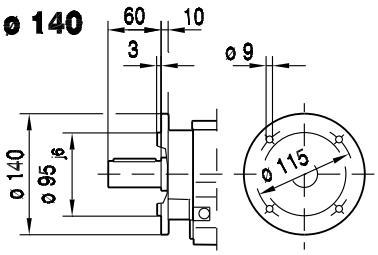

ø 160

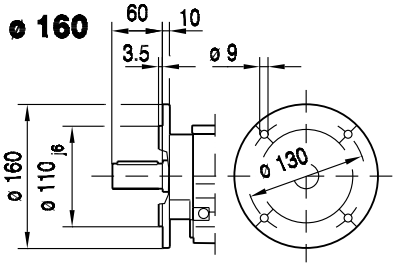

ø 200

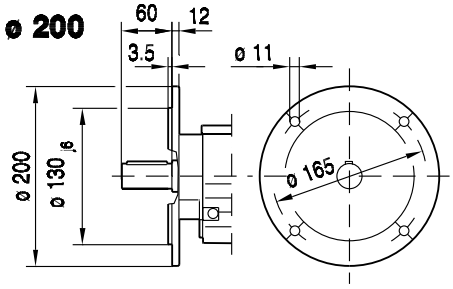

(→ 📖 150)	DS56H	CM71S	CM71M	CM71L	CM90S	CM90M	CM90L	CM112S			
AC	73	117	117	117	142	142	142	186			
AD	77	122	122	122	140	140	140	162			
ADS	77	122	122	122	140	140	140	162			
L	501	467	487	527	519	546	604	559			
LS	501	549	569	609	615	642	700	649			
LB	266	232	252	292	284	311	369	324			
LBS	266	314	334	374	380	407	465	414			
XS	51	45	45	45	50	50	50	36			

8.24 R 57 / CMP / DS / CM [Nm]

M_{aDyn} [Nm]		CMP						DS			CM							
	i	50S	50M	50L	63S	63M	63L	56M	56L	56H	71S	71M	71L	90S	90M	90L	112S	112M
R57 2	4.39		44	66	47	91	129			65	70	92	134	169	222	322	350	>420
	5.05	25	50	75	54	105	149	19	37	74	81	105	154	194	256	370	403	>425
	5.82	29	58	87	63	121	172	21	43	86	93	121	177	224	295	>425	>425	>425
	6.41	32	64	96	69	133	189	24	47	95	103	134	195	246	325	>425	>425	
	7.53	38	75	112	81	156	222	28	56	111	121	157	229	289	381	>425	>425	
	7.97	40	80	119	86	165	235	29	59	118	128	166	243	306	404	>425	>425	
	9.06	46	91	135	98	188	267	33	67	134	145	189	276	348	>425			
	9.35	47	93	140	101	194	276	34	69	138	150	195	285	359	>455	>455	>455	>455
	10.79	54	108	161	116	224	318	40	80	159	173	225	329	414	>455	>455	>455	>455
	11.88	60	119	177	128	247	350	44	88	175	190	248	362	>455	>455	>455	>455	
	13.95	70	139	208	150	290	411	51	103	206	223	291	425	>455	>455	>455	>455	
	14.77	74	148	221	159	307	436	54	109	218	236	308	450	>455	>455	>455	>455	
	16.79	85	168	251	181	349	>455	62	124	248	269	350	>455	>455	>455			
	18.6	94	186	278	200	386	>455	69	137	274	298	388	>455	>455	>455			
	21.93	111	219	328	236	>455	>455	81	162	323	351	>455	>455	>455				
	24.99	126	250	373	269	>455		92	184	368	400	>455						
	26.31	133	263	393	283	>455		97	194	388	421	>455						
R57 3	26.97	133	264	395	284	>455	>455	97	195	389	423	>455	>455	>455	>455	>455	>455	
	30.18	149	295	442	318	>455	>455	109	218	436	>455	>455	>455	>455	>455	>455	>455	
	35.07	173	343	>455	370	>455	>455	127	253	>455	>455	>455	>455	>455	>455	>455	>455	
	37.3	184	365	>455	393	>455	>455	135	269	>455	>455	>455	>455	>455	>455	>455	>455	
	43.3	214	424	>455	>455	>455	>455	156	313	>455	>455	>455	>455	>455	>455			
	48.23	238	>455	>455	>455	>455	>455	174	348	>455	>455	>455	>455	>455	>455			
	53.22	263	>455	>455	>455	>455		192	384	>455	>455	>455						
	57.29	283	>455	>455	>455	>455	>455	207	414	>455	>455	>455	>455	>455				
	64.85	320	>455	>455	>455	>455		234	>455	>455	>455	>455						
	69.23	342	>455	>455	>455	>455		250	>455	>455	>455	>455						
	80.55	394	>455	>455	>455	>455	>455	288	>455	>455	>455	>455	>455	>455	>455			
	89.71	439	>455	>455	>455	>455	>455	320	>455	>455	>455	>455	>455	>455	>455			
	98.99	>455	>455	>455	>455	>455		354	>455	>455	>455	>455						
	106.58	>455	>455	>455	>455	>455	>455	381	>455	>455	>455	>455	>455	>455				
	120.63	>455	>455	>455	>455	>455		431	>455	>455	>455	>455						
	128.77	>455	>455	>455	>455	>455		>455	>455	>455	>455	>455						
	147.92	>455	>455		>455			>455	>455	>455								
	172.17	>455						>455	>455									
	186.89	>455						>455	>455									

m [kg]		CMP						DS			CM							
	s	50S	50M	50L	63S	63M	63L	56M	56L	56H	71S	71M	71L	90S	90M	90L	112S	112M
R57	2	21	22	23	23	25	26	20	21	22	26	28	31	35	38	43	44	49
R57	3	22	23	24	24	26	27	21	22	23	27	29	32	36	39	44	45	50
RF: + 3.4 kg / RM: + 15.4 kg																		

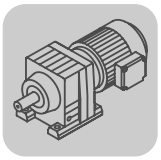

R..CMP, DS, CM
R 57 / CMP / DS / CM [Nm]

CMP.. / DS.. / CM..	i	n_{epk} [1/min]	η [%]	c_T R [Nm/°]	c_T RF [Nm/°]	c_T RM [Nm/°]	φ /R [°]
R57 2	4.39	4500	97	21.0	21.0	16.94	10
	5.05	4500	97	21.0	21.0	16.94	10
	5.82	4500	97	21.0	21.0	16.94	10
	6.41	4500	97	21.0	21.0	16.94	9
	7.53	4500	97	21.0	21.0	16.94	9
	7.97	4500	97	21.0	21.0	16.94	9
	9.06	4500	97	21.0	21.0	16.94	9
	9.35	4500	97	25.46	25.46	19.73	7
	10.79	4500	97	25.46	25.46	19.73	7
	11.88	4500	97	25.46	25.46	19.73	7
	13.95	4500	97	25.46	25.46	19.73	7
	14.77	4500	97	25.46	25.46	19.73	7
	16.79	4500	97	25.46	25.46	19.73	7
	18.6	4500	97	25.46	25.46	19.73	7
	21.93	4500	97	25.46	25.46	19.73	7
	24.99	4500	97	25.46	25.46	19.73	6
	26.31	4500	97	25.46	25.46	19.73	6
R57 3	26.97	4500	95	26.36	26.36	20.26	8
	30.18	4500	95	26.36	26.36	20.26	8
	35.07	4500	95	26.36	26.36	20.26	8
	37.3	4500	95	26.36	26.36	20.26	8
	43.3	4500	95	26.36	26.36	20.26	8
	48.23	4500	95	26.36	26.36	20.26	8
	53.22	4500	95	26.36	26.36	20.26	8
	57.29	4500	95	26.36	26.36	20.26	8
	64.85	4500	95	26.36	26.36	20.26	8
	69.23	4500	95	26.36	26.36	20.26	7
	80.55	4500	94	26.42	26.42	20.3	7
	89.71	4500	94	26.42	26.42	20.3	7
	98.99	4500	94	26.42	26.42	20.3	7
	106.58	4500	94	26.42	26.42	20.3	7
	120.63	4500	94	26.42	26.42	20.3	7
	128.77	4500	94	26.42	26.42	20.3	7
	147.92	4500	94	26.42	26.42	20.3	7
	172.17	4500	93	26.42	26.42	20.3	7
	186.89	4500	93	26.42	26.42	20.3	7

CMP.. / DS.. / CM..	i	M_{amax} [Nm]	M_{apk} [Nm]	$M_{aNotaus}$ [Nm]	n_{ak} [1/min]	J_G 10^{-4} [kgm^2]	F_{Ramax} R [N]	F_{Ramax} RF [N]	F_{Ramax} RM [N]	F_{Rapk} R [N]	F_{Rapk} RF [N]	F_{Rapk} RM [N]
R57 2	4.39	280	420	476	319	4.3	1900	1900	4000	7230	7230	4000
	5.05	305	425	519	277	3.4	1730	1730	4000	7210	7210	4000
	5.82	320	425	544	241	2.7	1820	1820	4000	7210	7210	4000
	6.41	335	425	570	218	2.3	1770	1770	4000	7210	7210	4000
	7.53	350	425	595	226	1.8	1950	1950	4000	7210	7210	4000
	7.97	355	425	604	213	1.6	2020	2020	4000	7210	7210	4000
	9.06	375	425	638	188	1.3	2010	2010	4000	7210	7210	4000
	9.35	370	455	629	193	2.8	3180	3180	4000	7080	7080	4000
	10.79	390	455	663	167	2.2	3330	3330	4000	7080	7080	4000
	11.88	405	455	689	143	1.9	3430	3430	4000	7080	7080	4000
	13.95	430	455	731	122	1.6	3610	3610	4000	7080	7080	4000
	14.77	435	455	740	115	1.4	3690	3690	4000	7080	7080	4000
	16.79	450	455	765	107	1.1	3860	3860	4000	7080	7080	4000
	18.6	450	455	765	108	0.94	4050	4050	4000	7080	7080	4000
	21.93	450	455	765	109	0.73	4370	4370	4000	7080	7080	4000
	24.99	450	455	765	108	0.51	4640	4640	4000	7080	7080	4000
	26.31	450	455	765	110	0.45	4750	4750	4000	7080	7080	4000

CMP.. / DS.. / CM..							F_{Ramax}			F_{Rapk}		
	i	M_{amax} [Nm]	M_{apk} [Nm]	$M_{aNotaus}$ [Nm]	n_{ak} [1/min]	$J_G\ 10^{-4}$ [kgm^2]	R [N]	RF [N]	RM [N]	R [N]	RF [N]	RM [N]
R57 3	26.97	450	455	765	63	1.5	4800	4800	4000	7080	7080	4000
	30.18	450	455	765	63	1.3	5040	5040	4000	7080	7080	4000
	35.07	450	455	765	66	0.97	5390	5390	4000	7080	7080	4000
	37.3	450	455	765	64	0.89	5530	5530	4000	7080	7080	4000
	43.3	450	455	765	65	0.70	5900	5900	4000	7080	7080	4000
	48.23	450	455	765	64	0.60	6170	6170	4000	7080	7080	4000
	53.22	450	455	765	66	0.49	6430	6430	4000	7080	7080	4000
	57.29	450	455	765	65	0.46	6630	6630	4000	7080	7080	4000
	64.85	450	455	765	65	0.38	6980	6980	4000	7080	7080	4000
	69.23	450	455	765	65	0.35	7100	7100	4000	7080	7080	4000
	80.55	450	455	765	56	0.62	7100	7100	4000	7080	7080	4000
	89.71	450	455	765	56	0.54	7100	7100	4000	7080	7080	4000
	98.99	450	455	765	56	0.45	7100	7100	4000	7080	7080	4000
	106.58	450	455	765	55	0.42	7100	7100	4000	7080	7080	4000
	120.63	450	455	765	56	0.35	7100	7100	4000	7080	7080	4000
	128.77	450	455	765	54	0.32	7100	7100	4000	7080	7080	4000
	147.92	450	455	765	47	0.26	7100	7100	4000	7080	7080	4000
	172.17	450	455	765	41	0.21	7100	7100	4000	7080	7080	4000
	186.89	450	455	765	37	0.18	7100	7100	4000	7080	7080	4000

8.25 R 57 / CMP / DS / CM [mm]

01 040 00 07

R57..

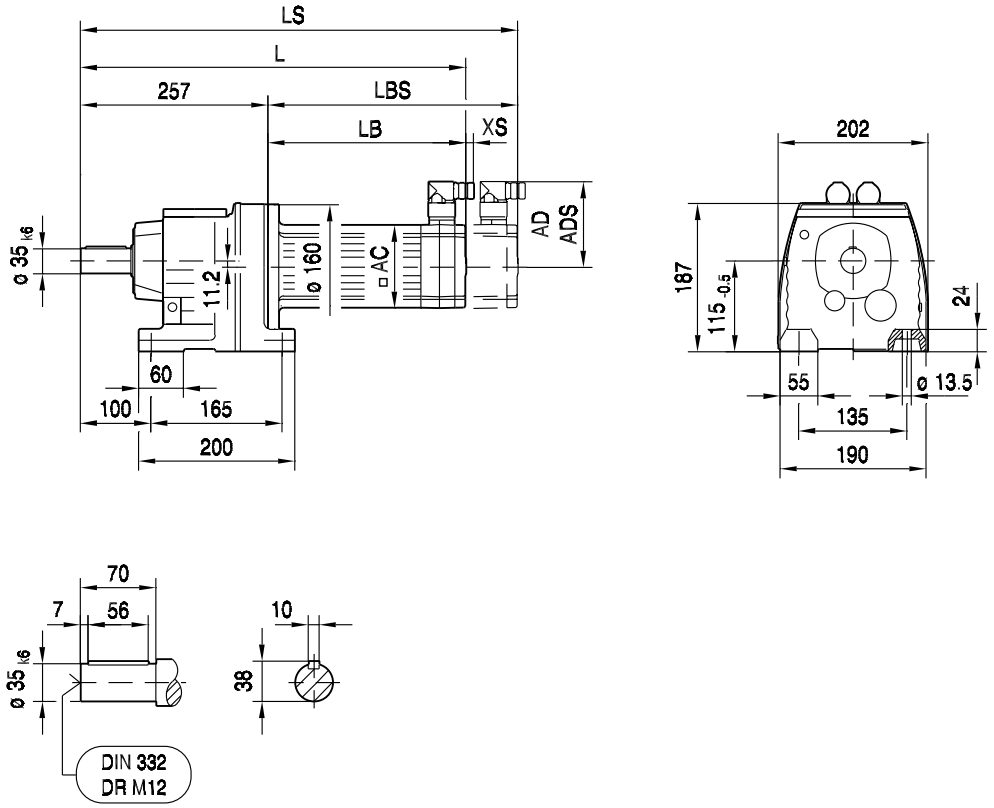

R57F..

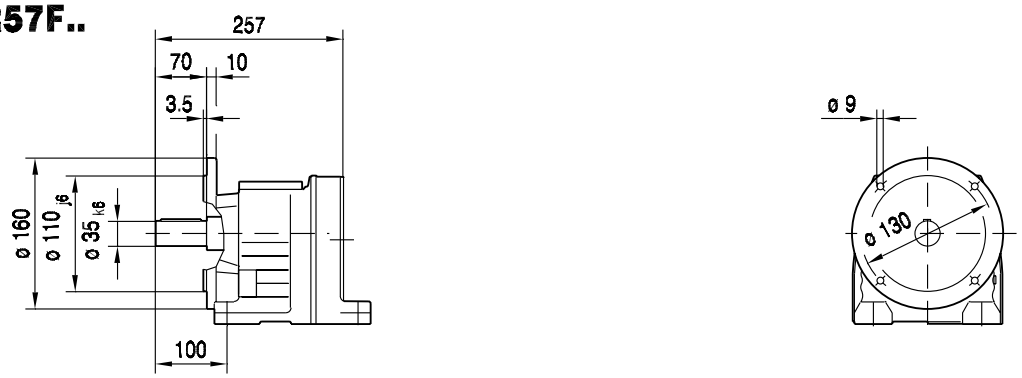

(→ 📖 150)	CMP50S	CMP50M	CMP50L	CMP63S	CMP63M	CMP63L		
AC	73	73	73	88	88	88		
AD	82	82	82	89	89	89		
ADS	82	82	82	89	89	89		
L	396	435	474	430	480	530		
LS	425	464	503	459	509	559		
LB	139	178	217	173	223	273		
LBS	168	207	246	202	252	302		
XS	18	18	18	14	14	14		

RF57..

01 041 00 07

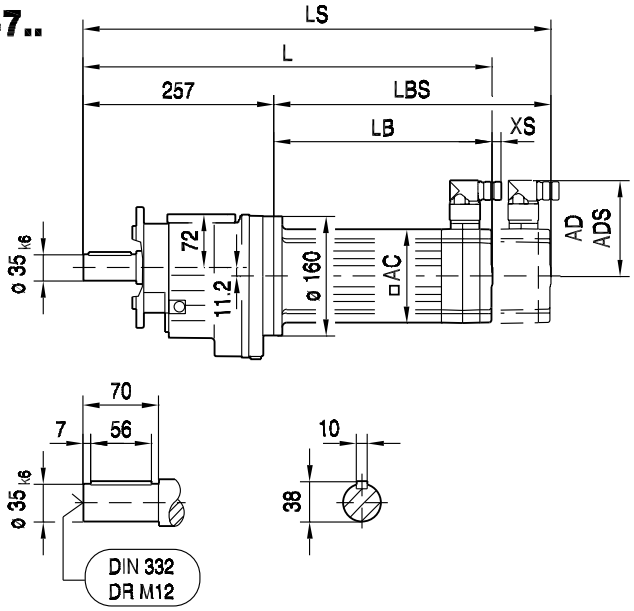

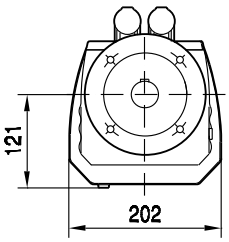

ø 160

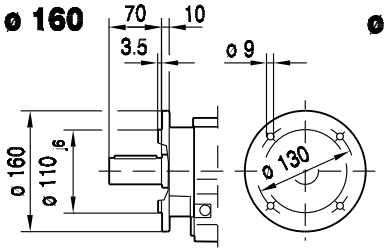

ø 200

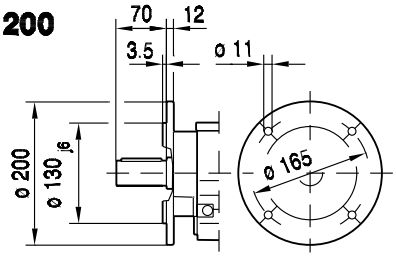

ø 250

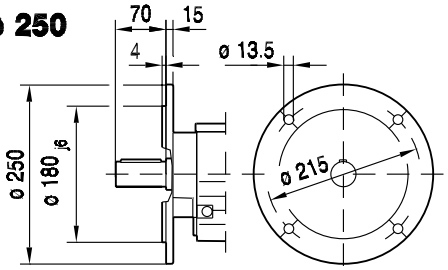

RM57..

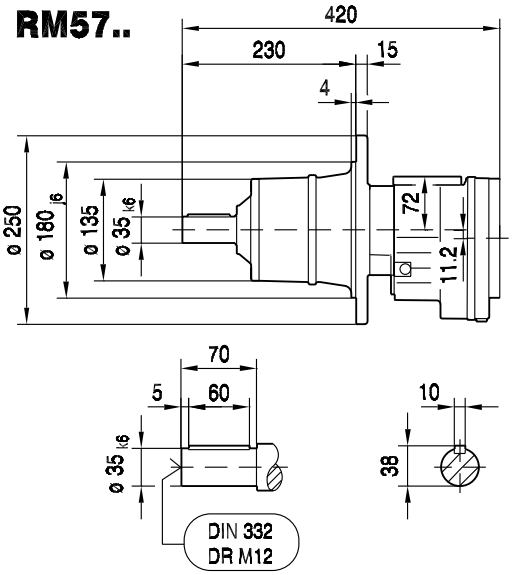

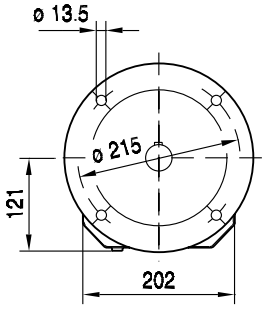

(→ 📖 150)	CMP50S	CMP50M	CMP50L	CMP63S	CMP63M	CMP63L		
AC	73	73	73	88	88	88		
AD	82	82	82	89	89	89		
ADS	82	82	82	89	89	89		
L	396	435	474	430	480	530		
LS	425	464	503	459	509	559		
LB	139	178	217	173	223	273		
LBS	168	207	246	202	252	302		
XS	18	18	18	14	14	14		

RZ57..

01 042 00 07

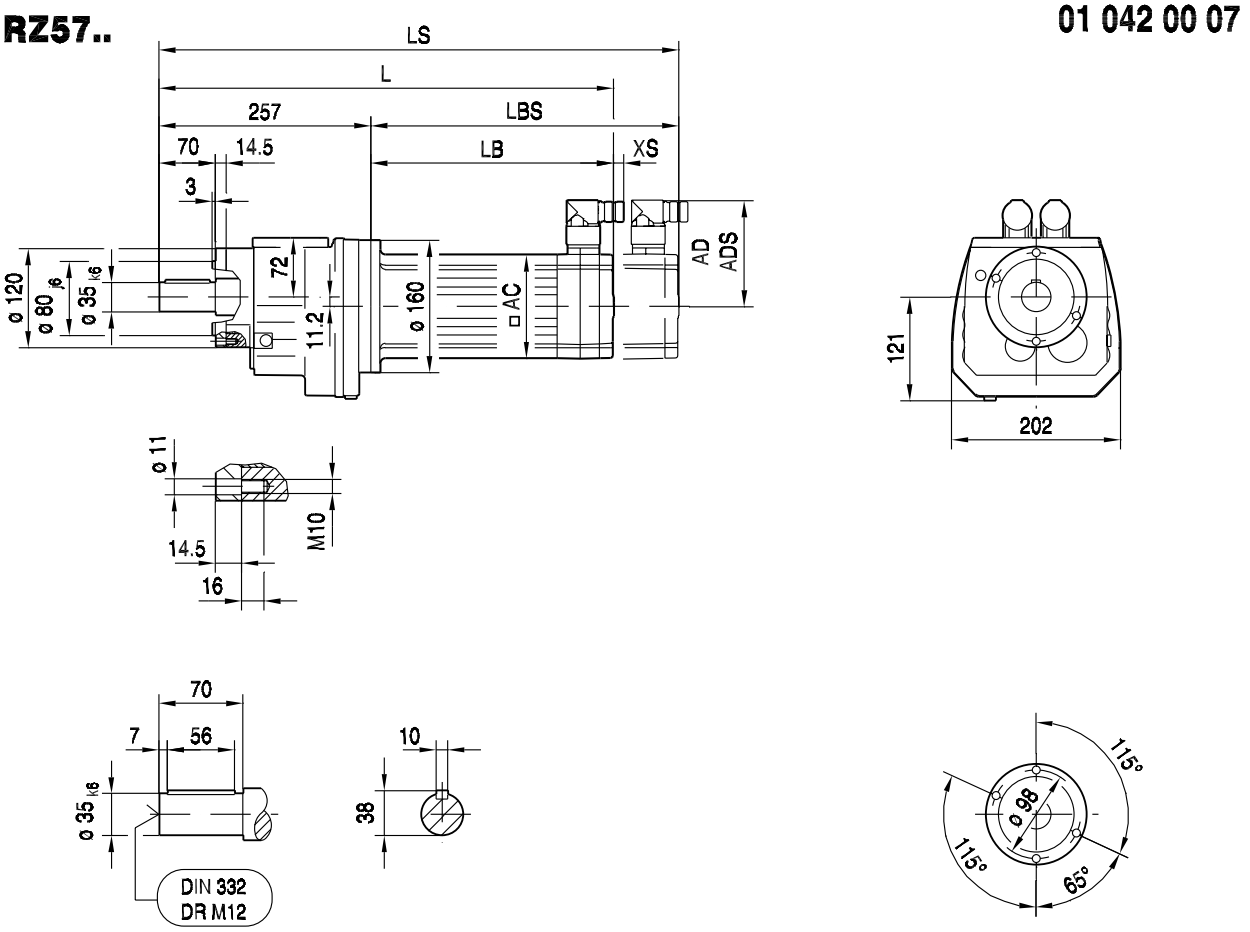

(→ 📖 150)	CMP50S	CMP50M	CMP50L	CMP63S	CMP63M	CMP63L		
AC	73	73	73	88	88	88		
AD	82	82	82	89	89	89		
ADS	82	82	82	89	89	89		
L	396	435	474	430	480	530		
LS	425	464	503	459	509	559		
LB	139	178	217	173	223	273		
LBS	168	207	246	202	252	302		
XS	18	18	18	14	14	14		

04 068 01 01

R57.. DS56..

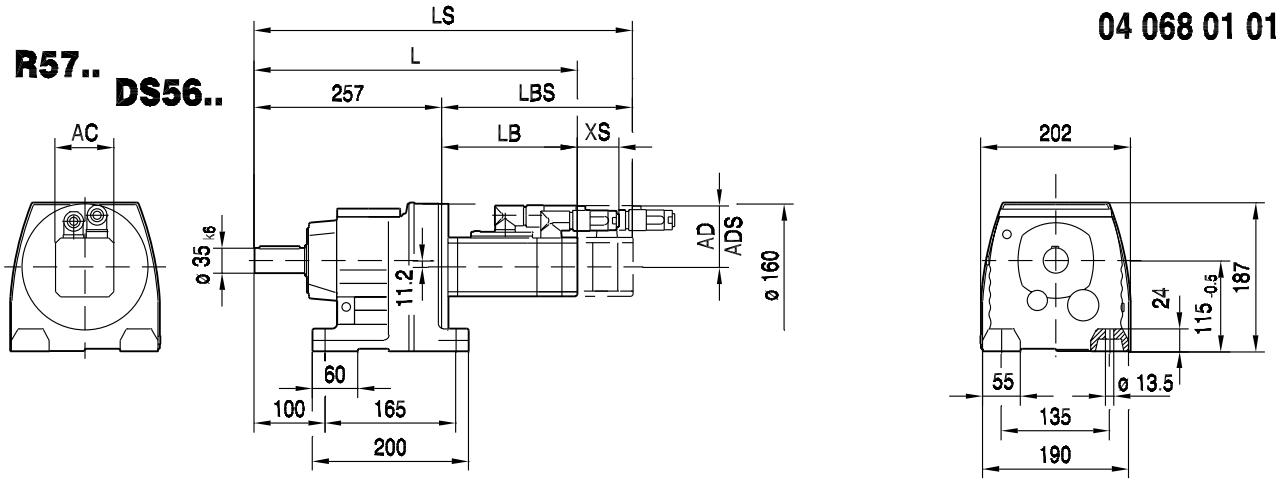

CM..

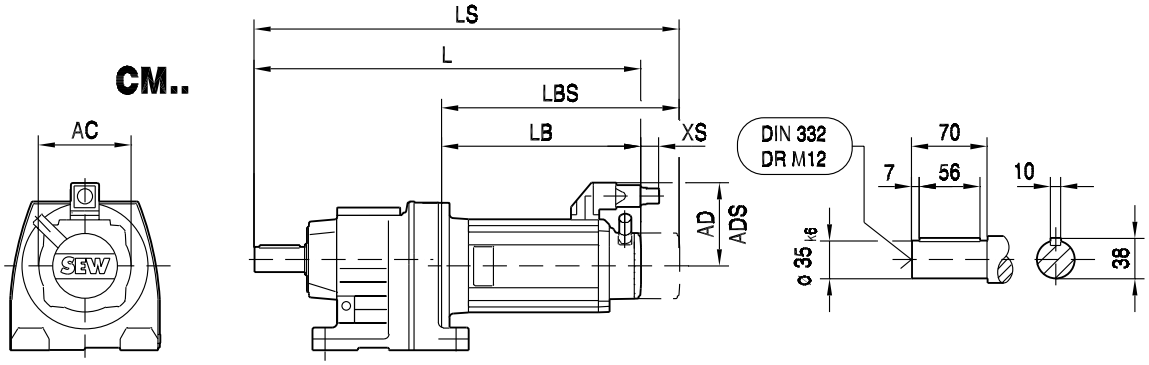

R57F..

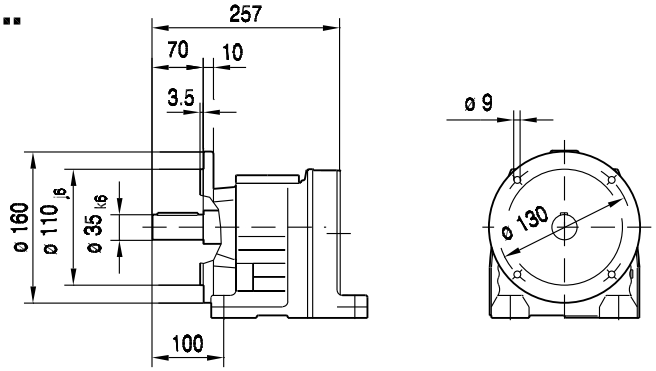

(→ 150)	DS56H	CM71S	CM71M	CM71L	CM90S	CM90M	CM90L	CM112S	CM112M		
AC	73	117	117	117	142	142	142	186	186		
AD	77	122	122	122	140	140	140	162	162		
ADS	77	122	122	122	140	140	140	162	162		
L	523	489	509	549	541	568	626	581	605		
LS	523	571	591	631	637	664	722	671	695		
LB	266	232	252	292	284	311	369	324	348		
LBS	266	314	334	374	380	407	465	414	438		
XS	51	45	45	45	50	50	50	36	36		

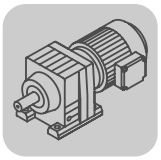

R..CMP, DS, CM
R 57 / CMP / DS / CM [mm]

04 069 01 01

RF57.. **DS56..**

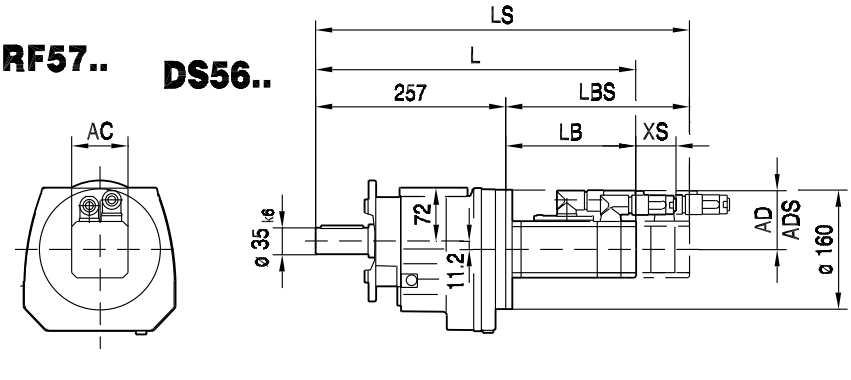

CM..

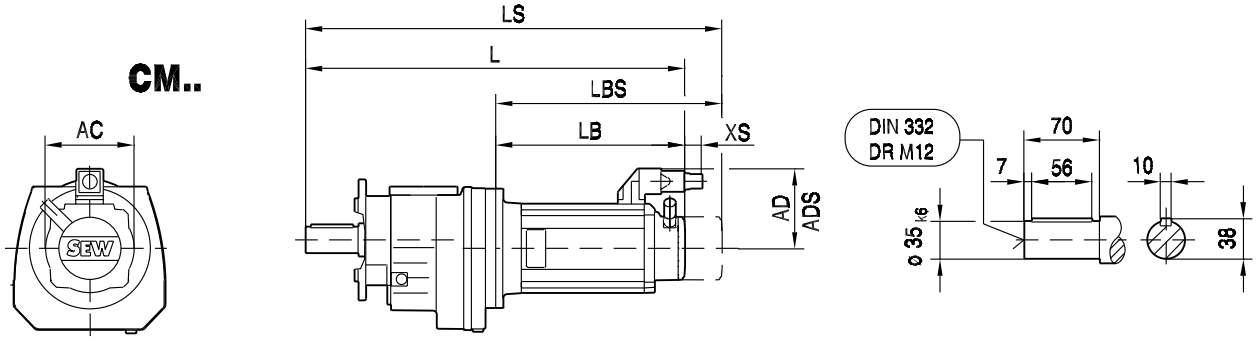

ø 160

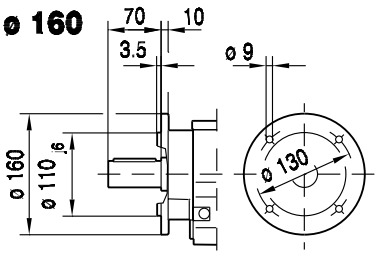

ø 200

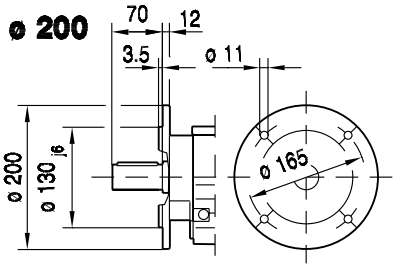

ø 250

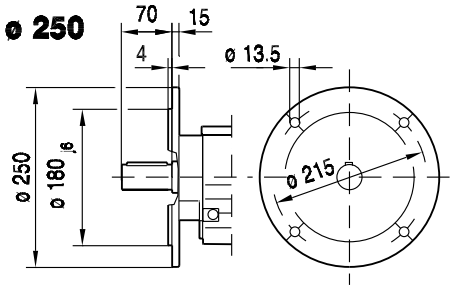

(→ 📖 150)	DS56H	CM71S	CM71M	CM71L	CM90S	CM90M	CM90L	CM112S	CM112M		
AC	73	117	117	117	142	142	142	186	186		
AD	77	122	122	122	140	140	140	162	162		
ADS	77	122	122	122	140	140	140	162	162		
L	523	489	509	549	541	568	626	581	605		
LS	523	571	591	631	637	664	722	671	695		
LB	266	232	252	292	284	311	369	324	348		
LBS	266	314	334	374	380	407	465	414	438		
XS	51	45	45	45	50	50	50	36	36		

8.26 R 67 / CMP / DS / CM [Nm]

M_{aDyn} [Nm]		CMP						DS			CM							
	i	50S	50M	50L	63S	63M	63L	56M	56L	56H	71S	71M	71L	90S	90M	90L	112S	112M
	4.29		43	64	46	89	127			63	69	89	131	165	217	315	342	>405
	4.93	25	49	74	53	102	145	18	36	73	79	103	150	189	250	362	394	>435
	5.7	29	57	85	61	118	168	21	42	84	91	119	174	219	289	418	455	>465
	6.27	32	63	94	68	130	185	23	46	92	100	131	191	241	317	460	>485	
	7.36	37	74	110	79	153	217	27	54	109	118	153	224	283	373	>485	>485	
	7.79	39	78	116	84	162	230	29	57	115	125	162	237	299	394	>485	>485	
	8.7		87	130	94	181	257			128	139	181	265	334	441	638	>660	>660
R67	10	50	100	149	108	208	295	37	74	147	160	209	305	384	506	>665	>665	>665
R67 2	11.54	58	115	172	124	240	340	43	85	170	185	241	351	443	584	>665	>665	>665
	12.7	64	127	190	137	264	374	47	94	187	203	265	387	488	643	>665	>665	
	14.91	75	149	223	161	310	440	55	110	220	239	311	454	573	>665	>665	>665	
	15.79	80	158	236	170	328	466	58	116	233	253	329	481	607	>665	>665	>665	
	17.95	91	179	268	193	373	529	66	132	265	287	374	547	>665	>665			
	19.89	100	199	297	214	413	587	73	147	293	318	415	606	>665	>665			
	23.44	118	234	350	252	487	>665	86	173	346	375	489	>665	>665				
	26.72	135	267	399	288	555		98	197	394	428	557						
	28.13	142	281	420	303	584		104	207	415	450	587						
	28.83	142	282	422	304	586	>595	104	208	416	452	589	>595	>595	>595	>595	>595	
	32.27	159	316	472	340	>595	>595	116	233	466	506	>595	>595	>595	>595	>595	>595	
	37.5	185	367	549	395	>595	>595	135	271	542	588	>595	>595	>595	>595	>595	>595	
	39.88	197	390	583	421	>595	>595	144	288	576	>595	>595	>595	>595	>595	>595	>595	
	46.29	229	453	>600	488	>600	>600	167	334	>600	>600	>600	>600	>600	>600			
	51.56	255	505	>600	544	>600	>600	186	372	>600	>600	>600	>600	>600	>600			
	56.89	281	557	>600	600	>600		205	411	>600	>600	>600						
	61.26	303	599	>600	>600	>600	>600	221	442	>600	>600	>600	>600	>600				
R67	69.75	345	>660	>660	>660	>660	>660	252	504	>660	>660	>660	>660	>660	>660	>660	>660	
R67 3	74.17	366	>660	>660	>660	>660	>660	268	536	>660	>660	>660	>660	>660	>660	>660	>660	
	86.11	425	>660	>660	>660	>660	>660	311	622	>660	>660	>660	>660	>660	>660			
	95.91	474	>660	>660	>660	>660	>660	346	>660	>660	>660	>660	>660	>660	>660			
	105.83	523	>660	>660	>660	>660		382	>660	>660	>660	>660						
	113.94	563	>660	>660	>660	>660	>660	411	>660	>660	>660	>660	>660	>660				
	128.97	637	>660	>660	>660	>660		466	>660	>660	>660	>660						
	137.67	>660	>660	>660	>660	>660		492	>660	>660	>660	>660						
	158.14	>660	>660		>660			565	>660	>660								
	184.07	>660						657	>660									
	199.81	>660						>660	>660									

m [kg]		CMP						DS			CM							
	s	50S	50M	50L	63S	63M	63L	56M	56L	56H	71S	71M	71L	90S	90M	90L	112S	112M
R67	2	28	29	30	30	31	33	27	28	29	33	34	38	42	45	50	51	55
R67	3	29	30	31	31	32	34	28	29	30	34	35	39	43	46	50	52	56
RF: + 3.2 kg / RM: + 19.0 kg																		

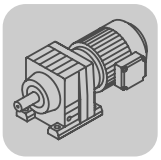

R..CMP, DS, CM
R 67 / CMP / DS / CM [Nm]

CMP.. / DS.. / CM..	i	n_{epk} [1/min]	η [%]	c_T R [Nm/']	c_T RF [Nm/']	c_T RM [Nm/']	φ /R [']
R67 2	4.29	3700	97	24.26	24.26	22.19	10
	4.93	4252	97	24.26	24.26	22.19	9
	5.7	4500	97	24.26	24.26	22.19	9
	6.27	4500	97	24.26	24.26	22.19	9
	7.36	4500	97	24.26	24.26	22.19	8
	7.79	4500	97	24.26	24.26	22.19	8
	8.7	4500	97	31.76	31.76	28.3	7
	10	4500	97	31.76	31.76	28.3	7
	11.54	4500	97	31.76	31.76	28.3	7
	12.7	4500	97	31.76	31.76	28.3	6
	14.91	4500	97	31.76	31.76	28.3	6
	15.79	4500	97	31.76	31.76	28.3	6
	17.95	4500	97	31.76	31.76	28.3	6
	19.89	4500	97	31.76	31.76	28.3	6
	23.44	4500	97	31.76	31.76	28.3	6
	26.72	4500	97	31.76	31.76	28.3	6
	28.13	4500	97	31.76	31.76	28.3	6
R67 3	28.83	4500	95	33.07	33.07	29.34	7
	32.27	4500	95	33.07	33.07	29.34	7
	37.5	4500	95	33.07	33.07	29.34	7
	39.88	4500	95	33.07	33.07	29.34	7
	46.29	4500	95	33.07	33.07	29.34	7
	51.56	4500	95	33.07	33.07	29.34	7
	56.89	4500	95	33.07	33.07	29.34	7
	61.26	4500	95	33.07	33.07	29.34	7
	69.75	4500	95	33.16	33.16	29.41	7
	74.17	4500	95	33.16	33.16	29.41	7
	86.11	4500	95	33.16	33.16	29.41	6
	95.91	4500	95	33.16	33.16	29.41	6
	105.83	4500	95	33.16	33.16	29.41	6
	113.94	4500	95	33.16	33.16	29.41	6
	128.97	4500	95	33.16	33.16	29.41	6
	137.67	4500	94	33.16	33.16	29.41	6
	158.14	4500	94	33.16	33.16	29.41	6
	184.07	4500	94	33.16	33.16	29.41	6
	199.81	4500	93	33.16	33.16	29.41	6

CMP.. / DS.. / CM..	i	M_{amax} [Nm]	M_{apk} [Nm]	$M_{aNotaus}$ [Nm]	n_{ak} [1/min]	J_G 10^{-4} [kgm^2]	F_{Ramax} R [N]	F_{Ramax} RF [N]	F_{Ramax} RM [N]	F_{Rapk} R [N]	F_{Rapk} RF [N]	F_{Rapk} RM [N]
R67 2	4.29	270	405	459	326	5.9	5000	5000	8720	9300	9300	9800
	4.93	290	435	493	284	4.6	5210	5210	9120	9100	9100	9760
	5.7	310	465	527	246	3.6	5450	5450	9560	8870	8870	9710
	6.27	330	485	561	223	3.0	5590	5590	9850	8710	8710	9680
	7.36	370	485	629	190	2.4	5790	5790	9850	8710	8710	9680
	7.79	380	485	646	180	2.1	5830	5830	9840	8710	8710	9680
	8.7	440	660	748	161	4.0	5960	5960	9750	5350	5350	9330
	10	470	665	799	140	3.2	6220	6220	9700	4700	4700	9320
	11.54	500	665	850	130	2.5	6500	6500	9660	4700	4700	9320
	12.7	520	665	884	118	2.2	6640	6640	9620	4700	4700	9320
	14.91	550	665	935	101	1.7	6980	6980	9560	4700	4700	9320
	15.79	560	665	952	95	1.6	7130	7130	9540	4700	4700	9320
	17.95	590	665	1003	84	1.2	7330	7330	9480	4700	4700	9320
	19.89	600	665	1020	75	1.0	7560	7560	9460	4700	4700	9320
	23.44	560	665	952	94	0.80	8010	8010	9540	4700	4700	9320
	26.72	540	665	918	105	0.56	8210	8210	9580	4700	4700	9320
	28.13	540	665	918	103	0.50	8210	8210	9580	4700	4700	9320

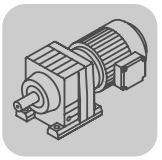

CMP.. / DS.. / CM..							F_{Ramax}			F_{Rapk}		
	i	M_{amax} [Nm]	M_{apk} [Nm]	$M_{aNotaus}$ [Nm]	n_{ak} [1/min]	$J_G\ 10^{-4}$ [kgm^2]	R [N]	RF [N]	RM [N]	R [N]	RF [N]	RM [N]
R67 3	28.83	520	595	884	49	1.5	8400	8400	9620	7620	7620	9470
	32.27	540	595	918	43	1.3	8210	8210	9580	7620	7620	9470
	37.5	570	595	969	37	1.0	7900	7900	9520	7620	7620	9470
	39.88	580	595	986	35	0.93	7790	7790	9500	7620	7620	9470
	46.29	600	600	1020	32	0.72	7560	7560	9460	7620	7620	9470
	51.56	600	600	1020	33	0.61	7560	7560	9460	7620	7620	9470
	56.89	600	600	1020	33	0.50	7560	7560	9460	7620	7620	9470
	61.26	600	600	1020	33	0.47	7560	7560	9460	7620	7620	9470
	69.75	600	660	1020	29	0.88	7560	7560	9460	5350	5350	9330
	74.17	600	660	1020	28	0.81	7560	7560	9460	5350	5350	9330
	86.11	600	660	1020	29	0.63	7560	7560	9460	5350	5350	9330
	95.91	600	660	1020	29	0.54	7560	7560	9460	5350	5350	9330
	105.83	600	660	1020	29	0.45	7560	7560	9460	5350	5350	9330
	113.94	600	660	1020	30	0.42	7560	7560	9460	5350	5350	9330
	128.97	600	660	1020	29	0.36	7560	7560	9460	5350	5350	9330
	137.67	600	660	1020	30	0.32	7560	7560	9460	5350	5350	9330
	158.14	600	660	1020	30	0.26	7560	7560	9460	5350	5350	9330
	184.07	600	660	1020	30	0.21	7560	7560	9460	5350	5350	9330
	199.81	600	660	1020	30	0.19	7560	7560	9460	5350	5350	9330

8.27 R 67 / CMP / DS / CM [mm]

01 043 00 07

R67..

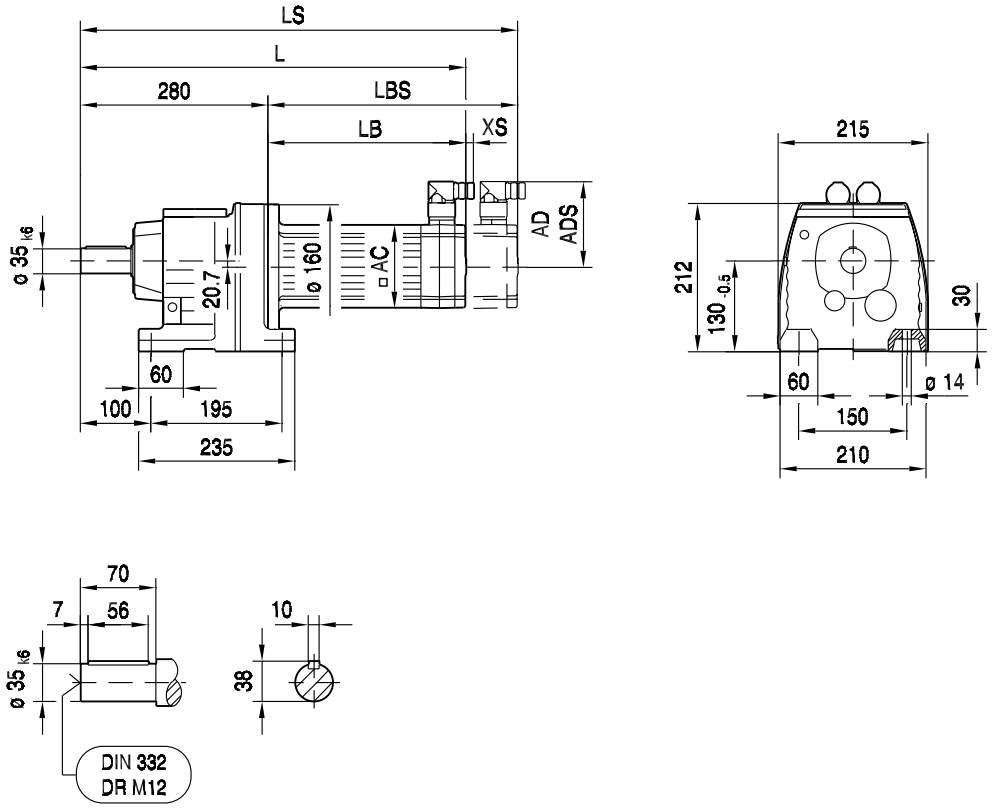

R67F..

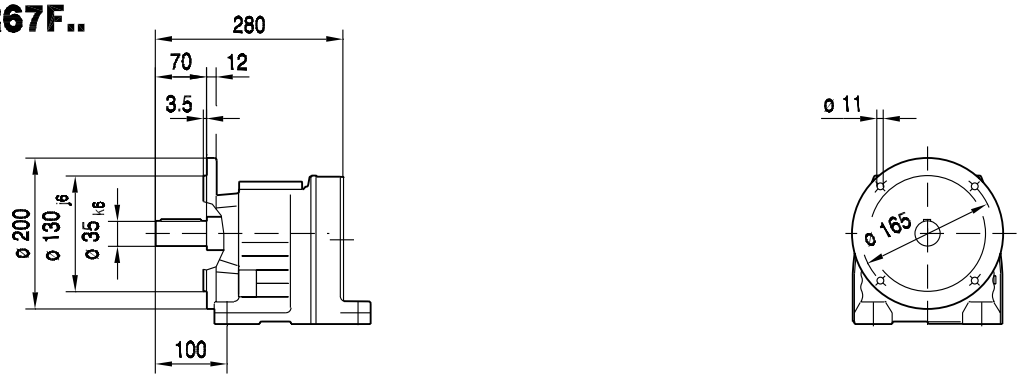

(→ 150)	CMP50S	CMP50M	CMP50L	CMP63S	CMP63M	CMP63L		
AC	73	73	73	88	88	88		
AD	82	82	82	89	89	89		
ADS	82	82	82	89	89	89		
L	419	458	497	453	503	553		
LS	448	487	526	482	532	582		
LB	139	178	217	173	223	273		
LBS	168	207	246	202	252	302		
XS	18	18	18	14	14	14		

01 044 00 07

RF67..

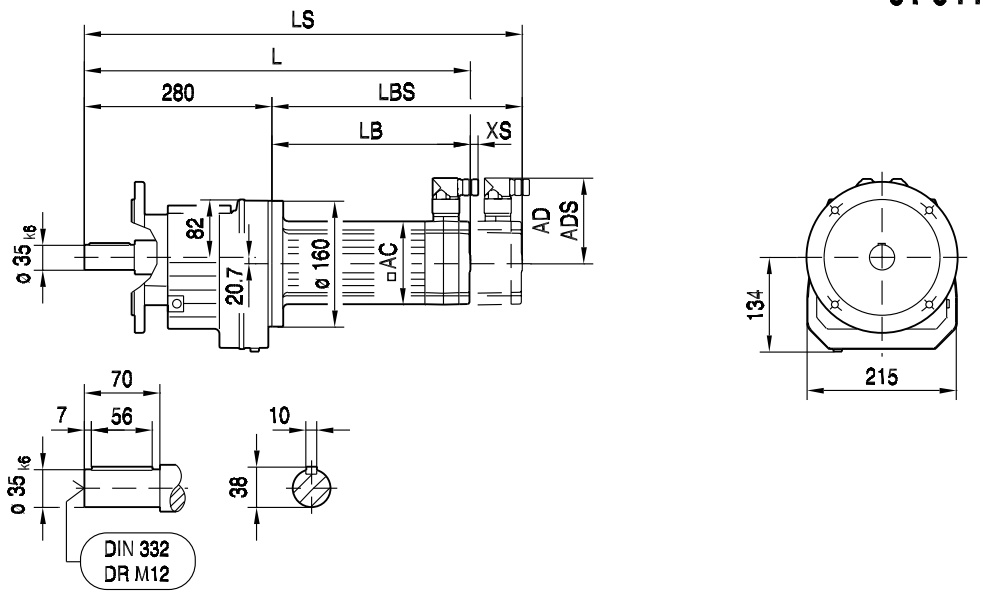

ø 200

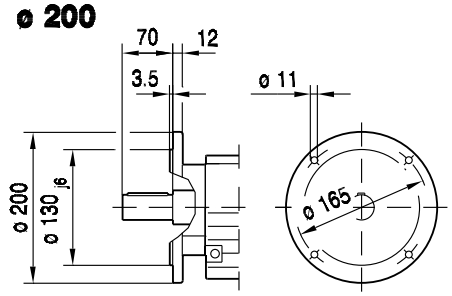

ø 250

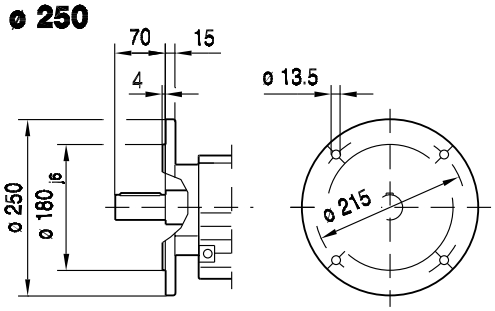

RM67..

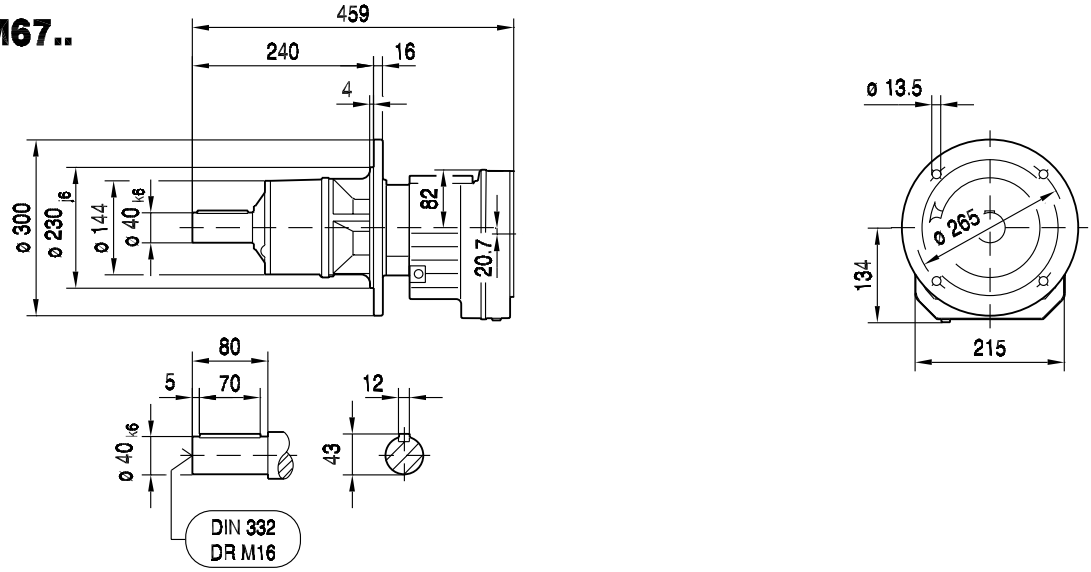

(→ 150)	CMP50S	CMP50M	CMP50L	CMP63S	CMP63M	CMP63L		
AC	73	73	73	88	88	88		
AD	82	82	82	89	89	89		
ADS	82	82	82	89	89	89		
L	419	458	497	453	503	553		
LS	448	487	526	482	532	582		
LB	139	178	217	173	223	273		
LBS	168	207	246	202	252	302		
XS	18	18	18	14	14	14		

01 045 00 07

RZ67..

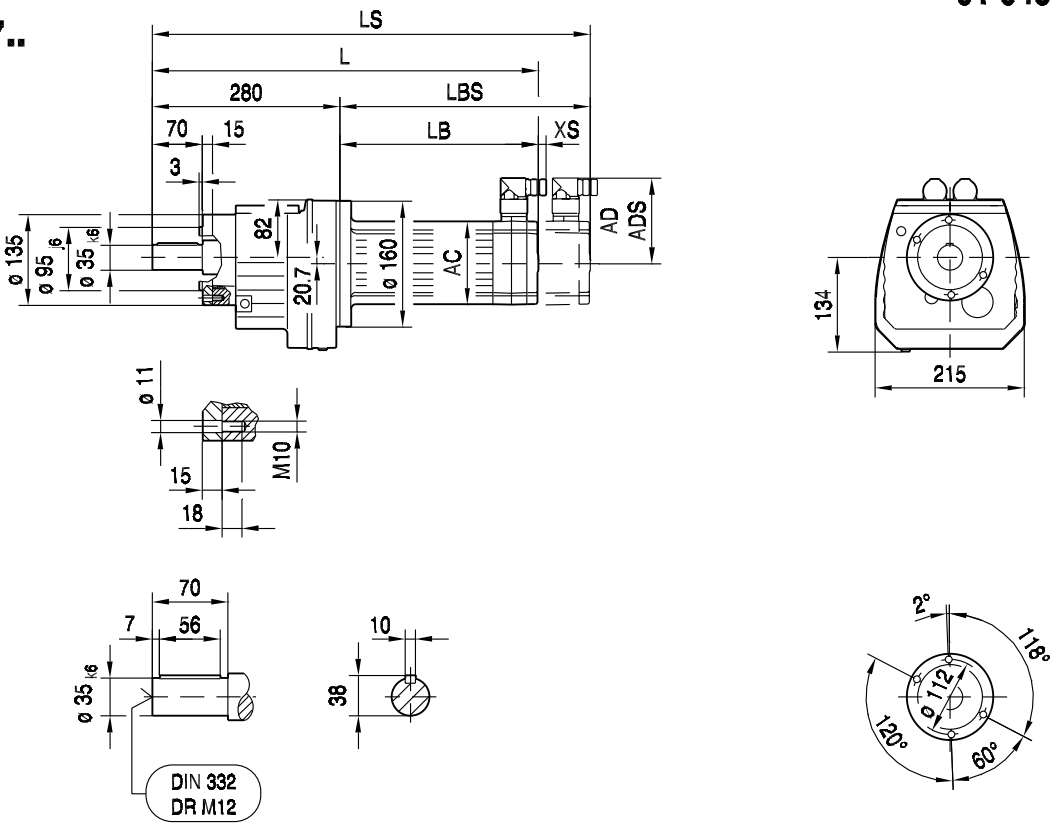

(→ 📖 150)	CMP50S	CMP50M	CMP50L	CMP63S	CMP63M	CMP63L		
AC	73	73	73	88	88	88		
AD	82	82	82	89	89	89		
ADS	82	82	82	89	89	89		
L	419	458	497	453	503	553		
LS	448	487	526	482	532	582		
LB	139	178	217	173	223	273		
LBS	168	207	246	202	252	302		
XS	18	18	18	14	14	14		

04 070 01 01

R67.. DS56..

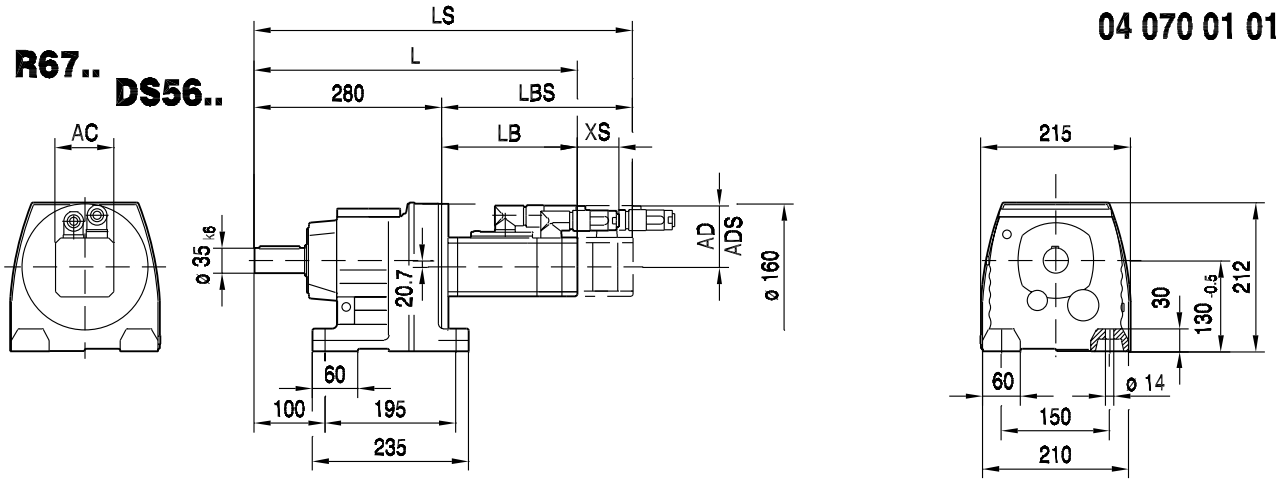

CM..

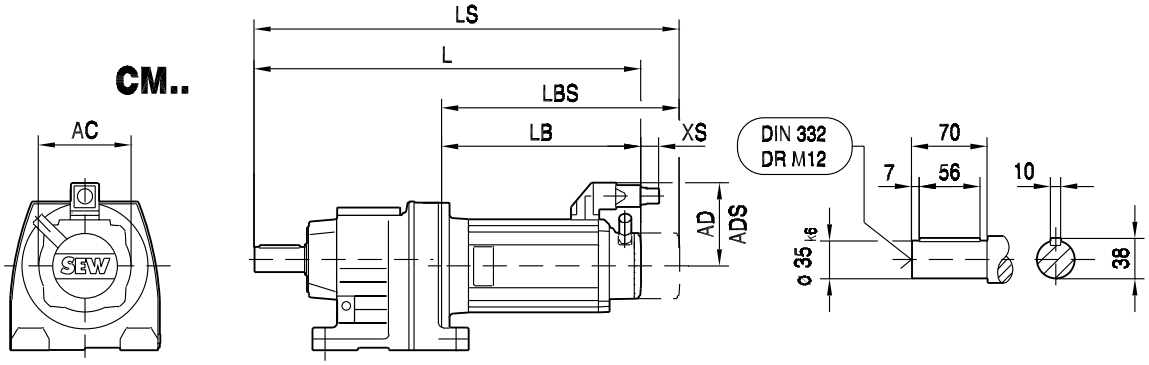

R67F..

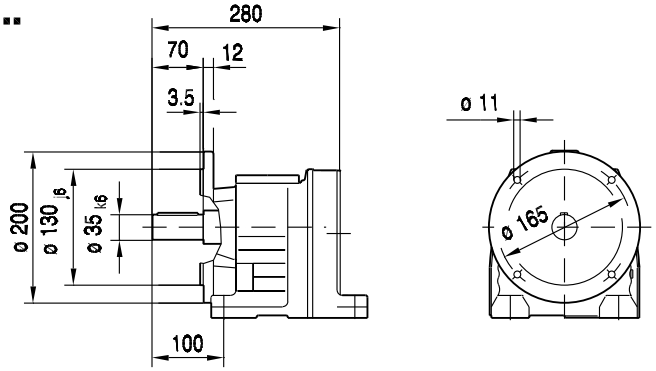

(→ 📖 150)	DS56H	CM71S	CM71M	CM71L	CM90S	CM90M	CM90L	CM112S	CM112M		
AC	73	117	117	117	142	142	142	186	186		
AD	77	122	122	122	140	140	140	162	162		
ADS	77	122	122	122	140	140	140	162	162		
L	546	512	532	572	564	591	649	604	628		
LS	546	594	614	654	660	687	745	694	718		
LB	266	232	252	292	284	311	369	324	348		
LBS	266	314	334	374	380	407	465	414	438		
XS	51	45	45	45	50	50	50	36	36		

04 071 01 01

RF67.. **DS56..**

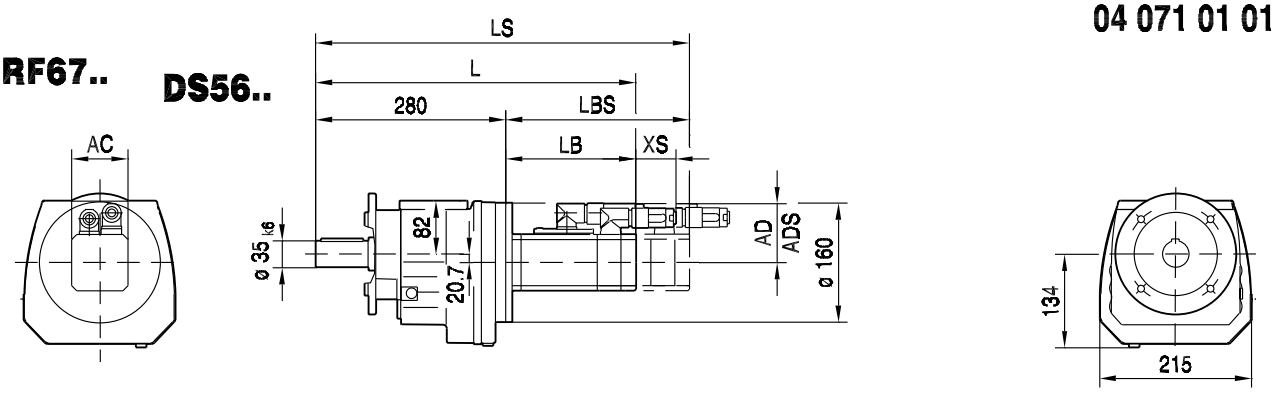

CM..

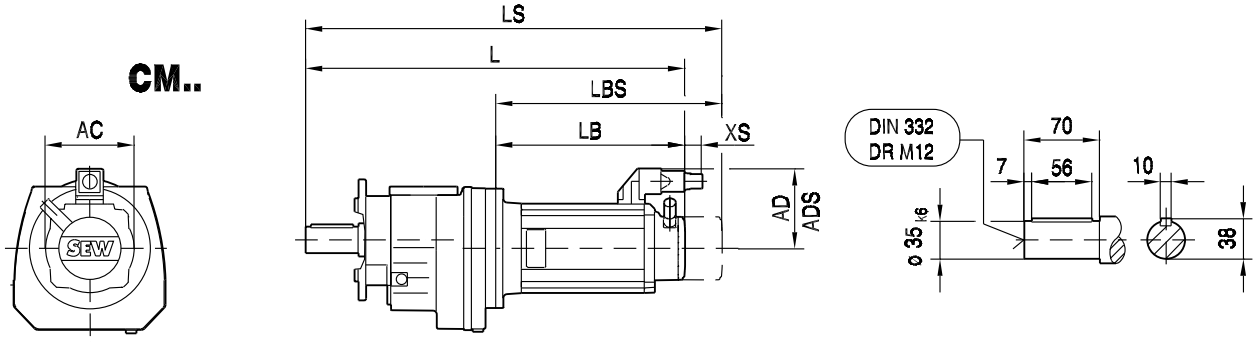

ø 200

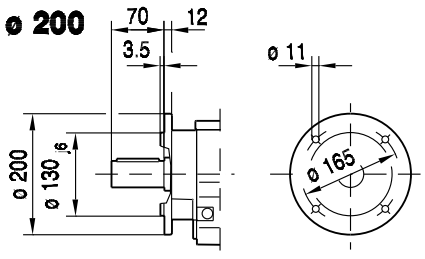

ø 250

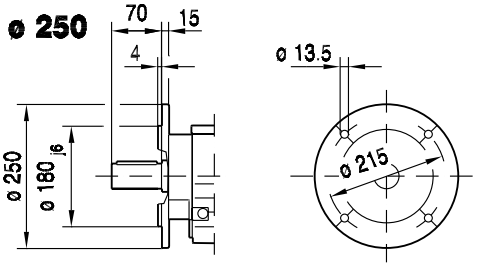

(→ 📖 150)	DS56H	CM71S	CM71M	CM71L	CM90S	CM90M	CM90L	CM112S	CM112M		
AC	73	117	117	117	142	142	142	186	186		
AD	77	122	122	122	140	140	140	162	162		
ADS	77	122	122	122	140	140	140	162	162		
L	546	512	532	572	564	591	649	604	628		
LS	546	594	614	654	660	687	745	694	718		
LB	266	232	252	292	284	311	369	324	348		
LBS	266	314	334	374	380	407	465	414	438		
XS	51	45	45	45	50	50	50	36	36		

8.28 R 77 / CMP / CM [Nm]

M_{aDyn} [Nm]		CMP			CM								
	i	63S	63M	63L	71S	71M	71L	90S	90M	90L	112S	112M	112L
R77 2	5.31	57	110	157	85	111	162	204	269	389	424	559	>765
	5.99	64	124	177	96	125	182	230	303	439	478	630	>810
	6.79	73	141	200	109	142	207	261	344	498	542	715	>840
	7.74	83	161	228	124	161	236	297	392	568	618	815	>840
	8.59	92	178	253	137	179	262	330	435	630	686		
	9.64	104	200	284	154	201	294	370	488	707	770	>900	>900
	10.88	117	226	321	174	227	331	418	551	798	869	>900	>900
	12.33	133	256	364	197	257	376	474	624	>900	>900	>900	>900
	14.05	151	292	414	225	293	428	540	711	>900	>900	>900	>900
	15.6	168	324	460	250	325	475	599	790	>900	>900		
	17.82	192	370	525	285	372	543	685	>900	>900	>900		
	18.8	202	390	554	301	392	573	722	>900	>900	>900		
	21.43	231	445	632	343	447	653	823	>900				
	23.37	252	485	689	374	487	712	898	>900				
R77 3	25.23	269	518	736	400	521	761	>900	>900	>900	>900	>900	>900
	29	309	596	846	459	599	874	>900	>900	>900	>900	>900	>900
	33.47	357	688	>900	530	691	>900	>900	>900	>900	>900	>900	>900
	36.83	388	749	>900	577	752	>900	>900	>900	>900	>900		
	43.26	456	879	>900	678	884	>900	>900	>900	>900	>900		
	45.81	483	>900	>900	718	>900	>900	>900	>900	>900	>900		
	52.07	549	>900	>900	816	>900	>900	>900	>900				
	57.68	608	>900	>900	>900	>900	>900	>900	>900				
	65.77	694	>900	>900	>900	>900	>900	>900	>900	>900	>900		
	77.24	814	>900	>900	>900	>900	>900	>900	>900	>900	>900		
	81.8	863	>900	>900	>900	>900	>900	>900	>900	>900	>900		
	92.97	>900	>900	>900	>900	>900	>900	>900	>900				
	102.99	>900	>900	>900	>900	>900	>900	>900	>900				
	121.42	>900	>900	>900	>900	>900	>900	>900					
	138.39	>900	>900		>900	>900							
	145.67	>900	>900		>900	>900							
	166.59	>900											
	195.24												

m [kg]		CMP			CM								
	s	63S	63M	63L	71S	71M	71L	90S	90M	90L	112S	112M	112L
R77	2	35	36	38	39	40	43	48	50	55	56	61	76
R77	3	36	37	39	40	41	45	49	52	57	58	62	77
RF: + 5.7 kg / RM: + 30.7 kg													

CMP.. / CM..				c_T			φ
	i	n_{epk} [1/min]	η [%]	R [Nm/']	RF [Nm/']	RM [Nm/']	/R [']
R77 2	5.31	4500	97	41.5	41.5	46.24	8
	5.99	4500	97	41.5	41.5	46.24	8
	6.79	4500	97	41.5	41.5	46.24	8
	7.74	4500	97	41.5	41.5	46.24	8
	8.59	4500	97	41.5	41.5	46.24	7
	9.64	4500	97	50.71	50.71	57.99	7
	10.88	4500	97	50.71	50.71	57.99	7
	12.33	4500	97	50.71	50.71	57.99	6
	14.05	4500	97	50.71	50.71	57.99	6
	15.6	4500	97	50.71	50.71	57.99	6
	17.82	4500	97	50.71	50.71	57.99	6
	18.8	4500	97	50.71	50.71	57.99	6
	21.43	4500	97	50.71	50.71	57.99	6
	23.37	4500	97	50.71	50.71	57.99	6

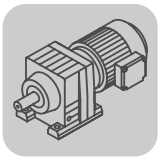

R..CMP, DS, CM
R 77 / CMP / CM [Nm]

CMP.. / CM..	i	n_{epk} [1/min]	η [%]	c_T R [Nm/']	c_T RF [Nm/']	c_T RM [Nm/']	φ /R [']
R77 3	25.23	4500	96	52.95	52.95	60.93	7
	29	4500	96	52.95	52.95	60.93	7
	33.47	4500	96	52.95	52.95	60.93	7
	36.83	4500	95	52.95	52.95	60.93	7
	43.26	4500	95	52.95	52.95	60.93	7
	45.81	4500	95	52.95	52.95	60.93	7
	52.07	4500	95	52.95	52.95	60.93	7
	57.68	4500	95	52.95	52.95	60.93	7
	65.77	4500	95	53.09	53.09	61.12	7
	77.24	4500	95	53.09	53.09	61.12	7
	81.8	4500	95	53.09	53.09	61.12	6
	92.97	4500	95	53.09	53.09	61.12	6
	102.99	4500	95	53.09	53.09	61.12	6
	121.42	4500	94	53.09	53.09	61.12	6
	138.39	4500	94	53.09	53.09	61.12	6
	145.67	4500	94	53.09	53.09	61.12	6
	166.59	4500	94	53.09	53.09	61.12	6
	195.24	4500	93	53.09	53.09	61.12	6

CMP.. / CM..	i	M_{amax} [Nm]	M_{apk} [Nm]	$M_{aNotaus}$ [Nm]	n_{ak} [1/min]	J_G 10^{-4} [kgm^2]	F_{Ramax} R [N]	F_{Ramax} RF [N]	F_{Ramax} RM [N]	F_{Rapk} R [N]	F_{Rapk} RF [N]	F_{Rapk} RM [N]
R77 2	5.31	510	765	867	264	7.7	3990	3990	12700	10400	10400	13000
	5.99	540	810	918	234	6.4	3990	3990	13000	10000	10000	13000
	6.79	580	840	986	206	5.2	3850	3850	13000	9730	9730	13000
	7.74	610	840	1037	181	4.2	3940	3940	13000	9730	9730	13000
	8.59	630	840	1071	175	3.7	4110	4110	13000	9730	9730	13000
	9.64	630	900	1071	145	6.6	6300	6300	13000	9110	9110	13000
	10.88	660	900	1122	129	5.5	6490	6490	13000	9110	9110	13000
	12.33	690	900	1173	114	4.5	6740	6740	13000	9110	9110	13000
	14.05	720	900	1224	100	3.7	7050	7050	13000	9110	9110	13000
	15.6	740	900	1258	90	3.3	7390	7390	13000	9110	9110	13000
	17.82	780	900	1326	79	2.7	7620	7620	13000	9110	9110	13000
	18.8	780	900	1326	74	2.5	7980	7980	13000	9110	9110	13000
	21.43	820	900	1394	65	2.0	8250	8250	13000	9110	9110	13000
	23.37	820	900	1394	64	1.7	8870	8870	13000	9110	9110	13000
R77 3	25.23	780	900	1326	59	3.7	10100	10100	13000	9110	9110	13000
	29	820	900	1394	52	3.0	9920	9920	13000	9110	9110	13000
	33.47	820	900	1394	51	2.2	9920	9920	13000	9110	9110	13000
	36.83	820	900	1394	52	1.9	9920	9920	13000	9110	9110	13000
	43.26	820	900	1394	53	1.6	9920	9920	13000	9110	9110	13000
	45.81	820	900	1394	52	1.4	9920	9920	13000	9110	9110	13000
	52.07	820	900	1394	54	1.1	9920	9920	13000	9110	9110	13000
	57.68	820	900	1394	54	0.97	9920	9920	13000	9110	9110	13000
	65.77	820	900	1394	38	1.6	9920	9920	13000	9110	9110	13000
	77.24	820	900	1394	38	1.3	9920	9920	13000	9110	9110	13000
	81.8	820	900	1394	38	1.2	9920	9920	13000	9110	9110	13000
	92.97	820	900	1394	39	0.99	9920	9920	13000	9110	9110	13000
	102.99	820	900	1394	38	0.86	9920	9920	13000	9110	9110	13000
	121.42	820	900	1394	39	0.68	9920	9920	13000	9110	9110	13000
	138.39	820	900	1394	38	0.46	9920	9920	13000	9110	9110	13000
	145.67	820	900	1394	38	0.42	9920	9920	13000	9110	9110	13000
	166.59	820	900	1394	38	0.34	9920	9920	13000	9110	9110	13000
	195.24	820	900	1394	36	0.27	9920	9920	13000	9110	9110	13000

8.29 R 77 / CMP / CM [mm]

01 046 00 07

R77..

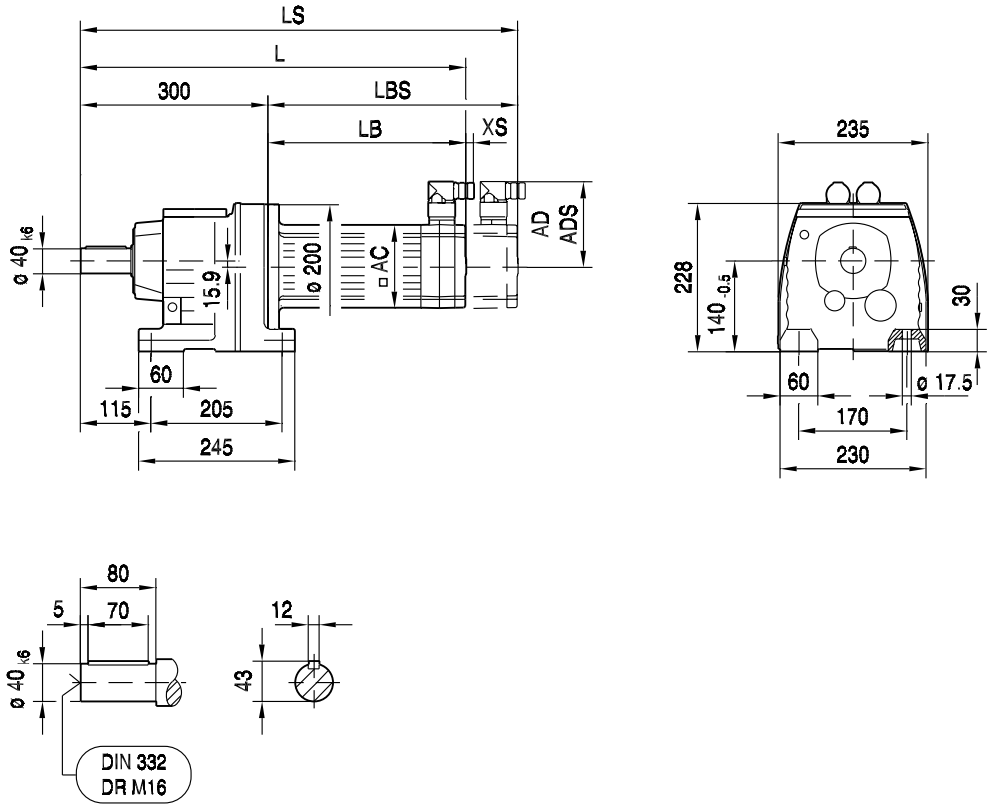

R77F..

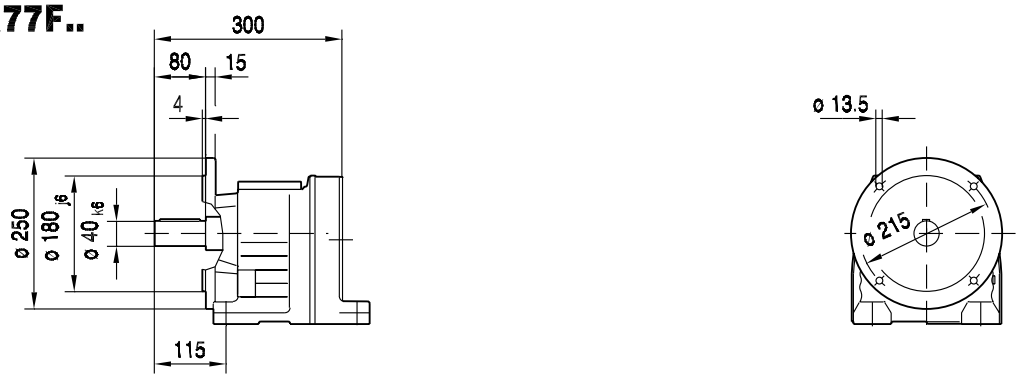

(→ 150)	CMP63S	CMP63M	CMP63L					
AC	88	88	88					
AD	89	89	89					
ADS	89	89	89					
L	467	517	567					
LS	496	546	596					
LB	167	217	267					
LBS	196	246	296					
XS	14	14	14					

01 047 00 07

RF77..

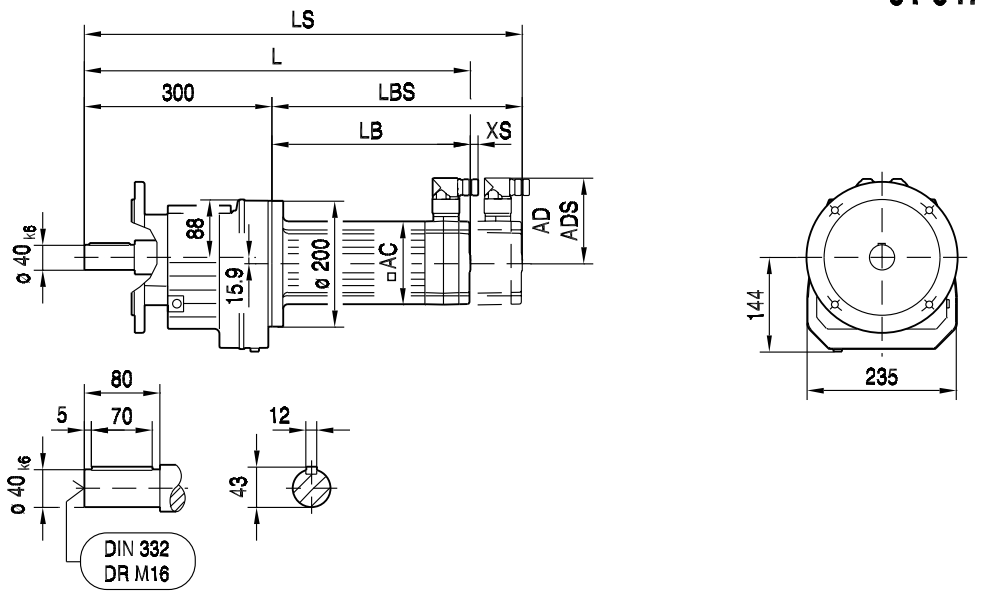

ø 250

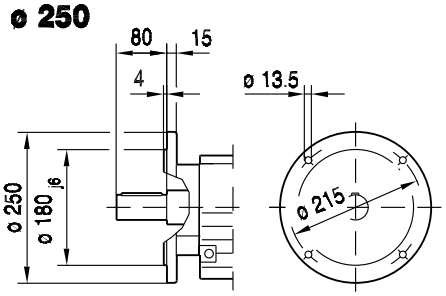

ø 300

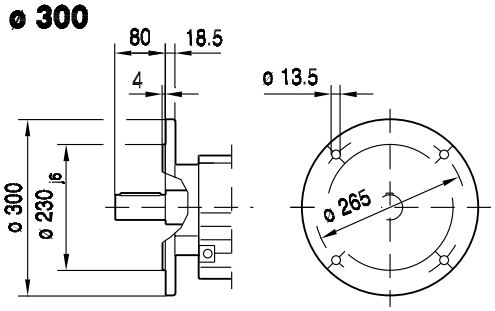

RM77..

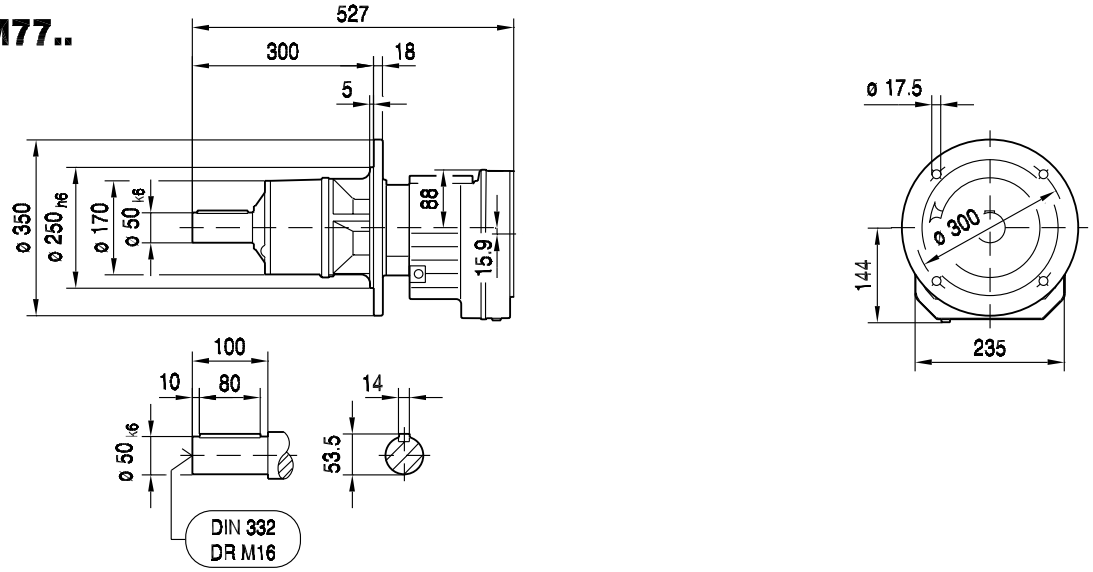

(→ 150)	CMP63S	CMP63M	CMP63L					
AC	88	88	88					
AD	89	89	89					
ADS	89	89	89					
L	467	517	567					
LS	496	546	596					
LB	167	217	267					
LBS	196	246	296					
XS	14	14	14					

01 048 00 07

RZ77..

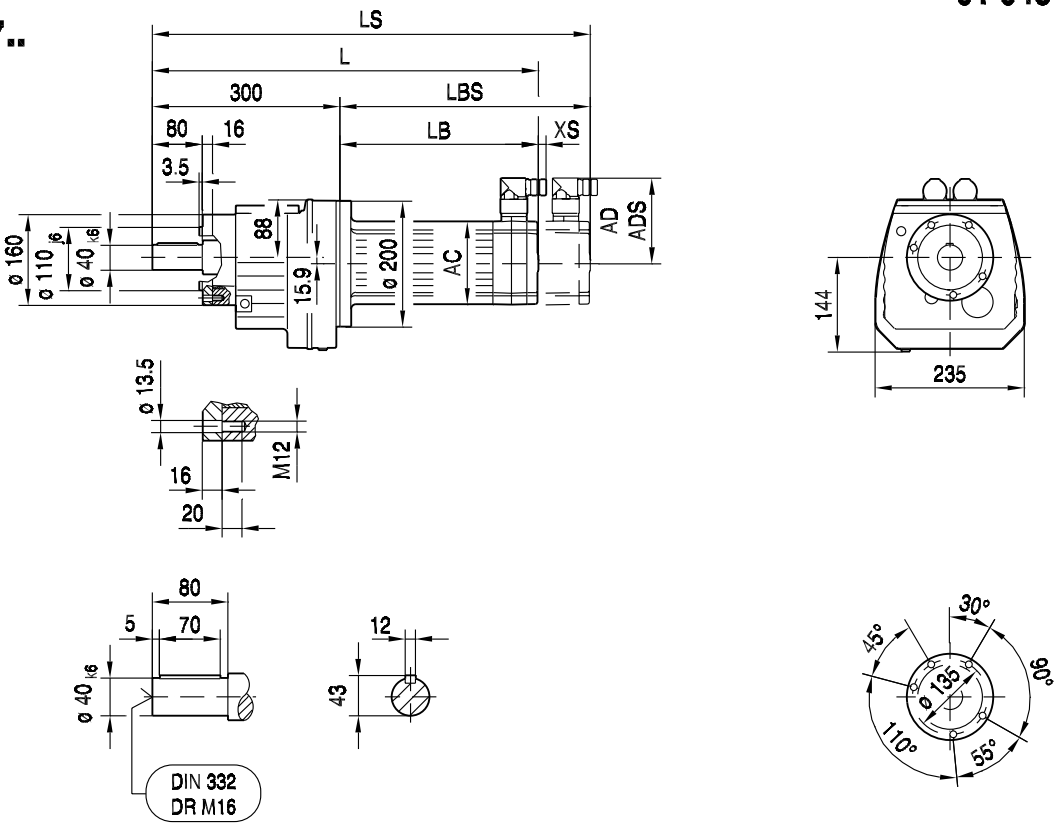

(→ 150)	CMP63S	CMP63M	CMP63L					
AC	88	88	88					
AD	89	89	89					
ADS	89	89	89					
L	467	517	567					
LS	496	546	596					
LB	167	217	267					
LBS	196	246	296					
XS	14	14	14					

04 072 01 01

R77..

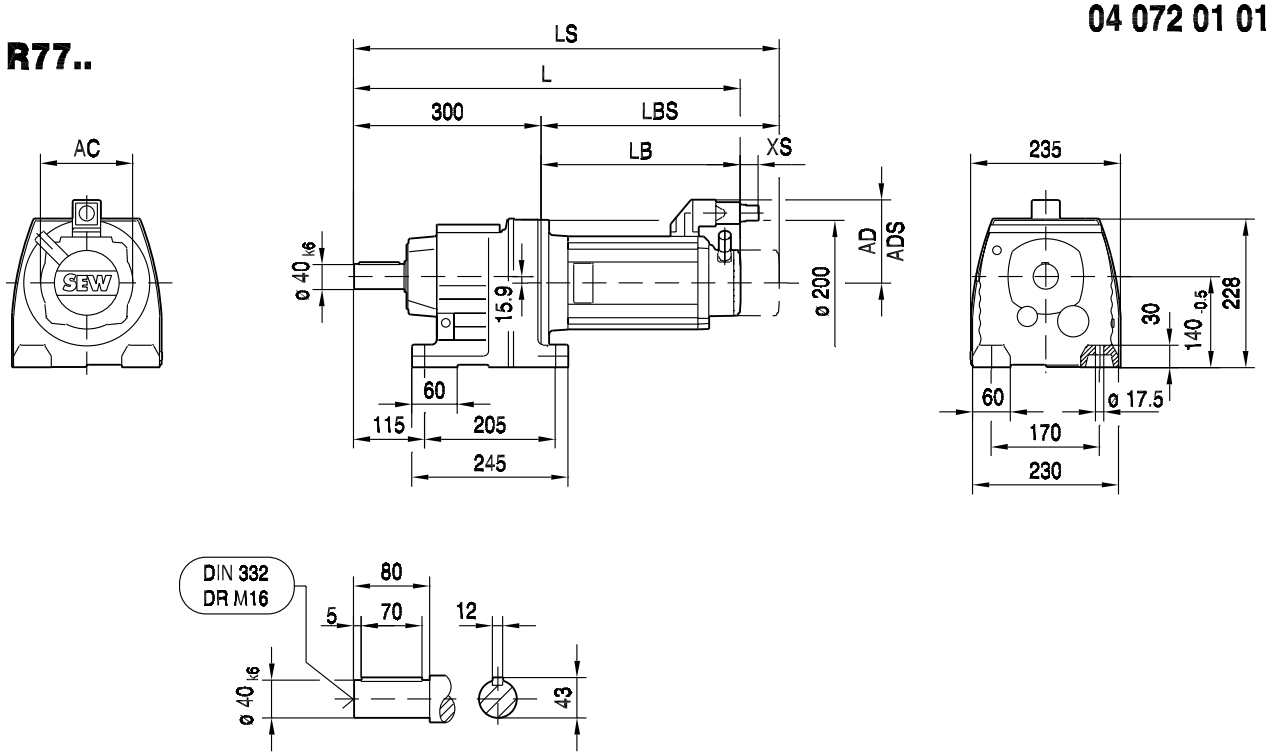

R77F..

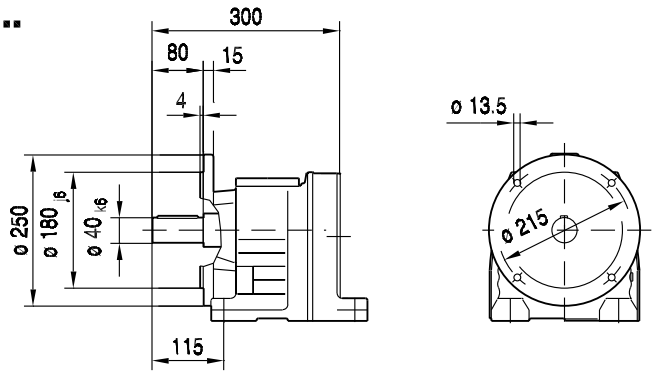

(→ 📖 150)	CM71S	CM71M	CM71L	CM90S	CM90M	CM90L	CM112S	CM112M	CM112L		
AC	117	117	117	142	142	142	186	186	186		
AD	122	122	122	140	140	140	162	162	162		
ADS	122	122	122	140	140	140	162	162	162		
L	526	546	585	576	603	657	612	639	701		
LS	608	628	667	672	699	753	702	729	791		
LB	226	246	285	276	303	357	312	339	401		
LBS	308	328	367	372	399	453	402	429	491		
XS	45	45	45	50	50	50	36	36	36		

04 073 01 01

RF77..

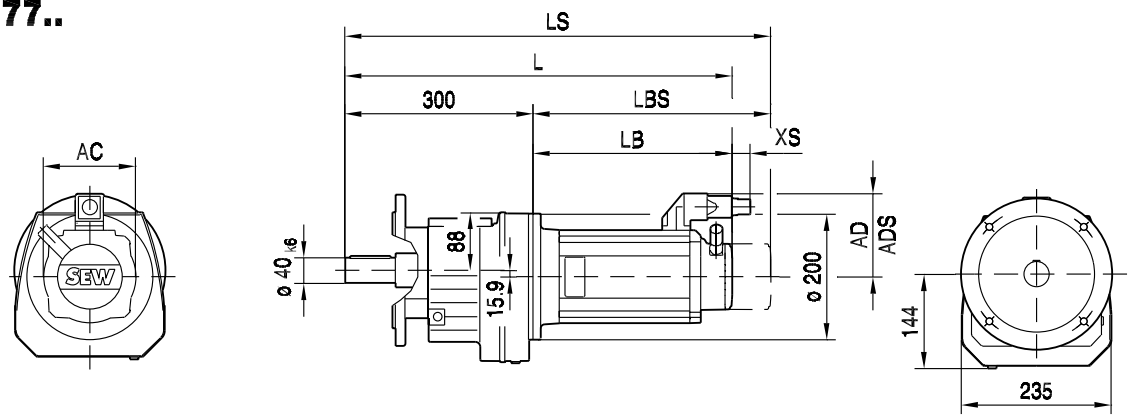

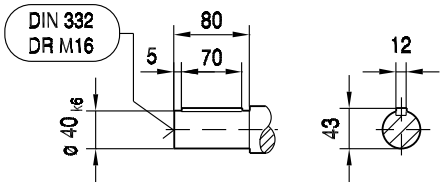

ø 250

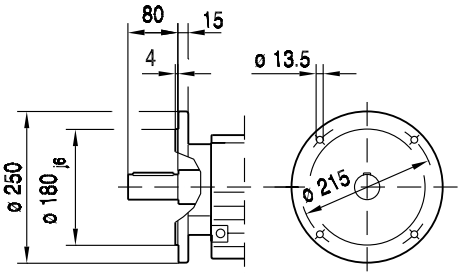

ø 300

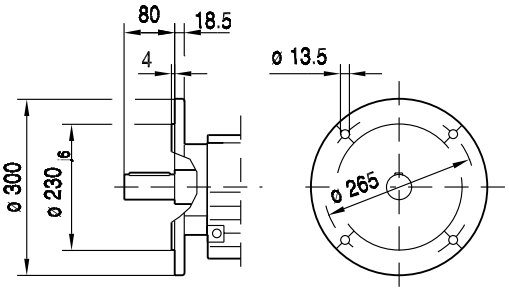

(→ 📖 150)	CM71S	CM71M	CM71L	CM90S	CM90M	CM90L	CM112S	CM112M	CM112L		
AC	117	117	117	142	142	142	186	186	186		
AD	122	122	122	140	140	140	162	162	162		
ADS	122	122	122	140	140	140	162	162	162		
L	526	546	585	576	603	657	612	639	701		
LS	608	628	667	672	699	753	702	729	791		
LB	226	246	285	276	303	357	312	339	401		
LBS	308	328	367	372	399	453	402	429	491		
XS	45	45	45	50	50	50	36	36	36		

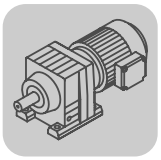

8.30 R 87 / CM [Nm]

M_{aDyn} [Nm]		CM						
	i	**90S**	**90M**	**90L**	**112S**	**112M**	**112L**	**112H**
R87 2	5.3	204	268	389	423	558	810	1224
	6.39	245	324	469	510	673	976	>1270
	7.13	274	361	523	569	750	1089	>1270
	8.22	316	416	603	656	865	1256	>1270
	9.14	351	463	670	730	962	>1270	>1270
	9.9	380	501	726	790	1042	1512	>1550
	11.93	458	604	875	952	1256	>1550	>1550
	13.33	512	675	978	1064	1403	>1550	>1550
	15.35	590	777	1126	1225	>1550	>1550	>1550
	17.08	656	865	1253	1364	>1550	>1550	>1550
	19.1	734	967	1401	1525	>1550	>1550	
	21.51	826	1089	>1550	>1550	>1550	>1550	
	23.4	899	1185	>1550	>1550			
	27.84	1069	1410	>1550	>1550			
	31.4	1206	>1550					
	34.4	1321	>1550					
R87 3	27.88	1060	1397	>1550	>1550	>1550	>1550	>1550
	32.66	1242	>1550	>1550	>1550	>1550	>1550	>1550
	36.84	1401	>1550	>1550	>1550	>1550	>1550	>1550
	41.74	>1550	>1550	>1550	>1550	>1550	>1550	
	47.58	>1550	>1550	>1550	>1550	>1550	>1550	
	52.82	>1550	>1550	>1550	>1550			
	60.35	>1550	>1550	>1550	>1550			
	63.68	>1550	>1550	>1550	>1550			
	72.57	>1550	>1550					
	81.92	>1550	>1550	>1550	>1550	>1550	>1550	
	93.38	>1550	>1550	>1550	>1550	>1550	>1550	
	103.65	>1550	>1550	>1550	>1550			
	118.43	>1550	>1550	>1550	>1550			
	124.97	>1550	>1550	>1550	>1550			
	142.41	>1550	>1550					
	155.34	>1550	>1550					
	181.77	>1550						
	205.71							
	216.54							
	246.54							

m [kg]		CM						
	s	**90S**	**90M**	**90L**	**112S**	**112M**	**112L**	**112H**
R87	2	75	77	82	82	86	100	110
R87	3	76	79	84	84	88	105	110
RF: + 7.1 kg / RM: + 36.8 kg								

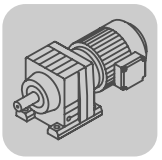

CM..	i	n_{epk} [1/min]	η [%]	c_T R [Nm/']	c_T RF [Nm/']	c_T RM [Nm/']	φ /R [']
R87 2	5.3	4500	97	75.67	75.67	77.6	7
	6.39	4500	97	75.67	75.67	77.6	7
	7.13	4500	97	75.67	75.67	77.6	7
	8.22	4500	97	75.67	75.67	77.6	7
	9.14	4500	97	75.67	75.67	77.6	6
	9.9	4500	97	93.17	93.17	95.62	6
	11.93	4500	97	93.17	93.17	95.62	6
	13.33	4500	97	93.17	93.17	95.62	6
	15.35	4500	97	93.17	93.17	95.62	6
	17.08	4500	97	93.17	93.17	95.62	6
	19.1	4500	97	93.17	93.17	95.62	6
	21.51	4500	97	93.17	93.17	95.62	6
	23.4	4500	97	93.17	93.17	95.62	6
	27.84	4500	97	93.17	93.17	95.62	6
	31.4	4500	97	93.17	93.17	95.62	5
	34.4	4500	97	93.17	93.17	95.62	5
R87 3	27.88	4500	96	96.73	96.73	99.38	7
	32.66	4500	96	96.73	96.73	99.38	7
	36.84	4500	96	96.73	96.73	99.38	7
	41.74	4500	96	96.73	96.73	99.38	7
	47.58	4500	96	96.73	96.73	99.38	7
	52.82	4500	96	96.73	96.73	99.38	6
	60.35	4500	96	96.73	96.73	99.38	6
	63.68	4500	96	96.73	96.73	99.38	6
	72.57	4500	96	96.73	96.73	99.38	6
	81.92	4500	95	97.05	97.05	99.71	6
	93.38	4500	95	97.05	97.05	99.71	6
	103.65	4500	95	97.05	97.05	99.71	6
	118.43	4500	95	97.05	97.05	99.71	6
	124.97	4500	95	97.05	97.05	99.71	6
	142.41	4500	95	97.05	97.05	99.71	6
	155.34	4500	94	97.05	97.05	99.71	6
	181.77	4500	94	97.05	97.05	99.71	6
	205.71	4500	94	97.05	97.05	99.71	6
	216.54	4500	94	97.05	97.05	99.71	6
	246.54	4500	93	97.05	97.05	99.71	6

CM..	i	M_{amax} [Nm]	M_{apk} [Nm]	$M_{aNotaus}$ [Nm]	n_{ak} [1/min]	J_G 10^{-4} [kgm^2]	F_{Ramax} R [N]	F_{Ramax} RF [N]	F_{Ramax} RM [N]	F_{Rapk} R [N]	F_{Rapk} RF [N]	F_{Rapk} RM [N]
R87 2	5.3	910	1270	1547	264	25	8980	8980	16600	18600	18600	20000
	6.39	1020	1270	1734	219	19	9450	9450	17700	18600	18600	20000
	7.13	1070	1270	1819	196	16	9780	9780	18300	18600	18600	20000
	8.22	1160	1270	1972	170	13	10200	10200	19200	18600	18600	20000
	9.14	1210	1270	2057	153	11	10500	10500	19800	18600	18600	20000
	9.9	1180	1550	2006	141	21	10400	10400	20000	16900	16900	20000
	11.93	1230	1550	2091	117	17	11200	11200	20000	16900	16900	20000
	13.33	1280	1550	2176	105	14	11600	11600	20000	16900	16900	20000
	15.35	1340	1550	2278	91	12	12100	12100	20000	16900	16900	20000
	17.08	1390	1550	2363	82	10	12600	12600	19900	16900	16900	20000
	19.1	1440	1550	2448	79	8.7	13000	13000	19900	16900	16900	20000
	21.51	1500	1550	2550	70	7.3	13600	13600	19800	16900	16900	20000
	23.4	1550	1550	2635	60	6.6	13900	13900	19700	16900	16900	20000
	27.84	1550	1550	2635	61	5.1	15000	15000	19700	16900	16900	20000
	31.4	1550	1550	2635	61	4.1	7820	7820	19700	16900	16900	20000
	34.4	1500	1550	2550	70	3.6	9480	9480	19800	16900	16900	20000

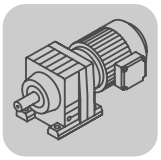

R..CMP, DS, CM
R 87 / CM [Nm]

CM..							F_{Ramax}			F_{Rapk}		
	i	M_{amax} [Nm]	M_{apk} [Nm]	$M_{aNotaus}$ [Nm]	n_{ak} [1/min]	$J_G\ 10^{-4}$ [kgm^2]	R [N]	RF [N]	RM [N]	R [N]	RF [N]	RM [N]
R87 3	27.88	1500	1550	2550	54	9.8	15100	15100	19800	16900	16900	20000
	32.66	1550	1550	2635	49	7.6	16000	16000	19700	16900	16900	20000
	36.84	1550	1550	2635	49	6.2	16800	16800	19700	16900	16900	20000
	41.74	1550	1550	2635	50	5.1	16900	16900	19700	16900	16900	20000
	47.58	1550	1550	2635	50	4.1	16900	16900	19700	16900	16900	20000
	52.82	1550	1550	2635	51	3.6	13500	13500	19700	16900	16900	20000
	60.35	1550	1550	2635	51	2.9	15200	15200	19700	16900	16900	20000
	63.68	1550	1550	2635	50	2.7	15800	15800	19700	16900	16900	20000
	72.57	1550	1550	2635	51	2.2	16900	16900	19700	16900	16900	20000
	81.92	1550	1550	2635	51	4.0	16900	16900	19700	16900	16900	20000
	93.38	1550	1550	2635	51	3.3	16900	16900	19700	16900	16900	20000
	103.65	1550	1550	2635	52	3.0	16900	16900	19700	16900	16900	20000
	118.43	1550	1550	2635	52	2.4	16900	16900	19700	16900	16900	20000
	124.97	1550	1550	2635	52	2.3	16900	16900	19700	16900	16900	20000
	142.41	1550	1550	2635	49	1.9	16900	16900	19700	16900	16900	20000
	155.34	1550	1550	2635	45	1.6	16900	16900	19700	16900	16900	20000
	181.77	1550	1550	2635	39	1.3	16900	16900	19700	16900	16900	20000
	205.71	1550	1550	2635	34	0.90	16900	16900	19700	16900	16900	20000
	216.54	1550	1550	2635	32	0.81	16900	16900	19700	16900	16900	20000
	246.54	1550	1550	2635	28	0.66	16900	16900	19700	16900	16900	20000

8.31 R 87 / CM [mm]

04 074 01 01

R87..

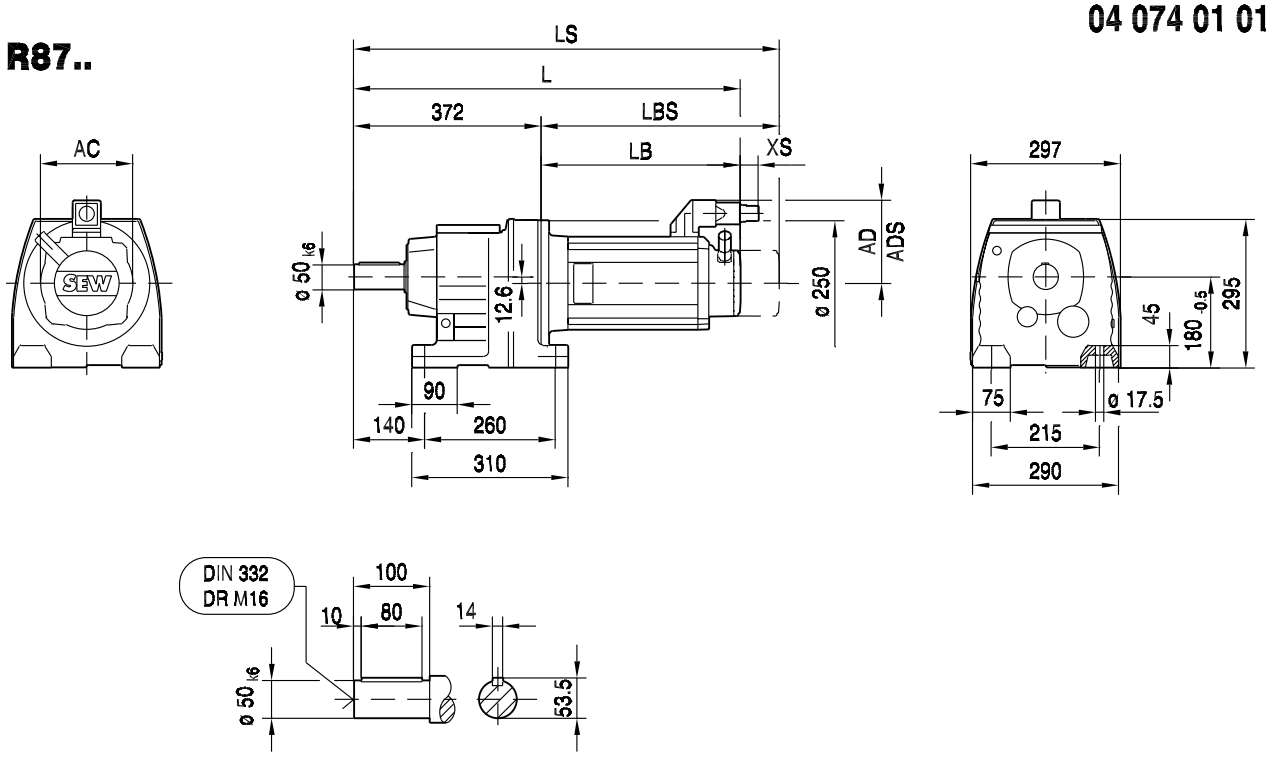

R87F..

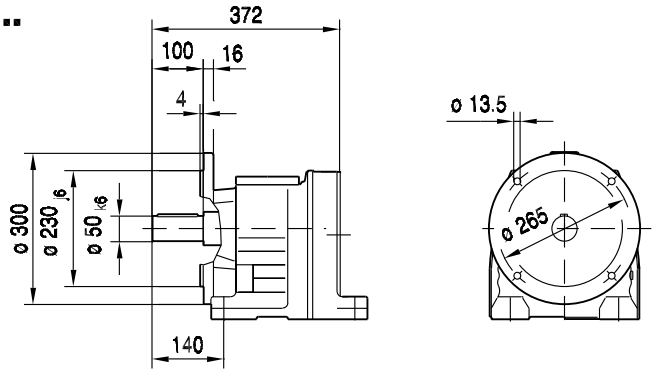

(→ 150)	CM90S	CM90M	CM90L	CM112S	CM112M	CM112L	CM112H				
AC	142	142	142	186	186	186	186				
AD	140	140	140	162	162	162	162				
ADS	140	140	140	162	162	162	162				
L	644	671	725	679	706	768	898				
LS	740	767	821	769	796	858	963				
LB	272	299	353	307	334	396	526				
LBS	368	395	449	397	424	486	591				
XS	50	50	50	36	36	36	36				

04 075 01 01

RF87..

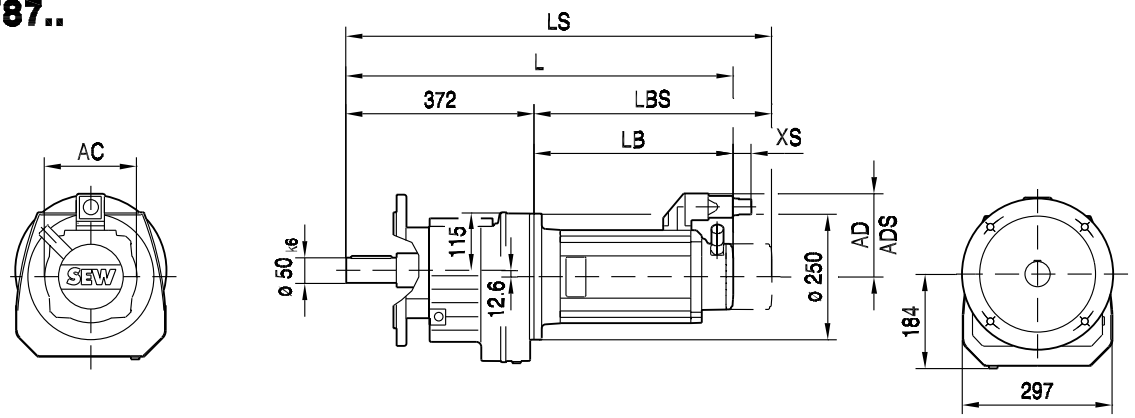

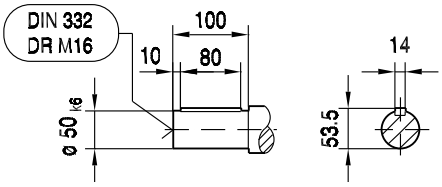

ø 300

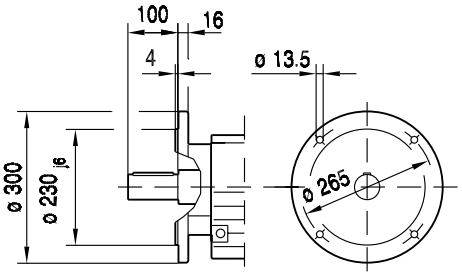

ø 350

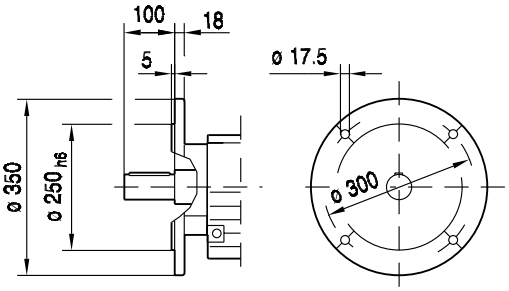

(→ 📖 150)	CM90S	CM90M	CM90L	CM112S	CM112M	CM112L	CM112H				
AC	142	142	142	186	186	186	186				
AD	140	140	140	162	162	162	162				
ADS	140	140	140	162	162	162	162				
L	644	671	725	679	706	768	898				
LS	740	767	821	769	796	858	963				
LB	272	299	353	307	334	396	526				
LBS	368	395	449	397	424	486	591				
XS	50	50	50	36	36	36	36				

8.32 R 97 / CM [Nm]

M_{aDyn} [Nm]		CM						
	i	90S	90M	90L	112S	112M	112L	112H
R97 2	4.5			330	359	474	687	1039
	5.2			381	415	547	794	1200
	6.21			455	496	654	949	1434
	7.12	273	361	522	568	749	1088	1644
	8.39	322	425	615	670	883	1282	1937
	9.29	357	470	681	742	978	1419	2145
	10.83			794	865	1140	1655	2500
	12.39	476	627	909	989	1304	1893	2860
	14.62	562	740	1072	1167	1539	2234	>3090
	16.17	621	819	1186	1291	1702	2470	>3090
	18.24	701	924	1338	1456	1920	2787	>3090
	20.14	774	1020	1477	1608	2120	3077	>3090
	22.37	859	1133	1640	1786	2354	>3090	
	25.03	961	1267	1835	1998	2634	>3090	
	27.19	1044	1377	1994	2171			
	32.05	1231	1623	2350	2559			
R97 3	27.58	1048	1382	2002	2179	2873	>3090	>3090
	33.25	1264	1666	2413	2627	>3090	>3090	>3090
	37.13	1412	1861	2695	2934	>3090	>3090	>3090
	42.78	1626	2144	>3090	>3090	>3090	>3090	>3090
	47.58	1809	2384	>3090	>3090	>3090	>3090	>3090
	53.21	2023	2666	>3090	>3090	>3090	>3090	
	59.92	2278	3003	>3090	>3090	>3090	>3090	
	65.21	2479	>3090	>3090	>3090			
	72.17	2715	>3090	>3090	>3090	>3090	>3090	>3090
	83.15	>3090	>3090	>3090	>3090	>3090	>3090	>3090
	92.48	>3090	>3090	>3090	>3090	>3090	>3090	>3090
	103.44	>3090	>3090	>3090	>3090	>3090	>3090	
	116.48	>3090	>3090	>3090	>3090	>3090	>3090	
	126.75	>3090	>3090	>3090	>3090			
	150.78	>3090	>3090	>3090	>3090			
	170.02	>3090	>3090					
	186.3	>3090	>3090					
	216.28	>3090						
	241.25							
	255.71							
	289.74							

m [kg]		CM						
	s	90S	90M	90L	112S	112M	112L	112H
R97	2	115	115	120	120	125	140	150
R97	3	120	120	125	125	130	145	150
RF: + 17.2 kg / RM: + 68.5 kg								

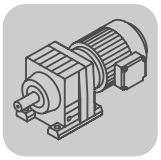

R..CMP, DS, CM
R 97 / CM [Nm]

CM..	i	n_{epk} [1/min]	η [%]	c_T R [Nm/']	c_T RF [Nm/']	c_T RM [Nm/']	φ /R [']
R97 2	4.5	3597	97	127.46	127.46	111.86	6
	5.2	3924	97	127.46	127.46	111.86	6
	6.21	4378	97	127.46	127.46	111.86	6
	7.12	4500	97	127.46	127.46	111.86	6
	8.39	4500	97	127.46	127.46	111.86	6
	9.29	4500	97	127.46	127.46	111.86	6
	10.83	4500	97	154.58	154.58	132.22	6
	12.39	4500	97	154.58	154.58	132.22	6
	14.62	4500	97	154.58	154.58	132.22	6
	16.17	4500	97	154.58	154.58	132.22	6
	18.24	4500	97	154.58	154.58	132.22	6
	20.14	4500	97	154.58	154.58	132.22	5
	22.37	4500	97	154.58	154.58	132.22	5
	25.03	4500	97	154.58	154.58	132.22	5
	27.19	4500	97	154.58	154.58	132.22	5
	32.05	4500	97	154.58	154.58	132.22	5
R97 3	27.58	4500	96	163.15	163.15	138.44	6
	33.25	4500	96	163.15	163.15	138.44	6
	37.13	4500	96	163.15	163.15	138.44	6
	42.78	4500	96	163.15	163.15	138.44	6
	47.58	4500	96	163.15	163.15	138.44	6
	53.21	4500	96	163.15	163.15	138.44	6
	59.92	4500	96	163.15	163.15	138.44	6
	65.21	4500	96	163.15	163.15	138.44	6
	72.17	4500	95	163.68	163.68	138.82	6
	83.15	4500	95	163.68	163.68	138.82	6
	92.48	4500	95	163.68	163.68	138.82	6
	103.44	4500	95	163.68	163.68	138.82	6
	116.48	4500	95	163.68	163.68	138.82	6
	126.75	4500	95	163.68	163.68	138.82	6
	150.78	4500	95	163.68	163.68	138.82	6
	170.02	4500	95	163.68	163.68	138.82	6
	186.3	4500	95	163.68	163.68	138.82	6
	216.28	4500	94	163.68	163.68	138.82	6
	241.25	4500	94	163.68	163.68	138.82	6
	255.71	4500	94	163.68	163.68	138.82	6
	289.74	4500	93	163.68	163.68	138.82	6

CM..	i	M_{amax} [Nm]	M_{apk} [Nm]	$M_{aNotaus}$ [Nm]	n_{ak} [1/min]	J_G 10^{-4} [kgm^2]	F_{Ramax} R [N]	F_{Ramax} RF [N]	F_{Ramax} RM [N]	F_{Rapk} R [N]	F_{Rapk} RF [N]	F_{Rapk} RM [N]
R97 2	4.5	1630	2445	2771	244	80	9500	9500	17900	24400	24400	26300
	5.2	1780	2560	3026	192	65	9850	9850	18700	23800	23800	26100
	6.21	1890	2560	3213	161	51	10500	10500	19900	23800	23800	26100
	7.12	2000	2560	3400	140	41	10900	10900	20800	23800	23800	26100
	8.39	2030	2560	3451	131	33	11700	11700	22000	23800	23800	26100
	9.29	2030	2560	3451	129	28	12200	12200	22800	23800	23800	26100
	10.83	2090	3090	3553	129	46	12100	12100	23700	16000	16000	24500
	12.39	2190	3090	3723	113	37	12700	12700	24800	16000	16000	24500
	14.62	2300	3090	3910	103	30	13400	13400	26200	16000	16000	24500
	16.17	2400	3090	4080	87	26	13800	13800	26200	16000	16000	24500
	18.24	2500	3090	4250	77	22	14400	14400	26100	16000	16000	24500
	20.14	2610	3090	4437	70	19	14800	14800	26000	16000	16000	24500
	22.37	2720	3090	4624	63	16	15300	15300	25800	16000	16000	24500
	25.03	2830	3090	4811	56	14	15900	15900	25700	16000	16000	24500
	27.19	2560	3090	4352	74	13	8380	8380	26000	16000	16000	24500
	32.05	2560	3090	4352	75	9.8	10600	10600	26000	16000	16000	24500

CM..	i	M_{amax} [Nm]	M_{apk} [Nm]	$M_{aNotaus}$ [Nm]	n_{ak} [1/min]	$J_G\ 10^{-4}$ [kgm^2]	F_{Ramax} R [N]	F_{Ramax} RF [N]	F_{Ramax} RM [N]	F_{Rapk} R [N]	F_{Rapk} RF [N]	F_{Rapk} RM [N]
R97 3	27.58	2670	3090	4539	54	24	16900	16900	25900	16000	16000	24500
	33.25	2890	3090	4913	45	19	17900	17900	25600	16000	16000	24500
	37.13	3000	3090	5100	40	16	18600	18600	25400	16000	16000	24500
	42.78	3000	3090	5100	37	13	19800	19800	25400	16000	16000	24500
	47.58	3000	3090	5100	38	11	19800	19800	25400	16000	16000	24500
	53.21	3000	3090	5100	39	9.5	19800	19800	25400	16000	16000	24500
	59.92	3000	3090	5100	40	8.0	19800	19800	25400	16000	16000	24500
	65.21	3000	3090	5100	40	7.1	19800	19800	25400	16000	16000	24500
	72.17	3000	3090	5100	35	14	18000	18000	25400	16000	16000	24500
	83.15	3000	3090	5100	35	11	19800	19800	25400	16000	16000	24500
	92.48	3000	3090	5100	35	9.8	19800	19800	25400	16000	16000	24500
	103.44	3000	3090	5100	35	8.4	19800	19800	25400	16000	16000	24500
	116.48	3000	3090	5100	35	7.0	19800	19800	25400	16000	16000	24500
	126.75	3000	3090	5100	36	6.3	19800	19800	25400	16000	16000	24500
	150.78	3000	3090	5100	35	4.9	19800	19800	25400	16000	16000	24500
	170.02	3000	3090	5100	35	4.0	19800	19800	25400	16000	16000	24500
	186.3	3000	3090	5100	35	3.5	19800	19800	25400	16000	16000	24500
	216.28	3000	3090	5100	32	2.8	19800	19800	25400	16000	16000	24500
	241.25	3000	3090	5100	29	1.8	19800	19800	25400	16000	16000	24500
	255.71	3000	3090	5100	27	1.6	19800	19800	25400	16000	16000	24500
	289.74	3000	3090	5100	24	1.3	19800	19800	25400	16000	16000	24500

8.33 R 97 / CM [mm]

04 076 01 01

R97..

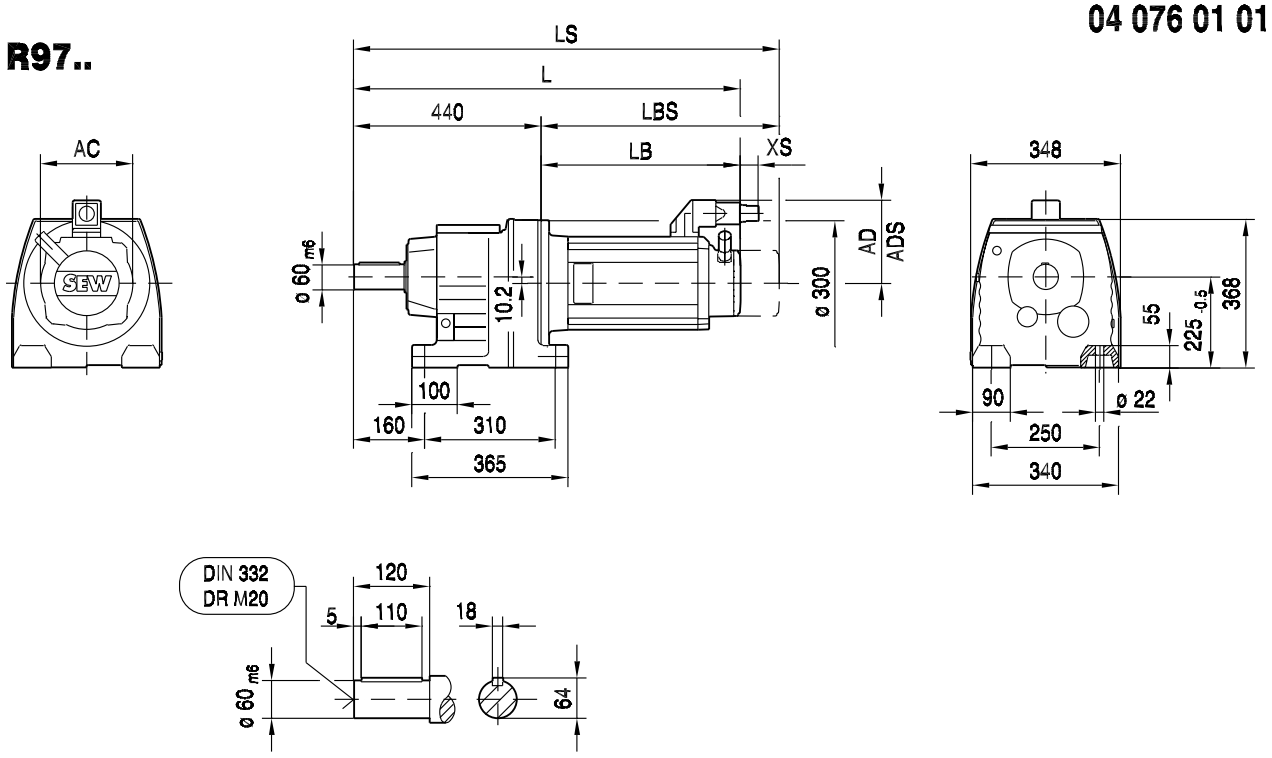

(→ 📖 150)	CM90S	CM90M	CM90L	CM112S	CM112M	CM112L	CM112H				
AC	142	142	142	186	186	186	186				
AD	140	140	140	162	162	162	162				
ADS	140	140	140	162	162	162	162				
L	706	733	787	742	769	831	961				
LS	802	829	883	832	859	921	1026				
LB	266	293	347	302	329	391	521				
LBS	362	389	443	392	419	481	586				
XS	50	50	50	36	36	36	36				

04 077 01 01

RF97..

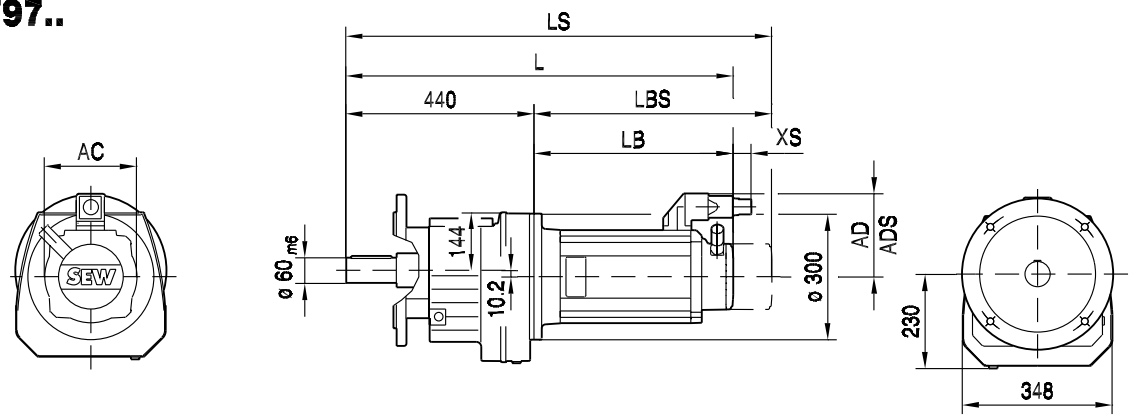

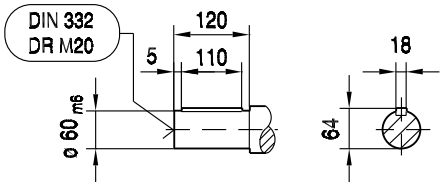

ø 350

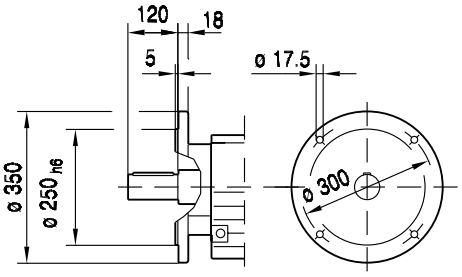

ø 450

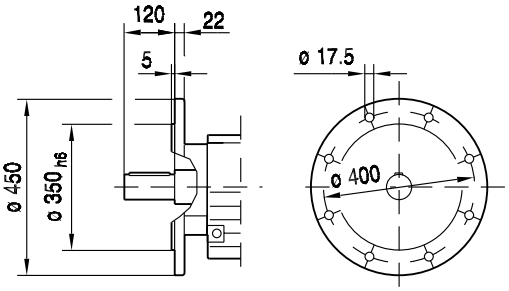

(→ 150)	CM90S	CM90M	CM90L	CM112S	CM112M	CM112L	CM112H				
AC	142	142	142	186	186	186	186				
AD	140	140	140	162	162	162	162				
ADS	140	140	140	162	162	162	162				
L	706	733	787	742	769	831	961				
LS	802	829	883	832	859	921	1026				
LB	266	293	347	302	329	391	521				
LBS	362	389	443	392	419	481	586				
XS	50	50	50	36	36	36	36				

8.34 R 107 / CM [Nm]

M_{aDyn} [Nm]		CM			
	i	112S	112M	112L	112H
R107 2	4.92		518	752	1136
	5.82	465	613	889	1344
	6.66	532	701	1017	1538
	7.86	627	827	1201	1815
	8.56		901	1308	1976
	10.13	809	1066	1548	2339
	11.59	925	1220	1771	2676
	13.66	1090	1438	2087	3154
	15.65	1249	1647	2391	3613
	18.21	1454	1917	2782	4204
	20.07	1602	2112	3066	>4360
	22.62	1806	2381	3456	>4360
	24.9	1988	2621	3804	>4360
	27.58	2202	2903	4214	
	30.77	2456	3238	>4360	
R107 3	29.49	2306	3040	>4360	>4360
	35.26	2786	3673	>4360	>4360
	40.37	3190	4205	>4360	>4360
	47.63	3763	>4360	>4360	>4360
	52.68	4162	>4360	>4360	>4360
	59.41	>4360	>4360	>4360	>4360
	65.6	>4360	>4360	>4360	>4360
	72.88	>4360	>4360	>4360	
	78.57	>4360	>4360	>4360	>4360
	92.7	>4360	>4360	>4360	>4360
	102.53	>4360	>4360	>4360	>4360
	115.63	>4360	>4360	>4360	>4360
	127.68	>4360	>4360	>4360	>4360
	141.83	>4360	>4360	>4360	
	158.68	>4360	>4360	>4360	
	172.34	>4360			
	203.16	>4360			
	229.95				
	251.15				

m [kg]		CM			
	s	112S	112M	112L	112H
R107	2	180	180	195	200
R107	3	185	190	205	205
RF: + 6.0 kg / RM: + 94.0 kg					

CM..					c_T		φ
	i	n_{epk} [1/min]	η [%]	R [Nm/']	RF [Nm/']	RM [Nm/']	/R [']
R107 2	4.92	3197	97	207.85	207.85	174.68	9
	5.82	3597	97	207.85	207.85	174.68	9
	6.66	3924	97	207.85	207.85	174.68	9
	7.86	4378	97	207.85	207.85	174.68	9
	8.56	4500	97	249.7	249.7	203.32	7
	10.13	4500	97	249.7	249.7	203.32	7
	11.59	4500	97	249.7	249.7	203.32	7
	13.66	4500	97	249.7	249.7	203.32	7
	15.65	4500	97	249.7	249.7	203.32	7
	18.21	4500	97	249.7	249.7	203.32	7
	20.07	4500	97	249.7	249.7	203.32	7
	22.62	4500	97	249.7	249.7	203.32	7
	24.9	4500	97	249.7	249.7	203.32	7
	27.58	4500	97	249.7	249.7	203.32	7
	30.77	4500	97	249.7	249.7	203.32	7

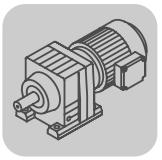

CM..	i	n_{epk} [1/min]	η [%]	c_T R [Nm/']	c_T RF [Nm/']	c_T RM [Nm/']	φ /R [']
R107 3	29.49	4500	95	259.15	259.15	209.55	7
	35.26	4500	96	259.15	259.15	209.55	7
	40.37	4500	96	259.15	259.15	209.55	7
	47.63	4500	96	259.15	259.15	209.55	7
	52.68	4500	96	259.15	259.15	209.55	7
	59.41	4500	96	259.15	259.15	209.55	7
	65.6	4500	96	259.15	259.15	209.55	7
	72.88	4500	96	259.15	259.15	209.55	7
	78.57	4500	95	259.94	259.94	210.06	7
	92.7	4500	95	259.94	259.94	210.06	7
	102.53	4500	95	259.94	259.94	210.06	7
	115.63	4500	95	259.94	259.94	210.06	7
	127.68	4500	95	259.94	259.94	210.06	7
	141.83	4500	95	259.94	259.94	210.06	7
	158.68	4500	95	259.94	259.94	210.06	7
	172.34	4500	95	259.94	259.94	210.06	7
	203.16	4500	94	259.94	259.94	210.06	7
	229.95	4500	94	259.94	259.94	210.06	7
	251.15	4500	94	259.94	259.94	210.06	7

CM..	i	M_{amax} [Nm]	M_{apk} [Nm]	$M_{aNotaus}$ [Nm]	n_{ak} [1/min]	J_G 10^{-4} [kgm^2]	F_{Ramax} R [N]	F_{Ramax} RF [N]	F_{Ramax} RM [N]	F_{Rapk} R [N]	F_{Rapk} RF [N]	F_{Rapk} RM [N]
R107 2	4.92	2900	3820	4930	467	144	11300	11300	21100	31800	31800	33500
	5.82	2970	3820	5049	515	108	12100	12100	22400	31800	31800	33500
	6.66	2970	3820	5049	586	88	12800	12800	23500	31800	31800	33500
	7.86	2970	3820	5049	700	70	13800	13800	24900	31800	31800	33500
	8.56	4300	4360	7310	245	129	11300	11300	24400	29100	29100	32100
	10.13	4300	4360	7310	237	97	12400	12400	26000	29100	29100	32100
	11.59	4300	4360	7310	242	80	13300	13300	27300	29100	29100	32100
	13.66	4300	4360	7310	242	64	14400	14400	29000	29100	29100	32100
	15.65	4300	4360	7310	236	52	15400	15400	30500	29100	29100	32100
	18.21	4300	4360	7310	236	43	16600	16600	32300	29100	29100	32100
	20.07	4300	4360	7310	234	37	17300	17300	32800	29100	29100	32100
	22.62	4300	4360	7310	234	31	18300	18300	32800	29100	29100	32100
	24.9	4300	4360	7310	237	27	19200	19200	32800	29100	29100	32100
	27.58	4300	4360	7310	232	21	20100	20100	32800	29100	29100	32100
	30.77	4300	4360	7310	227	18	21100	21100	32800	29100	29100	32100
R107 3	29.49	4300	4360	7310	85	60	20700	20700	32800	29100	29100	32100
	35.26	4300	4360	7310	88	47	22400	22400	32800	29100	29100	32100
	40.37	4300	4360	7310	87	38	23800	23800	32800	29100	29100	32100
	47.63	4300	4360	7310	88	31	25500	25500	32800	29100	29100	32100
	52.68	4300	4360	7310	89	27	26600	26600	32800	29100	29100	32100
	59.41	4300	4360	7310	89	22	28000	28000	32800	29100	29100	32100
	65.6	4300	4360	7310	90	19	29200	29200	32800	29100	29100	32100
	72.88	4300	4360	7310	89	17	29500	29500	32800	29100	29100	32100
	78.57	4300	4360	7310	46	34	29500	29500	32800	29100	29100	32100
	92.7	4300	4360	7310	47	28	29500	29500	32800	29100	29100	32100
	102.53	4300	4360	7310	48	25	29500	29500	32800	29100	29100	32100
	115.63	4300	4360	7310	48	20	29500	29500	32800	29100	29100	32100
	127.68	4300	4360	7310	49	18	29500	29500	32800	29100	29100	32100
	141.83	4300	4360	7310	49	15	29500	29500	32800	29100	29100	32100
	158.68	4300	4360	7310	44	13	29500	29500	32800	29100	29100	32100
	172.34	4300	4360	7310	41	12	29500	29500	32800	29100	29100	32100
	203.16	4300	4360	7310	34	9.2	29500	29500	32800	29100	29100	32100
	229.95	4300	4360	7310	30	5.9	29500	29500	32800	29100	29100	32100
	251.15	4300	4360	7310	28	5.1	29500	29500	32800	29100	29100	32100

8.35 R 107 / CM [mm]

04 078 01 01

R107..

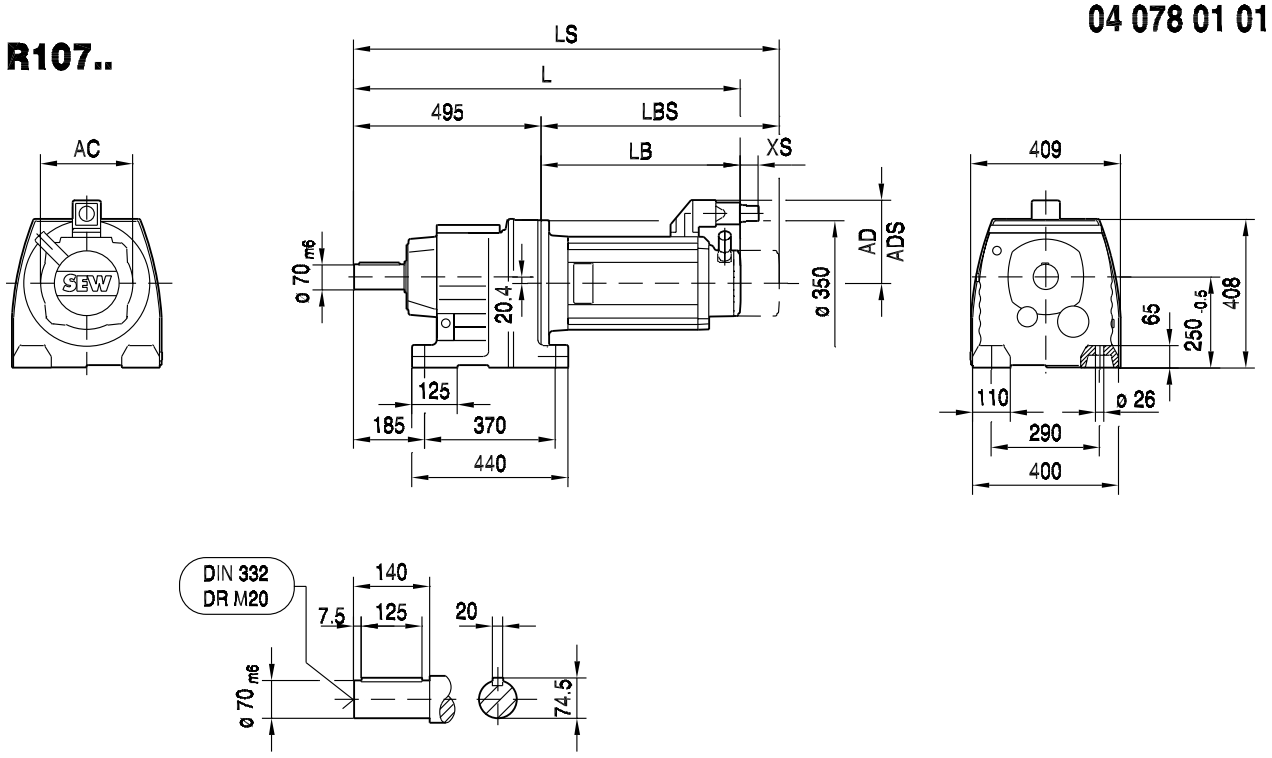

(→ 150)	CM112S	CM112M	CM112L	CM112H							
AC	186	186	186	186							
AD	162	162	162	162							
ADS	162	162	162	162							
L	791	818	880	1010							
LS	881	908	970	1075							
LB	296	323	385	515							
LBS	386	413	475	580							
XS	36	36	36	36							

04 079 01 01

RF107..

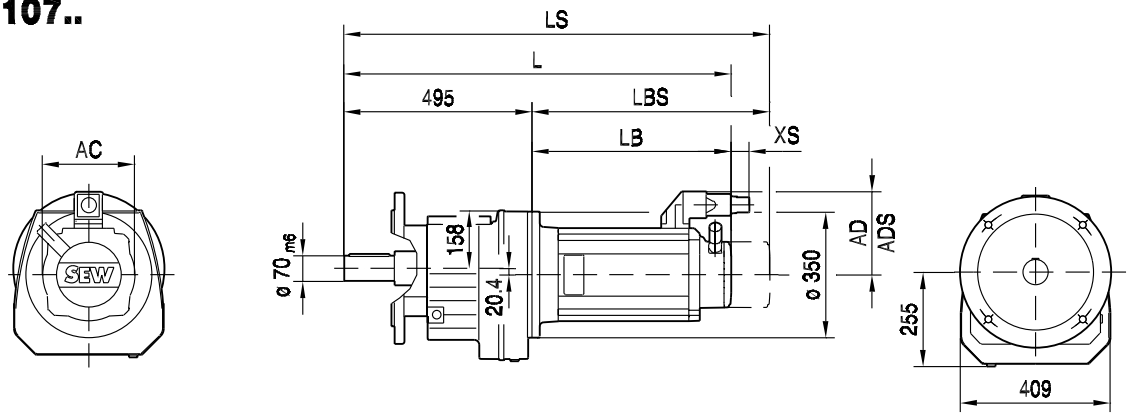

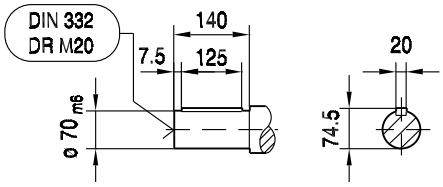

ø 350

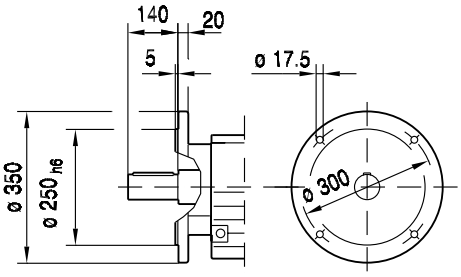

ø 450

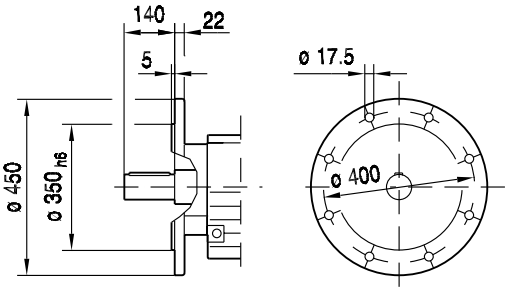

(→ 📖 150)	CM112S	CM112M	CM112L	CM112H							
AC	186	186	186	186							
AD	162	162	162	162							
ADS	162	162	162	162							
L	791	818	880	1010							
LS	881	908	970	1075							
LB	296	323	385	515							
LBS	386	413	475	580							
XS	36	36	36	36							

9 F..CMP, DS, CM

9.1 F, FA, FV, FH, FF, FAF, FVF, FHF, FA..B, FV..B, FH..B, FAZ, FVZ, FAF, FVF..CMP / DS / CM

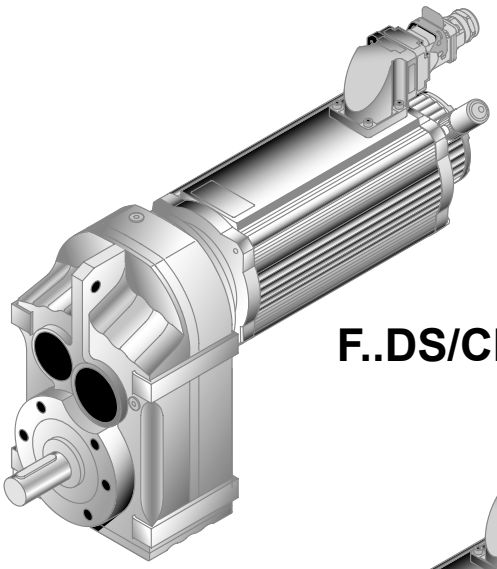

F..DS/CM..

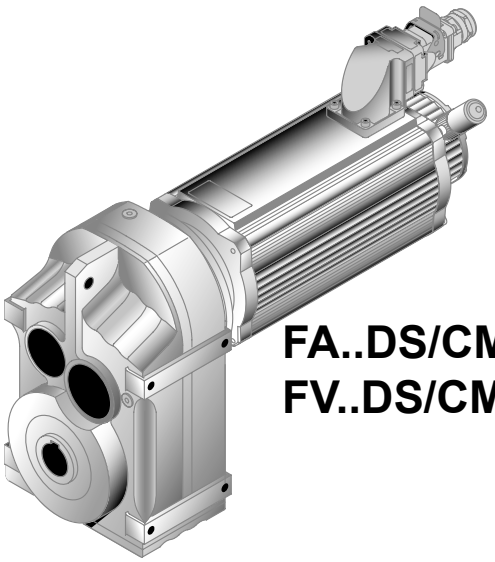

FA..DS/CM..
FV..DS/CM..

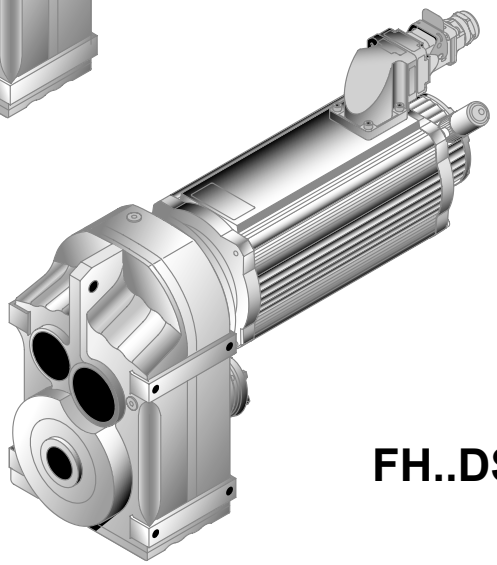

FH..DS/CM..

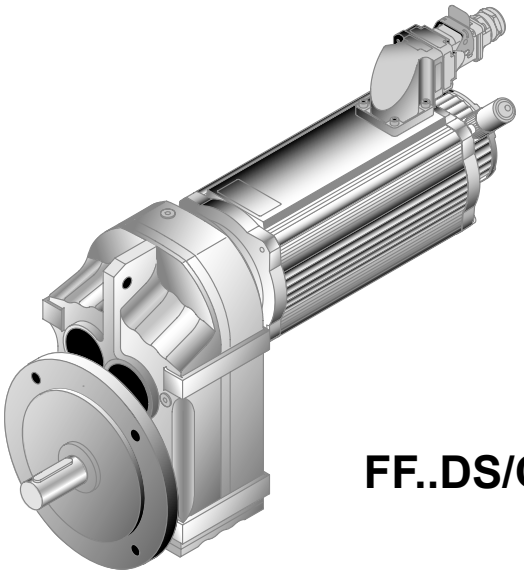

FF..DS/CM..

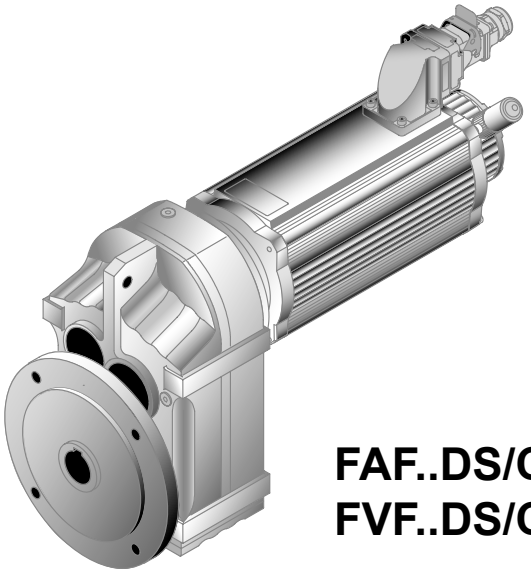

FAF..DS/CM..
FVF..DS/CM..

52497AXX

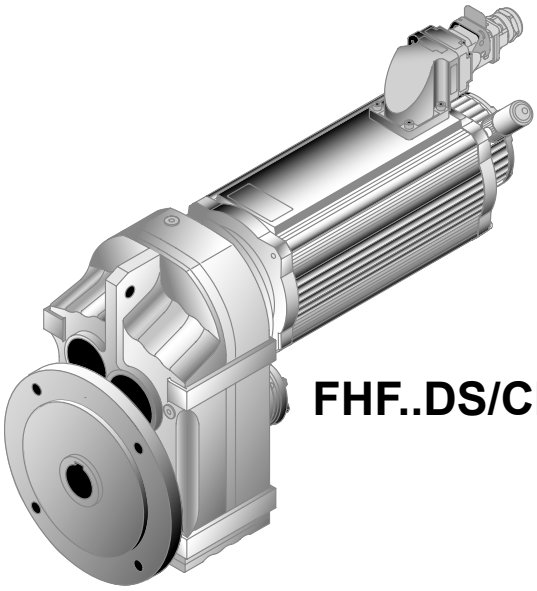

FHF..DS/CM..

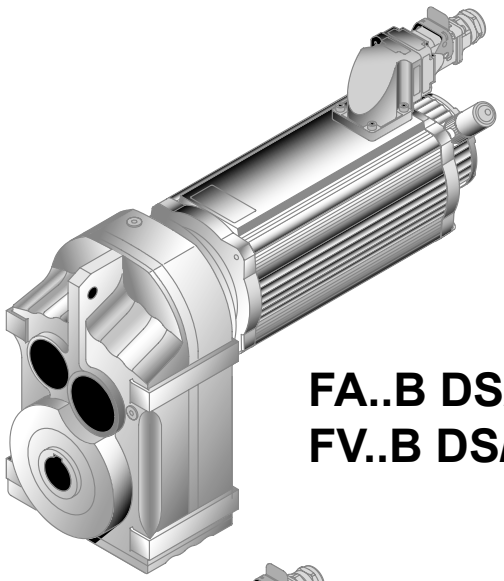

FA..B DS/CM..
FV..B DS/CM..

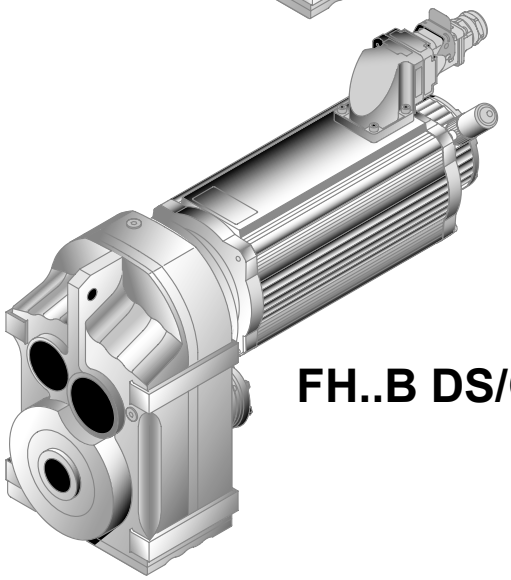

FH..B DS/CM..

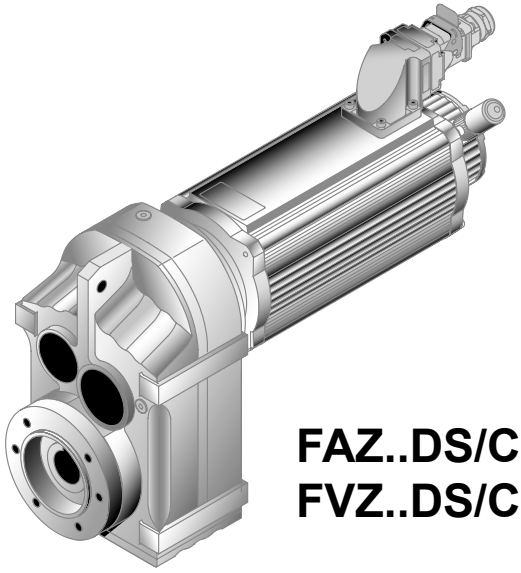

FAZ..DS/CM..
FVZ..DS/CM..

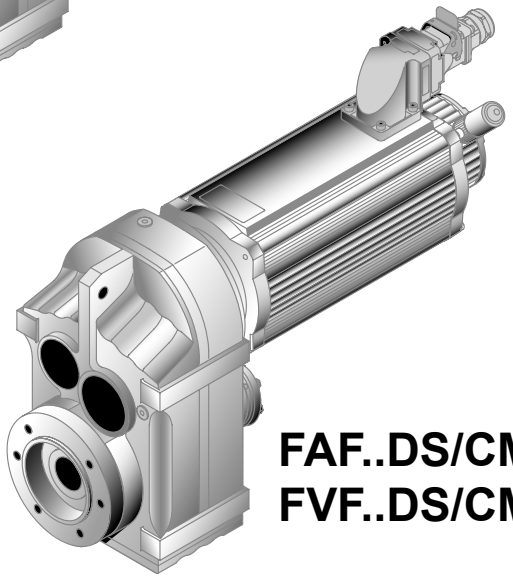

FAF..DS/CM..
FVF..DS/CM..

52495AXX

9.2 F 27 / CMP / DS / CM [Nm]

M_{aDyn} [Nm]		CMP							DS			CM			
	i	40M	50S	50M	50L	63S	63M	63L	56M	56L	56H	71S	71M	71L	90S
FA27 2	4.16	15	21	42	62	45	86	123	15	31	61	67	87	127	>130
	4.93	18	25	49	74	53	102	>144	18	36	73	79	103	>144	>144
	5.27	19	27	53	79	57	109	>150	19	39	78	84	110	>150	>150
	6.17	23	31	62	92	66	128	>163	23	45	91	99	129	>163	>163
	6.91	25	35	69	103	74	143	>163	25	51	102	111	144	>163	>163
	8.13	30	41	81	121	88	>163	>163	30	60	120	130	>163	>163	>163
	9.4	35	47	94	140	101	>163		35	69	139	150	>163		
	9.88	36	49	98	146	105	>157	>157	36	72	144	156	>157	>157	>157
	10.55	38	53	104	156	112	>157	>157	38	77	154	>157	>157	>157	>157
	12.35	45	62	122	>157	132	>157	>157	45	90	>157	>157	>157	>157	>157
	13.84	50	69	137	>157	147	>157	>157	50	101	>157	>157	>157	>157	>157
	16.28	59	81	>157	>157	>157	>157	>157	59	119	>157	>157	>157	>157	>157
	18.84	69	94	>157	>157	>157	>157		69	137	>157	>157	>157		
	20.15	74	101	>157	>157	>157	>157		74	147	>157	>157	>157		
	23.25	85	116	>157		>157			85	>157	>157				
	27.18	99	136						99	>157					
	29.56	108	148						108	>157					
FA27 3	33.83	121	>157	>157	>157	>157	>157	>157	121	>157	>157	>157	>157	>157	>157
	38.33	137	>157	>157	>157	>157	>157		137	>157	>157	>157	>157		
	40.89	146	>157	>157	>157	>157	>157	>157	146	>157	>157	>157	>157	>157	>157
	46.78	>157	>157	>157	>157	>157	>157		>157	>157	>157	>157	>157		
	50.19	>157	>157	>157	>157	>157	>157		>157	>157	>157	>157	>157		
	56.62	>157	>157	>157	>157	>157	>157	>157	>157	>157	>157	>157	>157	>157	>157
	63.86	>157	>157	>157	>157	>157	>157	>157	>157	>157	>157	>157	>157	>157	>157
	72.37	>157	>157	>157	>157	>157	>157		>157	>157	>157	>157	>157		
	77.21	>157	>157	>157	>157	>157	>157	>157	>157	>157	>157	>157	>157	>157	>157
	88.32	>157	>157	>157	>157	>157	>157		>157	>157	>157	>157	>157		
	94.76	>157	>157	>157	>157	>157	>157		>157	>157	>157	>157	>157		
	109.9	>157	>157	>157		>157			>157	>157	>157				
	129.09	>157	>157						>157	>157					
	140.74	>157	>157						>157	>157					

m [kg]		CMP							DS			CM			
	s	40M	50S	50M	50L	63S	63M	63L	56M	56L	56H	71S	71M	71L	90S
FA27	2	7.1	8.8	9.7	11	11	12	14	7.4	8.4	9.2	13	15	18	23
FA27	3	7.4	9.1	10.0	11	11	13	14	7.7	8.7	9.4	14	15	18	23
FAF: + 0.7 kg / F: + 0.5 kg / FF: + 1.3 kg															

CMP.. / DS.. / CM..		n_{epk}	η	c_T			
				FA	FAF	F	FF
	i	[1/min]	[%]	[Nm/°]	[Nm/°]	[Nm/°]	[Nm/°]
FA27 2	4.16	4120	97	46.16	46.16	20.52	18.43
	4.93	4500	97	46.16	46.16	20.52	18.43
	5.27	4500	97	46.16	46.16	20.52	18.43
	6.17	4500	97	46.16	46.16	20.52	18.43
	6.91	4500	97	46.16	46.16	20.52	18.43
	8.13	4500	97	46.16	46.16	20.52	18.43
	9.4	4500	97	46.16	46.16	20.52	18.43
	9.88	4500	96	82.95	82.95	25.56	22.39
	10.55	4500	96	82.95	82.95	25.56	22.39
	12.35	4500	96	82.95	82.95	25.56	22.39
	13.84	4500	96	82.95	82.95	25.56	22.39
	16.28	4500	96	82.95	82.95	25.56	22.39
	18.84	4500	96	82.95	82.95	25.56	22.39
	20.15	4500	96	82.95	82.95	25.56	22.39
	23.25	4500	96	82.95	82.95	25.56	22.39
	27.18	4500	96	82.95	82.95	25.56	22.39
	29.56	4500	96	82.95	82.95	25.56	22.39



CMP.. / DS.. / CM..	i	n_{epk} [1/min]	η [%]	c_T FA [Nm/']	FAF [Nm/']	F [Nm/']	FF [Nm/']
FA27 3	33.83	4500	94	94.87	94.87	26.59	23.17
	38.33	4500	94	94.87	94.87	26.59	23.17
	40.89	4500	94	94.87	94.87	26.59	23.17
	46.78	4500	94	94.87	94.87	26.59	23.17
	50.19	4500	94	94.87	94.87	26.59	23.17
	56.62	4500	93	99.28	99.28	26.92	23.43
	63.86	4500	93	99.28	99.28	26.92	23.43
	72.37	4500	93	99.28	99.28	26.92	23.43
	77.21	4500	93	99.28	99.28	26.92	23.43
	88.32	4500	93	99.28	99.28	26.92	23.43
	94.76	4500	93	99.28	99.28	26.92	23.43
	109.9	4500	93	99.28	99.28	26.92	23.43
	129.09	4500	93	99.28	99.28	26.92	23.43
	140.74	4500	93	99.28	99.28	26.92	23.43

CMP.. / DS.. / CM..	i	M_{amax} [Nm]	M_{apk} [Nm]	$M_{aNotaus}$ [Nm]	n_{ak} [1/min]	J_G 10^{-4} [kgm^2]	F_{Ramax} FA [N]	FAF [N]	F [N]	FF [N]	F_{Rapk} FA [N]	FAF [N]	F [N]	FF [N]
FA27 2	4.16	87	130	148	361	1.4	1810	1810	1380	1180	4500	4500	4500	4500
	4.93	96	144	163	304	1.0	1860	1860	1420	1210	4500	4500	4500	4500
	5.27	100	150	170	266	0.90	1880	1880	1440	1220	4500	4500	4500	4500
	6.17	109	163	185	227	0.68	1940	1940	1480	1260	4500	4500	4500	4500
	6.91	114	163	194	217	0.56	2000	2000	1530	1300	4500	4500	4500	4500
	8.13	123	163	209	172	0.42	2080	2080	1580	1350	4500	4500	4500	4500
	9.4	130	163	221	160	0.33	2170	2170	1660	1410	4500	4500	4500	4500
	9.88	130	157	221	202	0.74	2400	2400	1830	1560	4500	4500	4500	4500
	10.55	130	157	221	209	0.67	2490	2490	1900	1620	4500	4500	4500	4500
	12.35	130	157	221	211	0.51	2700	2700	2060	1760	4500	4500	4500	4500
	13.84	130	157	221	210	0.43	2860	2860	2180	1860	4500	4500	4500	4500
	16.28	130	157	221	209	0.32	3110	3110	2370	2020	4500	4500	4500	4500
	18.84	130	157	221	212	0.26	3340	3340	2550	2170	4500	4500	4500	4500
	20.15	130	157	221	213	0.23	3450	3450	2630	2240	4500	4500	4500	4500
	23.25	130	157	221	215	0.19	3690	3690	2820	2400	4500	4500	4500	4500
	27.18	130	157	221	217	0.15	3970	3970	3030	2580	4500	4500	4500	4500
	29.56	130	157	221	220	0.13	4120	4120	3140	2680	4500	4500	4500	4500
FA27 3	33.83	130	157	221	166	0.31	4380	4380	3340	2850	4500	4500	4500	4500
	38.33	130	157	221	167	0.26	4500	4500	3530	3010	4500	4500	4500	4500
	40.89	130	157	221	166	0.23	4500	4500	3640	3100	4500	4500	4500	4500
	46.78	130	157	221	150	0.18	4500	4500	3860	3290	4500	4500	4500	4500
	50.19	130	157	221	139	0.17	4500	4500	3980	3390	4500	4500	4500	4500
	56.62	130	157	221	124	0.31	4500	4500	4180	3570	4500	4500	4500	4500
	63.86	130	157	221	110	0.26	4500	4500	4400	3750	4500	4500	4500	4500
	72.37	130	157	221	97	0.22	4500	4500	4500	3960	4500	4500	4500	4500
	77.21	130	157	221	91	0.20	4500	4500	4500	4060	4500	4500	4500	4500
	88.32	130	157	221	79	0.16	4500	4500	4500	4290	4500	4500	4500	4500
	94.76	130	157	221	74	0.15	4500	4500	4500	4420	4500	4500	4500	4500
	109.9	130	157	221	64	0.12	4500	4500	4500	4500	4500	4500	4500	4500
	129.09	130	157	221	54	0.090	4500	4500	4500	4500	4500	4500	4500	4500
	140.74	130	157	221	50	0.080	4500	4500	4500	4500	4500	4500	4500	4500

9.3 F 27 / CMP / DS / CM [mm]

42 008 00 07

F27..

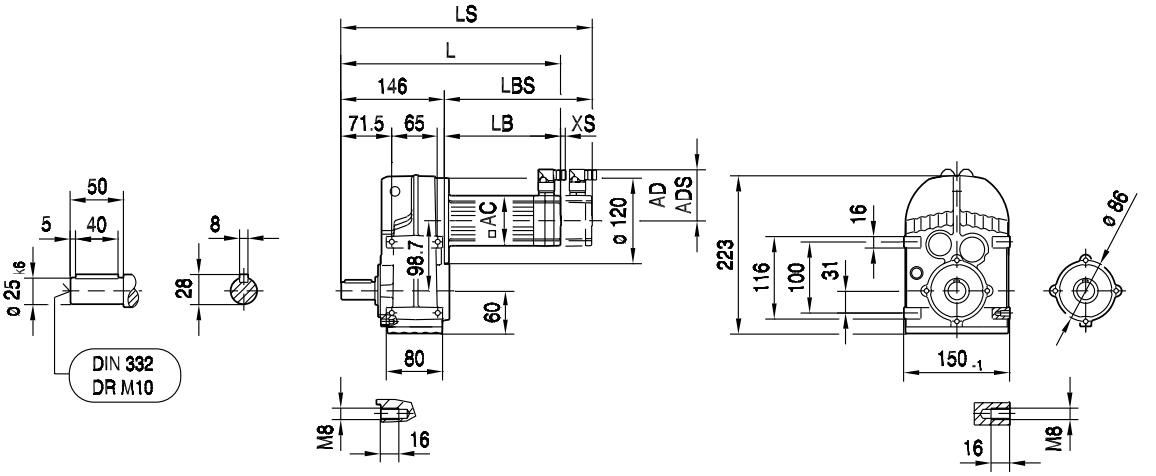

FA27B..

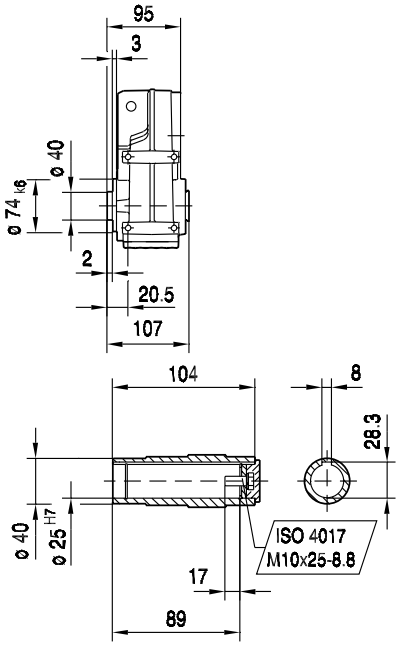

FH27B..

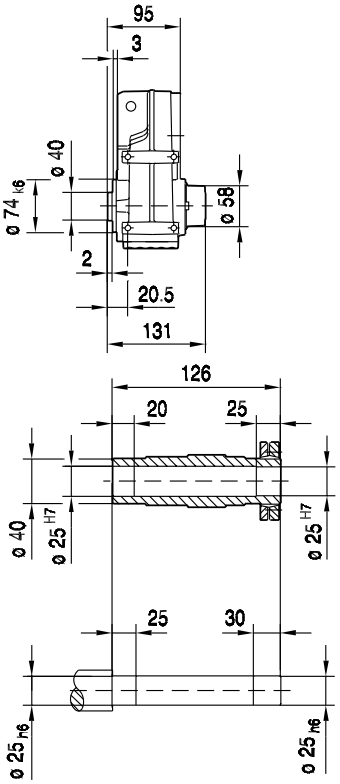

FV27B..

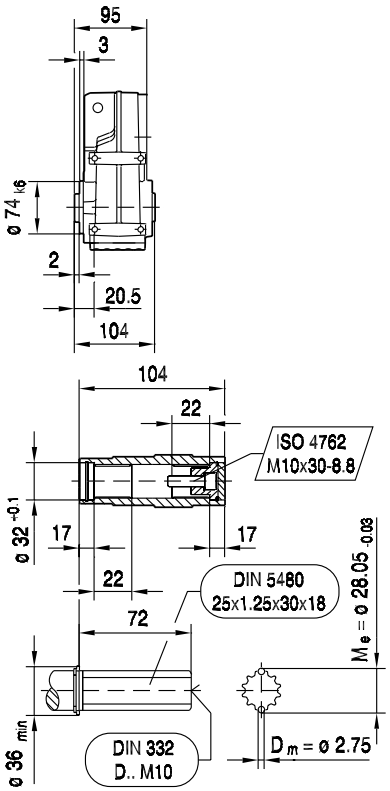

(→ 150)	CMP40M	CMP50S	CMP50M	CMP50L	CMP63S	CMP63M	CMP63L	
AC	57	73	73	73	88	88	88	
AD	75	82	82	82	89	89	89	
ADS	75	82	82	82	89	89	89	
L	289	291	330	369	326	376	429	
LS	319	320	359	398	354	404	458	
LB	143	145	184	223	180	230	283	
LBS	173	174	213	252	208	258	312	
XS	19	18	18	18	14	14	14	

42 009 00 07

FF27..

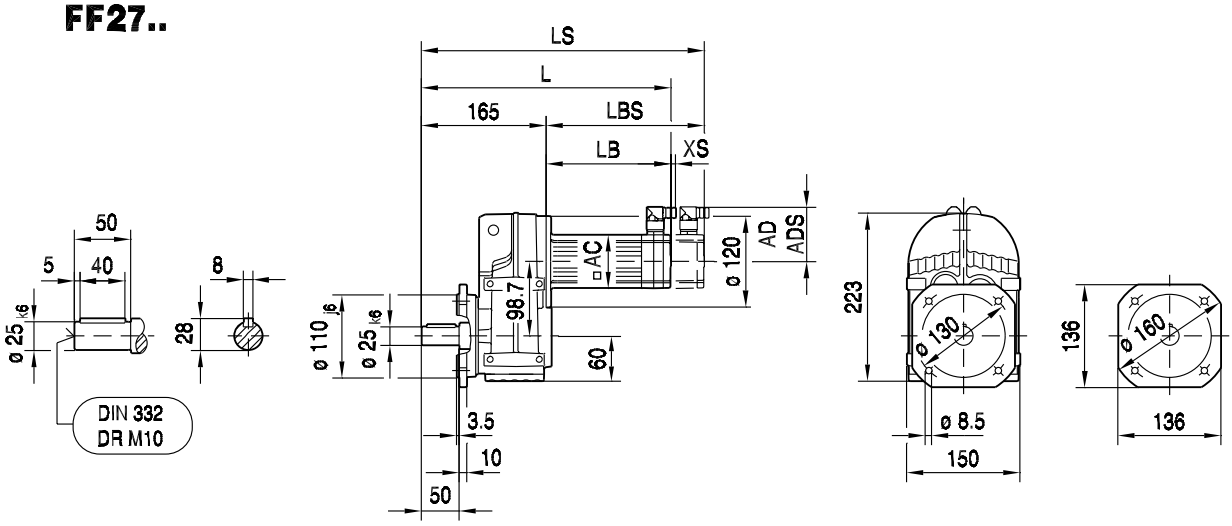

FAF27..

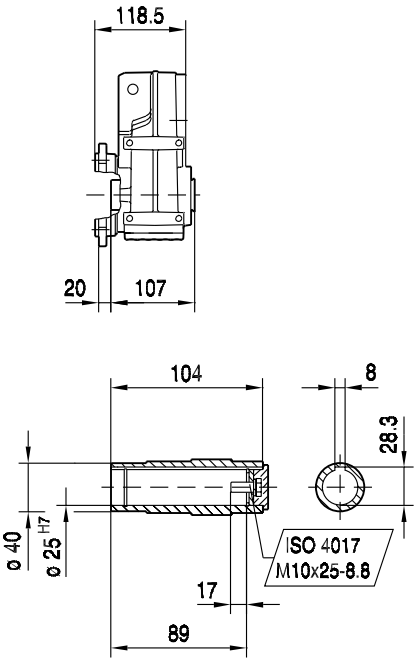

FHF27..

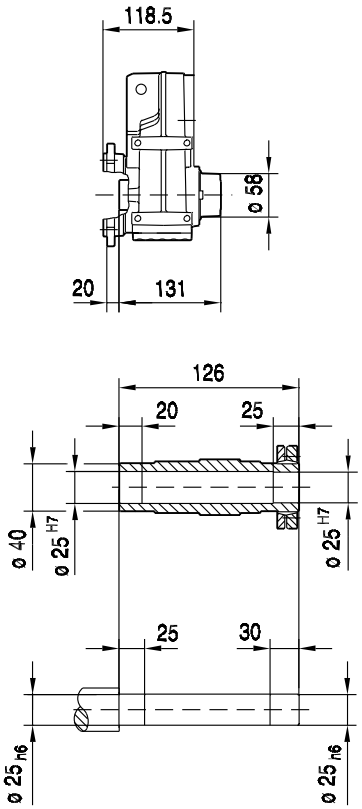

FVF27..

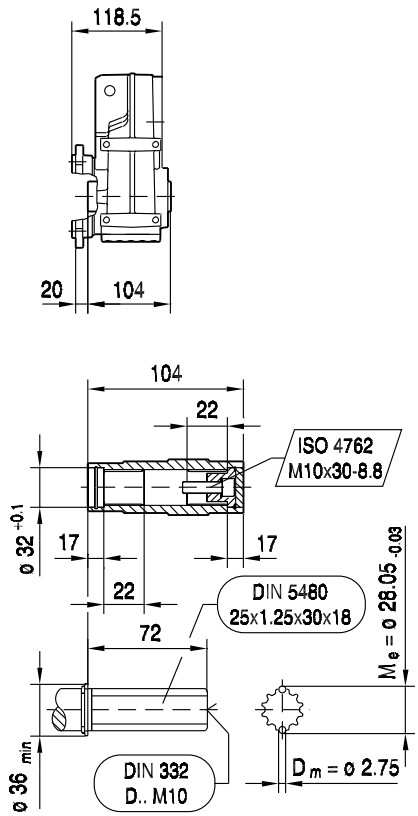

(→ 📖 150)	CMP40M	CMP50S	CMP50M	CMP50L	CMP63S	CMP63M	CMP63L	
AC	57	73	73	73	88	88	88	
AD	75	82	82	82	89	89	89	
ADS	75	82	82	82	89	89	89	
L	308	310	349	388	345	395	448	
LS	338	339	378	417	373	423	477	
LB	143	145	184	223	180	230	283	
LBS	173	174	213	252	208	258	312	
XS	19	18	18	18	14	14	14	

FA27..

42 010 00 07

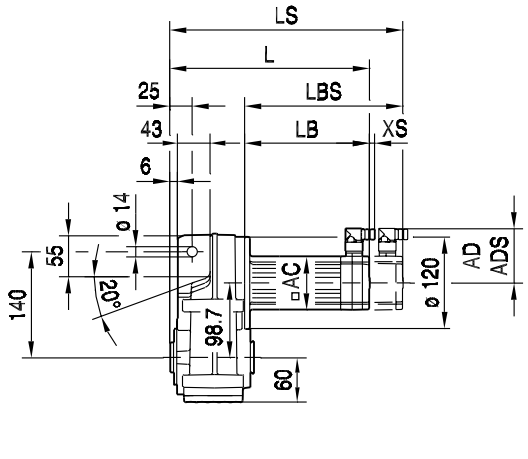

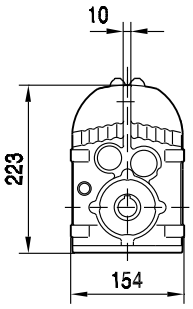

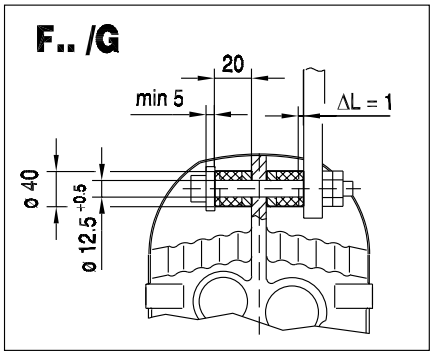

FA27..

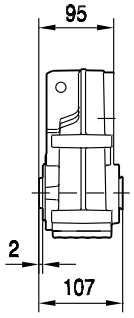

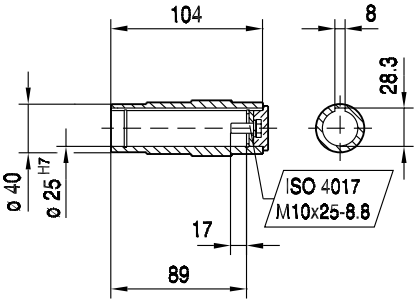

FH27..

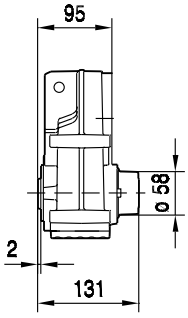

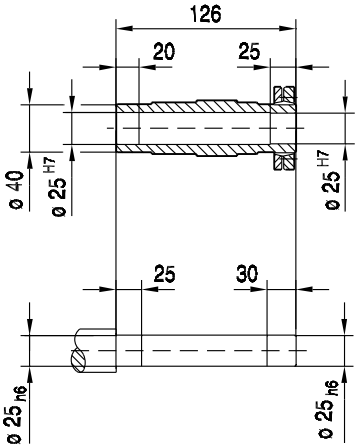

FV27..

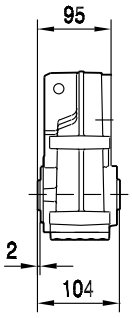

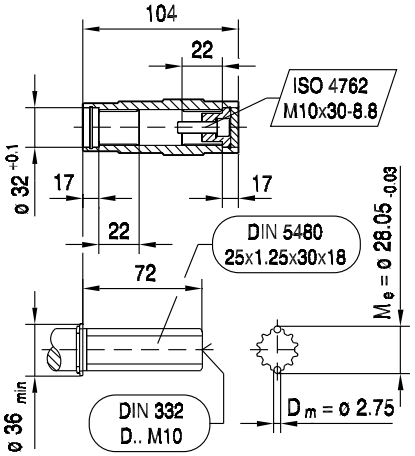

(→ 150)	CMP40M	CMP50S	CMP50M	CMP50L	CMP63S	CMP63M	CMP63L	
AC	57	73	73	73	88	88	88	
AD	75	82	82	82	89	89	89	
ADS	75	82	82	82	89	89	89	
L	238	240	279	318	275	325	378	
LS	268	269	308	347	303	353	407	
LB	143	145	184	223	180	230	283	
LBS	173	174	213	252	208	258	312	
XS	19	18	18	18	14	14	14	

FAZ27..

42 011 00 07

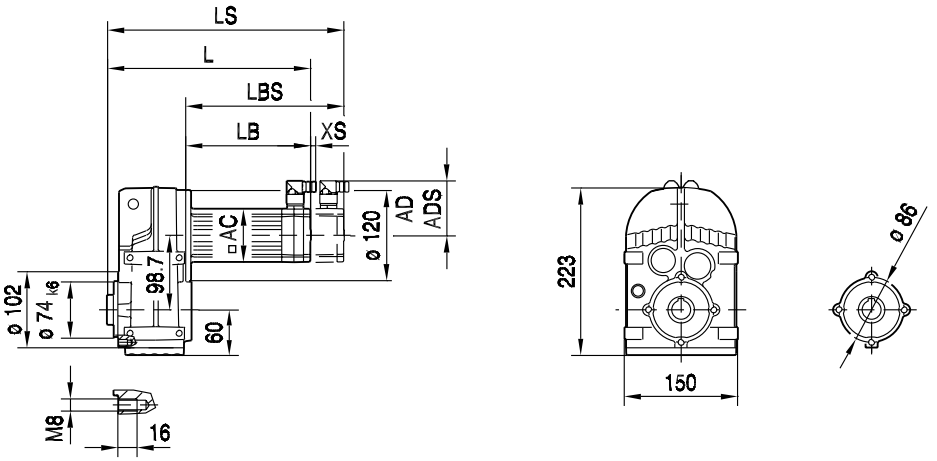

FAZ27..

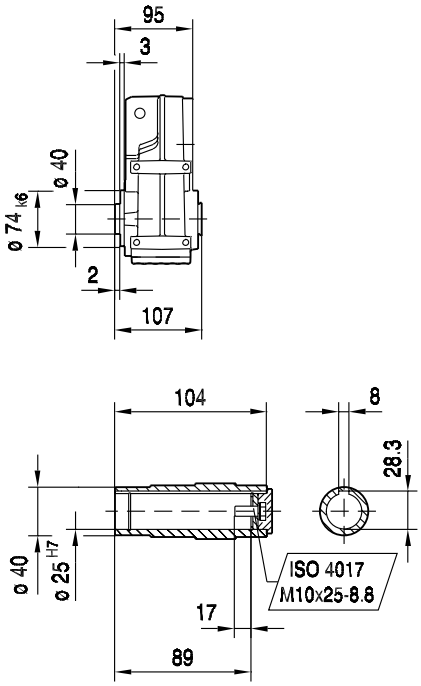

FHZ27..

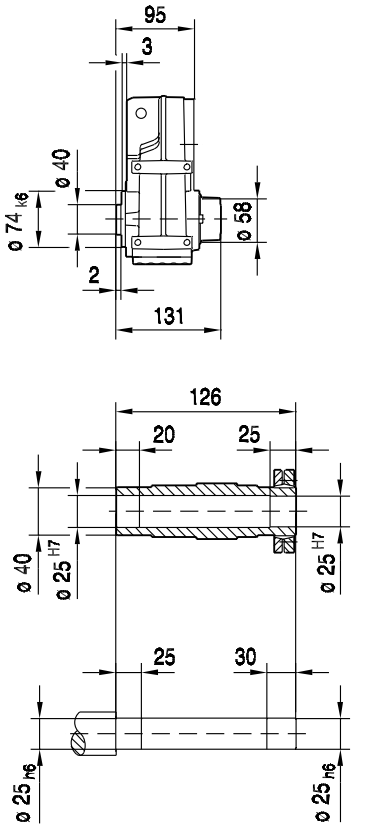

FVZ27..

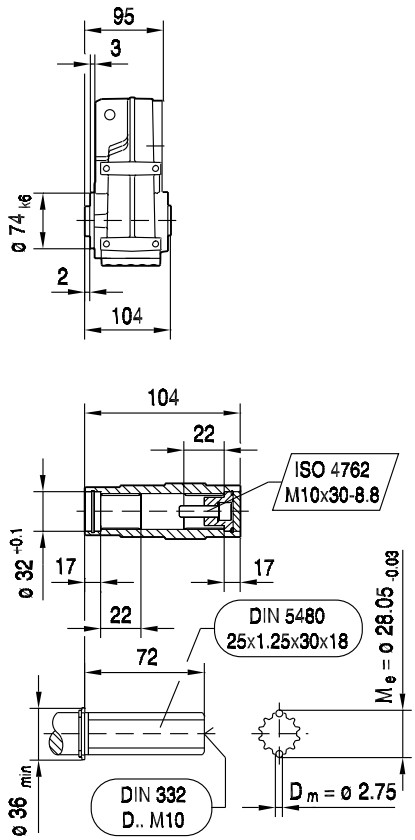

(→ 📖 150)	CMP40M	CMP50S	CMP50M	CMP50L	CMP63S	CMP63M	CMP63L	
AC	57	73	73	73	88	88	88	
AD	75	82	82	82	89	89	89	
ADS	75	82	82	82	89	89	89	
L	238	240	279	318	275	325	378	
LS	268	269	308	347	303	353	407	
LB	143	145	184	223	180	230	283	
LBS	173	174	213	252	208	258	312	
XS	19	18	18	18	14	14	14	

42 120 01 01

F27..

DS56..

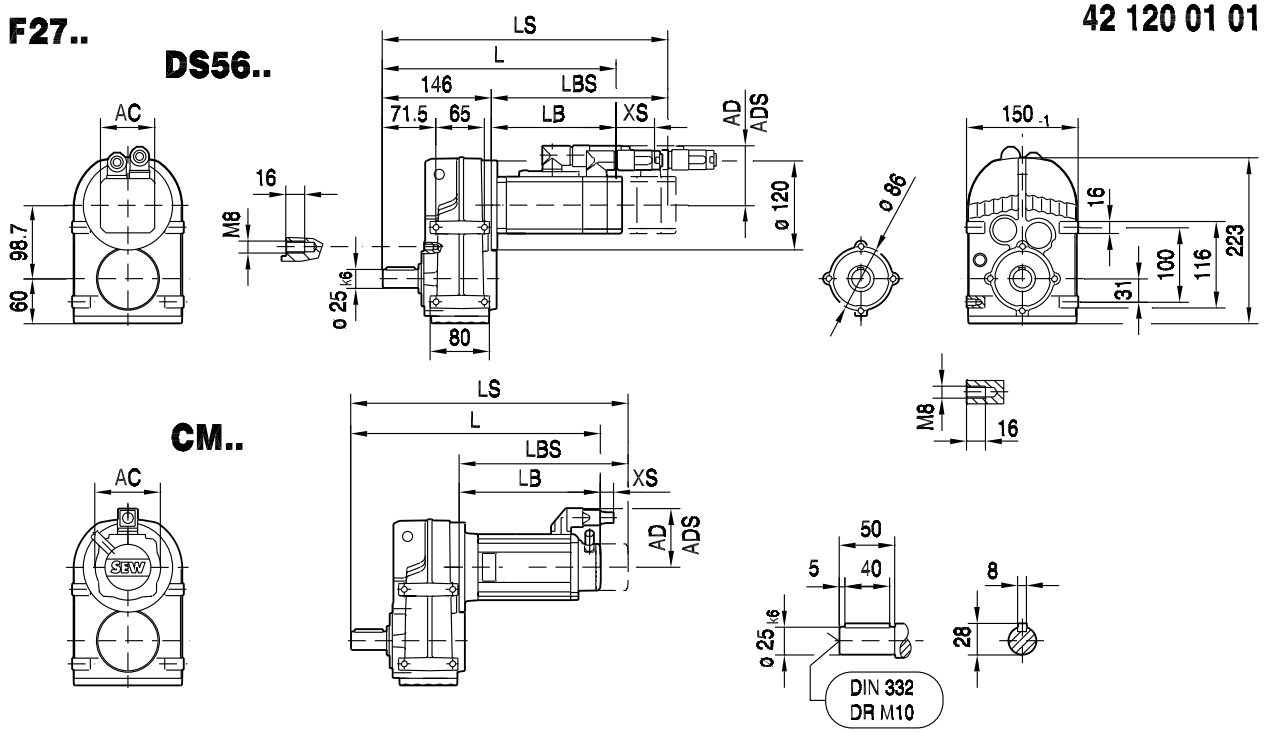

CM..

FA27B..

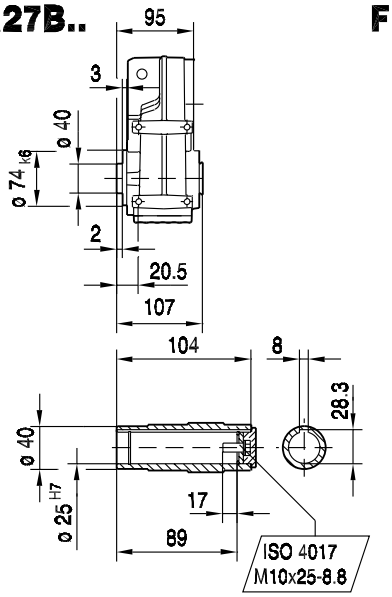

FH27B..

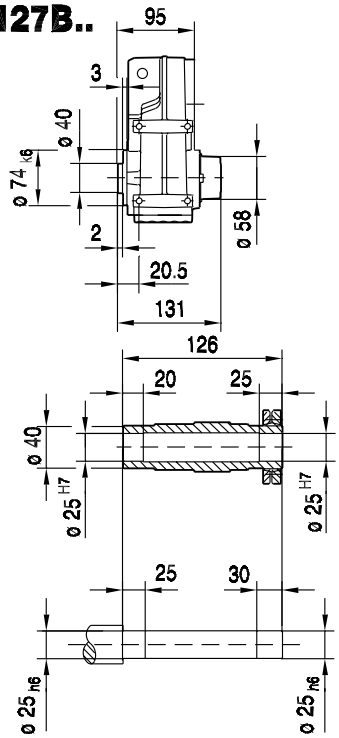

FV27B..

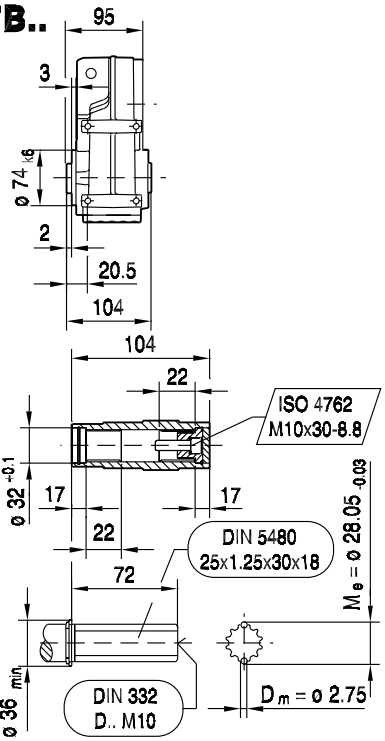

(→ 150)	DS56M	DS56L	DS56H	CM71S	CM71M	CM71L	CM90S				
AC	73	73	73	117	117	117	142				
AD	71	71	77	122	122	122	140				
ADS	77	77	77	122	122	122	140				
L	283	315	418	384	404	447	439				
LS	313	345	418	466	486	529	535				
LB	137	169	272	238	258	301	293				
LBS	167	199	272	320	340	383	389				
XS	70	70	51	45	45	45	50				

42 121 01 01

FF27..

DS56..

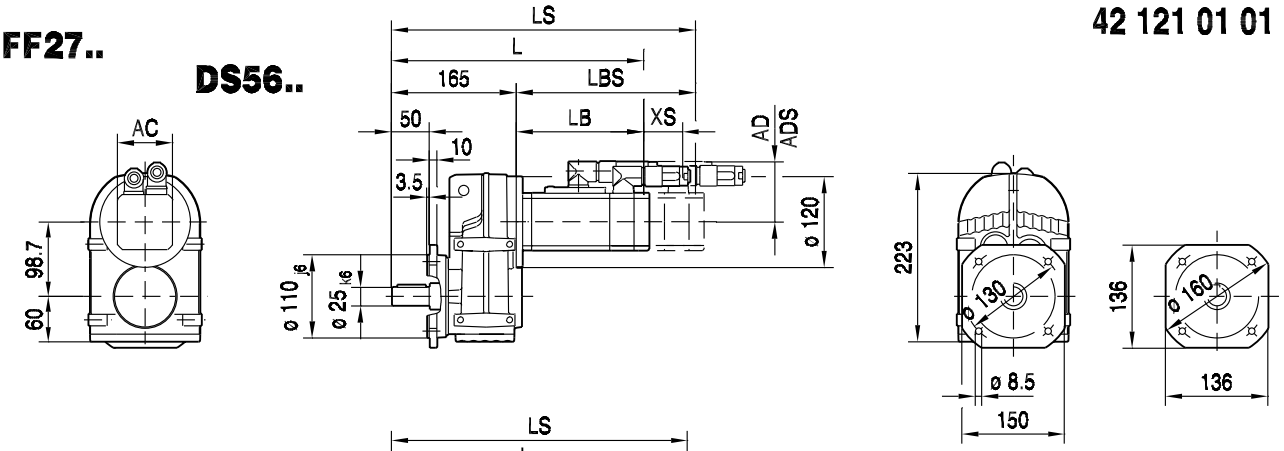

CM..

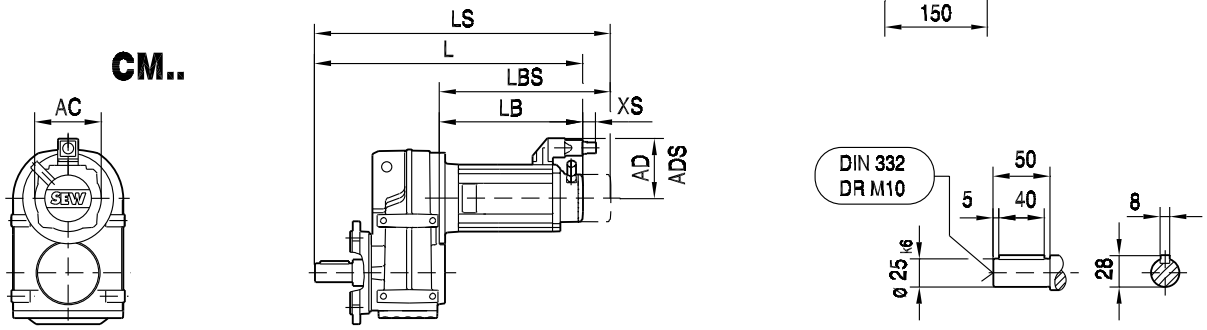

FAF27..

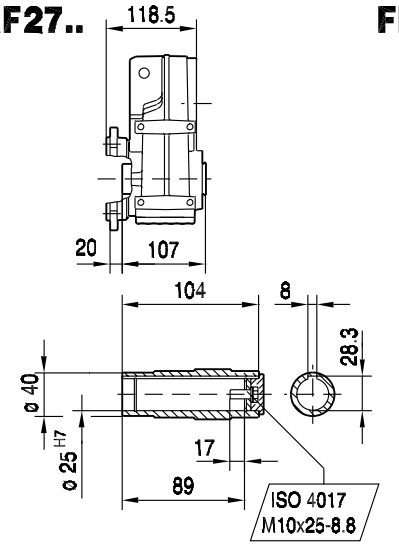

FHF27..

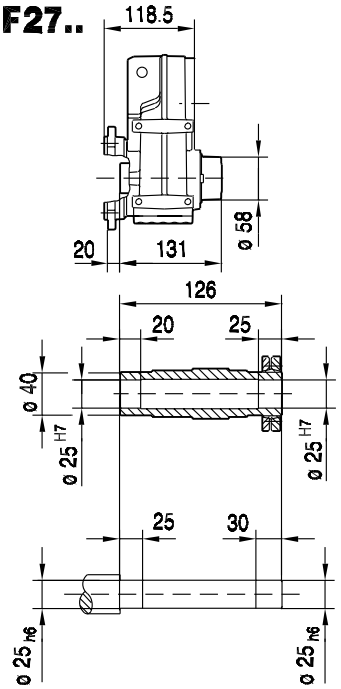

FVF27..

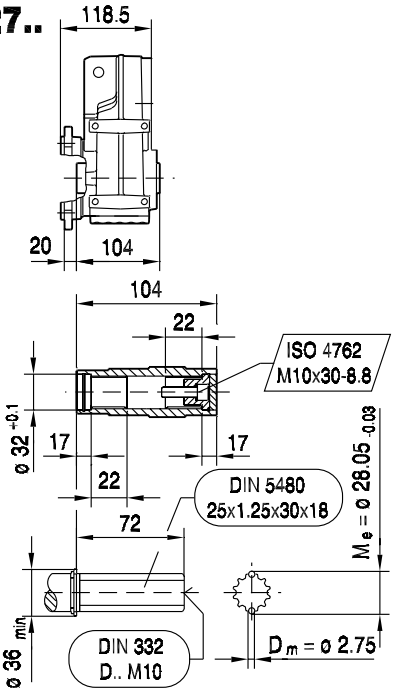

(→ 📖 150)	DS56M	DS56L	DS56H	CM71S	CM71M	CM71L	CM90S				
AC	73	73	73	117	117	117	142				
AD	71	71	77	122	122	122	140				
ADS	77	77	77	122	122	122	140				
L	302	334	437	403	423	466	458				
LS	332	364	437	485	505	548	554				
LB	137	169	272	238	258	301	293				
LBS	167	199	272	320	340	383	389				
XS	70	70	51	45	45	45	50				

42 122 01 01

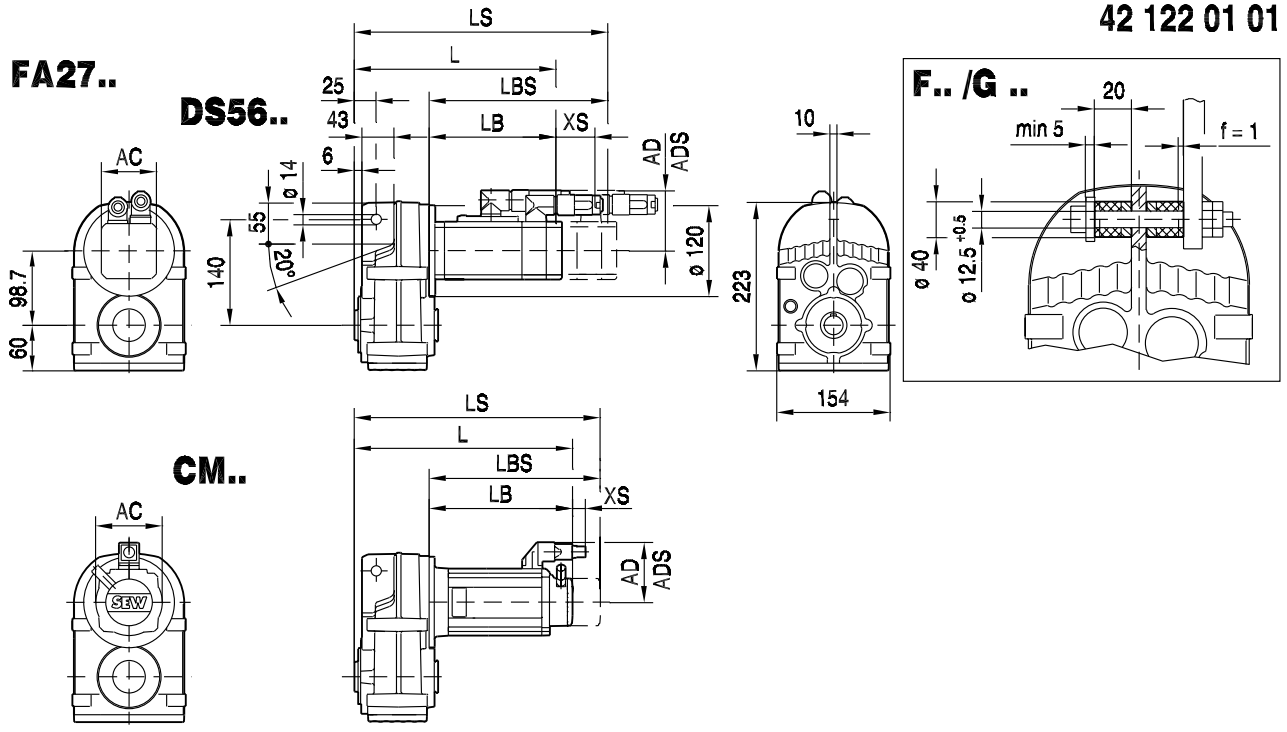

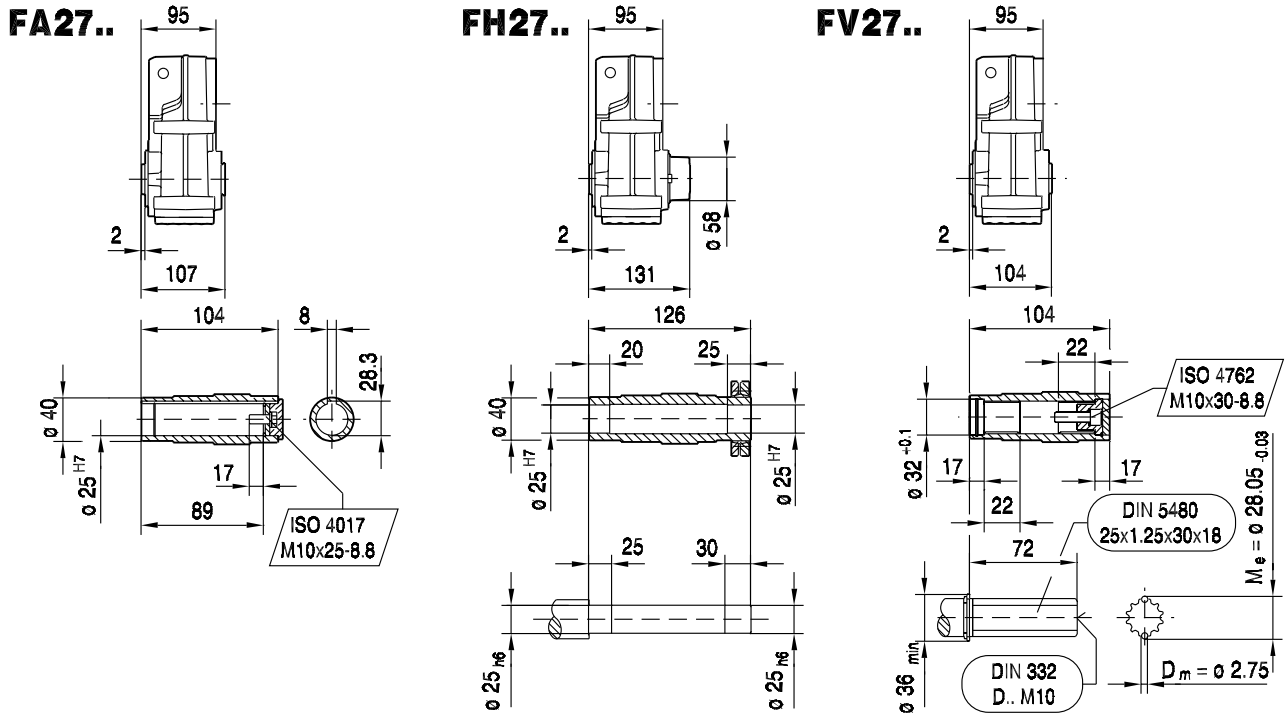

(→ 150)	DS56M	DS56L	DS56H	CM71S	CM71M	CM71L	CM90S				
AC	73	73	73	117	117	117	142				
AD	71	71	77	122	122	122	140				
ADS	77	77	77	122	122	122	140				
L	232	264	367	333	353	396	388				
LS	262	294	367	415	435	478	484				
LB	137	169	272	238	258	301	293				
LBS	167	199	272	320	340	383	389				
XS	70	70	51	45	45	45	50				

42 038 00 04

FAZ27..
DS56..

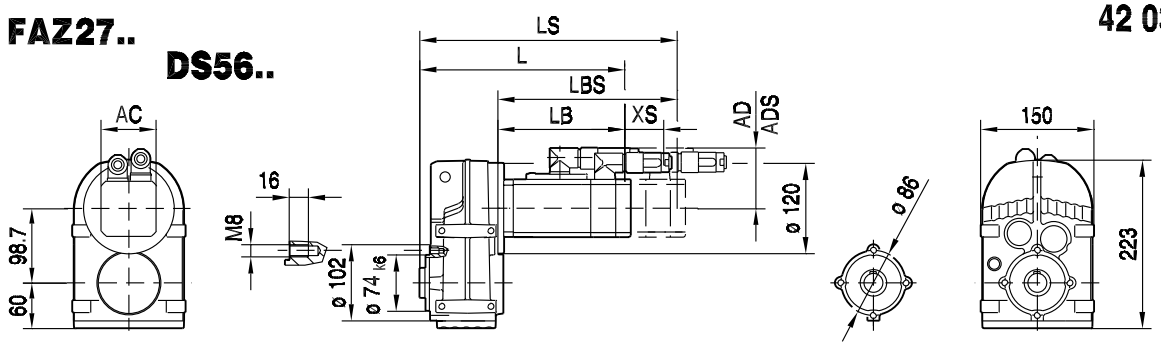

CM..

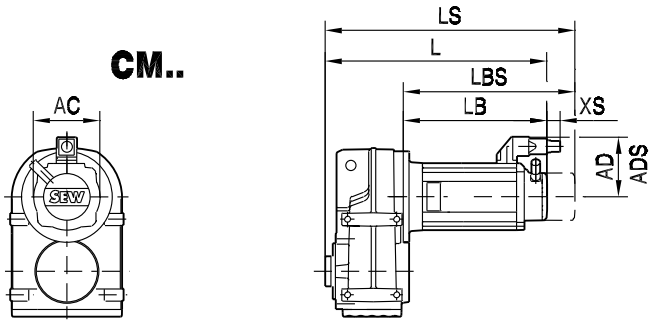

FAZ27..

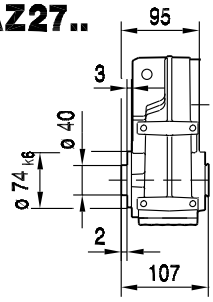

FHZ27..

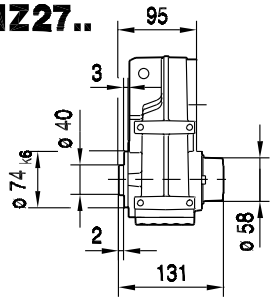

FVZ27..

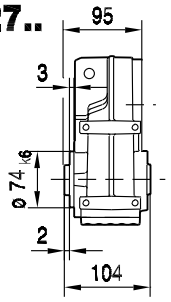

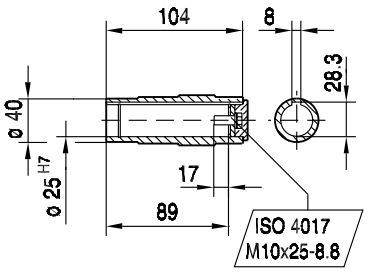

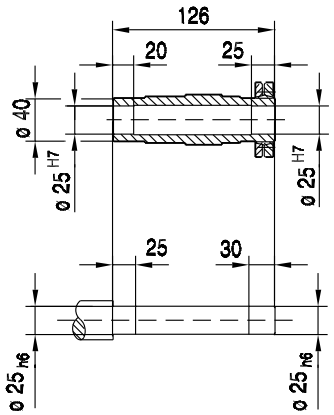

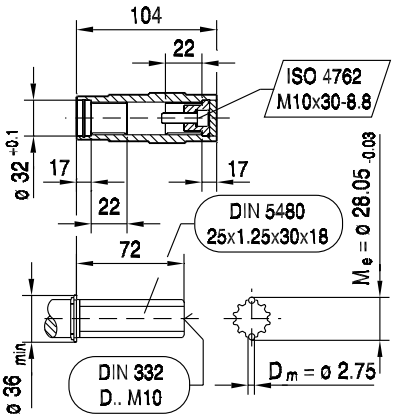

(→ 150)	DS56M	DS56L	DS56H	CM71S	CM71M	CM71L	CM90S				
AC	73	73	73	117	117	117	142				
AD	71	71	77	122	122	122	140				
ADS	77	77	77	122	122	122	140				
L	232	264	367	333	353	396	388				
LS	262	294	367	415	435	478	484				
LB	137	169	272	238	258	301	293				
LBS	167	199	272	320	340	383	389				
XS	70	70	51	45	45	45	50				

9.4 F 37 / CMP / DS / CM [Nm]

M_{aDyn} [Nm]		CMP							DS			CM			
	i	40M	50S	50M	50L	63S	63M	63L	56M	56L	56H	71S	71M	71L	90S
FA37 2	3.77	14	19	38	56	41	78	111	14	28	56	60	79	115	145
	4.22	16	21	42	63	45	88	124	16	31	62	68	88	129	162
	4.9	18	25	49	73	53	102	144	18	36	72	78	102	149	>180
	5.21	19	26	52	78	56	108	154	19	38	77	83	109	159	>187
	6.05	22	31	60	90	65	126	178	22	45	89	97	126	184	>188
	6.74	25	34	67	101	73	140	>188	25	50	99	108	141	>188	>188
	7.44	27	38	74	111	80	154		27	55	110	119	155		
	8.01	30	40	80	120	86	166	236	30	59	118	128	167	>240	>240
	8.97	33	45	90	134	97	186	>240	33	66	132	144	187	>240	>240
	10.42	38	53	104	156	112	216	>240	38	77	154	167	217	>240	>240
	11.08	41	56	111	166	119	230	>240	41	82	163	177	231	>240	>240
	12.87	47	65	129	192	139	>240	>240	47	95	190	206	>240	>240	>240
	14.33	53	72	143	214	154	>240	>240	53	106	211	229	>240	>240	>240
	15.81	58	80	158	236	170	>240		58	117	233	>240	>240		
	17.03	63	86	170	>240	183	>240	>240	63	126	>240	>240	>240	>240	>240
	19.27	71	97	193	>240	207	>240		71	142	>240	>240	>240		
	20.57	76	104	206	>240	221	>240		76	152	>240	>240	>240		
	23.63	87	119	236		>240			87	174	>240				
FA37 3	23.88	86	118	234	>240	>240	>240	>240	86	172	>240	>240	>240	>240	>240
	28.09	101	139	>240	>240	>240	>240	>240	101	203	>240	>240	>240	>240	>240
	31.69	114	157	>240	>240	>240	>240	>240	114	229	>240	>240	>240	>240	>240
	35.91	130	177	>240	>240	>240	>240		130	>240	>240	>240	>240		
	38.31	138	189	>240	>240	>240	>240	>240	138	>240	>240	>240	>240	>240	>240
	43.83	158	217	>240	>240	>240	>240		158	>240	>240	>240	>240		
	47.02	170	232	>240	>240	>240	>240		170	>240	>240	>240	>240		
	51.7	185	>240	>240	>240	>240	>240	>240	185	>240	>240	>240	>240	>240	>240
	54.54	197	>240	>240		>240			197	>240	>240				
	58.32	208	>240	>240	>240	>240	>240	>240	208	>240	>240	>240	>240	>240	>240
	66.09	236	>240	>240	>240	>240	>240		236	>240	>240	>240	>240		
	70.5	>240	>240	>240	>240	>240	>240	>240	>240	>240	>240	>240	>240	>240	>240
	80.65	>240	>240	>240	>240	>240	>240		>240	>240	>240	>240	>240		
	86.53	>240	>240	>240	>240	>240	>240		>240	>240	>240	>240	>240		
	100.36	>240	>240	>240		>240			>240	>240	>240				
	117.88	>240	>240						>240	>240					
	128.51	>240	>240						>240	>240					

m [kg]		CMP							DS			CM			
	s	40M	50S	50M	50L	63S	63M	63L	56M	56L	56H	71S	71M	71L	90S
FA37	2	13	15	16	17	17	19	20	14	15	15	20	21	24	29
FA37	3	13	15	16	17	17	19	20	14	15	16	20	21	25	29
FAF: + 1.5 kg / F: + 0.5 kg / FF: + 2.3 kg															



CMP.. / DS.. / CM..	i	n_{epk} [1/min]	η [%]	c_T FA [Nm/']	FAF [Nm/']	F [Nm/']	FF [Nm/']	φ /R [']
	3.77	4500	97	40.8	40.8	19.56	15.17	12
	4.22	4500	97	40.8	40.8	19.56	15.17	11
	4.9	4500	97	40.8	40.8	19.56	15.17	11
	5.21	4500	97	40.8	40.8	19.56	15.17	10
	6.05	4500	97	40.8	40.8	19.56	15.17	10
	6.74	4500	97	40.8	40.8	19.56	15.17	10
	7.44	4500	97	40.8	40.8	19.56	15.17	10
	8.01	4500	97	84.43	84.43	26.0	18.77	7
FA37	8.97	4500	97	84.43	84.43	26.0	18.77	7
2	10.42	4500	97	84.43	84.43	26.0	18.77	7
	11.08	4500	97	84.43	84.43	26.0	18.77	7
	12.87	4500	97	84.43	84.43	26.0	18.77	7
	14.33	4500	97	84.43	84.43	26.0	18.77	7
	15.81	4500	97	84.43	84.43	26.0	18.77	6
	17.03	4500	97	84.43	84.43	26.0	18.77	6
	19.27	4500	97	84.43	84.43	26.0	18.77	6
	20.57	4500	97	84.43	84.43	26.0	18.77	6
	23.63	4500	97	84.43	84.43	26.0	18.77	6
	23.88	4500	95	93.52	93.52	26.8	19.19	8
	28.09	4500	95	93.52	93.52	26.8	19.19	8
	31.69	4500	95	93.52	93.52	26.8	19.19	8
	35.91	4500	95	93.52	93.52	26.8	19.19	8
	38.31	4500	95	93.52	93.52	26.8	19.19	8
	43.83	4500	95	93.52	93.52	26.8	19.19	8
	47.02	4500	95	93.52	93.52	26.8	19.19	8
	51.7	4500	94	97.21	97.21	27.1	19.34	7
FA37	54.54	4500	95	93.52	93.52	26.8	19.19	8
3	58.32	4500	94	97.21	97.21	27.1	19.34	7
	66.09	4500	94	97.21	97.21	27.1	19.34	7
	70.5	4500	94	97.21	97.21	27.1	19.34	7
	80.65	4500	94	97.21	97.21	27.1	19.34	7
	86.53	4500	94	97.21	97.21	27.1	19.34	7
	100.36	4500	94	97.21	97.21	27.1	19.34	7
	117.88	4500	94	97.21	97.21	27.1	19.34	7
	128.51	4500	94	97.21	97.21	27.1	19.34	7

CMP.. / DS.. / CM..	i	M_{amax} [Nm]	M_{apk} [Nm]	$M_{aNotaus}$ [Nm]	n_{ak} [1/min]	J_G 10^{-4} [kgm^2]	F_{Ramax} FA [N]	FAF [N]	F [N]	FF [N]	F_{Rapk} FA [N]	FAF [N]	F [N]	FF [N]
	3.77	105	157	179	451	2.8	2470	2470	1970	2220	7000	7000	4810	5860
	4.22	110	165	187	427	2.3	2550	2550	2030	2300	7000	7000	4730	5820
	4.9	120	180	204	367	1.8	2630	2630	2100	2380	7000	7000	4560	5740
	5.21	125	187	213	326	1.6	2660	2660	2120	2410	7000	7000	4470	5700
	6.05	135	188	230	281	1.2	2750	2750	2190	2510	7000	7000	4460	5700
	6.74	140	188	238	267	1.0	2850	2850	2270	2600	7000	7000	4460	5700
	7.44	145	188	247	242	0.83	2940	2940	2350	2680	7000	7000	4460	5700
	8.01	170	240	289	200	1.5	2960	2960	2360	2710	7000	7000	3610	4100
FA37	8.97	175	240	298	190	1.3	3080	3080	2460	2820	7000	7000	3610	4100
2	10.42	185	240	315	163	1.0	3230	3230	2580	2960	7000	7000	3610	4100
	11.08	190	240	323	144	0.94	3290	3290	2620	3020	7000	7000	3610	4100
	12.87	200	240	340	124	0.74	3450	3450	2750	3170	7000	7000	3610	4100
	14.33	200	240	340	126	0.63	3650	3650	2910	3330	7000	7000	3610	4100
	15.81	200	240	340	127	0.52	3840	3840	3070	3490	7000	7000	3610	4100
	17.03	200	240	340	129	0.48	3990	3990	3180	3610	7000	7000	3610	4100
	19.27	200	240	340	130	0.40	4250	4250	3390	3820	7000	7000	3610	4100
	20.57	200	240	340	131	0.36	4390	4390	3500	3940	7000	7000	3610	4100
	23.63	200	240	340	135	0.29	4690	4690	3740	4190	7000	7000	3610	4100



F..CMP, DS, CM
F 37 / CMP / DS / CM [Nm]

CMP.. / DS.. / CM..							F_{Ramax}				F_{Rapk}			
	i	M_{amax} [Nm]	M_{apk} [Nm]	$M_{aNotaus}$ [Nm]	n_{ak} [1/min]	J_G 10^{-4} [kgm^2]	FA [N]	FAF [N]	F [N]	FF [N]	FA [N]	FAF [N]	F [N]	FF [N]
FA37 3	23.88	200	240	340	96	0.60	4720	4720	3760	4210	7000	7000	3610	4100
	28.09	200	240	340	96	0.45	5090	5090	4060	4520	7000	7000	3610	4100
	31.69	200	240	340	95	0.35	5380	5380	4290	4760	7000	7000	3610	4100
	35.91	200	240	340	97	0.29	5700	5700	4290	5020	7000	7000	3610	4100
	38.31	200	240	340	97	0.26	5870	5870	4290	5160	7000	7000	3610	4100
	43.83	200	240	340	96	0.21	6240	6240	4290	5460	7000	7000	3610	4100
	47.02	200	240	340	96	0.19	6430	6430	4290	5620	7000	7000	3610	4100
	51.7	200	240	340	95	0.34	6710	6710	4290	5670	7000	7000	3610	4100
	54.54	200	240	340	97	0.15	6860	6860	4290	5670	7000	7000	3610	4100
	58.32	200	240	340	96	0.27	7000	7000	4290	5670	7000	7000	3610	4100
	66.09	200	240	340	95	0.23	7000	7000	4290	5670	7000	7000	3610	4100
	70.5	200	240	340	95	0.21	7000	7000	4290	5670	7000	7000	3610	4100
	80.65	200	240	340	87	0.17	7000	7000	4290	5670	7000	7000	3610	4100
	86.53	200	240	340	81	0.15	7000	7000	4290	5670	7000	7000	3610	4100
	100.36	200	240	340	70	0.12	7000	7000	4290	5670	7000	7000	3610	4100
	117.88	200	240	340	59	0.10	7000	7000	4290	5670	7000	7000	3610	4100
	128.51	200	240	340	54	0.080	7000	7000	4290	5670	7000	7000	3610	4100

9.5 F 37 / CMP / DS / CM [mm]

F37..

42 012 00 07

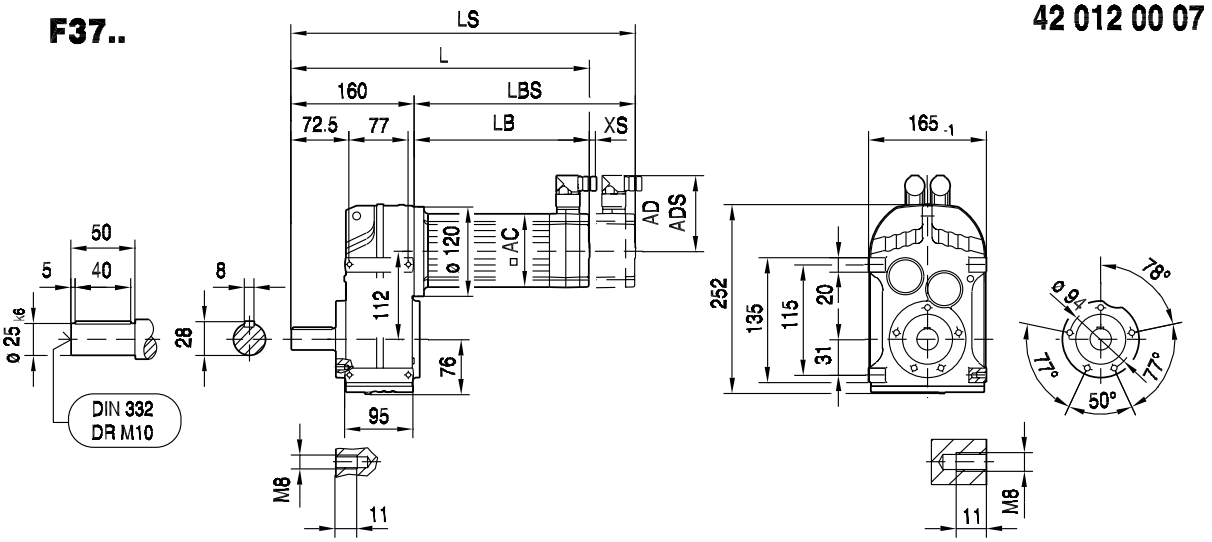

FA37B..

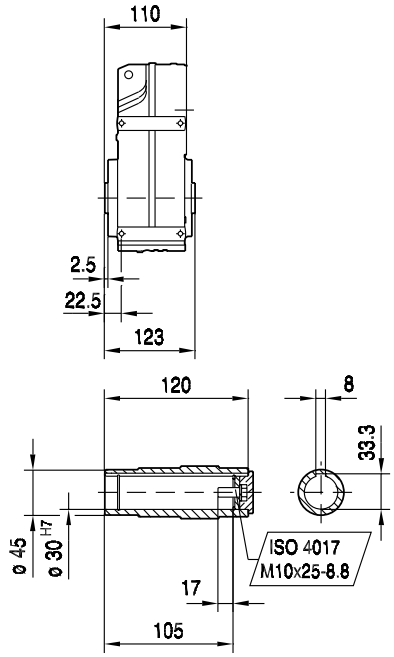

FH37B..

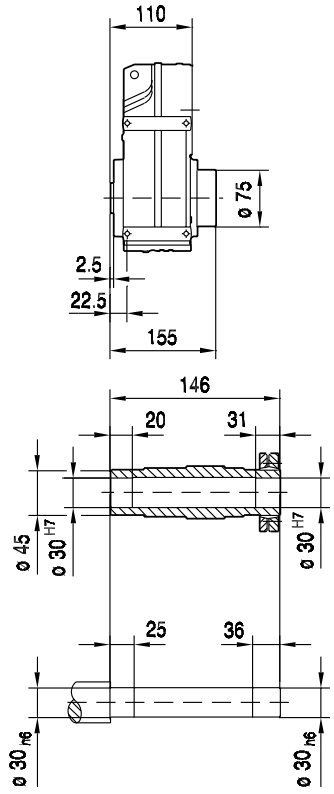

FV37B..

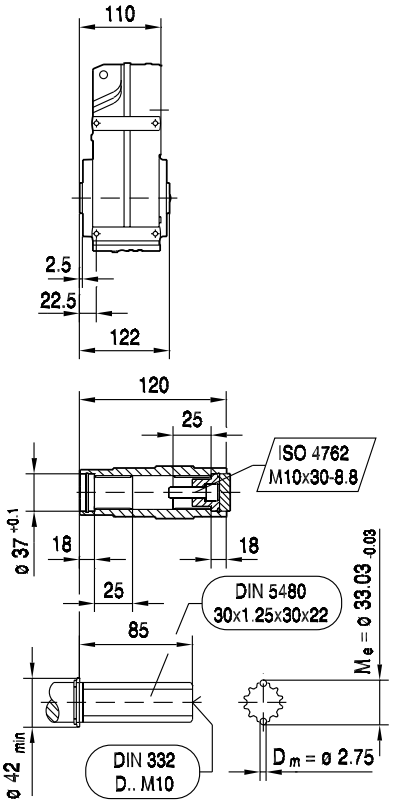

(→ 150)	CMP40M	CMP50S	CMP50M	CMP50L	CMP63S	CMP63M	CMP63L	
AC	57	73	73	73	88	88	88	
AD	75	82	82	82	89	89	89	
ADS	75	82	82	82	89	89	89	
L	303	305	344	383	340	390	443	
LS	333	334	373	412	368	418	472	
LB	143	145	184	223	180	230	283	
LBS	173	174	213	252	208	258	312	
XS	19	18	18	18	14	14	14	

42 013 00 07

FF37..

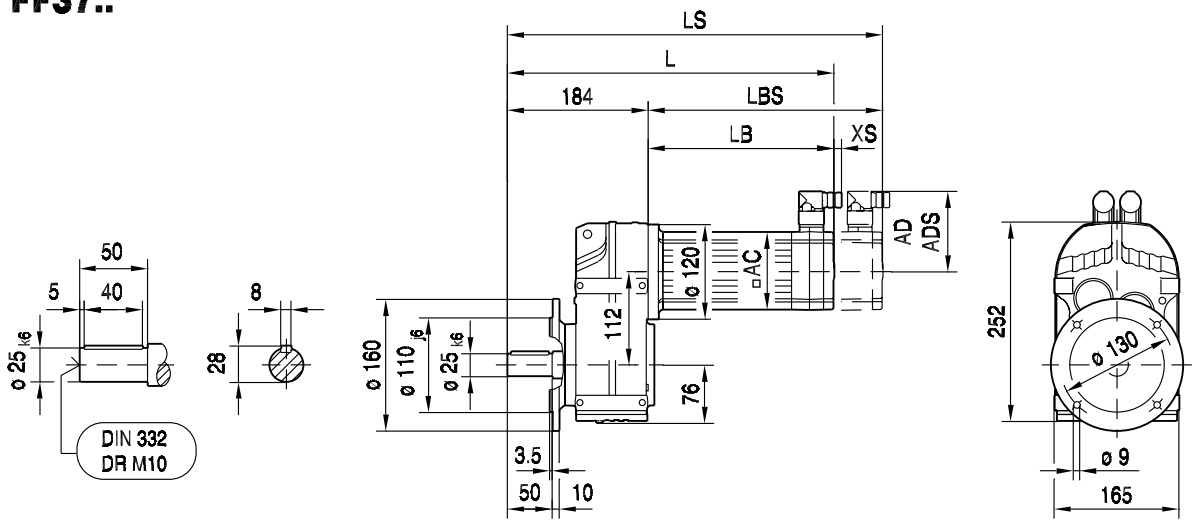

FAF37..

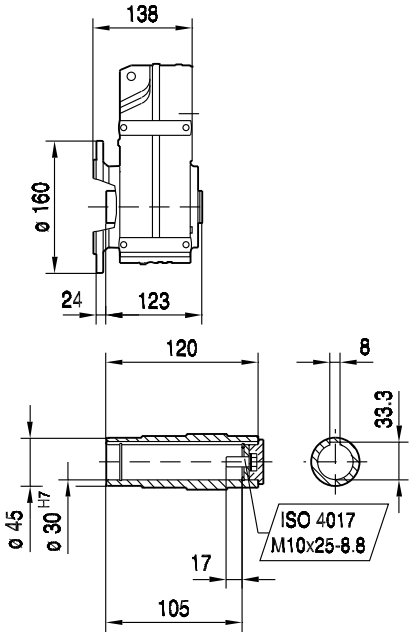

FHF37..

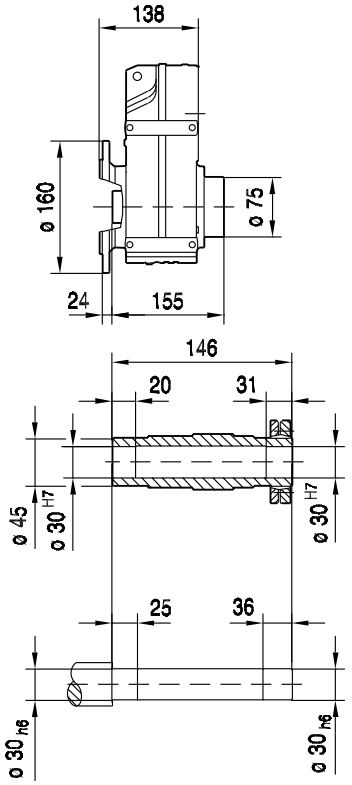

FVF37..

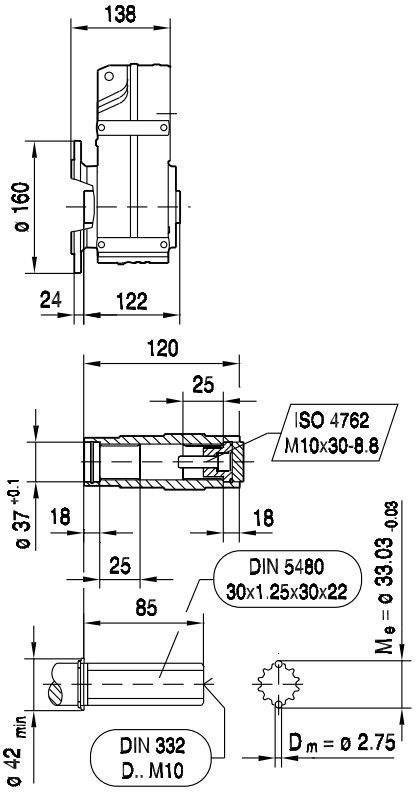

(→ 150)	CMP40M	CMP50S	CMP50M	CMP50L	CMP63S	CMP63M	CMP63L	
AC	57	73	73	73	88	88	88	
AD	75	82	82	82	89	89	89	
ADS	75	82	82	82	89	89	89	
L	327	329	368	407	364	414	467	
LS	357	358	397	436	392	442	496	
LB	143	145	184	223	180	230	283	
LBS	173	174	213	252	208	258	312	
XS	19	18	18	18	14	14	14	

FA37..

42 014 00 07

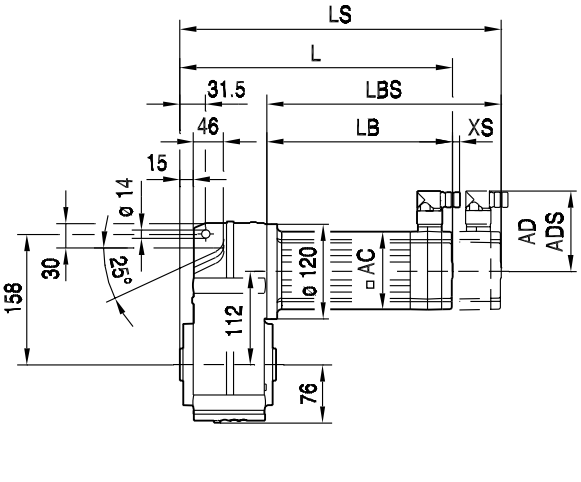

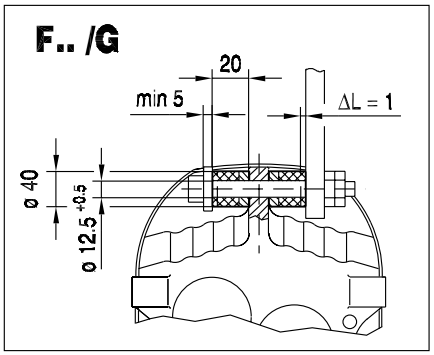

9

FA37..

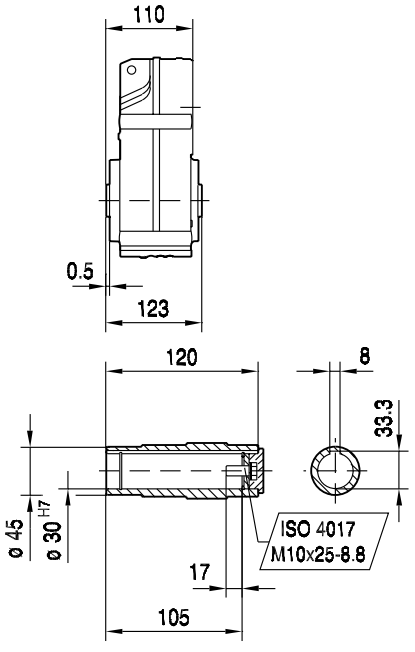

FH37..

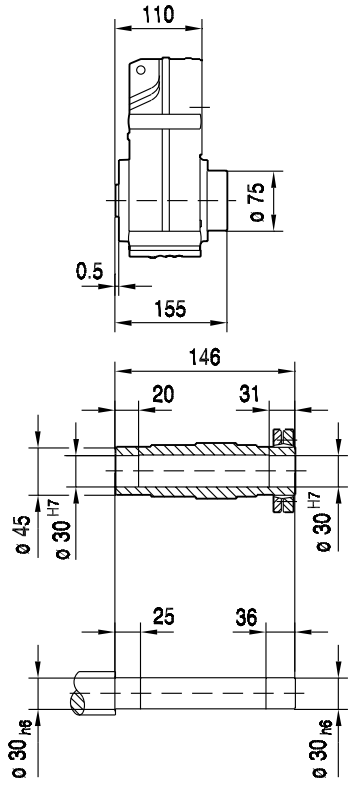

FV37..

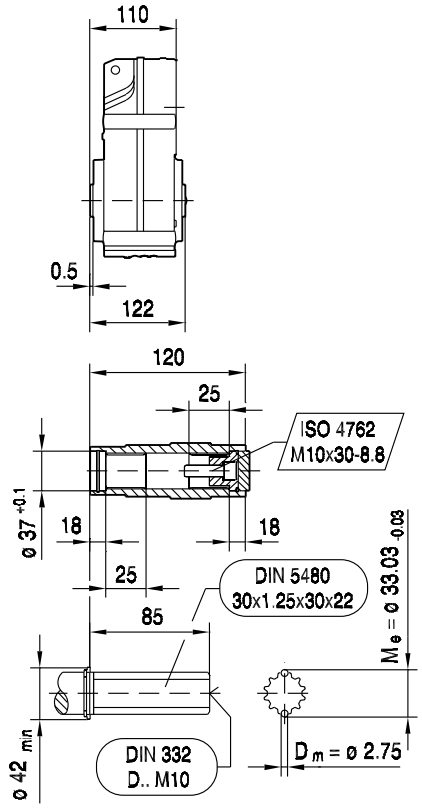

(→ 150)	CMP40M	CMP50S	CMP50M	CMP50L	CMP63S	CMP63M	CMP63L	
AC	57	73	73	73	88	88	88	
AD	75	82	82	82	89	89	89	
ADS	75	82	82	82	89	89	89	
L	253	255	294	333	290	340	393	
LS	283	284	323	362	318	368	422	
LB	143	145	184	223	180	230	283	
LBS	173	174	213	252	208	258	312	
XS	19	18	18	18	14	14	14	

FAZ37..

42 015 00 07

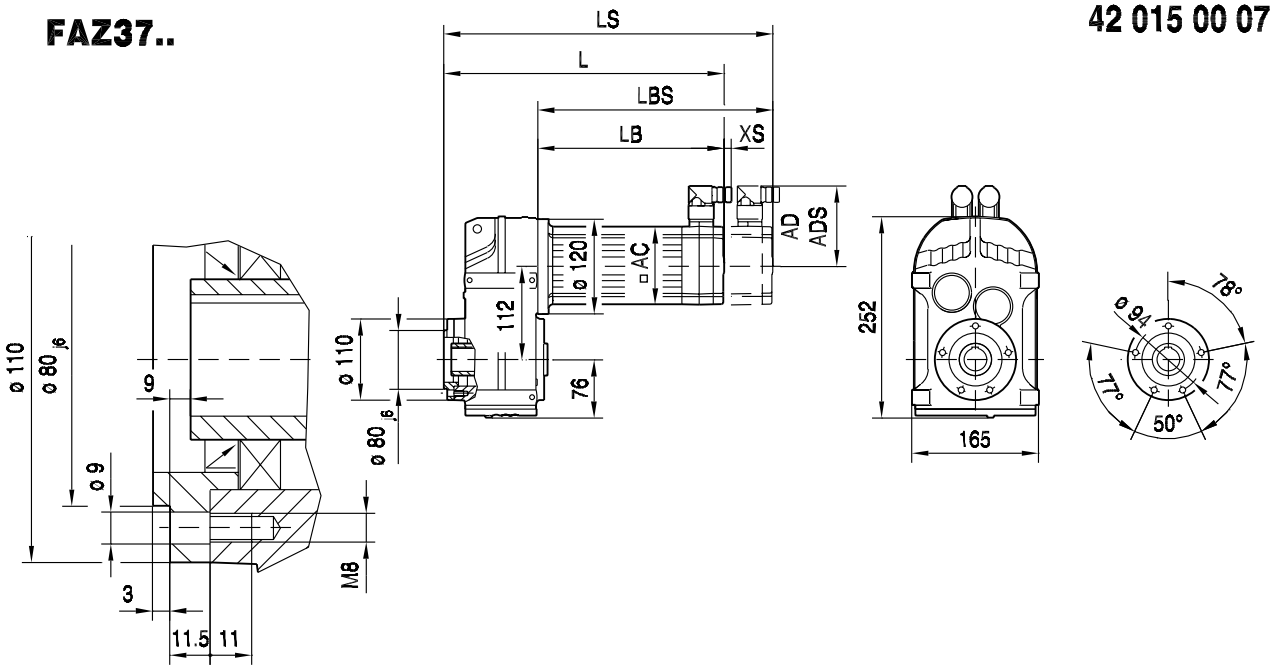

FAZ37..

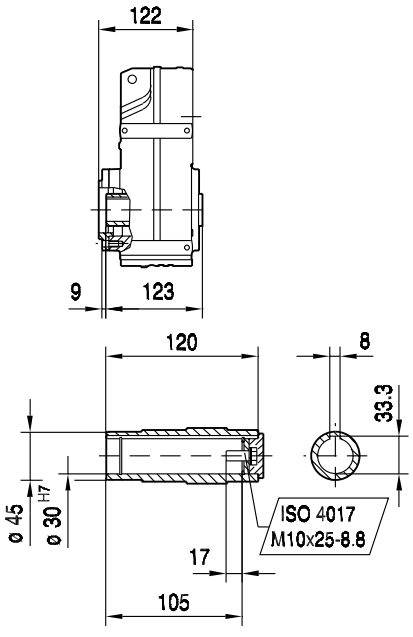

FHZ37..

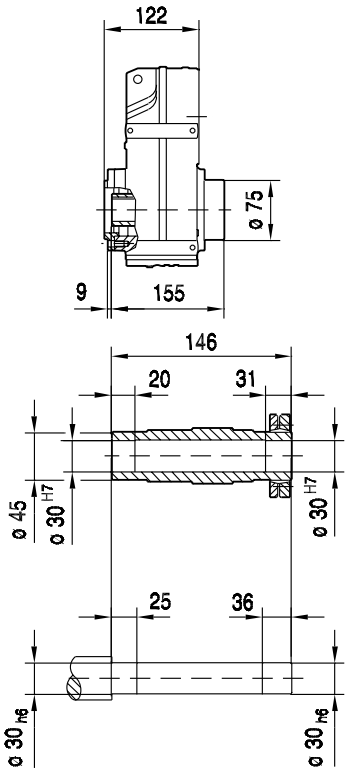

FVZ37..

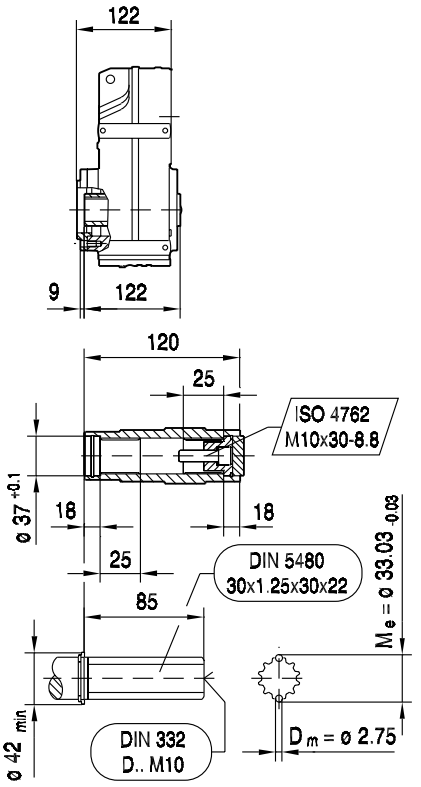

(→ 📖 150)	CMP40M	CMP50S	CMP50M	CMP50L	CMP63S	CMP63M	CMP63L	
AC	57	73	73	73	88	88	88	
AD	75	82	82	82	89	89	89	
ADS	75	82	82	82	89	89	89	
L	265	267	306	345	302	352	405	
LS	295	296	335	374	330	380	434	
LB	143	145	184	223	180	230	283	
LBS	173	174	213	252	208	258	312	
XS	19	18	18	18	14	14	14	

FT37..

42 016 00 07

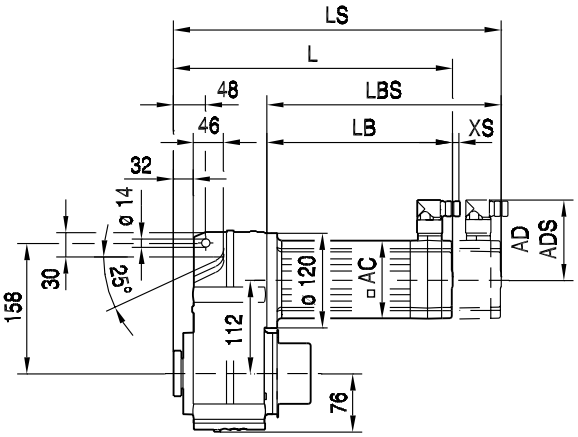

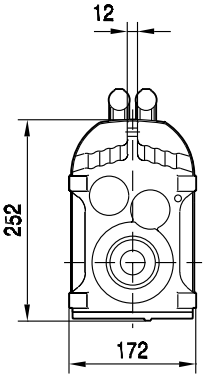

F.. /G

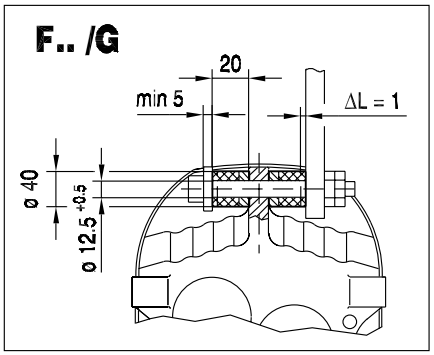

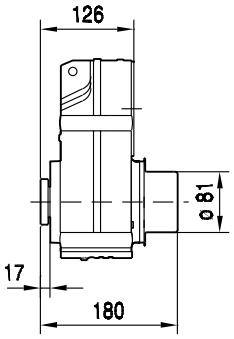

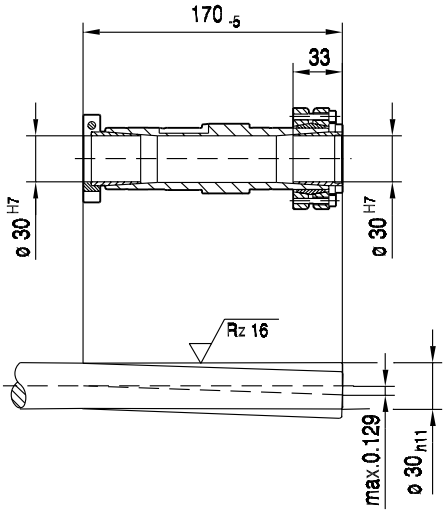

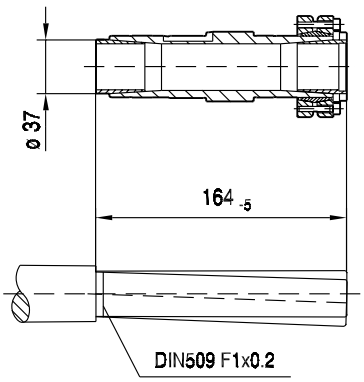

(→ 📖 150)	CMP40M	CMP50S	CMP50M	CMP50L	CMP63S	CMP63M	CMP63L	
AC	57	73	73	73	88	88	88	
AD	75	82	82	82	89	89	89	
ADS	75	82	82	82	89	89	89	
L	269	271	310	349	306	356	409	
LS	299	300	339	378	334	384	438	
LB	143	145	184	223	180	230	283	
LBS	173	174	213	252	208	258	312	
XS	19	18	18	18	14	14	14	

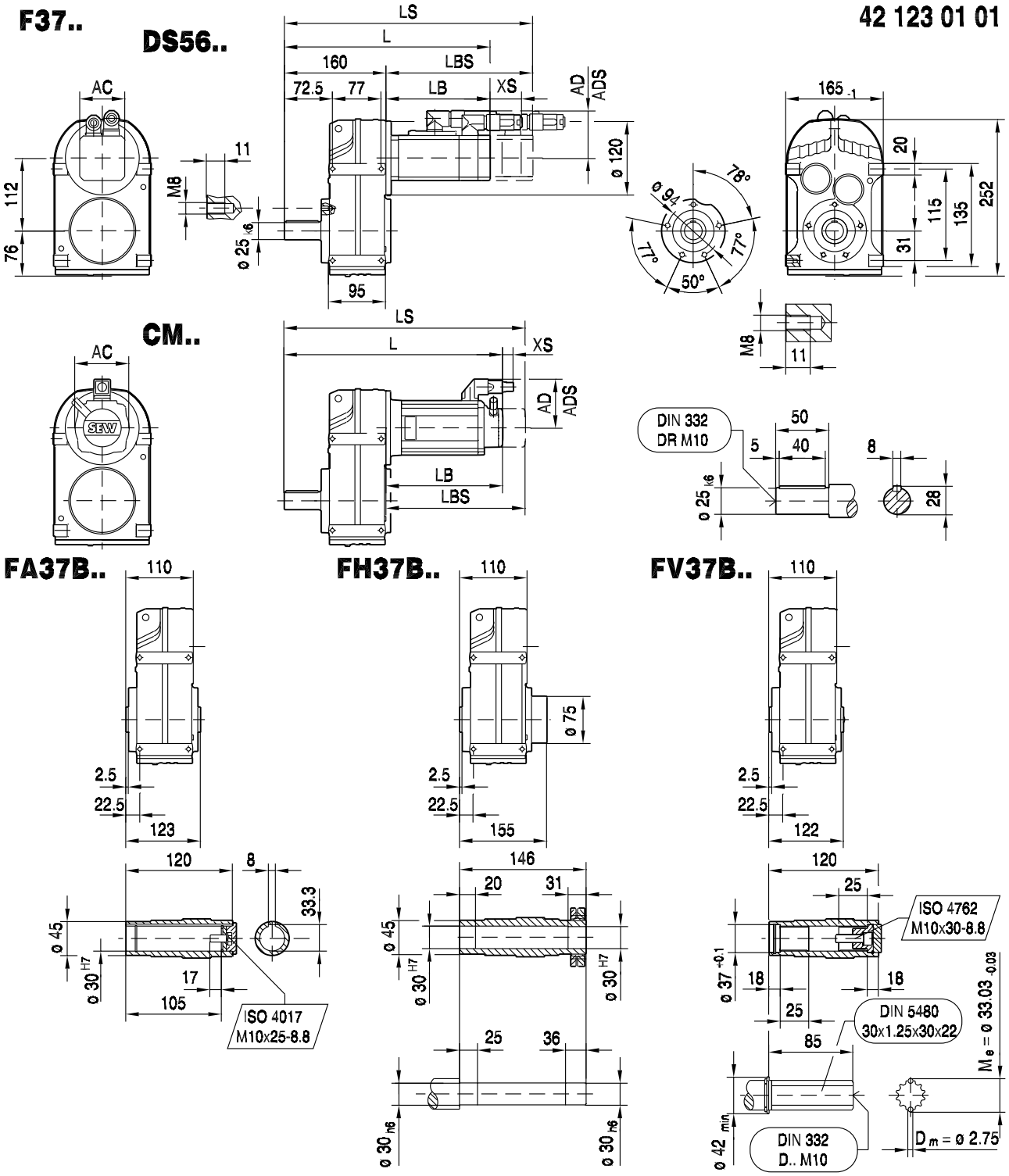

(→ 150)	DS56M	DS56L	DS56H	CM71S	CM71M	CM71L	CM90S				
AC	73	73	73	117	117	117	142				
AD	71	71	77	122	122	122	140				
ADS	77	77	77	122	122	122	140				
L	297	329	432	398	418	461	453				
LS	327	359	432	480	500	543	549				
LB	137	169	272	238	258	301	293				
LBS	167	199	272	320	340	383	389				
XS	70	70	51	45	45	45	50				

42 124 01 01

FF37..

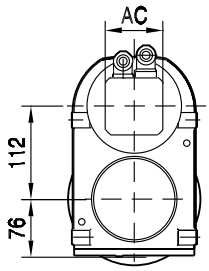

DS56..

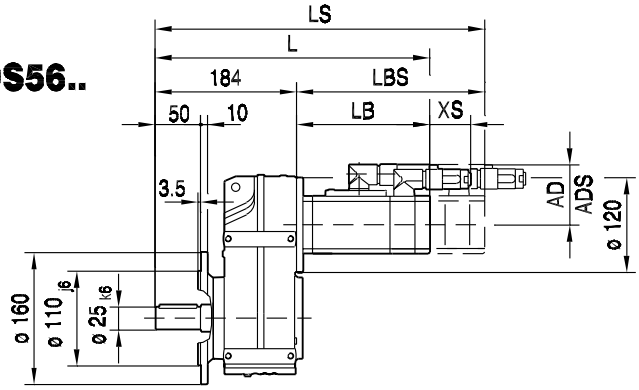

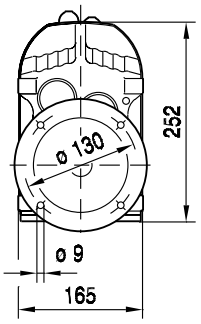

CM..

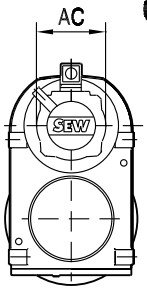

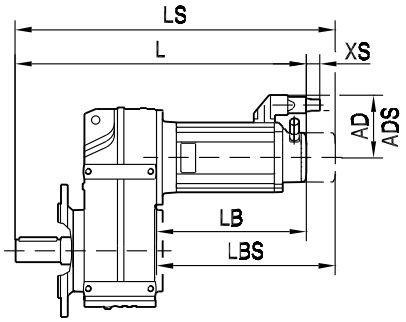

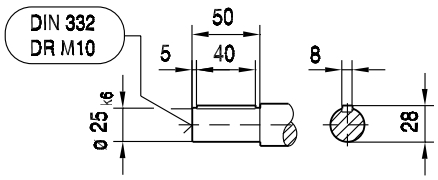

FAF37..

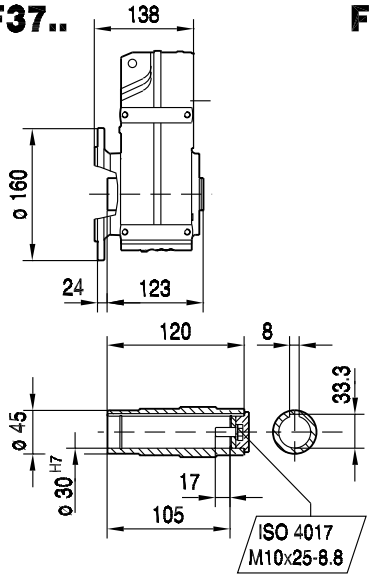

FHF37..

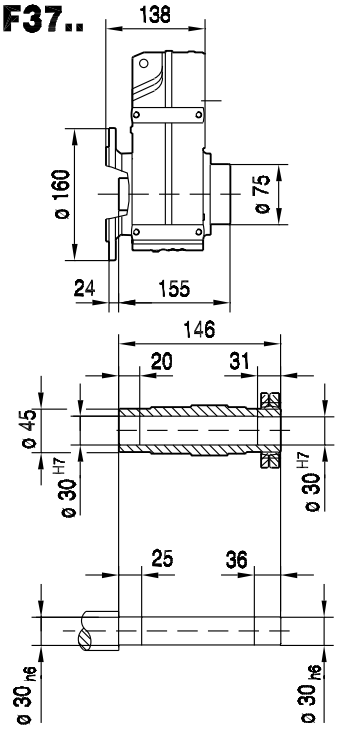

FVF37..

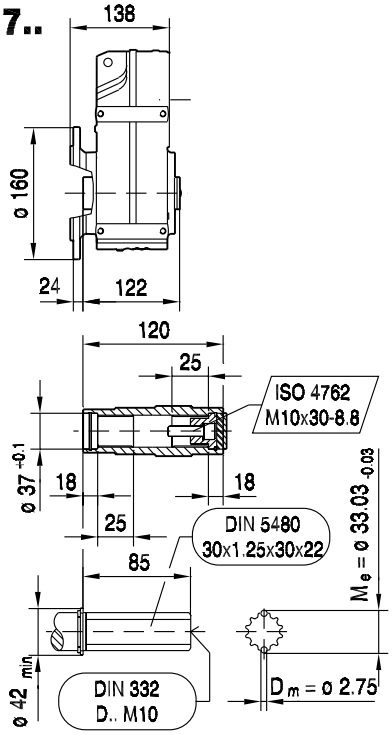

(→ 150)	DS56M	DS56L	DS56H	CM71S	CM71M	CM71L	CM90S				
AC	73	73	73	117	117	117	142				
AD	71	71	77	122	122	122	140				
ADS	77	77	77	122	122	122	140				
L	321	353	456	422	442	485	477				
LS	351	383	456	504	524	567	573				
LB	137	169	272	238	258	301	293				
LBS	167	199	272	320	340	383	389				
XS	70	70	51	45	45	45	50				

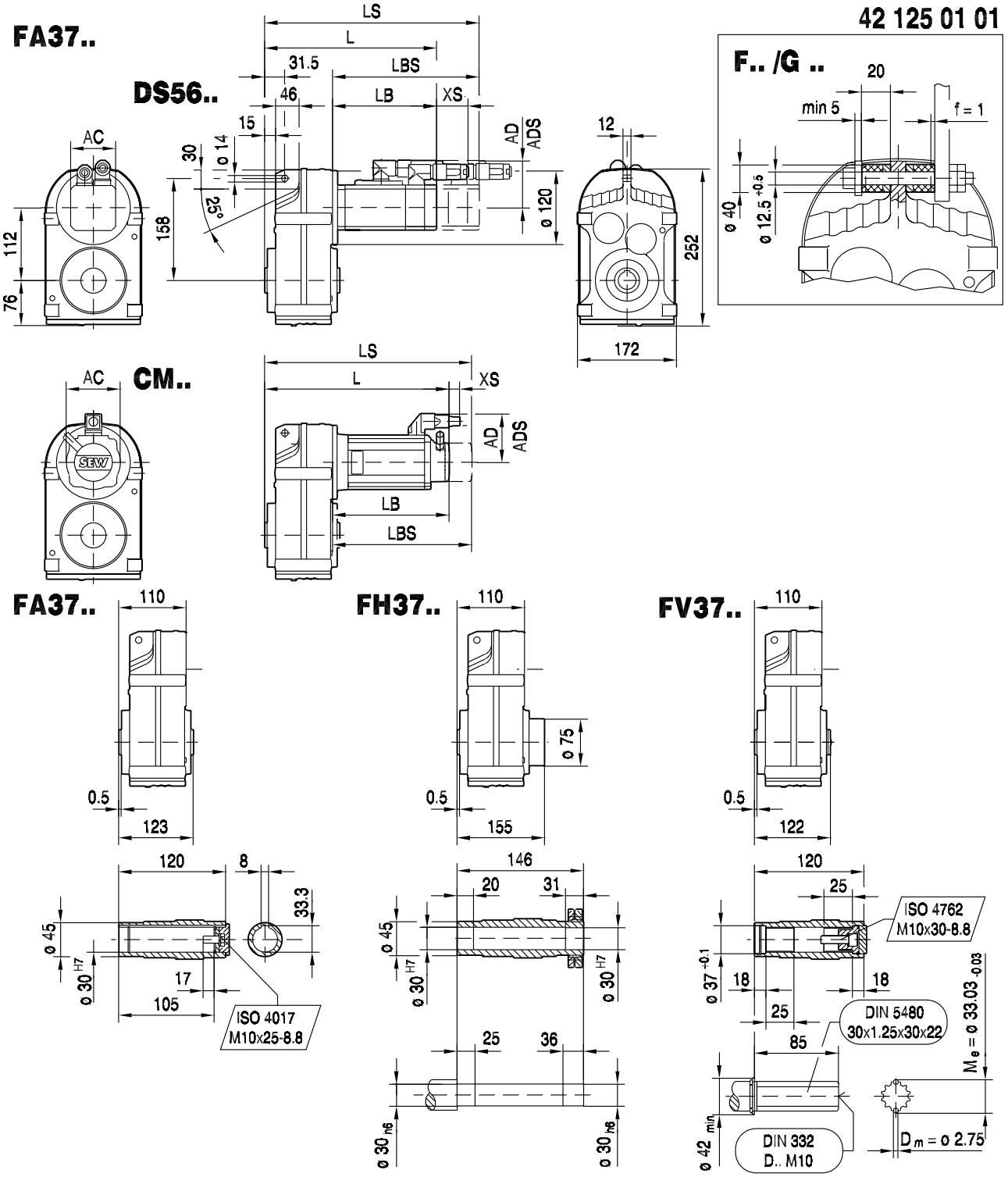

(→ 150)	DS56M	DS56L	DS56H	CM71S	CM71M	CM71L	CM90S				
AC	73	73	73	117	117	117	142				
AD	71	71	77	122	122	122	140				
ADS	77	77	77	122	122	122	140				
L	247	279	382	348	368	411	403				
LS	277	309	382	430	450	493	499				
LB	137	169	272	238	258	301	293				
LBS	167	199	272	320	340	383	389				
XS	70	70	51	45	45	45	50				

FAZ37.. DS56..

42 039 00 04

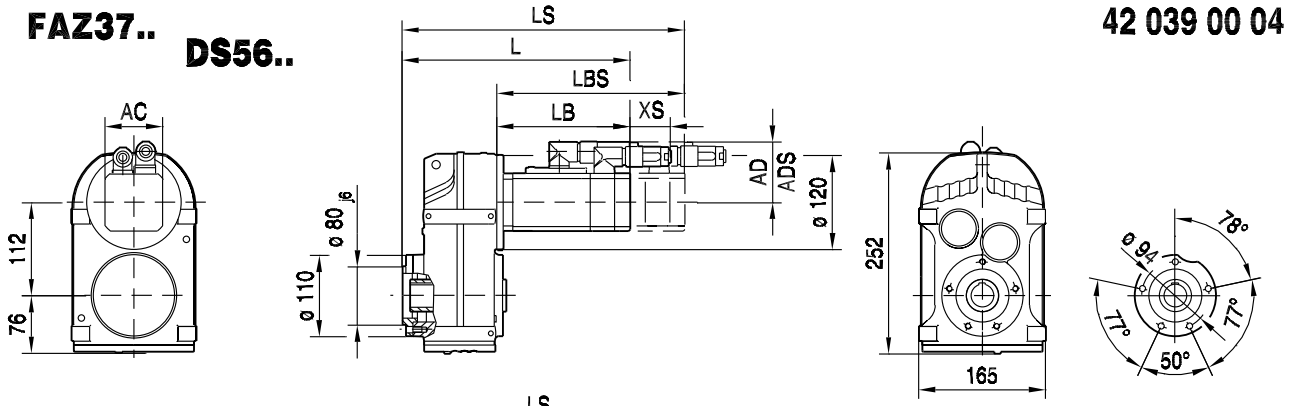

CM..

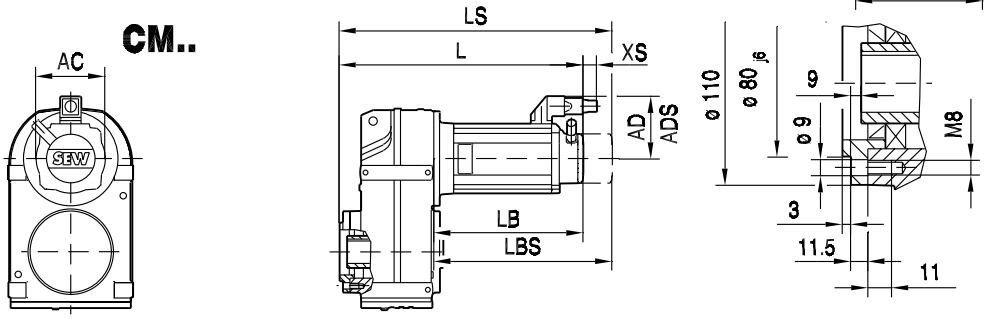

FAZ37..

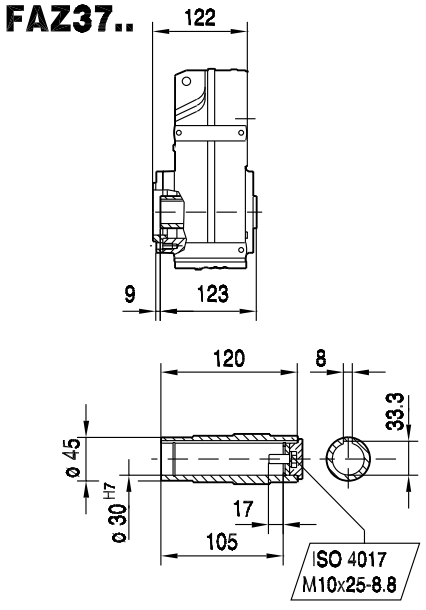

FHZ37..

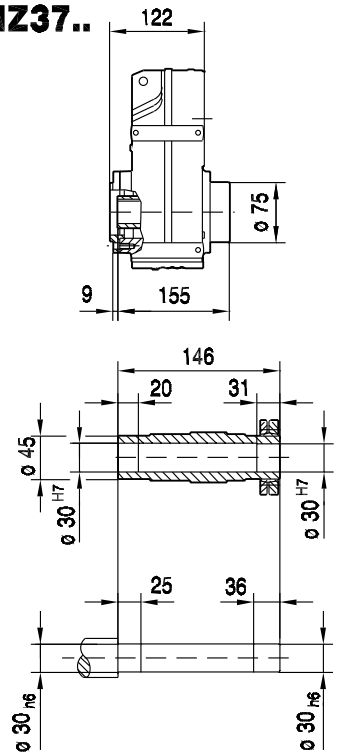

FVZ37..

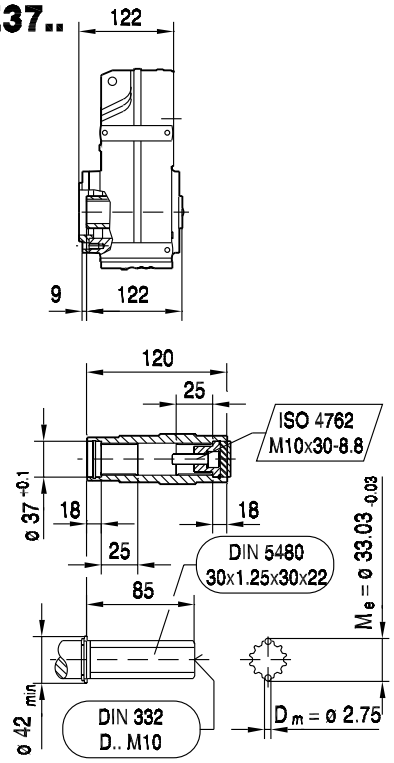

(→ 150)	DS56M	DS56L	DS56H	CM71S	CM71M	CM71L	CM90S				
AC	73	73	73	117	117	117	142				
AD	71	71	77	122	122	122	140				
ADS	77	77	77	122	122	122	140				
L	259	291	394	360	380	423	415				
LS	289	321	394	442	462	505	511				
LB	137	169	272	238	258	301	293				
LBS	167	199	272	320	340	383	389				
XS	70	70	51	45	45	45	50				

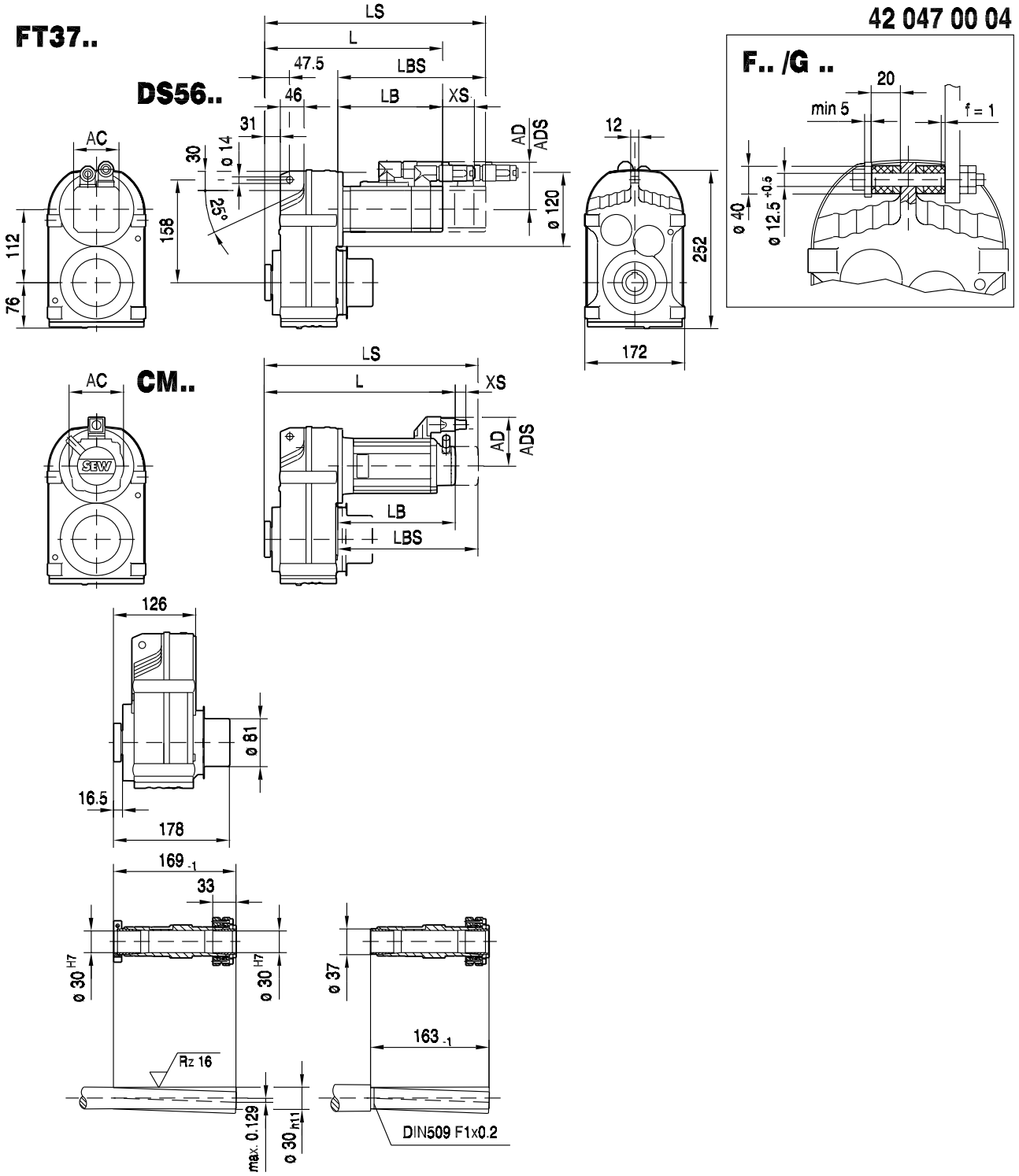

(→ 📖 150)	DS56M	DS56L	DS56H	CM71S	CM71M	CM71L	CM90S				
AC	73	73	73	117	117	117	142				
AD	71	71	77	122	122	122	140				
ADS	77	77	77	122	122	122	140				
L	263	295	398	364	384	427	419				
LS	293	325	398	446	466	509	515				
LB	137	169	272	238	258	301	293				
LBS	167	199	272	320	340	383	389				
XS	70	70	51	45	45	45	50				



9.6 F 47 / CMP / DS / CM [Nm]

M_{aDyn} [Nm]		CMP							DS			CM			
	i	40M	50S	50M	50L	63S	63M	63L	56M	56L	56H	71S	71M	71L	90S
FA47 2	4.99	18	25	50	75	54	104	147	18	37	74	80	104	152	192
	5.76	21	29	58	86	62	120	170	21	42	85	92	120	175	221
	6.34	23	32	63	95	68	132	187	23	47	93	101	132	193	244
	7.44	27	38	74	111	80	154	219	27	55	110	119	155	227	286
	7.88	29	40	79	118	85	164	232	29	58	116	126	164	240	303
	8.96	33	45	90	134	96	186	264	33	66	132	143	187	273	344
	10.97	40	55	110	164	118	228	323	40	81	162	176	229	334	421
	12.66	47	64	126	189	136	263	373	47	93	187	203	264	386	>435
	13.93	51	70	139	208	150	289	411	51	103	205	223	291	424	>435
	16.36	60	83	163	244	176	340	>435	60	121	241	262	341	>435	>435
	17.33	64	87	173	259	187	360	>435	64	128	256	277	361	>435	>435
	19.7	73	99	197	294	212	409	>435	73	145	290	315	411	>435	>435
	21.82	80	110	218	326	235	>435	>435	80	161	322	349	>435	>435	>435
	25.72	95	130	257	384	277	>435	>435	95	190	379	412	>435	>435	>435
	29.32	108	148	293	>435	316	>435		108	216	432	>435	>435		
	30.86	114	156	308	>435	332	>435		114	227	>435	>435	>435		
FA47 3	28.88	104	143	283	423	305	>435	>435	104	209	417	>435	>435	>435	>435
	34.29	124	169	336	>435	362	>435	>435	124	248	>435	>435	>435	>435	>435
	36.61	132	181	358	>435	386	>435	>435	132	264	>435	>435	>435	>435	>435
	42.86	155	212	419	>435	>435	>435	>435	155	309	>435	>435	>435	>435	>435
	48	173	237	>435	>435	>435	>435	>435	173	347	>435	>435	>435	>435	>435
	56.49	204	279	>435	>435	>435	>435	>435	204	408	>435	>435	>435	>435	>435
	65.36	236	323	>435	>435	>435	>435		236	>435	>435	>435	>435		
	68.09	243	333	>435	>435	>435	>435	>435	243	>435	>435	>435	>435	>435	>435
	79.72	285	390	>435	>435	>435	>435	>435	285	>435	>435	>435	>435	>435	>435
	89.29	319	>435	>435	>435	>435	>435	>435	319	>435	>435	>435	>435	>435	>435
	105.09	375	>435	>435	>435	>435	>435	>435	375	>435	>435	>435	>435	>435	>435
	121.57	434	>435	>435	>435	>435	>435		434	>435	>435	>435	>435		
	130.07	>435	>435	>435	>435	>435	>435		>435	>435	>435	>435	>435		
	150.06	>435	>435	>435		>435			>435	>435	>435				
	175.38	>435	>435						>435	>435					
	190.76	>435	>435						>435	>435					

m [kg]		CMP							DS			CM			
	s	40M	50S	50M	50L	63S	63M	63L	56M	56L	56H	71S	71M	71L	90S
FA47	2	18	19	20	21	21	23	24	18	19	20	24	25	29	33
FA47	3	18	20	21	22	22	24	25	19	20	20	25	26	29	34
FAF: + 2.7 kg / F: + 0.8 kg / FF: + 3.9 kg															

CMP.. / DS.. / CM..				c_T				φ
	i	n_{epk} [1/min]	η [%]	FA [Nm/']	FAF [Nm/']	F [Nm/']	FF [Nm/']	/R [']
FA47 2	4.99	4500	97	99.45	99.45	34.16	30.29	9
	5.76	4500	97	99.45	99.45	34.16	30.29	9
	6.34	4500	97	99.45	99.45	34.16	30.29	8
	7.44	4500	97	99.45	99.45	34.16	30.29	8
	7.88	4500	97	99.45	99.45	34.16	30.29	8
	8.96	4500	97	99.45	99.45	34.16	30.29	8
	10.97	4500	97	124.68	124.68	36.72	32.28	6
	12.66	4500	97	124.68	124.68	36.72	32.28	6
	13.93	4500	97	124.68	124.68	36.72	32.28	6
	16.36	4500	97	124.68	124.68	36.72	32.28	6
	17.33	4500	97	124.68	124.68	36.72	32.28	6
	19.7	4500	97	124.68	124.68	36.72	32.28	6
	21.82	4500	97	124.68	124.68	36.72	32.28	6
	25.72	4500	97	124.68	124.68	36.72	32.28	6
	29.32	4500	97	124.68	124.68	36.72	32.28	6
	30.86	4500	97	124.68	124.68	36.72	32.28	6



F..CMP, DS, CM
F 47 / CMP / DS / CM [Nm]

CMP.. / DS.. / CM..	i	n_{epk} [1/min]	η [%]	c_T FA [Nm/']	FAF [Nm/']	F [Nm/']	FF [Nm/']	φ /R [']
FA47 3	28.88	4500	95	136.29	136.29	37.66	33.01	7
	34.29	4500	95	136.29	136.29	37.66	33.01	7
	36.61	4500	95	136.29	136.29	37.66	33.01	7
	42.86	4500	95	136.29	136.29	37.66	33.01	7
	48	4500	95	136.29	136.29	37.66	33.01	7
	56.49	4500	95	136.29	136.29	37.66	33.01	7
	65.36	4500	95	136.29	136.29	37.66	33.01	7
	68.09	4500	94	137.7	137.7	37.77	33.09	6
	79.72	4500	94	137.7	137.7	37.77	33.09	6
	89.29	4500	94	137.7	137.7	37.77	33.09	6
	105.09	4500	94	137.7	137.7	37.77	33.09	6
	121.57	4500	94	137.7	137.7	37.77	33.09	6
	130.07	4500	94	137.7	137.7	37.77	33.09	6
	150.06	4500	94	137.7	137.7	37.77	33.09	6
	175.38	4500	94	137.7	137.7	37.77	33.09	6
	190.76	4500	94	137.7	137.7	37.77	33.09	6

CMP.. / DS.. / CM..	i	M_{amax} [Nm]	M_{apk} [Nm]	$M_{aNotaus}$ [Nm]	n_{ak} [1/min]	J_G 10^{-4} [kgm^2]	F_{Ramax} FA [N]	FAF [N]	F [N]	FF [N]	F_{Rapk} FA [N]	FAF [N]	F [N]	FF [N]
FA47 2	4.99	320	435	544	341	4.4	1160	1160	2310	2410	10000	10000	900	900
	5.76	340	435	578	295	3.4	1180	1180	2390	2500	10000	10000	900	900
	6.34	350	435	595	284	2.9	1230	1230	2470	2580	10000	10000	900	900
	7.44	380	435	646	242	2.3	1190	1190	2530	2660	10000	10000	900	900
	7.88	380	435	646	254	2.1	1280	1280	2630	2750	10000	10000	900	900
	8.96	330	435	561	424	1.6	1970	1970	3250	3310	10000	10000	900	900
	10.97	400	435	680	346	2.6	2060	2060	3440	3510	10000	10000	900	900
	12.66	400	435	680	371	2.1	2320	2320	3740	3790	10000	10000	900	900
	13.93	400	435	680	388	1.8	2510	2510	3950	3990	10000	10000	900	900
	16.36	400	435	680	403	1.5	2840	2840	4320	4340	10000	10000	900	900
	17.33	400	435	680	398	1.4	2960	2960	4450	4470	10000	10000	900	900
	19.7	400	435	680	355	1.1	3230	3230	4770	4770	10000	10000	900	900
	21.82	400	435	680	321	0.96	3460	3460	5030	5020	10000	10000	900	900
	25.72	400	435	680	272	0.75	3850	3850	5460	5430	10000	10000	900	900
	29.32	400	435	680	239	0.52	4170	4170	5830	5780	10000	10000	900	900
	30.86	400	435	680	227	0.46	4300	4300	5920	5920	10000	10000	900	900
FA47 3	28.88	400	435	680	111	1.1	4130	4130	5790	5740	10000	10000	900	900
	34.29	400	435	680	111	0.85	4580	4580	5920	5920	10000	10000	900	900
	36.61	400	435	680	112	0.76	4750	4750	5920	5920	10000	10000	900	900
	42.86	400	435	680	112	0.58	5190	5190	5920	5920	10000	10000	900	900
	48	400	435	680	113	0.48	5520	5520	5920	5920	10000	10000	900	900
	56.49	400	435	680	113	0.36	6020	6020	5920	5920	10000	10000	900	900
	65.36	400	435	680	107	0.29	6490	6490	5920	5920	10000	10000	900	900
	68.09	400	435	680	103	0.61	6620	6620	5920	5920	10000	10000	900	900
	79.72	400	435	680	88	0.48	7160	7160	5920	5920	10000	10000	900	900
	89.29	400	435	680	78	0.40	7570	7570	5920	5920	10000	10000	900	900
	105.09	400	435	680	67	0.30	8180	8180	5920	5920	10000	10000	900	900
	121.57	400	435	680	58	0.25	8760	8760	5920	5920	10000	10000	900	900
	130.07	400	435	680	54	0.23	9040	9040	5920	5920	10000	10000	900	900
	150.06	400	435	680	47	0.18	9640	9640	5920	5920	10000	10000	900	900
	175.38	400	435	680	40	0.14	10000	10000	5920	5920	10000	10000	900	900
	190.76	400	435	680	37	0.13	10000	10000	5920	5920	10000	10000	900	900

9.7 F 47 / CMP / DS / CM [mm]

F47..

42 017 00 07

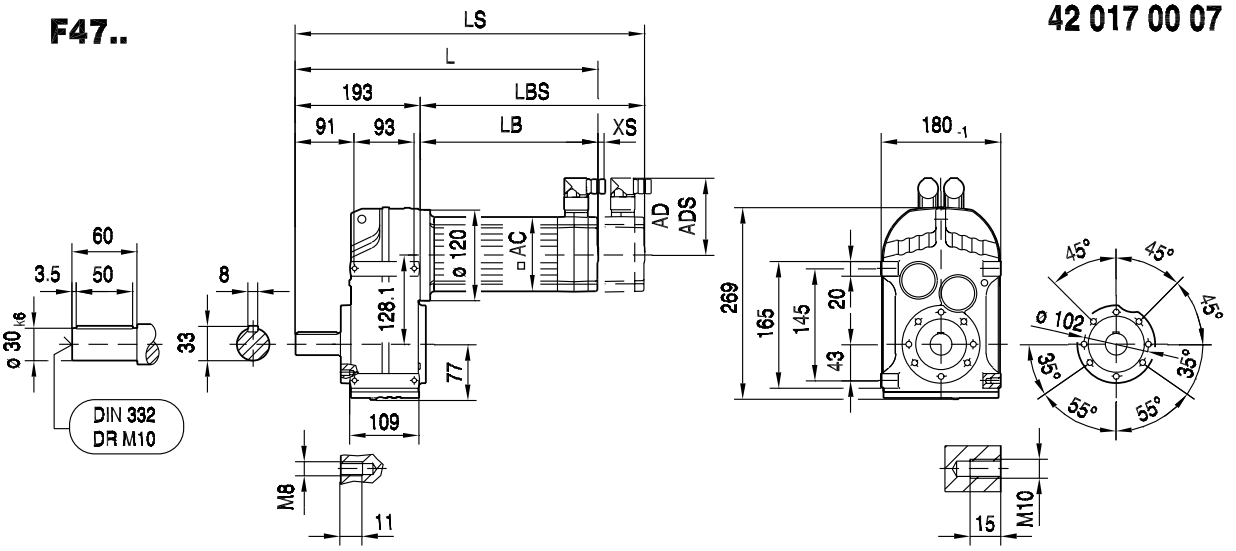

FA47B..

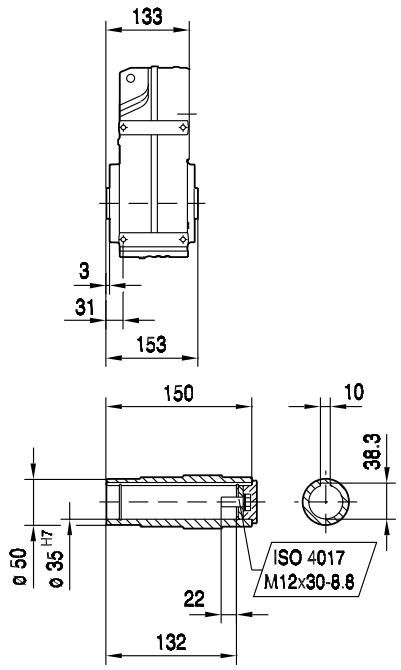

FH47B..

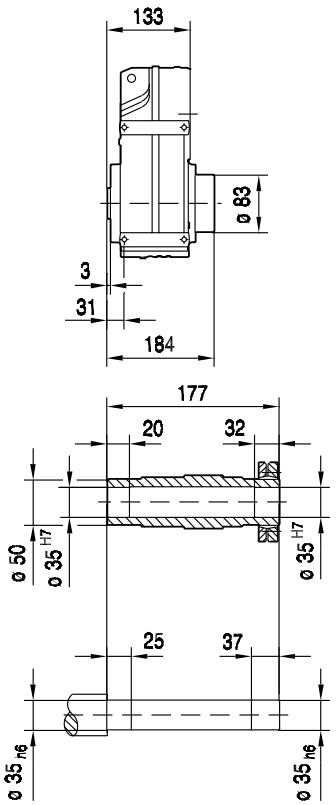

FV47B..

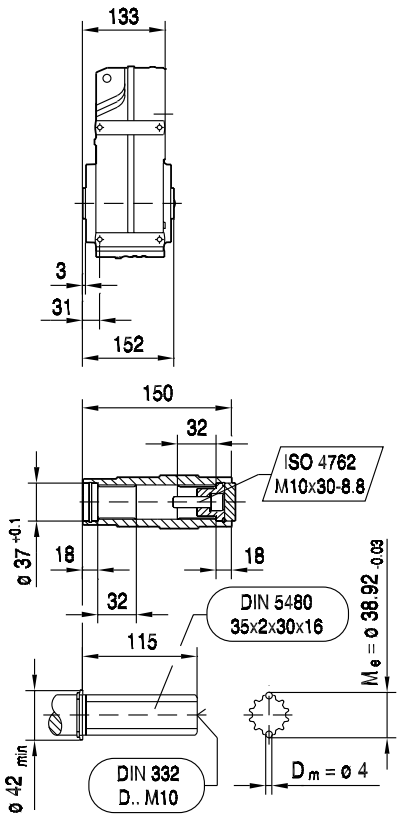

(→ 150)	CMP40M	CMP50S	CMP50M	CMP50L	CMP63S	CMP63M	CMP63L	
AC	57	73	73	73	88	88	88	
AD	75	82	82	82	89	89	89	
ADS	75	82	82	82	89	89	89	
L	336	338	377	416	373	423	476	
LS	366	367	406	445	401	451	505	
LB	143	145	184	223	180	230	283	
LBS	173	174	213	252	208	258	312	
XS	19	18	18	18	14	14	14	

42 018 00 07

FF47..

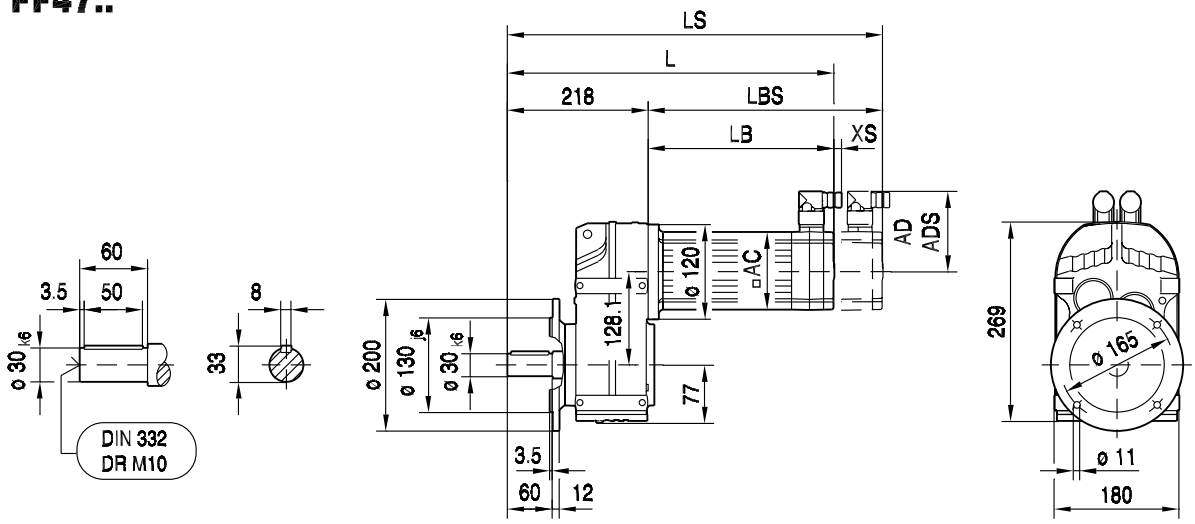

FAF47..

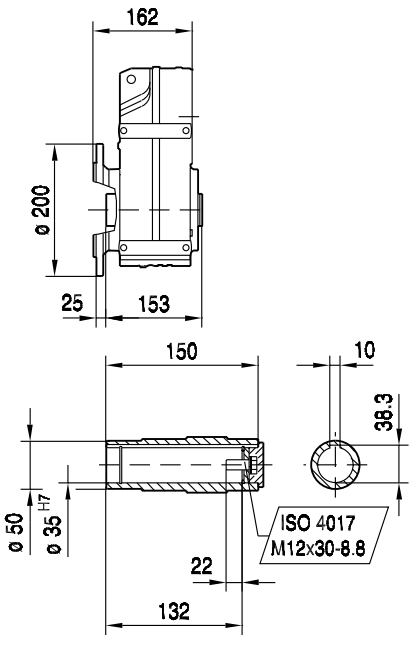

FHF47..

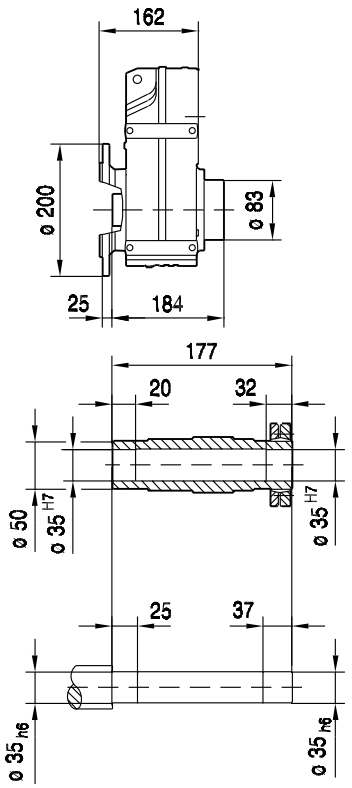

FVF47..

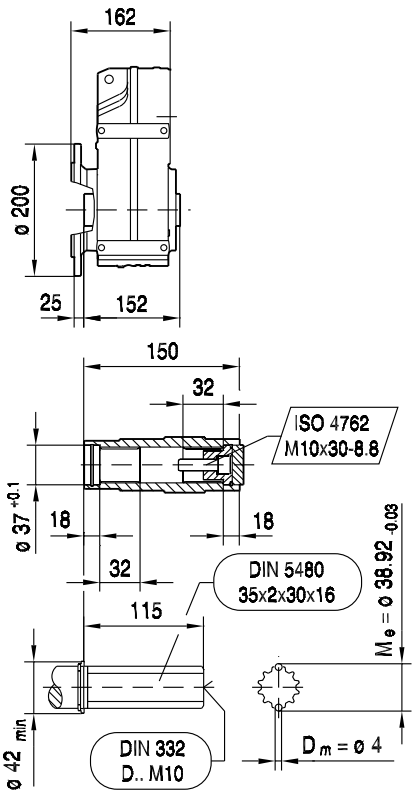

(→ 150)	CMP40M	CMP50S	CMP50M	CMP50L	CMP63S	CMP63M	CMP63L	
AC	57	73	73	73	88	88	88	
AD	75	82	82	82	89	89	89	
ADS	75	82	82	82	89	89	89	
L	361	363	402	441	398	448	501	
LS	391	392	431	470	426	476	530	
LB	143	145	184	223	180	230	283	
LBS	173	174	213	252	208	258	312	
XS	19	18	18	18	14	14	14	

FA47..

42 019 00 07

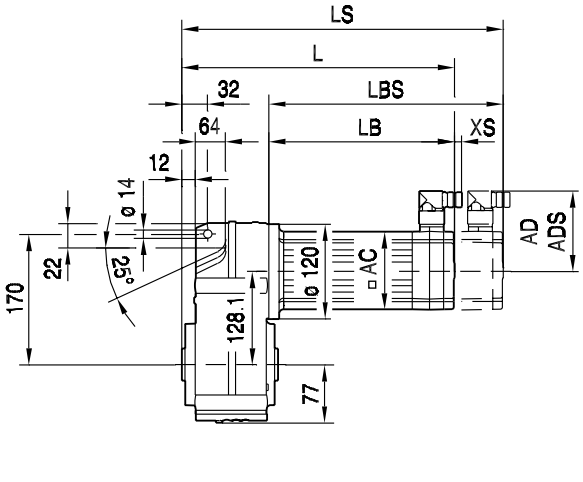

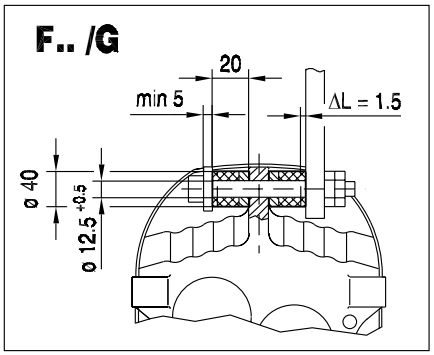

9

FA47..

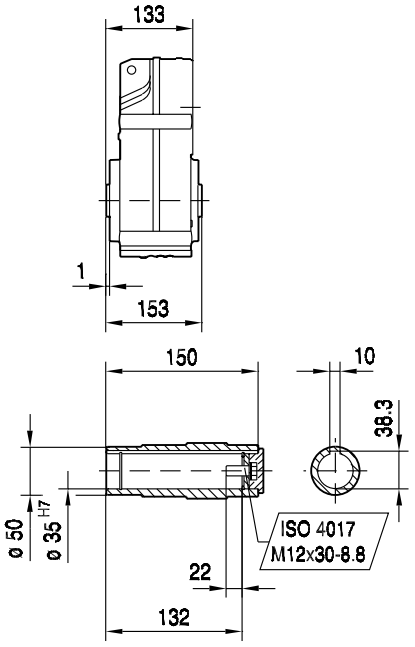

FH47..

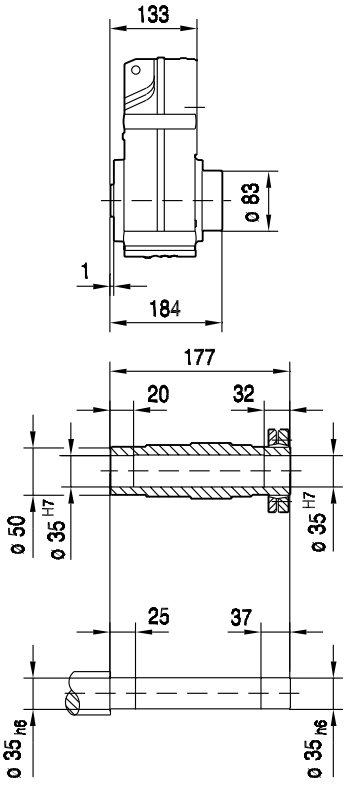

FV47..

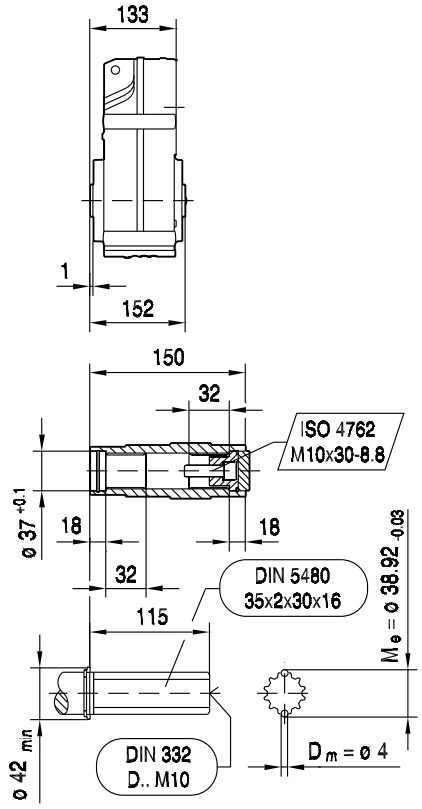

(→ 150)	CMP40M	CMP50S	CMP50M	CMP50L	CMP63S	CMP63M	CMP63L	
AC	57	73	73	73	88	88	88	
AD	75	82	82	82	89	89	89	
ADS	75	82	82	82	89	89	89	
L	276	278	317	356	313	363	416	
LS	306	307	346	385	341	391	445	
LB	143	145	184	223	180	230	283	
LBS	173	174	213	252	208	258	312	
XS	19	18	18	18	14	14	14	

FAZ47..

42 020 00 07

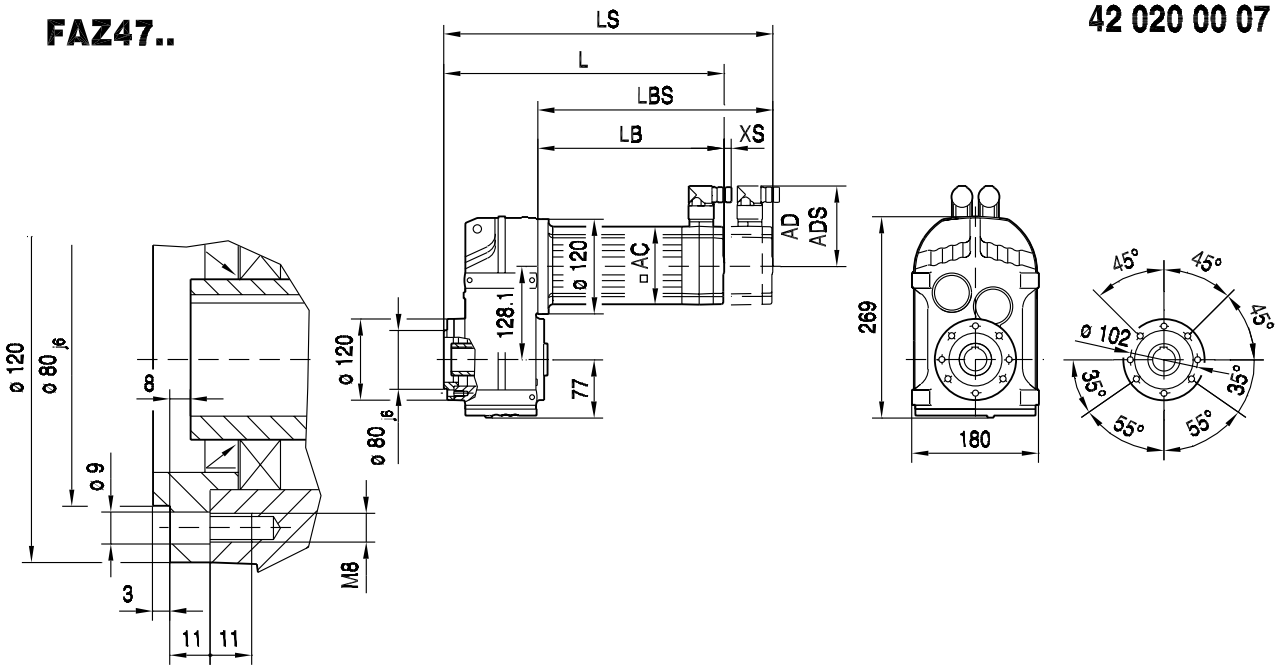

FAZ47..

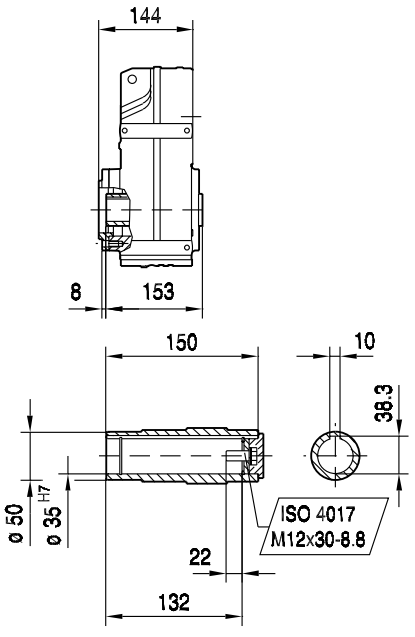

FHZ47..

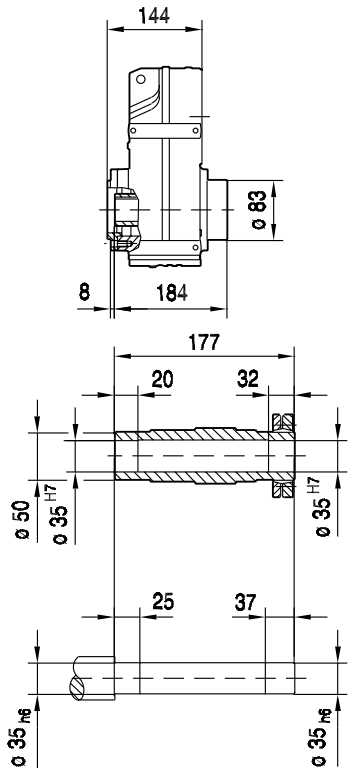

FVZ47..

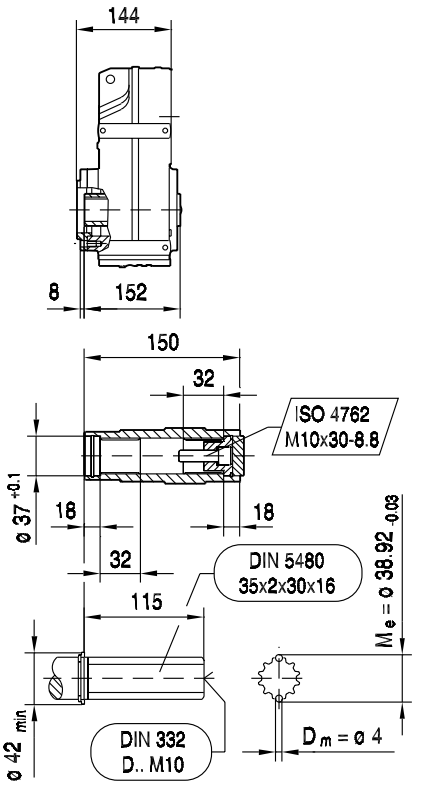

(→ 📖 150)	CMP40M	CMP50S	CMP50M	CMP50L	CMP63S	CMP63M	CMP63L	
AC	57	73	73	73	88	88	88	
AD	75	82	82	82	89	89	89	
ADS	75	82	82	82	89	89	89	
L	287	289	328	367	324	374	427	
LS	317	318	357	396	352	402	456	
LB	143	145	184	223	180	230	283	
LBS	173	174	213	252	208	258	312	
XS	19	18	18	18	14	14	14	

FT47..

42 021 00 07

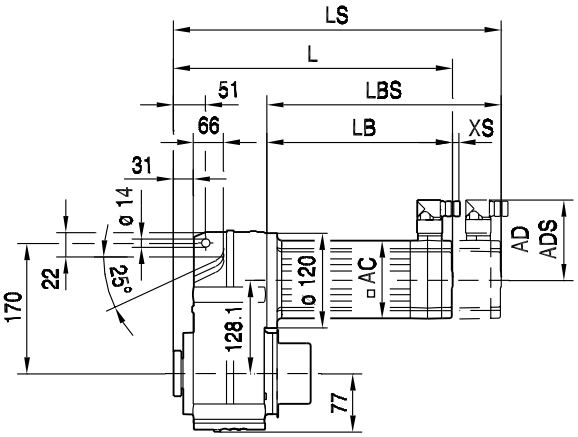

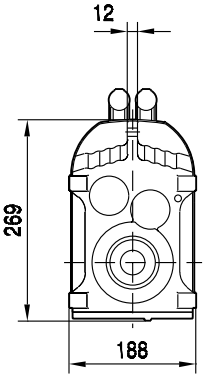

F.. /G

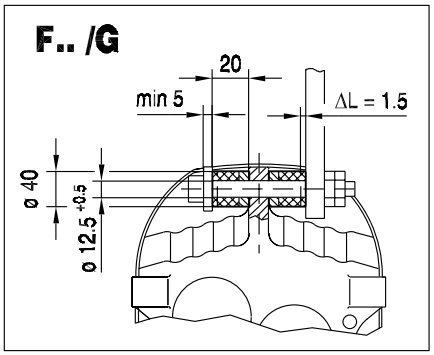

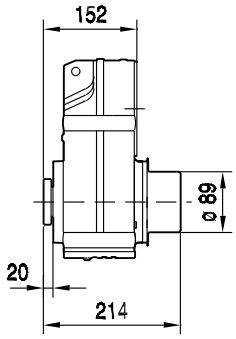

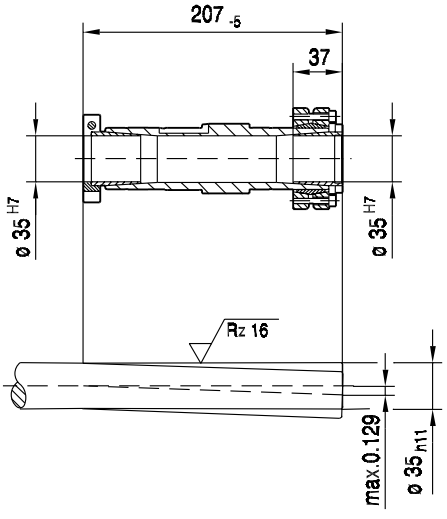

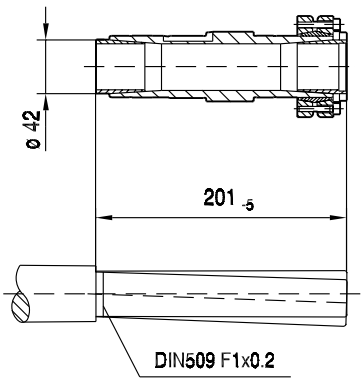

(→ 📖 150)	CMP40M	CMP50S	CMP50M	CMP50L	CMP63S	CMP63M	CMP63L	
AC	57	73	73	73	88	88	88	
AD	75	82	82	82	89	89	89	
ADS	75	82	82	82	89	89	89	
L	294	296	335	374	331	381	434	
LS	324	325	364	403	359	409	463	
LB	143	145	184	223	180	230	283	
LBS	173	174	213	252	208	258	312	
XS	19	18	18	18	14	14	14	

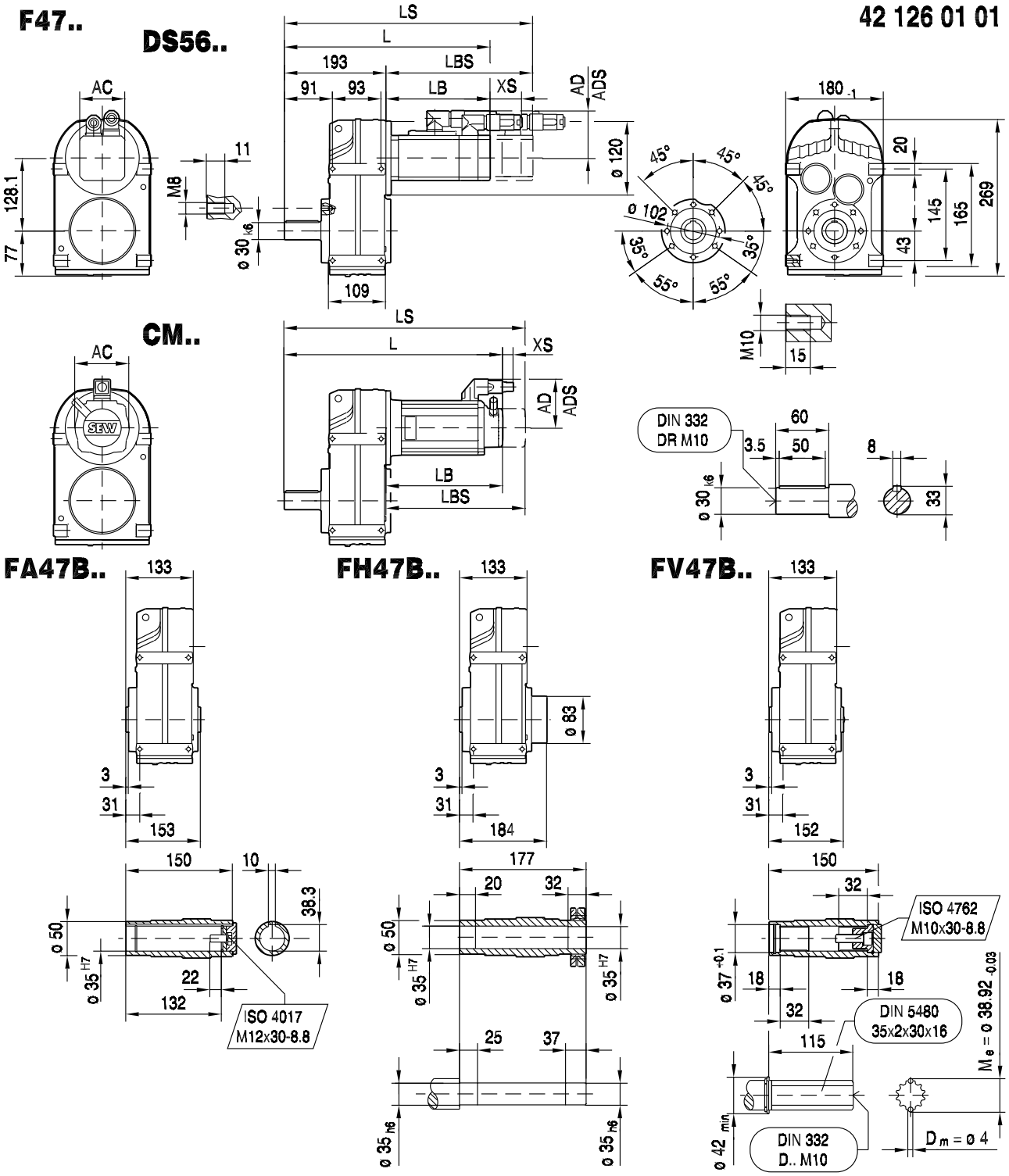

(→ 150)	DS56M	DS56L	DS56H	CM71S	CM71M	CM71L	CM90S				
AC	73	73	73	117	117	117	142				
AD	71	71	77	122	122	122	140				
ADS	77	77	77	122	122	122	140				
L	330	362	465	431	451	494	486				
LS	360	392	465	513	533	576	582				
LB	137	169	272	238	258	301	293				
LBS	167	199	272	320	340	383	389				
XS	70	70	51	45	45	45	50				

42 127 01 01

FF47..

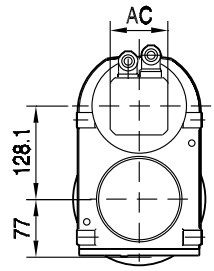

DS56..

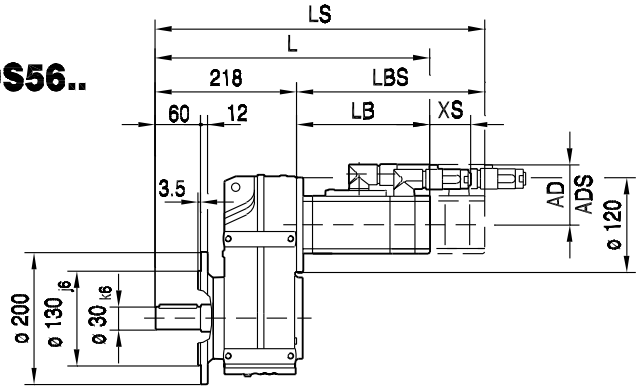

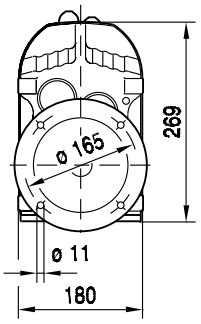

CM..

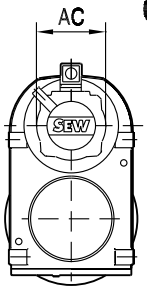

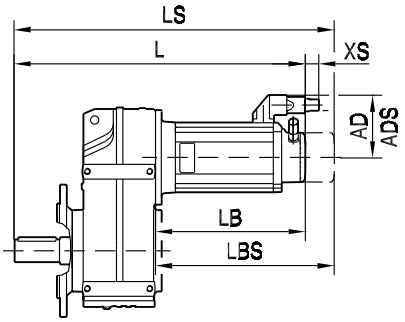

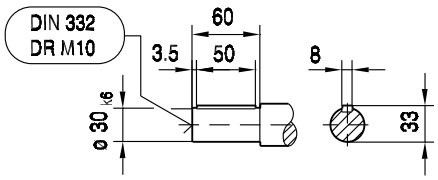

FAF47..

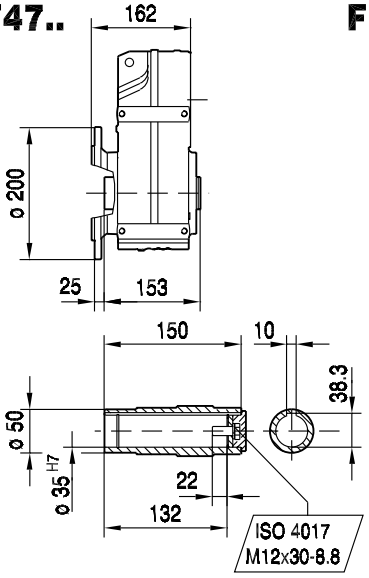

FHF47..

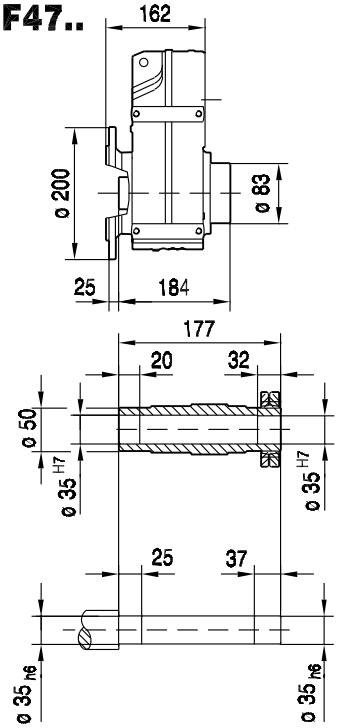

FVF47..

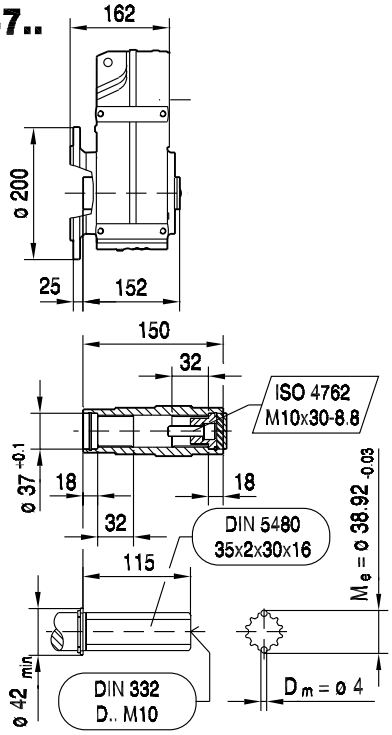

(→ 150)	DS56M	DS56L	DS56H	CM71S	CM71M	CM71L	CM90S				
AC	73	73	73	117	117	117	142				
AD	71	71	77	122	122	122	140				
ADS	77	77	77	122	122	122	140				
L	355	387	490	456	476	519	511				
LS	385	417	490	538	558	601	607				
LB	137	169	272	238	258	301	293				
LBS	167	199	272	320	340	383	389				
XS	70	70	51	45	45	45	50				

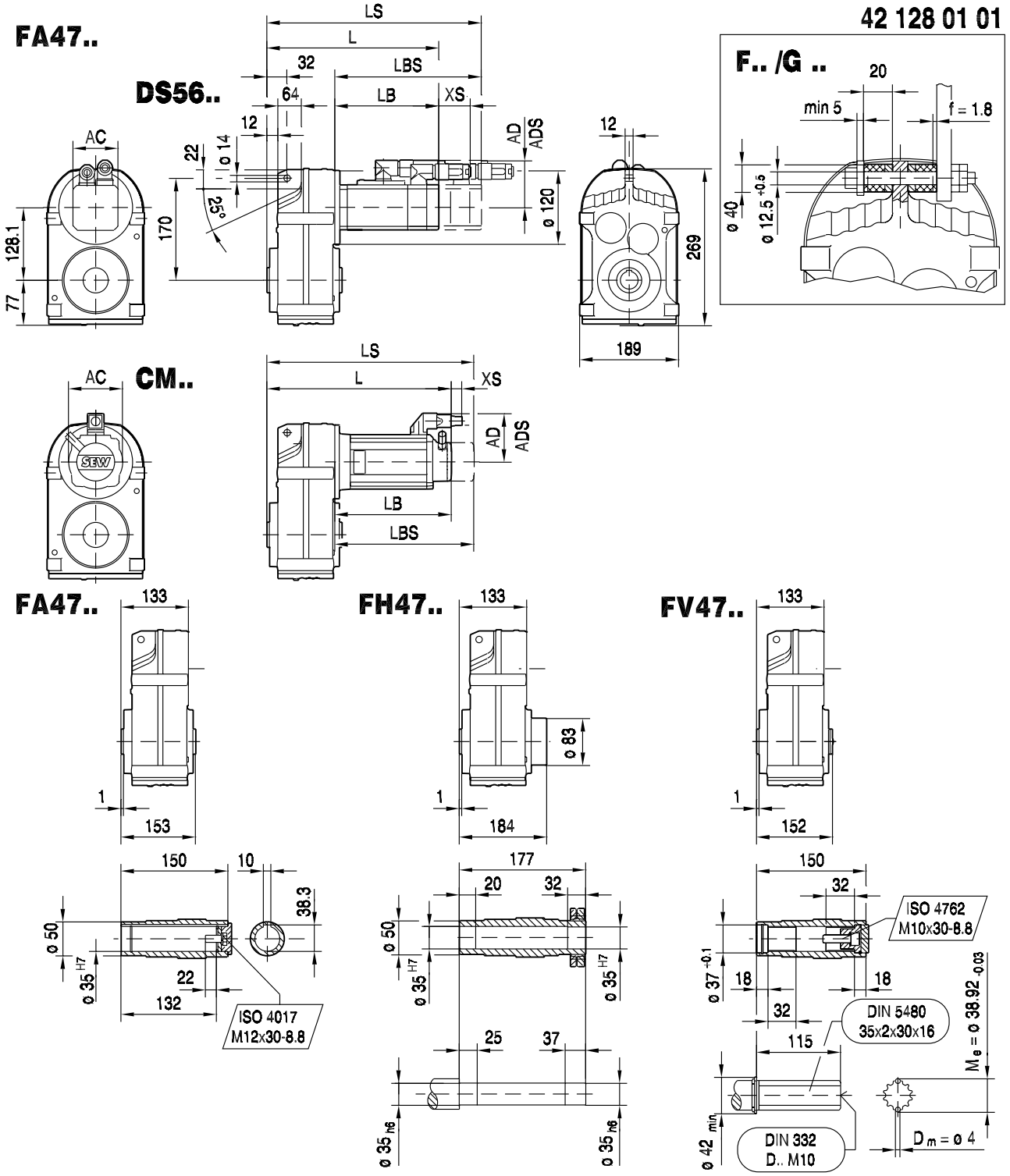

(→ 150)	DS56M	DS56L	DS56H	CM71S	CM71M	CM71L	CM90S				
AC	73	73	73	117	117	117	142				
AD	71	71	77	122	122	122	140				
ADS	77	77	77	122	122	122	140				
L	270	302	405	371	391	434	426				
LS	300	332	405	453	473	516	522				
LB	137	169	272	238	258	301	293				
LBS	167	199	272	320	340	383	389				
XS	70	70	51	45	45	45	50				

FAZ47.. DS56..

42 040 00 04

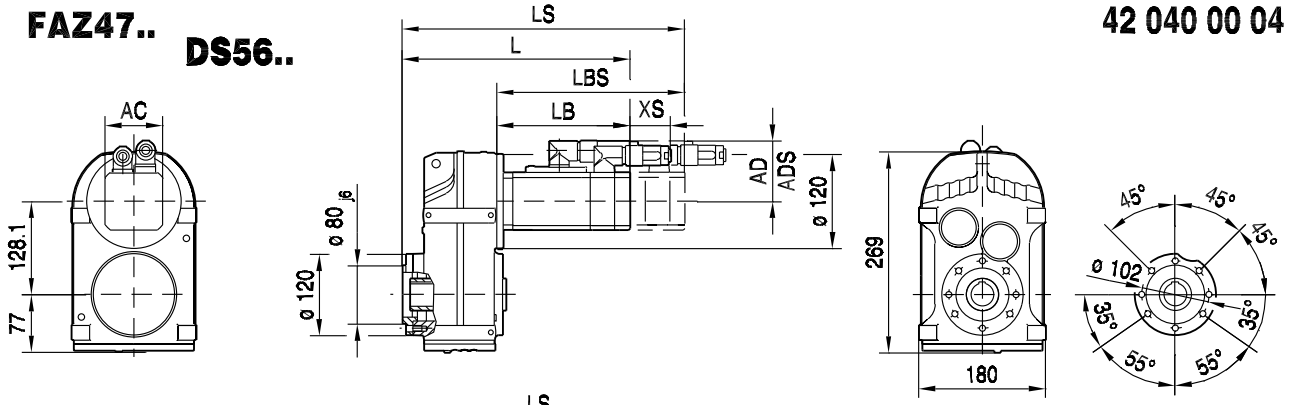

CM..

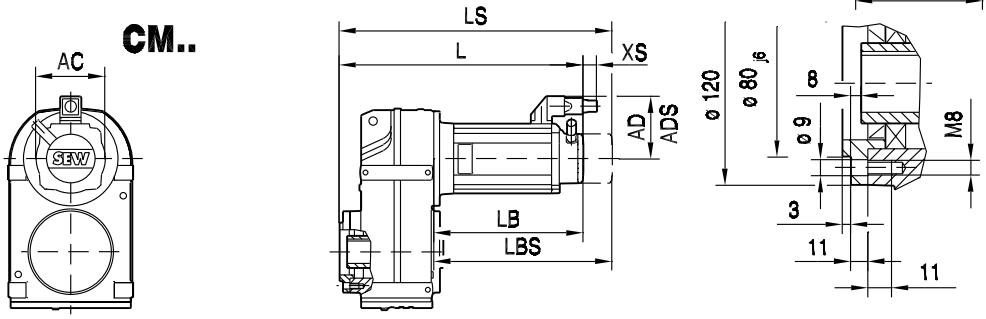

FAZ47..

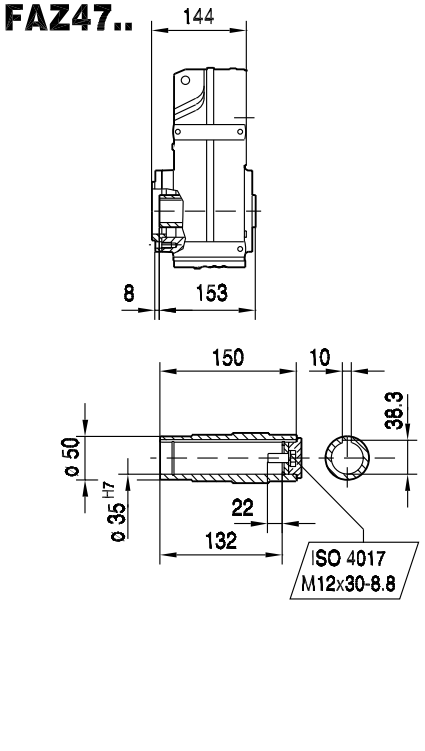

FHZ47..

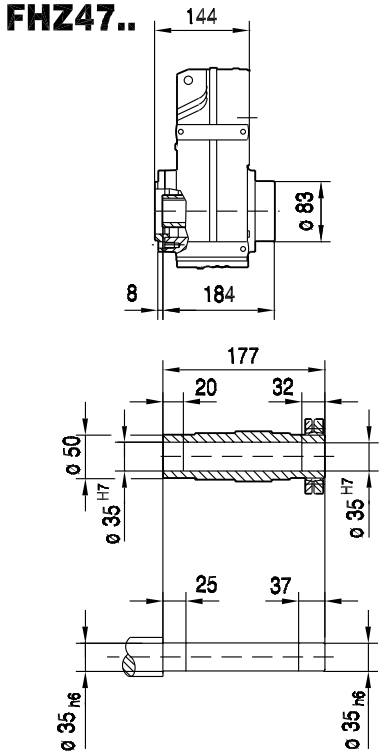

FVZ47..

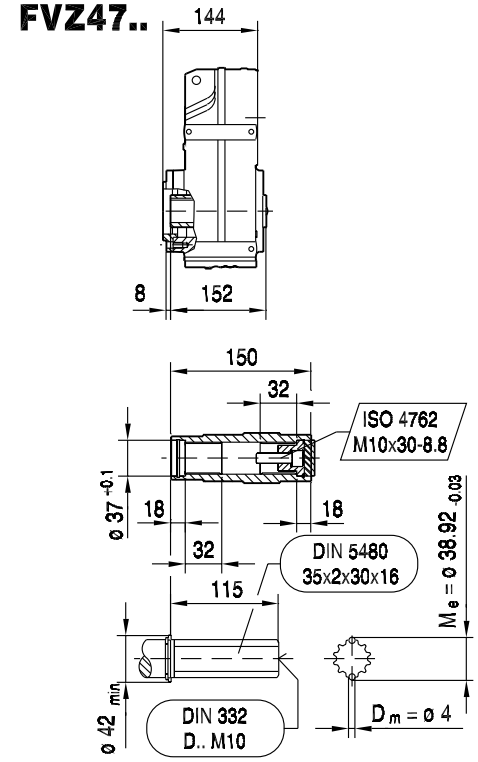

(→ 150)	DS56M	DS56L	DS56H	CM71S	CM71M	CM71L	CM90S				
AC	73	73	73	117	117	117	142				
AD	71	71	77	122	122	122	140				
ADS	77	77	77	122	122	122	140				
L	281	313	416	382	402	445	437				
LS	311	343	416	464	484	527	533				
LB	137	169	272	238	258	301	293				
LBS	167	199	272	320	340	383	389				
XS	70	70	51	45	45	45	50				



F..CMP, DS, CM
F 47 / CMP / DS / CM [mm]

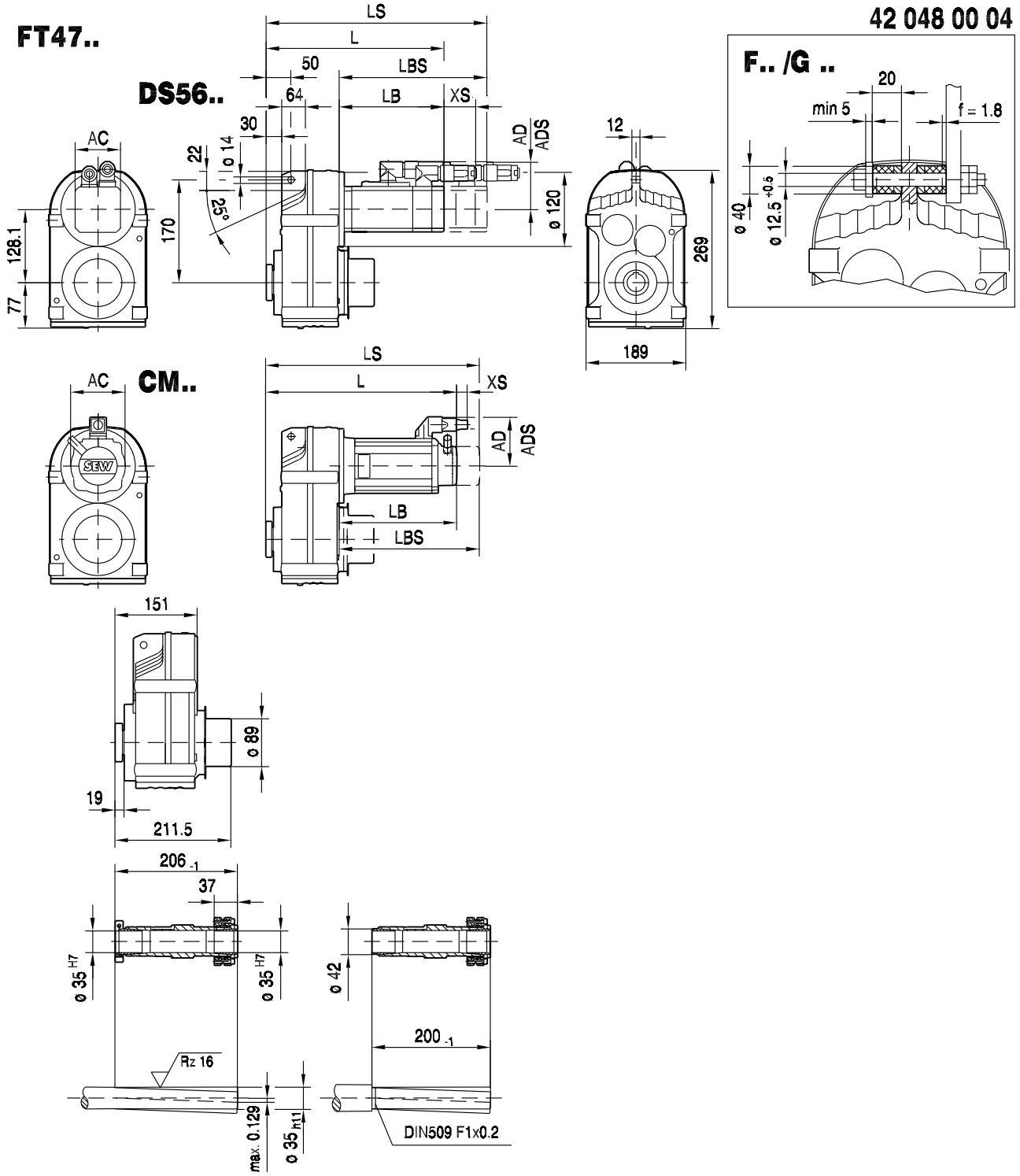

(→ 📖 150)	DS56M	DS56L	DS56H	CM71S	CM71M	CM71L	CM90S				
AC	73	73	73	117	117	117	142				
AD	71	71	77	122	122	122	140				
ADS	77	77	77	122	122	122	140				
L	288	320	423	389	409	452	444				
LS	318	350	423	471	491	534	540				
LB	137	169	272	238	258	301	293				
LBS	167	199	272	320	340	383	389				
XS	70	70	51	45	45	45	50				

9.8 F 57 / CMP / DS / CM [Nm]

M_{aDyn} [Nm]		CMP						DS			CM						
	i	50S	50M	50L	63S	63M	63L	56M	56L	56H	71S	71M	71L	90S	90M	90L	112S
FA57 2	5.18	26	52	77	56	108	153	19	38	76	83	108	158	199	262	380	414
	5.98	30	60	89	64	124	176	22	44	88	96	125	182	230	303	439	>475
	6.58	33	66	98	71	137	194	24	49	97	105	137	200	253	333	>480	>480
	7.73	39	77	115	83	160	228	28	57	114	124	161	235	297	391	>480	>480
	8.19	41	82	122	88	170	242	30	60	121	131	171	249	315	415	>485	>485
	9.31	47	93	139	100	193	275	34	69	137	149	194	284	358	>460		
	10.64	54	106	159	115	221	314	39	78	157	170	222	324	409	539	>645	>645
	12.29	62	123	184	132	255	362	45	91	181	197	256	374	472	622	>645	>645
	13.52	68	135	202	146	281	399	50	100	199	216	282	412	519	>645	>645	>645
	15.88	80	159	237	171	330	468	59	117	234	254	331	484	610	>645	>645	>645
	16.81	85	168	251	181	349	496	62	124	248	269	351	512	>645	>645	>645	>645
	19.11	96	191	285	206	397	564	70	141	282	306	399	582	>645	>645		
	21.17	107	212	316	228	439	624	78	156	312	339	442	645	>645	>645		
	24.96	126	249	373	269	518	>645	92	184	368	399	521	>645	>645			
	28.45	144	284	425	306	591		105	210	419	455	593					
	29.94	151	299	447	322	621		110	221	441	479	624					
	34.24	173	342		369			126	252	505							
	40.13	202						148	296								
FA57 3	30.15	149	295	441	318	613	>645	109	218	435	473	616	>645	>645	>645	>645	>645
	35.79	177	350	524	377	>645	>645	129	258	517	561	>645	>645	>645	>645	>645	>645
	38.21	189	374	559	403	>645	>645	138	276	552	599	>645	>645	>645	>645	>645	>645
	44.73	221	438	>645	472	>645	>645	161	323	>645	>645	>645	>645	>645	>645		
	50.1	247	490	>645	528	>645	>645	181	362	>645	>645	>645	>645	>645	>645		
	58.97	291	577	>645	622	>645	>645	213	426	>645	>645	>645	>645	>645			
	68.22	337	>645	>645	>645	>645		246	493	>645	>645	>645					
	72.98	361	>645	>645	>645	>645		263	527	>645	>645	>645					
	83.46	412	>645	>645	>645	>645	>645	301	603	>645	>645	>645	>645	>645	>645		
	93.47	462	>645	>645	>645	>645	>645	337	>645	>645	>645	>645	>645	>645	>645		
	110.01	543	>645	>645	>645	>645	>645	397	>645	>645	>645	>645	>645	>645			
	127.27	629	>645	>645	>645	>645		459	>645	>645	>645	>645					
	136.16	>645	>645	>645	>645	>645		492	>645	>645	>645	>645					
	157.09	>645	>645		>645			567	>645	>645							
	183.6	>645						>645	>645								
	199.7	>645						>645	>645								

m [kg]		CMP						DS			CM						
	s	50S	50M	50L	63S	63M	63L	56M	56L	56H	71S	71M	71L	90S	90M	90L	112S
FA57	2	26	27	28	29	30	32	26	27	27	32	33	36	41	43	48	50
FA57	3	27	28	29	29	31	32	26	27	28	32	34	37	41	44	49	50
FAF: + 5.5 kg / F: + 0.2 kg / FF: + 6.6 kg																	



F..CMP, DS, CM
F 57 / CMP / DS / CM [Nm]

CMP.. / DS.. / CM..	i	n_{epk} [1/min]	η [%]	c_T FA [Nm/']	FAF [Nm/']	F [Nm/']	FF [Nm/']	φ /R [']
FA57 2	5.18	4468	97	119.5	119.5	43.41	37.56	9
	5.98	4500	97	119.5	119.5	43.41	37.56	9
	6.58	4500	97	119.5	119.5	43.41	37.56	8
	7.73	4500	97	119.5	119.5	43.41	37.56	8
	8.19	4500	97	119.5	119.5	43.41	37.56	8
	9.31	4500	97	119.5	119.5	43.41	37.56	8
	10.64	4500	97	149.98	149.98	46.87	40.12	6
	12.29	4500	97	149.98	149.98	46.87	40.12	6
	13.52	4500	97	149.98	149.98	46.87	40.12	6
	15.88	4500	97	149.98	149.98	46.87	40.12	6
	16.81	4500	97	149.98	149.98	46.87	40.12	6
	19.11	4500	97	149.98	149.98	46.87	40.12	6
	21.17	4500	97	149.98	149.98	46.87	40.12	6
	24.96	4500	97	149.98	149.98	46.87	40.12	6
	28.45	4500	97	149.98	149.98	46.87	40.12	6
	29.94	4500	97	149.98	149.98	46.87	40.12	6
	34.24	4500	97	149.98	149.98	46.87	40.12	6
	40.13	4500	97	149.98	149.98	46.87	40.12	6
FA57 3	30.15	4500	95	169.49	169.49	48.62	41.39	7
	35.79	4500	95	169.49	169.49	48.62	41.39	7
	38.21	4500	95	169.49	169.49	48.62	41.39	7
	44.73	4500	95	169.49	169.49	48.62	41.39	7
	50.1	4500	95	169.49	169.49	48.62	41.39	7
	58.97	4500	95	169.49	169.49	48.62	41.39	7
	68.22	4500	95	169.49	169.49	48.62	41.39	6
	72.98	4500	95	169.49	169.49	48.62	41.39	6
	83.46	4500	95	171.38	171.38	48.77	41.51	6
	93.47	4500	95	171.38	171.38	48.77	41.51	6
	110.01	4500	95	171.38	171.38	48.77	41.51	6
	127.27	4500	95	171.38	171.38	48.77	41.51	6
	136.16	4500	95	171.38	171.38	48.77	41.51	6
	157.09	4500	95	171.38	171.38	48.77	41.51	6
	183.6	4500	95	171.38	171.38	48.77	41.51	6
	199.7	4500	95	171.38	171.38	48.77	41.51	6

CMP.. / DS.. / CM..	i	M_{amax} [Nm]	M_{apk} [Nm]	$M_{aNotaus}$ [Nm]	n_{ak} [1/min]	J_G 10^{-4} [kgm^2]	F_{Ramax} FA [N]	FAF [N]	F [N]	FF [N]	F_{Rapk} FA [N]	FAF [N]	F [N]	FF [N]
FA57 2	5.18	415	475	706	405	5.8	2020	2020	3460	3670	11500	11500	9910	8490
	5.98	420	475	714	452	4.5	2240	2240	3730	3940	11500	11500	9910	8490
	6.58	420	480	714	502	3.8	2430	2430	3940	4140	11500	11500	9880	8460
	7.73	420	480	714	595	2.9	2760	2760	4310	4500	11500	11500	9880	8460
	8.19	420	485	714	623	2.6	2880	2880	4450	4640	11500	11500	9840	8440
	9.31	420	460	714	666	2.0	3170	3170	4760	4950	11500	11500	10000	8580
	10.64	600	645	1020	207	3.2	2470	2470	4320	4590	11500	11500	6930	6930
	12.29	600	645	1020	212	2.6	2810	2810	4710	4970	11500	11500	6930	6930
	13.52	600	645	1020	207	2.2	3050	3050	4980	5230	11500	11500	6930	6930
	15.88	600	645	1020	214	1.8	3470	3470	5450	5690	11500	11500	6930	6930
	16.81	600	645	1020	214	1.6	3630	3630	5620	5860	11500	11500	6930	6930
	19.11	600	645	1020	215	1.3	3980	3980	6020	6260	11500	11500	6930	6930
	21.17	600	645	1020	217	1.1	4280	4280	6350	6580	11500	11500	6930	6930
	24.96	575	645	978	252	0.84	4970	4970	7060	7260	11500	11500	6930	6930
	28.45	535	645	910	246	0.59	5690	5690	7760	7930	11500	11500	6930	6930
	29.94	545	645	927	234	0.53	5790	5790	7890	8060	11500	11500	6930	6930
	34.24	500	645	850	204	0.43	6580	6580	8670	8500	11500	11500	6930	6930
	40.13	290	435	493	174	0.34	8750	8750	10500	9550	11500	11500	10400	8850



CMP.. / DS.. / CM..							F_{Ramax}				F_{Rapk}			
	i	M_{amax} [Nm]	M_{apk} [Nm]	$M_{aNotaus}$ [Nm]	n_{ak} [1/min]	J_G 10^{-4} [kgm^2]	FA [N]	FAF [N]	F [N]	FF [N]	FA [N]	FAF [N]	F [N]	FF [N]
FA57 3	30.15	590	645	1003	50	1.3	5460	5460	7650	7850	11500	11500	6930	6930
	35.79	600	645	1020	47	0.94	5980	5980	8250	7900	11500	11500	6930	6930
	38.21	600	645	1020	50	0.84	6210	6210	8510	7900	11500	11500	6930	6930
	44.73	600	645	1020	49	0.64	6790	6790	9160	7900	11500	11500	6930	6930
	50.1	600	645	1020	50	0.52	7230	7230	9200	7900	11500	11500	6930	6930
	58.97	600	645	1020	51	0.38	7890	7890	9200	7900	11500	11500	6930	6930
	68.22	600	645	1020	51	0.31	8510	8510	9200	7900	11500	11500	6930	6930
	72.98	600	645	1020	51	0.28	8810	8810	9200	7900	11500	11500	6930	6930
	83.46	600	645	1020	42	0.51	9420	9420	9200	7900	11500	11500	6930	6930
	93.47	600	645	1020	42	0.42	9960	9960	9200	7900	11500	11500	6930	6930
	110.01	600	645	1020	42	0.31	10800	10800	9200	7900	11500	11500	6930	6930
	127.27	600	645	1020	42	0.26	11500	11500	9200	7900	11500	11500	6930	6930
	136.16	600	645	1020	43	0.23	11500	11500	9200	7900	11500	11500	6930	6930
	157.09	600	645	1020	43	0.19	11500	11500	9200	7900	11500	11500	6930	6930
	183.6	600	645	1020	38	0.15	11500	11500	9200	7900	11500	11500	6930	6930
	199.7	600	645	1020	35	0.13	11500	11500	9200	7900	11500	11500	6930	6930

9.9 F 57 / CMP / DS / CM [mm]

F57..

42 022 00 07

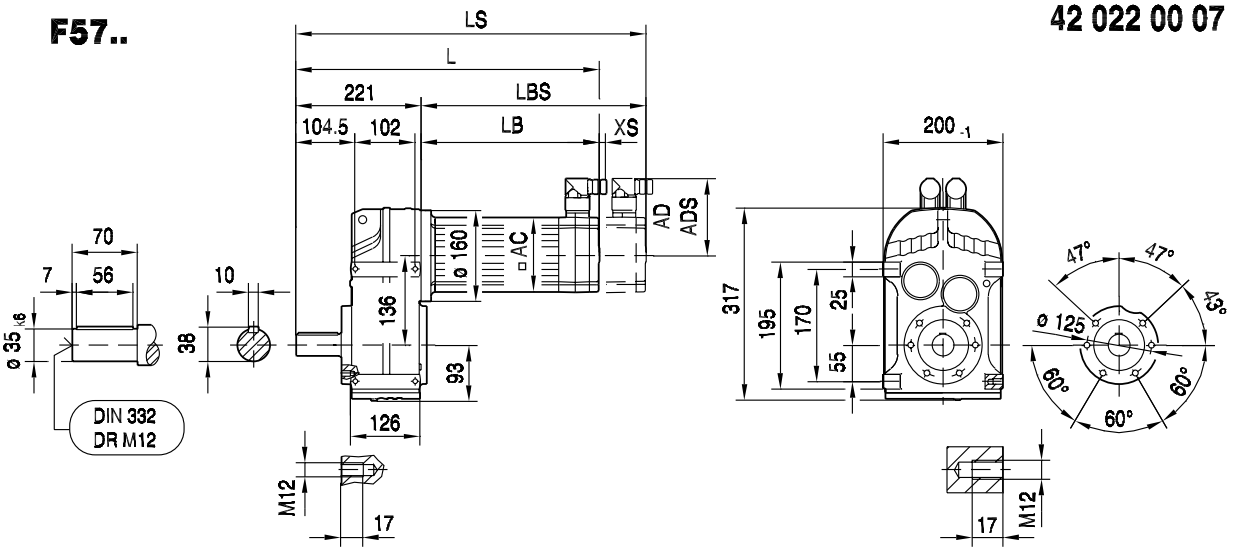

FA57B..

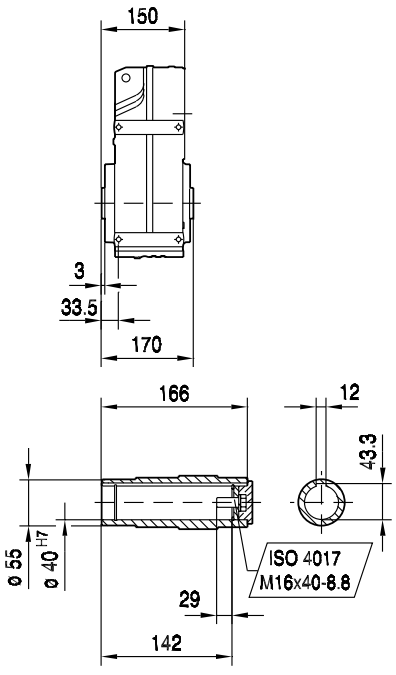

FH57B..

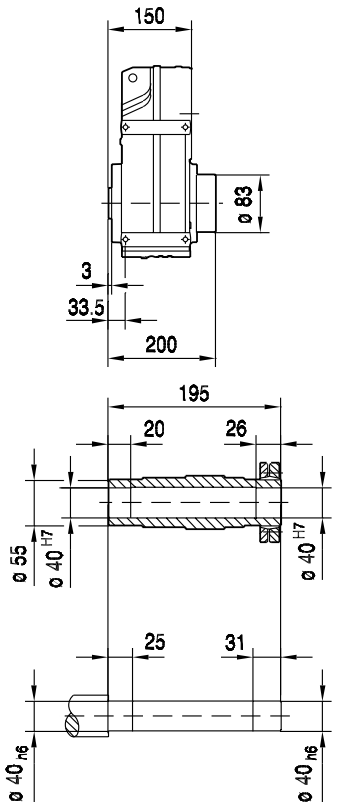

FV57B..

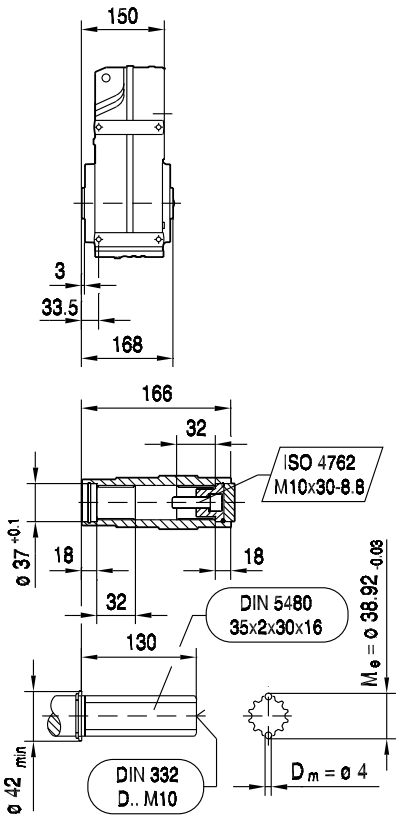

(→ 150)	CMP50S	CMP50M	CMP50L	CMP63S	CMP63M	CMP63L		
AC	73	73	73	88	88	88		
AD	82	82	82	89	89	89		
ADS	82	82	82	89	89	89		
L	360	399	438	394	444	494		
LS	389	428	467	423	473	523		
LB	139	178	217	173	223	273		
LBS	168	207	246	202	252	302		
XS	18	18	18	14	14	14		

FF57..

42 023 00 07

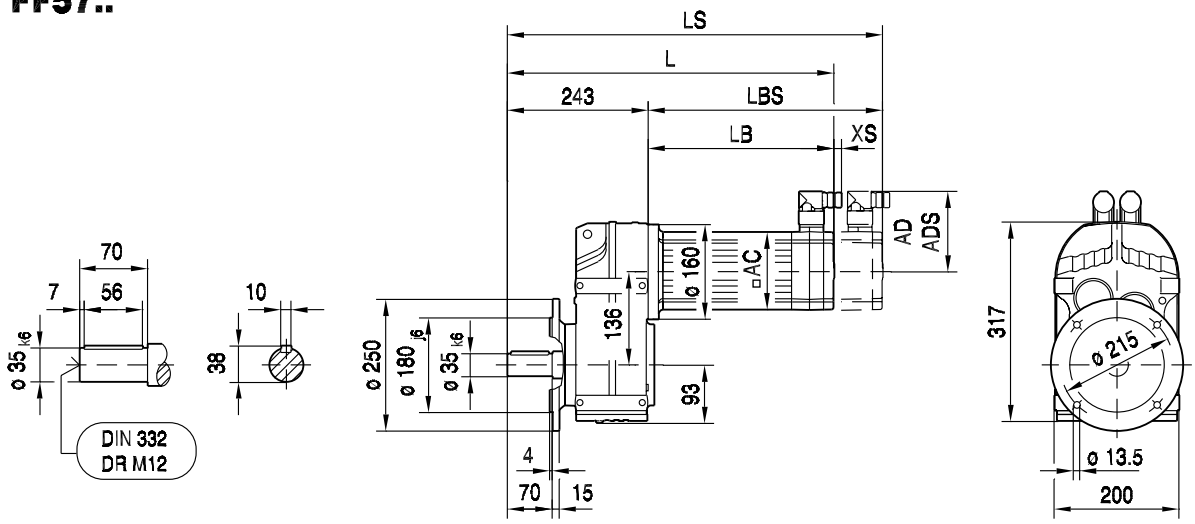

FAF57..

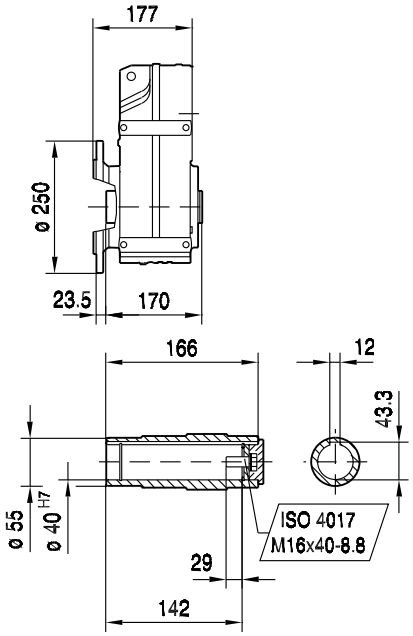

FHF57..

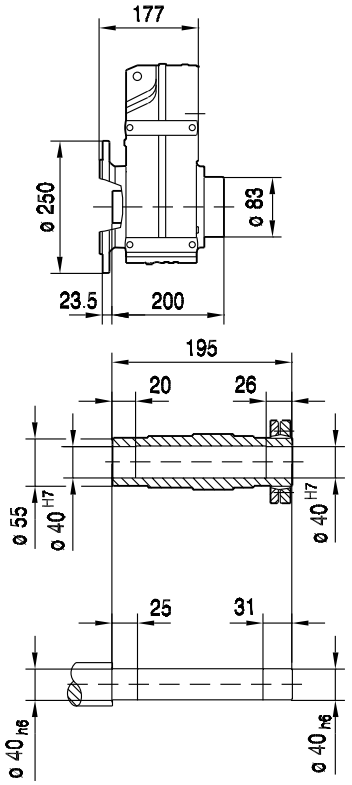

FVF57..

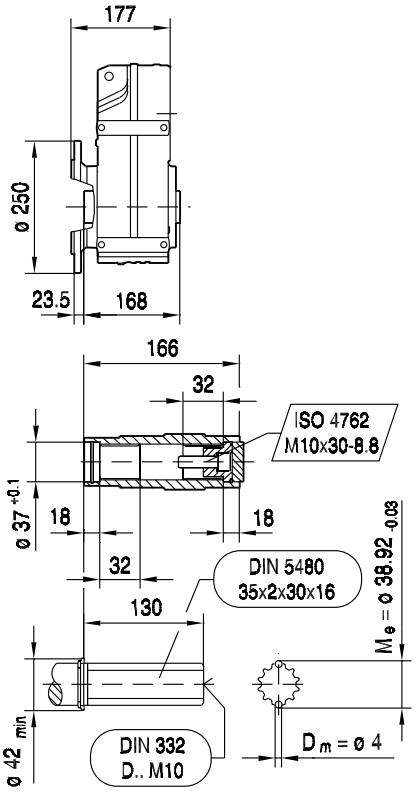

(→ 150)	CMP50S	CMP50M	CMP50L	CMP63S	CMP63M	CMP63L		
AC	73	73	73	88	88	88		
AD	82	82	82	89	89	89		
ADS	82	82	82	89	89	89		
L	382	421	460	416	466	516		
LS	411	450	489	445	495	545		
LB	139	178	217	173	223	273		
LBS	168	207	246	202	252	302		
XS	18	18	18	14	14	14		

FA57..

42 024 00 07

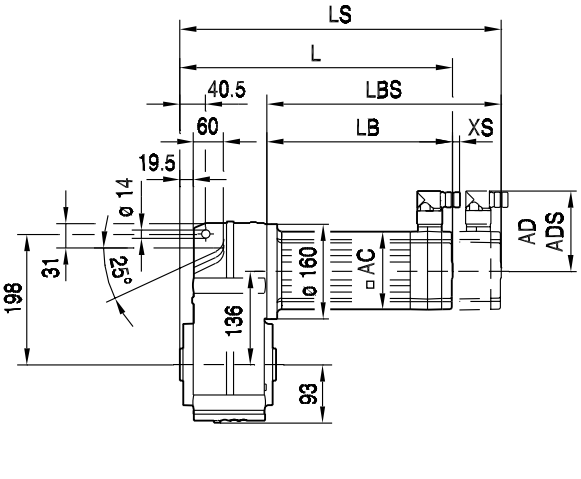

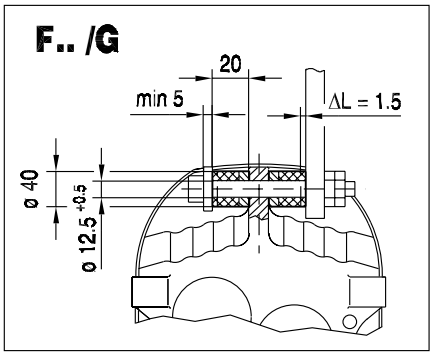

FA57..

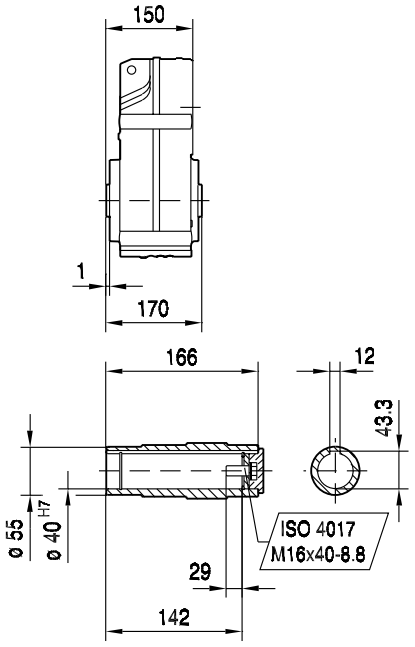

FH57..

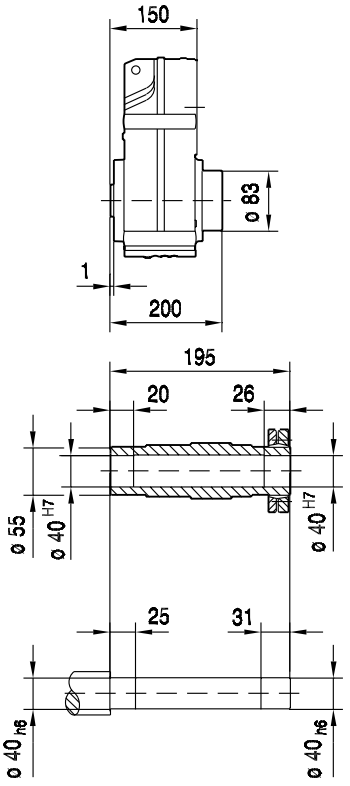

FV57..

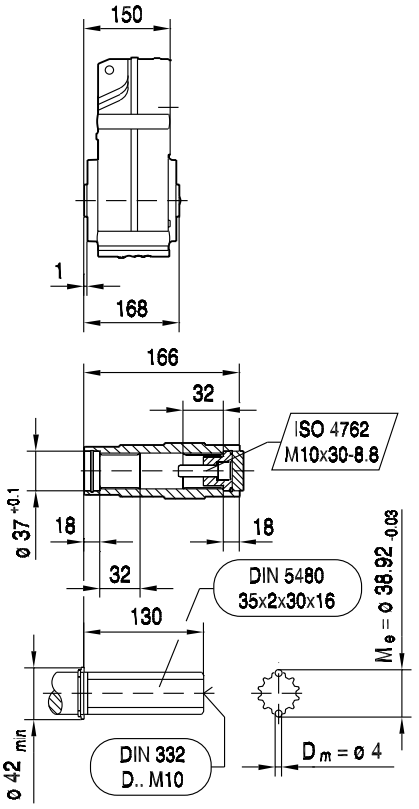

(→ 150)	CMP50S	CMP50M	CMP50L	CMP63S	CMP63M	CMP63L		
AC	73	73	73	88	88	88		
AD	82	82	82	89	89	89		
ADS	82	82	82	89	89	89		
L	289	328	367	323	373	423		
LS	318	357	396	352	402	452		
LB	139	178	217	173	223	273		
LBS	168	207	246	202	252	302		
XS	18	18	18	14	14	14		

FAZ57..

42 025 00 07

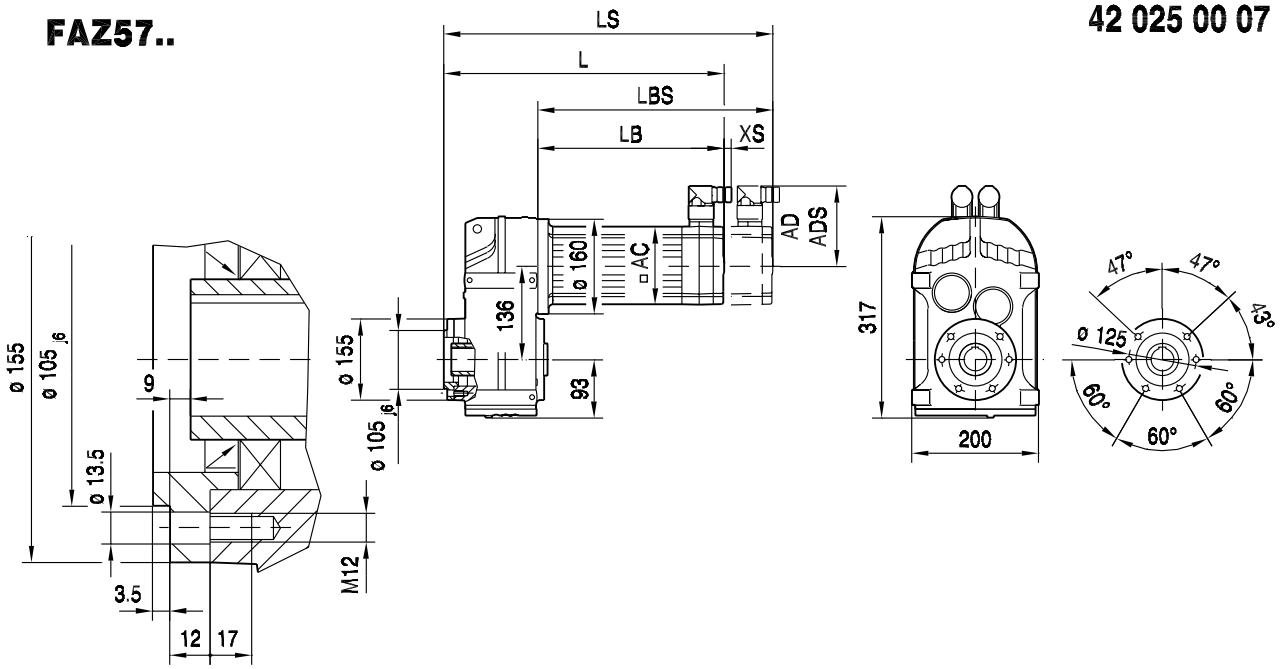

9

FAZ57..

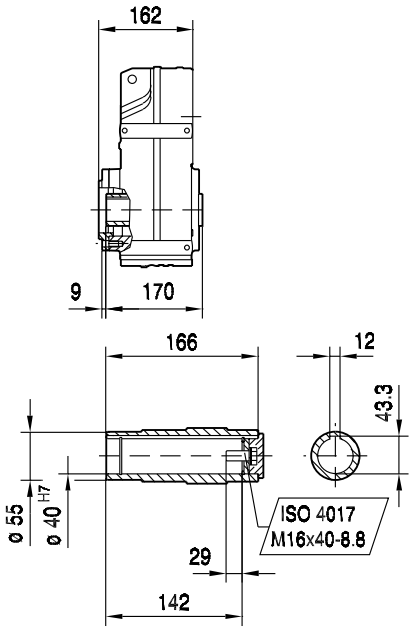

FHZ57..

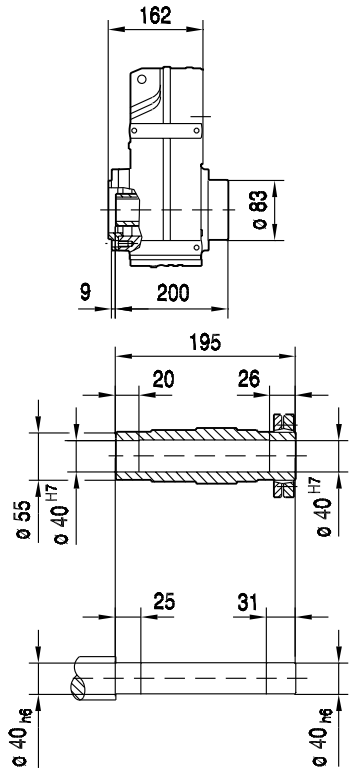

FVZ57..

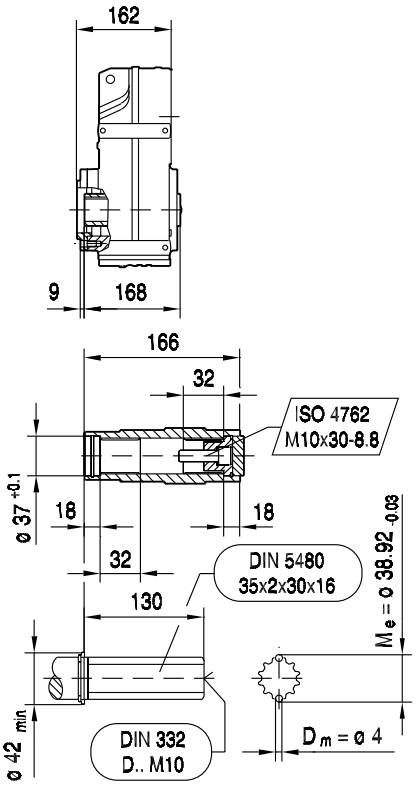

(→ 150)	CMP50S	CMP50M	CMP50L	CMP63S	CMP63M	CMP63L		
AC	73	73	73	88	88	88		
AD	82	82	82	89	89	89		
ADS	82	82	82	89	89	89		
L	301	340	379	335	385	435		
LS	330	369	408	364	414	464		
LB	139	178	217	173	223	273		
LBS	168	207	246	202	252	302		
XS	18	18	18	14	14	14		



FT57..

42 026 00 07

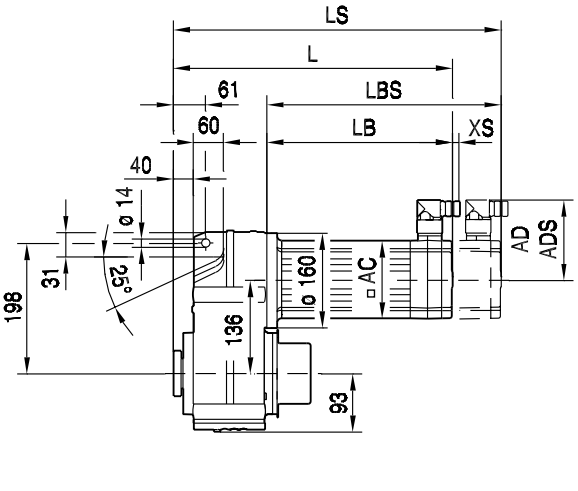

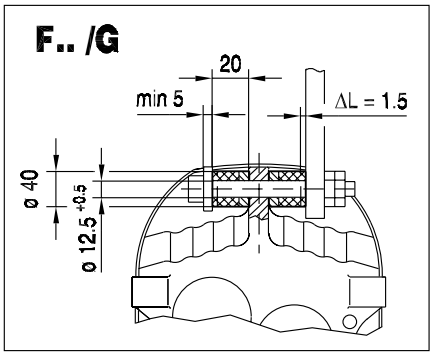

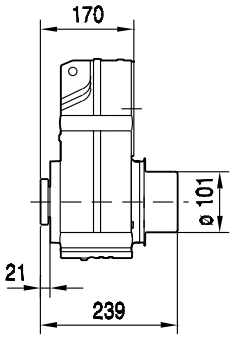

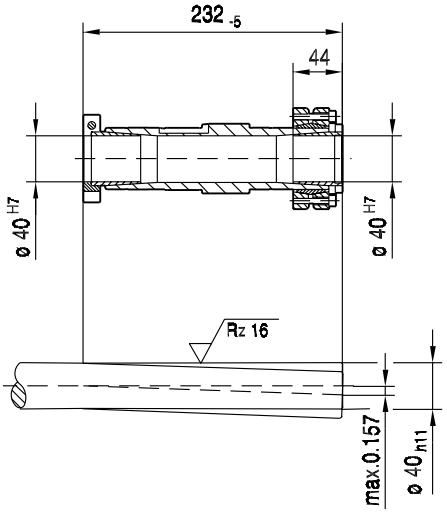

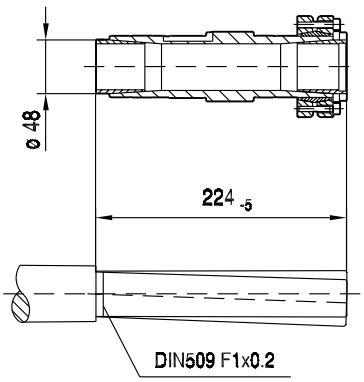

(→ 📖 150)	CMP50S	CMP50M	CMP50L	CMP63S	CMP63M	CMP63L		
AC	73	73	73	88	88	88		
AD	82	82	82	89	89	89		
ADS	82	82	82	89	89	89		
L	308	347	386	342	392	442		
LS	337	376	415	371	421	471		
LB	139	178	217	173	223	273		
LBS	168	207	246	202	252	302		
XS	18	18	18	14	14	14		

F57.. **DS56..** **42 129 01 01**

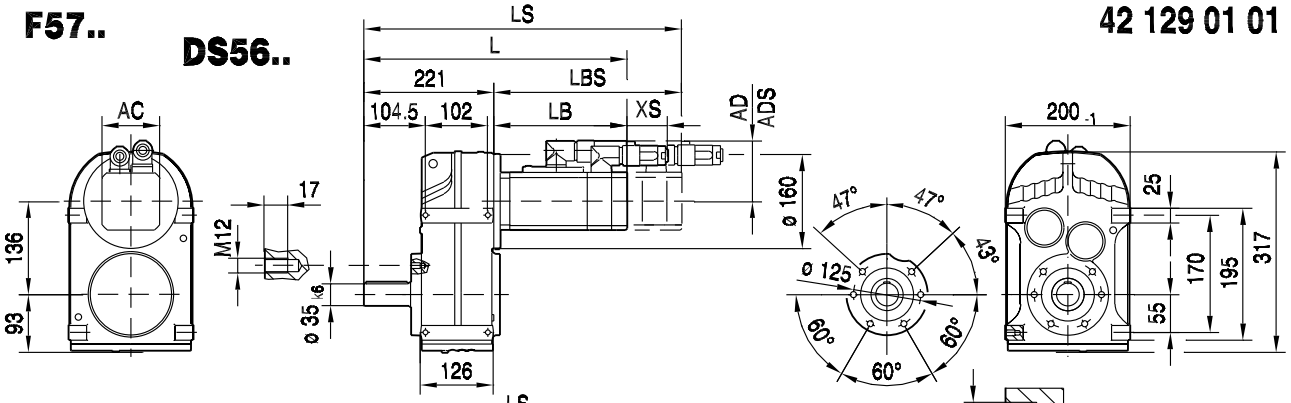

CM..

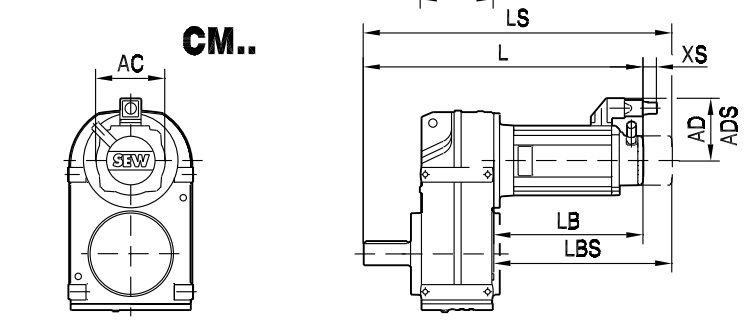

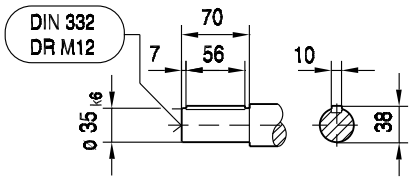

FA57B..

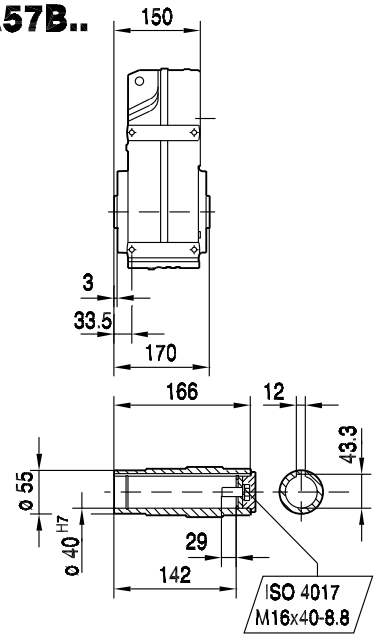

FH57B..

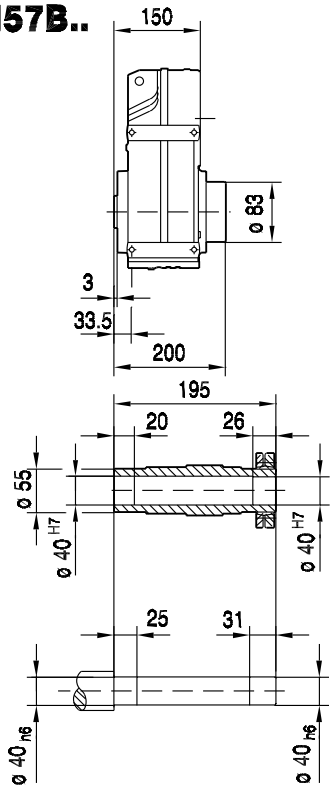

FV57B..

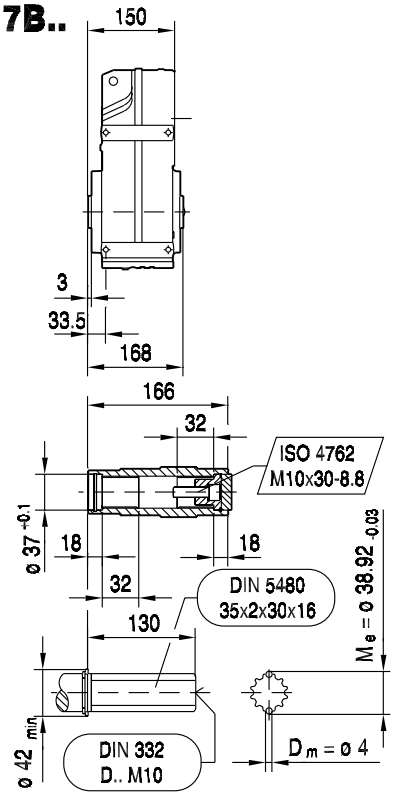

(→ 150)	DS56H	CM71S	CM71M	CM71L	CM90S	CM90M	CM90L	CM112S			
AC	73	117	117	117	142	142	142	186			
AD	77	122	122	122	140	140	140	162			
ADS	77	122	122	122	140	140	140	162			
L	487	453	473	513	505	532	590	545			
LS	487	535	555	595	601	628	686	635			
LB	266	232	252	292	284	311	369	324			
LBS	266	314	334	374	380	407	465	414			
XS	51	45	45	45	50	50	50	36			

42 130 01 01

FF57..

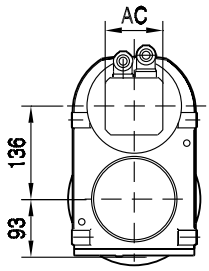

DS56..

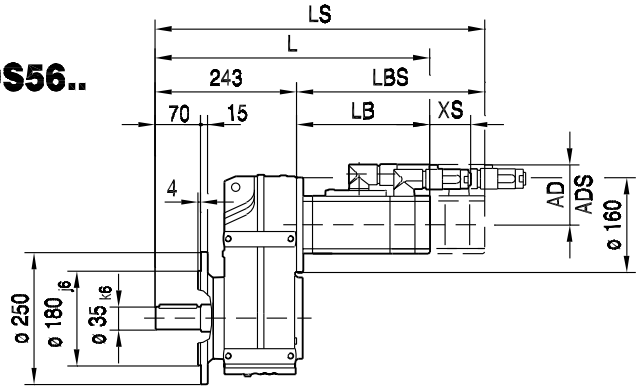

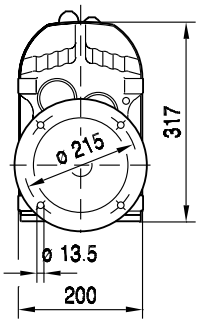

CM..

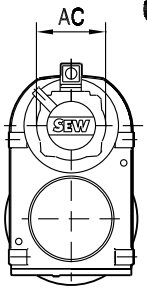

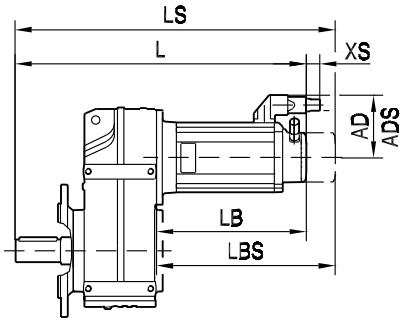

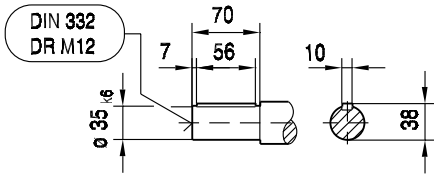

FAF57..

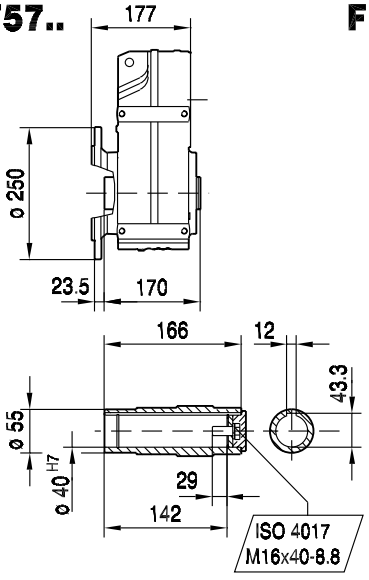

FHF57..

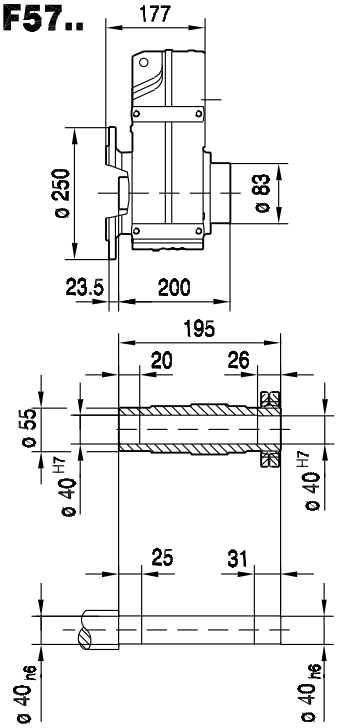

FVF57..

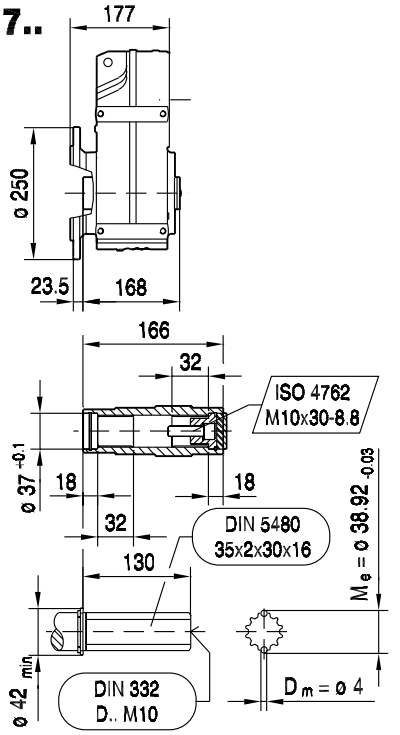

(→ 📖 150)	DS56H	CM71S	CM71M	CM71L	CM90S	CM90M	CM90L	CM112S			
AC	73	117	117	117	142	142	142	186			
AD	77	122	122	122	140	140	140	162			
ADS	77	122	122	122	140	140	140	162			
L	509	475	495	535	527	554	612	567			
LS	509	557	577	617	623	650	708	657			
LB	266	232	252	292	284	311	369	324			
LBS	266	314	334	374	380	407	465	414			
XS	51	45	45	45	50	50	50	36			

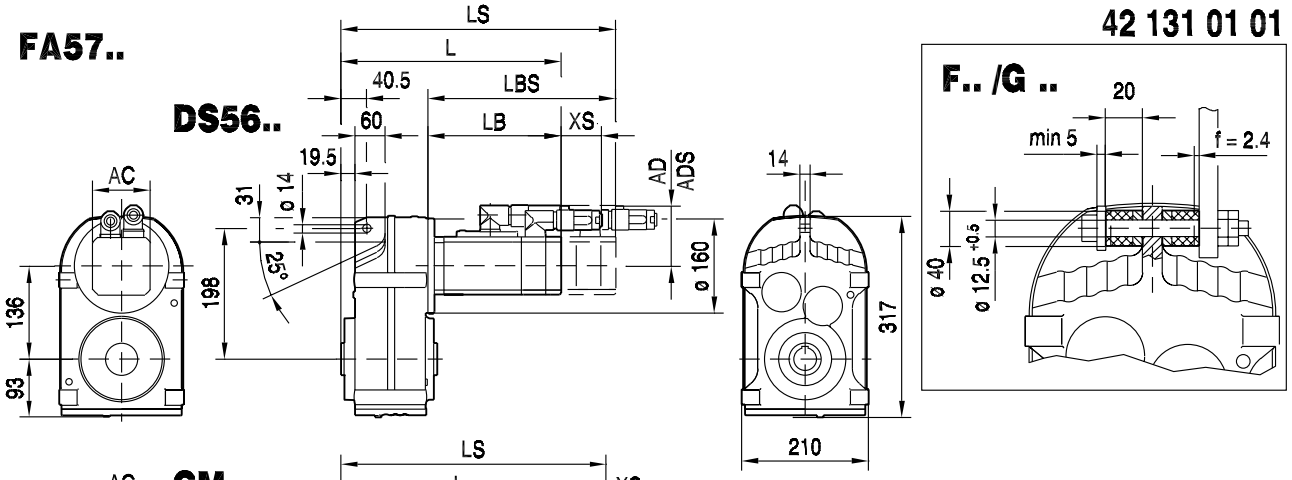

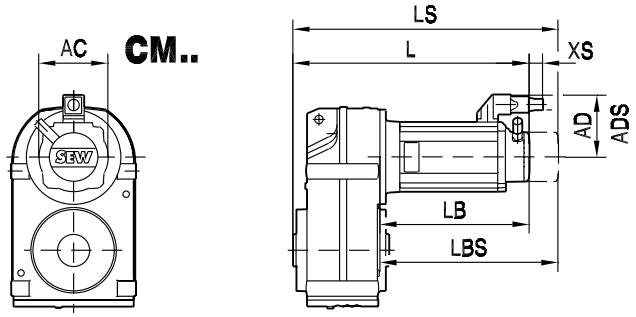

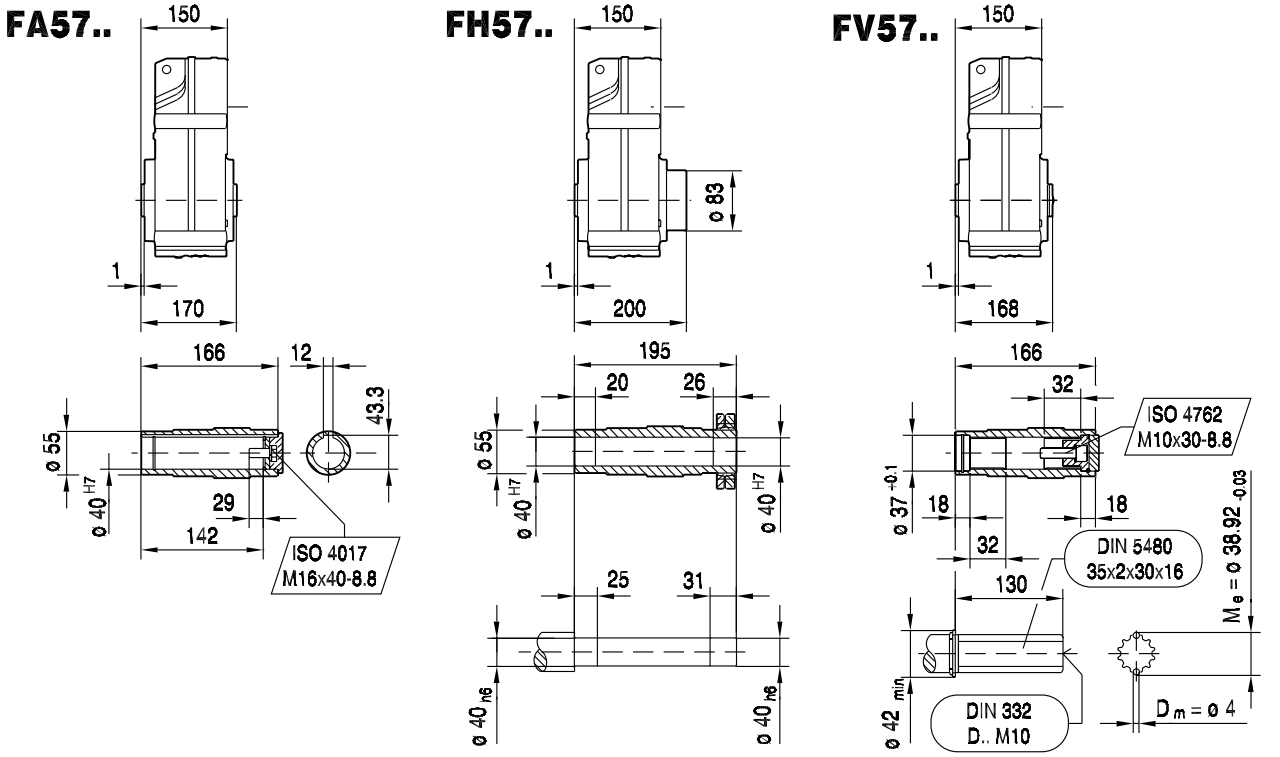

(→ 150)	DS56H	CM71S	CM71M	CM71L	CM90S	CM90M	CM90L	CM112S			
AC	73	117	117	117	142	142	142	186			
AD	77	122	122	122	140	140	140	162			
ADS	77	122	122	122	140	140	140	162			
L	416	382	402	442	434	461	519	474			
LS	416	464	484	524	530	557	615	564			
LB	266	232	252	292	284	311	369	324			
LBS	266	314	334	374	380	407	465	414			
XS	51	45	45	45	50	50	50	36			

FAZ57.. **DS56..**

42 041 00 04

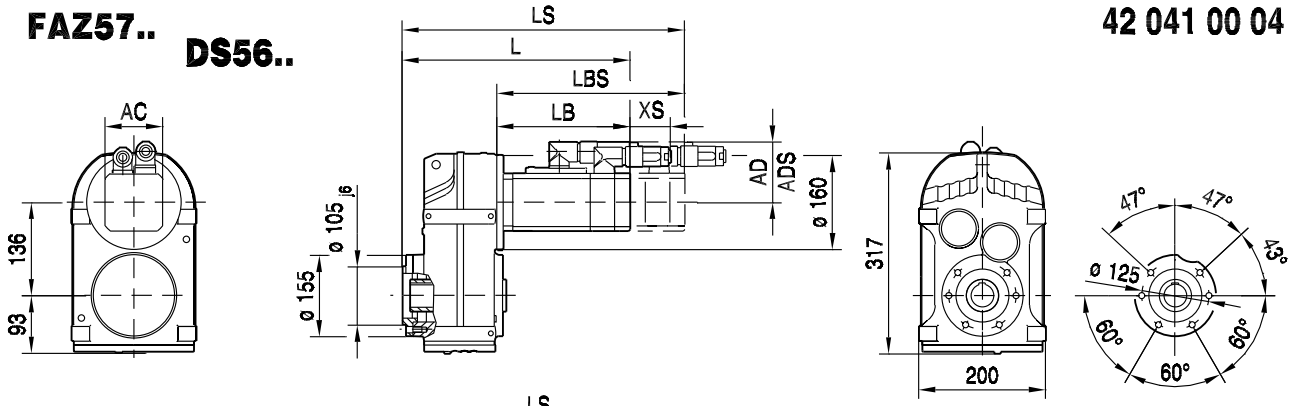

CM..

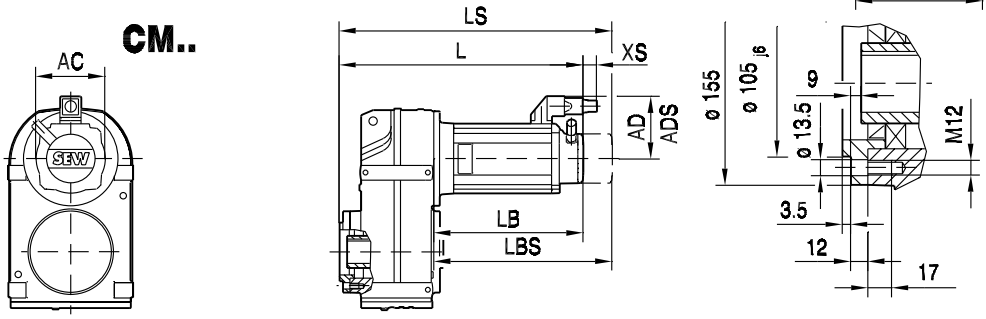

FAZ57..

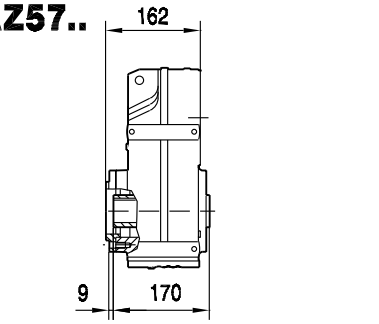

FHZ57..

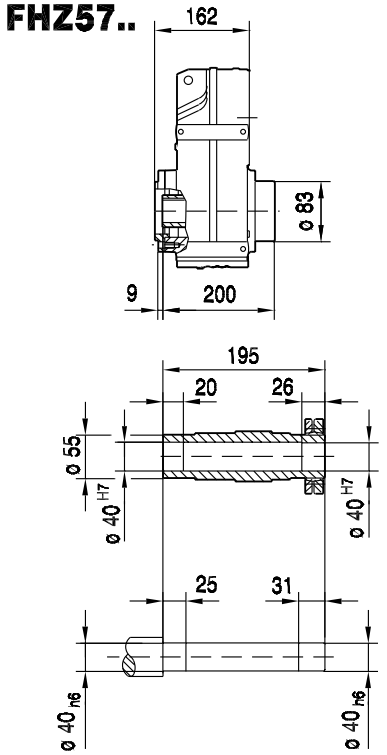

FVZ57..

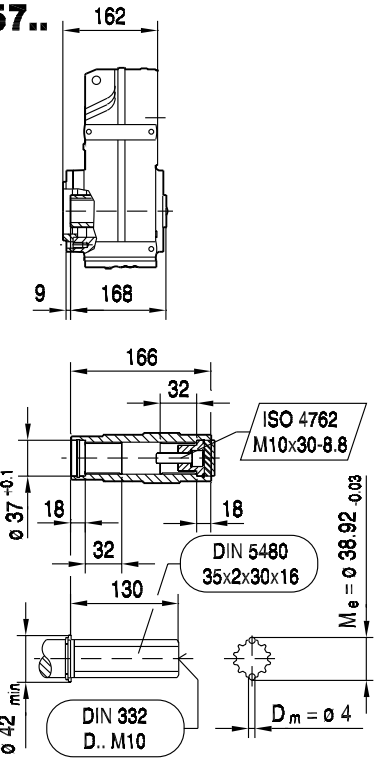

(→ 📖 150)	DS56H	CM71S	CM71M	CM71L	CM90S	CM90M	CM90L	CM112S			
AC	73	117	117	117	142	142	142	186			
AD	77	122	122	122	140	140	140	162			
ADS	77	122	122	122	140	140	140	162			
L	428	394	414	454	446	473	531	486			
LS	428	476	496	536	542	569	627	576			
LB	266	232	252	292	284	311	369	324			
LBS	266	314	334	374	380	407	465	414			
XS	51	45	45	45	50	50	50	36			

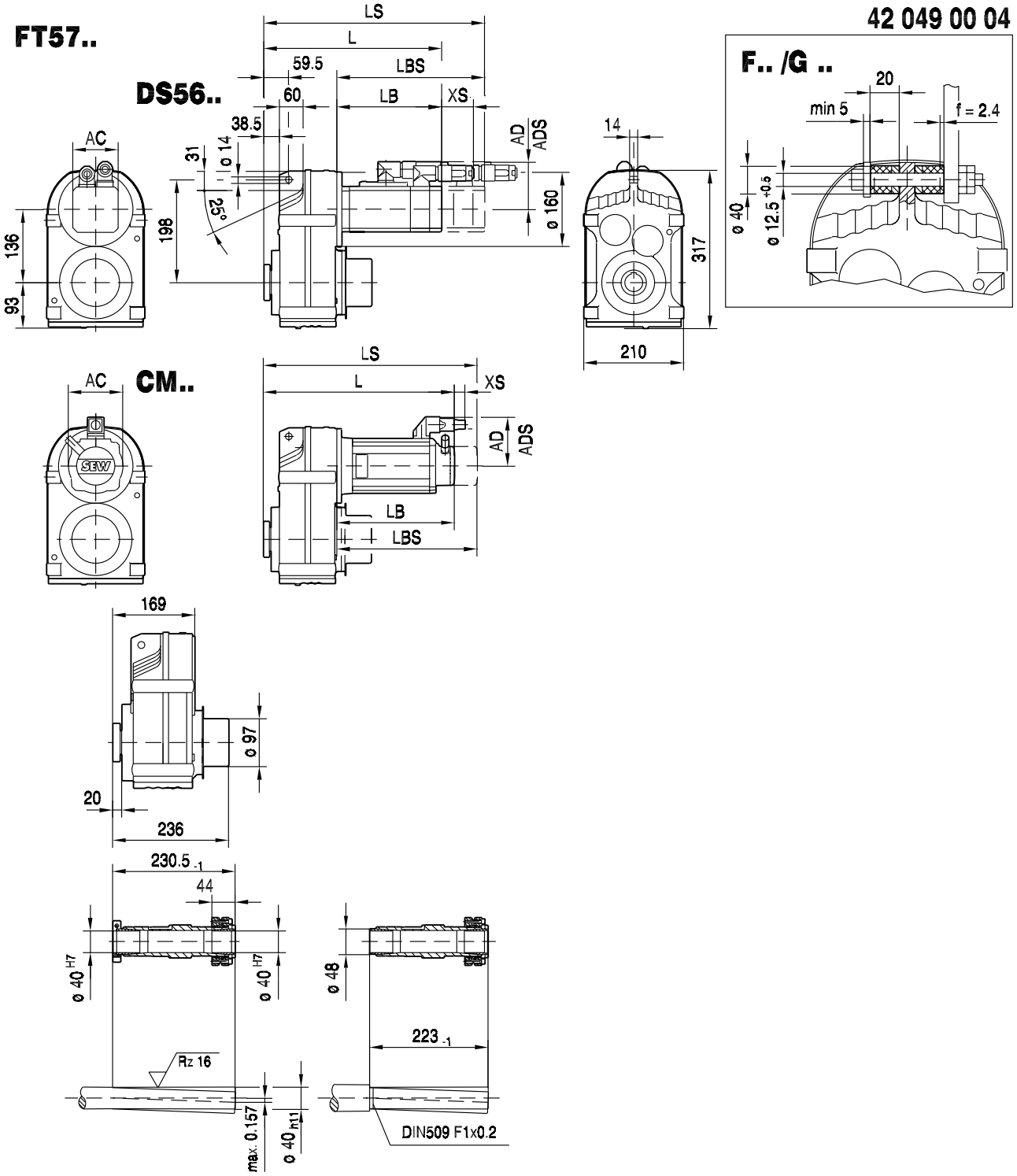

(→ 📖 150)	DS56H	CM71S	CM71M	CM71L	CM90S	CM90M	CM90L	CM112S			
AC	73	117	117	117	142	142	142	186			
AD	77	122	122	122	140	140	140	162			
ADS	77	122	122	122	140	140	140	162			
L	435	401	421	461	453	480	538	493			
LS	435	483	503	543	549	576	634	583			
LB	266	232	252	292	284	311	369	324			
LBS	266	314	334	374	380	407	465	414			
XS	51	45	45	45	50	50	50	36			

9.10 F 67 / CMP / DS / CM [Nm]

M_{aDyn} [Nm]		CMP						DS			CM							
	i	50S	50M	50L	63S	63M	63L	56M	56L	56H	71S	71M	71L	90S	90M	90L	112S	112M
FA67 2	3.97		40	59	43	82	117			59	64	83	121	152	201	291	317	418
	4.66		47	70	50	97	137			69	75	97	142	179	236	342	372	490
	5.25		52	78	57	109	155			77	84	109	160	202	266	385	419	553
	5.95	30	59	89	64	124	175	22	44	88	95	124	181	229	301	436	475	626
	6.78	34	68	101	73	141	200	25	50	100	109	141	207	260	343	497	541	>710
	7.53	38	75	112	81	156	222	28	56	111	121	157	229	289	381	552	601	
	8.6	43	86	128	93	179	254	32	63	127	138	179	262	330	435	631	687	
	9.08	46	91	136	98	188	268	33	67	134	145	189	277	349	460	666	>715	
	9.66		97	144	104	201	285			142	155	201	294	371	489	708	771	>920
	11.31		113	169	122	235	334			167	181	236	344	434	573	829	903	>920
	12.76		127	191	137	265	376			188	204	266	389	490	646	>920	>920	>920
	14.46	73	144	216	156	300	426	53	107	213	231	302	440	555	732	>920	>920	>920
	16.48	83	165	246	177	342	486	61	121	243	264	344	502	633	834	>920	>920	>920
	18.29	92	183	273	197	380	539	67	135	270	293	381	557	703	>920	>920	>920	
	20.9	105	209	312	225	434	616	77	154	308	335	436	637	803	>920	>920	>920	
	22.05	111	220	329	237	458	650	81	163	325	353	460	672	847	>920	>920	>920	
	25.13	127	251	375	271	522	741	93	185	371	402	524	765	>920	>920			
	27.41	138	274	409	295	569	808	101	202	404	439	572	835	>920	>920			
	32.08	162	321	479	345	666	>920	118	236	473	513	669	>920	>920				
	36.3	183	363	542	391	754		134	268	535	581	757						
FA67 3	34.01	168	333	498	359	691	>920	123	246	491	533	695	>920	>920	>920	>920	>920	
	39.26	194	384	574	414	798	>920	142	283	567	615	802	>920	>920	>920	>920	>920	
	43.2	213	423	632	456	878	>920	156	312	624	677	882	>920	>920	>920	>920	>920	
	50.74	251	496	742	535	>920	>920	183	366	733	795	>920	>920	>920	>920	>920	>920	
	53.73	265	526	786	567	>920	>920	194	388	776	842	>920	>920	>920	>920	>920	>920	
	61.07	302	598	893	644	>920	>920	220	441	882	>920	>920	>920	>920	>920			
	67.65	334	662	>920	713	>920	>920	244	488	>920	>920	>920	>920	>920	>920			
	79.76	394	780	>920	841	>920	>920	288	576	>920	>920	>920	>920	>920				
	90.59	448	886	>920	>920	>920	>920	327	654	>920	>920	>920	>920	>920	>920	>920	>920	
	95.94	474	>920	>920	>920	>920	>920	346	693	>920	>920	>920	>920	>920	>920	>920	>920	
	109.04	539	>920	>920	>920	>920	>920	394	787	>920	>920	>920	>920	>920	>920			
	120.79	597	>920	>920	>920	>920	>920	436	872	>920	>920	>920	>920	>920	>920			
	142.4	703	>920	>920	>920	>920	>920	514	>920	>920	>920	>920	>920	>920				
	162.31	802	>920	>920	>920	>920		586	>920	>920	>920	>920						
	170.85	844	>920	>920	>920	>920		617	>920	>920	>920	>920						
	195.39	>920	>920		>920			705	>920	>920								
	228.99	>920						827	>920									

m [kg]		CMP						DS			CM							
	s	50S	50M	50L	63S	63M	63L	56M	56L	56H	71S	71M	71L	90S	90M	90L	112S	112M
FA67	2	30	31	32	32	33	35	29	30	31	35	36	40	44	47	52	53	57
FA67	3	31	32	33	33	35	36	30	31	32	36	37	41	45	48	53	54	58
FAF: + 6.3 kg / F: + 2.8 kg / FF: + 8.9 kg																		



CMP.. / DS.. / CM..	i	n_{epk} [1/min]	η [%]	c_T FA [Nm/']	FAF [Nm/']	F [Nm/']	FF [Nm/']	φ /R [']
	3.97	4500	97	128.91	128.91	68.48	62.4	10
	4.66	4500	97	128.91	128.91	68.48	62.4	9
	5.25	4500	97	128.91	128.91	68.48	62.4	9
	5.95	4500	97	128.91	128.91	68.48	62.4	9
	6.78	4500	97	128.91	128.91	68.48	62.4	9
	7.53	4500	97	128.91	128.91	68.48	62.4	8
	8.6	4500	97	128.91	128.91	68.48	62.4	8
	9.08	4500	97	128.91	128.91	68.48	62.4	8
	9.66	4500	97	172.89	172.89	79.18	71.17	6
FA67	11.31	4500	97	172.89	172.89	79.18	71.17	6
2	12.76	4500	97	172.89	172.89	79.18	71.17	6
	14.46	4500	97	172.89	172.89	79.18	71.17	6
	16.48	4500	97	172.89	172.89	79.18	71.17	6
	18.29	4500	97	172.89	172.89	79.18	71.17	6
	20.9	4500	97	172.89	172.89	79.18	71.17	5
	22.05	4500	97	172.89	172.89	79.18	71.17	5
	25.13	4500	97	172.89	172.89	79.18	71.17	5
	27.41	4500	97	172.89	172.89	79.18	71.17	5
	32.08	4500	97	172.89	172.89	79.18	71.17	5
	36.3	4500	97	172.89	172.89	79.18	71.17	5
	34.01	4500	95	187.35	187.35	82.08	73.5	6
	39.26	4500	95	187.35	187.35	82.08	73.5	6
	43.2	4500	95	187.35	187.35	82.08	73.5	6
	50.74	4500	95	187.35	187.35	82.08	73.5	6
	53.73	4500	95	187.35	187.35	82.08	73.5	6
	61.07	4500	95	187.35	187.35	82.08	73.5	6
	67.65	4500	95	187.35	187.35	82.08	73.5	6
	79.76	4500	95	187.35	187.35	82.08	73.5	6
FA67	90.59	4500	95	188.88	188.88	82.37	73.73	6
3	95.94	4500	95	188.88	188.88	82.37	73.73	6
	109.04	4500	95	188.88	188.88	82.37	73.73	6
	120.79	4500	95	188.88	188.88	82.37	73.73	6
	142.4	4500	95	188.88	188.88	82.37	73.73	6
	162.31	4500	95	188.88	188.88	82.37	73.73	6
	170.85	4500	95	188.88	188.88	82.37	73.73	6
	195.39	4500	95	188.88	188.88	82.37	73.73	6
	228.99	4500	95	188.88	188.88	82.37	73.73	6



F..CMP, DS, CM

F 67 / CMP / DS / CM [Nm]

CMP.. / DS.. / CM..							F_{Ramax}				F_{Rapk}			
	i	M_{amax} [Nm]	M_{apk} [Nm]	$M_{aNotaus}$ [Nm]	n_{ak} [1/min]	J_G 10^{-4} [kgm^2]	FA [N]	FAF [N]	F [N]	FF [N]	FA [N]	FAF [N]	F [N]	FF [N]
FA67 2	3.97	500	695	850	403	16	1220	1220	8390	8620	13000	13000	11300	11300
	4.66	560	700	952	322	12	1020	1020	8590	8860	13000	13000	11300	11300
	5.25	590	705	1003	286	10.0	1010	1010	8850	9140	13000	13000	11200	11200
	5.95	610	705	1037	286	8.0	1090	1090	9200	9500	13000	13000	11200	11200
	6.78	620	710	1054	295	6.3	1280	1280	9660	9950	13000	13000	11200	11200
	7.53	610	715	1037	332	5.5	1570	1570	10100	10400	13000	13000	11200	11200
	8.6	570	715	969	442	4.4	2180	2180	10900	11200	13000	13000	11200	11200
	9.08	530	715	901	573	4.0	2620	2620	11400	11600	13000	13000	11200	11200
	9.66	820	920	1394	186	8.5	1580	1580	10300	10300	13000	13000	9310	9310
	11.31	820	920	1394	203	6.7	1960	1960	10300	10300	13000	13000	9310	9310
	12.76	820	920	1394	212	5.6	2260	2260	10300	10300	13000	13000	9310	9310
	14.46	820	920	1394	228	4.6	2580	2580	10300	10300	13000	13000	9310	9310
	16.48	820	920	1394	237	3.8	2940	2940	10300	10300	13000	13000	9310	9310
	18.29	820	920	1394	252	3.4	3230	3230	10300	10300	13000	13000	9310	9310
	20.9	820	920	1394	263	2.7	3620	3620	10300	10300	13000	13000	9310	9310
	22.05	820	920	1394	268	2.5	3780	3780	10300	10300	13000	13000	9310	9310
	25.13	820	920	1394	275	2.0	4190	4190	10300	10300	13000	13000	9310	9310
	27.41	820	920	1394	255	1.7	4470	4470	10300	10300	13000	13000	9310	9310
	32.08	820	920	1394	218	1.4	5000	5000	10300	10300	13000	13000	9310	9310
	36.3	820	920	1394	193	0.98	5440	5440	10300	10300	13000	13000	9310	9310
FA67 3	34.01	740	920	1258	44	2.8	5730	5730	11000	11000	13000	13000	9310	9310
	39.26	780	920	1326	38	2.2	5980	5980	10700	10700	13000	13000	9310	9310
	43.2	820	920	1394	35	1.9	6080	6080	10300	10300	13000	13000	9310	9310
	50.74	820	920	1394	34	1.6	6710	6710	10300	10300	13000	13000	9310	9310
	53.73	820	920	1394	34	1.4	6940	6940	10300	10300	13000	13000	9310	9310
	61.07	820	920	1394	34	1.1	7480	7480	10300	10300	13000	13000	9310	9310
	67.65	820	920	1394	35	0.97	7930	7930	10300	10300	13000	13000	9310	9310
	79.76	820	920	1394	36	0.76	8680	8680	10300	10300	13000	13000	9310	9310
	90.59	820	920	1394	56	1.4	9290	9290	10300	10300	13000	13000	9310	9310
	95.94	820	920	1394	56	1.2	9570	9570	10300	10300	13000	13000	9310	9310
	109.04	820	920	1394	57	0.98	10200	10200	10300	10300	13000	13000	9310	9310
	120.79	820	920	1394	57	0.85	10800	10800	10300	10300	13000	13000	9310	9310
	142.4	820	920	1394	49	0.68	11700	11700	10300	10300	13000	13000	9310	9310
	162.31	820	920	1394	43	0.47	12400	12400	10300	10300	13000	13000	9310	9310
	170.85	820	920	1394	41	0.42	12700	12700	10300	10300	13000	13000	9310	9310
	195.39	820	920	1394	36	0.34	13000	13000	10300	10300	13000	13000	9310	9310
	228.99	820	920	1394	31	0.27	13000	13000	10300	10300	13000	13000	9310	9310

9.11 F 67 / CMP / DS / CM [mm]

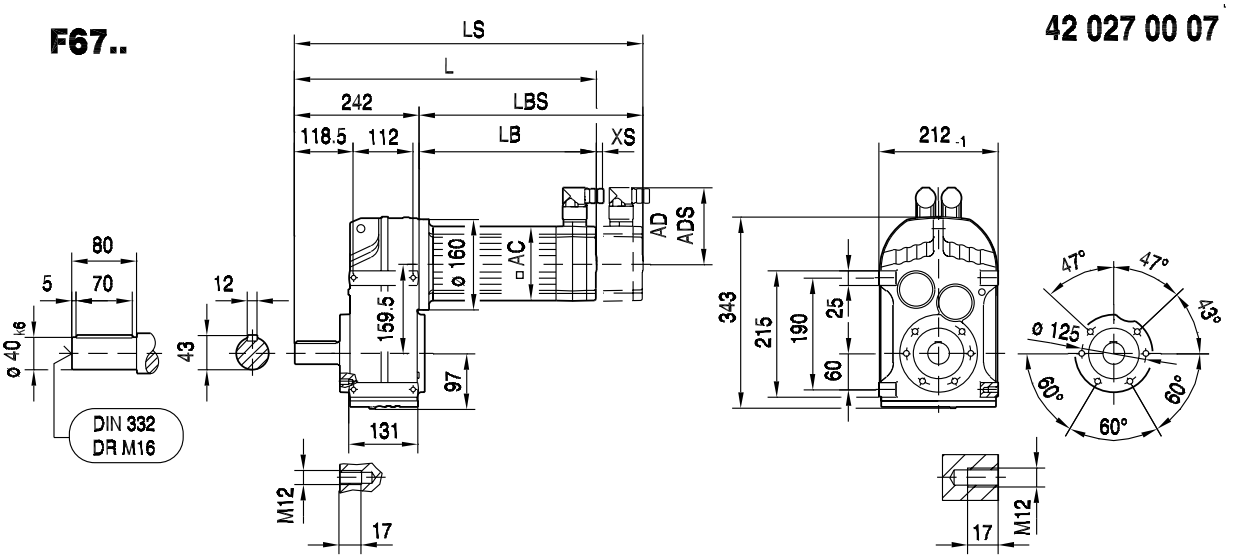

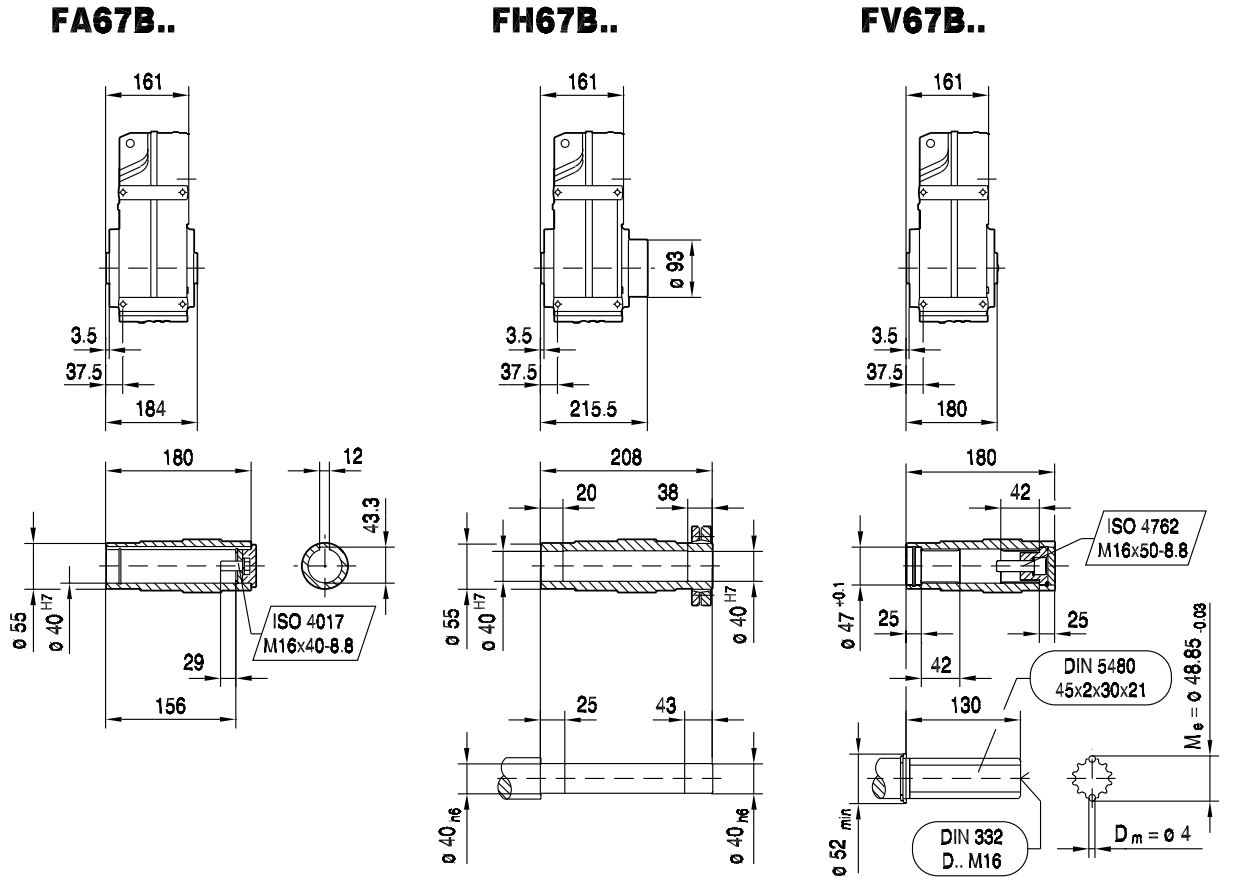

(→ 150)	CMP50S	CMP50M	CMP50L	CMP63S	CMP63M	CMP63L		
AC	73	73	73	88	88	88		
AD	82	82	82	89	89	89		
ADS	82	82	82	89	89	89		
L	381	420	459	415	465	515		
LS	410	449	488	444	494	544		
LB	139	178	217	173	223	273		
LBS	168	207	246	202	252	302		
XS	18	18	18	14	14	14		

FF67..

42 028 00 07

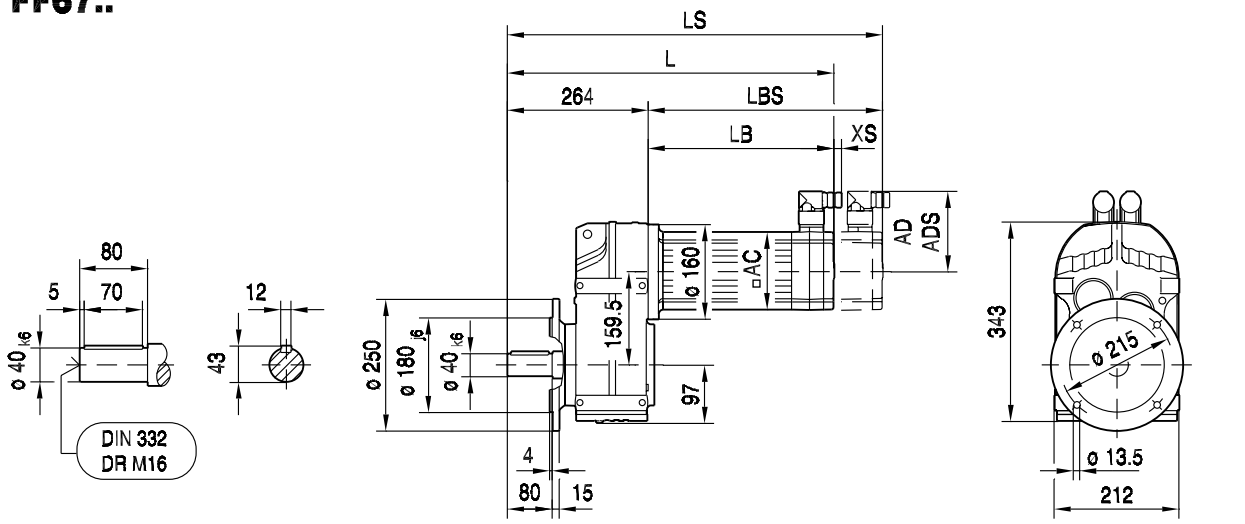

FAF67..

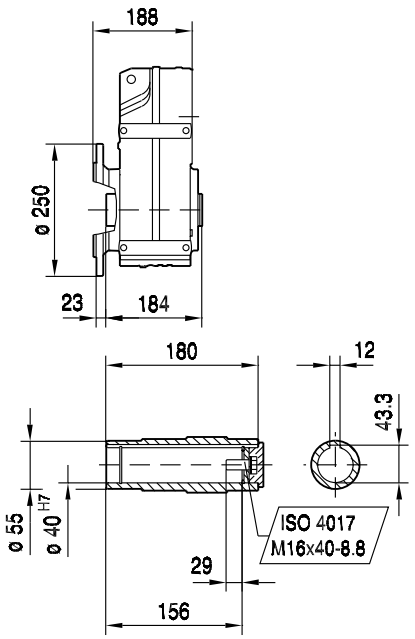

FHF67..

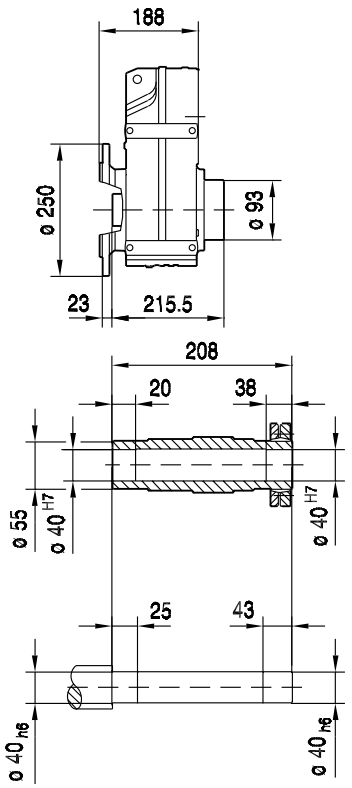

FVF67..

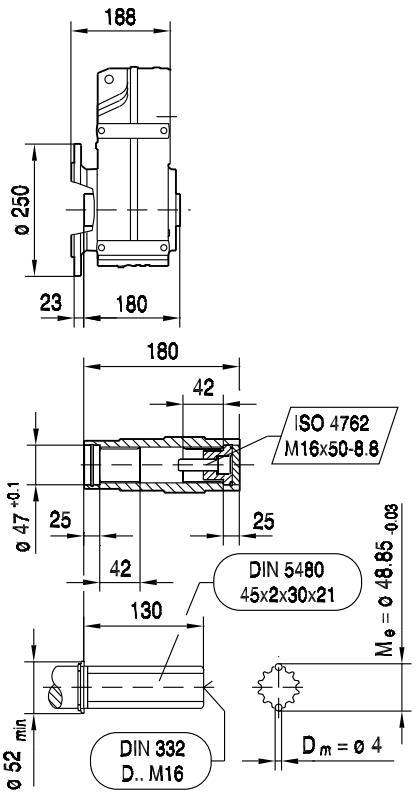

(→ 📖 150)	CMP50S	CMP50M	CMP50L	CMP63S	CMP63M	CMP63L		
AC	73	73	73	88	88	88		
AD	82	82	82	89	89	89		
ADS	82	82	82	89	89	89		
L	403	442	481	437	487	537		
LS	432	471	510	466	516	566		
LB	139	178	217	173	223	273		
LBS	168	207	246	202	252	302		
XS	18	18	18	14	14	14		

FA67..

42 029 00 07

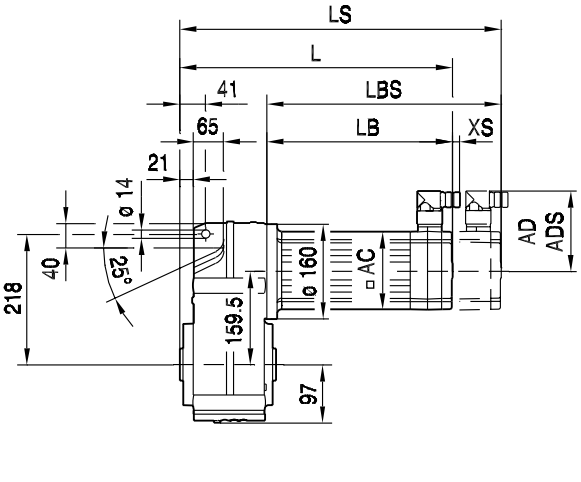

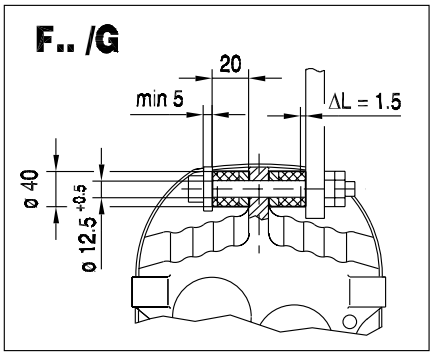

FA67..

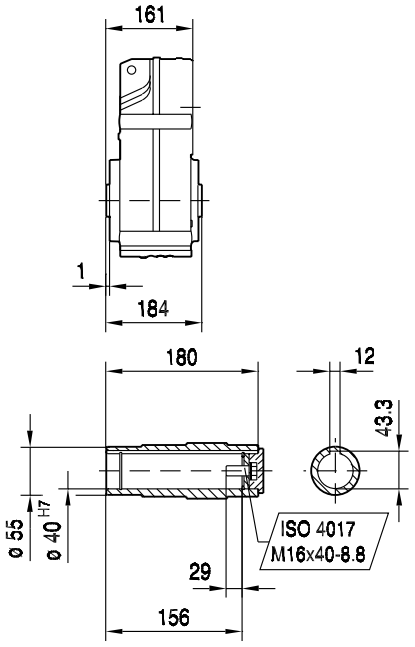

FH67..

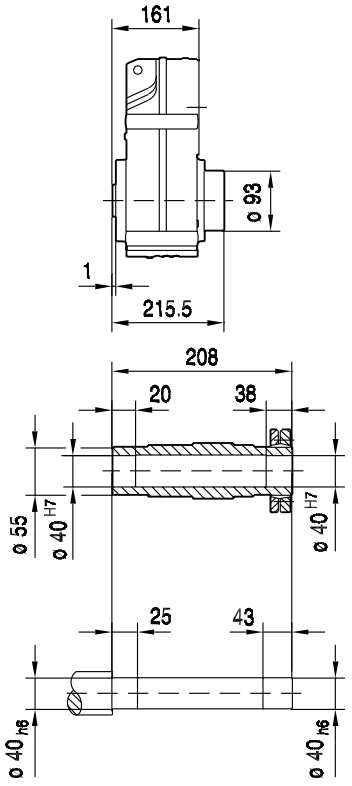

FV67..

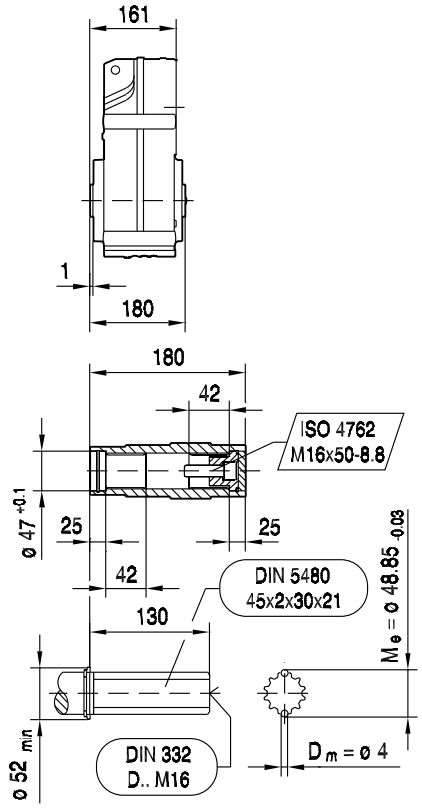

(→ 150)	CMP50S	CMP50M	CMP50L	CMP63S	CMP63M	CMP63L		
AC	73	73	73	88	88	88		
AD	82	82	82	89	89	89		
ADS	82	82	82	89	89	89		
L	300	339	378	334	384	434		
LS	329	368	407	363	413	463		
LB	139	178	217	173	223	273		
LBS	168	207	246	202	252	302		
XS	18	18	18	14	14	14		

FAZ67..

42 030 00 07

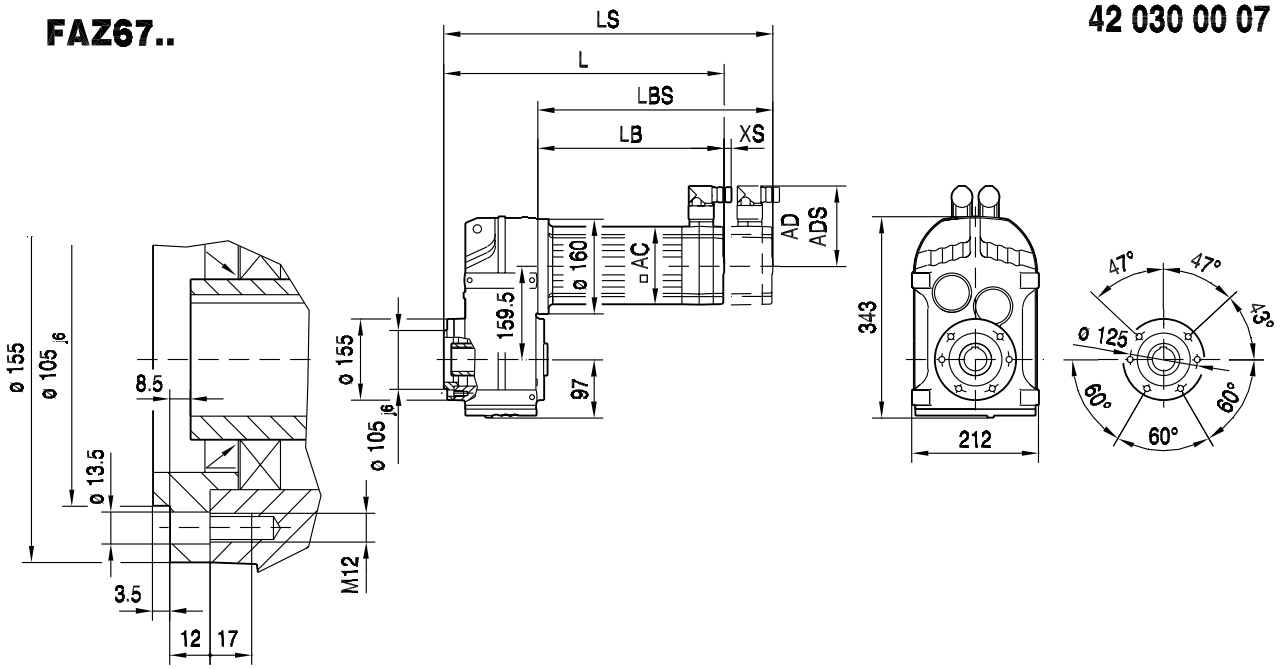

FAZ67..

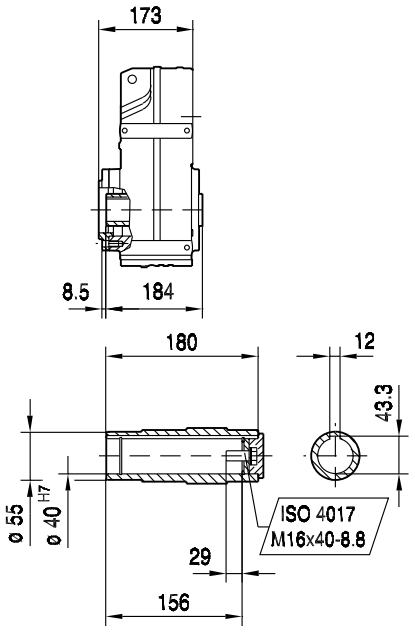

FHZ67..

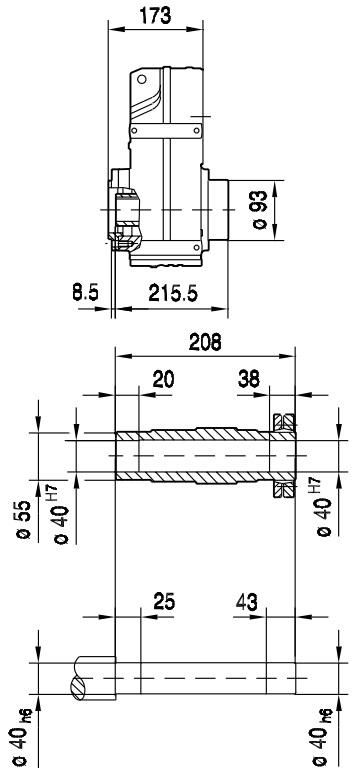

FVZ67..

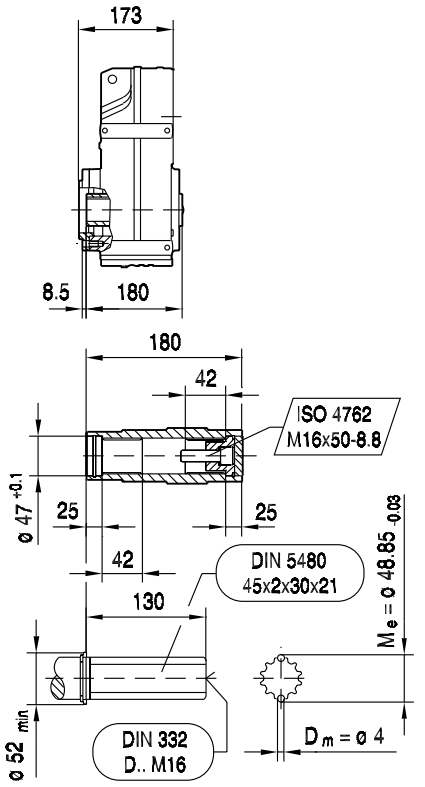

(→ 150)	CMP50S	CMP50M	CMP50L	CMP63S	CMP63M	CMP63L		
AC	73	73	73	88	88	88		
AD	82	82	82	89	89	89		
ADS	82	82	82	89	89	89		
L	312	351	390	346	396	446		
LS	341	380	419	375	425	475		
LB	139	178	217	173	223	273		
LBS	168	207	246	202	252	302		
XS	18	18	18	14	14	14		



FT67..

42 031 00 07

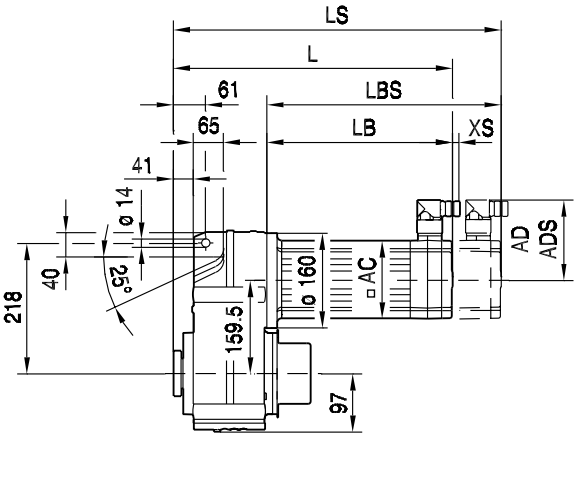

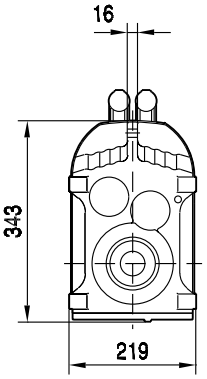

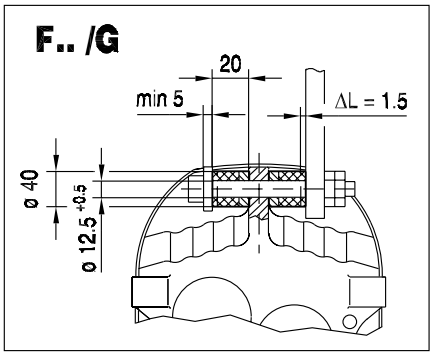

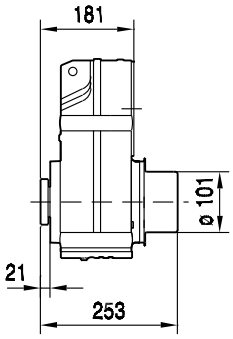

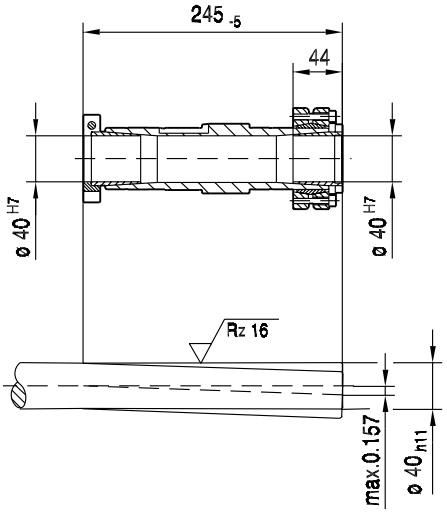

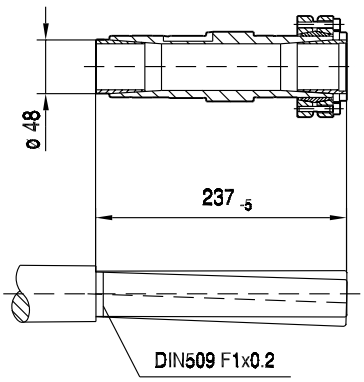

(→ 📖 150)	CMP50S	CMP50M	CMP50L	CMP63S	CMP63M	CMP63L		
AC	73	73	73	88	88	88		
AD	82	82	82	89	89	89		
ADS	82	82	82	89	89	89		
L	319	358	397	354	404	454		
LS	348	387	426	382	432	482		
LB	139	178	217	173	223	273		
LBS	168	207	246	202	252	302		
XS	18	18	18	14	14	14		

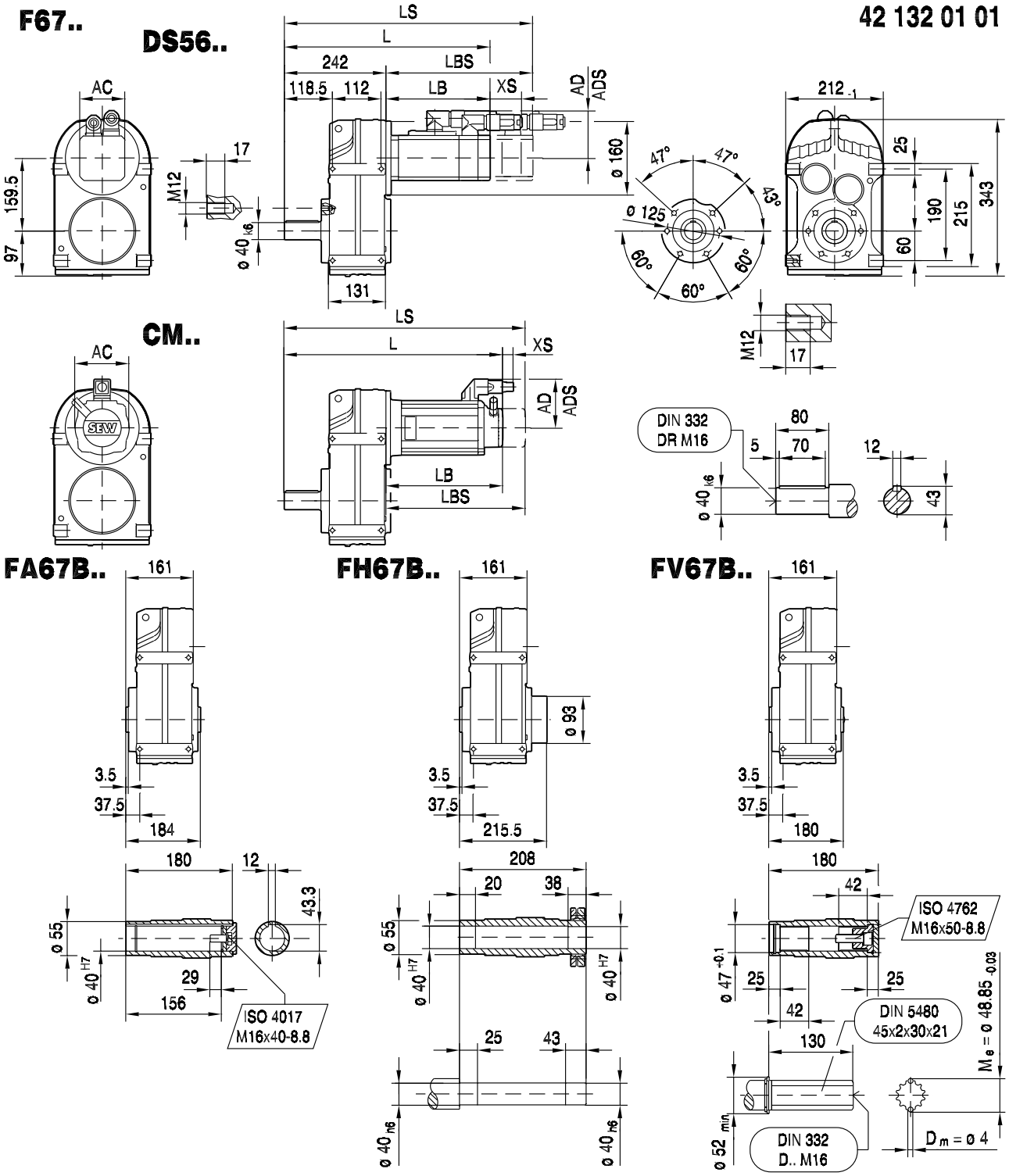

(→ 📖 150)	DS56H	CM71S	CM71M	CM71L	CM90S	CM90M	CM90L	CM112S	CM112M		
AC	73	117	117	117	142	142	142	186	186		
AD	77	122	122	122	140	140	140	162	162		
ADS	77	122	122	122	140	140	140	162	162		
L	508	474	494	534	526	553	611	566	590		
LS	508	556	576	616	622	649	707	656	680		
LB	266	232	252	292	284	311	369	324	348		
LBS	266	314	334	374	380	407	465	414	438		
XS	51	45	45	45	50	50	50	36	36		

42 133 01 01

FF67..

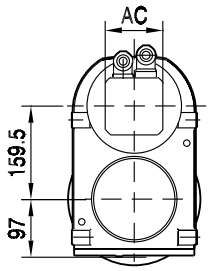

DS56..

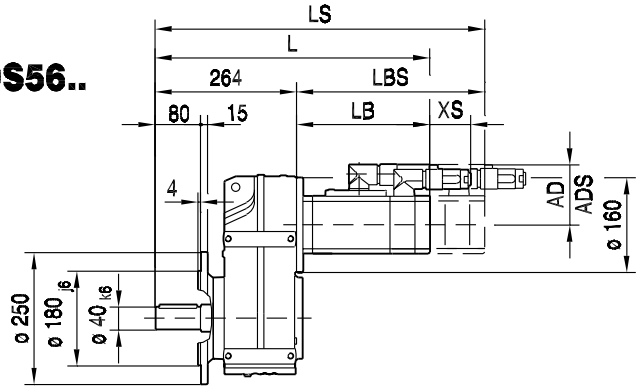

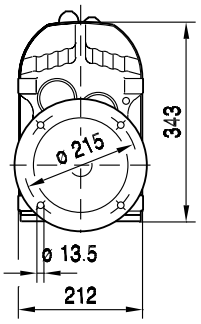

CM..

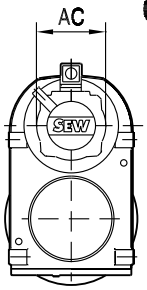

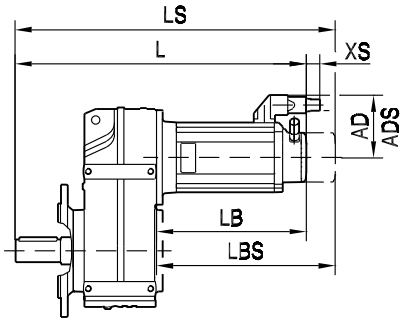

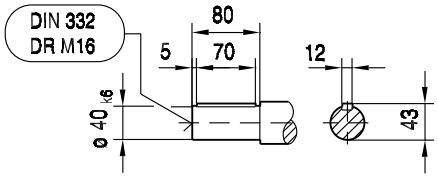

FAF67..

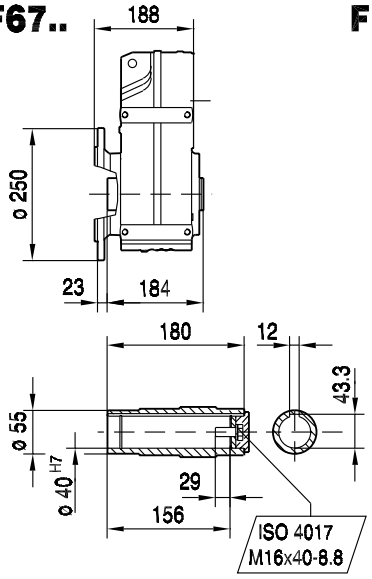

FHF67..

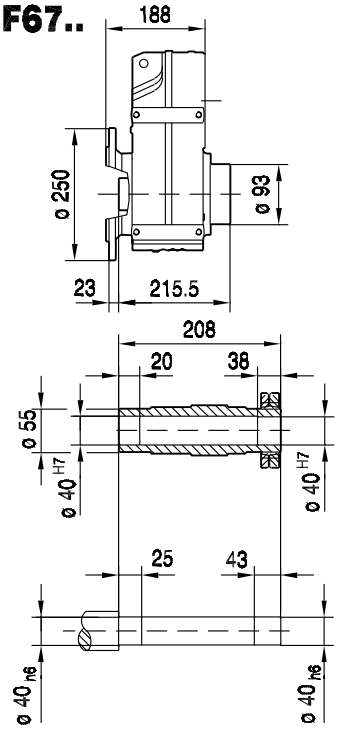

FVF67..

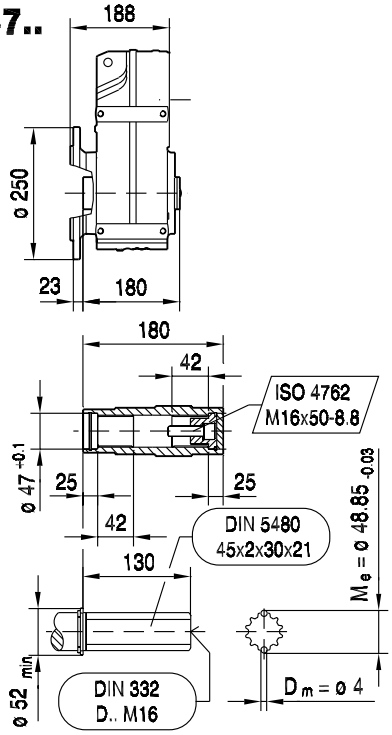

(→ 150)	DS56H	CM71S	CM71M	CM71L	CM90S	CM90M	CM90L	CM112S	CM112M		
AC	73	117	117	117	142	142	142	186	186		
AD	77	122	122	122	140	140	140	162	162		
ADS	77	122	122	122	140	140	140	162	162		
L	530	496	516	556	548	575	633	588	612		
LS	530	578	598	638	644	671	729	678	702		
LB	266	232	252	292	284	311	369	324	348		
LBS	266	314	334	374	380	407	465	414	438		
XS	51	45	45	45	50	50	50	36	36		

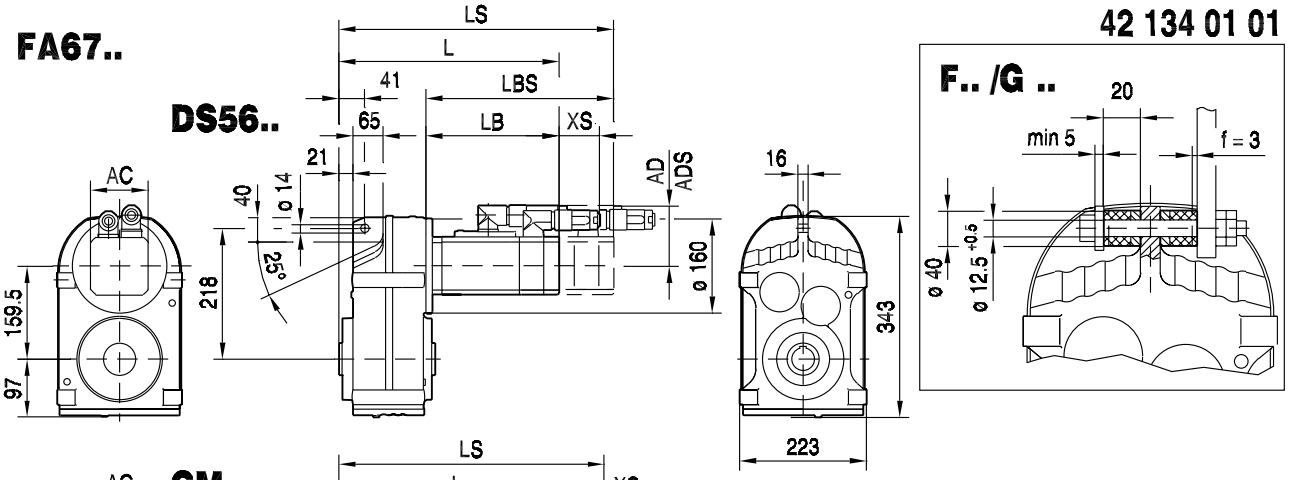

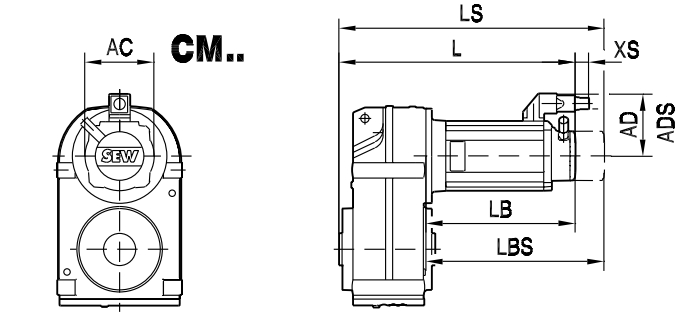

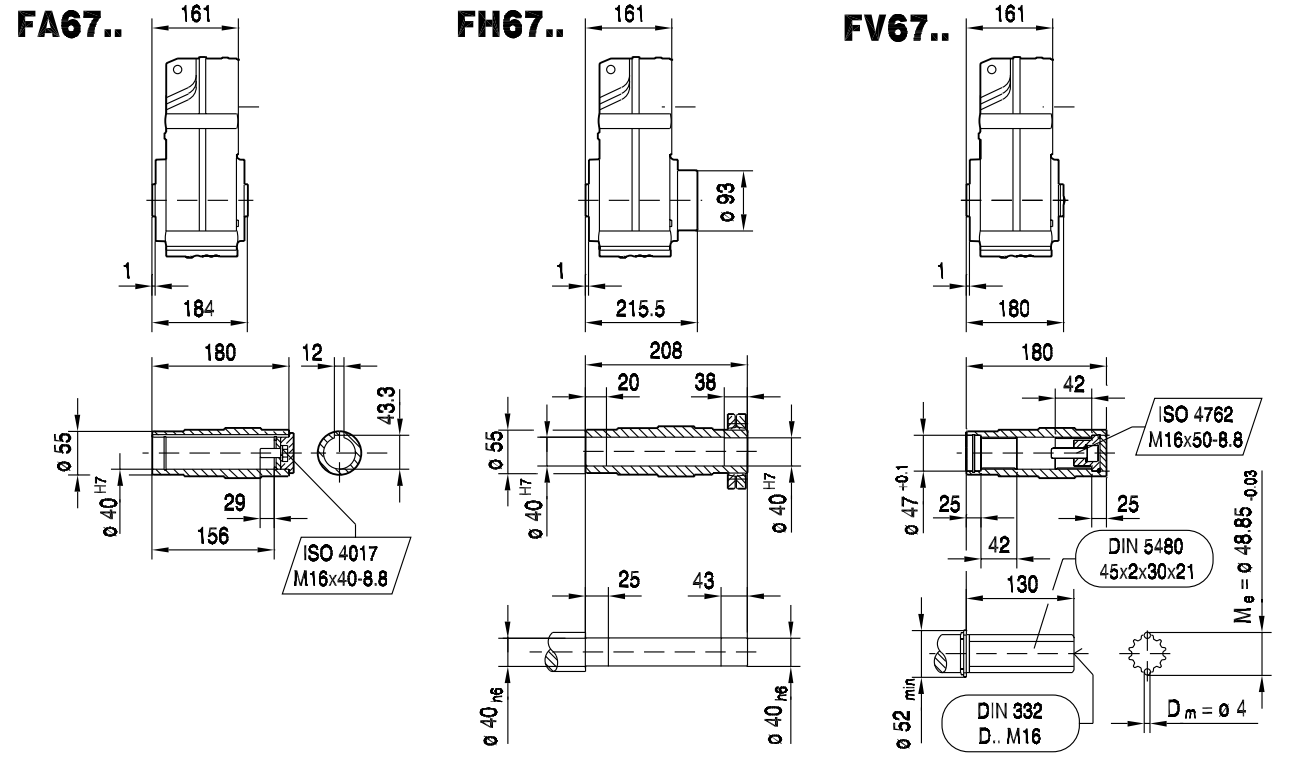

(→ 150)	DS56H	CM71S	CM71M	CM71L	CM90S	CM90M	CM90L	CM112S	CM112M		
AC	73	117	117	117	142	142	142	186	186		
AD	77	122	122	122	140	140	140	162	162		
ADS	77	122	122	122	140	140	140	162	162		
L	427	393	413	453	445	472	530	485	509		
LS	427	475	495	535	541	568	626	575	599		
LB	266	232	252	292	284	311	369	324	348		
LBS	266	314	334	374	380	407	465	414	438		
XS	51	45	45	45	50	50	50	36	36		

FAZ67.. DS56..

42 042 00 04

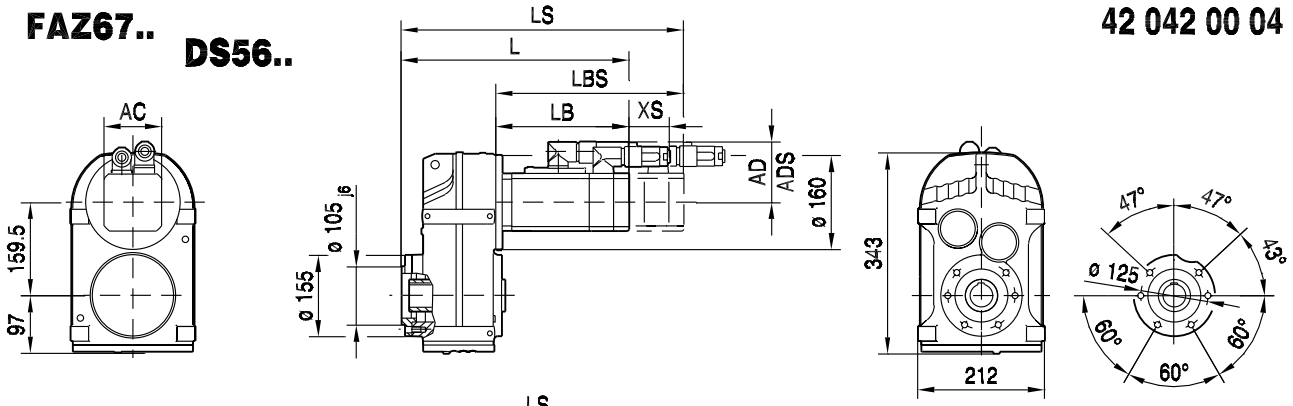

CM..

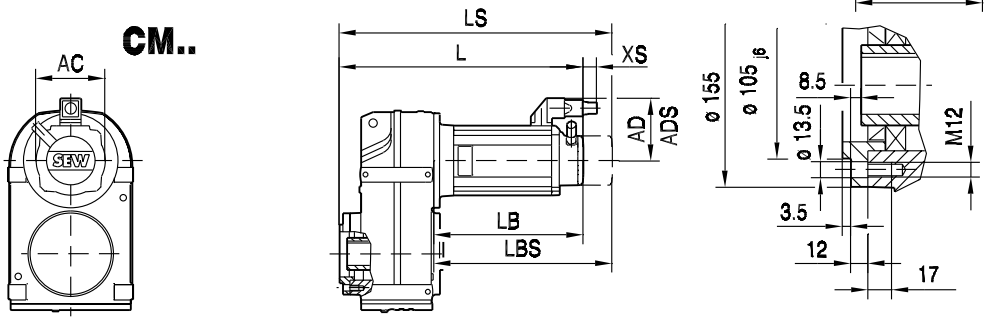

FAZ67..

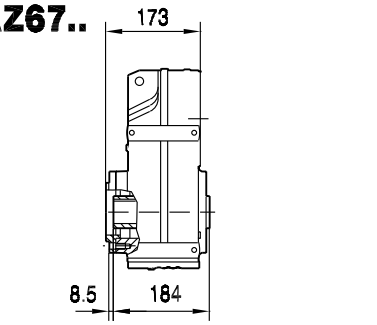

FHZ67..

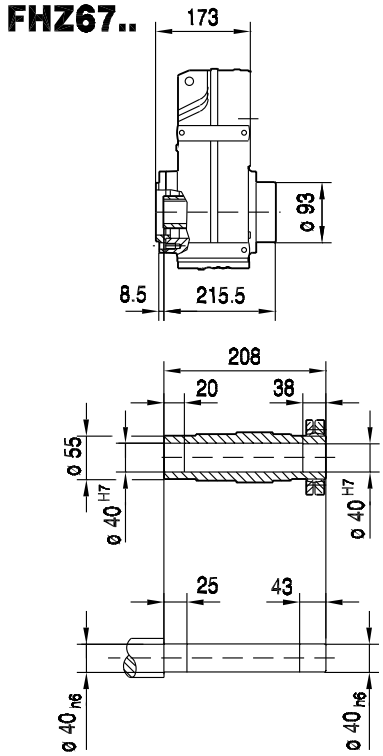

FVZ67..

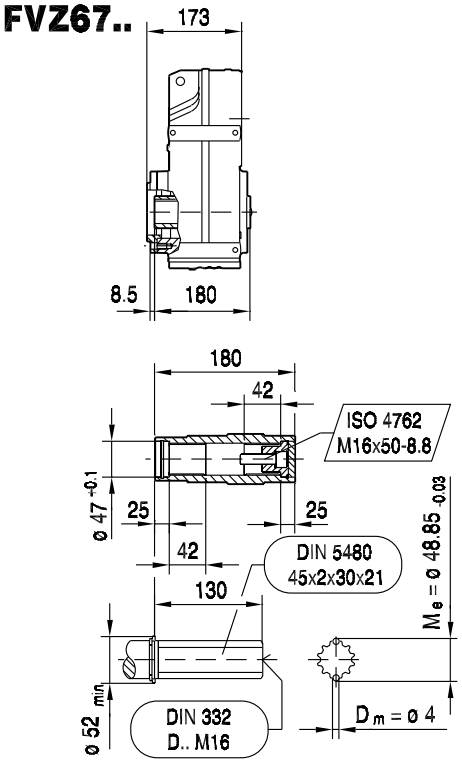

(→ 150)	DS56H	CM71S	CM71M	CM71L	CM90S	CM90M	CM90L	CM112S	CM112M		
AC	73	117	117	117	142	142	142	186	186		
AD	77	122	122	122	140	140	140	162	162		
ADS	77	122	122	122	140	140	140	162	162		
L	439	405	425	465	457	484	542	497	521		
LS	439	487	507	547	553	580	638	587	611		
LB	266	232	252	292	284	311	369	324	348		
LBS	266	314	334	374	380	407	465	414	438		
XS	51	45	45	45	50	50	50	36	36		

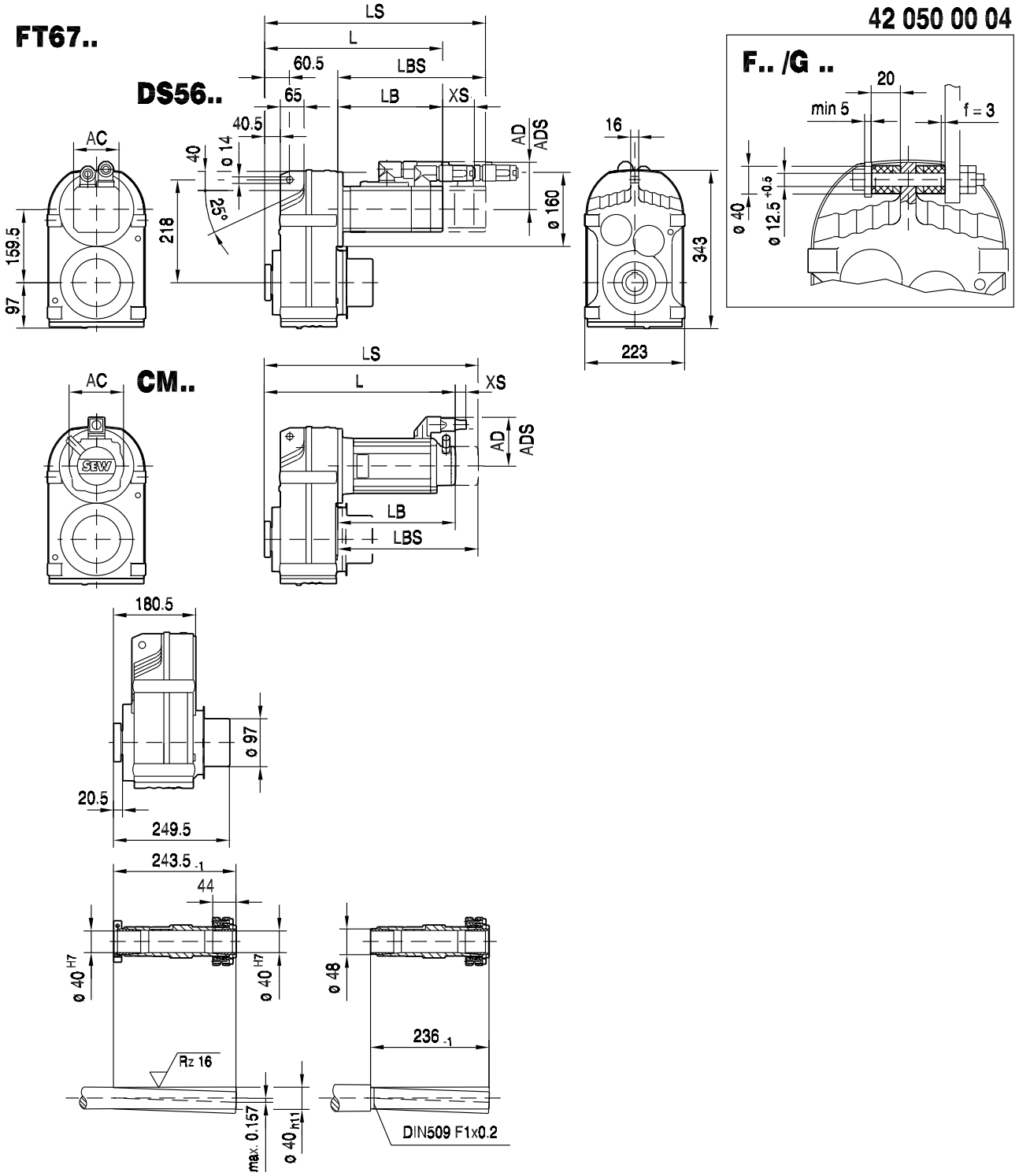

(→ 📖 150)	DS56H	CM71S	CM71M	CM71L	CM90S	CM90M	CM90L	CM112S	CM112M		
AC	73	117	117	117	142	142	142	186	186		
AD	77	122	122	122	140	140	140	162	162		
ADS	77	122	122	122	140	140	140	162	162		
L	446	412	432	472	465	492	550	505	529		
LS	446	494	514	554	560	587	645	595	619		
LB	266	232	252	292	284	311	369	324	348		
LBS	266	314	334	374	380	407	465	414	438		
XS	51	45	45	45	50	50	50	36	36		

9.12 F 77 / CMP / CM [Nm]

M_{aDyn} [Nm]		CMP			CM								
	i	63S	63M	63L	71S	71M	71L	90S	90M	90L	112S	112M	112L
FA77 2	4.28			126			130	164	217	314	342	450	654
	5.16			152			157	198	261	378	412	543	788
	5.76	62	120	170	92	120	175	221	292	422	460	606	880
	6.64	71	138	196	106	138	202	255	336	487	530	699	1014
	7.39	80	153	218	118	154	225	284	374	542	590	778	1129
	8.26	89	171	244	132	172	252	317	418	606	659	869	1262
	9.3	100	193	274	149	194	283	357	471	682	742	979	>1330
	10.93			322			333	420	553	802	873	1150	>1530
	12.2	131	253	360	195	254	372	469	618	895	974	1284	>1530
	14.06	151	292	415	225	293	428	540	712	1031	1122	1480	>1530
	15.64	168	325	461	250	326	476	601	792	1147	1249	>1530	>1530
	17.49	188	363	516	280	365	533	672	886	1283	1396	>1530	>1530
	19.7	212	409	581	315	411	600	757	997	1445	>1530	>1530	>1530
	21.43	231	445	632	343	447	653	823	1085	>1530	>1530		
	25.5	275	529	752	408	532	777	980	1291	>1530	>1530		
	28.75	310	597	848	460	600	876	1104	1456				
	31.51	339	654	929	504	657	960	1210	>1530				
	36.58	394	759	1079	585	763	1114	1405					
FA77 3	25.54	269	519	738	400	522	762	961	1267	>1530	>1530	>1530	>1530
	29.91	315	608	864	469	611	892	1125	1483	>1530	>1530	>1530	>1530
	33.74	356	686	974	529	689	1006	1269	>1530	>1530	>1530	>1530	>1530
	38.23	403	777	1104	599	781	1140	1438	>1530	>1530	>1530	>1530	>1530
	43.58	460	886	1259	683	890	1300	>1530	>1530	>1530	>1530	>1530	>1530
	48.37	510	983	1397	758	988	1443	>1530	>1530	>1530	>1530		
	55.27	583	1124	>1530	866	1129	>1530	>1530	>1530	>1530	>1530		
	58.32	615	1186	>1530	914	1191	>1530	>1530	>1530	>1530	>1530		
	66.46	701	1351	>1530	1042	1357	>1530	>1530	>1530				
	72.5	765	1474	>1530	1136	1481	>1530	>1530	>1530				
	75.02	791	1525	>1530	1176	>1530	>1530	>1530	>1530	>1530	>1530		
	85.52	902	>1530	>1530	1341	>1530	>1530	>1530	>1530	>1530	>1530		
	94.93	1001	>1530	>1530	1488	>1530	>1530	>1530	>1530	>1530	>1530		
	108.46	1144	>1530	>1530	>1530	>1530	>1530	>1530	>1530	>1530	>1530		
	114.45	1207	>1530	>1530	>1530	>1530	>1530	>1530	>1530	>1530	>1530		
	130.42	1375	>1530	>1530	>1530	>1530	>1530	>1530	>1530				
	142.27	1500	>1530	>1530	>1530	>1530	>1530	>1530	>1530				
	166.47	>1530	>1530	>1530	>1530	>1530	>1530	>1530					
	188.4	>1530	>1530		>1530	>1530							
	198.31	>1530	>1530		>1530	>1530							
	225.79	>1530											
	262.93												
	281.71												

m [kg]		CMP			CM								
	s	63S	63M	63L	71S	71M	71L	90S	90M	90L	112S	112M	112L
FA77	2	54	55	57	57	59	62	67	69	74	75	80	94
FA77	3	55	56	58	59	60	64	68	71	76	77	81	96
FAF: + 6.6 kg / F: + 3.8 kg / FF: + 14.4 kg													



F..CMP, DS, CM
F 77 / CMP / CM [Nm]

CMP.. / CM..	i	n_{epk} [1/min]	η [%]	c_T FA [Nm/']	c_T FAF [Nm/']	c_T F [Nm/']	c_T FF [Nm/']	φ /R [']
FA77 2	4.28	4500	97	263.21	263.21	131.94	106.2	8
	5.16	4500	97	263.21	263.21	131.94	106.2	8
	5.76	4500	97	263.21	263.21	131.94	106.2	8
	6.64	4500	97	263.21	263.21	131.94	106.2	8
	7.39	4500	97	263.21	263.21	131.94	106.2	7
	8.26	4500	97	263.21	263.21	131.94	106.2	7
	9.3	4500	97	263.21	263.21	131.94	106.2	7
	10.93	4500	97	351.36	351.36	150.92	118.16	6
	12.2	4500	97	351.36	351.36	150.92	118.16	5
	14.06	4500	97	351.36	351.36	150.92	118.16	5
	15.64	4500	97	351.36	351.36	150.92	118.16	5
	17.49	4500	97	351.36	351.36	150.92	118.16	5
	19.7	4500	97	351.36	351.36	150.92	118.16	5
	21.43	4500	97	351.36	351.36	150.92	118.16	5
	25.5	4500	97	351.36	351.36	150.92	118.16	5
	28.75	4500	97	351.36	351.36	150.92	118.16	5
	31.51	4500	97	351.36	351.36	150.92	118.16	5
	36.58	4500	97	351.36	351.36	150.92	118.16	5
FA77 3	25.54	4500	95	388.05	388.05	157.3	122.04	6
	29.91	4500	95	388.05	388.05	157.3	122.04	6
	33.74	4500	95	388.05	388.05	157.3	122.04	6
	38.23	4500	95	388.05	388.05	157.3	122.04	6
	43.58	4500	95	388.05	388.05	157.3	122.04	6
	48.37	4500	95	388.05	388.05	157.3	122.04	6
	55.27	4500	95	388.05	388.05	157.3	122.04	6
	58.32	4500	95	388.05	388.05	157.3	122.04	6
	66.46	4500	95	388.05	388.05	157.3	122.04	6
	72.5	4500	95	388.05	388.05	157.3	122.04	6
	75.02	4500	95	394.36	394.36	158.33	122.65	6
	85.52	4500	95	394.36	394.36	158.33	122.65	6
	94.93	4500	95	394.36	394.36	158.33	122.65	5
	108.46	4500	95	394.36	394.36	158.33	122.65	5
	114.45	4500	95	394.36	394.36	158.33	122.65	5
	130.42	4500	95	394.36	394.36	158.33	122.65	5
	142.27	4500	95	394.36	394.36	158.33	122.65	5
	166.47	4500	95	394.36	394.36	158.33	122.65	5
	188.4	4500	95	394.36	394.36	158.33	122.65	5
	198.31	4500	95	394.36	394.36	158.33	122.65	5
	225.79	4500	95	394.36	394.36	158.33	122.65	5
	262.93	4500	95	394.36	394.36	158.33	122.65	5
	281.71	4500	95	394.36	394.36	158.33	122.65	5



CMP.. / CM..							F_{Ramax}				F_{Rapk}			
	i	M_{amax} [Nm]	M_{apk} [Nm]	$M_{aNotaus}$ [Nm]	n_{ak} [1/min]	J_G 10^{-4} [kgm^2]	FA [N]	FAF [N]	F [N]	FF [N]	FA [N]	FAF [N]	F [N]	FF [N]
	4.28	1010	1310	1717	327	42	630	630	10200	10900	20000	20000	16900	17400
	5.16	1080	1320	1836	271	31	640	640	10700	11500	20000	20000	16800	17400
	5.76	1080	1320	1836	295	26	930	930	11300	12000	20000	20000	16800	17400
	6.64	1080	1320	1836	346	20	1310	1310	12000	12700	20000	20000	16800	17400
	7.39	1080	1330	1836	365	17	1610	1610	12500	13300	20000	20000	16800	17400
	8.26	1080	1330	1836	400	14	1940	1940	13100	13900	20000	20000	16800	17400
	9.3	1080	1330	1836	430	12	2300	2300	13800	14600	20000	20000	16800	17400
	10.93	1500	1530	2550	183	19	2080	2080	14200	15100	20000	20000	15500	17000
FA77	12.2	1500	1530	2550	205	16	2450	2450	14900	15800	20000	20000	15500	17000
2	14.06	1500	1530	2550	220	13	2940	2940	15700	16700	20000	20000	15500	17000
	15.64	1500	1530	2550	237	11	3330	3330	15700	17100	20000	20000	15500	17000
	17.49	1500	1530	2550	252	9.5	3750	3750	15700	17100	20000	20000	15500	17000
	19.7	1500	1530	2550	264	7.9	4220	4220	15700	17100	20000	20000	15500	17000
	21.43	1500	1530	2550	275	7.1	4560	4560	15700	17100	20000	20000	15500	17000
	25.5	1500	1530	2550	275	5.5	5300	5300	15700	17100	20000	20000	15500	17000
	28.75	1430	1530	2431	243	4.4	6190	6190	16200	17300	20000	20000	15500	17000
	31.51	1380	1530	2346	222	3.8	6870	6870	16500	17500	20000	20000	15500	17000
	36.58	1110	1530	1887	191	3.0	8990	8990	17900	18300	20000	20000	15500	17000
	25.54	1450	1530	2465	59	10	5560	5560	16100	17300	20000	20000	15500	17000
	29.91	1500	1530	2550	50	7.8	6010	6010	15700	17100	20000	20000	15500	17000
	33.74	1500	1530	2550	50	6.4	6580	6580	15700	17100	20000	20000	15500	17000
	38.23	1500	1530	2550	50	5.2	7190	7190	15700	17100	20000	20000	15500	17000
	43.58	1500	1530	2550	50	4.3	7850	7850	15700	17100	20000	20000	15500	17000
	48.37	1500	1530	2550	52	3.8	8410	8410	15700	17100	20000	20000	15500	17000
	55.27	1500	1530	2550	52	3.0	9140	9140	15700	17100	20000	20000	15500	17000
	58.32	1500	1530	2550	51	2.8	9450	9450	15700	17100	20000	20000	15500	17000
	66.46	1500	1530	2550	53	2.2	10200	10200	15700	17100	20000	20000	15500	17000
	72.5	1500	1530	2550	52	1.9	10700	10700	15700	17100	20000	20000	15500	17000
FA77	75.02	1500	1530	2550	53	4.0	11000	11000	15700	17100	20000	20000	15500	17000
3	85.52	1500	1530	2550	53	3.3	11800	11800	15700	17100	20000	20000	15500	17000
	94.93	1500	1530	2550	54	3.0	12500	12500	15700	17100	20000	20000	15500	17000
	108.46	1500	1530	2550	53	2.5	13400	13400	15700	17100	20000	20000	15500	17000
	114.45	1500	1530	2550	54	2.3	13800	13800	15700	17100	20000	20000	15500	17000
	130.42	1500	1530	2550	54	1.9	14800	14800	15700	17100	20000	20000	15500	17000
	142.27	1500	1530	2550	49	1.6	15400	15400	15700	17100	20000	20000	15500	17000
	166.47	1500	1530	2550	42	1.3	16700	16700	15700	17100	20000	20000	15500	17000
	188.4	1500	1530	2550	37	0.91	17700	17700	15700	17100	20000	20000	15500	17000
	198.31	1500	1530	2550	35	0.82	18100	18100	15700	17100	20000	20000	15500	17000
	225.79	1500	1530	2550	31	0.67	19300	19300	15700	17100	20000	20000	15500	17000
	262.93	1500	1530	2550	27	0.54	20000	20000	15700	17100	20000	20000	15500	17000
	281.71	1500	1530	2550	25	0.47	20000	20000	15700	17100	20000	20000	15500	17000

9.13 F 77 / CMP / CM [mm]

F77..

42 032 00 07

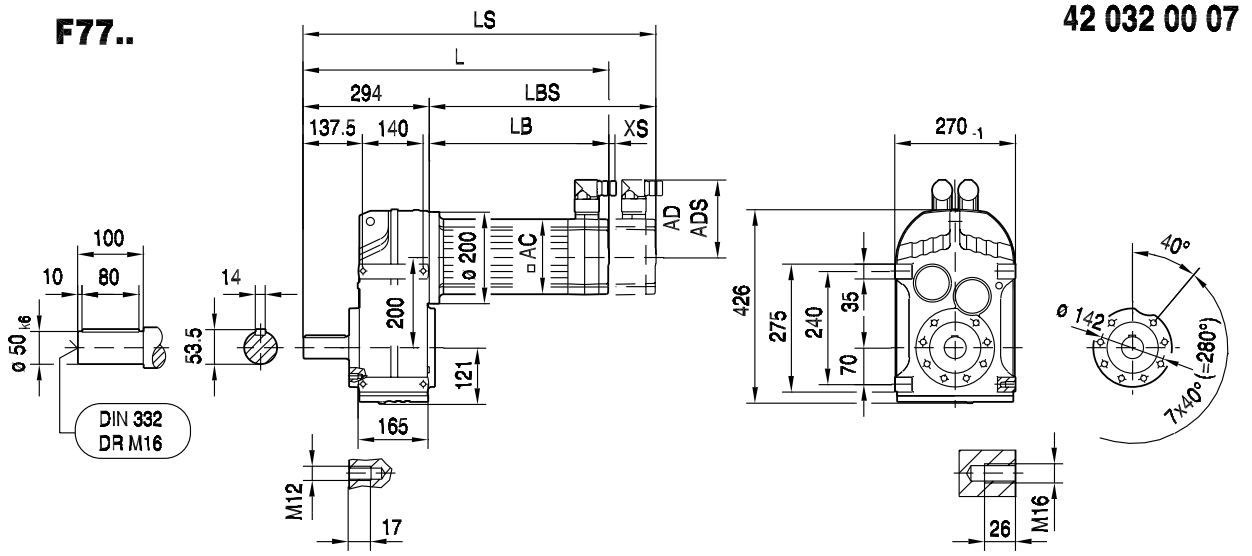

FA77B..

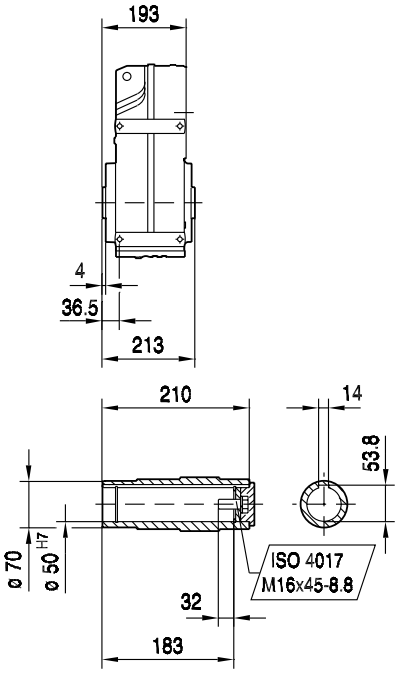

FH77B..

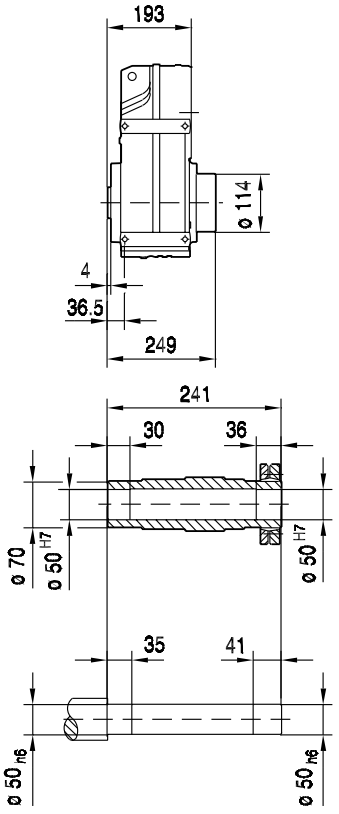

FV77B..

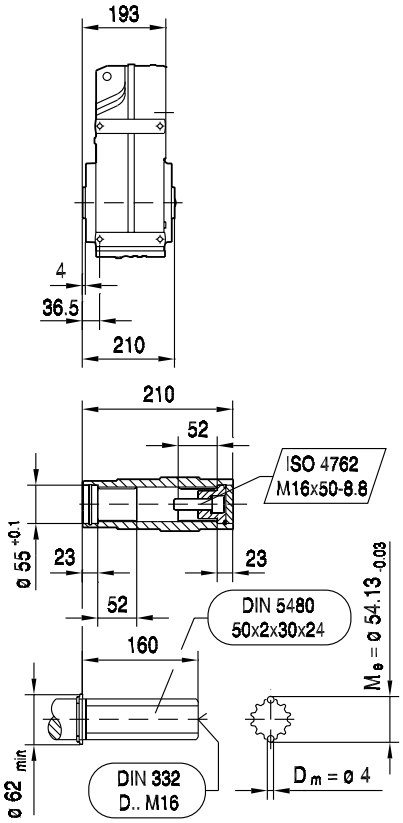

(→ 150)	CMP63S	CMP63M	CMP63L					
AC	88	88	88					
AD	89	89	89					
ADS	89	89	89					
L	461	511	561					
LS	490	540	590					
LB	167	217	267					
LBS	196	246	296					
XS	14	14	14					

FF77..

42 033 00 07

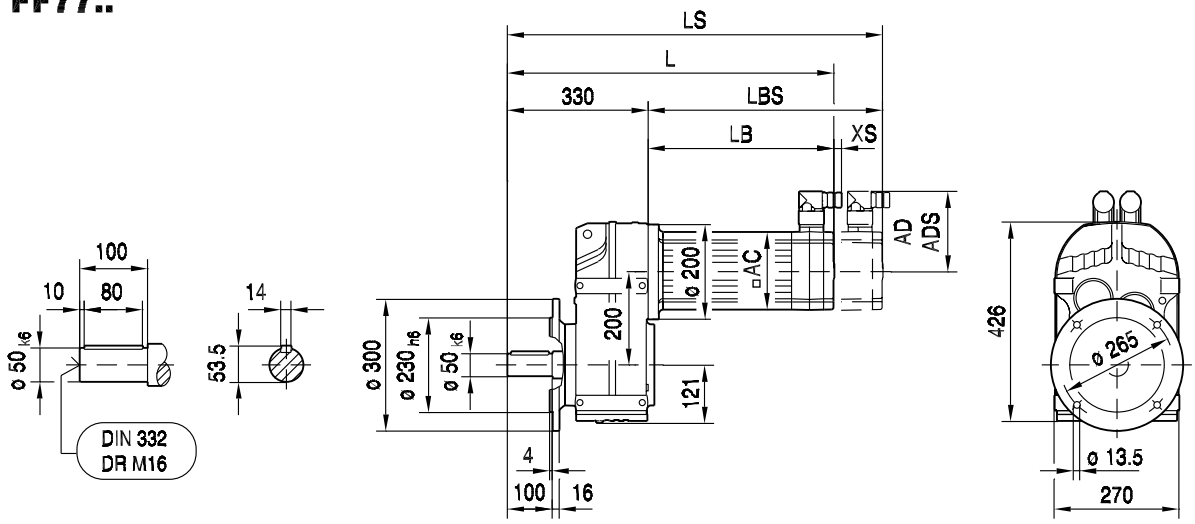

FAF77..

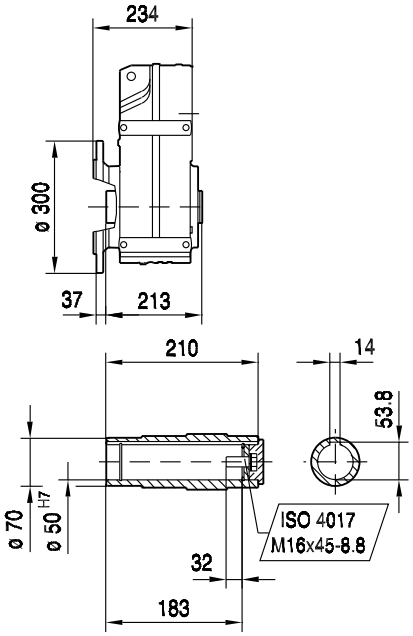

FHF77..

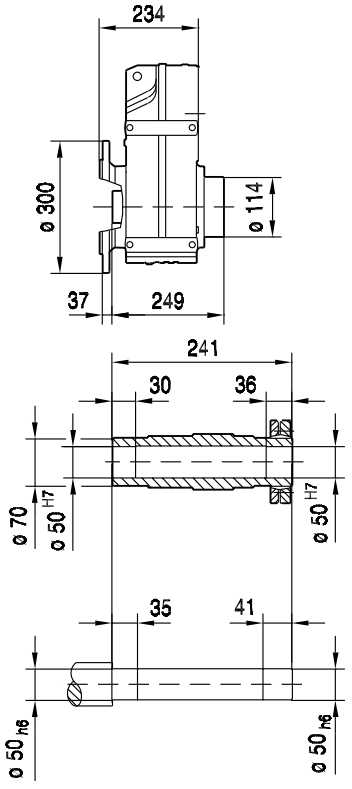

FVF77..

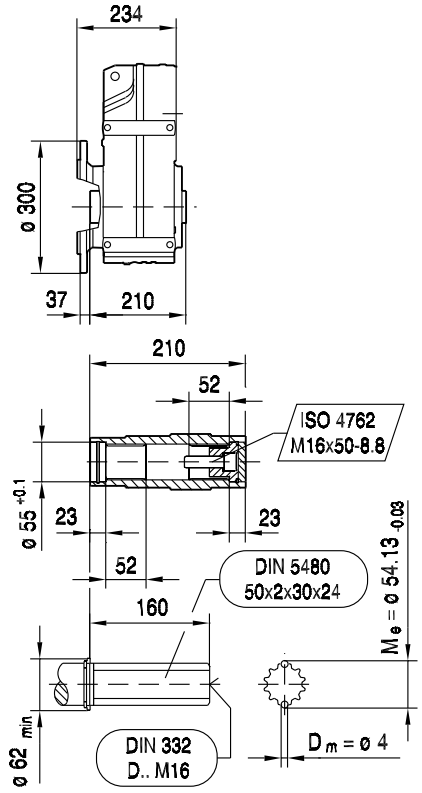

(→ 150)	CMP63S	CMP63M	CMP63L					
AC	88	88	88					
AD	89	89	89					
ADS	89	89	89					
L	497	547	597					
LS	526	576	626					
LB	167	217	267					
LBS	196	246	296					
XS	14	14	14					

FA77..

42 034 00 07

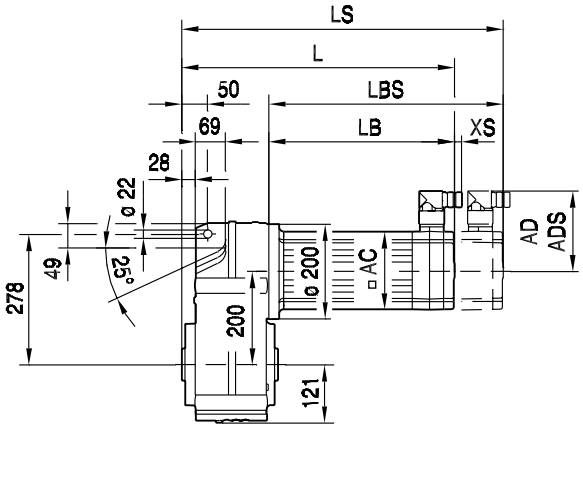

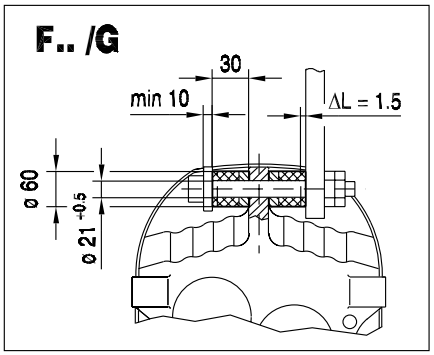

FA77..

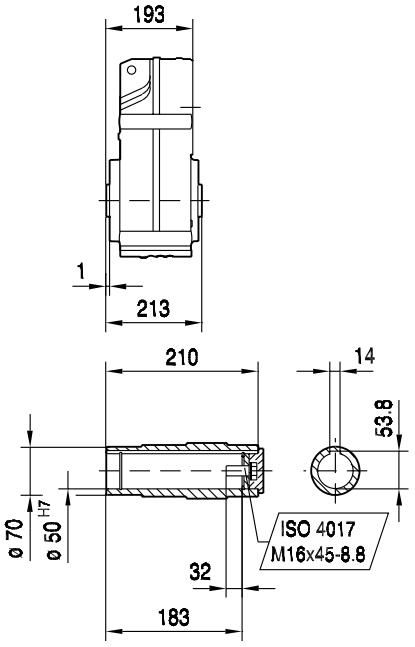

FH77..

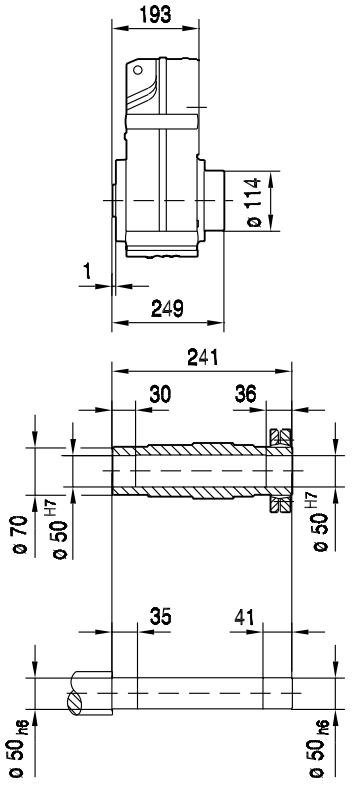

FV77..

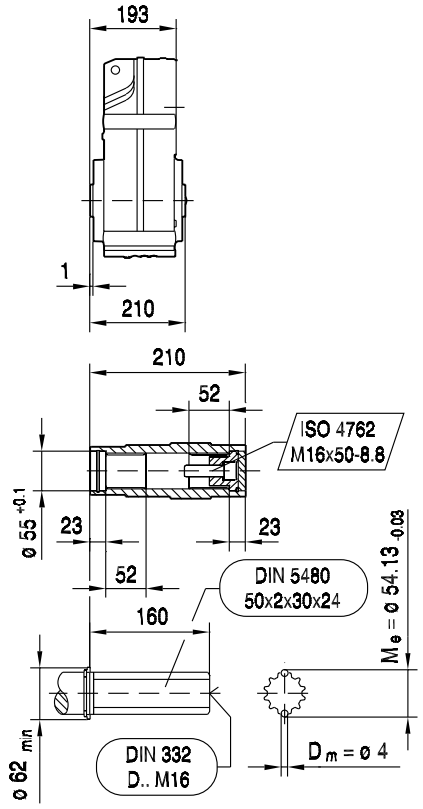

(→ 150)	CMP63S	CMP63M	CMP63L					
AC	88	88	88					
AD	89	89	89					
ADS	89	89	89					
L	360	410	460					
LS	389	439	489					
LB	167	217	267					
LBS	196	246	296					
XS	14	14	14					

FAZ77..

42 035 00 07

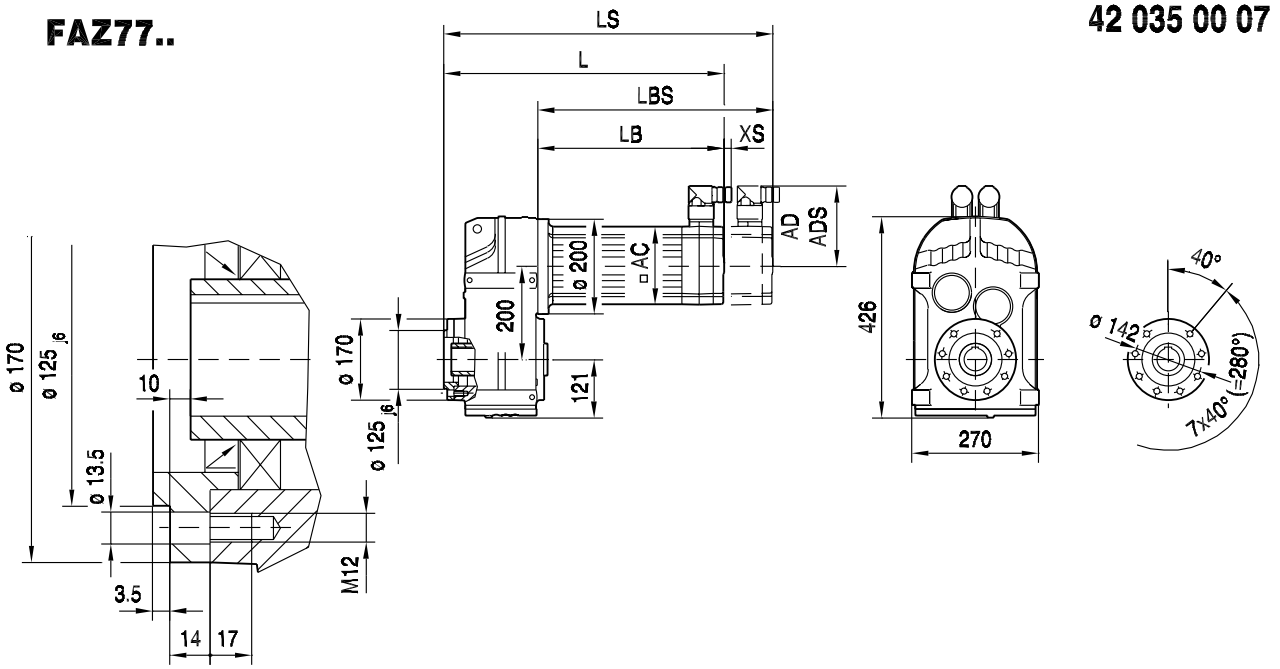

FAZ77..

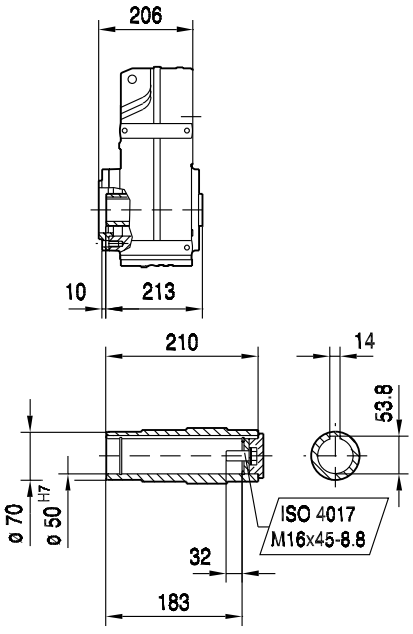

FHZ77..

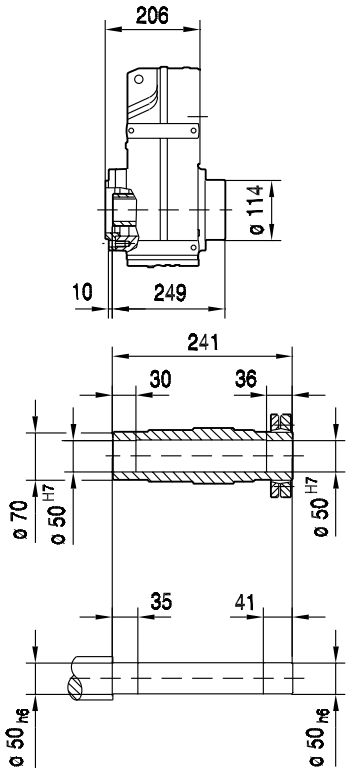

FVZ77..

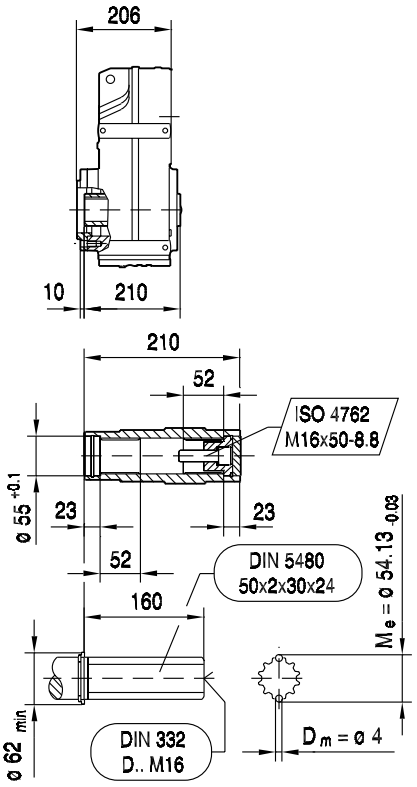

(→ 150)	CMP63S	CMP63M	CMP63L					
AC	88	88	88					
AD	89	89	89					
ADS	89	89	89					
L	373	423	473					
LS	402	452	502					
LB	167	217	267					
LBS	196	246	296					
XS	14	14	14					

FT77..

42 036 00 07

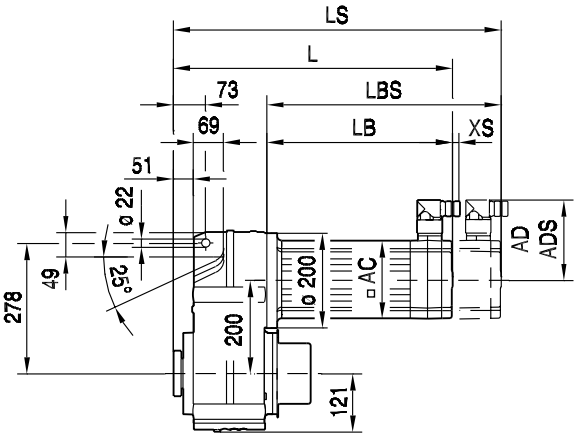

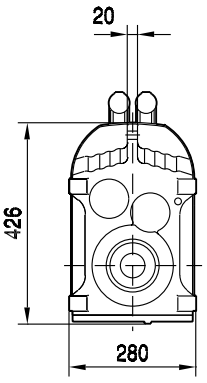

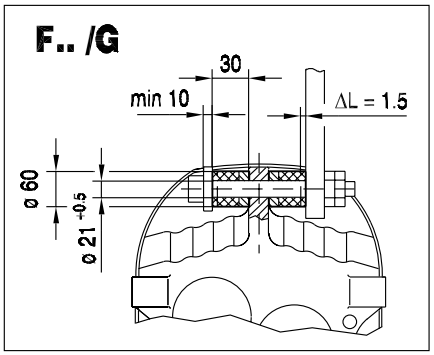

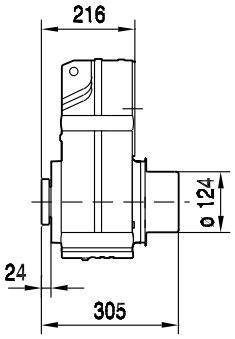

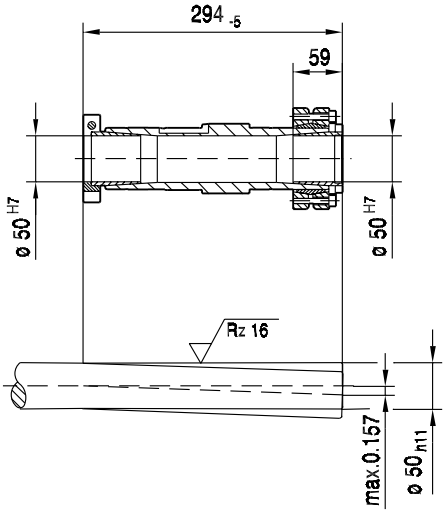

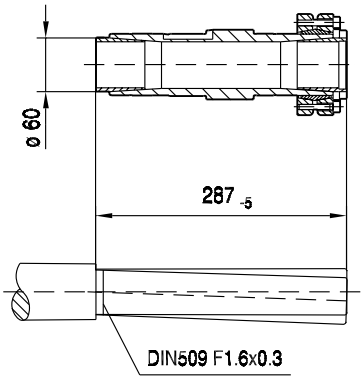

(→ 📖 150)	CMP63S	CMP63M	CMP63L					
AC	88	88	88					
AD	89	89	89					
ADS	89	89	89					
L	382	432	482					
LS	410	460	510					
LB	167	217	267					
LBS	196	246	296					
XS	14	14	14					

F77..

42 135 01 01

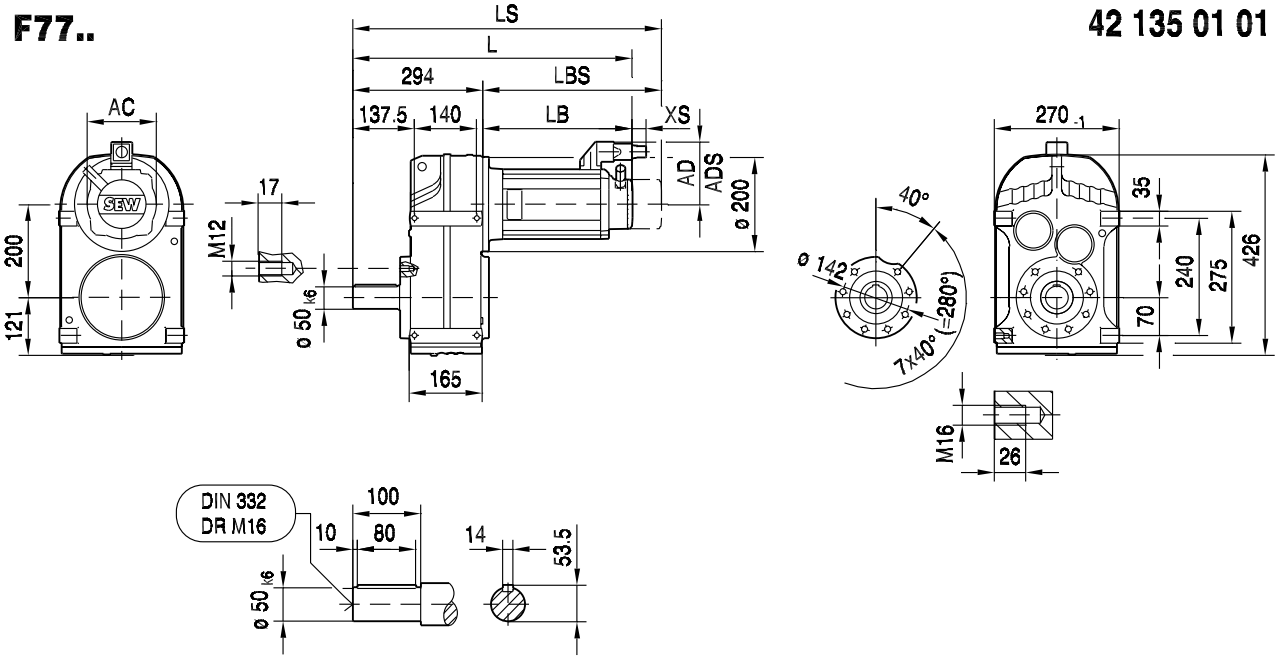

FA77B..

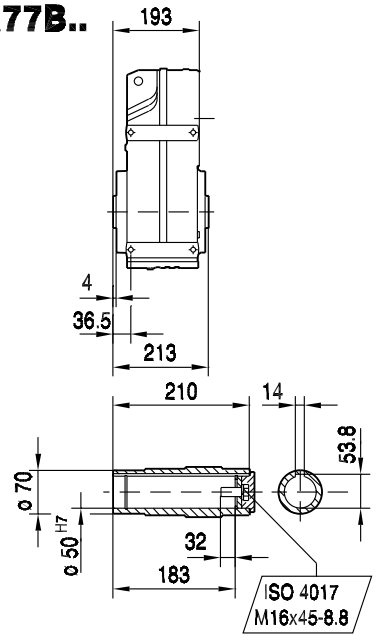

FH77B..

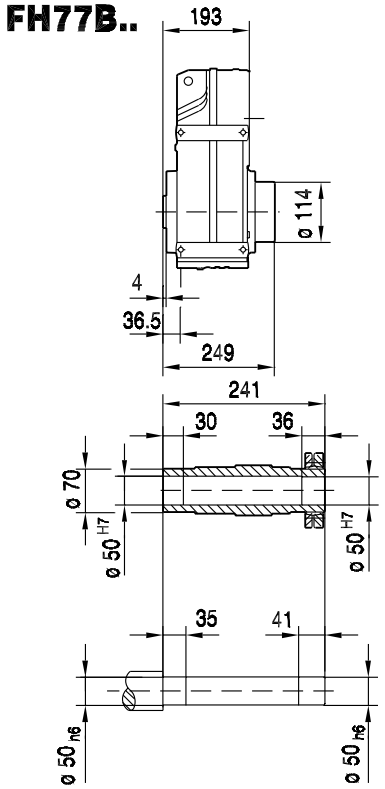

FV77B..

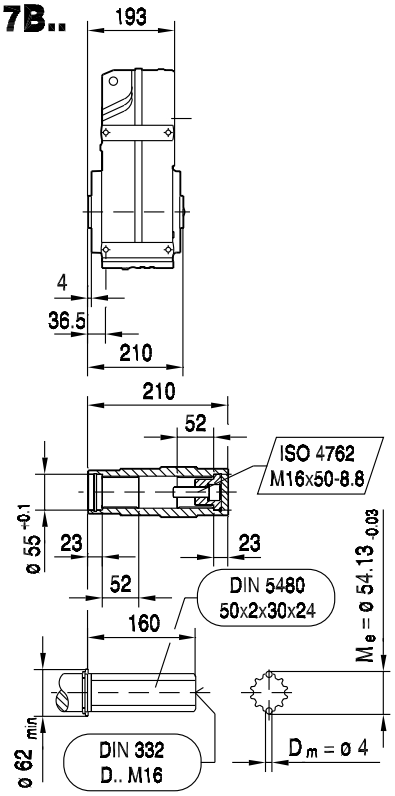

(→ 150)	CM71S	CM71M	CM71L	CM90S	CM90M	CM90L	CM112S	CM112M	CM112L		
AC	117	117	117	142	142	142	186	186	186		
AD	122	122	122	140	140	140	162	162	162		
ADS	122	122	122	140	140	140	162	162	162		
L	520	540	579	570	597	651	606	633	695		
LS	602	622	661	666	693	747	696	723	785		
LB	226	246	285	276	303	357	312	339	401		
LBS	308	328	367	372	399	453	402	429	491		
XS	45	45	45	50	50	50	36	36	36		

FF77..

42 136 01 01

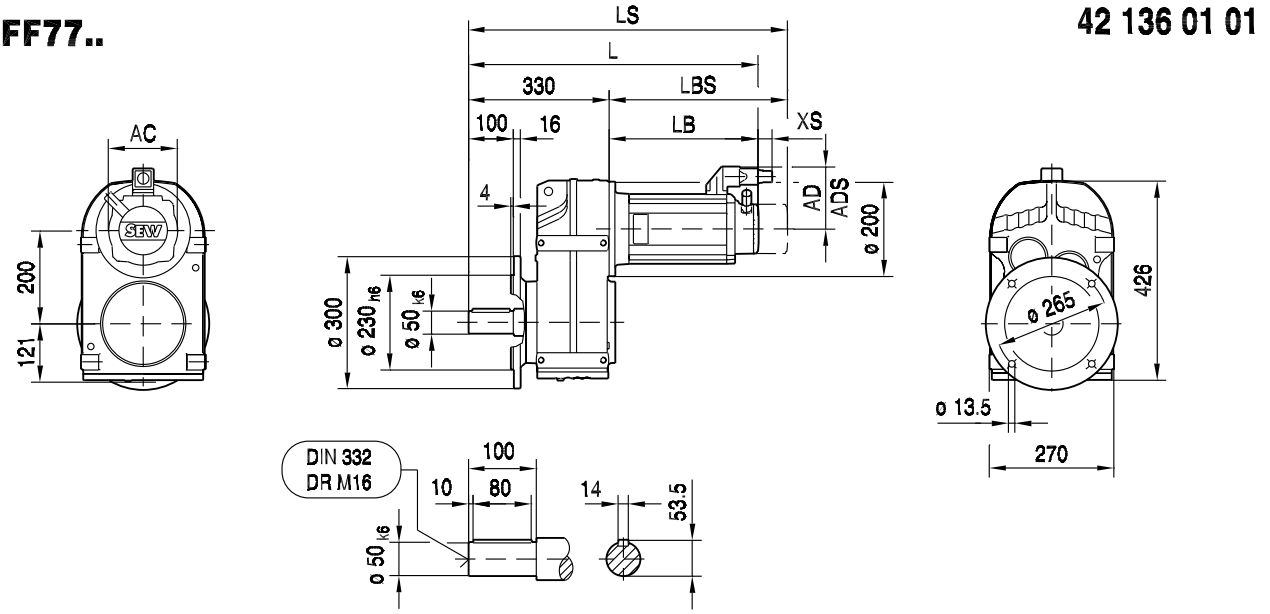

FAF77..

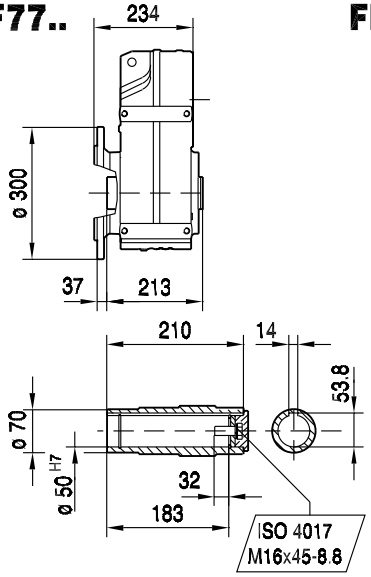

FHF77..

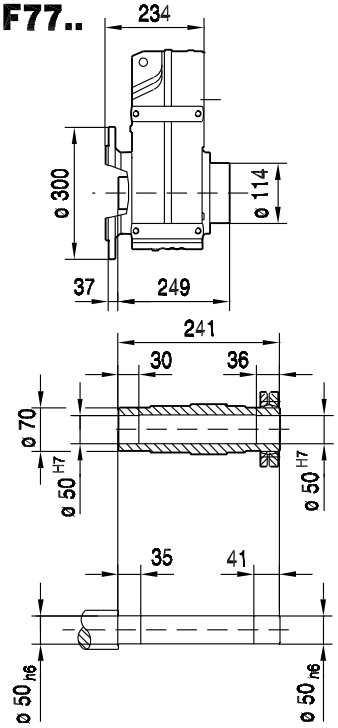

FVF77..

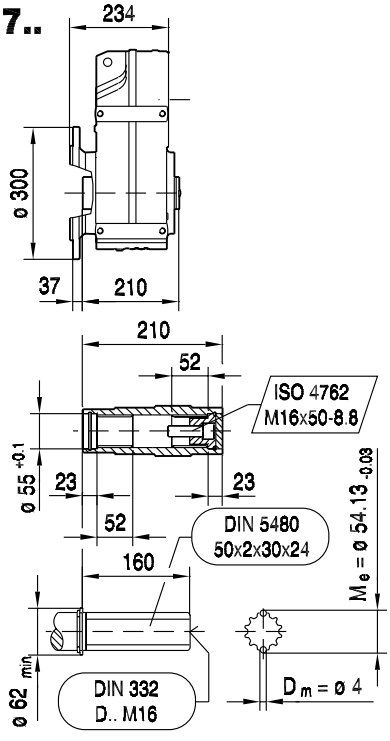

(→ 150)	CM71S	CM71M	CM71L	CM90S	CM90M	CM90L	CM112S	CM112M	CM112L		
AC	117	117	117	142	142	142	186	186	186		
AD	122	122	122	140	140	140	162	162	162		
ADS	122	122	122	140	140	140	162	162	162		
L	556	576	615	606	633	687	642	669	731		
LS	638	658	697	702	729	783	732	759	821		
LB	226	246	285	276	303	357	312	339	401		
LBS	308	328	367	372	399	453	402	429	491		
XS	45	45	45	50	50	50	36	36	36		

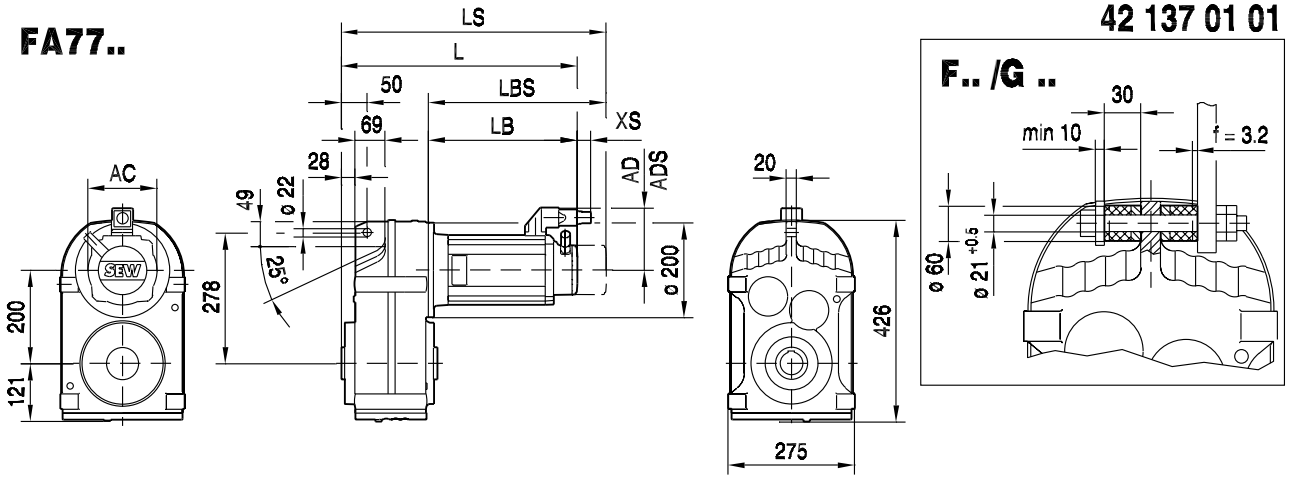

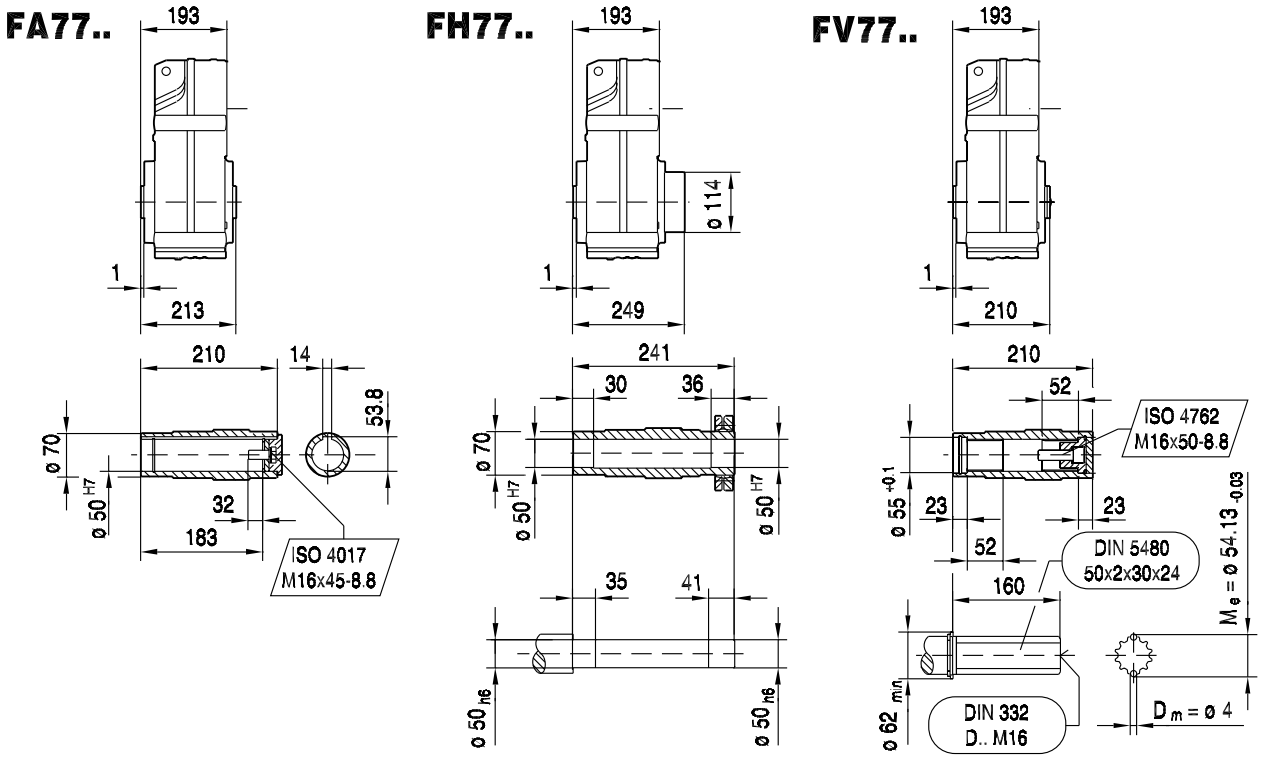

(→ 150)	CM71S	CM71M	CM71L	CM90S	CM90M	CM90L	CM112S	CM112M	CM112L		
AC	117	117	117	142	142	142	186	186	186		
AD	122	122	122	140	140	140	162	162	162		
ADS	122	122	122	140	140	140	162	162	162		
L	419	439	478	469	496	550	505	532	594		
LS	501	521	560	565	592	646	595	622	684		
LB	226	246	285	276	303	357	312	339	401		
LBS	308	328	367	372	399	453	402	429	491		
XS	45	45	45	50	50	50	36	36	36		



F..CMP, DS, CM
F 77 / CMP / CM [mm]

FAZ77..

42 043 00 04

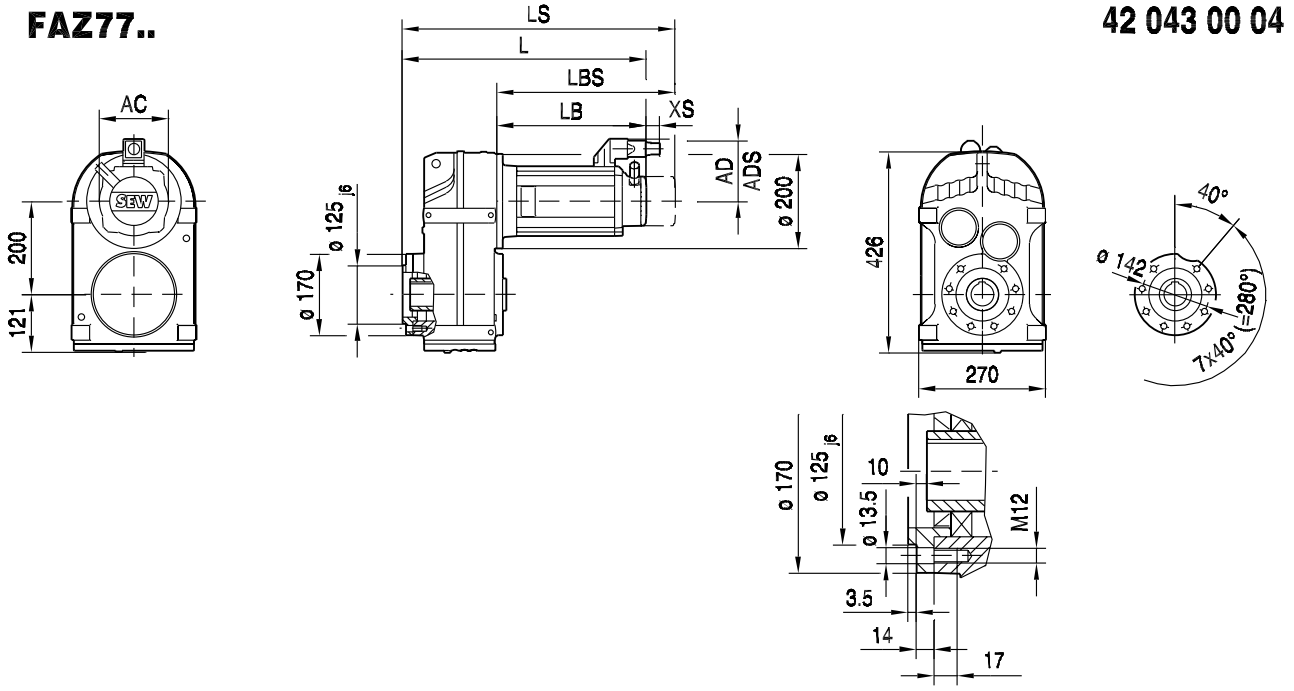

FAZ77..

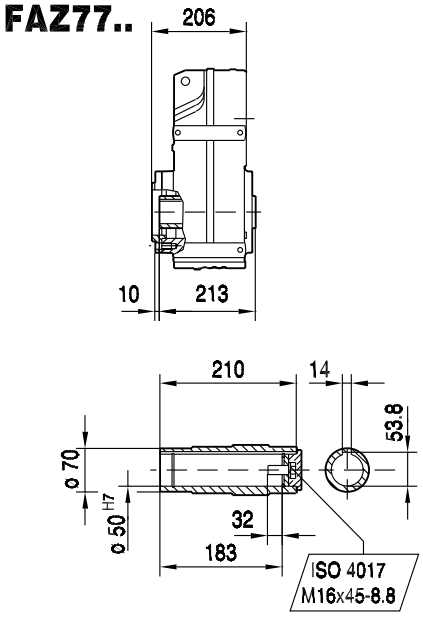

FHZ77..

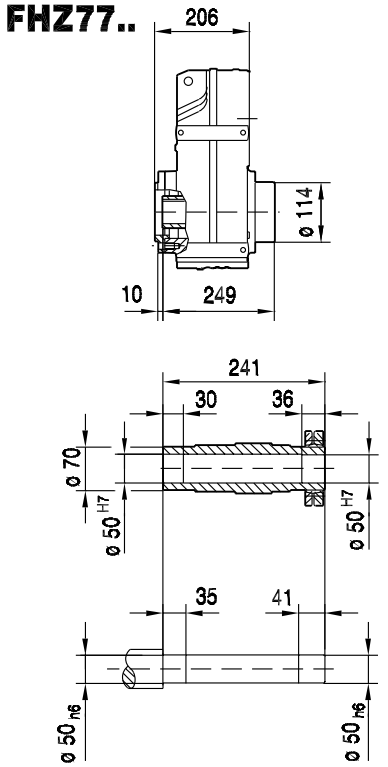

FVZ77..

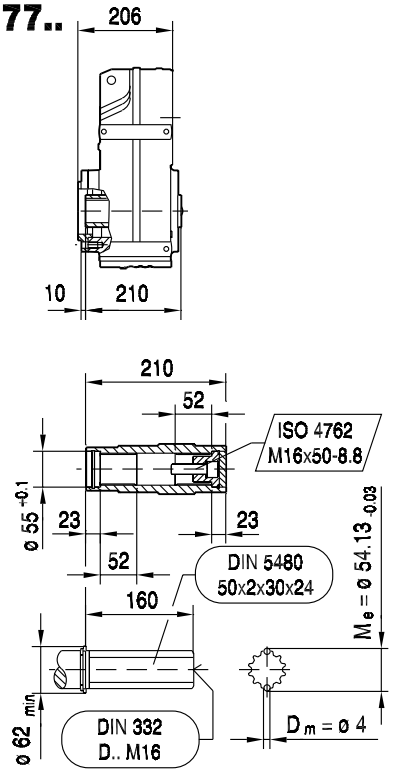

(→ 📖 150)	CM71S	CM71M	CM71L	CM90S	CM90M	CM90L	CM112S	CM112M	CM112L		
AC	117	117	117	142	142	142	186	186	186		
AD	122	122	122	140	140	140	162	162	162		
ADS	122	122	122	140	140	140	162	162	162		
L	432	452	491	482	509	563	518	545	607		
LS	514	534	573	578	605	659	608	635	697		
LB	226	246	285	276	303	357	312	339	401		
LBS	308	328	367	372	399	453	402	429	491		
XS	45	45	45	50	50	50	36	36	36		

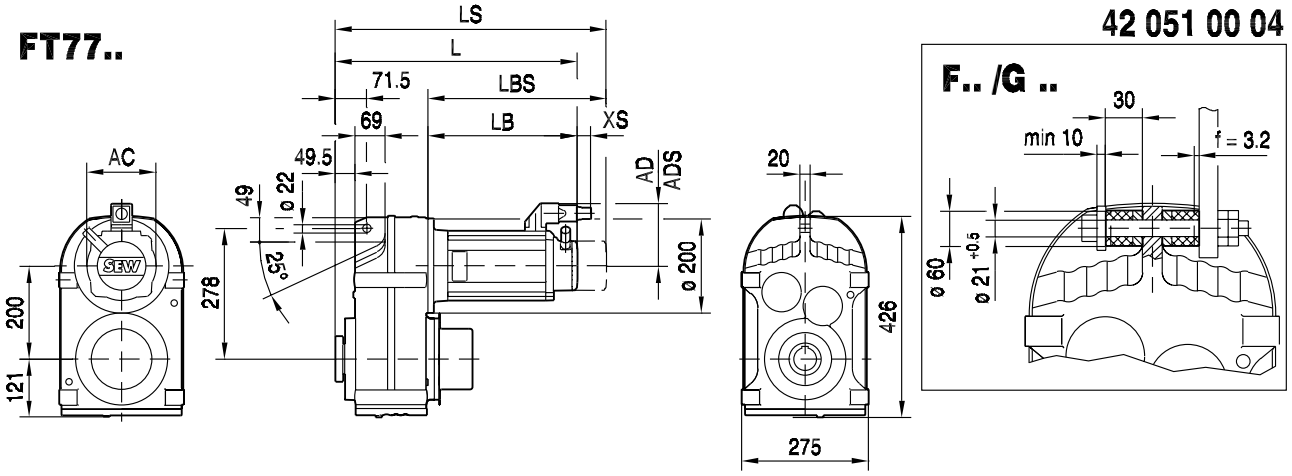

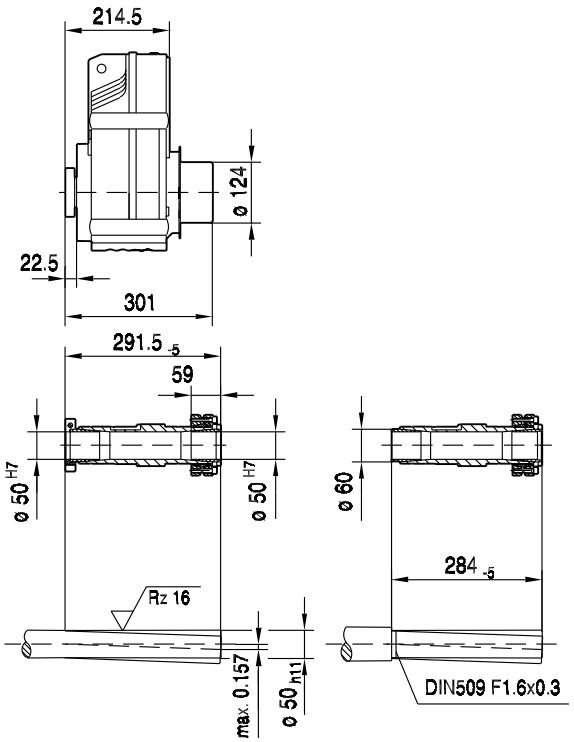

(→ 📖 150)	CM71S	CM71M	CM71L	CM90S	CM90M	CM90L	CM112S	CM112M	CM112L		
AC	117	117	117	142	142	142	186	186	186		
AD	122	122	122	140	140	140	162	162	162		
ADS	122	122	122	140	140	140	162	162	162		
L	440	460	499	491	518	572	527	554	616		
LS	522	542	581	586	613	667	617	644	706		
LB	226	246	285	276	303	357	312	339	401		
LBS	308	328	367	372	399	453	402	429	491		
XS	45	45	45	50	50	50	36	36	36		



9.14 F 87 / CM [Nm]

M_{aDyn} [Nm]		CM						
	i	90S	90M	90L	112S	112M	112L	112H
FA87 2	4.12			302	329	434	629	951
	4.92			361	393	518	752	1136
	5.63	216	285	413	449	593	860	1300
	6.65	255	337	488	531	700	1016	1535
	7.35	282	372	539	587	774	1123	1697
	8.29	318	420	608	662	872	1267	1914
	9.58			703	765	1008	1464	2212
	11.46			840	915	1206	1751	2646
	13.12	504	664	962	1047	1381	2004	3029
	15.48	595	784	1135	1236	1629	2365	>3090
	17.12	658	867	1255	1367	1802	2616	>3090
	19.31	742	978	1416	1542	2032	2950	>3090
	21.32	819	1080	1563	1702	2244	>3090	>3090
	23.68	910	1199	1737	1890	2492	>3090	
	26.5	1018	1342	1943	2116	2789	>3090	
	28.78	1105	1457	2110	2298			
	33.92	1303	1718	2487	2708			
FA87 3	29.2	1099	1448	2097	2283	3010	>3090	>3090
	35.19	1324	1745	2527	2751	>3090	>3090	>3090
	39.3	1478	1949	2823	3073	>3090	>3090	>3090
	45.28	1703	2245	>3090	>3090	>3090	>3090	>3090
	50.36	1895	2497	>3090	>3090	>3090	>3090	>3090
	56.75	2135	2814	>3090	>3090	>3090	>3090	
	68.4	2573	>3090	>3090	>3090	>3090	>3090	
	76.39	2874	>3090	>3090	>3090	>3090	>3090	
	88.01	>3090	>3090	>3090	>3090	>3090	>3090	
	97.89	>3090	>3090	>3090	>3090	>3090	>3090	
	109.49	>3090	>3090	>3090	>3090	>3090	>3090	
	123.29	>3090	>3090	>3090	>3090	>3090	>3090	
	134.16	>3090	>3090	>3090	>3090			
	159.61	>3090	>3090	>3090	>3090			
	179.97	>3090	>3090					
	197.2	>3090	>3090					
	228.93	>3090						
	255.37							
	270.68							

m [kg]		CM						
	s	90S	90M	90L	112S	112M	112L	112H
FA87	2	105	110	115	110	115	130	140
FA87	3	110	110	115	115	120	135	140
FAF: + 12.7 kg / F: + 5.7 kg / FF: + 21.3 kg								



CM..	i	n_{epk} [1/min]	η [%]	c_T FA [Nm/']	FAF [Nm/']	F [Nm/']	FF [Nm/']	φ /R [']
FA87 2	4.12	3924	97	465.26	465.26	196.68	186.3	7
	4.92	4378	97	465.26	465.26	196.68	186.3	7
	5.63	4500	97	465.26	465.26	196.68	186.3	7
	6.65	4500	97	465.26	465.26	196.68	186.3	7
	7.35	4500	97	465.26	465.26	196.68	186.3	7
	8.29	4500	97	465.26	465.26	196.68	186.3	7
	9.58	4500	97	711.06	711.06	230.34	216.23	7
	11.46	4500	97	711.06	711.06	230.34	216.23	7
	13.12	4500	97	711.06	711.06	230.34	216.23	7
	15.48	4500	97	711.06	711.06	230.34	216.23	7
	17.12	4500	97	711.06	711.06	230.34	216.23	7
	19.31	4500	97	711.06	711.06	230.34	216.23	7
	21.32	4500	97	711.06	711.06	230.34	216.23	7
	23.68	4500	97	711.06	711.06	230.34	216.23	7
	26.5	4500	97	711.06	711.06	230.34	216.23	7
	28.78	4500	97	711.06	711.06	230.34	216.23	7
	33.92	4500	97	711.06	711.06	230.34	216.23	7
FA87 3	29.2	4500	95	832.99	832.99	241.8	226.31	8
	35.19	4500	95	832.99	832.99	241.8	226.31	8
	39.3	4500	95	832.99	832.99	241.8	226.31	8
	45.28	4500	95	832.99	832.99	241.8	226.31	8
	50.36	4500	95	832.99	832.99	241.8	226.31	7
	56.75	4500	95	846.09	846.09	242.89	227.26	7
	68.4	4500	95	846.09	846.09	242.89	227.26	7
	76.39	4500	95	846.09	846.09	242.89	227.26	7
	88.01	4500	95	846.09	846.09	242.89	227.26	7
	97.89	4500	95	846.09	846.09	242.89	227.26	7
	109.49	4500	95	846.09	846.09	242.89	227.26	7
	123.29	4500	95	846.09	846.09	242.89	227.26	7
	134.16	4500	95	846.09	846.09	242.89	227.26	7
	159.61	4500	95	846.09	846.09	242.89	227.26	7
	179.97	4500	95	846.09	846.09	242.89	227.26	7
	197.2	4500	95	846.09	846.09	242.89	227.26	7
	228.93	4500	95	846.09	846.09	242.89	227.26	7
	255.37	4500	95	846.09	846.09	242.89	227.26	7
	270.68	4500	95	846.09	846.09	242.89	227.26	7

CM..	i	M_{amax} [Nm]	M_{apk} [Nm]	$M_{aNotaus}$ [Nm]	n_{ak} [1/min]	J_G 10^{-4} [kgm^2]	F_{Ramax} FA [N]	FAF [N]	F [N]	FF [N]	F_{Rapk} FA [N]	FAF [N]	F [N]	FF [N]
FA87 2	4.12	1460	1940	2482	340	114	3020	3020	5980	11800	30000	30000	26400	23400
	4.92	1530	1960	2601	346	85	3310	3310	6430	12600	30000	30000	26300	23400
	5.63	1530	1960	2601	391	67	3850	3850	7020	13400	30000	30000	26300	23400
	6.65	1530	1970	2601	466	52	4550	4550	7790	14400	30000	30000	26300	23400
	7.35	1530	1970	2601	490	44	5000	5000	8280	15000	30000	30000	26300	23400
	8.29	1530	1980	2601	531	36	5550	5550	8890	15800	30000	30000	26200	23300
	9.58	2880	3090	4896	146	63	275	275	5050	11000	30000	30000	16000	16000
	11.46	3000	3090	5100	122	49	575	575	5580	11800	30000	30000	16000	16000
	13.12	3000	3090	5100	114	40	1300	1300	6370	13100	30000	30000	16000	16000
	15.48	3000	3090	5100	110	32	2220	2220	7390	14700	30000	30000	16000	16000
	17.12	3000	3090	5100	105	28	2810	2810	8040	15800	30000	30000	16000	16000
	19.31	3000	3090	5100	104	23	3540	3540	8840	17000	30000	30000	16000	16000
	21.32	3000	3090	5100	98	20	4160	4160	9520	18000	30000	30000	16000	16000
	23.68	3000	3090	5100	97	17	4850	4850	10300	19100	30000	30000	16000	16000
	26.5	3000	3090	5100	98	15	5610	5610	11100	19800	30000	30000	16000	16000
	28.78	2450	3090	4165	191	13	8940	8940	13900	22500	30000	30000	16000	16000
	33.92	2610	3090	4437	150	10	9340	9340	14600	22200	30000	30000	16000	16000



CM..							F_{Ramax}				F_{Rapk}			
	i	M_{amax} [Nm]	M_{apk} [Nm]	$M_{aNotaus}$ [Nm]	n_{ak} [1/min]	$J_G\ 10^{-4}$ [kgm^2]	FA [N]	FAF [N]	F [N]	FF [N]	FA [N]	FAF [N]	F [N]	FF [N]
FA87 3	29.2	2510	3090	4267	48	25	8740	8740	13800	22400	30000	30000	16000	16000
	35.19	2610	3090	4437	40	19	9610	9610	14900	22200	30000	30000	16000	16000
	39.3	2720	3090	4624	36	16	9910	9910	15400	22000	30000	30000	16000	16000
	45.28	2820	3090	4794	31	13	10500	10500	16200	21700	30000	30000	16000	16000
	50.36	2940	3090	4998	28	11	10800	10800	16800	21500	30000	30000	16000	16000
	56.75	3000	3090	5100	32	20	11600	11600	17700	19800	30000	30000	16000	16000
	68.4	3000	3090	5100	32	16	13300	13300	19600	19800	30000	30000	16000	16000
	76.39	3000	3090	5100	31	14	14300	14300	19800	19800	30000	30000	16000	16000
	88.01	3000	3090	5100	32	11	15800	15800	19800	19800	30000	30000	16000	16000
	97.89	3000	3090	5100	32	9.9	16900	16900	19800	19800	30000	30000	16000	16000
	109.49	3000	3090	5100	32	8.3	18100	18100	19800	19800	30000	30000	16000	16000
	123.29	3000	3090	5100	32	7.0	19400	19400	19800	19800	30000	30000	16000	16000
	134.16	3000	3090	5100	32	6.3	20400	20400	19800	19800	30000	30000	16000	16000
	159.61	3000	3090	5100	32	4.9	22500	22500	19800	19800	30000	30000	16000	16000
	179.97	3000	3090	5100	32	4.0	24100	24100	19800	19800	30000	30000	16000	16000
	197.2	3000	3090	5100	32	3.5	25300	25300	19800	19800	30000	30000	16000	16000
	228.93	3000	3090	5100	31	2.8	27300	27300	19800	19800	30000	30000	16000	16000
	255.37	3000	3090	5100	27	1.8	28900	28900	19800	19800	30000	30000	16000	16000
	270.68	3000	3090	5100	26	1.6	29800	29800	19800	19800	30000	30000	16000	16000

9.15 F 87 / CM [mm]

F87..

42 138 01 01

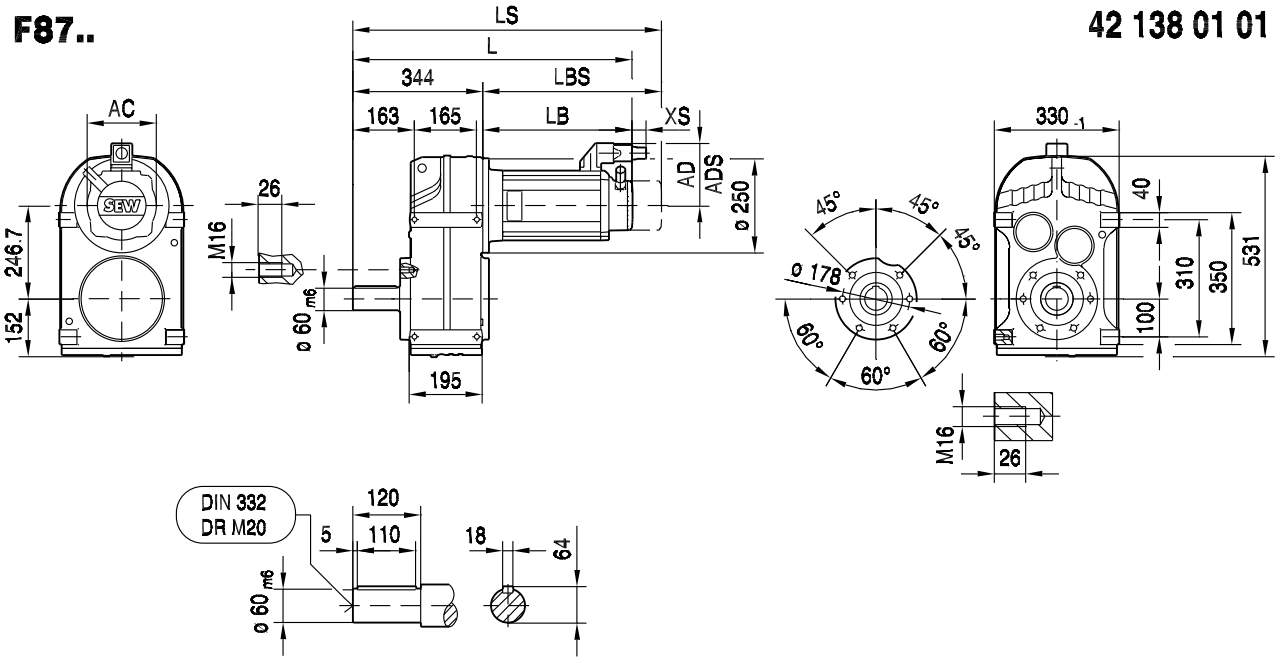

FA87B..

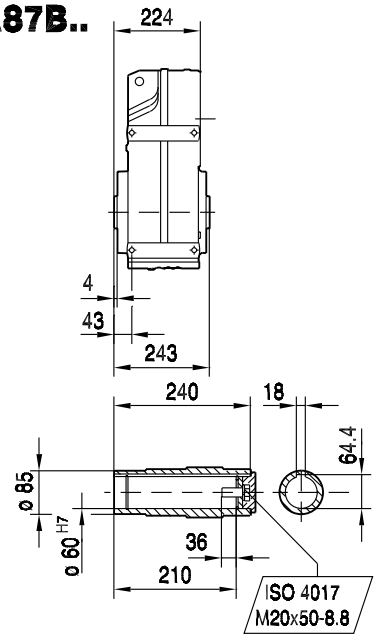

FH87B..

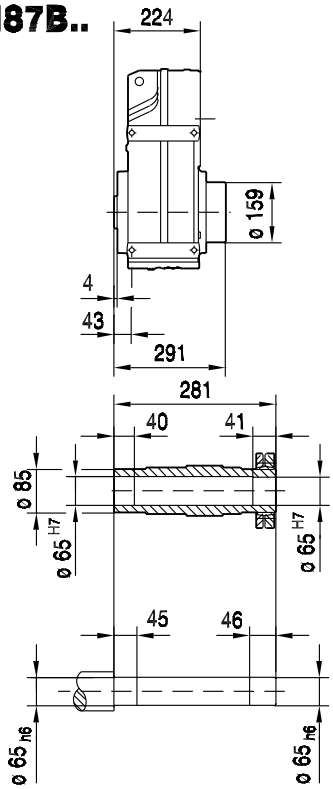

FV87B..

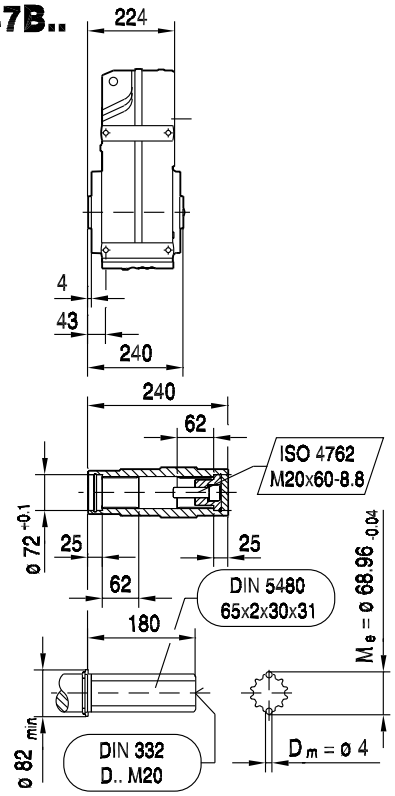

(→ 150)	CM90S	CM90M	CM90L	CM112S	CM112M	CM112L	CM112H				
AC	142	142	142	186	186	186	186				
AD	140	140	140	162	162	162	162				
ADS	140	140	140	162	162	162	162				
L	616	643	697	651	678	740	870				
LS	712	739	793	741	768	830	935				
LB	272	299	353	307	334	396	526				
LBS	368	395	449	397	424	486	591				
XS	50	50	50	36	36	36	36				

FF87..

42 139 01 01

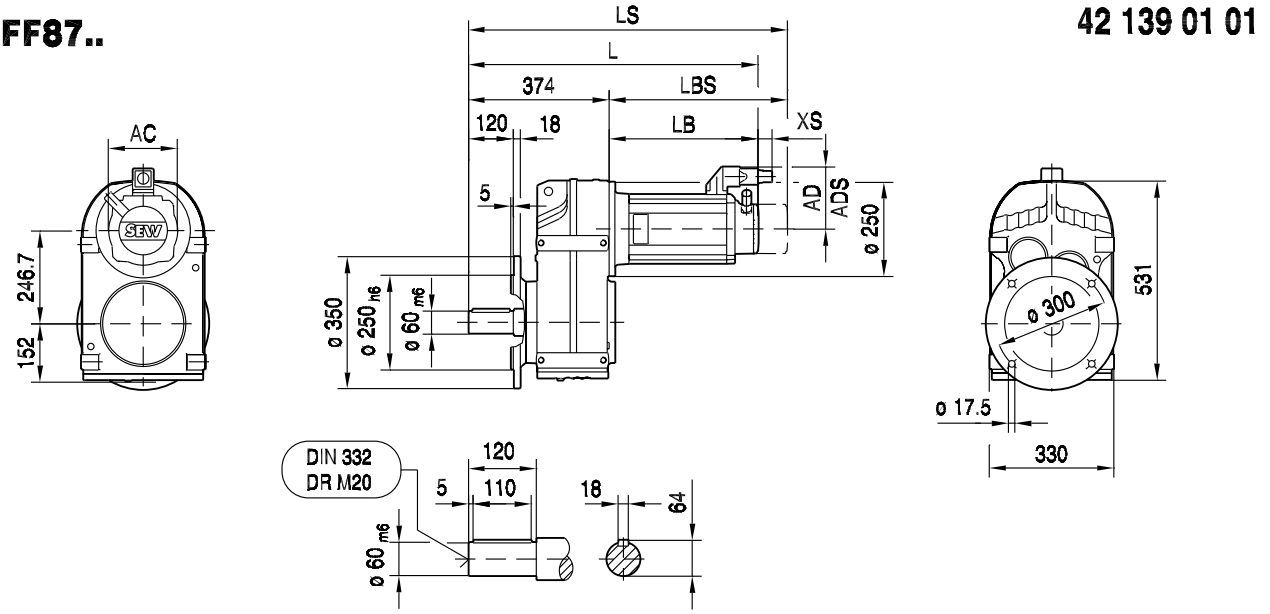

FAF87..

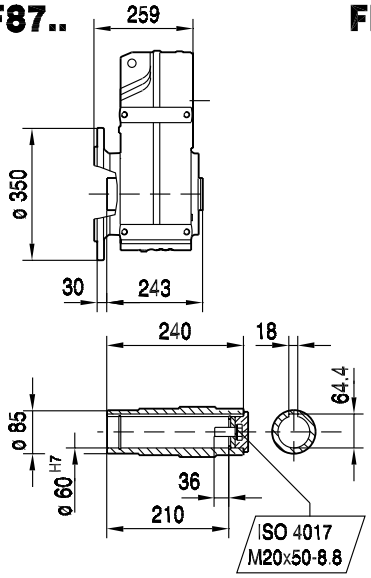

FHF87..

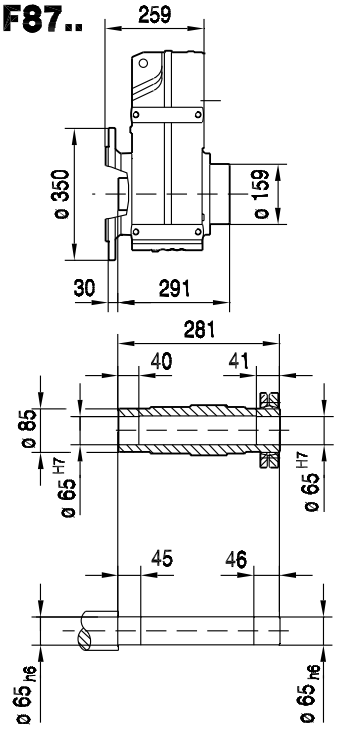

FVF87..

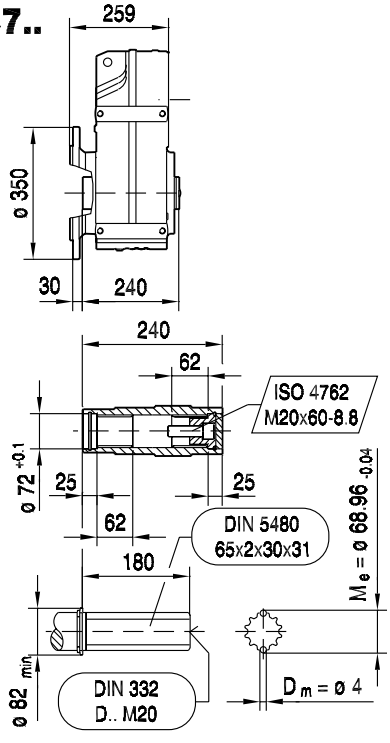

(→ 📖 150)	CM90S	CM90M	CM90L	CM112S	CM112M	CM112L	CM112H				
AC	142	142	142	186	186	186	186				
AD	140	140	140	162	162	162	162				
ADS	140	140	140	162	162	162	162				
L	646	673	727	681	708	770	900				
LS	742	769	823	771	798	860	965				
LB	272	299	353	307	334	396	526				
LBS	368	395	449	397	424	486	591				
XS	50	50	50	36	36	36	36				

FA87..

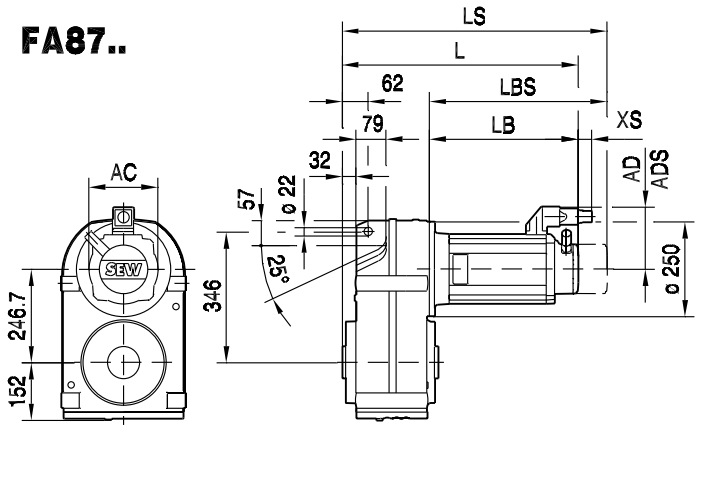

42 140 01 01

F.. /G ..

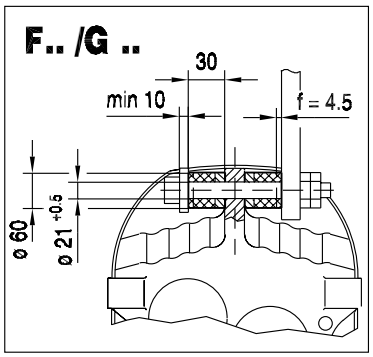

FA87..

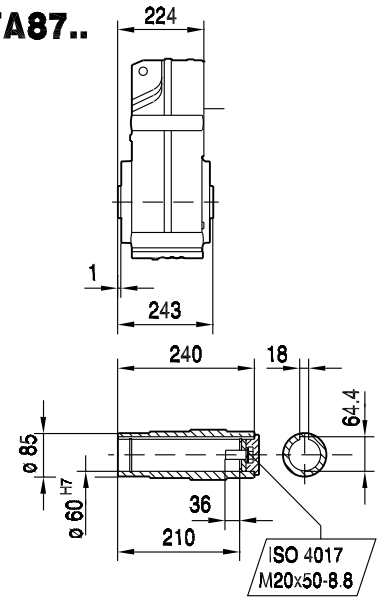

FH87..

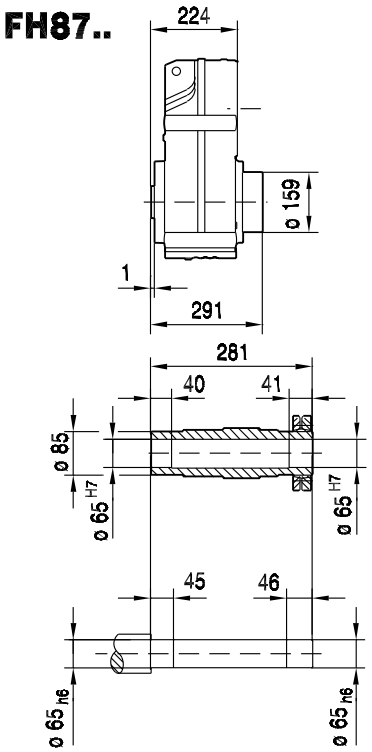

FV87..

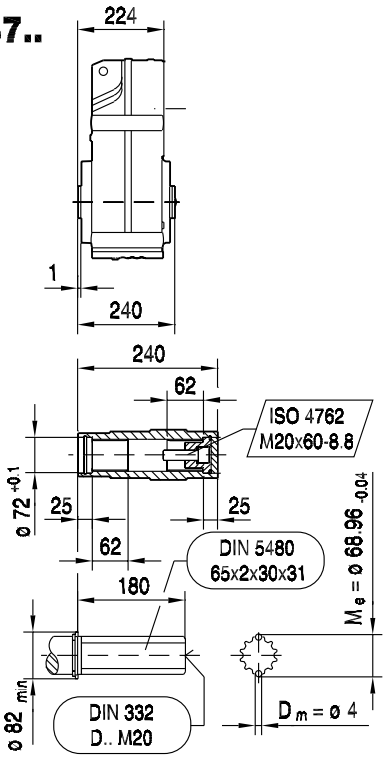

(→ 150)	CM90S	CM90M	CM90L	CM112S	CM112M	CM112L	CM112H				
AC	142	142	142	186	186	186	186				
AD	140	140	140	162	162	162	162				
ADS	140	140	140	162	162	162	162				
L	496	523	577	531	558	620	750				
LS	592	619	673	621	648	710	815				
LB	272	299	353	307	334	396	526				
LBS	368	395	449	397	424	486	591				
XS	50	50	50	36	36	36	36				

FAZ87..

42 044 00 04

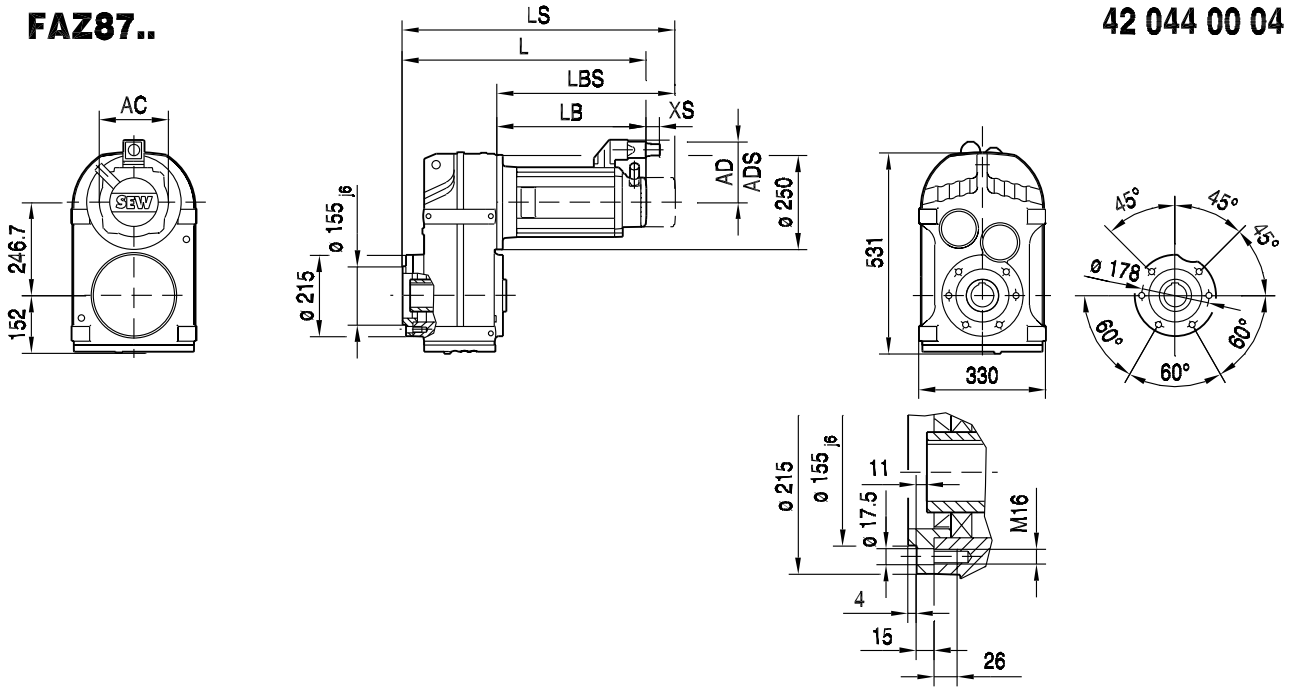

FAZ87..

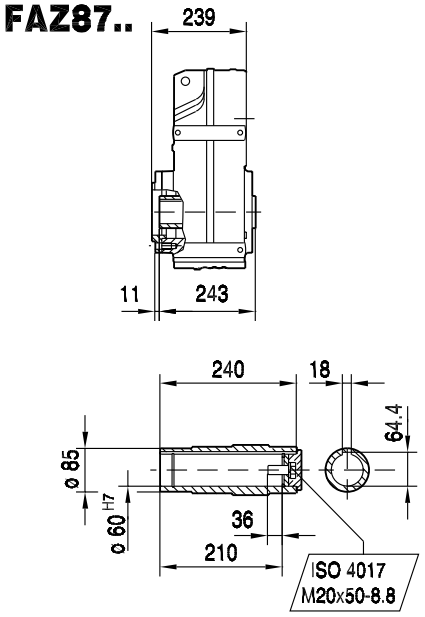

FHZ87..

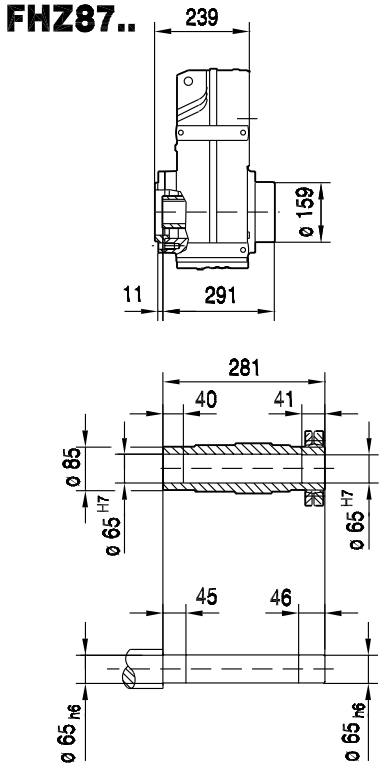

FVZ87..

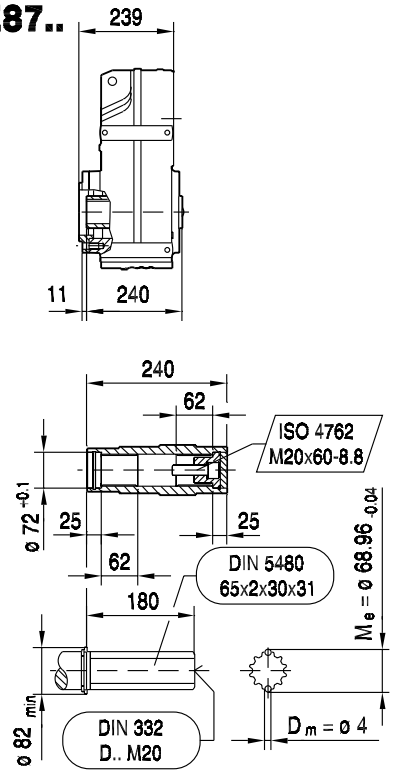

(→ 150)	CM90S	CM90M	CM90L	CM112S	CM112M	CM112L	CM112H				
AC	142	142	142	186	186	186	186				
AD	140	140	140	162	162	162	162				
ADS	140	140	140	162	162	162	162				
L	511	538	592	546	573	635	765				
LS	607	634	688	636	663	725	830				
LB	272	299	353	307	334	396	526				
LBS	368	395	449	397	424	486	591				
XS	50	50	50	36	36	36	36				

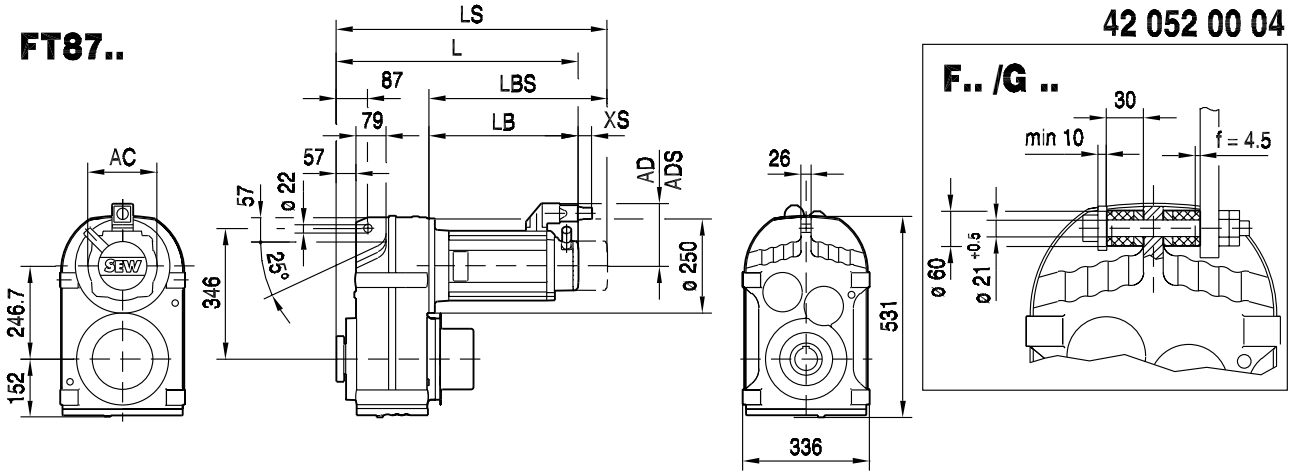

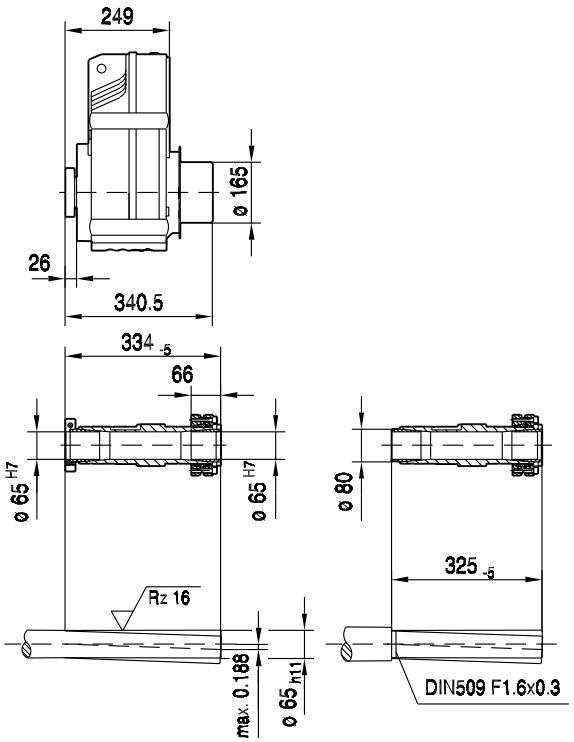

(→ 📖 150)	CM90S	CM90M	CM90L	CM112S	CM112M	CM112L	CM112H				
AC	142	142	142	186	186	186	186				
AD	140	140	140	162	162	162	162				
ADS	140	140	140	162	162	162	162				
L	521	548	602	556	583	645	775				
LS	617	644	698	646	673	735	840				
LB	272	299	353	307	334	396	526				
LBS	368	395	449	397	424	486	591				
XS	50	50	50	36	36	36	36				

9.16 F 97 / CM [Nm]

M_{aDyn} [Nm]		CM						
	i	90S	90M	90L	112S	112M	112L	112H
FA97 2	3.87					407	591	893
	4.57			335	365	481	698	1055
	5.23			384	418	550	799	1207
	6.17			452	493	649	943	1424
	7.07	272	358	518	564	744	1080	1632
	8.22	316	416	603	656	865	1256	1898
	9.06	348	459	664	723	954	1384	2092
	11.16			818	891	1175	1705	2576
	12.77			936	1019	1344	1951	2948
	15.06			1104	1202	1585	2301	3477
	17.25	663	873	1265	1377	1815	2635	3982
	20.07	771	1016	1472	1602	2112	3066	>4360
	22.11	849	1120	1621	1765	2327	3378	>4360
	24.92	957	1262	1827	1989	2623	3807	>4360
	27.44	1054	1389	2012	2191	2888	4192	>4360
	30.39	1167	1539	2229	2426	3198	>4360	
	33.91	1303	1717	2487	2707	3569	>4360	
	36.64	1407	1855	2687	2925			
	43.28	1662	2191	3174	3455			
FA97 3	32.5			2334	2541	3350	>4360	>4360
	38.86			2791	3038	4005	>4360	>4360
	44.49	1674	2206	3195	3478	>4360	>4360	>4360
	52.49	1975	2603	3770	4104	>4360	>4360	>4360
	58.06	2184	2879	4170	>4360	>4360	>4360	>4360
	65.47	2463	3247	>4360	>4360	>4360	>4360	>4360
	72.29	2720	3585	>4360	>4360	>4360	>4360	>4360
	75.63			>4360	>4360	>4360	>4360	>4360
	80.31	3021	3983	>4360	>4360	>4360	>4360	
	86.59	3258	4294	>4360	>4360	>4360	>4360	>4360
	89.85	3380	>4360	>4360	>4360	>4360	>4360	
	97.58	3671	>4360	>4360	>4360			
	102.16	3843	>4360	>4360	>4360	>4360	>4360	>4360
	112.99	4251	>4360	>4360	>4360	>4360	>4360	>4360
	127.42	>4360	>4360	>4360	>4360	>4360	>4360	>4360
	140.71	>4360	>4360	>4360	>4360	>4360	>4360	>4360
	156.3	>4360	>4360	>4360	>4360	>4360	>4360	
	174.87	>4360	>4360	>4360	>4360	>4360	>4360	
	189.92	>4360	>4360	>4360	>4360			
	223.88	>4360	>4360	>4360	>4360			
	253.41	>4360	>4360					
	276.77	>4360	>4360					

m [kg]		CM						
	s	90S	90M	90L	112S	112M	112L	112H
FA97	2	165	170	175	175	180	195	200
FA97	3	175	175	180	180	185	200	205
FAF: + 21.7 kg / F: + 7.5 kg / FF: + 40.3 kg								

CM..	i	n_{epk} [1/min]	η [%]	c_T FA [Nm/']	FAF [Nm/']	F [Nm/']	FF [Nm/']	φ /R [']
FA97 2	3.87	3197	97	626.57	626.57	324.27	283.43	9
	4.57	3597	97	626.57	626.57	324.27	283.43	9
	5.23	3924	97	626.57	626.57	324.27	283.43	9
	6.17	4378	97	626.57	626.57	324.27	283.43	9
	7.07	4500	97	626.57	626.57	324.27	283.43	9
	8.22	4500	97	626.57	626.57	324.27	283.43	9
	9.06	4500	97	626.57	626.57	324.27	283.43	9
	11.16	4500	97	873.12	873.12	379.77	324.94	6
	12.77	4500	97	873.12	873.12	379.77	324.94	6
	15.06	4500	97	873.12	873.12	379.77	324.94	6
	17.25	4500	97	873.12	873.12	379.77	324.94	6
	20.07	4500	97	873.12	873.12	379.77	324.94	6
	22.11	4500	97	873.12	873.12	379.77	324.94	6
	24.92	4500	97	873.12	873.12	379.77	324.94	6
	27.44	4500	97	873.12	873.12	379.77	324.94	6
	30.39	4500	97	873.12	873.12	379.77	324.94	6
	33.91	4500	97	873.12	873.12	379.77	324.94	6
	36.64	4500	97	873.12	873.12	379.77	324.94	6
	43.28	4500	97	873.12	873.12	379.77	324.94	6
FA97 3	32.5	4500	95	955.89	955.89	394.63	335.76	6
	38.86	4378	95	955.89	955.89	394.63	335.76	6
	44.49	4500	95	955.89	955.89	394.63	335.76	6
	52.49	4500	95	955.89	955.89	394.63	335.76	6
	58.06	4500	95	955.89	955.89	394.63	335.76	6
	65.47	4500	95	955.89	955.89	394.63	335.76	6
	72.29	4500	95	955.89	955.89	394.63	335.76	6
	75.63	4378	95	964.96	964.96	396.17	336.87	6
	80.31	4500	95	955.89	955.89	394.63	335.76	6
	86.59	4500	95	964.96	964.96	396.17	336.87	6
	89.85	4500	95	955.89	955.89	394.63	335.76	6
	97.58	4500	95	955.89	955.89	394.63	335.76	6
	102.16	4500	95	964.96	964.96	396.17	336.87	6
	112.99	4500	95	964.96	964.96	396.17	336.87	6
	127.42	4500	95	964.96	964.96	396.17	336.87	6
	140.71	4500	95	964.96	964.96	396.17	336.87	6
	156.3	4500	95	964.96	964.96	396.17	336.87	6
	174.87	4500	95	964.96	964.96	396.17	336.87	6
	189.92	4500	95	964.96	964.96	396.17	336.87	6
	223.88	4500	95	964.96	964.96	396.17	336.87	6
	253.41	4500	95	964.96	964.96	396.17	336.87	6
	276.77	4500	95	964.96	964.96	396.17	336.87	6



F..CMP, DS, CM
F 97 / CM [Nm]

CM..	i	M_{amax} [Nm]	M_{apk} [Nm]	$M_{aNotaus}$ [Nm]	n_{ak} [1/min]	J_G 10^{-4} [kgm^2]	F_{Ramax} FA [N]	F_{Ramax} FAF [N]	F_{Ramax} F [N]	F_{Ramax} FF [N]	F_{Rapk} FA [N]	F_{Rapk} FAF [N]	F_{Rapk} F [N]	F_{Rapk} FF [N]
FA97 2	3.87	1800	2700	3060	465	266	10300	10300	9960	16500	40000	40000	33600	30600
	4.57	2050	3000	3485	328	193	10200	10200	9950	16800	40000	40000	32900	30300
	5.23	2150	3020	3655	325	153	10700	10700	10400	17400	40000	40000	32800	30300
	6.17	2250	3030	3825	324	116	11400	11400	11100	18300	40000	40000	32800	30200
	7.07	2360	3040	4012	297	92	11900	11900	11500	19000	40000	40000	32800	30200
	8.22	2360	3050	4012	328	72	13100	13100	12600	20300	40000	40000	32800	30200
	9.06	2360	3050	4012	353	61	13900	13900	13400	21100	40000	40000	32800	30200
	11.16	4100	4360	6970	143	104	9710	9710	10000	18700	40000	40000	29700	28200
	12.77	4300	4360	7310	141	85	10100	10100	10500	19400	40000	40000	29700	28200
	15.06	4300	4360	7310	153	67	11700	11700	11900	21100	40000	40000	29700	28200
	17.25	4300	4360	7310	157	55	13100	13100	13200	22500	40000	40000	29700	28200
	20.07	4300	4360	7310	149	45	14700	14700	14600	24100	40000	40000	29700	28200
	22.11	4300	4360	7310	149	39	15700	15700	15600	25200	40000	40000	29700	28200
	24.92	4300	4360	7310	144	33	17100	17100	16800	26600	40000	40000	29700	28200
	27.44	4300	4360	7310	142	28	18200	18200	17900	27800	40000	40000	29700	28200
	30.39	4300	4360	7310	141	22	19500	19500	19000	28300	40000	40000	29700	28200
	33.91	4300	4360	7310	139	19	20900	20900	20300	28300	40000	40000	29700	28200
	36.64	3070	4360	5219	191	17	27000	27000	25500	30200	40000	40000	29700	28200
	43.28	3070	4360	5219	162	13	29300	29300	27600	30200	40000	40000	29700	28200
FA97 3	32.5	4300	4360	7310	52	60	20300	20300	19800	28300	40000	40000	29700	28200
	38.86	4300	4360	7310	51	48	22700	22700	21900	28300	40000	40000	29700	28200
	44.49	4300	4360	7310	52	39	24500	24500	23600	28300	40000	40000	29700	28200
	52.49	4300	4360	7310	51	31	26900	26900	25800	28300	40000	40000	29700	28200
	58.06	4300	4360	7310	52	27	28500	28500	27200	28300	40000	40000	29700	28200
	65.47	4300	4360	7310	52	23	30400	30400	29000	28300	40000	40000	29700	28200
	72.29	4300	4360	7310	53	20	32000	32000	29900	28300	40000	40000	29700	28200
	75.63	4300	4360	7310	56	42	32800	32800	29900	28300	40000	40000	29700	28200
	80.31	4300	4360	7310	52	17	33800	33800	29900	28300	40000	40000	29700	28200
	86.59	4300	4360	7310	57	34	35100	35100	29900	28300	40000	40000	29700	28200
	89.85	4300	4360	7310	52	14	35700	35700	29900	28300	40000	40000	29700	28200
	97.58	4300	4360	7310	52	13	37200	37200	29900	28300	40000	40000	29700	28200
	102.16	4300	4360	7310	58	28	38100	38100	29900	28300	40000	40000	29700	28200
	112.99	4300	4360	7310	58	25	40000	40000	29900	28300	40000	40000	29700	28200
	127.42	4300	4360	7310	55	20	40000	40000	29900	28300	40000	40000	29700	28200
	140.71	4300	4360	7310	50	18	40000	40000	29900	28300	40000	40000	29700	28200
	156.3	4300	4360	7310	45	15	40000	40000	29900	28300	40000	40000	29700	28200
	174.87	4300	4360	7310	40	13	40000	40000	29900	28300	40000	40000	29700	28200
	189.92	4300	4360	7310	37	12	40000	40000	29900	28300	40000	40000	29700	28200
	223.88	4300	4360	7310	31	9.2	40000	40000	29900	28300	40000	40000	29700	28200
	253.41	4300	4360	7310	28	5.9	40000	40000	29900	28300	40000	40000	29700	28200
	276.77	4300	4360	7310	25	5.1	40000	40000	29900	28300	40000	40000	29700	28200

9.17 F 97 / CM [mm]

F97..

42 141 01 01

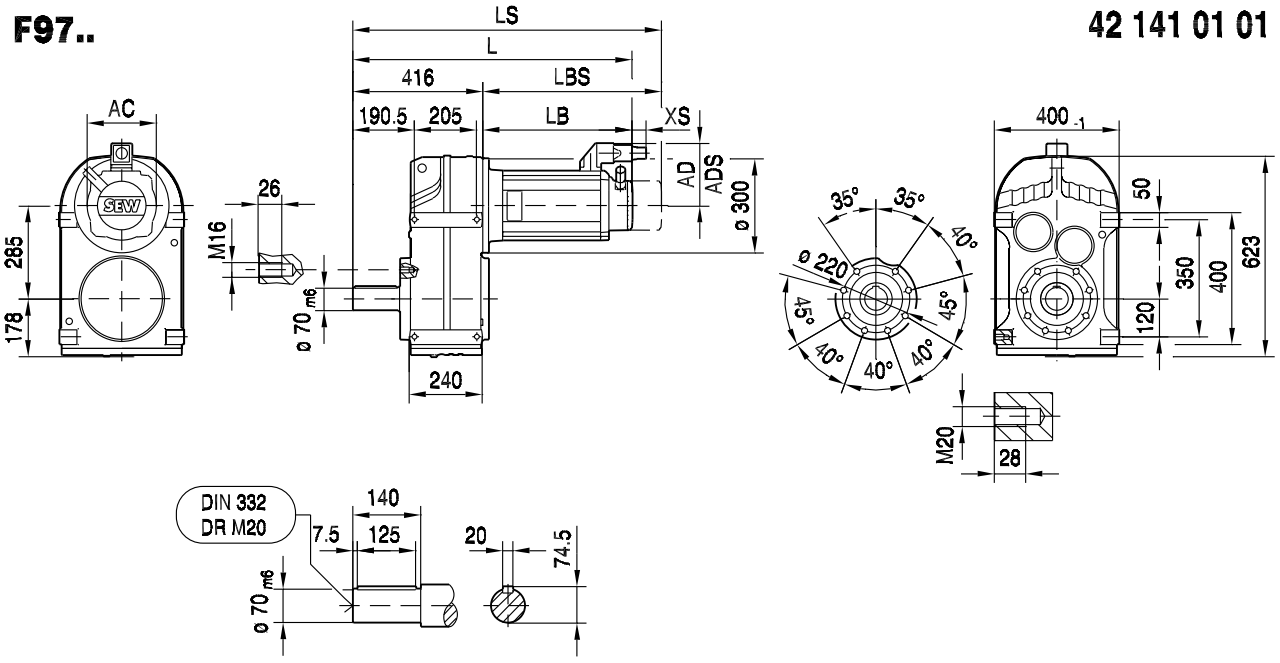

FA97B..

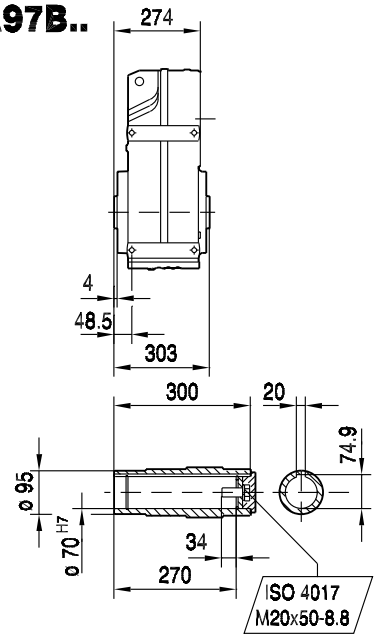

FH97B..

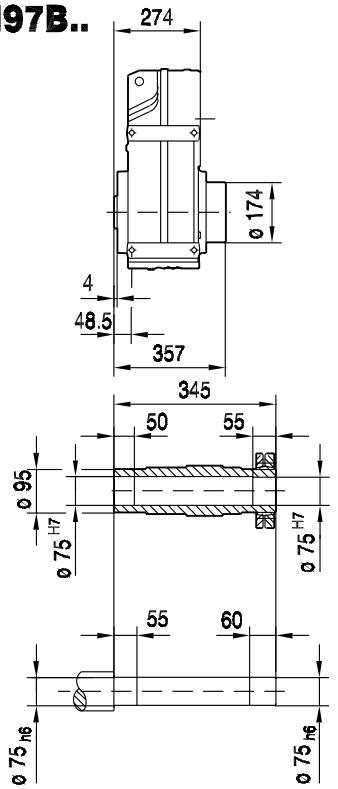

FV97B..

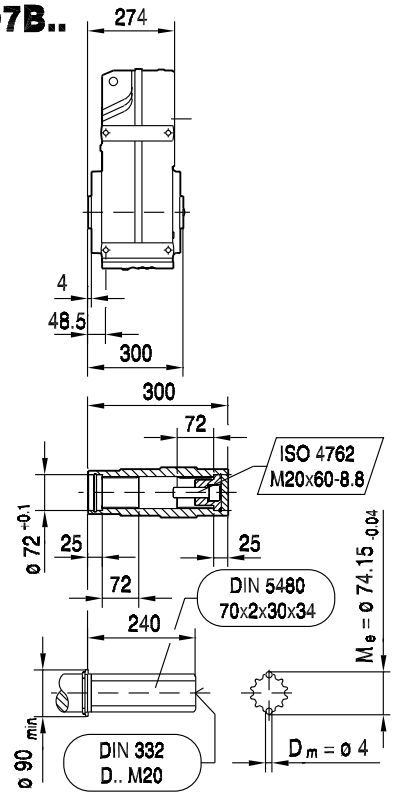

(→ 150)	CM90S	CM90M	CM90L	CM112S	CM112M	CM112L	CM112H				
AC	142	142	142	186	186	186	186				
AD	140	140	140	162	162	162	162				
ADS	140	140	140	162	162	162	162				
L	682	709	763	718	745	807	937				
LS	778	805	859	808	835	897	1002				
LB	266	293	347	302	329	391	521				
LBS	362	389	443	392	419	481	586				
XS	50	50	50	36	36	36	36				

FF97..

42 142 01 01

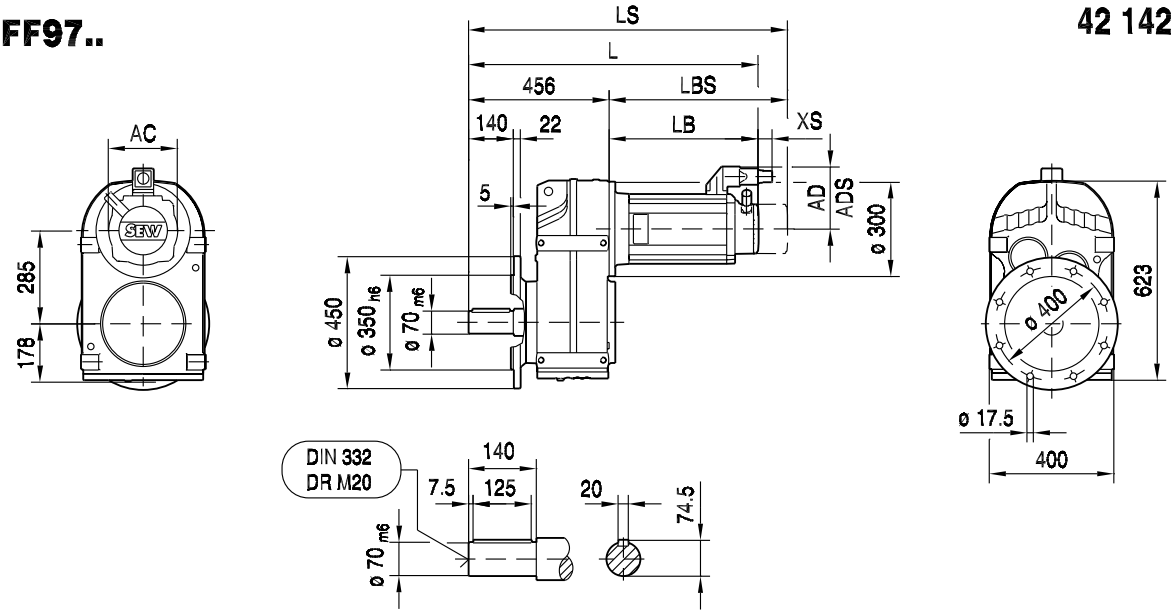

FAF97..

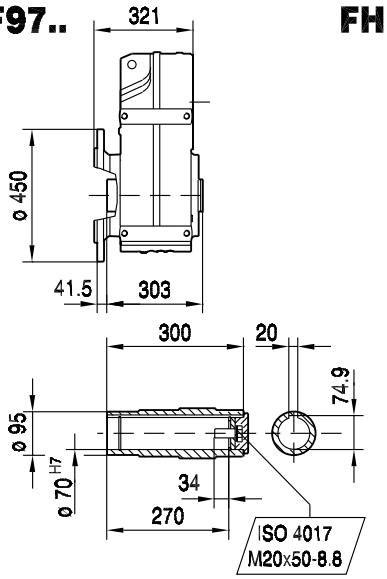

FHF97..

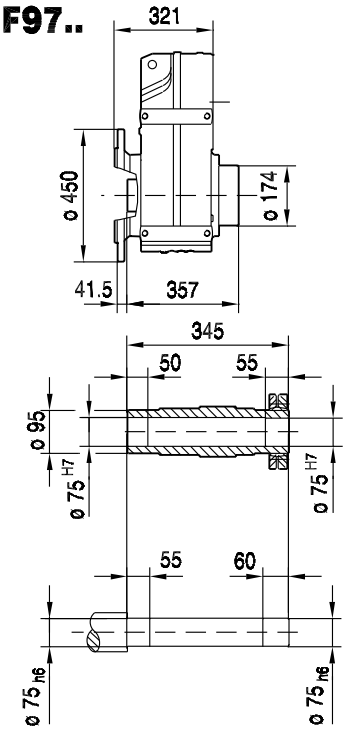

FVF97..

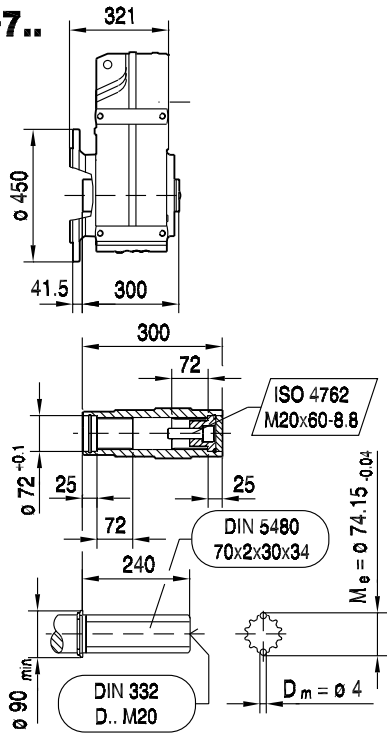

(→ 📖 150)	CM90S	CM90M	CM90L	CM112S	CM112M	CM112L	CM112H				
AC	142	142	142	186	186	186	186				
AD	140	140	140	162	162	162	162				
ADS	140	140	140	162	162	162	162				
L	722	749	803	758	785	847	977				
LS	818	845	899	848	875	937	1042				
LB	266	293	347	302	329	391	521				
LBS	362	389	443	392	419	481	586				
XS	50	50	50	36	36	36	36				

FA97..

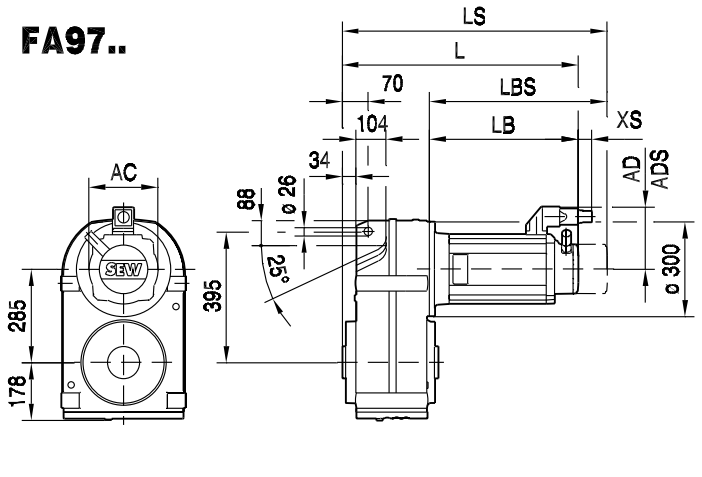

42 143 01 01

F.. /G ..

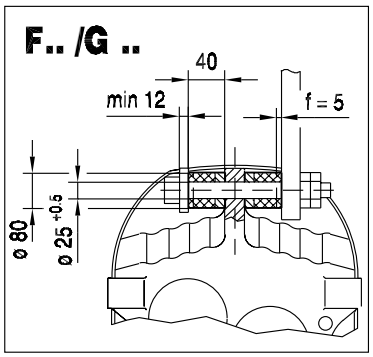

FA97..

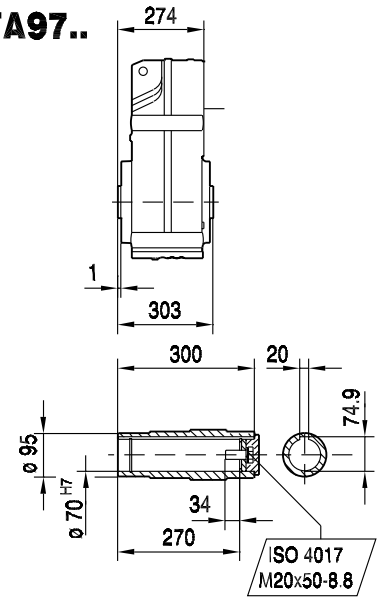

FH97..

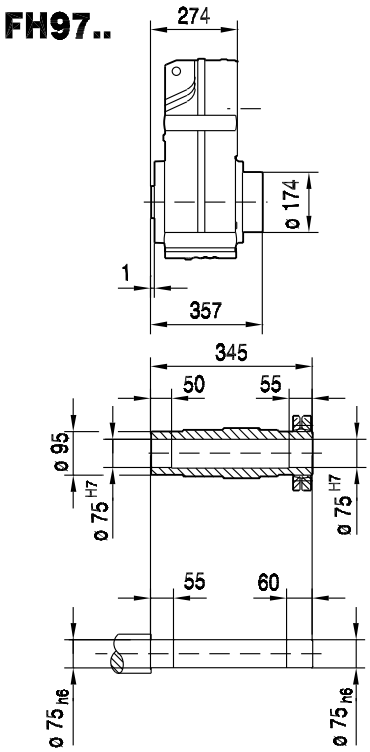

FV97..

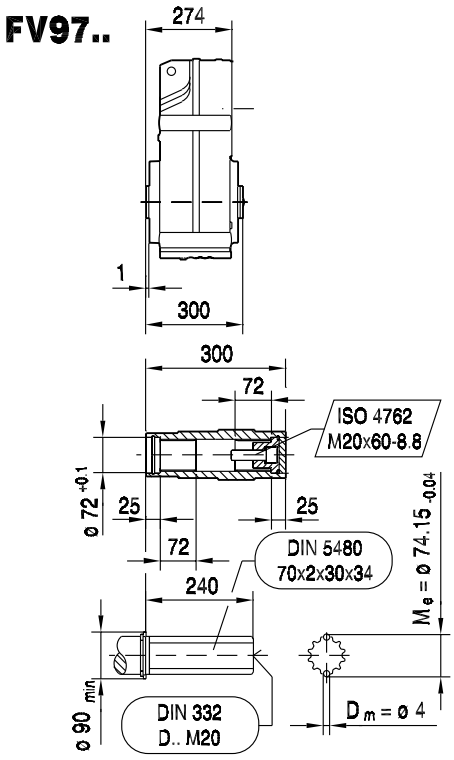

(→ 150)	CM90S	CM90M	CM90L	CM112S	CM112M	CM112L	CM112H				
AC	142	142	142	186	186	186	186				
AD	140	140	140	162	162	162	162				
ADS	140	140	140	162	162	162	162				
L	540	567	621	576	603	665	795				
LS	636	663	717	666	693	755	860				
LB	266	293	347	302	329	391	521				
LBS	362	389	443	392	419	481	586				
XS	50	50	50	36	36	36	36				



F..CMP, DS, CM
F 97 / CM [mm]

FAZ97..

42 045 00 04

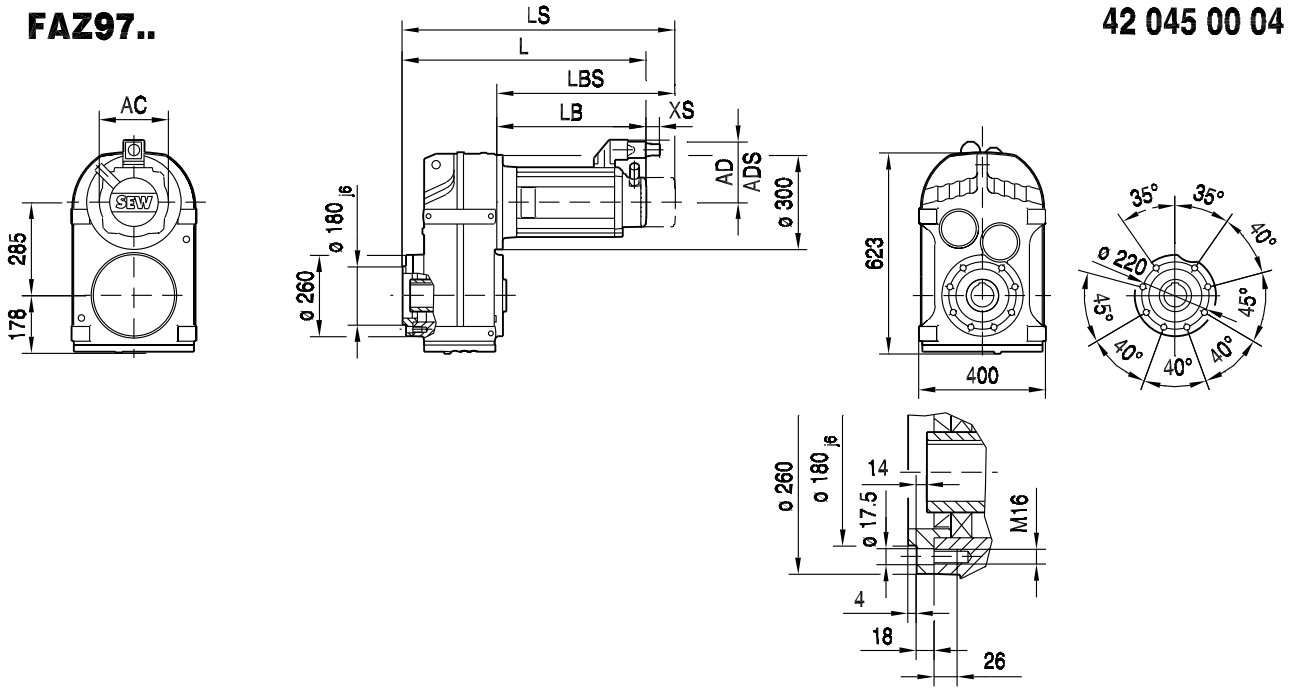

FAZ97..

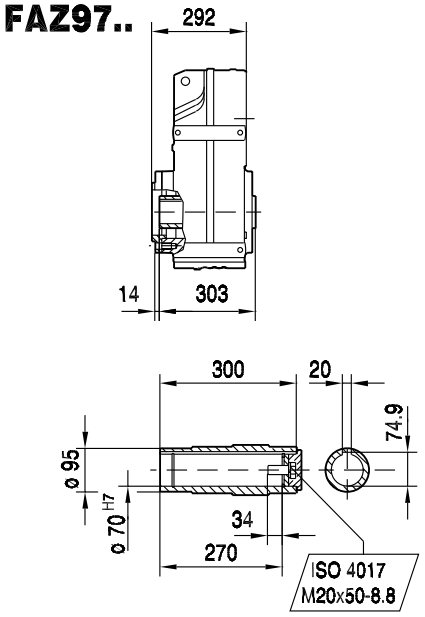

FHZ97..

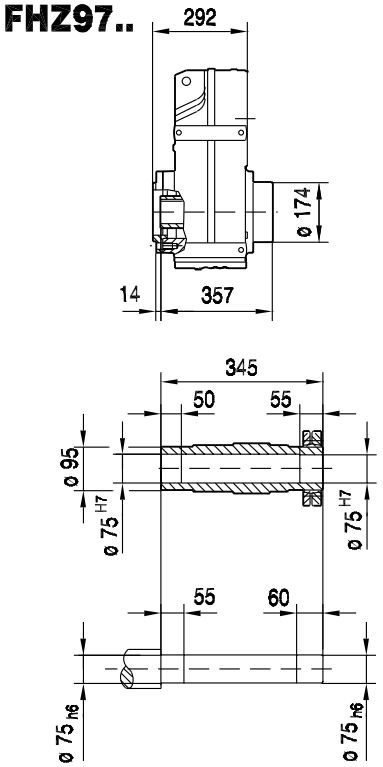

FVZ97..

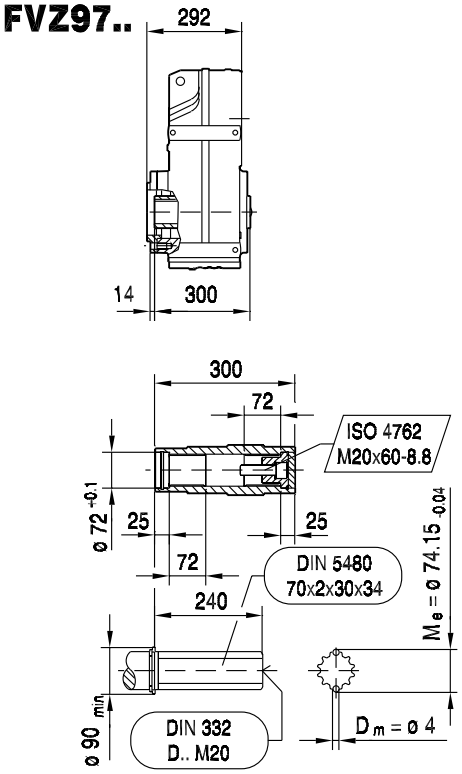

(→ 📖 150)	CM90S	CM90M	CM90L	CM112S	CM112M	CM112L	CM112H				
AC	142	142	142	186	186	186	186				
AD	140	140	140	162	162	162	162				
ADS	140	140	140	162	162	162	162				
L	558	585	639	594	621	683	813				
LS	654	681	735	684	711	773	878				
LB	266	293	347	302	329	391	521				
LBS	362	389	443	392	419	481	586				
XS	50	50	50	36	36	36	36				

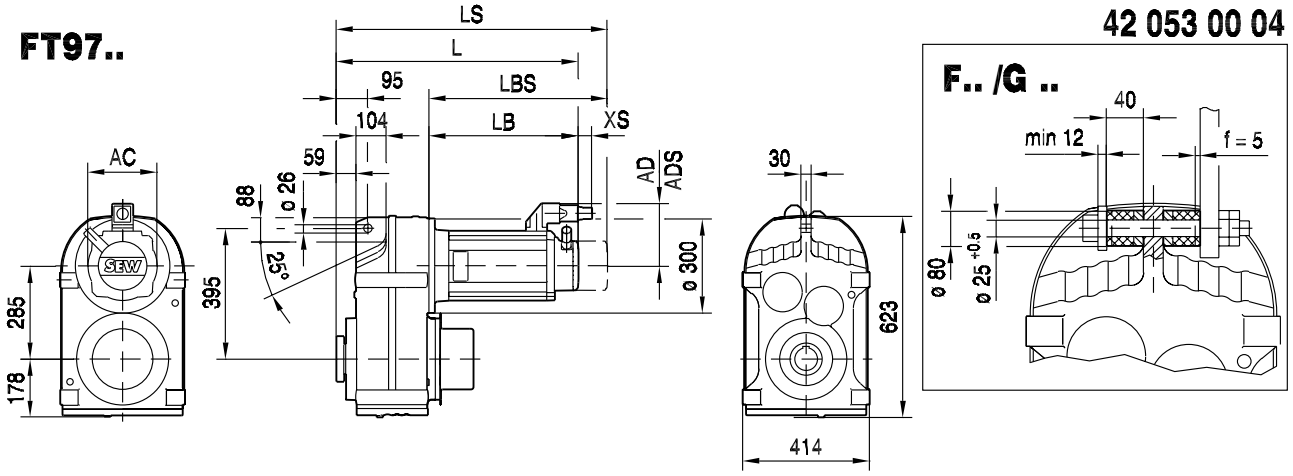

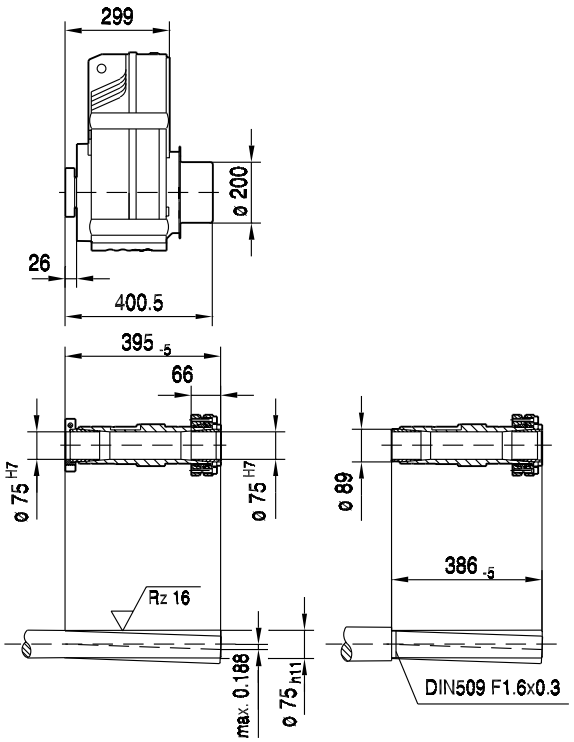

(→ 📖 150)	CM90S	CM90M	CM90L	CM112S	CM112M	CM112L	CM112H				
AC	142	142	142	186	186	186	186				
AD	140	140	140	162	162	162	162				
ADS	140	140	140	162	162	162	162				
L	565	592	646	601	628	690	820				
LS	661	688	742	691	718	780	885				
LB	266	293	347	302	329	391	521				
LBS	362	389	443	392	419	481	586				
XS	50	50	50	36	36	36	36				

9.18 F 107 / CM [Nm]

M_{aDyn} [Nm]		CM			
	i	112S	112M	112L	112H
FA107 2	5.03				1161
	6.22		655	950	1436
	7.4	591	779	1131	1708
	8.37	668	881	1279	1932
	9.69	774	1020	1480	2237
	9.96				2299
	12.33		1298	1884	2847
	14.67	1171	1544	2241	3387
	16.58	1324	1745	2533	3828
	19.2	1533	2021	2933	4433
	21.76	1737	2290	3324	5024
	25.14	2007	2646	3841	5804
	27.57	2201	2902	4212	6365
	33.79	2697	3556	5162	7801
FA107 3	31.8		3278	4758	7190
	37.61	2941	3877	5627	8504
	43.03	3364	4435	6438	>8860
	50.73	3966	5229	7590	>8860
	58.12	4544	5991	8696	>8860
	67.62	5287	6970	>8860	>8860
	74.52	5826	7681	>8860	>8860
	83.99	6567	8657	>8860	>8860
	88.49	6919	>8860	>8860	>8860
	92.47	7230	>8860	>8860	>8860
	101.38	7926	>8860	>8860	>8860
	117.94	>8860	>8860	>8860	>8860
	129.97	>8860	>8860	>8860	>8860
	146.49	>8860	>8860	>8860	>8860
	161.28	>8860	>8860	>8860	>8860
	178.64	>8860	>8860	>8860	
	199.31	>8860	>8860	>8860	
	215.37	>8860			
	254.4	>8860			

m [kg]		CM			
	s	112S	112M	112L	112H
FA107	2	245	250	265	270
FA107	3	255	260	275	280
FAF: + 21.0 kg / F: + 16.6 kg / FF: + 43.9 kg					

CM..				c_T				φ
	i	n_{epk} [1/min]	η [%]	FA [Nm/']	FAF [Nm/']	F [Nm/']	FF [Nm/']	/R [']
FA107 2	5.03	2797	97	1358.8	1358.8	722.45	666.16	7
	6.22	3197	97	1358.8	1358.8	722.45	666.16	7
	7.4	3597	97	1358.8	1358.8	722.45	666.16	7
	8.37	3924	97	1358.8	1358.8	722.45	666.16	7
	9.69	4500	97	1358.8	1358.8	722.45	666.16	7
	9.96	4500	97	1612.39	1612.39	788.37	721.81	5
	12.33	4500	97	1612.39	1612.39	788.37	721.81	5
	14.67	4500	97	1612.39	1612.39	788.37	721.81	5
	16.58	4500	97	1612.39	1612.39	788.37	721.81	5
	19.2	4500	97	1612.39	1612.39	788.37	721.81	5
	21.76	4500	97	1612.39	1612.39	788.37	721.81	5
	25.14	4500	97	1612.39	1612.39	788.37	721.81	5
	27.57	4500	97	1612.39	1612.39	788.37	721.81	5
	33.79	4500	97	1612.39	1612.39	788.37	721.81	5



CM..	i	n_{epk} [1/min]	η [%]	c_T FA [Nm/']	FAF [Nm/']	F [Nm/']	FF [Nm/']	φ /R [']
	31.8	3197	95	1805.54	1805.54	831.89	758.12	6
	37.61	3597	95	1805.54	1805.54	831.89	758.12	6
	43.03	3924	95	1805.54	1805.54	831.89	758.12	6
	50.73	4378	95	1805.54	1805.54	831.89	758.12	6
	58.12	4500	95	1805.54	1805.54	831.89	758.12	6
	67.62	4500	95	1805.54	1805.54	831.89	758.12	6
	74.52	4500	95	1805.54	1805.54	831.89	758.12	6
	83.99	4500	95	1805.54	1805.54	831.89	758.12	6
FA107	88.49	4378	95	1823.33	1823.33	835.64	761.24	5
3	92.47	4500	95	1805.54	1805.54	831.89	758.12	6
	101.38	4500	95	1823.33	1823.33	835.64	761.24	5
	117.94	4500	95	1823.33	1823.33	835.64	761.24	5
	129.97	4500	95	1823.33	1823.33	835.64	761.24	5
	146.49	4500	95	1823.33	1823.33	835.64	761.24	5
	161.28	4500	95	1823.33	1823.33	835.64	761.24	5
	178.64	4500	95	1823.33	1823.33	835.64	761.24	5
	199.31	4500	95	1823.33	1823.33	835.64	761.24	5
	215.37	4500	95	1823.33	1823.33	835.64	761.24	5
	254.4	4500	95	1823.33	1823.33	835.64	761.24	5

CM..	i	M_{amax} [Nm]	M_{apk} [Nm]	$M_{aNotaus}$ [Nm]	n_{ak} [1/min]	J_G 10^{-4} [kgm^2]	F_{Ramax} FA [N]	FAF [N]	F [N]	FF [N]	F_{Rapk} FA [N]	FAF [N]	F [N]	FF [N]
	5.03	4600	6240	7820	417	439	4520	39000	16400	19200	65000	65000	52500	55300
	6.22	4600	6240	7820	498	311	6920	42600	19000	22200	65000	65000	52500	55300
	7.4	4600	6240	7820	541	236	8400	45800	21300	24800	65000	65000	52500	55300
	8.37	4800	6240	8160	490	195	8720	47400	22000	25600	65000	65000	52500	55300
	9.69	4910	6240	8347	485	154	9670	50000	23500	27300	65000	65000	52500	55300
	9.96	6500	8860	11050	171	280	6200	47000	21500	25300	65000	65000	46500	45600
FA107	12.33	7000	8860	11900	138	209	6580	49800	22600	26600	65000	65000	46500	45600
2	14.67	7680	8860	13056	102	164	6050	51500	22400	26500	65000	65000	46500	45600
	16.58	7840	8860	13328	97	138	6870	53800	23900	28200	65000	65000	46500	45600
	19.2	7840	8860	13328	94	112	8600	57400	26500	31200	65000	65000	46500	45600
	21.76	7840	8860	13328	92	92	10100	60600	28800	33800	65000	65000	46500	45600
	25.14	7840	8860	13328	88	76	12000	64500	31500	36800	65000	65000	46500	45600
	27.57	7840	8860	13328	87	66	13200	65000	33300	38800	65000	65000	46500	45600
	33.79	7400	8860	12580	104	43	17700	65000	38300	44900	65000	65000	46500	45600
	31.8	7680	8860	13056	69	125	15800	65000	36500	42700	65000	65000	46500	45600
	37.61	7680	8860	13056	74	94	18300	65000	39500	46300	65000	65000	46500	45600
	43.03	7680	8860	13056	79	77	20300	65000	42000	49000	65000	65000	46500	45600
	50.73	7680	8860	13056	85	62	23000	65000	45100	51100	65000	65000	46500	45600
	58.12	7680	8860	13056	88	51	25300	65000	47800	51100	65000	65000	46500	45600
	67.62	7680	8860	13056	92	42	28000	65000	49800	51100	65000	65000	46500	45600
	74.52	7680	8860	13056	94	37	29900	65000	49800	51100	65000	65000	46500	45600
	83.99	7680	8860	13056	83	31	32200	65000	49800	51100	65000	65000	46500	45600
FA107	88.49	7680	8860	13056	79	56	33200	65000	49800	51100	65000	65000	46500	45600
3	92.47	7680	8860	13056	76	27	34100	65000	49800	51100	65000	65000	46500	45600
	101.38	7680	8860	13056	69	47	36000	65000	49800	51100	65000	65000	46500	45600
	117.94	7680	8860	13056	59	39	39300	65000	49800	51100	65000	65000	46500	45600
	129.97	7680	8860	13056	54	34	41400	65000	49800	51100	65000	65000	46500	45600
	146.49	7680	8860	13056	48	29	44200	65000	49800	51100	65000	65000	46500	45600
	161.28	7680	8860	13056	43	25	46600	65000	49800	51100	65000	65000	46500	45600
	178.64	7680	8860	13056	39	19	49100	65000	49800	51100	65000	65000	46500	45600
	199.31	7680	8860	13056	35	16	52000	65000	49800	51100	65000	65000	46500	45600
	215.37	7680	8860	13056	33	15	54000	65000	49800	51100	65000	65000	46500	45600
	254.4	7680	8860	13056	28	12	58600	65000	49800	51100	65000	65000	46500	45600

9.19 F 107 / CM [mm]

F107..

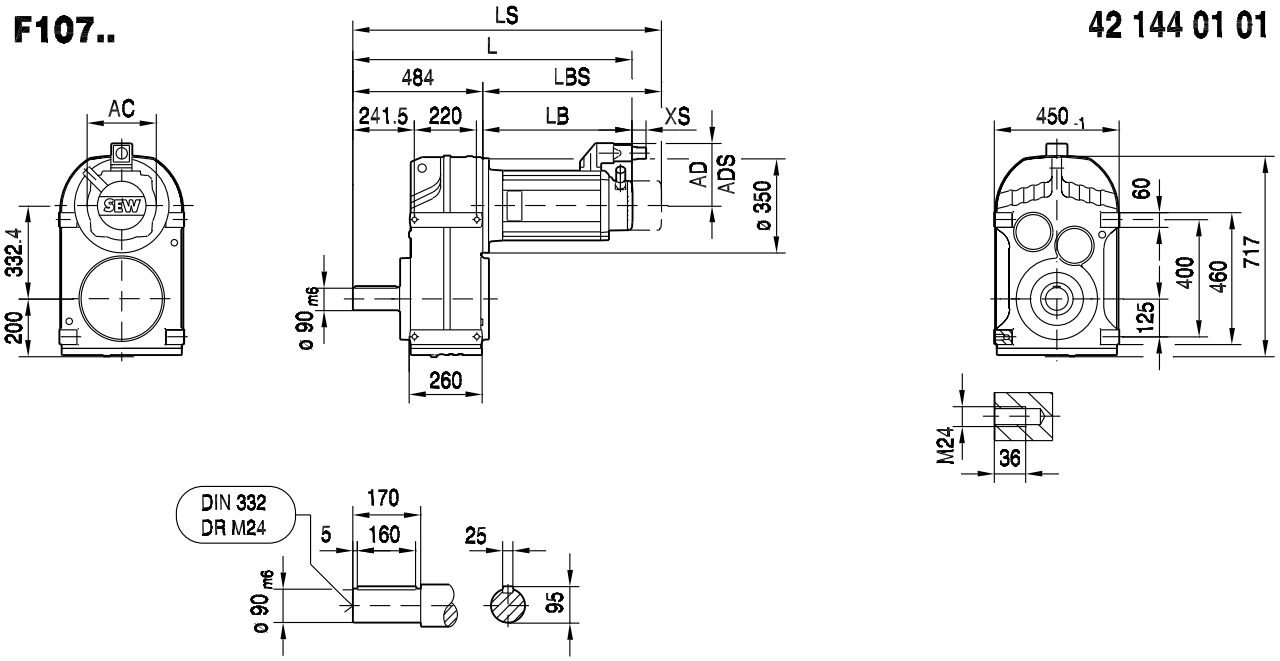

FA107B..

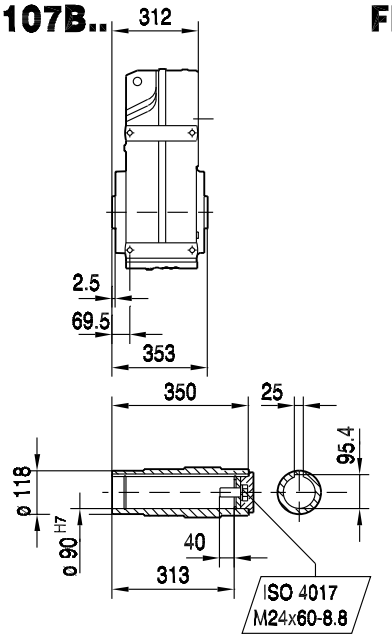

FH107B..

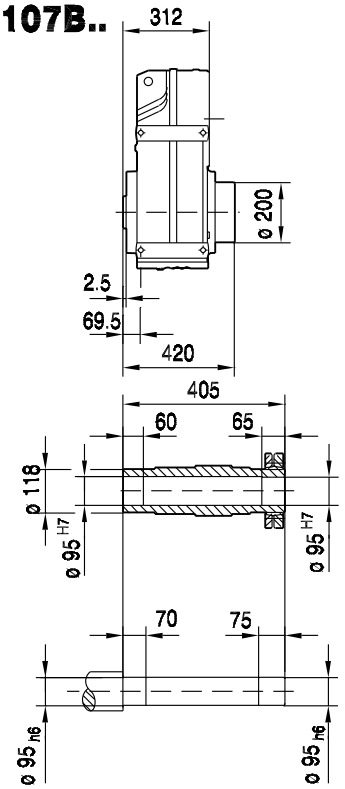

FV107B..

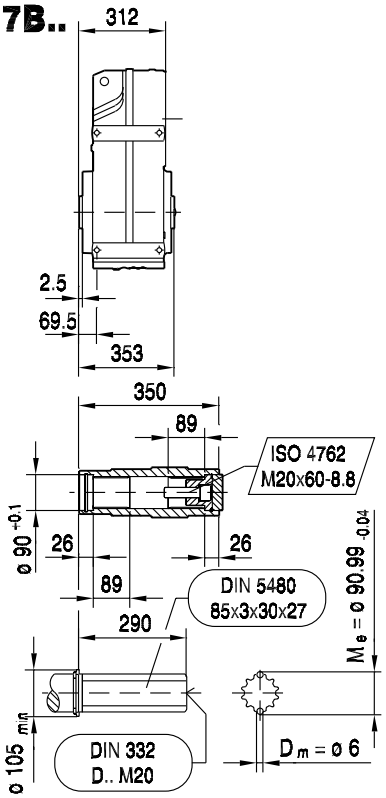

(→ 150)	CM112S	CM112M	CM112L	CM112H							
AC	186	186	186	186							
AD	162	162	162	162							
ADS	162	162	162	162							
L	780	807	869	999							
LS	870	897	959	1064							
LB	296	323	385	515							
LBS	386	413	475	580							
XS	36	36	36	36							

FF107..

42 145 01 01

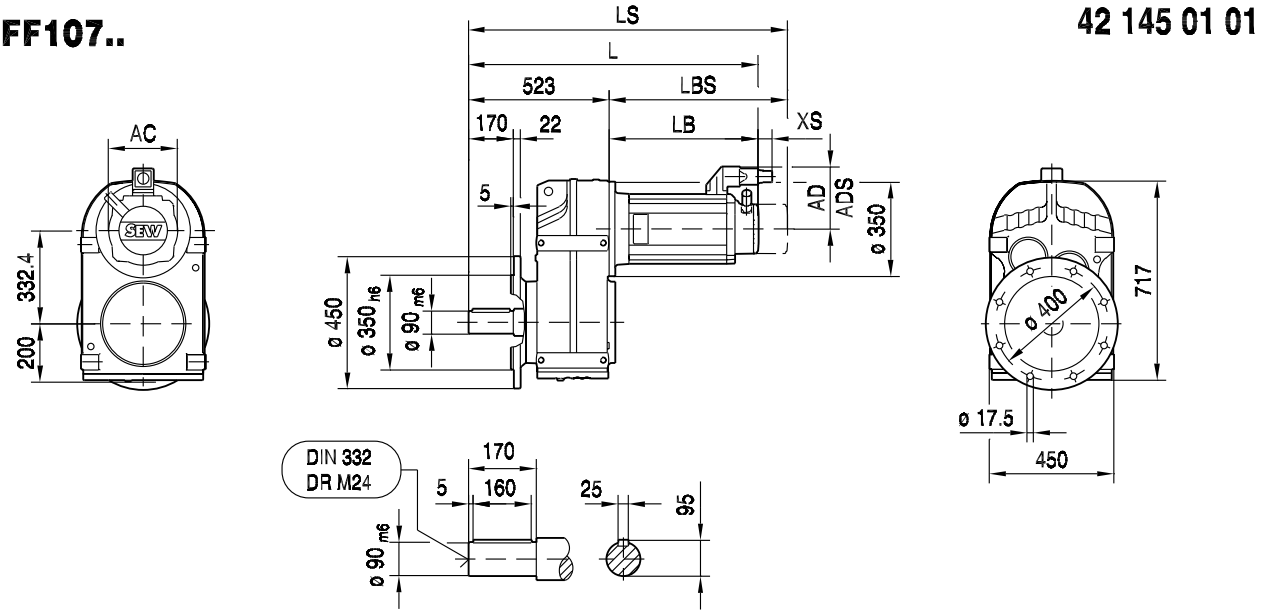

9

FAF107..

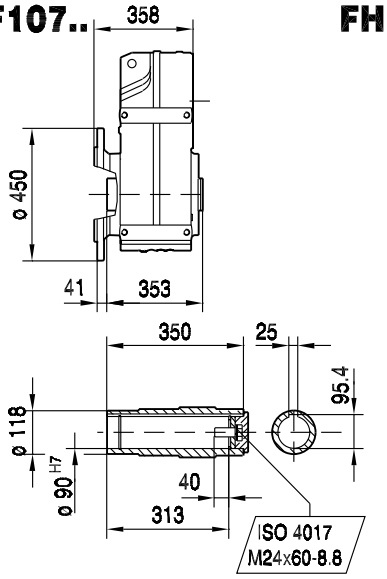

FHF107..

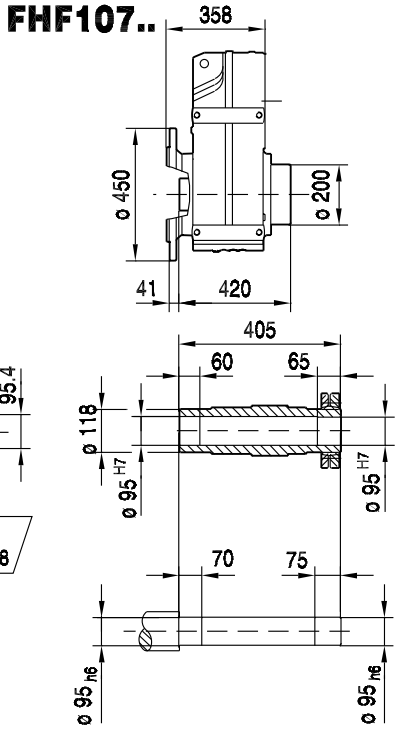

FVF107..

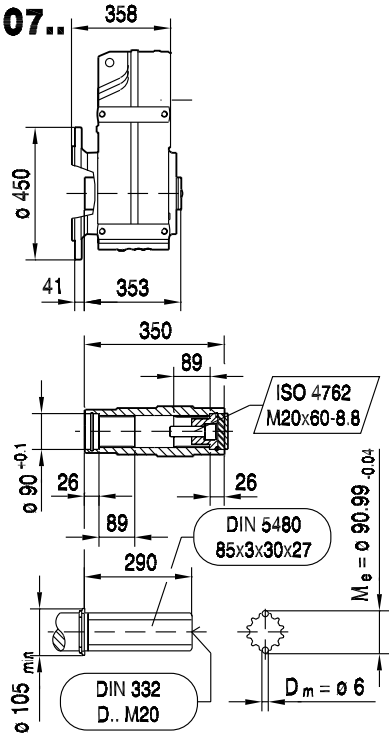

(→ 150)	CM112S	CM112M	CM112L	CM112H							
AC	186	186	186	186							
AD	162	162	162	162							
ADS	162	162	162	162							
L	819	846	908	1038							
LS	909	936	998	1103							
LB	296	323	385	515							
LBS	386	413	475	580							
XS	36	36	36	36							

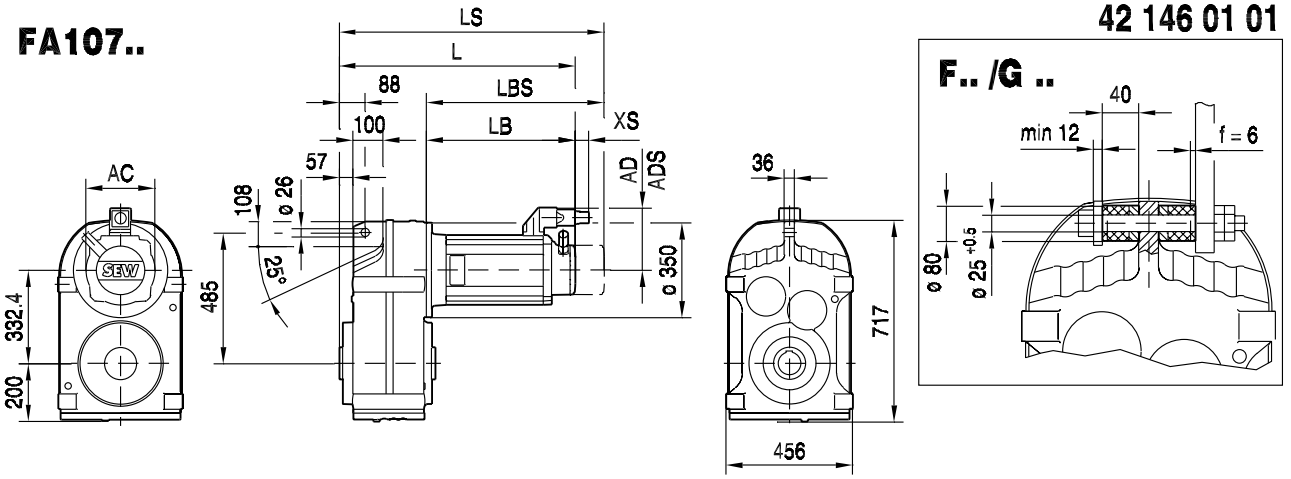

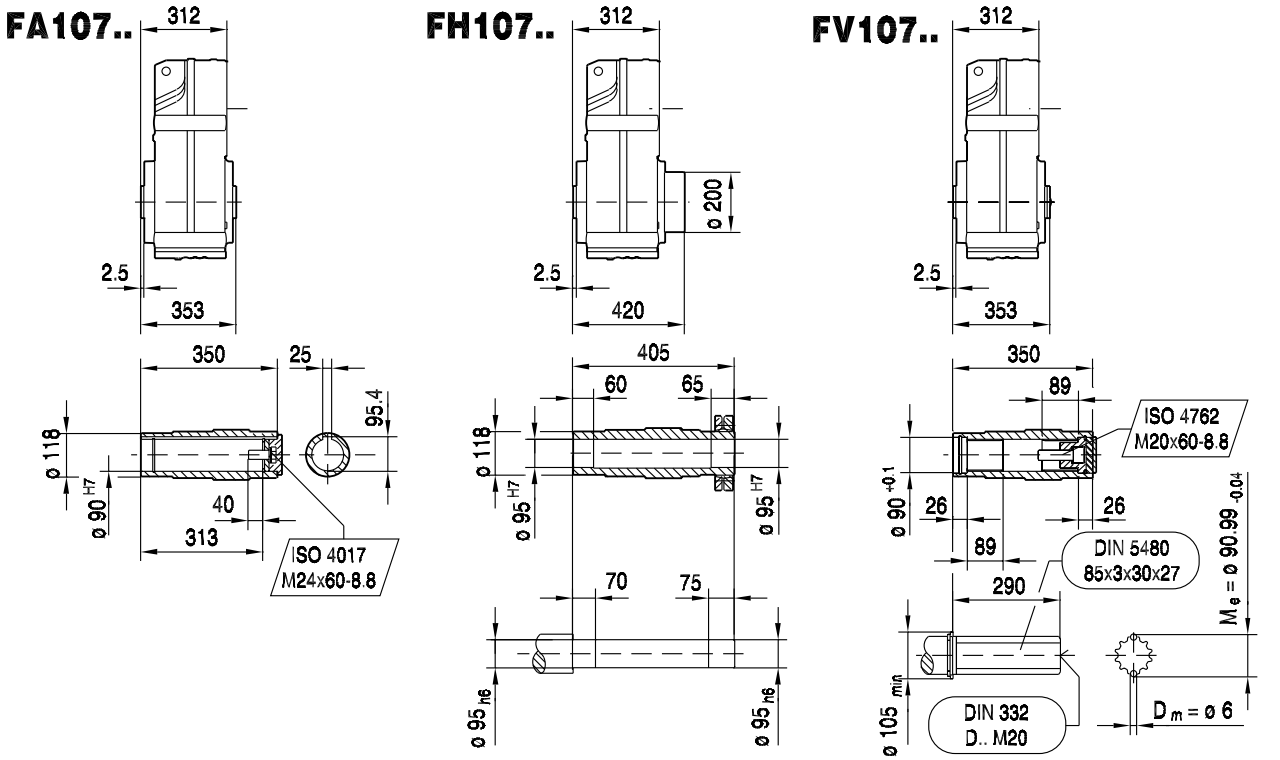

(→ 📖 150)	CM112S	CM112M	CM112L	CM112H							
AC	186	186	186	186							
AD	162	162	162	162							
ADS	162	162	162	162							
L	608	635	697	827							
LS	698	725	787	892							
LB	296	323	385	515							
LBS	386	413	475	580							
XS	36	36	36	36							

FAZ107..

42 046 00 04

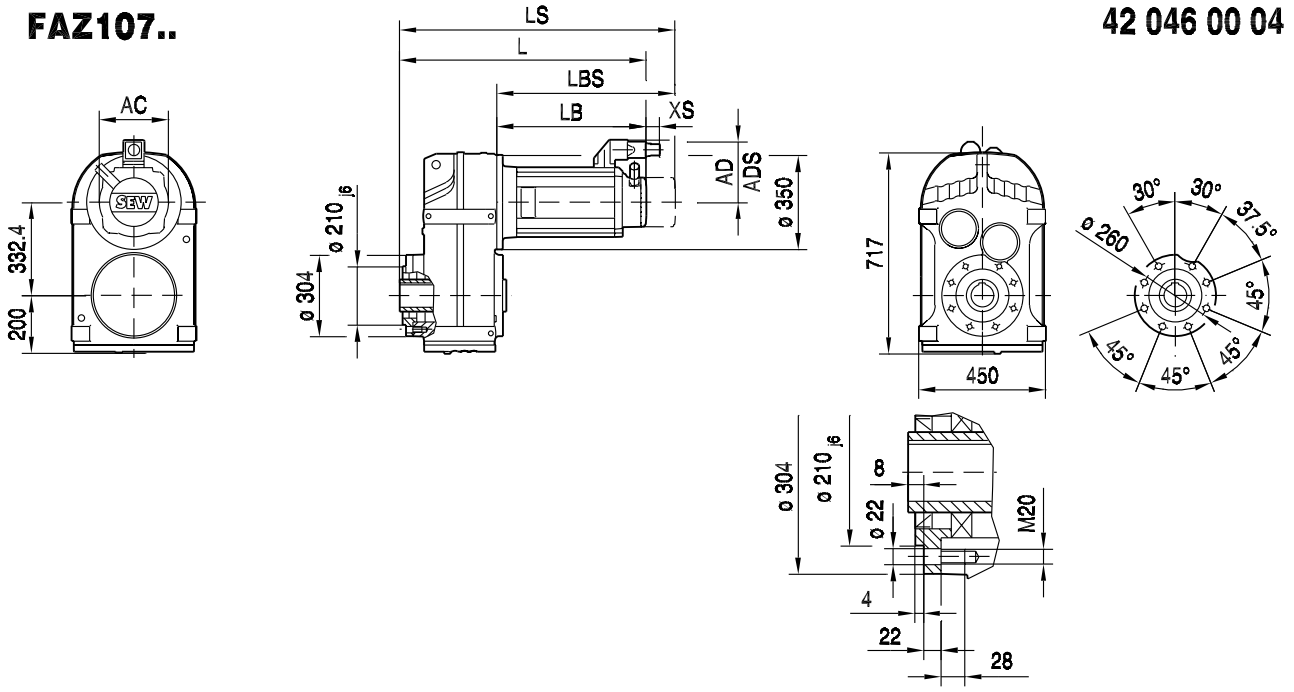

FAZ107..

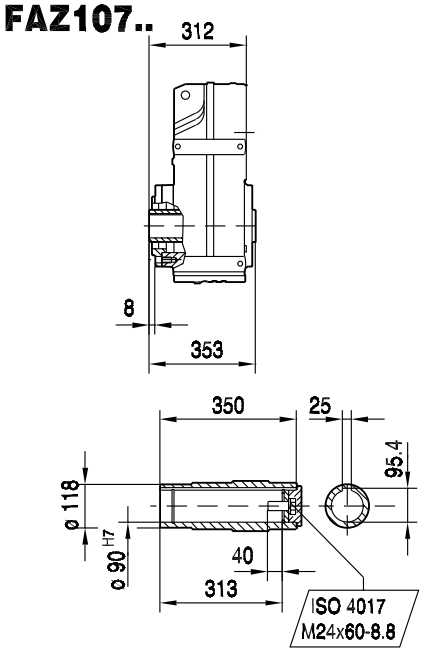

FHZ107..

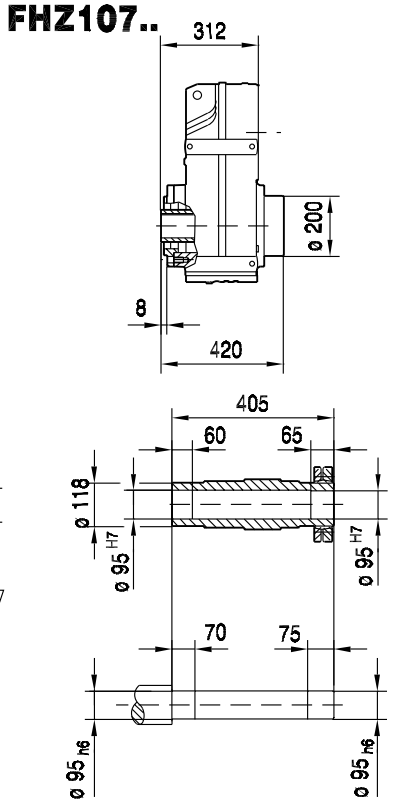

FVZ107..

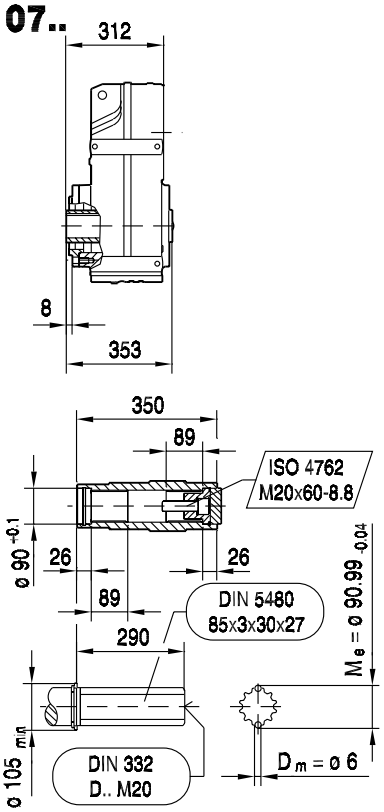

(→ 150)	CM112S	CM112M	CM112L	CM112H							
AC	186	186	186	186							
AD	162	162	162	162							
ADS	162	162	162	162							
L	608	635	697	827							
LS	698	725	787	892							
LB	296	323	385	515							
LBS	386	413	475	580							
XS	36	36	36	36							

10 K..CMP, DS, CM

10.1 K, KA, KV, KH, KF, KAF, KAV, KHF, KA../T, KV../T, KH../T, KAZ, KVZ, KHZ..CMP / DS / CM

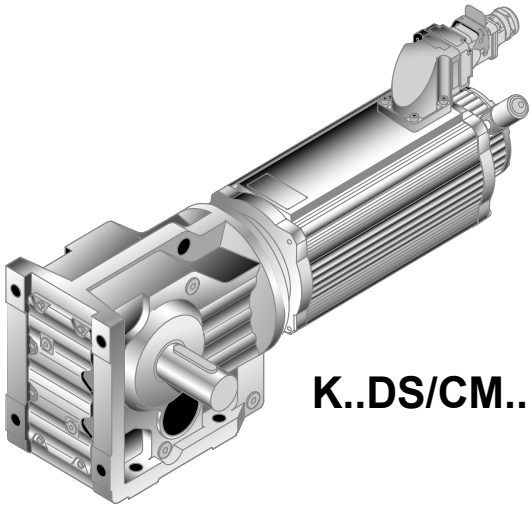

K..DS/CM..

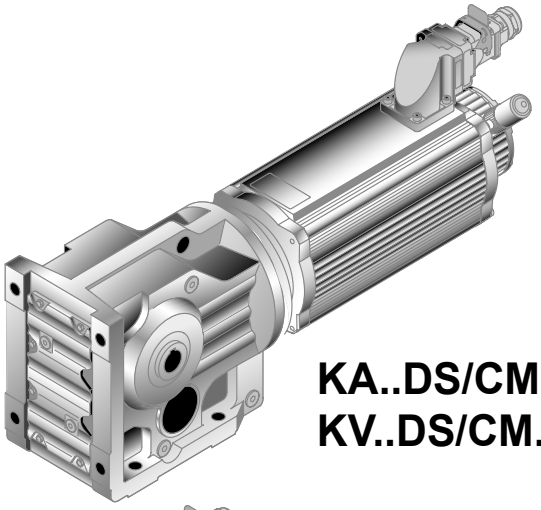

KA..DS/CM..
KV..DS/CM..

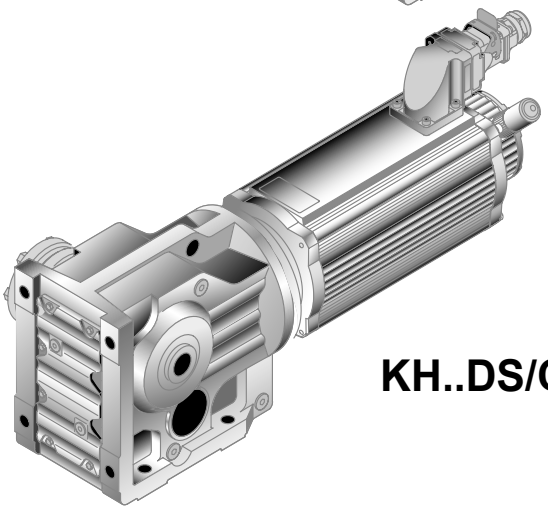

KH..DS/CM..

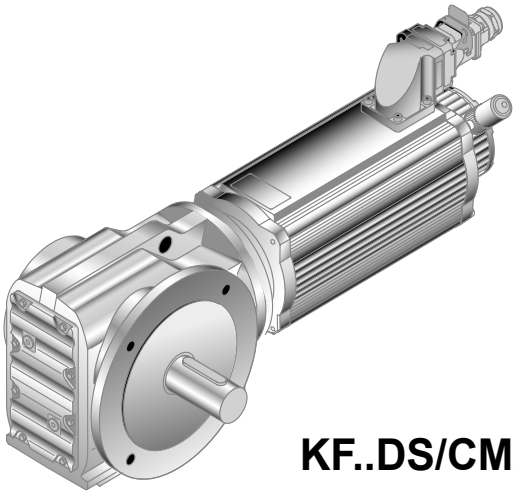

KF..DS/CM..

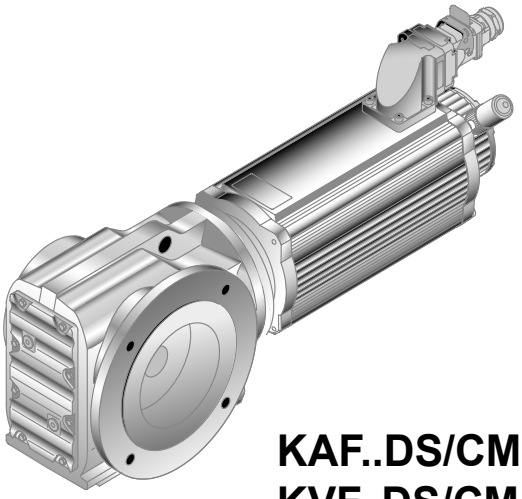

KAF..DS/CM..
KVF..DS/CM..

52501AXX

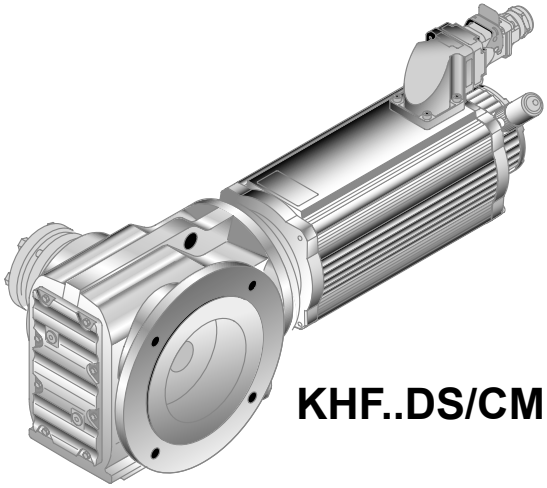

KHF..DS/CM..

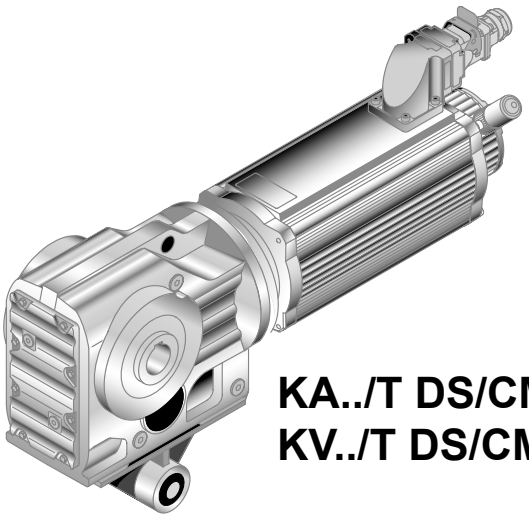

KA../T DS/CM..
KV../T DS/CM..

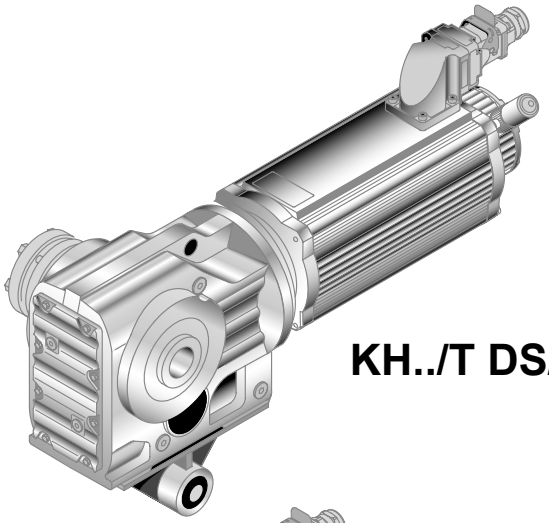

KH../T DS/CM..

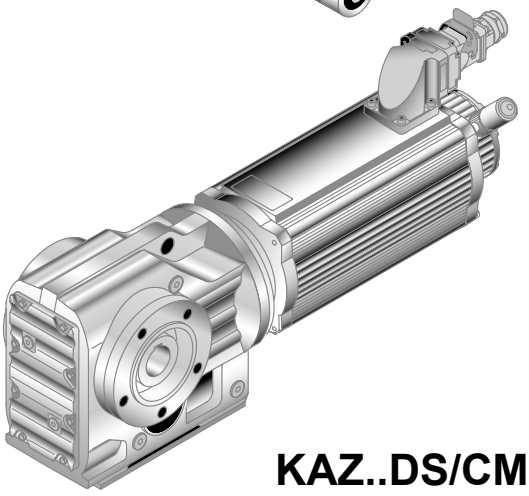

KAZ..DS/CM..
KVZ..DS/CM..

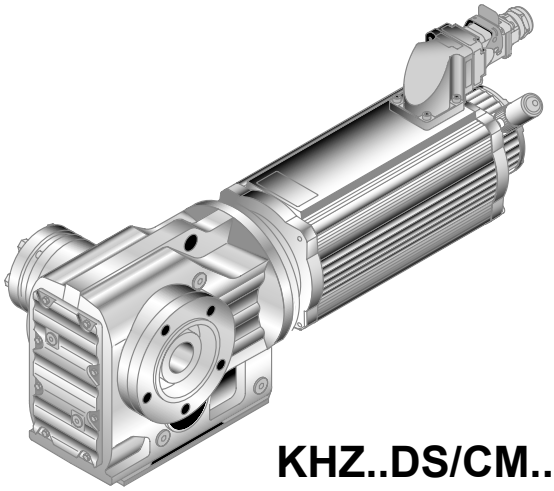

KHZ..DS/CM..

52502AXX

10.2 K 37 / CMP / DS / CM [Nm]

M_{aDyn} [Nm]		CMP							DS			CM			
	i	40M	50S	50M	50L	63S	63M	63L	56M	56L	56H	71S	71M	71L	90S
K37 3	3.98	15	20	39	59	42	82	116	15	29	58	63	82	120	151
	5.36	20	27	53	79	57	110	156	20	39	78	85	111	162	>199
	6.37	23	31	62	93	67	130	184	23	46	92	100	130	190	>199
	6.8	25	34	67	99	72	138	196	25	49	98	107	139	>199	>199
	7.96	29	39	78	116	84	162	>199	29	57	115	125	163	>199	>199
	8.91	32	44	87	130	94	181	>199	32	64	129	140	182	>199	>199
	10.49	38	52	103	153	111	>199	>199	38	76	151	164	>199	>199	>199
	12.14	43	59	118	176	127	>199		43	87	173	188	>199		
	13.08	47	64	127	189	136	>240	>240	47	93	187	203	>240	>240	>240
	15.31	55	75	148	222	160	>240	>240	55	109	219	237	>240	>240	>240
	17.15	61	84	166	>240	179	>240	>240	61	123	>240	>240	>240	>240	>240
	20.19	72	99	195	>240	211	>240	>240	72	144	>240	>240	>240	>240	>240
	23.36	83	114	226	>240	>240	>240		83	167	>240	>240	>240		
	24.99	89	122	>240	>240	>240	>240		89	179	>240	>240	>240		
	28.83	103	141	>240		>240			103	206	>240				
	29.96	105	143	>230	>230	>230	>230	>230	105	209	>230	>230	>230	>230	>230
	35.57	124	170	>230	>230	>230	>230	>230	124	>230	>230	>230	>230	>230	>230
	37.97	133	182	>230	>230	>230	>230	>230	133	>230	>230	>230	>230	>230	>230
	44.46	154	210	>230	>230	>230	>230	>230	154	>230	>230	>230	>230	>230	>230
	49.79	172	>230	>230	>230	>230	>230	>230	172	>230	>230	>230	>230	>230	>230
	58.6	203	>230	>230	>230	>230	>230	>230	203	>230	>230	>230	>230	>230	>230
	67.8	>230	>230	>230	>230	>230	>230		>230	>230	>230	>230	>230		
	72.54	>230	>230	>230	>230	>230	>230		>230	>230	>230	>230	>230		
	83.69	>230	>230	>230		>230			>230	>230	>230				
	97.81	>230	>230						>230	>230					
	106.38	>230	>230						>230	>230					

m [kg]		CMP							DS			CM			
	s	40M	50S	50M	50L	63S	63M	63L	56M	56L	56H	71S	71M	71L	90S
K37	3	13	15	16	17	17	19	20	14	15	15	20	21	25	29
KF: + 2.3 kg / KA: + -0.2 kg / KAF: + 1.5 kg															

CMP.. / DS.. / CM..	i	n_{epk} [1/min]	η [%]	c_T K [Nm/']	c_T KF [Nm/']	c_T KA [Nm/']	c_T KAF [Nm/']	φ /R [']
K37 3	3.98	4500	96	13.03	13.21	29.18	29.18	13
	5.36	4500	96	13.03	13.21	29.18	29.18	13
	6.37	4500	95	13.03	13.21	29.18	29.18	13
	6.8	4500	95	13.03	13.21	29.18	29.18	13
	7.96	4500	95	13.03	13.21	29.18	29.18	13
	8.91	4500	95	13.03	13.21	29.18	29.18	12
	10.49	4500	95	13.03	13.21	29.18	29.18	12
	12.14	4500	94	13.03	13.21	29.18	29.18	12
	13.08	4500	94	17.13	17.44	62.83	62.83	9
	15.31	4500	94	17.13	17.44	62.83	62.83	9
	17.15	4500	94	17.13	17.44	62.83	62.83	8
	20.19	4500	94	17.13	17.44	62.83	62.83	8
	23.36	4500	94	17.13	17.44	62.83	62.83	8
	24.99	4500	94	17.13	17.44	62.83	62.83	8
	28.83	4500	94	17.13	17.44	62.83	62.83	8
	29.96	4500	92	18.45	18.82	85.35	85.35	7
	35.57	4500	92	18.45	18.82	85.35	85.35	7
	37.97	4500	92	18.45	18.82	85.35	85.35	7
	44.46	4500	91	18.45	18.82	85.35	85.35	7
	49.79	4500	91	18.45	18.82	85.35	85.35	7
	58.6	4500	91	18.45	18.82	85.35	85.35	7
	67.8	4500	91	18.45	18.82	85.35	85.35	7
	72.54	4500	91	18.45	18.82	85.35	85.35	7
	83.69	4500	90	18.45	18.82	85.35	85.35	7
	97.81	4500	90	18.45	18.82	85.35	85.35	7
	106.38	4500	90	18.45	18.82	85.35	85.35	7

CMP.. / DS.. / CM..	i	M_{amax} [Nm]	M_{apk} [Nm]	$M_{aNotaus}$ [Nm]	n_{ak} [1/min]	J_G 10^{-4} [kgm^2]	F_{Ramax} K [N]	F_{Ramax} KF [N]	F_{Ramax} KA [N]	F_{Ramax} KAF [N]	F_{Rapk} K [N]	F_{Rapk} KF [N]	F_{Rapk} KA [N]	F_{Rapk} KAF [N]
K37 3	3.98	125	187	213	377	2.6	1660	2130	2310	2310	5780	5710	7000	7000
	5.36	140	199	238	317	1.7	1810	2340	2530	2530	5650	5640	7000	7000
	6.37	145	199	247	314	1.3	1950	2500	2720	2720	5650	5640	7000	7000
	6.8	150	199	255	294	1.1	1980	2540	2760	2760	5650	5640	7000	7000
	7.96	155	199	264	276	0.85	2110	2700	2940	2940	5650	5640	7000	7000
	8.91	160	199	272	258	0.70	2200	2810	3070	3070	5650	5640	7000	7000
	10.49	160	199	272	276	0.51	2410	3030	3340	3340	5650	5640	7000	7000
	12.14	160	199	272	297	0.40	2600	3240	3600	3600	5650	5640	7000	7000
	13.08	165	240	281	420	1.0	2650	3310	3660	3660	4100	4100	7000	7000
	15.31	175	240	298	346	0.76	2780	3480	3850	3850	4100	4100	7000	7000
	17.15	180	240	306	315	0.62	2900	3630	4020	4020	4100	4100	7000	7000
	20.19	185	240	315	287	0.46	3110	3870	4300	4300	4100	4100	7000	7000
	23.36	195	240	332	240	0.37	3260	4060	4510	4510	4100	4100	7000	7000
	24.99	200	240	340	220	0.33	3330	4150	4600	4600	4100	4100	7000	7000
	28.83	200	240	340	222	0.26	3580	4420	4940	4940	4100	4100	7000	7000
	29.96	200	230	340	157	0.76	3650	4500	5030	5030	5140	5140	7000	7000
	35.57	200	230	340	157	0.60	3970	4860	5460	5460	5140	5140	7000	7000
	37.97	200	230	340	158	0.54	4100	5000	5630	5630	5140	5140	7000	7000
	44.46	200	230	340	157	0.42	4420	5350	6060	6060	5140	5140	7000	7000
	49.79	200	230	340	141	0.36	4660	5610	6380	6380	5140	5140	7000	7000
	58.6	200	230	340	119	0.27	5020	5630	6860	6860	5140	5140	7000	7000
	67.8	200	230	340	103	0.23	5360	5630	7000	7000	5140	5140	7000	7000
	72.54	200	230	340	96	0.21	5520	5630	7000	7000	5140	5140	7000	7000
	83.69	200	230	340	84	0.17	5640	5630	7000	7000	5140	5140	7000	7000
	97.81	200	230	340	72	0.13	5640	5630	7000	7000	5140	5140	7000	7000
	106.38	200	230	340	66	0.12	5640	5630	7000	7000	5140	5140	7000	7000

10.3 K 37 / CMP / DS / CM [mm]

33 009 00 07

K37..

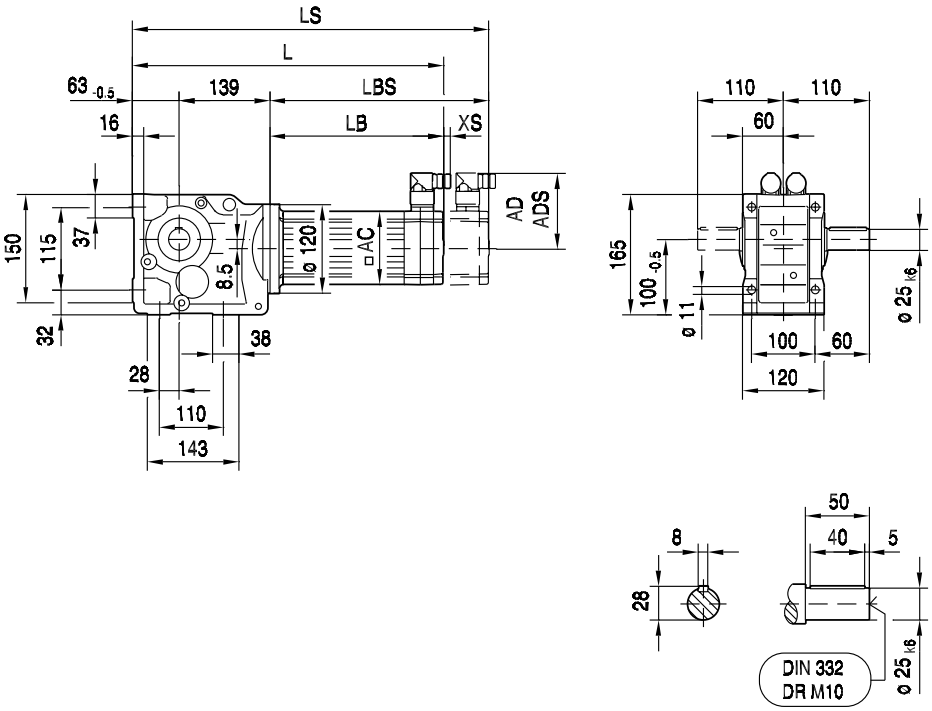

(→ 📖 150)	CMP40M	CMP50S	CMP50M	CMP50L	CMP63S	CMP63M	CMP63L	
AC	57	73	73	73	88	88	88	
AD	75	82	82	82	89	89	89	
ADS	75	82	82	82	89	89	89	
L	345	347	386	425	382	432	485	
LS	375	376	415	454	410	460	514	
LB	143	145	184	223	180	230	283	
LBS	173	174	213	252	208	258	312	
XS	19	18	18	18	14	14	14	

33 010 00 07

KF37..

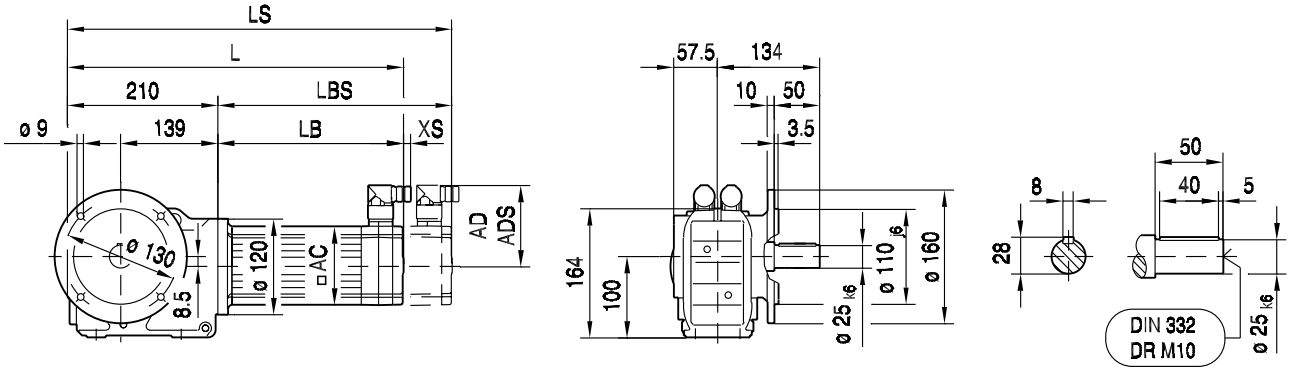

10

KAF37..

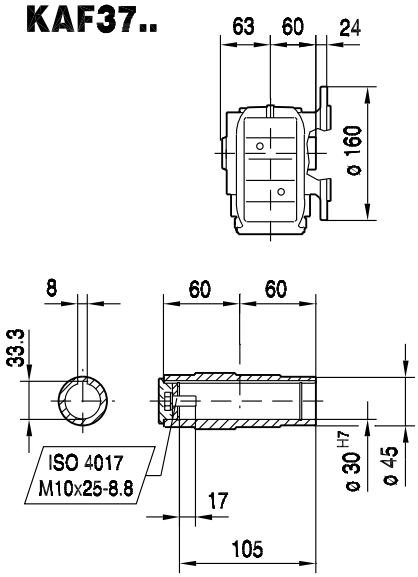

KHF37..

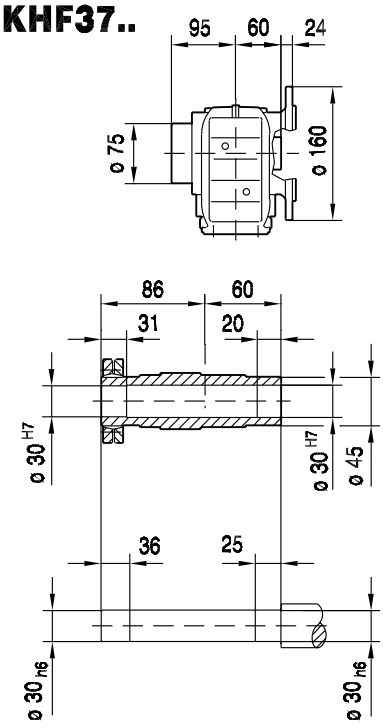

KVF37..

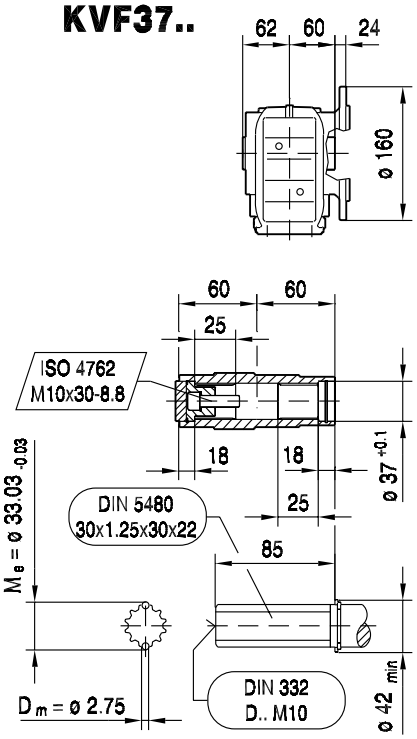

(→ 150)	CMP40M	CMP50S	CMP50M	CMP50L	CMP63S	CMP63M	CMP63L	
AC	57	73	73	73	88	88	88	
AD	75	82	82	82	89	89	89	
ADS	75	82	82	82	89	89	89	
L	353	355	394	433	390	440	493	
LS	383	384	423	462	418	468	522	
LB	143	145	184	223	180	230	283	
LBS	173	174	213	252	208	258	312	
XS	19	18	18	18	14	14	14	

KA37..

33 011 00 07

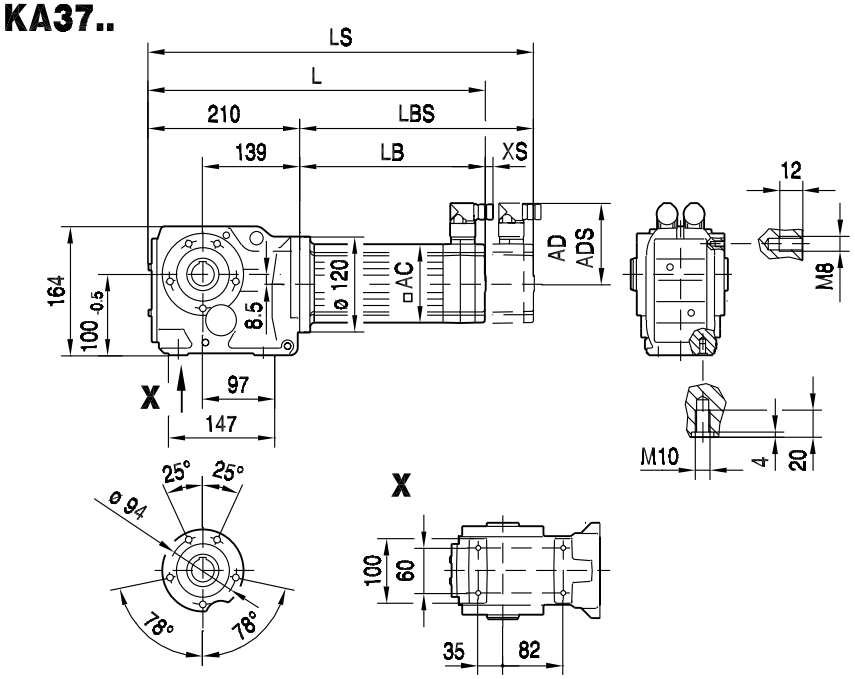

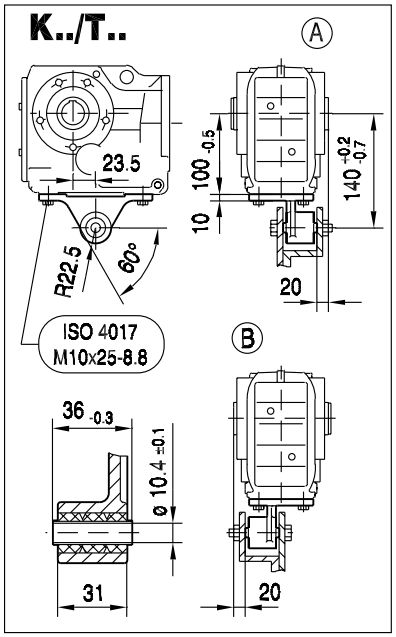

KA37..

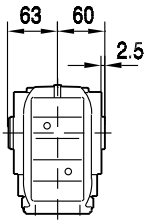

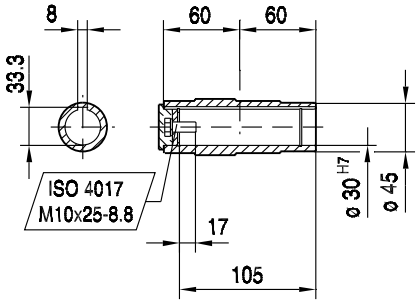

KH37..

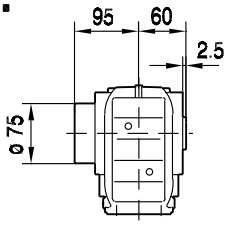

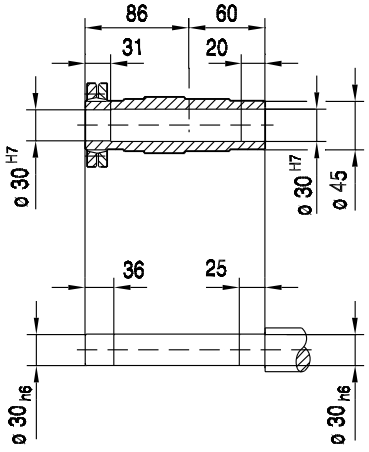

KV37..

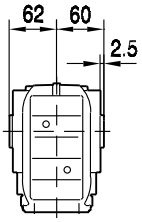

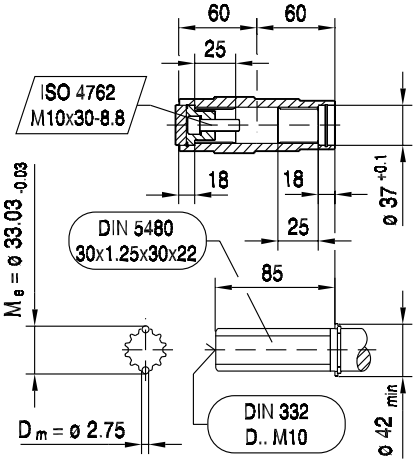

(→ 📖 150)	CMP40M	CMP50S	CMP50M	CMP50L	CMP63S	CMP63M	CMP63L	
AC	57	73	73	73	88	88	88	
AD	75	82	82	82	89	89	89	
ADS	75	82	82	82	89	89	89	
L	353	355	394	433	390	440	493	
LS	383	384	423	462	418	468	522	
LB	143	145	184	223	180	230	283	
LBS	173	174	213	252	208	258	312	
XS	19	18	18	18	14	14	14	

KAZ37..

33 012 00 07

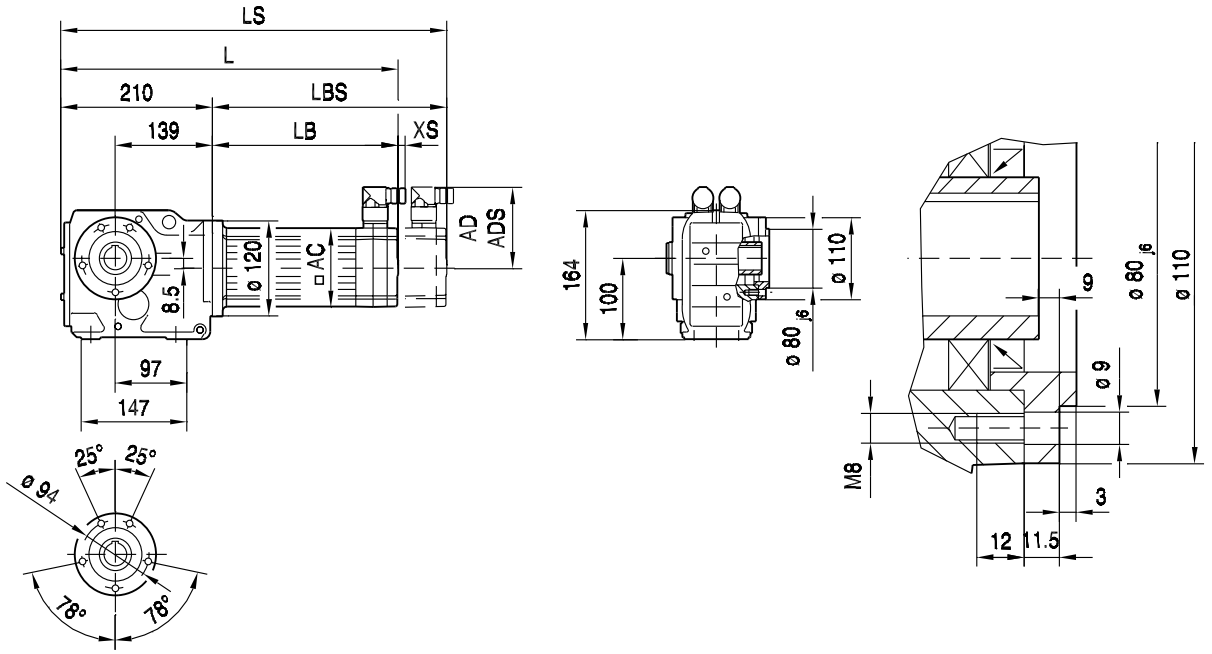

10

KAZ37..

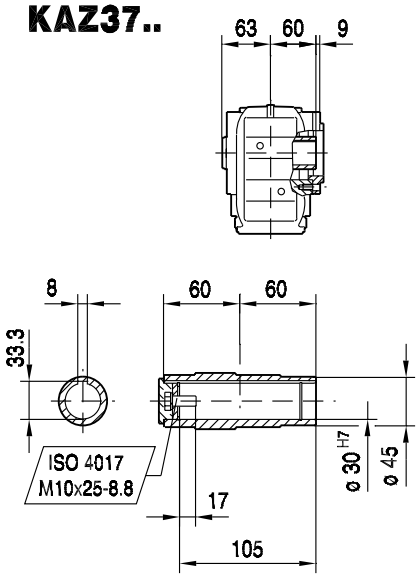

KHZ37..

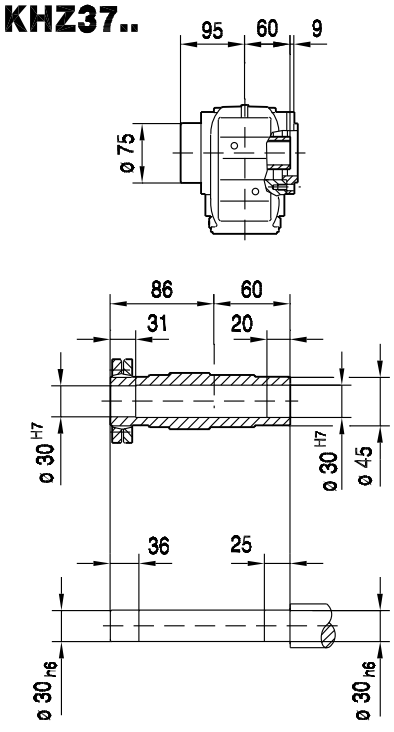

KVZ37..

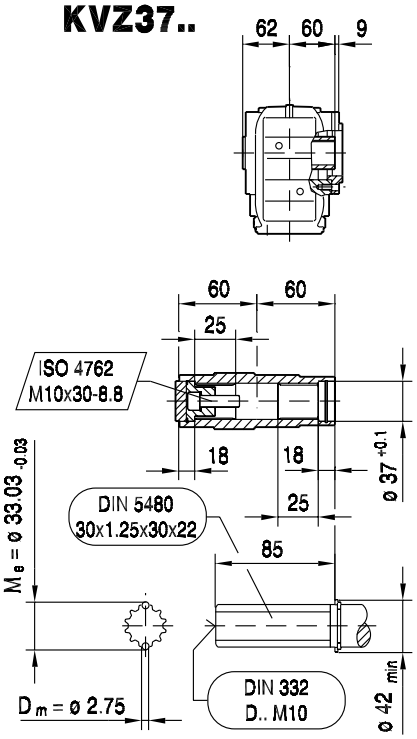

(→ 📖 150)	CMP40M	CMP50S	CMP50M	CMP50L	CMP63S	CMP63M	CMP63L	
AC	57	73	73	73	88	88	88	
AD	75	82	82	82	89	89	89	
ADS	75	82	82	82	89	89	89	
L	353	355	394	433	390	440	493	
LS	383	384	423	462	418	468	522	
LB	143	145	184	223	180	230	283	
LBS	173	174	213	252	208	258	312	
XS	19	18	18	18	14	14	14	

KT37..

33 013 00 07

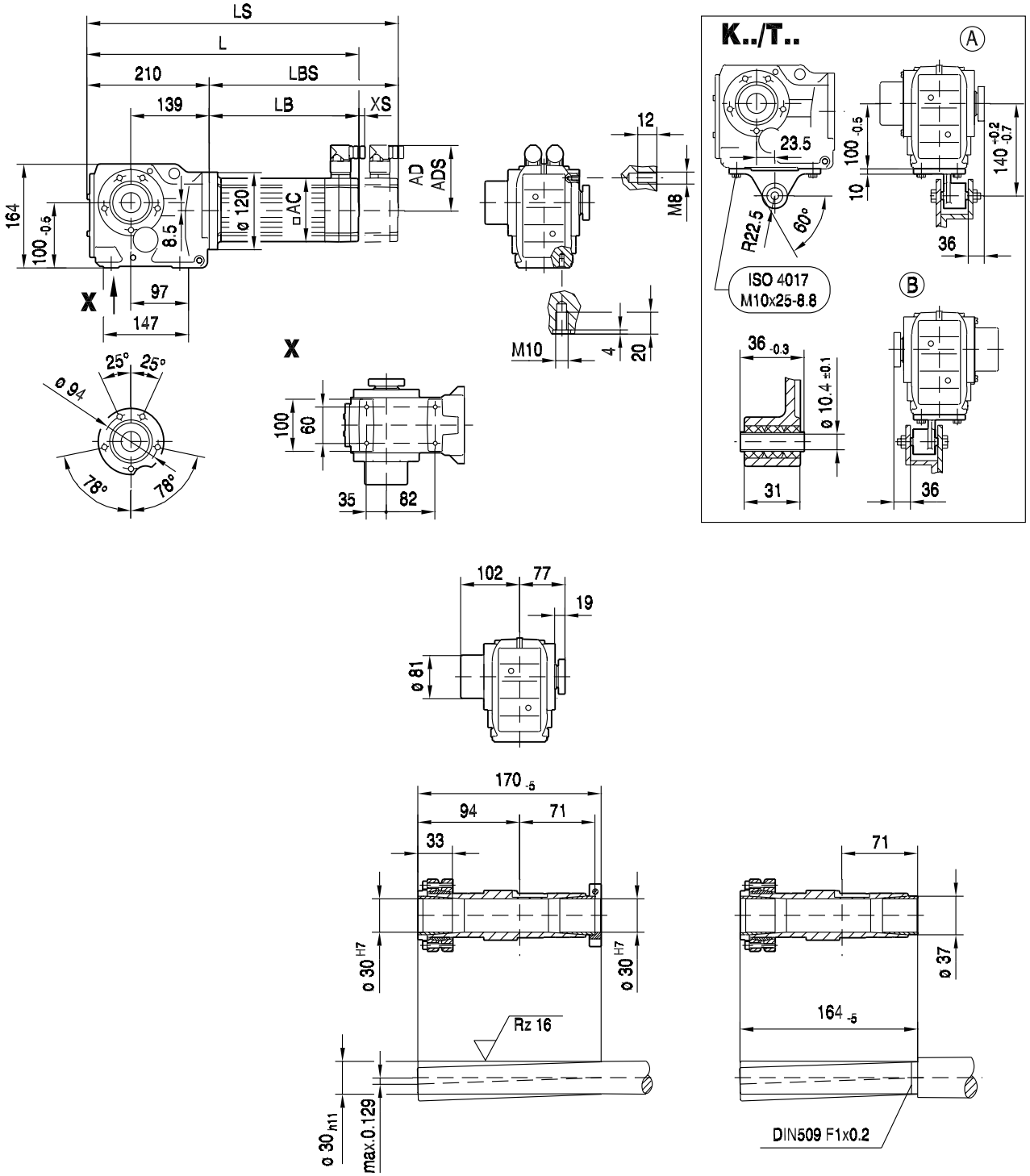

(→ 150)	CMP40M	CMP50S	CMP50M	CMP50L	CMP63S	CMP63M	CMP63L	
AC	57	73	73	73	88	88	88	
AD	75	82	82	82	89	89	89	
ADS	75	82	82	82	89	89	89	
L	353	355	394	433	390	440	493	
LS	383	384	423	462	418	468	522	
LB	143	145	184	223	180	230	283	
LBS	173	174	213	252	208	258	312	
XS	19	18	18	18	14	14	14	

34 030 01 01

K37.. DS56..

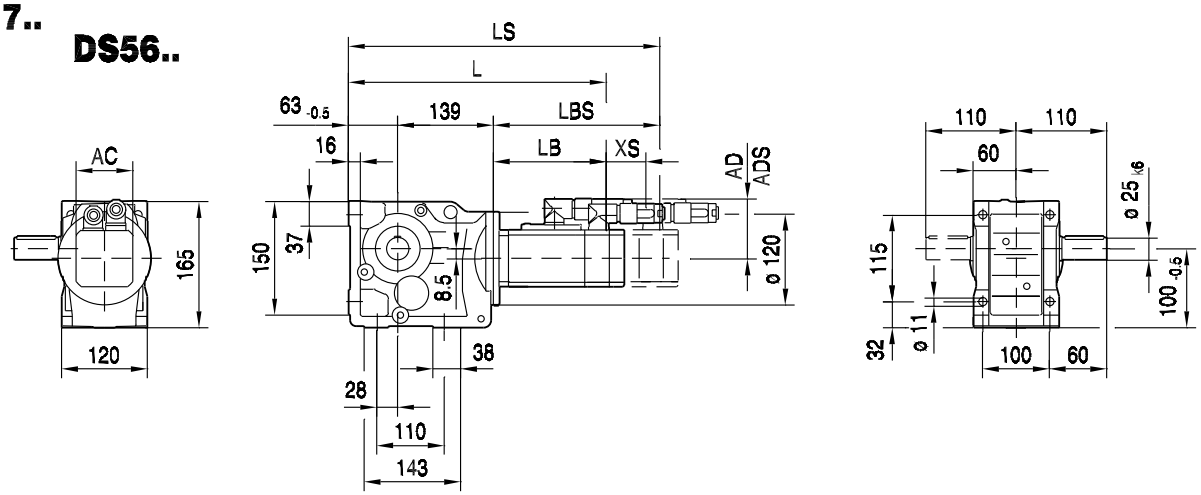

CM ..

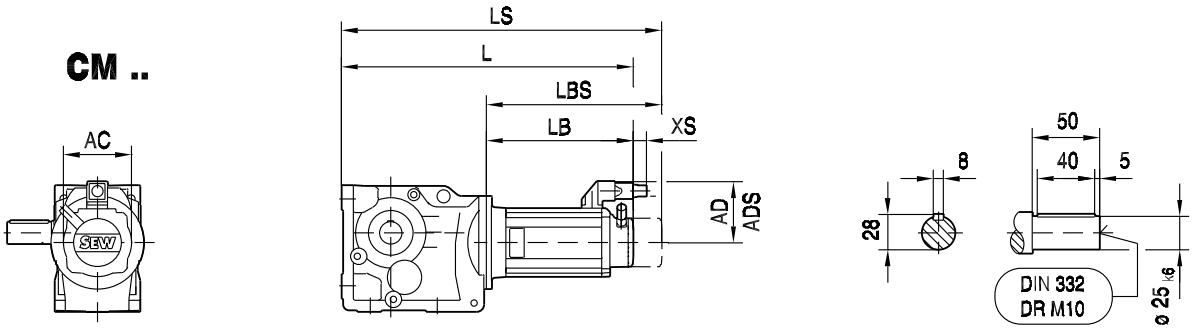

10

(→ 📖 150)	DS56M	DS56L	DS56H	CM71S	CM71M	CM71L	CM90S				
AC	73	73	73	117	117	117	142				
AD	71	71	77	122	122	122	140				
ADS	77	77	77	122	122	122	140				
L	339	371	474	440	460	503	495				
LS	369	401	474	522	542	585	591				
LB	137	169	272	238	258	301	293				
LBS	167	199	272	320	340	383	389				
XS	70	70	51	45	45	45	50				

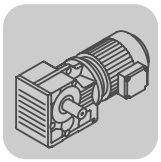

K..CMP, DS, CM
K 37 / CMP / DS / CM [mm]

KF37..

DS56..

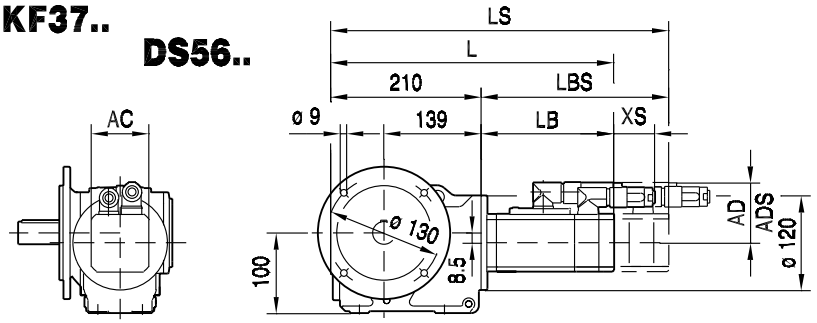

34 031 01 01

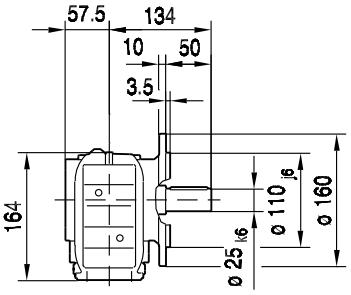

CM..

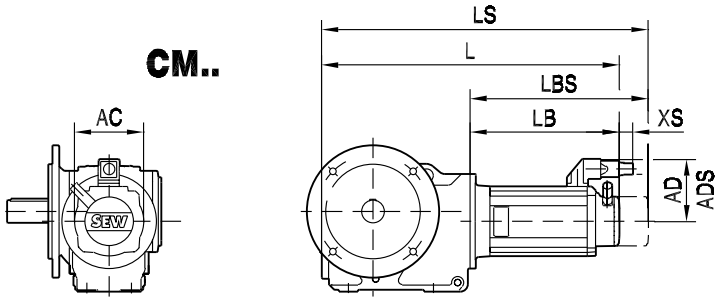

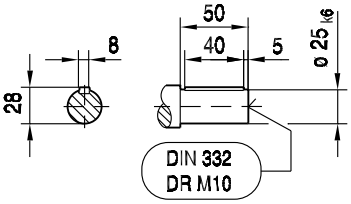

KAF37..

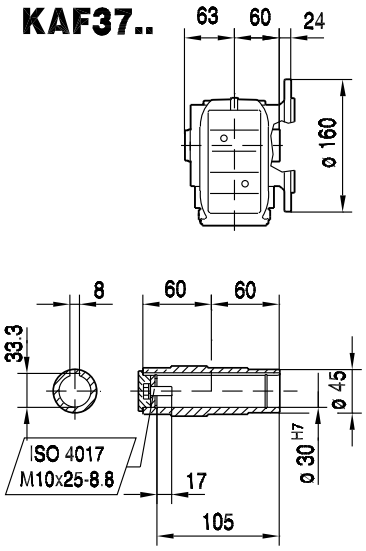

KHF37..

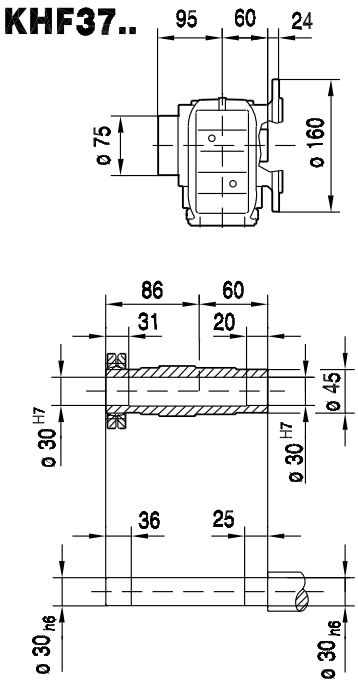

KVF37..

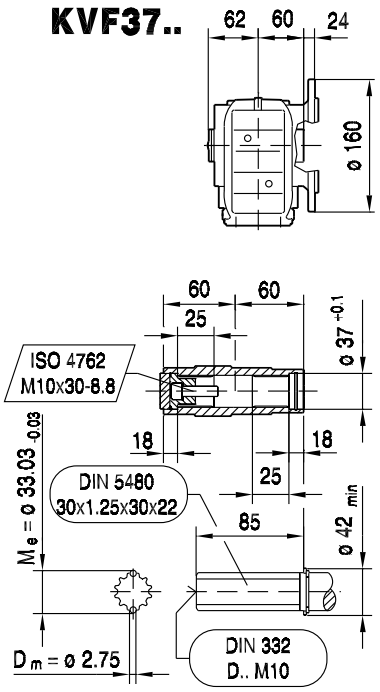

(→ 150)	DS56M	DS56L	DS56H	CM71S	CM71M	CM71L	CM90S				
AC	73	73	73	117	117	117	142				
AD	71	71	77	122	122	122	140				
ADS	77	77	77	122	122	122	140				
L	347	379	482	448	468	511	503				
LS	377	409	482	530	550	593	599				
LB	137	169	272	238	258	301	293				
LBS	167	199	272	320	340	383	389				
XS	70	70	51	45	45	45	50				

39 020 01 01

KA37..
DS56..

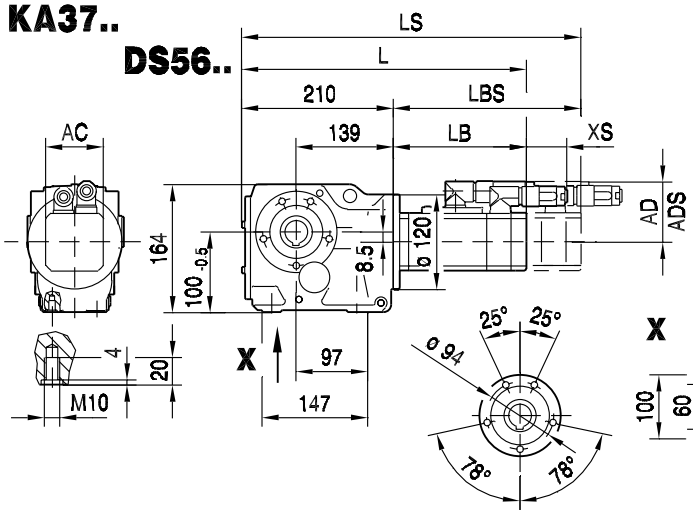

K.. /T..

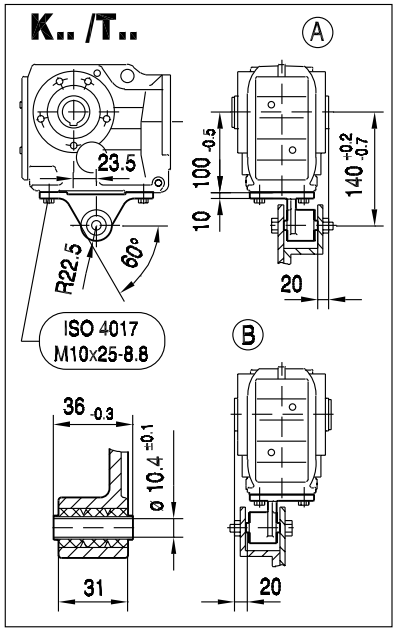

CM..

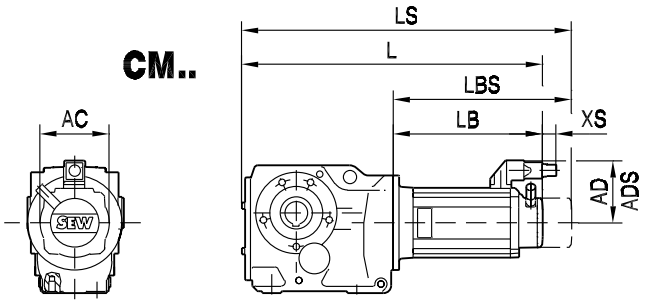

KA37..

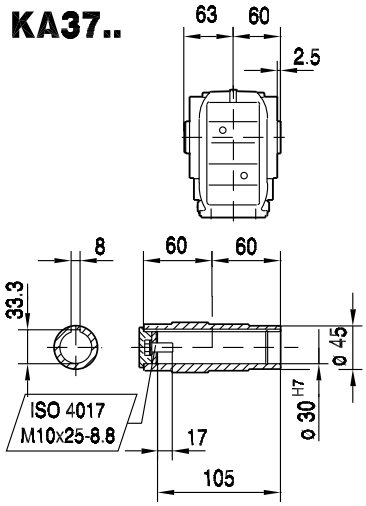

KH37..

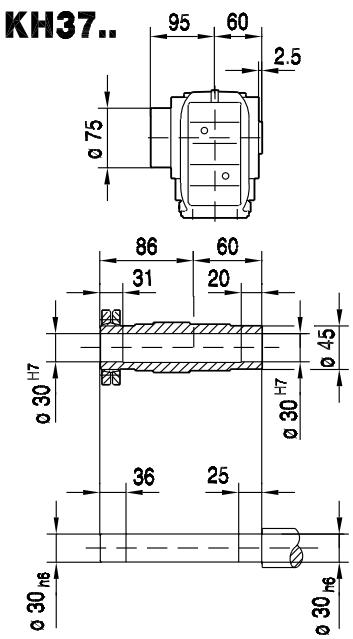

KV37..

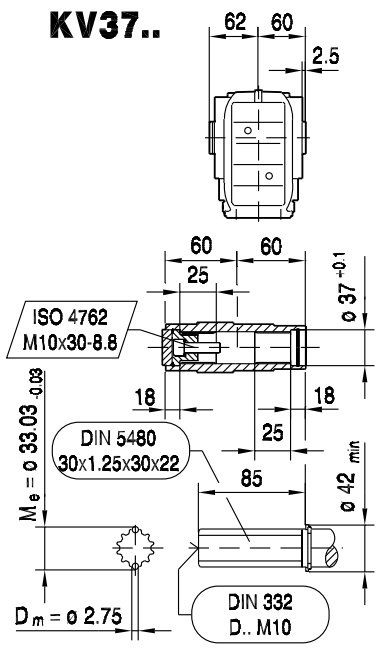

(→ 150)	DS56M	DS56L	DS56H	CM71S	CM71M	CM71L	CM90S				
AC	73	73	73	117	117	117	142				
AD	71	71	77	122	122	122	140				
ADS	77	77	77	122	122	122	140				
L	347	379	482	448	468	511	503				
LS	377	409	482	530	550	593	599				
LB	137	169	272	238	258	301	293				
LBS	167	199	272	320	340	383	389				
XS	70	70	51	45	45	45	50				

39 033 00 04

KAZ37..
DS56..

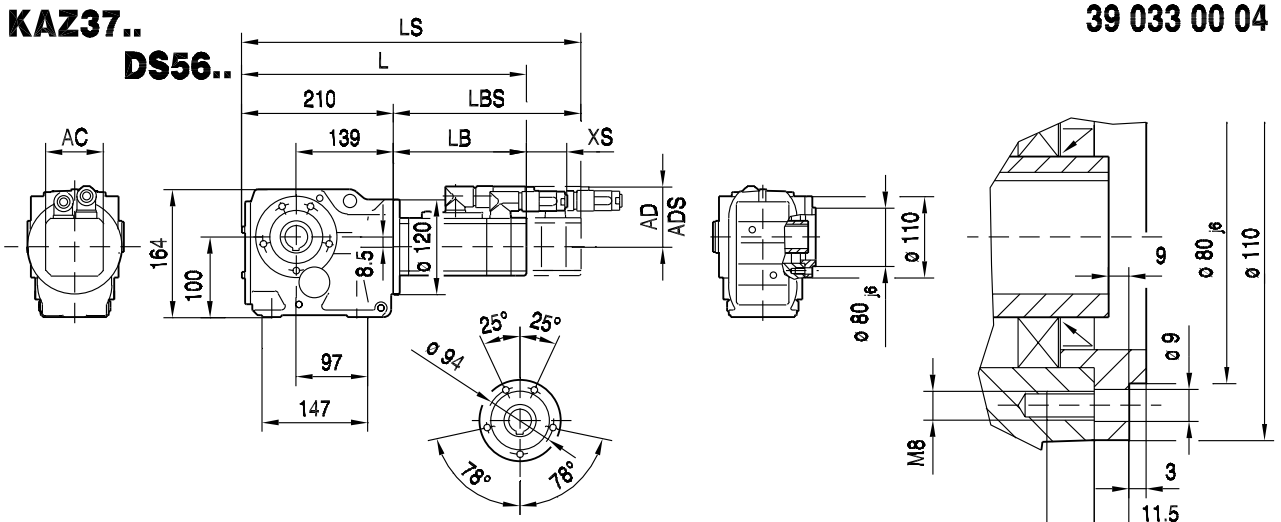

CM..

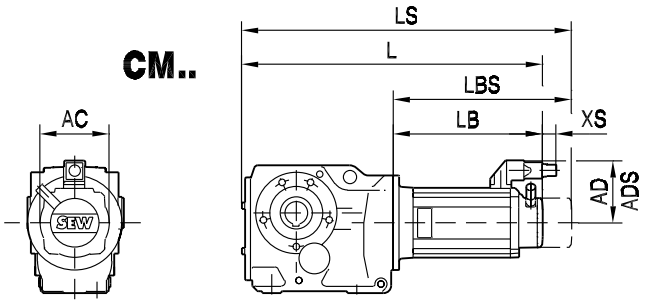

KAZ37..

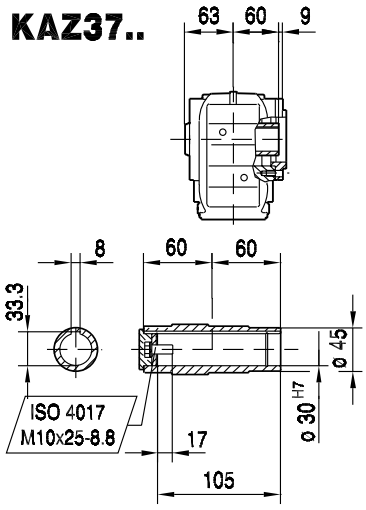

KHZ37..

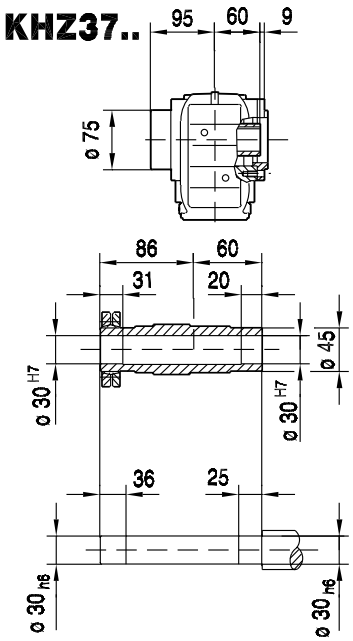

KVZ37..

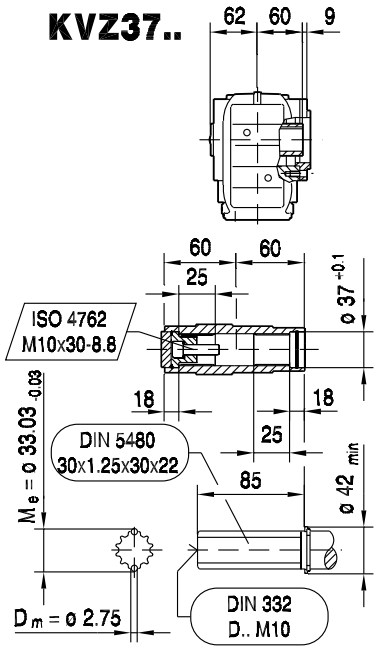

(→ 150)	DS56M	DS56L	DS56H	CM71S	CM71M	CM71L	CM90S				
AC	73	73	73	117	117	117	142				
AD	71	71	77	122	122	122	140				
ADS	77	77	77	122	122	122	140				
L	347	379	482	448	468	511	503				
LS	377	409	482	530	550	593	599				
LB	137	169	272	238	258	301	293				
LBS	167	199	272	320	340	383	389				
XS	70	70	51	45	45	45	50				

KT37..

DS56..

39 041 00 04

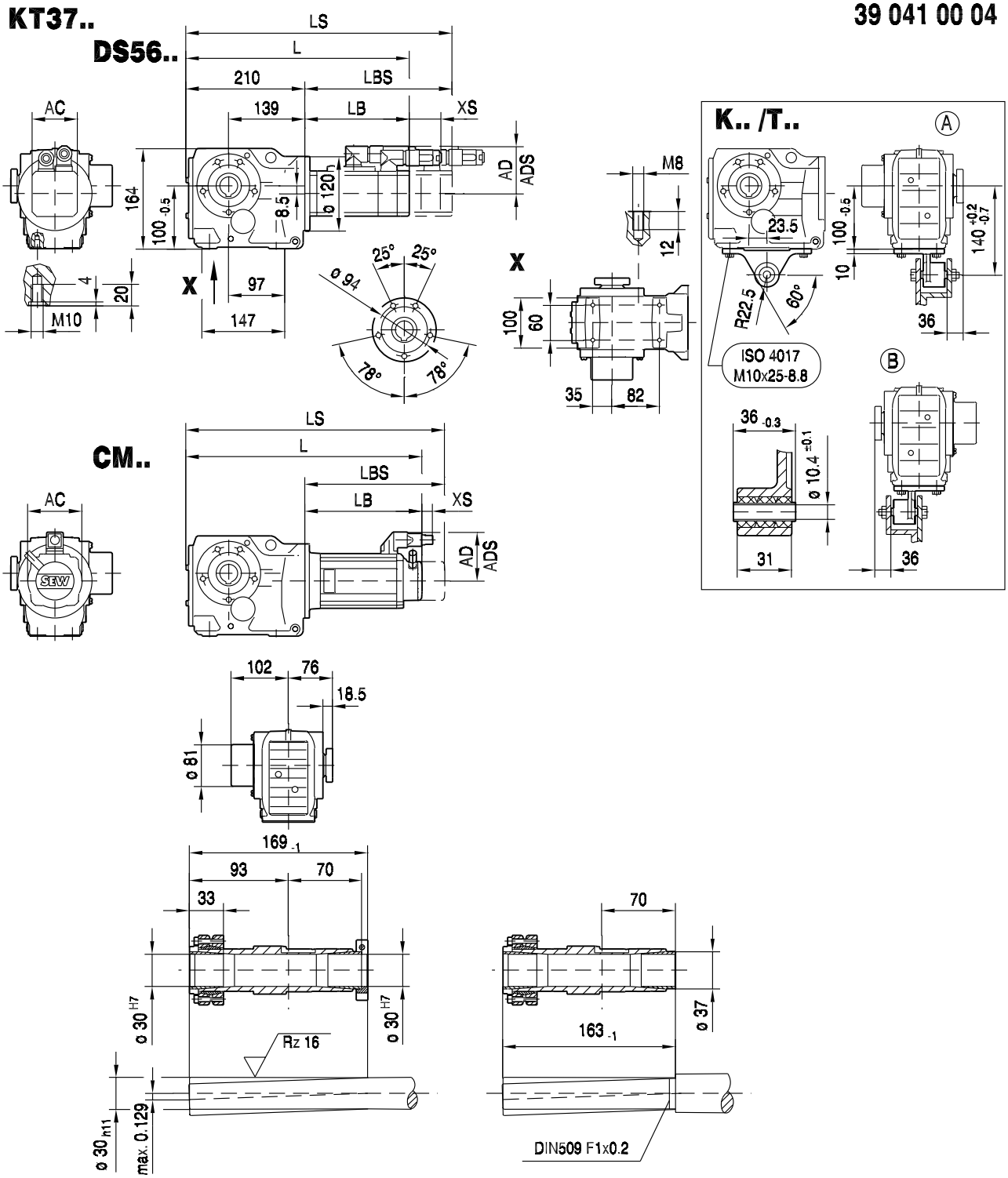

(→ 150)	DS56M	DS56L	DS56H	CM71S	CM71M	CM71L	CM90S				
AC	73	73	73	117	117	117	142				
AD	71	71	77	122	122	122	140				
ADS	77	77	77	122	122	122	140				
L	347	379	482	448	468	511	503				
LS	377	409	482	530	550	593	599				
LB	137	169	272	238	258	301	293				
LBS	167	199	272	320	340	383	389				
XS	70	70	51	45	45	45	50				

10.4 K 47 / CMP / DS / CM [Nm]

M_{aDyn} [Nm]		CMP						DS			CM				
	i	50S	50M	50L	63S	63M	63L	56M	56L	56H	71S	71M	71L	90S	90M
	4.64		46	69	49	95	135			68	73	96	140	176	233
	5.81	29	57	86	62	119	170	21	42	85	92	120	175	221	291
	6.58	33	64	96	69	134	190	24	48	95	103	134	196	248	>310
	7.36	36	72	108	78	150	213	27	53	106	115	150	220	277	>310
	8.56	42	84	125	90	174	247	31	62	124	134	175	255	>310	>310
	9.1	45	89	133	96	185	263	33	66	131	143	186	271	>310	>310
	10.56	52	103	154	111	215	305	38	76	152	166	216	>315	>315	>315
	11.77	58	115	172	124	239	>315	42	85	170	184	240	>315	>315	>315
	12.19	60	119	178	129	248	352	44	88	176	191	249	364	>435	>435
	13.65	67	134	200	144	278	394	49	99	197	214	279	407	>435	>435
	15.86	78	155	232	167	322	>435	57	115	229	249	324	>435	>435	>435
	16.86	83	165	247	178	343	>435	61	122	243	264	344	>435	>435	>435
	19.58	97	192	286	206	398	>435	71	141	283	307	400	>435	>435	>435
	21.81	108	213	319	230	>435	>435	79	157	315	342	>435	>435	>435	>435
K47	24.06	118	233	348	251	>435		86	172	344	373	>435			
3	25.91	127	251	375	270	>435	>435	93	185	370	402	>435	>435	>435	
	29.32	143	284	424	306	>435		105	209	419	>435	>435			
	31.3	153	303	>435	327	>435		112	224	>435	>435	>435			
	35.39	171	339	>435	365	>435	>435	125	250	>435	>435	>435	>435	>435	>435
	39.61	192	379	>435	409	>435	>435	140	280	>435	>435	>435	>435	>435	>435
	46.03	223	>435	>435	>435	>435	>435	163	325	>435	>435	>435	>435	>435	>435
	48.95	237	>435	>435	>435	>435	>435	173	346	>435	>435	>435	>435	>435	>435
	56.83	275	>435	>435	>435	>435	>435	201	402	>435	>435	>435	>435	>435	>435
	63.3	303	>435	>435	>435	>435	>435	221	>435	>435	>435	>435	>435	>435	>435
	69.84	334	>435	>435	>435	>435		244	>435	>435	>435	>435			
	75.2	360	>435	>435	>435	>435	>435	263	>435	>435	>435	>435	>435	>435	
	85.12	407	>435	>435	>435	>435		298	>435	>435	>435	>435			
	90.86	435	>435	>435	>435	>435		318	>435	>435	>435	>435			
	104.37	>435	>435		>435			365	>435	>435					
	121.48	>435						425	>435						
	131.87	>435						>435	>435						

m [kg]		CMP						DS			CM				
	s	50S	50M	50L	63S	63M	63L	56M	56L	56H	71S	71M	71L	90S	90M
K47	3	21	22	23	23	25	26	21	22	22	27	28	31	36	38
KF: + 3.2 kg / KA: + -0.9 kg / KAF: + 2.0 kg															

CMP.. / DS.. / CM..	i	n_{epk} [1/min]	η [%]	c_T K [Nm/']	c_T KF [Nm/']	c_T KA [Nm/']	c_T KAF [Nm/']	φ /R [']
K47 3	4.64	4500	96	25.53	23.31	50.12	50.12	12
	5.81	4500	96	25.53	23.31	50.12	50.12	12
	6.58	4500	95	25.53	23.31	50.12	50.12	12
	7.36	4500	95	25.53	23.31	50.12	50.12	11
	8.56	4500	95	25.53	23.31	50.12	50.12	11
	9.1	4500	95	25.53	23.31	50.12	50.12	11
	10.56	4500	95	25.53	23.31	50.12	50.12	11
	11.77	4500	95	25.53	23.31	50.12	50.12	10
	12.19	4500	95	33.04	29.4	90.48	90.48	8
	13.65	4500	95	33.04	29.4	90.48	90.48	8
	15.86	4500	95	33.04	29.4	90.48	90.48	8
	16.86	4500	95	33.04	29.4	90.48	90.48	8
	19.58	4500	95	33.04	29.4	90.48	90.48	8
	21.81	4500	95	33.04	29.4	90.48	90.48	8
	24.06	4500	94	33.04	29.4	90.48	90.48	8
	25.91	4500	94	33.04	29.4	90.48	90.48	8
	29.32	4500	94	33.04	29.4	90.48	90.48	8
	31.3	4500	94	33.04	29.4	90.48	90.48	7
	35.39	4500	93	36.02	31.74	117.01	117.01	7
	39.61	4500	93	36.02	31.74	117.01	117.01	7
	46.03	4500	93	36.02	31.74	117.01	117.01	7
	48.95	4500	93	36.02	31.74	117.01	117.01	7
	56.83	4500	93	36.02	31.74	117.01	117.01	7
	63.3	4500	92	36.02	31.74	117.01	117.01	7
	69.84	4500	92	36.02	31.74	117.01	117.01	6
	75.2	4500	92	36.02	31.74	117.01	117.01	6
	85.12	4500	92	36.02	31.74	117.01	117.01	6
	90.86	4500	92	36.02	31.74	117.01	117.01	6
	104.37	4500	92	36.02	31.74	117.01	117.01	6
	121.48	4500	92	36.02	31.74	117.01	117.01	6
	131.87	4500	92	36.02	31.74	117.01	117.01	6

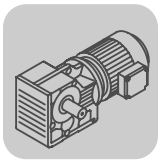

K..CMP, DS, CM
K 47 / CMP / DS / CM [Nm]

CMP.. / DS.. / CM..							F_{Ramax}				F_{Rapk}			
	i	M_{amax} [Nm]	M_{apk} [Nm]	$M_{aNotaus}$ [Nm]	n_{ak} [1/min]	$J_G\ 10^{-4}$ [kgm^2]	K [N]	KF [N]	KA [N]	KAF [N]	K [N]	KF [N]	KA [N]	KAF [N]
	4.64	205	300	349	302	4.4	2980	2970	2040	2040	7060	7060	10000	10000
	5.81	230	305	391	258	3.6	3140	3140	2100	2100	7020	7020	10000	10000
	6.58	240	310	408	228	2.8	3270	3270	2190	2190	6970	6970	10000	10000
	7.36	250	310	425	217	2.3	3380	3390	2270	2270	6970	6970	10000	10000
	8.56	270	310	459	175	1.8	3500	3520	2310	2310	6970	6970	10000	10000
	9.1	280	310	476	165	1.6	3540	3560	2310	2310	6970	6970	10000	10000
	10.56	280	315	476	170	1.2	3830	3840	2580	2580	6920	6920	10000	10000
	11.77	280	315	476	178	1.0	4060	4050	2770	2770	6920	6920	10000	10000
	12.19	350	435	595	279	2.4	3720	3770	2330	2330	900	900	10000	10000
	13.65	360	435	612	249	2.0	3890	3940	2450	2450	900	900	10000	10000
	15.86	380	435	646	208	1.6	4080	4130	2570	2570	900	900	10000	10000
	16.86	380	435	646	214	1.4	4220	4270	2690	2690	900	900	10000	10000
	19.58	400	435	680	179	1.1	4440	4480	2820	2820	900	900	10000	10000
	21.81	400	435	680	179	0.91	4710	4740	3070	3070	900	900	10000	10000
K47	24.06	400	435	680	179	0.75	4970	4990	3300	3300	900	900	10000	10000
 3	25.91	400	435	680	178	0.68	5170	5180	3470	3470	900	900	10000	10000
	29.32	400	435	680	177	0.55	5520	5500	3780	3780	900	900	10000	10000
	31.3	400	435	680	179	0.50	5700	5680	3940	3940	900	900	10000	10000
	35.39	400	435	680	93	1.3	5920	5920	4270	4270	900	900	10000	10000
	39.61	400	435	680	96	1.1	5920	5920	4580	4580	900	900	10000	10000
	46.03	400	435	680	100	0.88	5920	5920	5000	5000	900	900	10000	10000
	48.95	400	435	680	100	0.80	5920	5920	5190	5190	900	900	10000	10000
	56.83	400	435	680	104	0.64	5920	5920	5640	5640	900	900	10000	10000
	63.3	400	435	680	104	0.54	5920	5920	5990	5990	900	900	10000	10000
	69.84	400	435	680	100	0.45	5920	5920	6320	6320	900	900	10000	10000
	75.2	400	435	680	93	0.42	5920	5920	6570	6570	900	900	10000	10000
	85.12	400	435	680	82	0.35	5920	5920	7000	7000	900	900	10000	10000
	90.86	400	435	680	77	0.32	5920	5920	7240	7240	900	900	10000	10000
	104.37	400	435	680	67	0.26	5920	5920	7760	7760	900	900	10000	10000
	121.48	400	435	680	58	0.21	5920	5920	8360	8360	900	900	10000	10000
	131.87	400	435	680	53	0.18	5920	5920	8700	8700	900	900	10000	10000

10.5 K 47 / CMP / DS / CM [mm]

33 014 00 07

K47..

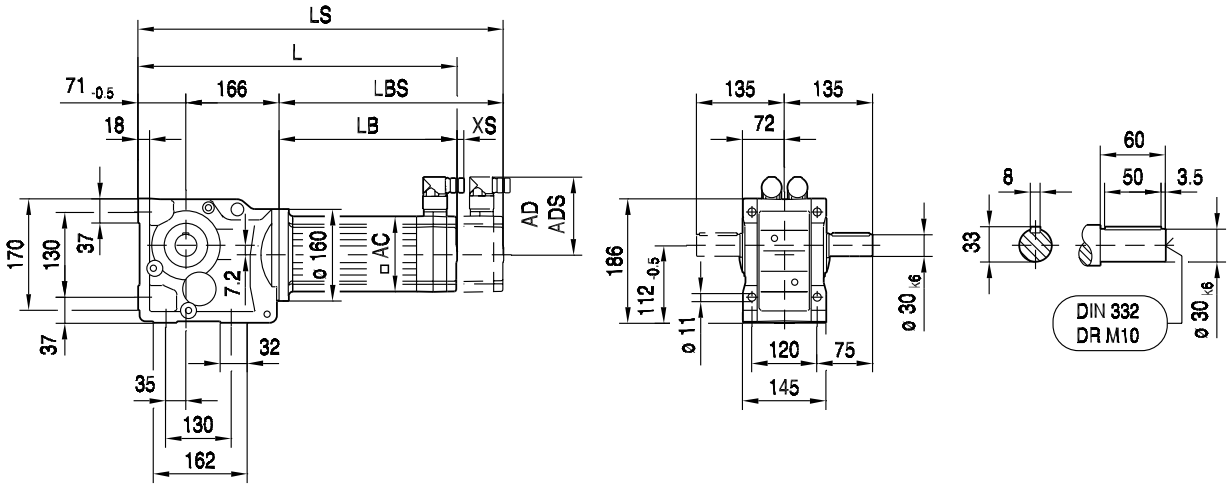

10

KA47B..

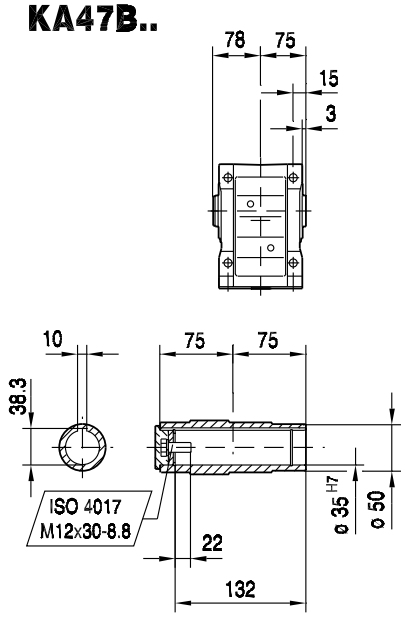

KH47B..

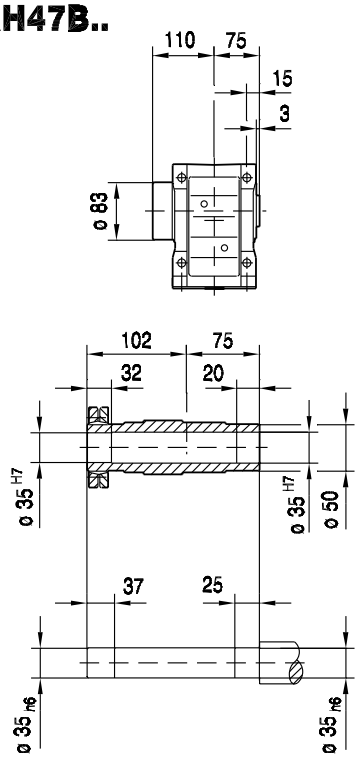

KV47B..

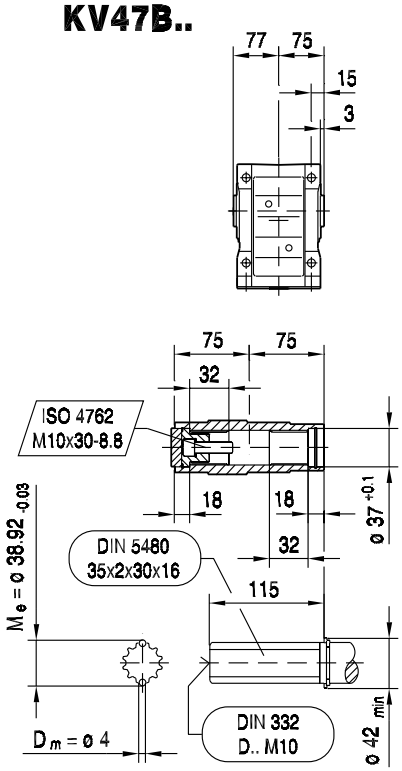

(→ 📖 150)	CMP50S	CMP50M	CMP50L	CMP63S	CMP63M	CMP63L		
AC	73	73	73	88	88	88		
AD	82	82	82	89	89	89		
ADS	82	82	82	89	89	89		
L	376	415	454	410	460	510		
LS	405	444	483	439	489	539		
LB	139	178	217	173	223	273		
LBS	168	207	246	202	252	302		
XS	18	18	18	14	14	14		

33 015 00 07

KF47..

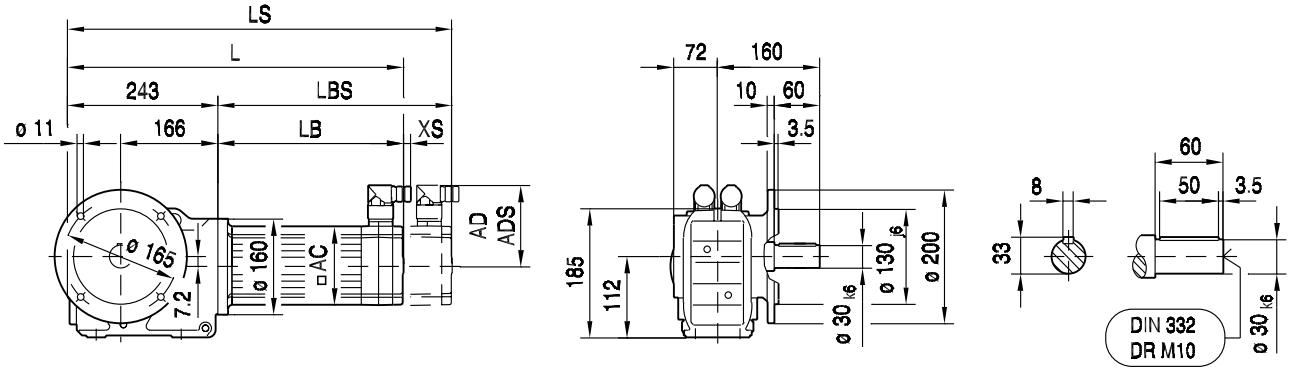

KAF47..

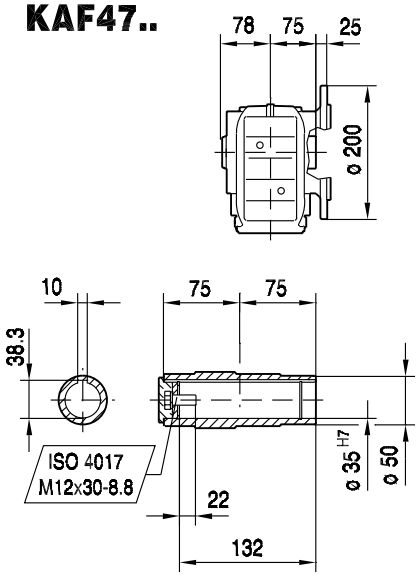

KHF47..

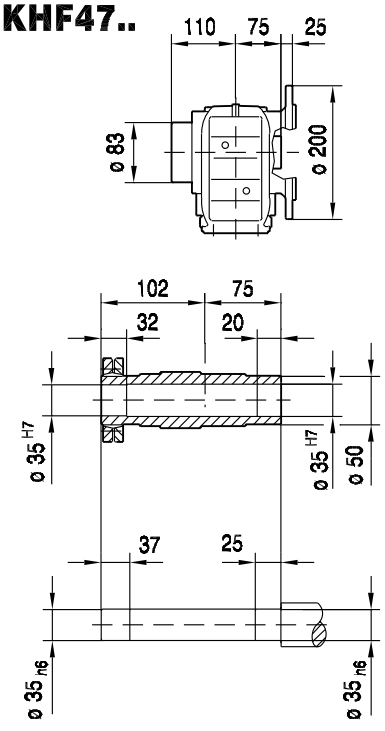

KVF47..

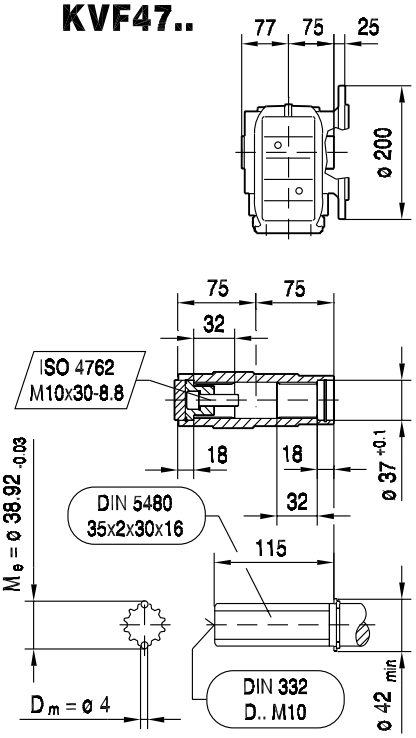

(→ 150)	CMP50S	CMP50M	CMP50L	CMP63S	CMP63M	CMP63L		
AC	73	73	73	88	88	88		
AD	82	82	82	89	89	89		
ADS	82	82	82	89	89	89		
L	382	421	460	416	466	516		
LS	411	450	489	445	495	545		
LB	139	178	217	173	223	273		
LBS	168	207	246	202	252	302		
XS	18	18	18	14	14	14		

KA47..

33 016 00 07

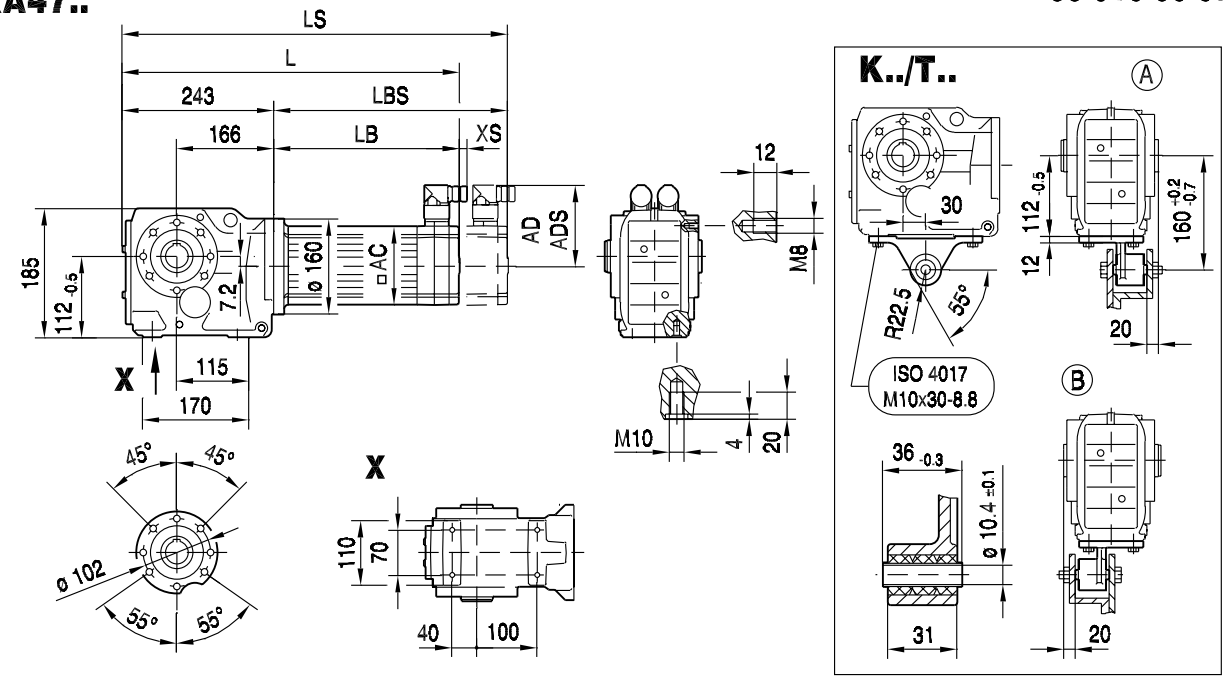

10

KA47..

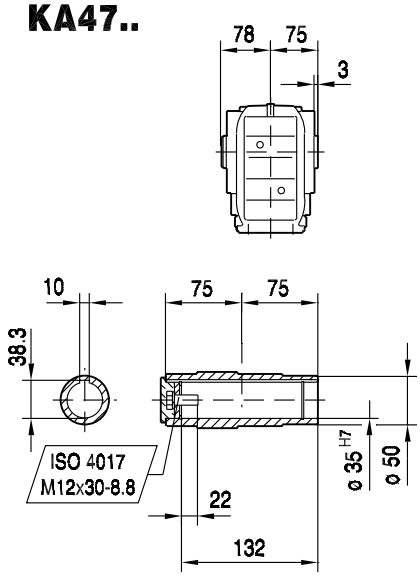

KH47..

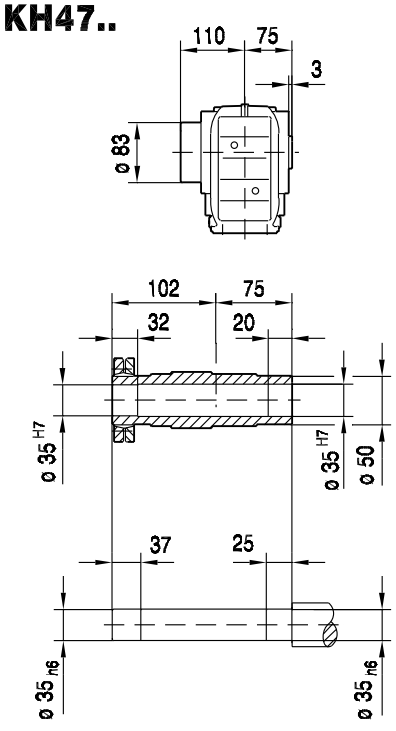

KV47..

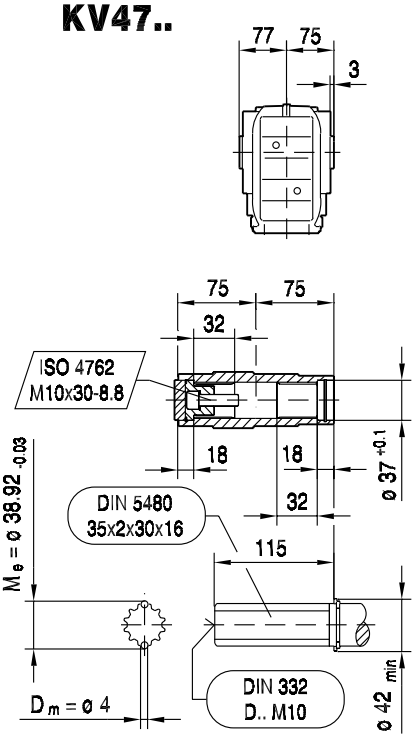

(→ 150)	CMP50S	CMP50M	CMP50L	CMP63S	CMP63M	CMP63L		
AC	73	73	73	88	88	88		
AD	82	82	82	89	89	89		
ADS	82	82	82	89	89	89		
L	382	421	460	416	466	516		
LS	411	450	489	445	495	545		
LB	139	178	217	173	223	273		
LBS	168	207	246	202	252	302		
XS	18	18	18	14	14	14		

KAZ47..

33 017 00 07

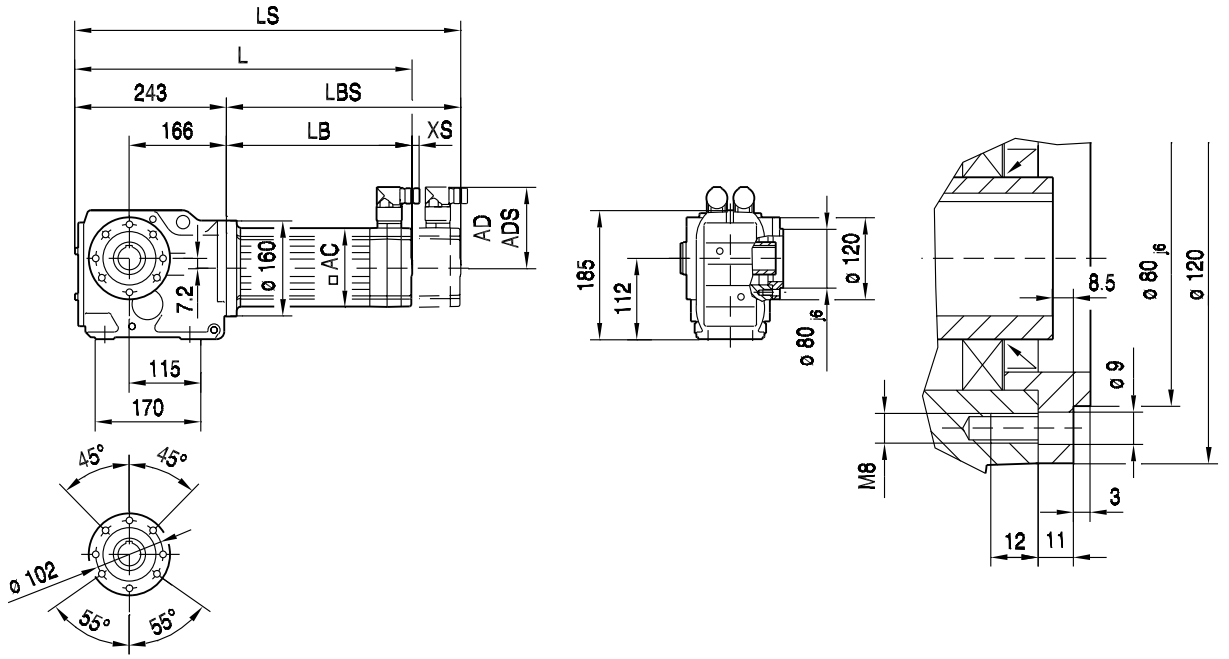

KAZ47..

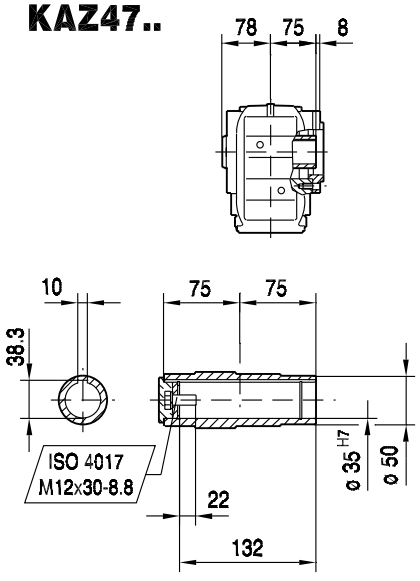

KHZ47..

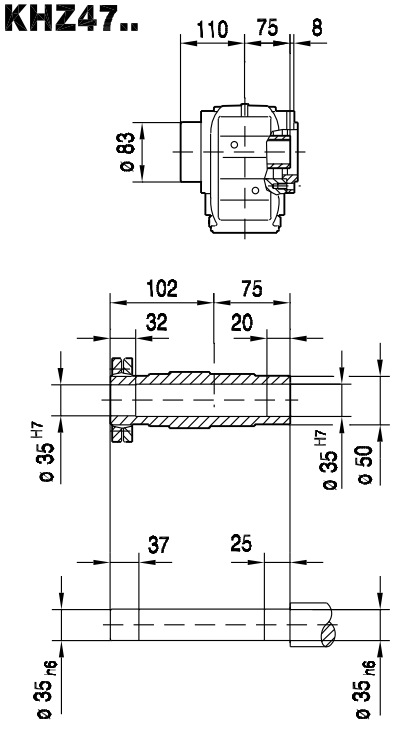

KVZ47..

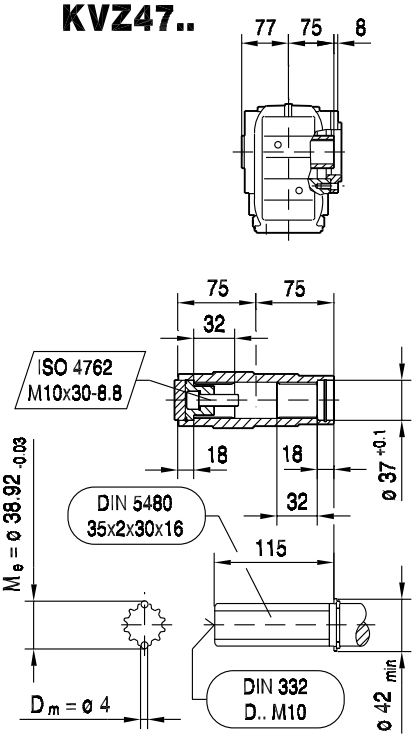

(→ 150)	CMP50S	CMP50M	CMP50L	CMP63S	CMP63M	CMP63L		
AC	73	73	73	88	88	88		
AD	82	82	82	89	89	89		
ADS	82	82	82	89	89	89		
L	382	421	460	416	466	516		
LS	411	450	489	445	495	545		
LB	139	178	217	173	223	273		
LBS	168	207	246	202	252	302		
XS	18	18	18	14	14	14		

KT47..

33 018 00 07

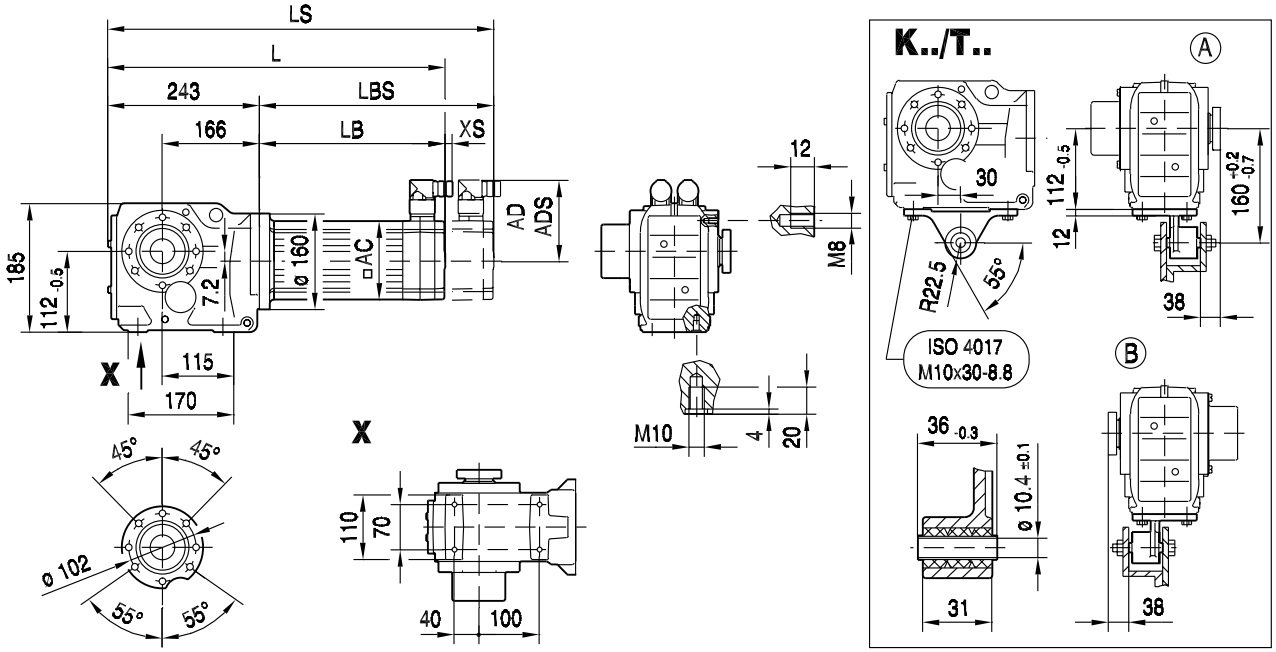

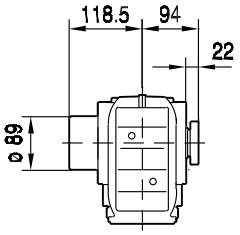

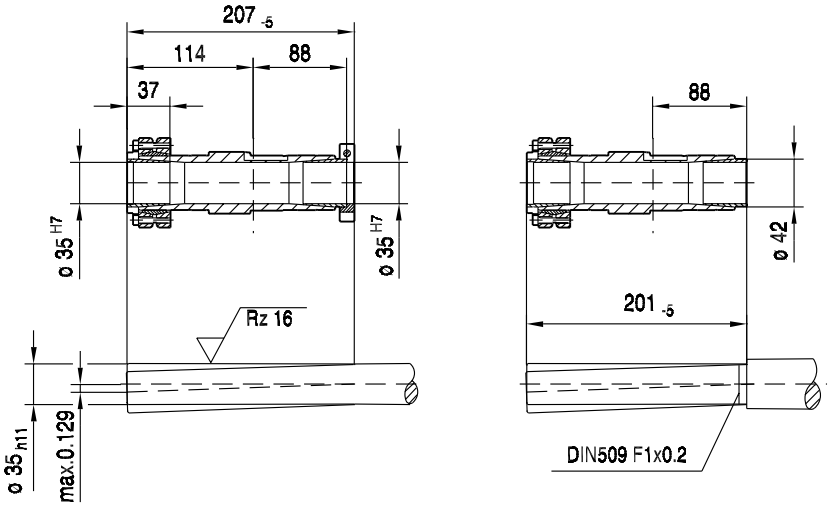

(→ 150)	CMP50S	CMP50M	CMP50L	CMP63S	CMP63M	CMP63L		
AC	73	73	73	88	88	88		
AD	82	82	82	89	89	89		
ADS	82	82	82	89	89	89		
L	382	421	460	416	466	516		
LS	411	450	489	445	495	545		
LB	139	178	217	173	223	273		
LBS	168	207	246	202	252	302		
XS	18	18	18	14	14	14		

34 032 01 01

K47..

DS56..

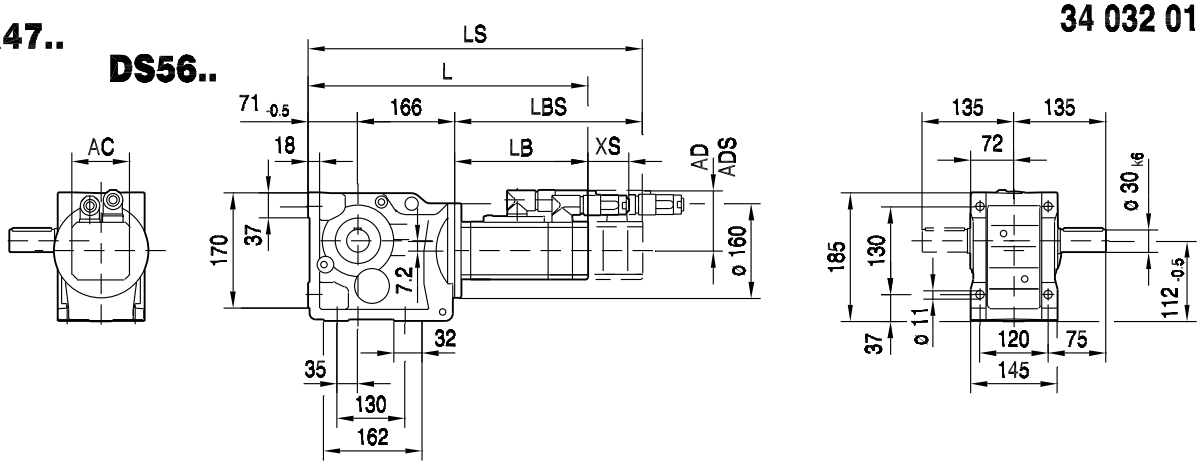

CM..

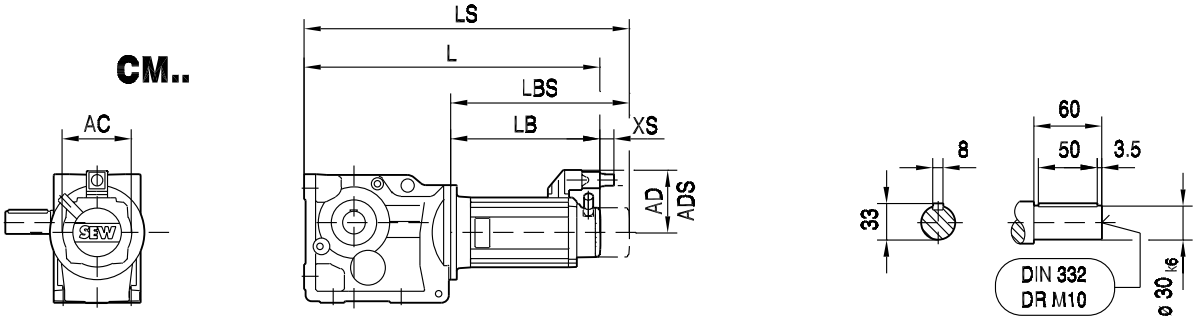

KA47B..

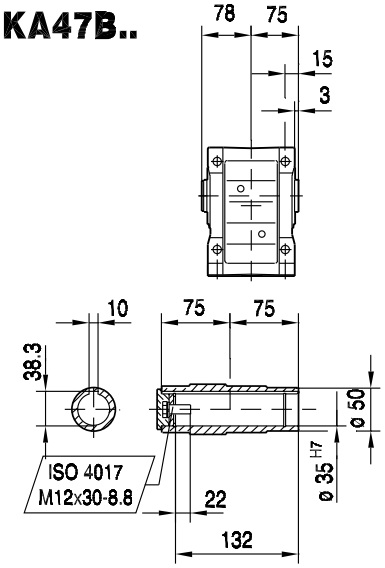

KH47B..

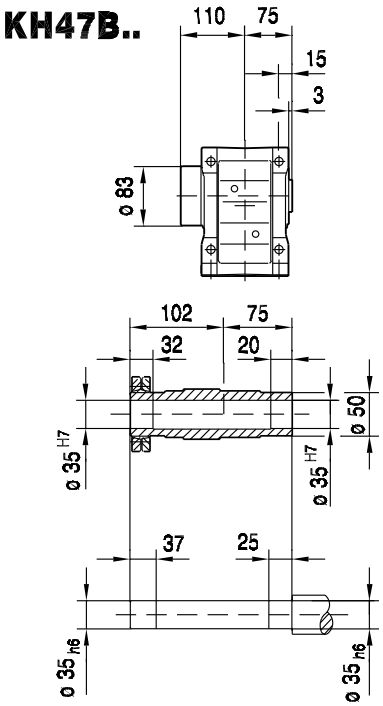

KV47B..

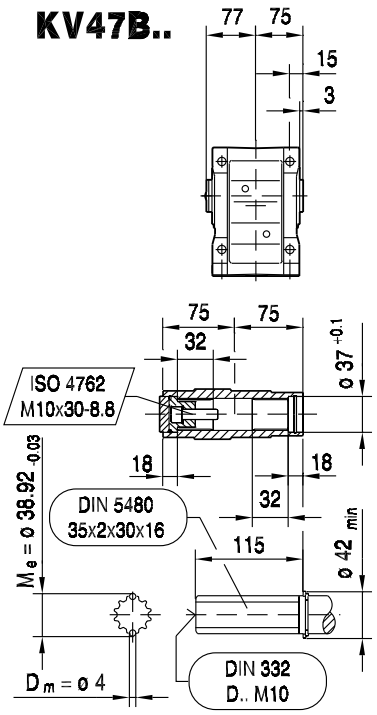

(→ 📖 150)	DS56H	CM71S	CM71M	CM71L	CM90S	CM90M					
AC	73	117	117	117	142	142					
AD	77	122	122	122	140	140					
ADS	77	122	122	122	140	140					
L	503	469	489	529	521	548					
LS	503	551	571	611	617	644					
LB	266	232	252	292	284	311					
LBS	266	314	334	374	380	407					
XS	51	45	45	45	50	50					

KF47..
DS56..

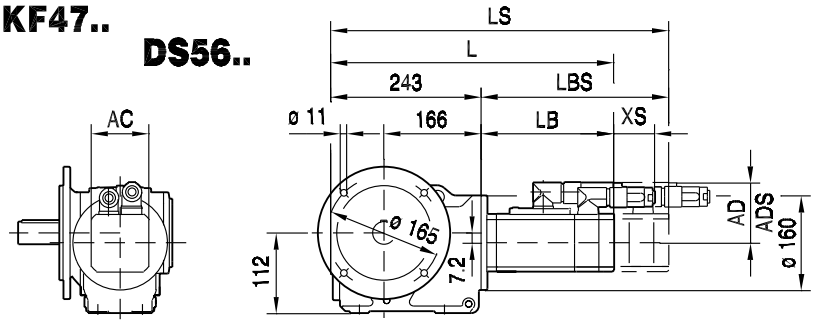

34 033 01 01

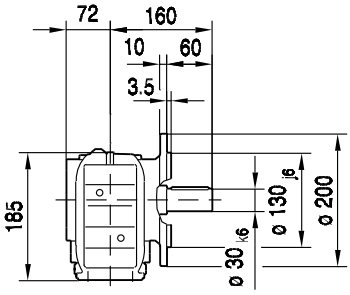

CM..

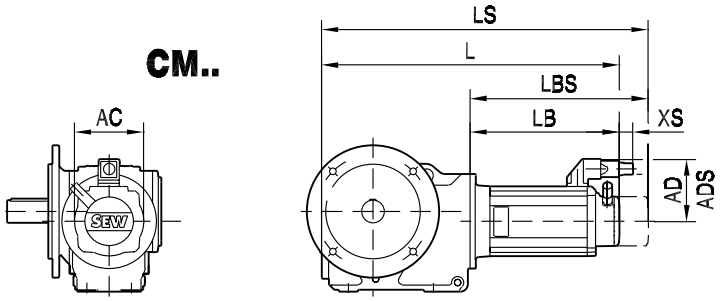

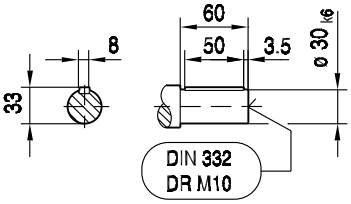

10

KAF47..

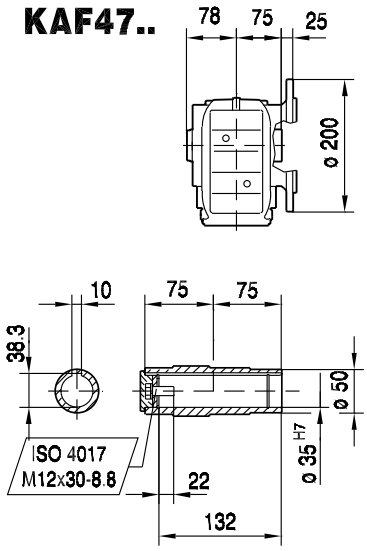

KHF47..

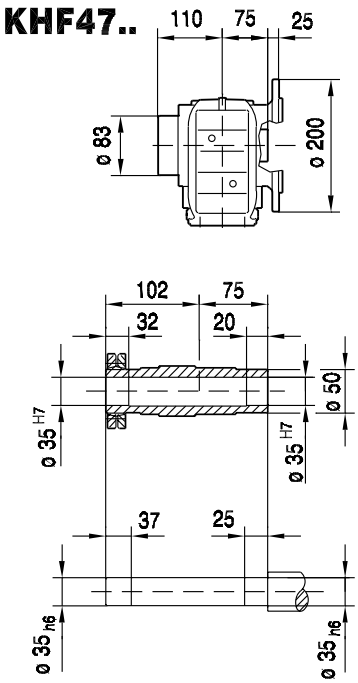

KVF47..

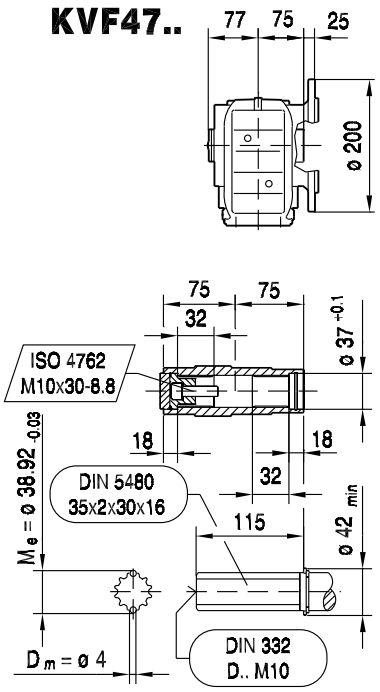

(→ 150)	DS56H	CM71S	CM71M	CM71L	CM90S	CM90M					
AC	73	117	117	117	142	142					
AD	77	122	122	122	140	140					
ADS	77	122	122	122	140	140					
L	509	475	495	535	527	554					
LS	509	557	577	617	623	650					
LB	266	232	252	292	284	311					
LBS	266	314	334	374	380	407					
XS	51	45	45	45	50	50					

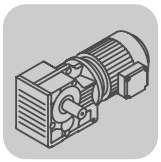

K..CMP, DS, CM
K 47 / CMP / DS / CM [mm]

KA47..

DS56..

39 021 01 01

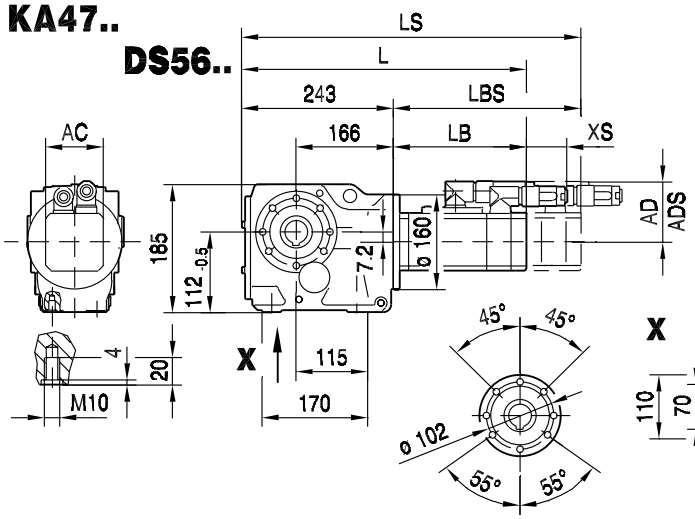

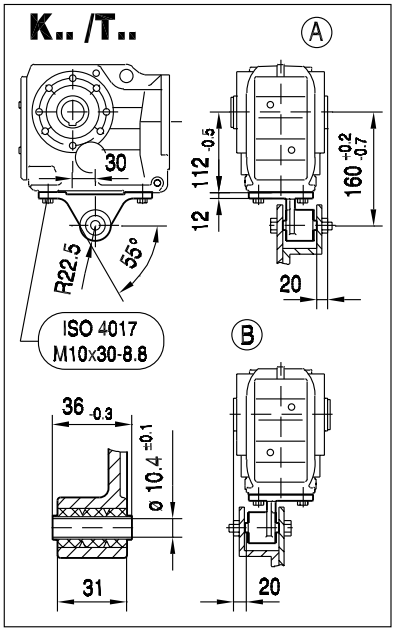

CM..

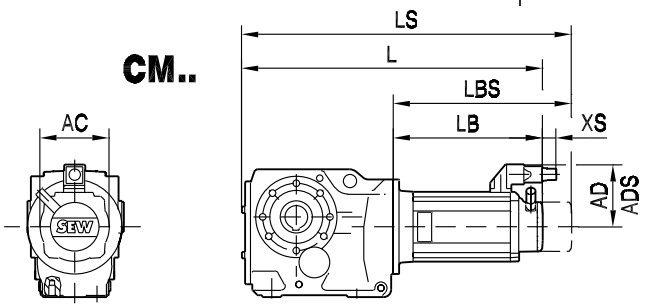

KA47..

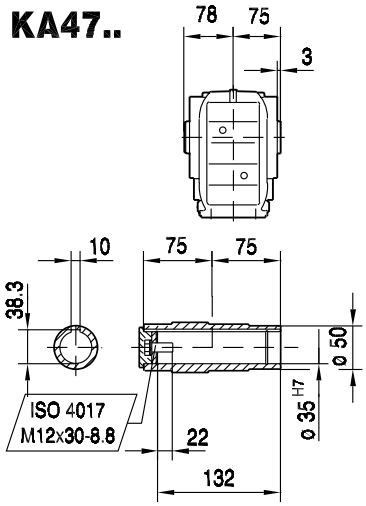

KH47..

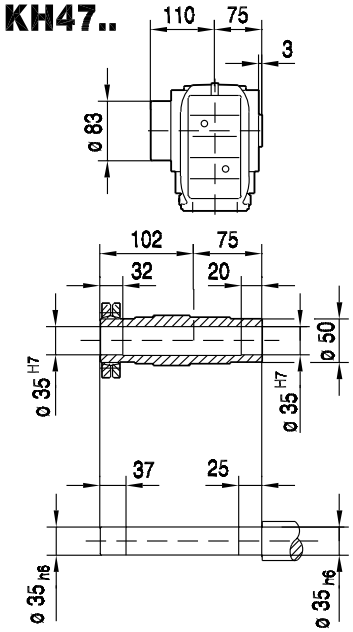

KV47..

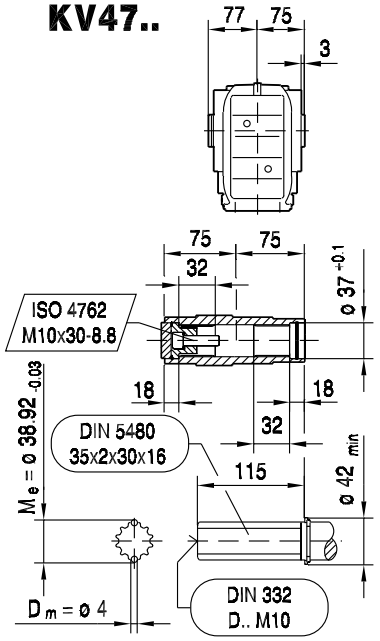

(→ 150)	DS56H	CM71S	CM71M	CM71L	CM90S	CM90M					
AC	73	117	117	117	142	142					
AD	77	122	122	122	140	140					
ADS	77	122	122	122	140	140					
L	509	475	495	535	527	554					
LS	509	557	577	617	623	650					
LB	266	232	252	292	284	311					
LBS	266	314	334	374	380	407					
XS	51	45	45	45	50	50					

39 034 00 04

KAZ47..
DS56..

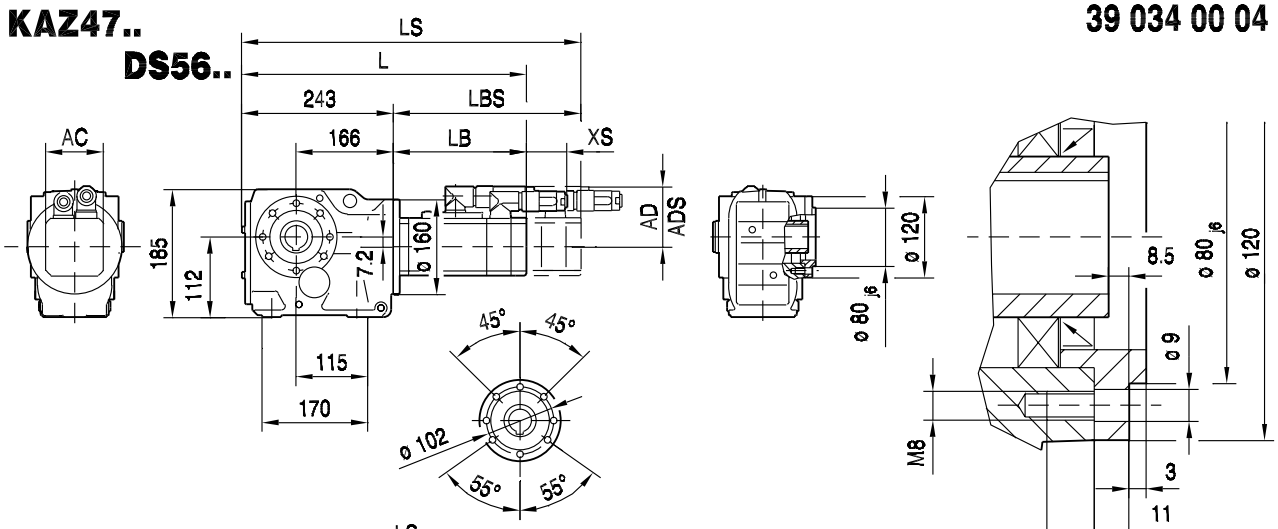

CM..

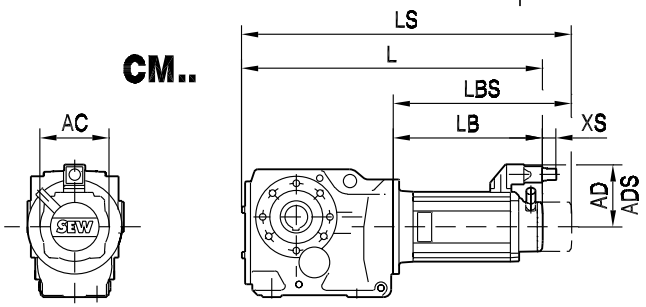

KAZ47..

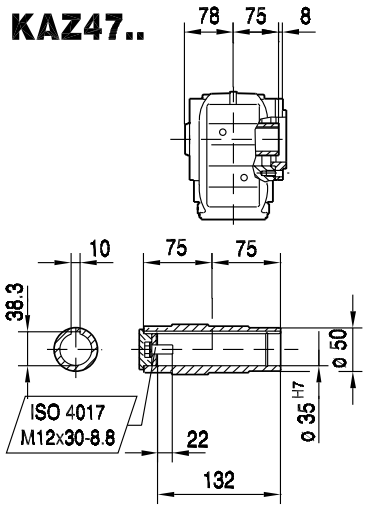

KHZ47..

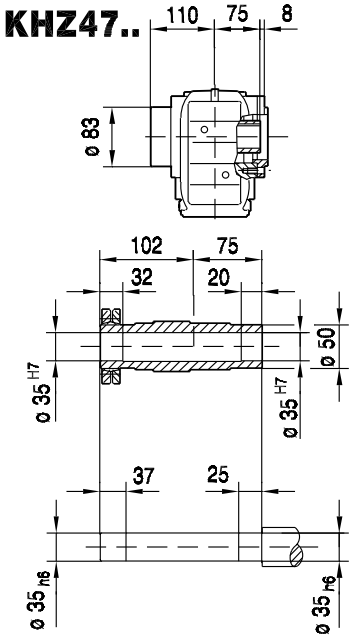

KVZ47..

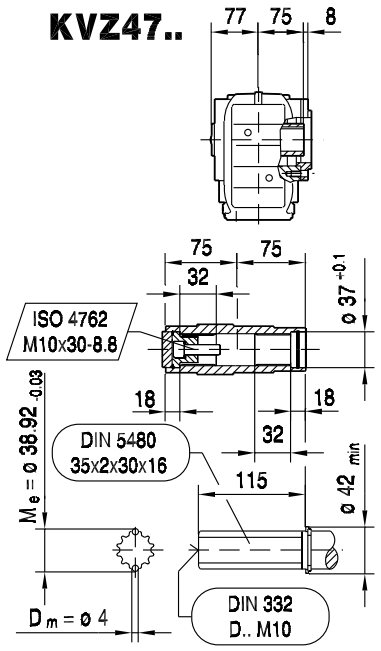

(→ 150)	DS56H	CM71S	CM71M	CM71L	CM90S	CM90M					
AC	73	117	117	117	142	142					
AD	77	122	122	122	140	140					
ADS	77	122	122	122	140	140					
L	509	475	495	535	527	554					
LS	509	557	577	617	623	650					
LB	266	232	252	292	284	311					
LBS	266	314	334	374	380	407					
XS	51	45	45	45	50	50					

KT47..

DS56..

39 042 00 04

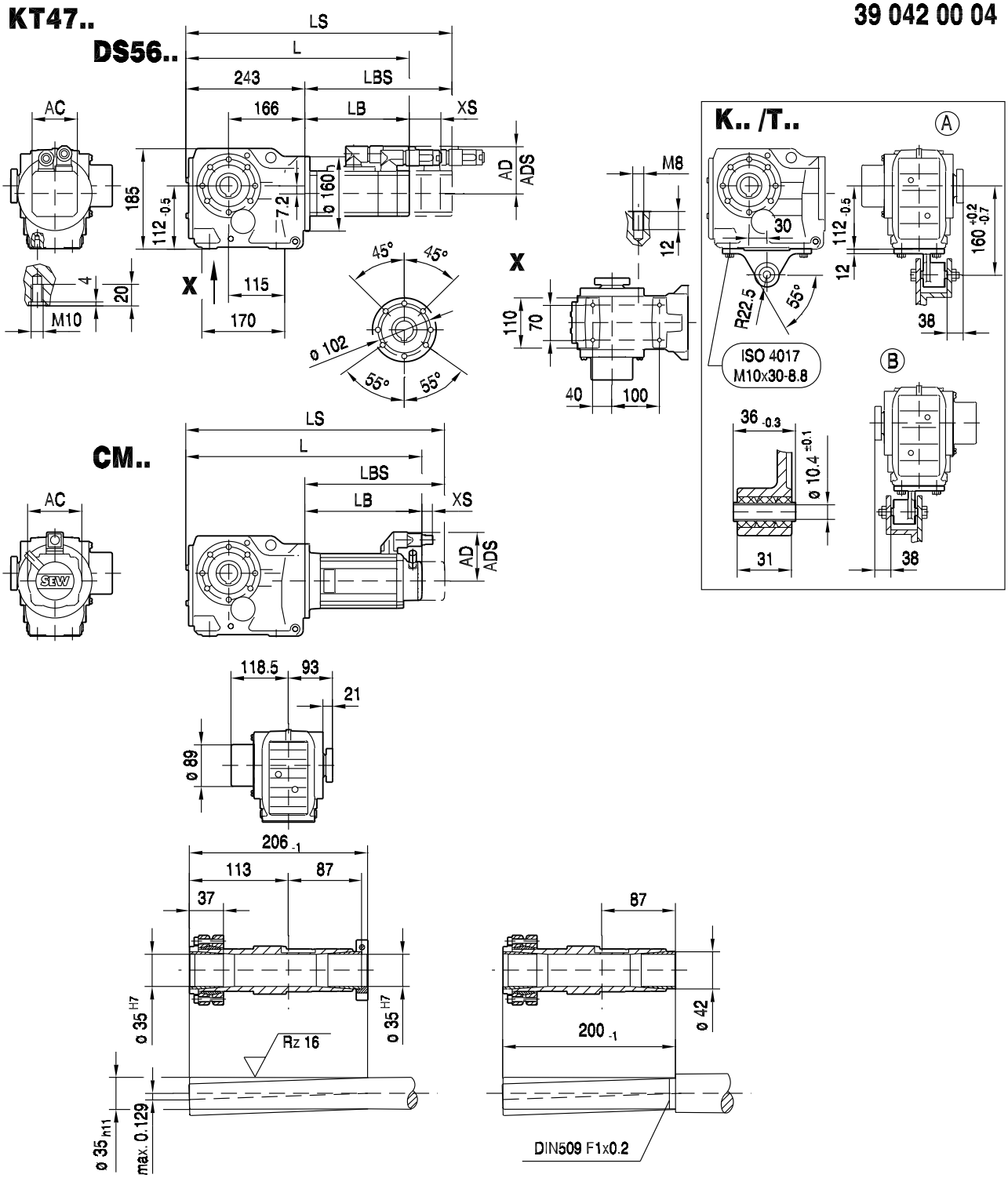

(→ 📖 150)	DS56H	CM71S	CM71M	CM71L	CM90S	CM90M					
AC	73	117	117	117	142	142					
AD	77	122	122	122	140	140					
ADS	77	122	122	122	140	140					
L	509	475	495	535	527	554					
LS	509	557	577	617	623	650					
LB	266	232	252	292	284	311					
LBS	266	314	334	374	380	407					
XS	51	45	45	45	50	50					

10.6 K 57 / CMP / DS / CM [Nm]

M_{aDyn} [Nm]		CMP						DS			CM						
	i	50S	50M	50L	63S	63M	63L	56M	56L	56H	71S	71M	71L	90S	90M	90L	112S
	4.69		46	69	50	96	137			68	74	97	141	178	235	340	371
	6.57		64	96	69	134	190			95	103	134	196	247	326	472	514
	7.55	37	74	110	80	153	218	27	55	109	118	154	225	284	374	542	>547
	8.71	43	85	127	92	177	252	31	63	126	137	178	260	328	432	>585	>585
	9.59	47	94	140	101	195	277	35	69	138	150	196	286	361	476	>585	>585
	11.26	56	110	165	119	229	325	41	81	163	177	230	336	424	558	>585	>585
	11.92	59	117	174	126	242	344	43	86	172	187	243	356	448	>585	>585	>585
	13.25		130	194	140	269	383			191	208	271	395	498	657	>665	>665
	15.22	75	149	223	160	309	440	55	110	220	239	311	454	573	>665	>665	>665
	17.57	87	172	257	185	357	507	63	127	254	275	359	524	661	>665	>665	>665
	19.34	96	189	283	204	393	559	70	140	279	303	395	577	>665	>665	>665	>665
	22.71	112	222	332	239	462	656	82	164	328	356	464	>665	>665	>665	>665	>665
	24.05	119	235	352	254	489	>665	87	174	347	377	491	>665	>665	>665	>665	>665
K57	27.34	134	265	396	285	550	>665	98	195	391	424	553	>665	>665	>665		
3	30.28	148	293	438	316	609	>665	108	216	433	470	612	>665	>665	>665		
	35.7	175	346	517	372	>665	>665	128	255	510	554	>665	>665	>665			
	38.49	186	369	551	397	>665	>665	136	272	544	591	>665	>665	>665	>665	>665	>665
	44.43	215	426	636	459	>665	>665	157	314	628	>665	>665	>665	>665	>665	>665	>665
	48.89	236	468	>665	505	>665	>665	173	346	>665	>665	>665	>665	>665	>665	>665	>665
	57.42	278	550	>665	593	>665	>665	203	406	>665	>665	>665	>665	>665	>665	>665	>665
	60.81	294	582	>665	628	>665	>665	215	430	>665	>665	>665	>665	>665	>665	>665	>665
	69.12	334	662	>665	>665	>665	>665	244	489	>665	>665	>665	>665	>665	>665		
	76.56	370	>665	>665	>665	>665	>665	271	541	>665	>665	>665	>665	>665	>665		
	90.26	436	>665	>665	>665	>665	>665	319	638	>665	>665	>665	>665	>665			
	102.88	492	>665	>665	>665	>665		360	>665	>665	>665	>665					
	108.29	518	>665	>665	>665	>665		379	>665	>665	>665	>665					
	123.85	592	>665		>665			433	>665	>665							
	145.14	>665						507	>665								

m [kg]		CMP						DS			CM						
	s	50S	50M	50L	63S	63M	63L	56M	56L	56H	71S	71M	71L	90S	90M	90L	112S
K57	3	27	28	29	29	31	32	26	27	28	32	34	37	41	44	49	50
KF: + 4.7 kg / KA: + -2.1 kg / KAF: + 3.6 kg																	

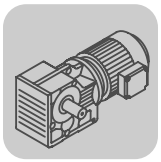

K..CMP, DS, CM
K 57 / CMP / DS / CM [Nm]

CMP.. / DS.. / CM..	i	n_{epk} [1/min]	η [%]	c_T K [Nm/']	c_T KF [Nm/']	c_T KA [Nm/']	c_T KAF [Nm/']	φ /R [']
K57 3	4.69	4045	96	34.23	32.72	81.26	81.26	11
	6.57	4500	95	34.23	32.72	81.26	81.26	10
	7.55	4500	95	34.23	32.72	81.26	81.26	10
	8.71	4500	95	34.23	32.72	81.26	81.26	10
	9.59	4500	95	34.23	32.72	81.26	81.26	10
	11.26	4500	95	34.23	32.72	81.26	81.26	9
	11.92	4500	95	34.23	32.72	81.26	81.26	9
	13.25	4500	95	41.31	39.0	135.41	135.41	7
	15.22	4500	95	41.31	39.0	135.41	135.41	7
	17.57	4500	95	41.31	39.0	135.41	135.41	7
	19.34	4500	95	41.31	39.0	135.41	135.41	7
	22.71	4500	95	41.31	39.0	135.41	135.41	7
	24.05	4500	95	41.31	39.0	135.41	135.41	7
	27.34	4500	94	41.31	39.0	135.41	135.41	7
	30.28	4500	94	41.31	39.0	135.41	135.41	7
	35.7	4500	94	41.31	39.0	135.41	135.41	7
	38.49	4500	93	42.6	40.15	150.38	150.38	6
	44.43	4500	93	42.6	40.15	150.38	150.38	6
	48.89	4500	93	42.6	40.15	150.38	150.38	6
	57.42	4500	93	42.6	40.15	150.38	150.38	6
	60.81	4500	93	42.6	40.15	150.38	150.38	6
	69.12	4500	93	42.6	40.15	150.38	150.38	6
	76.56	4500	93	42.6	40.15	150.38	150.38	6
	90.26	4500	93	42.6	40.15	150.38	150.38	6
	102.88	4500	92	42.6	40.15	150.38	150.38	6
	108.29	4500	92	42.6	40.15	150.38	150.38	6
	123.85	4500	92	42.6	40.15	150.38	150.38	6
	145.14	4500	92	42.6	40.15	150.38	150.38	6

CMP.. / DS.. / CM..							F_{Ramax}				F_{Rapk}			
	i	M_{amax} [Nm]	M_{apk} [Nm]	$M_{aNotaus}$ [Nm]	n_{ak} [1/min]	J_G 10^{-4} [kgm^2]	K [N]	KF [N]	KA [N]	KAF [N]	K [N]	KF [N]	KA [N]	KAF [N]
K57 3	4.69	300	450	510	320	9.0	3800	3980	2580	2580	8520	8520	11500	11500
	6.57	345	517	587	244	5.6	4180	4400	2800	2800	7990	8110	11500	11500
	7.55	365	547	621	225	4.4	4360	4580	2900	2900	7740	7920	11500	11500
	8.71	390	585	663	195	3.5	4520	4760	2980	2980	7420	7660	11500	11500
	9.59	405	585	689	177	3.0	4650	4900	3050	3050	7420	7660	11500	11500
	11.26	415	585	706	178	2.3	4990	5250	3340	3340	7420	7660	11500	11500
	11.92	415	585	706	176	2.1	5150	5400	3470	3470	7420	7660	11500	11500
	13.25	510	665	867	226	4.8	5190	5350	3240	3240	4700	4700	11500	11500
	15.22	535	665	910	197	3.8	5430	5600	3390	3390	4700	4700	11500	11500
	17.57	555	665	944	171	3.0	5740	5910	3610	3610	4700	4700	11500	11500
	19.34	575	665	978	155	2.6	5910	6080	3710	3710	4700	4700	11500	11500
	22.71	600	665	1020	132	2.0	6280	6460	3970	3970	4700	4700	11500	11500
	24.05	600	665	1020	133	1.9	6480	6650	4140	4140	4700	4700	11500	11500
	27.34	600	665	1020	132	1.5	6930	7090	4550	4550	4700	4700	11500	11500
	30.28	600	665	1020	132	1.2	7300	7460	4880	4880	4700	4700	11500	11500
	35.7	600	665	1020	134	0.95	7630	7720	5440	5440	4700	4700	11500	11500
	38.49	600	665	1020	70	2.3	7630	7720	5710	5710	4700	4700	11500	11500
	44.43	600	665	1020	72	1.9	7630	7720	6240	6240	4700	4700	11500	11500
	48.89	600	665	1020	74	1.6	7630	7720	6610	6610	4700	4700	11500	11500
	57.42	600	665	1020	75	1.3	7630	7720	7260	7260	4700	4700	11500	11500
	60.81	600	665	1020	76	1.2	7630	7720	7490	7490	4700	4700	11500	11500
	69.12	600	665	1020	77	0.98	7630	7720	8040	8040	4700	4700	11500	11500
	76.56	600	665	1020	78	0.85	7630	7720	8500	8500	4700	4700	11500	11500
	90.26	600	665	1020	78	0.67	7630	7720	9260	9260	4700	4700	11500	11500
	102.88	600	665	1020	68	0.46	7630	7720	9900	9900	4700	4700	11500	11500
	108.29	600	665	1020	65	0.41	7630	7720	10200	10200	4700	4700	11500	11500
	123.85	600	665	1020	57	0.33	7630	7720	10900	10900	4700	4700	11500	11500
	145.14	600	665	1020	48	0.27	7630	7720	11500	11500	4700	4700	11500	11500

10.7 K 57 / CMP / DS / CM [mm]

33 019 00 07

K57..

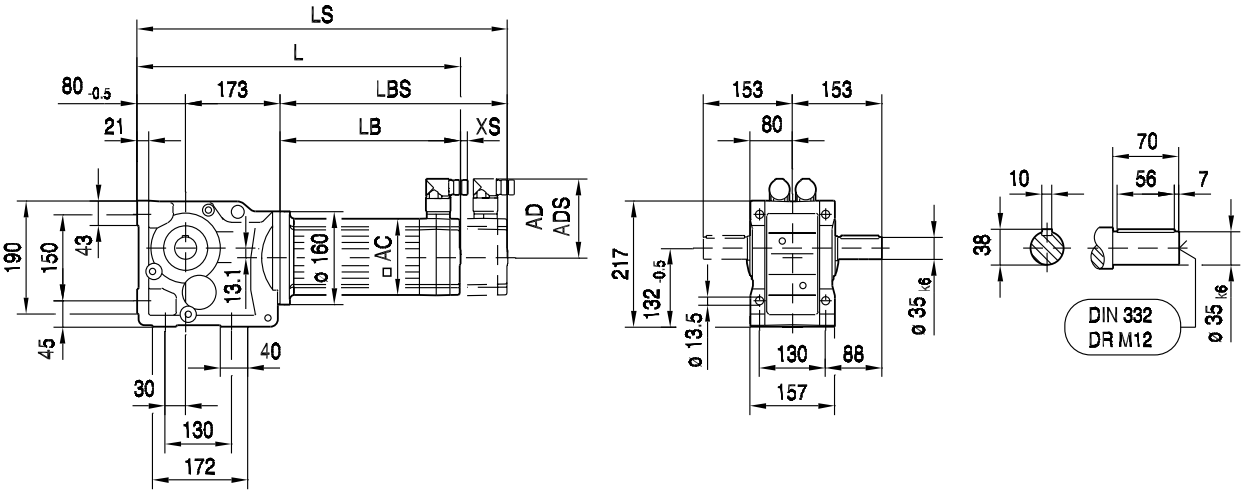

KA57B..

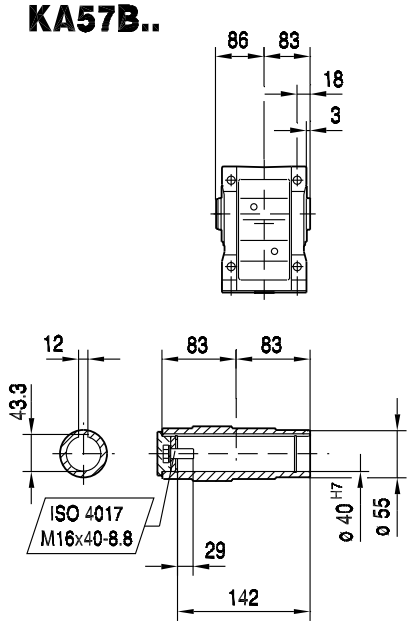

KH57B..

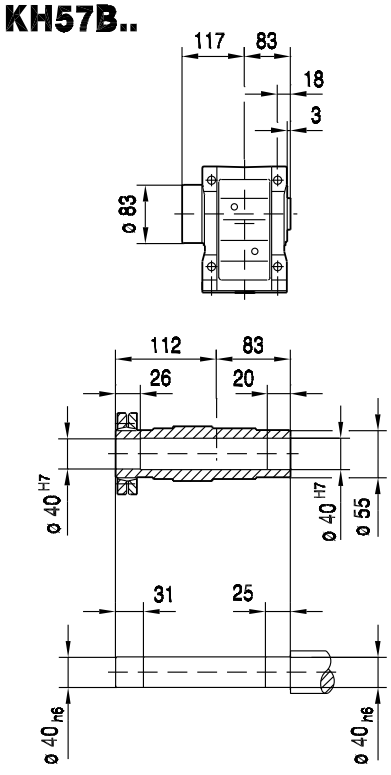

KV57B..

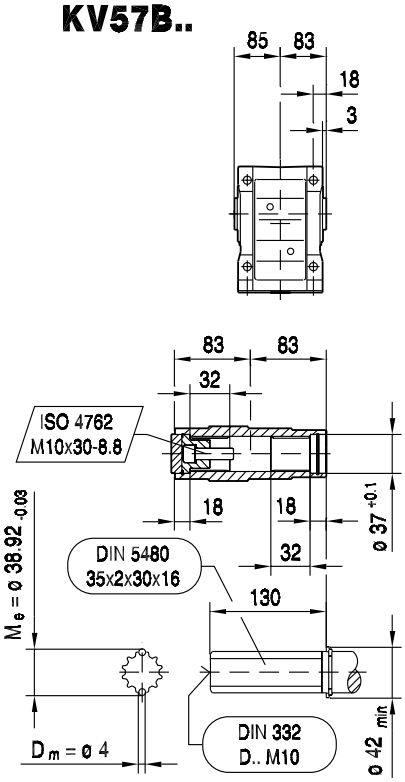

(→ 150)	CMP50S	CMP50M	CMP50L	CMP63S	CMP63M	CMP63L		
AC	73	73	73	88	88	88		
AD	82	82	82	89	89	89		
ADS	82	82	82	89	89	89		
L	392	431	470	426	476	526		
LS	421	460	499	455	505	555		
LB	139	178	217	173	223	273		
LBS	168	207	246	202	252	302		
XS	18	18	18	14	14	14		

33 020 00 07

KF57..

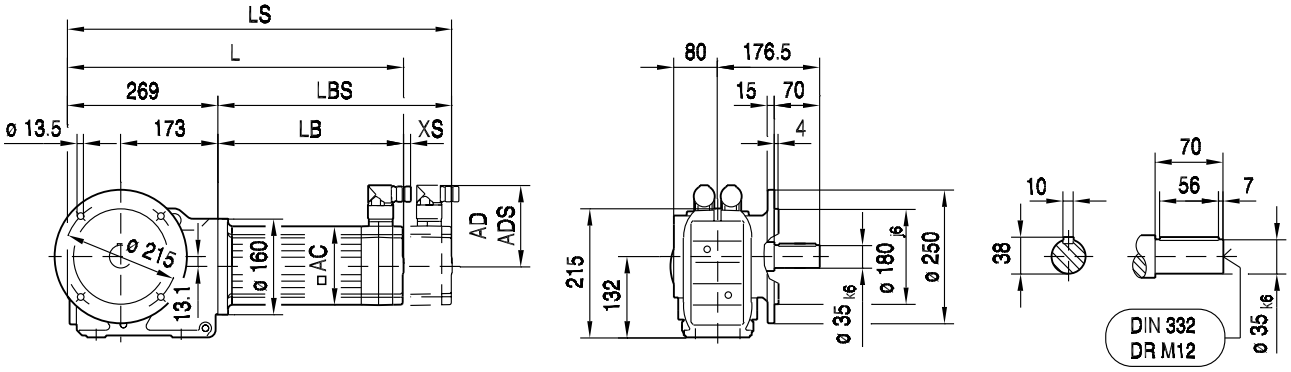

10

KAF57..

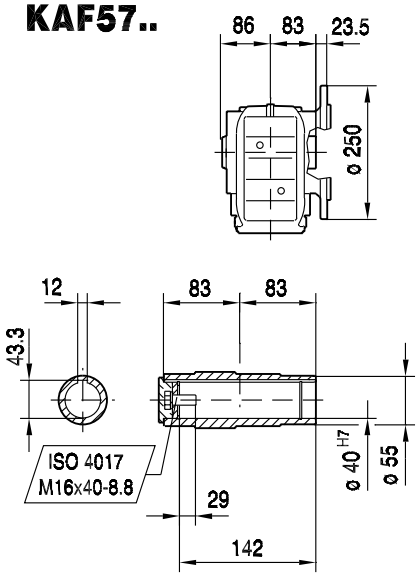

KHF57..

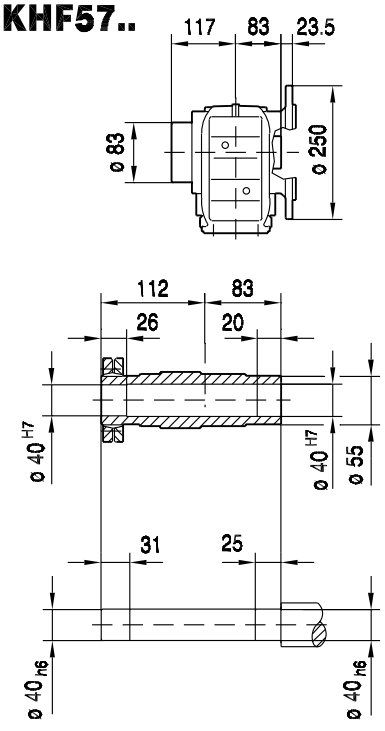

KVF57..

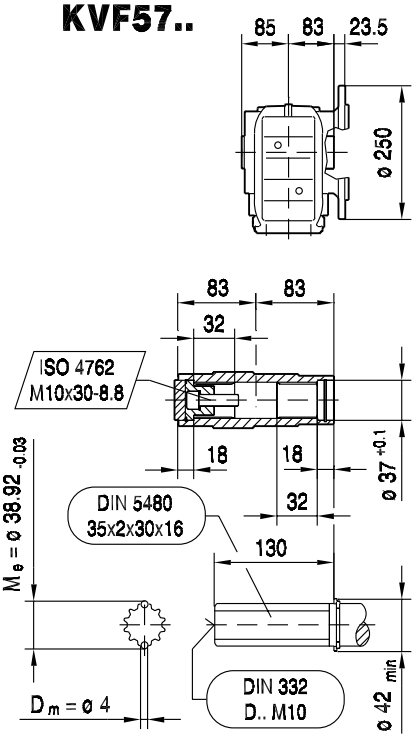

(→ 150)	CMP50S	CMP50M	CMP50L	CMP63S	CMP63M	CMP63L		
AC	73	73	73	88	88	88		
AD	82	82	82	89	89	89		
ADS	82	82	82	89	89	89		
L	408	447	486	442	492	542		
LS	437	476	515	471	521	571		
LB	139	178	217	173	223	273		
LBS	168	207	246	202	252	302		
XS	18	18	18	14	14	14		

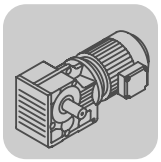

K..CMP, DS, CM
K 57 / CMP / DS / CM [mm]

KA57..

33 021 00 07

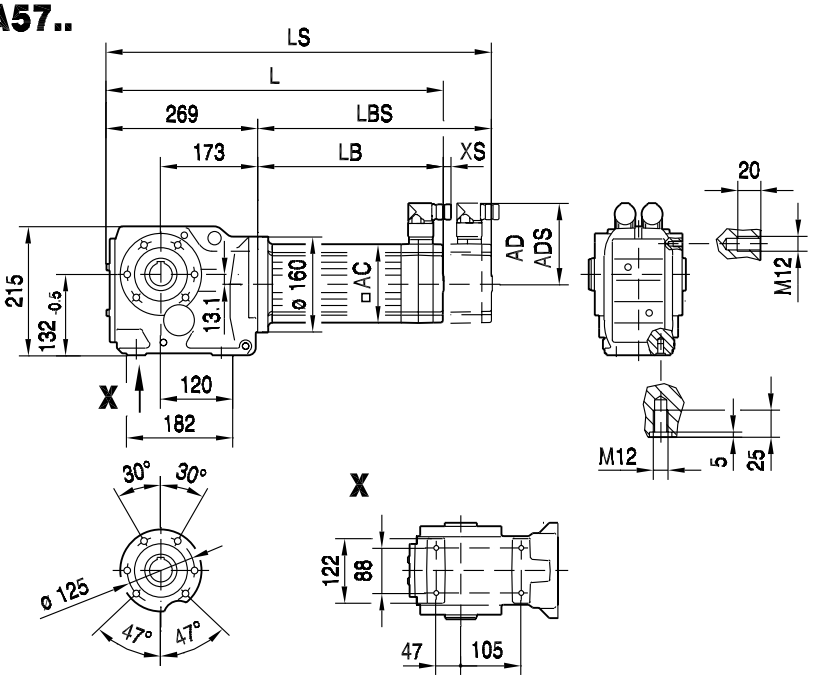

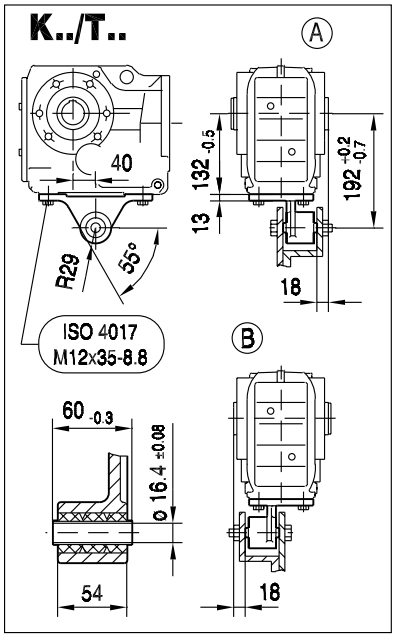

KA57..

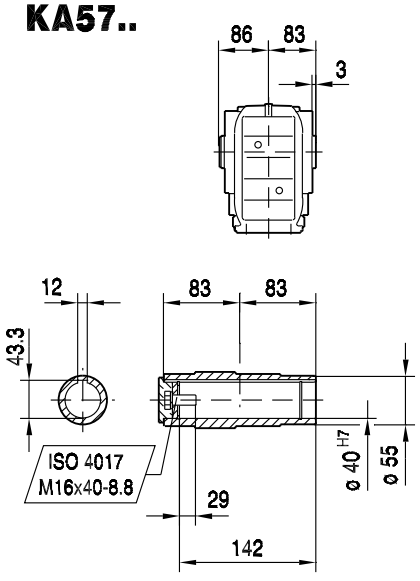

KH57..

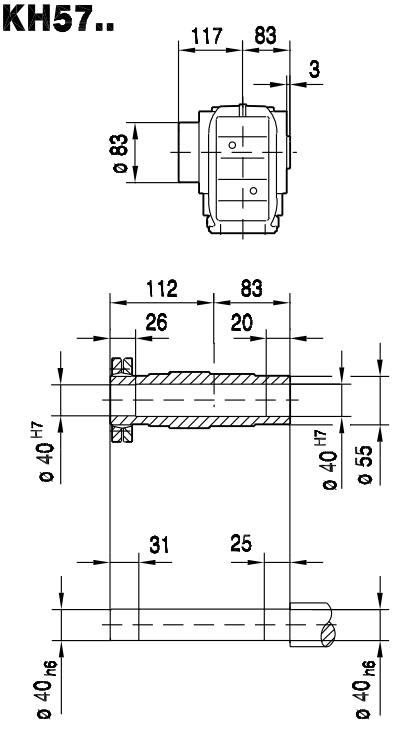

KV57..

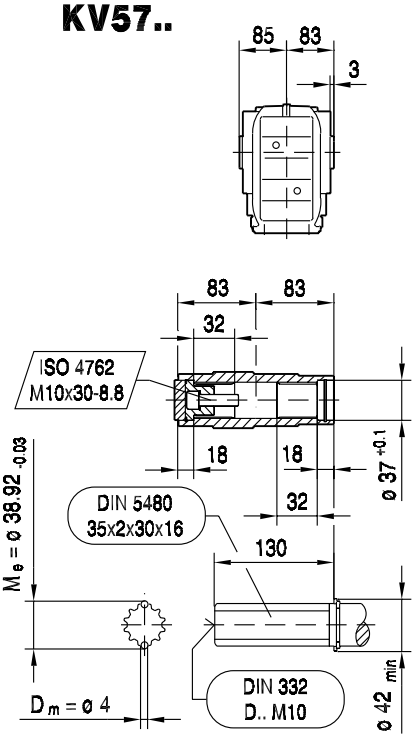

(→ 150)	CMP50S	CMP50M	CMP50L	CMP63S	CMP63M	CMP63L		
AC	73	73	73	88	88	88		
AD	82	82	82	89	89	89		
ADS	82	82	82	89	89	89		
L	408	447	486	442	492	542		
LS	437	476	515	471	521	571		
LB	139	178	217	173	223	273		
LBS	168	207	246	202	252	302		
XS	18	18	18	14	14	14		

KAZ57..

33 022 00 07

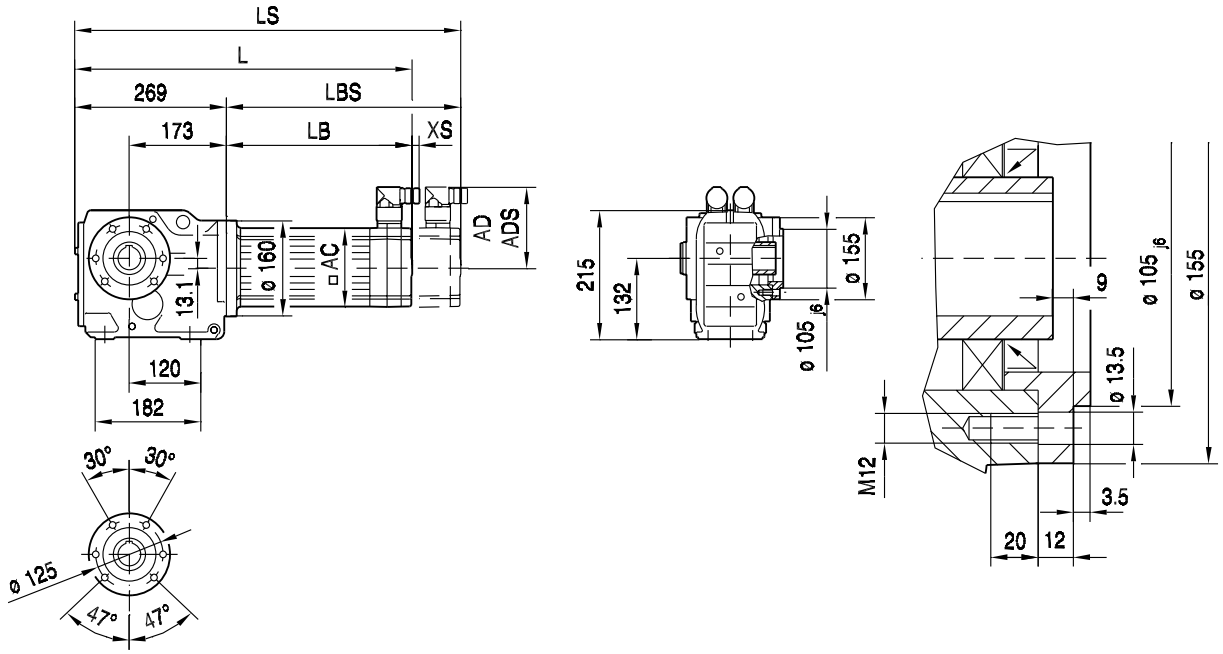

10

KAZ57..

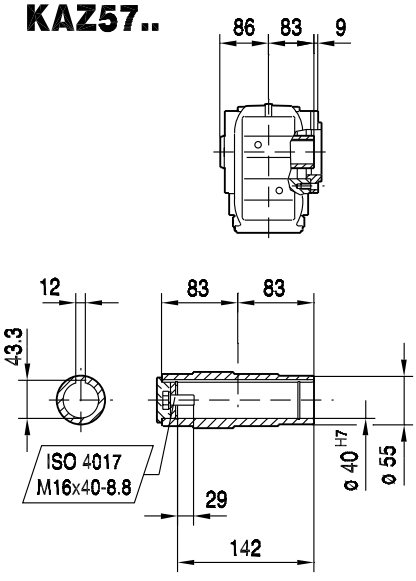

KHZ57..

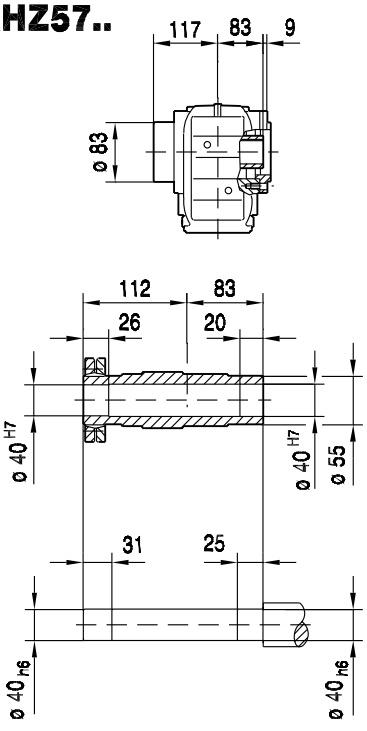

KVZ57..

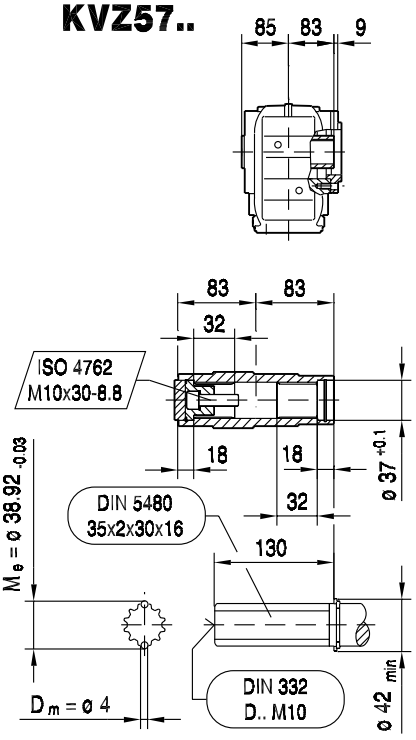

(→ 150)	CMP50S	CMP50M	CMP50L	CMP63S	CMP63M	CMP63L		
AC	73	73	73	88	88	88		
AD	82	82	82	89	89	89		
ADS	82	82	82	89	89	89		
L	408	447	486	442	492	542		
LS	437	476	515	471	521	571		
LB	139	178	217	173	223	273		
LBS	168	207	246	202	252	302		
XS	18	18	18	14	14	14		

KT57..

33 023 00 07

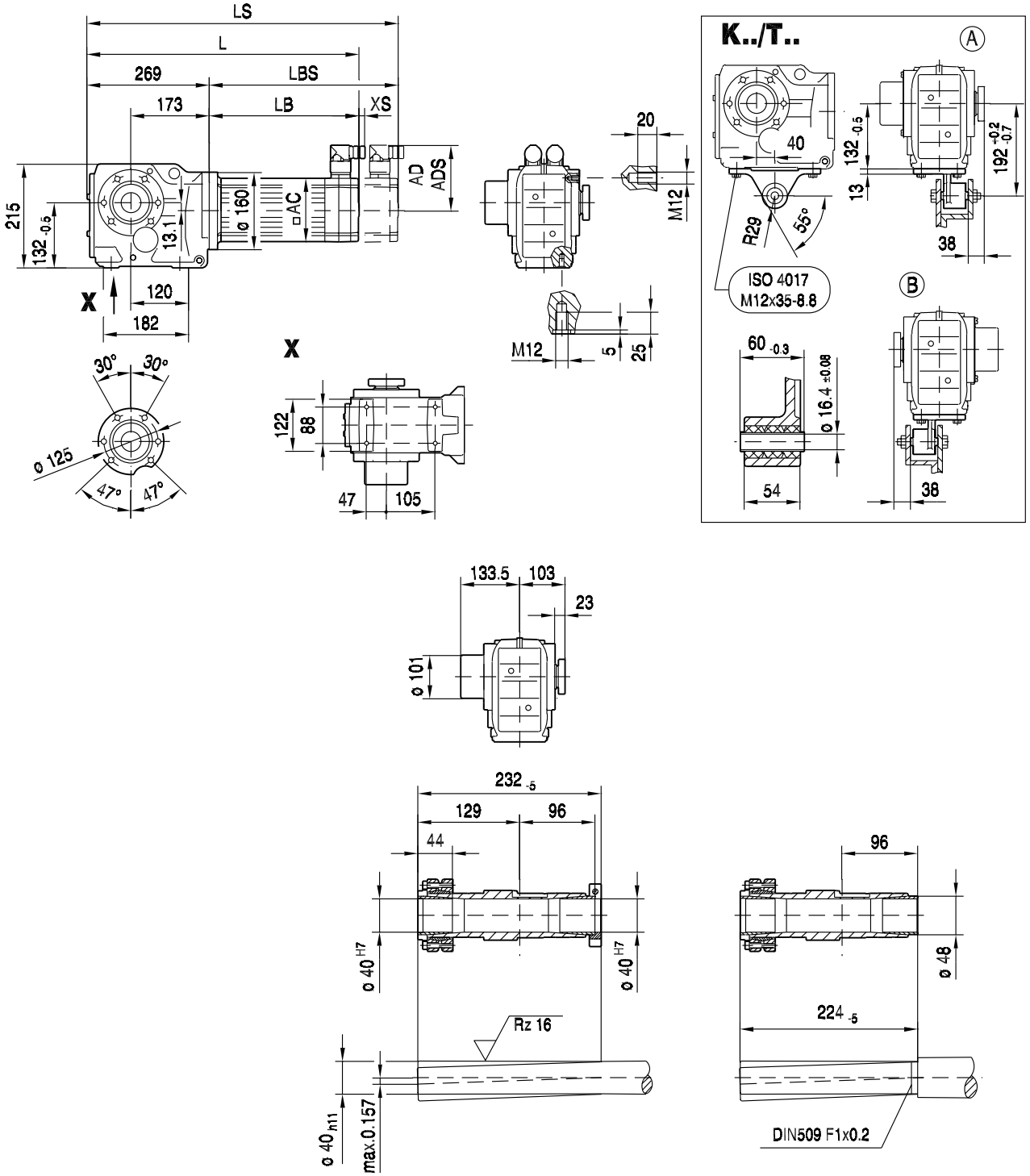

(→ 📖 150)	CMP50S	CMP50M	CMP50L	CMP63S	CMP63M	CMP63L		
AC	73	73	73	88	88	88		
AD	82	82	82	89	89	89		
ADS	82	82	82	89	89	89		
L	408	447	486	442	492	542		
LS	437	476	515	471	521	571		
LB	139	178	217	173	223	273		
LBS	168	207	246	202	252	302		
XS	18	18	18	14	14	14		

34 034 01 01

K57..

DS56..

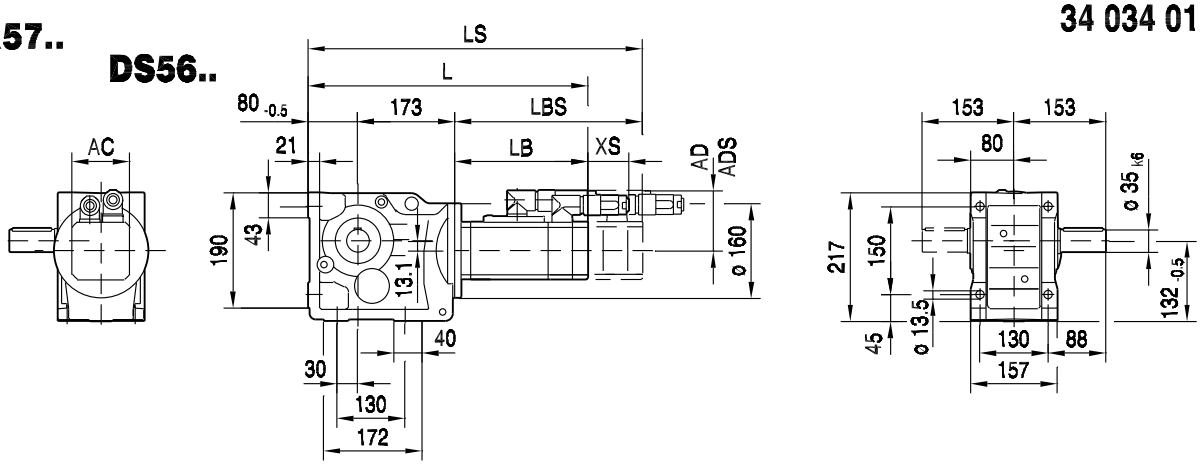

CM..

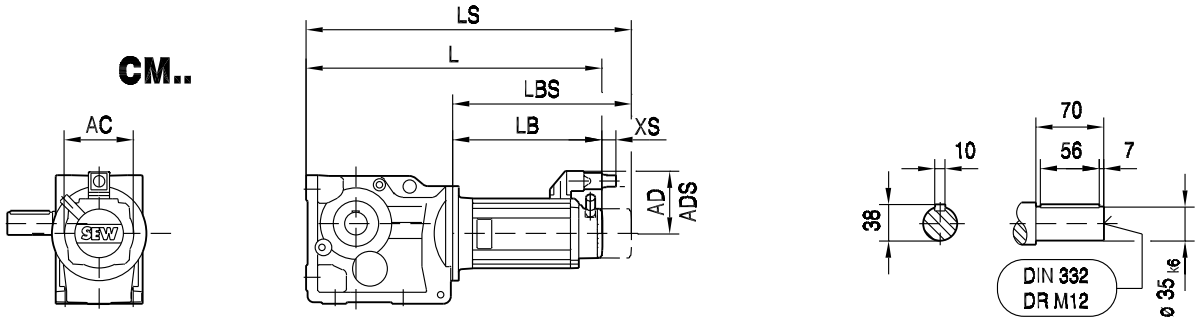

KA57B..

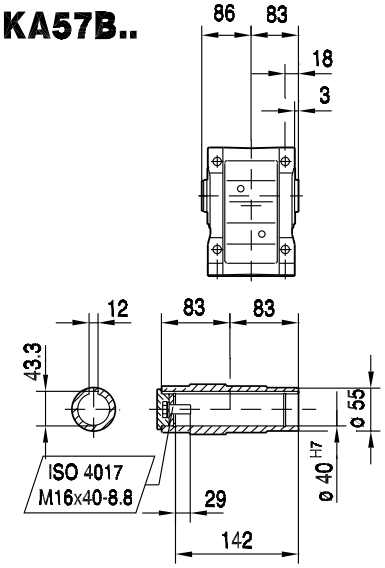

KH57B..

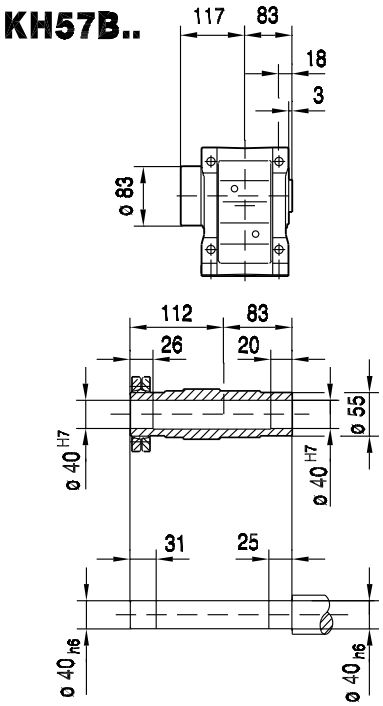

KV57B..

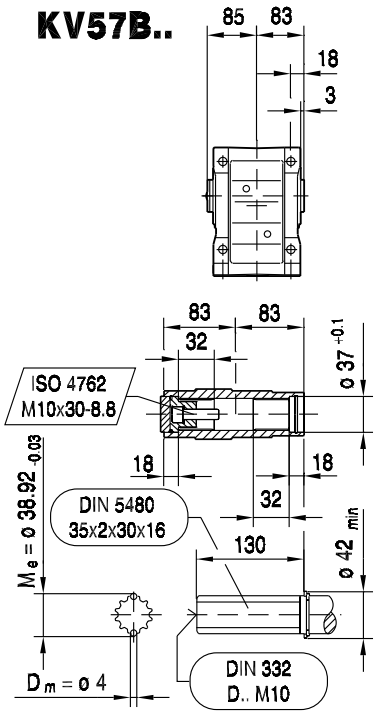

(→ 150)	DS56H	CM71S	CM71M	CM71L	CM90S	CM90M	CM90L	CM112S			
AC	73	117	117	117	142	142	142	186			
AD	77	122	122	122	140	140	140	162			
ADS	77	122	122	122	140	140	140	162			
L	519	485	505	545	537	564	622	577			
LS	519	567	587	627	633	660	718	667			
LB	266	232	252	292	284	311	369	324			
LBS	266	314	334	374	380	407	465	414			
XS	51	45	45	45	50	50	50	36			

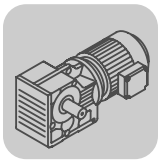

K..CMP, DS, CM
K 57 / CMP / DS / CM [mm]

KF57..

DS56..

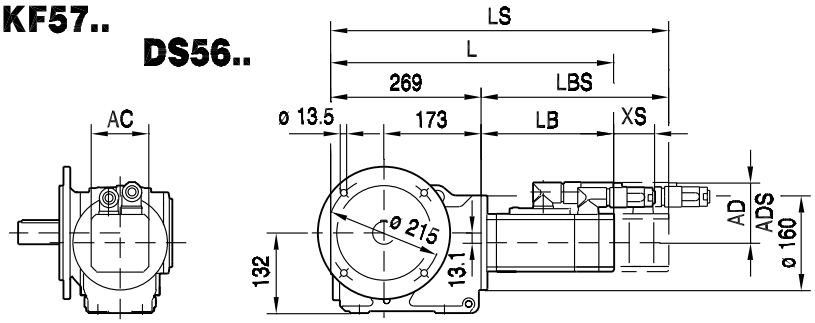

34 035 01 01

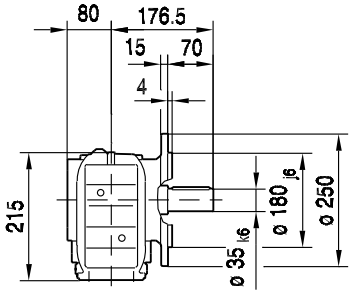

CM..

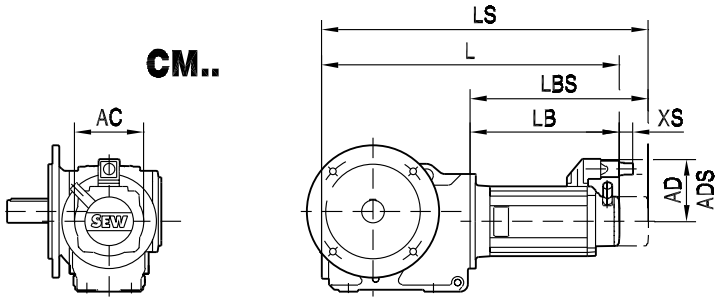

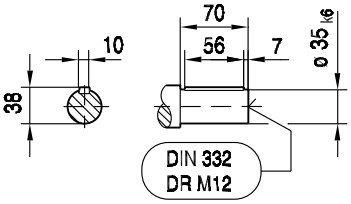

KAF57..

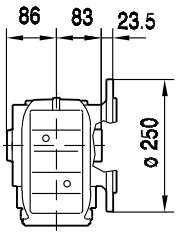

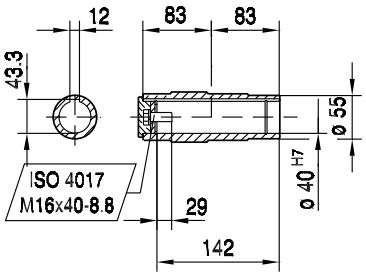

KHF57..

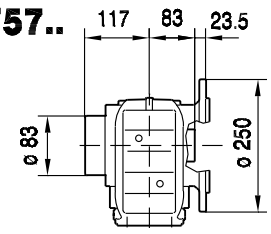

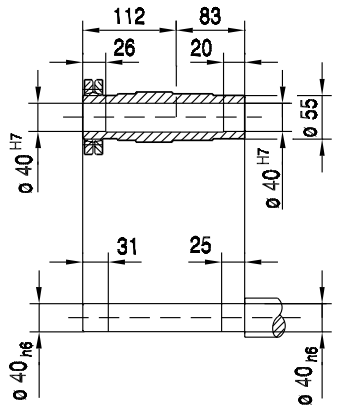

KVF57..

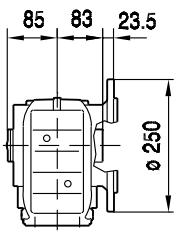

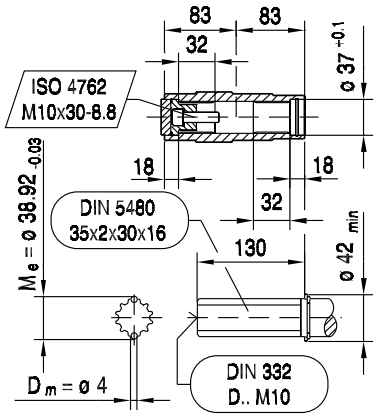

(→ 150)	DS56H	CM71S	CM71M	CM71L	CM90S	CM90M	CM90L	CM112S			
AC	73	117	117	117	142	142	142	186			
AD	77	122	122	122	140	140	140	162			
ADS	77	122	122	122	140	140	140	162			
L	535	501	521	561	553	580	638	593			
LS	535	583	603	643	649	676	734	683			
LB	266	232	252	292	284	311	369	324			
LBS	266	314	334	374	380	407	465	414			
XS	51	45	45	45	50	50	50	36			

39 022 01 01

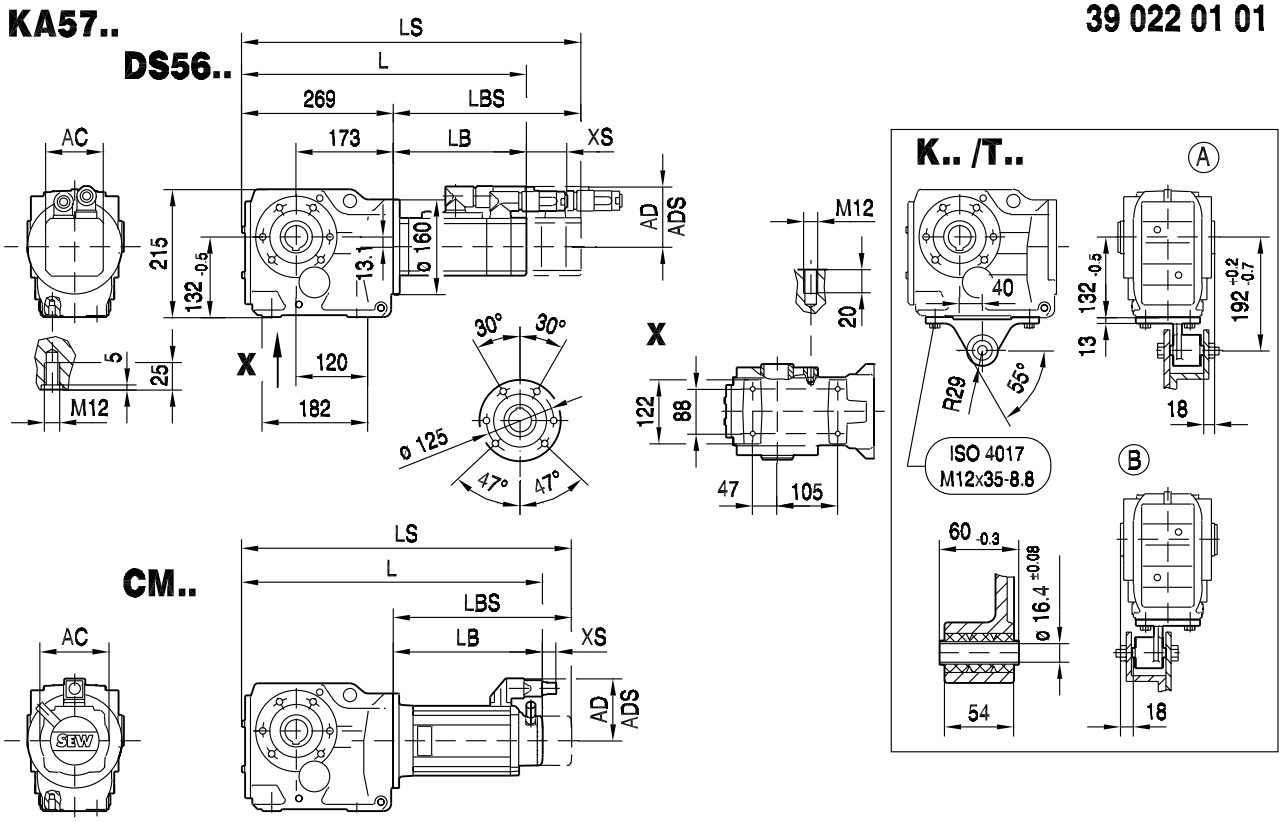

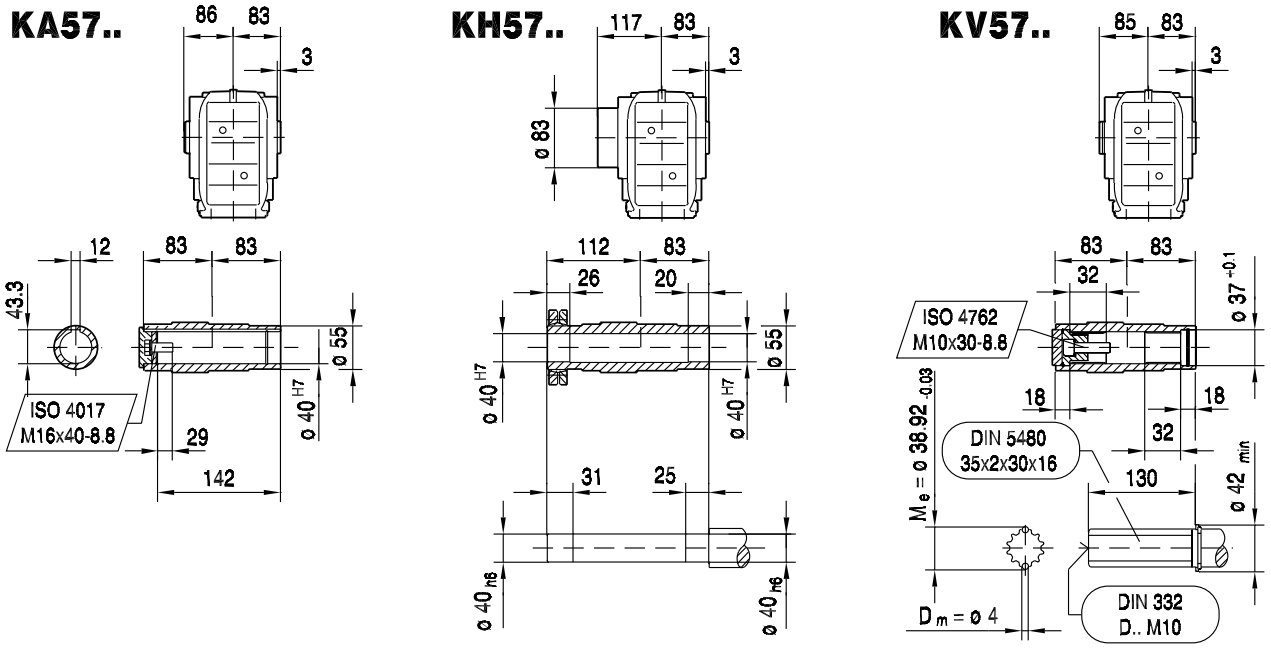

(→ 150)	DS56H	CM71S	CM71M	CM71L	CM90S	CM90M	CM90L	CM112S			
AC	73	117	117	117	142	142	142	186			
AD	77	122	122	122	140	140	140	162			
ADS	77	122	122	122	140	140	140	162			
L	535	501	521	561	553	580	638	593			
LS	535	583	603	643	649	676	734	683			
LB	266	232	252	292	284	311	369	324			
LBS	266	314	334	374	380	407	465	414			
XS	51	45	45	45	50	50	50	36			

KAZ57..
DS56..

39 035 00 04

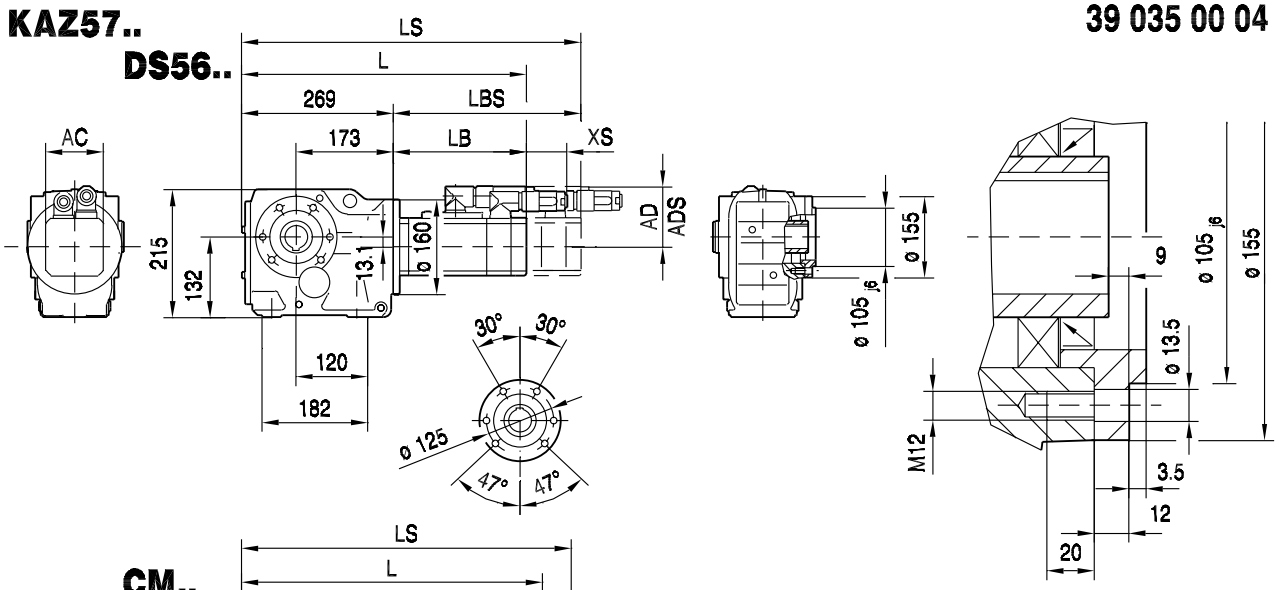

CM..

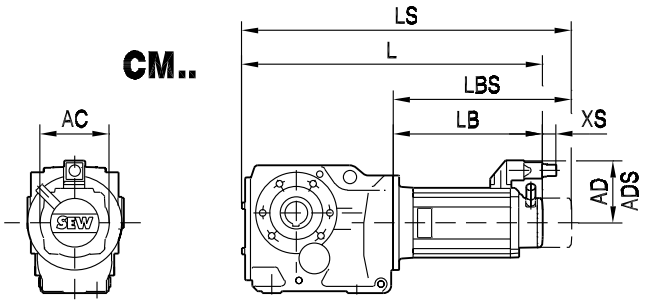

KAZ57..

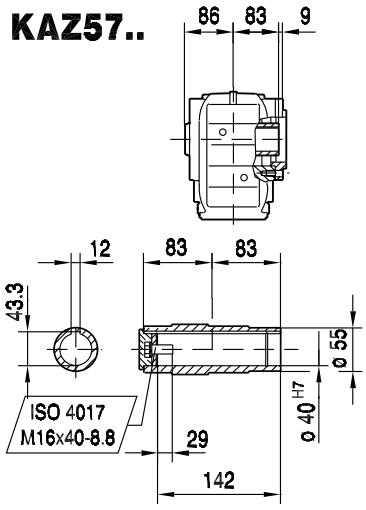

KHZ57..

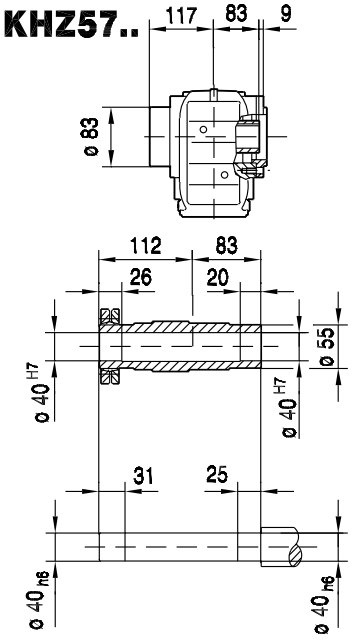

KVZ57..

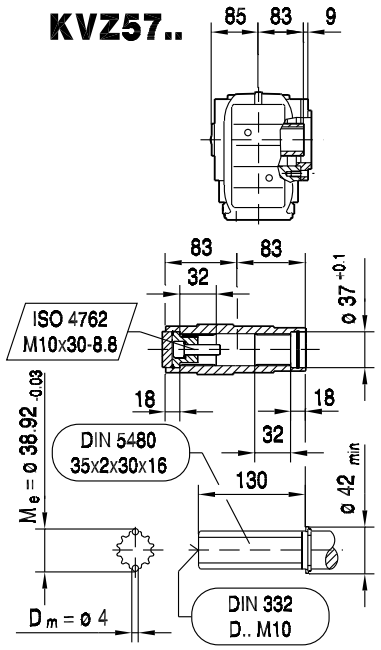

(→ 150)	DS56H	CM71S	CM71M	CM71L	CM90S	CM90M	CM90L	CM112S			
AC	73	117	117	117	142	142	142	186			
AD	77	122	122	122	140	140	140	162			
ADS	77	122	122	122	140	140	140	162			
L	535	501	521	561	553	580	638	593			
LS	535	583	603	643	649	676	734	683			
LB	266	232	252	292	284	311	369	324			
LBS	266	314	334	374	380	407	465	414			
XS	51	45	45	45	50	50	50	36			

39 043 00 04

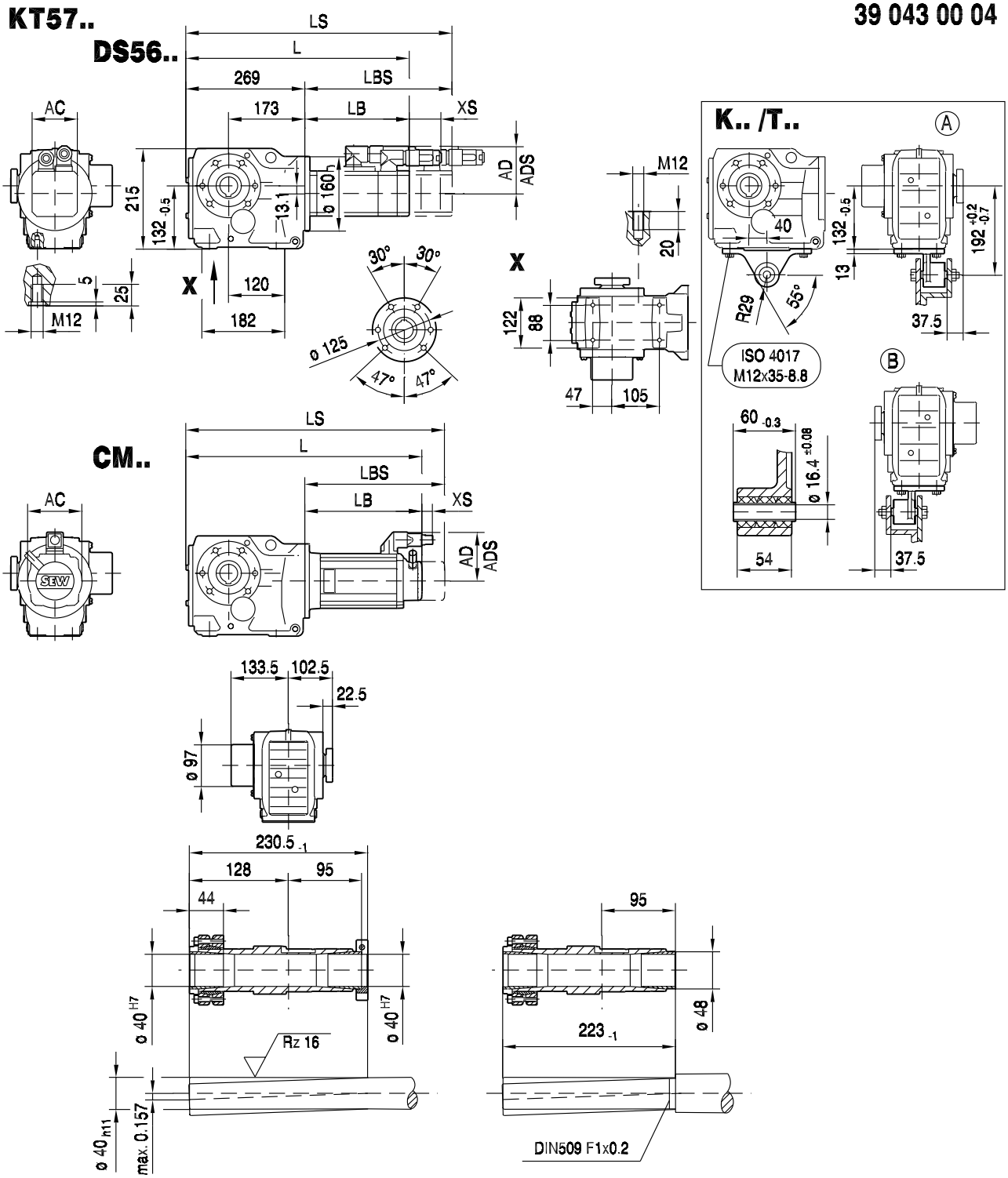

(→ 150)	DS56H	CM71S	CM71M	CM71L	CM90S	CM90M	CM90L	CM112S			
AC	73	117	117	117	142	142	142	186			
AD	77	122	122	122	140	140	140	162			
ADS	77	122	122	122	140	140	140	162			
L	535	501	521	561	553	580	638	593			
LS	535	583	603	643	649	676	734	683			
LB	266	232	252	292	284	311	369	324			
LBS	266	314	334	374	380	407	465	414			
XS	51	45	45	45	50	50	50	36			

10.8 K 67 / CMP / DS / CM [Nm]

M_{aDyn} [Nm]		CMP						DS			CM							
	i	50S	50M	50L	63S	63M	63L	56M	56L	56H	71S	71M	71L	90S	90M	90L	112S	112M
	5.2		51	77	55	107	152			76	82	107	157	198	261	377	411	
	7.28		71	107	77	148	210			105	114	149	217	274	361	523	569	>630
	8.37	41	82	122	88	170	242	30	60	121	131	171	250	315	415	601	654	>660
	9.66	48	95	141	102	196	279	35	70	139	151	197	288	363	479	>685	>685	>685
	10.63	53	104	156	112	216	307	38	77	153	167	217	317	400	527	>690	>690	
	12.48	62	122	183	132	254	360	45	90	180	196	255	372	469	619	>695	>695	
	13.22		129	193	139	269	382			191	207	270	394	497	656	>920	>920	>920
	15.19	75	149	222	160	309	439	55	110	219	238	310	453	571	753	>920	>920	>920
	17.54	87	172	257	185	357	507	63	127	253	275	358	523	660	870	>920	>920	>920
	19.3	95	189	282	204	392	557	70	139	279	303	394	576	726	>920	>920	>920	
	22.66	112	222	332	239	461	654	82	164	327	355	463	676	852	>920	>920	>920	
	24	119	235	351	253	488	693	87	173	347	376	490	716	903	>920	>920	>920	
K67	27.28	135	267	399	288	555	788	98	197	394	428	557	814	>920	>920			
3	30.22	149	296	442	319	614	873	109	218	436	474	617	901	>920	>920			
	35.62	176	349	521	376	724	>920	129	257	514	558	728	>920	>920				
	38.39	188	372	556	401	772	>920	137	274	549	595	776	>920	>920	>920	>920	>920	>920
	44.32	217	429	642	462	892	>920	158	317	633	687	896	>920	>920	>920	>920	>920	>920
	48.77	238	472	706	509	>920	>920	174	348	697	756	>920	>920	>920	>920	>920	>920	
	57.28	280	555	829	598	>920	>920	205	409	818	888	>920	>920	>920	>920	>920	>920	
	60.66	297	587	878	633	>920	>920	217	433	867	>920	>920	>920	>920	>920	>920	>920	
	68.95	337	668	>920	719	>920	>920	246	493	>920	>920	>920	>920	>920	>920			
	76.37	373	739	>920	797	>920	>920	273	546	>920	>920	>920	>920	>920	>920			
	90.04	435	862	>920	>920	>920	>920	318	636	>920	>920	>920	>920	>920				
	102.62	496	>920	>920	>920	>920		363	725	>920	>920	>920						
	108.03	522	>920	>920	>920	>920		382	764	>920	>920	>920						
	123.54	597	>920		>920			437	873	>920								
	144.79	700						512	>920									

m [kg]		CMP						DS			CM							
	s	50S	50M	50L	63S	63M	63L	56M	56L	56H	71S	71M	71L	90S	90M	90L	112S	112M
K67	3	33	34	35	35	37	38	32	33	34	38	39	43	47	50	55	56	60
KF: + 5.6 kg / KA: + -2.7 kg / KAF: + 3.0 kg																		

CMP.. / DS.. / CM..				c_T				φ
	i	n_{epk} [1/min]	η [%]	K [Nm/']	KF [Nm/']	KA [Nm/']	KAF [Nm/']	/R [']
K67 3	5.2	3862	96	57.99	53.57	96.17	96.17	10
	7.28	4500	95	57.99	53.57	96.17	96.17	9
	8.37	4500	95	57.99	53.57	96.17	96.17	9
	9.66	4500	95	57.99	53.57	96.17	96.17	9
	10.63	4500	95	57.99	53.57	96.17	96.17	9
	12.48	4500	95	57.99	53.57	96.17	96.17	9
	13.22	4500	95	72.94	66.08	145.68	145.68	8
	15.19	4500	95	72.94	66.08	145.68	145.68	8
	17.54	4500	95	72.94	66.08	145.68	145.68	7
	19.3	4500	95	72.94	66.08	145.68	145.68	7
	22.66	4500	95	72.94	66.08	145.68	145.68	7
	24	4500	95	72.94	66.08	145.68	145.68	7
	27.28	4500	95	72.94	66.08	145.68	145.68	7
	30.22	4500	95	72.94	66.08	145.68	145.68	7
	35.62	4500	95	72.94	66.08	145.68	145.68	7
	38.39	4500	94	77.39	69.72	164.59	164.59	6
	44.32	4500	94	77.39	69.72	164.59	164.59	6
	48.77	4500	94	77.39	69.72	164.59	164.59	6
	57.28	4500	94	77.39	69.72	164.59	164.59	6
	60.66	4500	94	77.39	69.72	164.59	164.59	6
	68.95	4500	94	77.39	69.72	164.59	164.59	6
	76.37	4500	94	77.39	69.72	164.59	164.59	6
	90.04	4500	93	77.39	69.72	164.59	164.59	6
	102.62	4500	93	77.39	69.72	164.59	164.59	6
	108.03	4500	93	77.39	69.72	164.59	164.59	6
	123.54	4500	93	77.39	69.72	164.59	164.59	6
	144.79	4500	93	77.39	69.72	164.59	164.59	6

CMP.. / DS.. / CM..							F_{Ramax}				F_{Rapk}			
	i	M_{amax} [Nm]	M_{apk} [Nm]	$M_{aNotaus}$ [Nm]	n_{ak} [1/min]	J_G 10^{-4} [kgm^2]	K [N]	KF [N]	KA [N]	KAF [N]	K [N]	KF [N]	KA [N]	KAF [N]
K67 3	5.2	350	525	595	192	11	9860	10000	2450	2450	12300	12300	13000	13000
	7.28	420	630	714	206	6.3	10700	10900	2480	2480	11700	11700	13000	13000
	8.37	440	660	748	179	4.9	11100	11400	2590	2590	11500	11500	13000	13000
	9.66	480	685	816	155	3.8	11500	11700	2550	2550	11400	11400	13000	13000
	10.63	500	690	850	141	3.2	11800	12000	2590	2590	11300	11300	13000	13000
	12.48	530	695	901	120	2.5	12300	12300	2710	2710	11300	11300	13000	13000
	13.22	670	920	1139	113	5.6	11500	11500	2420	2420	9310	9310	13000	13000
	15.19	700	920	1190	105	4.4	11300	11300	2550	2550	9310	9310	13000	13000
	17.54	740	920	1258	97	3.4	11000	11000	2630	2630	9310	9310	13000	13000
	19.3	760	920	1292	93	2.9	10800	10800	2740	2740	9310	9310	13000	13000
	22.66	780	920	1326	93	2.2	10700	10700	3070	3070	9310	9310	13000	13000
	24	800	920	1360	88	2.0	10500	10500	3090	3090	9310	9310	13000	13000
	27.28	820	920	1394	84	1.6	10300	10300	3340	3340	9310	9310	13000	13000
	30.22	820	920	1394	86	1.3	10300	10300	3680	3680	9310	9310	13000	13000
	35.62	820	920	1394	90	1.0	10300	10300	4260	4260	9310	9310	13000	13000
	38.39	800	920	1360	52	2.4	10500	10500	4690	4690	9310	9310	13000	13000
	44.32	820	920	1394	50	1.9	10300	10300	5070	5070	9310	9310	13000	13000
	48.77	820	920	1394	49	1.7	10300	10300	5440	5440	9310	9310	13000	13000
	57.28	820	920	1394	52	1.4	10300	10300	6100	6100	9310	9310	13000	13000
	60.66	820	920	1394	53	1.2	10300	10300	6340	6340	9310	9310	13000	13000
	68.95	820	920	1394	52	1.0	10300	10300	6900	6900	9310	9310	13000	13000
	76.37	820	920	1394	54	0.87	10300	10300	7360	7360	9310	9310	13000	13000
	90.04	820	920	1394	54	0.68	10300	10300	8140	8140	9310	9310	13000	13000
	102.62	820	920	1394	56	0.47	10300	10300	8800	8800	9310	9310	13000	13000
	108.03	820	920	1394	56	0.42	10300	10300	9060	9060	9310	9310	13000	13000
	123.54	820	920	1394	56	0.34	10300	10300	9770	9770	9310	9310	13000	13000
	144.79	820	920	1394	48	0.28	10300	10300	10700	10700	9310	9310	13000	13000

10.9 K 67 / CMP / DS / CM [mm]

33 024 00 07

K67..

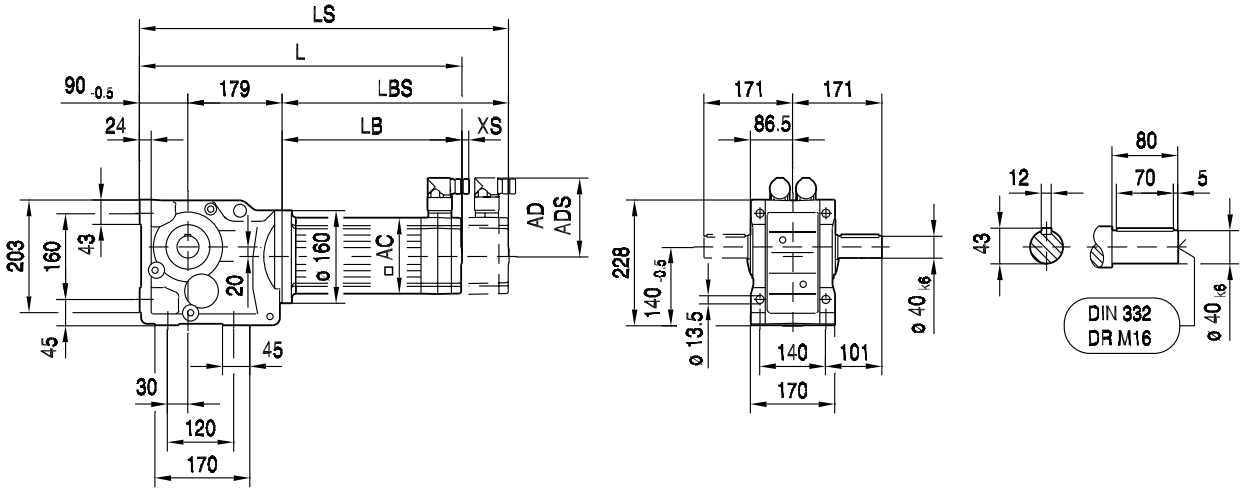

KA67B..

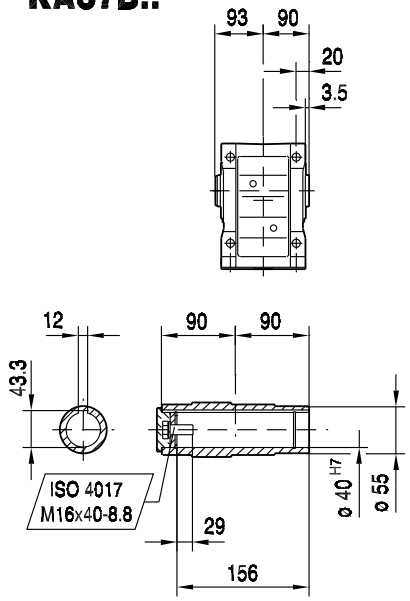

KH67B..

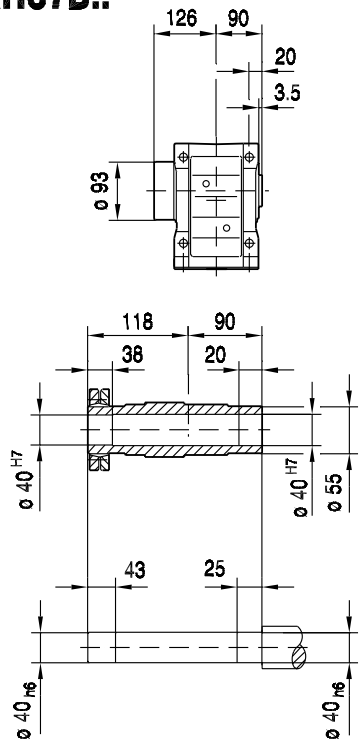

KV67B..

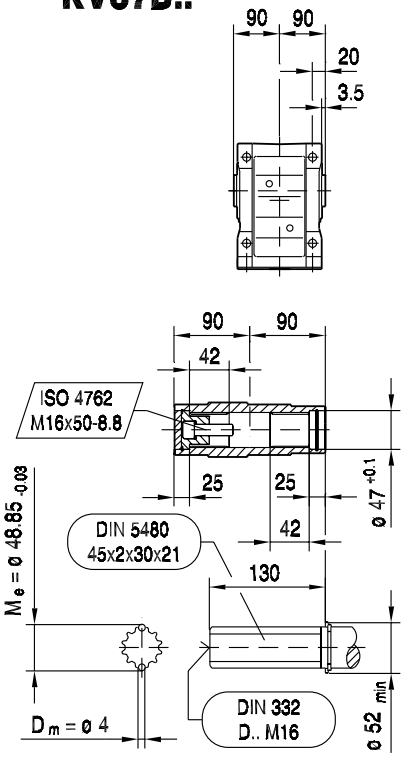

(→ 150)	CMP50S	CMP50M	CMP50L	CMP63S	CMP63M	CMP63L		
AC	73	73	73	88	88	88		
AD	82	82	82	89	89	89		
ADS	82	82	82	89	89	89		
L	408	447	486	442	492	542		
LS	437	476	515	471	521	571		
LB	139	178	217	173	223	273		
LBS	168	207	246	202	252	302		
XS	18	18	18	14	14	14		

33 025 00 07

KF67..

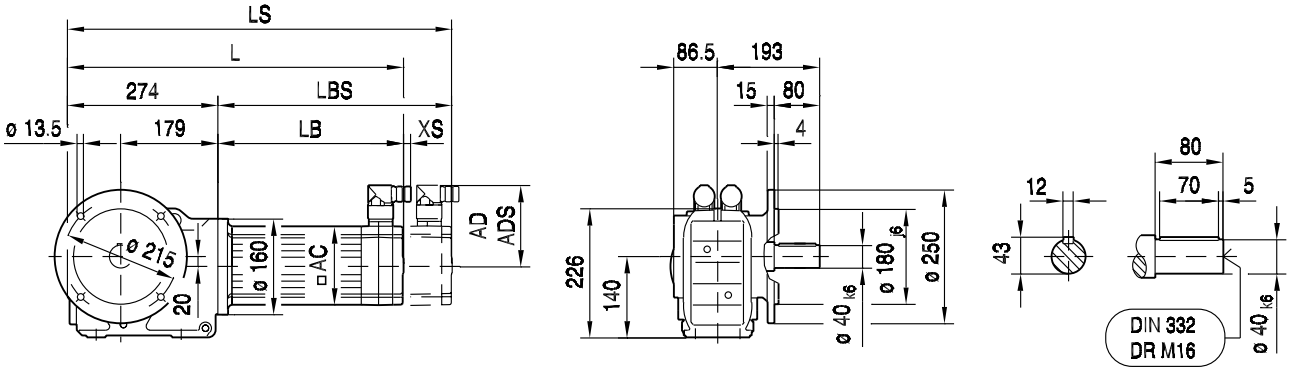

10

KAF67..

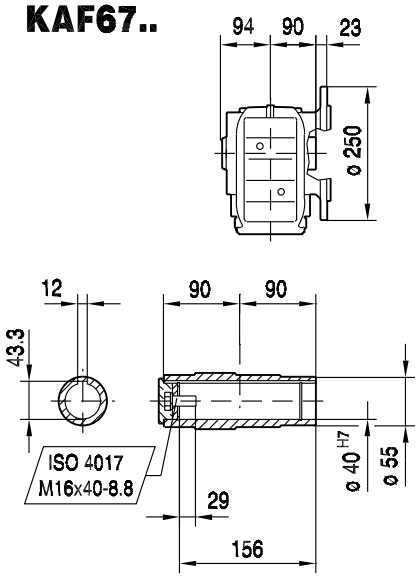

KHF67..

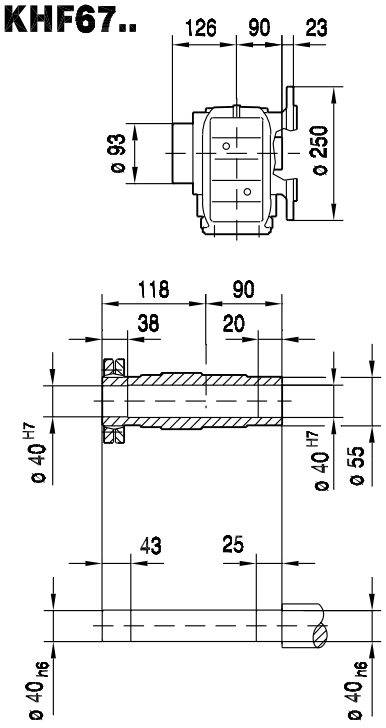

KVF67..

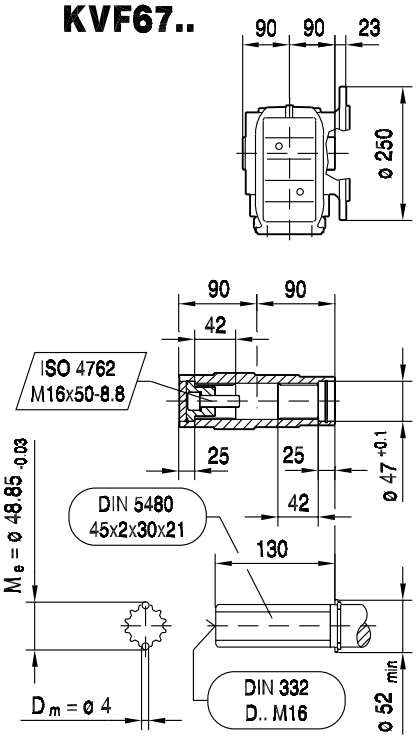

(→ 150)	CMP50S	CMP50M	CMP50L	CMP63S	CMP63M	CMP63L		
AC	73	73	73	88	88	88		
AD	82	82	82	89	89	89		
ADS	82	82	82	89	89	89		
L	413	452	491	447	497	547		
LS	442	481	520	476	526	576		
LB	139	178	217	173	223	273		
LBS	168	207	246	202	252	302		
XS	18	18	18	14	14	14		

KA67..

33 026 00 07

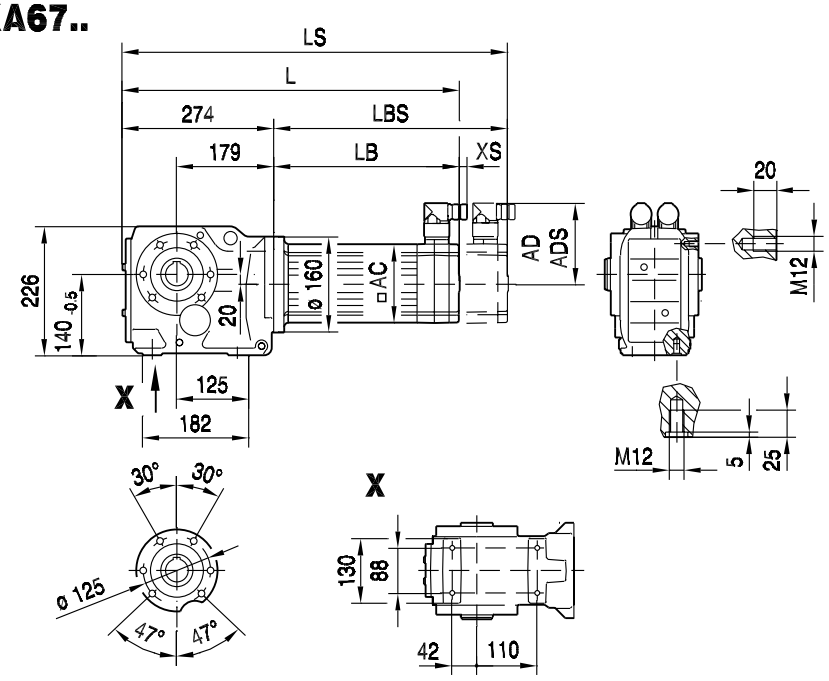

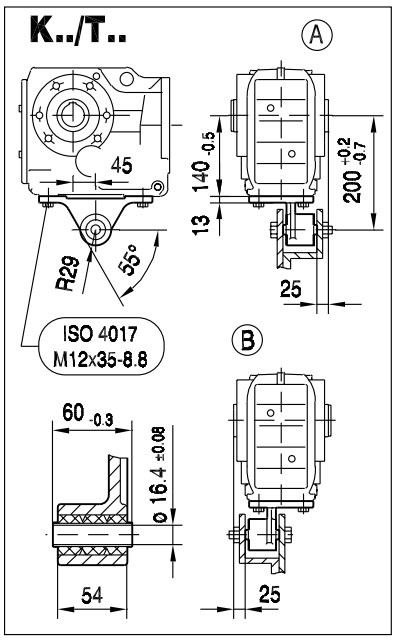

KA67..

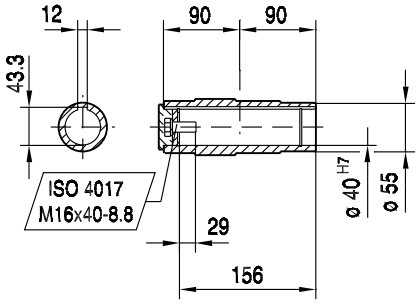

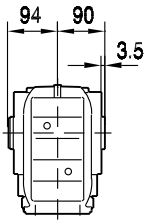

KH67..

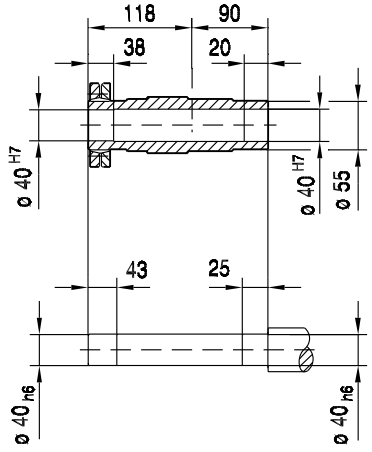

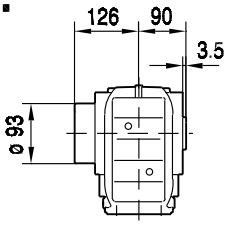

KV67..

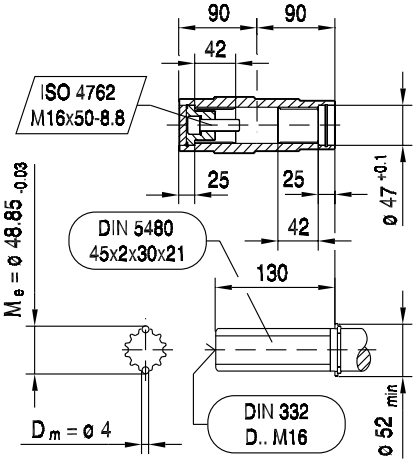

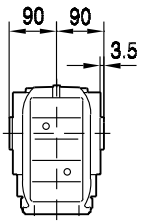

(→ 150)	CMP50S	CMP50M	CMP50L	CMP63S	CMP63M	CMP63L		
AC	73	73	73	88	88	88		
AD	82	82	82	89	89	89		
ADS	82	82	82	89	89	89		
L	413	452	491	447	497	547		
LS	442	481	520	476	526	576		
LB	139	178	217	173	223	273		
LBS	168	207	246	202	252	302		
XS	18	18	18	14	14	14		

KAZ67..

33 027 00 07

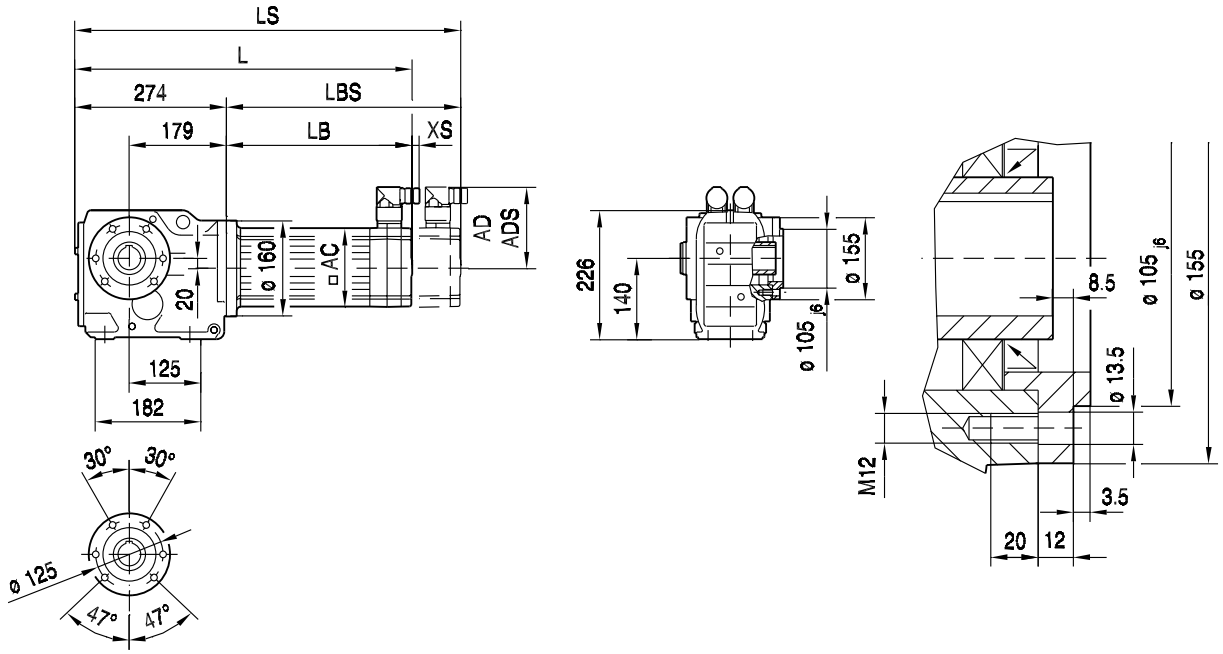

10

KAZ67..

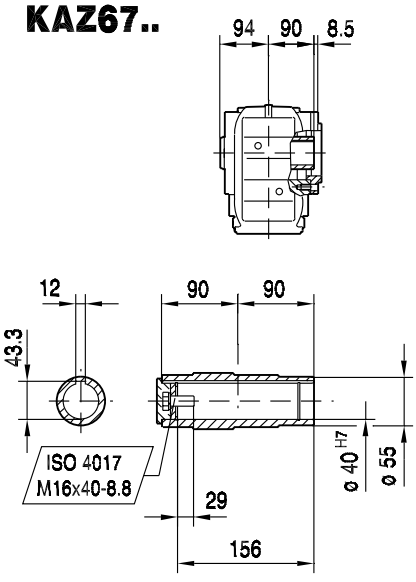

KHZ67..

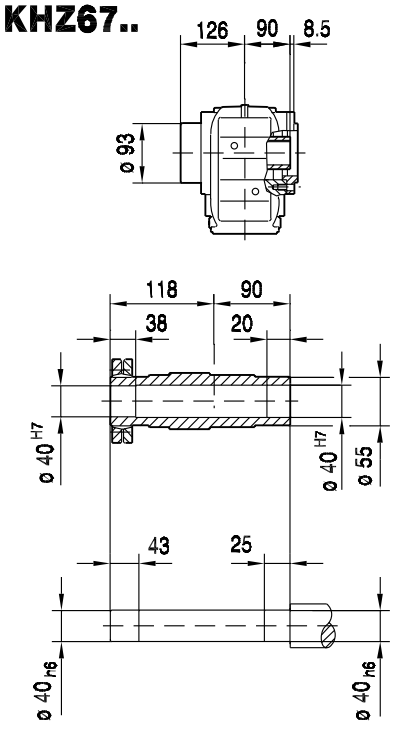

KVZ67..

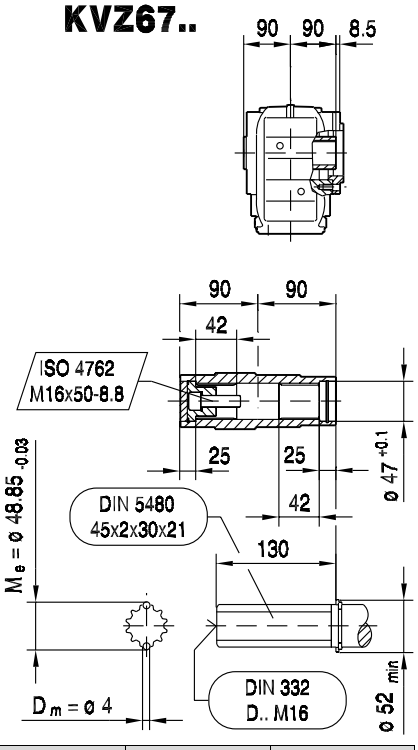

(→ 150)	CMP50S	CMP50M	CMP50L	CMP63S	CMP63M	CMP63L		
AC	73	73	73	88	88	88		
AD	82	82	82	89	89	89		
ADS	82	82	82	89	89	89		
L	413	452	491	447	497	547		
LS	442	481	520	476	526	576		
LB	139	178	217	173	223	273		
LBS	168	207	246	202	252	302		
XS	18	18	18	14	14	14		

KT67..

33 028 00 07

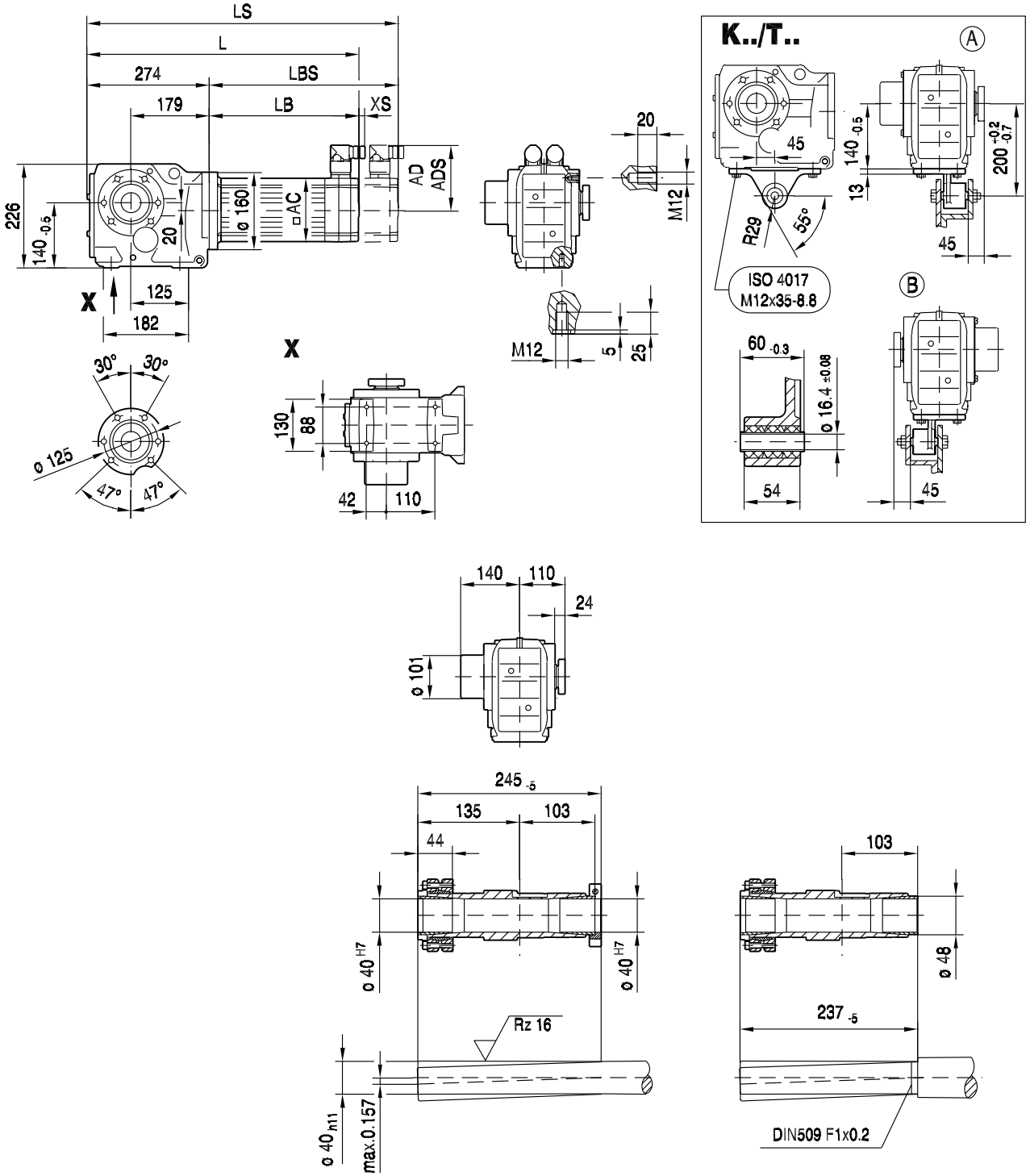

(→ 150)	CMP50S	CMP50M	CMP50L	CMP63S	CMP63M	CMP63L		
AC	73	73	73	88	88	88		
AD	82	82	82	89	89	89		
ADS	82	82	82	89	89	89		
L	413	452	491	447	497	547		
LS	442	481	520	476	526	576		
LB	139	178	217	173	223	273		
LBS	168	207	246	202	252	302		
XS	18	18	18	14	14	14		

34 036 01 01

K67..

DS56..

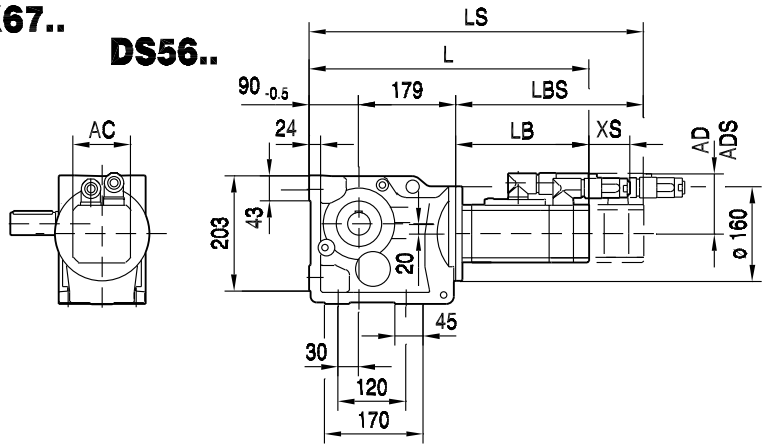

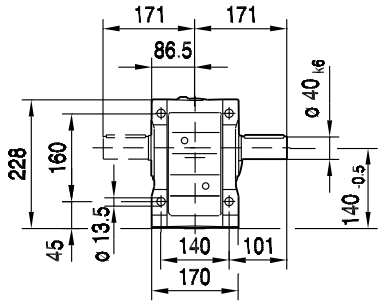

CM..

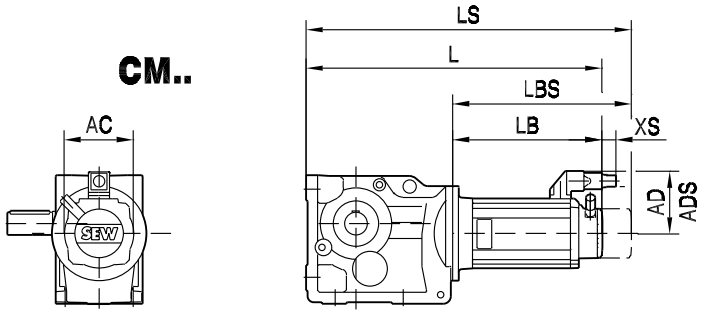

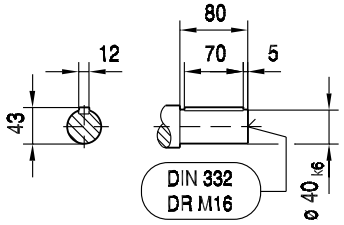

KA67B..

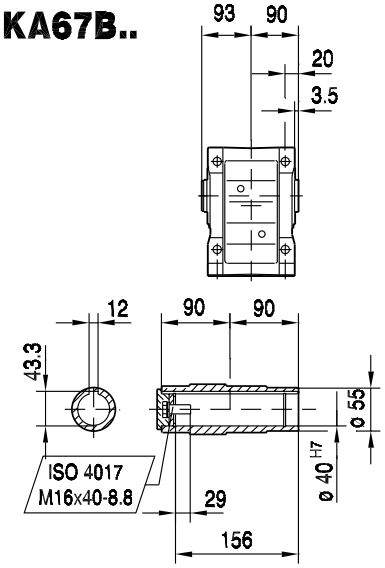

KH67B..

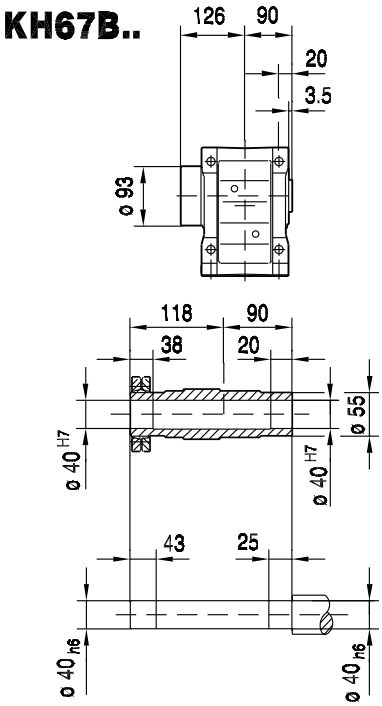

KV67B..

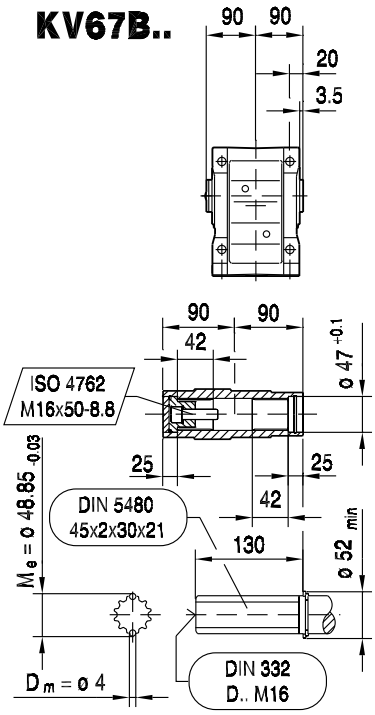

(→ 150)	DS56H	CM71S	CM71M	CM71L	CM90S	CM90M	CM90L	CM112S	CM112M		
AC	73	117	117	117	142	142	142	186	186		
AD	77	122	122	122	140	140	140	162	162		
ADS	77	122	122	122	140	140	140	162	162		
L	535	501	521	561	553	580	638	593	617		
LS	535	583	603	643	649	676	734	683	707		
LB	266	232	252	292	284	311	369	324	348		
LBS	266	314	334	374	380	407	465	414	438		
XS	51	45	45	45	50	50	50	36	36		

KF67..

DS56..

34 037 01 01

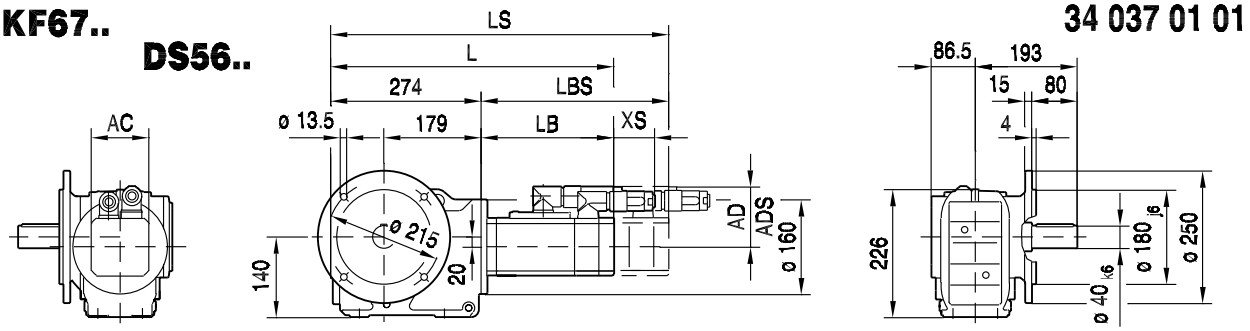

CM..

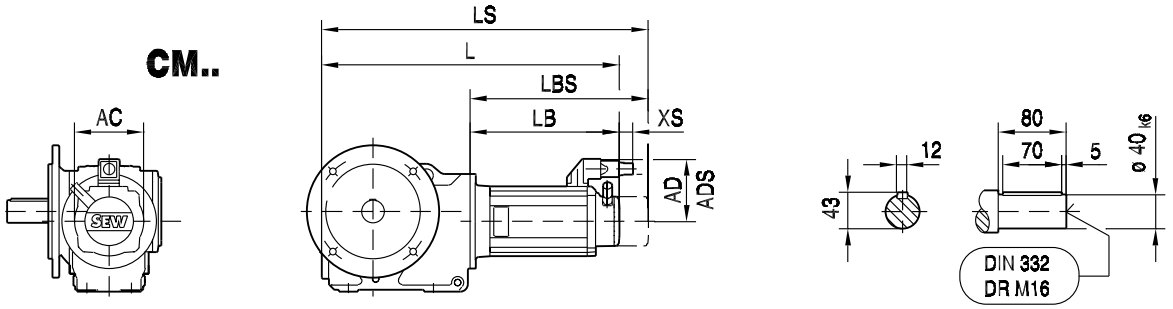

KAF67..

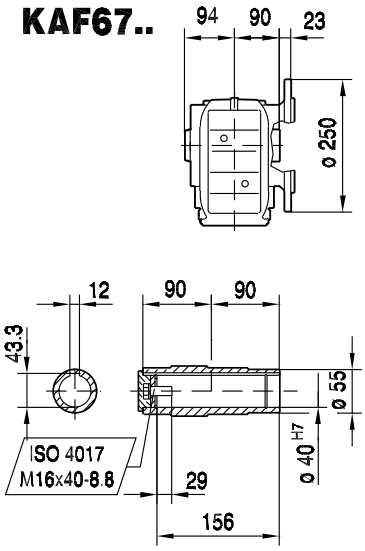

KHF67..

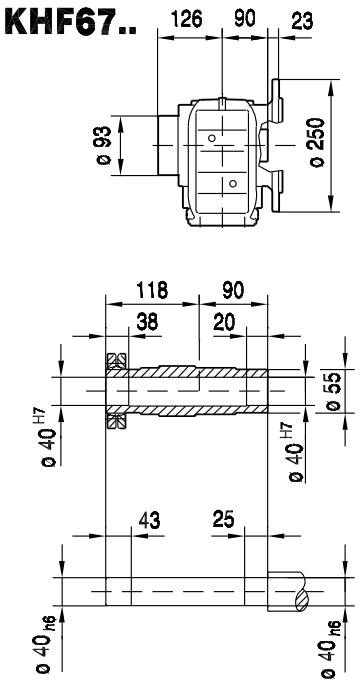

KVF67..

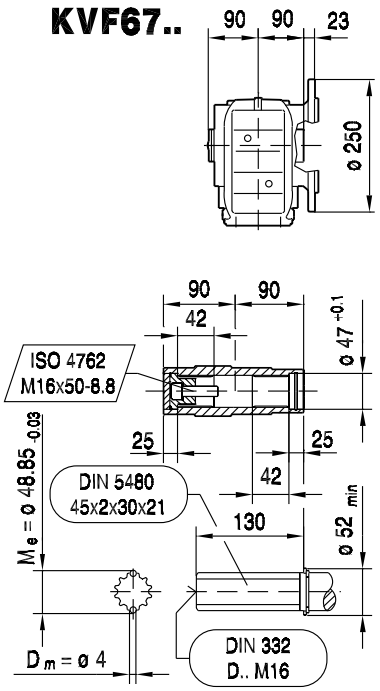

(→ 📖 150)	DS56H	CM71S	CM71M	CM71L	CM90S	CM90M	CM90L	CM112S	CM112M		
AC	73	117	117	117	142	142	142	186	186		
AD	77	122	122	122	140	140	140	162	162		
ADS	77	122	122	122	140	140	140	162	162		
L	540	506	526	566	558	585	643	598	622		
LS	540	588	608	648	654	681	739	688	712		
LB	266	232	252	292	284	311	369	324	348		
LBS	266	314	334	374	380	407	465	414	438		
XS	51	45	45	45	50	50	50	36	36		

39 023 01 01

KA67..
DS56..

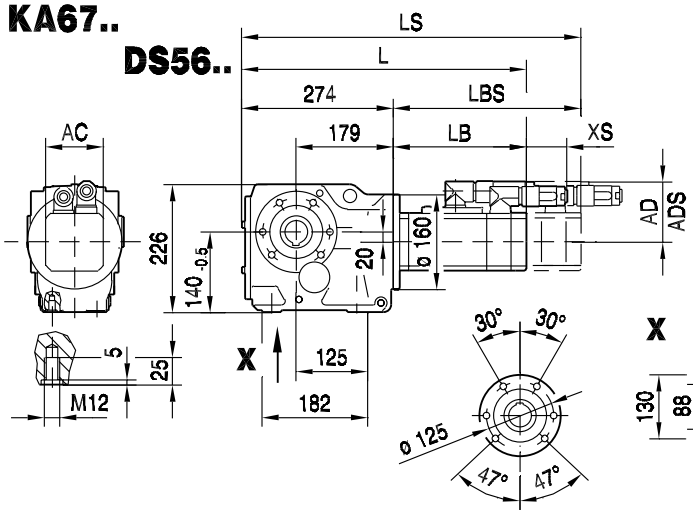

K.. /T..

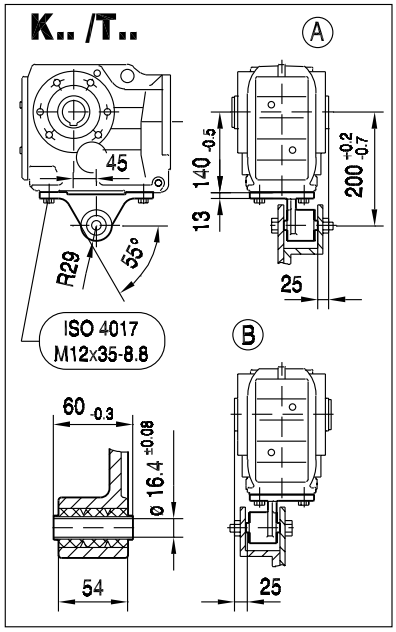

CM..

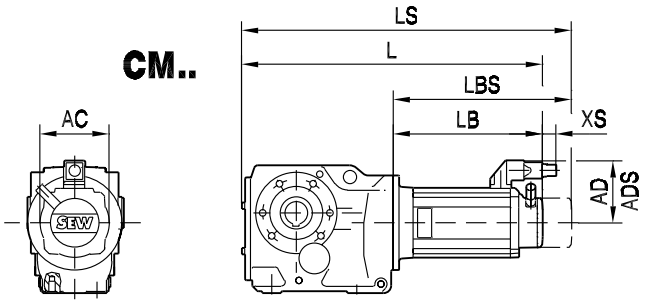

KA67..

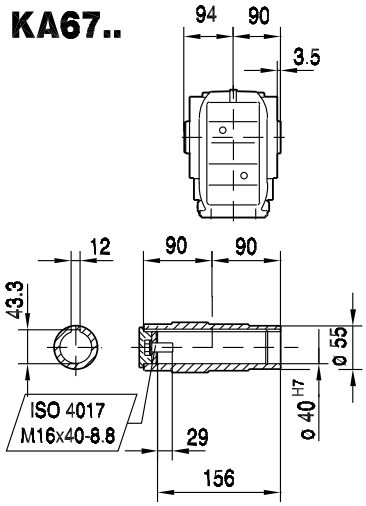

KH67..

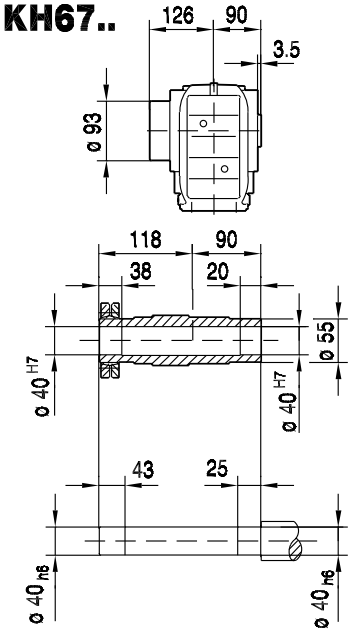

KV67..

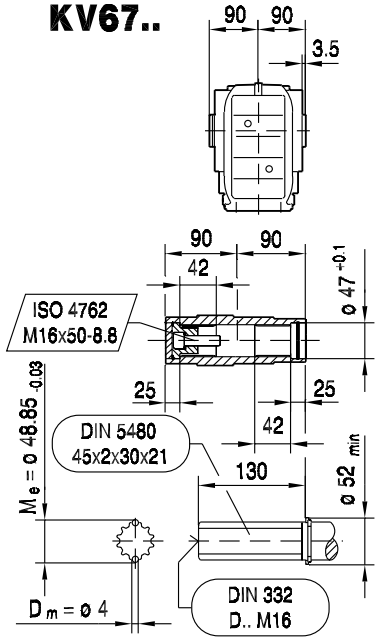

(→ 150)	DS56H	CM71S	CM71M	CM71L	CM90S	CM90M	CM90L	CM112S	CM112M		
AC	73	117	117	117	142	142	142	186	186		
AD	77	122	122	122	140	140	140	162	162		
ADS	77	122	122	122	140	140	140	162	162		
L	540	506	526	566	558	585	643	598	622		
LS	540	588	608	648	654	681	739	688	712		
LB	266	232	252	292	284	311	369	324	348		
LBS	266	314	334	374	380	407	465	414	438		
XS	51	45	45	45	50	50	50	36	36		

KAZ67..
DS56..

39 036 00 04

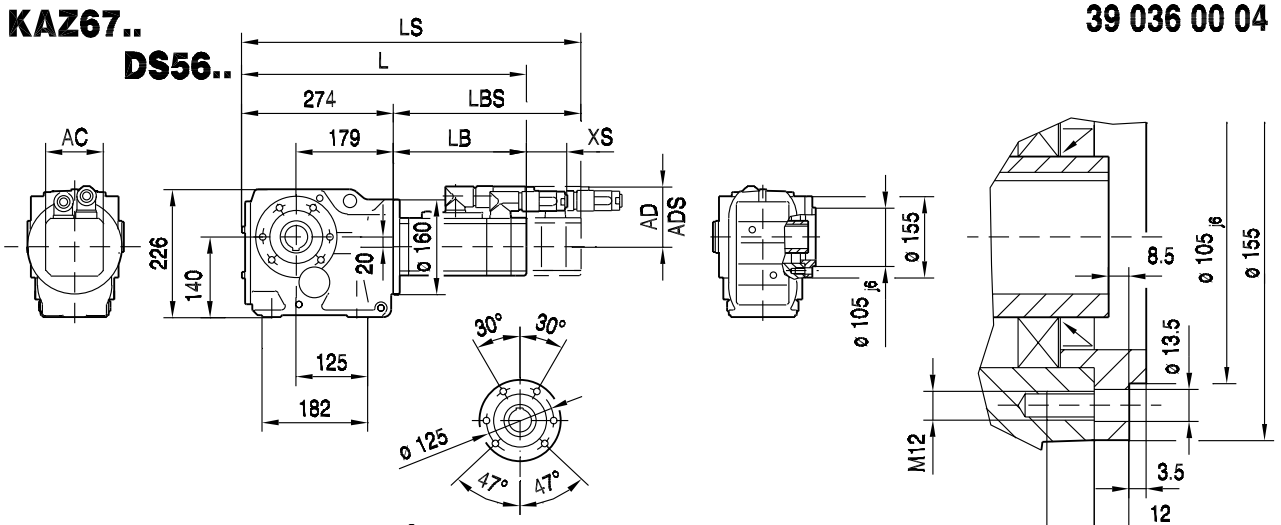

CM..

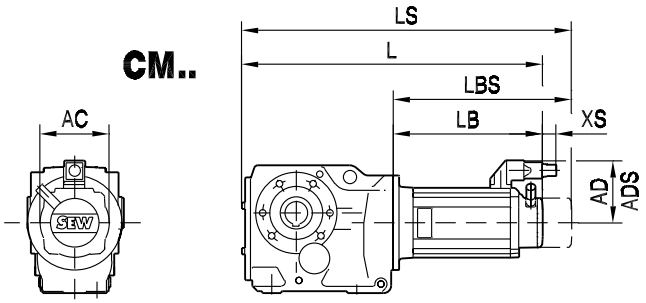

KAZ67..

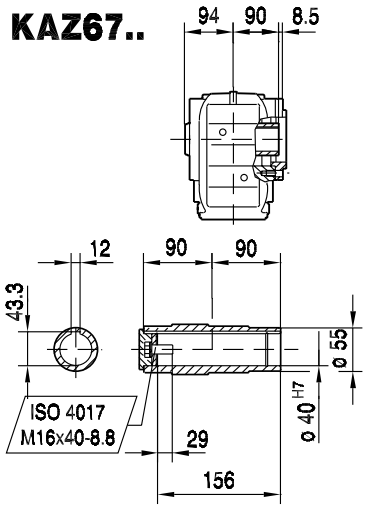

KHZ67..

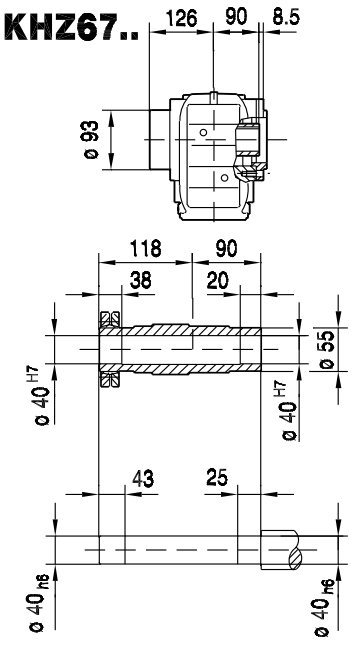

KVZ67..

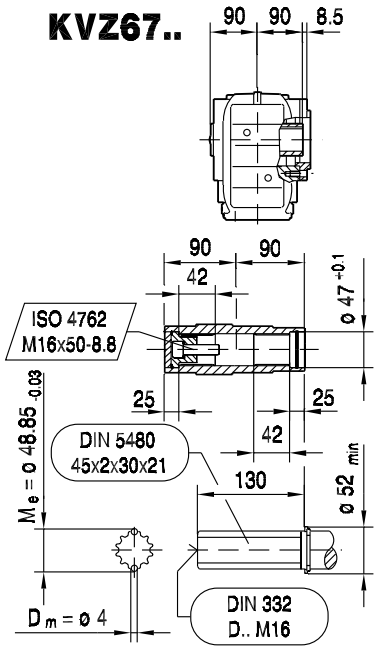

(→ 📖 150)	DS56H	CM71S	CM71M	CM71L	CM90S	CM90M	CM90L	CM112S	CM112M		
AC	73	117	117	117	142	142	142	186	186		
AD	77	122	122	122	140	140	140	162	162		
ADS	77	122	122	122	140	140	140	162	162		
L	540	506	526	566	558	585	643	598	622		
LS	540	588	608	648	654	681	739	688	712		
LB	266	232	252	292	284	311	369	324	348		
LBS	266	314	334	374	380	407	465	414	438		
XS	51	45	45	45	50	50	50	36	36		

KT67..

DS56..

39 044 00 04

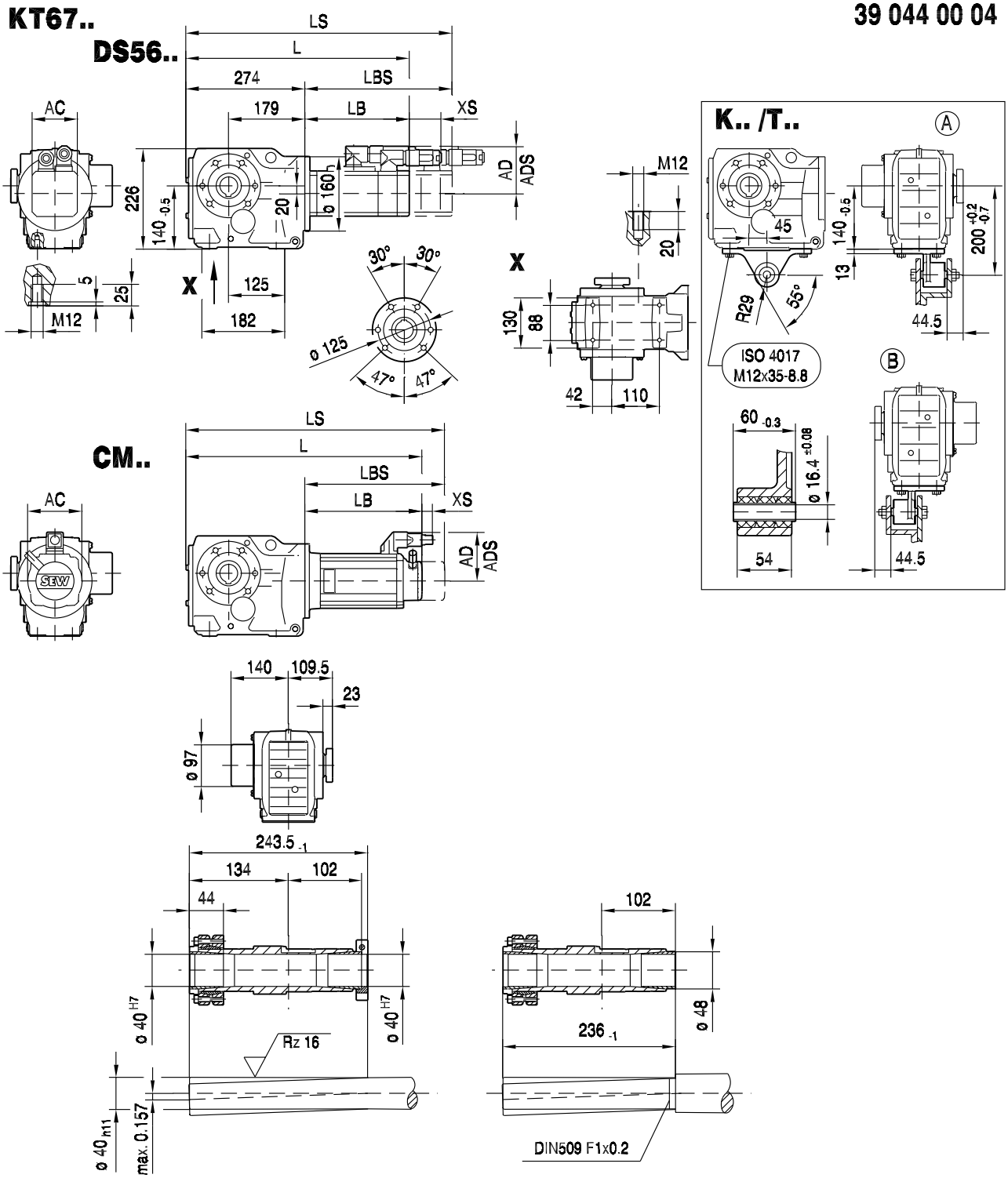

(→ 150)	DS56H	CM71S	CM71M	CM71L	CM90S	CM90M	CM90L	CM112S	CM112M		
AC	73	117	117	117	142	142	142	186	186		
AD	77	122	122	122	140	140	140	162	162		
ADS	77	122	122	122	140	140	140	162	162		
L	540	506	526	566	558	585	643	598	622		
LS	540	588	608	648	654	681	739	688	712		
LB	266	232	252	292	284	311	369	324	348		
LBS	266	314	334	374	380	407	465	414	438		
XS	51	45	45	45	50	50	50	36	36		

10.10 K 77 / CMP / CM [Nm]

M_{aDyn} [Nm]		CMP			CM								
	i	63S	63M	63L	71S	71M	71L	90S	90M	90L	112S	112M	112L
K77 3	7.24	76	147	209	113	148	216	272	359	520	566	746	1083
	8.48	89	172	245	133	173	253	319	421	609	663	874	>1160
	9.56	101	194	276	150	195	285	360	474	687	747	985	>1160
	10.84	114	220	313	170	221	323	408	538	779	848	1117	>1170
	12.36	130	251	357	194	252	369	465	613	888	966	>1170	>1170
	13.52	143	275	390	212	276	403	509	670	971	1057	1394	>1550
	15.84	167	322	457	248	324	473	596	786	1138	1238	>1550	>1550
	17.87	188	363	516	280	365	533	672	886	1283	1397	>1550	>1550
	20.25	214	412	585	317	414	604	762	1004	1454	>1550	>1550	>1550
	23.08	243	469	667	362	471	688	868	1145	>1550	>1550	>1550	>1550
	25.62	270	521	740	402	523	764	964	1270	>1550	>1550		
	29.27	309	595	845	459	598	873	1101	1451	>1550	>1550		
	30.89	326	628	892	484	631	921	1162	1532	>1550	>1550		
	35.2	371	716	1017	552	719	1050	1324	>1550				
	38.39	405	780	1109	602	784	1145	1444	>1550				
	40.04	418	805	1144	621	809	1182	1490	>1550	>1550	>1550	>1550	>1550
	45.16	471	908	1290	700	913	1333	>1550	>1550	>1550	>1550	>1550	>1550
	51.18	534	1030	1463	794	1034	1511	>1550	>1550	>1550	>1550	>1550	>1550
	58.34	609	1174	>1550	905	1179	>1550	>1550	>1550	>1550	>1550	>1550	>1550
	64.75	676	1303	>1550	1004	1309	>1550	>1550	>1550	>1550	>1550		
	73.99	772	1488	>1550	1148	1495	>1550	>1550	>1550	>1550	>1550		
	78.07	815	>1550	>1550	1211	>1550	>1550	>1550	>1550	>1550	>1550		
	88.97	928	>1550	>1550	1380	>1550	>1550	>1550	>1550				
	97.05	1013	>1550	>1550	1505	>1550	>1550	>1550	>1550				
	113.56	1185	>1550	>1550	>1550	>1550	>1550	>1550					
	128.52	1341	>1550		>1550	>1550							
	135.28	1412	>1550		>1550	>1550							
	154.02	>1550											
	179.37												
	192.18												

m [kg]		CMP			CM								
	s	63S	63M	63L	71S	71M	71L	90S	90M	90L	112S	112M	112L
K77	3	59	60	62	63	64	68	72	75	80	80	85	100
KF: + 8.3 kg / KA: + -7.5 kg / KAF: + 0.4 kg													

CMP.. / CM..				c_T				φ
	i	n_{epk} [1/min]	η [%]	K [Nm/']	KF [Nm/']	KA [Nm/']	KAF [Nm/']	/R [']
K77 3	7.24	4500	95	109.85	91.4	187.84	187.84	8
	8.48	4500	95	109.85	91.4	187.84	187.84	8
	9.56	4500	95	109.85	91.4	187.84	187.84	8
	10.84	4500	95	109.85	91.4	187.84	187.84	8
	12.36	4500	95	109.85	91.4	187.84	187.84	8
	13.52	4500	95	140.68	111.79	300.46	300.46	7
	15.84	4500	95	140.68	111.79	300.46	300.46	6
	17.87	4500	95	140.68	111.79	300.46	300.46	6
	20.25	4500	95	140.68	111.79	300.46	300.46	6
	23.08	4500	95	140.68	111.79	300.46	300.46	6
	25.62	4500	95	140.68	111.79	300.46	300.46	6
	29.27	4500	95	140.68	111.79	300.46	300.46	6
	30.89	4500	95	140.68	111.79	300.46	300.46	6
	35.2	4500	95	140.68	111.79	300.46	300.46	6
	38.39	4500	95	140.68	111.79	300.46	300.46	6
	40.04	4500	94	150.31	117.79	348.11	348.11	6
	45.16	4500	94	150.31	117.79	348.11	348.11	6
	51.18	4500	94	150.31	117.79	348.11	348.11	6
	58.34	4500	94	150.31	117.79	348.11	348.11	6
	64.75	4500	94	150.31	117.79	348.11	348.11	5
	73.99	4500	94	150.31	117.79	348.11	348.11	5
	78.07	4500	94	150.31	117.79	348.11	348.11	5
	88.97	4500	94	150.31	117.79	348.11	348.11	5
	97.05	4500	94	150.31	117.79	348.11	348.11	5
	113.56	4500	94	150.31	117.79	348.11	348.11	5
	128.52	4500	94	150.31	117.79	348.11	348.11	5
	135.28	4500	94	150.31	117.79	348.11	348.11	5
	154.02	4500	94	150.31	117.79	348.11	348.11	5
	179.37	4500	94	150.31	117.79	348.11	348.11	5
	192.18	4500	94	150.31	117.79	348.11	348.11	5

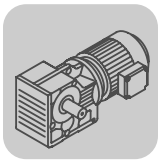

K..CMP, DS, CM
K 77 / CMP / CM [Nm]

CMP.. / CM..							F_{Ramax}				F_{Rapk}			
	i	M_{amax} [Nm]	M_{apk} [Nm]	$M_{aNotaus}$ [Nm]	n_{ak} [1/min]	$J_G\ 10^{-4}$ [kgm^2]	K [N]	KF [N]	KA [N]	KAF [N]	K [N]	KF [N]	KA [N]	KAF [N]
K77 3	7.24	820	1150	1394	207	17	13100	13800	2490	2490	17700	17700	20000	20000
	8.48	890	1160	1513	177	13	13500	14300	2430	2430	17600	17700	20000	20000
	9.56	940	1160	1598	157	10	13900	14700	2430	2430	17600	17700	20000	20000
	10.84	990	1170	1683	138	8.2	14400	15200	2460	2460	17600	17700	20000	20000
	12.36	1000	1170	1700	121	6.5	15100	16000	2820	2820	17600	17700	20000	20000
	13.52	1340	1550	2278	155	15	14800	15800	1850	1850	15400	16600	20000	20000
	15.84	1400	1550	2380	145	11	15500	16600	2030	2030	15400	16600	20000	20000
	17.87	1450	1550	2465	140	9.0	16100	16900	2160	2160	15400	16600	20000	20000
	20.25	1500	1550	2550	128	7.2	15700	16800	2330	2330	15400	16600	20000	20000
	23.08	1550	1550	2635	126	5.8	15400	16600	2550	2550	15400	16600	20000	20000
	25.62	1550	1550	2635	133	5.0	15400	16600	2990	2990	15400	16600	20000	20000
	29.27	1550	1550	2635	137	4.0	15400	16600	3590	3590	15400	16600	20000	20000
	30.89	1550	1550	2635	142	3.6	15400	16600	3840	3840	15400	16600	20000	20000
	35.2	1550	1550	2635	142	2.9	15400	16600	4460	4460	15400	16600	20000	20000
	38.39	1500	1550	2550	159	2.5	15700	16800	5210	5210	15400	16600	20000	20000
	40.04	1550	1550	2635	37	6.0	15400	16600	5100	5100	15400	16600	20000	20000
	45.16	1550	1550	2635	33	4.9	15400	16600	5720	5720	15400	16600	20000	20000
	51.18	1550	1550	2635	29	4.1	15400	16600	6390	6390	15400	16600	20000	20000
	58.34	1550	1550	2635	31	3.3	15400	16600	7130	7130	15400	16600	20000	20000
	64.75	1550	1550	2635	31	3.0	15400	16600	7740	7740	15400	16600	20000	20000
	73.99	1550	1550	2635	31	2.4	15400	16600	8550	8550	15400	16600	20000	20000
	78.07	1550	1550	2635	32	2.3	15400	16600	8890	8890	15400	16600	20000	20000
	88.97	1550	1550	2635	33	1.9	15400	16600	9730	9730	15400	16600	20000	20000
	97.05	1550	1550	2635	32	1.6	15400	16600	10300	10300	15400	16600	20000	20000
	113.56	1550	1550	2635	33	1.3	15400	16600	11400	11400	15400	16600	20000	20000
	128.52	1550	1550	2635	33	0.90	15400	16600	12300	12300	15400	16600	20000	20000
	135.28	1550	1550	2635	33	0.81	15400	16600	12700	12700	15400	16600	20000	20000
	154.02	1550	1550	2635	33	0.66	15400	16600	13700	13700	15400	16600	20000	20000
	179.37	1450	1550	2465	39	0.53	16100	16900	15600	15600	15400	16600	20000	20000
	192.18	1450	1550	2465	36	0.46	16100	16900	16200	16200	15400	16600	20000	20000

10.11 K 77 / CMP / CM [mm]

33 029 00 07

K77..

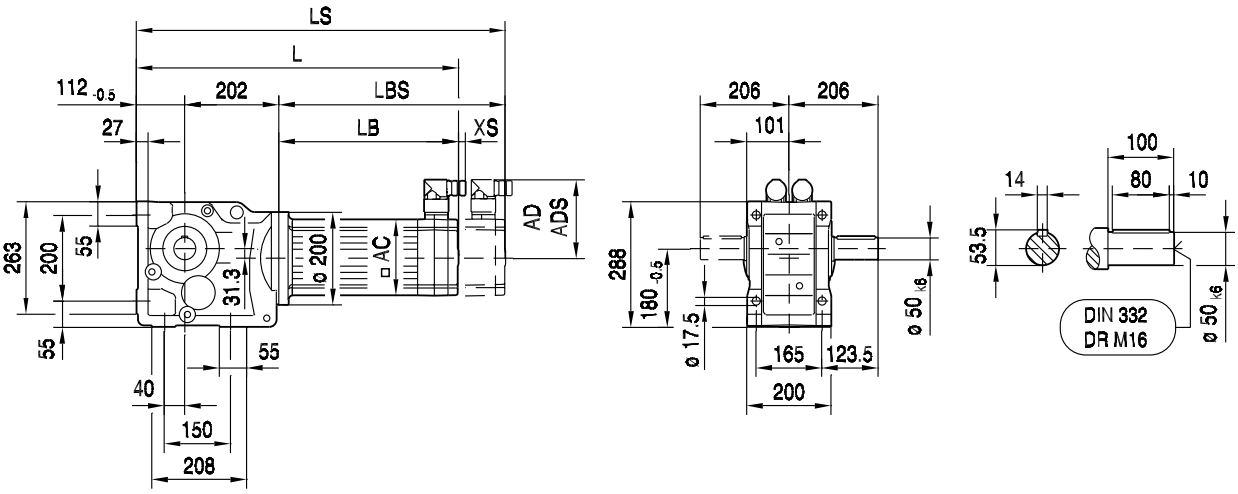

10

KA77B..

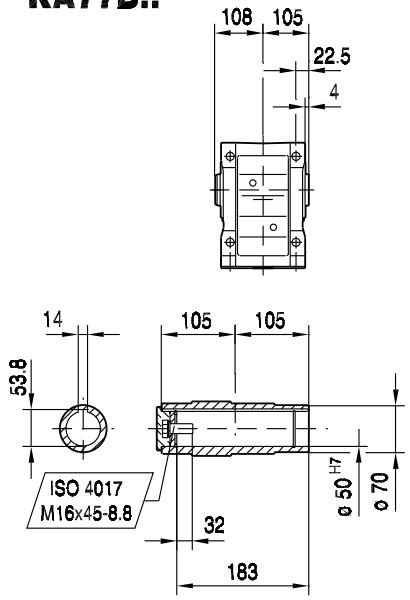

KH77B..

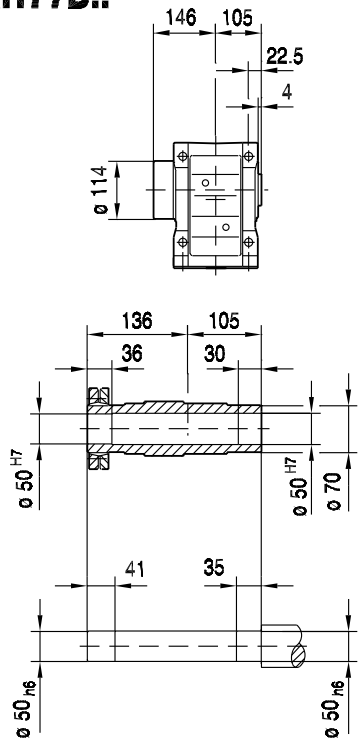

KV77B..

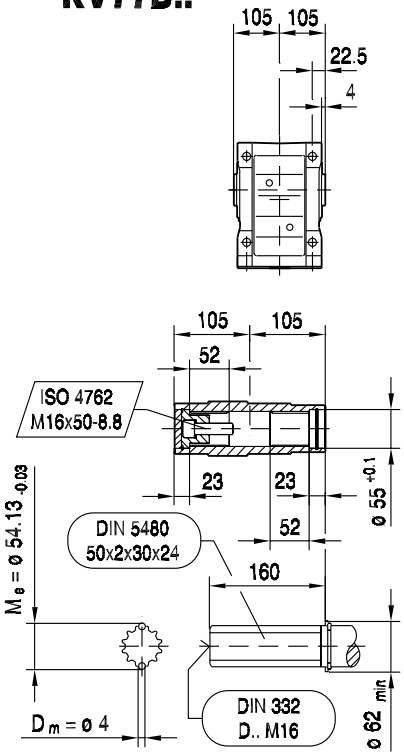

(→ 150)	CMP63S	CMP63M	CMP63L					
AC	88	88	88					
AD	89	89	89					
ADS	89	89	89					
L	481	531	581					
LS	510	560	610					
LB	167	217	267					
LBS	196	246	296					
XS	14	14	14					

33 030 00 07

KF77..

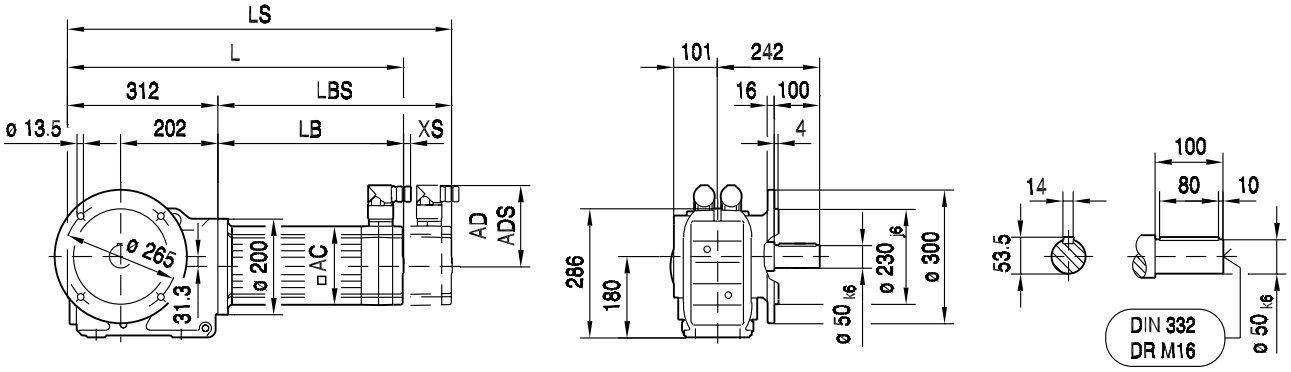

KAF77..

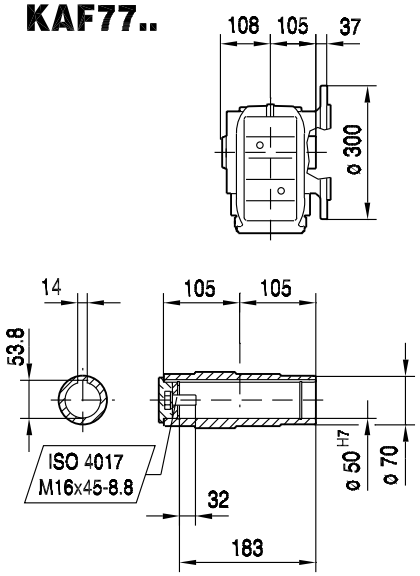

KHF77..

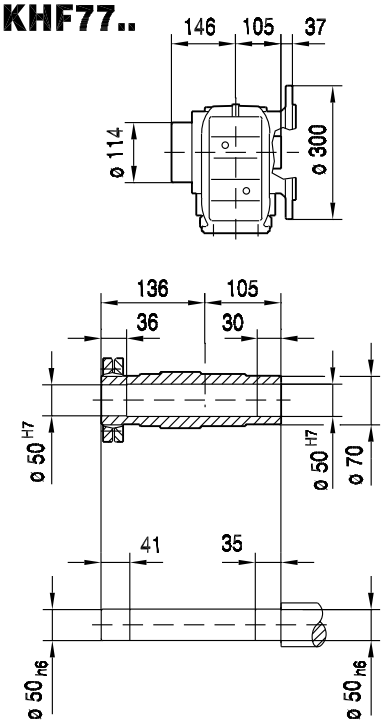

KVF77..

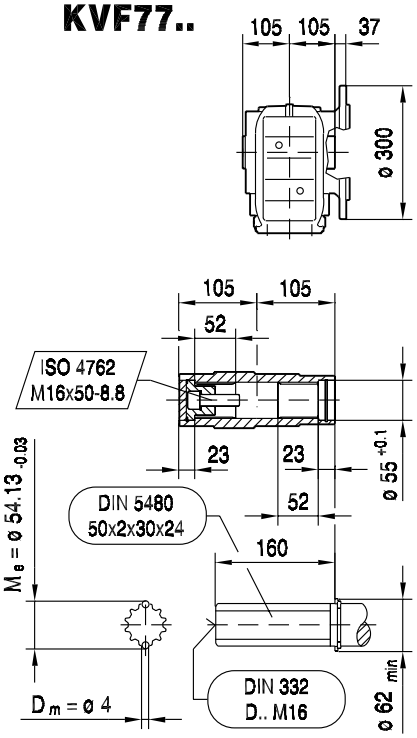

(→ 150)	CMP63S	CMP63M	CMP63L					
AC	88	88	88					
AD	89	89	89					
ADS	89	89	89					
L	479	529	579					
LS	508	558	608					
LB	167	217	267					
LBS	196	246	296					
XS	14	14	14					

KA77..

33 031 00 07

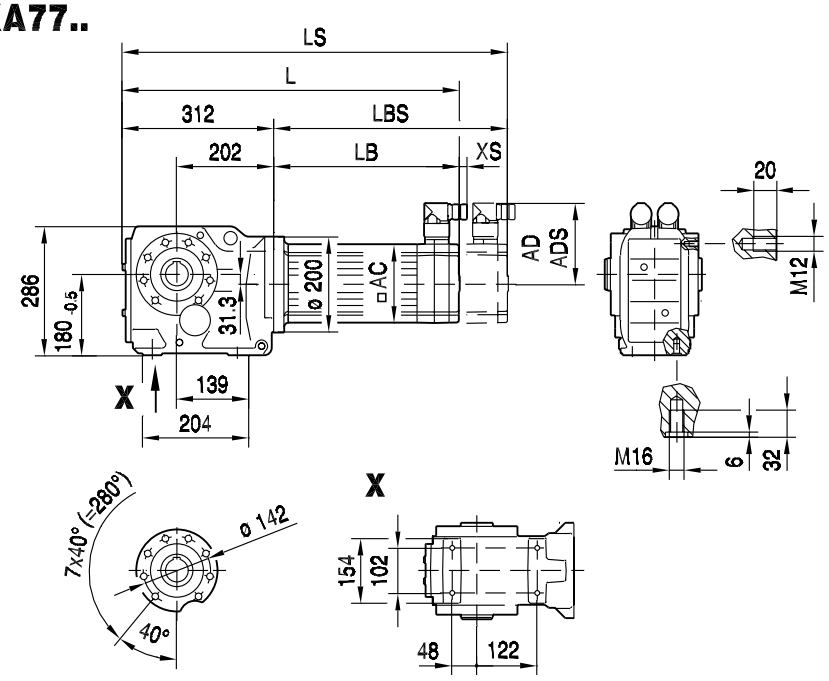

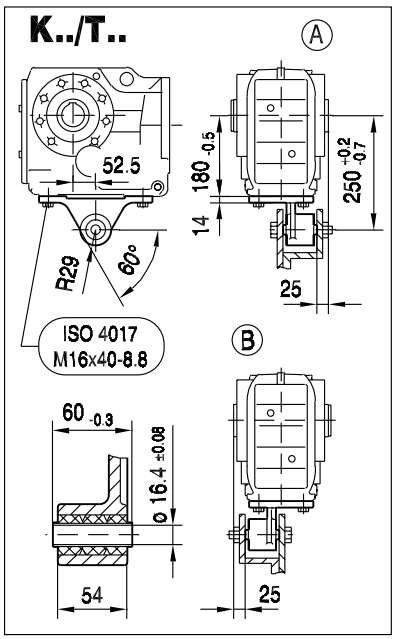

10

KA77..

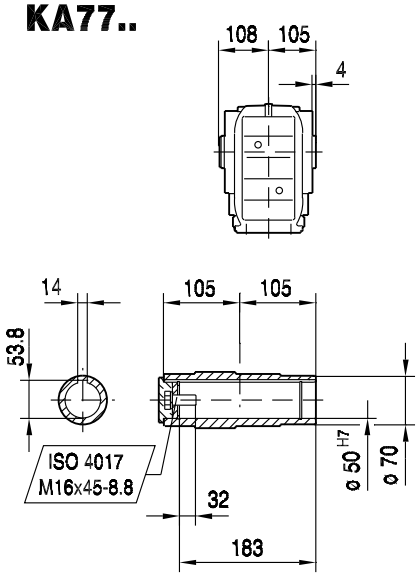

KH77..

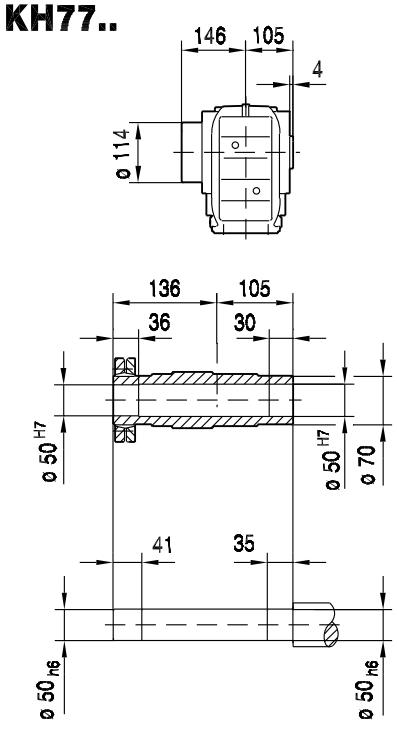

KV77..

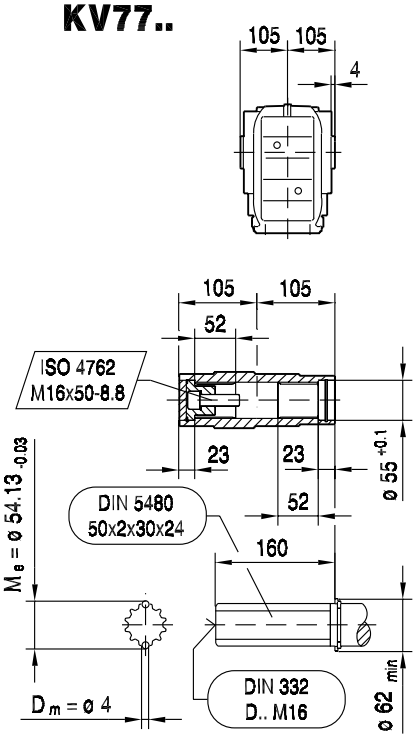

(→ 150)	CMP63S	CMP63M	CMP63L					
AC	88	88	88					
AD	89	89	89					
ADS	89	89	89					
L	479	529	579					
LS	508	558	608					
LB	167	217	267					
LBS	196	246	296					
XS	14	14	14					

KAZ77..

33 032 00 07

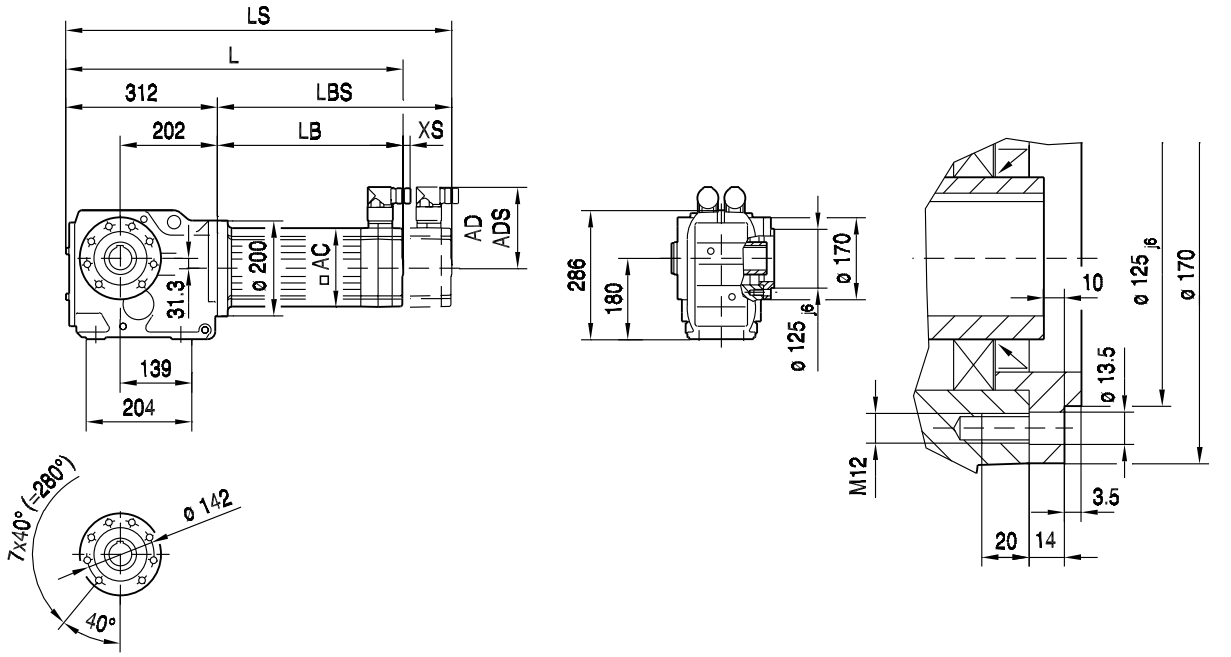

KAZ77..

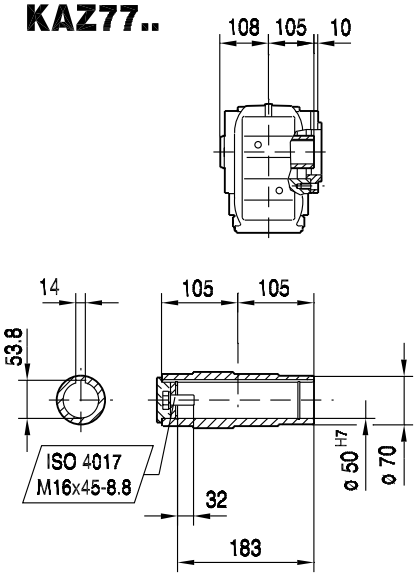

KHZ77..

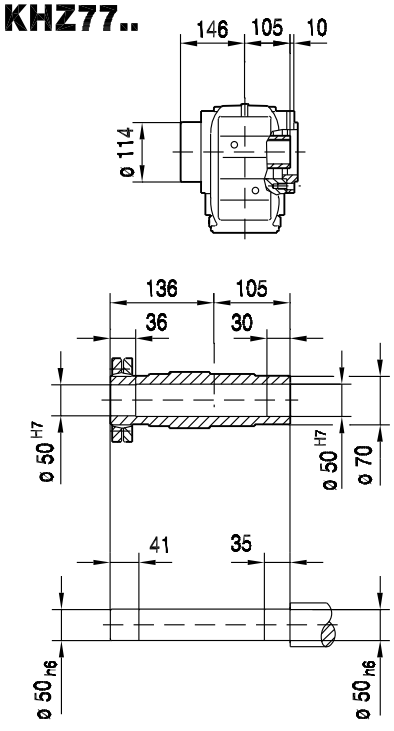

KVZ77..

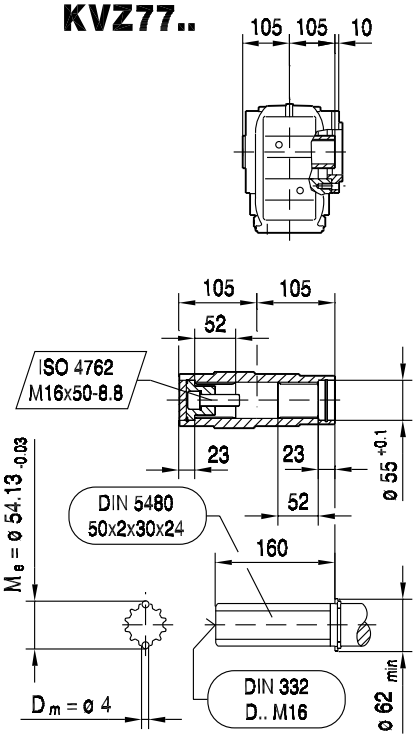

(→ 150)	CMP63S	CMP63M	CMP63L					
AC	88	88	88					
AD	89	89	89					
ADS	89	89	89					
L	479	529	579					
LS	508	558	608					
LB	167	217	267					
LBS	196	246	296					
XS	14	14	14					

KT77..

33 033 00 07

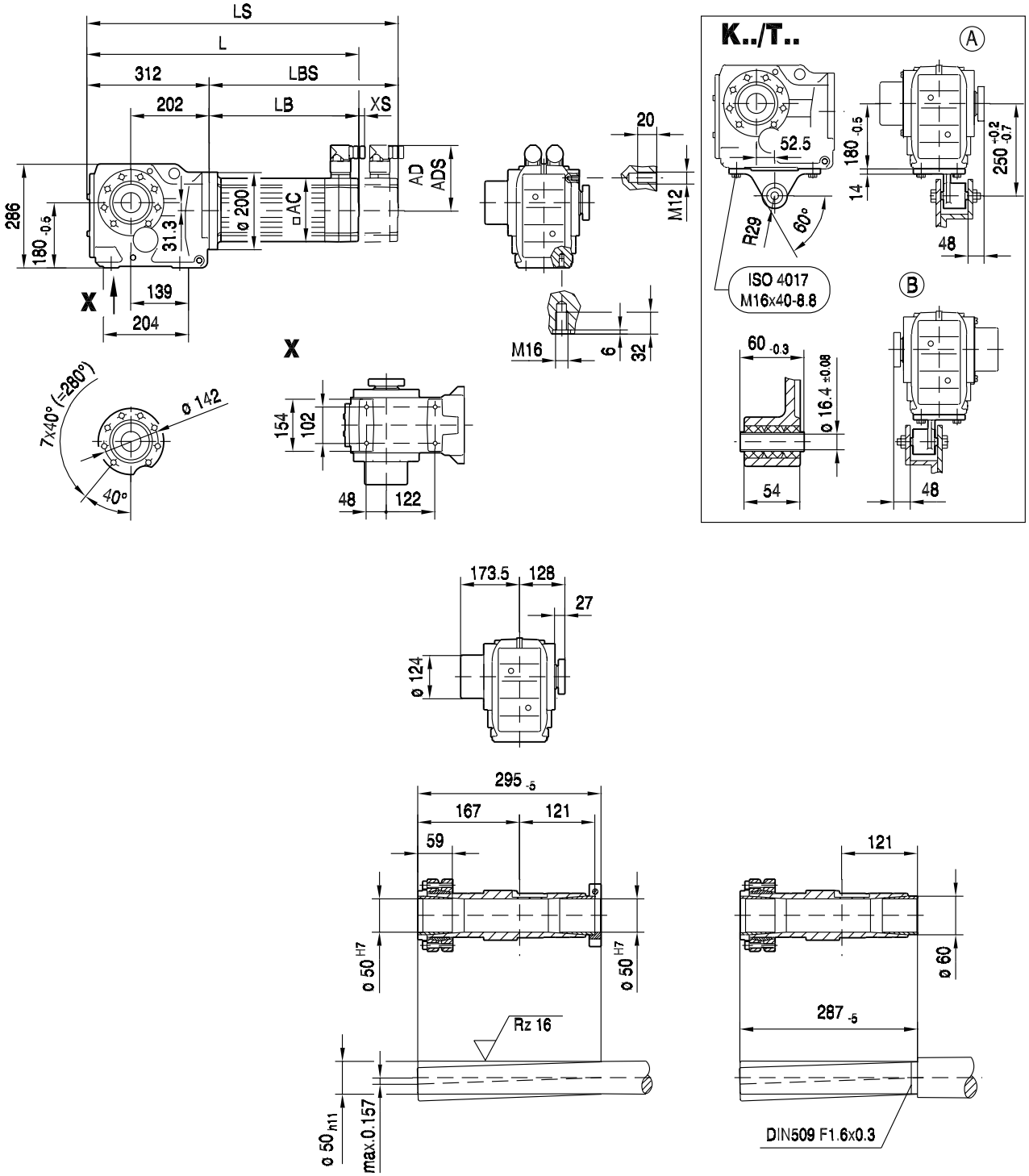

(→ 150)	CMP63S	CMP63M	CMP63L					
AC	88	88	88					
AD	89	89	89					
ADS	89	89	89					
L	479	529	579					
LS	508	558	608					
LB	167	217	267					
LBS	196	246	296					
XS	14	14	14					

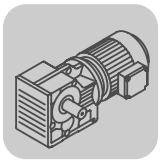

K..CMP, DS, CM
K 77 / CMP / CM [mm]

K77..

34 038 01 01

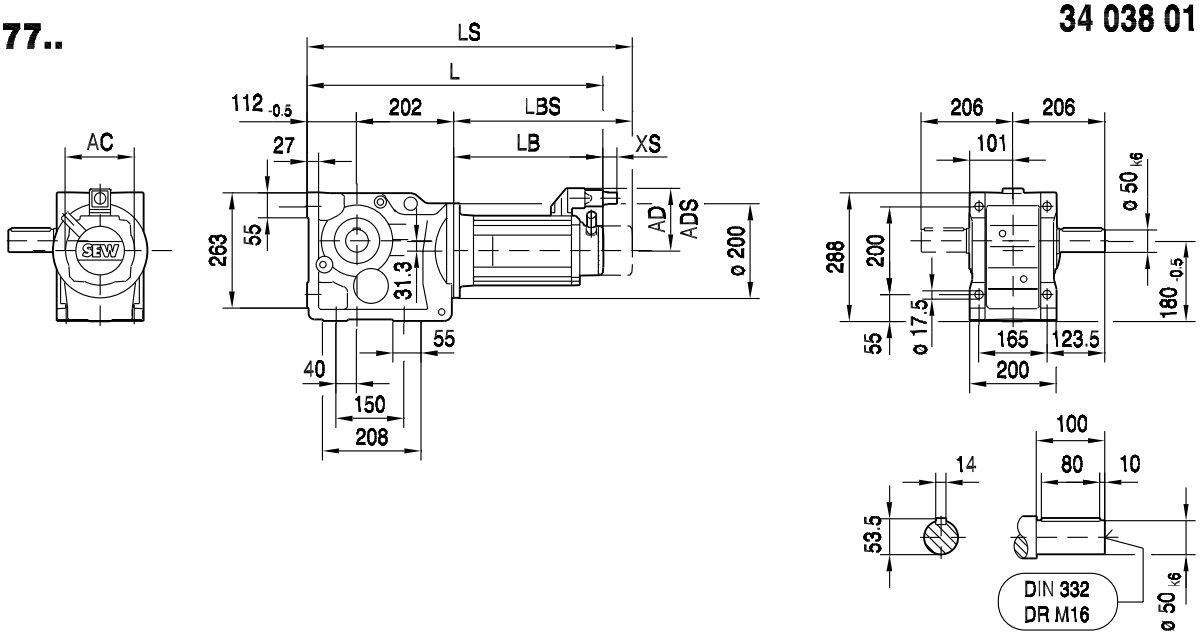

KA77B..

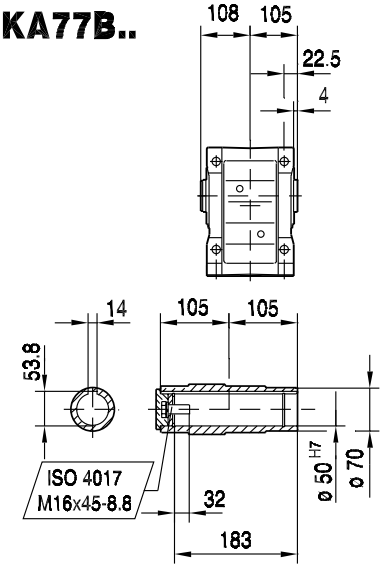

KH77B..

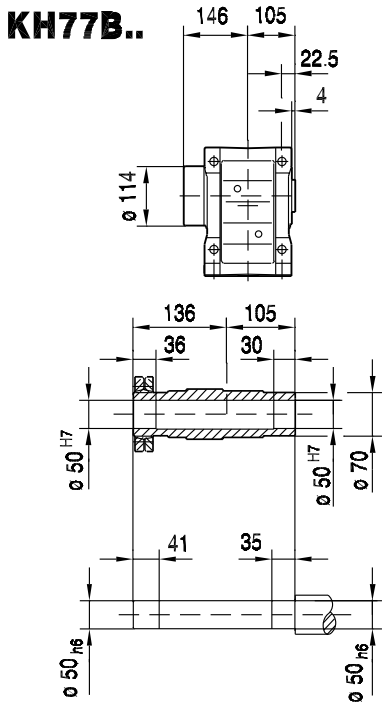

KV77B..

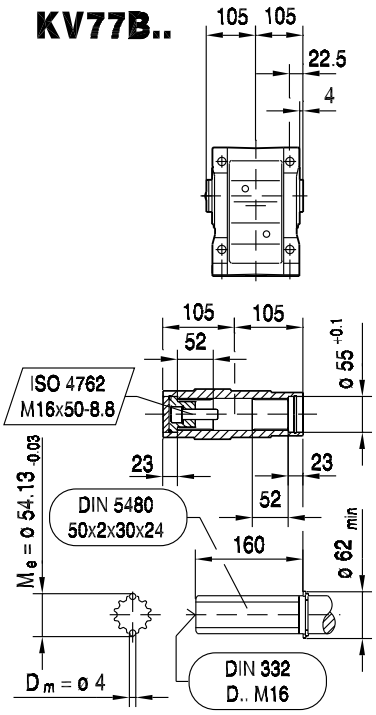

(→ 📖 150)	CM71S	CM71M	CM71L	CM90S	CM90M	CM90L	CM112S	CM112M	CM112L		
AC	117	117	117	142	142	142	186	186	186		
AD	122	122	122	140	140	140	162	162	162		
ADS	122	122	122	140	140	140	162	162	162		
L	540	560	599	590	617	671	626	653	715		
LS	622	642	681	686	713	767	716	743	805		
LB	226	246	285	276	303	357	312	339	401		
LBS	308	328	367	372	399	453	402	429	491		
XS	45	45	45	50	50	50	36	36	36		

KF77..

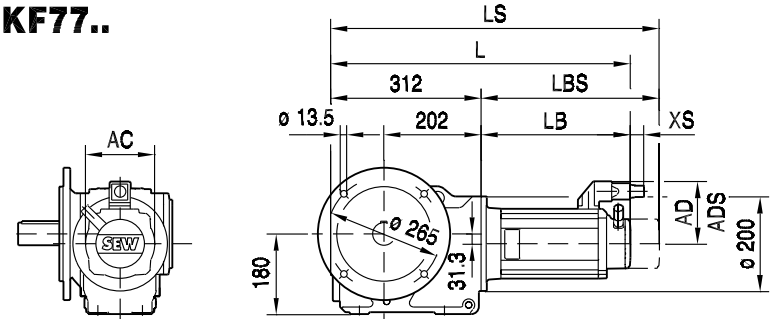

34 039 01 01

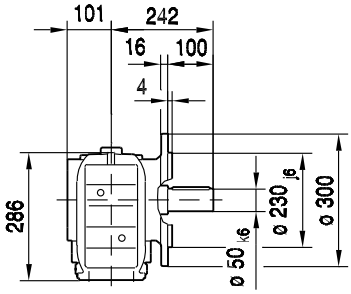

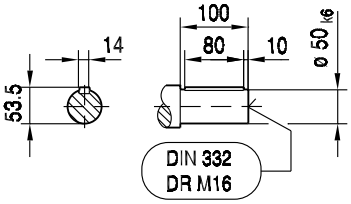

10

KAF77..

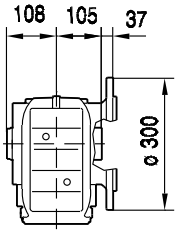

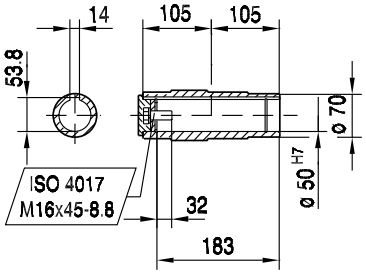

KHF77..

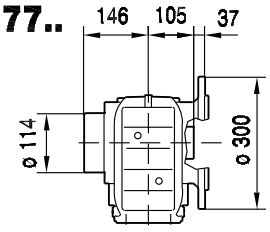

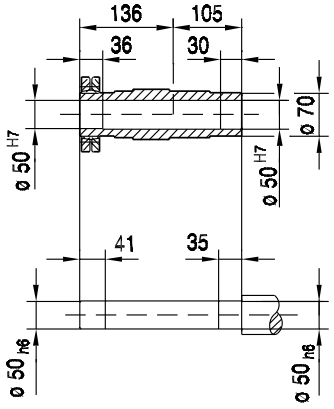

KVF77..

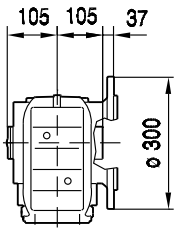

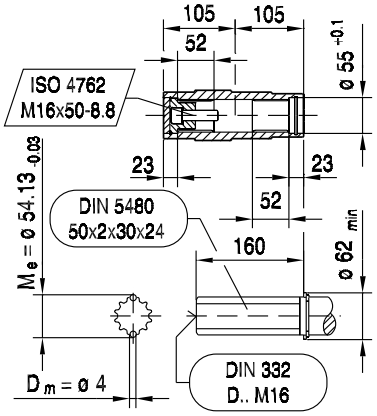

(→ 📖 150)	CM71S	CM71M	CM71L	CM90S	CM90M	CM90L	CM112S	CM112M	CM112L		
AC	117	117	117	142	142	142	186	186	186		
AD	122	122	122	140	140	140	162	162	162		
ADS	122	122	122	140	140	140	162	162	162		
L	538	558	597	588	615	669	624	651	713		
LS	620	640	679	684	711	765	714	741	803		
LB	226	246	285	276	303	357	312	339	401		
LBS	308	328	367	372	399	453	402	429	491		
XS	45	45	45	50	50	50	36	36	36		

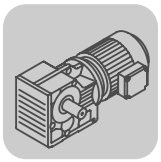

K..CMP, DS, CM
K 77 / CMP / CM [mm]

KA77..

39 024 01 01

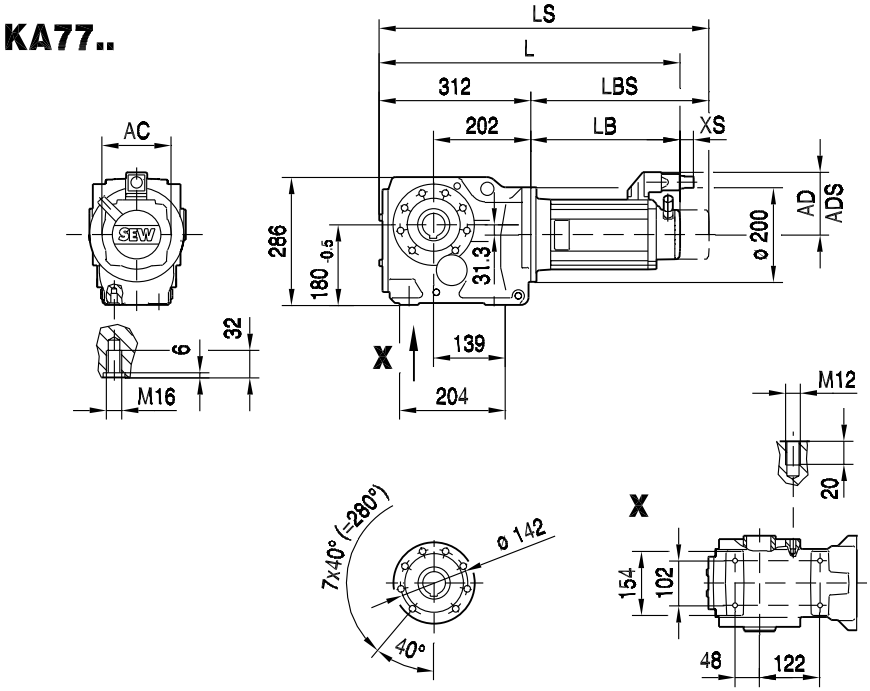

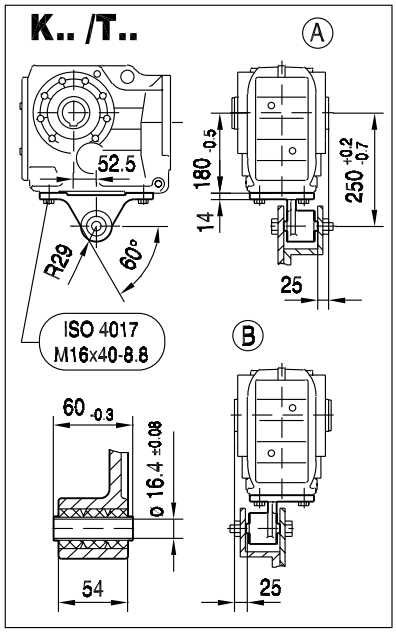

KA77..

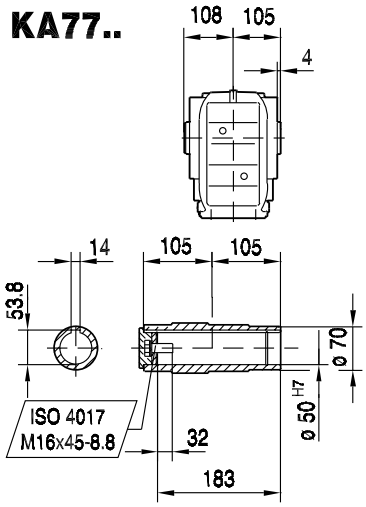

KH77..

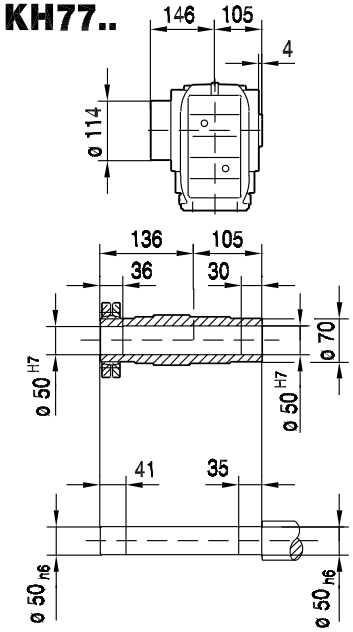

KV77..

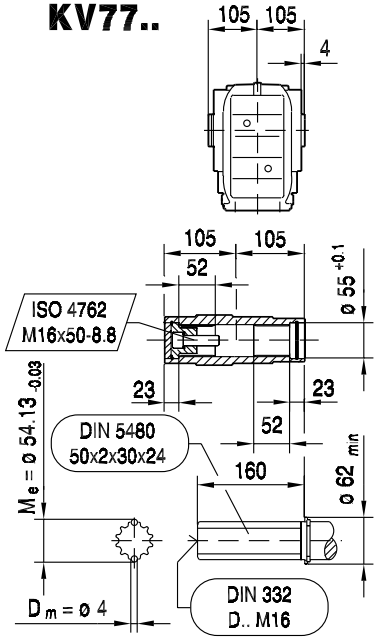

(→ 📖 150)	CM71S	CM71M	CM71L	CM90S	CM90M	CM90L	CM112S	CM112M	CM112L		
AC	117	117	117	142	142	142	186	186	186		
AD	122	122	122	140	140	140	162	162	162		
ADS	122	122	122	140	140	140	162	162	162		
L	538	558	597	588	615	669	624	651	713		
LS	620	640	679	684	711	765	714	741	803		
LB	226	246	285	276	303	357	312	339	401		
LBS	308	328	367	372	399	453	402	429	491		
XS	45	45	45	50	50	50	36	36	36		

KAZ77..

39 037 00 04

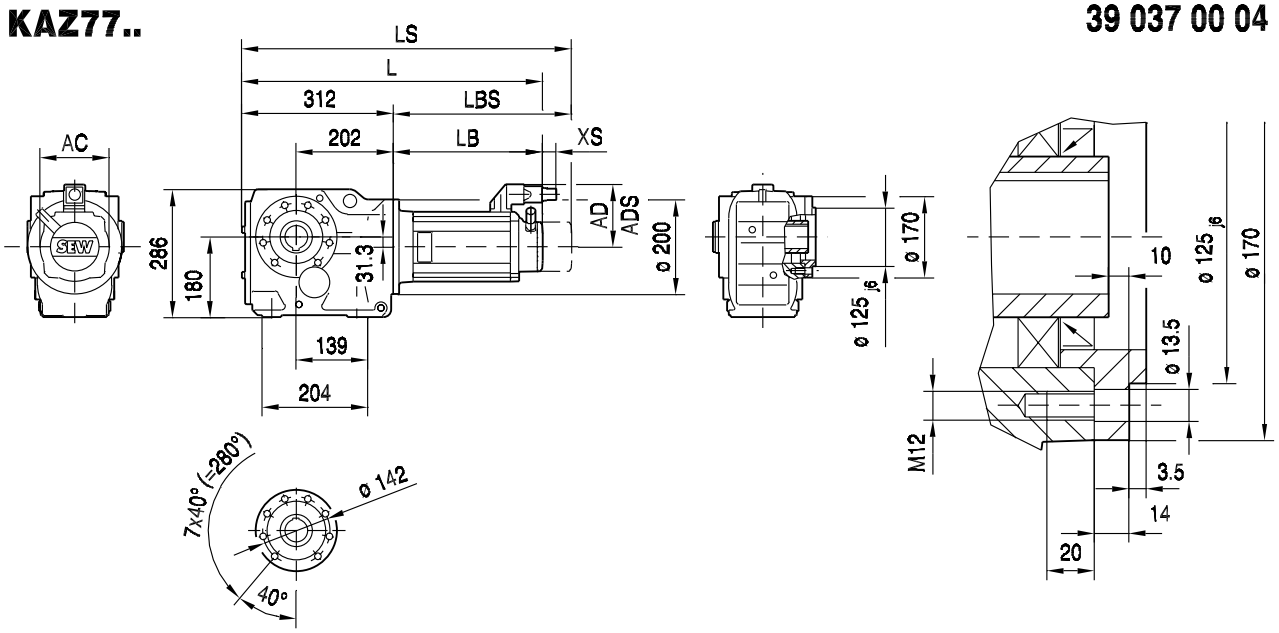

KAZ77..

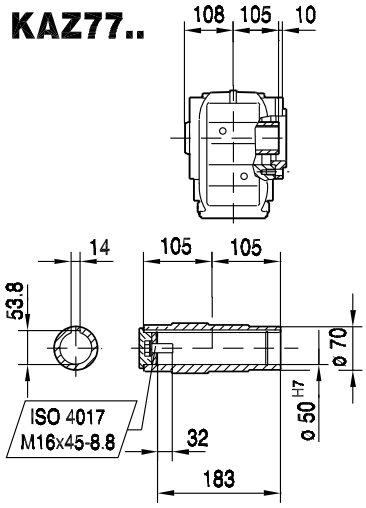

KHZ77..

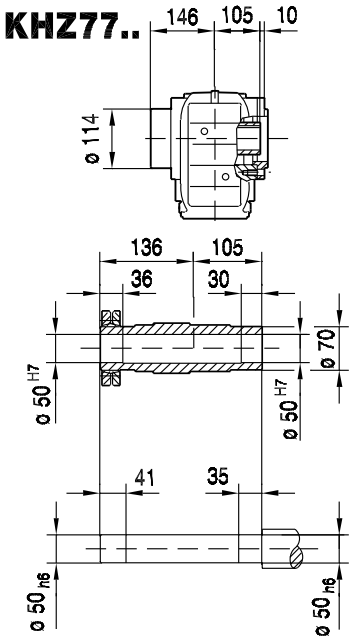

KVZ77..

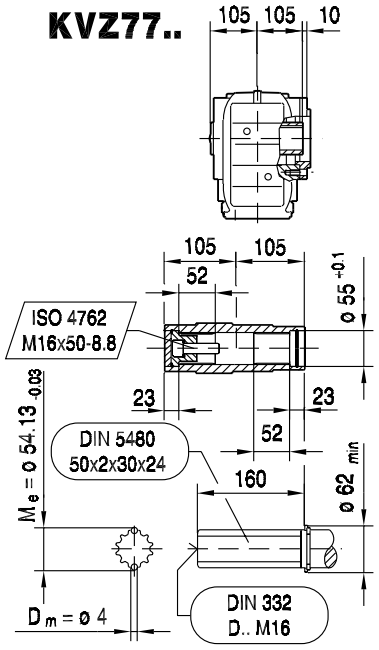

(→ 150)	CM71S	CM71M	CM71L	CM90S	CM90M	CM90L	CM112S	CM112M	CM112L		
AC	117	117	117	142	142	142	186	186	186		
AD	122	122	122	140	140	140	162	162	162		
ADS	122	122	122	140	140	140	162	162	162		
L	538	558	597	588	615	669	624	651	713		
LS	620	640	679	684	711	765	714	741	803		
LB	226	246	285	276	303	357	312	339	401		
LBS	308	328	367	372	399	453	402	429	491		
XS	45	45	45	50	50	50	36	36	36		

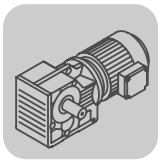

K..CMP, DS, CM
K 77 / CMP / CM [mm]

KT77..

39 045 00 04

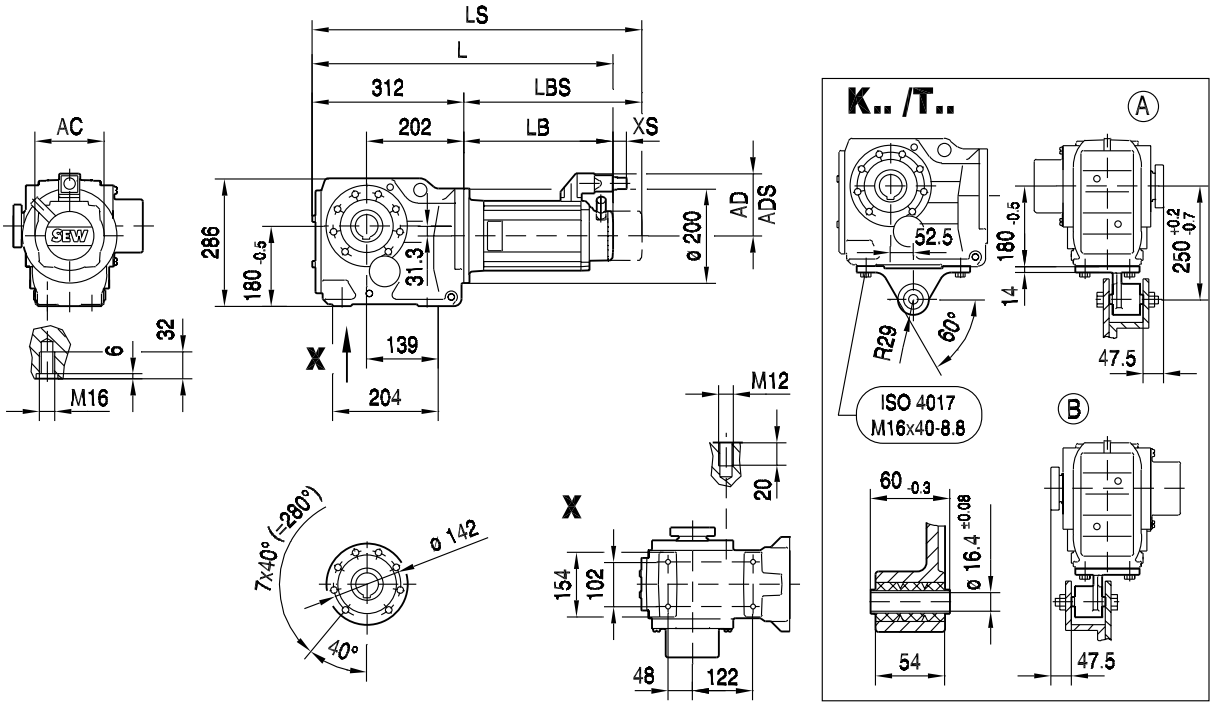

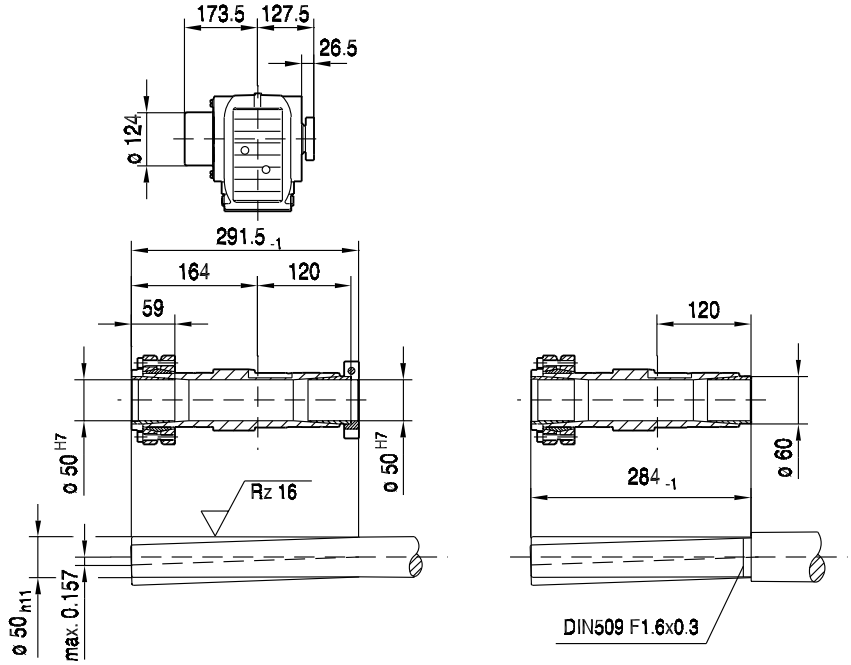

(→ 📖 150)	CM71S	CM71M	CM71L	CM90S	CM90M	CM90L	CM112S	CM112M	CM112L		
AC	117	117	117	142	142	142	186	186	186		
AD	122	122	122	140	140	140	162	162	162		
ADS	122	122	122	140	140	140	162	162	162		
L	538	558	597	588	615	669	624	651	713		
LS	620	640	679	684	711	765	714	741	803		
LB	226	246	285	276	303	357	312	339	401		
LBS	308	328	367	372	399	453	402	429	491		
XS	45	45	45	50	50	50	36	36	36		

10.12 K 87 / CM [Nm]

M_{aDyn} [Nm]		CM						
	i	90S	90M	90L	112S	112M	112L	112H
K87 3	7.21			518	564	743	1079	1630
	8.29	312	411	595	648	854	1240	1874
	10	376	496	718	782	1031	1496	>2240
	11.17	420	554	802	873	1151	1671	>2250
	12.56			902	982	1295	1879	2840
	14.45	544	717	1038	1130	1489	2162	>3150
	16	602	793	1149	1251	1649	>2270	
	17.42	655	864	1251	1362	1796	2606	>3240
	19.45	732	965	1397	1521	2005	2910	>3240
	22.41	843	1111	1609	1752	2310	>3240	>3240
	24.92	937	1236	1790	1948	2569	>3240	>3240
	27.88	1049	1383	2002	2180	2874	>3240	
	31.39	1181	1557	2254	2454	3236	>3240	
	36.52	1359	1792	2595	2825	>3240	>3240	>3240
	44.02	1639	2160	3128	>3240	>3240	>3240	>3240
	49.16	1830	2412	>3240	>3240	>3240	>3240	>3240
	56.64	2108	2779	>3240	>3240	>3240	>3240	>3240
	63	2345	3091	>3240	>3240	>3240	>3240	>3240
	70.46	2623	>3240	>3240	>3240	>3240	>3240	
	79.34	2953	>3240	>3240	>3240	>3240	>3240	
	86.34	3214	>3240	>3240	>3240			
	102.71	>3240	>3240	>3240	>3240			
	115.82	>3240	>3240					
	126.91	>3240	>3240					
	147.32	>3240						
	164.34							
	174.19							
	197.37							

m [kg]		CM						
	s	90S	90M	90L	112S	112M	112L	112H
K87	3	110	110	115	115	120	135	140
KF: + 9.2 kg / KA: + -12.1 kg / KAF: + 1.1 kg								

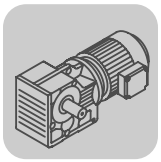

K..CMP, DS, CM
K 87 / CM [Nm]

CM..	i	n_{epk} [1/min]	η [%]	c_T K [Nm/']	c_T KF [Nm/']	c_T KA [Nm/']	c_T KAF [Nm/']	φ /R [']
	7.21	4378	95	168.63	156.02	410.92	410.92	7
	8.29	4500	95	168.63	156.02	410.92	410.92	7
	10	4500	95	168.63	156.02	410.92	410.92	7
	11.17	4500	95	168.63	156.02	410.92	410.92	7
	12.56	4378	95	197.65	180.56	639.96	639.96	6
	14.45	4500	95	197.65	180.56	639.96	639.96	6
	16	4500	95	168.63	156.02	410.92	410.92	6
	17.42	4500	95	197.65	180.56	639.96	639.96	6
	19.45	4500	95	197.65	180.56	639.96	639.96	6
	22.41	4500	95	197.65	180.56	639.96	639.96	6
	24.92	4500	95	197.65	180.56	639.96	639.96	6
	27.88	4500	95	197.65	180.56	639.96	639.96	6
	31.39	4500	95	197.65	180.56	639.96	639.96	6
K87	36.52	4500	94	206.55	187.95	743.68	743.68	6
3	44.02	4500	94	206.55	187.95	743.68	743.68	6
	49.16	4500	94	206.55	187.95	743.68	743.68	5
	56.64	4500	94	206.55	187.95	743.68	743.68	5
	63	4500	94	206.55	187.95	743.68	743.68	5
	70.46	4500	94	206.55	187.95	743.68	743.68	5
	79.34	4500	94	206.55	187.95	743.68	743.68	5
	86.34	4500	94	206.55	187.95	743.68	743.68	5
	102.71	4500	94	206.55	187.95	743.68	743.68	5
	115.82	4500	94	206.55	187.95	743.68	743.68	5
	126.91	4500	94	206.55	187.95	743.68	743.68	5
	147.32	4500	94	206.55	187.95	743.68	743.68	5
	164.34	4500	94	206.55	187.95	743.68	743.68	5
	174.19	4500	94	206.55	187.95	743.68	743.68	5
	197.37	4500	94	206.55	187.95	743.68	743.68	5

CM..							F_{Ramax}				F_{Rapk}			
	i	M_{amax} [Nm]	M_{apk} [Nm]	$M_{aNotaus}$ [Nm]	n_{ak} [1/min]	$J_G\ 10^{-4}$ [kgm^2]	K [N]	KF [N]	KA [N]	KAF [N]	K [N]	KF [N]	KA [N]	KAF [N]
K87 3	7.21	1300	1950	2210	250	46	13200	15100	4970	4970	28100	27000	30000	30000
	8.29	1400	2100	2380	205	35	13500	15600	4960	4960	27900	26900	30000	30000
	10	1500	2240	2550	180	26	14200	16400	5210	5210	27800	26700	30000	30000
	11.17	1500	2250	2550	188	22	14900	17100	5770	5770	27800	26700	30000	30000
	12.56	2000	3000	3400	223	42	14800	17000	5030	5030	26900	25900	30000	30000
	14.45	2100	3150	3570	201	32	15300	17700	5240	5240	26700	25700	30000	30000
	16	1800	2270	3060	119	12	16000	18500	5810	5810	27700	26700	30000	30000
	17.42	2200	3240	3740	189	24	16300	18800	5770	5770	26500	25600	30000	30000
	19.45	2300	3240	3910	170	20	16800	19300	5890	5890	26500	25600	30000	30000
	22.41	2300	3240	3910	178	16	17900	20600	6790	6790	26500	25600	30000	30000
	24.92	2500	3240	4250	140	14	18000	20700	6390	6390	26500	25600	30000	30000
	27.88	2600	3240	4420	122	12	18500	21400	6600	6600	26500	25600	30000	30000
	31.39	2700	3240	4590	108	9.6	19200	22100	6900	6900	26500	25600	30000	30000
	36.52	2500	3240	4250	41	20	21400	24500	9140	9140	26500	25600	30000	30000
	44.02	2600	3240	4420	39	16	22800	26000	10100	10100	26500	25600	30000	30000
	49.16	2700	3240	4590	35	14	23500	26300	10400	10400	26500	25600	30000	30000
	56.64	2700	3240	4590	35	11	25000	26300	11600	11600	26500	25600	30000	30000
	63	2700	3240	4590	35	9.8	26200	26300	12600	12600	26500	25600	30000	30000
	70.46	2700	3240	4590	35	8.4	27300	26300	13700	13700	26500	25600	30000	30000
	79.34	2700	3240	4590	37	7.1	27300	26300	14800	14800	26500	25600	30000	30000
	86.34	2700	3240	4590	37	6.3	27300	26300	15700	15700	26500	25600	30000	30000
	102.71	2700	3240	4590	38	4.9	27300	26300	17500	17500	26500	25600	30000	30000
	115.82	2700	3240	4590	38	4.0	27300	26300	18800	18800	26500	25600	30000	30000
	126.91	2700	3240	4590	39	3.5	27300	26300	19900	19900	26500	25600	30000	30000
	147.32	2700	3240	4590	39	2.8	27300	26300	21600	21600	26500	25600	30000	30000
	164.34	2700	3240	4590	39	1.8	27300	26300	23000	23000	26500	25600	30000	30000
	174.19	2700	3240	4590	39	1.6	27300	26300	23700	23700	26500	25600	30000	30000
	197.37	2700	3240	4590	35	1.3	27300	26300	25400	25400	26500	25600	30000	30000

10.13 K 87 / CM [mm]

K87..

34 040 01 01

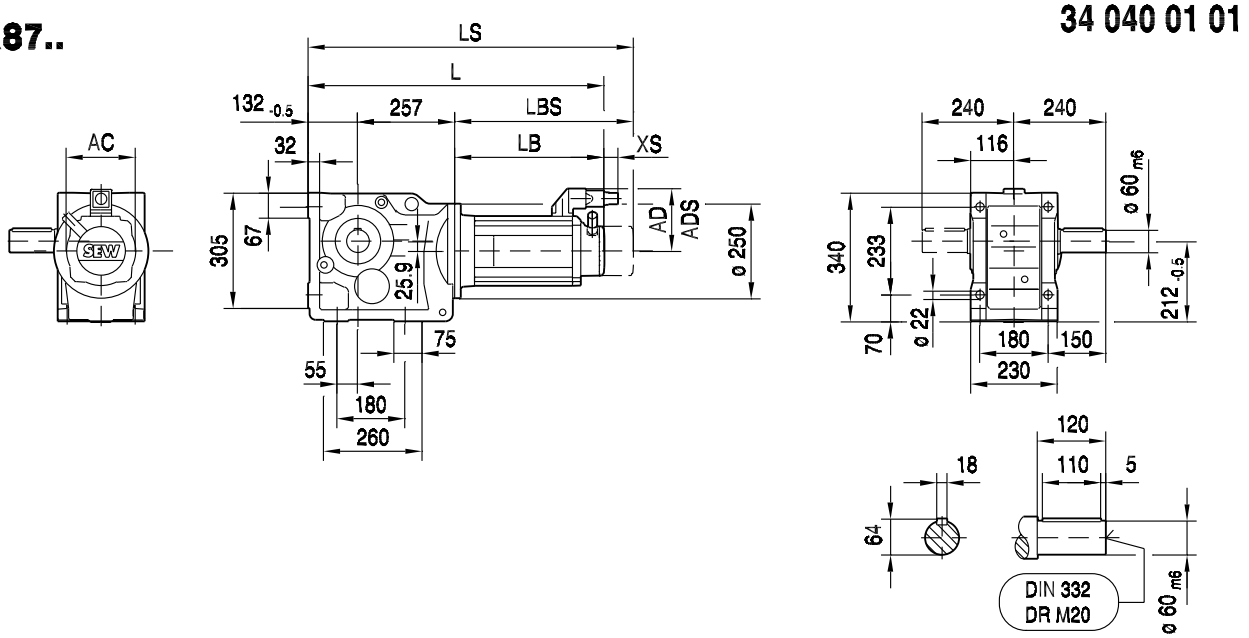

KA87B..

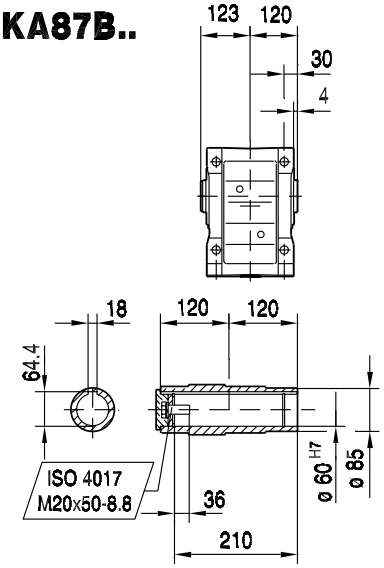

KH87B..

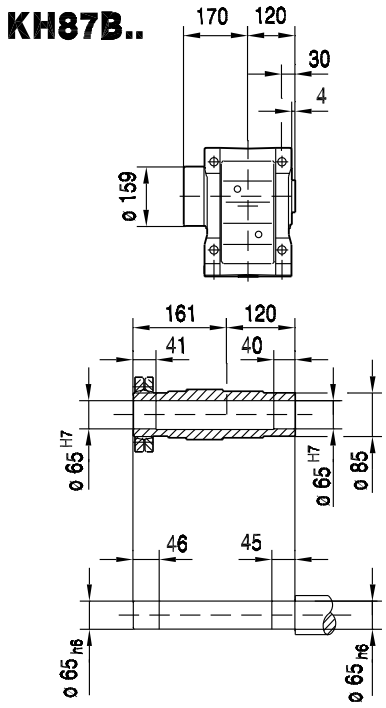

KV87B..

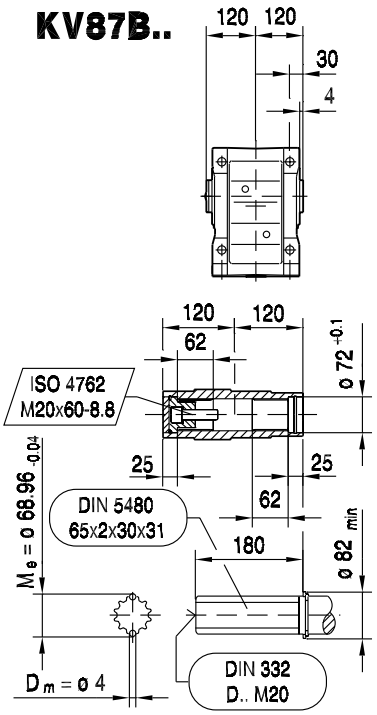

(→ 150)	CM90S	CM90M	CM90L	CM112S	CM112M	CM112L	CM112H				
AC	142	142	142	186	186	186	186				
AD	140	140	140	162	162	162	162				
ADS	140	140	140	162	162	162	162				
L	661	688	742	696	723	785	915				
LS	757	784	838	786	813	875	980				
LB	272	299	353	307	334	396	526				
LBS	368	395	449	397	424	486	591				
XS	50	50	50	36	36	36	36				

KF87..

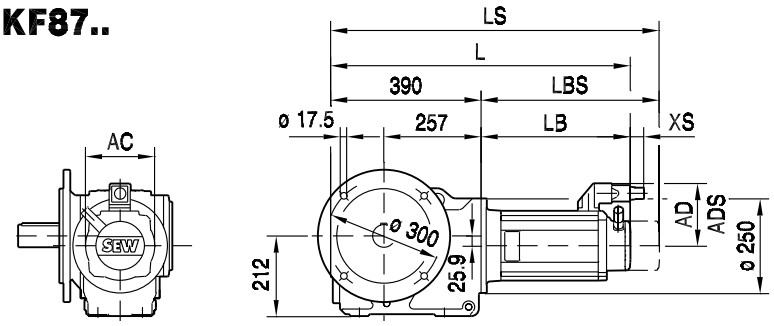

34 041 01 01

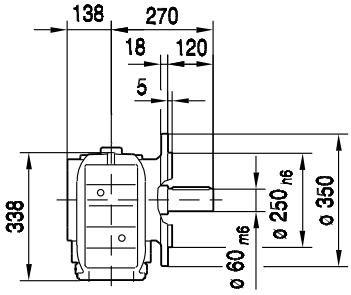

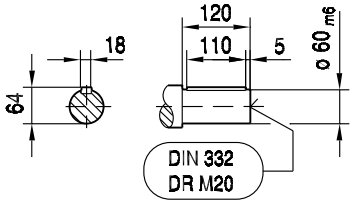

10

KAF87..

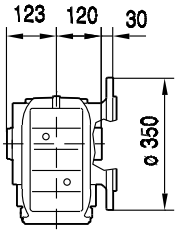

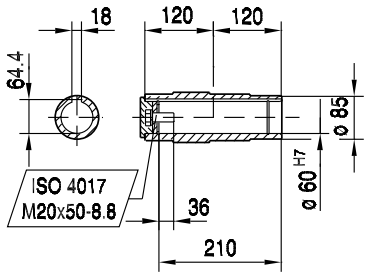

KHF87..

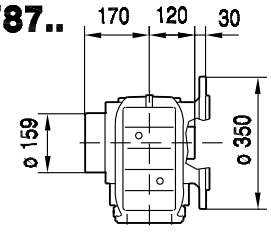

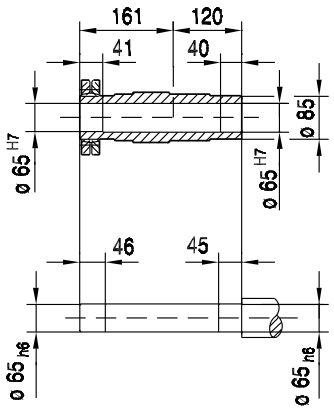

KVF87..

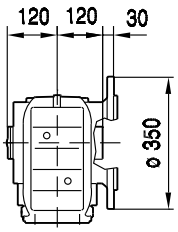

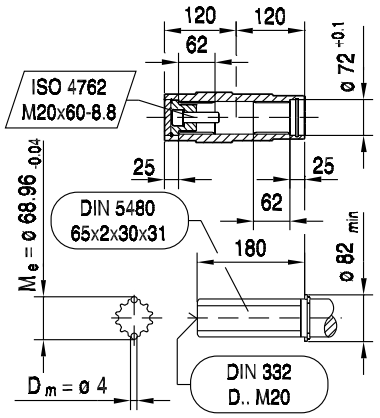

(→ 📖 150)	CM90S	CM90M	CM90L	CM112S	CM112M	CM112L	CM112H				
AC	142	142	142	186	186	186	186				
AD	140	140	140	162	162	162	162				
ADS	140	140	140	162	162	162	162				
L	662	689	743	697	724	786	916				
LS	758	785	839	787	814	876	981				
LB	272	299	353	307	334	396	526				
LBS	368	395	449	397	424	486	591				
XS	50	50	50	36	36	36	36				

KA87..

39 025 01 01

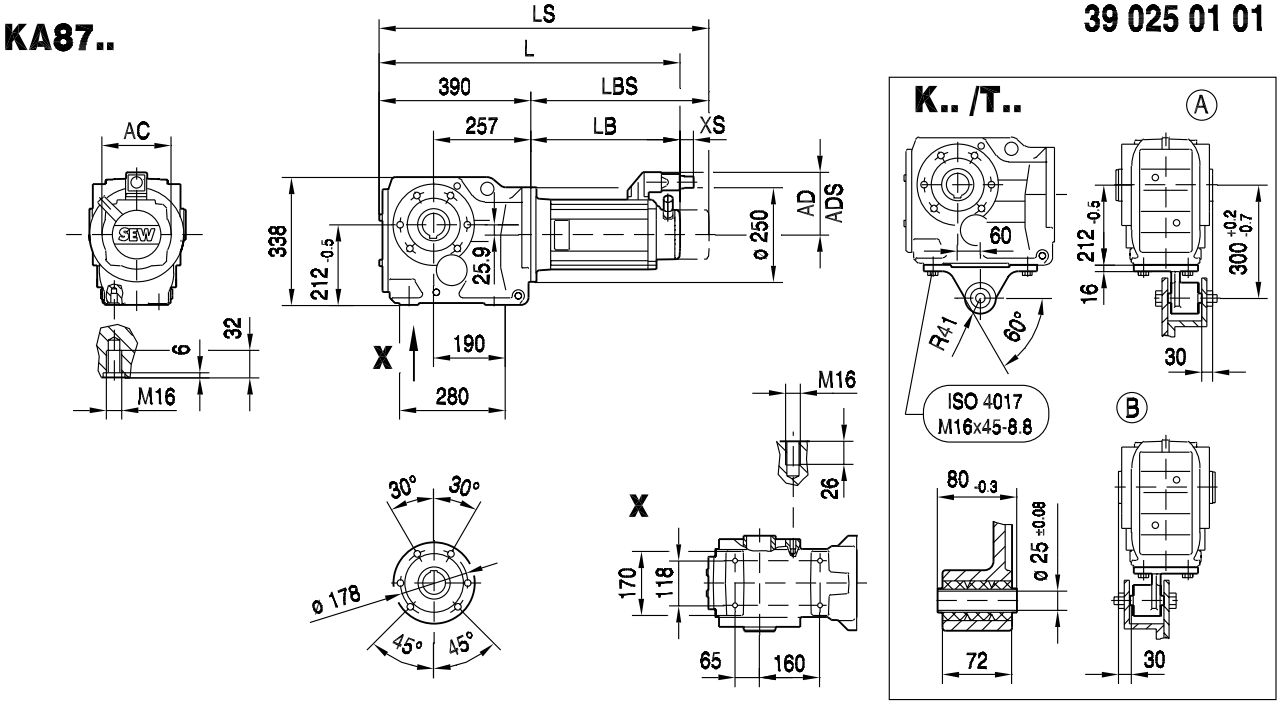

KA87..

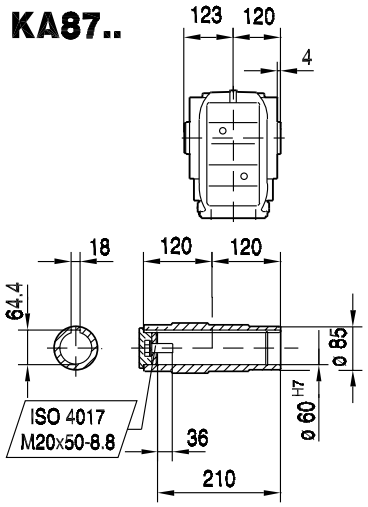

KH87..

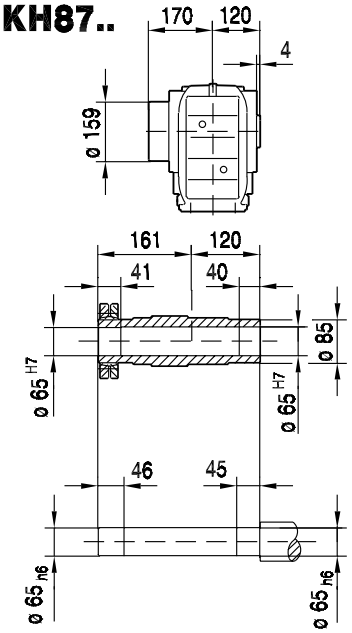

KV87..

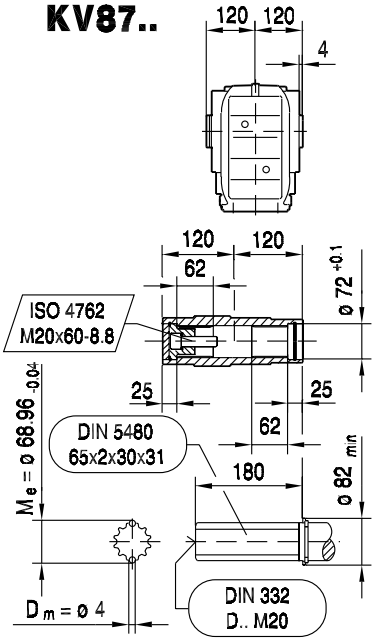

(→ 150)	CM90S	CM90M	CM90L	CM112S	CM112M	CM112L	CM112H				
AC	142	142	142	186	186	186	186				
AD	140	140	140	162	162	162	162				
ADS	140	140	140	162	162	162	162				
L	662	689	743	697	724	786	916				
LS	758	785	839	787	814	876	981				
LB	272	299	353	307	334	396	526				
LBS	368	395	449	397	424	486	591				
XS	50	50	50	36	36	36	36				

KAZ87..

39 038 00 04

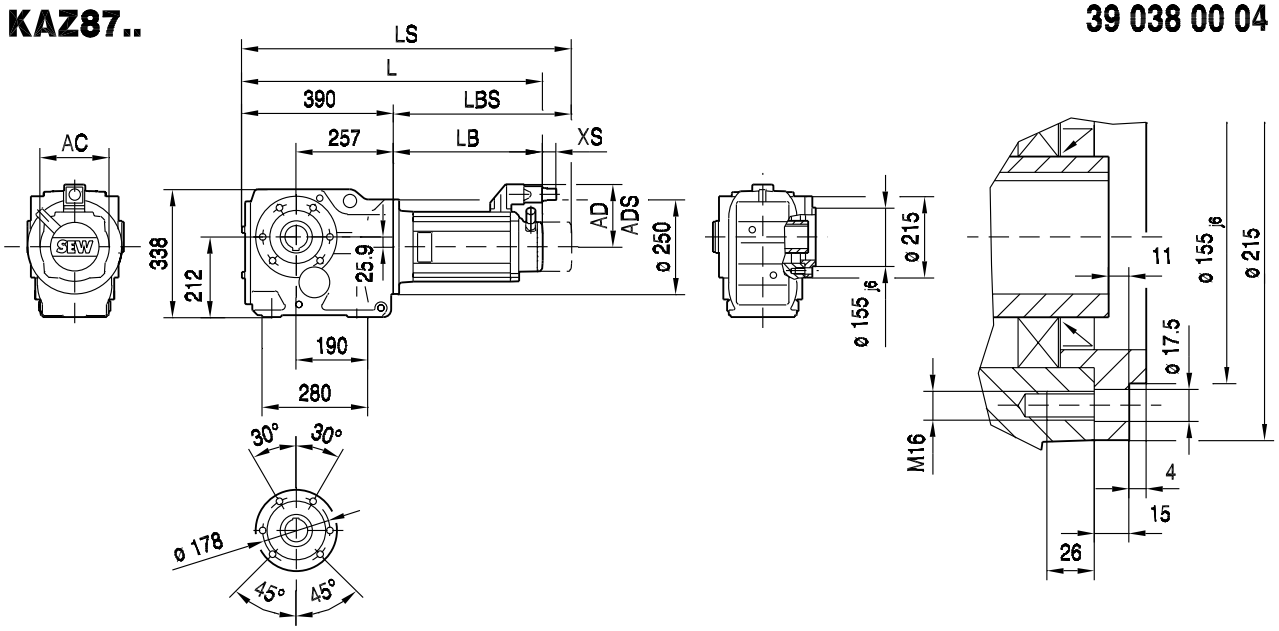

10

KAZ87..

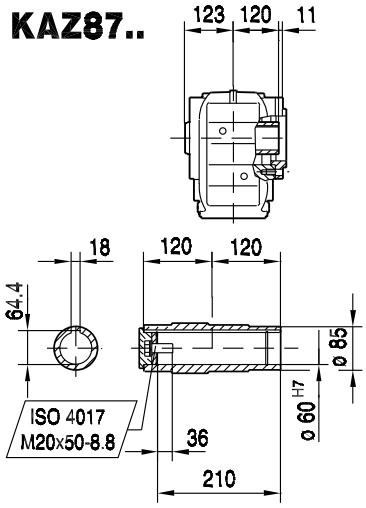

KHZ87..

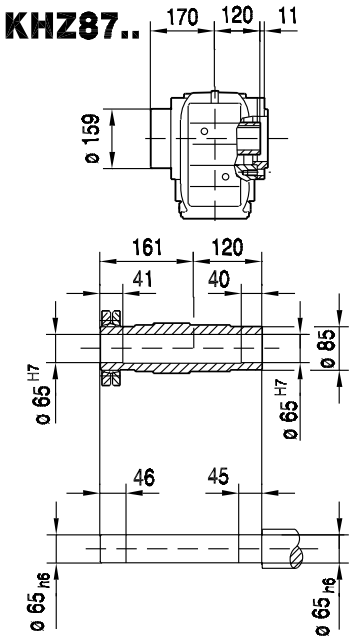

KVZ87..

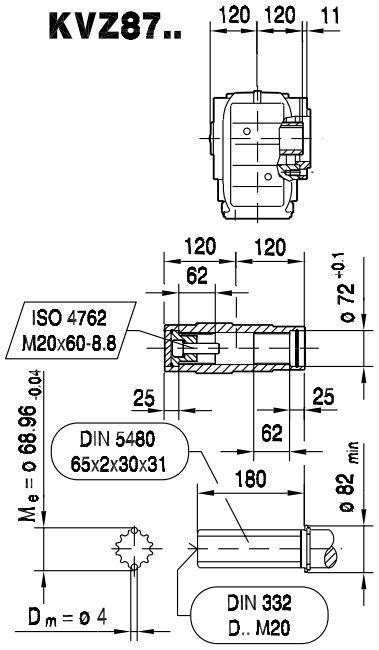

(→ 150)	CM90S	CM90M	CM90L	CM112S	CM112M	CM112L	CM112H				
AC	142	142	142	186	186	186	186				
AD	140	140	140	162	162	162	162				
ADS	140	140	140	162	162	162	162				
L	662	689	743	697	724	786	916				
LS	758	785	839	787	814	876	981				
LB	272	299	353	307	334	396	526				
LBS	368	395	449	397	424	486	591				
XS	50	50	50	36	36	36	36				

KT87..

39 046 00 04

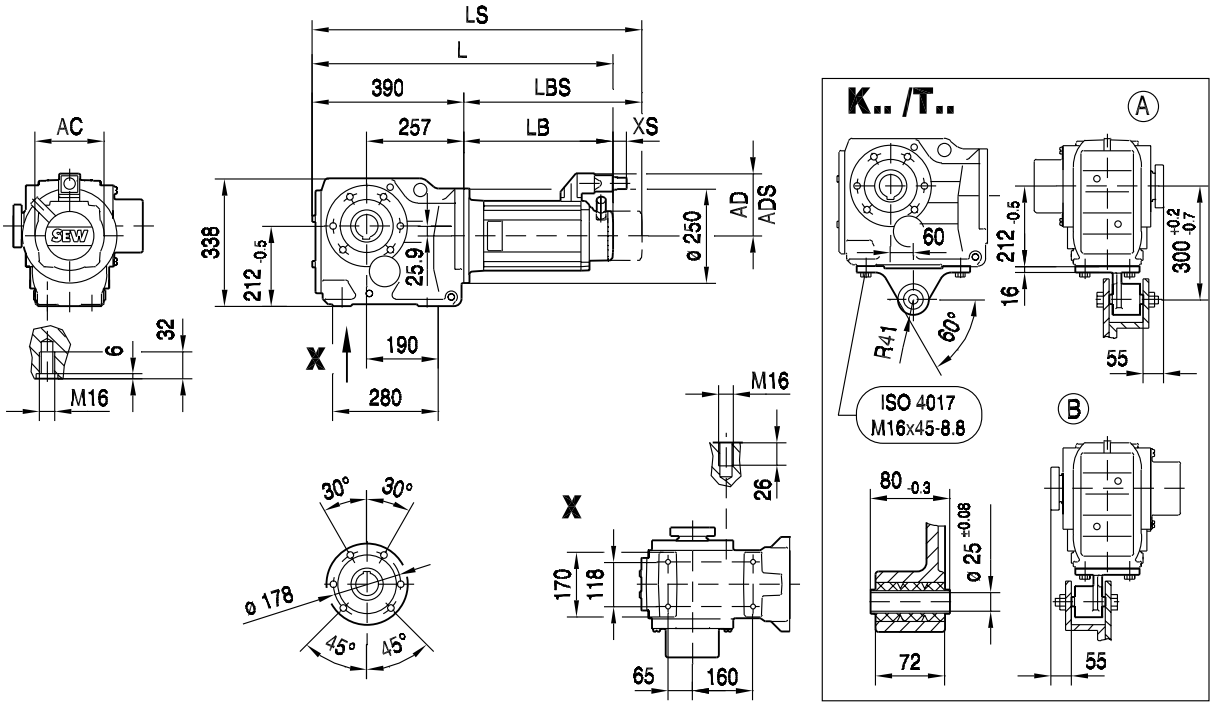

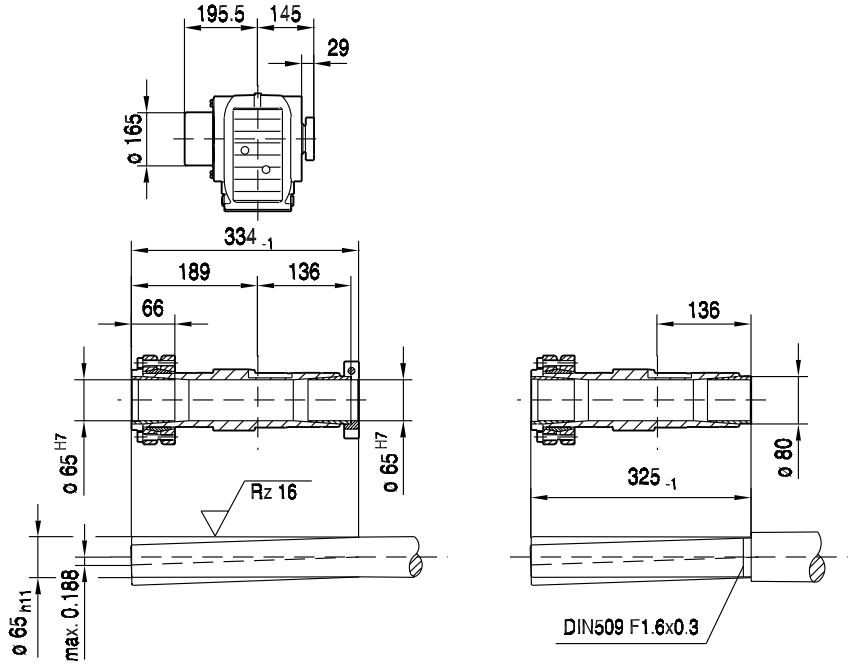

(→ 📖 150)	CM90S	CM90M	CM90L	CM112S	CM112M	CM112L	CM112H				
AC	142	142	142	186	186	186	186				
AD	140	140	140	162	162	162	162				
ADS	140	140	140	162	162	162	162				
L	662	689	743	697	724	786	916				
LS	758	785	839	787	814	876	981				
LB	272	299	353	307	334	396	526				
LBS	368	395	449	397	424	486	591				
XS	50	50	50	36	36	36	36				

10.14 K 97 / CM [Nm]

M_{aDyn} [Nm]		CM						
	i	90S	90M	90L	112S	112M	112L	112H
K97 3	7.54			547	596	785	1140	1723
	8.71			626	681	898	1303	1969
	10.41			748	814	1073	1558	2354
	11.99			861	937	1236	1794	2711
	13.85			995	1083	1428	2072	3131
	16.56			1189	1295	1707	2478	3744
	18.96	713	940	1362	1482	1954	2837	4287
	22.37	842	1109	1607	1749	2306	3347	>4710
	24.75	931	1227	1778	1935	2551	3703	>4710
	27.91	1050	1384	2004	2182	2877	4176	>4710
	30.82	1159	1528	2213	2410	3177	4611	>4710
	34.23	1288	1697	2458	2676	3528	>4710	
	38.3	1441	1899	2751	2994	3948	>4710	
	41.87			2975	3239	4270	>4710	>4710
	47.93	1784	2352	3406	3708	>4710	>4710	>4710
	56.55	2105	2775	4019	4375	>4710	>4710	>4710
	62.55	2328	3069	4445	>4710	>4710	>4710	>4710
	70.54	2626	3461	>4710	>4710	>4710	>4710	>4710
	77.89	2899	3822	>4710	>4710	>4710	>4710	>4710
	86.52	3221	4245	>4710	>4710	>4710	>4710	
	96.8	3603	>4710	>4710	>4710	>4710	>4710	
	105.13	3913	>4710	>4710	>4710			
	123.93	4613	>4710	>4710	>4710			
	140.28	>4710	>4710					
	153.21	>4710	>4710					
	176.05	>4710						

m [kg]		CM						
	s	90S	90M	90L	112S	112M	112L	112H
K97	3	170	170	175	175	180	195	200
KF: + 20.1 kg / KA: + -18.2 kg / KAF: + 6.7 kg								

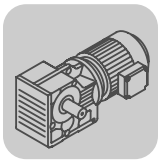

K..CMP, DS, CM
K 97 / CM [Nm]

CM..	i	n_{epk} [1/min]	η [%]	c_T K [Nm/']	KF [Nm/']	KA [Nm/']	KAF [Nm/']	φ /R [']
K97 3	7.54	3597	96	263.58	237.42	580.89	580.89	10
	8.71	4500	95	263.58	237.42	580.89	580.89	10
	10.41	4500	95	263.58	237.42	580.89	580.89	10
	11.99	4500	95	300.61	267.05	790.78	790.78	8
	13.85	4500	95	300.61	267.05	790.78	790.78	8
	16.56	4500	95	300.61	267.05	790.78	790.78	8
	18.96	4500	95	300.61	267.05	790.78	790.78	8
	22.37	4500	95	300.61	267.05	790.78	790.78	8
	24.75	4500	95	300.61	267.05	790.78	790.78	8
	27.91	4500	95	300.61	267.05	790.78	790.78	8
	30.82	4500	95	300.61	267.05	790.78	790.78	7
	34.23	4500	95	300.61	267.05	790.78	790.78	7
	38.3	4500	95	300.61	267.05	790.78	790.78	7
	41.87	4378	94	314.14	277.67	891.83	891.83	7
	47.93	4500	94	314.14	277.67	891.83	891.83	7
	56.55	4500	94	314.14	277.67	891.83	891.83	7
	62.55	4500	94	314.14	277.67	891.83	891.83	7
	70.54	4500	94	314.14	277.67	891.83	891.83	7
	77.89	4500	94	314.14	277.67	891.83	891.83	7
	86.52	4500	94	314.14	277.67	891.83	891.83	7
	96.8	4500	94	314.14	277.67	891.83	891.83	7
	105.13	4500	94	314.14	277.67	891.83	891.83	7
	123.93	4500	94	314.14	277.67	891.83	891.83	7
	140.28	4500	94	314.14	277.67	891.83	891.83	7
	153.21	4500	94	314.14	277.67	891.83	891.83	7
	176.05	4500	94	314.14	277.67	891.83	891.83	7

CM..	i	M_{amax} [Nm]	M_{apk} [Nm]	$M_{aNotaus}$ [Nm]	n_{ak} [1/min]	J_G 10^{-4} [kgm^2]	F_{Ramax} K [N]	KF [N]	KA [N]	KAF [N]	F_{Rapk} K [N]	KF [N]	KA [N]	KAF [N]
K97 3	7.54	2400	3560	4080	279	120	15700	18100	10200	10200	40000	39300	40000	40000
	8.71	2660	3590	4522	218	94	15800	18200	9930	9930	40000	39300	40000	40000
	10.41	2870	3610	4879	183	71	16400	19000	10300	10300	40000	39300	40000	40000
	11.99	3890	4710	6613	167	115	16200	18800	9100	9100	40000	38300	40000	40000
	13.85	4300	4710	7310	130	91	16100	18900	8520	8520	40000	38300	40000	40000
	16.56	4300	4710	7310	139	69	17800	20700	10300	10300	40000	38300	40000	40000
	18.96	4300	4710	7310	148	55	19100	22100	11700	11700	40000	38300	40000	40000
	22.37	4300	4710	7310	156	43	20900	24000	13500	13500	40000	38300	40000	40000
	24.75	4300	4710	7310	166	37	22000	25200	14700	14700	40000	38300	40000	40000
	27.91	4300	4710	7310	168	30	23300	26600	16100	16100	40000	38300	40000	40000
	30.82	4300	4710	7310	172	26	24500	27800	17300	17300	40000	38300	40000	40000
	34.23	4300	4710	7310	178	22	25700	29200	18600	18600	40000	38300	40000	40000
	38.3	4300	4710	7310	183	18	27100	30700	20100	20100	40000	38300	40000	40000
	41.87	4300	4710	7310	36	42	28300	31900	21300	21300	40000	38300	40000	40000
	47.93	4300	4710	7310	31	35	30000	33800	23300	23300	40000	38300	40000	40000
	56.55	4300	4710	7310	30	28	32300	36300	25700	25700	40000	38300	40000	40000
	62.55	4300	4710	7310	30	25	33800	37800	27300	27300	40000	38300	40000	40000
	70.54	4300	4710	7310	31	21	35600	38700	29200	29200	40000	38300	40000	40000
	77.89	4300	4710	7310	32	18	37100	38700	30900	30900	40000	38300	40000	40000
	86.52	4300	4710	7310	32	16	38800	38700	32700	32700	40000	38300	40000	40000
	96.8	4300	4710	7310	33	13	40000	38700	34700	34700	40000	38300	40000	40000
	105.13	4300	4710	7310	33	12	40000	38700	36300	36300	40000	38300	40000	40000
	123.93	4300	4710	7310	33	9.3	40000	38700	39500	39500	40000	38300	40000	40000
	140.28	4300	4710	7310	34	5.9	40000	38700	40000	40000	40000	38300	40000	40000
	153.21	4300	4710	7310	34	5.2	40000	38700	40000	40000	40000	38300	40000	40000
	176.05	4300	4710	7310	34	4.0	40000	38700	40000	40000	40000	38300	40000	40000

10.15 K 97 / CM [mm]

K97..

34 042 01 01

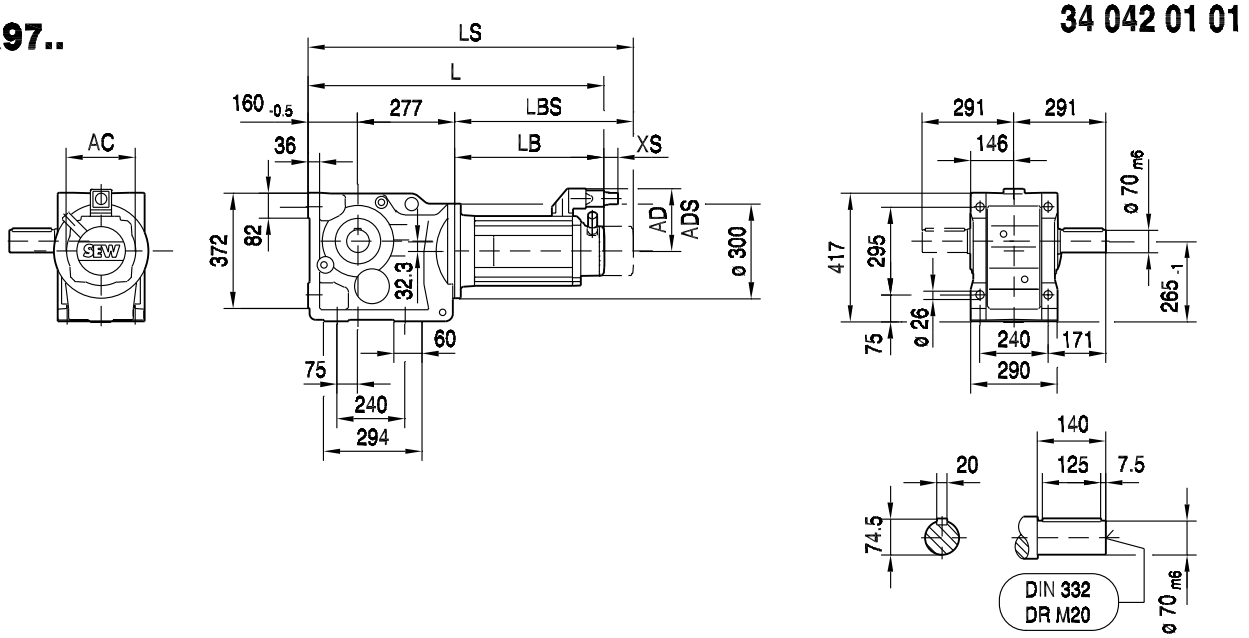

KA97B..

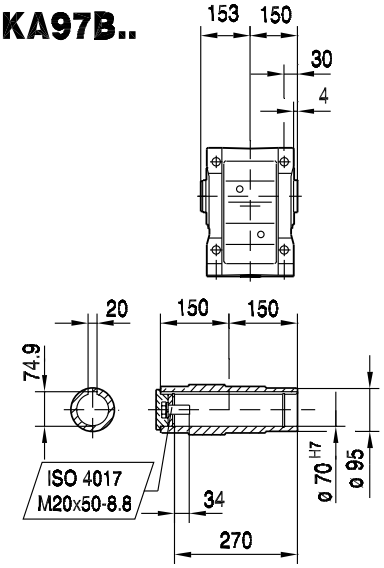

KH97B..

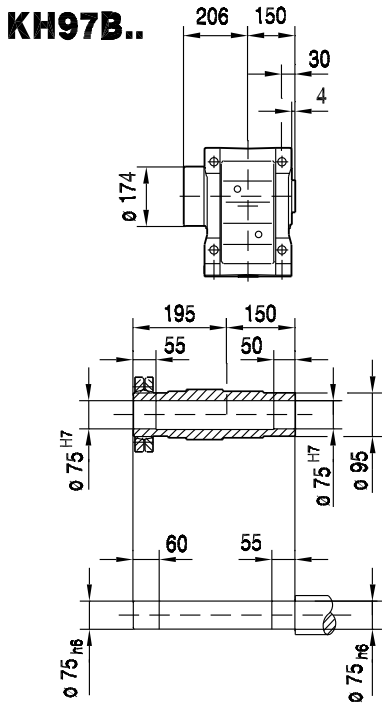

KV97B..

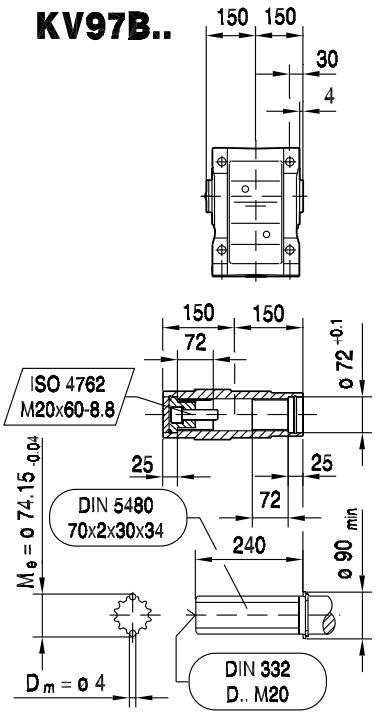

(→ 150)	CM90S	CM90M	CM90L	CM112S	CM112M	CM112L	CM112H				
AC	142	142	142	186	186	186	186				
AD	140	140	140	162	162	162	162				
ADS	140	140	140	162	162	162	162				
L	703	730	784	739	766	828	958				
LS	799	826	880	829	856	918	1023				
LB	266	293	347	302	329	391	521				
LBS	362	389	443	392	419	481	586				
XS	50	50	50	36	36	36	36				

KF97..

34 043 01 01

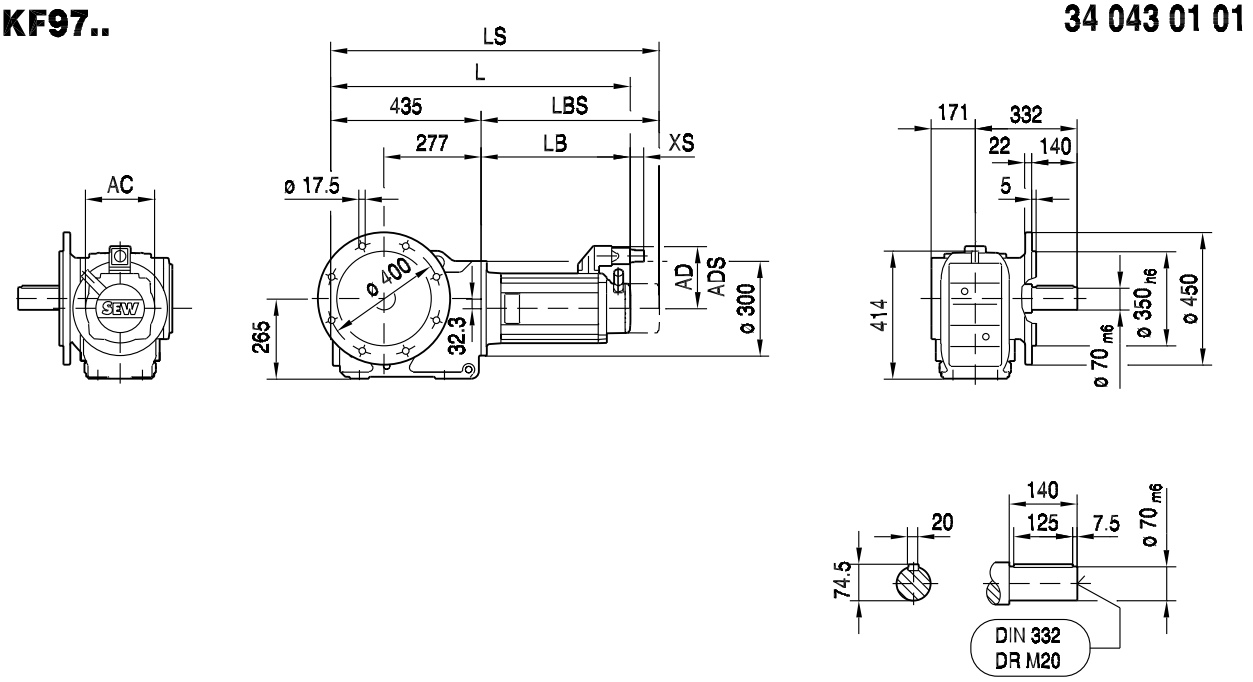

KAF97..

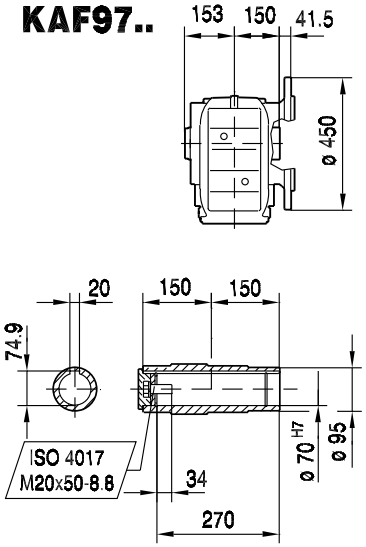

KHF97..

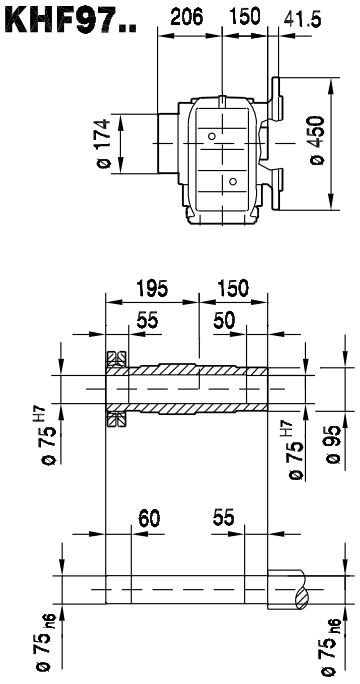

KVF97..

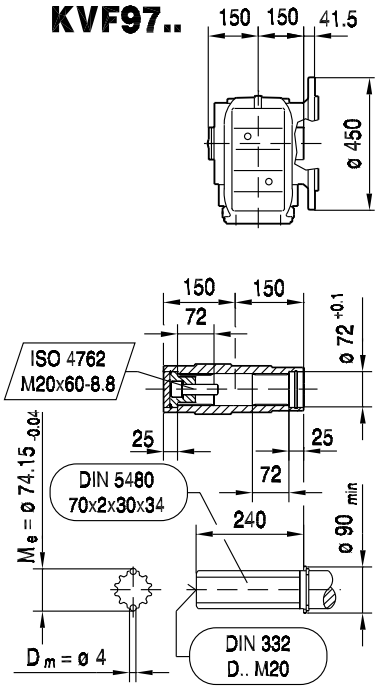

(→ 150)	CM90S	CM90M	CM90L	CM112S	CM112M	CM112L	CM112H				
AC	142	142	142	186	186	186	186				
AD	140	140	140	162	162	162	162				
ADS	140	140	140	162	162	162	162				
L	701	728	782	737	764	826	956				
LS	797	824	878	827	854	916	1021				
LB	266	293	347	302	329	391	521				
LBS	362	389	443	392	419	481	586				
XS	50	50	50	36	36	36	36				

KA97..

39 026 01 01

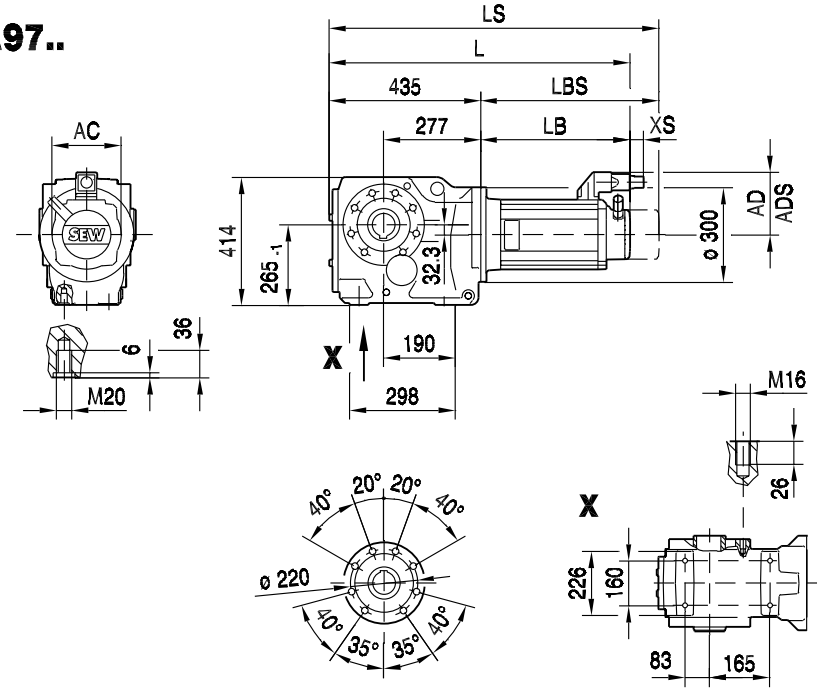

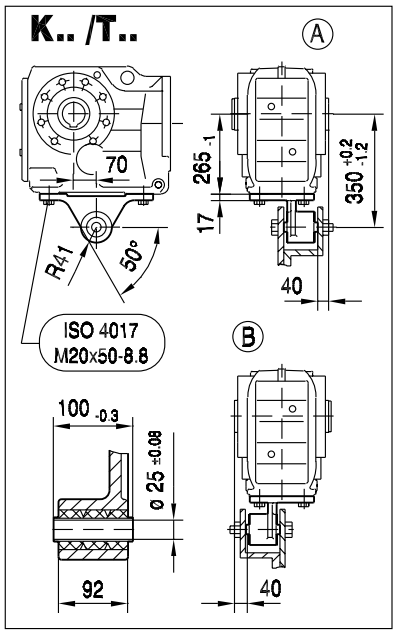

10

KA97..

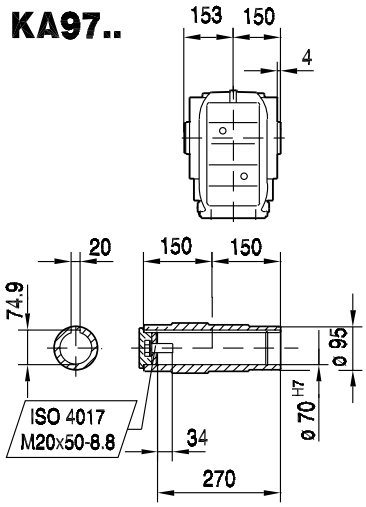

KH97..

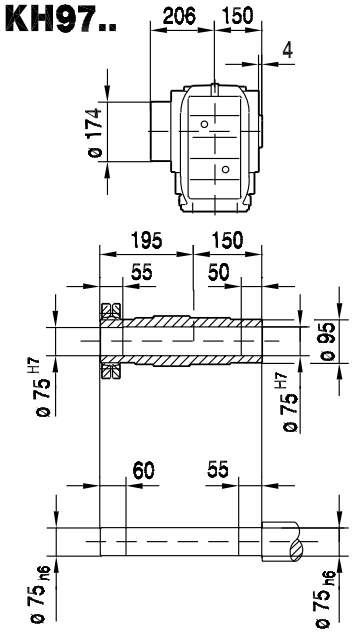

KV97..

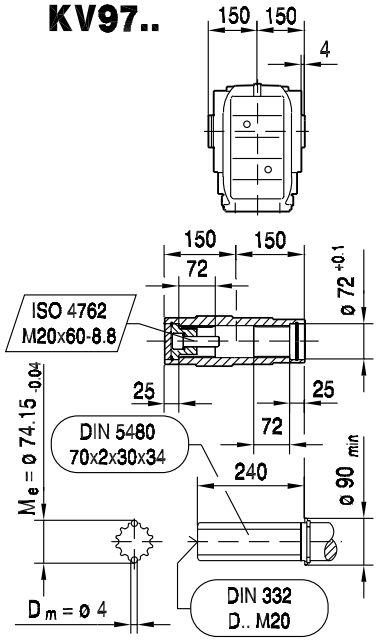

(→ 150)	CM90S	CM90M	CM90L	CM112S	CM112M	CM112L	CM112H				
AC	142	142	142	186	186	186	186				
AD	140	140	140	162	162	162	162				
ADS	140	140	140	162	162	162	162				
L	701	728	782	737	764	826	956				
LS	797	824	878	827	854	916	1021				
LB	266	293	347	302	329	391	521				
LBS	362	389	443	392	419	481	586				
XS	50	50	50	36	36	36	36				

KAZ97..

39 039 00 04

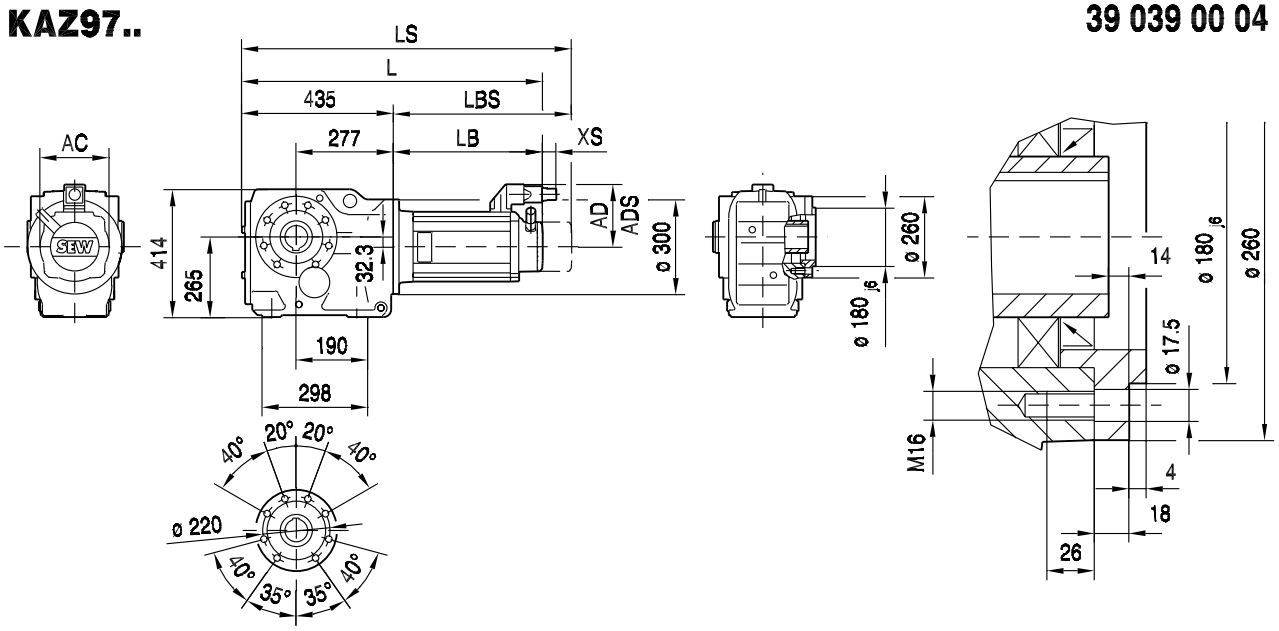

KAZ97..

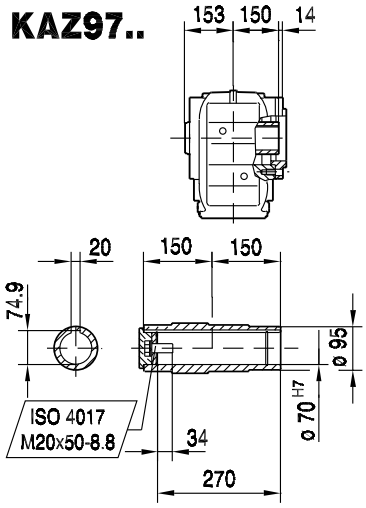

KHZ97..

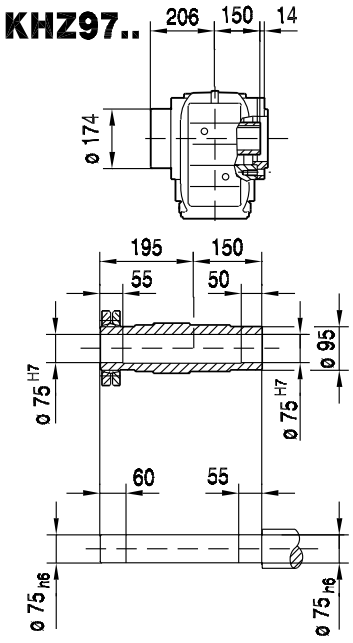

KVZ97..

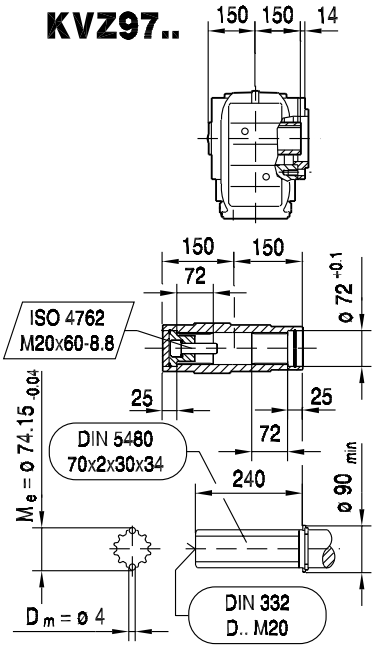

(→ 150)	CM90S	CM90M	CM90L	CM112S	CM112M	CM112L	CM112H				
AC	142	142	142	186	186	186	186				
AD	140	140	140	162	162	162	162				
ADS	140	140	140	162	162	162	162				
L	701	728	782	737	764	826	956				
LS	797	824	878	827	854	916	1021				
LB	266	293	347	302	329	391	521				
LBS	362	389	443	392	419	481	586				
XS	50	50	50	36	36	36	36				

KT97..

39 047 00 04

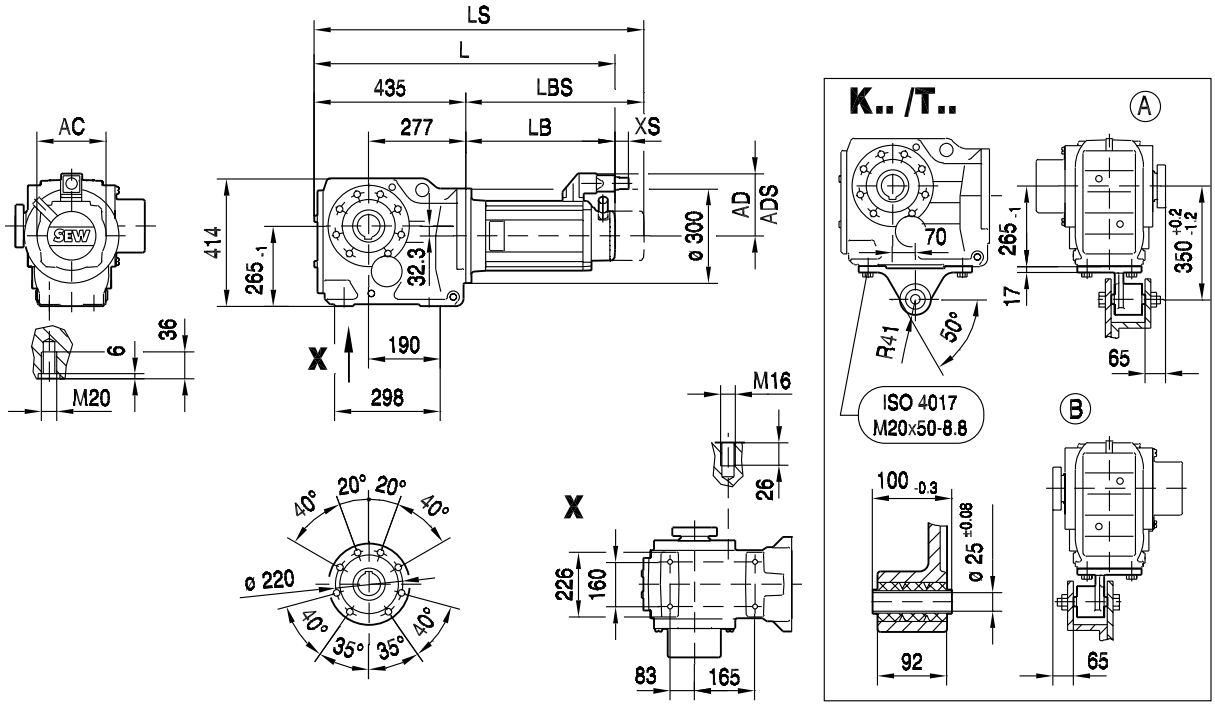

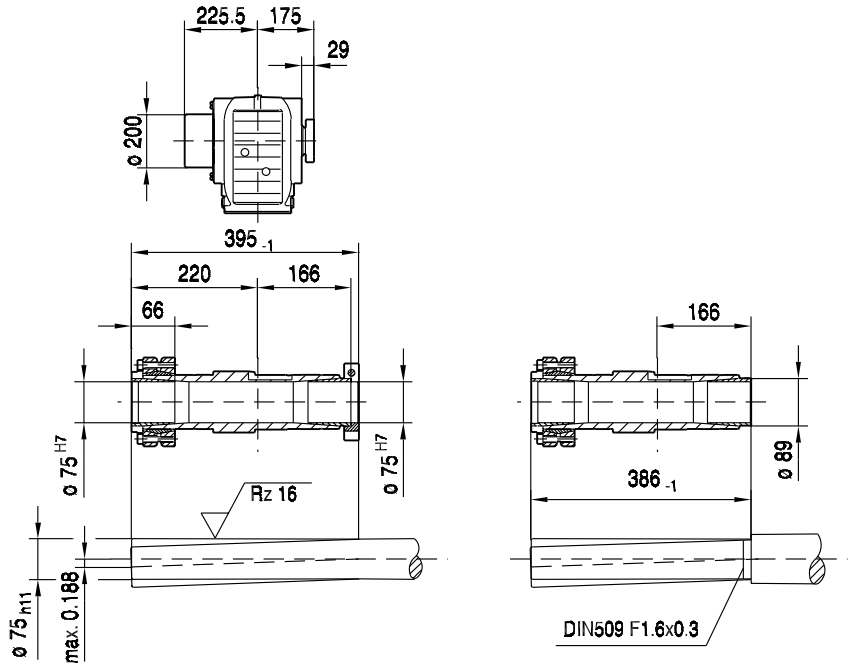

(→ 📖 150)	CM90S	CM90M	CM90L	CM112S	CM112M	CM112L	CM112H				
AC	142	142	142	186	186	186	186				
AD	140	140	140	162	162	162	162				
ADS	140	140	140	162	162	162	162				
L	701	728	782	737	764	826	956				
LS	797	824	878	827	854	916	1021				
LB	266	293	347	302	329	391	521				
LBS	362	389	443	392	419	481	586				
XS	50	50	50	36	36	36	36				

10.16 K 107 / CM [Nm]

M_{aDyn} [Nm]		CM			
	i	112S	112M	112L	112H
K107 3	7.35		766	1111	1679
	8.69	679	896	1300	1965
	9.94	777	1025	1487	2247
	11.73	917	1209	1755	2652
	13.43	1050	1384	2009	3037
	14.64	1145	1509	2191	3310
	16.75	1310	1727	2506	3787
	19.74	1543	2035	2954	4463
	22.62	1769	2332	3385	5114
	26.32	2058	2713	3938	5951
	29	2267	2989	4339	6557
	31.28		3224	4680	7072
	32.69	2556	3370	4891	7391
	37	2893	3814	5536	8366
	42.33	3310	4363	6334	>9090
	49.9	3901	5143	7466	>9090
	57.17	4470	5893	8554	>9090
	66.52	5201	6857	>9090	>9090
	73.3	5731	7555	>9090	>9090
	82.61	6459	8515	>9090	>9090
	90.96	7112	>9090	>9090	>9090
	100.75	7877	>9090	>9090	
	112.41	8789	>9090	>9090	
	121.46	>9090			
	143.47	>9090			

m [kg]		CM			
	s	112S	112M	112L	112H
K107	3	290	295	310	315
KF: + 12.1 kg / KA: + -27.2 kg / KAF: + -3.2 kg					

CM..				c_T				φ
	i	n_{epk} [1/min]	η [%]	K [Nm/']	KF [Nm/']	KA [Nm/']	KAF [Nm/']	/R [']
K107 3	7.35	3197	96	518.94	488.07	862.15	862.15	9
	8.69	3597	95	518.94	488.07	862.15	862.15	9
	9.94	4500	95	518.94	488.07	862.15	862.15	9
	11.73	4500	95	518.94	488.07	862.15	862.15	9
	13.43	4500	95	518.94	488.07	862.15	862.15	9
	14.64	4500	95	660.92	611.66	1340.65	1340.65	7
	16.75	4500	95	660.92	611.66	1340.65	1340.65	7
	19.74	4500	95	660.92	611.66	1340.65	1340.65	6
	22.62	4500	95	660.92	611.66	1340.65	1340.65	6
	26.32	4500	95	660.92	611.66	1340.65	1340.65	6
	29	4500	95	660.92	611.66	1340.65	1340.65	6
	31.28	3197	95	730.16	670.5	1659.95	1659.95	6
	32.69	4500	95	660.92	611.66	1340.65	1340.65	6
	37	3597	95	730.16	670.5	1659.95	1659.95	6
	42.33	3924	95	730.16	670.5	1659.95	1659.95	6
	49.9	4378	95	730.16	670.5	1659.95	1659.95	6
	57.17	4500	95	730.16	670.5	1659.95	1659.95	6
	66.52	4500	95	730.16	670.5	1659.95	1659.95	6
	73.3	4500	95	730.16	670.5	1659.95	1659.95	6
	82.61	4500	95	730.16	670.5	1659.95	1659.95	6
	90.96	4500	95	730.16	670.5	1659.95	1659.95	6
	100.75	4500	95	730.16	670.5	1659.95	1659.95	6
	112.41	4500	95	730.16	670.5	1659.95	1659.95	6
	121.46	4500	95	730.16	670.5	1659.95	1659.95	6
	143.47	4500	95	730.16	670.5	1659.95	1659.95	6

CM..							F_{Ramax}				F_{Rapk}			
	i	M_{amax} [Nm]	M_{apk} [Nm]	$M_{aNotaus}$ [Nm]	n_{ak} [1/min]	J_G 10^{-4} [kgm^2]	K [N]	KF [N]	KA [N]	KAF [N]	K [N]	KF [N]	KA [N]	KAF [N]
	7.35	3600	4720	6120	286	231	24400	28500	9900	47100	65000	65000	65000	65000
	8.69	4070	4780	6919	207	170	24600	29100	9270	48300	65000	65000	65000	65000
	9.94	4190	4840	7123	201	136	25800	30500	10000	50500	65000	65000	65000	65000
	11.73	4300	4910	7310	196	104	27500	32300	11100	53500	65000	65000	65000	65000
	13.43	4300	4940	7310	201	82	29200	34200	12600	56500	65000	65000	65000	65000
	14.64	6890	8060	11713	123	163	19500	23000	6180	51700	65000	65000	65000	65000
	16.75	7050	8160	11985	119	131	21000	24800	7080	54200	65000	65000	65000	65000
	19.74	7200	8270	12240	117	100	23200	27300	8440	57700	65000	65000	65000	65000
	22.62	7200	8320	12240	124	80	25800	30300	10100	61200	65000	65000	65000	65000
	26.32	7200	8370	12240	129	63	28800	33600	12100	65000	65000	65000	65000	65000
	29	7200	8400	12240	134	54	30700	35800	13400	65000	65000	65000	65000	65000
K107	31.28	6800	9090	11560	48	112	34200	39700	16100	65000	65000	65000	65000	65000
3	32.69	7200	8430	12240	138	45	33200	38600	15100	65000	65000	65000	65000	65000
	37	7200	9090	12240	41	86	35800	41500	17000	65000	65000	65000	65000	65000
	42.33	7360	9090	12512	38	72	37900	44000	18400	65000	65000	65000	65000	65000
	49.9	7840	9090	13328	30	58	39300	45600	19200	65000	65000	65000	65000	65000
	57.17	8000	9090	13600	30	48	41700	48400	20900	65000	65000	65000	65000	65000
	66.52	8000	9090	13600	30	40	45400	52500	23600	65000	65000	65000	65000	65000
	73.3	8000	9090	13600	30	35	47900	55300	25400	65000	65000	65000	65000	65000
	82.61	8000	9090	13600	30	29	50900	58700	27700	65000	65000	65000	65000	65000
	90.96	8000	9090	13600	31	25	53500	61600	29600	65000	65000	65000	65000	65000
	100.75	8000	9090	13600	32	20	56200	64700	31700	65000	65000	65000	65000	65000
	112.41	8000	9090	13600	32	17	59300	65000	34000	65000	65000	65000	65000	65000
	121.46	8000	9090	13600	32	15	61500	65000	35700	65000	65000	65000	65000	65000
	143.47	8000	9090	13600	32	12	65000	65000	39600	65000	65000	65000	65000	65000

10.17 K 107 / CM [mm]

K107..

34 044 01 01

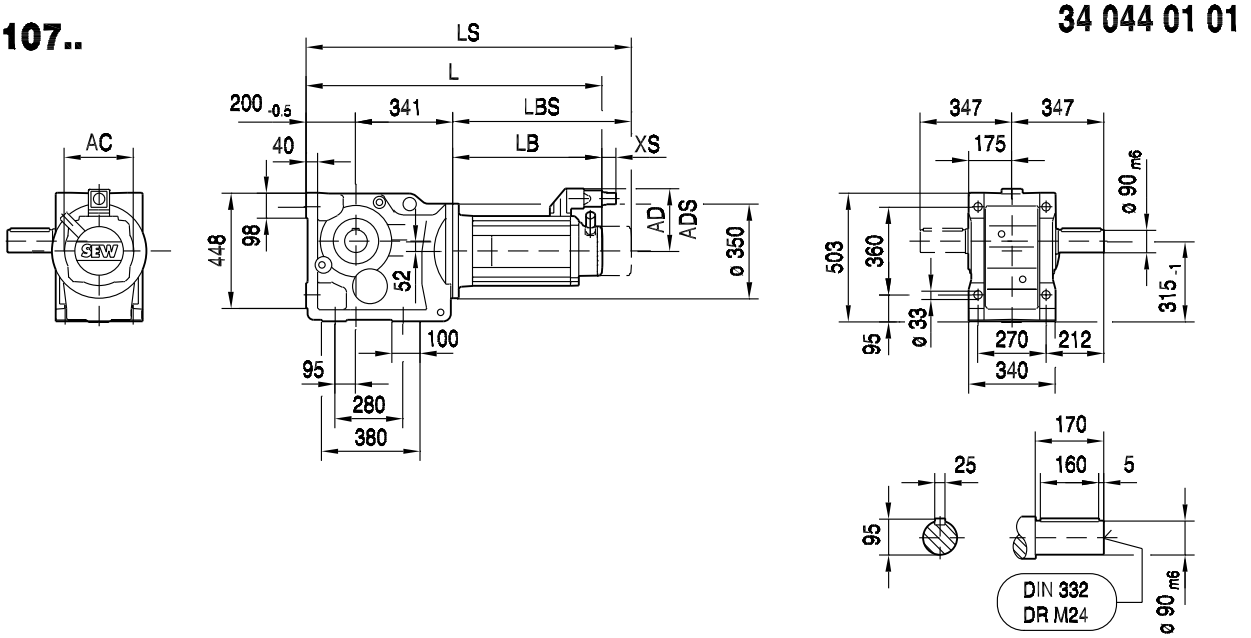

KA107B..

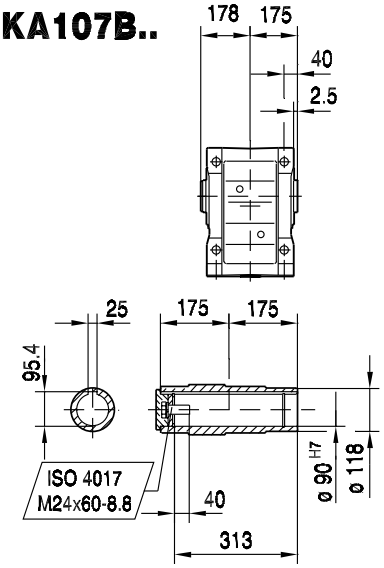

KH107B..

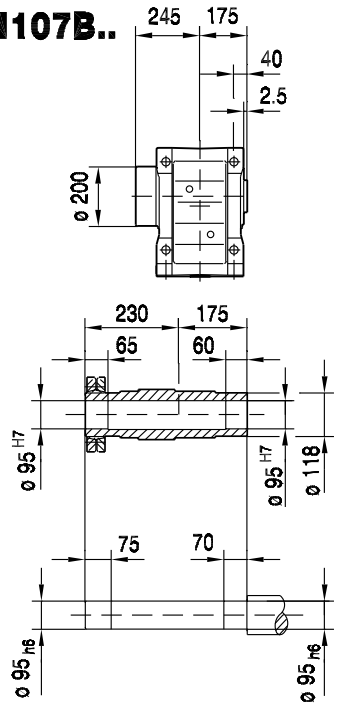

KV107B..

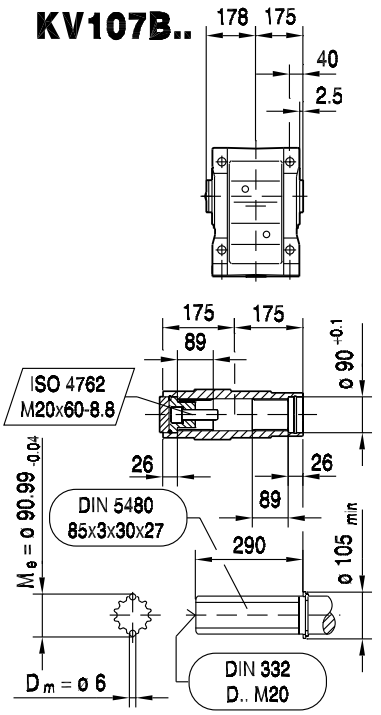

(→ 150)	CM112S	CM112M	CM112L	CM112H							
AC	186	186	186	186							
AD	162	162	162	162							
ADS	162	162	162	162							
L	837	864	926	1056							
LS	927	954	1016	1121							
LB	296	323	385	515							
LBS	386	413	475	580							
XS	36	36	36	36							

KF107..

34 045 01 01

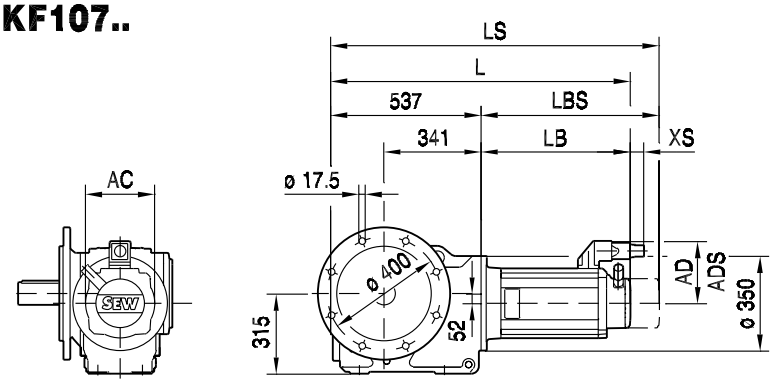

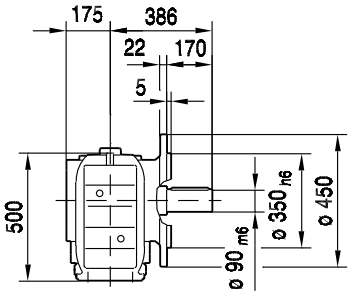

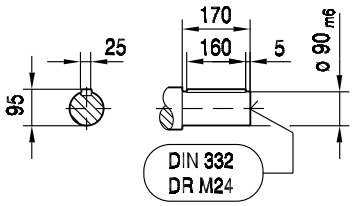

10

KAF107..

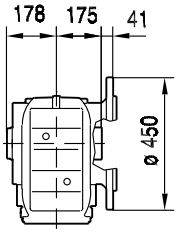

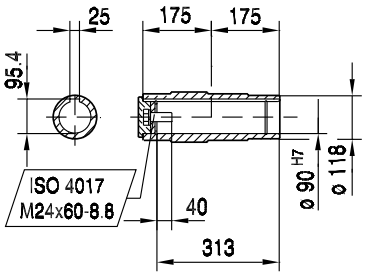

KHF107..

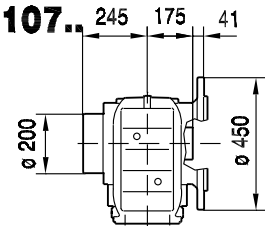

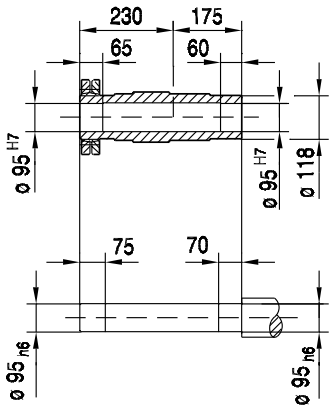

KVF107..

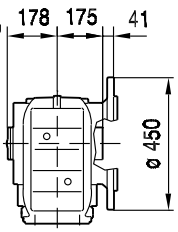

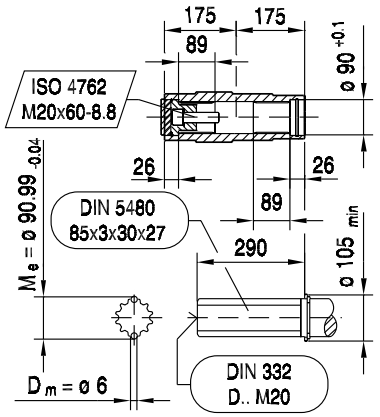

(→ 150)	CM112S	CM112M	CM112L	CM112H							
AC	186	186	186	186							
AD	162	162	162	162							
ADS	162	162	162	162							
L	833	860	922	1052							
LS	923	950	1012	1117							
LB	296	323	385	515							
LBS	386	413	475	580							
XS	36	36	36	36							

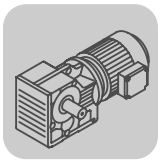

K..CMP, DS, CM
K 107 / CM [mm]

KA107..

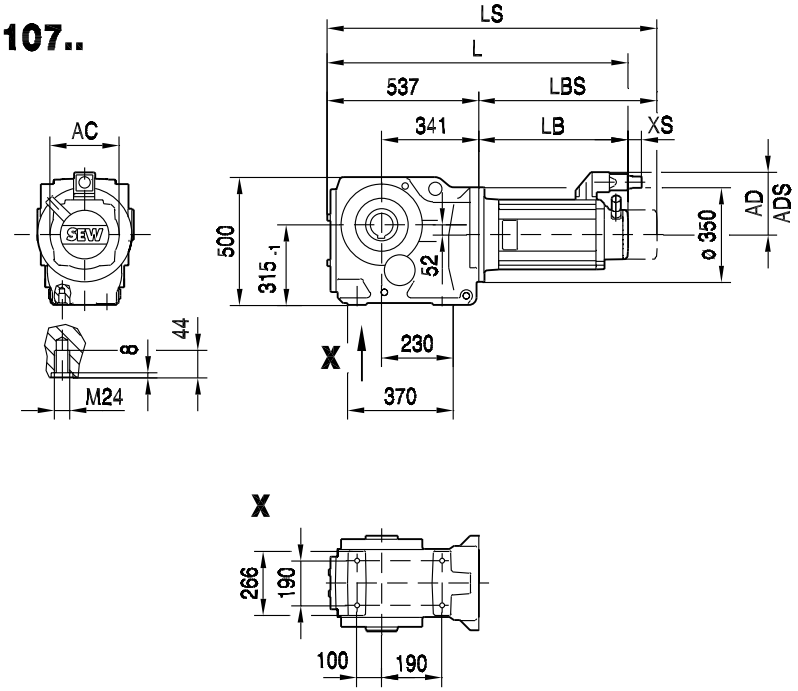

39 027 01 01

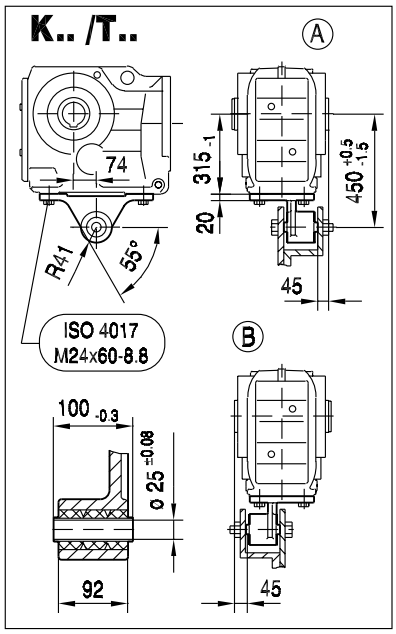

KA107..

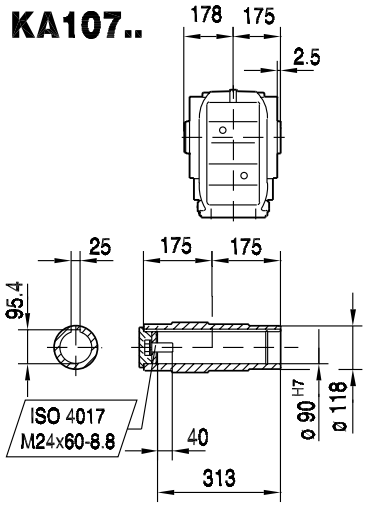

KH107..

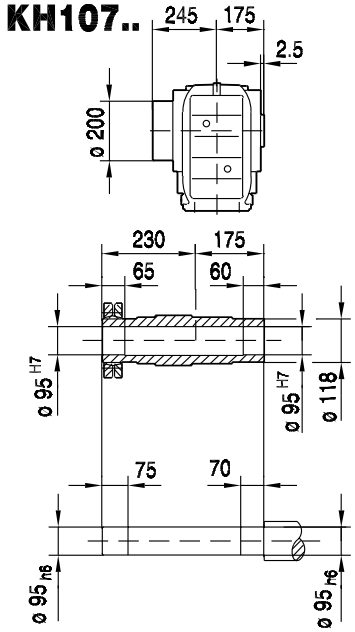

KV107..

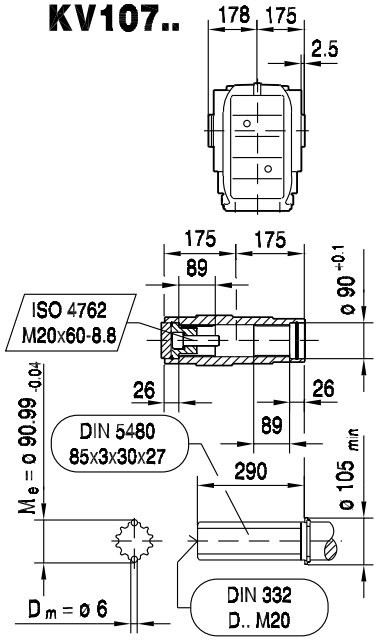

(→ 150)	CM112S	CM112M	CM112L	CM112H							
AC	186	186	186	186							
AD	162	162	162	162							
ADS	162	162	162	162							
L	833	860	922	1052							
LS	923	950	1012	1117							
LB	296	323	385	515							
LBS	386	413	475	580							
XS	36	36	36	36							

KAZ107..

39 040 00 04

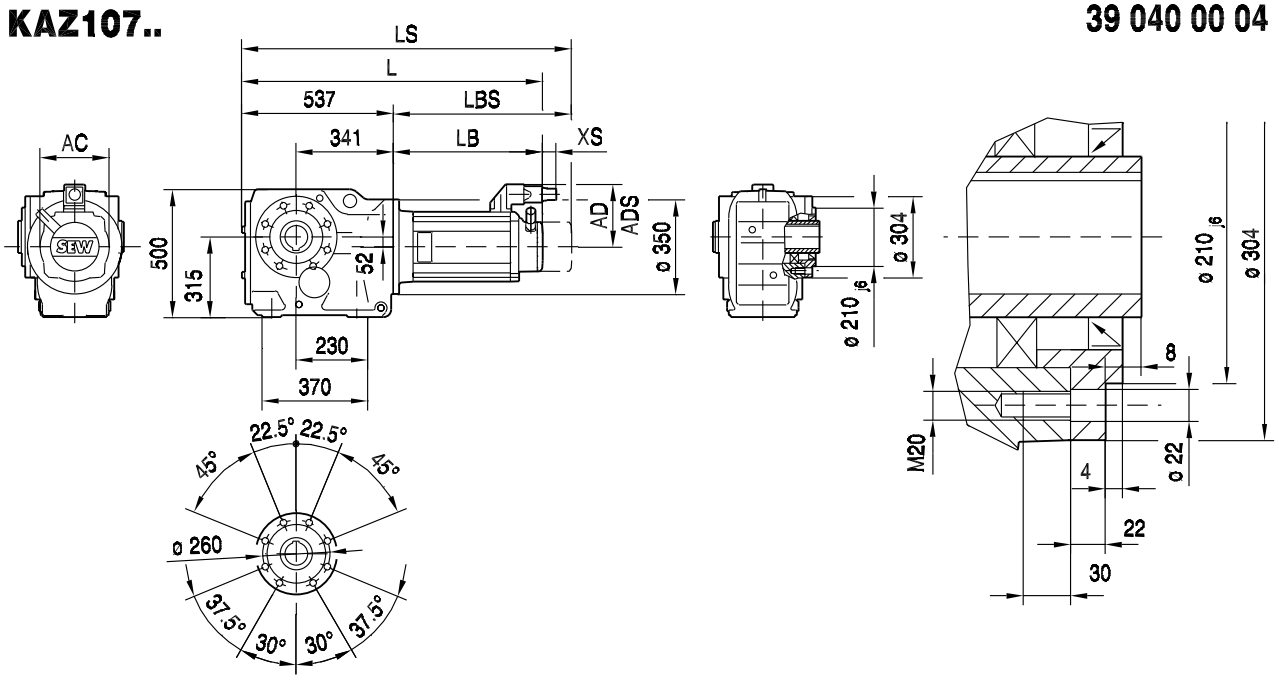

10

KAZ107..

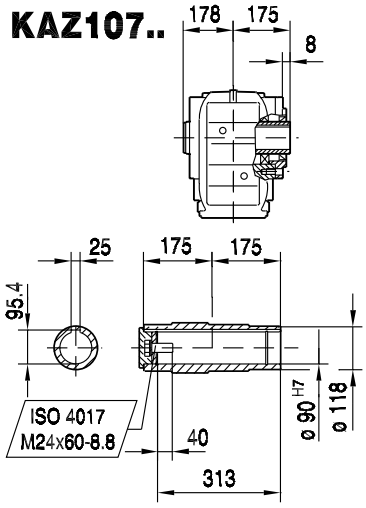

KHZ107..

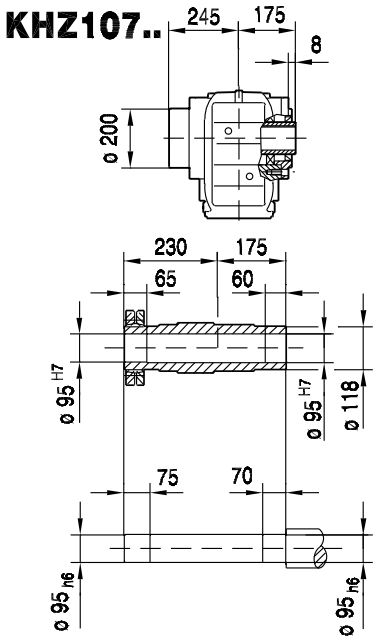

KVZ107..

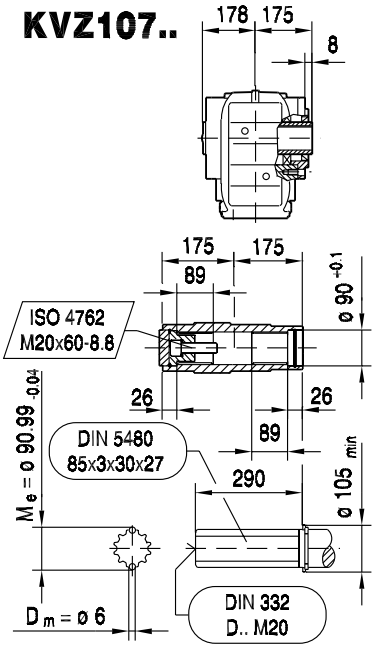

(→ 150)	CM112S	CM112M	CM112L	CM112H							
AC	186	186	186	186							
AD	162	162	162	162							
ADS	162	162	162	162							
L	833	860	922	1052							
LS	923	950	1012	1117							
LB	296	323	385	515							
LBS	386	413	475	580							
XS	36	36	36	36							

11 S..CMP, DS, CM

11.1 S, SF, SAF, SHF, SA../T, SH, SAZ, SHZ..CMP / DS / CM

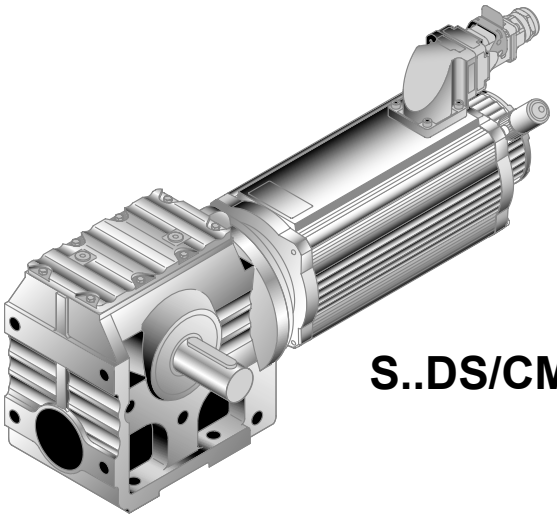

S..DS/CM..

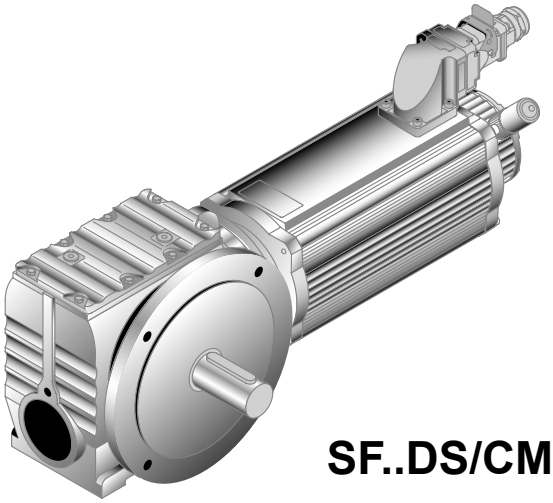

SF..DS/CM..

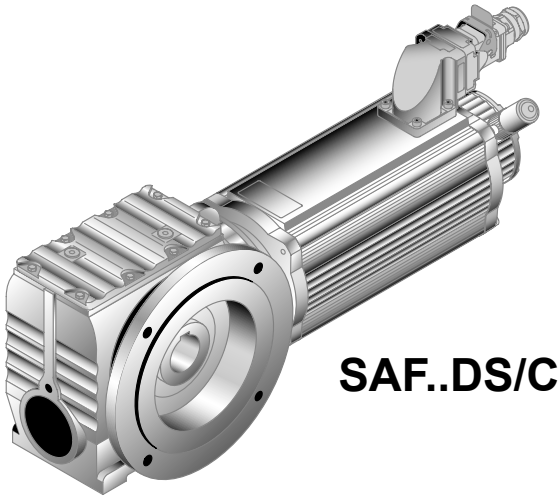

SAF..DS/CM..

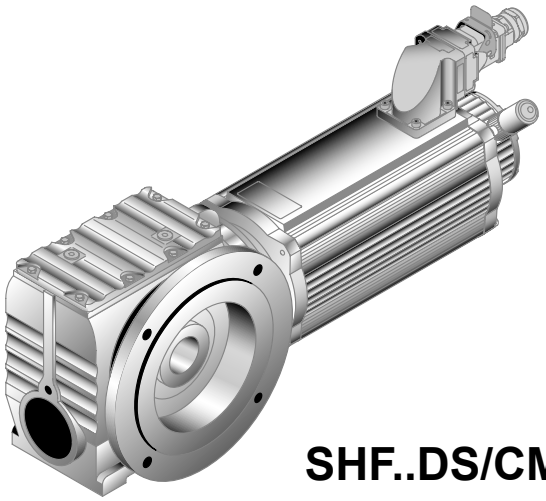

SHF..DS/CM..

52503AXX

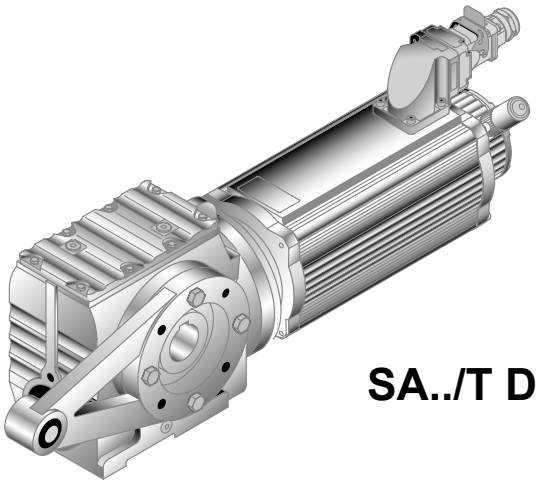

SA../T DS/CM..

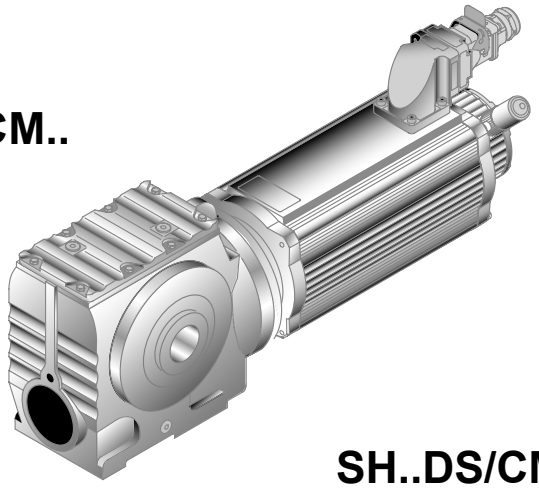

SH..DS/CM..

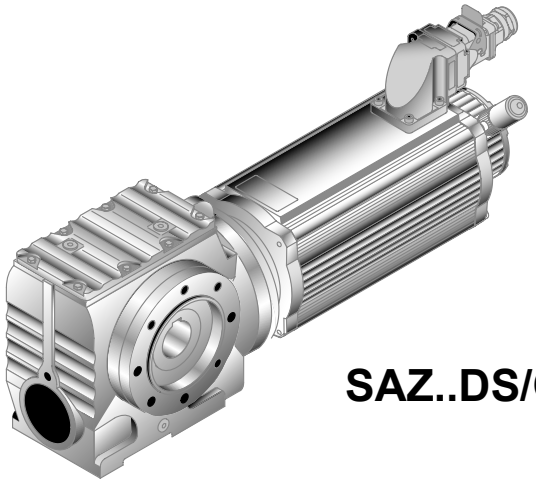

SAZ..DS/CM..

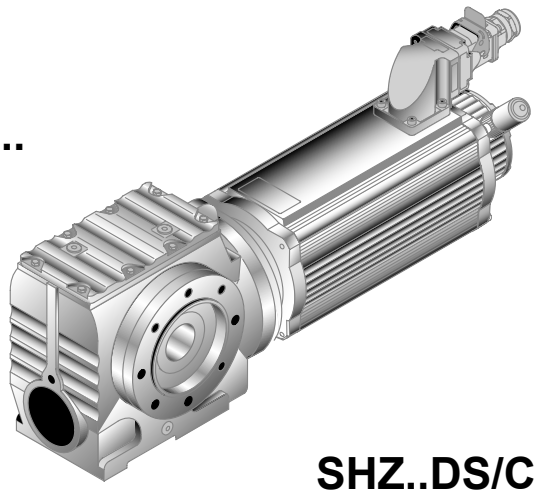

SHZ..DS/CM..

52504AXX

11.2 S 37 / CMP / DS / CM [Nm]

M_{aDyn} [Nm]		CMP						DS			CM	
	i	40M	50S	50M	50L	63S	63M	56M	56L	56H	71S	71M
S37 2	6.8	22	31	>60	>60	>60	>60	22	45	>60	>60	>60
	8	26	36	>61	>61	>61	>61	26	52	>61	>61	>61
	9.02	30	41	>62	>62	>62	>62	30	60	>62	>62	>62
	10.23	33	46	>63	>63	>63	>63	33	>63	>63	>63	>63
	10.91	36	49	>64	>64	>64	>64	36	>64	>64	>64	>64
	12.48	41	56	>64	>64	>64	>64	41	>64	>64	>64	>64
	13.39	43	59	>65	>65	>65	>65	43	>65	>65	>65	>65
	15.53	50	>66	>66		>66		50	>66	>66		
	18.24	58	>67					58	>67			
	19.13	57	79	>93	>93	>93	>93	57	>93	>93	>93	>93
	19.89	63	>68					63	>68			
	22.5	67	91	>95	>95	>95	>95	67	>95	>95	>95	>95
	25.38	75	>96	>96	>96	>96	>96	75	>96	>96	>96	>96
	28.76	84	>97	>97	>97	>97	>97	84	>97	>97	>97	>97
	30.68	90	>98	>98	>98	>98	>98	90	>98	>98	>98	>98
	35.1	>99	>99	>99	>99	>99	>99	>99	>99	>99	>99	>99
	37.66	>100	>100	>100	>100	>100	>100	>100	>100	>100	>100	>100
	43.68	>101	>101	>101		>101		>101	>101	>101		
	51.3	>103	>103					>103	>103			
	55.93	>104	>104					>104	>104			

m [kg]		CMP						DS			CM	
	s	40M	50S	50M	50L	63S	63M	56M	56L	56H	71S	71M
S37	2	8.0	9.7	11	12	12	13	8.3	9.3	10	14	16
SF: + 1.3 kg / SA: + -0.3 kg / SAF: + 1.3 kg												

CMP.. / DS.. / CM..				c_T			
	i	n_{epk} [1/min]	η [%]	S [Nm/']	SF [Nm/']	SA [Nm/']	SAF [Nm/']
S37 2	6.8	4500	87	-	-	-	-
	8	4500	86	-	-	-	-
	9.02	4500	87	-	-	-	-
	10.23	4500	86	-	-	-	-
	10.91	4500	86	-	-	-	-
	12.48	4500	86	-	-	-	-
	13.39	4500	85	-	-	-	-
	15.53	4500	85	-	-	-	-
	18.24	4500	84	-	-	-	-
	19.13	4500	79	-	-	-	-
	19.89	4500	84	-	-	-	-
	22.5	4500	78	-	-	-	-
	25.38	4500	78	-	-	-	-
	28.76	4500	77	-	-	-	-
	30.68	4500	77	-	-	-	-
	35.1	4500	76	-	-	-	-
	37.66	4500	76	-	-	-	-
	43.68	4500	75	-	-	-	-
	51.3	4500	74	-	-	-	-
	55.93	4500	73	-	-	-	-

CMP.. / DS.. / CM..							F_{Ramax}				F_{Rapk}			
	i	M_{amax} [Nm]	M_{apk} [Nm]	$M_{aNotaus}$ [Nm]	n_{ak} [1/min]	J_G 10^{-4} [kgm^2]	S [N]	SF [N]	SA [N]	SAF [N]	S [N]	SF [N]	SA [N]	SAF [N]
S37 2	6.8	43	60	73	29	0.47	1630	1840	2360	2360	3000	3000	4000	4000
	8	45	61	77	25	0.36	1730	1950	2500	2500	3000	3000	4000	4000
	9.02	46	62	78	22	0.30	1810	2040	2610	2610	3000	3000	4000	4000
	10.23	47	63	80	20	0.24	1900	2140	2740	2740	3000	3000	4000	4000
	10.91	48	64	82	18	0.22	1940	2190	2800	2800	3000	3000	4000	4000
	12.48	48	64	82	16	0.18	2060	2320	2970	2970	3000	3000	4000	4000
	13.39	49	65	83	15	0.16	2110	2370	3040	3040	3000	3000	4000	4000
	15.53	50	66	85	13	0.13	2240	2510	3220	3220	3000	3000	4000	4000
	18.24	52	67	88	11	0.10	2380	2660	3410	3410	3000	3000	4000	4000
	19.13	71	93	121	10	0.43	2380	2670	3420	3420	3000	3000	4000	4000
	19.89	52	68	88	10	0.090	2470	2760	3540	3540	3000	3000	4000	4000
	22.5	73	95	124	9	0.32	2530	2840	3630	3630	3000	3000	4000	4000
	25.38	74	96	126	8	0.27	2660	2980	3810	3810	3000	3000	4000	4000
	28.76	75	97	128	7	0.22	2800	3000	4000	4000	3000	3000	4000	4000
	30.68	76	98	129	16	0.20	2860	3000	4000	4000	3000	3000	4000	4000
	35.1	78	99	133	14	0.16	3000	3000	4000	4000	3000	3000	4000	4000
	37.66	79	100	134	13	0.15	3000	3000	4000	4000	3000	3000	4000	4000
	43.68	81	101	138	16	0.12	3000	3000	4000	4000	3000	3000	4000	4000
	51.3	81	103	138	14	0.090	3000	3000	4000	4000	3000	3000	4000	4000
	55.93	81	104	138	13	0.080	3000	3000	4000	4000	3000	3000	4000	4000

11.3 S 37 / CMP / DS / CM [mm]

02 001 00 07

S37..

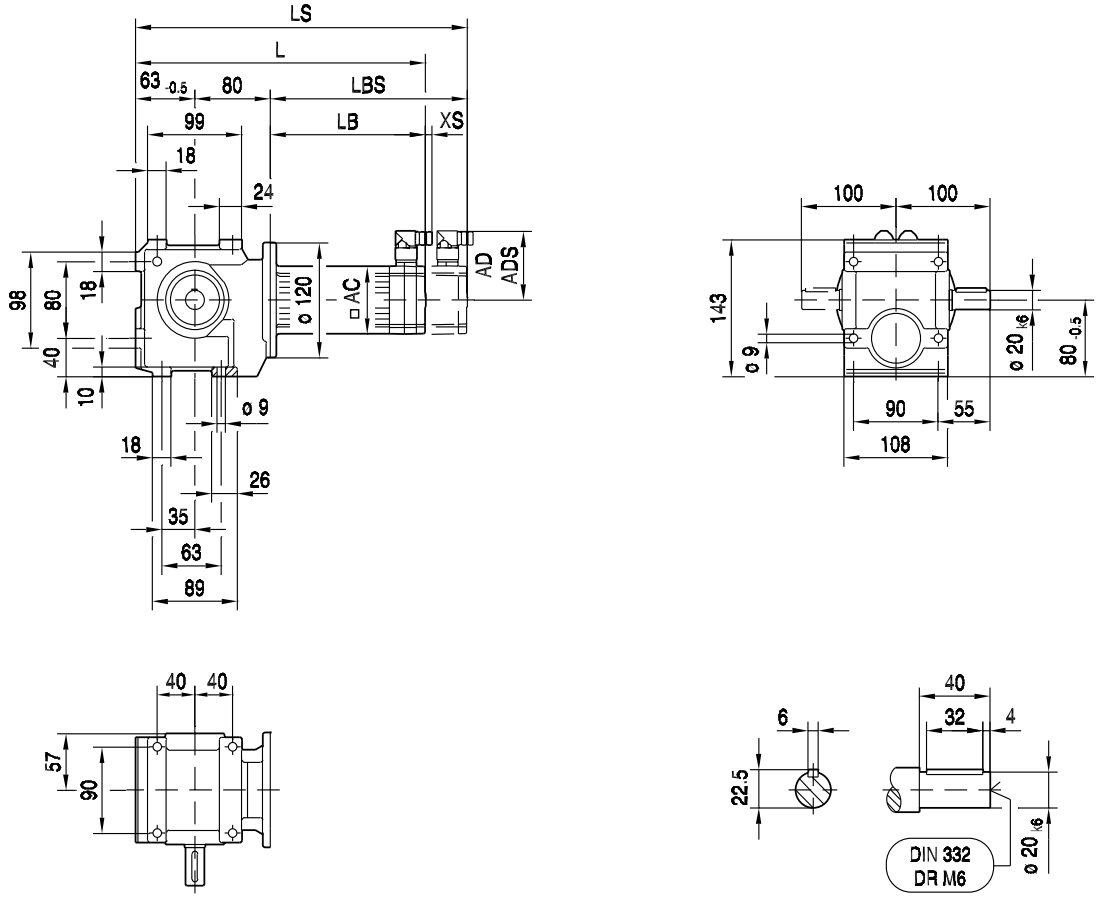

(→ 📖 150)	CMP40M	CMP50S	CMP50M	CMP50L	CMP63S	CMP63M		
AC	57	73	73	73	88	88		
AD	75	82	82	82	89	89		
ADS	75	82	82	82	89	89		
L	286	288	327	366	323	373		
LS	316	317	356	395	351	401		
LB	143	145	184	223	180	230		
LBS	173	174	213	252	208	258		
XS	19	18	18	18	14	14		

02 002 00 07

SF37..

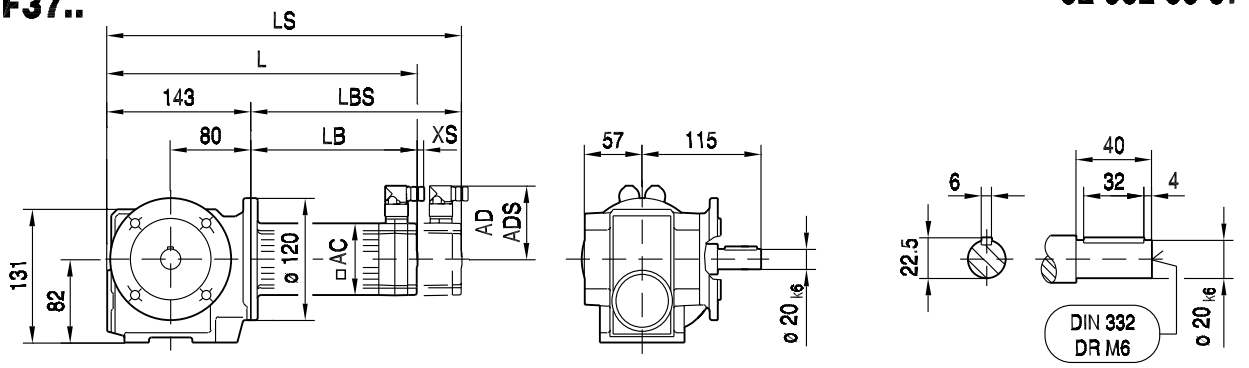

ø 120

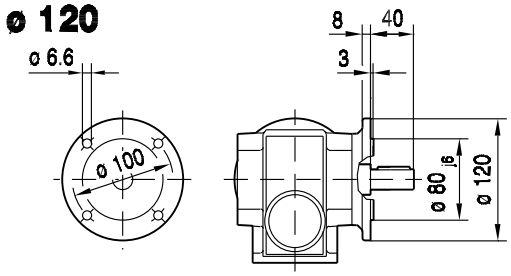

ø 160

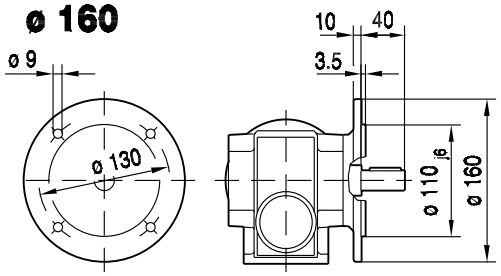

11

SAF37..

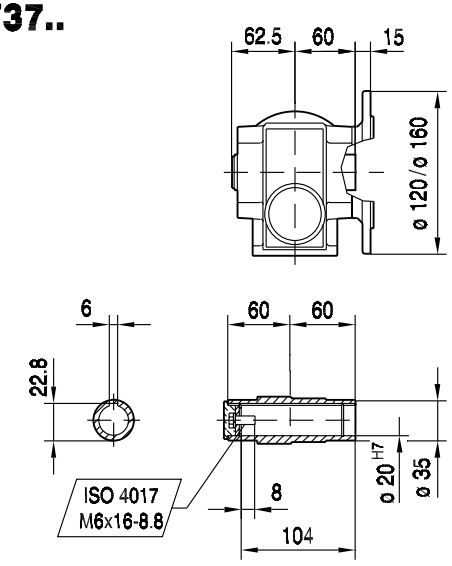

SHF37..

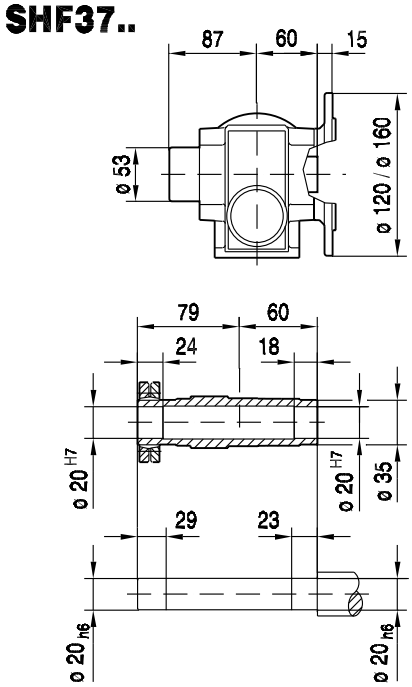

(→ 📖 150)	CMP40M	CMP50S	CMP50M	CMP50L	CMP63S	CMP63M		
AC	57	73	73	73	88	88		
AD	75	82	82	82	89	89		
ADS	75	82	82	82	89	89		
L	286	288	327	366	323	373		
LS	316	317	356	395	351	401		
LB	143	145	184	223	180	230		
LBS	173	174	213	252	208	258		
XS	19	18	18	18	14	14		

02 003 00 07

SA37..

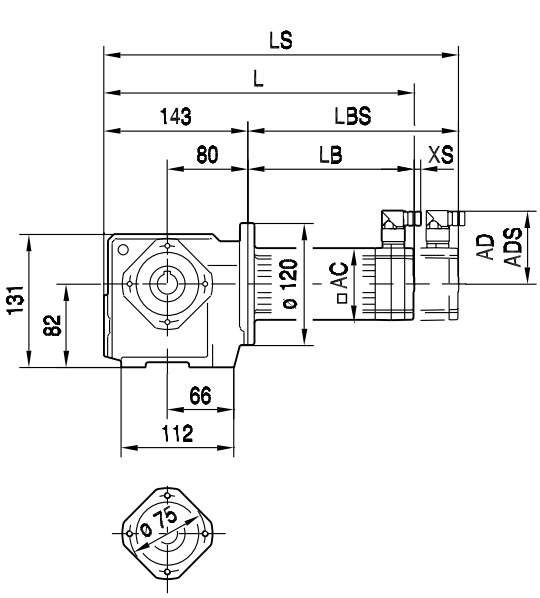

S.. /T..

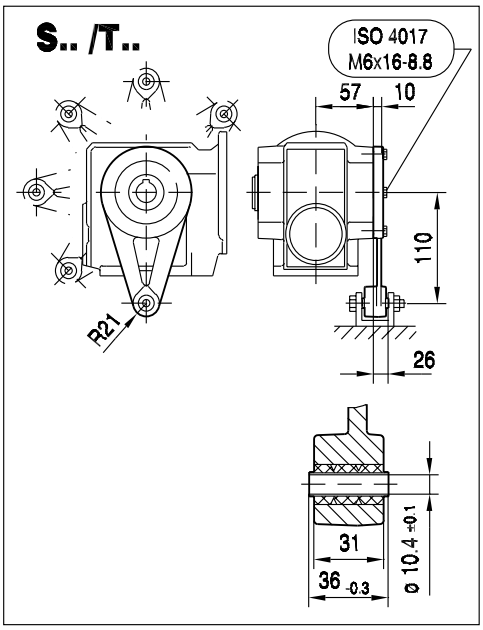

SA37..

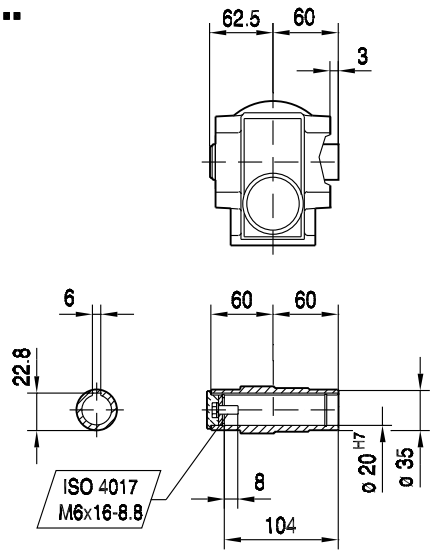

SH37..

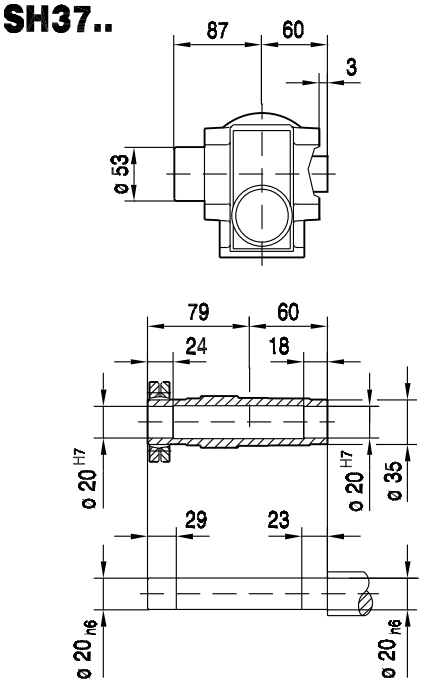

(→ 📖 150)	CMP40M	CMP50S	CMP50M	CMP50L	CMP63S	CMP63M		
AC	57	73	73	73	88	88		
AD	75	82	82	82	89	89		
ADS	75	82	82	82	89	89		
L	286	288	327	366	323	373		
LS	316	317	356	395	351	401		
LB	143	145	184	223	180	230		
LBS	173	174	213	252	208	258		
XS	19	18	18	18	14	14		

02 004 00 07

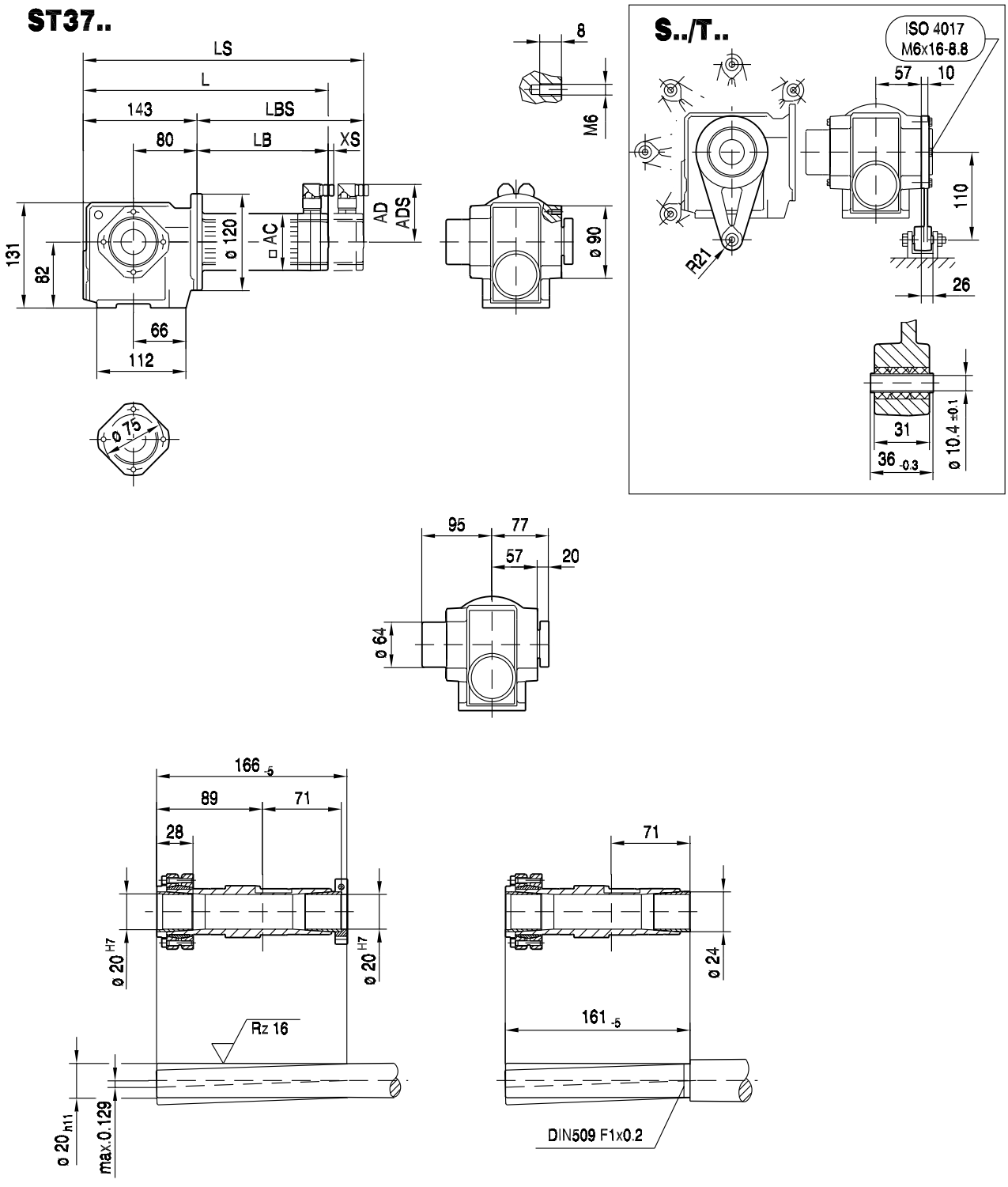

(→ 📖 150)	CMP40M	CMP50S	CMP50M	CMP50L	CMP63S	CMP63M		
AC	57	73	73	73	88	88		
AD	75	82	82	82	89	89		
ADS	75	82	82	82	89	89		
L	286	288	327	366	323	373		
LS	316	317	356	395	351	401		
LB	143	145	184	223	180	230		
LBS	173	174	213	252	208	258		
XS	19	18	18	18	14	14		

05 036 01 01

S37..

DS56..

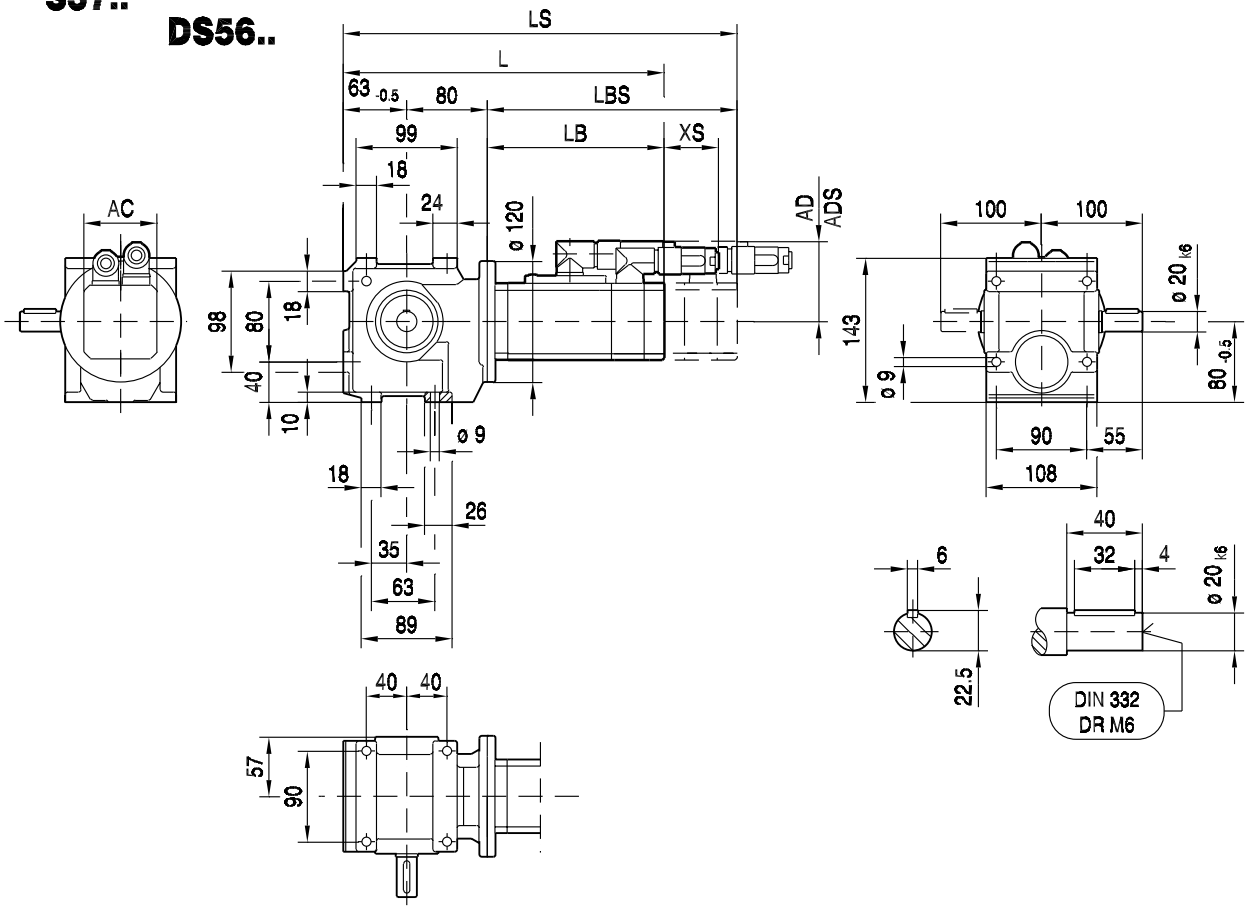

CM..

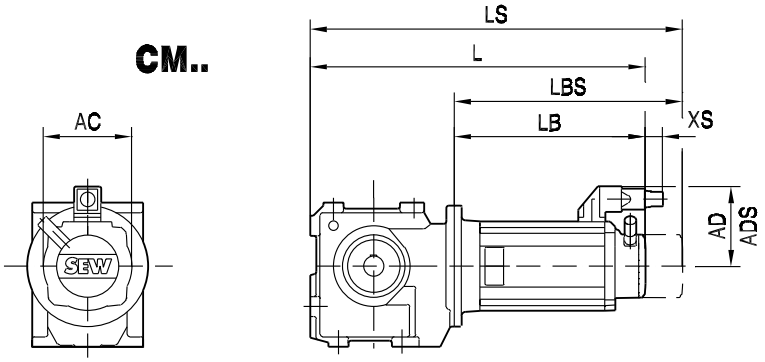

(→ 📖 150)	DS56M	DS56L	DS56H	CM71S	CM71M						
AC	73	73	73	117	117						
AD	71	71	77	122	122						
ADS	77	77	77	122	122						
L	280	312	415	381	401						
LS	310	342	415	463	483						
LB	137	169	272	238	258						
LBS	167	199	272	320	340						
XS	70	70	51	45	45						

SF37.. **DS56..**

05 037 01 01

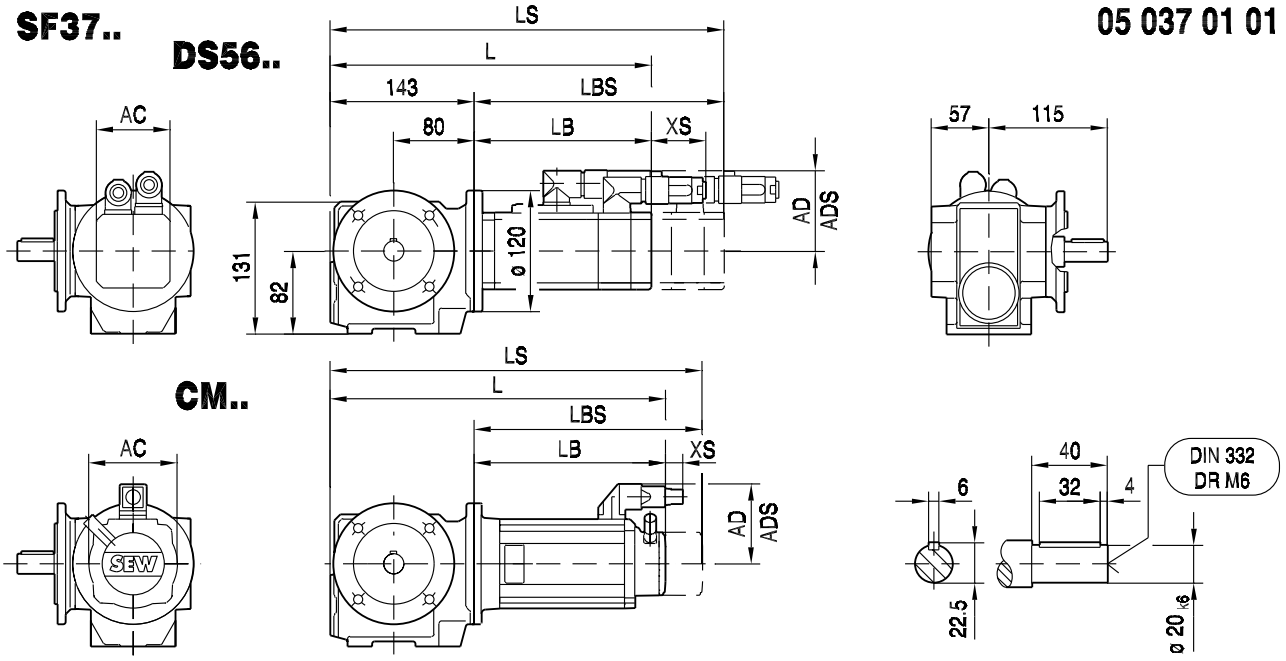

ø 120

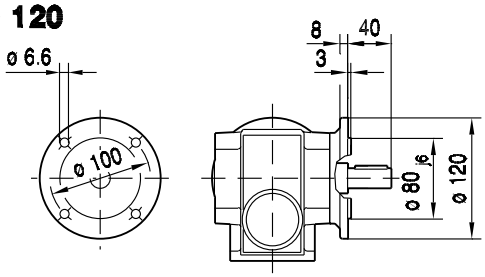

ø 160

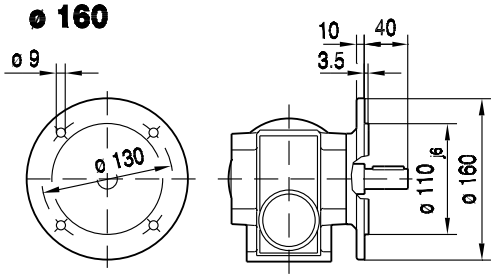

SAF37..

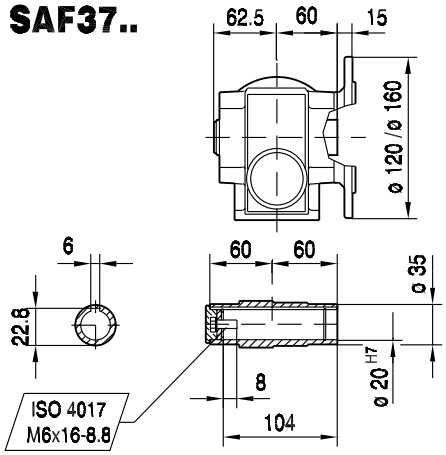

SHF37..

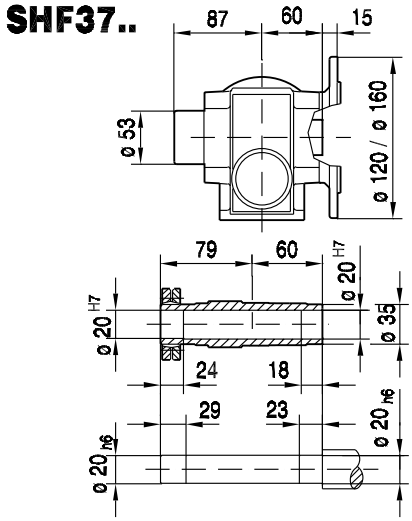

(→ 📖 150)	DS56M	DS56L	DS56H	CM71S	CM71M						
AC	73	73	73	117	117						
AD	71	71	77	122	122						
ADS	77	77	77	122	122						
L	280	312	415	381	401						
LS	310	342	415	463	483						
LB	137	169	272	238	258						
LBS	167	199	272	320	340						
XS	70	70	51	45	45						

28 010 01 01

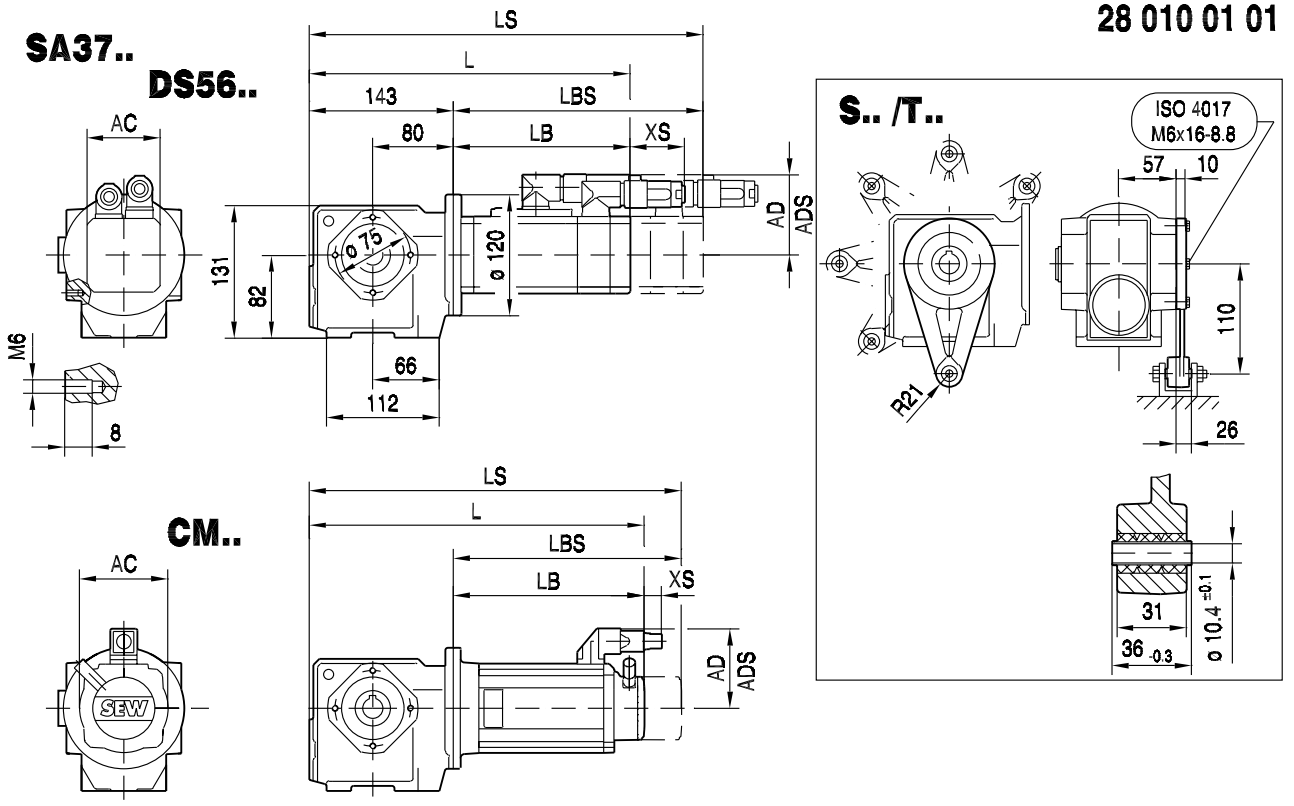

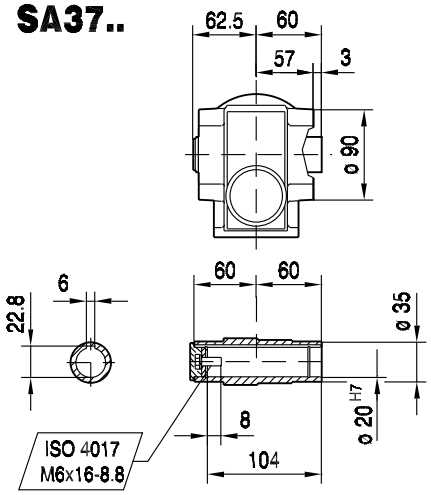

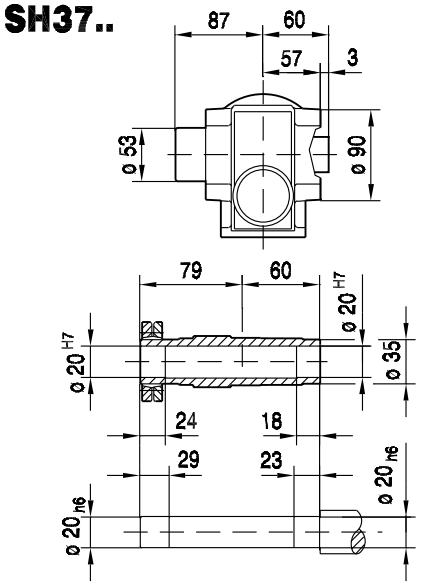

(→ 📖 150)	DS56M	DS56L	DS56H	CM71S	CM71M						
AC	73	73	73	117	117						
AD	71	71	77	122	122						
ADS	77	77	77	122	122						
L	280	312	415	381	401						
LS	310	342	415	463	483						
LB	137	169	272	238	258						
LBS	167	199	272	320	340						
XS	70	70	51	45	45						

28 019 00 04

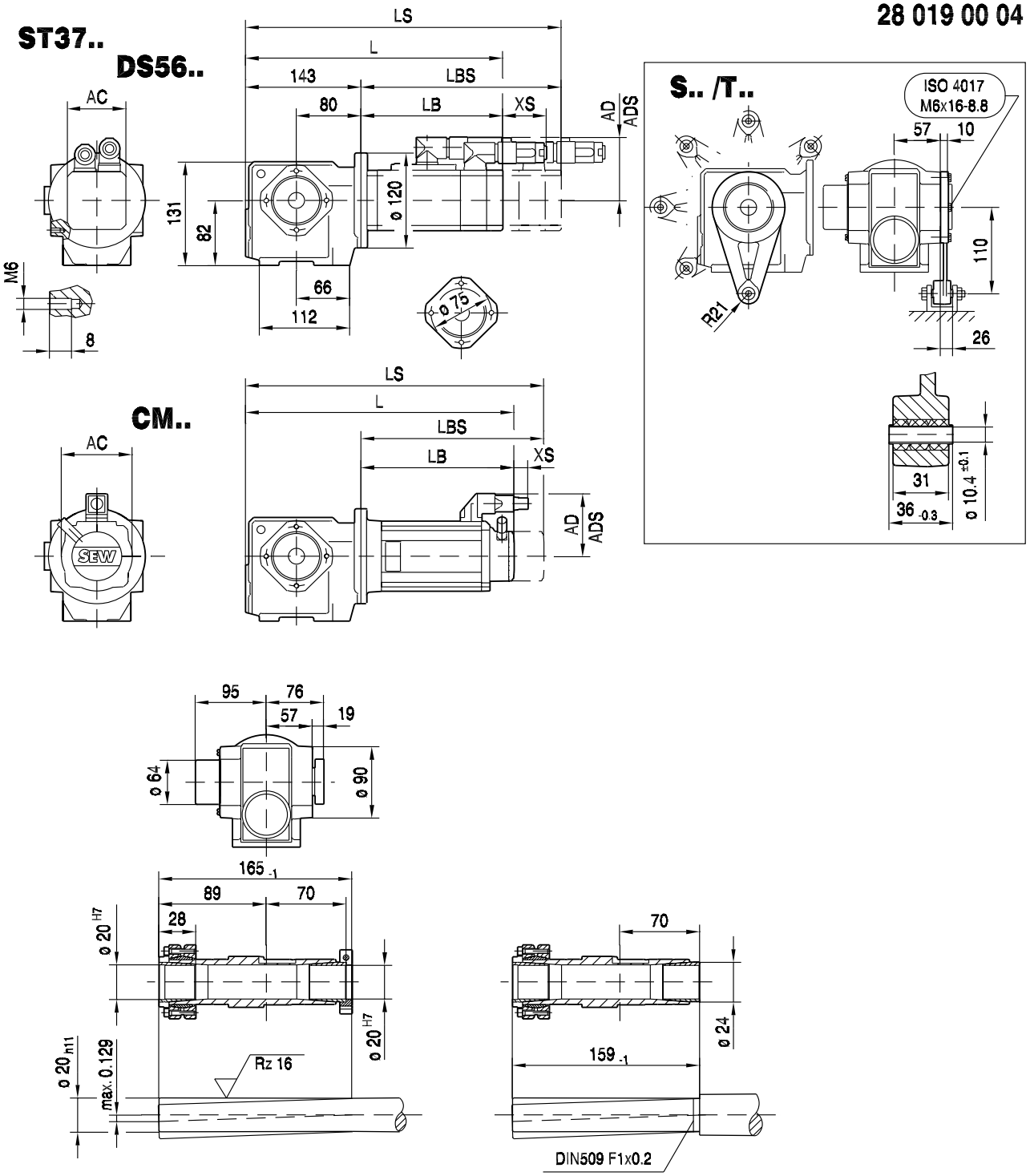

(→ 📖 150)	DS56M	DS56L	DS56H	CM71S	CM71M						
AC	73	73	73	117	117						
AD	71	71	77	122	122						
ADS	77	77	77	122	122						
L	280	312	415	381	401						
LS	310	342	415	463	483						
LB	137	169	272	238	258						
LBS	167	199	272	320	340						
XS	70	70	51	45	45						

11.4 S 47 / CMP / DS / CM [Nm]

M_{aDyn} [Nm]		CMP							DS			CM			
	i	40M	50S	50M	50L	63S	63M	63L	56M	56L	56H	71S	71M	71L	90S
S47 2	7.28	24	33	65	98	70	>129	>129	24	48	96	105	>129	>129	>129
	8.64	29	40	78	117	84	>146	>146	29	58	116	125	>146	>146	>146
	9.23	31	42	84	125	90	>146	>146	31	62	123	134	>146	>146	>146
	10.8	36	49	98	>145	105	>145	>145	36	72	144	>145	>145	>145	>145
	12.1	40	55	110	>145	118	>145	>145	40	81	>145	>145	>145	>145	>145
	14.24	47	64	128	>144	138	>144	>144	47	94	>144	>144	>144	>144	>144
	16.47	54	75	>144	>144	>144	>144		54	109	>144	>144	>144		
	17.62	58	79	>144	>144	>144	>144		58	115	>144	>144	>144		
	19.54			163	>184	176	>184	>184			>184	>184	>184	>184	>184
	20.33	66	91	>143		>143			66	133	>143				
	23.2	71	97	191	>200	>200	>200	>200	71	141	>200	>200	>200	>200	>200
	24.77	75	103	204	>205	>205	>205	>205	75	151	>205	>205	>205	>205	>205
	29	87	119	>215	>215	>215	>215	>215	87	174	>215	>215	>215	>215	>215
	32.48	98	133	>215	>215	>215	>215	>215	98	195	>215	>215	>215	>215	>215
	38.23	113	155	>215	>215	>215	>215	>215	113	>215	>215	>215	>215	>215	>215
	44.22	129	177	>210	>210	>210	>210		129	>210	>210	>210	>210		
	47.32	138	189	>210	>210	>210	>210		138	>210	>210	>210	>210		
	54.59	158	>210	>210		>210			158	>210	>210				
	63.8	182	>210						182	>210					
	69.39	198	>210						198	>210					

m [kg]		CMP							DS			CM			
	s	40M	50S	50M	50L	63S	63M	63L	56M	56L	56H	71S	71M	71L	90S
S47	2	11	13	14	15	15	16	18	11	12	13	17	19	22	26
SF: + 3.6 kg / SA: + 1.1 kg / SAF: + 2.8 kg															

CMP.. / DS.. / CM..				c_T			
	i	n_{epk} [1/min]	η [%]	S [Nm/']	SF [Nm/']	SA [Nm/']	SAF [Nm/']
S47 2	7.28	4500	87	-	-	-	-
	8.64	4500	88	-	-	-	-
	9.23	4500	88	-	-	-	-
	10.8	4500	88	-	-	-	-
	12.1	4500	88	-	-	-	-
	14.24	4500	87	-	-	-	-
	16.47	4500	87	-	-	-	-
	17.62	4500	86	-	-	-	-
	19.54	4500	81	-	-	-	-
	20.33	4500	86	-	-	-	-
	23.2	4500	80	-	-	-	-
	24.77	4500	80	-	-	-	-
	29	4500	79	-	-	-	-
	32.48	4500	79	-	-	-	-
	38.23	4500	78	-	-	-	-
	44.22	4500	77	-	-	-	-
	47.32	4500	77	-	-	-	-
	54.59	4500	76	-	-	-	-
	63.8	4500	75	-	-	-	-
	69.39	4500	75	-	-	-	-

CMP.. / DS.. / CM..							F_{Ramax}				F_{Rapk}			
	i	M_{amax} [Nm]	M_{apk} [Nm]	$M_{aNotaus}$ [Nm]	n_{ak} [1/min]	J_G 10^{-4} [kgm^2]	S [N]	SF [N]	SA [N]	SAF [N]	S [N]	SF [N]	SA [N]	SAF [N]
S47 2	7.28	103	129	175	27	1.1	2110	2690	2940	2940	5360	5870	7000	7000
	8.64	109	146	185	23	0.83	2230	2840	3110	3110	5260	5780	7000	7000
	9.23	109	146	185	22	0.74	2310	2930	3210	3210	5260	5780	7000	7000
	10.8	109	145	185	19	0.57	2500	3150	3480	3480	5270	5790	7000	7000
	12.1	109	145	185	17	0.47	2650	3310	3670	3670	5270	5790	7000	7000
	14.24	110	144	187	14	0.35	2850	3540	3950	3950	5270	5790	7000	7000
	16.47	110	144	187	12	0.28	3060	3770	4230	4230	5270	5790	7000	7000
	17.62	110	144	187	11	0.26	3160	3880	4360	4360	5270	5790	7000	7000
	19.54	144	184	245	10	0.94	3370	4120	4660	4660	5200	5710	7000	7000
	20.33	110	143	187	10	0.20	3370	4130	4650	4650	5280	5800	7000	7000
	23.2	152	200	258	9	0.72	3570	4360	4940	4940	5110	5620	7000	7000
	24.77	155	205	264	8	0.65	3650	4460	5050	5050	5080	5590	7000	7000
	29	155	215	264	7	0.49	3920	4760	5420	5420	5020	5530	7000	7000
	32.48	155	215	264	6	0.41	4120	4990	5690	5690	5020	5530	7000	7000
	38.23	155	215	264	5	0.31	4420	5330	6100	6100	5020	5530	7000	7000
	44.22	155	210	264	5	0.25	4710	5660	6490	6490	5050	5560	7000	7000
	47.32	155	210	264	4	0.23	4850	5810	6680	6680	5050	5560	7000	7000
	54.59	155	210	264	9	0.18	5150	5870	7000	7000	5050	5560	7000	7000
	63.8	155	210	264	8	0.15	5370	5870	7000	7000	5050	5560	7000	7000
	69.39	155	210	264	7	0.13	5370	5870	7000	7000	5050	5560	7000	7000

11.5 S 47 / CMP / DS / CM [mm]

02 005 00 07

S47..

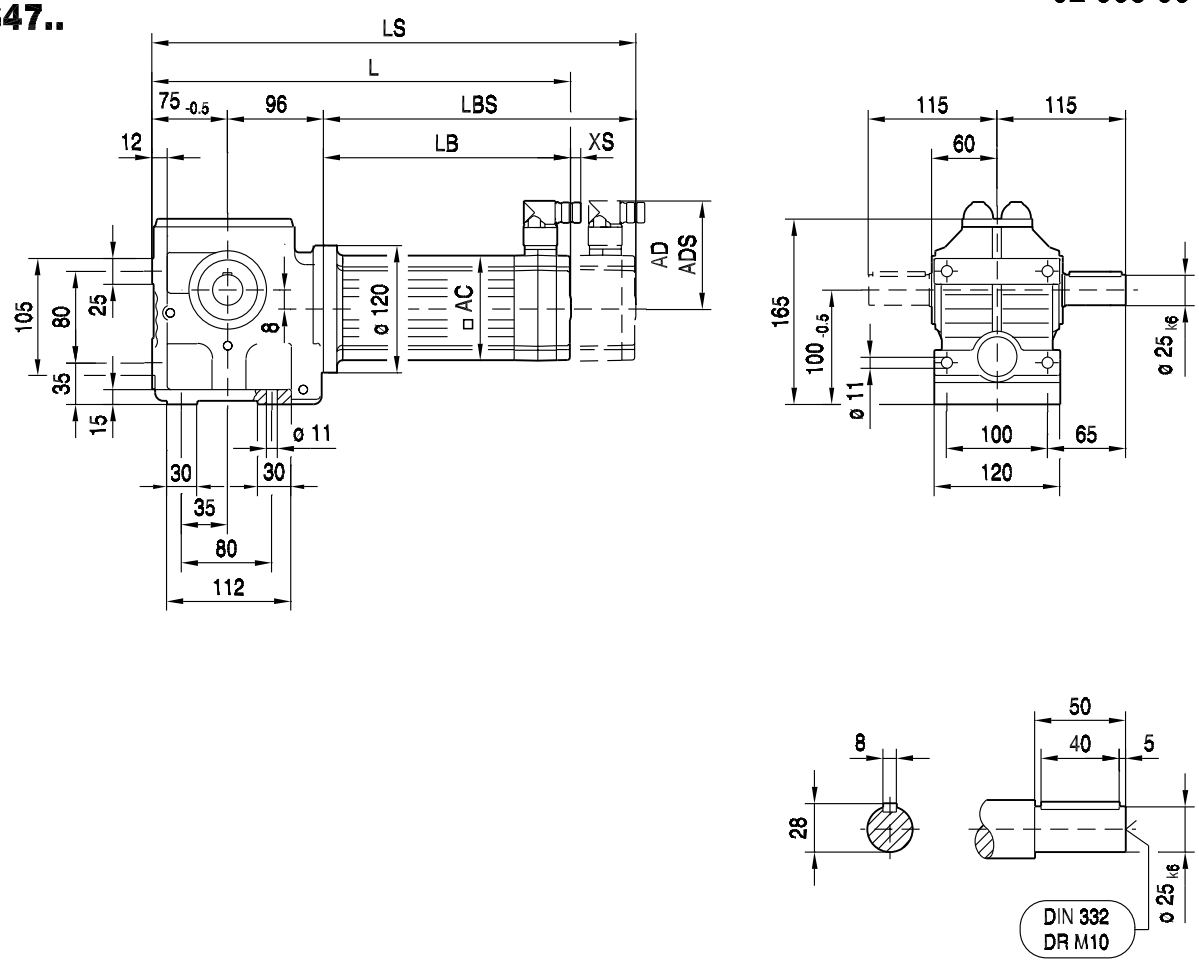

(→ 📖 150)	CMP40M	CMP50S	CMP50M	CMP50L	CMP63S	CMP63M	CMP63L	
AC	57	73	73	73	88	88	88	
AD	75	82	82	82	89	89	89	
ADS	75	82	82	82	89	89	89	
L	314	316	355	394	351	401	454	
LS	344	345	384	423	379	429	483	
LB	143	145	184	223	180	230	283	
LBS	173	174	213	252	208	258	312	
XS	19	18	18	18	14	14	14	

02 006 00 07

SF47..

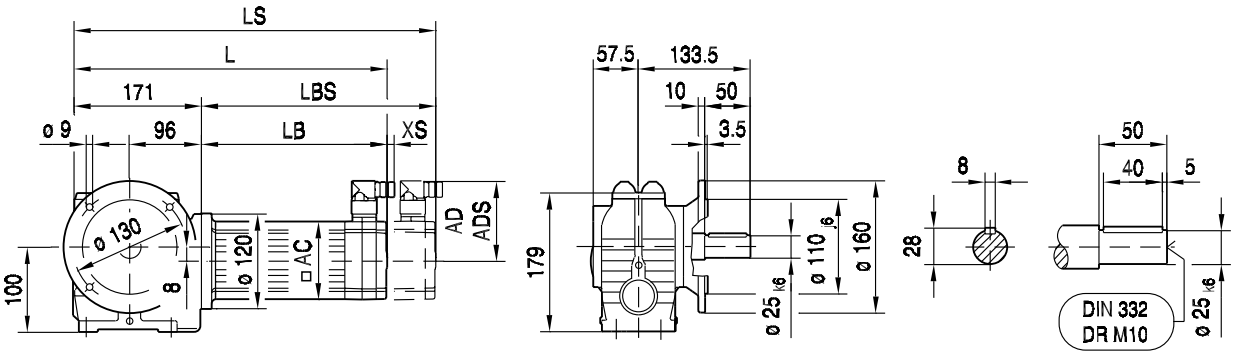

SAF47..

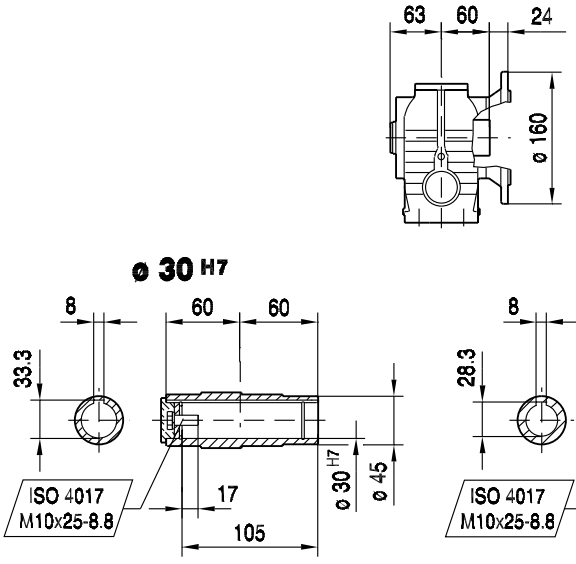

SHF47..

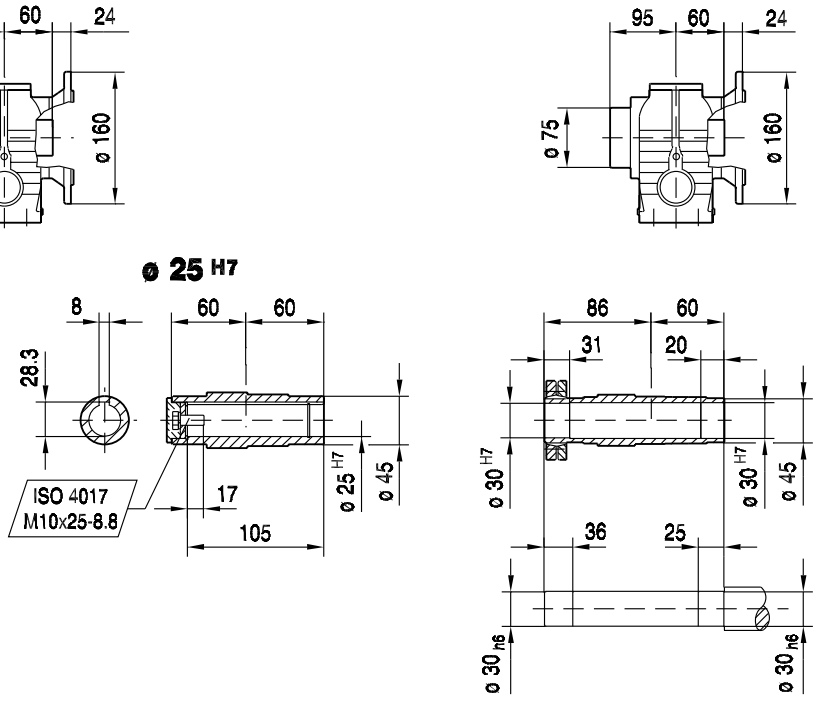

(→ 150)	CMP40M	CMP50S	CMP50M	CMP50L	CMP63S	CMP63M	CMP63L	
AC	57	73	73	73	88	88	88	
AD	75	82	82	82	89	89	89	
ADS	75	82	82	82	89	89	89	
L	314	316	355	394	351	401	454	
LS	344	345	384	423	379	429	483	
LB	143	145	184	223	180	230	283	
LBS	173	174	213	252	208	258	312	
XS	19	18	18	18	14	14	14	

02 007 00 07

SA47..

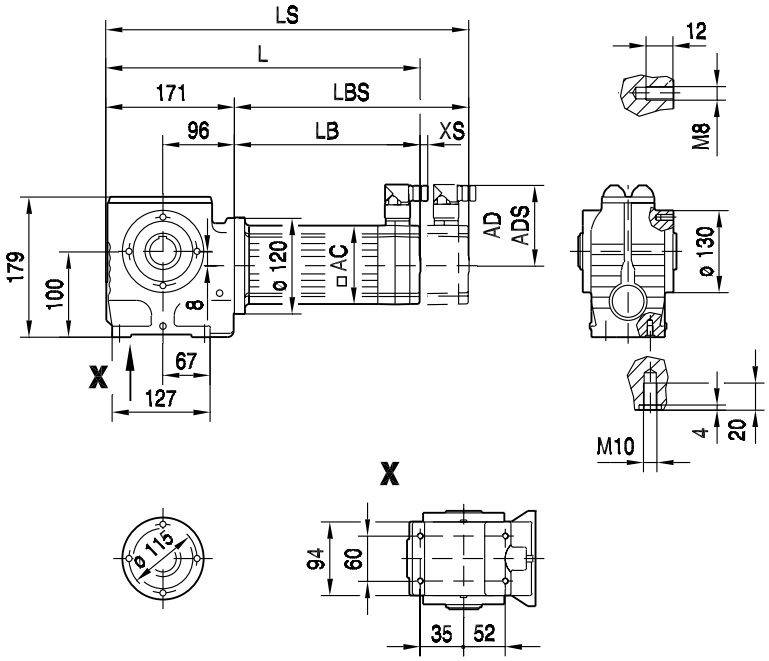

S.. /T..

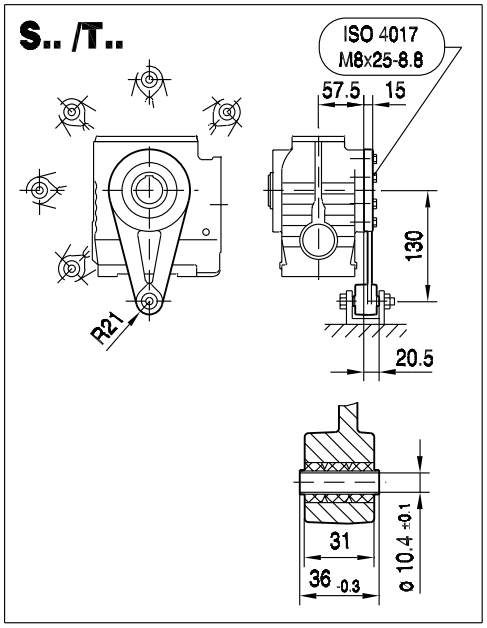

SA47..

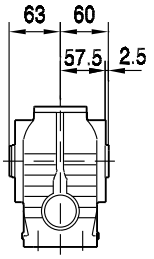

SH47..

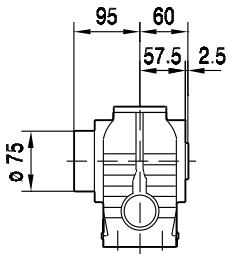

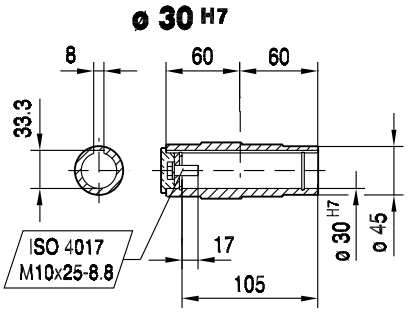

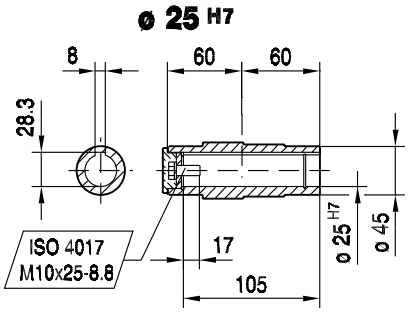

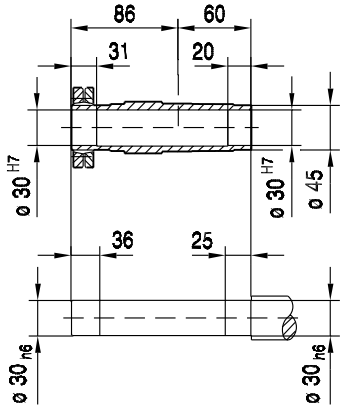

(→ 📖 150)	CMP40M	CMP50S	CMP50M	CMP50L	CMP63S	CMP63M	CMP63L	
AC	57	73	73	73	88	88	88	
AD	75	82	82	82	89	89	89	
ADS	75	82	82	82	89	89	89	
L	314	316	355	394	351	401	454	
LS	344	345	384	423	379	429	483	
LB	143	145	184	223	180	230	283	
LBS	173	174	213	252	208	258	312	
XS	19	18	18	18	14	14	14	

02 008 00 07

SAZ47..

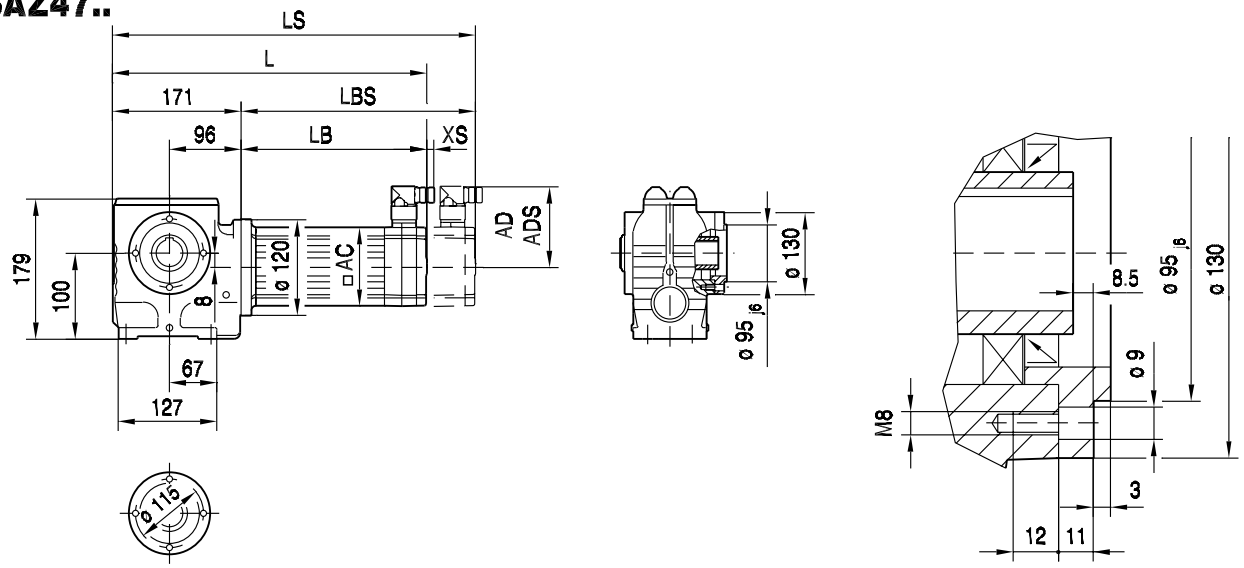

SAZ47..

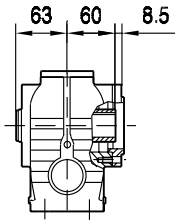

SHZ47..

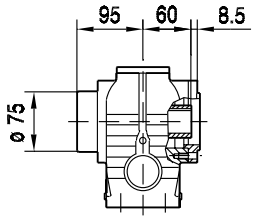

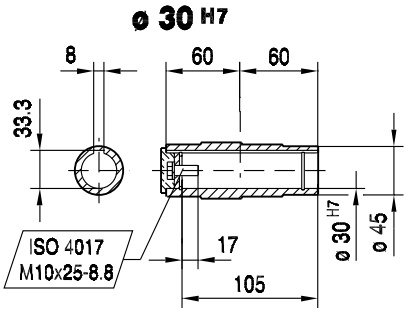

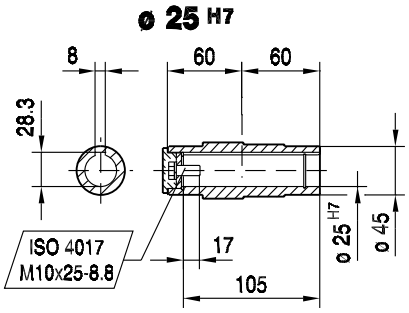

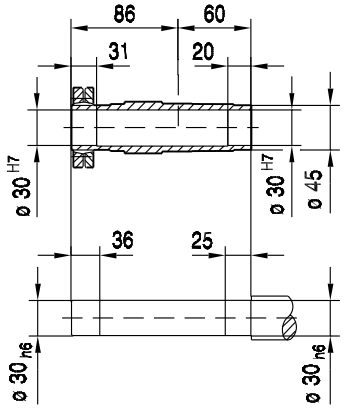

(→ 150)	CMP40M	CMP50S	CMP50M	CMP50L	CMP63S	CMP63M	CMP63L	
AC	57	73	73	73	88	88	88	
AD	75	82	82	82	89	89	89	
ADS	75	82	82	82	89	89	89	
L	314	316	355	394	351	401	454	
LS	344	345	384	423	379	429	483	
LB	143	145	184	223	180	230	283	
LBS	173	174	213	252	208	258	312	
XS	19	18	18	18	14	14	14	

02 009 00 07

ST47..

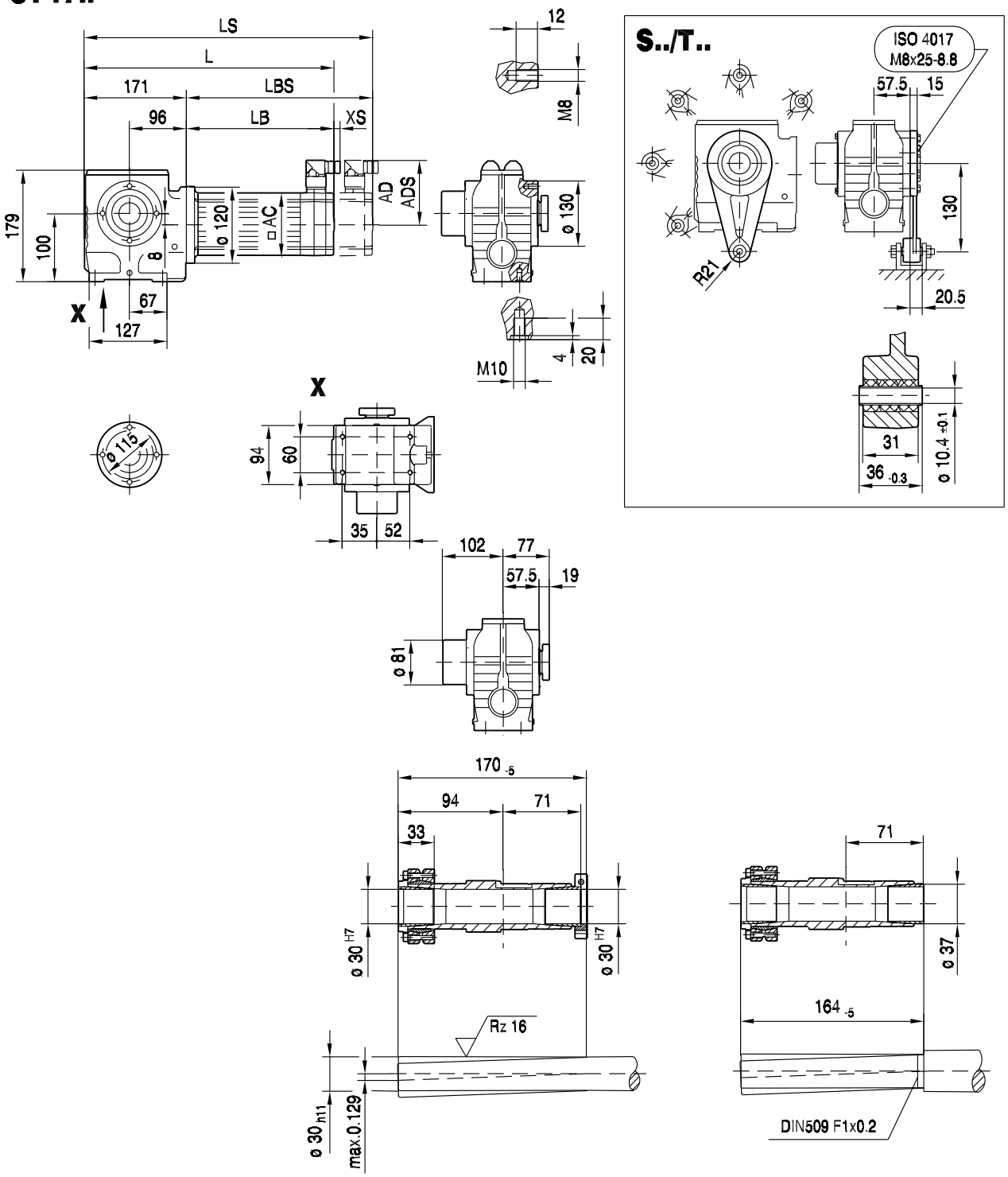

(→ 150)	CMP40M	CMP50S	CMP50M	CMP50L	CMP63S	CMP63M	CMP63L	
AC	57	73	73	73	88	88	88	
AD	75	82	82	82	89	89	89	
ADS	75	82	82	82	89	89	89	
L	314	316	355	394	351	401	454	
LS	344	345	384	423	379	429	483	
LB	143	145	184	223	180	230	283	
LBS	173	174	213	252	208	258	312	
XS	19	18	18	18	14	14	14	

S47..

05 038 01 01

DS56..

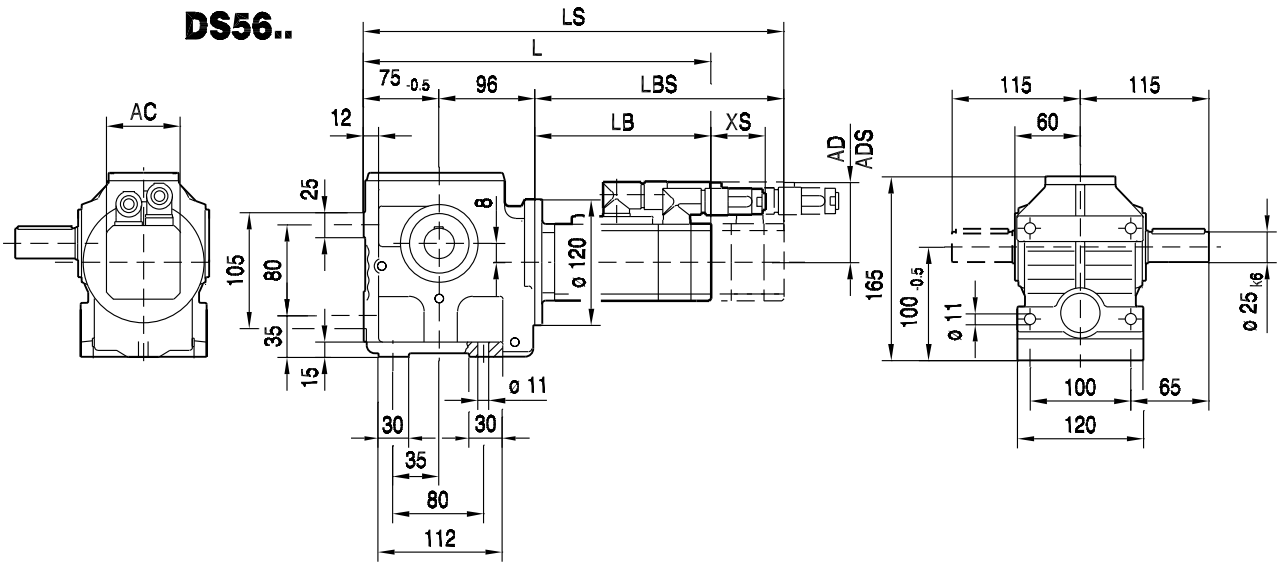

CM..

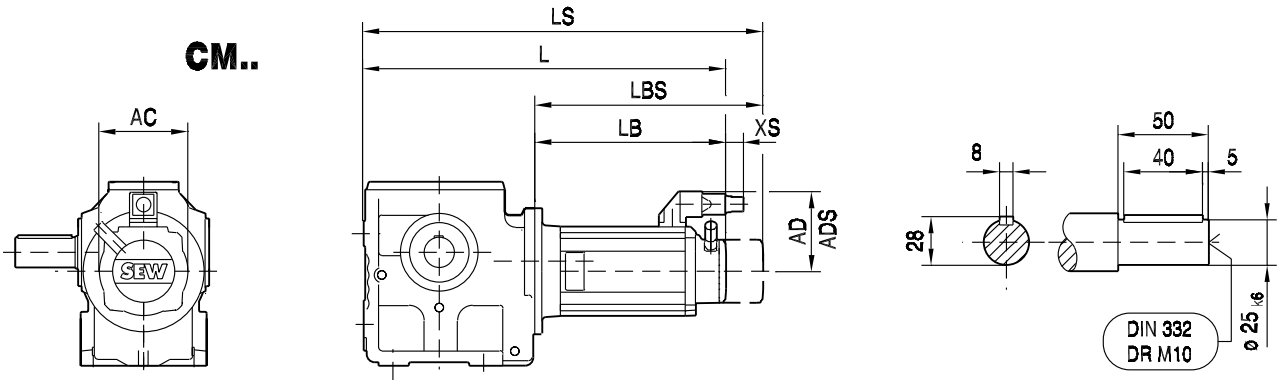

(→ 📖 150)	DS56M	DS56L	DS56H	CM71S	CM71M	CM71L	CM90S				
AC	73	73	73	117	117	117	142				
AD	71	71	77	122	122	122	140				
ADS	77	77	77	122	122	122	140				
L	308	340	443	409	429	472	464				
LS	338	370	443	491	511	554	560				
LB	137	169	272	238	258	301	293				
LBS	167	199	272	320	340	383	389				
XS	70	70	51	45	45	45	50				

05 039 01 01

SF47..

DS56..

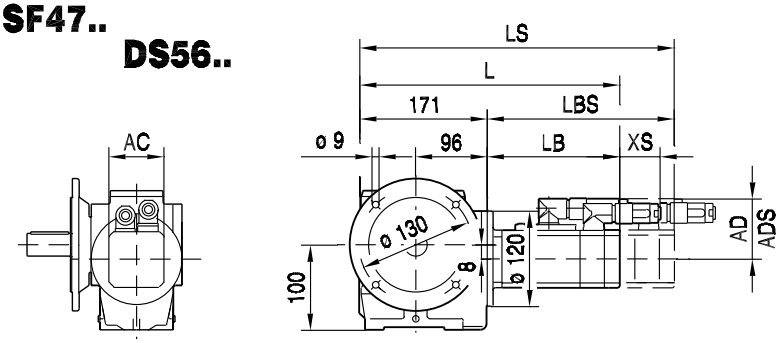

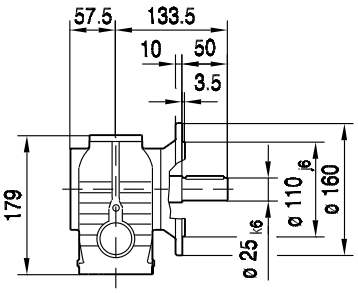

CM..

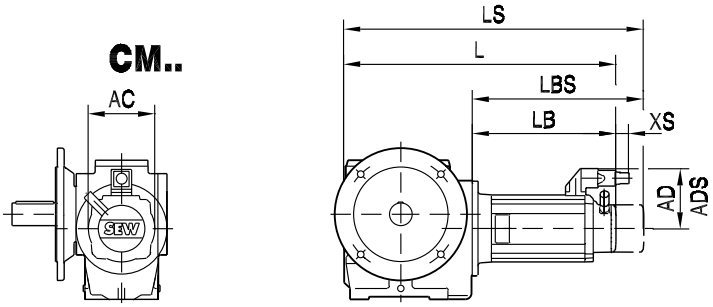

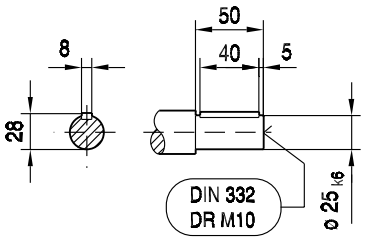

SAF47..

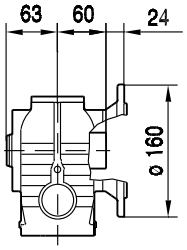

SHF47..

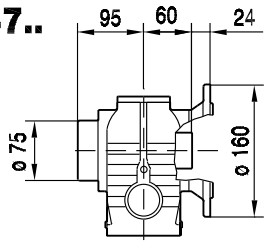

ø 30 H7

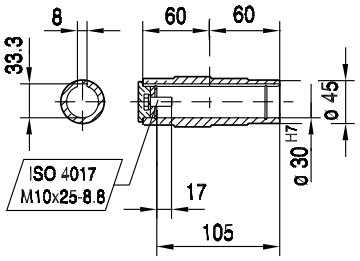

ø 25 H7

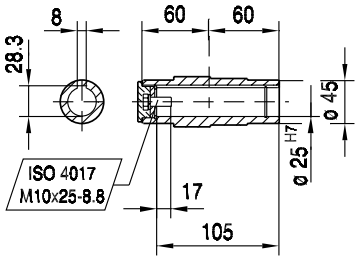

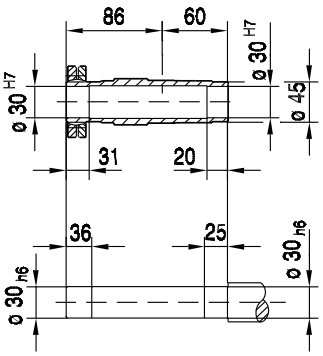

(→ 📖 150)	DS56M	DS56L	DS56H	CM71S	CM71M	CM71L	CM90S				
AC	73	73	73	117	117	117	142				
AD	71	71	77	122	122	122	140				
ADS	77	77	77	122	122	122	140				
L	308	340	443	409	429	472	464				
LS	338	370	443	491	511	554	560				
LB	137	169	272	238	258	301	293				
LBS	167	199	272	320	340	383	389				
XS	70	70	51	45	45	45	50				

28 011 01 01

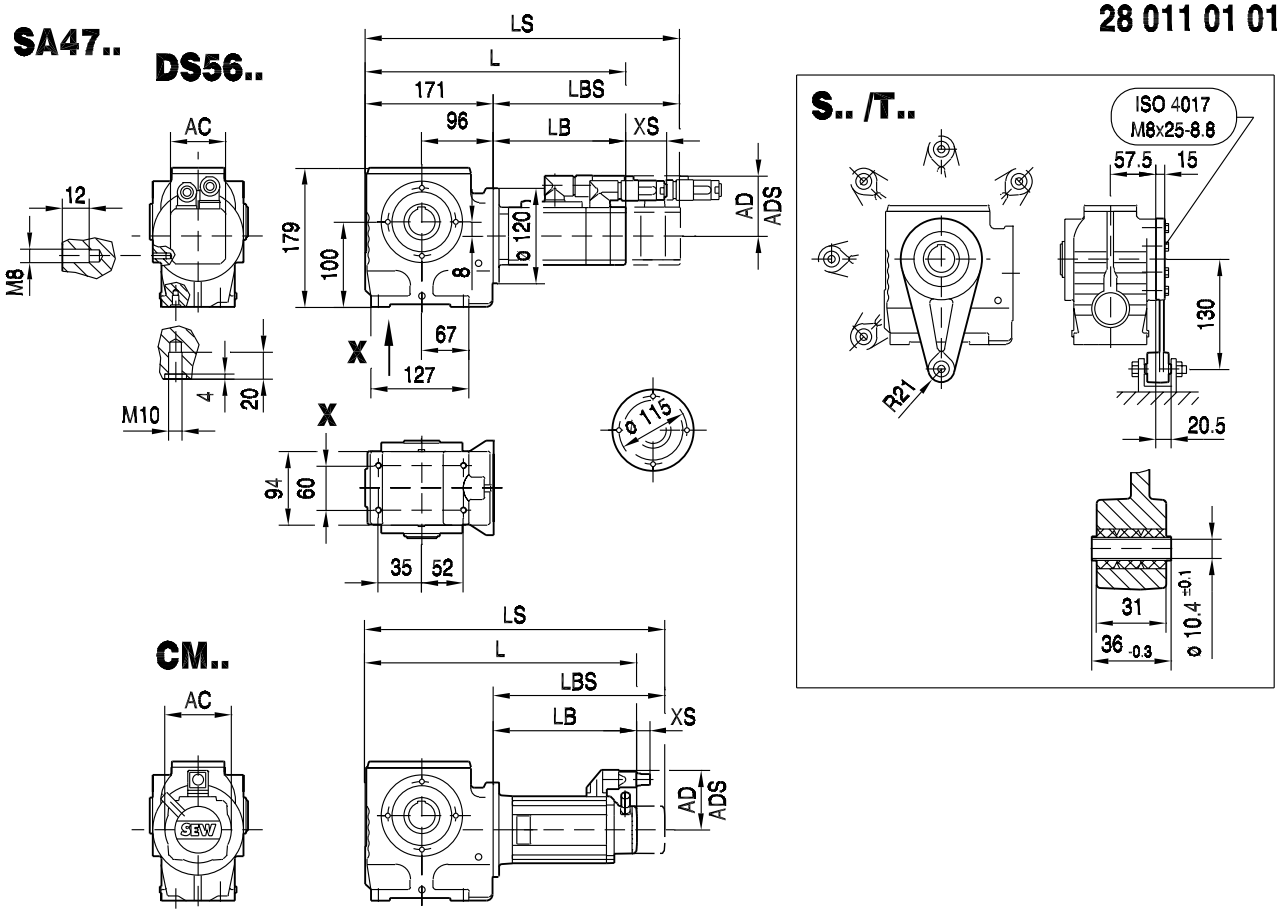

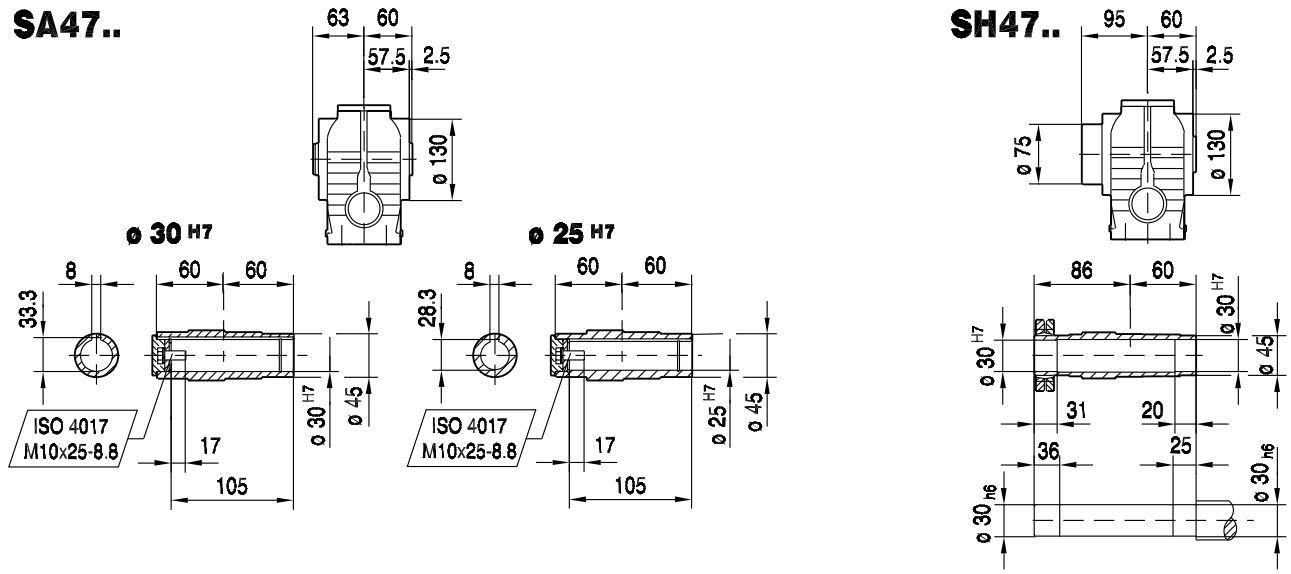

(→ 📖 150)	DS56M	DS56L	DS56H	CM71S	CM71M	CM71L	CM90S				
AC	73	73	73	117	117	117	142				
AD	71	71	77	122	122	122	140				
ADS	77	77	77	122	122	122	140				
L	308	340	443	409	429	472	464				
LS	338	370	443	491	511	554	560				
LB	137	169	272	238	258	301	293				
LBS	167	199	272	320	340	383	389				
XS	70	70	51	45	45	45	50				

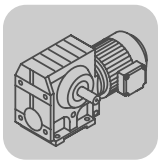

S..CMP, DS, CM
S 47 / CMP / DS / CM [mm]

SAZ47.. DS56..

28 016 00 04

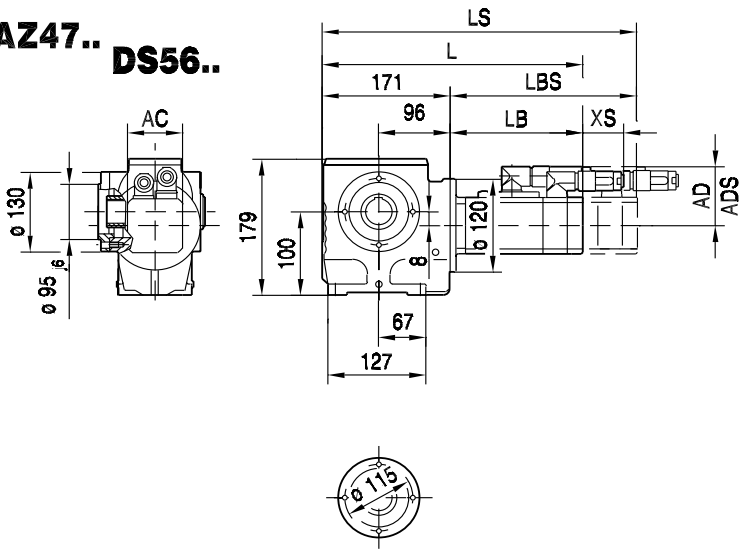

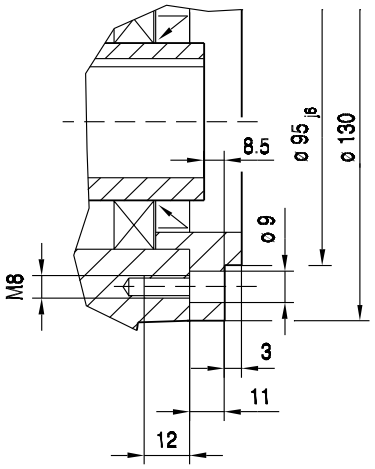

CM..

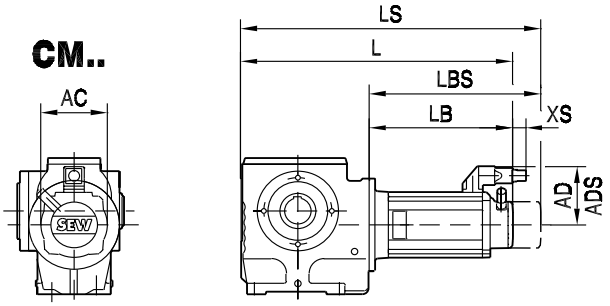

SAZ47..

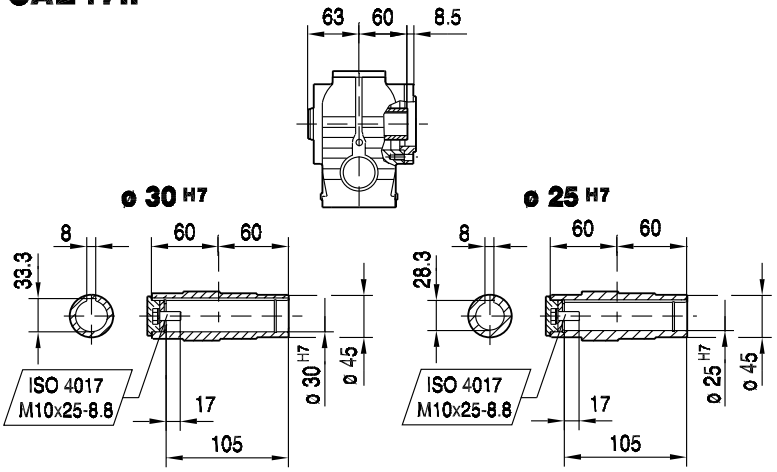

SHZ47..

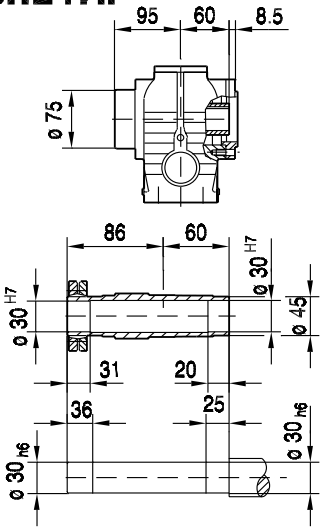

(→ 📖 150)	DS56M	DS56L	DS56H	CM71S	CM71M	CM71L	CM90S				
AC	73	73	73	117	117	117	142				
AD	71	71	77	122	122	122	140				
ADS	77	77	77	122	122	122	140				
L	308	340	443	409	429	472	464				
LS	338	370	443	491	511	554	560				
LB	137	169	272	238	258	301	293				
LBS	167	199	272	320	340	383	389				
XS	70	70	51	45	45	45	50				

28 020 00 04

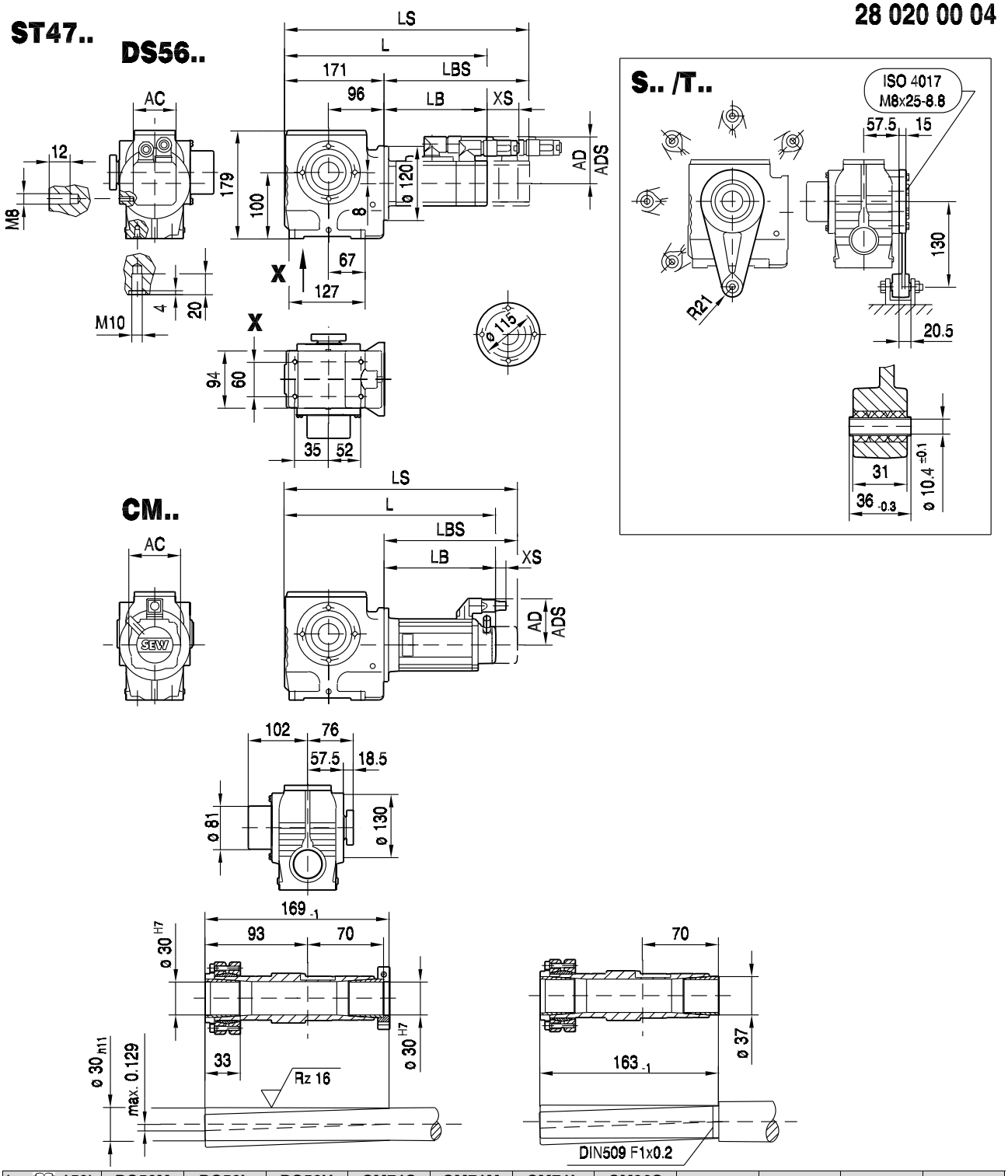

(→ 📖 150)	DS56M	DS56L	DS56H	CM71S	CM71M	CM71L	CM90S				
AC	73	73	73	117	117	117	142				
AD	71	71	77	122	122	122	140				
ADS	77	77	77	122	122	122	140				
L	308	340	443	409	429	472	464				
LS	338	370	443	491	511	554	560				
LB	137	169	272	238	258	301	293				
LBS	167	199	272	320	340	383	389				
XS	70	70	51	45	45	45	50				

11.6 S 57 / CMP / DS / CM [Nm]

M_{aDyn} [Nm]		CMP							DS			CM			
	i	40M	50S	50M	50L	63S	63M	63L	56M	56L	56H	71S	71M	71L	90S
S57 2	7.28	25	34	67	100	72	139	>183	25	49	98	107	139	>183	>183
	8.64	29	40	79	118	85	165	>211	29	58	117	127	165	>211	>211
	9.23	31	43	85	127	91	176	>223	31	62	125	136	177	>223	>223
	10.8	37	50	99	148	107	206	>220	37	73	146	159	207	>220	>220
	12.1	40	55	110	164	118	>220	>220	40	81	162	176	>220	>220	>220
	14.24	48	65	129	193	139	>220	>220	48	95	190	207	>220	>220	>220
	16.47	54	75	148	>220	159	>220		54	109	218	>220	>220		
	17.62	58	80	158	>215	170	>215		58	117	>215	>215	>215		
	19.54			165	247	178	>274	>274			244	264	>274	>274	>274
	20.33	67	92	182		196			67	134	>215				
	23.2	72	99	196	293	211	>315	>315	72	145	289	314	>315	>315	>315
	24.77	76	104	207	309	223	>330	>330	76	152	305	>330	>330	>330	>330
	29	89	122	242	>360	261	>360	>360	89	179	357	>360	>360	>360	>360
	32.48	99	135	268	>367	288	>367	>367	99	197	>367	>367	>367	>367	>367
	38.23	116	159	315	>367	339	>367	>367	116	232	>367	>367	>367	>367	>367
	44.22	133	182	360	>367	>367	>367		133	265	>367	>367	>367		
	47.32	142	194	>367	>367	>367	>367		142	284	>367	>367	>367		
	54.59	162	221	>367		>367			162	324	>367				
	63.8	187	255						187	>360					
	69.39	203	278						203	>360					

m [kg]		CMP							DS			CM			
	s	40M	50S	50M	50L	63S	63M	63L	56M	56L	56H	71S	71M	71L	90S
S57	2	15	17	17	18	19	20	22	15	16	17	21	22	26	30
SF: + 3.8 kg / SA: + -0.3 kg / SAF: + 2.6 kg															

CMP.. / DS.. / CM..				c_T			
	i	n_{epk} [1/min]	η [%]	S [Nm/']	SF [Nm/']	SA [Nm/']	SAF [Nm/']
S57 2	7.28	4500	89	-	-	-	-
	8.64	4500	89	-	-	-	-
	9.23	4500	89	-	-	-	-
	10.8	4500	89	-	-	-	-
	12.1	4500	88	-	-	-	-
	14.24	4500	88	-	-	-	-
	16.47	4500	87	-	-	-	-
	17.62	4500	87	-	-	-	-
	19.54	4500	82	-	-	-	-
	20.33	4500	87	-	-	-	-
	23.2	4500	82	-	-	-	-
	24.77	4500	81	-	-	-	-
	29	4500	81	-	-	-	-
	32.48	4500	80	-	-	-	-
	38.23	4500	80	-	-	-	-
	44.22	4500	79	-	-	-	-
	47.32	4500	79	-	-	-	-
	54.59	4500	78	-	-	-	-
	63.8	4500	77	-	-	-	-
	69.39	4500	77	-	-	-	-

CMP.. / DS.. / CM..							F_{Ramax}				F_{Rapk}			
	i	M_{amax} [Nm]	M_{apk} [Nm]	$M_{aNotaus}$ [Nm]	n_{ak} [1/min]	J_G 10^{-4} [kgm^2]	S [N]	SF [N]	SA [N]	SAF [N]	S [N]	SF [N]	SA [N]	SAF [N]
S57 2	7.28	146	183	248	27	1.7	3790	3770	2620	2620	7880	7880	10000	10000
	8.64	166	211	282	23	1.3	3900	3890	2430	2430	7730	7730	10000	10000
	9.23	169	223	287	22	1.1	3990	3980	2530	2530	7660	7660	10000	10000
	10.8	169	220	287	19	0.85	4290	4270	3000	3000	7680	7680	10000	10000
	12.1	169	220	287	17	0.70	4520	4490	3360	3360	7680	7680	10000	10000
	14.24	169	220	287	14	0.51	4860	4820	3810	3810	7680	7680	10000	10000
	16.47	168	220	286	12	0.40	5200	5130	4120	4120	7680	7680	10000	10000
	17.62	168	215	286	11	0.36	5350	5280	4260	4260	7710	7710	10000	10000
	19.54	215	274	366	26	1.3	5720	5620	4610	4610	7300	7300	10000	10000
	20.33	168	215	286	10	0.28	5690	5600	4560	4560	7710	7710	10000	10000
	23.2	245	315	417	9	0.95	5930	5840	4710	4710	6950	6950	10000	10000
	24.77	245	330	417	8	0.85	6100	6000	4870	4870	6800	6800	10000	10000
	29	245	360	417	7	0.65	6520	6410	5250	5250	6470	6470	10000	10000
	32.48	245	367	417	6	0.54	6840	6710	5540	5540	6380	6380	10000	10000
	38.23	245	367	417	5	0.39	7320	7170	5970	5970	6380	6380	10000	10000
	44.22	245	367	417	11	0.32	7520	7520	6380	6380	6380	6380	10000	10000
	47.32	245	367	417	11	0.28	7520	7520	6580	6580	6380	6380	10000	10000
	54.59	245	367	417	9	0.23	7520	7520	7000	7000	6380	6380	10000	10000
	63.8	245	360	417	8	0.18	7520	7520	7500	7500	6470	6470	10000	10000
	69.39	245	360	417	7	0.15	7520	7520	7770	7770	6470	6470	10000	10000

11.7 S 57 / CMP / DS / CM [mm]

02 010 00 07

S57..

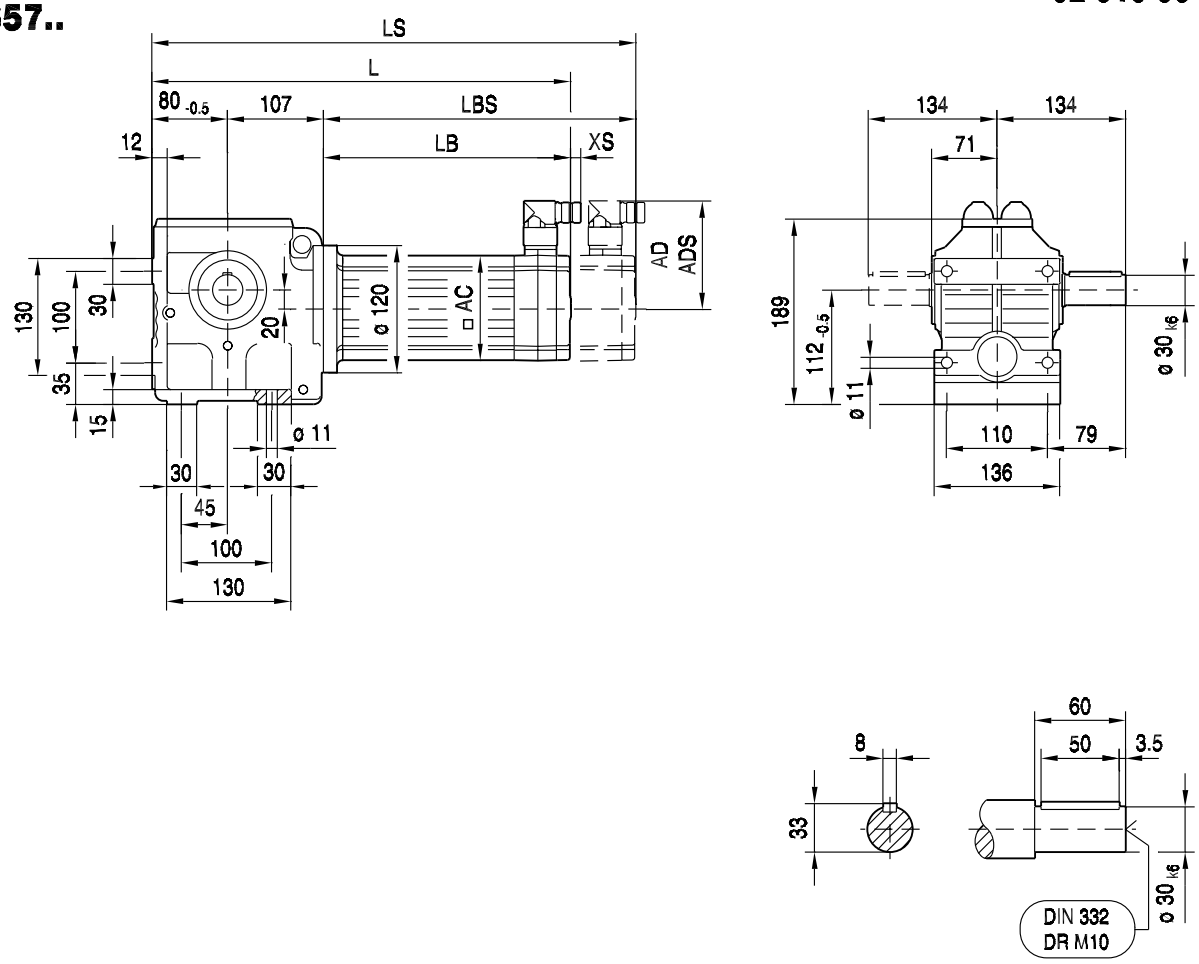

(→ 📖 150)	CMP40M	CMP50S	CMP50M	CMP50L	CMP63S	CMP63M	CMP63L	
AC	57	73	73	73	88	88	88	
AD	75	82	82	82	89	89	89	
ADS	75	82	82	82	89	89	89	
L	330	332	371	410	367	417	470	
LS	360	361	400	439	395	445	499	
LB	143	145	184	223	180	230	283	
LBS	173	174	213	252	208	258	312	
XS	19	18	18	18	14	14	14	

02 011 00 07

SF57..

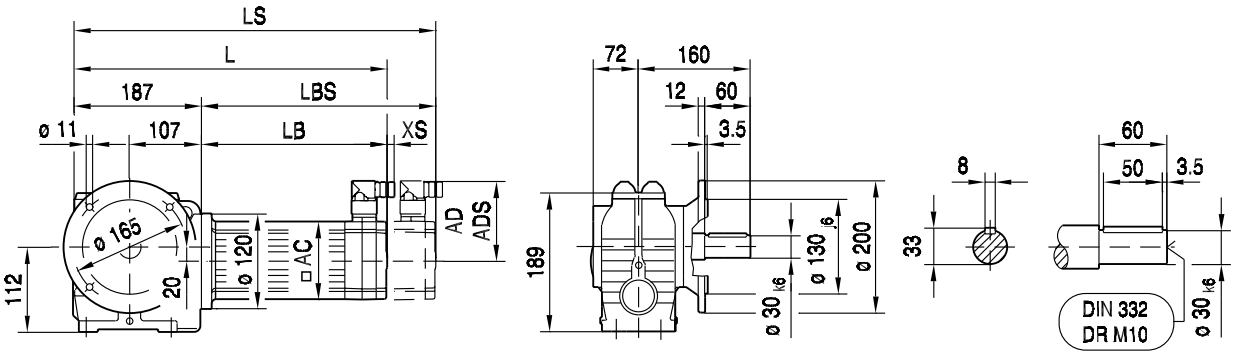

SAF57..

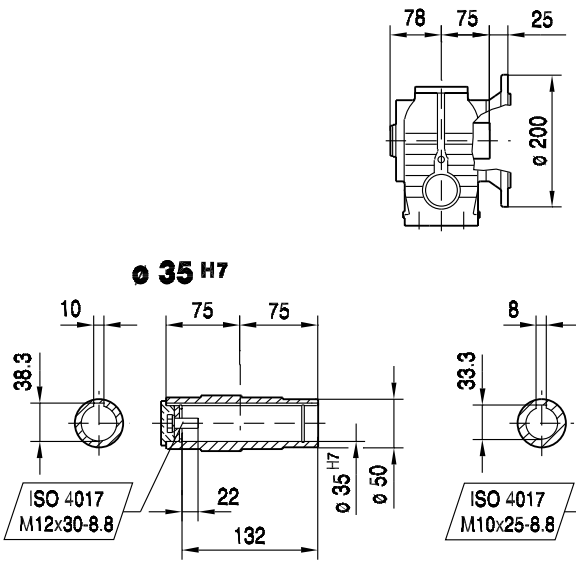

SHF57..

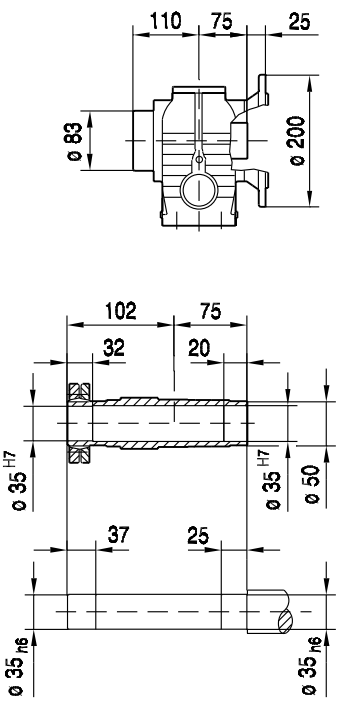

(→ 150)	CMP40M	CMP50S	CMP50M	CMP50L	CMP63S	CMP63M	CMP63L	
AC	57	73	73	73	88	88	88	
AD	75	82	82	82	89	89	89	
ADS	75	82	82	82	89	89	89	
L	330	332	371	410	367	417	470	
LS	360	361	400	439	395	445	499	
LB	143	145	184	223	180	230	283	
LBS	173	174	213	252	208	258	312	
XS	19	18	18	18	14	14	14	

02 012 00 07

SA57..

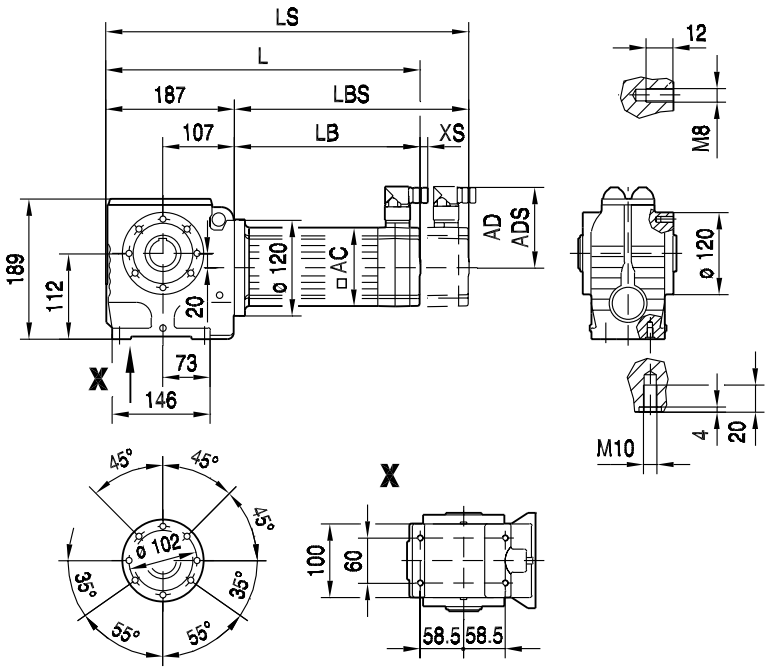

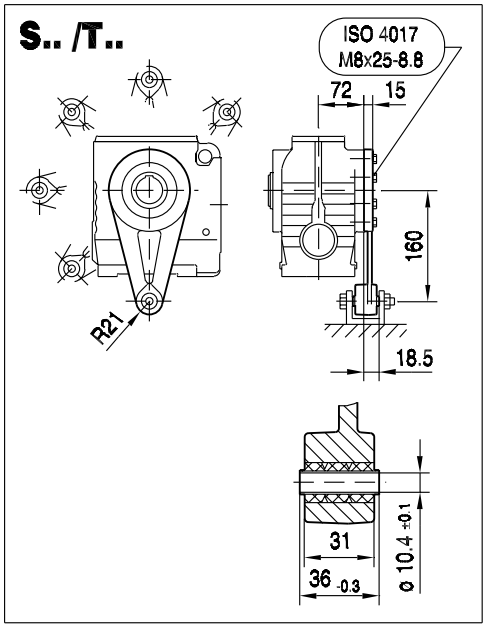

SA57..

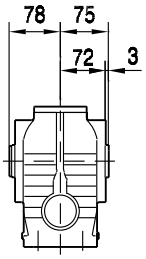

SH57..

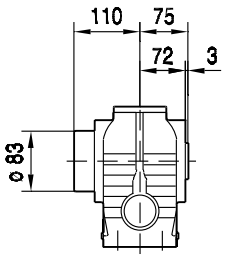

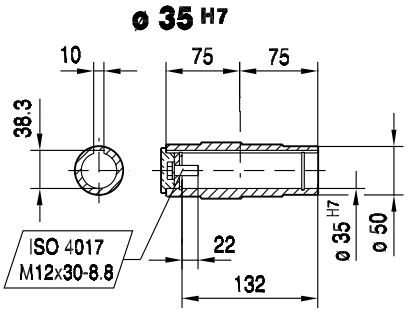

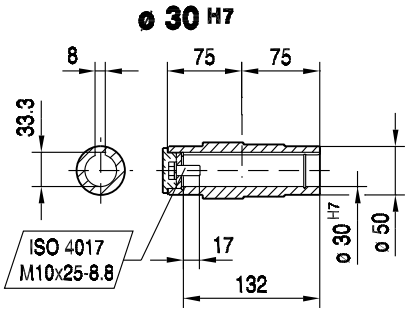

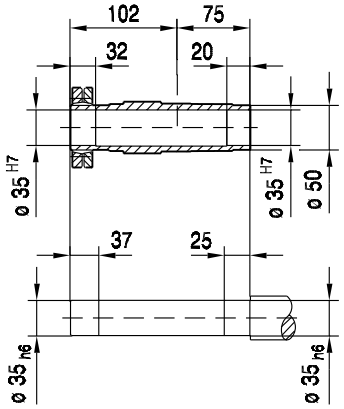

(→ 📖 150)	CMP40M	CMP50S	CMP50M	CMP50L	CMP63S	CMP63M	CMP63L	
AC	57	73	73	73	88	88	88	
AD	75	82	82	82	89	89	89	
ADS	75	82	82	82	89	89	89	
L	330	332	371	410	367	417	470	
LS	360	361	400	439	395	445	499	
LB	143	145	184	223	180	230	283	
LBS	173	174	213	252	208	258	312	
XS	19	18	18	18	14	14	14	

02 013 00 07

SAZ57..

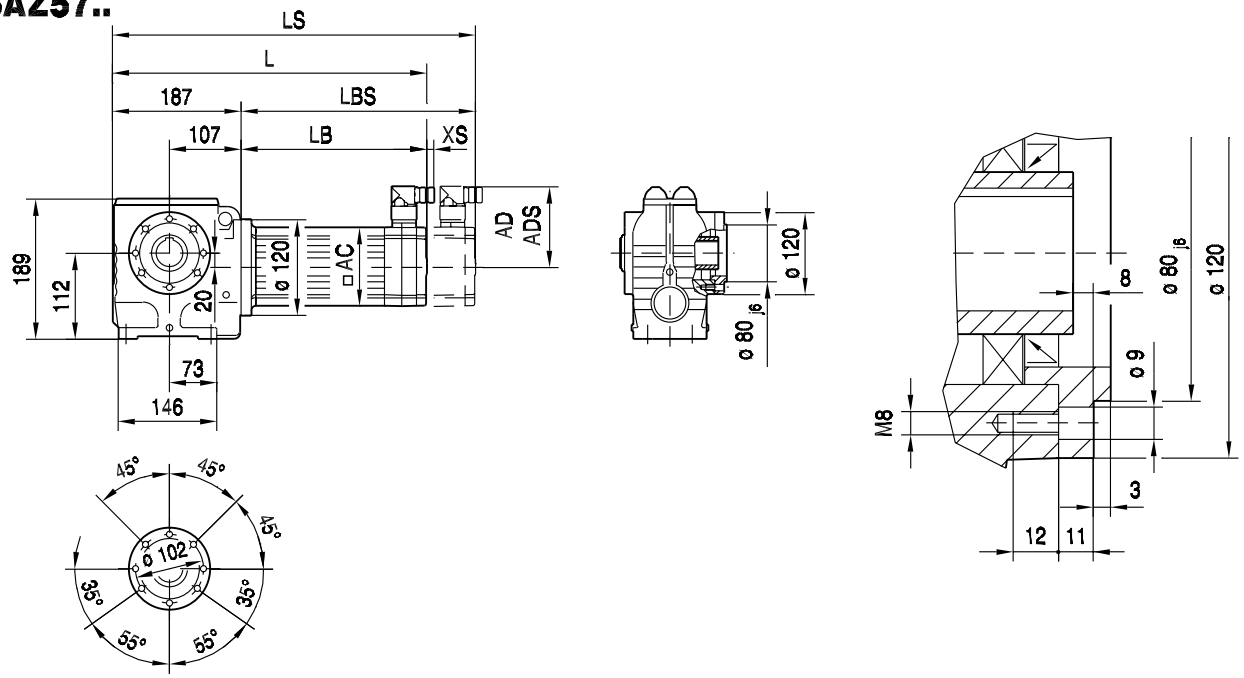

SAZ57..

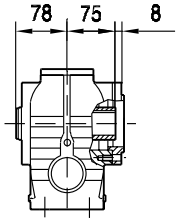

SHZ57..

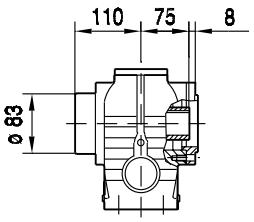

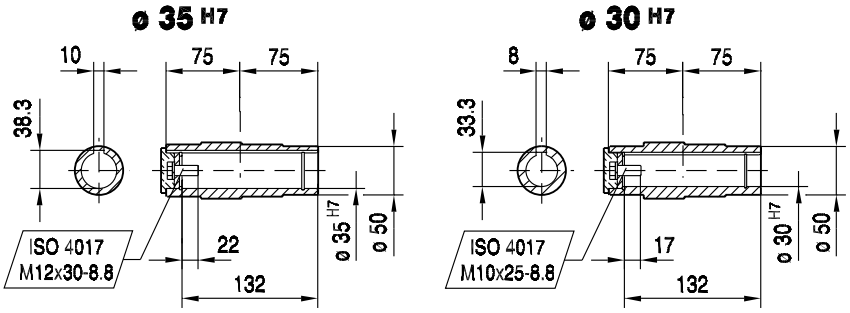

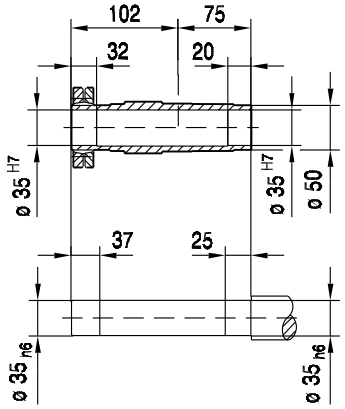

(→ 150)	CMP40M	CMP50S	CMP50M	CMP50L	CMP63S	CMP63M	CMP63L	
AC	57	73	73	73	88	88	88	
AD	75	82	82	82	89	89	89	
ADS	75	82	82	82	89	89	89	
L	330	332	371	410	367	417	470	
LS	360	361	400	439	395	445	499	
LB	143	145	184	223	180	230	283	
LBS	173	174	213	252	208	258	312	
XS	19	18	18	18	14	14	14	

02 014 00 07

ST57..

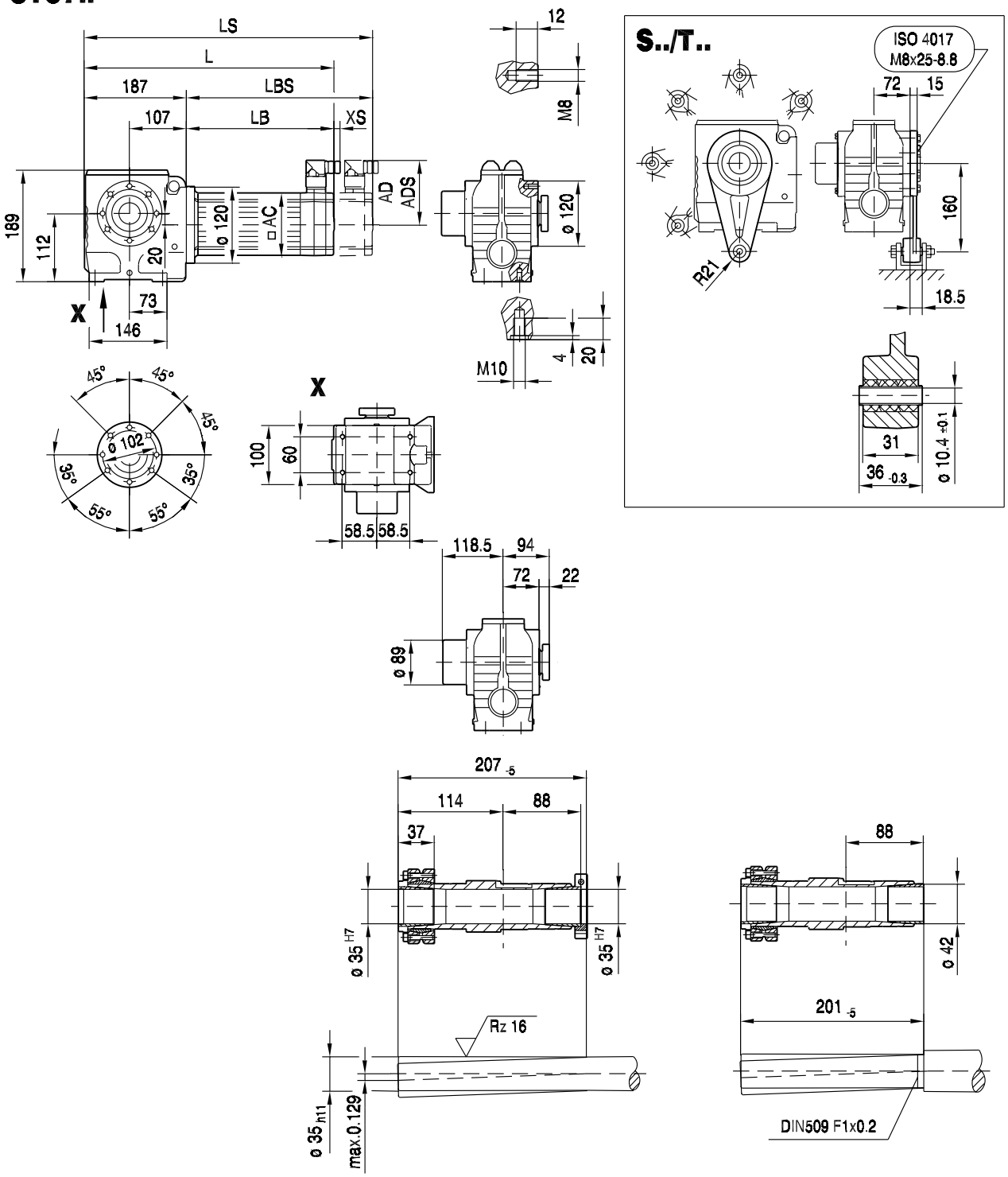

(→ 📖 150)	CMP40M	CMP50S	CMP50M	CMP50L	CMP63S	CMP63M	CMP63L	
AC	57	73	73	73	88	88	88	
AD	75	82	82	82	89	89	89	
ADS	75	82	82	82	89	89	89	
L	330	332	371	410	367	417	470	
LS	360	361	400	439	395	445	499	
LB	143	145	184	223	180	230	283	
LBS	173	174	213	252	208	258	312	
XS	19	18	18	18	14	14	14	

S57..

05 040 01 01

DS56..

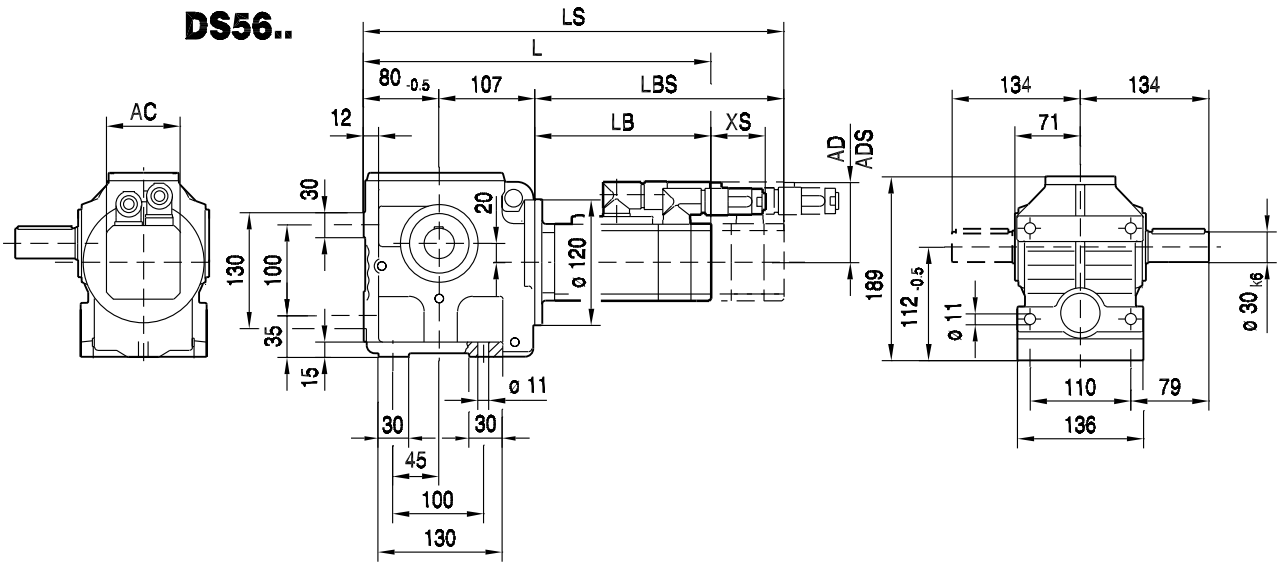

CM..

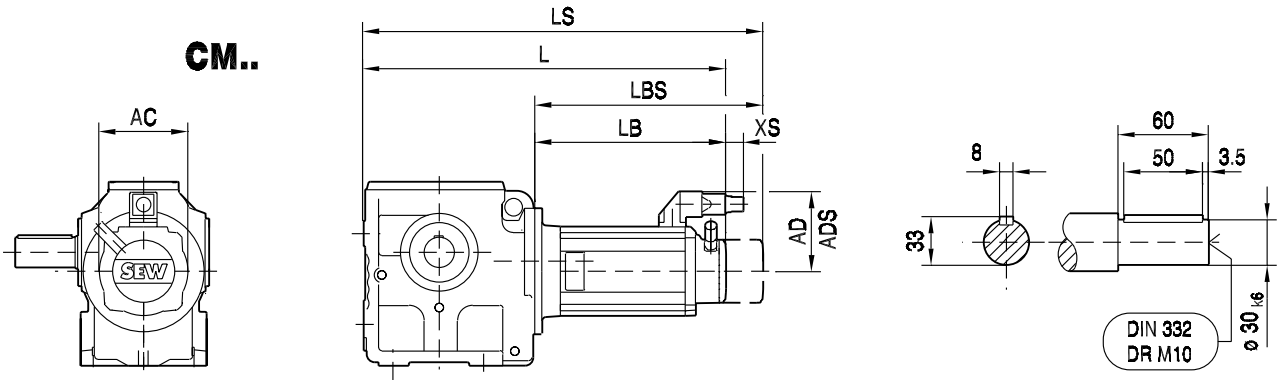

11

(→ 📖 150)	DS56M	DS56L	DS56H	CM71S	CM71M	CM71L	CM90S				
AC	73	73	73	117	117	117	142				
AD	71	71	77	122	122	122	140				
ADS	77	77	77	122	122	122	140				
L	324	356	459	425	445	488	480				
LS	354	386	459	507	527	570	576				
LB	137	169	272	238	258	301	293				
LBS	167	199	272	320	340	383	389				
XS	70	70	51	45	45	45	50				

05 041 01 01

SF57..
DS56..

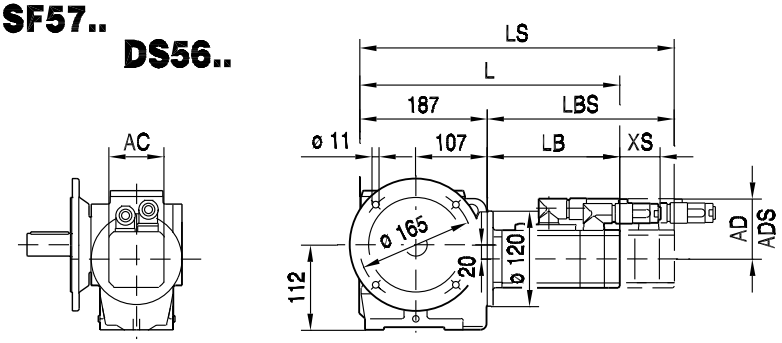

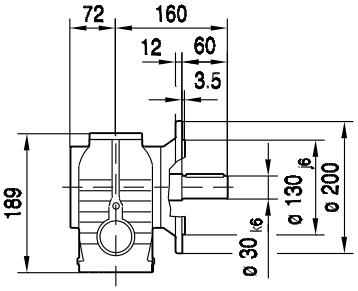

CM..

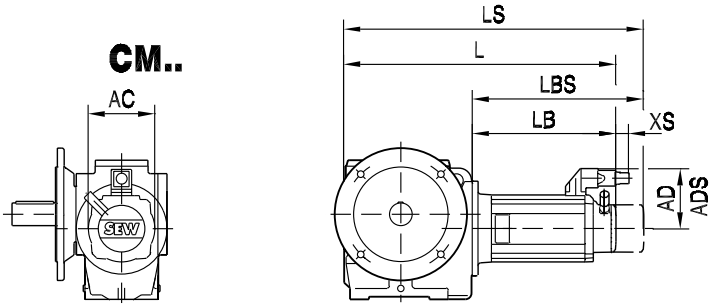

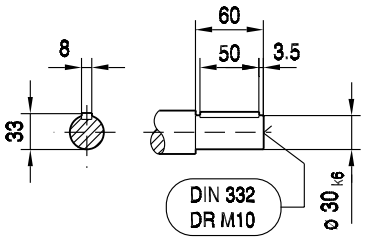

SAF57..

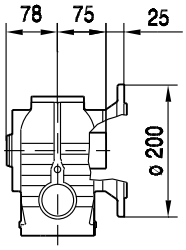

ø 35 H7

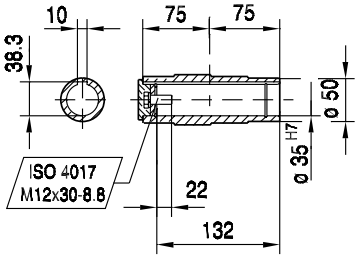

ø 30 H7

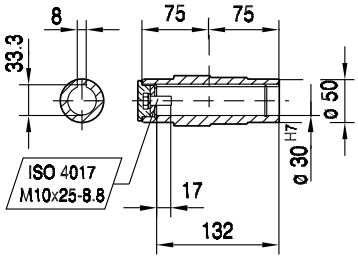

SHF57..

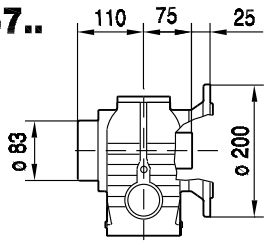

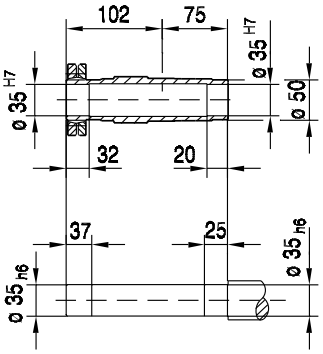

(→ 150)	DS56M	DS56L	DS56H	CM71S	CM71M	CM71L	CM90S				
AC	73	73	73	117	117	117	142				
AD	71	71	77	122	122	122	140				
ADS	77	77	77	122	122	122	140				
L	324	356	459	425	445	488	480				
LS	354	386	459	507	527	570	576				
LB	137	169	272	238	258	301	293				
LBS	167	199	272	320	340	383	389				
XS	70	70	51	45	45	45	50				

28 012 01 01

SA57.. **DS56..**

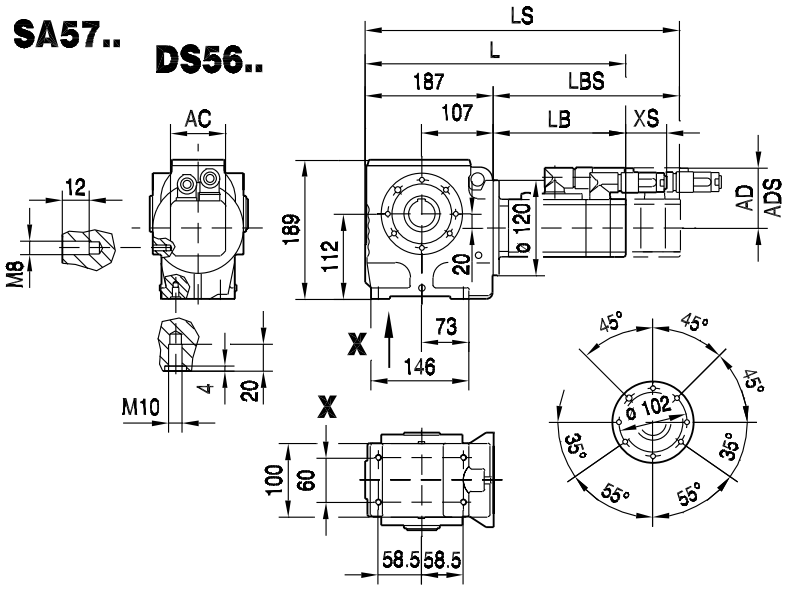

S.. /T..

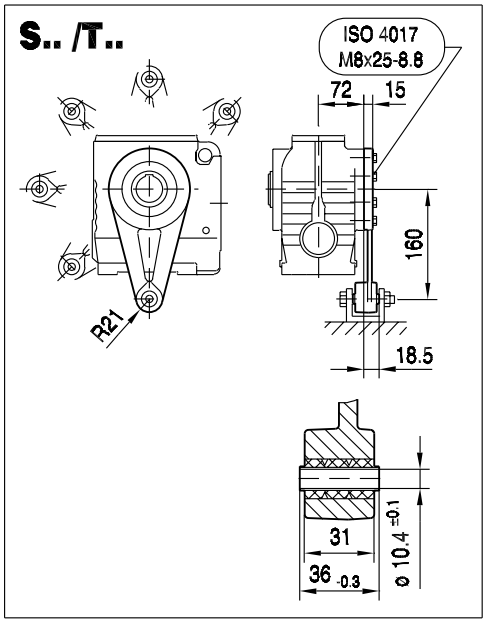

CM..

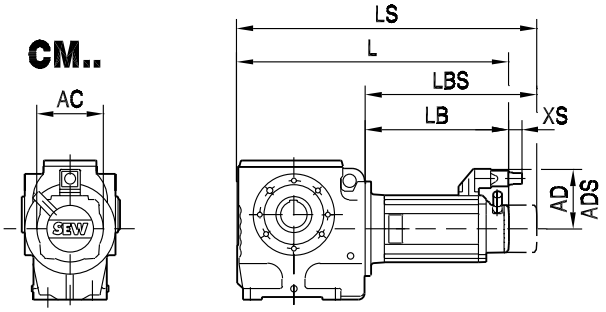

SA57..

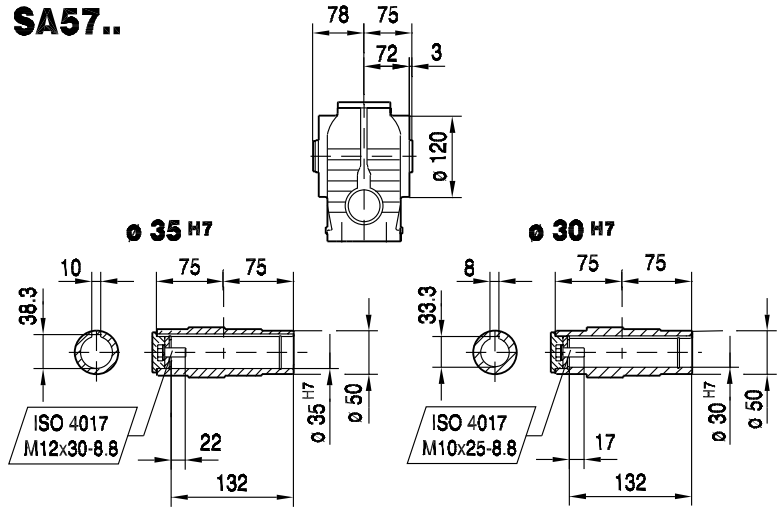

SH57..

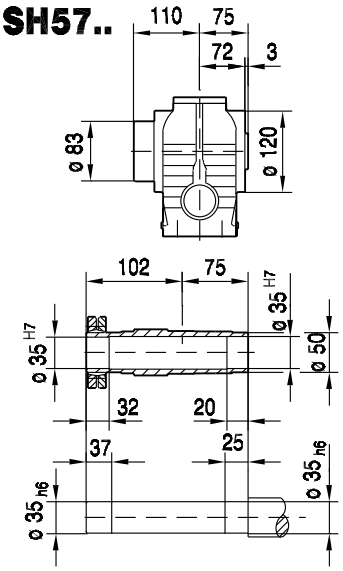

(→ 📖 150)	DS56M	DS56L	DS56H	CM71S	CM71M	CM71L	CM90S				
AC	73	73	73	117	117	117	142				
AD	71	71	77	122	122	122	140				
ADS	77	77	77	122	122	122	140				
L	324	356	459	425	445	488	480				
LS	354	386	459	507	527	570	576				
LB	137	169	272	238	258	301	293				
LBS	167	199	272	320	340	383	389				
XS	70	70	51	45	45	45	50				

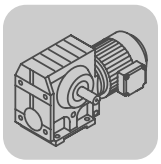

S..CMP, DS, CM
S 57 / CMP / DS / CM [mm]

SAZ57.. DS56..

28 017 00 04

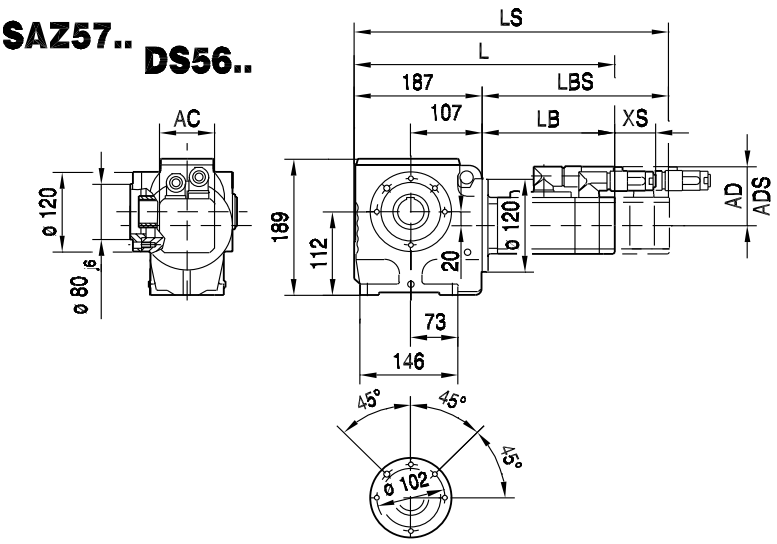

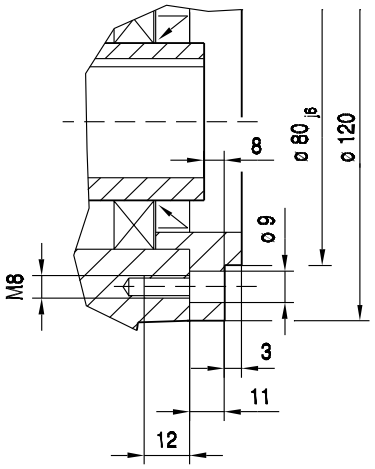

CM..

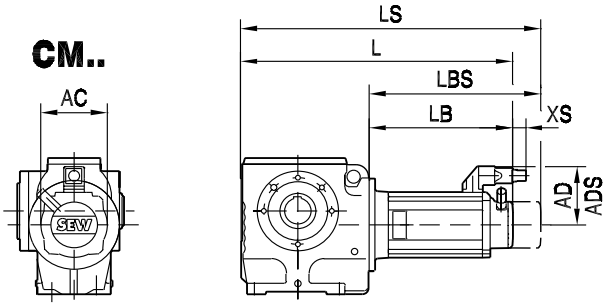

SAZ57..

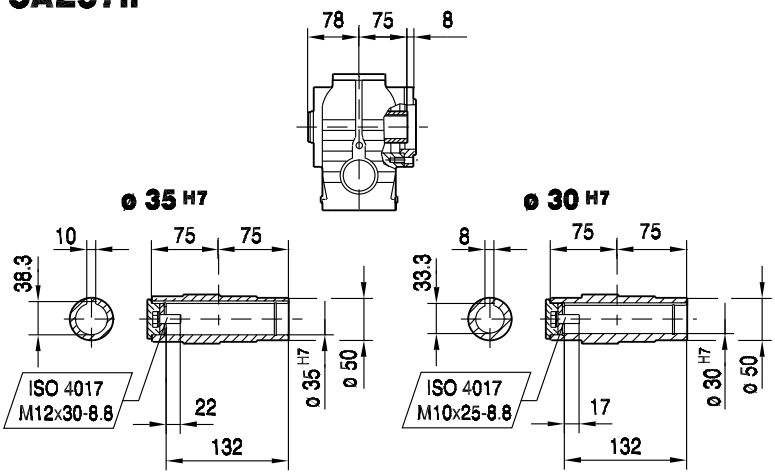

SHZ57..

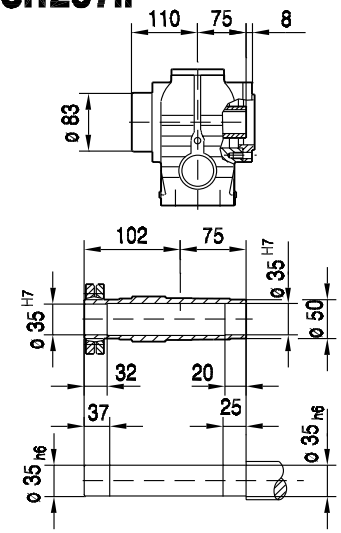

(→ 📖 150)	DS56M	DS56L	DS56H	CM71S	CM71M	CM71L	CM90S				
AC	73	73	73	117	117	117	142				
AD	71	71	77	122	122	122	140				
ADS	77	77	77	122	122	122	140				
L	324	356	459	425	445	488	480				
LS	354	386	459	507	527	570	576				
LB	137	169	272	238	258	301	293				
LBS	167	199	272	320	340	383	389				
XS	70	70	51	45	45	45	50				

28 021 00 04

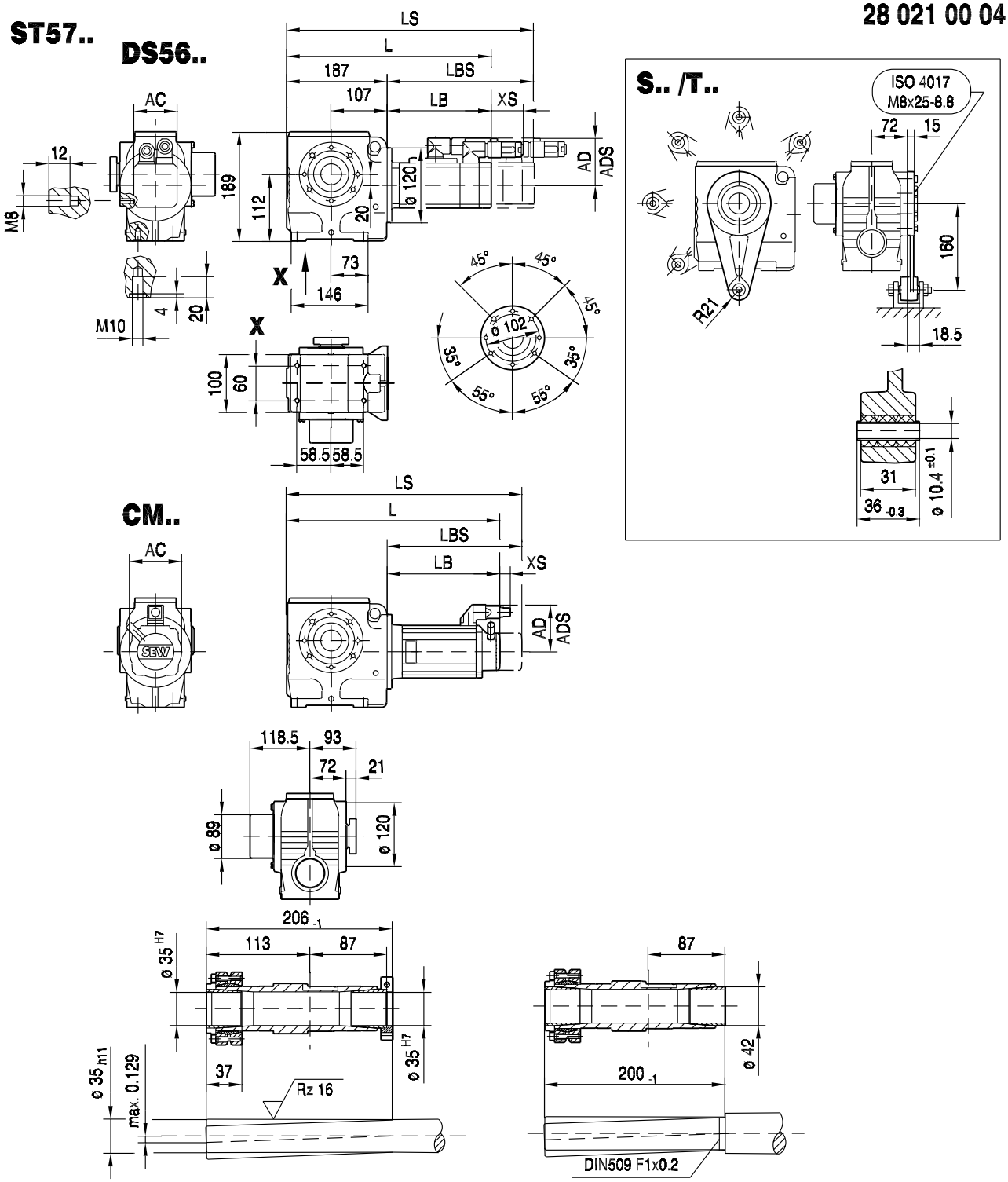

(→ 📖 150)	DS56M	DS56L	DS56H	CM71S	CM71M	CM71L	CM90S				
AC	73	73	73	117	117	117	142				
AD	71	71	77	122	122	122	140				
ADS	77	77	77	122	122	122	140				
L	324	356	459	425	445	488	480				
LS	354	386	459	507	527	570	576				
LB	137	169	272	238	258	301	293				
LBS	167	199	272	320	340	383	389				
XS	70	70	51	45	45	45	50				

11.8 S 67 / CMP / DS / CM [Nm]

M_{aDyn} [Nm]		CMP						DS			CM						
	i	50S	50M	50L	63S	63M	63L	56M	56L	56H	71S	71M	71L	90S	90M	90L	112S
S67 2	7.56		71	106	76	147	209			105	114	148	216	272	359	>375	>375
	8.69	41	81	120	87	167	238	30	59	119	129	168	246	310	408	>420	>420
	10.03	47	93	139	100	193	274	34	69	137	149	194	283	357	>450	>450	>450
	11.03	52	102	153	110	212	302	38	75	151	164	213	312	393	>455	>455	>455
	12.96	61	120	180	129	250	355	44	89	177	192	251	366	>455	>455	>455	>455
	13.73	64	126	188	136	262	371	46	93	186	202	263	384	>455	>455	>455	>455
	15.6	72	143	214	154	297	422	53	106	211	229	299	436	>455	>455		
	17.28	80	158	237	171	329	>455	58	117	234	254	331	>455	>455	>455		
	20.3														>490	>490	>490
	20.37	93	185	276	199	384	>450	68	136	272	296	385	>450	>450			
	23.22	106	210	315	227	437		78	155	311	337	439					
	23.33						>515						>515	>515	>515	>515	>515
	24.44	112	222	331	239	>450		82	163	327	355	>450					
	26.93	116	230	344	248	478	>535	85	170	340	369	481	>535	>535	>535	>535	>535
	29.63	128	253	379	273	526	>550	93	187	374	406	529	>550	>550	>550	>550	>550
	34.8	148	294	439	317	>575	>575	108	217	434	471	>575	>575	>575	>575	>575	>575
	36.85	157	311	465	335	>580	>580	115	230	459	499	>580	>580	>580	>580	>580	>580
	41.89	176	349	523	377	>595	>595	129	258	516	560	>595	>595	>595	>595		
	46.4	195	387	579	417	>610	>610	143	286	571	>610	>610	>610	>610	>610		
	54.7	228	451	>625	486	>625	>625	166	333	>625	>625	>625	>625	>625			
	62.35	256	507	>640	547	>640		187	374	>640	>640	>640					
	65.63	270	534	>645	576	>645		197	394	>645	>645	>645					
	75.06	308	611		>655			225	451	>655							

m [kg]		CMP						DS			CM						
	s	50S	50M	50L	63S	63M	63L	56M	56L	56H	71S	71M	71L	90S	90M	90L	112S
S67	2	27	28	29	29	31	32	26	27	28	32	34	37	41	44	49	50
SF: + 6.5 kg / SA: + 1.0 kg / SAF: + 5.5 kg																	

CMP.. / DS.. / CM..		n_{epk}	η	c_T			
	i	[1/min]	[%]	S [Nm/°]	SF [Nm/°]	SA [Nm/°]	SAF [Nm/°]
S67 2	7.56	4500	91	-	-	-	-
	8.69	4500	90	-	-	-	-
	10.03	4500	90	-	-	-	-
	11.03	4500	90	-	-	-	-
	12.96	4500	90	-	-	-	-
	13.73	4500	89	-	-	-	-
	15.6	4500	89	-	-	-	-
	17.28	4500	89	-	-	-	-
	20.3	4500	84	-	-	-	-
	20.37	4500	88	-	-	-	-
	23.22	4500	88	-	-	-	-
	23.33	4500	83	-	-	-	-
	24.44	4500	88	-	-	-	-
	26.93	4500	83	-	-	-	-
	29.63	4500	83	-	-	-	-
	34.8	4500	82	-	-	-	-
	36.85	4500	82	-	-	-	-
	41.89	4500	81	-	-	-	-
	46.4	4500	81	-	-	-	-
	54.7	4500	80	-	-	-	-
	62.35	4500	79	-	-	-	-
	65.63	4500	79	-	-	-	-
	75.06	4500	79	-	-	-	-

CMP.. / DS.. / CM..							F_{Ramax}				F_{Rapk}			
	i	M_{amax} [Nm]	M_{apk} [Nm]	$M_{aNotaus}$ [Nm]	n_{ak} [1/min]	J_G 10^{-4} [kgm^2]	S [N]	SF [N]	SA [N]	SAF [N]	S [N]	SF [N]	SA [N]	SAF [N]
	7.56	295	375	502	26	5.4	3220	3890	2540	2540	9740	9740	12000	12000
	8.69	335	420	570	23	4.3	2860	3590	2020	2020	9460	9460	12000	12000
	10.03	340	450	578	20	3.3	3290	4050	2480	2480	9250	9250	12000	12000
	11.03	340	455	578	18	2.8	3660	4430	2890	2890	9210	9210	12000	12000
	12.96	340	455	578	15	2.2	4310	5110	3610	3610	9210	9210	12000	12000
	13.73	340	455	578	15	2.0	4510	5310	3870	3870	9210	9210	12000	12000
	15.6	340	455	578	13	1.5	4820	5640	4480	4480	9210	9210	12000	12000
	17.28	340	455	578	12	1.3	5080	5910	4990	4990	9210	9210	12000	12000
	20.3	425	490	723	10	4.0	5760	6650	6090	6090	8940	8940	12000	12000
	20.37	340	450	578	34	0.99	5520	6360	5700	5700	9250	9250	12000	12000
S67	23.22	340	450	578	47	0.71	5890	6740	6110	6110	9250	9250	12000	12000
2	23.33	480	515	816	9	3.2	5810	6800	6120	6120	8720	8720	12000	12000
	24.44	340	450	578	45	0.63	6040	6900	6270	6270	9250	9250	12000	12000
	26.93	480	535	816	7	2.6	6240	7240	6590	6590	8540	8540	12000	12000
	29.63	480	550	816	7	2.2	6540	7540	6920	6920	8390	8390	12000	12000
	34.8	480	575	816	14	1.8	7060	8080	7490	7490	8140	8140	12000	12000
	36.85	480	580	816	14	1.6	7250	8280	7710	7710	8080	8080	12000	12000
	41.89	480	595	816	12	1.3	7690	8740	8200	8200	7920	7920	12000	12000
	46.4	480	610	816	11	1.1	8060	9020	8600	8600	7740	7740	12000	12000
	54.7	480	625	816	9	0.84	8670	9020	9280	9280	7560	7560	12000	12000
	62.35	480	640	816	8	0.59	9020	9020	9850	9850	7370	7370	12000	12000
	65.63	480	645	816	8	0.53	9020	9020	10100	10100	6930	7300	12000	12000
	75.06	480	655	816	7	0.43	9020	9020	10700	10700	5930	7170	12000	12000

11.9 S 67 / CMP / DS / CM [mm]

02 015 00 07

S67..

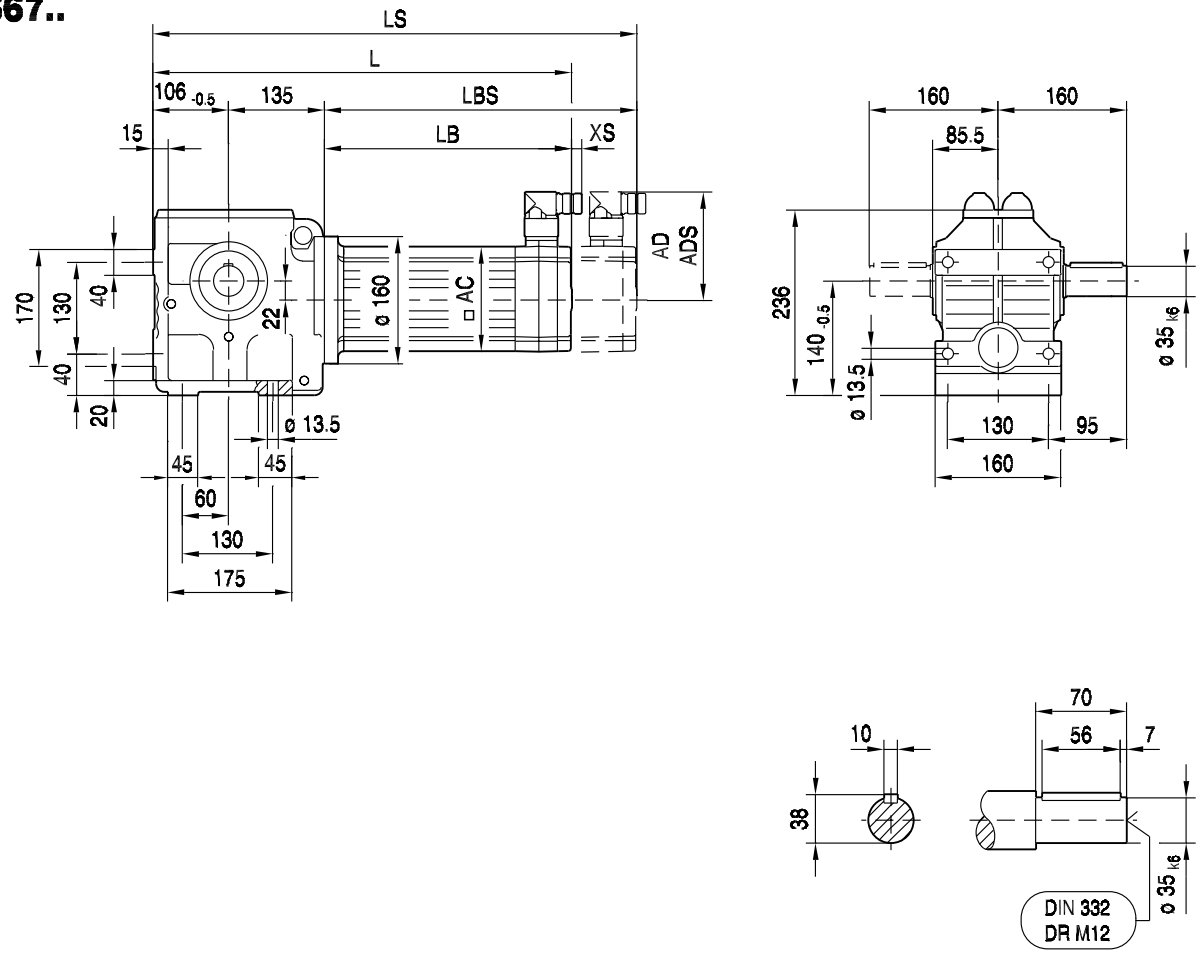

(→ 📖 150)	CMP50S	CMP50M	CMP50L	CMP63S	CMP63M	CMP63L		
AC	73	73	73	88	88	88		
AD	82	82	82	89	89	89		
ADS	82	82	82	89	89	89		
L	380	419	458	414	464	514		
LS	409	448	487	443	493	543		
LB	139	178	217	173	223	273		
LBS	168	207	246	202	252	302		
XS	18	18	18	14	14	14		

02 016 00 07

SF67..

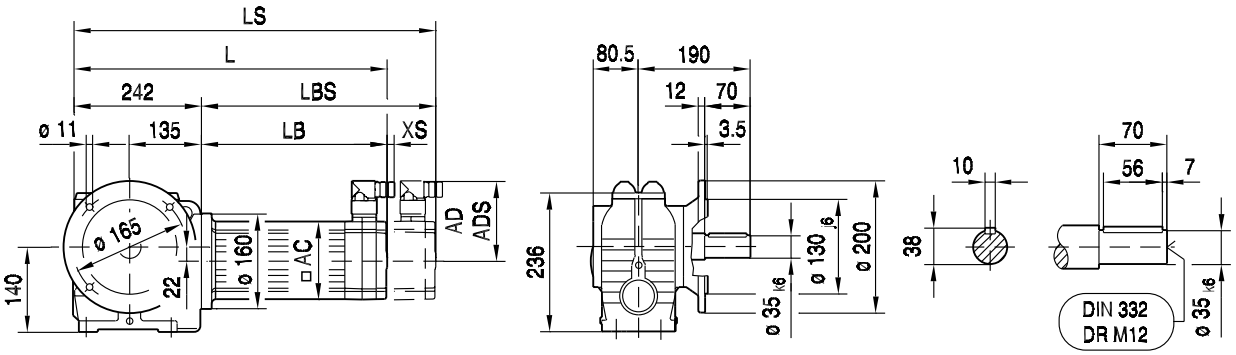

SAF67..

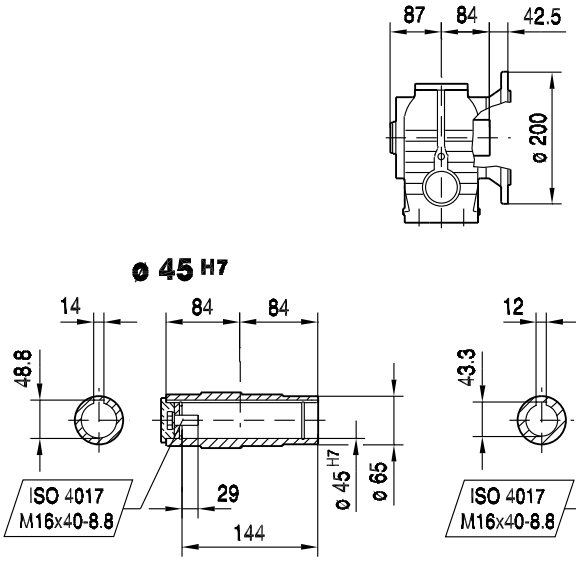

SHF67..

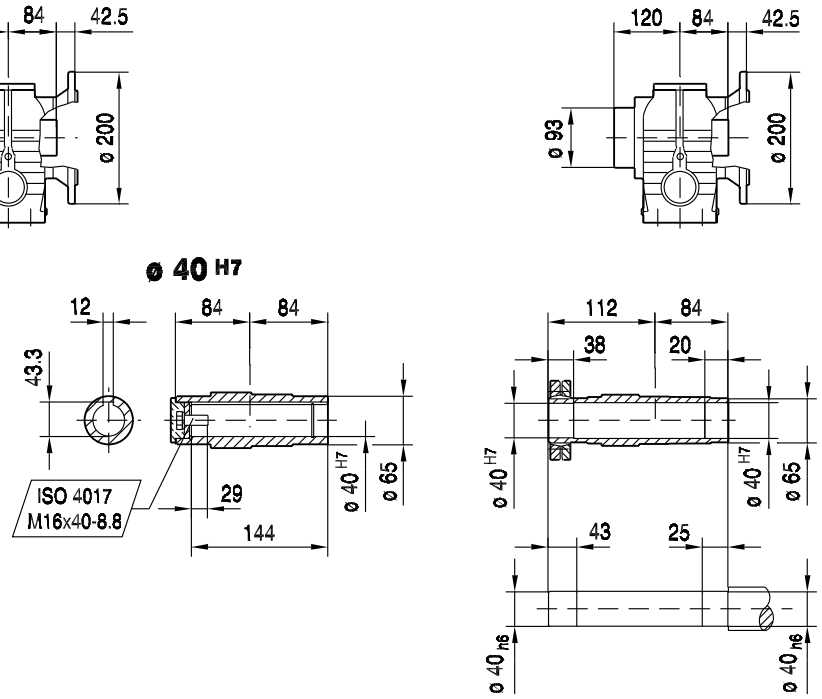

(→ 150)	CMP50S	CMP50M	CMP50L	CMP63S	CMP63M	CMP63L		
AC	73	73	73	88	88	88		
AD	82	82	82	89	89	89		
ADS	82	82	82	89	89	89		
L	381	420	459	415	465	515		
LS	410	449	488	444	494	544		
LB	139	178	217	173	223	273		
LBS	168	207	246	202	252	302		
XS	18	18	18	14	14	14		

02 017 00 07

SA67..

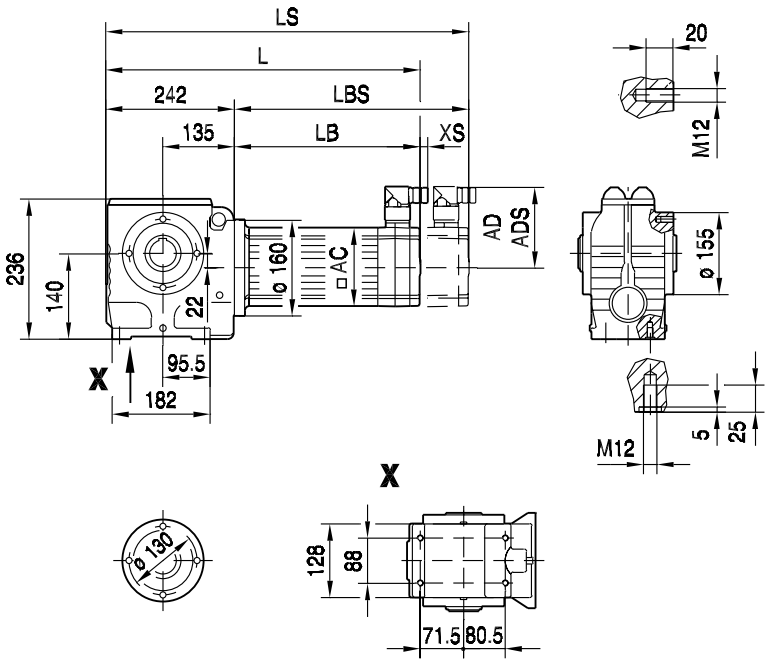

S.. /T..

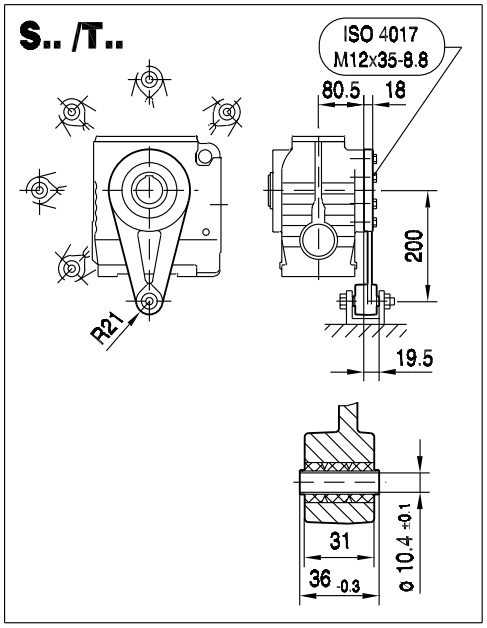

SA67..

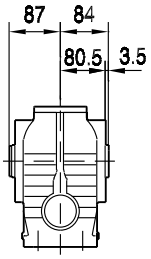

SH67..

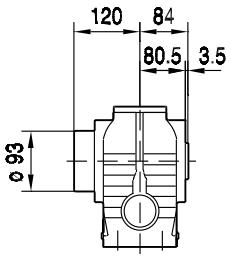

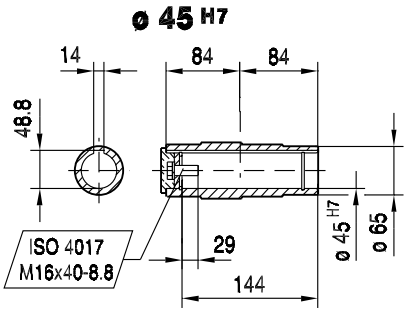

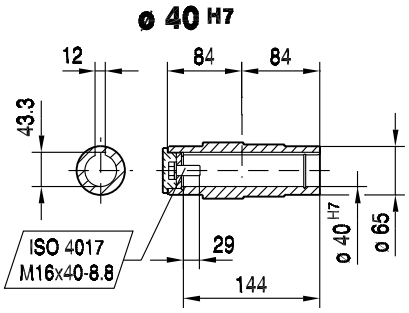

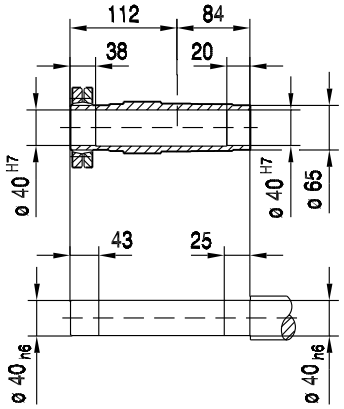

(→ 📖 150)	CMP50S	CMP50M	CMP50L	CMP63S	CMP63M	CMP63L		
AC	73	73	73	88	88	88		
AD	82	82	82	89	89	89		
ADS	82	82	82	89	89	89		
L	381	420	459	415	465	515		
LS	410	449	488	444	494	544		
LB	139	178	217	173	223	273		
LBS	168	207	246	202	252	302		
XS	18	18	18	14	14	14		

02 018 00 07

SAZ67..

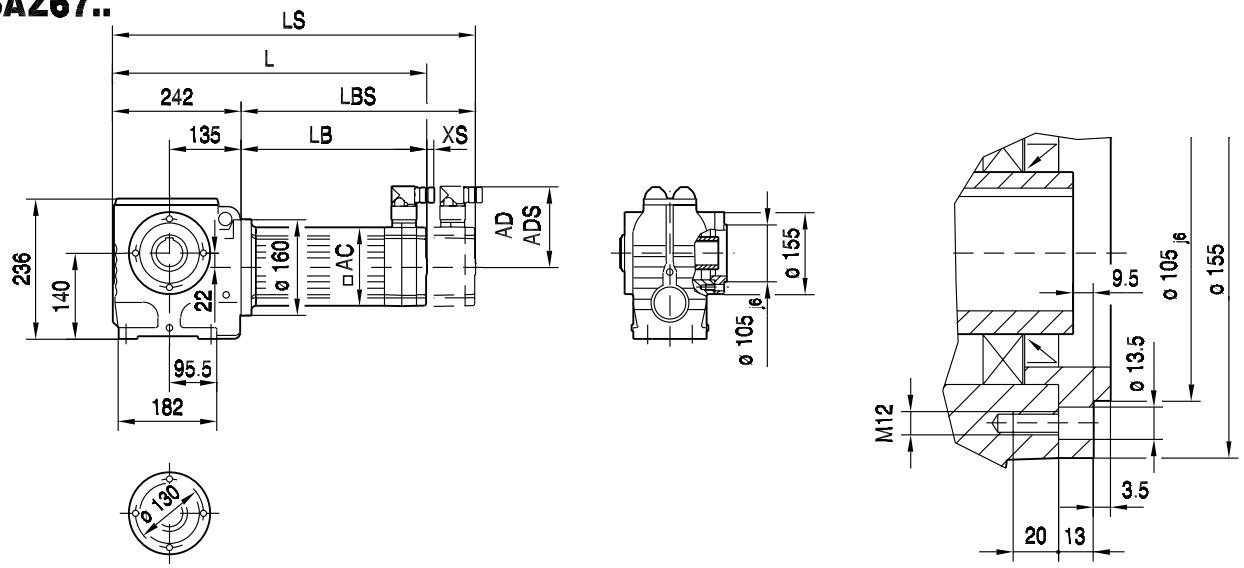

SAZ67..

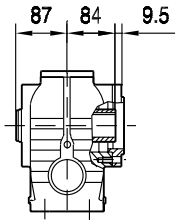

SHZ67..

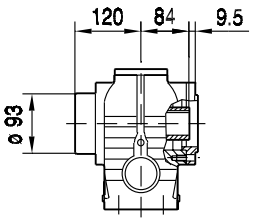

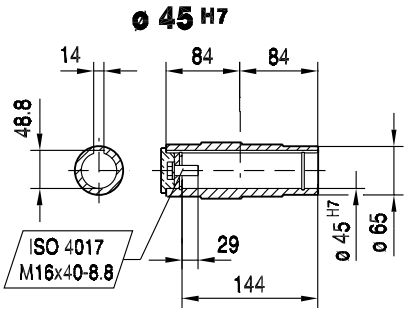

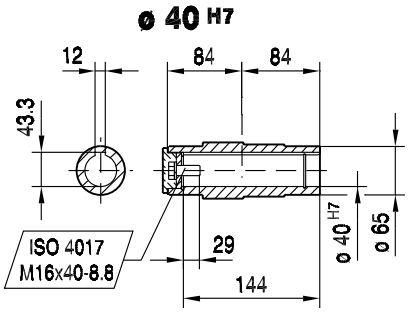

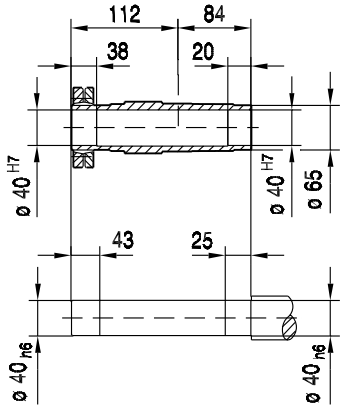

(→ 150)	CMP50S	CMP50M	CMP50L	CMP63S	CMP63M	CMP63L		
AC	73	73	73	88	88	88		
AD	82	82	82	89	89	89		
ADS	82	82	82	89	89	89		
L	381	420	459	415	465	515		
LS	410	449	488	444	494	544		
LB	139	178	217	173	223	273		
LBS	168	207	246	202	252	302		
XS	18	18	18	14	14	14		

02 019 00 07

ST67..

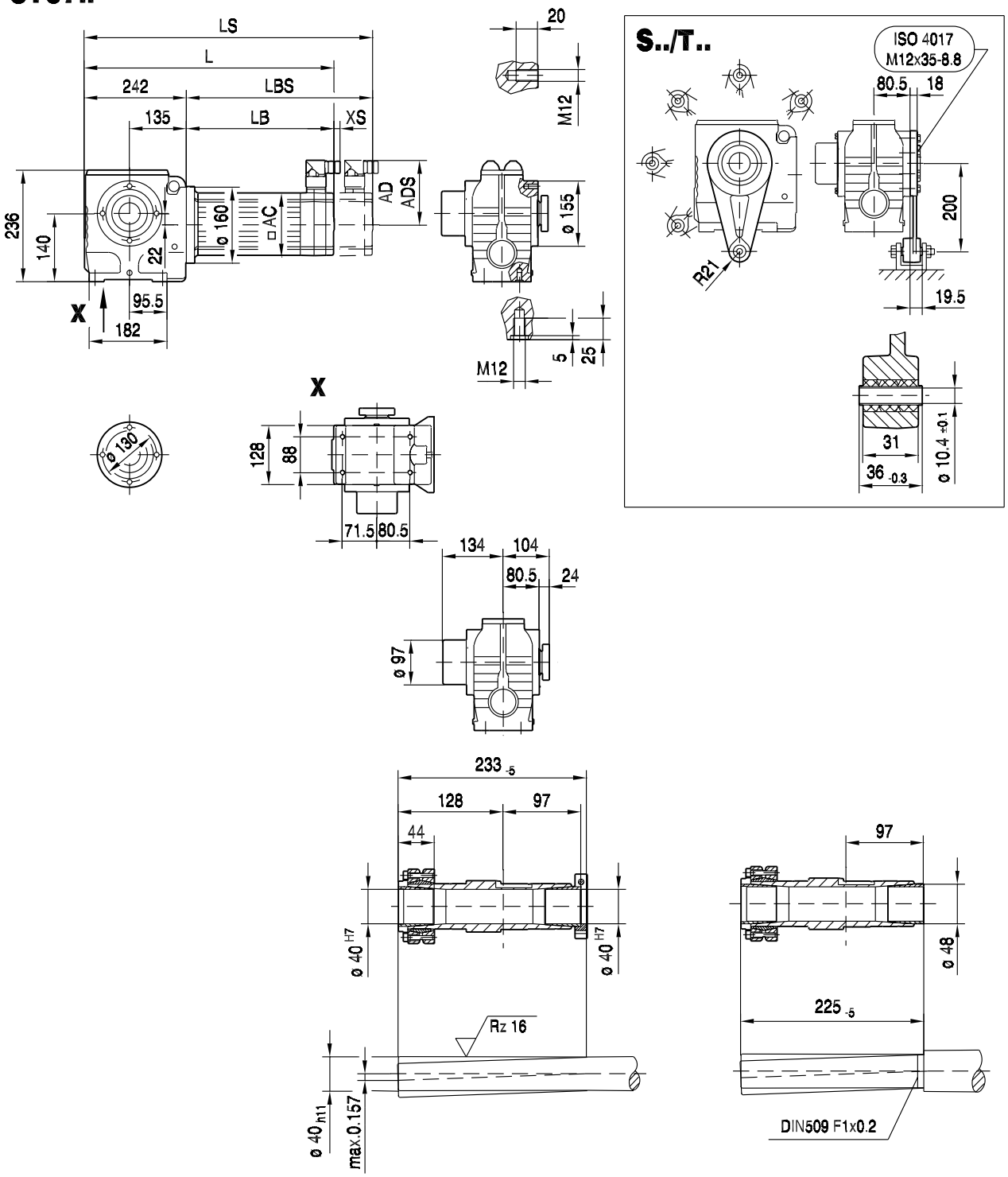

(→ 150)	CMP50S	CMP50M	CMP50L	CMP63S	CMP63M	CMP63L		
AC	73	73	73	88	88	88		
AD	82	82	82	89	89	89		
ADS	82	82	82	89	89	89		
L	381	420	459	415	465	515		
LS	410	449	488	444	494	544		
LB	139	178	217	173	223	273		
LBS	168	207	246	202	252	302		
XS	18	18	18	14	14	14		

S67..

05 042 01 01

DS56..

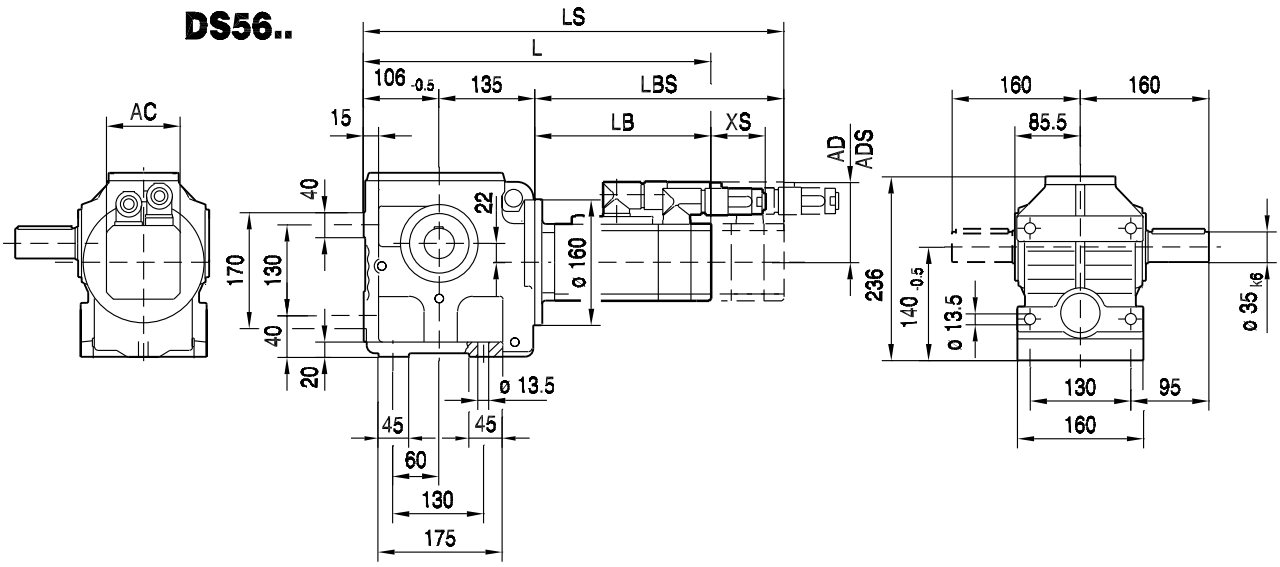

CM..

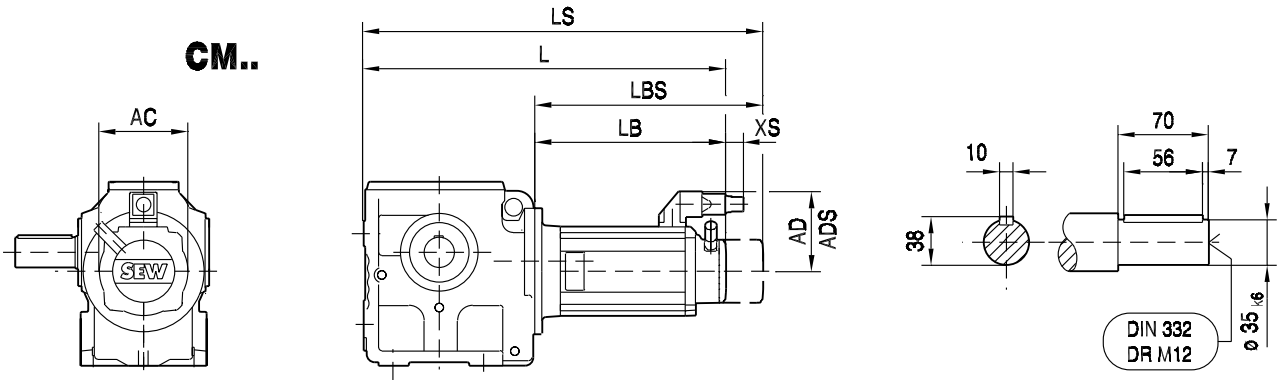

(→ 📖 150)	DS56H	CM71S	CM71M	CM71L	CM90S	CM90M	CM90L	CM112S			
AC	73	117	117	117	142	142	142	186			
AD	77	122	122	122	140	140	140	162			
ADS	77	122	122	122	140	140	140	162			
L	507	473	493	533	525	552	610	565			
LS	507	555	575	615	621	648	706	655			
LB	266	232	252	292	284	311	369	324			
LBS	266	314	334	374	380	407	465	414			
XS	51	45	45	45	50	50	50	36			

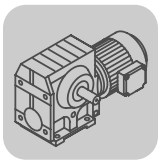

S..CMP, DS, CM
S 67 / CMP / DS / CM [mm]

05 043 01 01

SF67..
DS56..

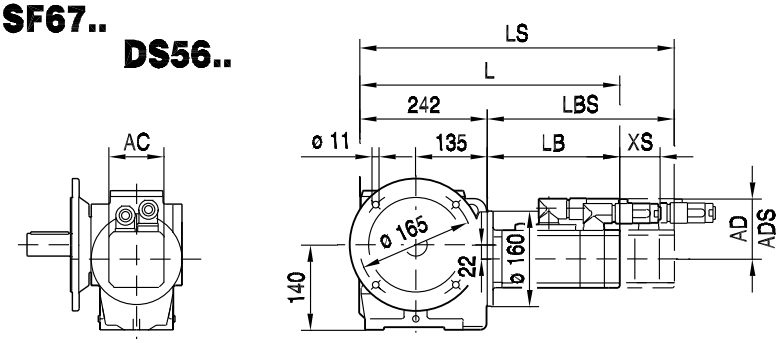

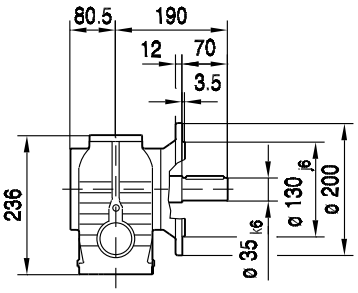

CM..

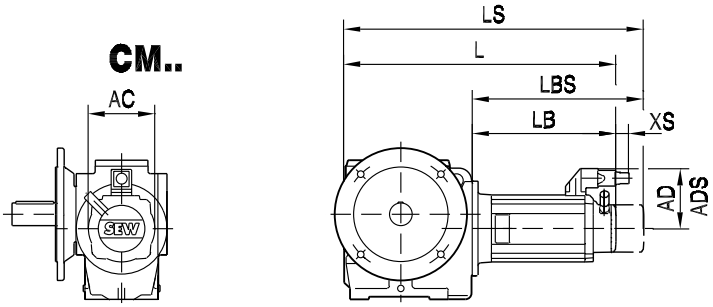

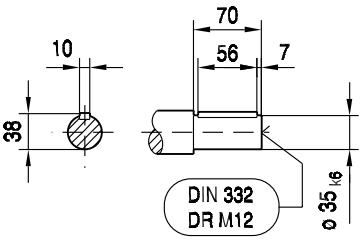

SAF67..

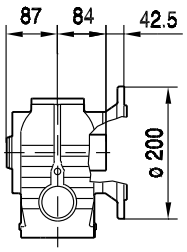

SHF67..

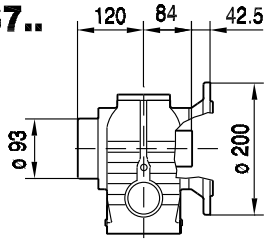

ø 45 H7

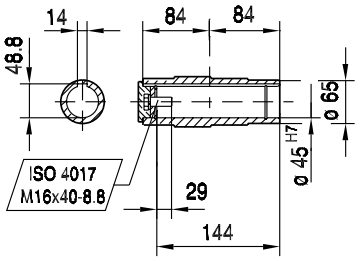

ø 40 H7

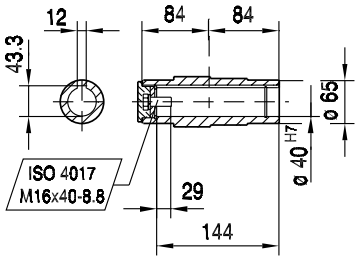

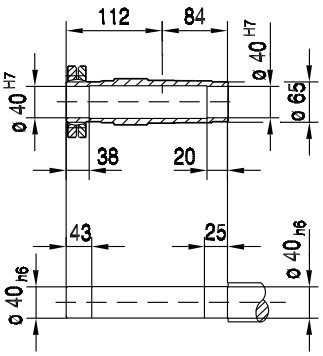

(→ 📖 150)	DS56H	CM71S	CM71M	CM71L	CM90S	CM90M	CM90L	CM112S			
AC	73	117	117	117	142	142	142	186			
AD	77	122	122	122	140	140	140	162			
ADS	77	122	122	122	140	140	140	162			
L	508	474	494	534	526	553	611	566			
LS	508	556	576	616	622	649	707	656			
LB	266	232	252	292	284	311	369	324			
LBS	266	314	334	374	380	407	465	414			
XS	51	45	45	45	50	50	50	36			

28 013 01 01

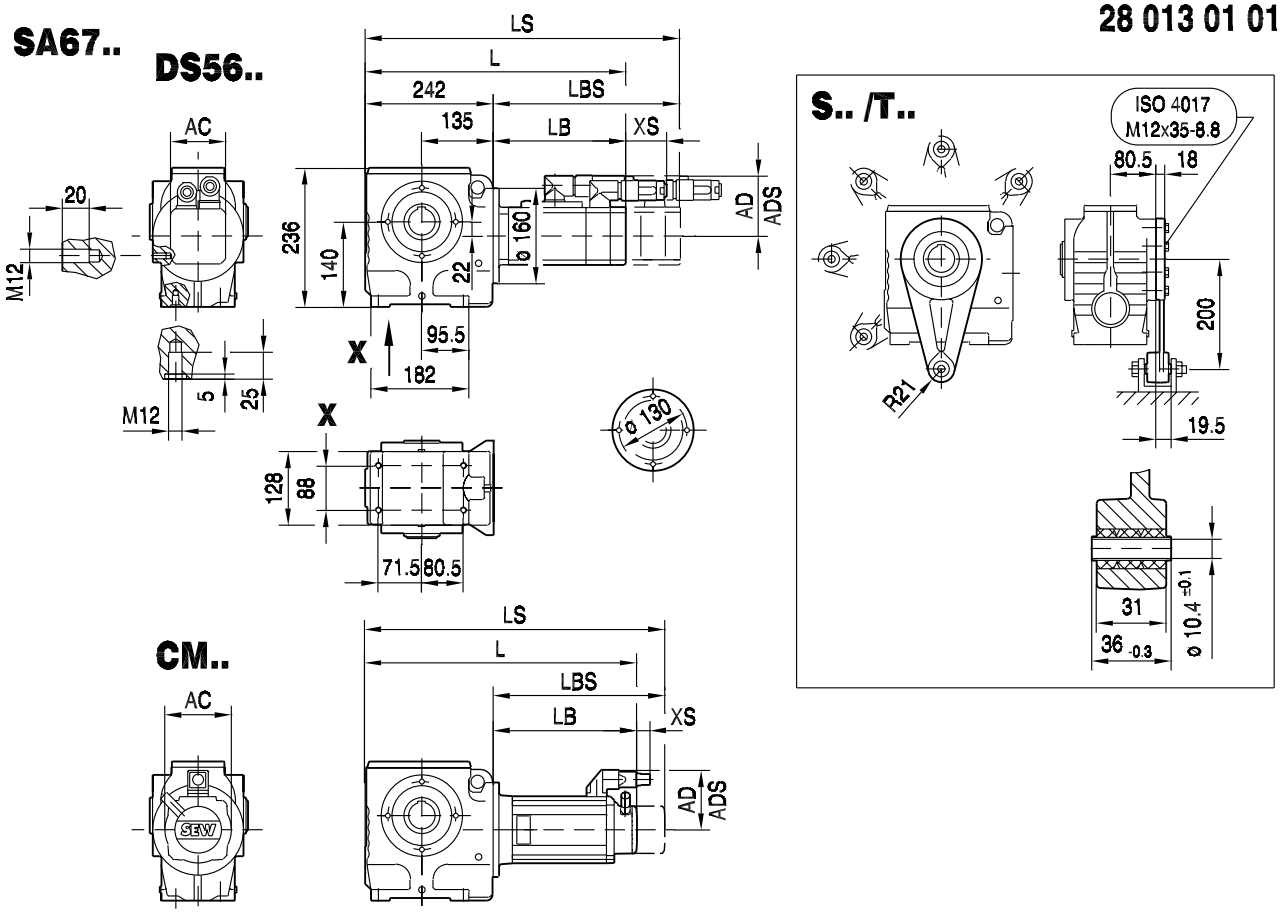

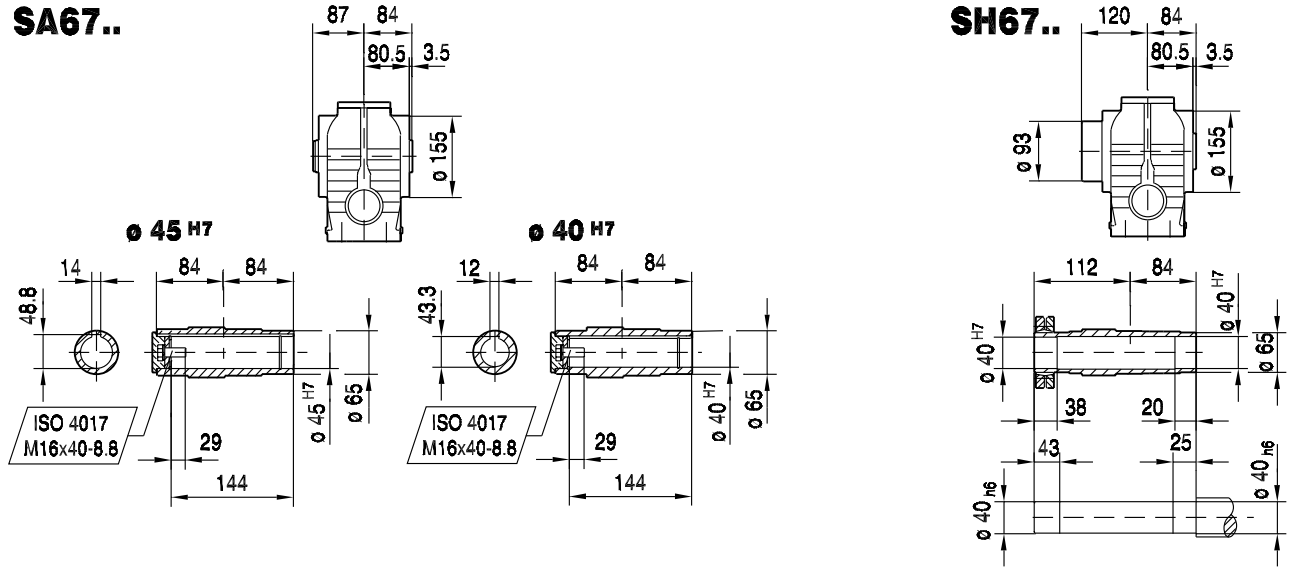

(→ 150)	DS56H	CM71S	CM71M	CM71L	CM90S	CM90M	CM90L	CM112S			
AC	73	117	117	117	142	142	142	186			
AD	77	122	122	122	140	140	140	162			
ADS	77	122	122	122	140	140	140	162			
L	508	474	494	534	526	553	611	566			
LS	508	556	576	616	622	649	707	656			
LB	266	232	252	292	284	311	369	324			
LBS	266	314	334	374	380	407	465	414			
XS	51	45	45	45	50	50	50	36			

28 018 00 04

SAZ67.. DS56..

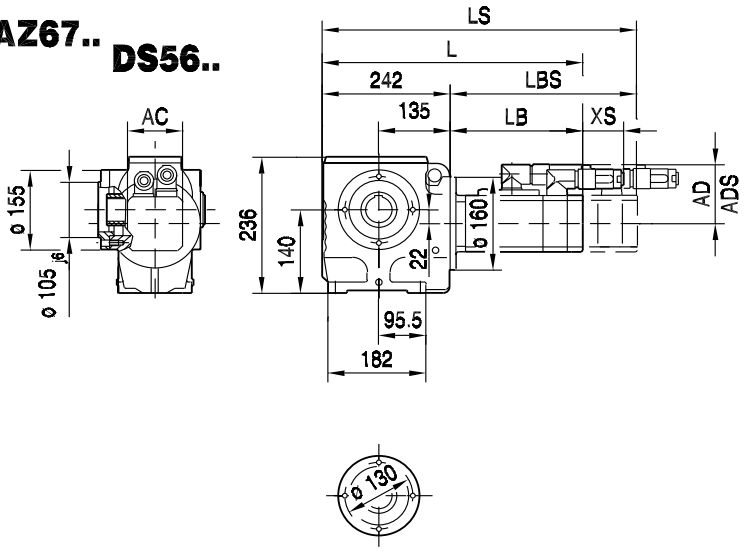

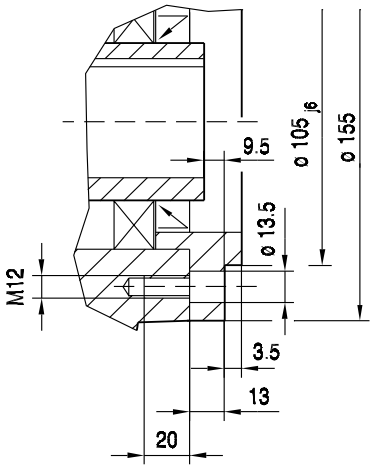

CM..

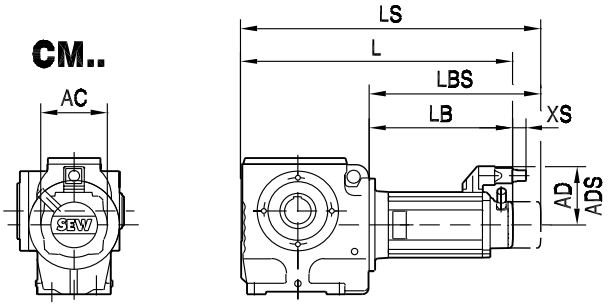

SAZ67..

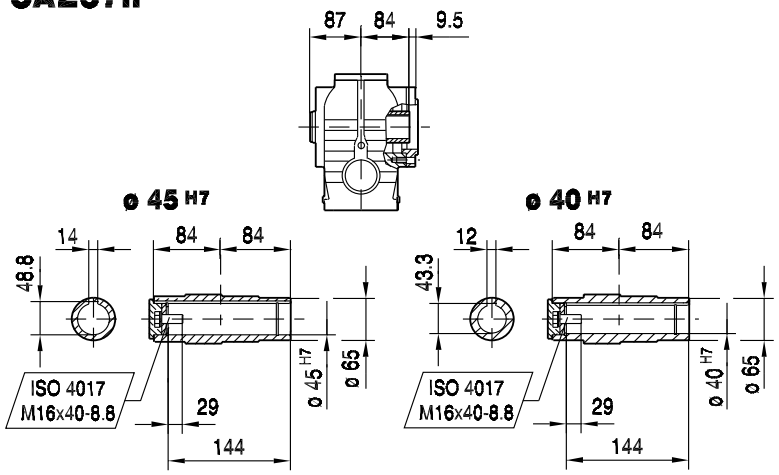

SHZ67..

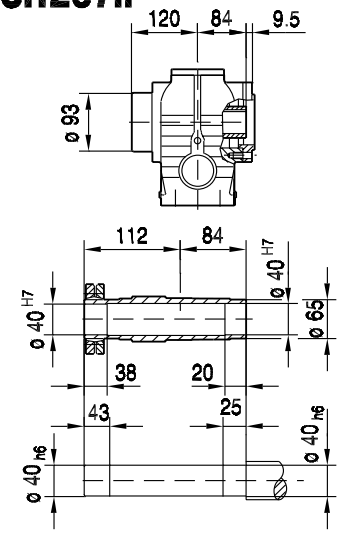

(→ 📖 150)	DS56H	CM71S	CM71M	CM71L	CM90S	CM90M	CM90L	CM112S			
AC	73	117	117	117	142	142	142	186			
AD	77	122	122	122	140	140	140	162			
ADS	77	122	122	122	140	140	140	162			
L	508	474	494	534	526	553	611	566			
LS	508	556	576	616	622	649	707	656			
LB	266	232	252	292	284	311	369	324			
LBS	266	314	334	374	380	407	465	414			
XS	51	45	45	45	50	50	50	36			

28 022 00 04

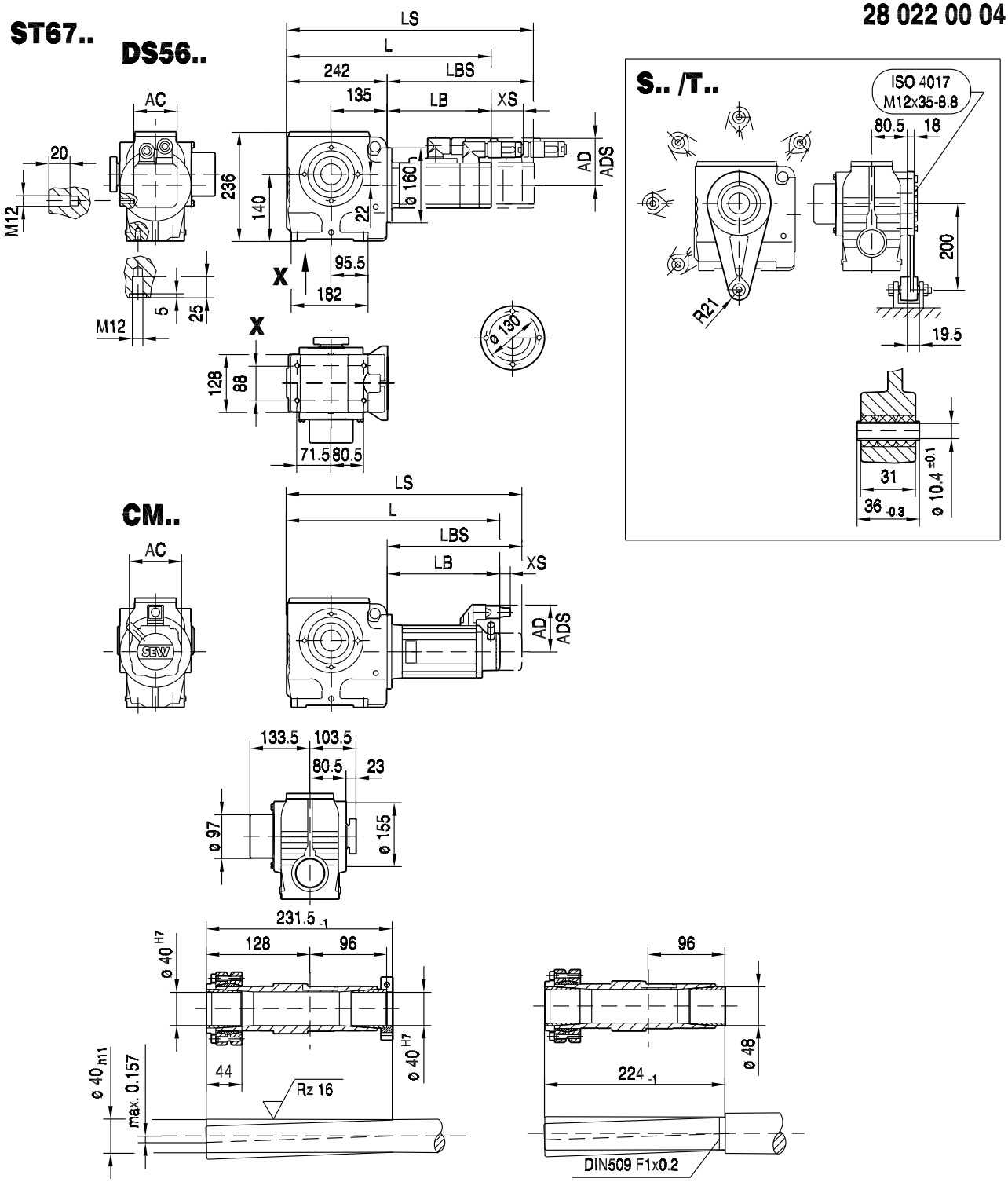

(→ 📖 150)	DS56H	CM71S	CM71M	CM71L	CM90S	CM90M	CM90L	CM112S			
AC	73	117	117	117	142	142	142	186			
AD	77	122	122	122	140	140	140	162			
ADS	77	122	122	122	140	140	140	162			
L	508	474	494	534	526	553	611	566			
LS	508	556	576	616	622	649	707	656			
LB	266	232	252	292	284	311	369	324			
LBS	266	314	334	374	380	407	465	414			
XS	51	45	45	45	50	50	50	36			

12 W37..CMP, DS, CM

12.1 W37..CMP / DS / CM

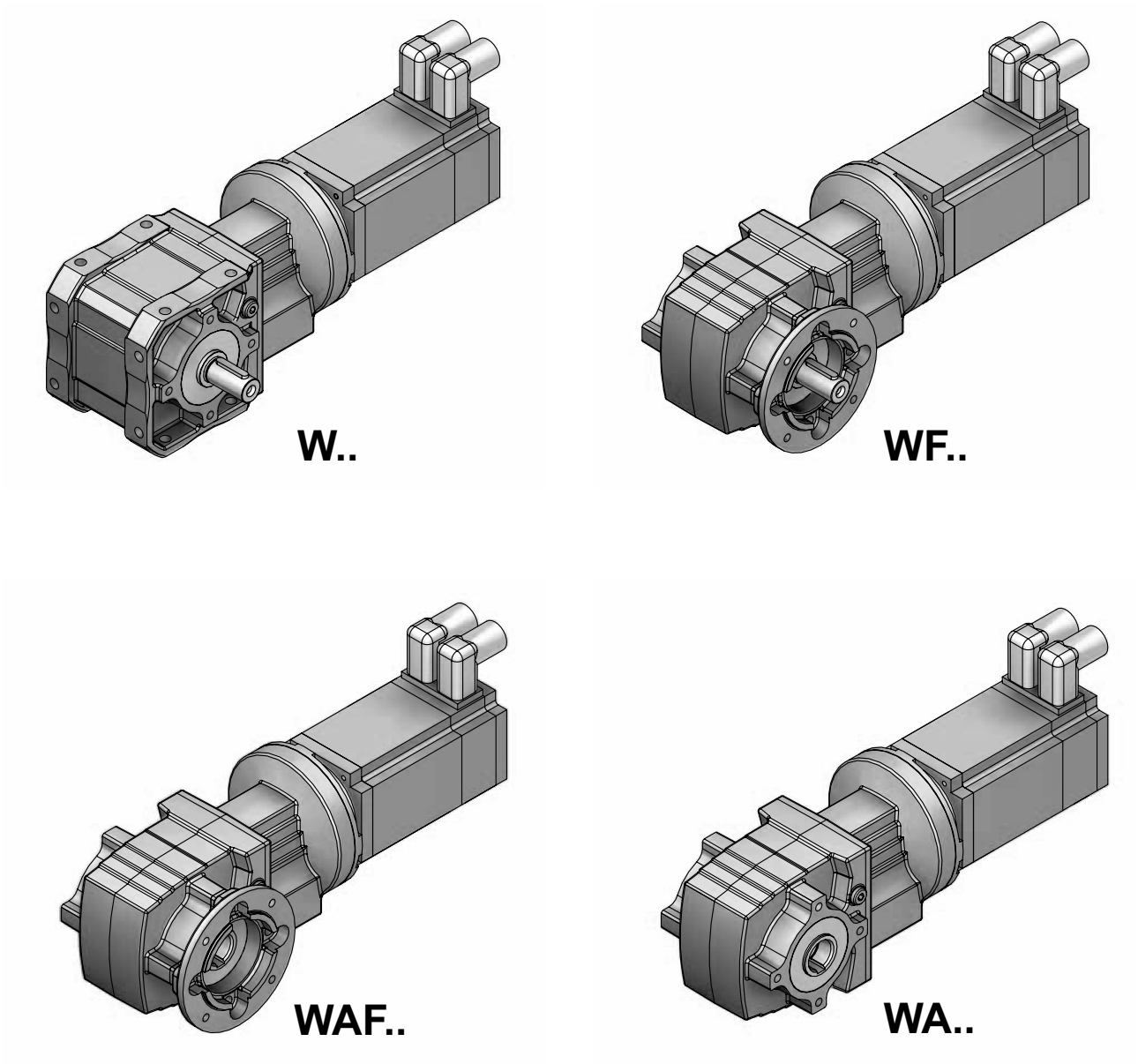

63324axx

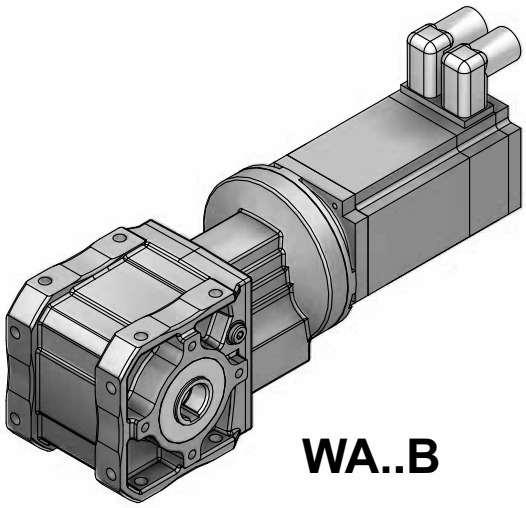

WA..B

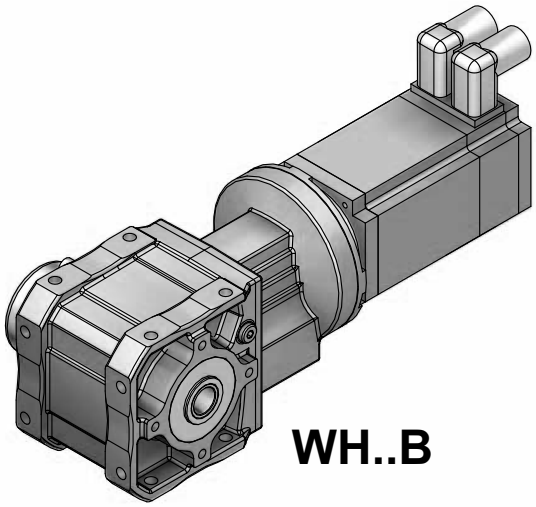

WH..B

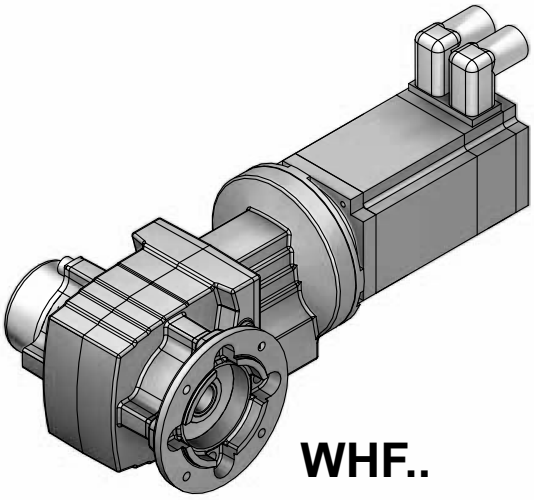

WHF..

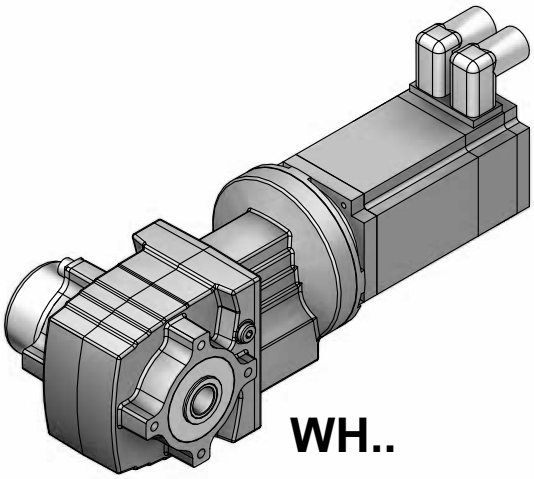

WH..

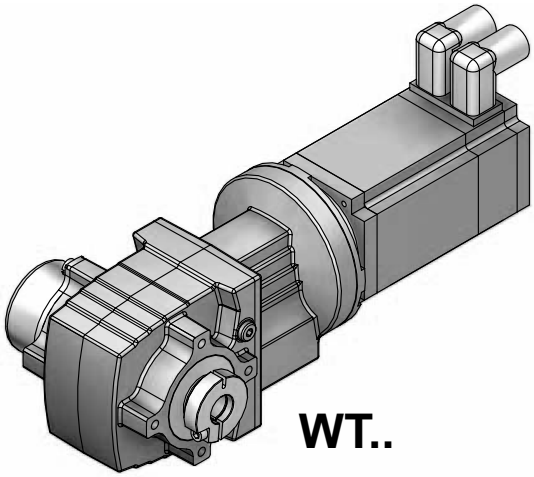

WT..

63325axx

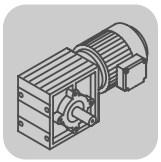

12.2 W37 / CMP / DS / CM [Nm]

M_{aDyn} [Nm]		CMP							DS			CM			
	i	40M	50S	50M	50L	63S	63M	63L	56M	56L	56H	71S	71M	71L	90S
W37 2	3.2	11	15	31	46	33	64	>84	11	23	45	49	64	>84	>84
	3.93	14	19	37	56	40	77	>84	14	27	55	60	78	>84	>84
	5.11	18	24	48	72	52	>84	>84	18	36	71	78	>84	>84	>84
	5.77	20	27	54	81	58	>84	>84	20	40	80	>84	>84	>84	>84
	6.97	24	33	65	>84	70	>84	>84	24	48	>84	>84	>84	>84	>84
	8.55	30	40	80	>84	>84	>84		30	59	>84	>84	>84		
	9.92	34	47	>84		>84			34	69	>84				
	10.67	35	48	96	>108	103	>108	>108	35	71	>108	>108	>108	>108	>108
	11.65	40	55						40	81					
	12.7	44	60						44	>84					
	13.89	45	62	>108	>108	>108	>108	>108	45	91	>108	>108	>108	>108	>108
	15.67	51	70	>108	>108	>108	>108	>108	51	102	>108	>108	>108	>108	>108
	18.94	61	84	>108	>108	>108	>108	>108	61	>108	>108	>108	>108	>108	>108
	21.33	62	84	>102	>102	>102	>102	>102	62	>102	>102	>102	>102	>102	>102
	23.25	74	102	>108	>108	>108	>108		74	>108	>108	>108	>108		
	26.96	85	>108	>108		>108			85	>108	>108				
	27.78	78	107	>111	>111	>111	>111	>111	78	>111	>111	>111	>111	>111	>111
	31.33	87	>117	>117	>117	>117	>117	>117	87	>117	>117	>117	>117	>117	>117
	31.67	99	>108						99	>108					
	34.52	108	>108						108	>108					
	37.88	104	>126	>126	>126	>126	>126	>126	104	>126	>126	>126	>126	>126	>126
	46.49	124	>130	>130	>130	>130	>130		124	>130	>130	>130	>130		
	53.92	>130	>130	>130		>130			>130	>130	>130				
	63.33	>126	>126						>126	>126					
	69.05	>130	>130						>130	>130					

m [kg]		CMP							DS			CM			
	s	40M	50S	50M	50L	63S	63M	63L	56M	56L	56H	71S	71M	71L	90S
W37	2	7.4	9.2	10	11	11	13	14	7.8	8.8	9.5	14	15	19	23
WF: + 0.0 kg / WA: + 0.0 kg / WAF: + 0.0 kg															

CMP.. / DS.. / CM..				c_T			
	i	n_{epk} [1/min]	η [%]	W [Nm/°]	WF [Nm/°]	WA [Nm/°]	WAF [Nm/°]
W37 2	3.2	4500	93	-	-	-	-
	3.93	4500	92	-	-	-	-
	5.11	4500	92	-	-	-	-
	5.77	4500	91	-	-	-	-
	6.97	4500	91	-	-	-	-
	8.55	4500	91	-	-	-	-
	9.92	4500	91	-	-	-	-
	10.67	4500	87	-	-	-	-
	11.65	4500	91	-	-	-	-
	12.7	4500	91	-	-	-	-
	13.89	4500	86	-	-	-	-
	15.67	4500	86	-	-	-	-
	18.94	4500	85	-	-	-	-
	21.33	4500	76	-	-	-	-
	23.25	4500	84	-	-	-	-
	26.96	4500	83	-	-	-	-
	27.78	4500	74	-	-	-	-
	31.33	4500	73	-	-	-	-
	31.67	4500	82	-	-	-	-
	34.52	4500	82	-	-	-	-
	37.88	4500	72	-	-	-	-
	46.49	4500	70	-	-	-	-
	53.92	4500	69	-	-	-	-
	63.33	4500	67	-	-	-	-
	69.05	4500	67	-	-	-	-

CMP.. / DS.. / CM..							F_{Ramax}				F_{Rapk}			
	i	M_{amax} [Nm]	M_{apk} [Nm]	$M_{aNotaus}$ [Nm]	n_{ak} [1/min]	J_G 10^{-4} [kgm^2]	W [N]	WF [N]	WA [N]	WAF [N]	W [N]	WF [N]	WA [N]	WAF [N]
W37 2	3.2	70	84	119	2188	2.0	2220	2350	2050	2050	3690	3690	5000	5000
	3.93	70	84	119	1781	1.4	2410	2550	2240	2240	3690	3690	5000	5000
	5.11	70	84	119	1370	0.85	2680	2820	2490	2490	3690	3690	5000	5000
	5.77	70	84	119	1213	0.68	2810	2950	2620	2620	3690	3690	5000	5000
	6.97	70	84	119	1004	0.48	3020	3170	2830	2830	3690	3690	5000	5000
	8.55	70	84	119	819	0.33	3270	3420	3070	3070	3690	3690	5000	5000
	9.92	70	84	119	706	0.25	3460	3620	3250	3250	3690	3690	5000	5000
	10.67	90	108	153	150	0.78	2880	3140	2530	2530	3360	3360	5000	5000
	11.65	70	84	119	601	0.19	3680	3830	3460	3460	3690	3690	5000	5000
	12.7	70	84	119	551	0.16	3800	3830	3580	3580	3690	3690	5000	5000
	13.89	90	108	153	151	0.50	3250	3510	2890	2890	3360	3360	5000	5000
	15.67	90	108	153	147	0.41	3430	3610	3070	3070	3360	3360	5000	5000
	18.94	90	108	153	148	0.29	3610	3610	3360	3360	3360	3360	5000	5000
	21.33	85	102	144	66	0.71	3680	3680	3400	3400	3450	3450	5000	5000
	23.25	90	108	153	146	0.21	3610	3610	3690	3690	3360	3360	5000	5000
	26.96	90	108	153	145	0.16	3610	3610	3950	3950	3360	3360	5000	5000
	27.78	93	111	158	50	0.46	3580	3580	3710	3710	3300	3300	5000	5000
	31.33	98	117	166	45	0.38	3510	3510	3840	3840	2960	2960	5000	5000
	31.67	90	108	153	145	0.12	3610	3610	4240	4240	3360	3360	5000	5000
	34.52	90	108	153	145	0.11	3610	3610	4410	4410	3360	3360	5000	5000
	37.88	105	126	178	37	0.27	3400	3400	4080	4080	2080	2080	5000	5000
	46.49	110	130	187	32	0.19	3320	3320	4410	4410	1490	1490	5000	5000
	53.92	110	130	187	32	0.15	3320	3320	4730	4730	1490	1490	5000	5000
	63.33	105	126	178	36	0.12	3400	3400	5000	5000	2080	2080	5000	5000
	69.05	110	130	187	32	0.10	3320	3320	5000	5000	1490	1490	5000	5000

12.3 W37 / *CMP / DS / CM [mm]*

20 031 00 07

W37..

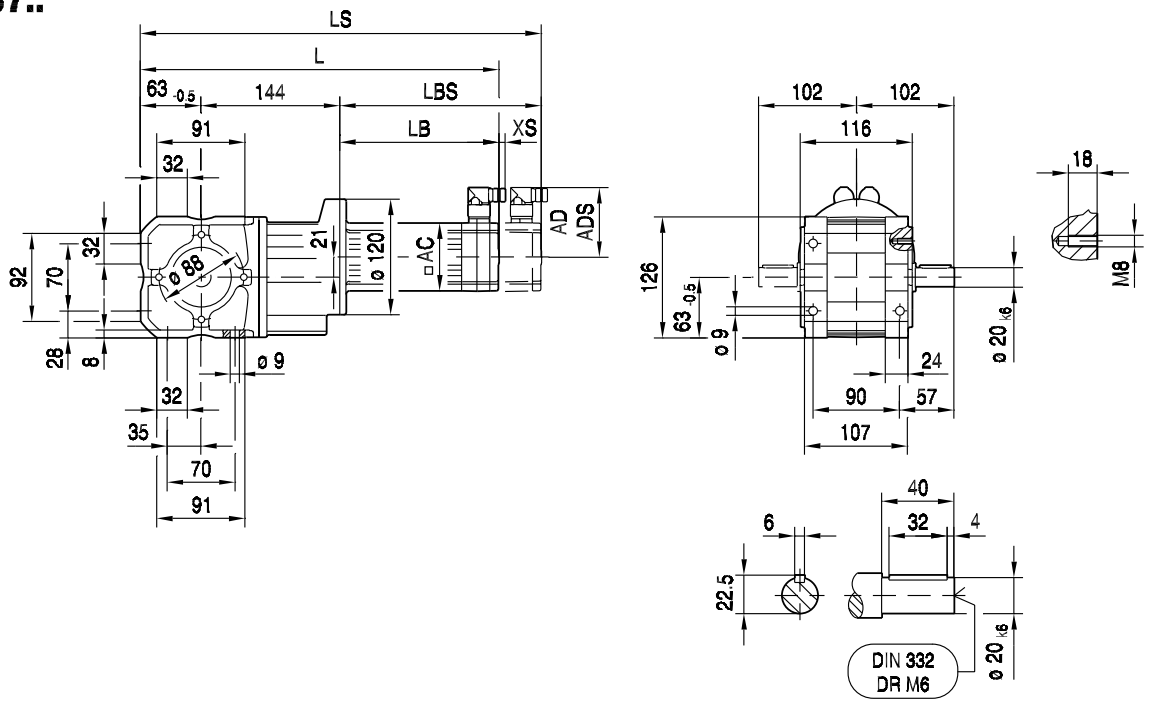

WA37B..

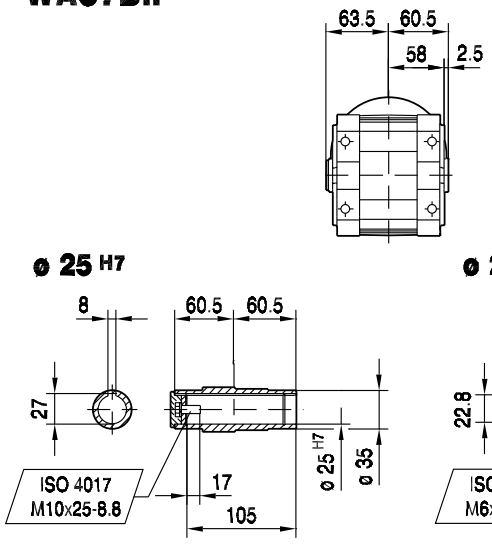

WH37B..

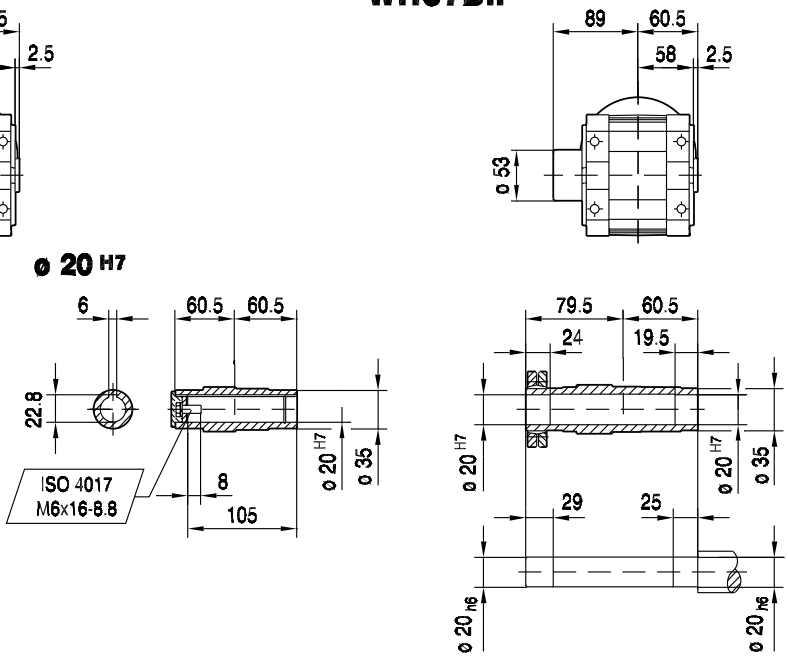

(→ 📖 150)	CMP40M	CMP50S	CMP50M	CMP50L	CMP63S	CMP63M	CMP63L	
AC	57	73	73	73	88	88	88	
AD	75	82	82	82	89	89	89	
ADS	75	82	82	82	89	89	89	
L	350	352	391	430	387	437	490	
LS	380	381	420	459	415	465	519	
LB	143	145	184	223	180	230	283	
LBS	173	174	213	252	208	258	312	
XS	19	18	18	18	14	14	14	

20 032 00 07

WF37..

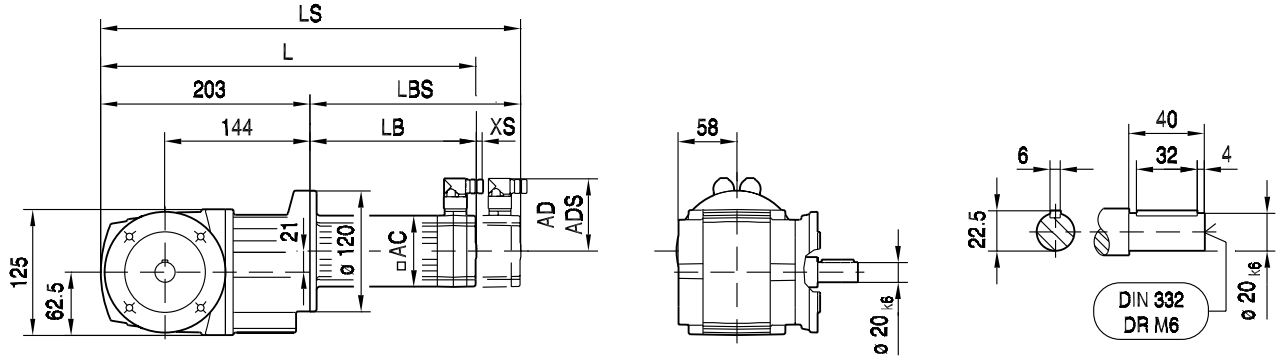

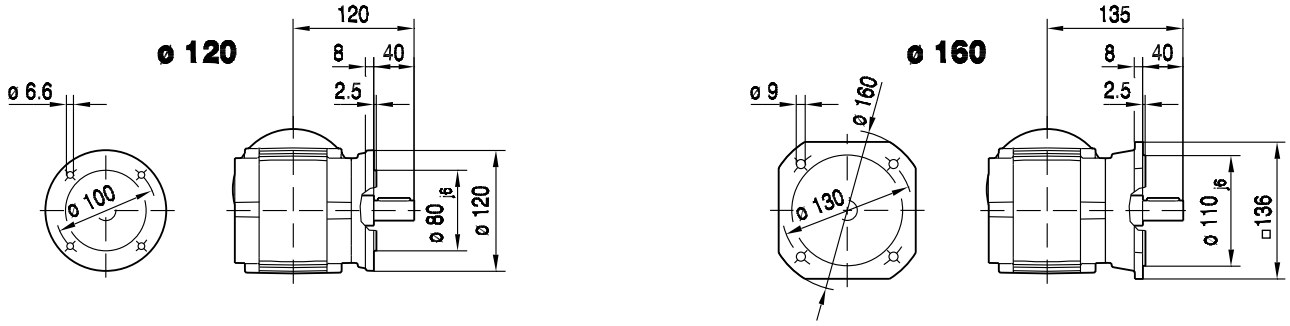

WAF37..

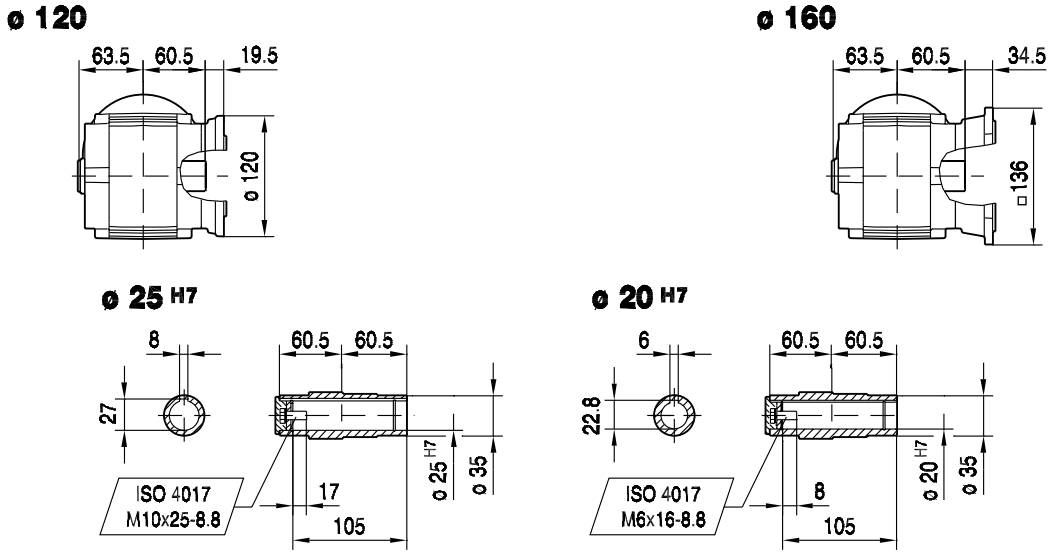

(→ 150)	CMP40M	CMP50S	CMP50M	CMP50L	CMP63S	CMP63M	CMP63L	
AC	57	73	73	73	88	88	88	
AD	75	82	82	82	89	89	89	
ADS	75	82	82	82	89	89	89	
L	346	348	387	426	383	433	486	
LS	376	377	416	455	411	461	515	
LB	143	145	184	223	180	230	283	
LBS	173	174	213	252	208	258	312	
XS	19	18	18	18	14	14	14	

20 033 00 07

WHF37..

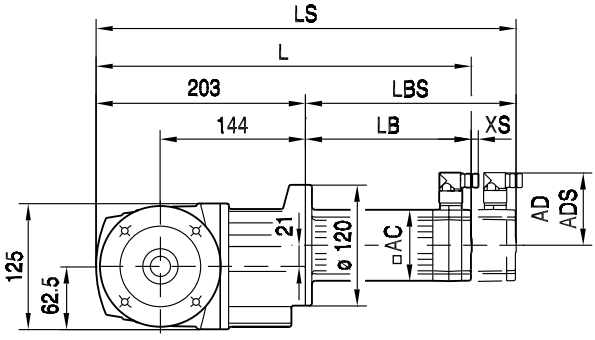

ø 120

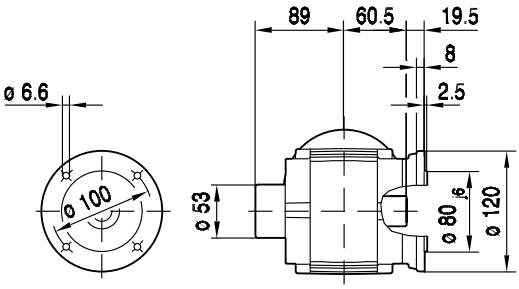

ø 160

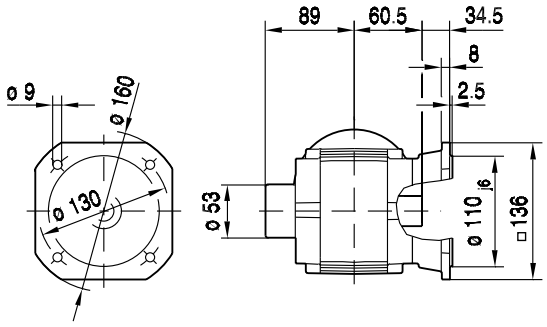

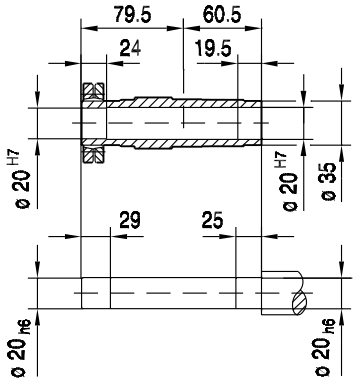

(→ 📖 150)	CMP40M	CMP50S	CMP50M	CMP50L	CMP63S	CMP63M	CMP63L	
AC	57	73	73	73	88	88	88	
AD	75	82	82	82	89	89	89	
ADS	75	82	82	82	89	89	89	
L	346	348	387	426	383	433	486	
LS	376	377	416	455	411	461	515	
LB	143	145	184	223	180	230	283	
LBS	173	174	213	252	208	258	312	
XS	19	18	18	18	14	14	14	

20 034 00 07

WA37..

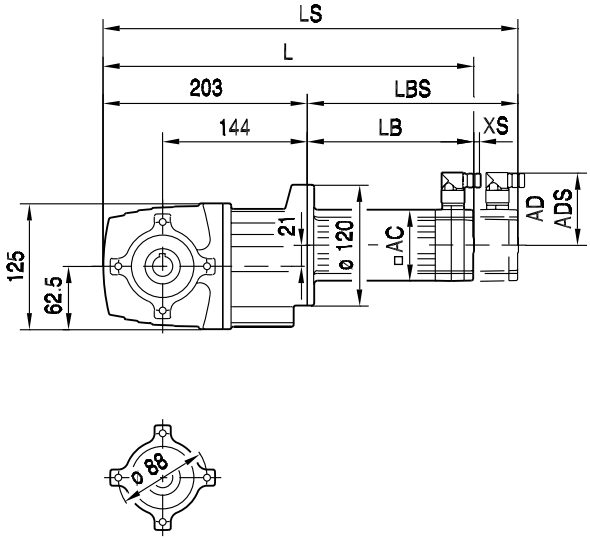

W../T..

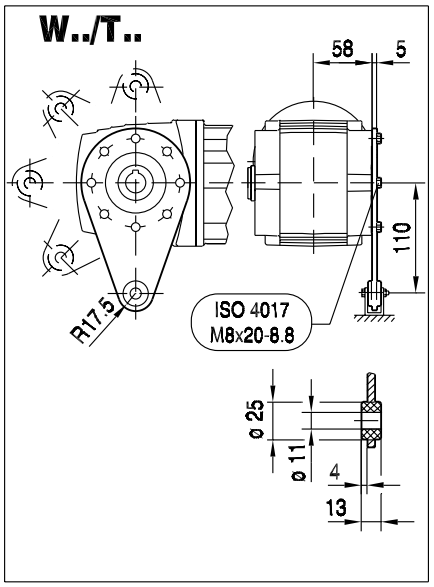

WA37..

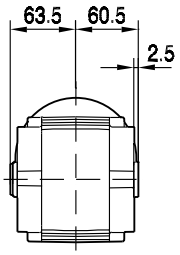

ø 25 H7

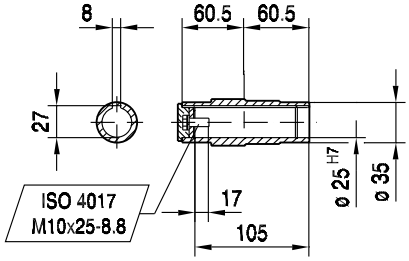

ø 20 H7

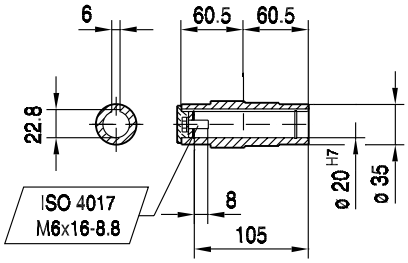

WH37..

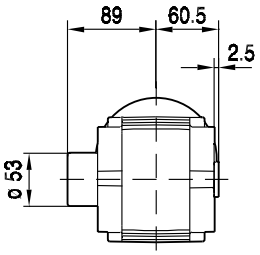

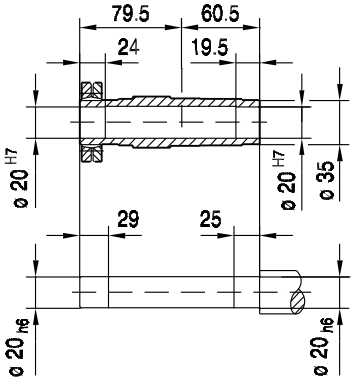

(→ 150)	CMP40M	CMP50S	CMP50M	CMP50L	CMP63S	CMP63M	CMP63L	
AC	57	73	73	73	88	88	88	
AD	75	82	82	82	89	89	89	
ADS	75	82	82	82	89	89	89	
L	346	348	387	426	383	433	486	
LS	376	377	416	455	411	461	515	
LB	143	145	184	223	180	230	283	
LBS	173	174	213	252	208	258	312	
XS	19	18	18	18	14	14	14	

20 035 00 07

WT37..

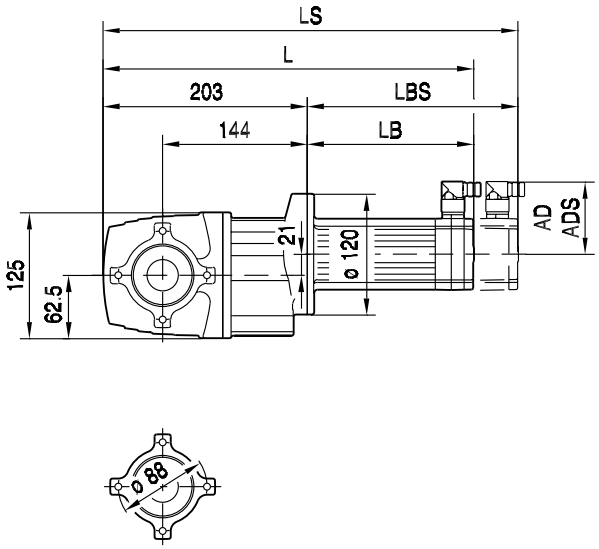

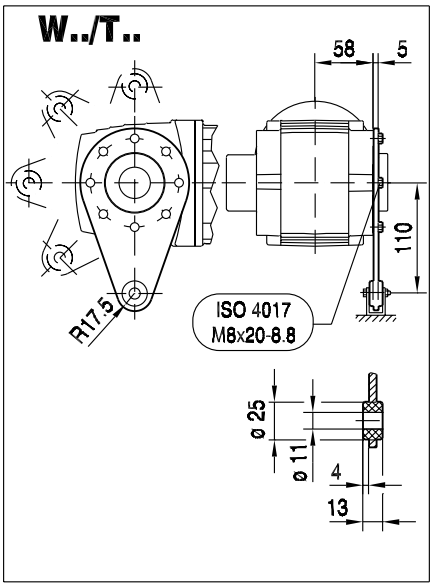

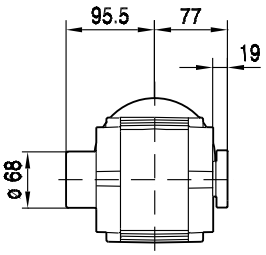

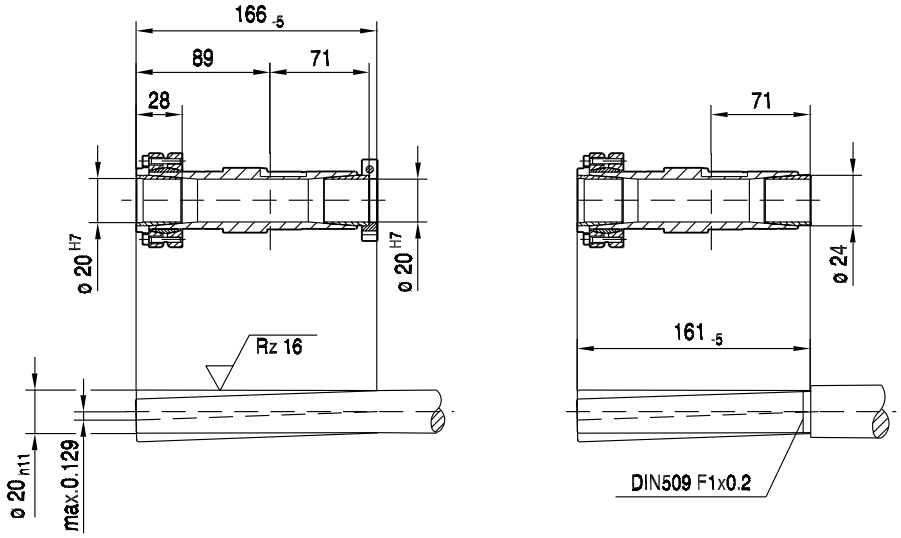

(→ 150)	CMP40M	CMP50S	CMP50M	CMP50L	CMP63S	CMP63M	CMP63L	
AC	57	73	73	73	88	88	88	
AD	75	82	82	82	89	89	89	
ADS	75	82	82	82	89	89	89	
L	346	348	387	426	383	433	486	
LS	376	377	416	455	411	461	515	
LB	143	145	184	223	180	230	283	
LBS	173	174	213	252	208	258	312	
XS	19	18	18	18	14	14	14	

20 019 00 08

W37..

DS56..

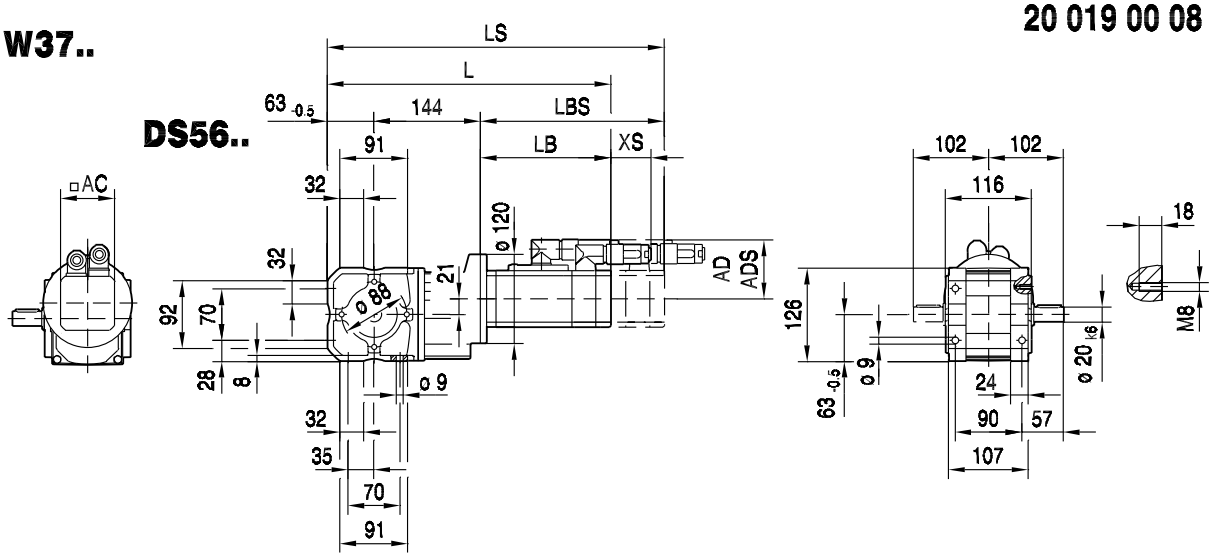

CM..

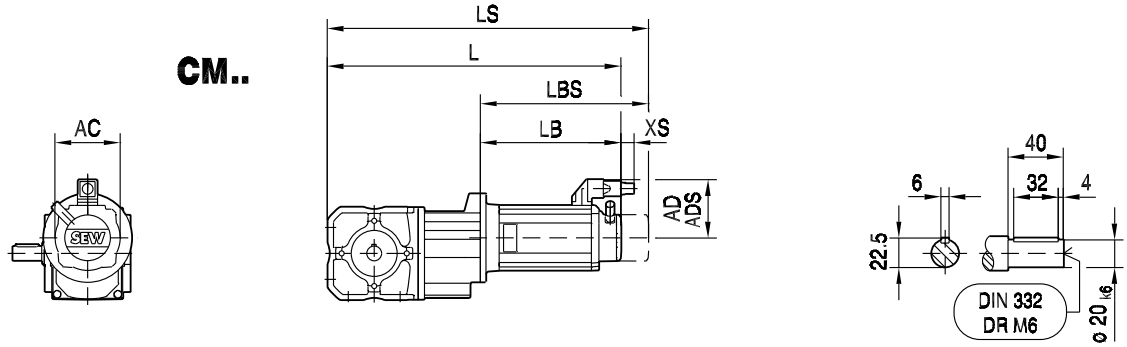

WA37B..

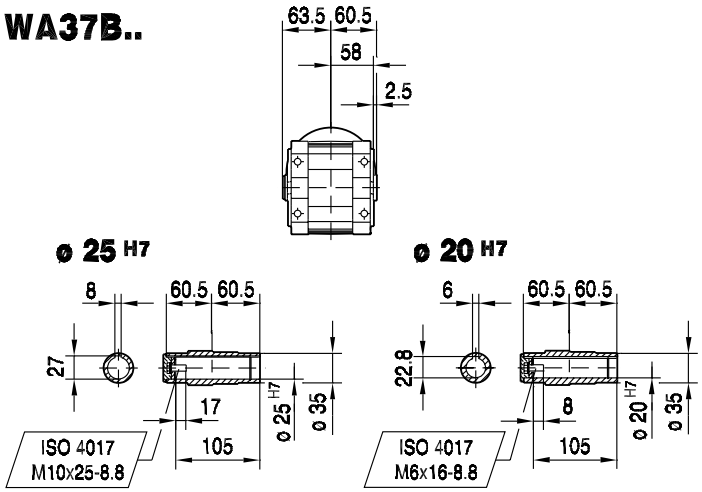

WH37B..

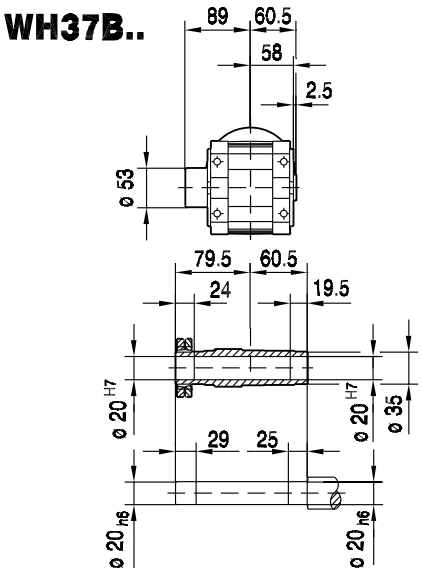

(→ 150)	DS56M	DS56L	DS56H	CM71S	CM71M	CM71L	CM90S	
AC	73	73	73	117	117	117	142	
AD	71	71	77	122	122	122	140	
ADS	77	77	77	122	122	122	140	
L	344	376	479	446	466	508	501	
LS	374	406	479	528	548	590	596	
LB	137	169	272	239	259	301	294	
LBS	167	199	272	321	341	383	389	
XS	70	70	51	45	45	45	50	

WF37..

20 020 00 08

DS56..

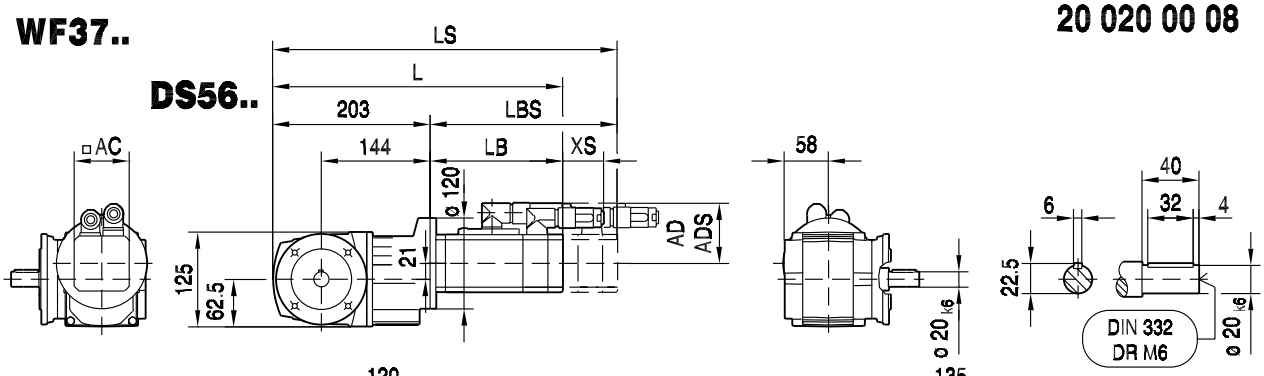

ø 120

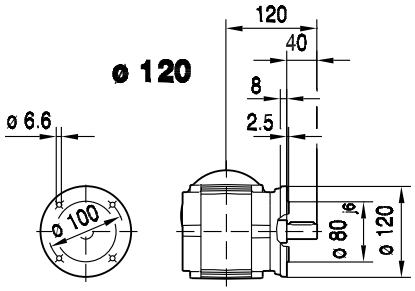

ø 160

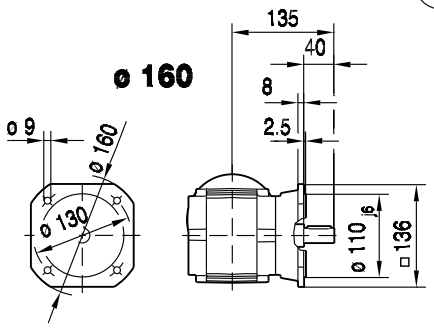

CM..

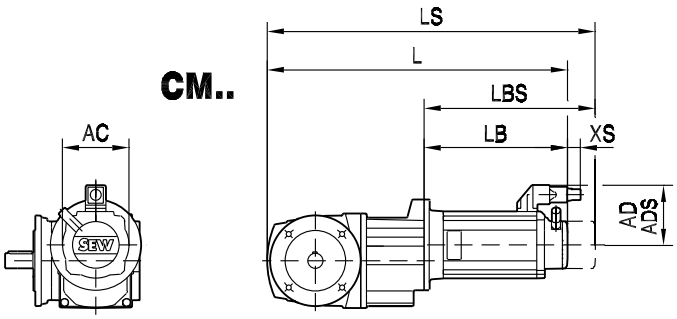

WAF37..

ø 120

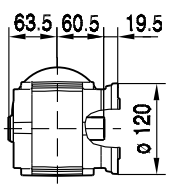

ø 160

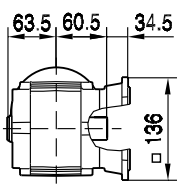

ø 25 H7

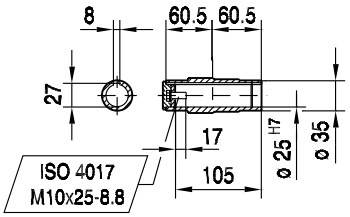

ø 20 H7

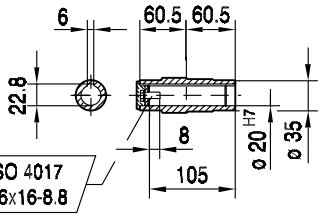

(→ 📖 150)	DS56M	DS56L	DS56H	CM71S	CM71M	CM71L	CM90S	
AC	73	73	73	117	117	117	142	
AD	71	71	77	122	122	122	140	
ADS	77	77	77	122	122	122	140	
L	340	372	475	442	462	504	497	
LS	370	402	475	524	544	586	592	
LB	137	169	272	239	259	301	294	
LBS	167	199	272	321	341	383	389	
XS	70	70	51	45	45	45	50	

20 021 00 08

WHF37..

DS56..

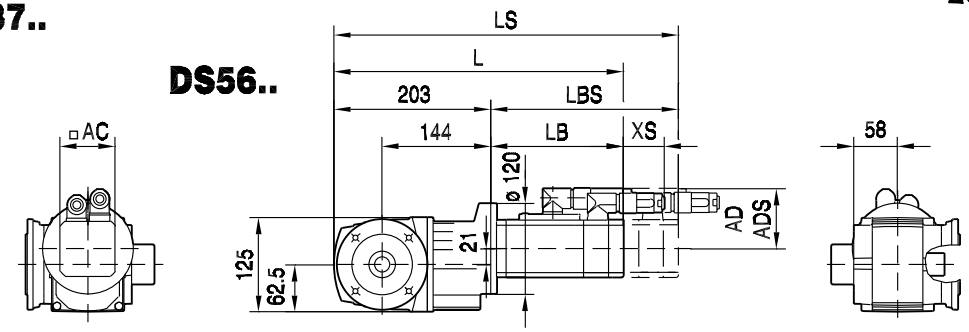

ø 120

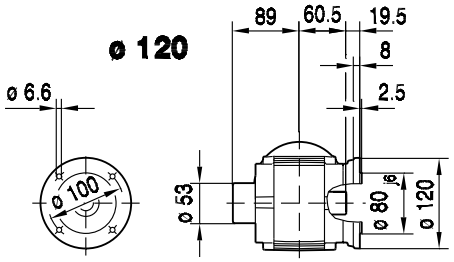

ø 160

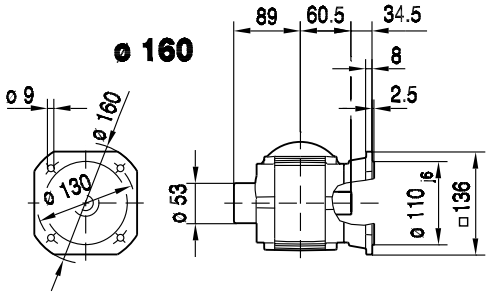

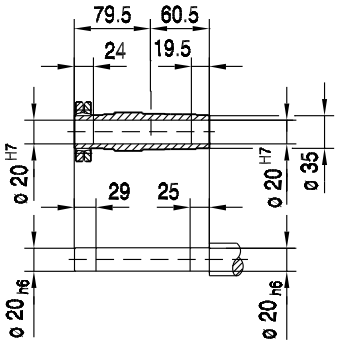

CM..

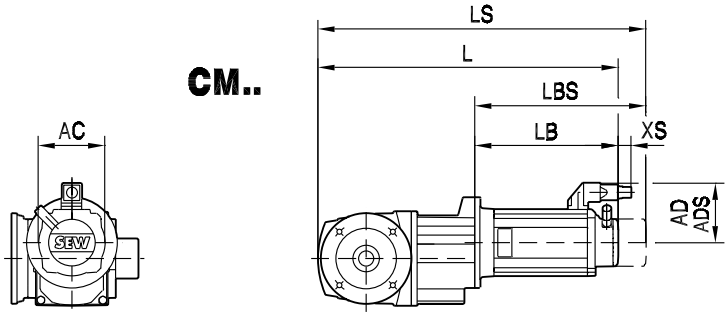

(→ 📖 150)	DS56M	DS56L	DS56H	CM71S	CM71M	CM71L	CM90S	
AC	73	73	73	117	117	117	142	
AD	71	71	77	122	122	122	140	
ADS	77	77	77	122	122	122	140	
L	340	372	475	442	462	504	497	
LS	370	402	475	524	544	586	592	
LB	137	169	272	239	259	301	294	
LBS	167	199	272	321	341	383	389	
XS	70	70	51	45	45	45	50	

20 022 00 08

WA37..

DS56..

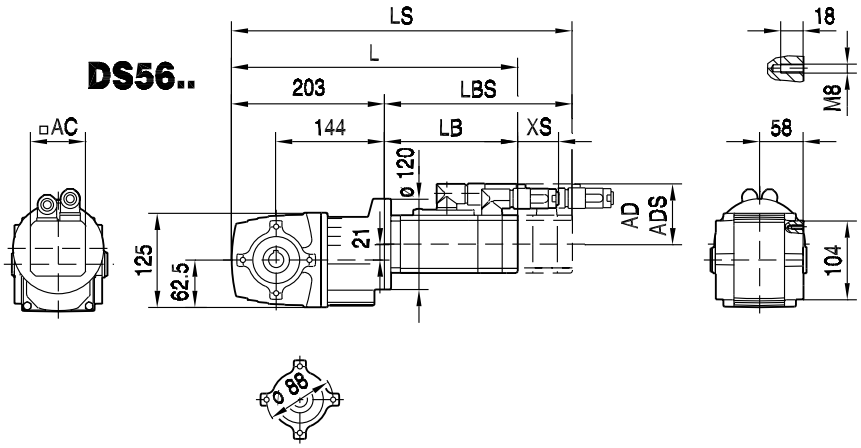

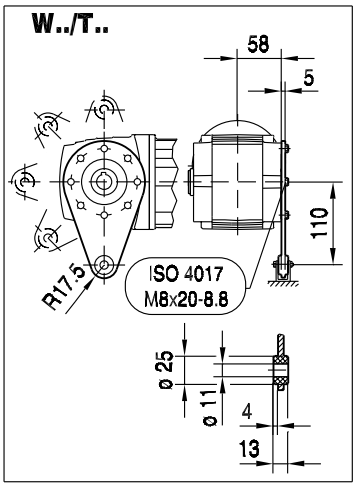

CM..

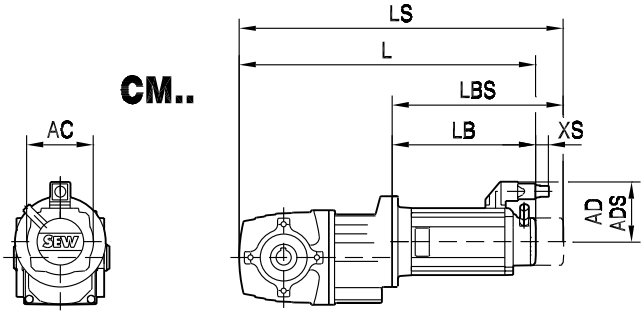

WA37..

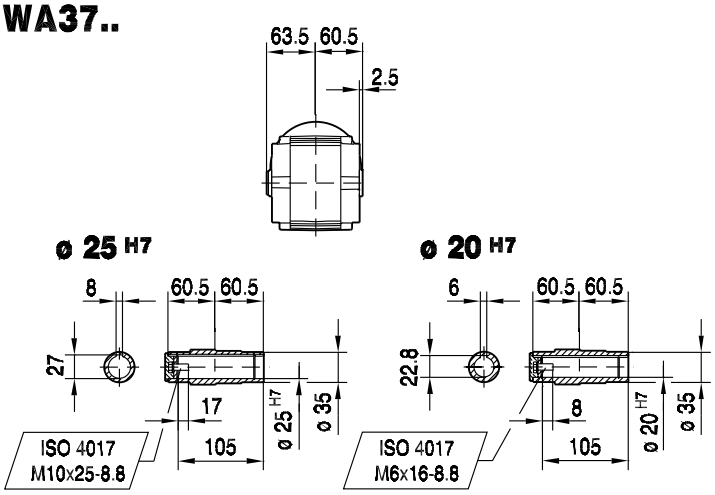

WH37..

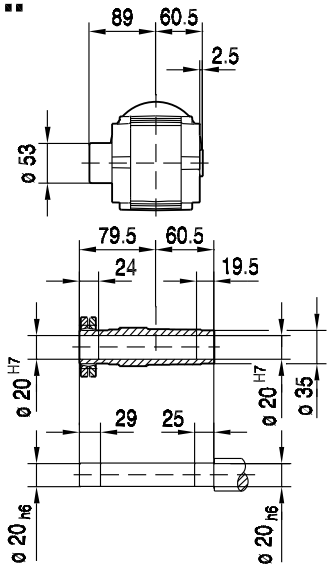

(→ 150)	DS56M	DS56L	DS56H	CM71S	CM71M	CM71L	CM90S	
AC	73	73	73	117	117	117	142	
AD	71	71	77	122	122	122	140	
ADS	77	77	77	122	122	122	140	
L	340	372	475	442	462	504	497	
LS	370	402	475	524	544	586	592	
LB	137	169	272	239	259	301	294	
LBS	167	199	272	321	341	383	389	
XS	70	70	51	45	45	45	50	

20 023 00 08

WT37..

DS56..

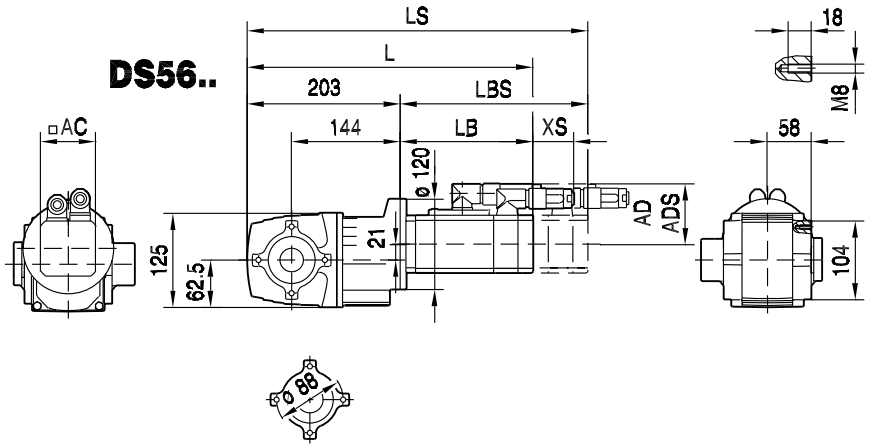

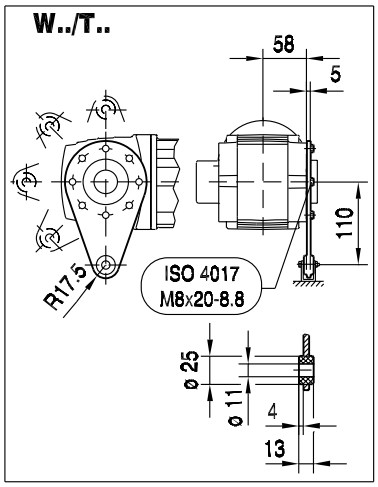

CM..

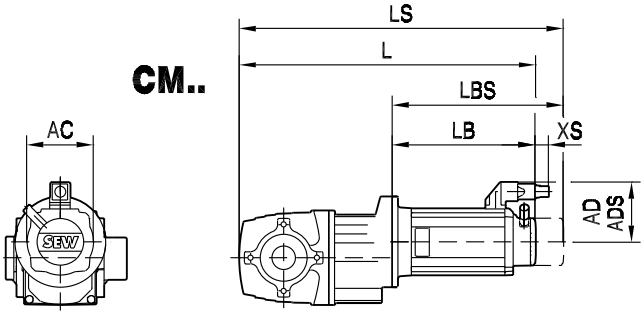

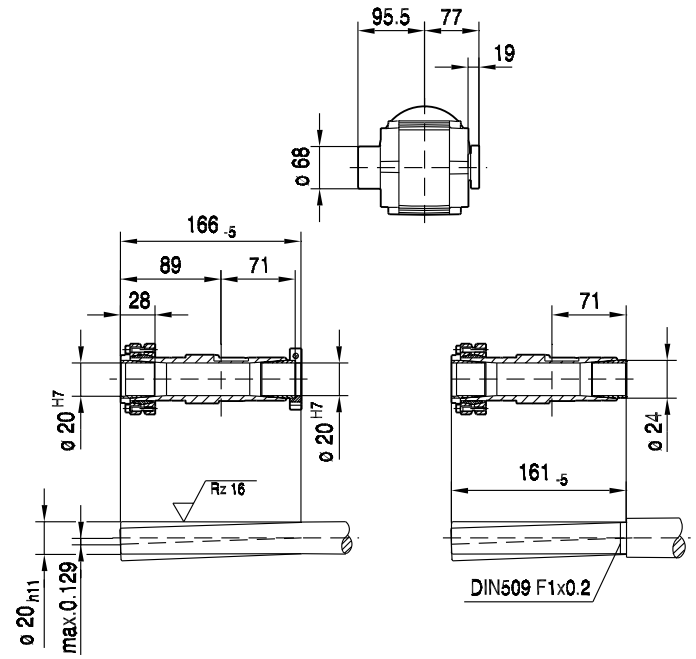

(→ 150)	DS56M	DS56L	DS56H	CM71S	CM71M	CM71L	CM90S	
AC	73	73	73	117	117	117	142	
AD	71	71	77	122	122	122	140	
ADS	77	77	77	122	122	122	140	
L	340	372	475	442	462	504	497	
LS	370	402	475	524	544	586	592	
LB	137	169	272	239	259	301	294	
LBS	167	199	272	321	341	383	389	
XS	70	70	51	45	45	45	50	

13 BS.F..CMP, DS, CM

13.1 BSF, BSBF, BSKF, BSHF, BSF..B, BSBF..B, BSKF..B, BSHF..B, BSHF../T, BSHF../I, BSHF..B/I..CMP / DS / CM

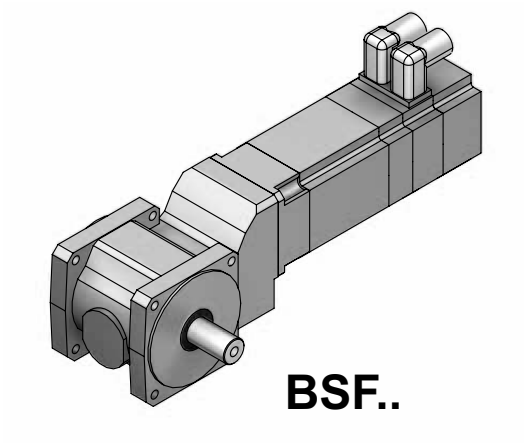

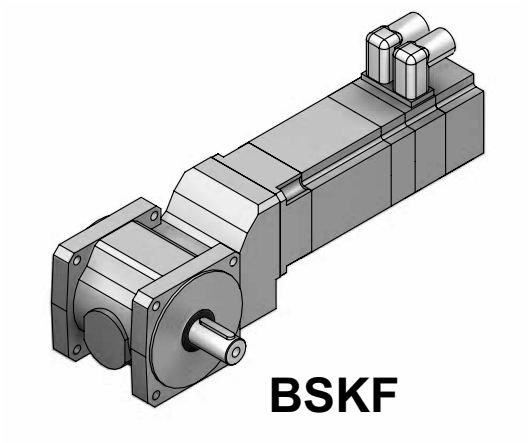

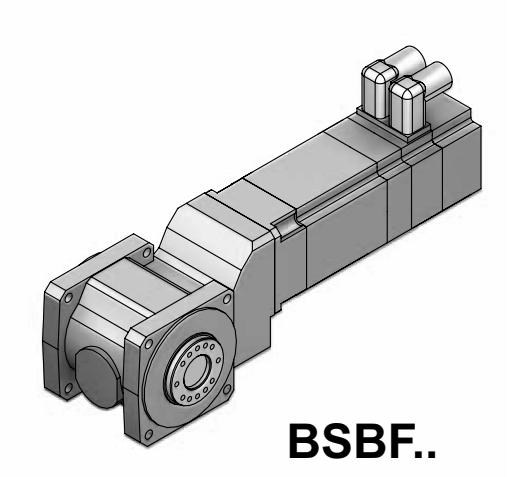

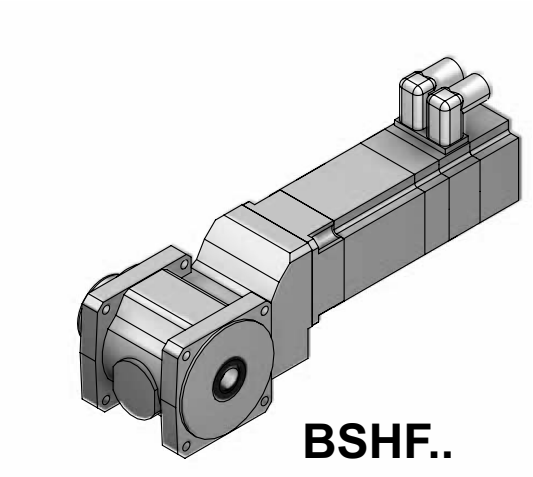

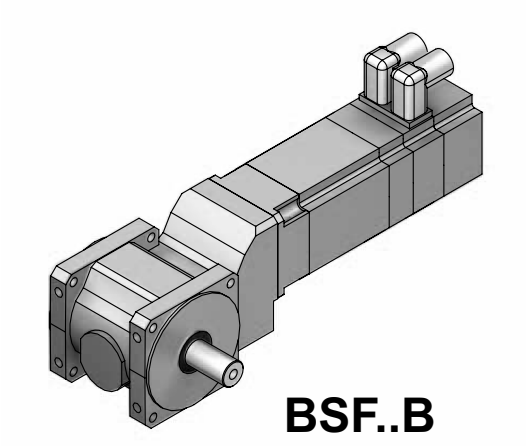

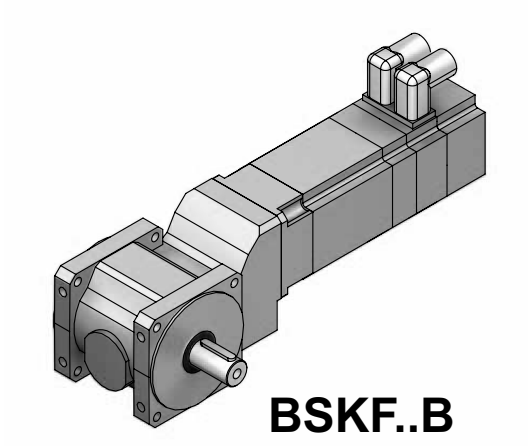

63323axx

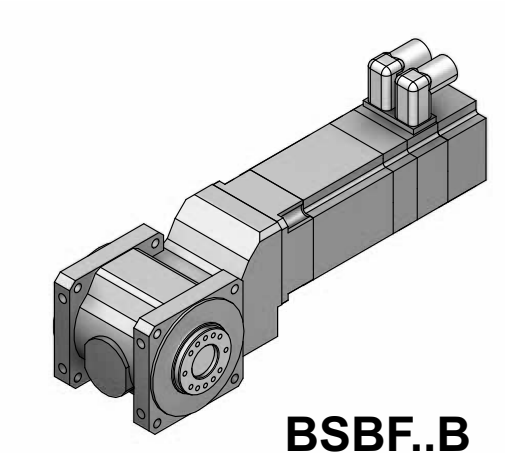

BSBF..B

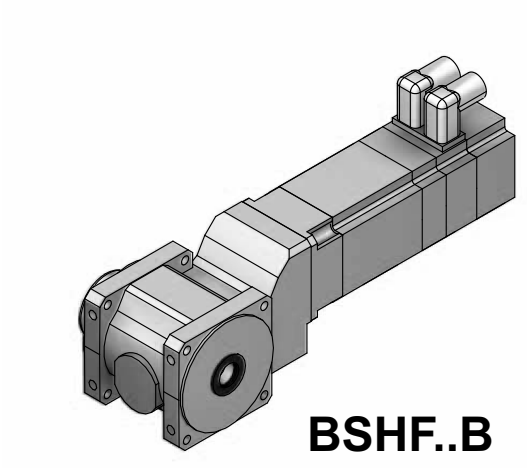

BSHF..B

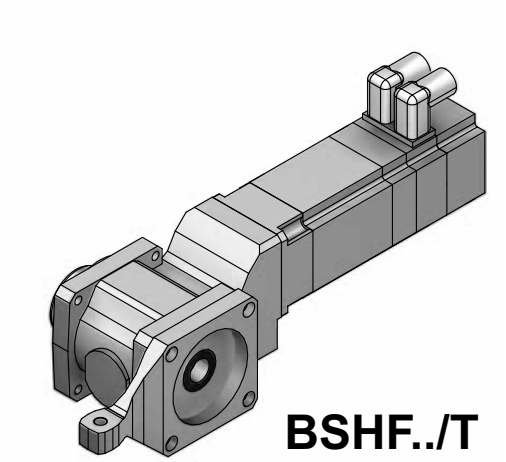

BSHF../T

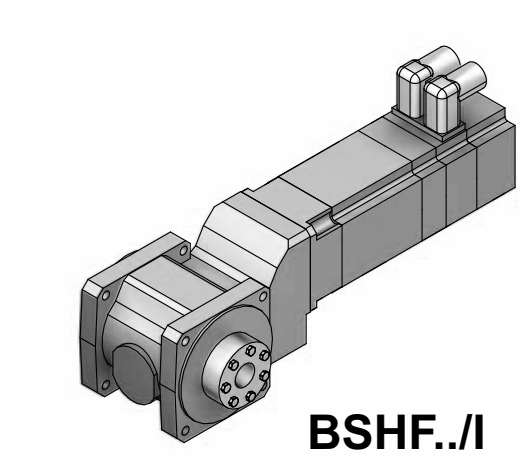

BSHF../I

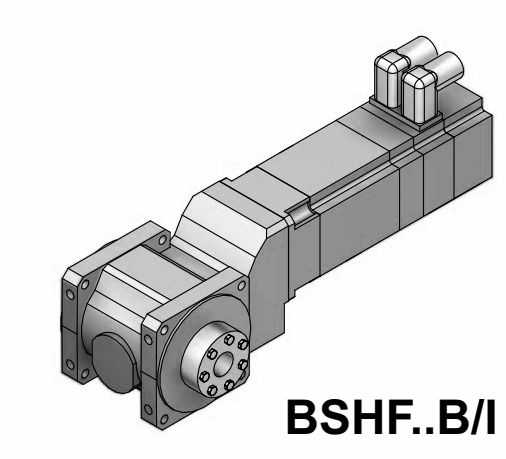

BSHF..B/I

63318axx

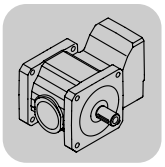

13.2 BS.F 202 / CMP / DS [Nm]

M_{aDyn} [Nm]		CMP			DS		
	i	50S	50M	63S	56M	56L	56H
BSF202 2	3	15	29	31	11	21	43
	4	19	39	42	14	28	57
	6	29	58	>60	21	43	>60
	8	39	>60	>60	29	57	>60
	10	47	>51	>51	34	>51	>51
	15	>51	>51	>51	>51	>51	>51
	20	>51	>51	>51	>51	>51	>51
	25	>51			>51	>51	

m [kg]		CMP			DS		
	s	50S	50M	63S	56M	56L	56H
BSF202	2	7.2	8.1	8.5	6.4	7.4	8.1
BSBF: + 0.0 kg / BSHF: + 0.0 kg							

CMP.. / DS..				M1			M2;M4			M3;M5-6			φ		
	i	n_{epk} [1/min]	η [%]	a_0	a_1	a_2	a_0	a_1	a_2	a_0	a_1	a_2		/R	/M
													[']	[']	[']
BSF202 2	3	4500	93.7	4.100	-0.011	77457	14.470	-0.020	66498	6.120	-0.013	75323	6	3	-
	4	4500	93.7	4.260	-0.014	76815	20.110	-0.028	60846	7.520	-0.017	73532	6	3	-
	6	4500	93.7	4.500	-0.019	75905	30.660	-0.042	51203	10.050	-0.024	70662	6	3	-
	8	4500	93.8	4.700	-0.022	75309	37.130	-0.052	46240	12.100	-0.029	68596	6	3	-
	10	4500	90.1	3.310	-0.057	47656	52.730	-0.146	26432	19.700	-0.083	39837	6	3	-
	15	4500	90.2	4.090	-0.076	46683	56.520	-0.189	28536	31.620	-0.125	34857	6	3	-
	20	4500	90.3	3.770	-0.089	46508	53.030	-0.210	32477	42.490	-0.161	30764	6	3	-
	25	4500	90.5	3.670	-0.098	46334	47.990	-0.221	36133	51.810	-0.191	27469	6	3	-

CMP.. / DS..							c_T			F_{Ramax}			F_{Rapk}		
	i	M_{amax} [Nm]	M_{apk} [Nm]	$M_{aNotaus}$ [Nm]	n_{ak} [1/min]	J_G 10^{-4} [kgm^2]	BSF [Nm/']	BSBF [Nm/']	BSHF [Nm/']	BSF [N]	BSBF [N]	BSHF [N]	BSF [N]	BSBF [N]	BSHF [N]
BSF202 2	3	40	60	90	767	0.76	2.1	2.3	2.3	2690	2990	2610	4200	4200	4200
	4	40	60	90	775	0.47	2.2	2.4	2.4	3010	3340	2920	4200	4200	4200
	6	40	60	90	783	0.23	2.2	2.5	2.5	3510	3900	3410	4200	4200	4200
	8	40	60	90	875	0.14	2.3	2.5	2.5	3920	4200	3800	4200	4200	4200
	10	40	51	77	320	0.27	4.1	4.7	4.7	4140	4200	4020	4200	4200	4200
	15	40	51	77	327	0.14	4.2	4.8	4.7	4200	4200	4200	4200	4200	4200
	20	40	51	77	350	0.092	4.2	4.8	4.7	4200	4200	4200	4200	4200	4200
	25	40	51	77	280	0.066	4.2	4.8	4.8	4200	4200	4200	4200	4200	4200

13.3 BS.F 202 / CMP / DS [mm]

BSF202..

55 002 00 06

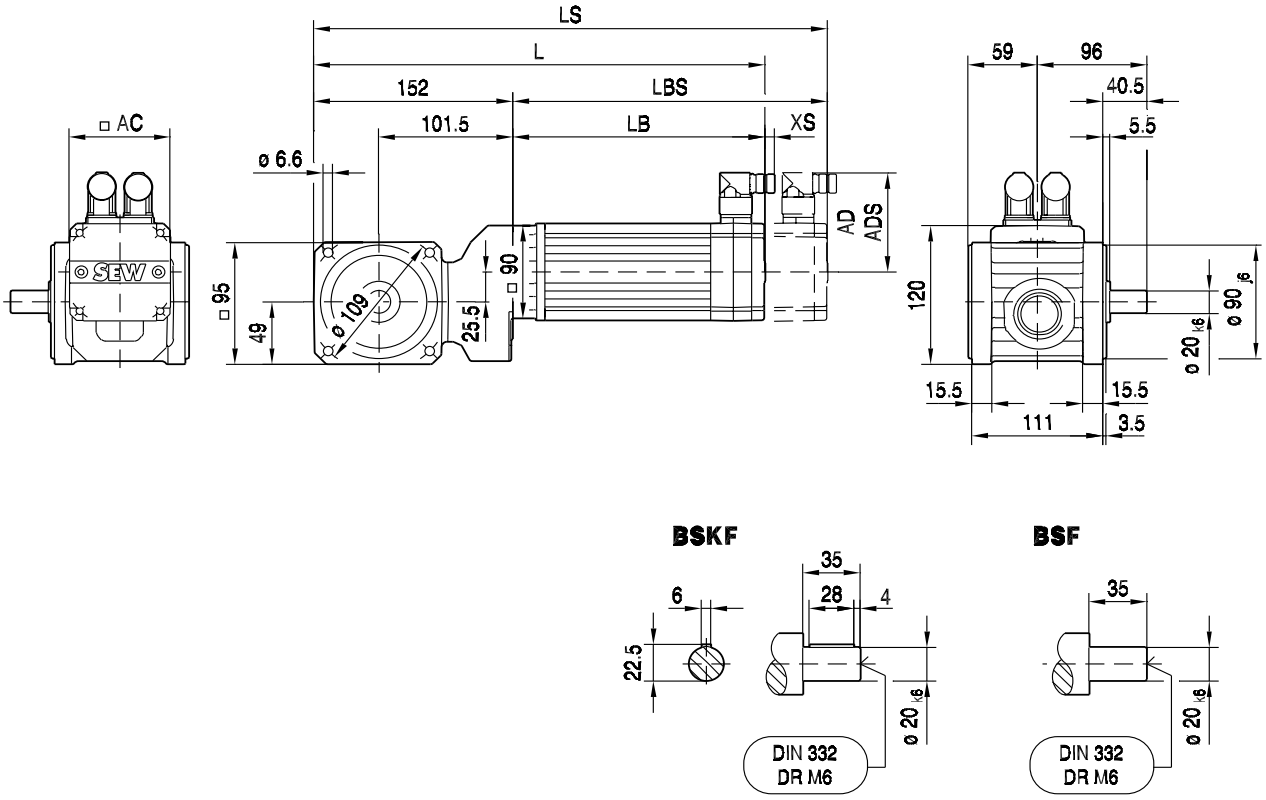

13

(→ 📖 150)	CMP50S	CMP50M	CMP63S					
AC	73	73	88					
AD	83	83	92					
ADS	83	83	92					
L	298	337	333					
LS	327	366	361					
LB	146	185	181					
LBS	175	214	210					
XS	18	18	14					

BSBF202..

55 003 00 06

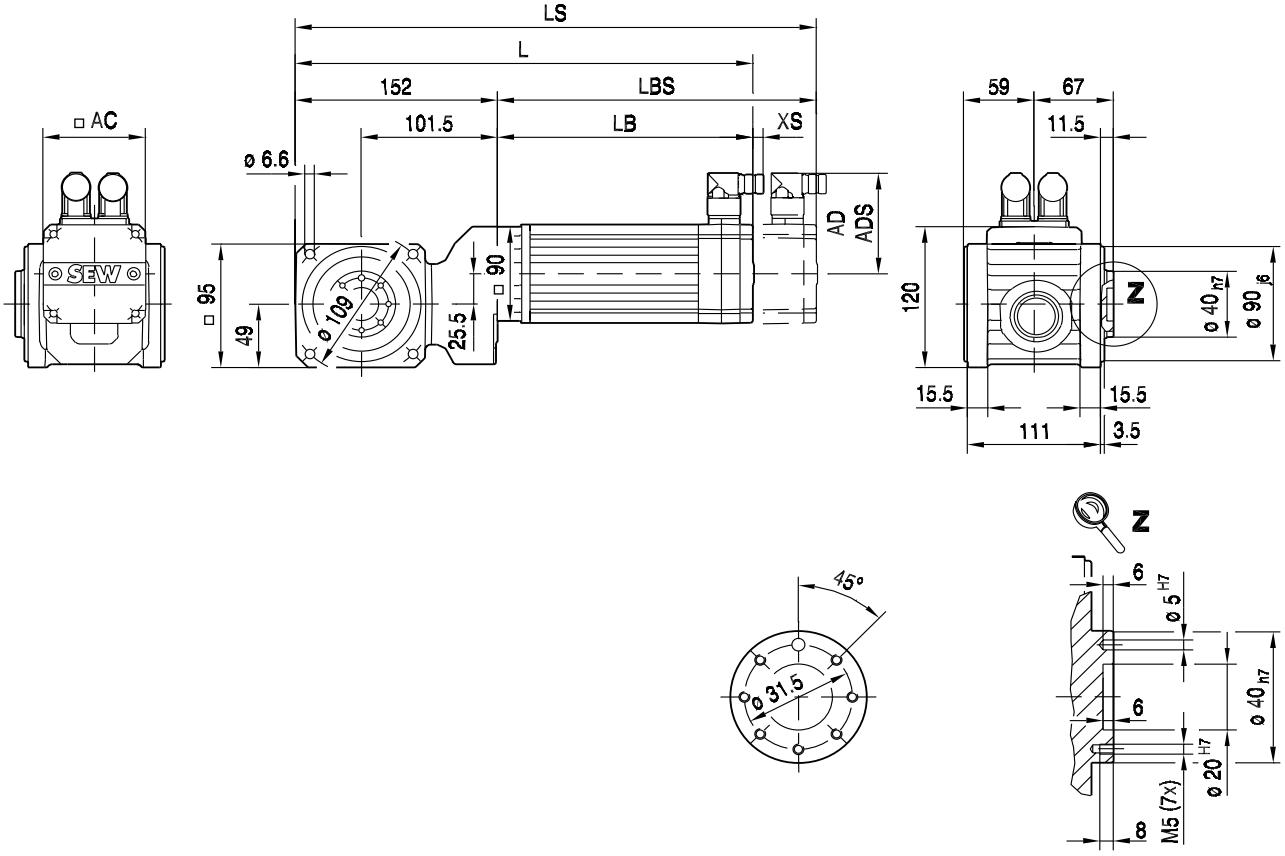

(→ 📖 150)	CMP50S	CMP50M	CMP63S					
AC	73	73	88					
AD	83	83	92					
ADS	83	83	92					
L	298	337	333					
LS	327	366	361					
LB	146	185	181					
LBS	175	214	210					
XS	18	18	14					

BSHF202..

55 004 00 06

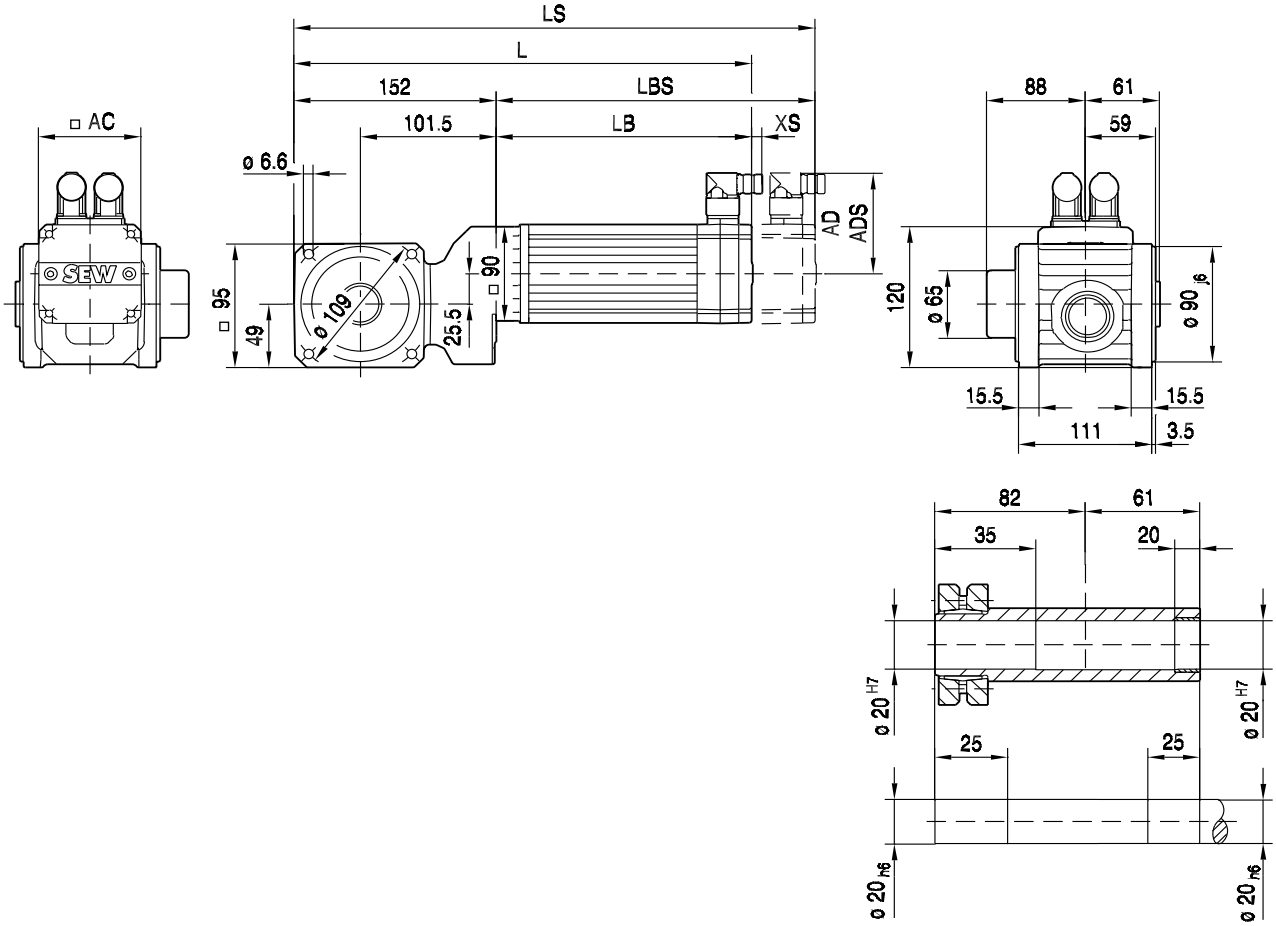

13

(→ 📖 150)	CMP50S	CMP50M	CMP63S					
AC	73	73	88					
AD	83	83	92					
ADS	83	83	92					
L	298	337	333					
LS	327	366	361					
LB	146	185	181					
LBS	175	214	210					
XS	18	18	14					

BSHF202/I..

55 005 00 06

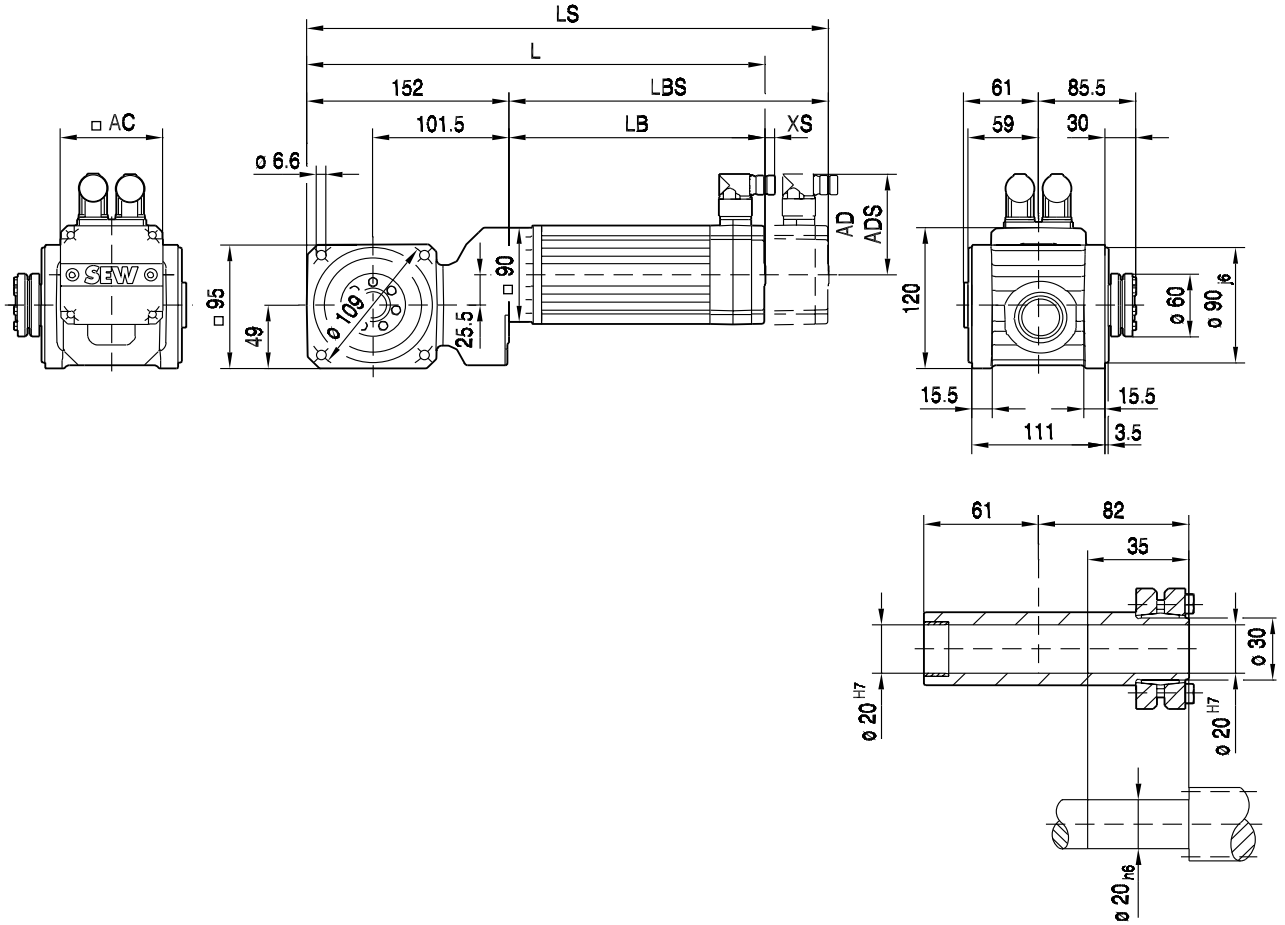

(→ 📖 150)	CMP50S	CMP50M	CMP63S					
AC	73	73	88					
AD	83	83	92					
ADS	83	83	92					
L	298	337	333					
LS	327	366	361					
LB	146	185	181					
LBS	175	214	210					
XS	18	18	14					

BSAF202..

55 015 00 07

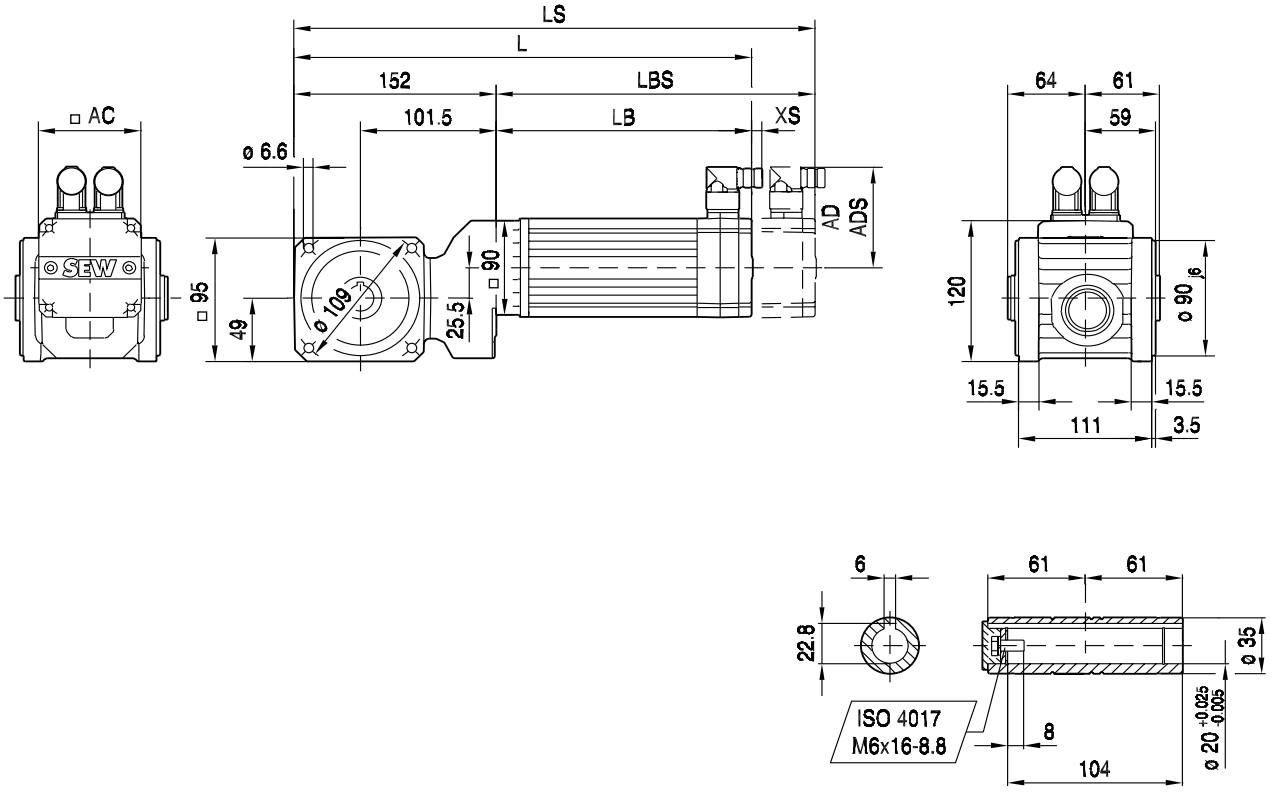

13

(→ 📖 150)	CMP50S	CMP50M	CMP63S					
AC	73	73	88					
AD	83	83	92					
ADS	83	83	92					
L	298	337	333					
LS	327	366	361					
LB	146	185	181					
LBS	175	214	210					
XS	18	18	14					

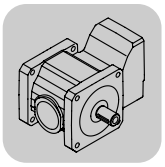

BSF202..

56 001 00 03

DS56..

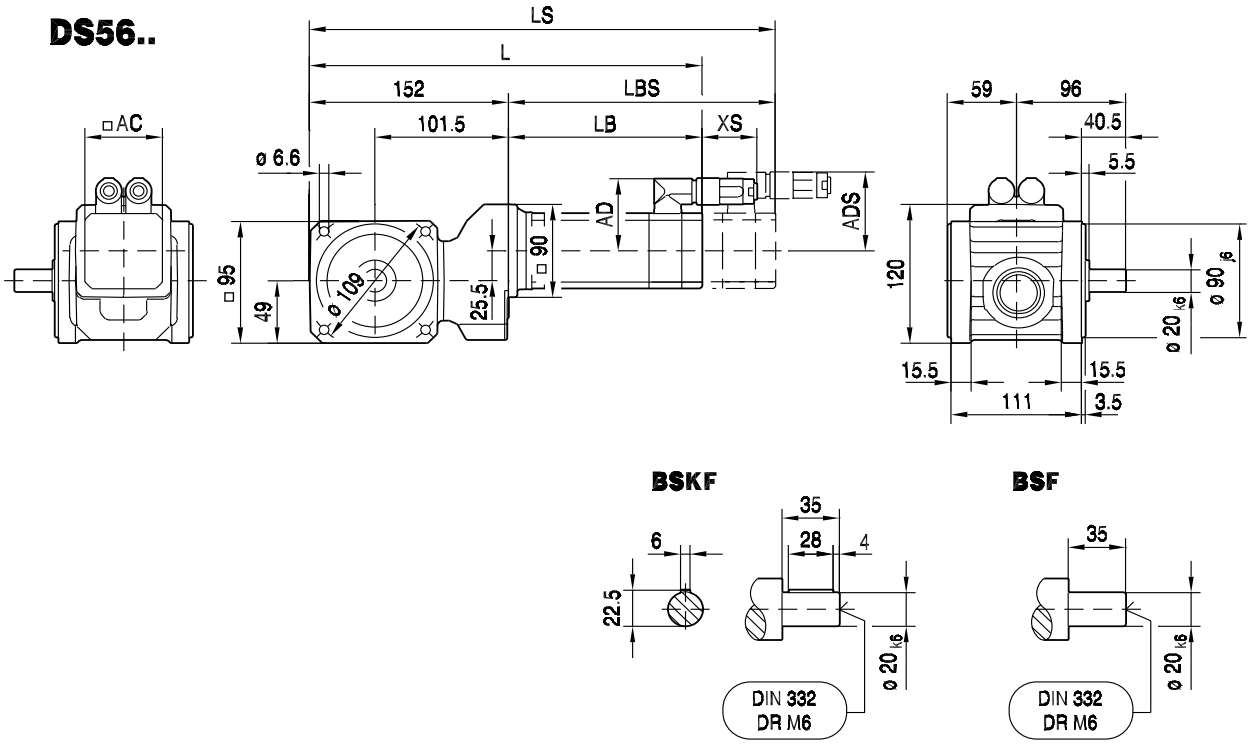

(→ 📖 150)	DS56M	DS56L	DS56H					
AC	73	73	73					
AD	71	71	77					
ADS	77	77	77					
L	291	323	426					
LS	321	353	426					
LB	139	171	274					
LBS	169	201	274					
XS	70	70	51					

BSBF202..

56 002 00 03

DS56..

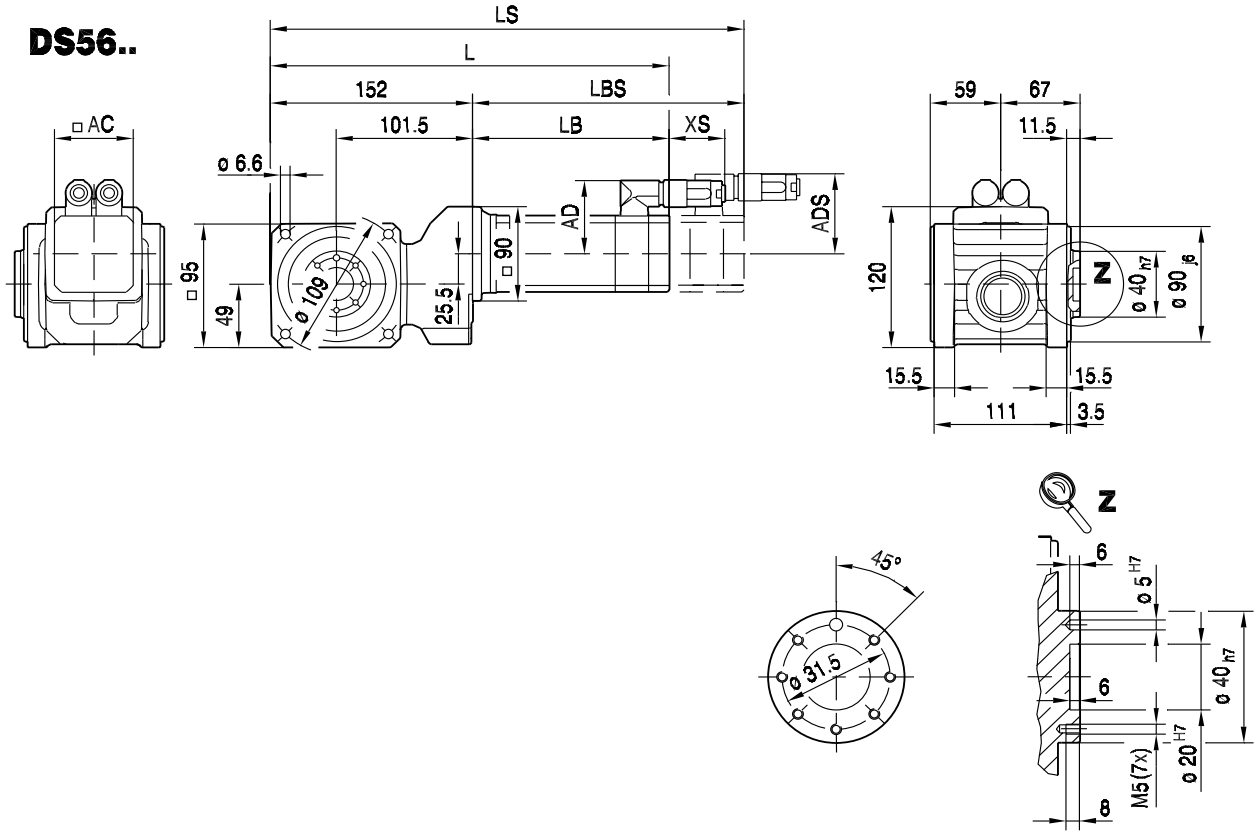

13

(→ 📖 150)	DS56M	DS56L	DS56H					
AC	73	73	73					
AD	71	71	77					
ADS	77	77	77					
L	291	323	426					
LS	321	353	426					
LB	139	171	274					
LBS	169	201	274					
XS	70	70	51					

BSHF202..

56 044 00 03

DS56..

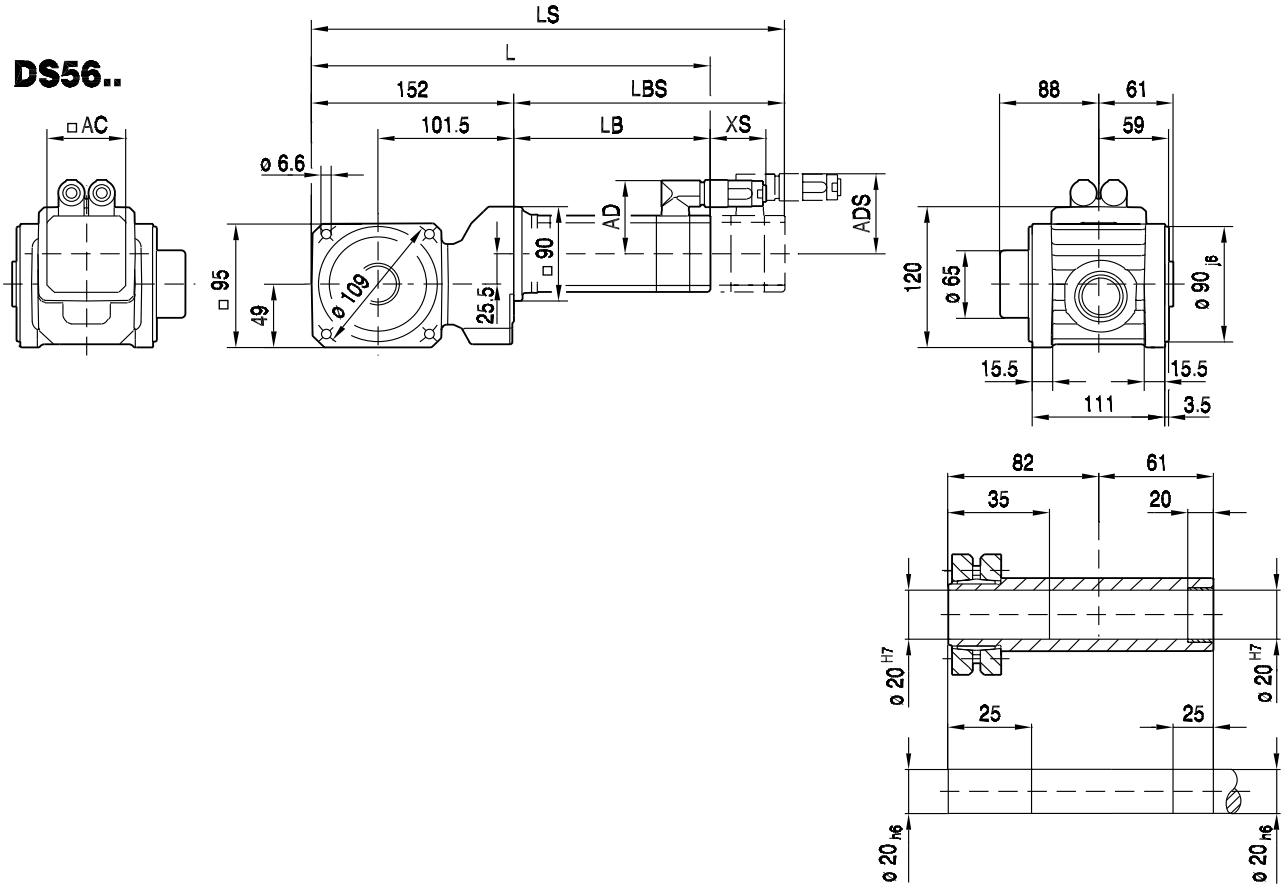

(→ 📖 150)	DS56M	DS56L	DS56H					
AC	73	73	73					
AD	71	71	77					
ADS	77	77	77					
L	291	323	426					
LS	321	353	426					
LB	139	171	274					
LBS	169	201	274					
XS	70	70	51					

BSHF202/I..

56 003 00 03

DS56..

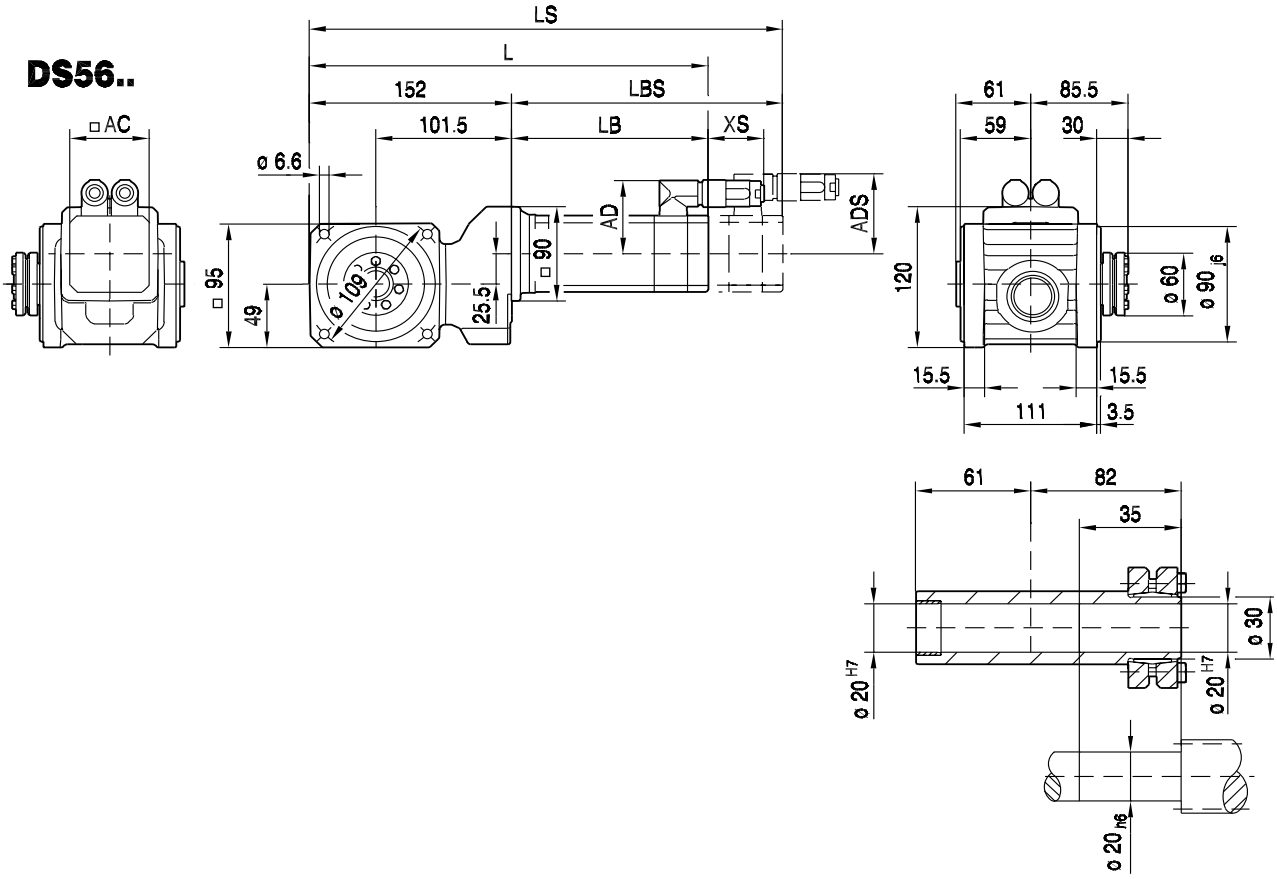

(→ 150)	DS56M	DS56L	DS56H					
AC	73	73	73					
AD	71	71	77					
ADS	77	77	77					
L	291	323	426					
LS	321	353	426					
LB	139	171	274					
LBS	169	201	274					
XS	70	70	51					

BSAF202..

55 003 00 07

DS56..

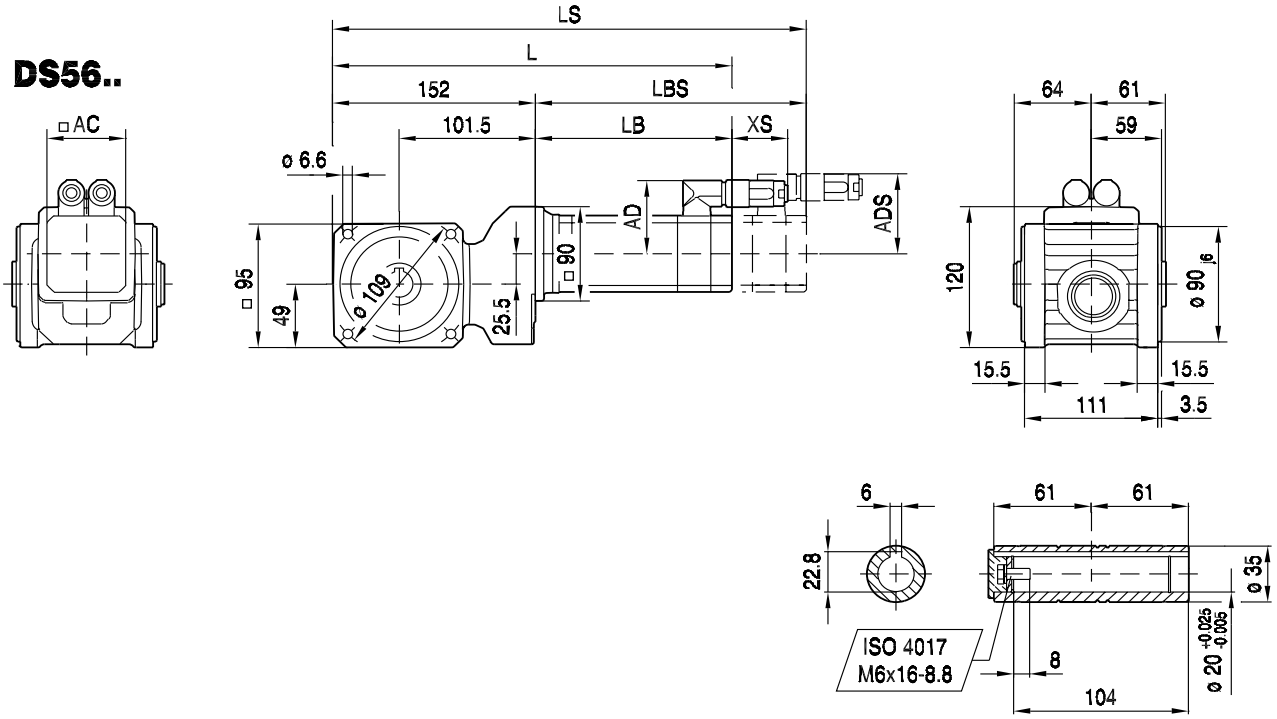

(→ 150)	DS56M	DS56L	DS56H					
AC	73	73	73					
AD	71	71	77					
ADS	77	77	77					
L	291	323	426					
LS	321	353	426					
LB	139	171	274					
LBS	169	201	274					
XS	70	70	51					

13.4 BS.F 302 / CMP / DS / CM [Nm]

M_{aDyn} [Nm]		CMP									DS			CM		
	i	50S	50M	50L	63S	63M	63L	71S	71M	71L	56M	56L	56H	71S	71M	71L
BSF302 2	3			43		60	86	51	77	>102				46	61	88
	4	20	39	58	42	80	>114	69	103	>114	14	29	57	62	81	>114
	6	29	58	87	63	>120	>120	103	>120	>120	21	43	86	93	>120	>120
	8	39	78	116	84	>120		>120			29	57	114	>120	>120	
	10	47	93	>108	101	>108	>108	>108	>108	>108	34	69	>108	>108	>108	>108
	15	71	>112	>112	>112	>112	>112	>112	>112	>112	52	104	>112	>112	>112	>112
	20	95	>112	>112	>112	>112		>112			69	>112	>112	>112	>112	
	25	>112	>112		>112						87	>112	>112			
	30	>112									104	>112				

m [kg]		CMP									DS			CM		
	s	50S	50M	50L	63S	63M	63L	71S	71M	71L	56M	56L	56H	71S	71M	71L
BSF302	2	9.2	10	11	10	12	13	15	16	18	8.4	9.4	10	16	18	20
BSBF: + 0.3 kg / BSHF: + -0.1 kg																

CMP.. / DS.. / CM..				M1			M2;M4			M3;M5-6			φ		
	i	n_{epk} [1/min]	η [%]	a_0	a_1	a_2	a_0	a_1	a_2	a_0	a_1	a_2		/R	/M
													[']	[']	[']
BSF302 2	3	4500	93.8	10.610	-0.020	101982	29.340	-0.039	87407	16.530	-0.026	97370	6	3	-
	4	4500	94	11.440	-0.025	100944	39.040	-0.054	80239	20.240	-0.034	94323	6	3	-
	6	4500	94	12.770	-0.033	99436	48.540	-0.075	75064	26.760	-0.048	89388	6	3	-
	8	4500	94.1	13.720	-0.038	98463	54.940	-0.091	72074	31.930	-0.059	85770	6	3	-
	10	4500	90.7	17.470	-0.106	60873	82.080	-0.261	41142	61.940	-0.192	43856	6	3	-
	15	4500	91	23.300	-0.146	58348	101.60	-0.363	38252	94.430	-0.295	33419	6	3	-
	20	4500	91.1	28.020	-0.176	56577	121.97	-0.451	33554	108.88	-0.358	30285	6	3	-
	25	4500	91.1	30.930	-0.198	55589	137.52	-0.520	30171	119.67	-0.407	28099	6	3	-
	30	4500	91.2	33.580	-0.216	54719	149.62	-0.574	27671	127.99	-0.446	26539	6	3	-

CMP.. / DS.. / CM..							c_T			F_{Ramax}			F_{Rapk}		
	i	M_{amax} [Nm]	M_{apk} [Nm]	$M_{aNotaus}$ [Nm]	n_{ak} [1/min]	J_G 10^{-4} [kgm^2]	BSF [Nm/']	BSBF [Nm/']	BSHF [Nm/']	BSF [N]	BSBF [N]	BSHF [N]	BSF [N]	BSBF [N]	BSHF [N]
BSF302 2	3	68	102	153	500	1.6	3.7	4.1	4.0	4520	4980	4380	4920	6000	5510
	4	76	114	171	375	0.97	4.0	4.4	4.3	4970	5470	4810	4750	6000	5420
	6	80	120	180	283	0.48	4.2	4.7	4.6	5160	6000	5570	4660	6000	5370
	8	80	120	180	313	0.29	4.4	4.8	4.7	5160	6000	5660	4660	6000	5370
	10	72	108	162	150	0.55	6.9	7.8	7.8	5230	6000	5700	4840	6000	5470
	15	80	112	168	107	0.29	6.9	7.8	7.7	5160	6000	5660	4780	6000	5440
	20	80	112	168	110	0.19	6.9	7.8	7.8	5160	6000	5660	4780	6000	5440
	25	80	112	168	108	0.13	7.0	7.9	7.8	5160	6000	5660	4780	6000	5440
	30	80	112	168	117	0.10	7.0	7.9	7.8	5160	6000	5660	4780	6000	5440

13.5 BS.F 302 / CMP / DS / CM [mm]

BSF302..

55 006 00 06

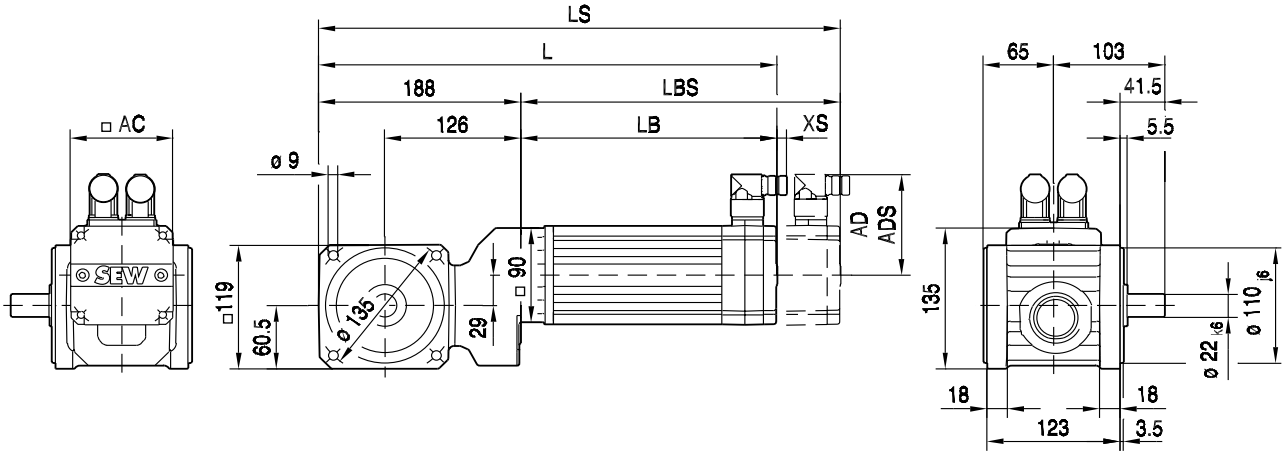

BSKF

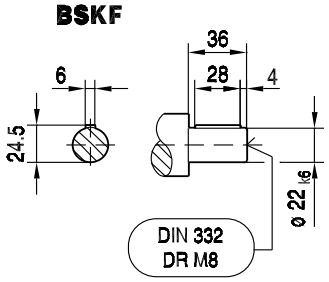

BSF

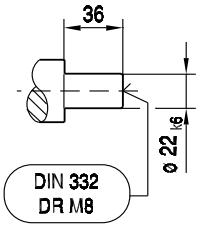

(→ 150)	CMP50S	CMP50M	CMP50L	CMP63S	CMP63M	CMP63L		
AC	73	73	73	88	88	88		
AD	83	83	83	92	92	92		
ADS	83	83	83	92	92	92		
L	334	373	412	369	419	469		
LS	363	402	441	397	447	497		
LB	146	185	224	181	231	281		
LBS	175	214	253	210	260	310		
XS	18	18	18	14	14	14		

BSBF302..

55 007 00 06

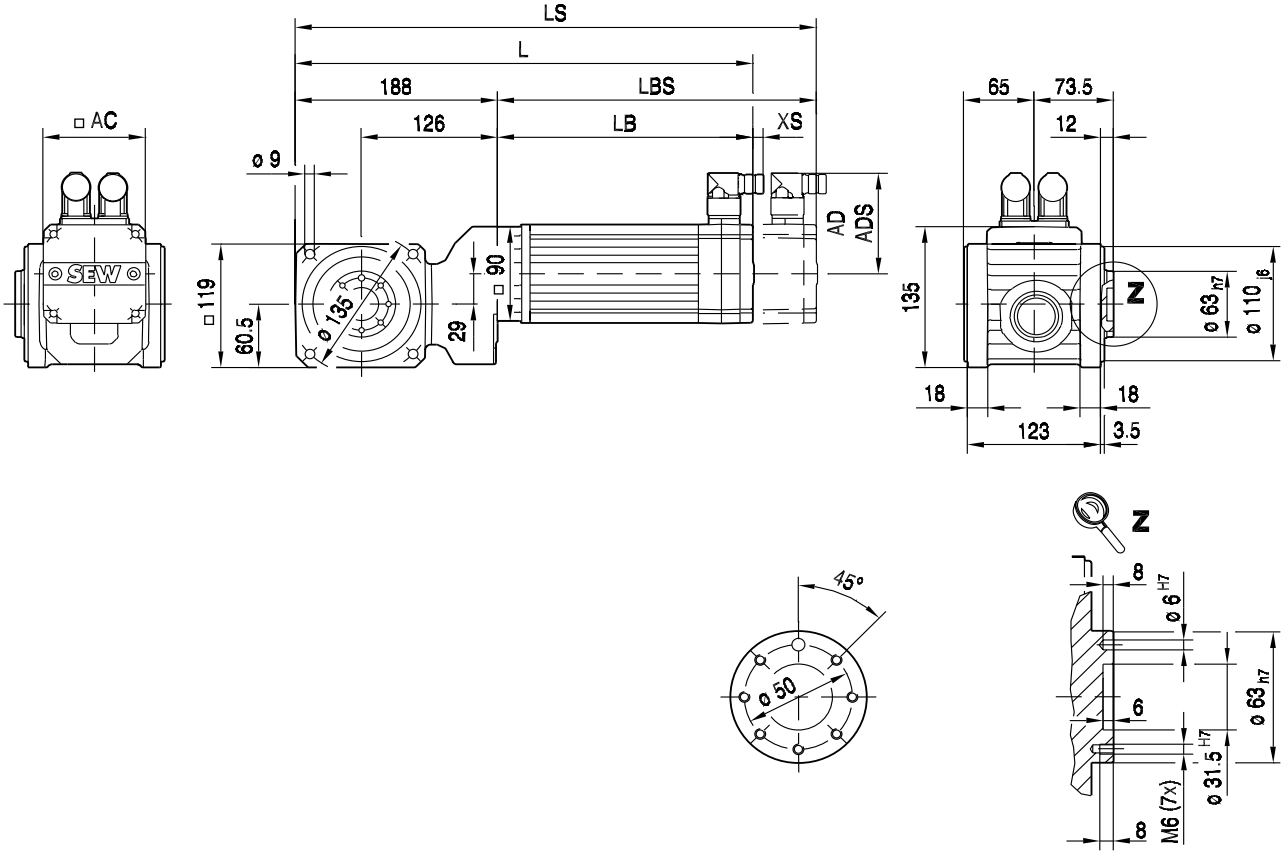

(→ 📖 150)	CMP50S	CMP50M	CMP50L	CMP63S	CMP63M	CMP63L		
AC	73	73	73	88	88	88		
AD	83	83	83	92	92	92		
ADS	83	83	83	92	92	92		
L	334	373	412	369	419	469		
LS	363	402	441	397	447	497		
LB	146	185	224	181	231	281		
LBS	175	214	253	210	260	310		
XS	18	18	18	14	14	14		

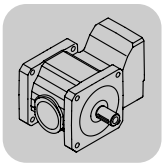

BS.F..CMP, DS, CM
BS.F 302 / CMP / DS / CM [mm]

BSHF302..

55 008 00 06

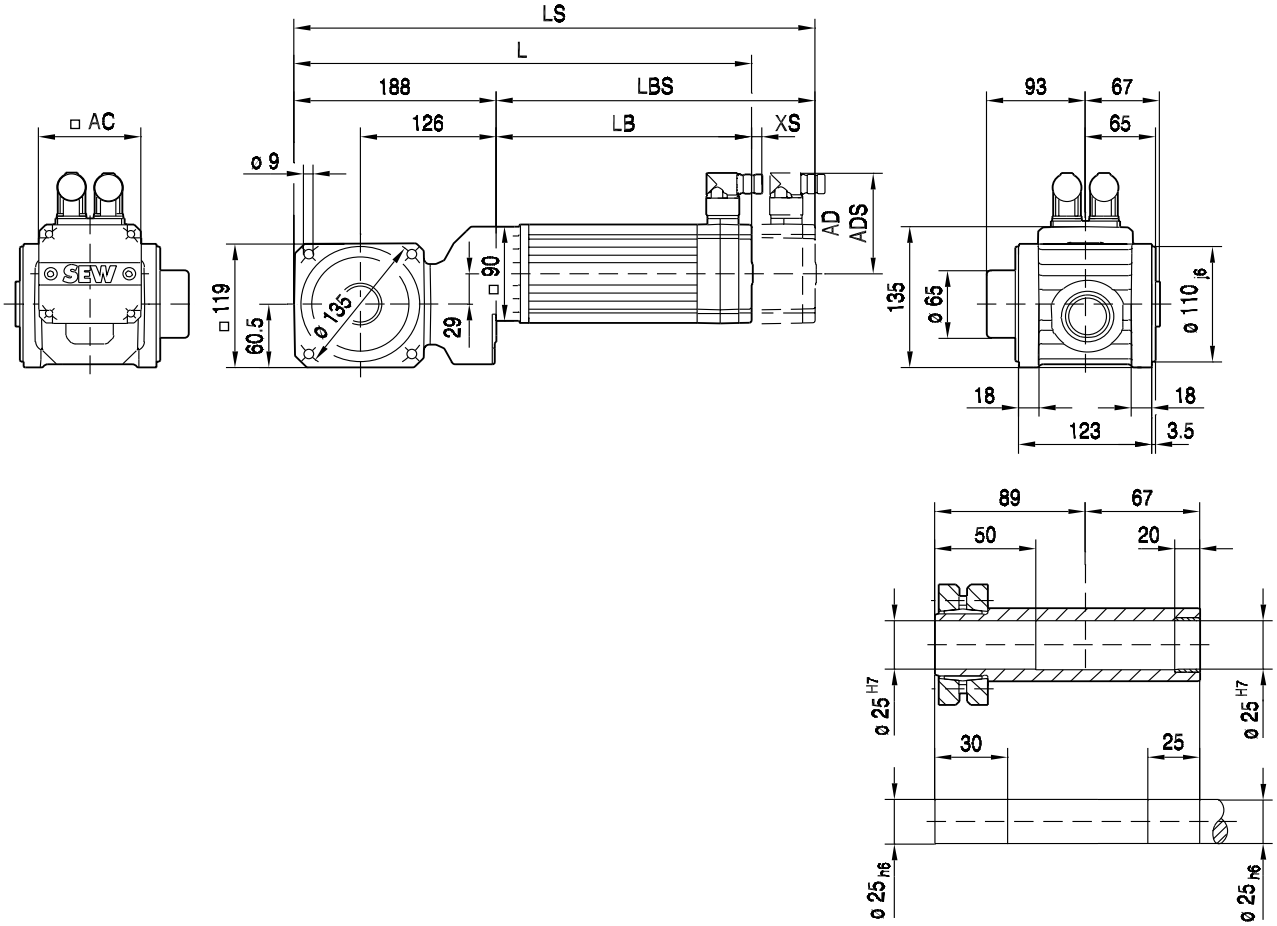

(→ 📖 150)	CMP50S	CMP50M	CMP50L	CMP63S	CMP63M	CMP63L		
AC	73	73	73	88	88	88		
AD	83	83	83	92	92	92		
ADS	83	83	83	92	92	92		
L	334	373	412	369	419	469		
LS	363	402	441	397	447	497		
LB	146	185	224	181	231	281		
LBS	175	214	253	210	260	310		
XS	18	18	18	14	14	14		

BSHF302/I..

55 009 00 06

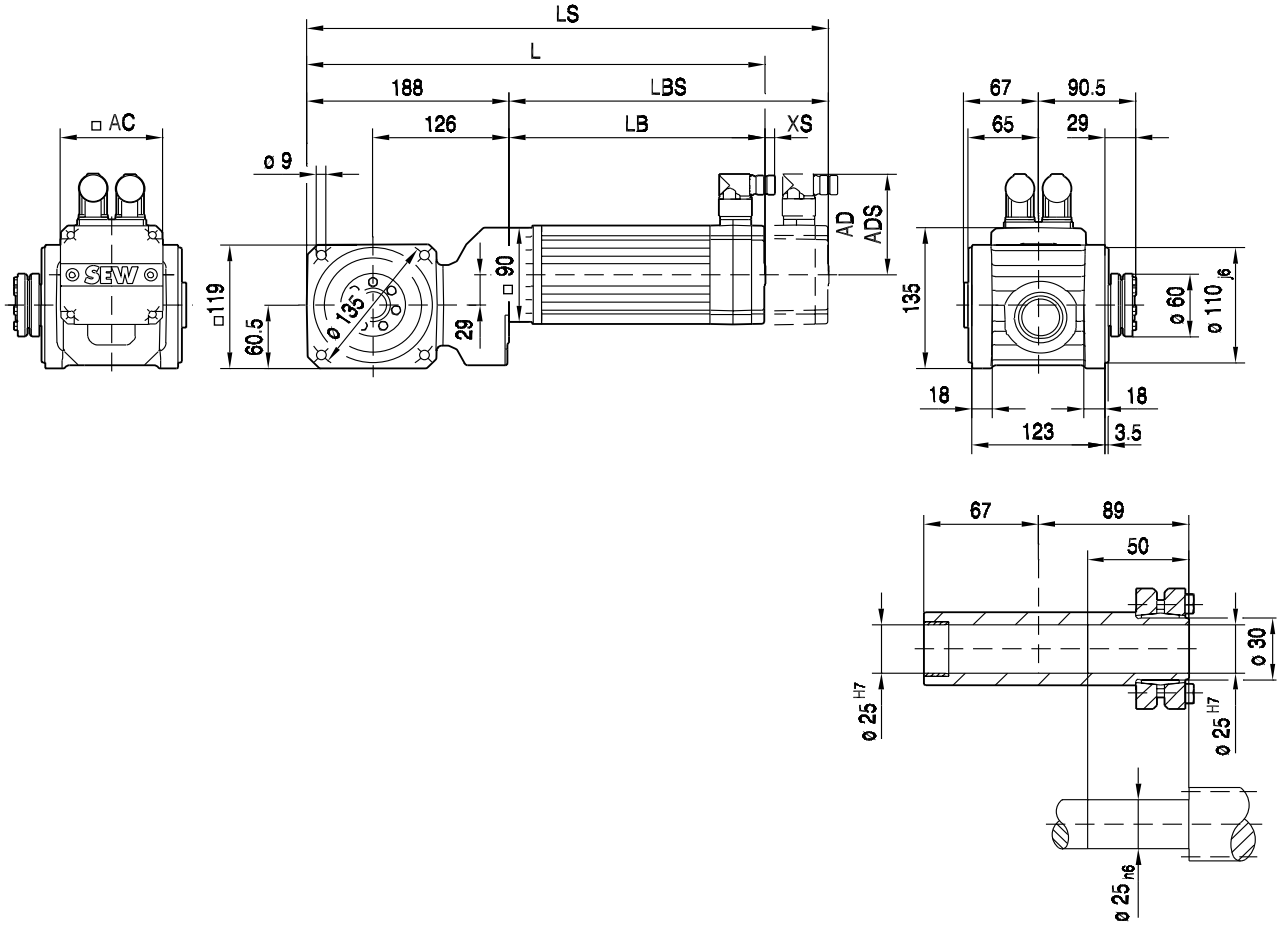

13

(→ 📖 150)	CMP50S	CMP50M	CMP50L	CMP63S	CMP63M	CMP63L		
AC	73	73	73	88	88	88		
AD	83	83	83	92	92	92		
ADS	83	83	83	92	92	92		
L	334	373	412	369	419	469		
LS	363	402	441	397	447	497		
LB	146	185	224	181	231	281		
LBS	175	214	253	210	260	310		
XS	18	18	18	14	14	14		

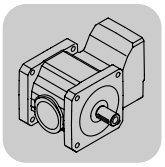

BS.F..CMP, DS, CM

BS.F 302 / CMP / DS / CM [mm]

BSAF302..

55 016 00 07

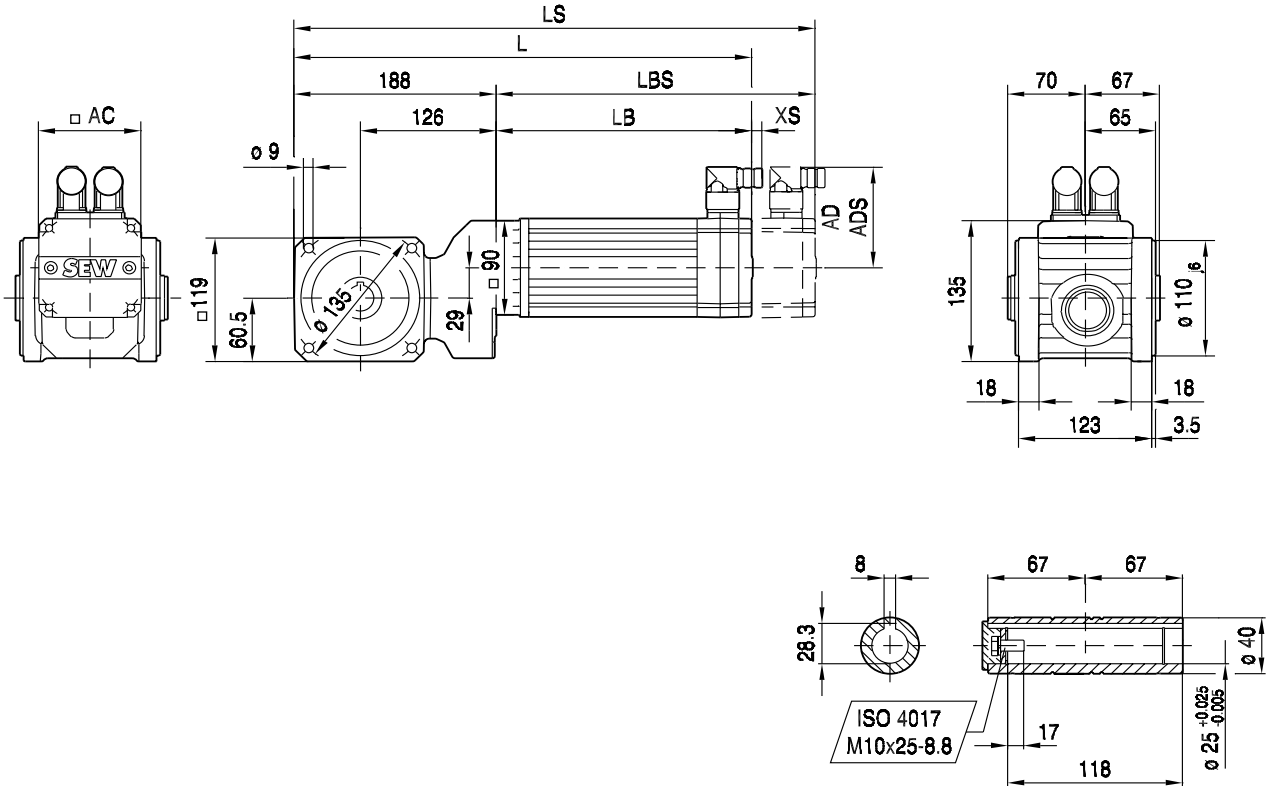

(→ 📖 150)	CMP50S	CMP50M	CMP50L	CMP63S	CMP63M	CMP63L		
AC	73	73	73	88	88	88		
AD	83	83	83	92	92	92		
ADS	83	83	83	92	92	92		
L	334	373	412	369	419	469		
LS	363	402	441	397	447	497		
LB	146	185	224	181	231	281		
LBS	175	214	253	210	260	310		
XS	18	18	18	14	14	14		

BSF302..

56 004 00 03

DS56..

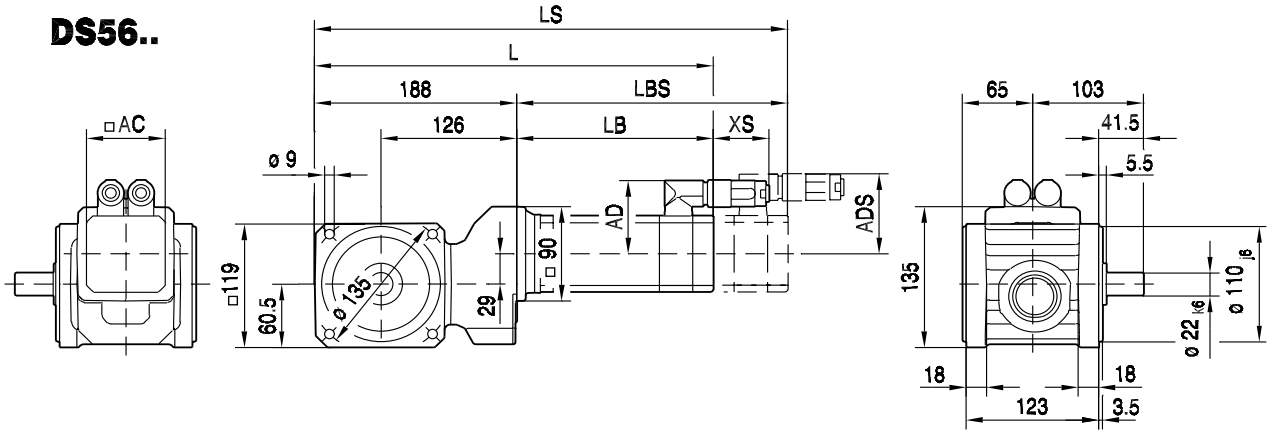

BSKF

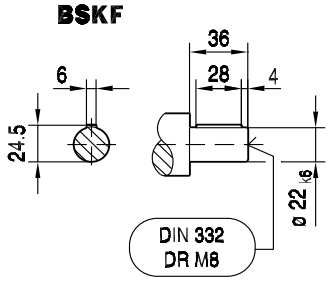

BSF

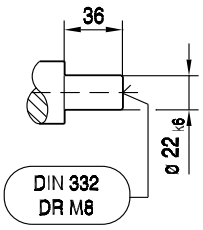

CM..

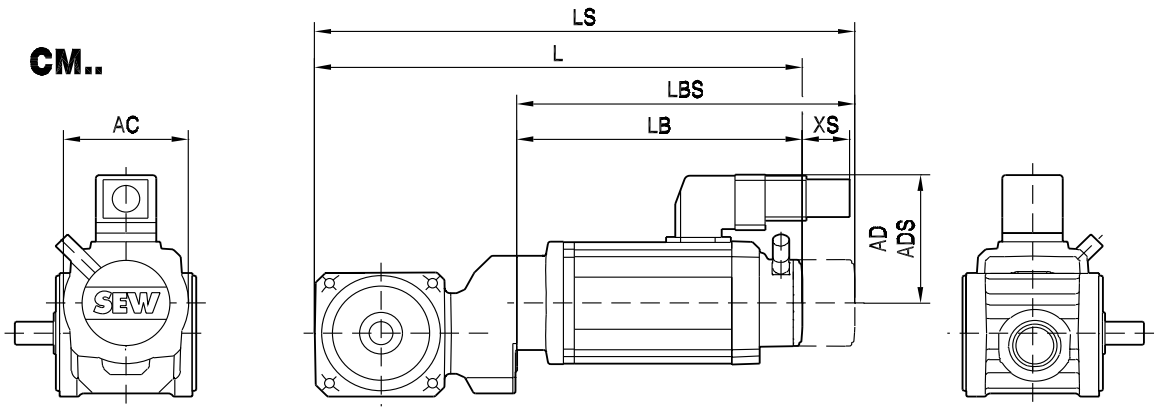

(→ 📖 150)	DS56M	DS56L	DS56H	CM71S	CM71M	CM71L		
AC	73	73	73	117	117	117		
AD	71	71	77	122	122	122		
ADS	77	77	77	122	122	122		
L	327	359	462	427	447	487		
LS	357	389	462	509	529	569		
LB	139	171	274	240	260	300		
LBS	169	201	274	322	342	382		
XS	70	70	51	45	45	45		

BSBF302..

56 005 00 03

DS56..

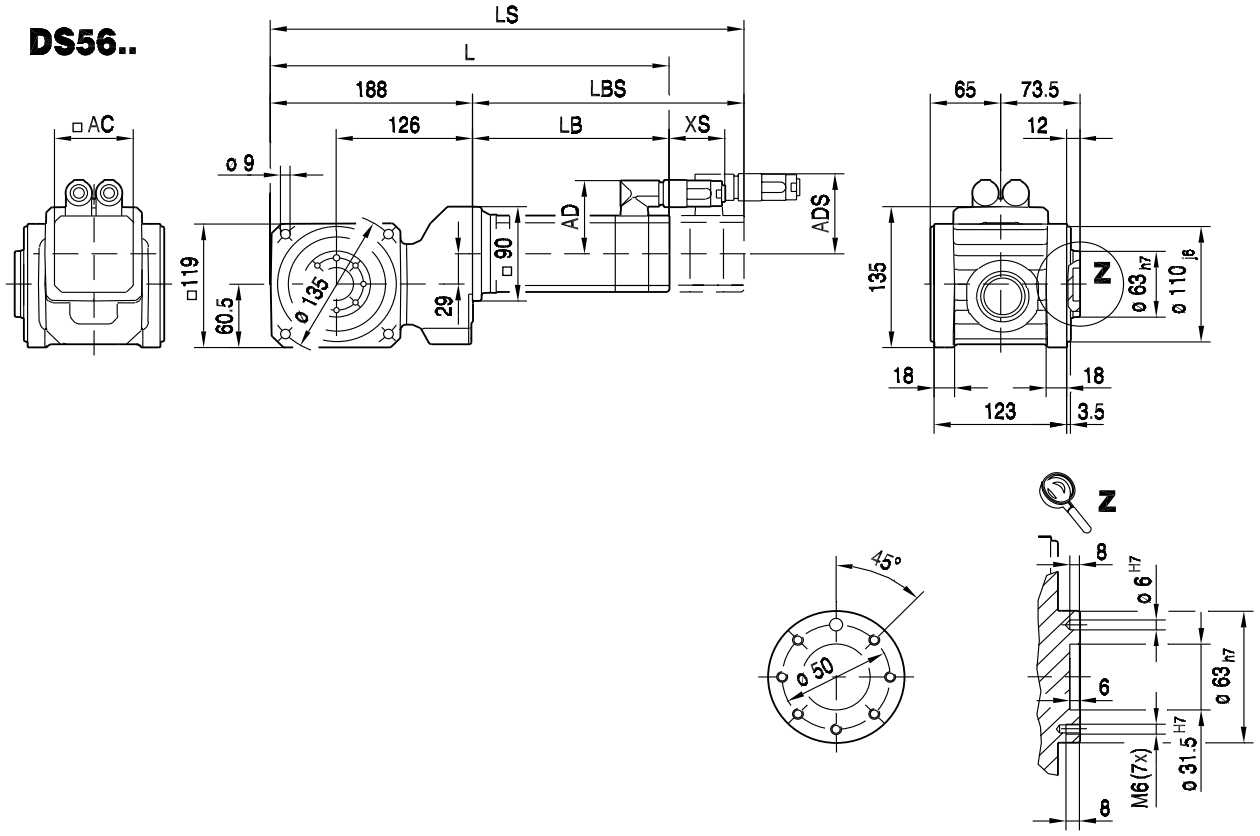

CM..

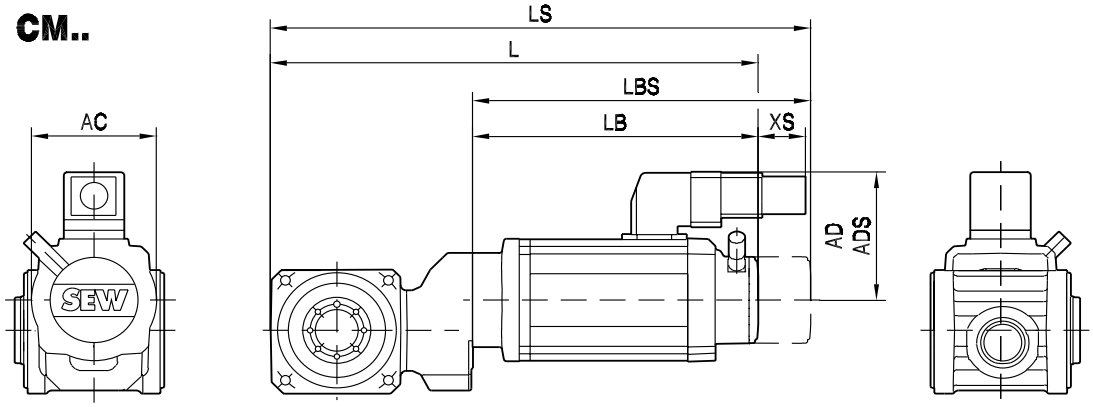

(→ 📖 150)	DS56M	DS56L	DS56H	CM71S	CM71M	CM71L		
AC	73	73	73	117	117	117		
AD	71	71	77	122	122	122		
ADS	77	77	77	122	122	122		
L	327	359	462	427	447	487		
LS	357	389	462	509	529	569		
LB	139	171	274	240	260	300		
LBS	169	201	274	322	342	382		
XS	70	70	51	45	45	45		

BSHF302..

56 046 00 03

DS56..

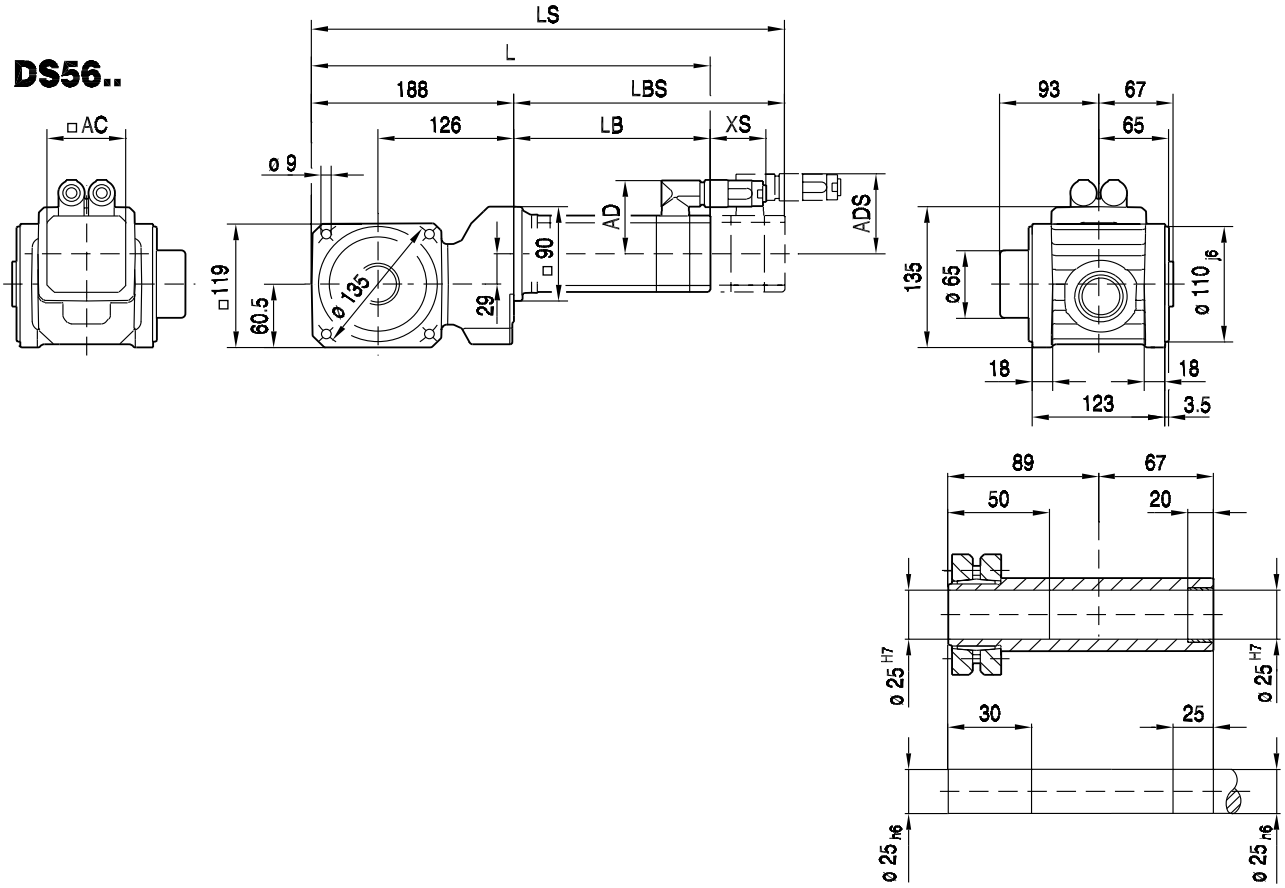

CM..

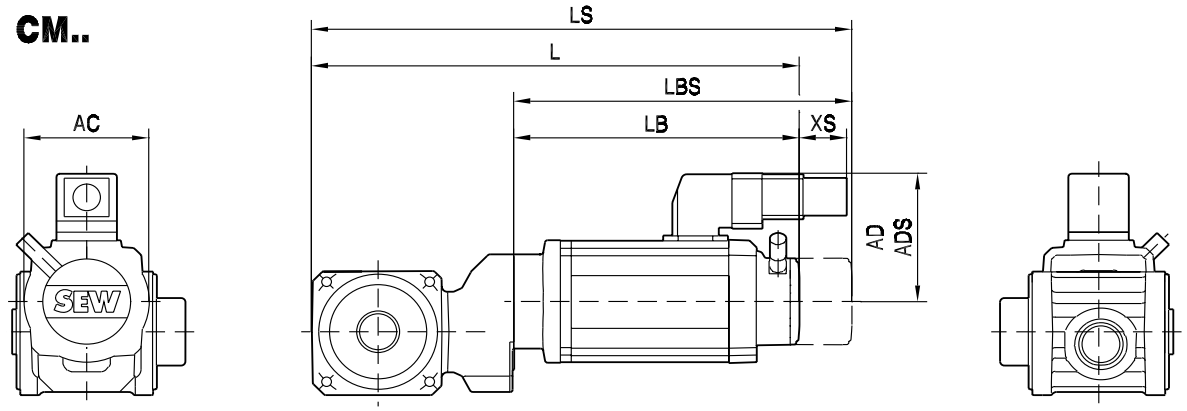

(→ 📖 150)	DS56M	DS56L	DS56H	CM71S	CM71M	CM71L		
AC	73	73	73	117	117	117		
AD	71	71	77	122	122	122		
ADS	77	77	77	122	122	122		
L	327	359	462	427	447	487		
LS	357	389	462	509	529	569		
LB	139	171	274	240	260	300		
LBS	169	201	274	322	342	382		
XS	70	70	51	45	45	45		

BSHF302/I..

56 006 00 03

DS56..

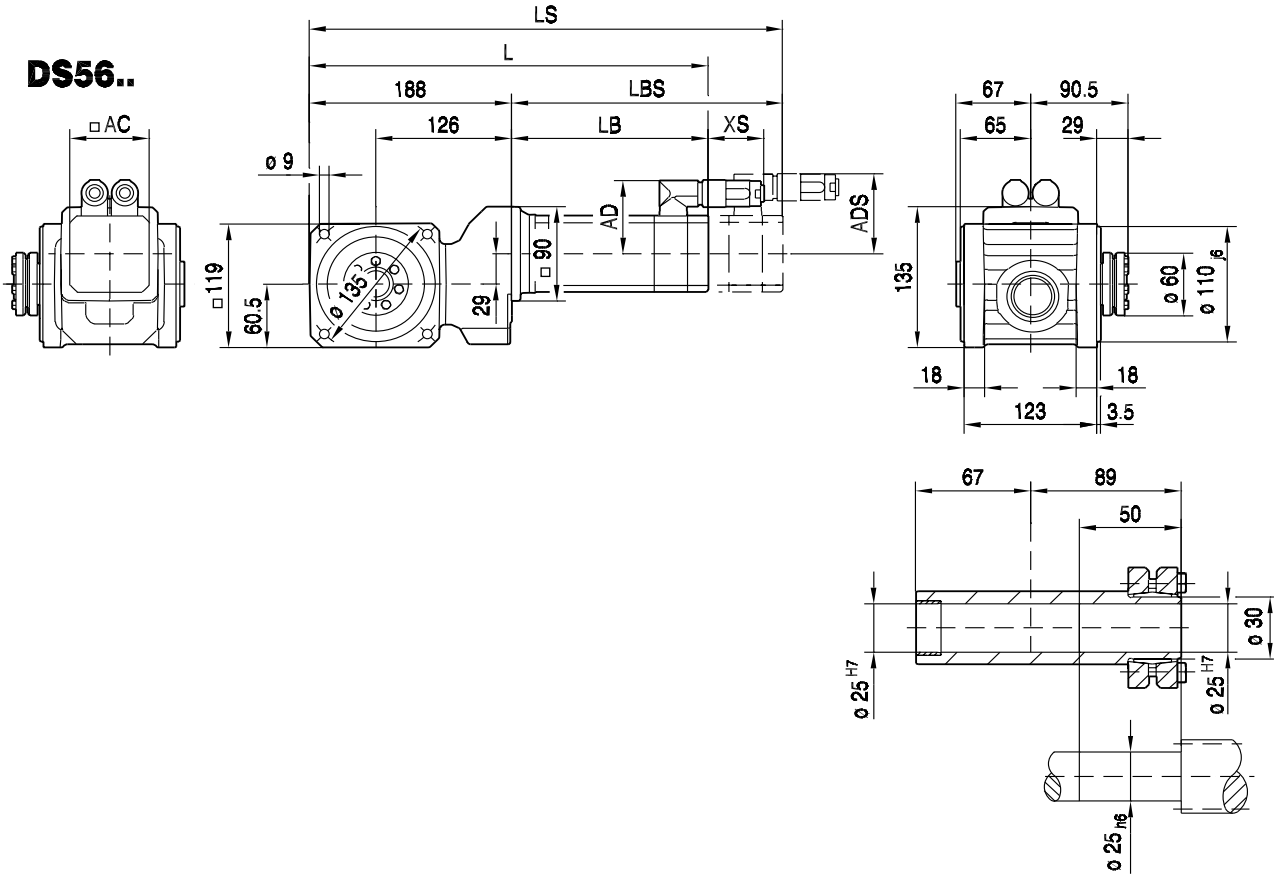

CM..

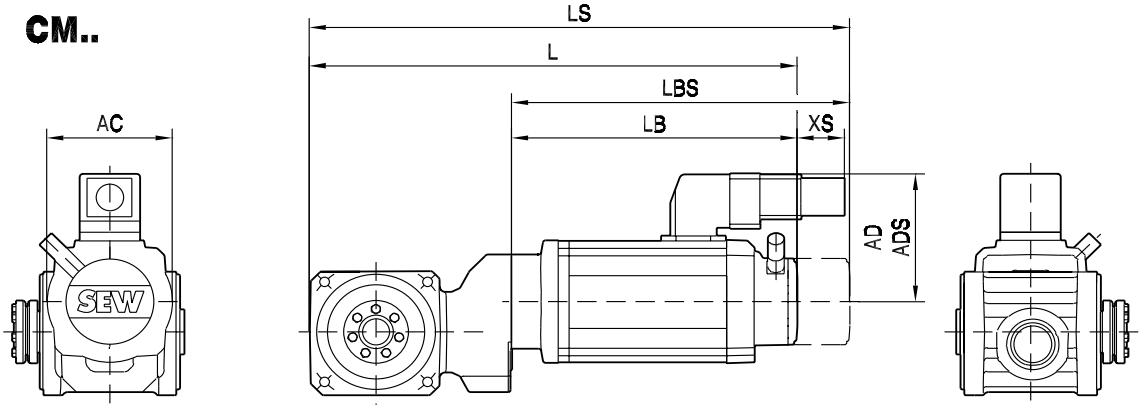

(→ 📖 150)	DS56M	DS56L	DS56H	CM71S	CM71M	CM71L		
AC	73	73	73	117	117	117		
AD	71	71	77	122	122	122		
ADS	77	77	77	122	122	122		
L	327	359	462	427	447	487		
LS	357	389	462	509	529	569		
LB	139	171	274	240	260	300		
LBS	169	201	274	322	342	382		
XS	70	70	51	45	45	45		

BSAF302..

55 004 00 07

DS56..

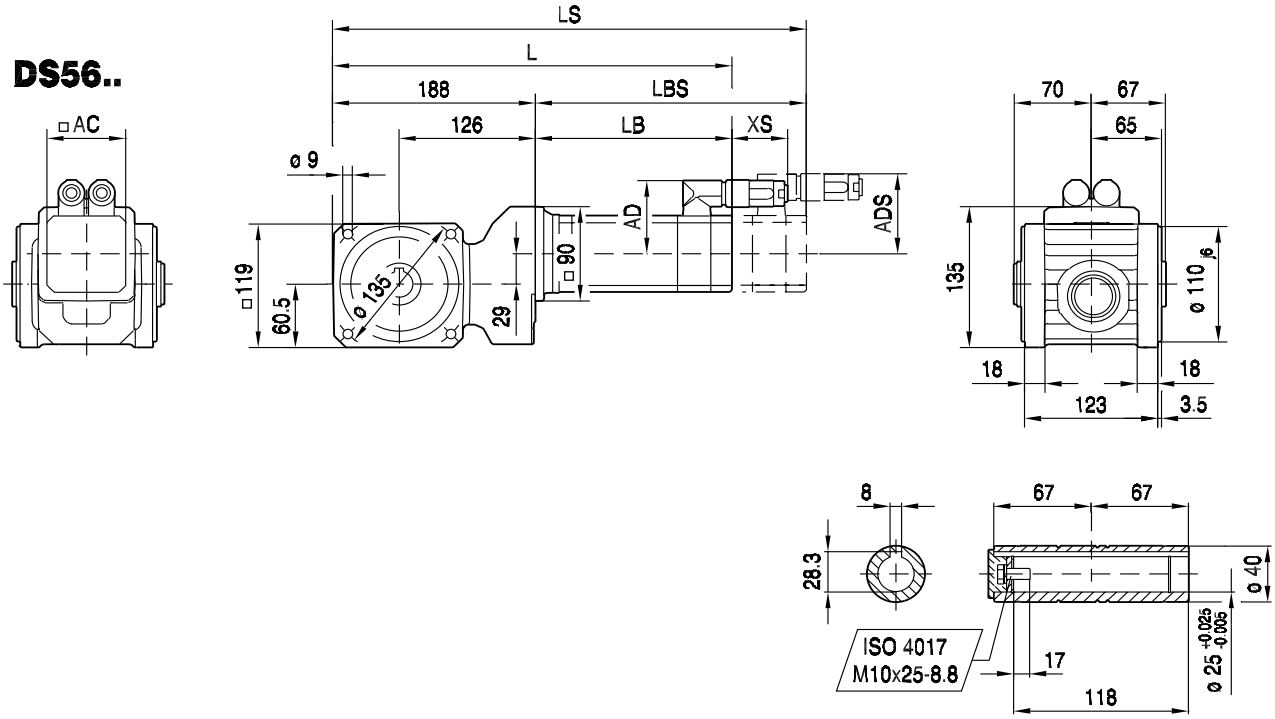

CM..

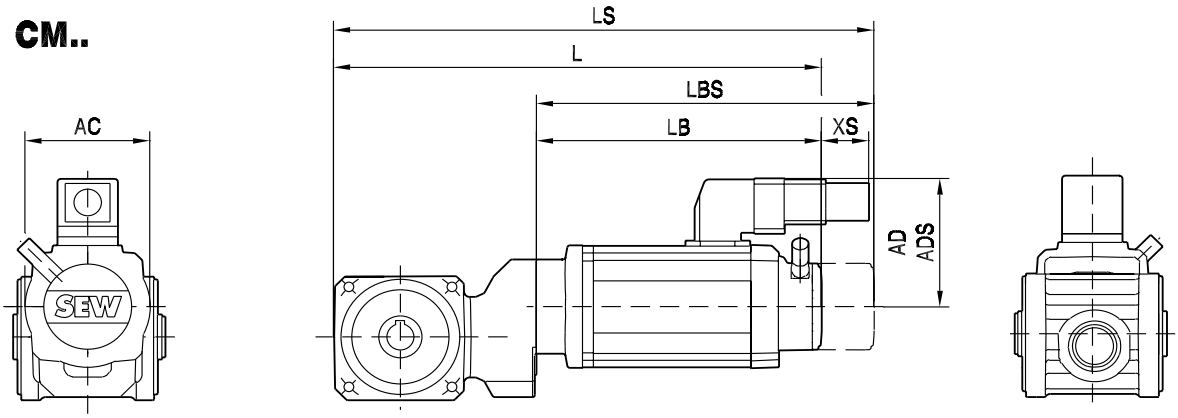

(→ 150)	DS56M	DS56L	DS56H	CM71S	CM71M	CM71L		
AC	73	73	73	117	117	117		
AD	71	71	77	122	122	122		
ADS	77	77	77	122	122	122		
L	327	359	462	427	447	487		
LS	357	389	462	509	529	569		
LB	139	171	274	240	260	300		
LBS	169	201	274	322	342	382		
XS	70	70	51	45	45	45		

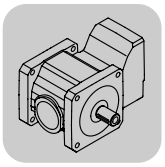

13.6 BS.F 402 / CMP / DS / CM [Nm]

M_{aDyn} [Nm]		CMP									DS			CM					
	i	50S	50M	50L	63S	63M	63L	71S	71M	71L	56M	56L	56H	71S	71M	71L	90S	90M	90L
BSF402 2	3						85		77	129						88	111	147	>183
	4		39	58	42	80	114	69	103	172			57	62	81	118	149	196	>200
	6	29	58	87	63	121	171	103	155	>205	21	43	86	93	121	177	>205	>205	>205
	8	39	77	116	83	161	>210	138	207	>210	29	57	114	124	162	>210	>210		
	10		93	139	100	>186	>186	165	>186	>186			137	149	>186	>186	>186	>186	>186
	15	71	140	209	151	>210	>210	>210	>210	>210	52	103	206	>210	>210	>210	>210	>210	>210
	20	94	187	>220	201	>220	>220	>220	>220	>220	69	138	>220	>220	>220	>220	>220		
	25	118	>225	>225	>225	>225		>225			86	173	>225	>225	>225				
	30	142	>225		>225						104	207	>225						

m [kg]		CMP									DS			CM					
	s	50S	50M	50L	63S	63M	63L	71S	71M	71L	56M	56L	56H	71S	71M	71L	90S	90M	90L
BSF402	2	13	14	15	15	17	18	19	21	23	13	14	15	20	22	25	31	34	38
BSBF: + 0.5 kg / BSHF: + -0.6 kg																			

CMP.. / DS.. / CM..				M1			M2;M4			M3;M5-6			φ		
	i	n_{epk} [1/min]	η [%]	a_0	a_1	a_2	a_0	a_1	a_2	a_0	a_1	a_2		/R	/M
													[']	[']	[']
BSF402 2	3	4500	93.7	16.640	-0.042	136375	23.960	-0.064	131323	16.800	-0.043	134151	6	3	-
	4	4500	93.8	17.960	-0.052	135265	27.920	-0.082	129034	18.770	-0.053	132596	6	3	-
	6	4500	93.9	19.780	-0.066	133791	33.620	-0.110	126042	21.690	-0.070	130498	6	3	-
	8	4500	94	21.090	-0.077	132801	37.830	-0.131	124010	23.790	-0.082	129114	6	3	-
	10	4500	90.1	22.390	-0.211	82904	53.970	-0.374	74730	28.110	-0.227	79870	6	3	-
	15	4500	90.5	29.190	-0.282	80694	74.180	-0.523	70371	37.700	-0.308	77196	6	3	-
	20	4500	90.7	34.340	-0.335	79192	89.990	-0.638	67275	45.420	-0.370	75192	6	3	-
	25	4500	90.9	38.330	-0.375	78100	101.09	-0.725	65289	51.010	-0.417	73859	6	3	-
	30	4500	91	41.830	-0.407	77194	110.31	-0.794	63679	55.870	-0.455	72752	6	3	-

CMP.. / DS.. / CM..							c_T			F_{Ramax}			F_{Rapk}		
	i	M_{amax} [Nm]	M_{apk} [Nm]	$M_{aNotaus}$ [Nm]	n_{ak} [1/min]	J_G 10^{-4} [kgm^2]	BSF [Nm/']	BSBF [Nm/']	BSHF [Nm/']	BSF [N]	BSBF [N]	BSHF [N]	BSF [N]	BSBF [N]	BSHF [N]
BSF402 2	3	122	183	275	500	5.2	7.3	8.9	8.5	6620	7600	6530	9050	10800	10800
	4	136	200	300	375	3.2	7.7	9.6	9.0	7270	8350	7170	8970	10800	10800
	6	156	205	305	250	1.5	8.1	10.2	9.6	8320	9560	8210	8940	10800	10800
	8	160	210	315	188	0.92	8.3	10.6	9.9	9140	10600	9120	8920	10800	10800
	10	124	186	275	150	1.9	10.9	15.3	13.9	9270	10800	10500	9040	10800	10800
	15	140	210	315	100	1.0	11.1	15.7	14.2	9220	10800	10800	8920	10800	10800
	20	152	220	330	75	0.62	11.2	15.9	14.5	9170	10800	10800	8870	10800	10800
	25	160	225	335	64	0.45	11.3	16.0	14.5	9140	10800	10800	8840	10800	10800
	30	160	225	335	60	0.34	11.3	16.1	14.6	9140	10800	10800	8840	10800	10800

13.7 BS.F 402 / CMP / DS / CM [mm]

BSF402..

55 010 00 06

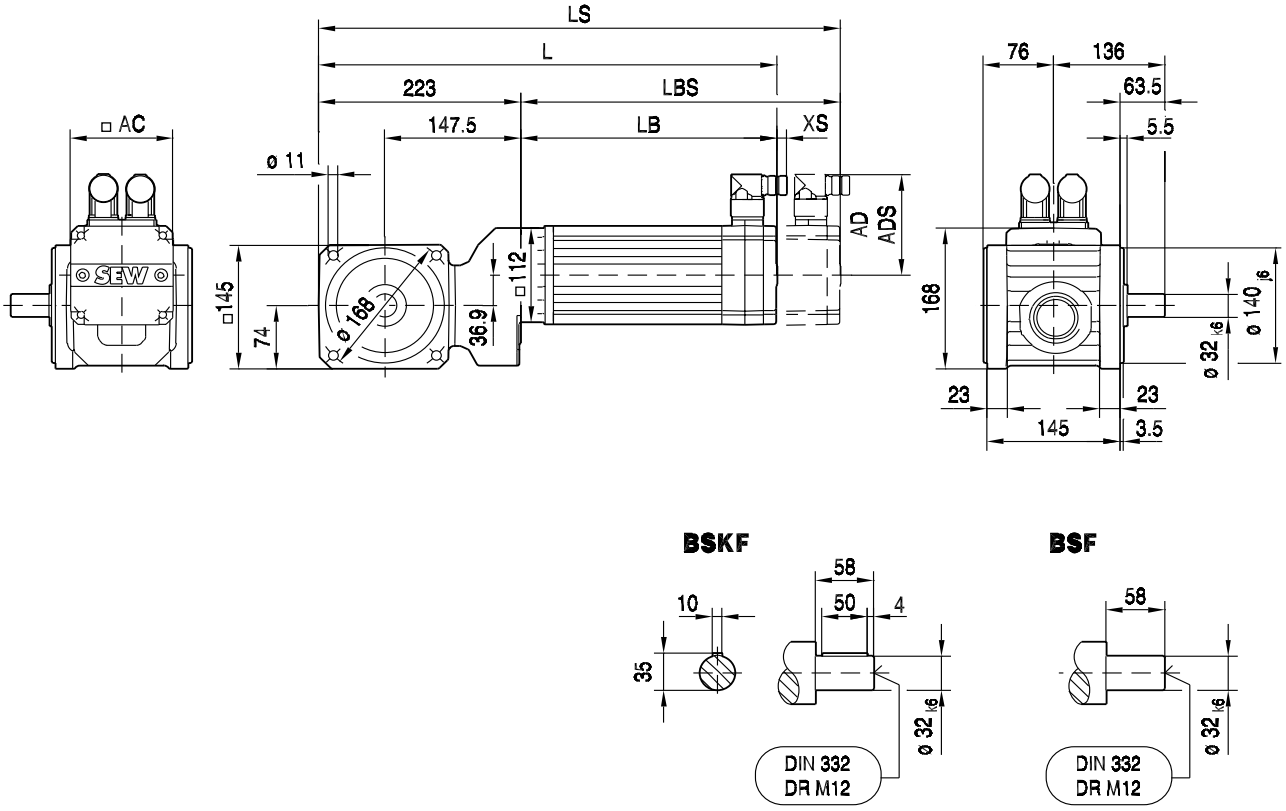

(→ 150)	CMP50S	CMP50M	CMP50L	CMP63S	CMP63M	CMP63L		
AC	73	73	73	88	88	88		
AD	83	83	83	92	92	92		
ADS	83	83	83	92	92	92		
L	364	403	442	399	449	499		
LS	393	432	471	428	478	528		
LB	141	180	219	176	226	276		
LBS	170	209	248	205	255	305		
XS	18	18	18	14	14	14		

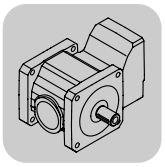

BS.F..CMP, DS, CM

BS.F 402 / CMP / DS / CM [mm]

BSBF402..

55 011 00 06

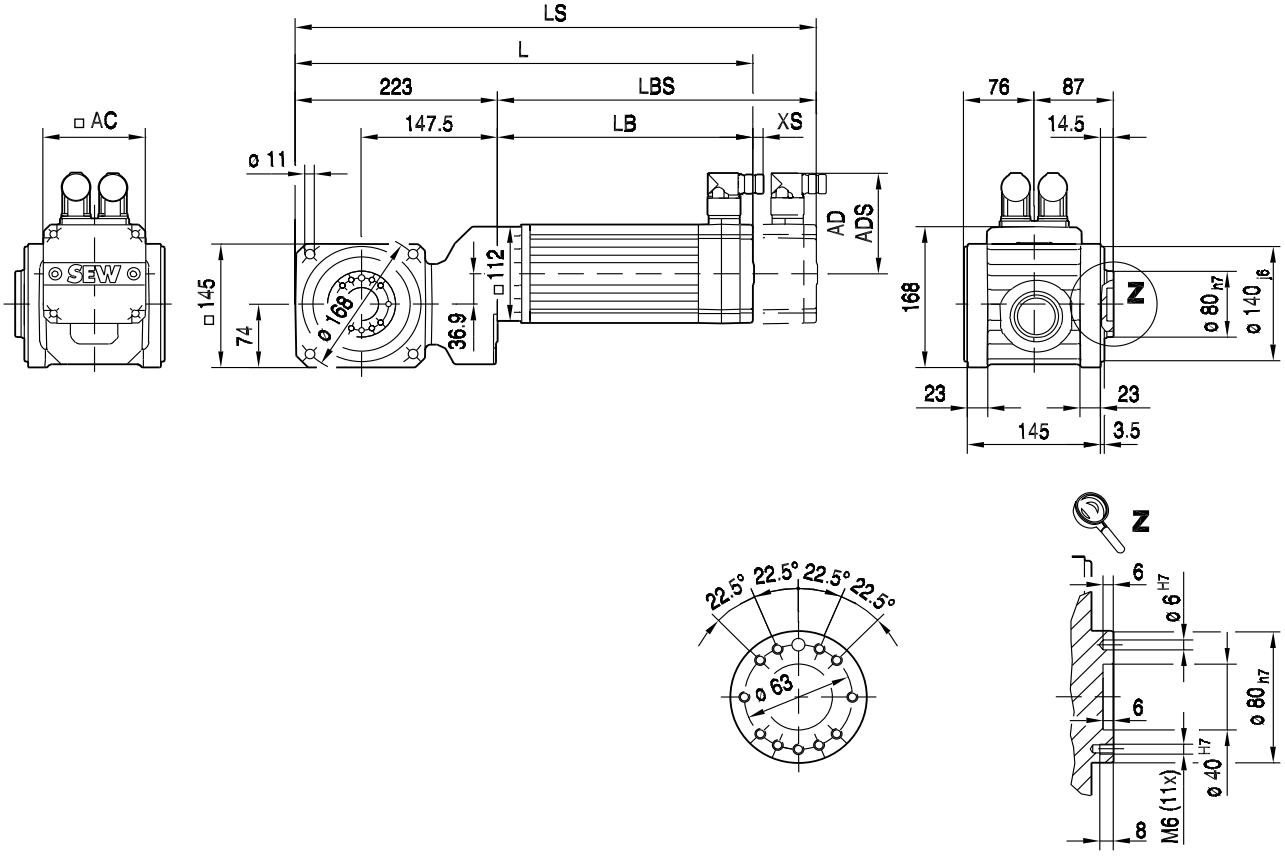

(→ 📖 150)	CMP50S	CMP50M	CMP50L	CMP63S	CMP63M	CMP63L		
AC	73	73	73	88	88	88		
AD	83	83	83	92	92	92		
ADS	83	83	83	92	92	92		
L	364	403	442	399	449	499		
LS	393	432	471	428	478	528		
LB	141	180	219	176	226	276		
LBS	170	209	248	205	255	305		
XS	18	18	18	14	14	14		

BSHF402..

55 012 00 06

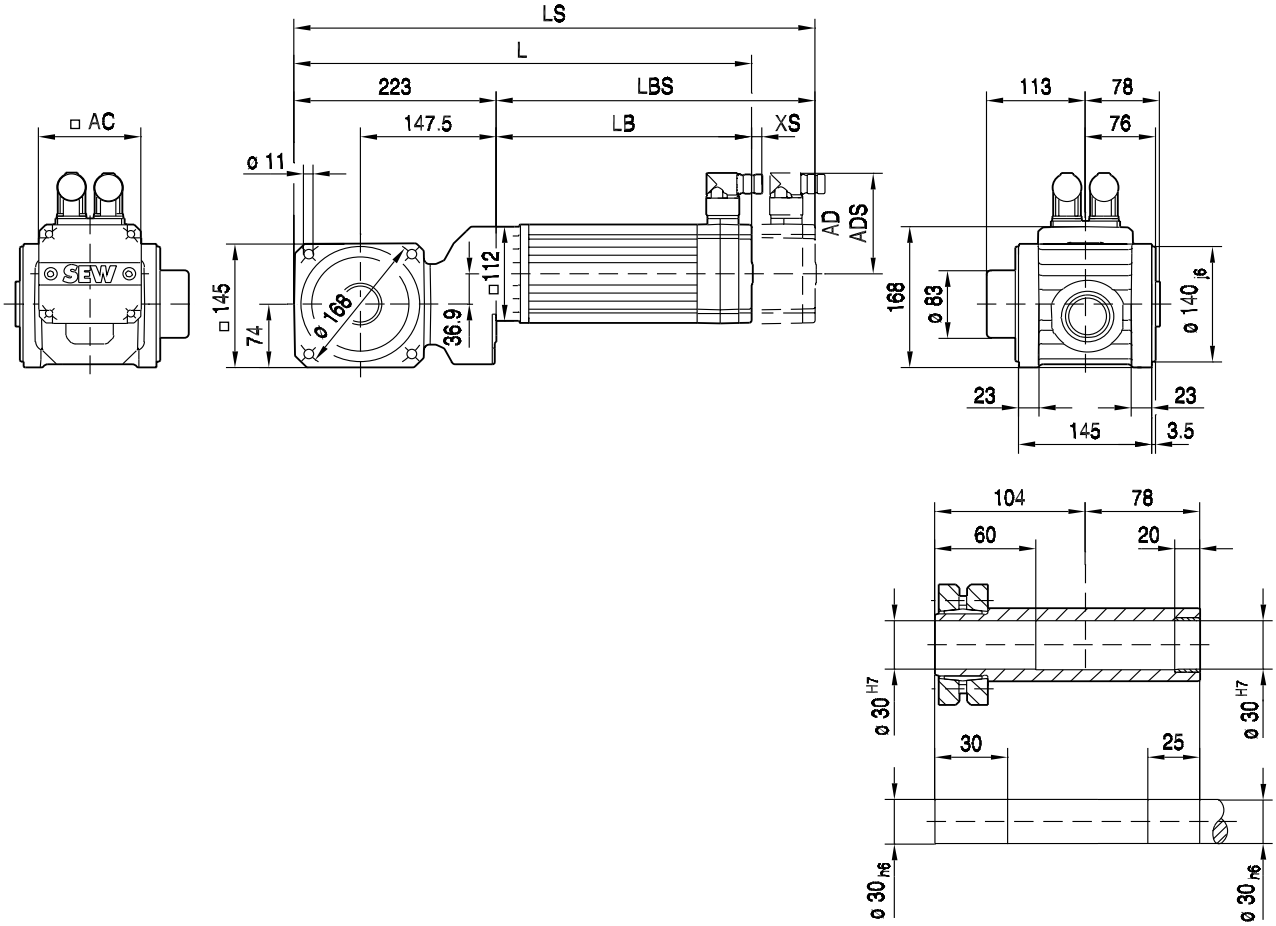

13

(→ 📖 150)	CMP50S	CMP50M	CMP50L	CMP63S	CMP63M	CMP63L		
AC	73	73	73	88	88	88		
AD	83	83	83	92	92	92		
ADS	83	83	83	92	92	92		
L	364	403	442	399	449	499		
LS	393	432	471	428	478	528		
LB	141	180	219	176	226	276		
LBS	170	209	248	205	255	305		
XS	18	18	18	14	14	14		

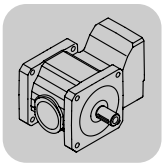

BS.F..CMP, DS, CM

BS.F 402 / CMP / DS / CM [mm]

BSHF402/I..

55 013 00 06

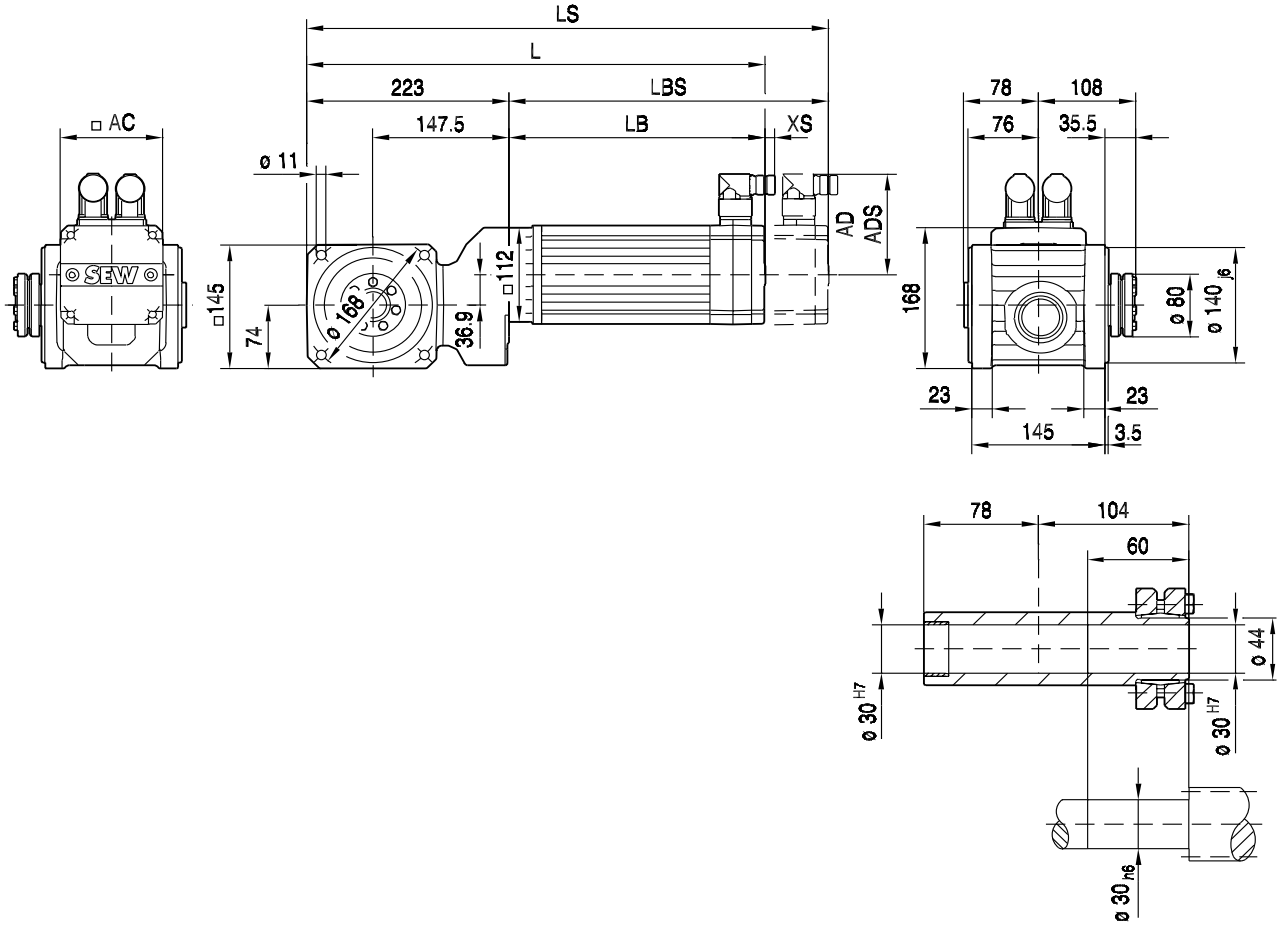

(→ 📖 150)	CMP50S	CMP50M	CMP50L	CMP63S	CMP63M	CMP63L		
AC	73	73	73	88	88	88		
AD	83	83	83	92	92	92		
ADS	83	83	83	92	92	92		
L	364	403	442	399	449	499		
LS	393	432	471	428	478	528		
LB	141	180	219	176	226	276		
LBS	170	209	248	205	255	305		
XS	18	18	18	14	14	14		

BSAF402..

55 017 00 07

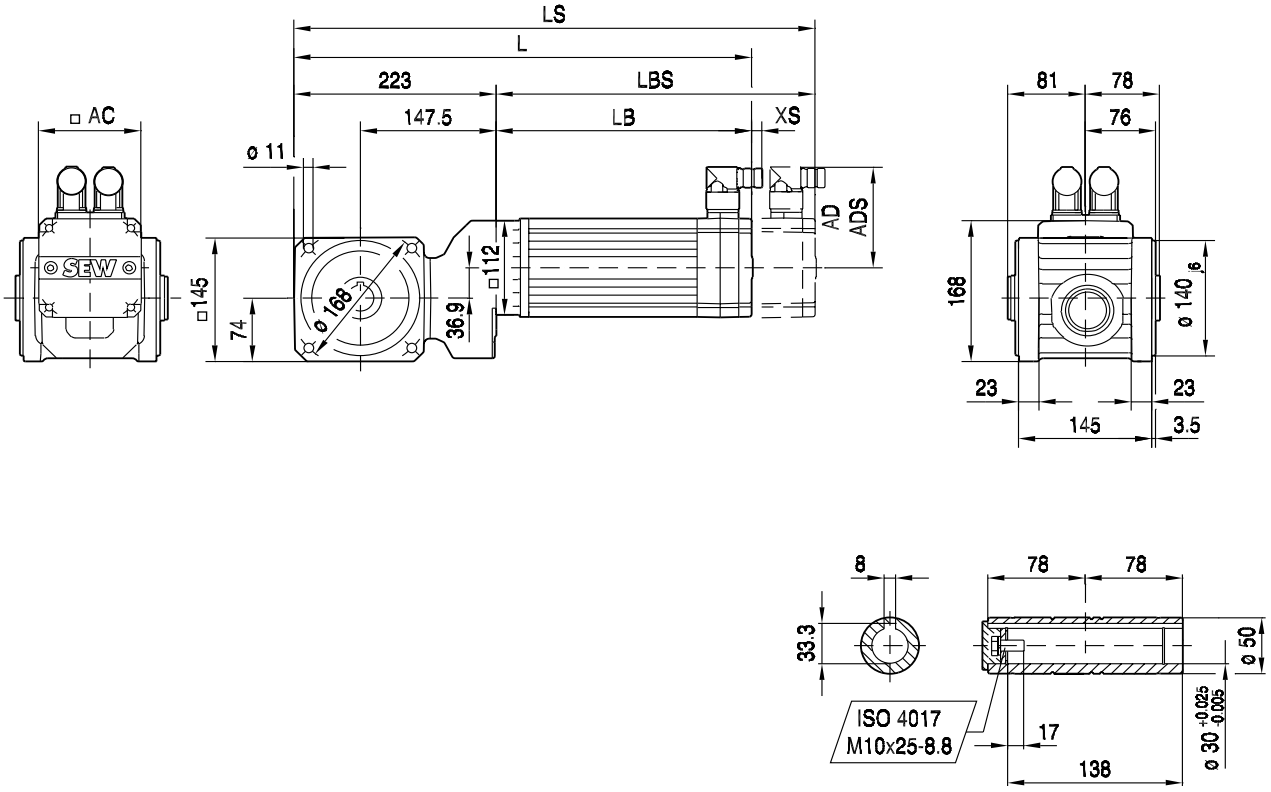

(→ 📖 150)	CMP50S	CMP50M	CMP50L	CMP63S	CMP63M	CMP63L		
AC	73	73	73	88	88	88		
AD	83	83	83	92	92	92		
ADS	83	83	83	92	92	92		
L	364	403	442	399	449	499		
LS	393	432	471	428	478	528		
LB	141	180	219	176	226	276		
LBS	170	209	248	205	255	305		
XS	18	18	18	14	14	14		

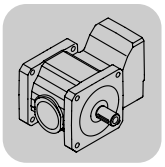

BSF402..

56 007 00 03

DS56..

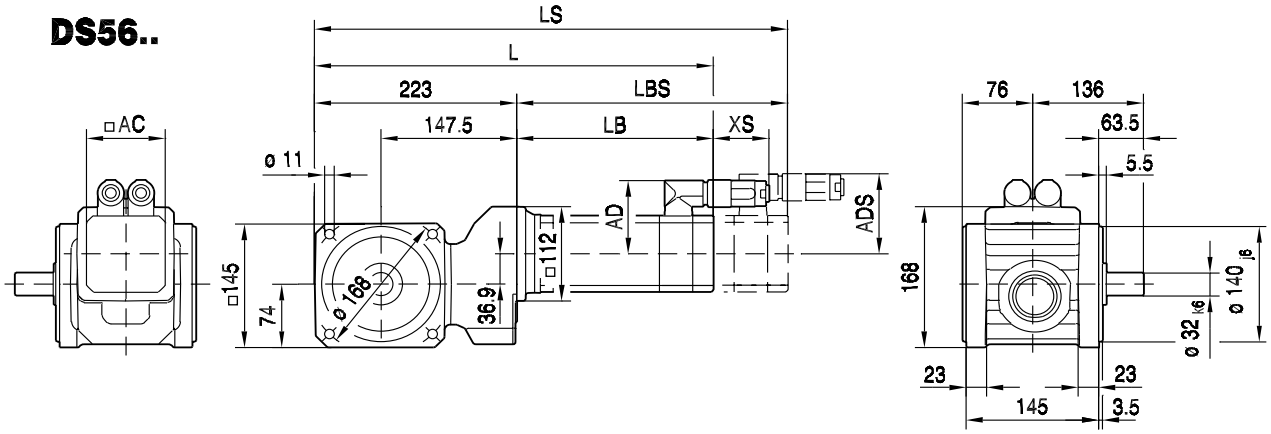

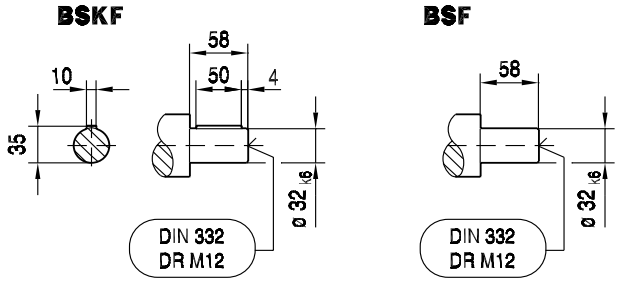

CM..

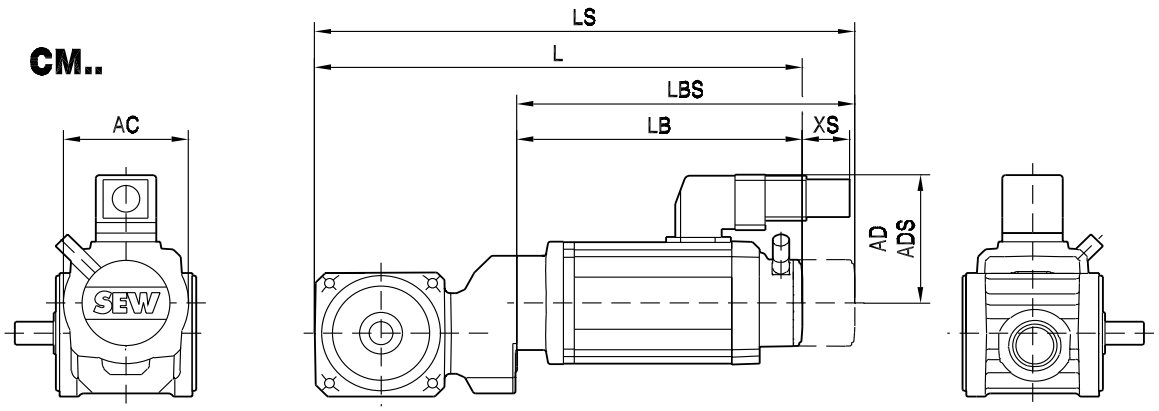

(→ 📖 150)	DS56M	DS56L	DS56H	CM71S	CM71M	CM71L	CM90S	CM90M	CM90L
AC	73	73	73	117	117	117	142	142	142
AD	71	71	77	122	122	122	140	140	140
ADS	77	77	77	122	122	122	140	140	140
L	357	389	492	457	477	517	510	537	591
LS	387	419	492	540	560	600	605	632	686
LB	134	166	269	235	255	295	287	314	368
LBS	164	196	269	317	337	377	382	409	463
XS	70	70	51	45	45	45	50	50	50

BSBF402..

56 008 00 03

DS56..

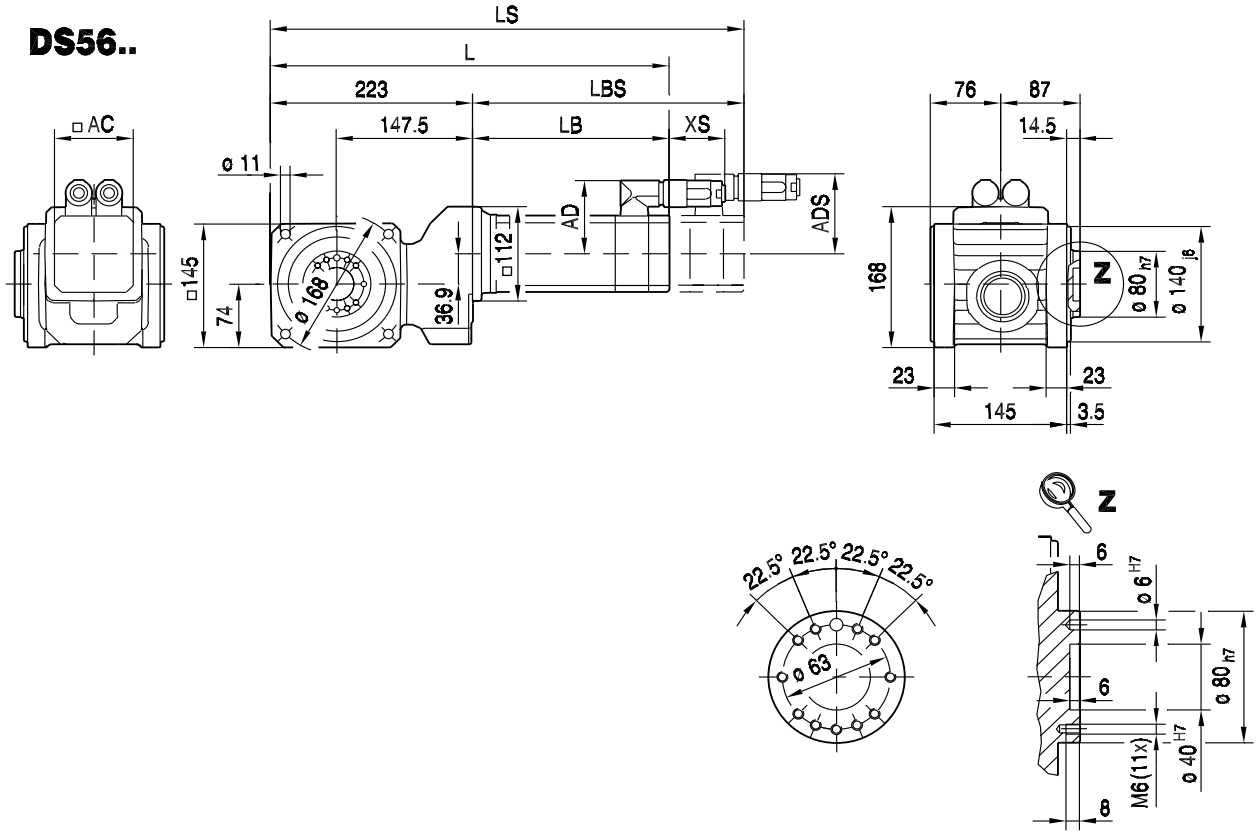

CM..

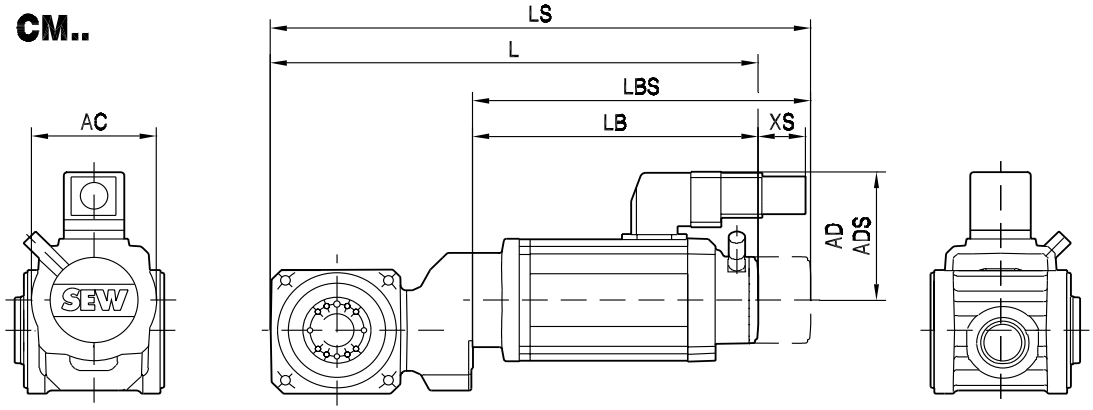

(→ 150)	DS56M	DS56L	DS56H	CM71S	CM71M	CM71L	CM90S	CM90M	CM90L
AC	73	73	73	117	117	117	142	142	142
AD	71	71	77	122	122	122	140	140	140
ADS	77	77	77	122	122	122	140	140	140
L	357	389	492	457	477	517	510	537	591
LS	387	419	492	540	560	600	605	632	686
LB	134	166	269	235	255	295	287	314	368
LBS	164	196	269	317	337	377	382	409	463
XS	70	70	51	45	45	45	50	50	50

BSHF402..

56 048 00 03

DS56..

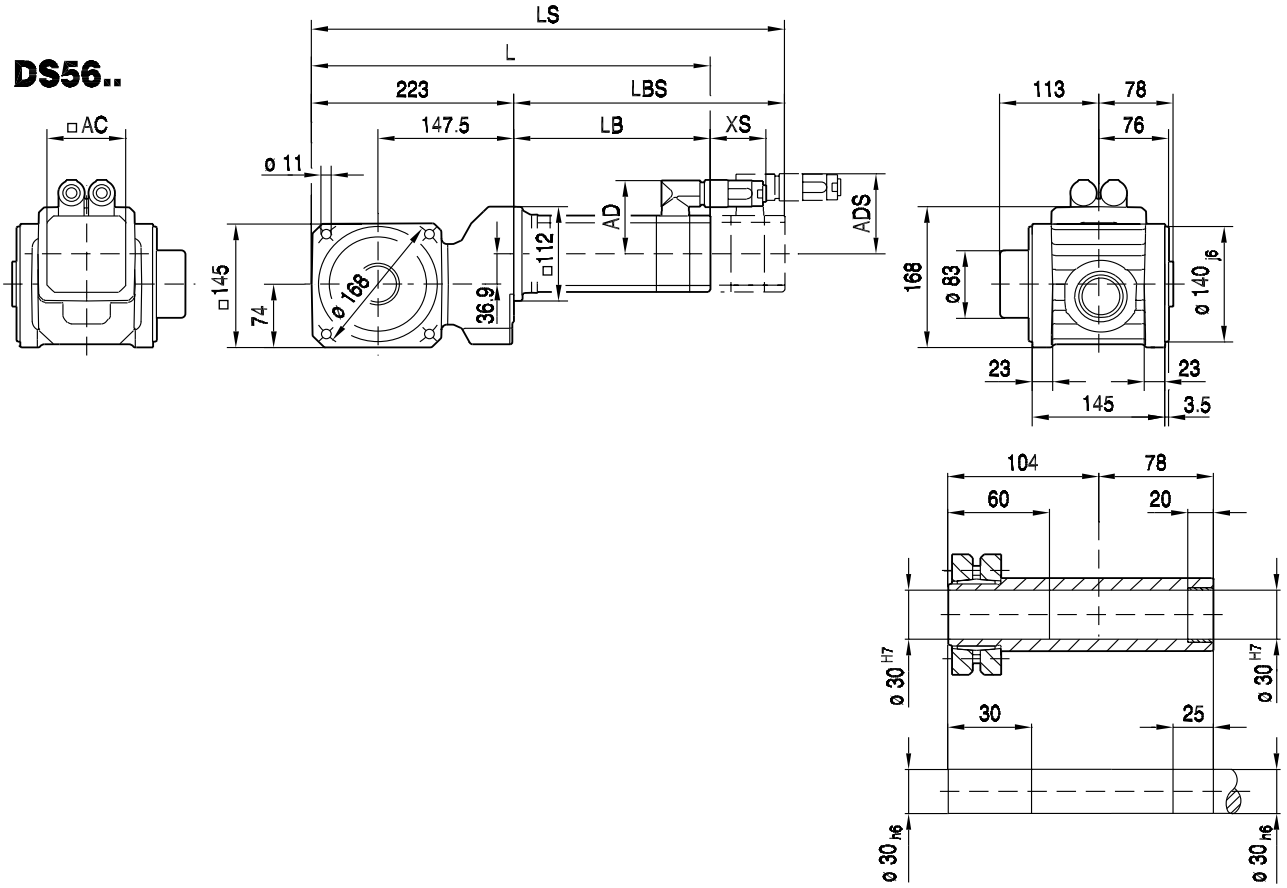

CM..

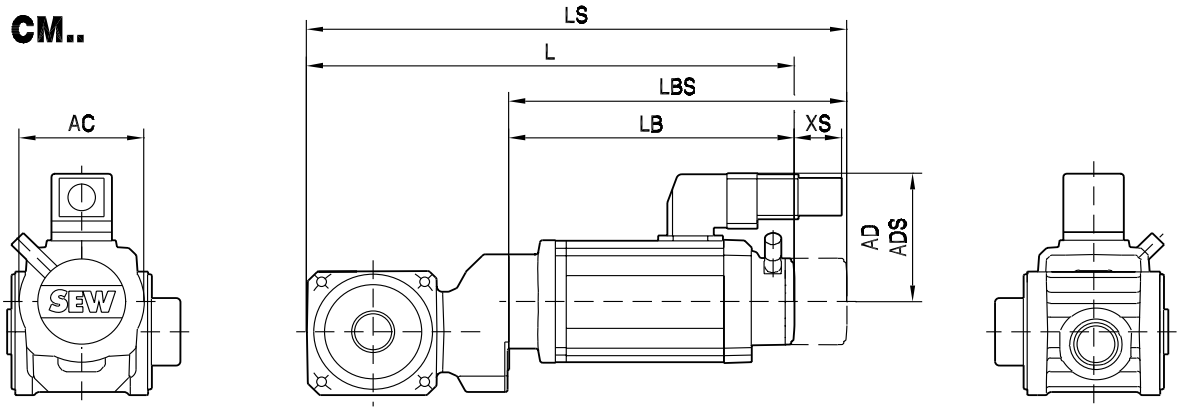

(→ 📖 150)	DS56M	DS56L	DS56H	CM71S	CM71M	CM71L	CM90S	CM90M	CM90L
AC	73	73	73	117	117	117	142	142	142
AD	71	71	77	122	122	122	140	140	140
ADS	77	77	77	122	122	122	140	140	140
L	357	389	492	457	477	517	510	537	591
LS	387	419	492	540	560	600	605	632	686
LB	134	166	269	235	255	295	287	314	368
LBS	164	196	269	317	337	377	382	409	463
XS	70	70	51	45	45	45	50	50	50

BSHF402/I..

56 009 00 03

DS56..

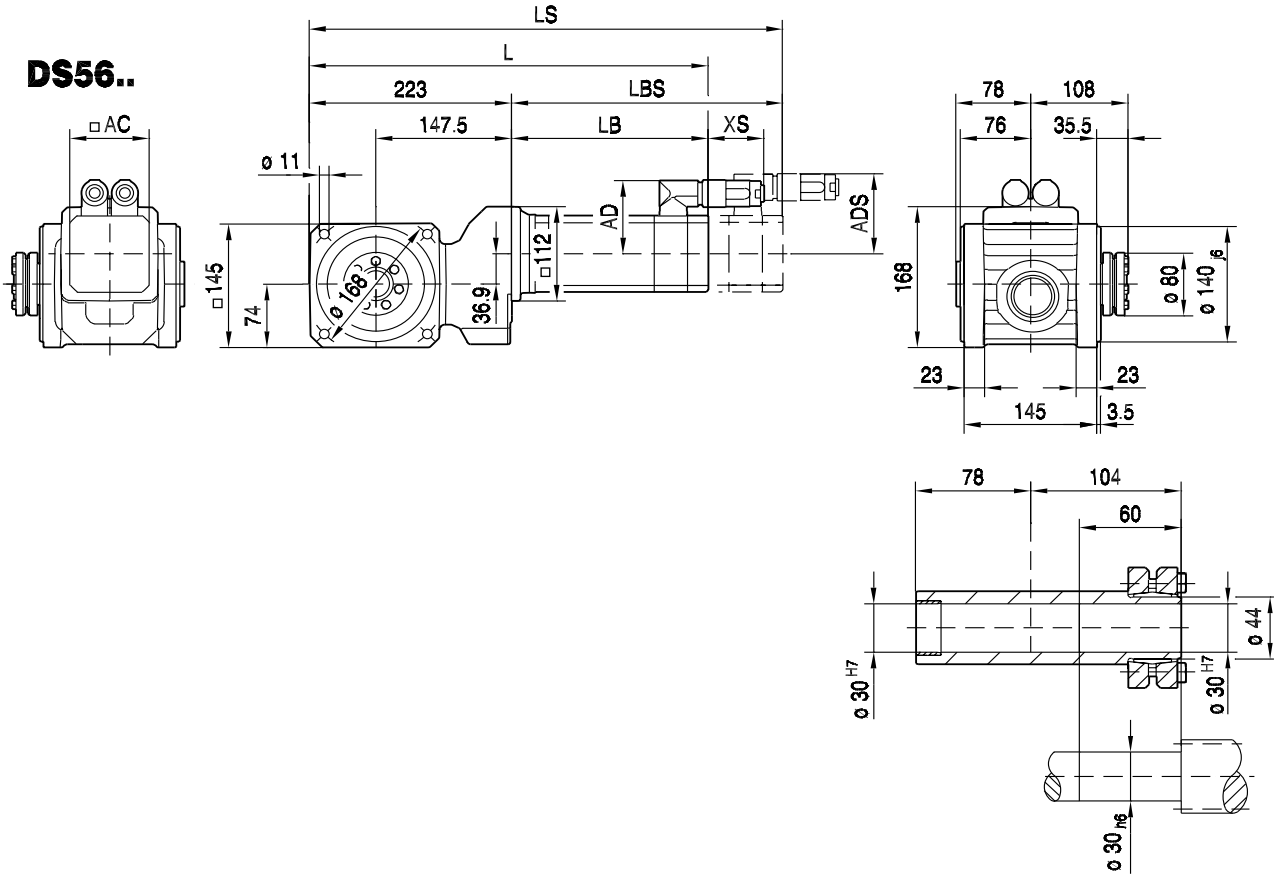

CM..

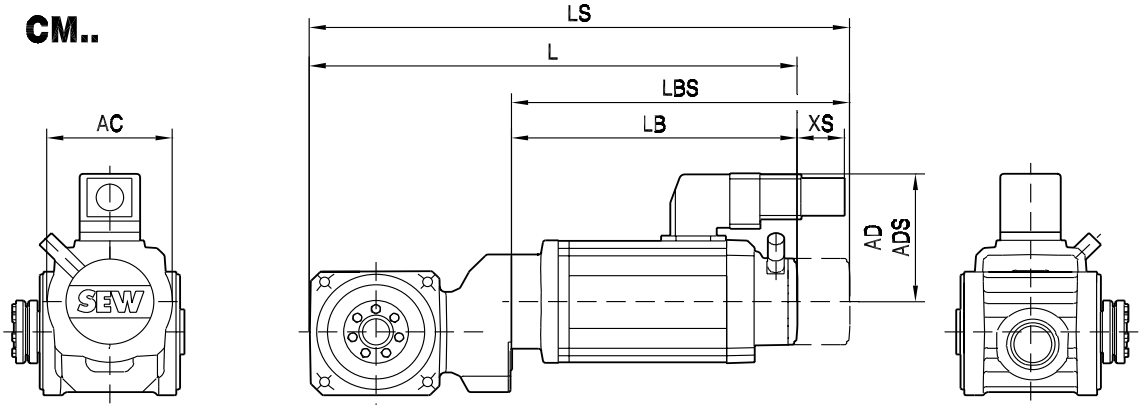

(→ 📖 150)	DS56M	DS56L	DS56H	CM71S	CM71M	CM71L	CM90S	CM90M	CM90L
AC	73	73	73	117	117	117	142	142	142
AD	71	71	77	122	122	122	140	140	140
ADS	77	77	77	122	122	122	140	140	140
L	357	389	492	457	477	517	510	537	591
LS	387	419	492	540	560	600	605	632	686
LB	134	166	269	235	255	295	287	314	368
LBS	164	196	269	317	337	377	382	409	463
XS	70	70	51	45	45	45	50	50	50

BSAF402..

55 005 00 07

DS56..

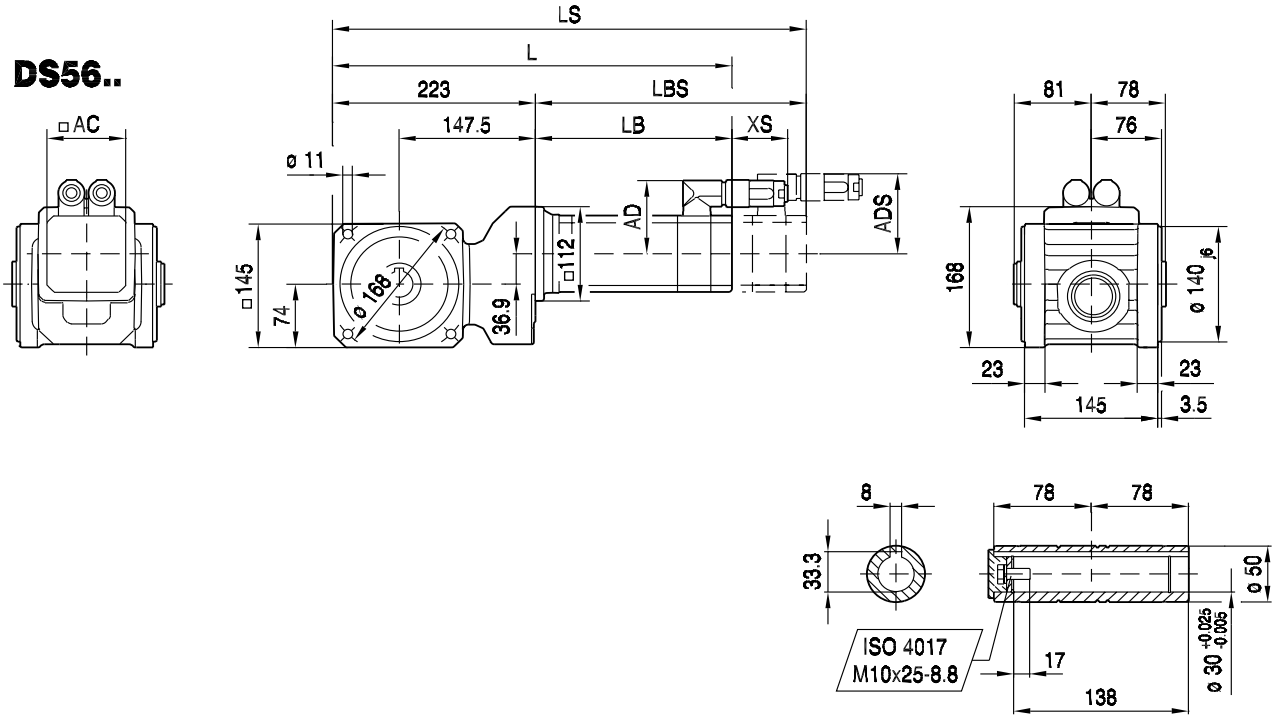

CM..

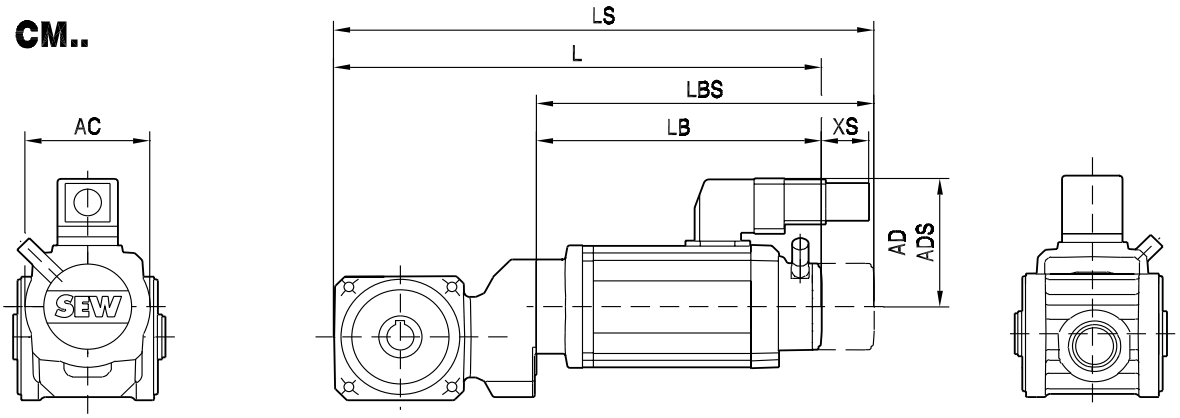

(→ 📖 150)	DS56M	DS56L	DS56H	CM71S	CM71M	CM71L	CM90S	CM90M	CM90L
AC	73	73	73	117	117	117	142	142	142
AD	71	71	77	122	122	122	140	140	140
ADS	77	77	77	122	122	122	140	140	140
L	357	389	492	457	477	517	510	537	591
LS	387	419	492	540	560	600	605	632	686
LB	134	166	269	235	255	295	287	314	368
LBS	164	196	269	317	337	377	382	409	463
XS	70	70	51	45	45	45	50	50	50

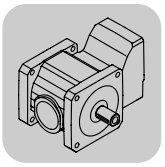

13.8 BS.F 502 / CMP / CM [Nm]

M_{aDyn} [Nm]		CMP						CM						
	i	63S	63M	63L	71S	71M	71L	71S	71M	71L	90S	90M	90L	112S
BSF502 2	3												213	232
	4		81	114	69	104	172	62	81	118	149	196	285	310
	6	63	121	172	103	155	259	93	121	177	224	295	>410	>410
	8	84	161	229	138	207	345	124	162	236	298	393		
	10		194	275	166	249	>375	149	195	284	358	>375	>375	>375
	12	125	241		206			186	243					
	15	151	291	>375	248	373	>375	224	292	>375	>375	>375	>375	>375
	20	201	>375	>375	331	>375	>375	299	>375	>375	>375	>375		
	25	251	>375	>375	>375	>375	>375	373	>375	>375	>375			
	30	302	>375		>375			>375	>375					
	35	352												

m [kg]		CMP						CM						
	s	63S	63M	63L	71S	71M	71L	71S	71M	71L	90S	90M	90L	112S
BSF502	2	33	34	36	37	38	41	38	39	43	48	51	56	58
BSBF: + 0.4 kg / BSHF: + -1.0 kg														

CMP.. / CM..				M1			M2;M4			M3;M5-6			φ		
	i	n_{epk} [1/min]	η [%]	a_0	a_1	a_2	a_0	a_1	a_2	a_0	a_1	a_2	[']	/R [']	/M [']
BSF502 2	3	4500	94.1	21.290	-0.055	184165	18.470	-0.081	183632	32.710	-0.077	180058	6	3	-
	4	4500	94.1	20.570	-0.065	183623	16.990	-0.097	182939	34.950	-0.094	178708	6	3	-
	6	4500	94.1	19.770	-0.080	182775	14.920	-0.121	181967	37.600	-0.120	177200	6	3	-
	8	4500	94.1	19.260	-0.090	182213	13.390	-0.137	181401	39.070	-0.138	176411	6	3	-
	10	4500	90.5	-6.620	-0.203	120320	-17.470	-0.316	119454	22.510	-0.334	115909	6	3	-
	12	4500	94	18.420	-0.103	181624	11.520	-0.158	180702	40.770	-0.162	175563	6	3	-
	15	4500	90.5	-8.980	-0.257	119313	-22.970	-0.403	118384	27.690	-0.441	114160	6	3	-
	20	4500	90.5	-10.770	-0.295	118759	-26.040	-0.466	117558	31.720	-0.518	112896	6	3	-
	25	4500	90.5	-11.480	-0.324	118189	-28.420	-0.511	117063	34.290	-0.575	112134	6	3	-
	30	4500	90.6	-12.280	-0.345	117868	-30.160	-0.546	116700	36.580	-0.620	111510	6	3	-
	35	4500	90.6	-12.890	-0.362	117623	-31.460	-0.574	116419	38.290	-0.655	111052	6	3	-

CMP.. / CM..							c_T			F_{Ramax}			F_{Rapk}		
	i	M_{amax} [Nm]	M_{apk} [Nm]	$M_{aNotaus}$ [Nm]	n_{ak} [1/min]	J_G 10^{-4} [kgm^2]	BSF [Nm/']	BSBF [Nm/']	BSHF [Nm/']	BSF [N]	BSBF [N]	BSHF [N]	BSF [N]	BSBF [N]	BSHF [N]
BSF502 2	3	310	385	575	533	12	23.0	27.0	25.0	10200	12200	11000	12000	14400	14400
	4	320	400	600	450	7.3	25.0	31.0	27.0	11200	13400	12100	11900	14400	14400
	6	320	410	615	450	3.6	27.0	33.0	30.0	12200	14400	13800	11900	14400	14400
	8	320	420	630	450	6.2	28.0	35.0	31.0	12200	14400	14400	11800	14400	14400
	10	250	375	560	500	4.0	31.0	35.0	33.0	12300	14400	14400	12000	14400	14400
	12	300	410	615	583	1.1	28.0	36.0	31.0	12200	14400	14400	11900	14400	14400
	15	250	375	560	467	2.1	32.0	36.0	34.0	12300	14400	14400	12000	14400	14400
	20	250	375	560	350	1.3	32.0	37.0	35.0	12300	14400	14400	12000	14400	14400
	25	250	375	560	280	0.92	33.0	37.0	35.0	12300	14400	14400	12000	14400	14400
	30	250	375	560	233	0.70	33.0	37.0	35.0	12300	14400	14400	12000	14400	14400
	35	250	375	560	200	0.56	32.0	37.0	35.0	12300	14400	14400	12000	14400	14400

13.9 BS.F 502 / CMP / CM [mm]

BSF502..

55 014 00 06

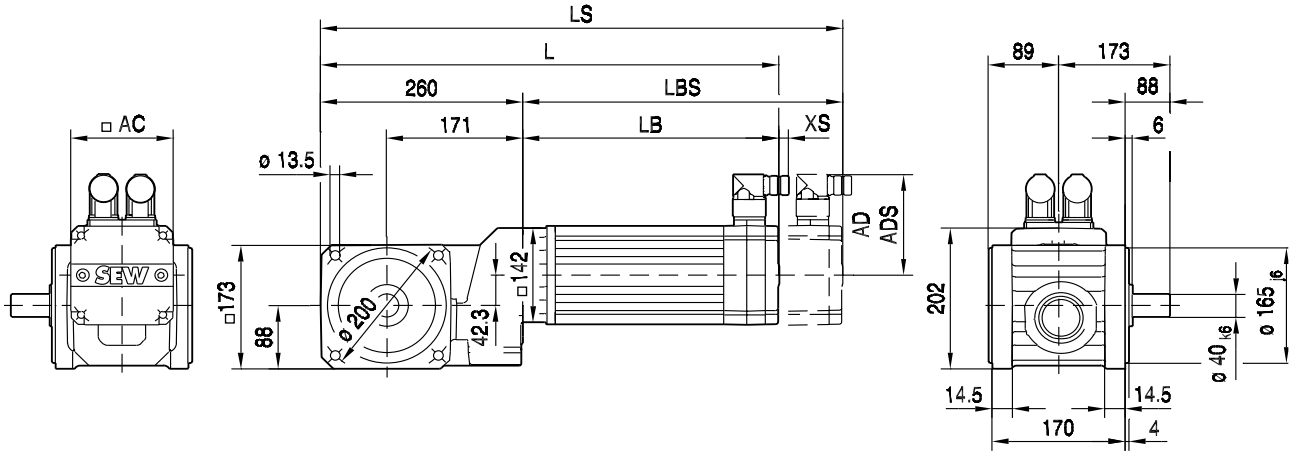

BSKF

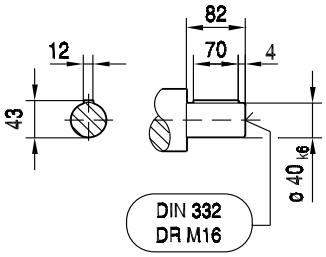

BSF

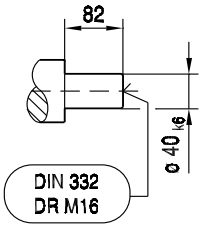

(→ 150)	CMP63S	CMP63M	CMP63L					
AC	88	88	88					
AD	92	92	92					
ADS	92	92	92					
L	428	478	528					
LS	457	507	557					
LB	168	218	268					
LBS	197	247	297					
XS	14	14	14					

BSBF502..

55 015 00 06

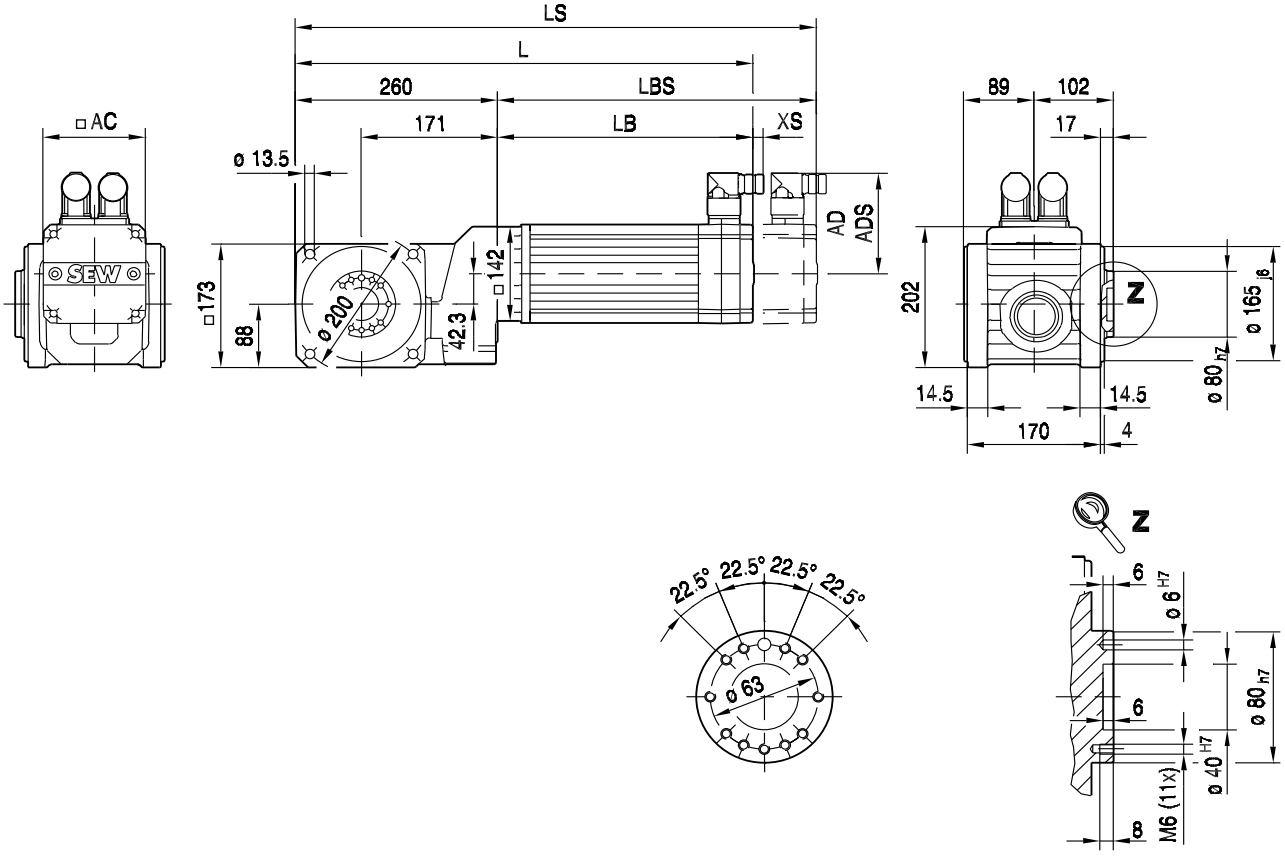

(→ 📖 150)	CMP63S	CMP63M	CMP63L					
AC	88	88	88					
AD	92	92	92					
ADS	92	92	92					
L	428	478	528					
LS	457	507	557					
LB	168	218	268					
LBS	197	247	297					
XS	14	14	14					

BSHF502..

55 016 00 06

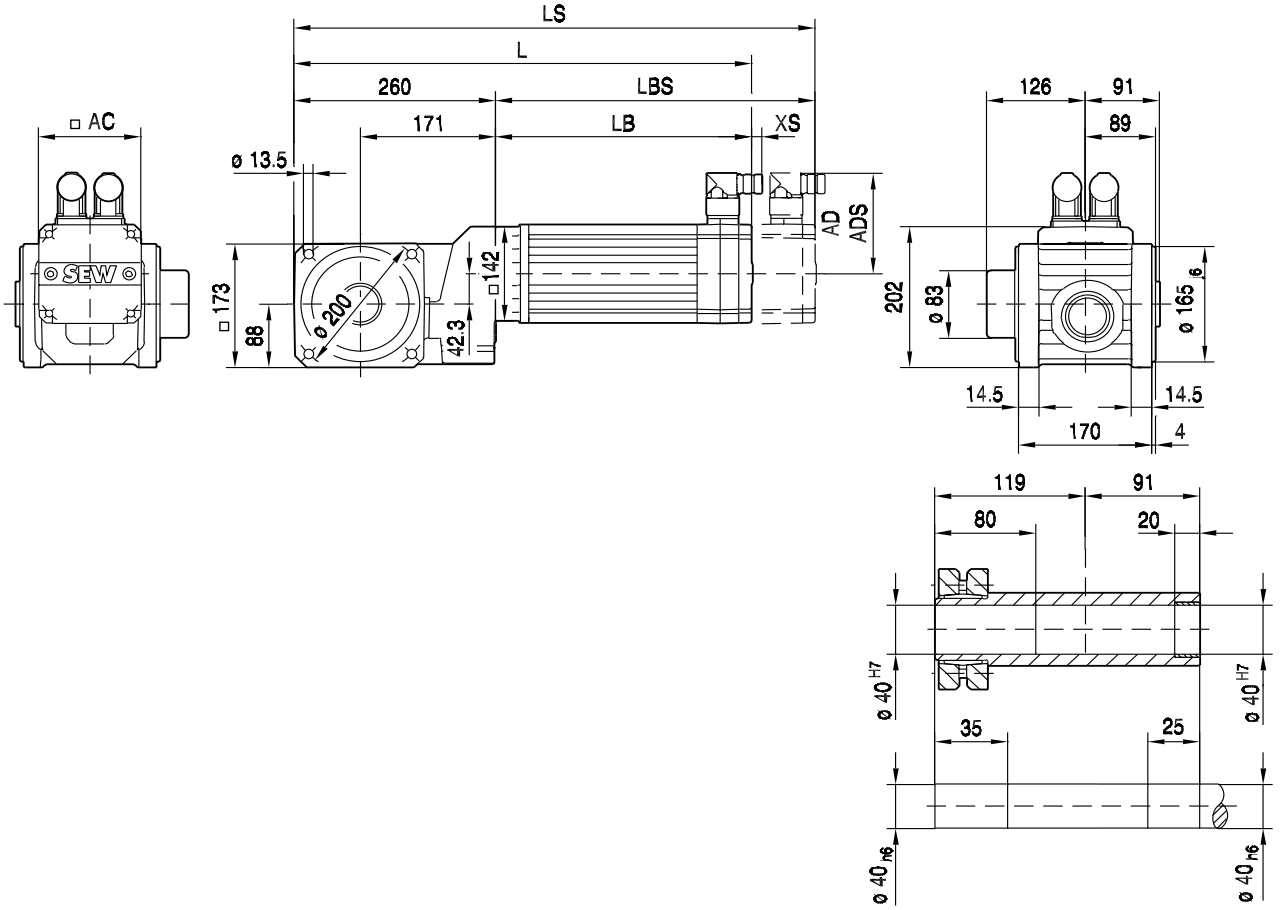

(→ 📖 150)	CMP63S	CMP63M	CMP63L					
AC	88	88	88					
AD	92	92	92					
ADS	92	92	92					
L	428	478	528					
LS	457	507	557					
LB	168	218	268					
LBS	197	247	297					
XS	14	14	14					

BSHF502/I..

55 017 00 06

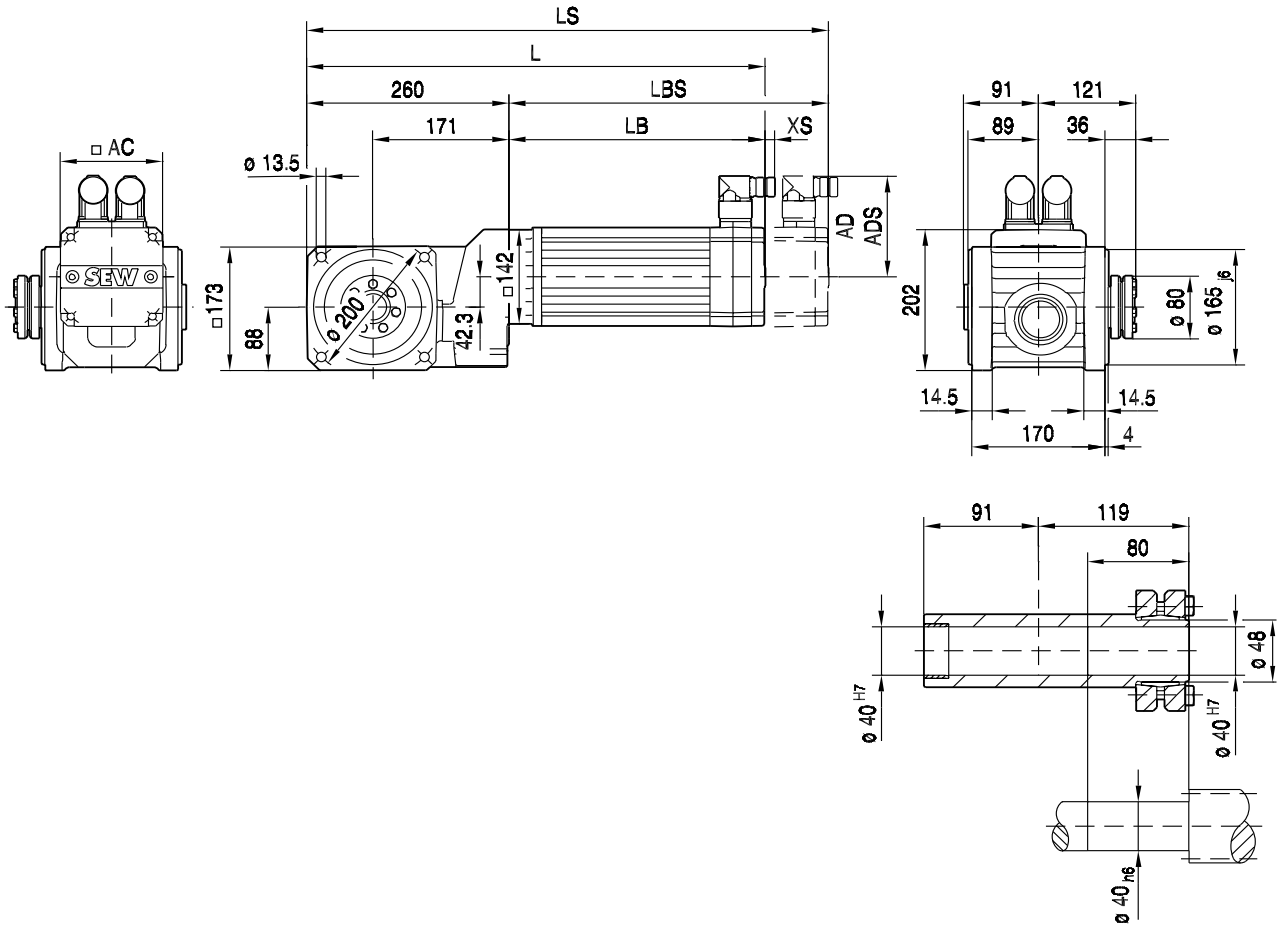

13

(→ 📖 150)	CMP63S	CMP63M	CMP63L					
AC	88	88	88					
AD	92	92	92					
ADS	92	92	92					
L	428	478	528					
LS	457	507	557					
LB	168	218	268					
LBS	197	247	297					
XS	14	14	14					

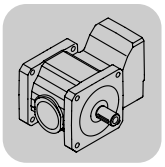

BSAF502..

55 018 00 07

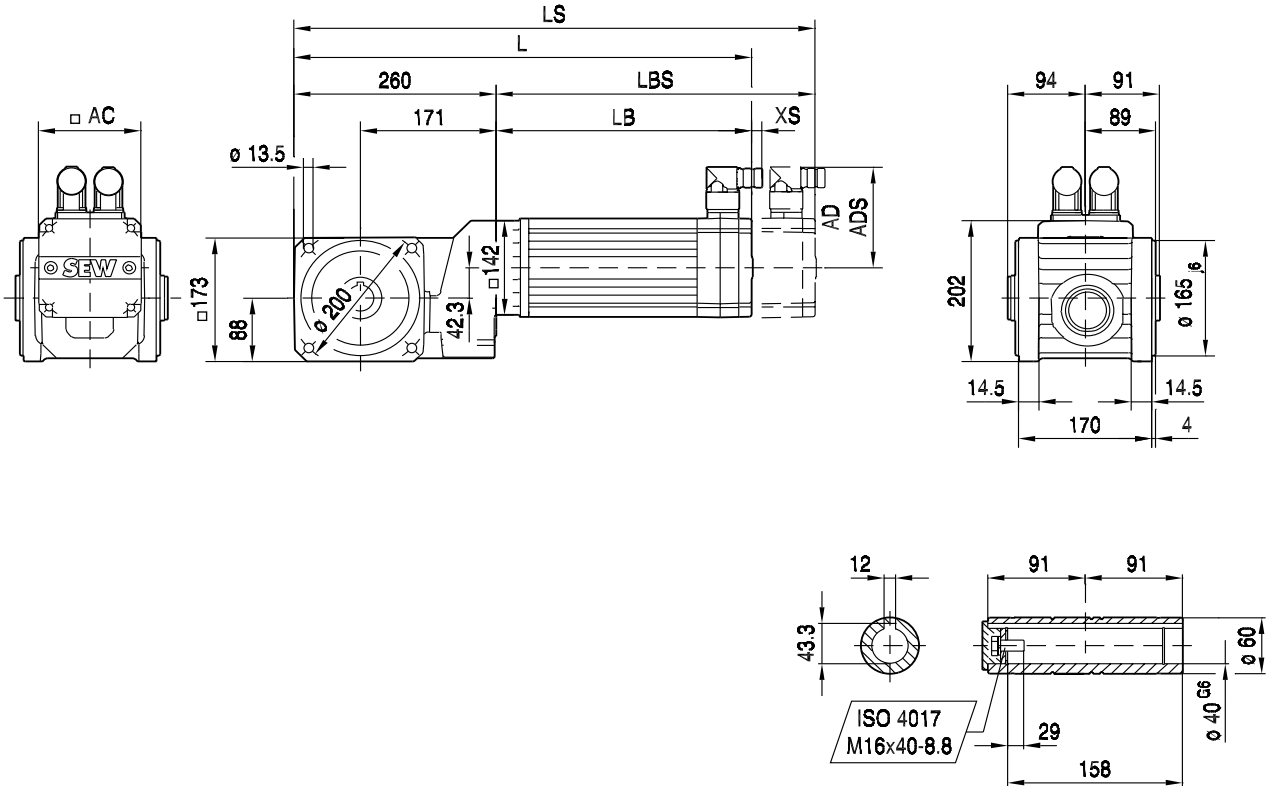

(→ 📖 150)	CMP63S	CMP63M	CMP63L					
AC	88	88	88					
AD	92	92	92					
ADS	92	92	92					
L	428	478	528					
LS	457	507	557					
LB	168	218	268					
LBS	197	247	297					
XS	14	14	14					

BSF502..

56 010 00 03

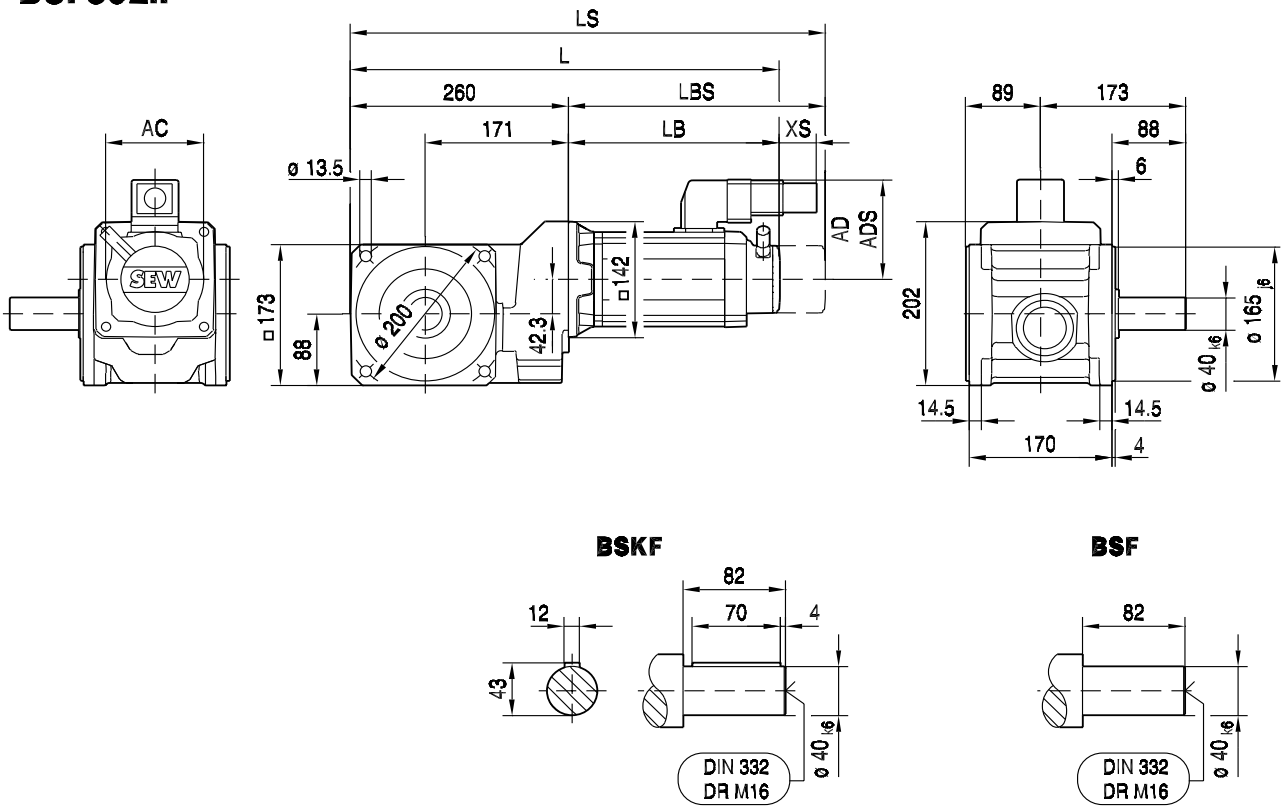

(→ 📖 150)	CM71S	CM71M	CM71L	CM90S	CM90M	CM90L	CM112S	
AC	117	117	117	142	142	142	186	
AD	122	122	122	140	140	140	162	
ADS	122	122	122	140	140	140	162	
L	487	507	547	539	566	620	574	
LS	569	589	629	634	661	715	664	
LB	227	247	287	279	306	360	314	
LBS	309	329	369	374	401	455	404	
XS	45	45	45	50	50	50	36	

BSBF502..

56 011 00 03

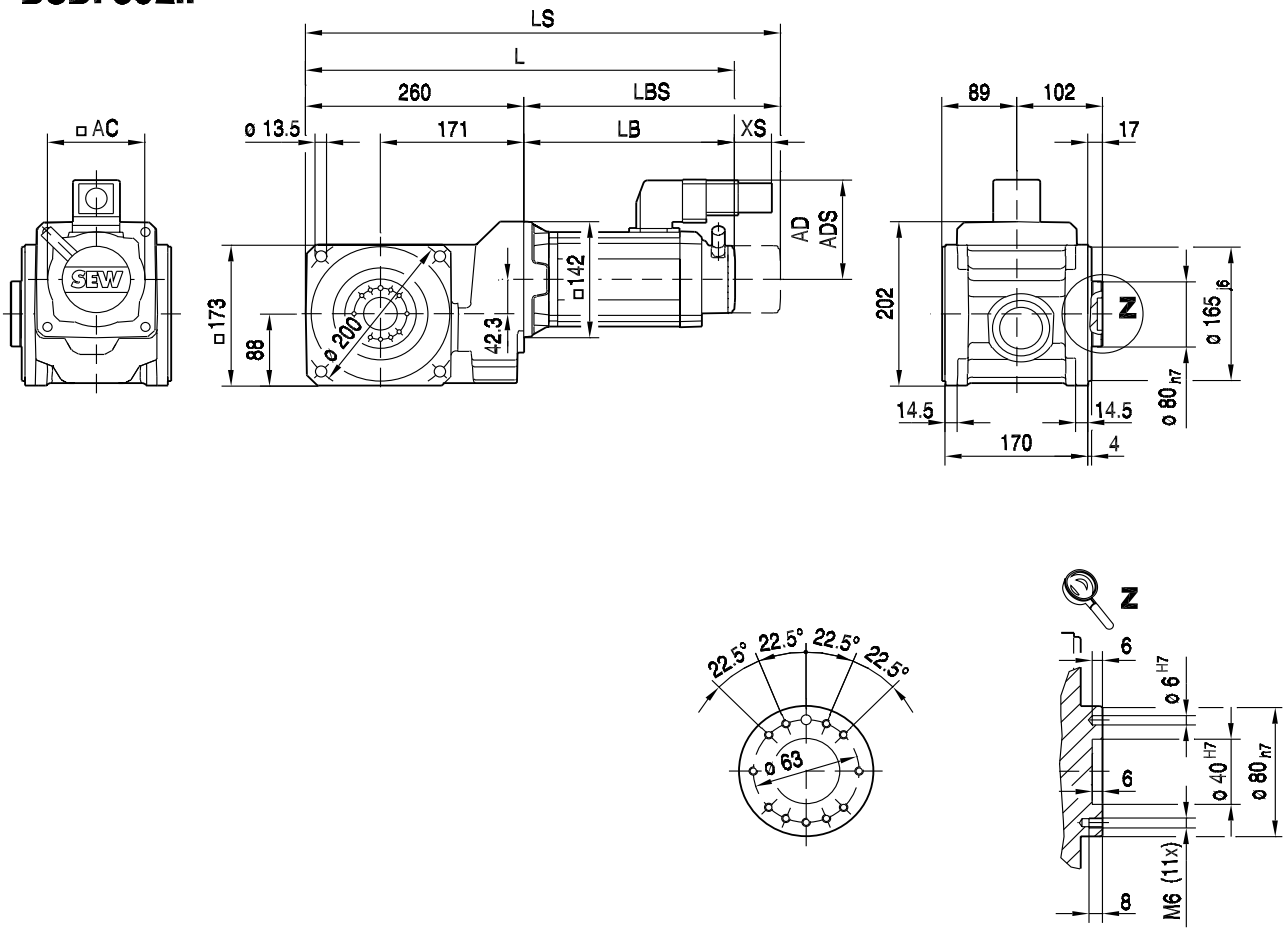

(→ 150)	CM71S	CM71M	CM71L	CM90S	CM90M	CM90L	CM112S	
AC	117	117	117	142	142	142	186	
AD	122	122	122	140	140	140	162	
ADS	122	122	122	140	140	140	162	
L	487	507	547	539	566	620	574	
LS	569	589	629	634	661	715	664	
LB	227	247	287	279	306	360	314	
LBS	309	329	369	374	401	455	404	
XS	45	45	45	50	50	50	36	

BSHF502..

56 050 00 03

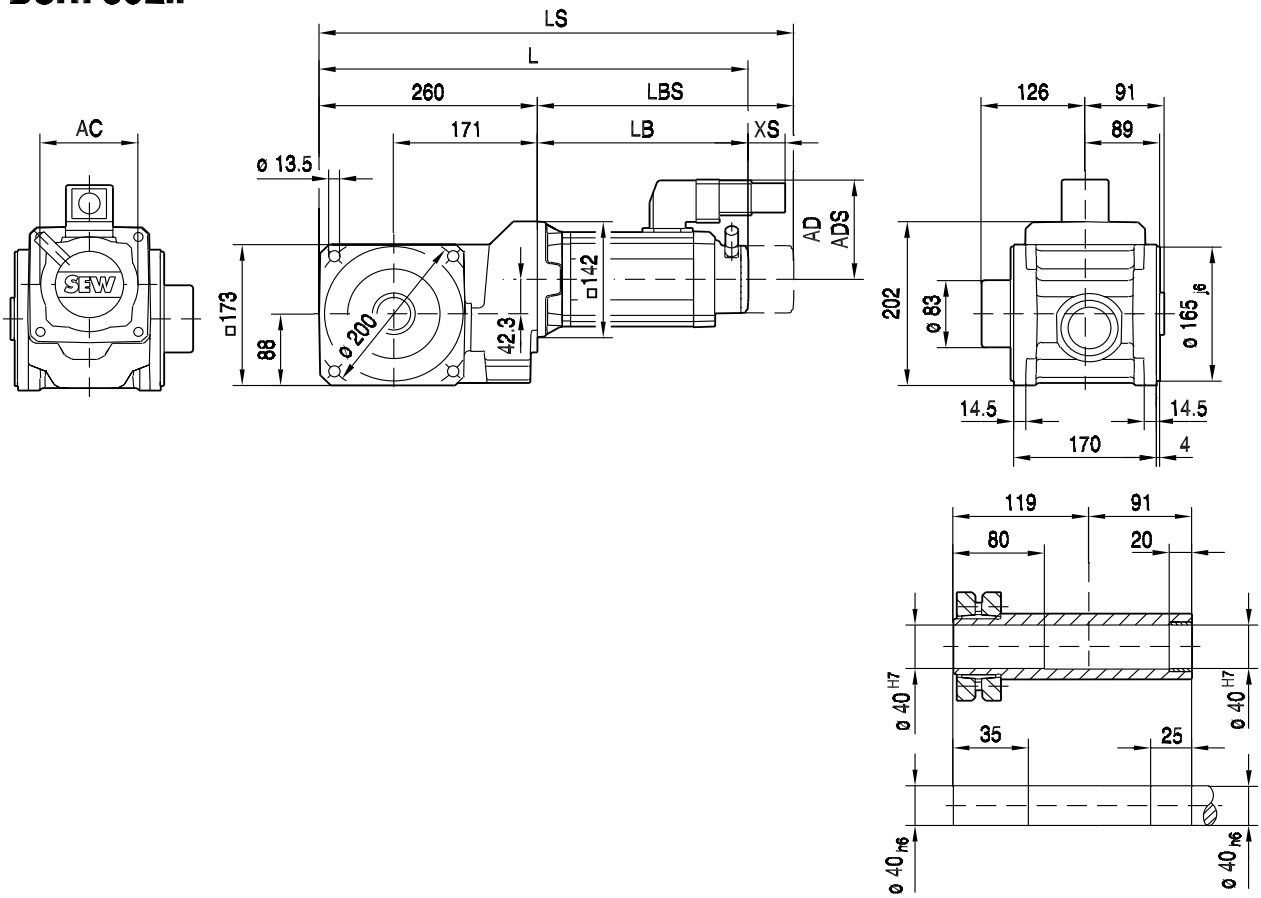

13

(→ 📖 150)	CM71S	CM71M	CM71L	CM90S	CM90M	CM90L	CM112S	
AC	117	117	117	142	142	142	186	
AD	122	122	122	140	140	140	162	
ADS	122	122	122	140	140	140	162	
L	487	507	547	539	566	620	574	
LS	569	589	629	634	661	715	664	
LB	227	247	287	279	306	360	314	
LBS	309	329	369	374	401	455	404	
XS	45	45	45	50	50	50	36	

BSHF502/I..

56 012 00 03

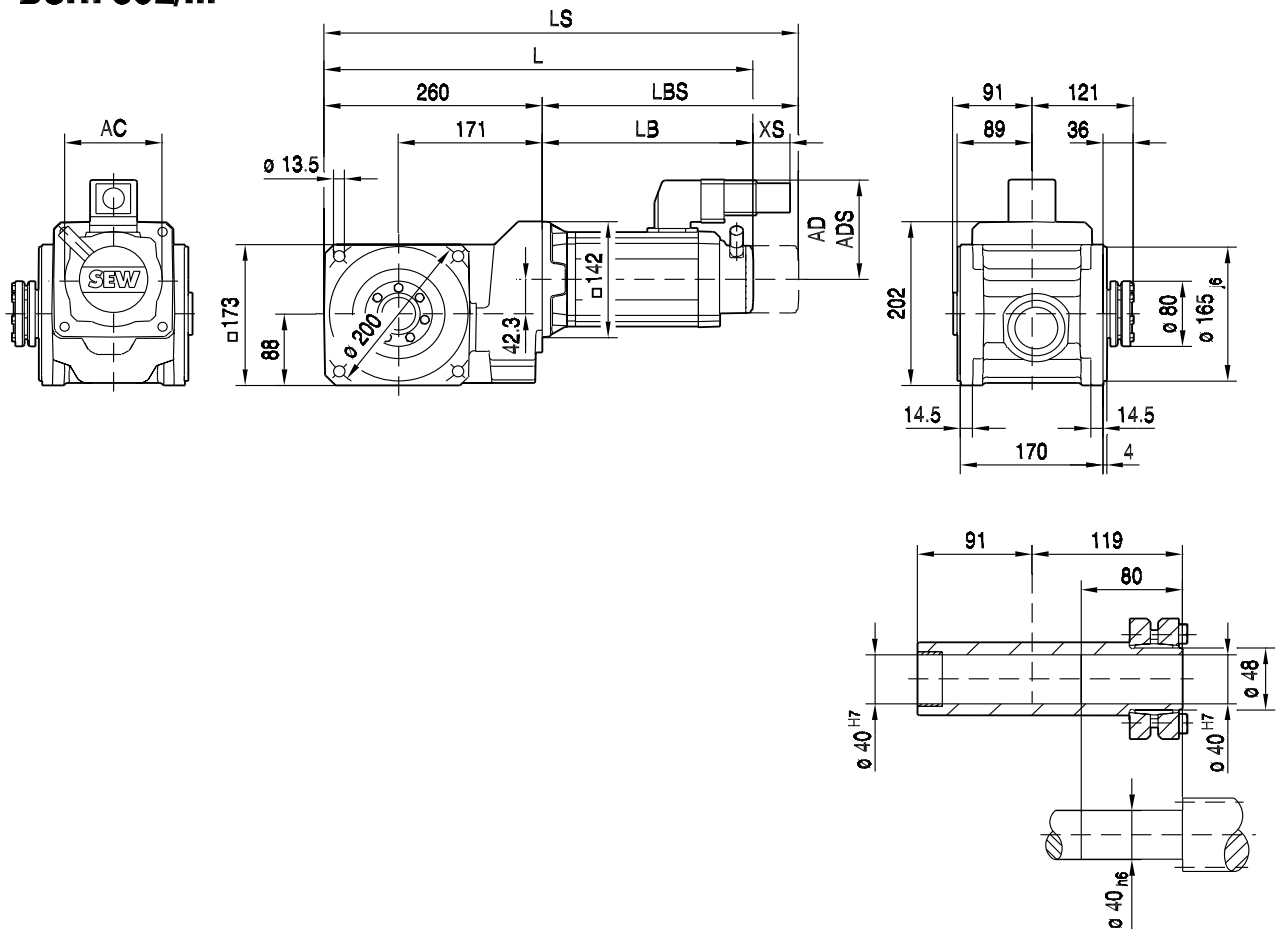

(→ 📖 150)	CM71S	CM71M	CM71L	CM90S	CM90M	CM90L	CM112S	
AC	117	117	117	142	142	142	186	
AD	122	122	122	140	140	140	162	
ADS	122	122	122	140	140	140	162	
L	487	507	547	539	566	620	574	
LS	569	589	629	634	661	715	664	
LB	227	247	287	279	306	360	314	
LBS	309	329	369	374	401	455	404	
XS	45	45	45	50	50	50	36	

BSAF502..

55 006 00 07

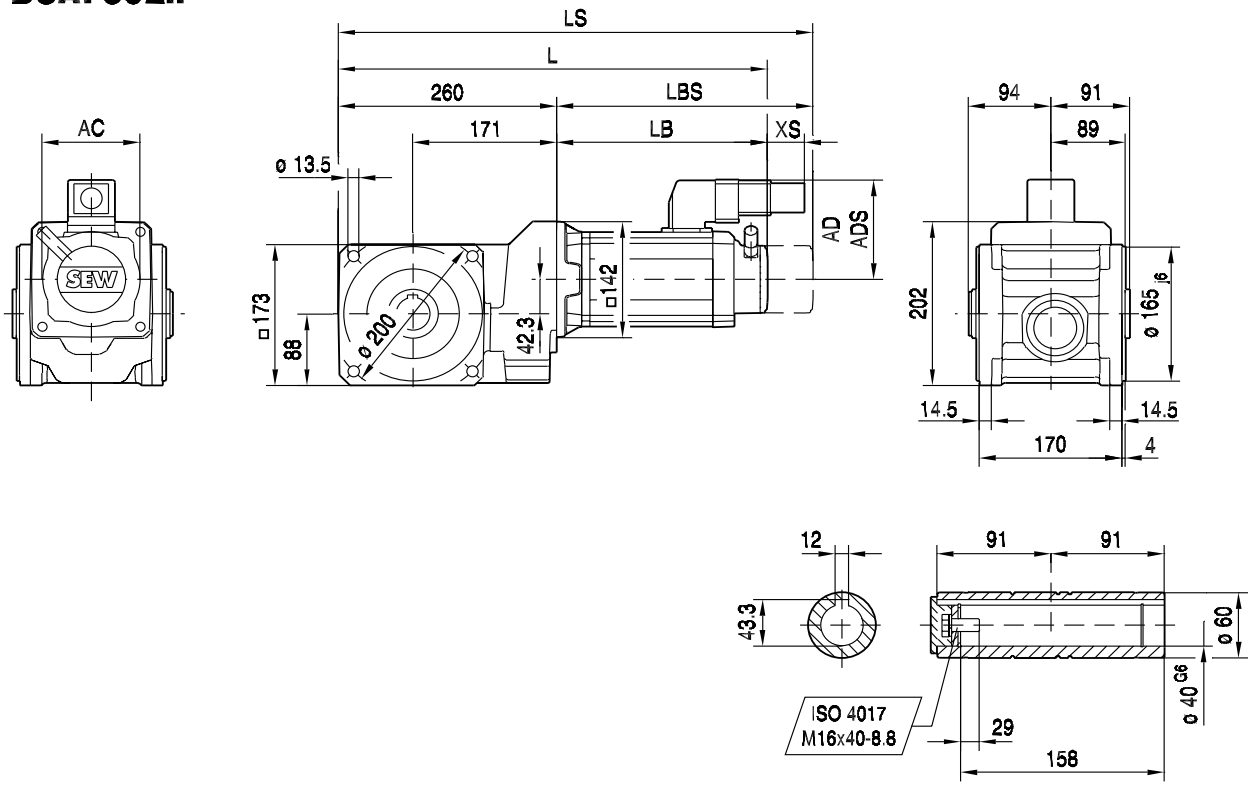

(→ 📖 150)	CM71S	CM71M	CM71L	CM90S	CM90M	CM90L	CM112S	
AC	117	117	117	142	142	142	186	
AD	122	122	122	140	140	140	162	
ADS	122	122	122	140	140	140	162	
L	487	507	547	539	566	620	574	
LS	569	589	629	634	661	715	664	
LB	227	247	287	279	306	360	314	
LBS	309	329	369	374	401	455	404	
XS	45	45	45	50	50	50	36	

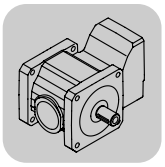

13.10 BS.F 602 / CMP / CM [Nm]

M_{aDyn} [Nm]		CMP					CM									
	i	63M	63L	71S	71M	71L	71S	71M	71L	90S	90M	90L	112S	112M	112L	112H
BSF602 2	3													306	444	671
	4		114		104	172			118	149	196	285	310	408	593	>715
	6	121	172	103	155	259	93	121	177	224	295	427	465	613	>800	
	8	161	229	138	207	345	124	162	236	298	393	569	620			
	10		276		250	416			285	360	474	687	748	>750	>750	>750
	12	241	343	206	310	517	186	243	354	447						
	15	291	414	249	375	624	225	293	428	539	711	>750	>750	>750	>750	
	20	389	552	332	499	>750	300	390	570	719	>750	>750	>750			
	25	486	691	416	625	>750	375	489	714	>750	>750					
	30	584	>750	499	750	>750	450	586	>750	>750						
	35	681		582			525	684								
	40	>750		665			600	>750								

m [kg]		CMP					CM									
	s	63M	63L	71S	71M	71L	71S	71M	71L	90S	90M	90L	112S	112M	112L	112H
BSF602	2	51	53	54	55	58	55	56	60	65	68	73	75	80	95	100
BSBF: + 0.3 kg / BSHF: + -2.9 kg																

CMP.. / CM..				M1			M2;M4			M3;M5-6			φ		
	i	n_{epk} [1/min]	η [%]	a_0	a_1	a_2	a_0	a_1	a_2	a_0	a_1	a_2		/R	/M
													[']	[']	[']
BSF602 2	3	4500	94	-1.220	-0.060	258182	17.380	-0.144	253939	36.730	-0.132	247267	6	3	-
	4	4500	94.1	-3.350	-0.071	257389	17.940	-0.178	252543	42.420	-0.166	244809	6	3	-
	6	4500	94.1	-6.350	-0.086	256315	18.500	-0.230	250689	50.090	-0.218	241723	6	3	-
	8	4500	94.1	-8.400	-0.097	255637	18.730	-0.267	249529	54.770	-0.255	239958	6	3	-
	10	4500	90.9	-47.500	-0.236	167324	-14.520	-0.678	162357	41.590	-0.662	155420	6	3	-
	12	4500	94	-11.010	-0.111	254840	18.580	-0.314	248244	60.300	-0.303	237995	6	3	-
	15	4500	90.8	-55.050	-0.294	166158	-15.400	-0.892	160319	47.820	-0.869	154910	6	3	-
	20	4500	90.8	-60.080	-0.333	165439	-17.900	-1.036	159395	52.820	-1.018	154092	6	3	-
	25	4500	90.9	-63.710	-0.362	164961	-18.710	-1.146	158560	57.420	-1.130	153134	6	3	-
	30	4500	90.9	-66.470	-0.383	164630	-19.570	-1.230	158019	60.840	-1.217	152406	6	3	-
	35	4500	90.9	-68.080	-0.402	164287	-20.310	-1.295	157620	64.770	-1.290	151662	6	3	-
	40	4500	90.9	-69.660	-0.415	164073	-20.990	-1.347	157322	67.100	-1.346	151214	6	3	-

CMP.. / CM..							c_T			F_{Ramax}			F_{Rapk}		
	i	M_{amax} [Nm]	M_{apk} [Nm]	$M_{aNotaus}$ [Nm]	n_{ak} [1/min]	J_G 10^{-4} [kgm^2]	BSF [Nm/']	BSBF [Nm/']	BSHF [Nm/']	BSF [N]	BSBF [N]	BSHF [N]	BSF [N]	BSBF [N]	BSHF [N]
BSF602 2	3	505	700	1050	500	35	45.0	49.0	49.0	15400	17600	15900	24000	24000	24000
	4	575	715	1070	375	21	47.0	52.0	52.0	16700	19100	17200	24000	24000	24000
	6	610	800	1200	250	10	50.0	56.0	55.0	19000	21700	19600	24000	24000	24000
	8	640	780	1170	213	6.2	52.0	58.0	58.0	20800	23800	21500	24000	24000	24000
	10	520	750	1120	200	9.9	76.0	90.0	87.0	22400	24000	23100	24000	24000	24000
	12	550	775	1160	408	2.9	54.0	60.0	60.0	24000	24000	24000	24000	24000	24000
	15	520	750	1120	187	5.3	77.0	92.0	89.0	24000	24000	24000	24000	24000	24000
	20	520	750	1120	190	3.5	74.0	88.0	85.0	24000	24000	24000	24000	24000	24000
	25	520	750	1120	192	2.5	76.0	90.0	86.0	24000	24000	24000	24000	24000	24000
	30	520	750	1120	193	1.7	74.0	88.0	85.0	24000	24000	24000	24000	24000	24000
	35	520	750	1120	200	1.4	73.0	87.0	83.0	24000	24000	24000	24000	24000	24000
	40	520	750	1120	175	1.1	74.0	87.0	84.0	24000	24000	24000	24000	24000	24000

13.11 BS.F 602 / CMP / CM [mm]

BSF602..

55 018 00 06

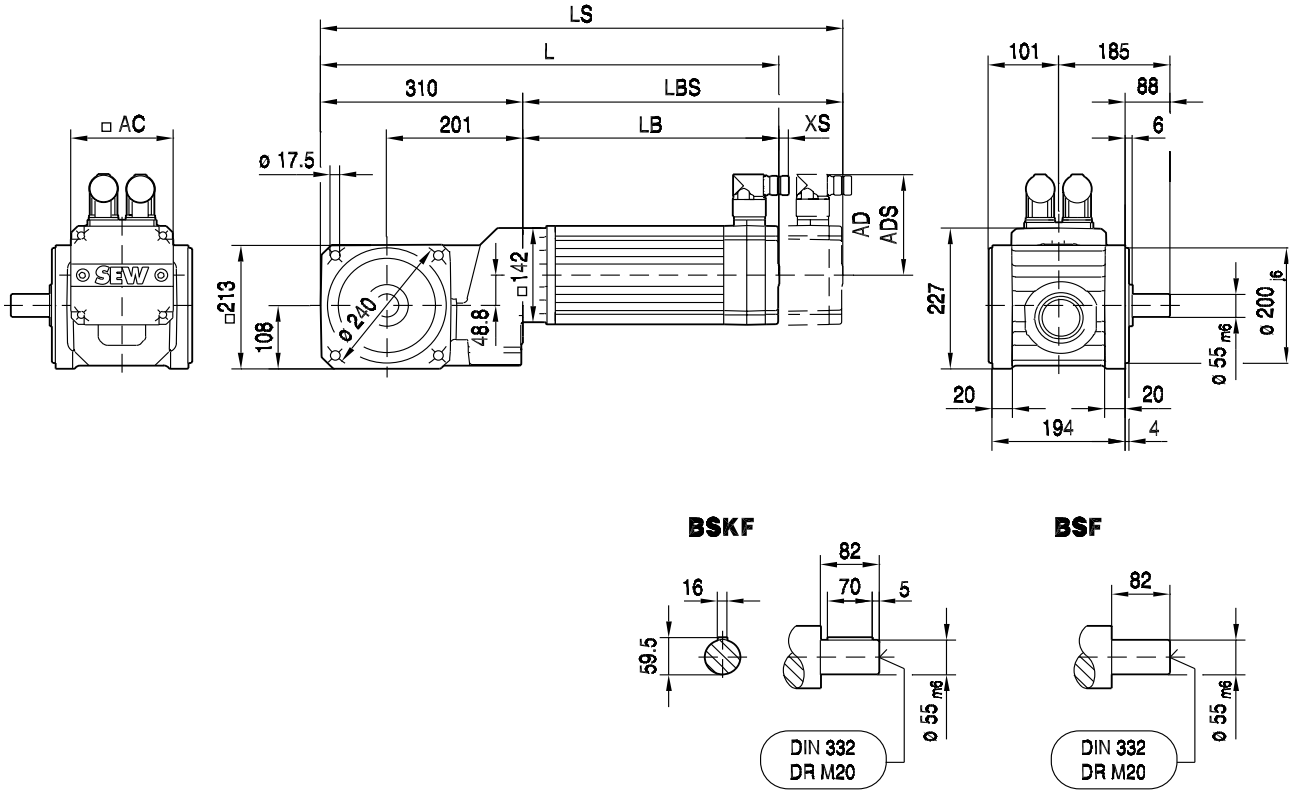

(→ 150)	CMP63M	CMP63L						
AC	88	88						
AD	92	92						
ADS	92	92						
L	528	578						
LS	557	607						
LB	218	268						
LBS	247	297						
XS	14	14						

BSBF602..

55 019 00 06

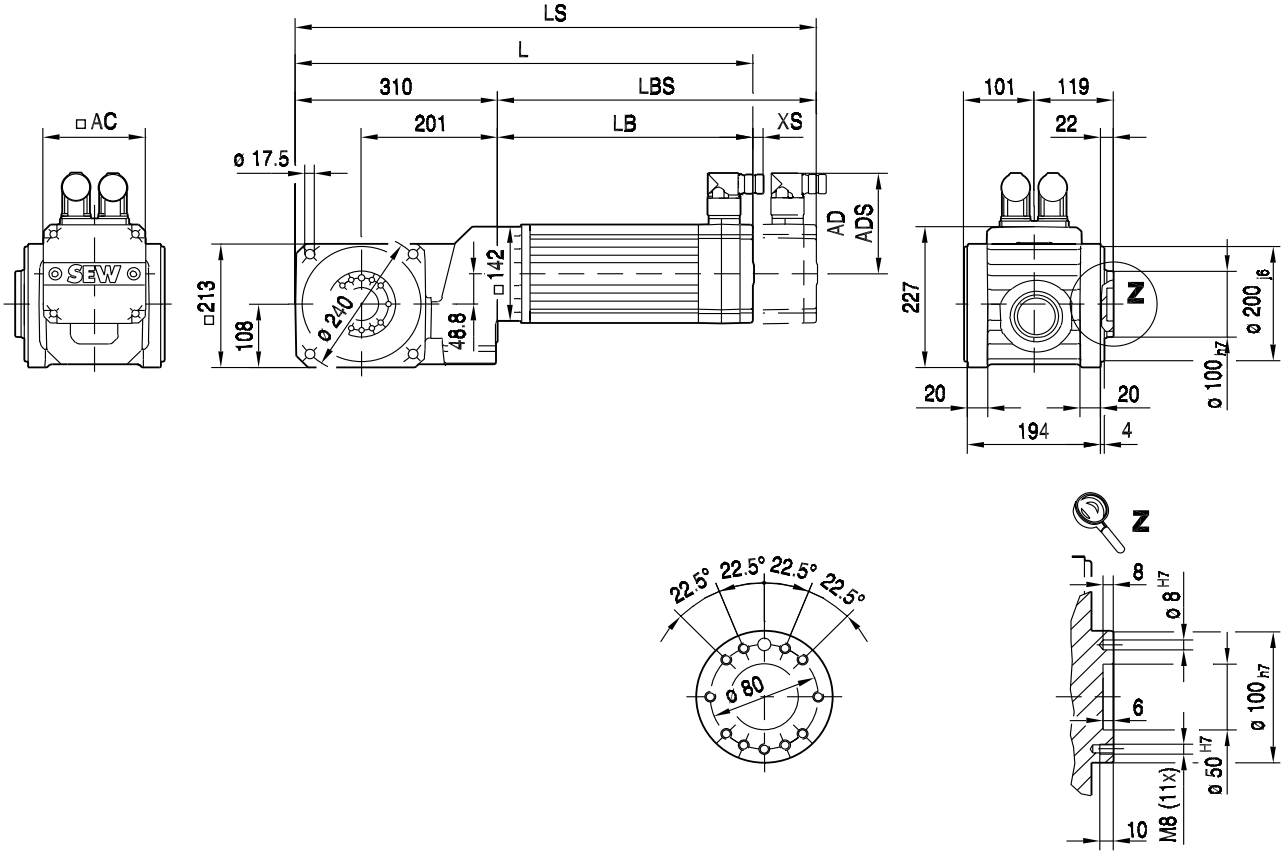

(→ 📖 150)	CMP63M	CMP63L						
AC	88	88						
AD	92	92						
ADS	92	92						
L	528	578						
LS	557	607						
LB	218	268						
LBS	247	297						
XS	14	14						

BSHF602..

55 020 00 06

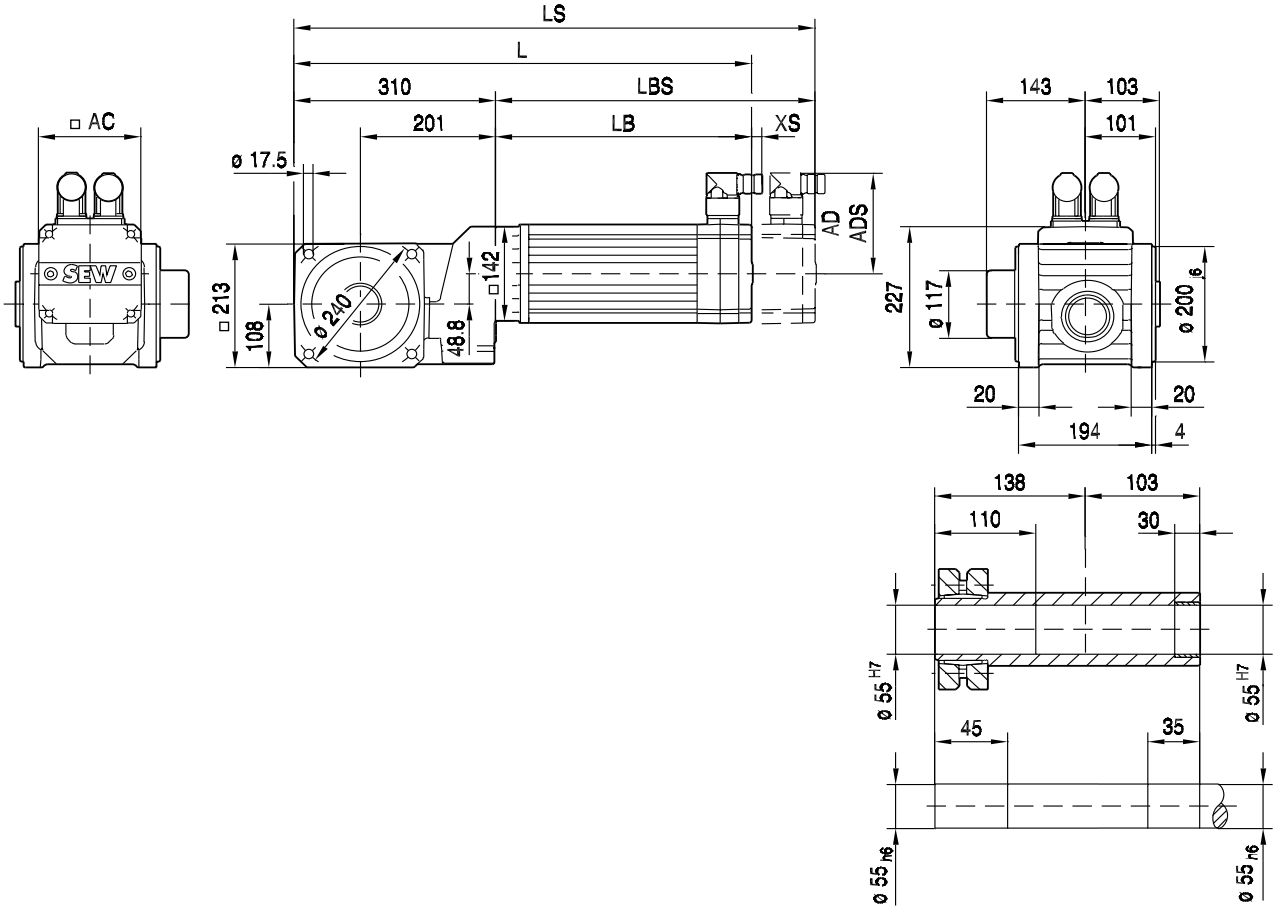

13

(→ 📖 150)	CMP63M	CMP63L						
AC	88	88						
AD	92	92						
ADS	92	92						
L	528	578						
LS	557	607						
LB	218	268						
LBS	247	297						
XS	14	14						

BSHF602/I..

55 021 00 06

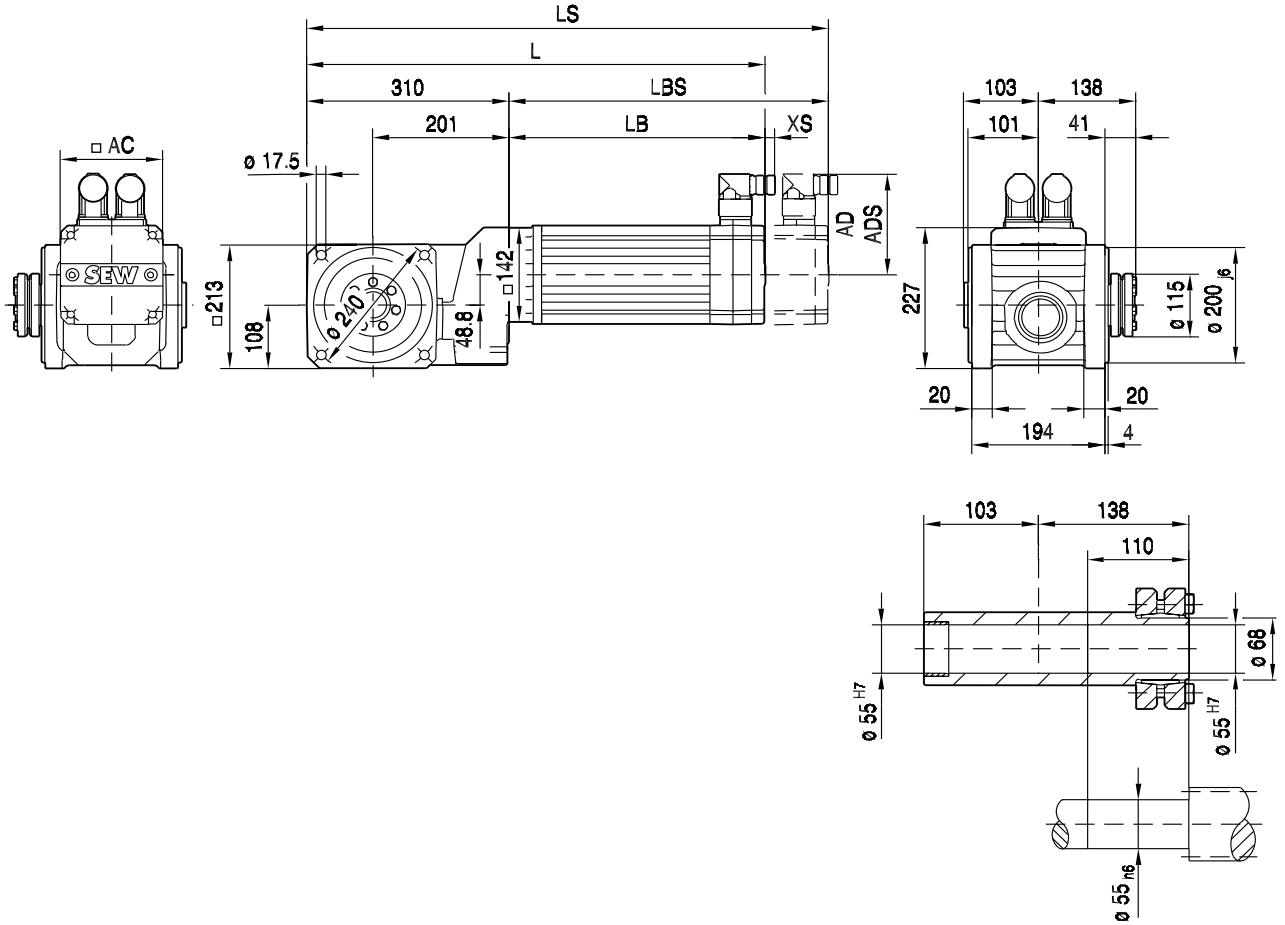

(→ 150)	CMP63M	CMP63L						
AC	88	88						
AD	92	92						
ADS	92	92						
L	528	578						
LS	557	607						
LB	218	268						
LBS	247	297						
XS	14	14						

BSAF602..

55 019 00 07

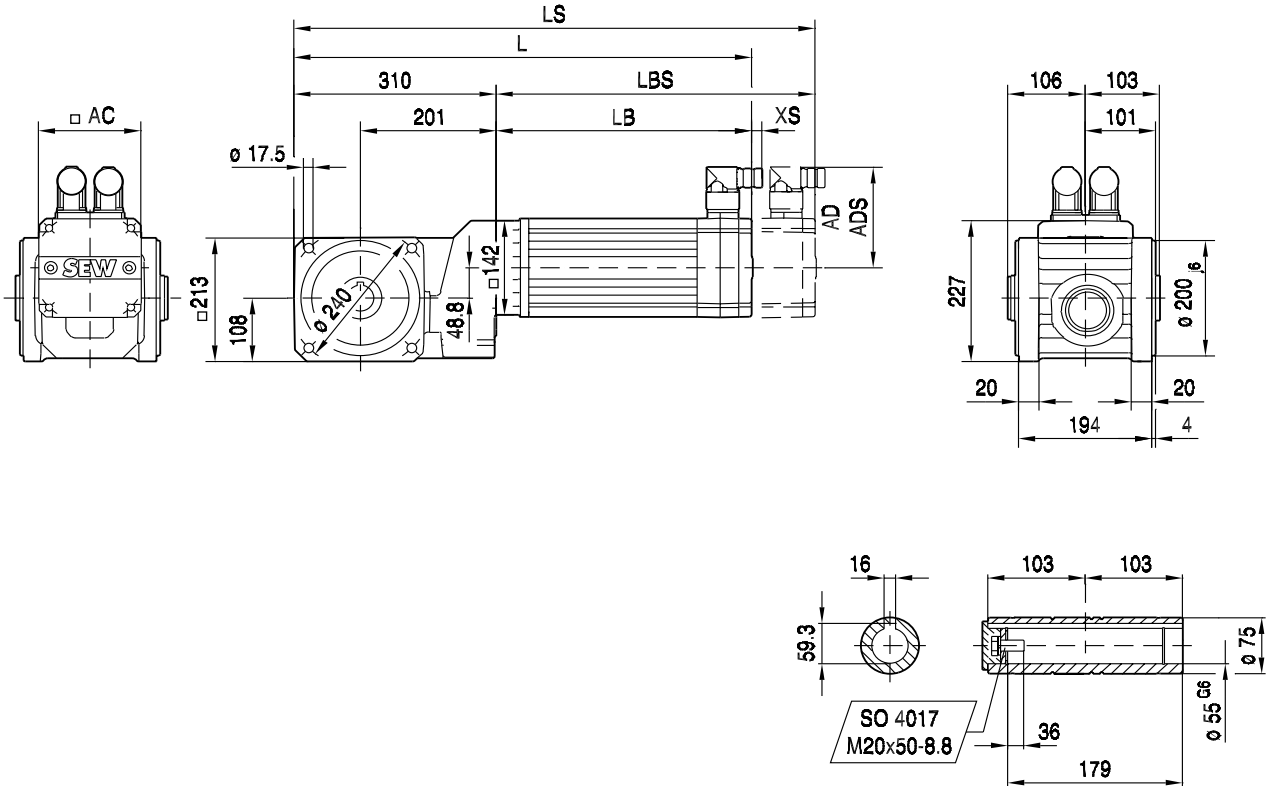

13

(→ 150)	CMP63M	CMP63L						
AC	88	88						
AD	92	92						
ADS	92	92						
L	528	578						
LS	557	607						
LB	218	268						
LBS	247	297						
XS	14	14						

BSF602..

56 013 00 03

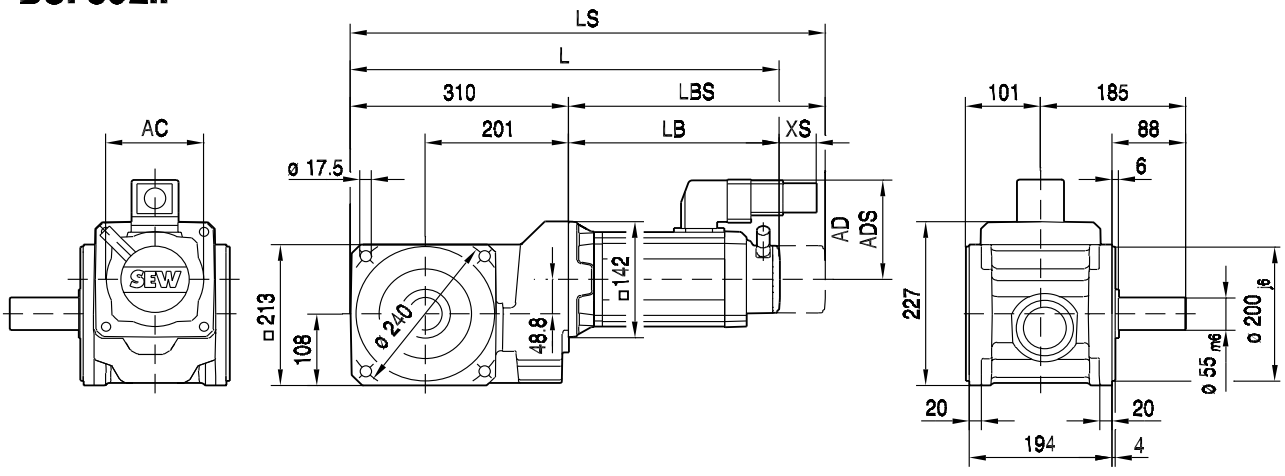

BSKF

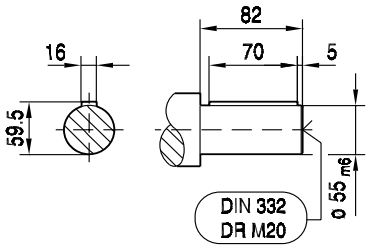

BSF

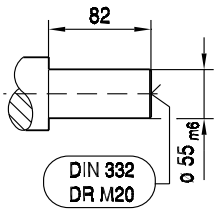

(→ 📖 150)	CM71S	CM71M	CM71L	CM90S	CM90M	CM90L	CM112S	CM112M	CM112L
AC	117	117	117	142	142	142	186	186	186
AD	122	122	122	140	140	140	162	162	162
ADS	122	122	122	140	140	140	162	162	162
L	537	557	597	589	616	670	624	651	708
LS	619	639	679	684	711	765	714	741	798
LB	227	247	287	279	306	360	314	341	398
LBS	309	329	369	374	401	455	404	431	488
XS	45	45	45	50	50	50	36	36	36

BSBF602..

56 014 00 03

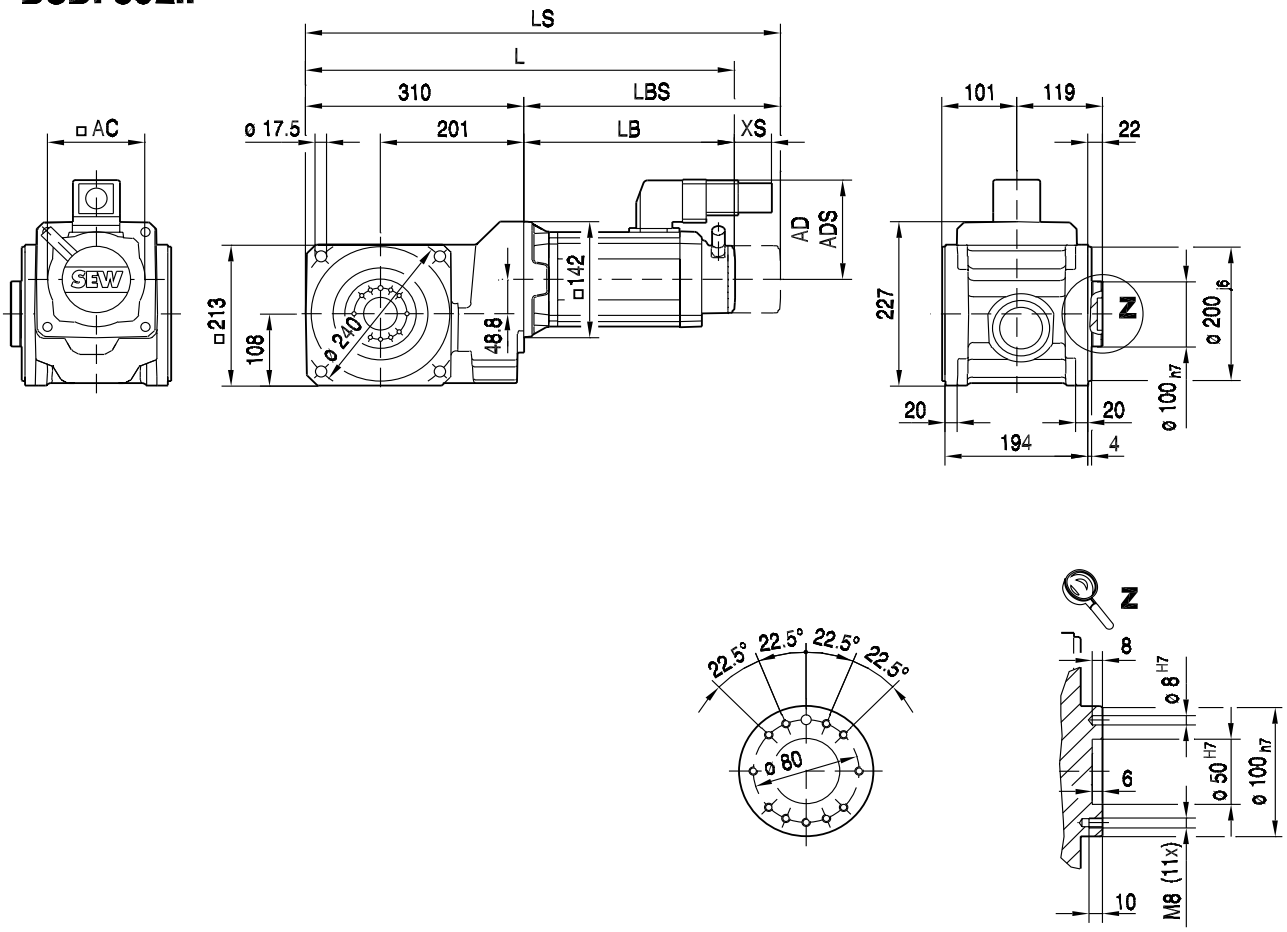

(→ 📖 150)	CM71S	CM71M	CM71L	CM90S	CM90M	CM90L	CM112S	CM112M	CM112L
AC	117	117	117	142	142	142	186	186	186
AD	122	122	122	140	140	140	162	162	162
ADS	122	122	122	140	140	140	162	162	162
L	537	557	597	589	616	670	624	651	708
LS	619	639	679	684	711	765	714	741	798
LB	227	247	287	279	306	360	314	341	398
LBS	309	329	369	374	401	455	404	431	488
XS	45	45	45	50	50	50	36	36	36

BSHF602..

56 052 00 03

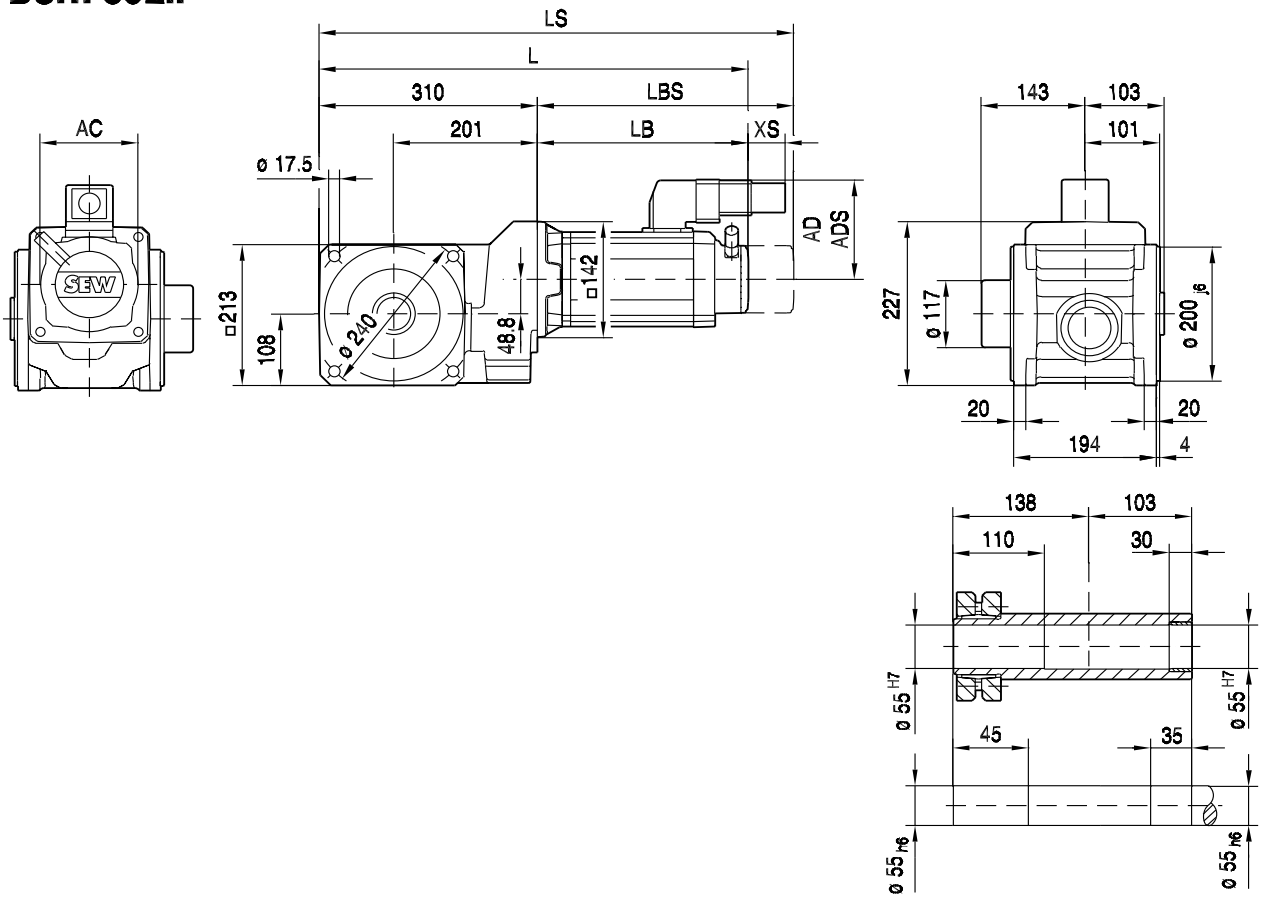

(→ 📖 150)	CM71S	CM71M	CM71L	CM90S	CM90M	CM90L	CM112S	CM112M	CM112L
AC	117	117	117	142	142	142	186	186	186
AD	122	122	122	140	140	140	162	162	162
ADS	122	122	122	140	140	140	162	162	162
L	537	557	597	589	616	670	624	651	708
LS	619	639	679	684	711	765	714	741	798
LB	227	247	287	279	306	360	314	341	398
LBS	309	329	369	374	401	455	404	431	488
XS	45	45	45	50	50	50	36	36	36

BSHF602/I..

56 015 00 03

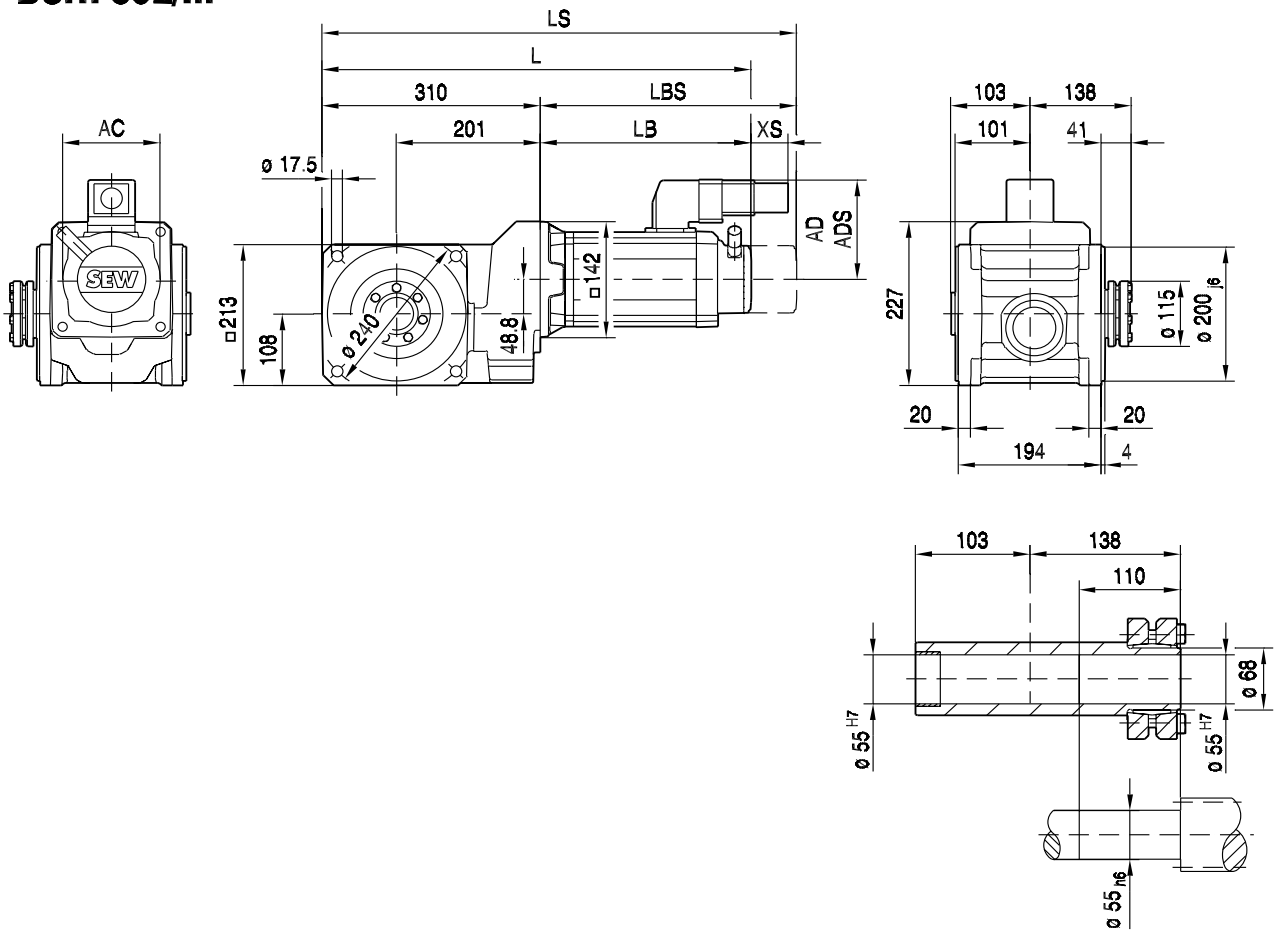

(→ 📖 150)	CM71S	CM71M	CM71L	CM90S	CM90M	CM90L	CM112S	CM112M	CM112L
AC	117	117	117	142	142	142	186	186	186
AD	122	122	122	140	140	140	162	162	162
ADS	122	122	122	140	140	140	162	162	162
L	537	557	597	589	616	670	624	651	708
LS	619	639	679	684	711	765	714	741	798
LB	227	247	287	279	306	360	314	341	398
LBS	309	329	369	374	401	455	404	431	488
XS	45	45	45	50	50	50	36	36	36

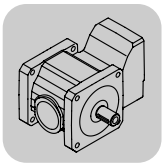

BSAF602..

55 007 00 07

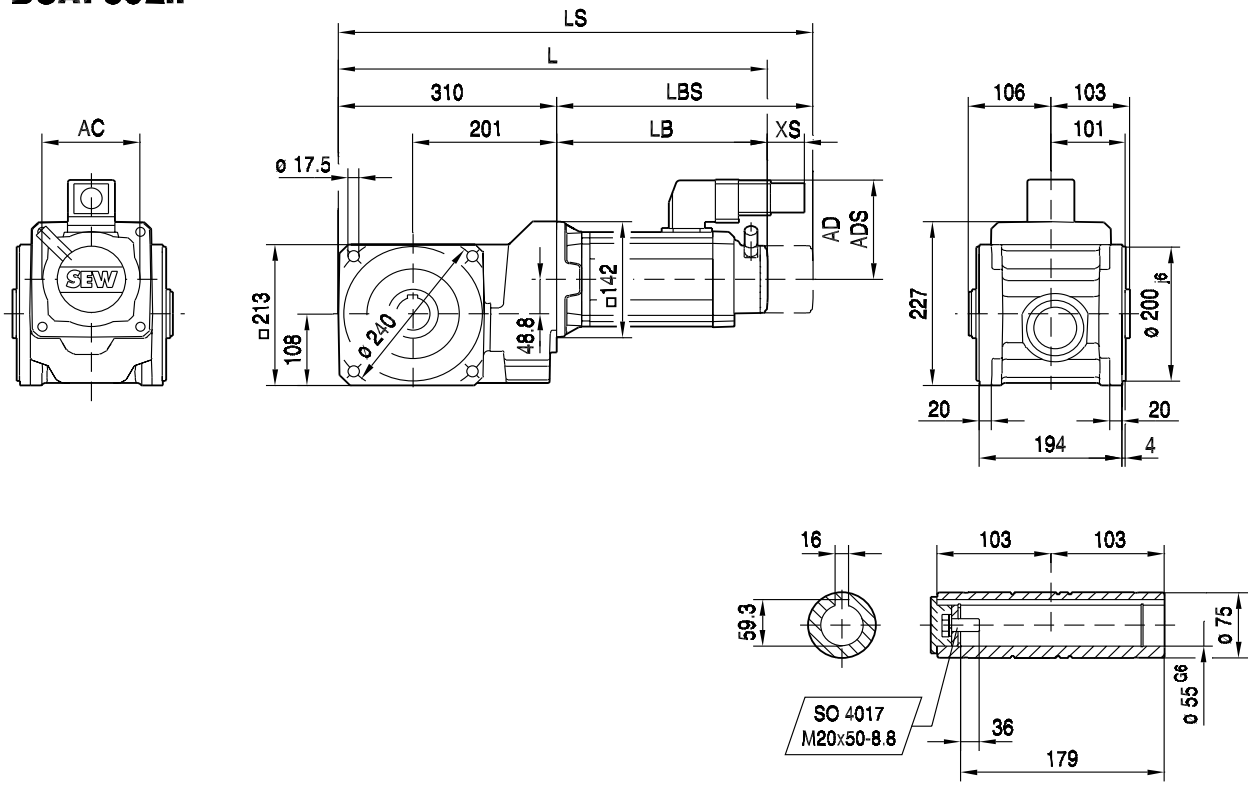

(→ 📖 150)	CM71S	CM71M	CM71L	CM90S	CM90M	CM90L	CM112S	CM112M	CM112L
AC	117	117	117	142	142	142	186	186	186
AD	122	122	122	140	140	140	162	162	162
ADS	122	122	122	140	140	140	162	162	162
L	537	557	597	589	616	670	624	651	708
LS	619	639	679	684	711	765	714	741	798
LB	227	247	287	279	306	360	314	341	398
LBS	309	329	369	374	401	455	404	431	488
XS	45	45	45	50	50	50	36	36	36

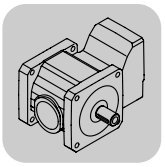

13.12 BS.F 802 / CM [Nm]

M_{aDyn} [Nm]		CMP		CM						
	i	71M	71L	90S	90M	90L	112S	112M	112L	112H
BSF802 2	4							408	593	896
	6				295	427	465	613	890	1345
	8	207	346	299	394	570	621	819	1188	1795
	10							990	1436	>1680
	12	311	518	448	590	855	930			
	15				714	1034	1126	1484	>1680	>1680
	20	502	835	722	952	1379	1501	>1680	>1680	>1680
	25	627	1044	903	1190	>1680	>1680	>1680	>1680	
	30	753	1254	1085	1430	>1680	>1680			
	35	879	1464	1265	1668					
	40	1005	1674	1448	>1680					

m [kg]		CMP		CM						
	s	71M	71L	90S	90M	90L	112S	112M	112L	112H
BSF802	2	83	85	93	96	100	105	105	125	130
BSBF: + 1.1 kg / BSHF: + -3.5 kg										

CMP.. / CM..				M1			M2;M4			M3;M5-6			φ		
	i	n_{epk} [1/min]	η [%]	a_0	a_1	a_2	a_0	a_1	a_2	a_0	a_1	a_2		/R	/M
													[']	[']	[']
BSF802 2	4	4500	94.1	36.530	-0.257	380872	85.550	-0.552	372271	94.470	-0.447	370986	6	3	-
	6	4500	94.2	38.780	-0.322	379127	97.230	-0.720	369115	110.31	-0.584	367673	6	3	-
	8	4500	94.3	40.010	-0.368	378029	104.52	-0.839	367166	120.39	-0.682	365688	6	3	-
	10	4500	91.2	-23.290	-0.920	247749	61.410	-2.162	238512	91.960	-1.769	237008	6	3	-
	12	4500	94.2	41.330	-0.427	376719	112.55	-0.993	364991	131.79	-0.808	363576	6	3	-
	15	4500	91.2	-23.520	-1.178	245862	79.260	-2.866	235221	119.05	-2.352	233398	6	3	-
	20	4500	91.2	-23.770	-1.359	244661	87.970	-3.354	233524	136.38	-2.767	231226	6	3	-
	25	4500	91.2	-24.680	-1.491	243925	94.410	-3.718	232349	148.58	-3.076	229783	6	3	-
	30	4500	91.3	-25.170	-1.592	243363	99.420	-3.997	231420	157.99	-3.315	228644	6	3	-
	35	4500	91.3	-25.610	-1.671	242945	102.30	-4.214	230843	165.07	-3.503	227831	6	3	-
	40	4500	91.4	-26.020	-1.735	242626	107.05	-4.402	230135	170.79	-3.656	227184	6	3	-

CMP.. / CM..							c_T			F_{Ramax}			F_{Rapk}		
	i	M_{amax} [Nm]	M_{apk} [Nm]	$M_{aNotaus}$ [Nm]	n_{ak} [1/min]	J_G 10^{-4} [kgm^2]	BSF [Nm/']	BSBF [Nm/']	BSHF [Nm/']	BSF [N]	BSBF [N]	BSHF [N]	BSF [N]	BSBF [N]	BSHF [N]
BSF802 2	4	1240	1860	2790	425	70	95.0	112.0	103.0	29800	35000	29700	36000	36000	36000
	6	1370	1910	2860	267	34	106.0	126.0	115.0	33800	36000	33700	36000	36000	36000
	8	1500	1910	2860	225	21	107.0	128.0	117.0	36000	36000	36000	36000	36000	36000
	10	1220	1680	2520	190	32	149.0	193.0	170.0	36000	36000	36000	36000	36000	36000
	12	1360	1910	2860	267	11	114.0	139.0	126.0	36000	36000	36000	36000	36000	36000
	15	1220	1680	2520	180	18	154.0	202.0	176.0	36000	36000	36000	36000	36000	36000
	20	1220	1680	2520	190	12	154.0	202.0	176.0	36000	36000	36000	36000	36000	36000
	25	1220	1680	2520	180	8.5	157.0	207.0	180.0	36000	36000	36000	36000	36000	36000
	30	1220	1680	2520	180	6.5	157.0	208.0	181.0	36000	36000	36000	36000	36000	36000
	35	1220	1680	2520	191	5.1	156.0	205.0	178.0	36000	36000	36000	36000	36000	36000
	40	1220	1680	2520	175	4.2	156.0	206.0	179.0	36000	36000	36000	36000	36000	36000

13.13 BS.F 802 / CM [mm]

BSF802..

56 016 00 03

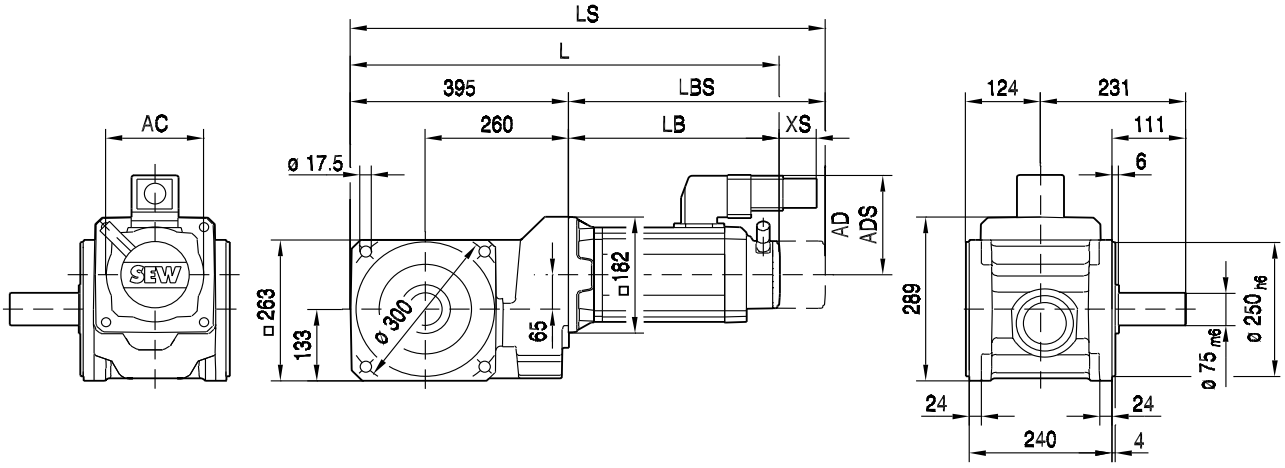

BSKF

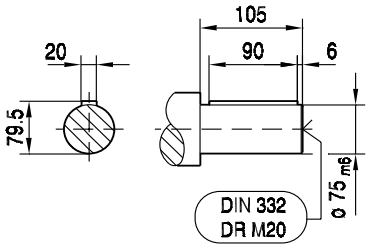

BSF

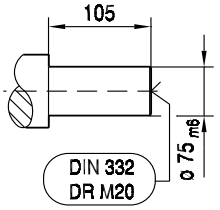

(→ 150)	CM90S	CM90M	CM90L	CM112S	CM112M	CM112L	CM112H	
AC	142	142	142	186	186	186	186	
AD	140	140	140	162	162	162	162	
ADS	140	140	140	162	162	162	162	
L	670	697	751	705	732	789	922	
LS	765	792	846	795	822	879	987	
LB	275	302	356	310	337	394	527	
LBS	370	397	451	400	427	484	592	
XS	50	50	50	36	36	36	36	

BSBF802..

56 017 00 03

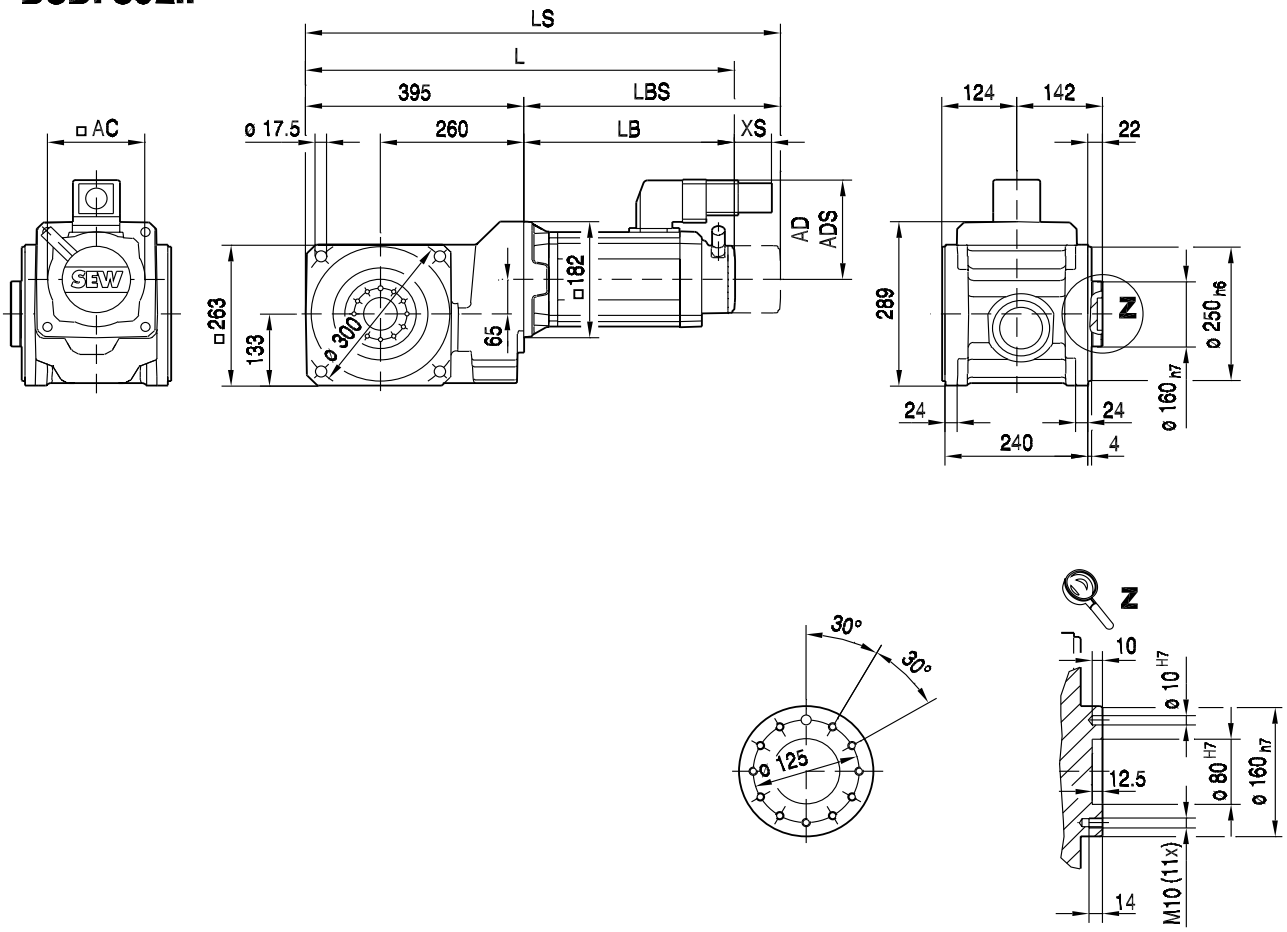

(→ 150)	CM90S	CM90M	CM90L	CM112S	CM112M	CM112L	CM112H	
AC	142	142	142	186	186	186	186	
AD	140	140	140	162	162	162	162	
ADS	140	140	140	162	162	162	162	
L	670	697	751	705	732	789	922	
LS	765	792	846	795	822	879	987	
LB	275	302	356	310	337	394	527	
LBS	370	397	451	400	427	484	592	
XS	50	50	50	36	36	36	36	

BSHF802..

56 054 00 03

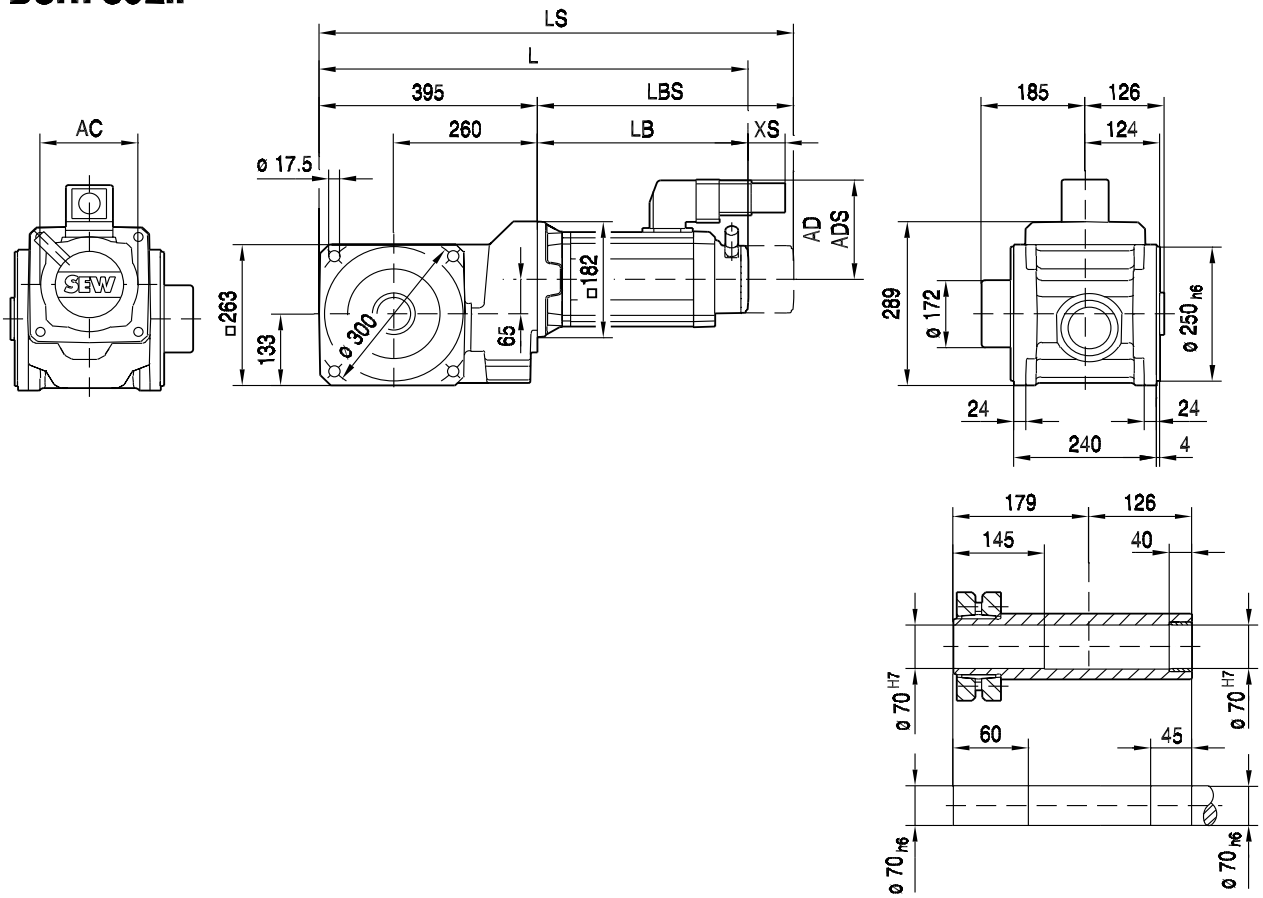

(→ 150)	CM90S	CM90M	CM90L	CM112S	CM112M	CM112L	CM112H	
AC	142	142	142	186	186	186	186	
AD	140	140	140	162	162	162	162	
ADS	140	140	140	162	162	162	162	
L	670	697	751	705	732	789	922	
LS	765	792	846	795	822	879	987	
LB	275	302	356	310	337	394	527	
LBS	370	397	451	400	427	484	592	
XS	50	50	50	36	36	36	36	

BSHF802/I..

56 018 00 03

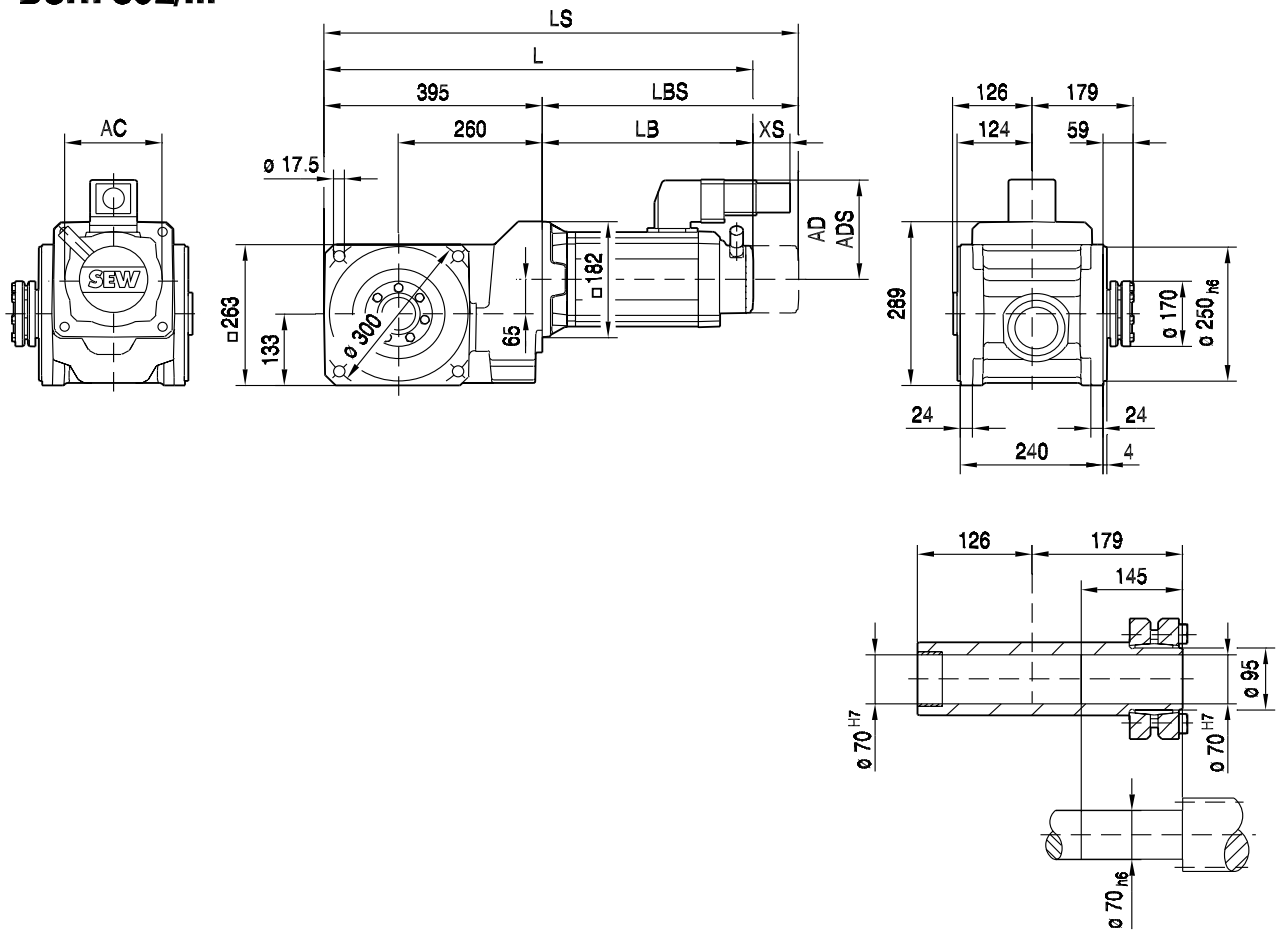

(→ 150)	CM90S	CM90M	CM90L	CM112S	CM112M	CM112L	CM112H	
AC	142	142	142	186	186	186	186	
AD	140	140	140	162	162	162	162	
ADS	140	140	140	162	162	162	162	
L	670	697	751	705	732	789	922	
LS	765	792	846	795	822	879	987	
LB	275	302	356	310	337	394	527	
LBS	370	397	451	400	427	484	592	
XS	50	50	50	36	36	36	36	

BSAF802..

55 008 00 07

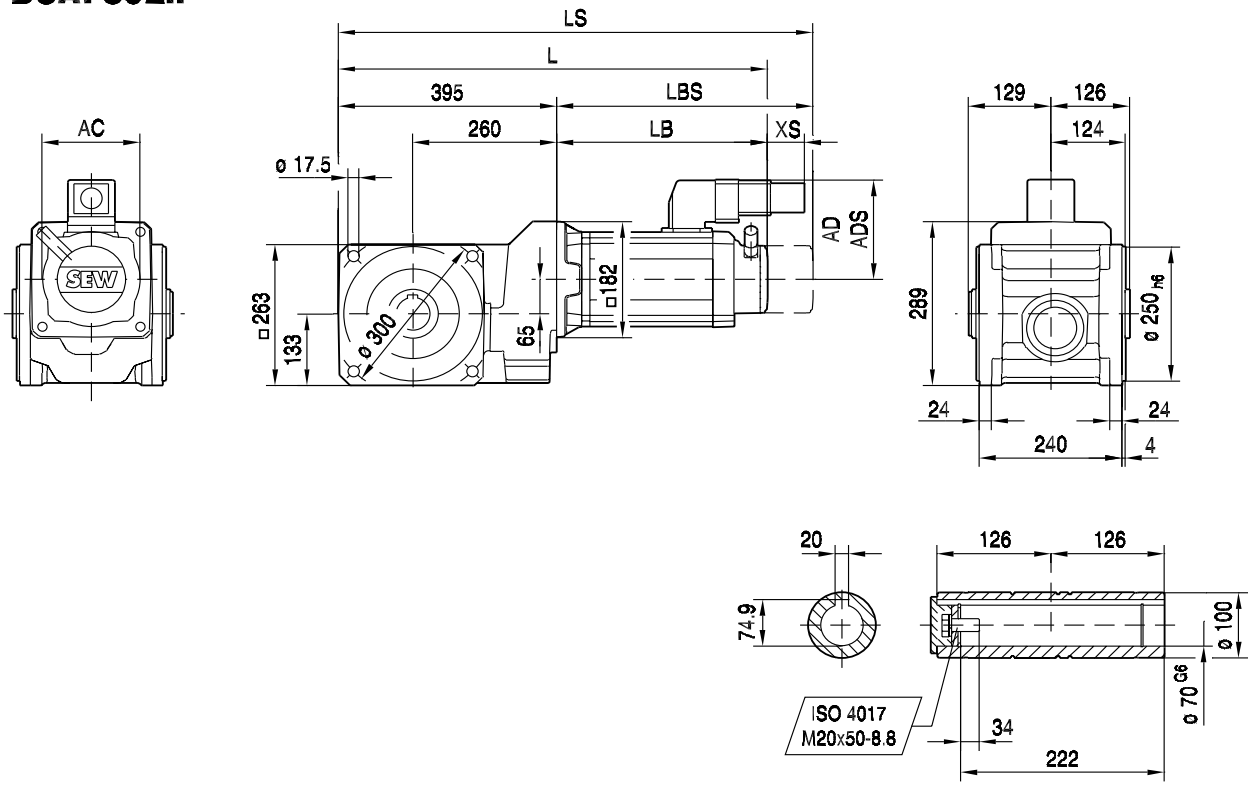

(→ 150)	CM90S	CM90M	CM90L	CM112S	CM112M	CM112L	CM112H	
AC	142	142	142	186	186	186	186	
AD	140	140	140	162	162	162	162	
ADS	140	140	140	162	162	162	162	
L	670	697	751	705	732	789	922	
LS	765	792	846	795	822	879	987	
LB	275	302	356	310	337	394	527	
LBS	370	397	451	400	427	484	592	
XS	50	50	50	36	36	36	36	

13.14 BS.F..B [mm]

BS..B

55 037 00 03

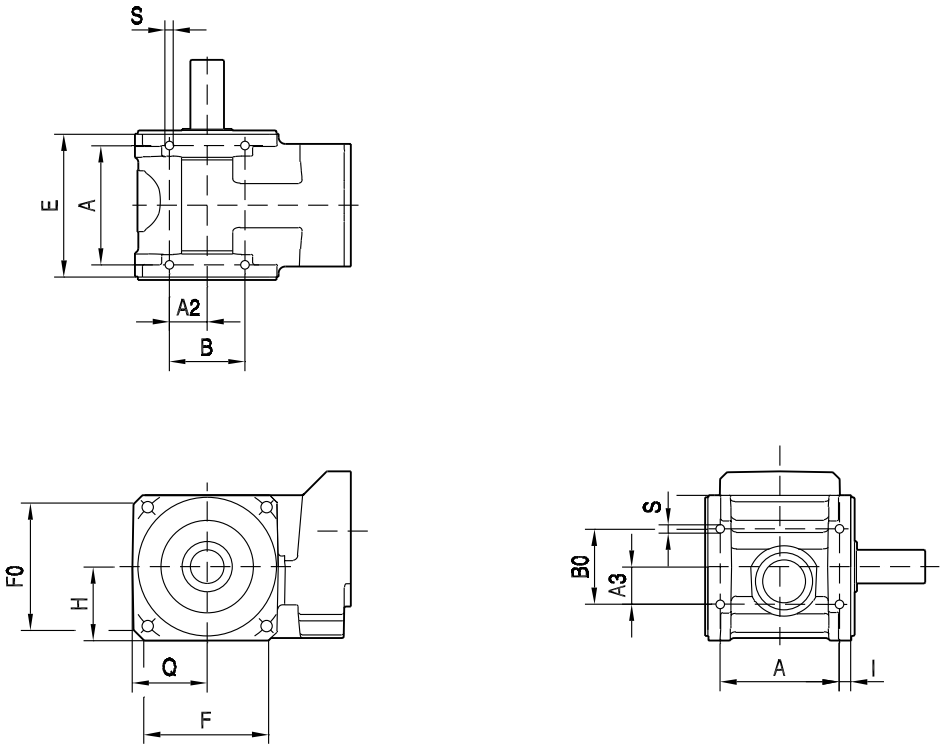

(→ 150)	E	A	S	A2	B	F	H	Q	F0	B0	A3	I
BSF..202B	111	96	M8x14	30	60	80	$47_{-0.3}$	$47_{-0.3}$	78	60	30	7.5
BSF..302B	123	105	M10x18	37.5	75	101	$58.5_{-0.3}$	$58.5_{-0.3}$	98.5	75	37.5	9
BSF..402B	145	120	M12x22	46.5	93	127	$72_{-0.3}$	$72_{-0.3}$	125	93	46.5	12.5
BSF..502B	170	142	M12x16	45	90	151	$86_{-0.5}$	$86_{-0.5}$	151	90	45	14
BSF..602B	194	160	M16x20	50	100	182	$106_{-0.5}$	$106_{-0.5}$	183	100	50	17
BSF..802B	240	186	M20x25	65	130	239	$131_{-0.5}$	$131_{-0.5}$	237	130	65	27

13.15 BSHF../T [mm]

BSHF../T

55 038 00 03

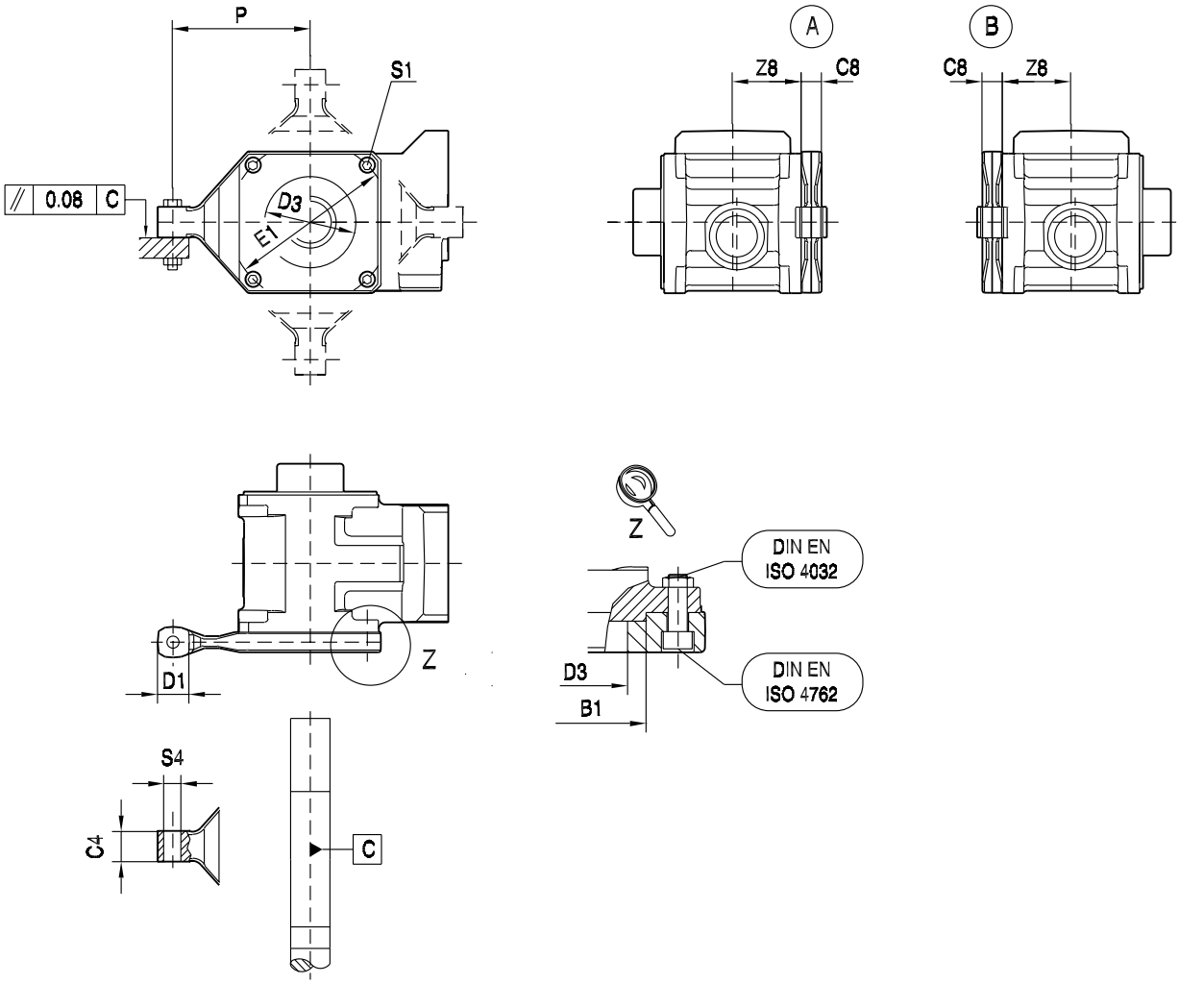

(→ 📖 150)	P	B1	E1	D3	Z8	C8	D1	S4	C4	S1							
BSHF202/T	110	90	109	75	55.5	18	34	14	20	M6x35							
BSHF302/T	140	110	135	90	61.5	20	38	14	24	M8x40							
BSHF402/T	158	140	168	115	72.5	22	38	14	28	M10x45							
BSHF502/T	170	165	200	140	85	25	38	14	38	M12x40							
BSHF602/T	198	200	240	140	97	35	58	22	50	M16x55							
BSHF802/T	278	250	300	195	120	34	58	22	70	M16x55							

13.16 BSBF [mm]

55 035 01 03

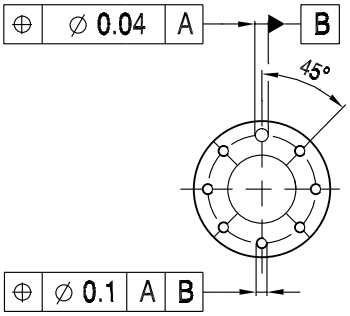

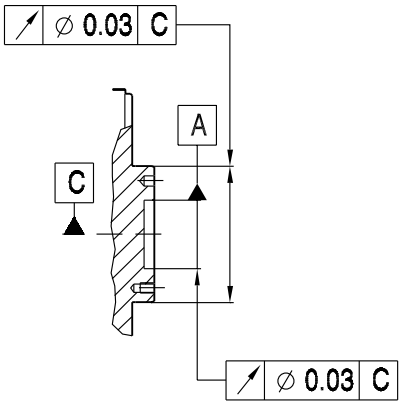

BSBF202 PSBF221/222
BSBF302 PSBF321/322

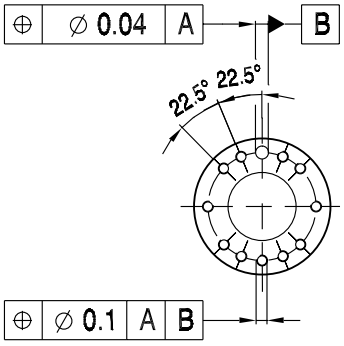

BSBF402 PSBF421/422
BSBF502 PSBF521/522

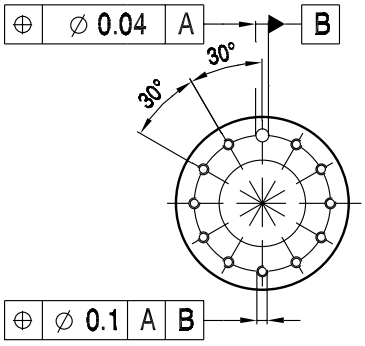

BSBF602 PSBF621/622
BSBF802 PSBF821/822

55 036 00 03

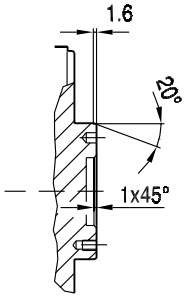

14 PS.F..CMP, DS, CM

14.1 PSF, PSKF, PSBF..CMP / DS / CM

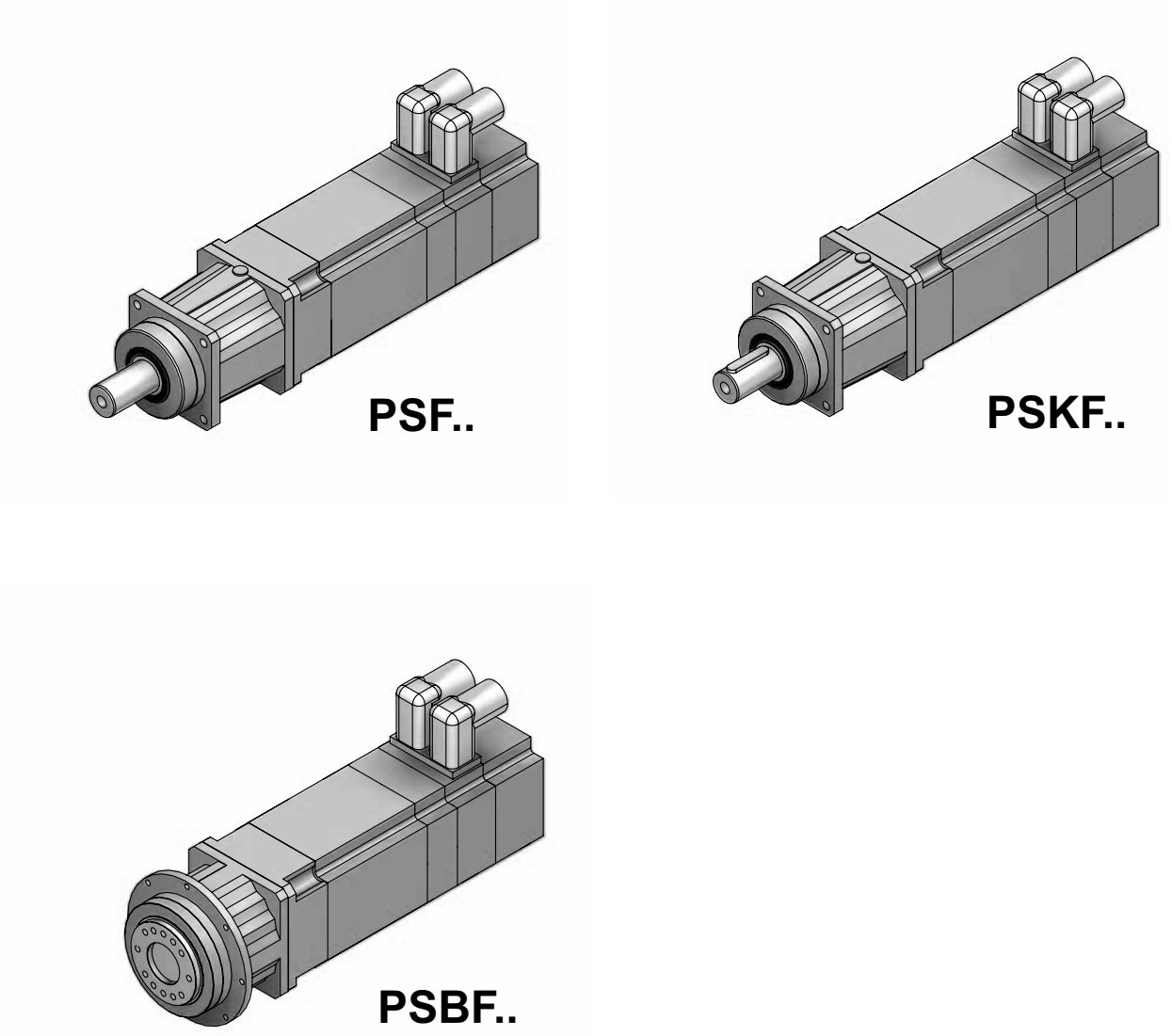

63321axx

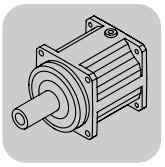

14.2 PS.F 121/122 / CMP / DS [Nm]

M_{aDyn} [Nm]		CMP				DS		
	i	40M	50S	50M	50L	56M	56L	56H
PSF121 1	3		15	31	>36	11	23	>36
	4	15	21	>38	>38	15	30	>38
	5	19	26	>35	>35	19	>35	>35
	7	26	36			26	>37	
	10	>26						
PSF122 2	16	>38	>38	>38	>38	>38	>38	>38
	20	>35	>35	>35	>35	>35	>35	>35
	25	>35	>35	>35	>35	>35	>35	>35
	28	>33	>33			>33	>33	
	35	>35	>35			>35	>35	
	40	>32						
	49	>37	>37			>37	>37	
	70	>37						
	100	>26						

m [kg]		CMP				DS		
	s	40M	50S	50M	50L	56M	56L	56H
PSF121	1	3.0	3.7	4.6	5.5	3.8	4.8	5.5
PSF122	2	3.6	4.3	5.2	6.1	4.4	5.4	6.1

CMP.. / DS..				M1;M3;M5-6			M2			M4			φ		
	i	n_{epk} [1/min]	η [%]	a_0	a_1	a_2	a_0	a_1	a_2	a_0	a_1	a_2		/R	/M
													[']	[']	[']
PSF121 1	3	8000	99	68.000	-0.058	0	77.000	-0.082	0	78.000	-0.101	0	8	4	2
	4	8000	99	94.000	-0.086	0	106.00	-0.120	0	104.00	-0.142	0	8	4	2
	5	8000	99	96.000	-0.096	0	109.00	-0.130	0	108.00	-0.141	0	8	4	2
	7	8000	99	107.00	-0.126	0	120.00	-0.164	0	118.00	-0.191	0	8	4	2
	10	8000	99	107.00	-0.155	0	121.00	-0.198	0	129.00	-0.253	0	8	4	2
PSF122 2	16	8000	98	142.00	-0.366	0	190.00	-0.684	0	200.00	-0.761	0	10	6	3
	20	8000	98	168.00	-0.523	0	229.00	-1.007	0	238.00	-1.096	0	10	6	3
	25	8000	98	176.00	-0.608	0	235.00	-1.098	0	244.00	-1.190	0	10	6	3
	28	8000	98	163.00	-0.561	0	205.00	-0.895	0	214.00	-0.979	0	10	6	3
	35	8000	98	194.00	-0.819	0	247.00	-1.321	0	255.00	-1.416	0	10	6	3
	40	8000	98	193.00	-0.855	0	230.00	-1.206	0	237.00	-1.289	0	10	6	3
	49	8000	98	263.00	-1.518	0	339.00	-2.492	0	347.00	-2.616	0	10	6	3
	70	8000	98	316.00	-2.373	0	380.00	-3.394	0	388.00	-3.528	0	10	6	3
	100	8000	98	420.00	-4.459	0	512.00	-6.456	0	519.00	-6.643	0	10	6	3

CMP.. / DS..							c_T PSF	F_{Ramax} PSF	F_{Rapk} PSF
	i	M_{amax} [Nm]	M_{apk} [Nm]	$M_{aNotaus}$ [Nm]	n_{ak} [1/min]	J_G 10^{-4} [kgm^2]	[Nm/']	[N]	[N]
PSF121 1	3	20	36	54	500	0.088	2.07	2000	1900
	4	25	38	57	500	0.044	2.22	1980	1890
	5	25	35	53	500	0.029	2.18	1980	1910
	7	25	37	56	443	0.015	2.0	1980	1900
	10	25	26	39	370	0.008	1.54	1980	1970
PSF122 2	16	25	38	57	438	0.037	1.97	1980	1890
	20	25	35	53	350	0.024	1.98	1980	1910
	25	25	35	53	280	0.024	1.94	1980	1910
	28	25	33	50	250	0.013	1.91	1980	1930
	35	25	35	53	200	0.012	1.9	1980	1910
	40	25	32	48	175	0.006	1.79	1980	1930
	49	25	37	56	143	0.012	1.79	1980	1900
	70	25	37	56	100	0.006	1.73	1980	1900
	100	25	26	39	70	0.006	1.37	1980	1970

14.3 PS.F 121/122 / CMP / DS [mm]

57 026 00 06

PSF121..

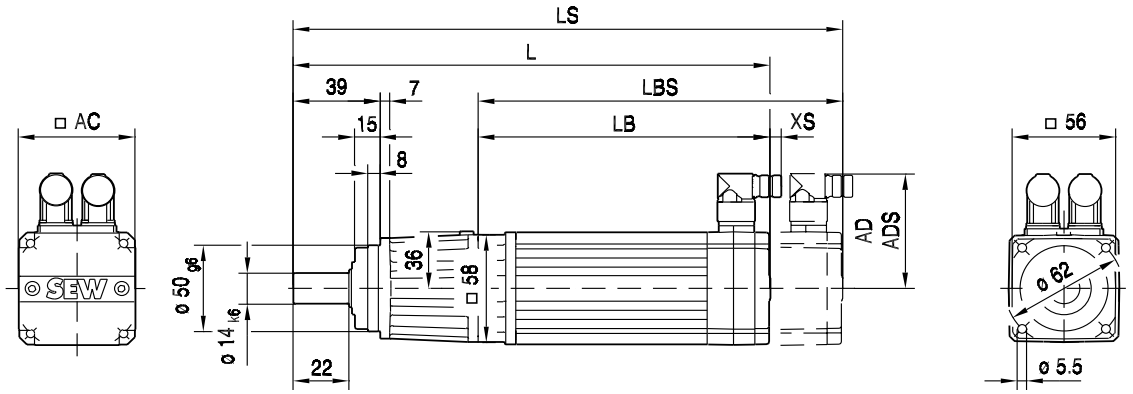

PSF

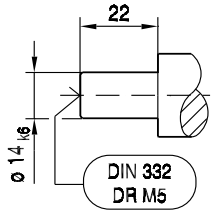

PSKF

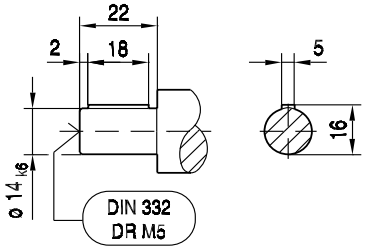

(→ 📖 150)	CMP40M	CMP50S	CMP50M	CMP50L				
AC	57	73	73	73				
AD	75	82	82	82				
ADS	75	82	82	82				
L	254	255	294	333				
LS	284	284	323	362				
LB	156	157	196	235				
LBS	186	186	225	264				
XS	19	18	18	18				

57 027 00 06

PSF122..

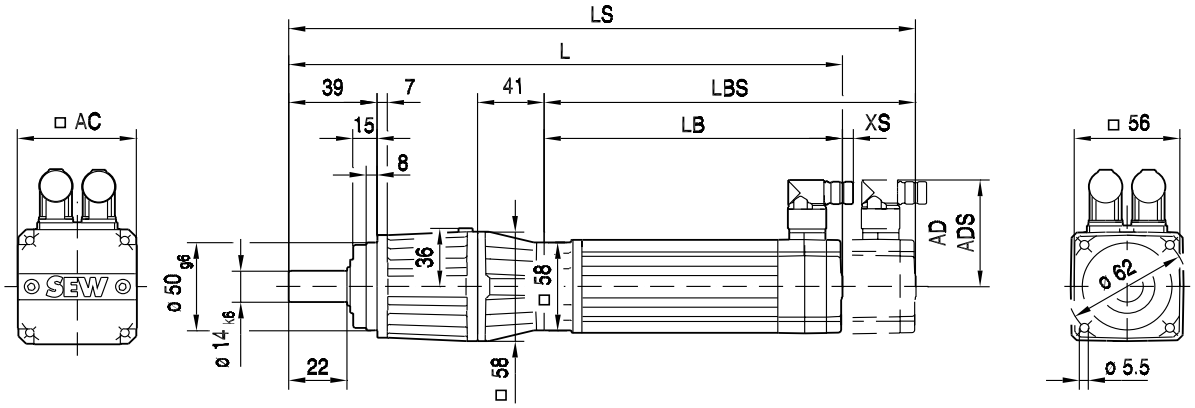

PSF

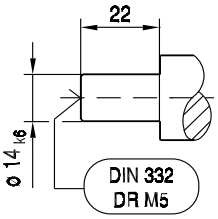

PSKF

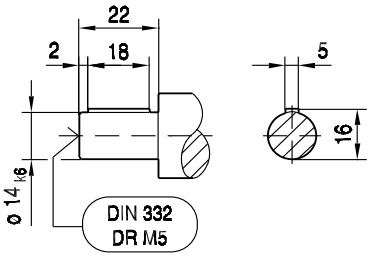

14

(→ 📖 150)	CMP40M	CMP50S	CMP50M	CMP50L				
AC	57	73	73	73				
AD	75	82	82	82				
ADS	75	82	82	82				
L	295	296	335	374				
LS	325	325	364	403				
LB	156	157	196	235				
LBS	186	186	225	264				
XS	19	18	18	18				

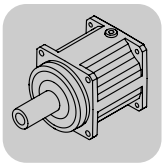

PS.F..CMP, DS, CM
PS.F 121/122 / CMP / DS [mm]

58 003 00 03

PSF121..

DS56..

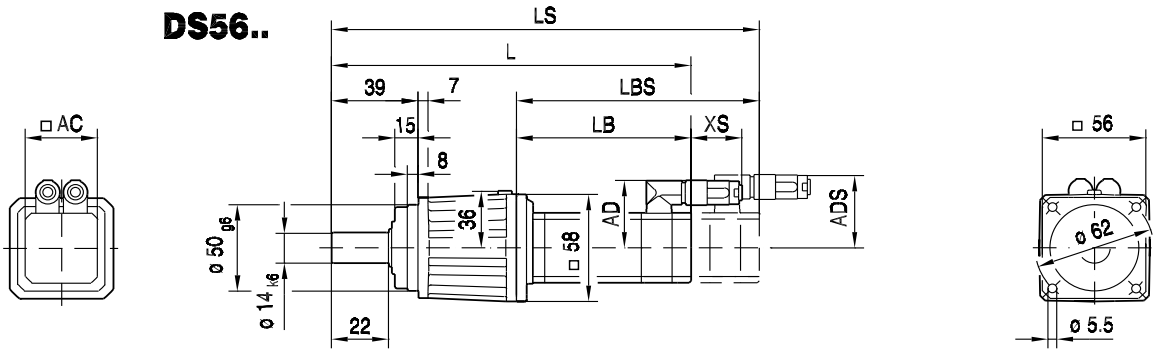

PSF

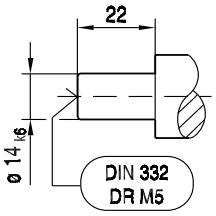

PSKF

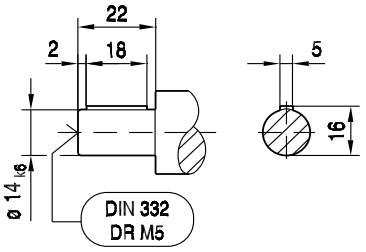

(→ 📖 150)	DS56M	DS56L	DS56H					
AC	73	73	73					
AD	71	71	77					
ADS	77	77	77					
L	248	280	383					
LS	278	310	383					
LB	150	182	285					
LBS	180	212	285					
XS	70	70	51					

58 004 00 03

PSF122..

DS56..

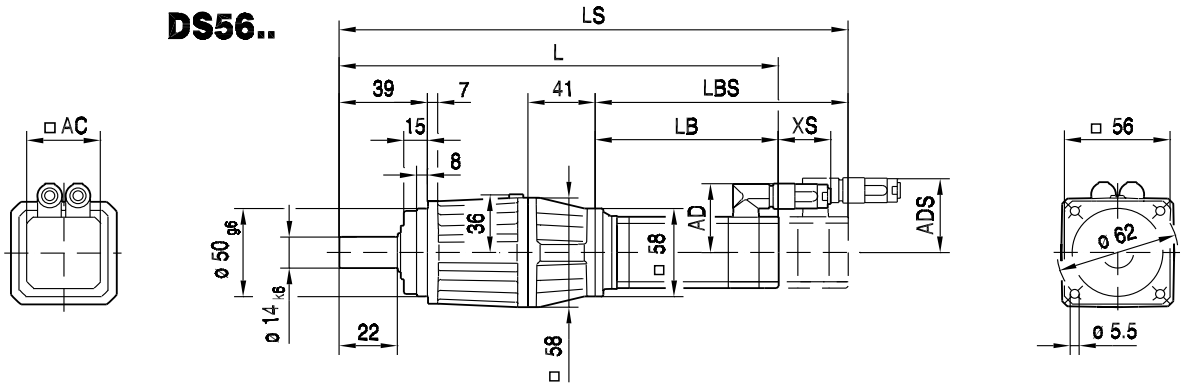

PSF

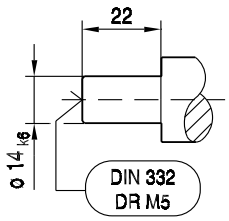

PSKF

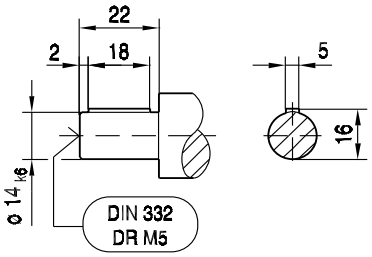

(→ 📖 150)	DS56M	DS56L	DS56H					
AC	73	73	73					
AD	71	71	77					
ADS	77	77	77					
L	289	321	424					
LS	319	351	424					
LB	150	182	285					
LBS	180	212	285					
XS	70	70	51					

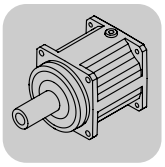

14.4 PS.F 221/222 / CMP / DS [Nm]

M_{aDyn} [Nm]		CMP							DS		
	i	40M	50S	50M	50L	63S	63M	63L	56M	56L	56H
PSF221 1	3		15	31	46	33	64	>65	11	23	45
	4		21	41	61	44	85	>85	15	30	60
	5		26	51	76	55	>80	>80	19	38	75
	7		36	71	>85	77	>85		26	53	>85
	10		51						38	>62	
PSF222 2	16	60	82	>85	>85				60	>85	>85
	20	74	>80	>80	>80				74	>80	>80
	25	>80	>80	>80	>80				>80	>80	>80
	28	>83	>83						>83	>83	
	35	>80	>80						>80	>80	
	40	>79									
	49	>85	>85						>85	>85	
	70	>85									
	100	>62									

m [kg]		CMP							DS		
	s	40M	50S	50M	50L	63S	63M	63L	56M	56L	56H
PSF221	1	3.6	4.4	5.3	6.2	6.6	8.1	9.6	4.4	5.4	6.2
PSF222	2	4.4	5.1	6.0	6.9	7.4	8.8	10	5.2	6.2	6.9

CMP.. / DS..		n_{epk}	η	M1;M3;M5-6			M2			M4			φ		
	i	[1/min]	[%]	a_0	a_1	a_2	a_0	a_1	a_2	a_0	a_1	a_2		/R	/M
													[']	[']	[']
PSF221 1	3	7500	99	109.00	-0.092	0	126.00	-0.144	0	129.00	-0.181	0	6	3	1
	4	7500	99	153.00	-0.134	0	179.00	-0.210	0	181.00	-0.258	0	6	3	1
	5	7500	99	153.00	-0.142	0	179.00	-0.218	0	179.00	-0.264	0	6	3	1
	7	7500	99	169.00	-0.177	0	196.00	-0.260	0	202.00	-0.325	0	6	3	1
	10	7500	99	158.00	-0.197	0	183.00	-0.276	0	201.00	-0.377	0	6	3	1
PSF222 2	16	8000	98	187.00	-0.438	0	237.00	-0.779	0	251.00	-0.896	0	8	4	2
	20	8000	98	210.00	-0.591	0	274.00	-1.092	0	287.00	-1.220	0	8	4	2
	25	8000	98	219.00	-0.675	0	281.00	-1.180	0	294.00	-1.312	0	8	4	2
	28	8000	98	214.00	-0.653	0	259.00	-1.015	0	273.00	-1.143	0	8	4	2
	35	8000	98	245.00	-0.908	0	302.00	-1.441	0	315.00	-1.583	0	8	4	2
	40	8000	98	235.00	-0.911	0	273.00	-1.268	0	283.00	-1.391	0	8	4	2
	49	8000	98	320.00	-1.613	0	403.00	-2.620	0	415.00	-2.796	0	8	4	2
	70	8000	98	363.00	-2.362	0	432.00	-3.370	0	442.00	-3.550	0	8	4	2
	100	8000	98	461.00	-4.232	0	560.00	-6.162	0	570.00	-6.394	0	8	4	2

CMP.. / DS..		M_{amax}	M_{apk}	$M_{aNotaus}$	n_{ak}	$J_G\ 10^{-4}$	c_T PSF	F_{Ramax} PSF	F_{Rapk} PSF
	i	[Nm]	[Nm]	[Nm]	[1/min]	[kgm^2]	[Nm/']	[N]	[N]
PSF221 1	3	40	65	98	1833	0.23	3.65	2870	2440
	4	55	85	128	575	0.12	3.74	2680	1720
	5	55	80	120	520	0.10	3.7	2680	1950
	7	55	85	128	457	0.054	3.47	2680	1720
	10	55	62	93	400	0.026	2.83	2680	2520
PSF222 2	16	55	85	128	438	0.042	3.22	2680	1720
	20	55	80	120	350	0.041	3.28	2680	1950
	25	55	80	120	280	0.027	3.22	2680	1950
	28	55	83	125	250	0.038	3.09	2680	1820
	35	55	80	120	200	0.014	3.13	2680	1950
	40	55	79	119	175	0.036	2.8	2680	1990
	49	55	85	128	143	0.013	3.06	2680	1720
	70	55	85	128	100	0.006	2.89	2680	1720
	100	55	62	93	70	0.006	2.48	2680	2520

14.5 PS.F 221/222 / CMP / DS [mm]

57 028 00 06

PSF221..

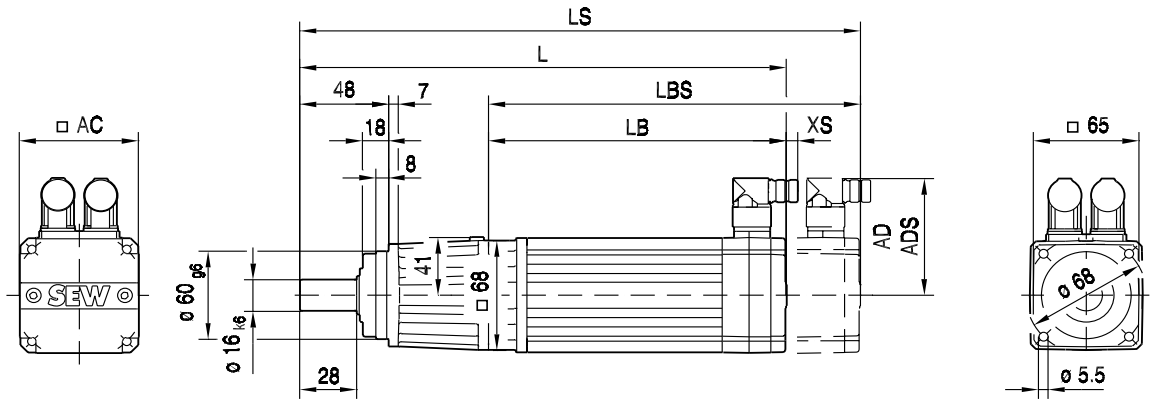

PSF

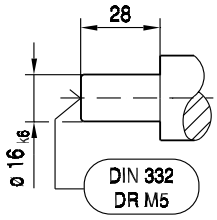

PSKF

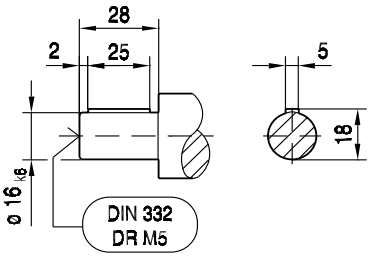

(→ 📖 150)	CMP50S	CMP50M	CMP50L	CMP63S	CMP63M	CMP63L		
AC	73	73	73	88	88	88		
AD	82	82	82	89	89	89		
ADS	82	82	82	89	89	89		
L	269	308	347	304	354	404		
LS	298	337	376	333	383	432		
LB	151	190	229	186	236	286		
LBS	180	219	258	215	265	314		
XS	18	18	18	14	14	14		

57 029 00 06

PSF222..

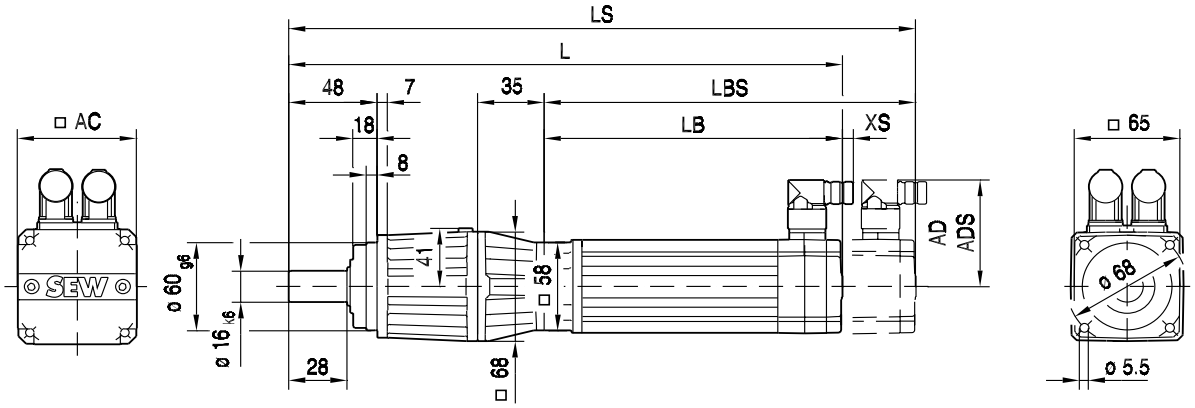

PSF

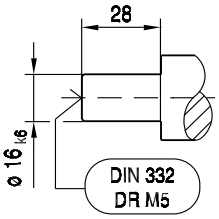

PSKF

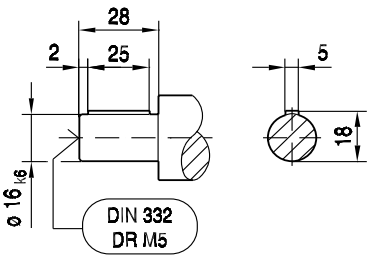

(→ 📖 150)	CMP40M	CMP50S	CMP50M	CMP50L				
AC	57	73	73	73				
AD	75	82	82	82				
ADS	75	82	82	82				
L	309	310	349	388				
LS	339	339	378	417				
LB	156	157	196	235				
LBS	186	186	225	264				
XS	19	18	18	18				

58 005 00 03

PSF221..

DS56..

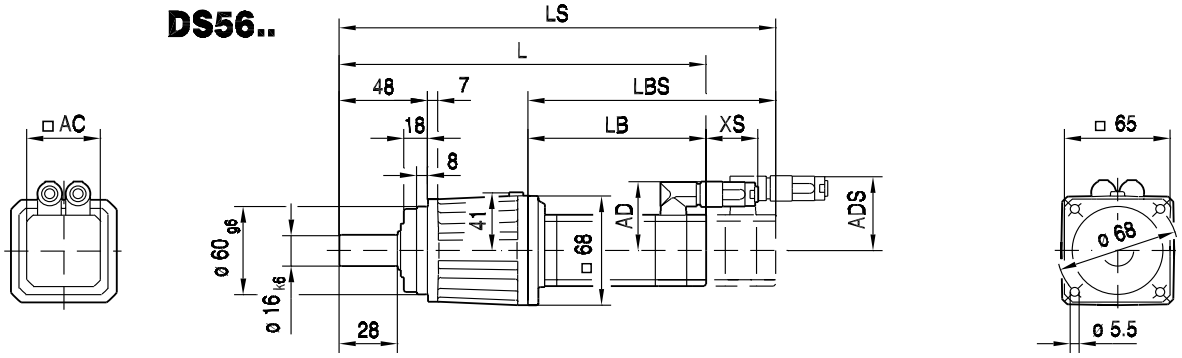

PSF

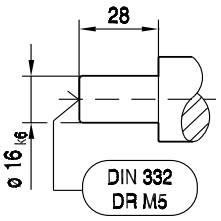

PSKF

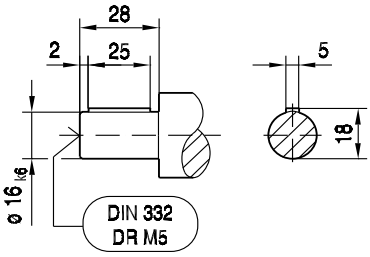

(→ 📖 150)	DS56M	DS56L	DS56H					
AC	73	73	73					
AD	71	71	77					
ADS	77	77	77					
L	262	294	397					
LS	292	324	397					
LB	144	176	279					
LBS	174	206	279					
XS	70	70	51					

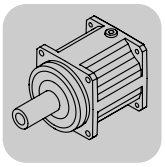

58 006 00 03

PSF222..

DS56..

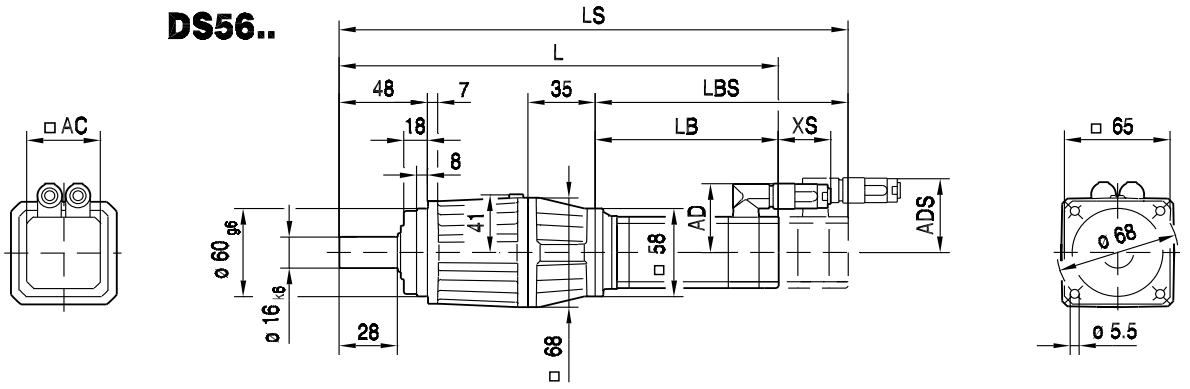

PSF

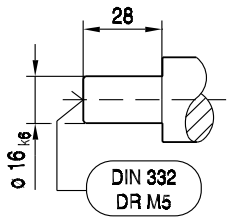

PSKF

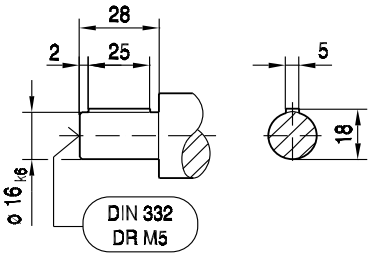

(→ 📖 150)	DS56M	DS56L	DS56H					
AC	73	73	73					
AD	71	71	77					
ADS	77	77	77					
L	303	335	438					
LS	333	365	438					
LB	150	182	285					
LBS	180	212	285					
XS	70	70	51					

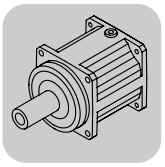

14.6 PS.F 321/322 / CMP / DS / CM [Nm]

M_{aDyn} [Nm]		CMP						DS			CM		
	i	50S	50M	50L	63S	63M	63L	56M	56L	56H	71S	71M	71L
PSF321 1	3		31	46	33	64	90			45	49	64	93
	4	21	41	61	44	85	120	15	30	60	65	85	124
	5	26	51	76	55	106	150	19	38	75	82	106	155
	7	36	71	107	77	148	>168	26	53	105	114	149	>168
	10	51	102	>121	110			38	75	>121	>121		
PSF322 2	16	82	>153	>153	>153	>153	>153	60	119	>153			
	20	102	>169	>169	>169	>169	>169	74	149	>169			
	25	127	>169	>169	>169	>169	>169	93	>169	>169			
	28	143	>145	>145	>145	>145		104	>145	>145			
	35	>169	>169	>169	>169	>169		130	>169	>169			
	40	>142						>142	>142				
	49	>168	>168	>168	>168	>168		>168	>168	>168			
	70	>168						>168	>168				
	100	>121						>121	>121				

m [kg]		CMP						DS			CM		
	s	50S	50M	50L	63S	63M	63L	56M	56L	56H	71S	71M	71L
PSF321	1	6.7	7.6	8.5	8.0	9.5	11	5.9	6.9	7.6	13	16	18
PSF322	2	8.2	9.1	10.0	9.5	11	12	7.4	8.4	9.1	15	17	19

CMP.. / DS.. / CM..				M1;M3;M5-6			M2			M4			φ		
	i	n_{epk} [1/min]	η [%]	a_0	a_1	a_2	a_0	a_1	a_2	a_0	a_1	a_2		/R	/M
													[']	[']	[']
PSF321 1	3	7000	99	205.00	-0.222	0	234.00	-0.327	0	288.00	-0.595	0	6	3	1
	4	7000	99	276.00	-0.316	0	312.00	-0.455	0	387.00	-0.833	0	6	3	1
	5	7000	99	290.00	-0.355	0	328.00	-0.501	0	414.00	-0.930	0	6	3	1
	7	7000	99	296.00	-0.418	0	335.00	-0.581	0	422.00	-1.036	0	6	3	1
	10	7000	99	269.00	-0.477	0	302.00	-0.617	0	374.00	-1.016	0	6	3	1
PSF322 2	16	7500	98	312.00	-0.710	0	400.00	-1.349	0	430.00	-1.630	0	8	4	2
	20	7500	98	366.00	-0.987	0	479.00	-1.946	0	508.00	-2.259	0	8	4	2
	25	7500	98	372.00	-1.053	0	522.00	-2.195	0	512.00	-2.336	0	8	4	2
	28	7500	98	331.00	-0.884	0	418.00	-1.557	0	449.00	-1.859	0	8	4	2
	35	7500	98	396.00	-1.263	0	505.00	-2.272	0	534.00	-2.609	0	8	4	2
	40	7500	98	348.00	-1.101	0	426.00	-1.769	0	453.00	-2.062	0	8	4	2
	49	7500	98	467.00	-1.995	0	616.00	-3.752	0	641.00	-4.128	0	8	4	2
	70	7500	98	502.00	-2.580	0	633.00	-4.341	0	657.00	-4.724	0	8	4	2
	100	7500	98	577.00	-4.137	0	756.00	-7.260	0	776.00	-7.704	0	8	4	2

CMP.. / DS.. / CM..							c_T	F_{Ramax}	F_{Rapk}
	i	M_{amax} [Nm]	M_{apk} [Nm]	$M_{aNotaus}$ [Nm]	n_{ak} [1/min]	J_G 10^{-4} [kgm^2]	PSF [Nm/']	PSF [N]	PSF [N]
PSF321 1	3	85	125	188	567	0.69	11.3	4380	5280
	4	110	170	255	450	0.35	11.7	4770	4420
	5	110	169	250	460	0.51	11.6	5100	4450
	7	110	168	250	400	0.27	10.5	5480	4470
	10	110	121	182	360	0.13	7.6	5480	5330
PSF322 2	16	110	153	230	438	0.042	9.01	5480	4800
	20	110	169	250	350	0.14	9.36	5480	4450
	25	110	169	250	280	0.088	9.23	5480	4450
	28	110	145	215	250	0.12	8.78	5480	4950
	35	110	169	250	200	0.047	9.03	5480	4450
	40	110	142	210	175	0.11	7.74	5480	5000
	49	110	168	250	143	0.042	8.72	5480	4470
	70	110	168	250	100	0.020	8.09	5480	4470
	100	110	121	182	70	0.019	6.44	5480	5330

14.7 PS.F 321/322 / CMP / DS / CM [mm]

57 030 00 06

PSF321..

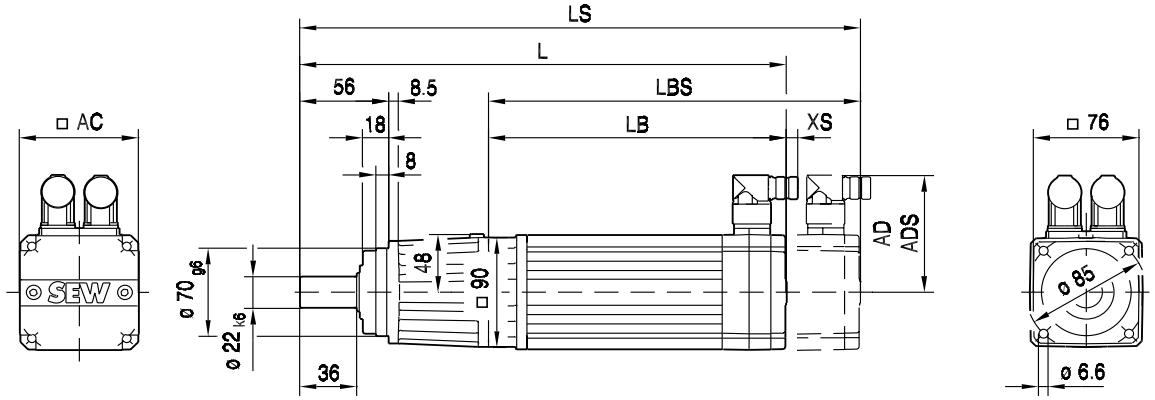

PSF

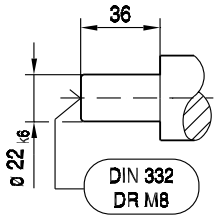

PSKF

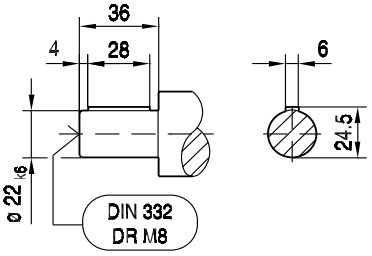

(→ 📖 150)	CMP50S	CMP50M	CMP50L	CMP63S	CMP63M	CMP63L		
AC	73	73	73	88	88	88		
AD	82	82	82	89	89	89		
ADS	82	82	82	89	89	89		
L	291	330	369	326	376	426		
LS	320	359	398	355	405	455		
LB	146	185	224	181	231	281		
LBS	175	214	253	210	260	310		
XS	18	18	18	14	14	14		

57 031 00 06

PSF322..

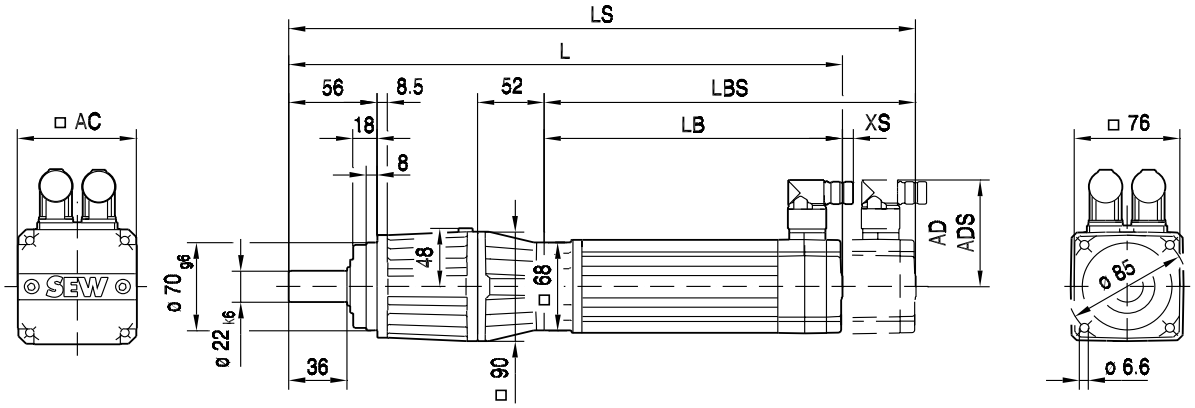

PSF

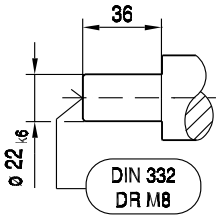

PSKF

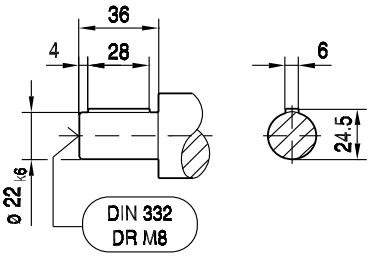

(→ 📖 150)	CMP50S	CMP50M	CMP50L	CMP63S	CMP63M	CMP63L		
AC	73	73	73	88	88	88		
AD	82	82	82	89	89	89		
ADS	82	82	82	89	89	89		
L	348	387	426	383	433	483		
LS	377	416	455	412	462	511		
LB	151	190	229	186	236	286		
LBS	180	219	258	215	265	314		
XS	18	18	18	14	14	14		

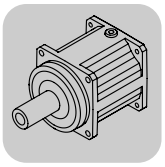

58 007 00 03

PSF321..

DS56..

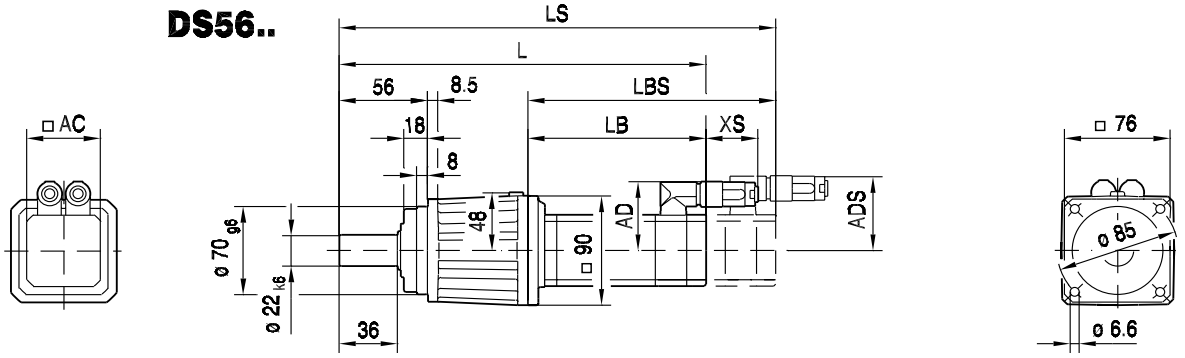

PSF

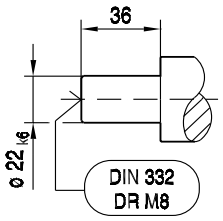

PSKF

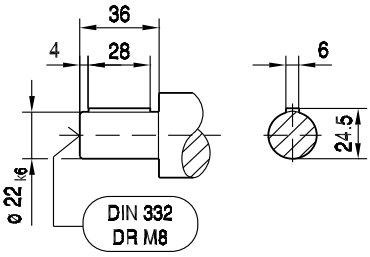

CM..

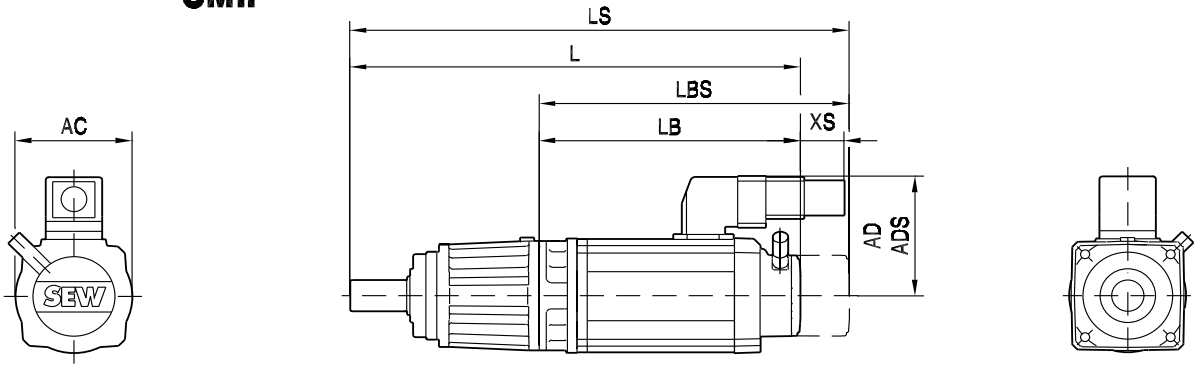

(→ 📖 150)	DS56M	DS56L	DS56H	CM71S	CM71M	CM71L		
AC	73	73	73	117	117	117		
AD	71	71	77	122	122	122		
ADS	77	77	77	122	122	122		
L	284	316	419	385	405	445		
LS	314	346	419	467	487	527		
LB	139	171	274	240	260	300		
LBS	169	201	274	322	342	382		
XS	70	70	51	45	45	45		

58 008 00 03

PSF322..

DS56..

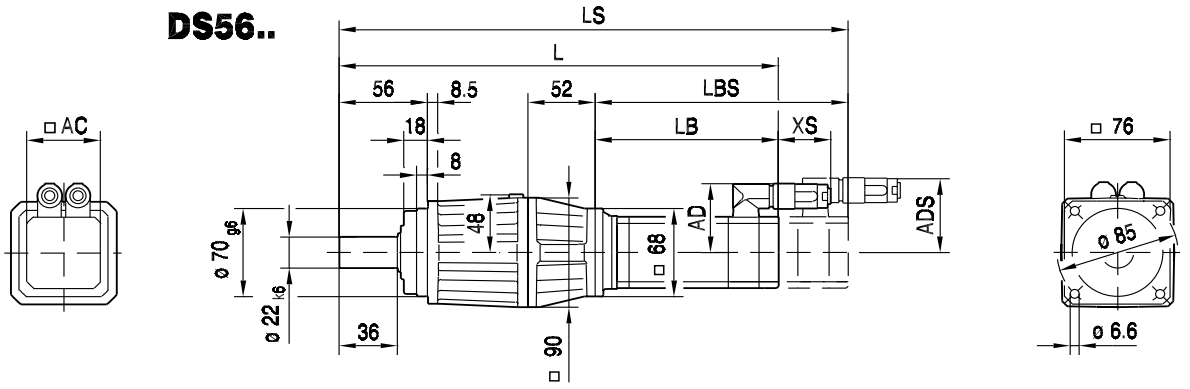

PSF

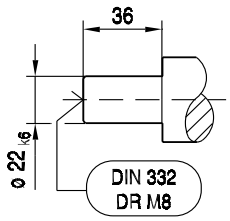

PSKF

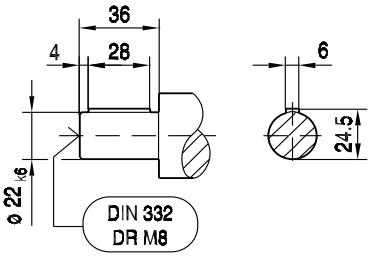

(→ 📖 150)	DS56M	DS56L	DS56H					
AC	73	73	73					
AD	71	71	77					
ADS	77	77	77					
L	341	373	476					
LS	371	403	476					
LB	144	176	279					
LBS	174	206	279					
XS	70	70	51					

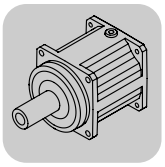

14.8 PS.F 521/522 / CMP / DS / CM [Nm]

M_{aDyn} [Nm]		CMP						DS			CM					
	i	50S	50M	50L	63S	63M	63L	56M	56L	56H	71S	71M	71L	90S	90M	90L
PSF521 1	3														155	225
	4					85	120					85	124	157	207	299
	5		51	76	55	106	150			75	82	106	155	196	258	374
	7		71	107	77	148	211			105	114	149	218	274	>360	>360
	10		102	152	110	212	>270			150	163	213	>270	>270		
PSF522 2	16	82	162	241	174	336	>385	60	119	238	259	337	>385			
	20	102	202	302	218	>375	>375	74	149	298	323	>375	>375			
	25	127	252	>375	272	>375	>375	93	186	372	>375	>375	>375			
	28	143	283	>385	305	>385	>385	104	209	>385	>385	>385	>385			
	35	178	353	>375	>375	>375	>375	130	261	>375	>375	>375	>375			
	40	204	>385	>385	>385			149	298	>385	>385					
	49	250	>360	>360	>360	>360	>360	182	>360	>360	>360	>360	>360			
	70	357	>360	>360	>360			261	>360	>360	>360					
	100	>270	>270	>270	>270			>270	>270	>270	>270					

m [kg]		CMP						DS			CM					
	s	50S	50M	50L	63S	63M	63L	56M	56L	56H	71S	71M	71L	90S	90M	90L
PSF521	1	9.9	11	12	12	13	15	9.1	10	11	17	19	21	27	30	35
PSF522	2	13	14	15	14	16	17	12	13	14	20	22	24	30	33	38

CMP.. / DS.. / CM..				M1;M3;M5-6			M2			M4			φ		
	i	n_{epk} [1/min]	η [%]	a_0	a_1	a_2	a_0	a_1	a_2	a_0	a_1	a_2		/R	/M
													[']	[']	[']
PSF521 1	3	6000	99	445.00	-0.542	0	515.00	-0.834	0	676.00	-1.697	0	6	3	1
	4	6000	99	626.00	-0.806	0	736.00	-1.274	0	955.00	-2.483	0	6	3	1
	5	6000	99	633.00	-0.860	0	747.00	-1.345	0	964.00	-2.554	0	6	3	1
	7	6000	99	670.00	-1.029	0	805.00	-1.596	0	1024.0	-2.855	0	6	3	1
	10	6000	99	651.00	-1.253	0	752.00	-1.709	0	937.00	-2.831	0	6	3	1
PSF522 2	16	7000	98	683.00	-1.837	0	835.00	-3.238	0	888.00	-3.890	0	8	4	2
	20	7000	98	751.00	-2.385	0	981.00	-4.855	0	1107.0	-6.734	0	8	4	2
	25	7000	98	781.00	-2.642	0	1012.0	-5.183	0	1142.0	-7.143	0	8	4	2
	28	7000	98	732.00	-2.395	0	873.00	-3.829	0	924.00	-4.507	0	8	4	2
	35	7000	98	870.00	-3.860	0	1027.0	-5.742	0	1150.0	-7.701	0	8	4	2
	40	7000	98	759.00	-3.015	0	876.00	-4.378	0	919.00	-5.027	0	8	4	2
	49	7000	98	1064.0	-6.079	0	1323.0	-9.798	0	1445.0	-12.110	0	8	4	2
	70	7000	98	1122.0	-7.805	0	1331.0	-11.307	0	1424.0	-13.427	0	8	4	2
	100	7000	98	1077.0	-6.893	0	1467.0	-13.340	0	1576.0	-15.732	0	8	4	2

CMP.. / DS.. / CM..							c_T PSF	F_{Ramax} PSF	F_{Rapk} PSF
	i	M_{amax} [Nm]	M_{apk} [Nm]	$M_{aNotaus}$ [Nm]	n_{ak} [1/min]	J_G 10^{-4} [kgm^2]	[Nm/']	[N]	[N]
PSF521 1	3	180	280	420	2267	2.7	29.1	6150	9540
	4	300	385	575	450	1.4	31.7	6700	8680
	5	300	375	560	420	1.3	31.5	7170	8780
	7	300	360	540	371	0.68	27.8	7930	8920
	10	270	270	405	480	0.34	20.4	8820	9610
PSF522 2	16	300	385	575	431	0.38	23.93	9400	8680
	20	300	375	560	350	0.37	25.06	9400	8780
	25	300	375	560	280	0.24	24.64	9400	8780
	28	300	385	575	250	0.33	22.53	9400	8680
	35	300	375	560	200	0.13	23.52	9400	8780
	40	300	385	575	175	0.31	18.92	9400	8680
	49	300	360	540	143	0.12	22.56	9400	8920
	70	300	360	540	100	0.057	20.3	9400	8920
	100	270	270	405	70	0.054	16.71	9610	9610

14.9 PS.F 521/522 / CMP / DS / CM [mm]

57 032 00 06

PSF521..

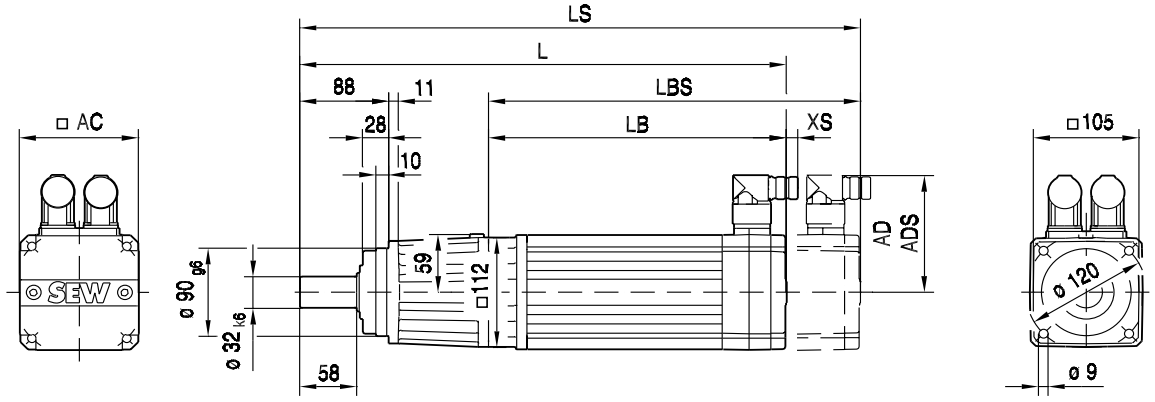

PSF

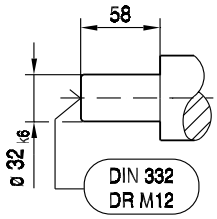

PSKF

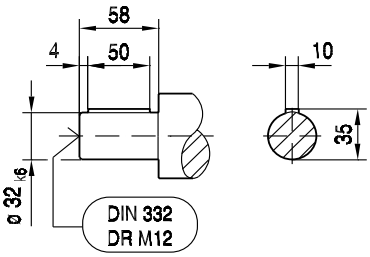

(→ 📖 150)	CMP50M	CMP50L	CMP63S	CMP63M	CMP63L			
AC	73	73	88	88	88			
AD	82	82	89	89	89			
ADS	82	82	89	89	89			
L	370	409	366	416	466			
LS	399	438	394	444	494			
LB	180	219	176	226	276			
LBS	209	248	205	255	305			
XS	18	18	14	14	14			

57 033 00 06

PSF522..

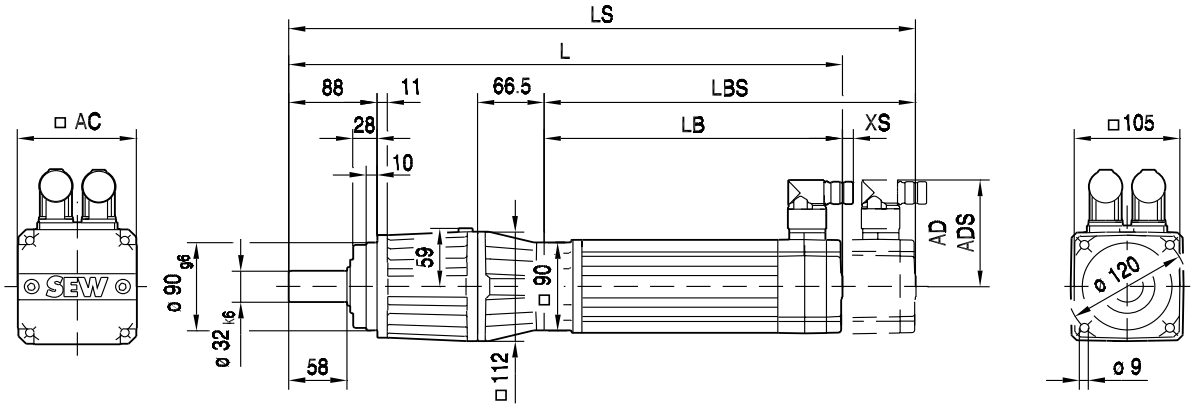

PSF

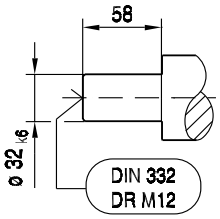

PSKF

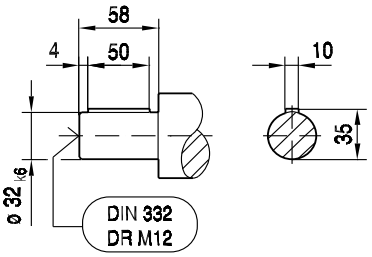

(→ 📖 150)	CMP50S	CMP50M	CMP50L	CMP63S	CMP63M	CMP63L		
AC	73	73	73	88	88	88		
AD	82	82	82	89	89	89		
ADS	82	82	82	89	89	89		
L	402	441	480	437	487	537		
LS	431	470	509	466	516	566		
LB	146	185	224	181	231	281		
LBS	175	214	253	210	260	310		
XS	18	18	18	14	14	14		

58 011 00 03

PSF521..

DS56..

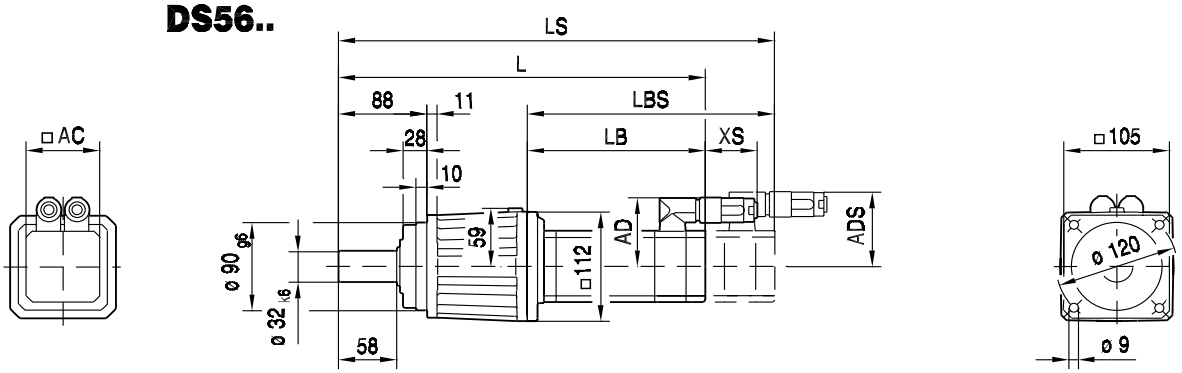

PSF

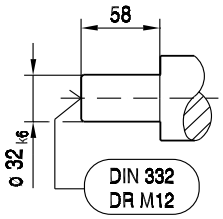

PSKF

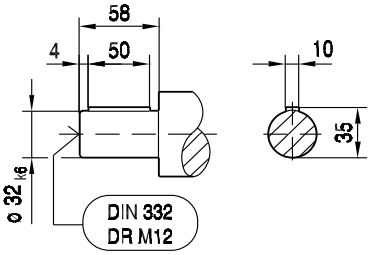

CM..

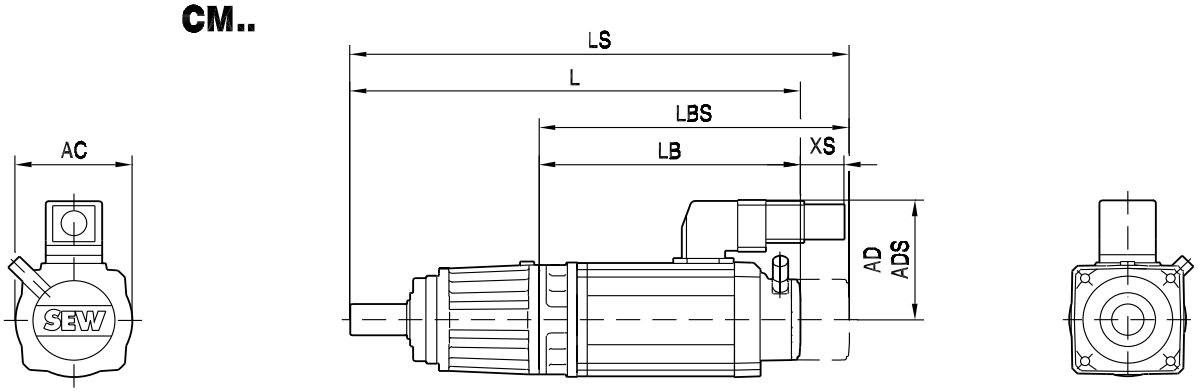

(→ 📖 150)	DS56H	CM71S	CM71M	CM71L	CM90S	CM90M	CM90L	
AC	73	117	117	117	142	142	142	
AD	77	122	122	122	140	140	140	
ADS	77	122	122	122	140	140	140	
L	458	424	444	484	476	503	557	
LS	458	506	526	566	571	598	652	
LB	269	235	255	295	287	314	368	
LBS	269	317	337	377	382	409	463	
XS	51	45	45	45	50	50	50	

58 012 00 03

PSF522..

DS56..

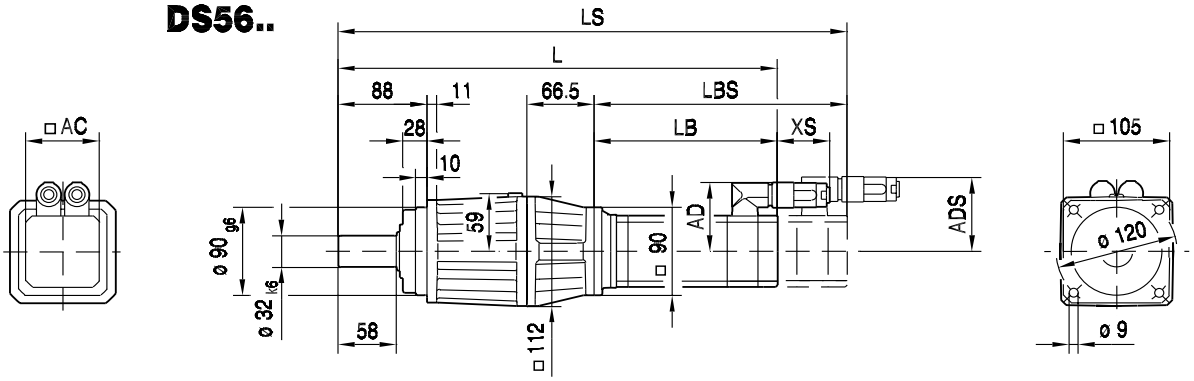

PSF

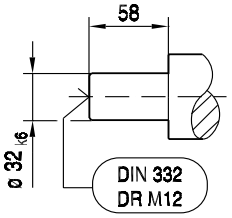

PSKF

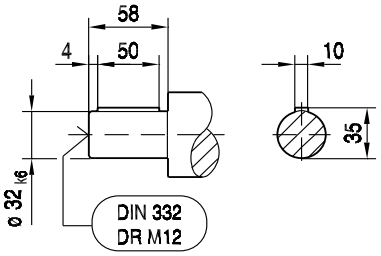

CM..

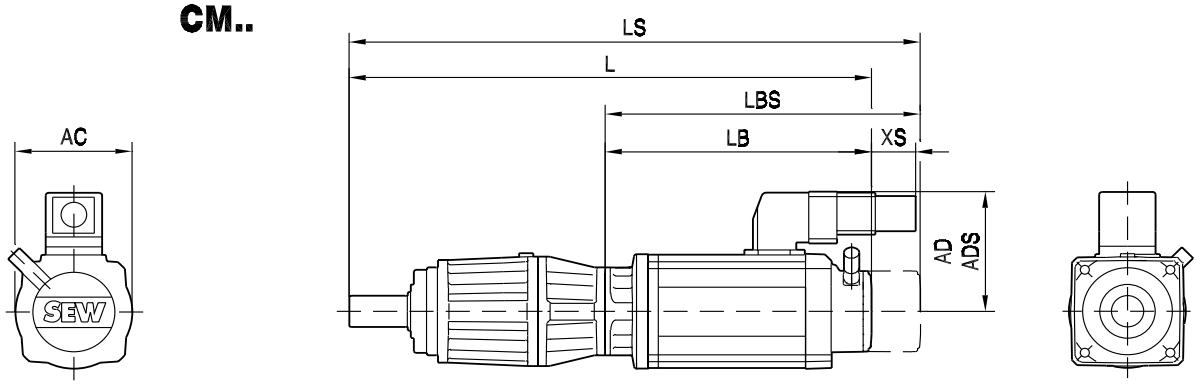

(→ 📖 150)	DS56M	DS56L	DS56H	CM71S	CM71M	CM71L		
AC	73	73	73	117	117	117		
AD	71	71	77	122	122	122		
ADS	77	77	77	122	122	122		
L	395	427	530	496	516	556		
LS	425	457	530	578	598	638		
LB	139	171	274	240	260	300		
LBS	169	201	274	322	342	382		
XS	70	70	51	45	45	45		

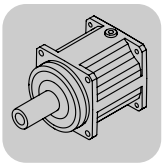

14.10 PS.F 621/622 / CMP / DS / CM [Nm]

M_{aDyn} [Nm]		CMP					DS	CM									
	i	50M	50L	63S	63M	63L	56H	71S	71M	71L	90S	90M	90L	112S	112M	112L	112H
PSF621 1	4											207	299	326	430	624	>745
	5					150				155	196	258	374	407	537	>700	>700
	7					211				218	274	362	524	570	>660		
	10					301		163	213	311	392	>500	>500				
PSF622 2	16				336	477			337	492	621	>745	>745				
	20				419	596			421	615	>700	>700	>700				
	25	252	377	272	524	>700	372	404	527	>700	>700	>700	>700				
	28	283	423	305	587	>745	417	453	590	>745	>745	>745	>745				
	35	353	528	381	>700	>700	521	566	>700	>700	>700	>700	>700				
	40	404	604	435	>745	>745	596	647	>745	>745	>745						
	49	495	>660	533	>660	>660	>660	>660	>660	>660	>660	>660	>660				
	70	>660	>660	>660	>660	>660	>660	>660	>660	>660	>660						
	100	>500	>500	>500	>500	>500	>500	>500	>500	>500	>500						

m [kg]		CMP					DS	CM									
	s	50M	50L	63S	63M	63L	56H	71S	71M	71L	90S	90M	90L	112S	112M	112L	112H
PSF621	1	19	20	20	21	23	19	25	26	30	36	38	43	46	50	66	73
PSF622	2	24	25	25	27	29	25	30	32	35	41	44	48	51	55	71	78

CMP.. / DS.. / CM..				M1;M3;M5-6			M2			M4			φ		
	i	n_{epk} [1/min]	η [%]	a_0	a_1	a_2	a_0	a_1	a_2	a_0	a_1	a_2		/R	/M
													[']	[']	[']
PSF621 1	4	6000	99	1186.0	-1.675	0	1399.0	-2.659	0	1830.0	-5.404	0	4	2	1
	5	6000	99	1176.0	-1.751	0	1402.0	-2.761	0	1836.0	-5.516	0	4	2	1
	7	6000	99	1290.0	-2.268	0	1505.0	-3.257	0	1948.0	-6.140	0	4	2	1
	10	6000	99	1059.0	-1.739	0	1306.0	-2.710	0	1764.0	-5.445	0	4	2	1
PSF622 2	16	6000	98	1347.0	-4.385	0	1660.0	-7.947	0	1760.0	-9.517	0	6	3	1
	20	6000	98	1530.0	-7.334	0	1859.0	-12.068	0	2106.0	-16.961	0	6	3	1
	25	6000	98	1562.0	-7.844	0	1890.0	-12.609	0	2148.0	-17.712	0	6	3	1
	28	6000	98	1456.0	-5.614	0	1765.0	-9.355	0	1865.0	-11.032	0	6	3	1
	35	6000	98	1662.0	-9.338	0	1987.0	-14.315	0	2266.0	-19.903	0	6	3	1
	40	6000	98	1532.0	-7.060	0	1803.0	-10.733	0	1911.0	-12.558	0	6	3	1
	49	6000	98	2051.0	-14.837	0	2556.0	-24.533	0	2744.0	-29.980	0	6	3	1
	70	6000	98	1951.0	-13.437	0	2459.0	-22.865	0	2639.0	-28.039	0	6	3	1
	100	6000	98	2327.0	-21.522	0	3156.0	-40.509	0	3278.0	-45.862	0	6	3	1

CMP.. / DS.. / CM..							c_T	F_{Ramax}	F_{Rapk}
	i	M_{amax} [Nm]	M_{apk} [Nm]	$M_{aNotaus}$ [Nm]	n_{ak} [1/min]	J_G 10^{-4} [kgm^2]	PSF [Nm/']	PSF [N]	PSF [N]
PSF621 1	4	600	745	1110	300	4.4	57.0	13400	13400
	5	600	700	1050	280	4.3	56.0	13900	13500
	7	600	660	990	243	2.2	50.0	13900	13700
	10	500	500	750	420	1.1	38.0	14200	14200
PSF622 2	16	600	745	1110	306	1.4	48.34	13900	13400
	20	600	700	1050	230	1.4	48.97	13900	13500
	25	600	700	1050	228	0.94	48.17	13900	13500
	28	600	745	1110	250	1.3	44.83	13900	13400
	35	600	700	1050	200	0.49	45.67	13900	13500
	40	600	745	1110	175	1.2	39.4	13900	13400
	49	600	660	990	143	0.45	43.39	13900	13700
	70	600	660	990	100	0.22	40.24	13900	13700
	100	500	500	750	70	0.21	33.01	14200	14200

14.11 PS.F 621/622 / CMP / DS / CM [mm]

57 034 00 06

PSF621..

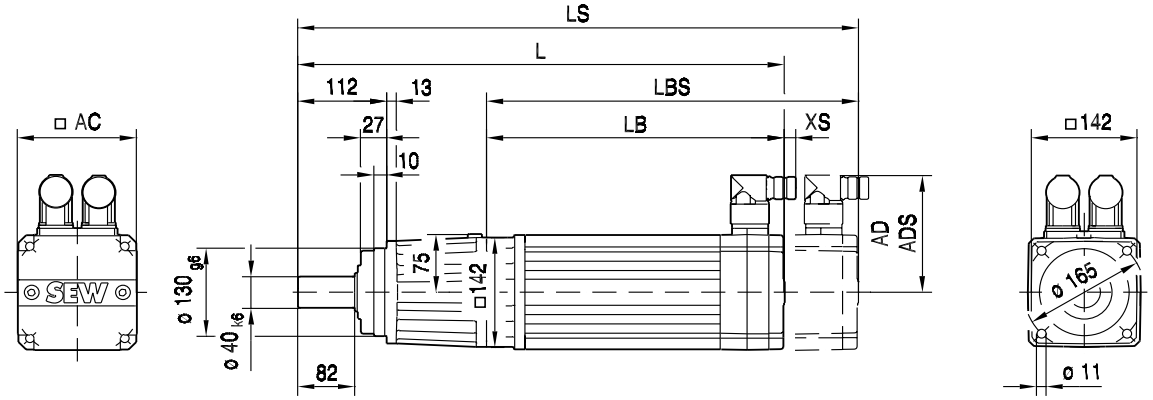

PSF

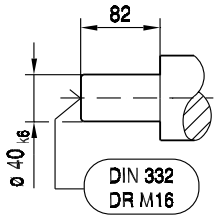

PSKF

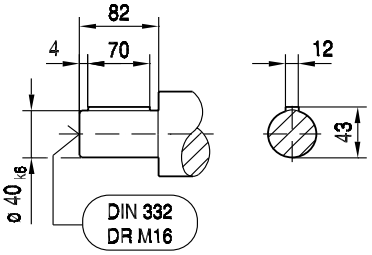

(→ 📖 150)	CMP63L							
AC	88							
AD	89							
ADS	89							
L	516							
LS	545							
LB	268							
LBS	297							
XS	14							

57 035 00 06

PSF622..

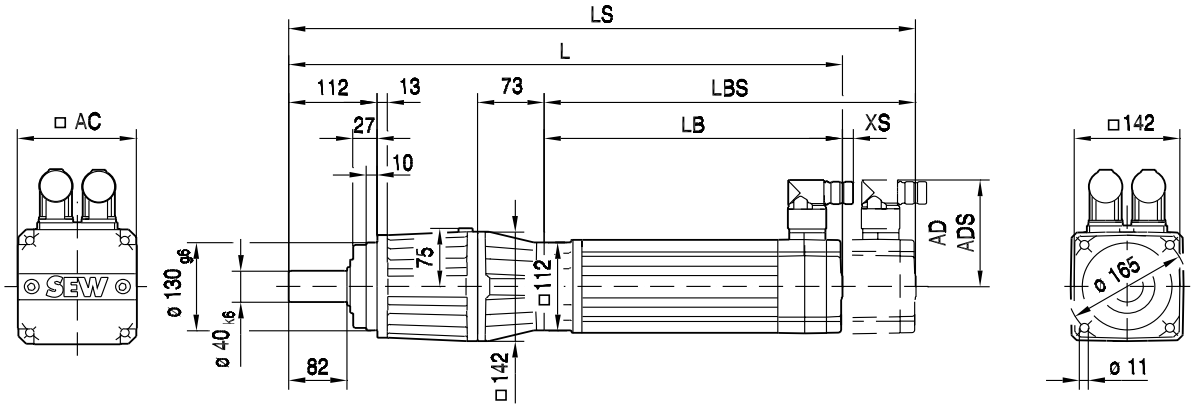

PSF

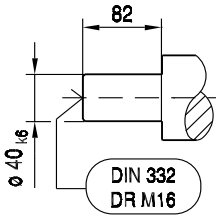

PSKF

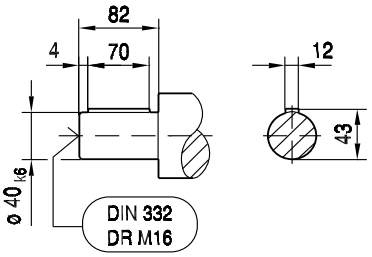

14

(→ 📖 150)	CMP50M	CMP50L	CMP63S	CMP63M	CMP63L			
AC	73	73	88	88	88			
AD	82	82	89	89	89			
ADS	82	82	89	89	89			
L	501	540	497	547	597			
LS	530	569	526	576	626			
LB	180	219	176	226	276			
LBS	209	248	205	255	305			
XS	18	18	14	14	14			

58 013 00 03

PSF621..

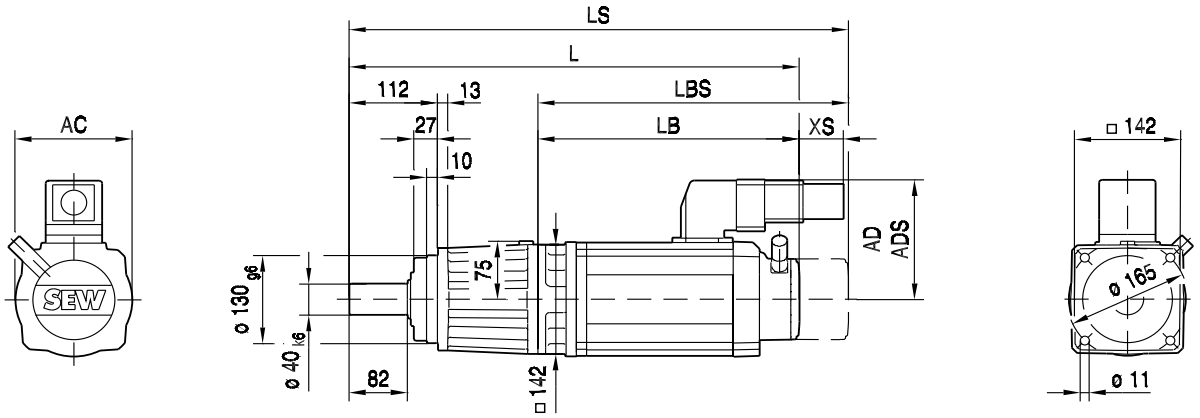

PSF

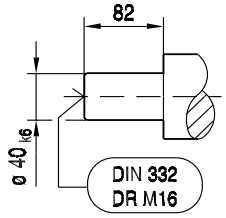

PSKF

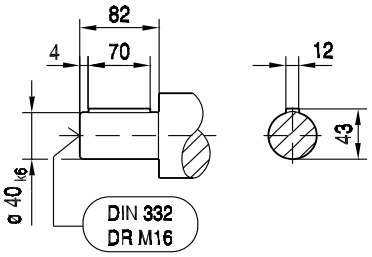

(→ 📖 150)	CM71S	CM71M	CM71L	CM90S	CM90M	CM90L	CM112S	CM112M	CM112L	CM112H
AC	117	117	117	142	142	142	186	186	186	186
AD	122	122	122	140	140	140	162	162	162	162
ADS	122	122	122	140	140	140	162	162	162	162
L	475	495	535	527	554	608	562	589	646	771
LS	557	577	617	622	649	703	652	679	736	836
LB	227	247	287	279	306	360	314	341	398	523
LBS	309	329	369	374	401	455	404	431	488	588
XS	45	45	45	50	50	50	36	36	36	36

58 014 00 03

PSF622..

DS56..

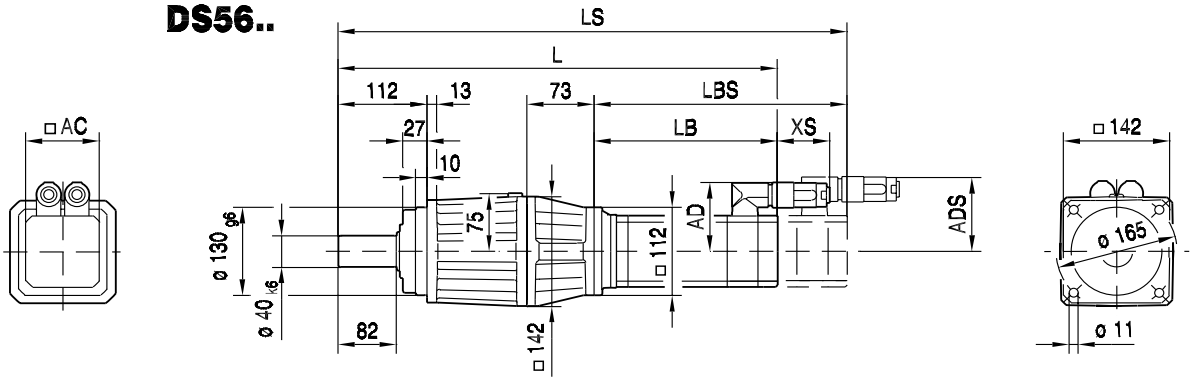

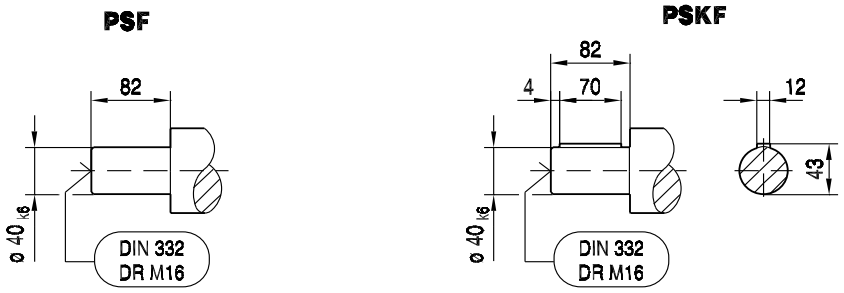

CM..

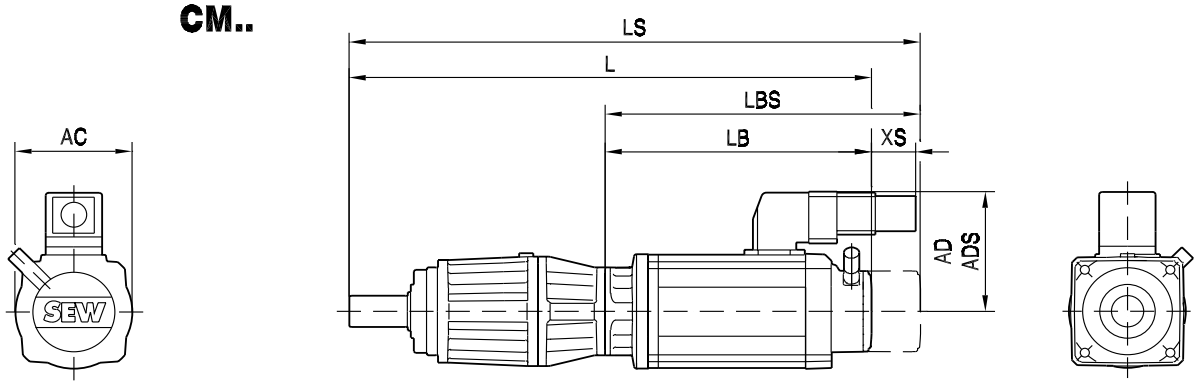

(→ 📖 150)	DS56H	CM71S	CM71M	CM71L	CM90S	CM90M	CM90L	
AC	73	117	117	117	142	142	142	
AD	77	122	122	122	140	140	140	
ADS	77	122	122	122	140	140	140	
L	590	556	576	616	608	635	689	
LS	590	638	658	698	703	730	784	
LB	269	235	255	295	287	314	368	
LBS	269	317	337	377	382	409	463	
XS	51	45	45	45	50	50	50	

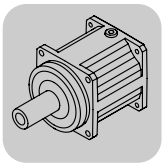

14.12 PS.F 721/722 / CMP / DS / CM [Nm]

M_{aDyn} [Nm]		CMP					DS	CM									
	i	50M	50L	63S	63M	63L	56H	71S	71M	71L	90S	90M	90L	112S	112M	112L	112H
PSF721 1	4													326	430	624	942
	5													407	537	780	1178
	7											362	524	570	752	1091	>1380
	10											517	748	815	>1050		
PSF722 2	16				336	477			337	492	621	818	1185				
	20				419	596			421	615	776	1023	1482				
	25	252	377	272	524	745	372	404	527	769	970	1279	>1540				
	28	283	423	305	587	834	417	453	590	862	1087	>1350	>1350				
	35	353	528	381	734	1043	521	566	737	1077	1358	>1540	>1540				
	40	404	604	435	839	>1080	596	647	843	>1080	>1080						
	49	495	740	533	1028	>1380	730	792	1032	>1380	>1380	>1380	>1380				
	70	707	1056	761	>1380	>1380	1043	1132	>1380	>1380	>1380						
	100	1009	>1050	>1050	>1050	>1050	>1050	>1050	>1050	>1050	>1050						

m [kg]		CMP					DS	CM									
	s	50M	50L	63S	63M	63L	56H	71S	71M	71L	90S	90M	90L	112S	112M	112L	112H
PSF721	1	32	33	33	35	36	33	38	40	43	49	53	58	60	64	80	87
PSF722	2	39	40	40	42	43	40	45	46	50	56	60	64	66	71	87	94

CMP.. / DS.. / CM..				M1;M3;M5-6			M2			M4			φ		
	i	n_{epk} [1/min]	η [%]	a_0	a_1	a_2	a_0	a_1	a_2	a_0	a_1	a_2		/R	/M
													[']	[']	[']
PSF721 1	4	4500	99	2288.0	-3.437	0	2722.0	-5.815	0	3473.0	-11.679	0	4	2	1
	5	4500	99	2309.0	-3.570	0	2746.0	-5.951	0	3503.0	-11.878	0	4	2	1
	7	4500	99	2377.0	-4.171	0	2811.0	-6.427	0	3629.0	-12.643	0	4	2	1
	10	4500	99	2233.0	-4.553	0	2602.0	-6.455	0	3361.0	-12.221	0	4	2	1
PSF722 2	16	6000	98	2190.0	-6.493	0	2548.0	-10.764	0	2779.0	-14.201	0	6	3	1
	20	6000	98	2400.0	-8.185	0	2857.0	-14.191	0	3065.0	-17.745	0	6	3	1
	25	6000	98	2434.0	-8.643	0	2887.0	-14.651	0	3098.0	-18.278	0	6	3	1
	28	6000	98	2223.0	-7.521	0	2594.0	-11.891	0	2834.0	-15.477	0	6	3	1
	35	6000	98	2550.0	-10.050	0	3009.0	-16.379	0	3216.0	-20.048	0	6	3	1
	40	6000	98	2098.0	-8.216	0	2451.0	-12.365	0	2676.0	-15.787	0	6	3	1
	49	6000	98	2915.0	-14.944	0	3640.0	-26.147	0	3839.0	-30.340	0	6	3	1
	70	6000	98	3051.0	-18.629	0	3669.0	-29.409	0	3842.0	-33.476	0	6	3	1
	100	6000	98	3522.0	-29.556	0	4490.0	-49.846	0	4683.0	-54.900	0	6	3	1

CMP.. / DS.. / CM..							c_T	F_{Ramax}	F_{Rapk}
	i	M_{amax} [Nm]	M_{apk} [Nm]	$M_{aNotaus}$ [Nm]	n_{ak} [1/min]	J_G 10^{-4} [kgm^2]	PSF [Nm/']	PSF [N]	PSF [N]
PSF721 1	4	1000	1550	2320	450	13	146.0	22700	34800
	5	1000	1540	2310	420	8.6	143.0	24300	34500
	7	1000	1380	2070	357	4.5	125.0	26900	35000
	10	1000	1050	1570	340	2.2	91.0	29900	35800
PSF722 2	16	1000	1470	2200	181	2.0	104.12	34500	34700
	20	1000	1540	2310	345	1.3	108.88	35900	34500
	25	1000	1540	2310	280	1.1	106.12	35900	34500
	28	1000	1350	2020	168	0.68	89.7	35900	35100
	35	1000	1540	2310	200	0.58	95.13	35900	34500
	40	1000	1080	1620	140	0.33	70.53	35900	35800
	49	1000	1380	2070	143	0.50	92.94	35900	35000
	70	1000	1380	2070	100	0.25	79.9	35900	35000
	100	1000	1050	1570	70	0.22	68.87	35900	35800

14.13 PS.F 721/722 / CMP / DS / CM [mm]

57 037 00 06

PSF722..

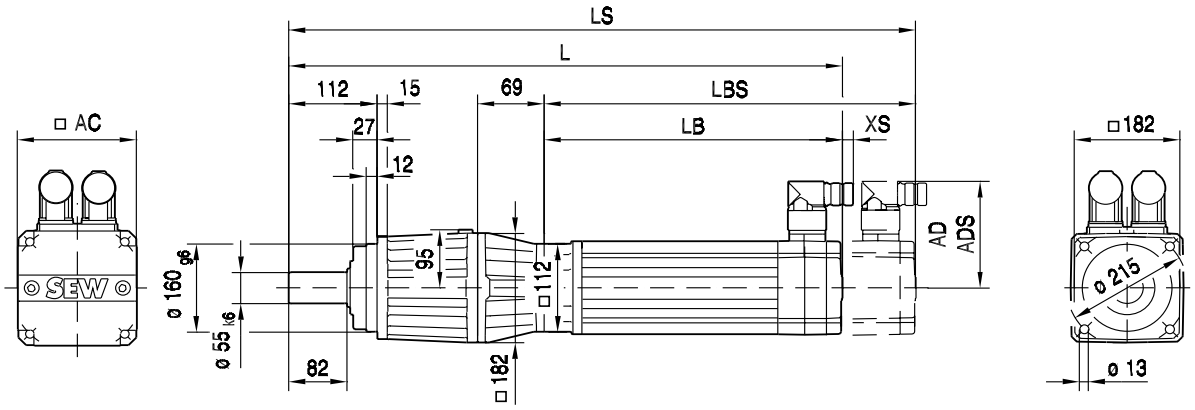

PSF

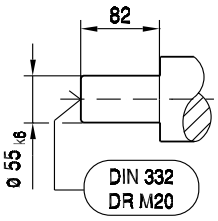

PSKF

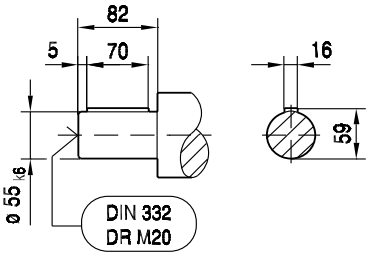

14

(→ 📖 150)	CMP50M	CMP50L	CMP63S	CMP63M	CMP63L			
AC	73	73	88	88	88			
AD	82	82	89	89	89			
ADS	82	82	89	89	89			
L	523	562	519	569	619			
LS	552	591	548	598	648			
LB	180	219	176	226	276			
LBS	209	248	205	255	305			
XS	18	18	14	14	14			

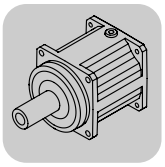

58 015 00 03

PSF721..

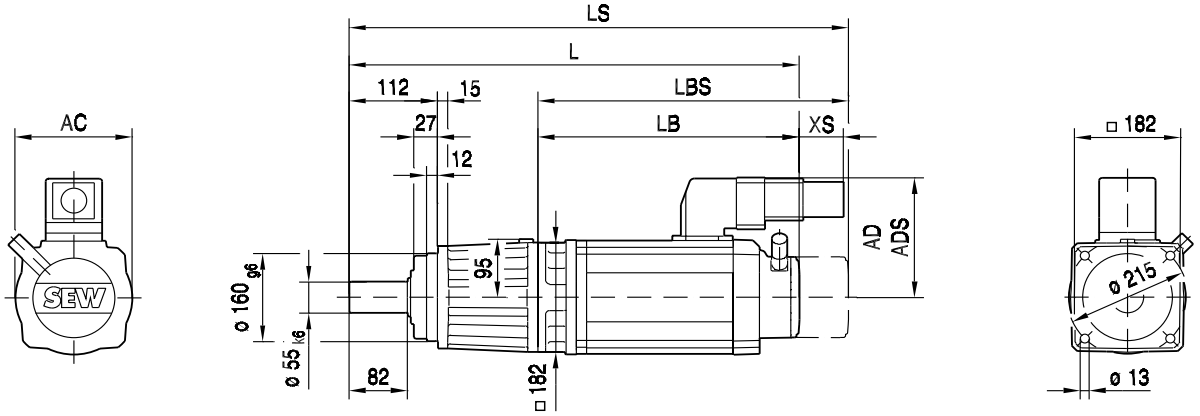

PSF

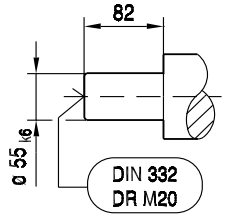

PSKF

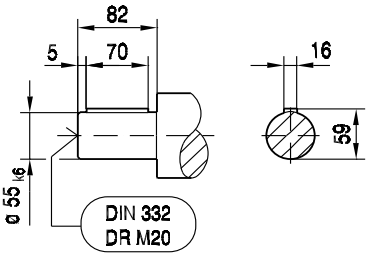

(→ 📖 150)	CM90M	CM90L	CM112S	CM112M	CM112L	CM112H		
AC	142	142	186	186	186	186		
AD	140	140	162	162	162	162		
ADS	140	140	162	162	162	162		
L	576	630	584	611	668	801		
LS	671	725	674	701	758	866		
LB	302	356	310	337	394	527		
LBS	397	451	400	427	484	592		
XS	50	50	36	36	36	36		

58 016 00 03

PSF722..

DS56..

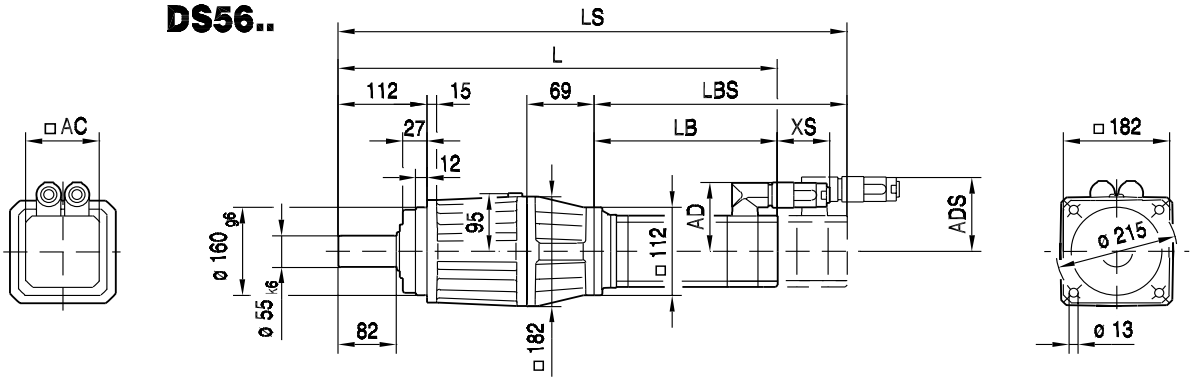

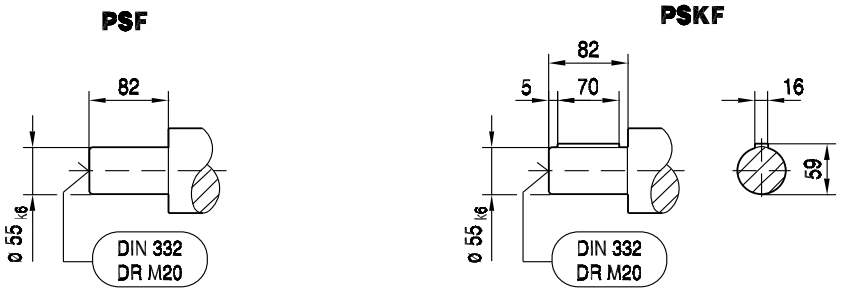

CM..

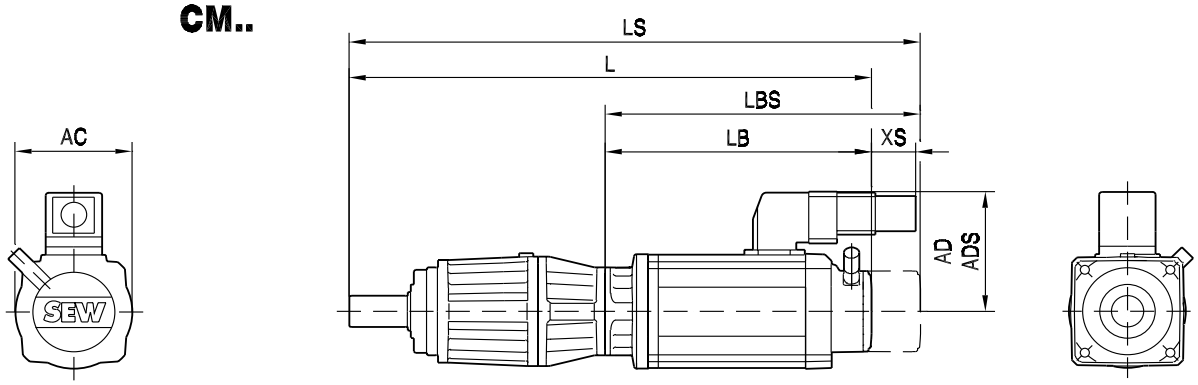

(→ 📖 150)	DS56H	CM71S	CM71M	CM71L	CM90S	CM90M	CM90L	
AC	73	117	117	117	142	142	142	
AD	77	122	122	122	140	140	140	
ADS	77	122	122	122	140	140	140	
L	612	578	598	638	630	657	711	
LS	612	660	680	720	725	752	806	
LB	269	235	255	295	287	314	368	
LBS	269	317	337	377	382	409	463	
XS	51	45	45	45	50	50	50	

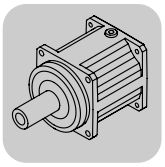

14.14 PS.F 821/822 / CMP / CM [Nm]

M_{aDyn} [Nm]		CMP	CM									
	i	63L	71S	71M	71L	90S	90M	90L	112S	112M	112L	112H
PSF821 1	4											
	5											
	7											
	10											
PSF822 2	16						818	1185	1290	1701	2470	>2500
	20						1023	1482	1613	2127	>2500	>2500
	25	745			769	970	1279	1852	2016	>2500	>2500	>2500
	28	834			862	1087	1432	2074	2258	>2500		
	35	1043			1077	1358	1790	>2500	>2500	>2500		
	40	1192	647	843	1231	1552	>2000	>2000				
	49	1460			1508	1902	2507	>2740	>2740	>2740		
	70	2085	1132	1475	2154	2717	>2740	>2740				
	100	>2060	1617	>2060	>2060	>2060	>2060	>2060				

m [kg]		CMP	CM									
	s	63L	71S	71M	71L	90S	90M	90L	112S	112M	112L	112H
PSF821	1	50	52	53	56	62	64	70	72	76	92	99
PSF822	2	63	65	66	70	76	78	83	86	90	105	115

CMP.. / CM..				M1;M3;M5-6			M2			M4			φ		
	i	n_{epk} [1/min]	η [%]	a_0	a_1	a_2	a_0	a_1	a_2	a_0	a_1	a_2	[']	/R [']	/M [']
PSF821 1	4	4500	99	0	0	0	0	0	0	0	0	0	4	2	1
	5	4500	99	0	0	0	0	0	0	0	0	0	4	2	1
	7	4500	99	0	0	0	0	0	0	0	0	0	4	2	1
	10	4500	99	0	0	0	0	0	0	0	0	0	4	2	1
PSF822 2	16	6000	98	3871.0	-13.296	0	4541.0	-22.002	0	4968.0	-29.212	0	6	3	1
	20	6000	98	4406.0	-24.058	0	5007.0	-34.125	0	6113.0	-58.782	0	6	3	1
	25	6000	98	4478.0	-25.333	0	5074.0	-35.377	0	6180.0	-60.325	0	6	3	1
	28	6000	98	4113.0	-16.193	0	4784.0	-25.218	0	5227.0	-32.940	0	6	3	1
	35	6000	98	4703.0	-28.994	0	5302.0	-39.407	0	6432.0	-65.521	0	6	3	1
	40	6000	98	3947.0	-18.132	0	4586.0	-26.684	0	5043.0	-34.537	0	6	3	1
	49	6000	98	5602.0	-42.367	0	6553.0	-62.572	0	7505.0	-89.863	0	6	3	1
	70	6000	98	5901.0	-52.384	0	6737.0	-71.810	0	7681.0	-100.25	0	6	3	1
	100	6000	98	6600.0	-77.444	0	7873.0	-113.80	0	8521.0	-140.65	0	6	3	1

CMP.. / CM..							c_T PSF	F_{Ramax} PSF	F_{Rapk} PSF
	i	M_{amax} [Nm]	M_{apk} [Nm]	$M_{aNotaus}$ [Nm]	n_{ak} [1/min]	J_G 10^{-4} [kgm^2]	[Nm/']	[N]	[N]
PSF821 1	4	1750	2500	3750	300	52	394.0	30000	61700
	5	1750	2500	3750	280	47	403.0	32100	61700
	7	1750	2740	4110	243	25	364.0	35500	61200
	10	1750	2060	3090	230	12	283.0	39500	62400
PSF822 2	16	1750	2500	3750	225	7.1	297.55	45500	61700
	20	1750	2500	3750	265	6.8	314.0	48600	61700
	25	1750	2500	3750	268	4.4	302.23	52000	61700
	28	1750	2500	3750	161	5.4	253.94	53800	61700
	35	1750	2500	3750	200	2.3	270.43	57500	61700
	40	1750	2000	3000	168	4.6	183.25	59900	62500
	49	1750	2740	4110	143	1.8	277.8	62800	61200
	70	1750	2740	4110	100	0.91	223.29	62800	61200
	100	1750	2060	3090	70	0.78	207.07	62800	62400

14.15 PS.F 821/822 / CMP / CM [mm]

57 049 00 06

PSF822..

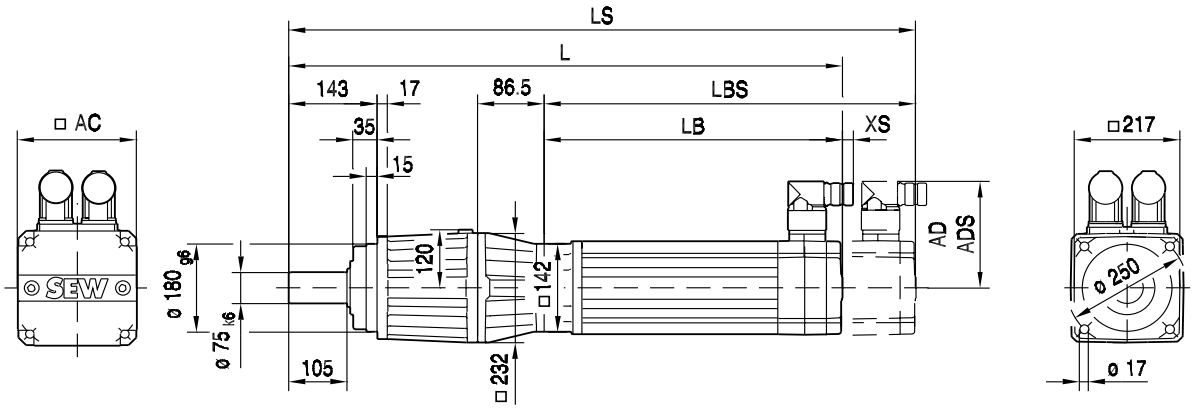

PSF

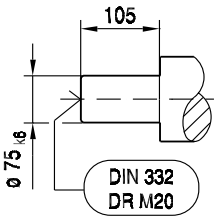

PSKF

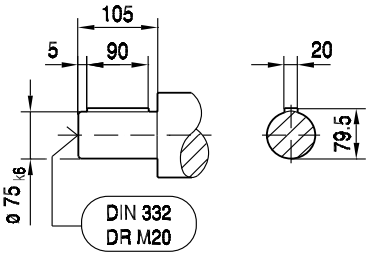

(→ 📖 150)	CMP63L							
AC	88							
AD	89							
ADS	89							
L	679							
LS	707							
LB	268							
LBS	297							
XS	14							

58 018 00 03

PSF822..

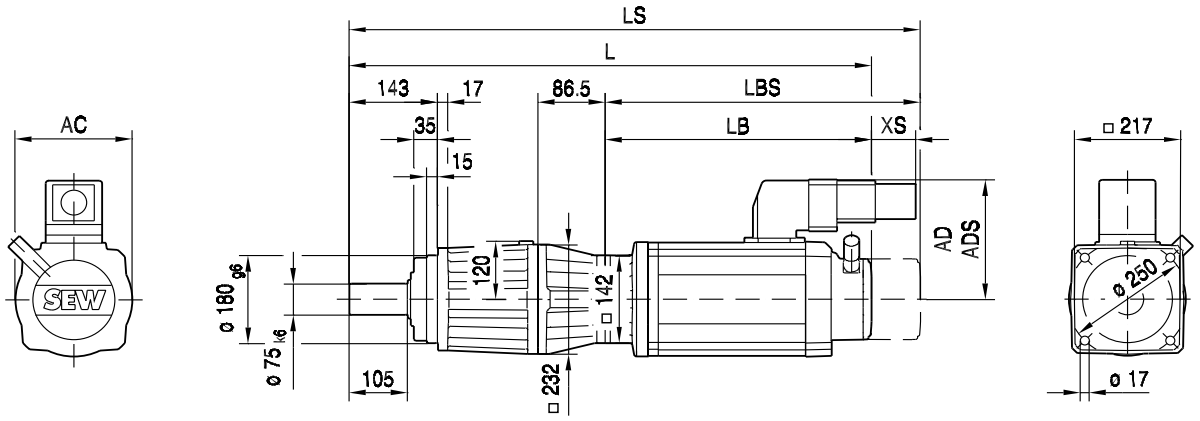

PSF

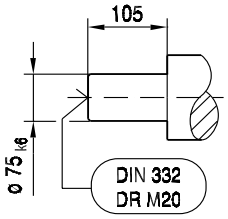

PSKF

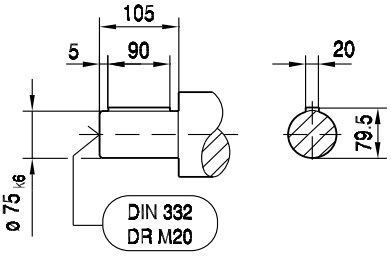

(→ 📖 150)	CM71S	CM71M	CM71L	CM90S	CM90M	CM90L	CM112S	CM112M	CM112L	CM112H
AC	117	117	117	142	142	142	186	186	186	186
AD	122	122	122	140	140	140	162	162	162	162
ADS	122	122	122	140	140	140	162	162	162	162
L	637	657	697	689	716	770	724	751	808	934
LS	719	739	779	784	811	865	814	841	898	999
LB	227	247	287	279	306	360	314	341	398	523
LBS	309	329	369	374	401	455	404	431	488	588
XS	45	45	45	50	50	50	36	36	36	36

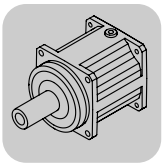

14.16 PS.F 921/922 / CM [Nm]

M_{aDyn} [Nm]		CM					
	i	90M	90L	112S	112M	112L	112H
PSF921 1	4						
	5						
	7						
	10						
PSF922 2	16			1290	1701	2470	3732
	20			1613	2127	3087	>4200
	25			2016	2658	3859	>4200
	28	1432	2074	2258	2977	>4200	>4200
	35	1790	2593	2823	3722	>4200	>4200
	40	2046	2964	3226	>4200		
	49	2507	>3310	>3310	>3310	>3310	>3310
	70	3581	>4200	>4200	>4200		
	100	>3230	>3230	>3230	>3230		

m [kg]		CM					
	s	90M	90L	112S	112M	112L	112H
PSF921	1	80	85	87	92	110	115
PSF922	2	100	105	110	110	130	135

CM..				M1;M3;M5-6			M2			M4			φ		
	i	n_{epk} [1/min]	η [%]	a_0	a_1	a_2	a_0	a_1	a_2	a_0	a_1	a_2	[']	/R [']	/M [']
PSF921 1	4	4500	99	0	0	0	0	0	0	0	0	0	4	2	1
	5	4500	99	0	0	0	0	0	0	0	0	0	4	2	1
	7	4500	99	0	0	0	0	0	0	0	0	0	4	2	1
	10	4500	99	0	0	0	0	0	0	0	0	0	4	2	1
PSF922 2	16	4500	98	6739.0	-32.288	0	7810.0	-50.952	0	8299.0	-61.476	0	6	3	1
	20	4500	98	6947.0	-34.756	0	8395.0	-61.188	0	8826.0	-71.640	0	6	3	1
	25	4500	98	7003.0	-35.696	0	8459.0	-62.307	0	8897.0	-72.954	0	6	3	1
	28	4500	98	6981.0	-35.629	0	8094.0	-55.208	0	8595.0	-66.164	0	6	3	1
	35	4500	98	7239.0	-39.178	0	8731.0	-66.919	0	9199.0	-78.275	0	6	3	1
	40	4500	98	6912.0	-38.324	0	7971.0	-57.478	0	8456.0	-68.332	0	6	3	1
	49	4500	98	7925.0	-52.774	0	10351	-102.66	0	10602	-112.90	0	6	3	1
	70	4500	98	8606.0	-64.942	0	10715	-114.02	0	11060	-126.12	0	6	3	1
	100	4500	98	9818.0	-100.18	0	12834	-187.94	0	12892	-197.42	0	6	3	1

CM..							c_T PSF	F_{Ramax} PSF	F_{Rapk} PSF
	i	M_{amax} [Nm]	M_{apk} [Nm]	$M_{aNotaus}$ [Nm]	n_{ak} [1/min]	J_G 10^{-4} [kgm^2]	[Nm/']	[N]	[N]
PSF921 1	4	3000	4200	6300	250	96	507.0	32100	81600
	5	3000	4200	6300	240	62	526.0	34300	81600
	7	3000	4200	6300	214	33	513.0	38000	81600
	10	3000	3230	4840	190	16	409.0	42300	83000
PSF922 2	16	3000	4200	6300	250	17	398.15	48700	81600
	20	3000	4200	6300	250	11	420.22	52000	81600
	25	3000	4200	6300	248	9.5	417.2	55600	81600
	28	3000	4200	6300	250	5.7	367.91	57600	81600
	35	3000	4200	6300	200	5.0	389.01	61500	81600
	40	3000	4200	6300	175	2.8	288.76	64100	81600
	49	3000	3310	4960	143	4.4	399.99	68100	82900
	70	3000	4200	6300	100	2.2	341.17	75800	81600
	100	3000	3230	4840	70	2.0	317.17	83300	83000

14.17 PS.F 921/922 / CM [mm]

58 020 00 03

PSF922..

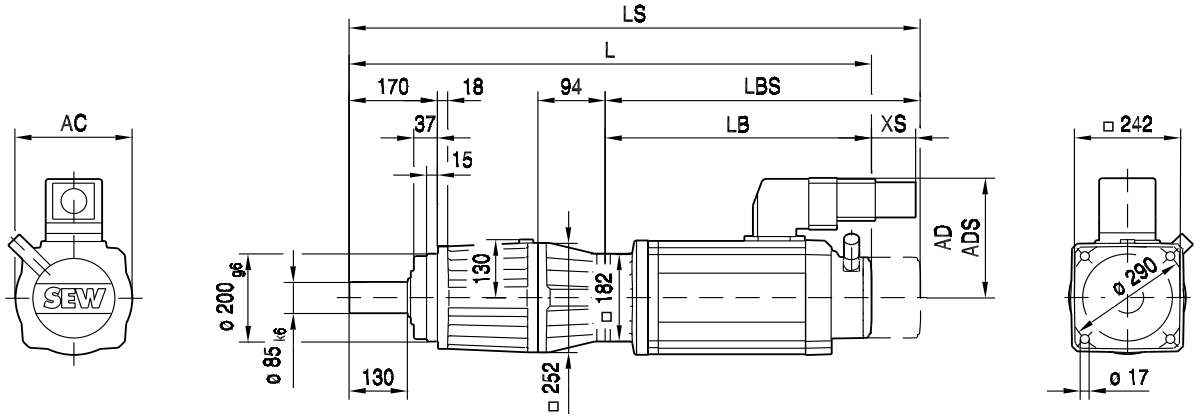

PSF

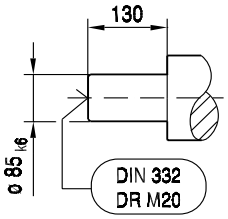

PSKF

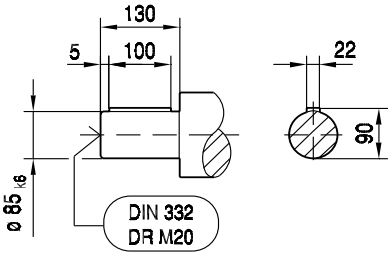

(→ 📖 150)	CM90M	CM90L	CM112S	CM112M	CM112L	CM112H		
AC	142	142	186	186	186	186		
AD	140	140	162	162	162	162		
ADS	140	140	162	162	162	162		
L	767	821	775	802	859	992		
LS	862	916	865	892	949	1057		
LB	302	356	310	337	394	527		
LBS	397	451	400	427	484	592		
XS	50	50	36	36	36	36		

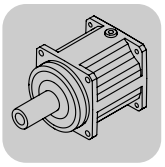

14.18 PSBF 221/222 / CMP / DS [Nm]

M_{aDyn} [Nm]		CMP							DS		
	i	40M	50S	50M	50L	63S	63M	63L	56M	56L	56H
PSBF221 1	5		26	51	76	55	>80	>80	19	38	75
	7		36	71	>85	77	>85		26	53	>85
	10		51						38	>62	
PSBF222 2	20	74	>80	>80	>80				74	>80	>80
	25	>80	>80	>80	>80				>80	>80	>80
	35	>80	>80						>80	>80	
	49	>85	>85						>85	>85	
	70	>85									
	100	>62									

m [kg]		CMP							DS		
	s	40M	50S	50M	50L	63S	63M	63L	56M	56L	56H
PSBF221	1	3.0	3.8	4.7	5.6	6.1	7.6	9.0	3.9	4.9	5.6
PSBF222	2	3.6	4.4	5.3	6.2	6.6	8.2	9.6	4.5	5.5	6.2

CMP.. / DS..				M1;M3;M5-6			M2			M4			φ		
	i	n_{epk} [1/min]	η [%]	a_0	a_1	a_2	a_0	a_1	a_2	a_0	a_1	a_2	[']	/R [']	/M [']
PSBF221 1	5	7500	99	153.00	-0.142	0	179.00	-0.218	0	179.00	-0.264	0	6	3	1
	7	7500	99	169.00	-0.177	0	196.00	-0.260	0	202.00	-0.325	0	6	3	1
	10	7500	99	158.00	-0.197	0	183.00	-0.276	0	201.00	-0.377	0	6	3	1
PSBF222 2	20	8000	98	210.00	-0.591	0	274.00	-1.092	0	287.00	-1.220	0	8	4	2
	25	8000	98	219.00	-0.675	0	281.00	-1.180	0	294.00	-1.312	0	8	4	2
	35	8000	98	245.00	-0.908	0	302.00	-1.441	0	315.00	-1.583	0	8	4	2
	49	8000	98	320.00	-1.613	0	403.00	-2.620	0	415.00	-2.796	0	8	4	2
	70	8000	98	363.00	-2.362	0	432.00	-3.370	0	442.00	-3.550	0	8	4	2
	100	8000	98	461.00	-4.232	0	560.00	-6.162	0	570.00	-6.394	0	8	4	2

CMP.. / DS..									
	i	M_{amax} [Nm]	M_{apk} [Nm]	$M_{aNotaus}$ [Nm]	n_{ak} [1/min]	J_G 10^{-4} [kgm^2]	c_T PSBF [Nm/']	F_{Ramax} PSBF [N]	F_{Rapk} PSBF [N]
PSBF221 1	5	55	80	120	520	0.10	16.13	1530	5000
	7	55	85	128	457	0.054	14.0	1720	5000
	10	55	62	93	400	0.026	7.33	1930	5000
PSBF222 2	20	55	80	120	350	0.041	10.0	2430	5000
	25	55	80	120	280	0.027	9.84	2620	5000
	35	55	80	120	200	0.014	8.99	2930	5000
	49	55	85	128	143	0.013	9.1	3280	5000
	70	55	85	128	100	0.006	7.71	3700	5000
	100	55	62	93	70	0.006	5.33	4160	5000

14.19 PSBF 221/222 / CMP / DS [mm]

57 038 00 06

PSBF221..

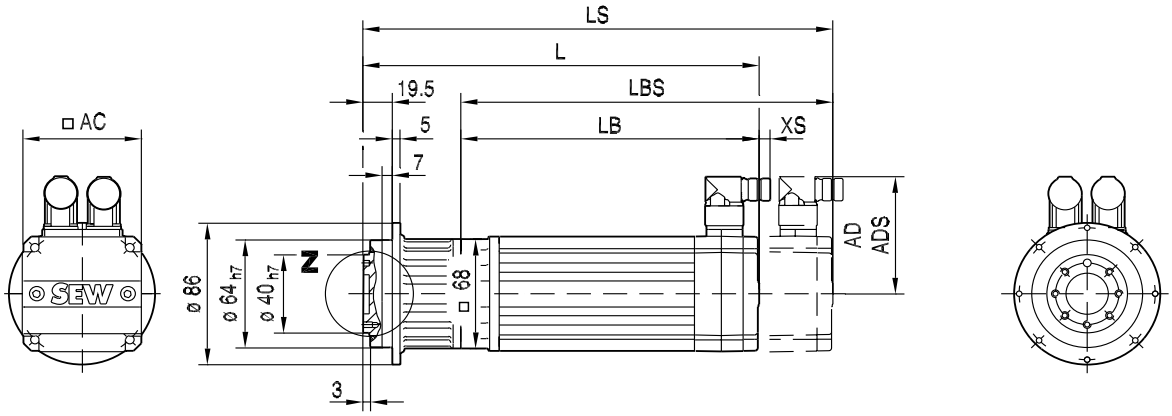

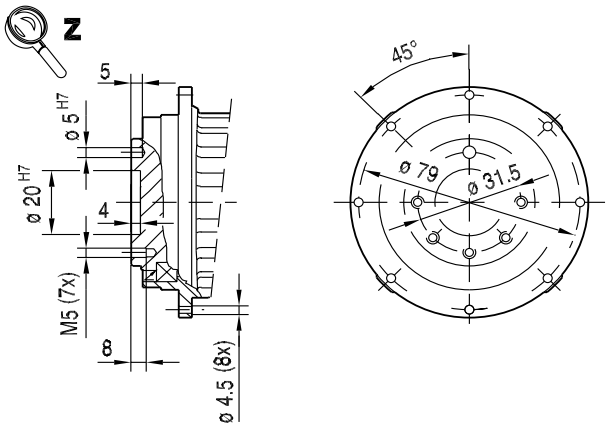

(→ 📖 150)	CMP50S	CMP50M	CMP50L	CMP63S	CMP63M	CMP63L		
AC	73	73	73	88	88	88		
AD	82	82	82	89	89	89		
ADS	82	82	82	89	89	89		
L	211	250	289	246	296	346		
LS	240	279	318	274	324	374		
LB	151	190	229	186	236	286		
LBS	180	219	258	215	265	314		
XS	18	18	18	14	14	14		

57 039 00 06

PSBF222..

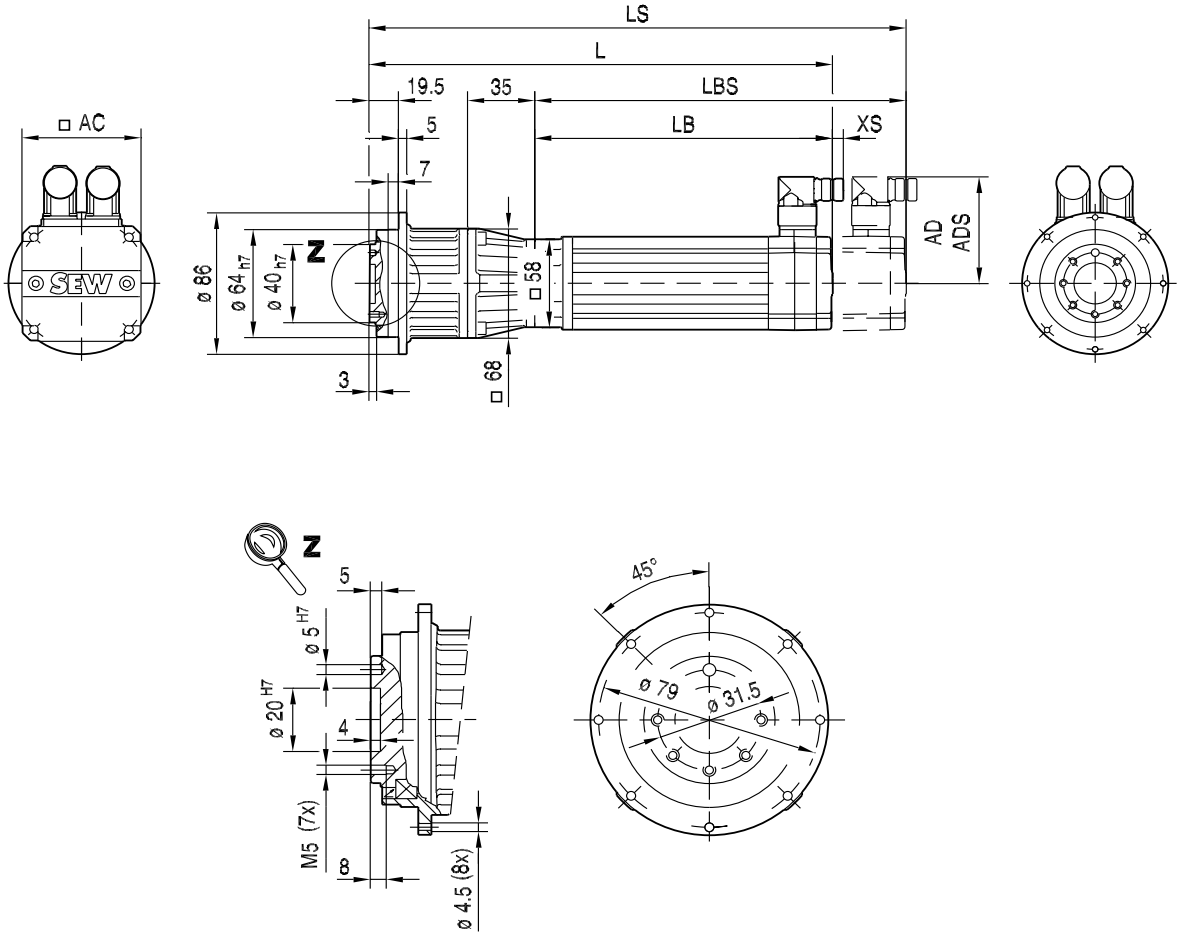

(→ 150)	CMP40M	CMP50S	CMP50M	CMP50L				
AC	57	73	73	73				
AD	75	82	82	82				
ADS	75	82	82	82				
L	250	252	291	330				
LS	280	281	320	359				
LB	156	157	196	235				
LBS	186	186	225	264				
XS	19	18	18	18				

58 039 00 03

PSBF221..

DS56..

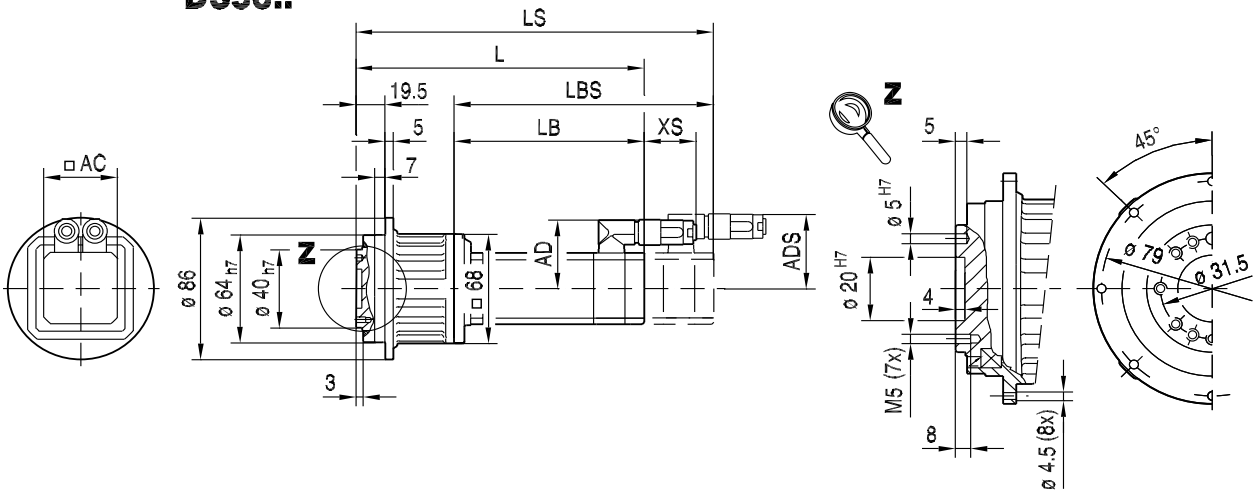

(→ 📖 150)	DS56M	DS56L	DS56H					
AC	73	73	73					
AD	71	71	77					
ADS	77	77	77					
L	204	236	339					
LS	234	266	339					
LB	144	176	279					
LBS	174	206	279					
XS	70	70	51					

58 040 00 03

PSBF222..

DS56..

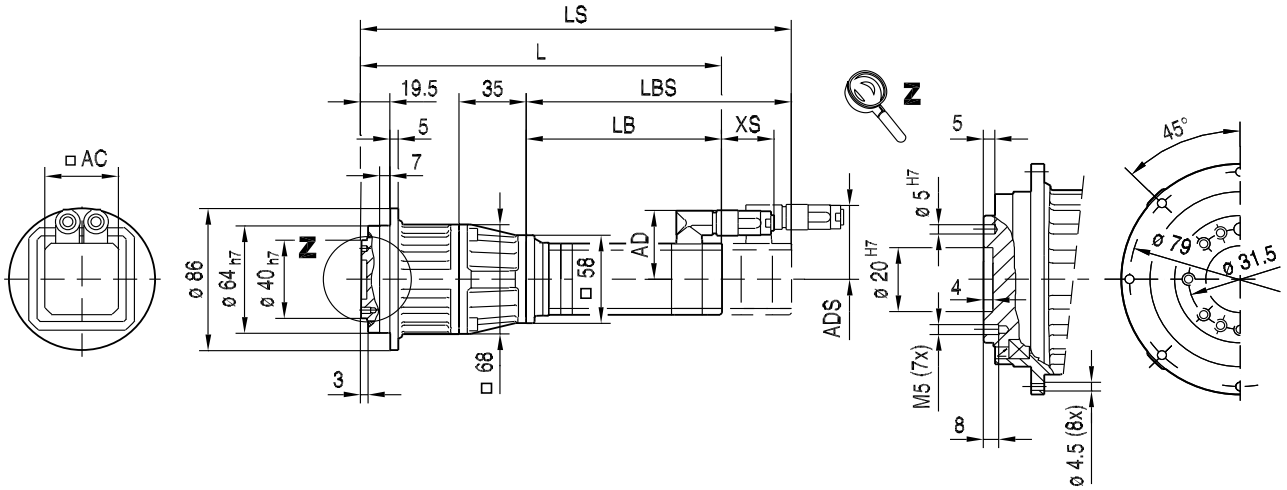

(→ 📖 150)	DS56M	DS56L	DS56H					
AC	73	73	73					
AD	71	71	77					
ADS	77	77	77					
L	245	277	380					
LS	275	307	380					
LB	150	182	285					
LBS	180	212	285					
XS	70	70	51					

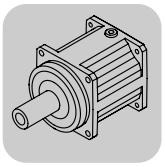

14.20 PSBF 321/322 / CMP / DS / CM [Nm]

M_{aDyn} [Nm]		CMP						DS			CM		
	i	50S	50M	50L	63S	63M	63L	56M	56L	56H	71S	71M	71L
PSBF321 1	5	26	51	76	55	106	150	19	38	75	82	106	155
	7	36	71	107	77	148	>168	26	53	105	114	149	>168
	10	51	102	>121	110			38	75	>121	>121		
PSBF322 2	15	76	151	>169	163	>169	>169	56	112	>169			
	20	102	>169	>169	>169	>169	>169	74	149	>169			
	25	127	>169	>169	>169	>169	>169	93	>169	>169			
	35	>169	>169	>169	>169	>169		130	>169	>169			
	49	>168	>168	>168	>168	>168		>168	>168	>168			
	70	>168						>168	>168				
	100	>121						>121	>121				

m [kg]		CMP						DS			CM		
	s	50S	50M	50L	63S	63M	63L	56M	56L	56H	71S	71M	71L
PSBF321	1	6.7	7.6	8.5	8.0	9.5	11	5.9	6.9	7.6	13	16	18
PSBF322	2	8.2	9.1	10.0	9.5	11	12	7.4	8.4	9.1	15	17	19

CMP.. / DS.. / CM..				M1;M3;M5-6			M2			M4			φ		
	i	n_{epk} [1/min]	η [%]	a_0	a_1	a_2	a_0	a_1	a_2	a_0	a_1	a_2	[']	/R [']	/M [']
PSBF321 1	5	7000	99	290.00	-0.355	0	328.00	-0.501	0	414.00	-0.930	0	6	3	1
	7	7000	99	296.00	-0.418	0	335.00	-0.581	0	422.00	-1.036	0	6	3	1
	10	7000	99	269.00	-0.477	0	302.00	-0.617	0	374.00	-1.016	0	6	3	1
PSBF322 2	15	7500	98	365.00	-1.076	0	452.00	-1.831	0	517.00	-2.590	0	8	4	2
	20	7500	98	366.00	-0.987	0	479.00	-1.946	0	508.00	-2.259	0	8	4	2
	25	7500	98	372.00	-1.053	0	522.00	-2.195	0	512.00	-2.336	0	8	4	2
	35	7500	98	396.00	-1.263	0	505.00	-2.272	0	534.00	-2.609	0	8	4	2
	49	7500	98	467.00	-1.995	0	616.00	-3.752	0	641.00	-4.128	0	8	4	2
	70	7500	98	502.00	-2.580	0	633.00	-4.341	0	657.00	-4.724	0	8	4	2
	100	7500	98	577.00	-4.137	0	756.00	-7.260	0	776.00	-7.704	0	8	4	2

CMP.. / DS.. / CM..							c_T	F_{Ramax}	F_{Rapk}
	i	M_{amax} [Nm]	M_{apk} [Nm]	$M_{aNotaus}$ [Nm]	n_{ak} [1/min]	J_G 10^{-4} [kgm^2]	PSBF [Nm/']	PSBF [N]	PSBF [N]
PSBF321 1	5	110	169	250	460	0.51	38.6	8580	25000
	7	110	168	250	400	0.27	28.6	9500	25000
	10	110	121	182	360	0.13	14.1	10600	25000
PSBF322 2	15	110	169	250	453	0.26	20.02	11900	25000
	20	110	169	250	350	0.14	21.01	13000	25000
	25	110	169	250	280	0.088	20.9	13900	25000
	35	110	169	250	200	0.047	19.9	15400	25000
	49	110	168	250	143	0.042	18.47	17000	25000
	70	110	168	250	100	0.020	15.85	18900	25000
	100	110	121	182	70	0.019	10.55	21100	25000

14.21 PSBF 321/322 / CMP / DS / CM [mm]

57 040 00 06

PSBF321..

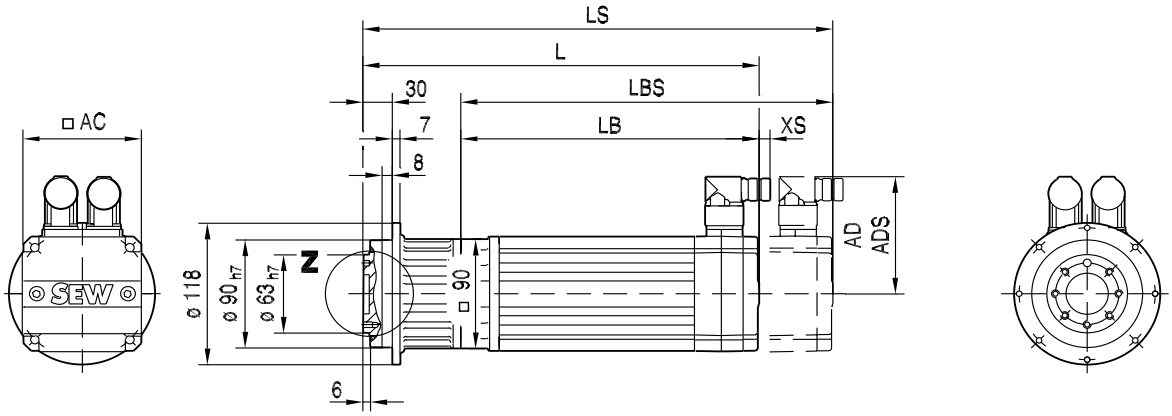

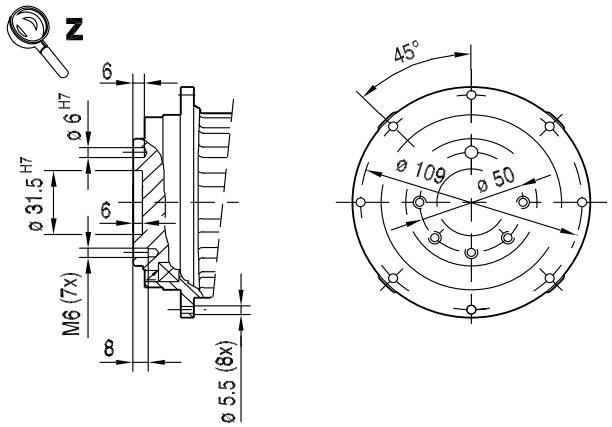

(→ 150)	CMP50S	CMP50M	CMP50L	CMP63S	CMP63M	CMP63L		
AC	73	73	73	88	88	88		
AD	82	82	82	89	89	89		
ADS	82	82	82	89	89	89		
L	229	268	307	264	314	364		
LS	258	297	336	293	343	393		
LB	146	185	224	181	231	281		
LBS	175	214	253	210	260	310		
XS	18	18	18	14	14	14		

57 041 00 06

PSBF322..

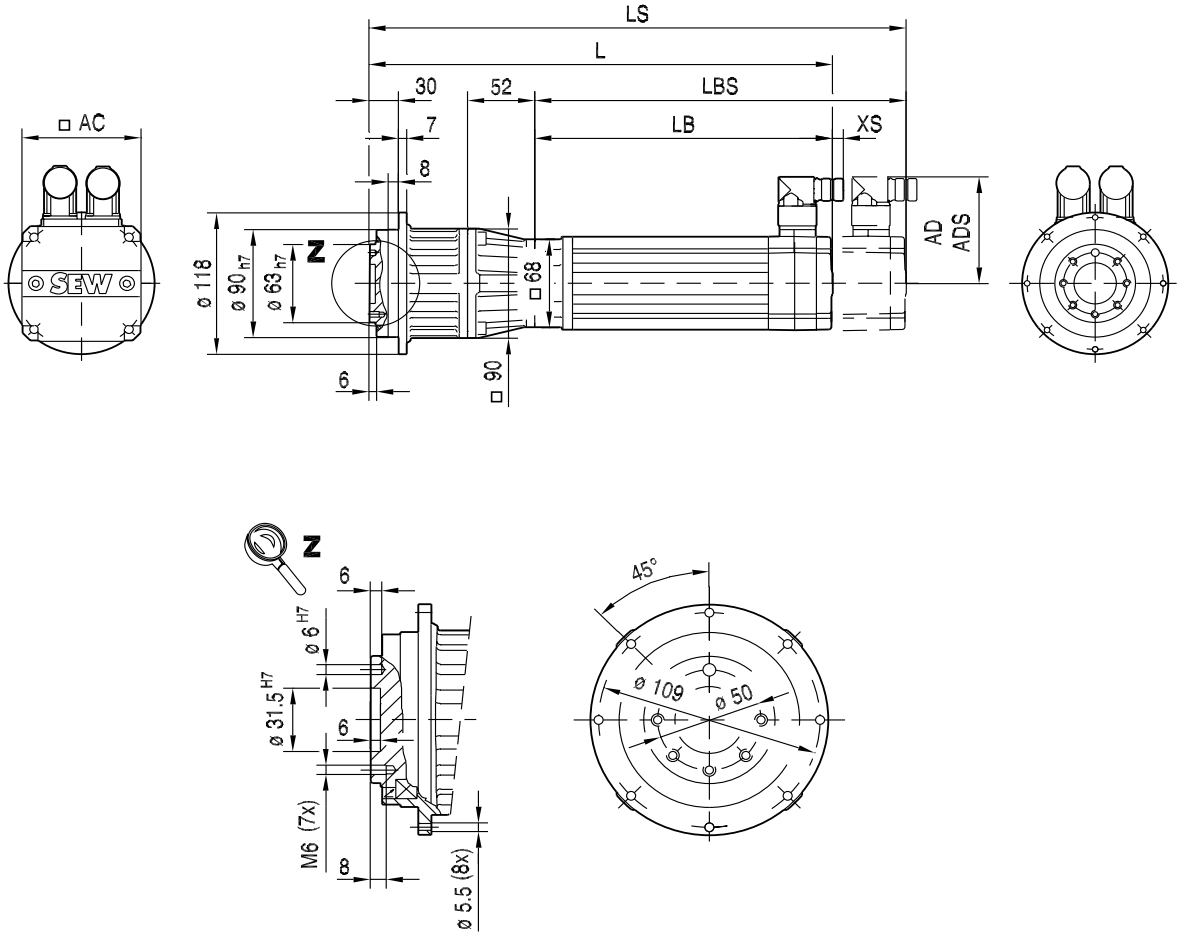

(→ 📖 150)	CMP50S	CMP50M	CMP50L	CMP63S	CMP63M	CMP63L		
AC	73	73	73	88	88	88		
AD	82	82	82	89	89	89		
ADS	82	82	82	89	89	89		
L	286	325	364	321	371	421		
LS	315	354	393	350	400	449		
LB	151	190	229	186	236	286		
LBS	180	219	258	215	265	314		
XS	18	18	18	14	14	14		

58 041 00 03

PSBF321..

DS56..

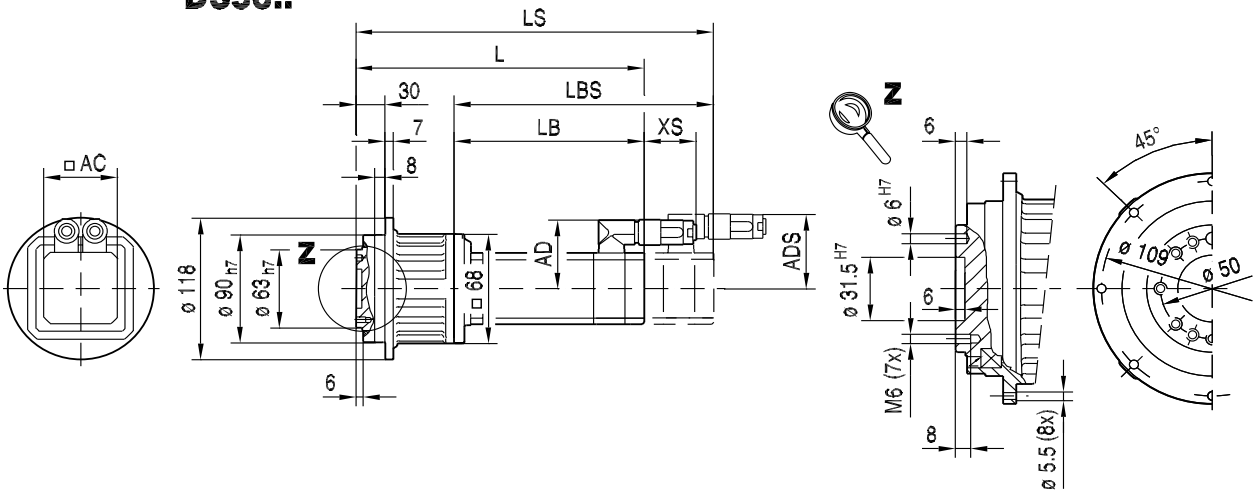

CM..

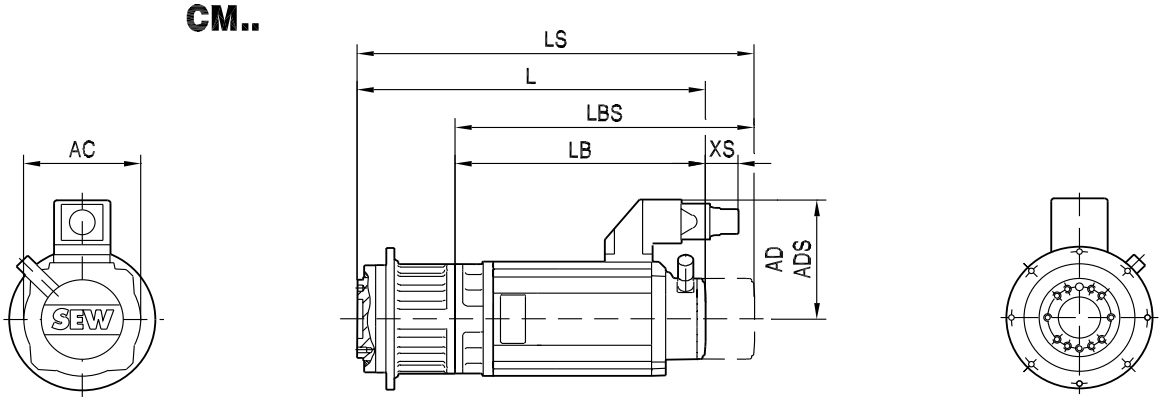

(→ 📖 150)	DS56M	DS56L	DS56H	CM71S	CM71M	CM71L		
AC	73	73	73	117	117	117		
AD	71	71	77	122	122	122		
ADS	77	77	77	122	122	122		
L	222	254	357	323	343	383		
LS	252	284	357	405	425	465		
LB	139	171	274	240	260	300		
LBS	169	201	274	322	342	382		
XS	70	70	51	45	45	45		

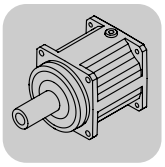

58 042 00 03

PSBF322..

DS56..

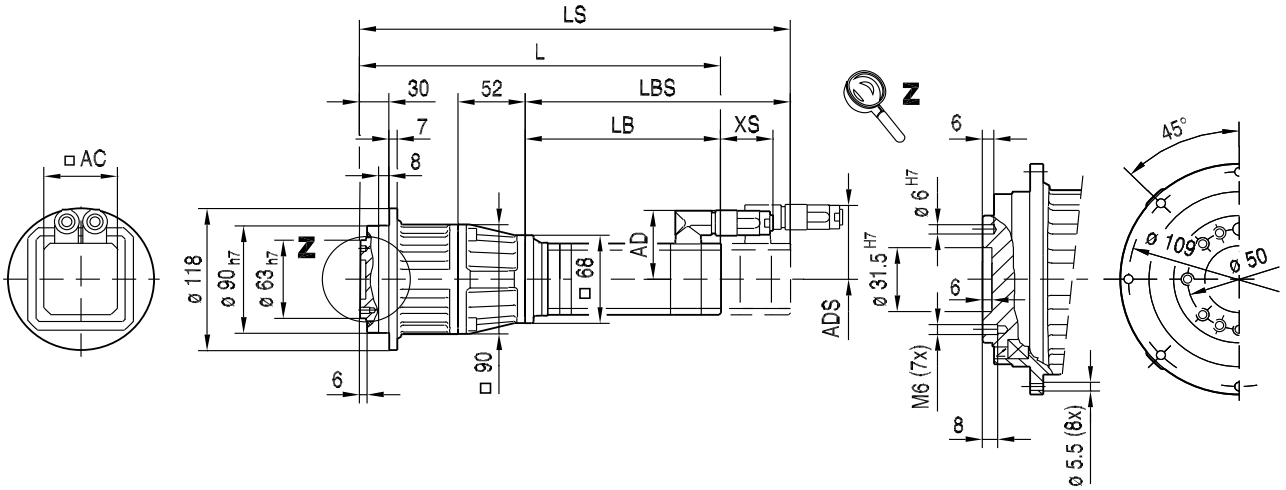

CM..

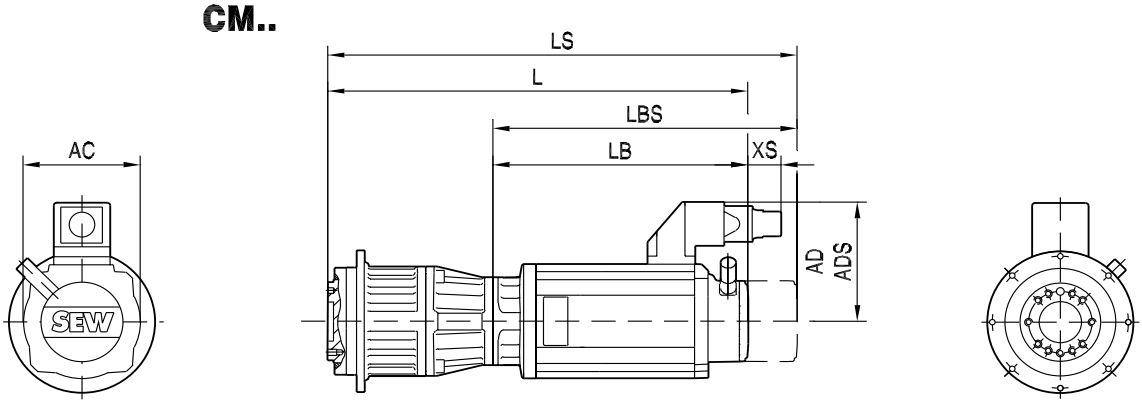

(→ 📖 150)	DS56M	DS56L	DS56H					
AC	73	73	73					
AD	71	71	77					
ADS	77	77	77					
L	279	311	414					
LS	309	341	414					
LB	144	176	279					
LBS	174	206	279					
XS	70	70	51					

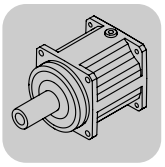

14.22 PSBF 521/522 / CMP / DS / CM [Nm]

M_{aDyn} [Nm]		CMP						DS			CM					
	i	50S	50M	50L	63S	63M	63L	56M	56L	56H	71S	71M	71L	90S	90M	90L
PSBF521 1	5		51	76	55	106	150			75	82	106	155	196	258	374
	7		71	107	77	148	211			105	114	149	218	274	>360	>360
	10		102	152	110	212	>270			150	163	213	>270	>270		
PSBF522 2	15		151	226	163	315	>375			223	243	316	>375			
	20	102	202	302	218	>375	>375	74	149	298	323	>375	>375			
	25	127	252	>375	272	>375	>375	93	186	372	>375	>375	>375			
	35	178	353	>375	>375	>375	>375	130	261	>375	>375	>375	>375			
	49	250	>360	>360	>360	>360	>360	182	>360	>360	>360	>360	>360			
	70	357	>360	>360	>360			261	>360	>360	>360					
	100	>270	>270	>270	>270			>270	>270	>270	>270					

m [kg]		CMP						DS			CM					
	s	50S	50M	50L	63S	63M	63L	56M	56L	56H	71S	71M	71L	90S	90M	90L
PSBF521	1	8.8	9.7	11	10	12	13	8.0	9.0	9.9	16	18	20	26	29	34
PSBF522	2	12	12	13	13	15	16	11	12	13	18	21	23	29	31	36

CMP.. / DS.. / CM..				M1;M3;M5-6			M2			M4			φ		
	i	n_{epk} [1/min]	η [%]	a_0	a_1	a_2	a_0	a_1	a_2	a_0	a_1	a_2		/R	/M
													[']	[']	[']
PSBF521 1	5	6000	99	633.00	-0.860	0	747.00	-1.345	0	964.00	-2.554	0	6	3	1
	7	6000	99	670.00	-1.029	0	805.00	-1.596	0	1024.0	-2.855	0	6	3	1
	10	6000	99	651.00	-1.253	0	752.00	-1.709	0	937.00	-2.831	0	6	3	1
PSBF522 2	15	7000	98	735.00	-2.616	0	885.00	-4.256	0	989.00	-5.851	0	8	4	2
	20	7000	98	751.00	-2.385	0	981.00	-4.855	0	1107.0	-6.734	0	8	4	2
	25	7000	98	781.00	-2.642	0	1012.0	-5.183	0	1142.0	-7.143	0	8	4	2
	35	7000	98	870.00	-3.860	0	1027.0	-5.742	0	1150.0	-7.701	0	8	4	2
	49	7000	98	1064.0	-6.079	0	1323.0	-9.798	0	1445.0	-12.110	0	8	4	2
	70	7000	98	1122.0	-7.805	0	1331.0	-11.307	0	1424.0	-13.427	0	8	4	2
	100	7000	98	1077.0	-6.893	0	1467.0	-13.340	0	1576.0	-15.732	0	8	4	2

CMP.. / DS.. / CM..							c_T PSBF	F_{Ramax} PSBF	F_{Rapk} PSBF
	i	M_{amax} [Nm]	M_{apk} [Nm]	$M_{aNotaus}$ [Nm]	n_{ak} [1/min]	J_G 10^{-4} [kgm^2]	[Nm/']	[N]	[N]
PSBF521 1	5	300	375	560	420	1.3	117.6	13900	40000
	7	300	360	540	371	0.68	71.5	15400	40000
	10	270	270	405	480	0.34	37.3	17200	40000
PSBF522 2	15	300	375	560	407	0.75	58.44	19400	40000
	20	300	375	560	350	0.37	58.47	21100	40000
	25	300	375	560	280	0.24	57.68	22600	40000
	35	300	375	560	200	0.13	51.91	25000	40000
	49	300	360	540	143	0.12	44.82	27600	40000
	70	300	360	540	100	0.057	36.68	30800	40000
	100	270	270	405	70	0.054	26.56	34200	40000

14.23 PSBF 521/522 / CMP / DS / CM [mm]

57 042 00 06

PSBF521..

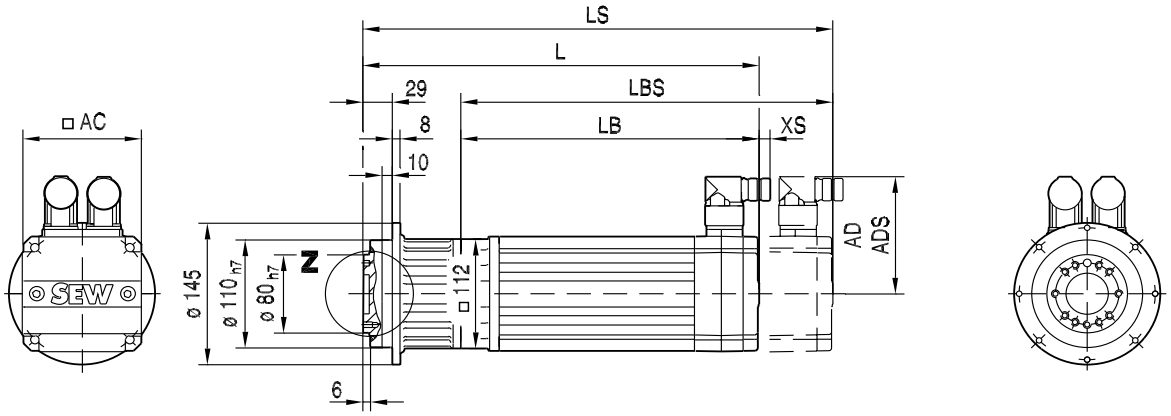

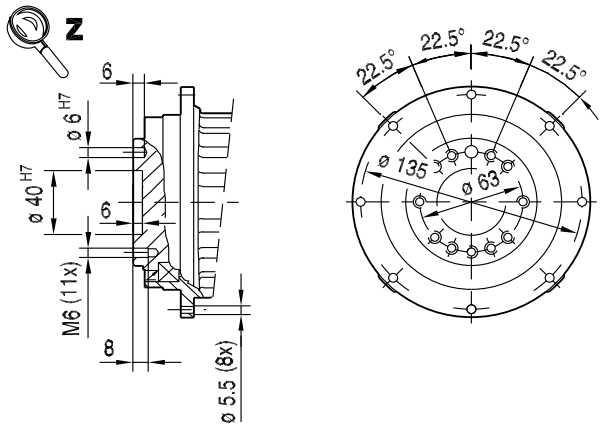

(→ 150)	CMP50M	CMP50L	CMP63S	CMP63M	CMP63L			
AC	73	73	88	88	88			
AD	82	82	89	89	89			
ADS	82	82	89	89	89			
L	279	318	275	325	375			
LS	308	347	303	353	403			
LB	180	219	176	226	276			
LBS	209	248	205	255	305			
XS	18	18	14	14	14			

57 043 00 06

PSBF522..

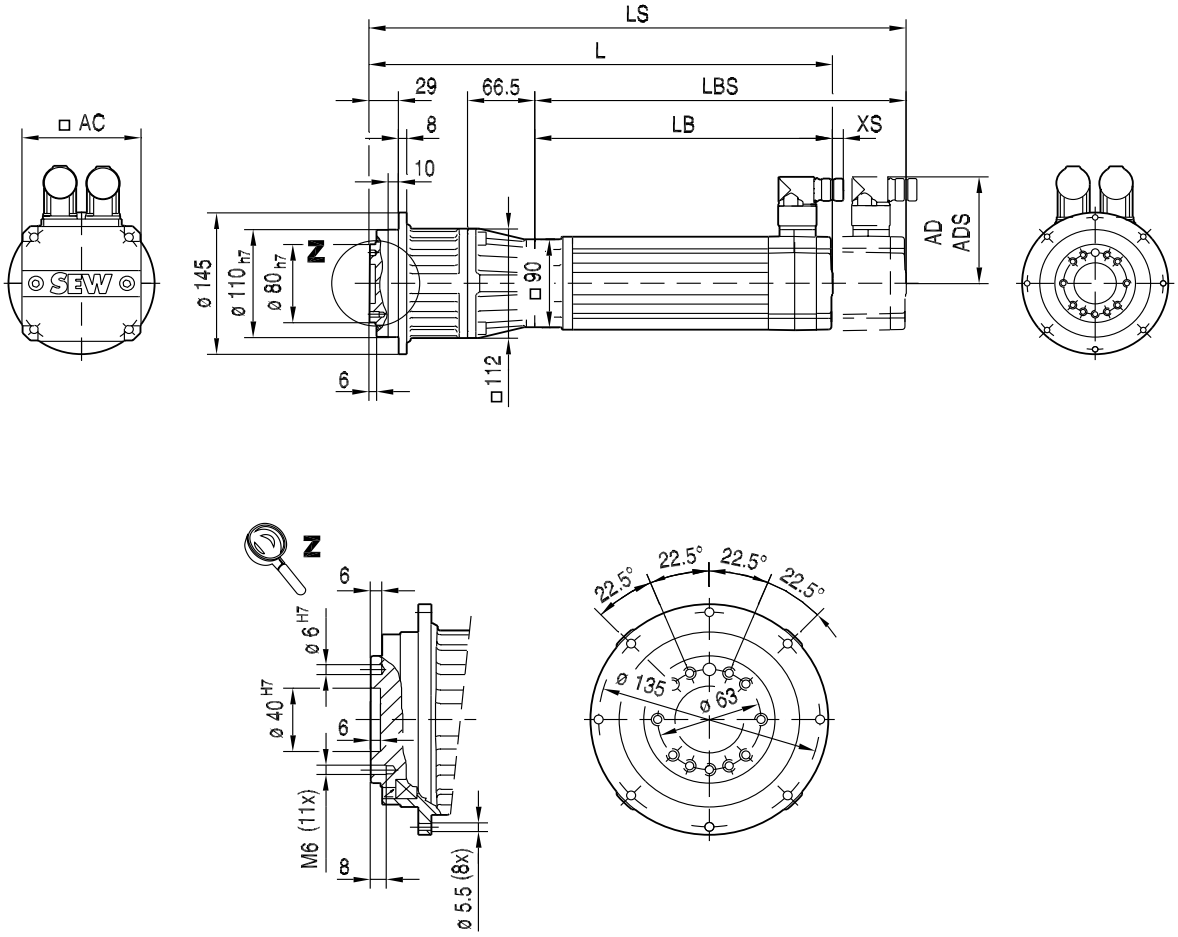

(→ 📖 150)	CMP50S	CMP50M	CMP50L	CMP63S	CMP63M	CMP63L		
AC	73	73	73	88	88	88		
AD	82	82	82	89	89	89		
ADS	82	82	82	89	89	89		
L	311	350	389	346	396	446		
LS	340	379	418	375	425	475		
LB	146	185	224	181	231	281		
LBS	175	214	253	210	260	310		
XS	18	18	18	14	14	14		

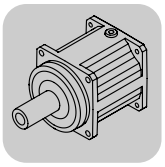

58 045 00 03

PSBF521..

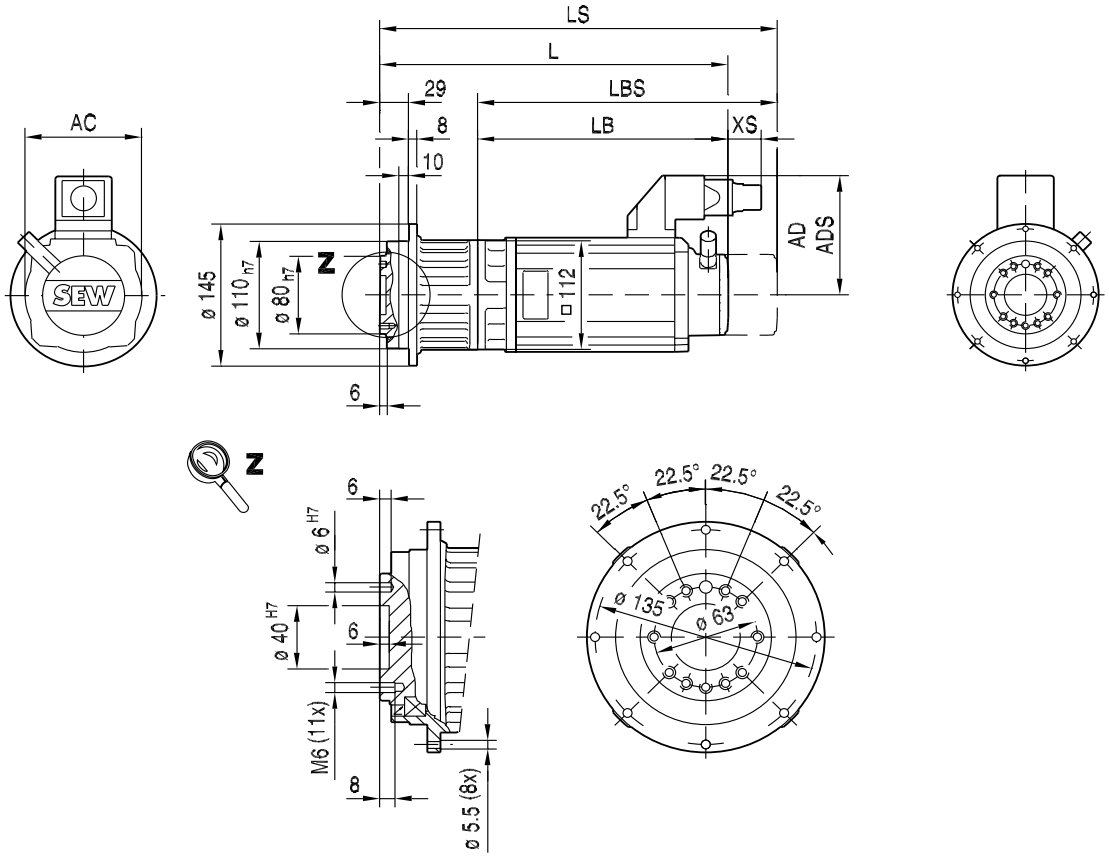

(→ 📖 150)	DS56H	CM71S	CM71M	CM71L	CM90S	CM90M	CM90L	
AC	73	117	117	117	142	142	142	
AD	77	122	122	122	140	140	140	
ADS	77	122	122	122	140	140	140	
L	367	333	353	393	385	412	466	
LS	367	415	435	475	480	507	561	
LB	269	235	255	295	287	314	368	
LBS	269	317	337	377	382	409	463	
XS	51	45	45	45	50	50	50	

58 046 00 03

PSBF522..

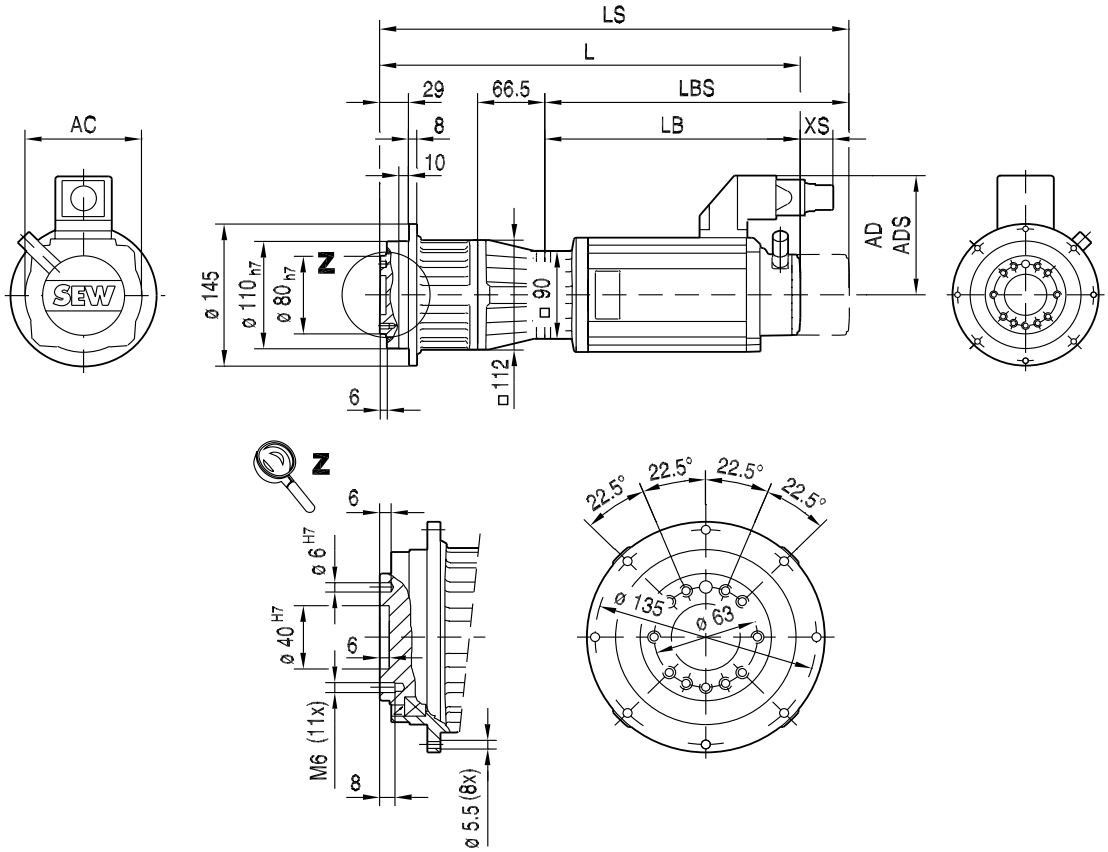

(→ 150)	DS56M	DS56L	DS56H	CM71S	CM71M	CM71L		
AC	73	73	73	117	117	117		
AD	71	71	77	122	122	122		
ADS	77	77	77	122	122	122		
L	304	336	439	405	425	465		
LS	334	366	439	487	507	547		
LB	139	171	274	240	260	300		
LBS	169	201	274	322	342	382		
XS	70	70	51	45	45	45		

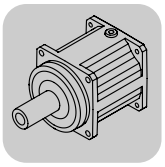

14.24 PSBF 621/622 / CMP / DS / CM [Nm]

M_{aDyn} [Nm]		CMP					DS	CM									
	i	50M	50L	63S	63M	63L	56H	71S	71M	71L	90S	90M	90L	112S	112M	112L	112H
PSBF621 1	5					150				155	196	258	374	407	537	>700	>700
	7					211				218	274	362	524	570	>660		
	10					301		163	213	311	392	>500	>500				
PSBF622 2	20				419	596			421	615	>700	>700	>700				
	25	252	377	272	524	>700	372	404	527	>700	>700	>700	>700				
	35	353	528	381	>700	>700	521	566	>700	>700	>700	>700	>700				
	49	495	>660	533	>660	>660	>660	>660	>660	>660	>660	>660	>660				
	70	>660	>660	>660	>660	>660	>660	>660	>660	>660	>660						
	100	>500	>500	>500	>500	>500	>500	>500	>500	>500	>500						

m [kg]		CMP					DS	CM									
	s	50M	50L	63S	63M	63L	56H	71S	71M	71L	90S	90M	90L	112S	112M	112L	112H
PSBF621	1	14	15	15	16	18	14	20	22	25	31	33	38	41	45	61	68
PSBF622	2	19	20	20	22	24	20	26	27	31	36	39	44	46	51	66	73

CMP.. / DS.. / CM..				M1;M3;M5-6			M2			M4			φ		
	i	n_{epk} [1/min]	η [%]	a_0	a_1	a_2	a_0	a_1	a_2	a_0	a_1	a_2		/R	/M
													[']	[']	[']
PSBF621 1	5	6000	99	1176.0	-1.751	0	1402.0	-2.761	0	1836.0	-5.516	0	4	2	1
	7	6000	99	1290.0	-2.268	0	1505.0	-3.257	0	1948.0	-6.140	0	4	2	1
	10	6000	99	1059.0	-1.739	0	1306.0	-2.710	0	1764.0	-5.445	0	4	2	1
PSBF622 2	20	6000	98	1530.0	-7.334	0	1859.0	-12.068	0	2106.0	-16.961	0	6	3	1
	25	6000	98	1562.0	-7.844	0	1890.0	-12.609	0	2148.0	-17.712	0	6	3	1
	35	6000	98	1662.0	-9.338	0	1987.0	-14.315	0	2266.0	-19.903	0	6	3	1
	49	6000	98	2051.0	-14.837	0	2556.0	-24.533	0	2744.0	-29.980	0	6	3	1
	70	6000	98	1951.0	-13.437	0	2459.0	-22.865	0	2639.0	-28.039	0	6	3	1
	100	6000	98	2327.0	-21.522	0	3156.0	-40.509	0	3278.0	-45.862	0	6	3	1

CMP.. / DS.. / CM..							c_T	F_{Ramax}	F_{Rapk}
	i	M_{amax} [Nm]	M_{apk} [Nm]	$M_{aNotaus}$ [Nm]	n_{ak} [1/min]	J_G 10^{-4} [kgm^2]	PSBF [Nm/']	PSBF [N]	PSBF [N]
PSBF621 1	5	600	700	1050	280	4.3	288.0	20800	60000
	7	600	660	990	243	2.2	183.0	23000	60000
	10	500	500	750	420	1.1	85.0	25500	60000
PSBF622 2	20	600	700	1050	230	1.4	160.91	31500	60000
	25	600	700	1050	228	0.94	156.15	33600	60000
	35	600	700	1050	200	0.49	132.65	37200	60000
	49	600	660	990	143	0.45	115.07	41200	60000
	70	600	660	990	100	0.22	95.28	45800	60000
	100	500	500	750	70	0.21	62.73	51000	60000

14.25 PSBF 621/622 / CMP / DS / CM [mm]

57 044 00 06

PSBF621..

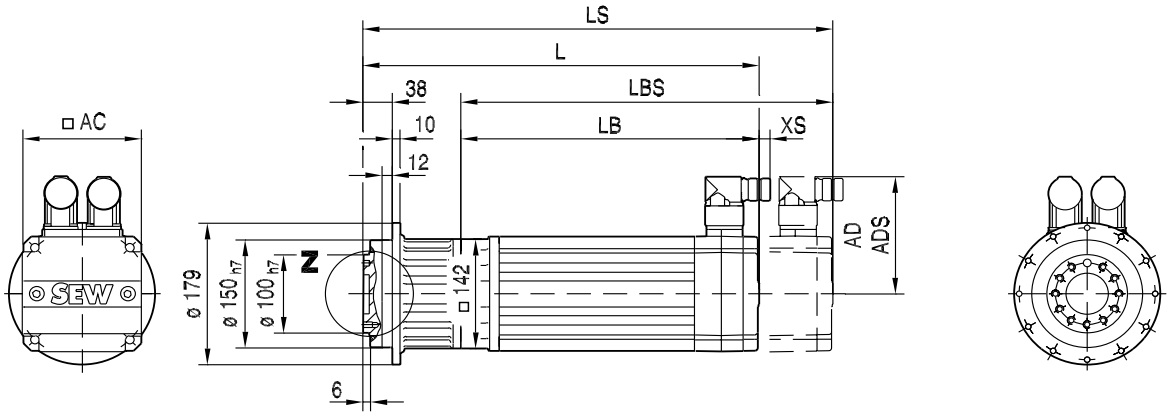

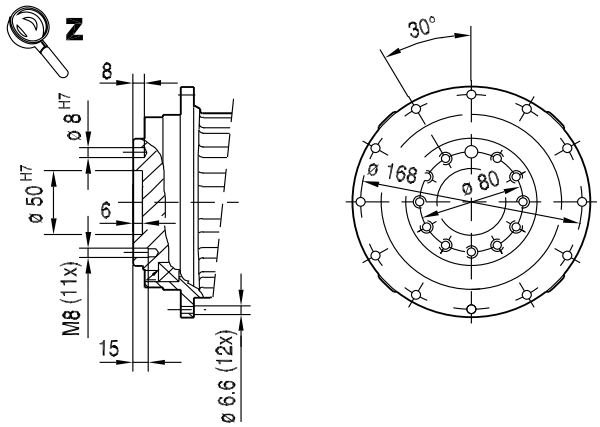

(→ 150)	CMP63L							
AC	88							
AD	89							
ADS	89							
L	387							
LS	416							
LB	268							
LBS	297							
XS	14							

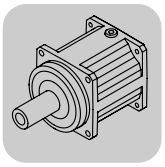

57 045 00 06

PSBF622..

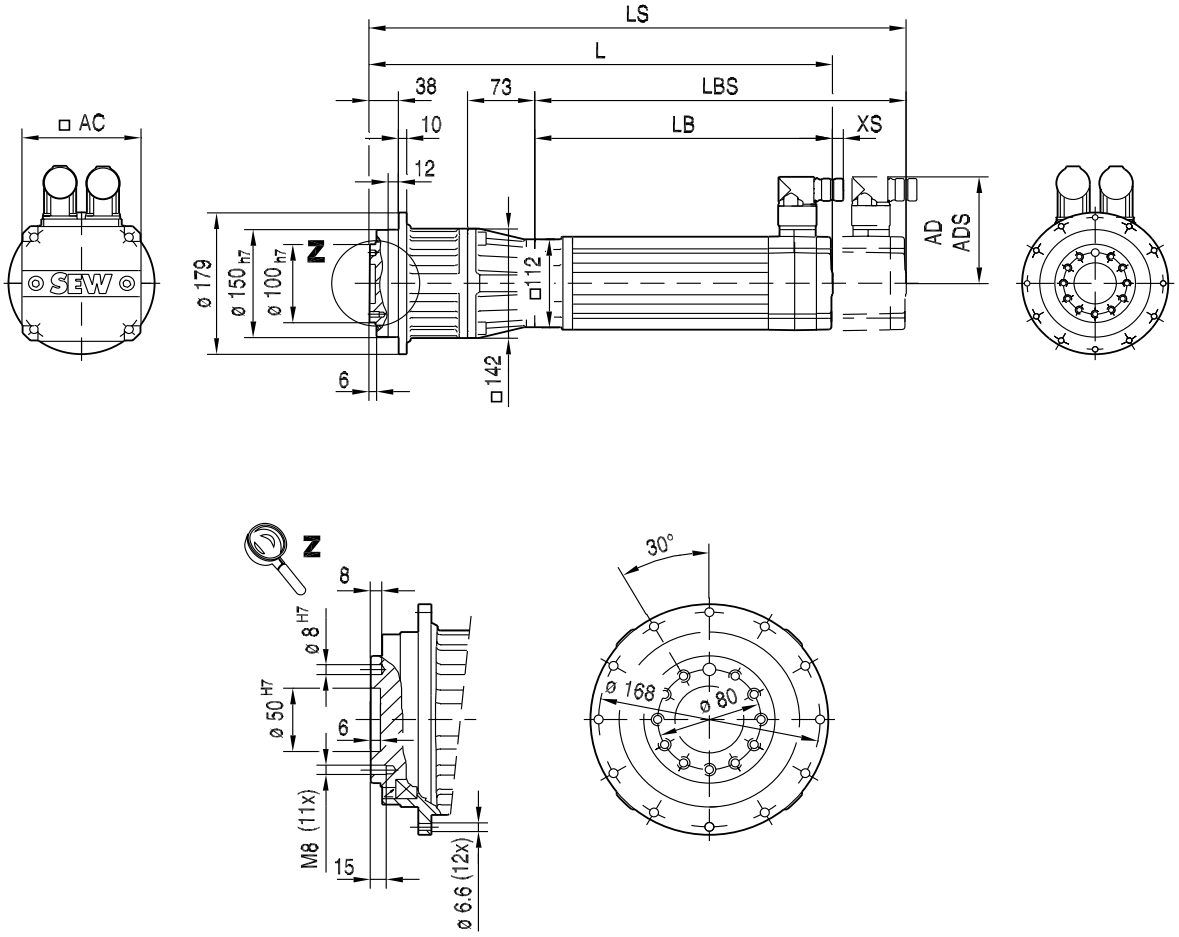

(→ 150)	CMP50M	CMP50L	CMP63S	CMP63M	CMP63L			
AC	73	73	88	88	88			
AD	82	82	89	89	89			
ADS	82	82	89	89	89			
L	372	411	368	418	468			
LS	401	440	397	447	497			
LB	180	219	176	226	276			
LBS	209	248	205	255	305			
XS	18	18	14	14	14			

58 047 00 03

PSBF621..

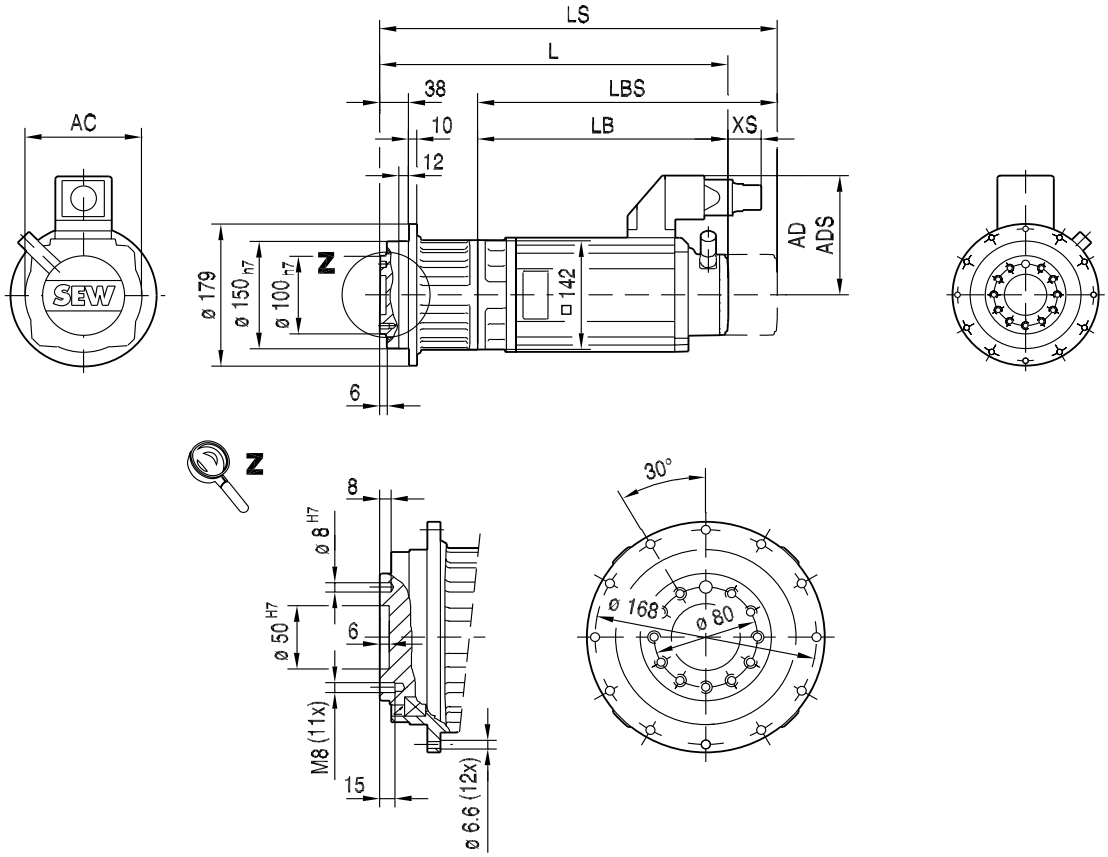

(→ 📖 150)	CM71S	CM71M	CM71L	CM90S	CM90M	CM90L	CM112S	CM112M	CM112L	CM112H
AC	117	117	117	142	142	142	186	186	186	186
AD	122	122	122	140	140	140	162	162	162	162
ADS	122	122	122	140	140	140	162	162	162	162
L	346	366	406	398	425	479	433	460	517	642
LS	428	448	488	493	520	574	523	550	607	707
LB	227	247	287	279	306	360	314	341	398	523
LBS	309	329	369	374	401	455	404	431	488	588
XS	45	45	45	50	50	50	36	36	36	36

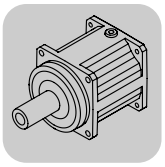

58 048 00 03

PSBF622..

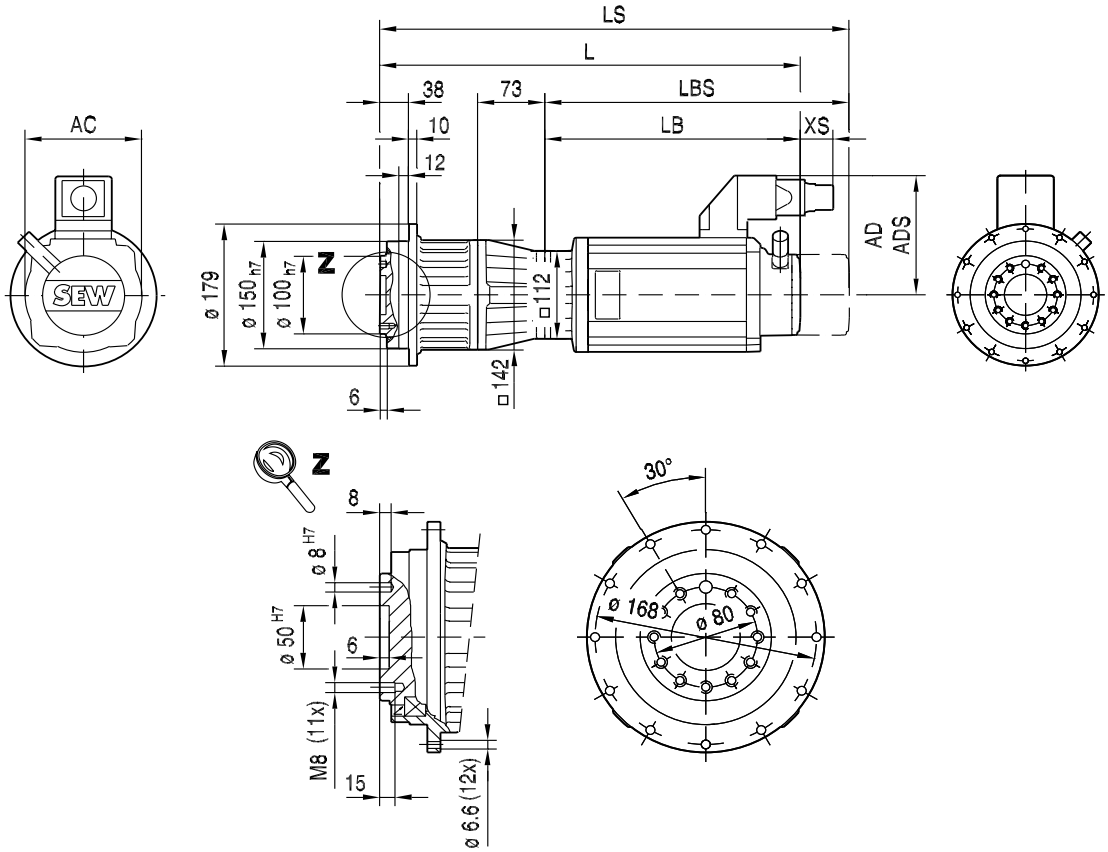

(→ 📖 150)	DS56H	CM71S	CM71M	CM71L	CM90S	CM90M	CM90L	
AC	73	117	117	117	142	142	142	
AD	77	122	122	122	140	140	140	
ADS	77	122	122	122	140	140	140	
L	461	427	447	487	479	506	560	
LS	461	509	529	569	574	601	655	
LB	269	235	255	295	287	314	368	
LBS	269	317	337	377	382	409	463	
XS	51	45	45	45	50	50	50	

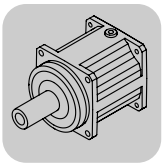

14.26 PSBF 721/722 / CMP / DS / CM [Nm]

M_{aDyn} [Nm]		CMP					DS	CM									
	i	50M	50L	63S	63M	63L	56H	71S	71M	71L	90S	90M	90L	112S	112M	112L	112H
PSBF721 1	5													407	537	780	1178
	7											362	524	570	752	1091	>1380
	10											517	748	815	>1050		
PSBF722 2	20				419	596			421	615	776	1023	1482				
	25	252	377	272	524	745	372	404	527	769	970	1279	>1540				
	35	353	528	381	734	1043	521	566	737	1077	1358	>1540	>1540				
	49	495	740	533	1028	>1380	730	792	1032	>1380	>1380	>1380	>1380				
	70	707	1056	761	>1380	>1380	1043	1132	>1380	>1380	>1380						
	100	1009	>1050	>1050	>1050	>1050	>1050	>1050	>1050	>1050	>1050						

m [kg]		CMP					DS	CM									
	s	50M	50L	63S	63M	63L	56H	71S	71M	71L	90S	90M	90L	112S	112M	112L	112H
PSBF721	1	29	30	31	32	34	30	36	37	40	46	50	55	57	62	77	84
PSBF722	2	36	37	37	39	40	37	42	44	47	53	57	62	64	68	84	91

CMP.. / DS.. / CM..				M1;M3;M5-6			M2			M4			φ		
	i	n_{epk} [1/min]	η [%]	a_0	a_1	a_2	a_0	a_1	a_2	a_0	a_1	a_2	[']	/R [']	/M [']
PSBF721 1	5	4500	99	2309.0	-3.570	0	2746.0	-5.951	0	3503.0	-11.878	0	4	2	1
	7	4500	99	2377.0	-4.171	0	2811.0	-6.427	0	3629.0	-12.643	0	4	2	1
	10	4500	99	2233.0	-4.553	0	2602.0	-6.455	0	3361.0	-12.221	0	4	2	1
PSBF722 2	20	6000	98	2400.0	-8.185	0	2857.0	-14.191	0	3065.0	-17.745	0	6	3	1
	25	6000	98	2434.0	-8.643	0	2887.0	-14.651	0	3098.0	-18.278	0	6	3	1
	35	6000	98	2550.0	-10.050	0	3009.0	-16.379	0	3216.0	-20.048	0	6	3	1
	49	6000	98	2915.0	-14.944	0	3640.0	-26.147	0	3839.0	-30.340	0	6	3	1
	70	6000	98	3051.0	-18.629	0	3669.0	-29.409	0	3842.0	-33.476	0	6	3	1
	100	6000	98	3522.0	-29.556	0	4490.0	-49.846	0	4683.0	-54.900	0	6	3	1

CMP.. / DS.. / CM..							c_T	F_{Ramax}	F_{Rapk}
	i	M_{amax} [Nm]	M_{apk} [Nm]	$M_{aNotaus}$ [Nm]	n_{ak} [1/min]	J_G 10^{-4} [kgm^2]	PSBF [Nm/']	PSBF [N]	PSBF [N]
PSBF721 1	5	1000	1540	2310	1400	8.6	538.0	33500	120000
	7	1000	1380	2070	1000	4.5	398.0	37100	120000
	10	1000	1050	1570	700	2.2	197.0	41300	120000
PSBF722 2	20	1000	1540	2310	350	1.3	245.0	50800	120000
	25	1000	1540	2310	280	1.1	243.0	54400	120000
	35	1000	1540	2310	200	0.58	218.0	60100	120000
	49	1000	1380	2070	143	0.50	201.0	66500	120000
	70	1000	1380	2070	100	0.25	156.0	74000	120000
	100	1000	1050	1570	70	0.22	123.0	82400	120000

14.27 PSBF 721/722 / CMP / DS / CM [mm]

57 076 00 07

PSBF722..

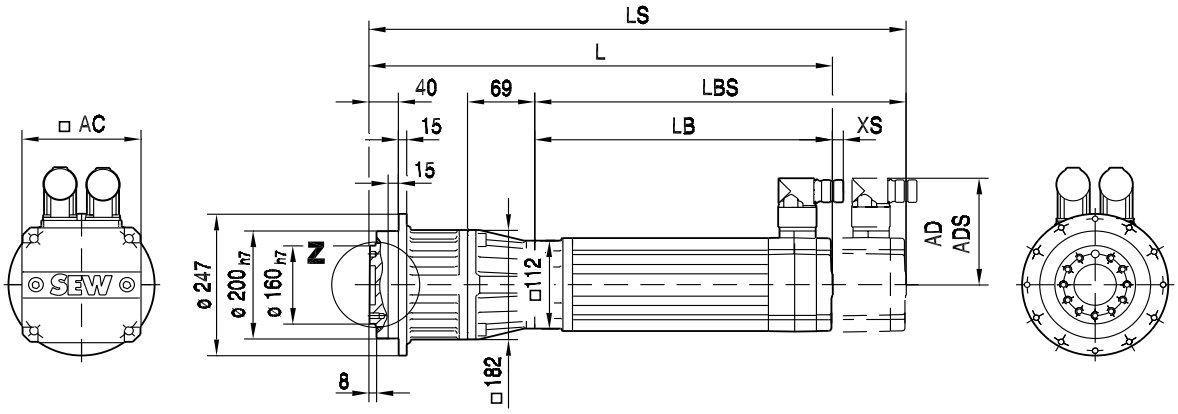

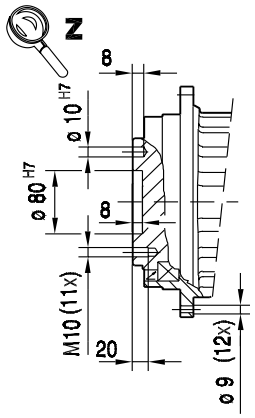

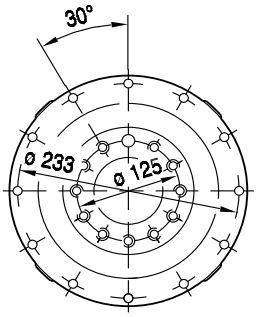

(→ 150)	CMP50M	CMP50L	CMP63S	CMP63M	CMP63L			
AC	73	73	88	88	88			
AD	82	82	89	89	89			
ADS	82	82	89	89	89			
L	394	433	390	440	490			
LS	423	462	419	469	519			
LB	180	219	176	226	276			
LBS	209	248	205	255	305			
XS	18	18	14	14	14			

57 071 00 07

PSBF721..

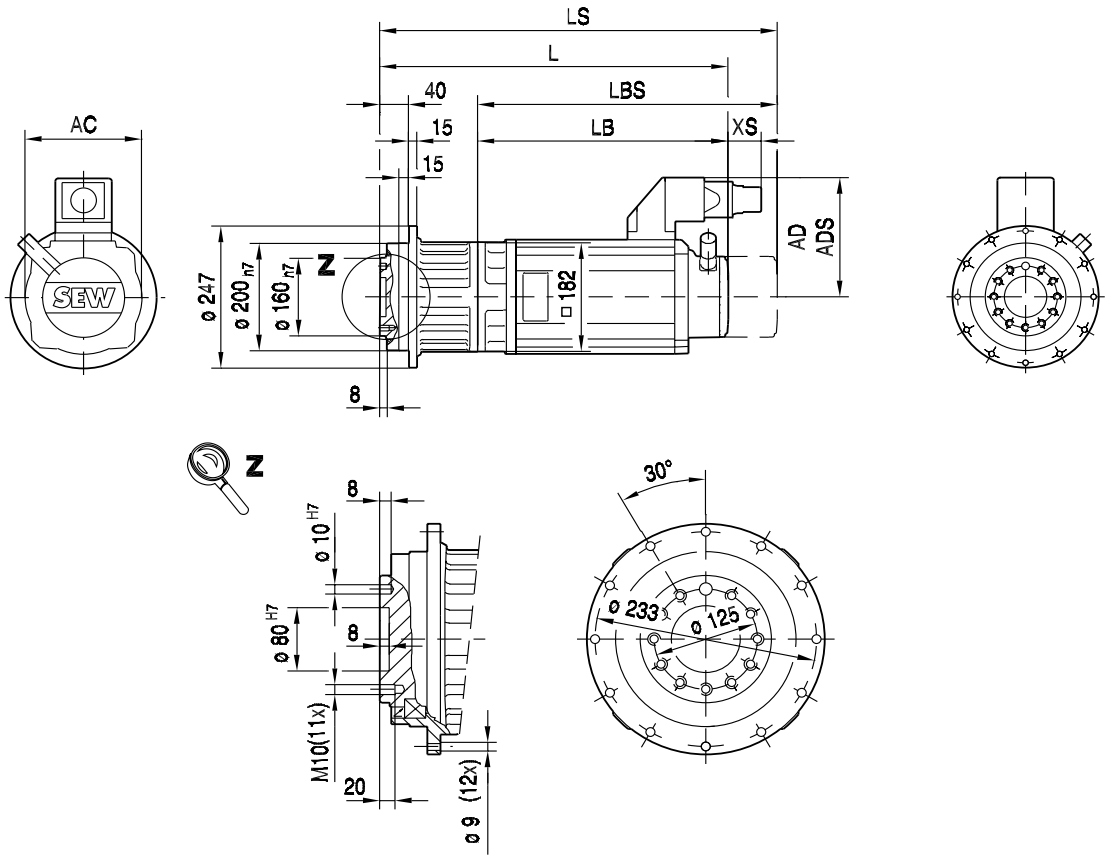

(→ 150)	CM90M	CM90L	CM112S	CM112M	CM112L	CM112H		
AC	142	142	186	186	186	186		
AD	140	140	162	162	162	162		
ADS	140	140	162	162	162	162		
L	447	501	455	482	539	672		
LS	542	596	545	572	629	737		
LB	302	356	310	337	394	527		
LBS	397	451	400	427	484	592		
XS	50	50	36	36	36	36		

57 072 00 07

PSBF722..

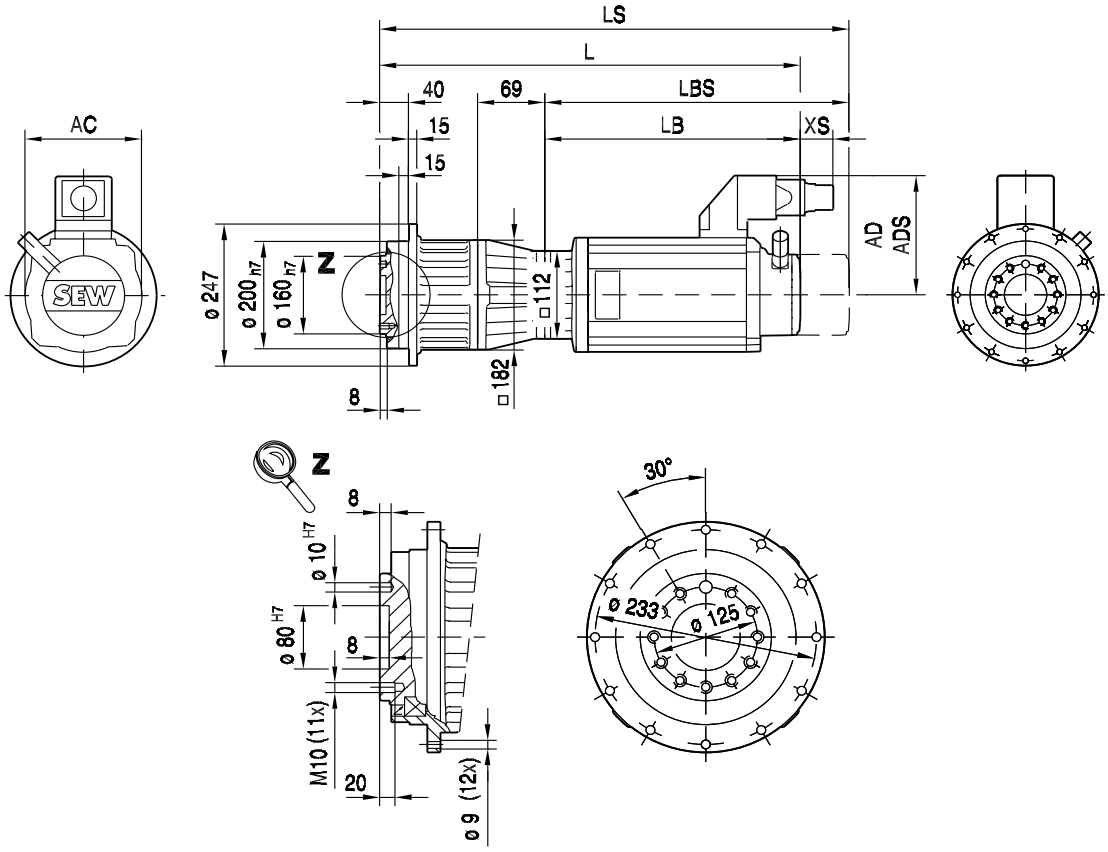

(→ 📖 150)	DS56H	CM71S	CM71M	CM71L	CM90S	CM90M	CM90L	
AC	73	117	117	117	142	142	142	
AD	77	122	122	122	140	140	140	
ADS	77	122	122	122	140	140	140	
L	483	449	469	509	501	528	582	
LS	483	531	551	591	596	623	677	
LB	269	235	255	295	287	314	368	
LBS	269	317	337	377	382	409	463	
XS	51	45	45	45	50	50	50	

14.28 PSBF 821/822 / CMP / CM [Nm]

M_{aDyn} [Nm]		CMP	CM									
	i	63L	71S	71M	71L	90S	90M	90L	112S	112M	112L	112H
PSBF821 1	5											
	7											
	10											
PSBF822 2	20						1023	1482	1613	2127	>2500	>2500
	25	745			769	970	1279	1852	2016	>2500	>2500	>2500
	35	1043			1077	1358	1790	>2500	>2500	>2500		
	49	1460			1508	1902	2507	>2740	>2740	>2740		
	70	2085	1132	1475	2154	2717	>2740	>2740				
	100	>2060	1617	>2060	>2060	>2060	>2060	>2060				

m [kg]		CMP	CM									
	s	63L	71S	71M	71L	90S	90M	90L	112S	112M	112L	112H
PSBF821	1	42	44	45	48	54	56	62	64	68	84	91
PSBF822	2	55	57	59	62	68	70	75	78	82	98	105

CMP.. / CM..				M1;M3;M5-6			M2			M4			φ		
	i	n_{epk} [1/min]	η [%]	a_0	a_1	a_2	a_0	a_1	a_2	a_0	a_1	a_2	[']	/R [']	/M [']
PSBF821 1	5	4500	99	0	0	0	0	0	0	0	0	0	4	2	1
	7	4500	99	0	0	0	0	0	0	0	0	0	4	2	1
	10	4500	99	0	0	0	0	0	0	0	0	0	4	2	1
PSBF822 2	20	6000	98	4406.0	-24.058	0	5007.0	-34.125	0	6113.0	-58.782	0	6	3	1
	25	6000	98	4478.0	-25.333	0	5074.0	-35.377	0	6180.0	-60.325	0	6	3	1
	35	6000	98	4703.0	-28.994	0	5302.0	-39.407	0	6432.0	-65.521	0	6	3	1
	49	6000	98	5602.0	-42.367	0	6553.0	-62.572	0	7505.0	-89.863	0	6	3	1
	70	6000	98	5901.0	-52.384	0	6737.0	-71.810	0	7681.0	-100.25	0	6	3	1
	100	6000	98	6600.0	-77.444	0	7873.0	-113.80	0	8521.0	-140.65	0	6	3	1

CMP.. / CM..							c_T	F_{Ramax}	F_{Rapk}
	i	M_{amax} [Nm]	M_{apk} [Nm]	$M_{aNotaus}$ [Nm]	n_{ak} [1/min]	J_G 10^{-4} [kgm^2]	PSBF [Nm/']	PSBF [N]	PSBF [N]
PSBF821 1	5	1750	2500	3750	280	47	1213.0	58500	180000
	7	1750	2740	4110	243	25	913.0	64800	180000
	10	1750	2060	3090	230	12	533.0	72100	180000
PSBF822 2	20	1750	2500	3750	265	6.8	635.98	88700	180000
	25	1750	2500	3750	268	4.4	604.81	94900	180000
	35	1750	2500	3750	200	2.3	489.6	104900	180000
	49	1750	2740	4110	143	1.8	514.29	116100	180000
	70	1750	2740	4110	100	0.91	354.22	129200	180000
	100	1750	2060	3090	70	0.78	315.07	143800	180000

14.29 PSBF 821/822 / CMP / CM [mm]

57 051 00 06

PSBF822..

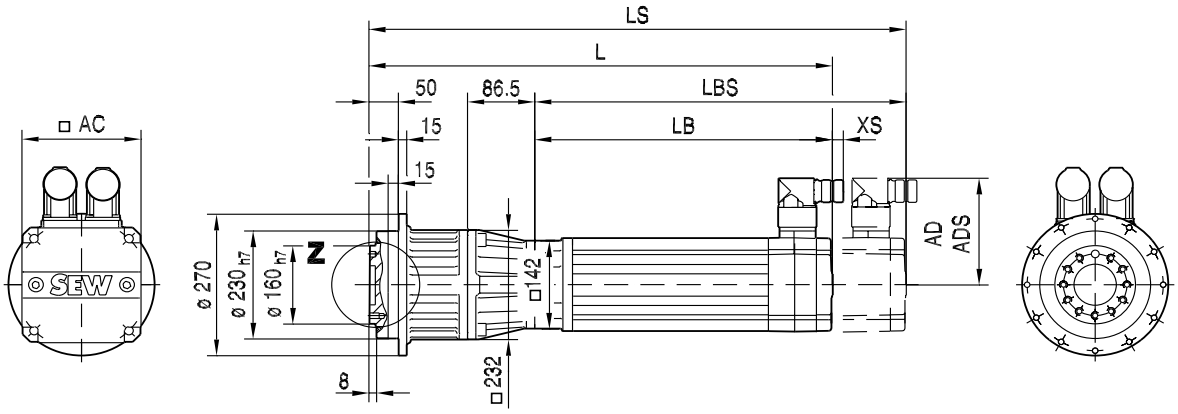

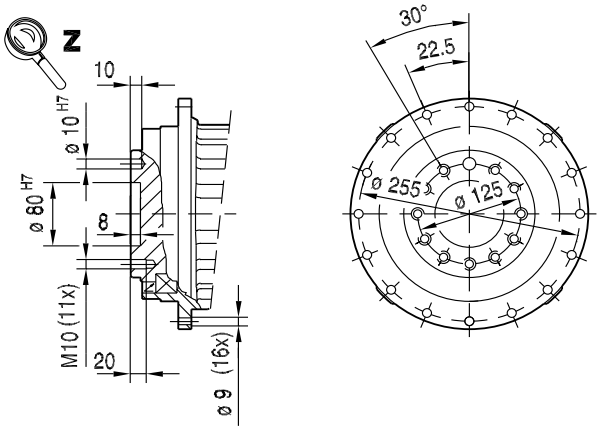

(→ 150)	CMP63L							
AC	88							
AD	89							
ADS	89							
L	521							
LS	549							
LB	268							
LBS	297							
XS	14							

58 050 00 03

PSBF822..

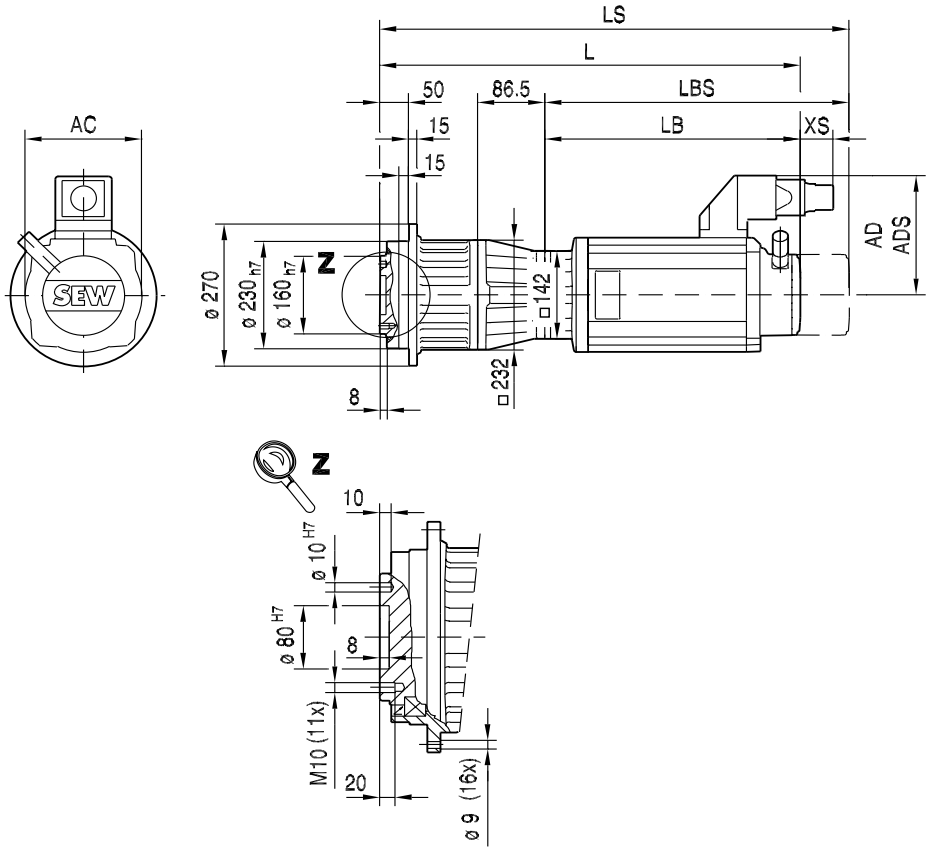

(→ 📖 150)	CM71S	CM71M	CM71L	CM90S	CM90M	CM90L	CM112S	CM112M	CM112L	CM112H
AC	117	117	117	142	142	142	186	186	186	186
AD	122	122	122	140	140	140	162	162	162	162
ADS	122	122	122	140	140	140	162	162	162	162
L	479	499	539	531	558	612	566	593	650	776
LS	561	581	621	626	653	707	656	683	740	841
LB	227	247	287	279	306	360	314	341	398	523
LBS	309	329	369	374	401	455	404	431	488	588
XS	45	45	45	50	50	50	36	36	36	36

14.30 PSBF [mm]

55 035 01 03

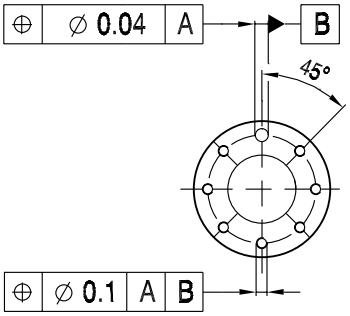

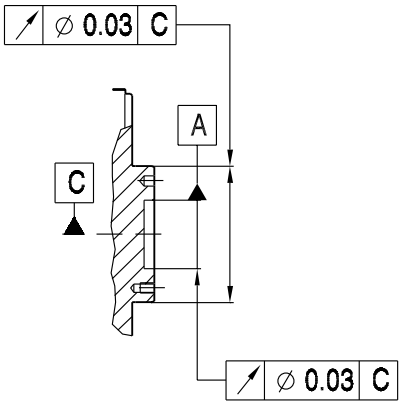

BSBF202 PSBF221/222
BSBF302 PSBF321/322

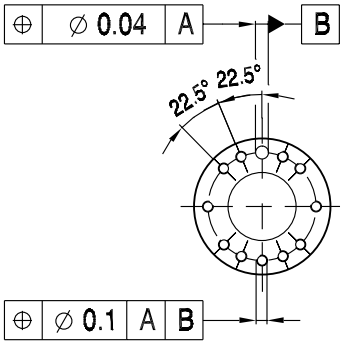

BSBF402 PSBF421/422
BSBF502 PSBF521/522

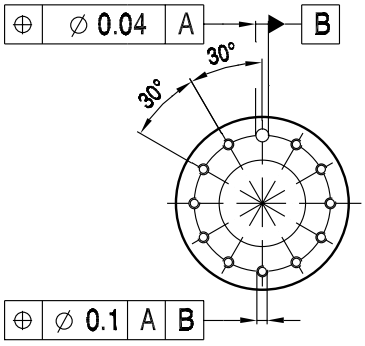

BSBF602 PSBF621/622
BSBF802 PSBF821/822

55 036 00 03

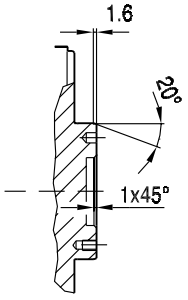

15 PS.C..CMP, DS, CM

15.1 PSC, PSKC, PSCZ, PSKCZ..CMP / DS / CM

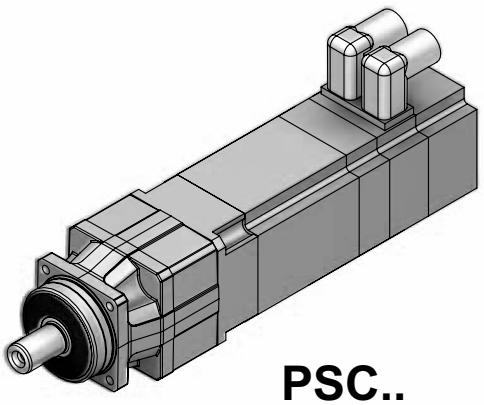

PSC..

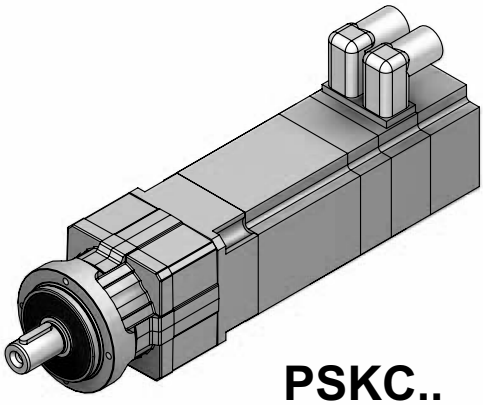

PSKC..

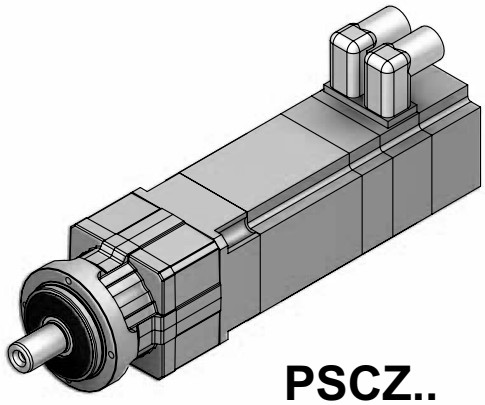

PSCZ..

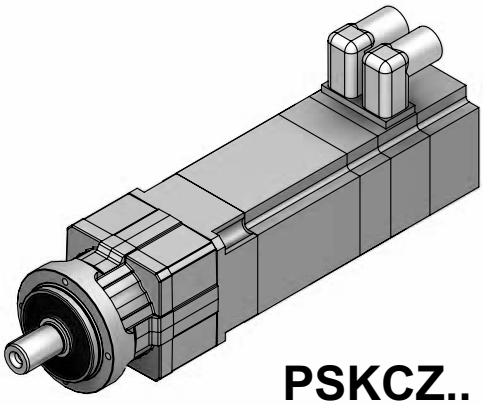

PSKCZ..

63320axx

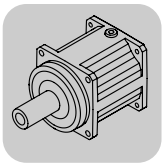

15.2 PS.C221/222 / CMP / DS [Nm]

M_{aDyn} [Nm]		CMP							DS		
	i	40M	50S	50M	50L	63S	63M	63L	56M	56L	56H
PSC221 1	3	11	15	31	>40	33	>40	>40	11	23	>40
	5	19	26	>42	>42	>42	>42	>42	19	38	>42
	7	26	36	>39	>39	>39	>39		26	>39	>39
	10	>37	>37						>37	>37	
PSC222 2	15	>40	>40	>40	>40	>40	>40	>40	>40	>40	>40
	21	>40	>40	>40	>40	>40	>40		>40	>40	>40
	25	>42	>42	>42	>42	>42	>42	>42	>42	>42	>42
	30	>40	>40						>40	>40	
	35	>39	>39	>39	>39	>39	>39		>39	>39	>39
	49	>39	>39	>39	>39	>39	>39		>39	>39	>39
	50	>42	>42						>42	>42	
	70	>39	>39						>39	>39	
	100	>37	>37						>37	>37	

m [kg]		CMP							DS		
	s	40M	50S	50M	50L	63S	63M	63L	56M	56L	56H
PSC221	1	3.2	4.0	5.0	5.9	6.3	7.8	9.3	4.2	5.2	5.9
PSC222	2	3.8	4.7	5.6	6.5	7.0	8.5	10.0	4.8	5.8	6.5

				M1;M3;M5-6			M2			M4			φ
	i	n_{epk} [1/min]	η [%]	a_0	a_1	a_2	a_0	a_1	a_2	a_0	a_1	a_2	[']
PSC221 1	3	7000	99	101.00	-0.093	0	106.00	-0.104	0	109.00	-0.110	0	10
	5	7000	99	160.00	-0.181	0	163.00	-0.190	0	167.00	-0.200	0	10
	7	7000	99	186.00	-0.257	0	187.00	-0.264	0	186.00	-0.267	0	10
	10	7000	99	158.00	-0.178	0	161.00	-0.184	0	164.00	-0.194	0	10
PSC222 2	15	7000	98	176.00	-0.608	0	176.00	-0.623	0	178.00	-0.633	0	15
	21	7000	98	198.00	-0.834	0	196.00	-0.840	0	197.00	-0.850	0	15
	25	7000	98	342.00	-1.906	0	345.00	-1.965	0	346.00	-1.980	0	15
	30	7000	98	177.00	-0.606	0	177.00	-0.617	0	178.00	-0.627	0	15
	35	7000	98	395.00	-2.703	0	396.00	-2.764	0	398.00	-2.780	0	15
	49	7000	98	557.00	-5.287	0	559.00	-5.413	0	560.00	-5.433	0	15
	50	7000	98	932.00	-8.059	0	914.00	-8.267	0	916.00	-8.301	0	15
	70	7000	98	484.00	-3.704	0	485.00	-3.798	0	487.00	-3.815	0	15
	100	7000	98	634.00	-6.890	0	637.00	-7.071	0	638.00	-7.089	0	15

CMP / DS							c_T	F_{Ramax}	F_{Rapk}
	i	M_{amax} [Nm]	M_{apk} [Nm]	$M_{aNotaus}$ [Nm]	n_{ak} [1/min]	J_G 10^{-4} [kgm^2]	PSC [Nm/']	PSC [N]	PSC [N]
PSC221 1	3	29	40	60	1500	0.17	3.46	1170	2000
	5	34	42	63	720	0.058	3.44	1390	2000
	7	32	39	59	800	0.030	3.28	1550	2000
	10	30	37	56	700	0.014	2.92	1750	2000
PSC222 2	15	29	40	60	467	0.057	2.93	2000	2000
	21	29	40	60	333	0.030	2.88	2000	2000
	25	34	42	63	280	0.053	3.02	2000	2000
	30	29	40	60	233	0.014	2.77	2000	2000
	35	32	39	59	200	0.027	2.98	2000	2000
	49	32	39	59	143	0.027	2.88	2000	2000
	50	34	42	63	140	0.013	2.9	2000	2000
	70	32	39	59	100	0.013	2.82	2000	2000
	100	30	37	56	70	0.013	2.57	2000	2000

15.3 PS.C221/222 / CMP / DS [mm]

57 031 00 07

PSC221..

CMP..

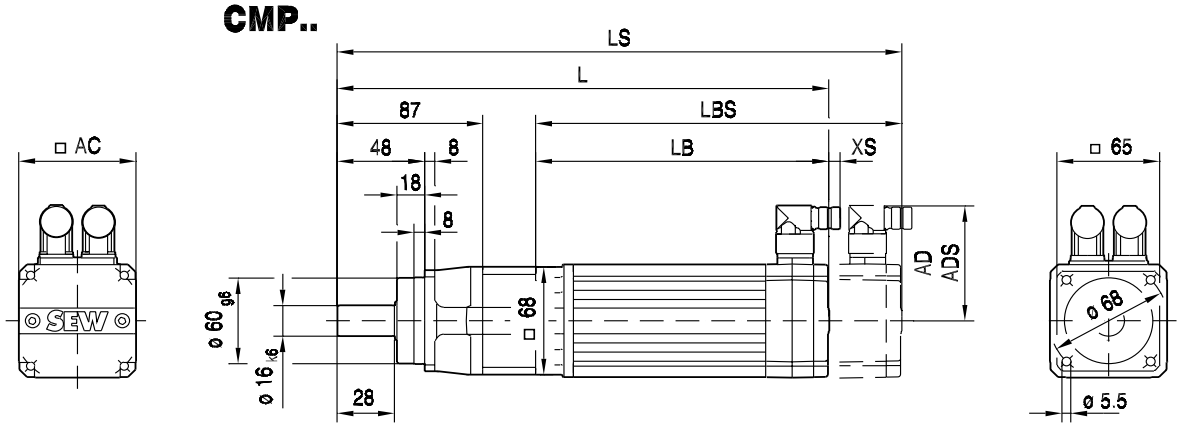

PSC / PSCZ

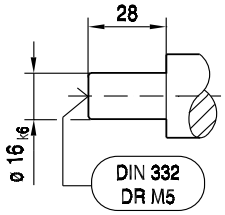

PSKC / PSKCZ

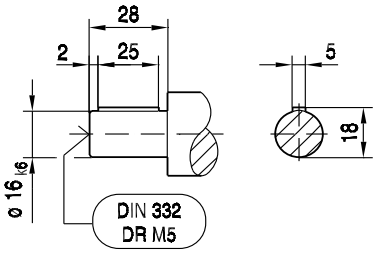

PSCZ221..

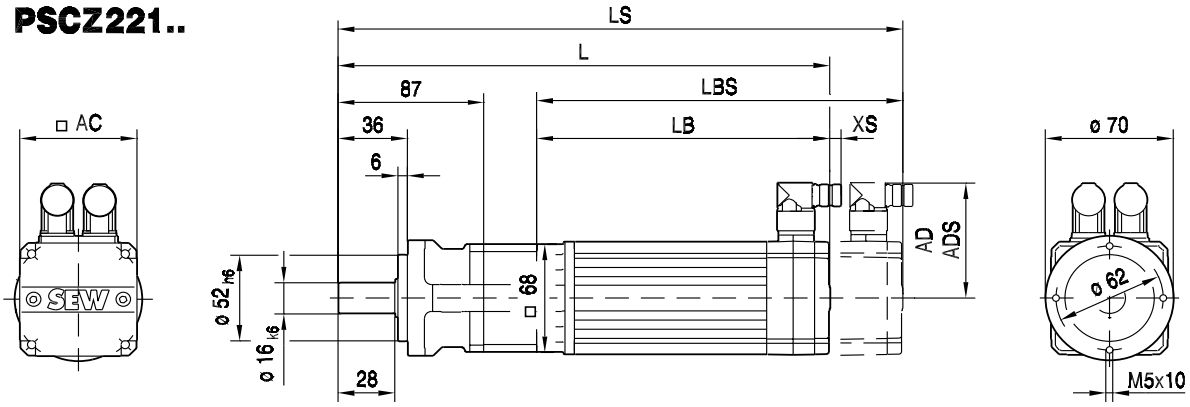

(→ 150)	CMP40M	CMP50S	CMP50M	CMP50L	CMP63S	CMP63M	CMP63L				
AC	57	73	73	73	88	88	88				
AD	75	83	83	83	92	92	92				
ADS	75	83	83	83	92	92	92				
L	270	272	311	350	307	357	407				
LS	300	301	340	379	336	386	435				
LB	149	151	190	229	186	236	286				
LBS	179	180	219	258	215	265	314				
XS	19	18	18	18	14	14	14				

57 032 00 07

PSC222..

CMP..

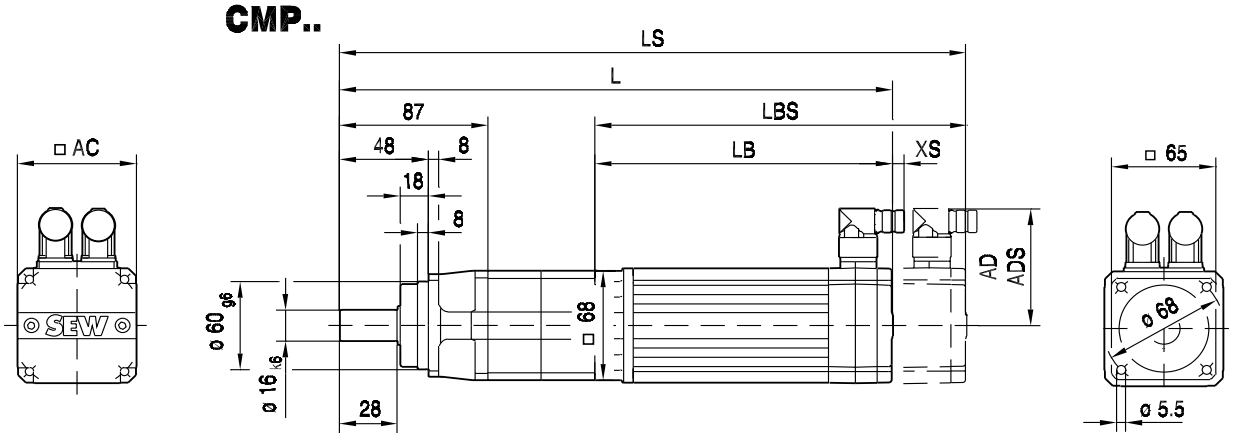

PSC / PSCZ

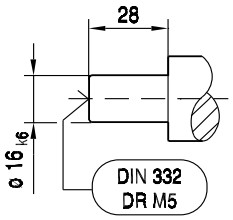

PSKC / PSCKZ

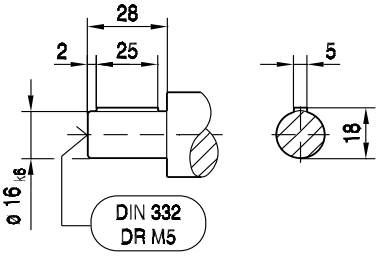

PSCZ222..

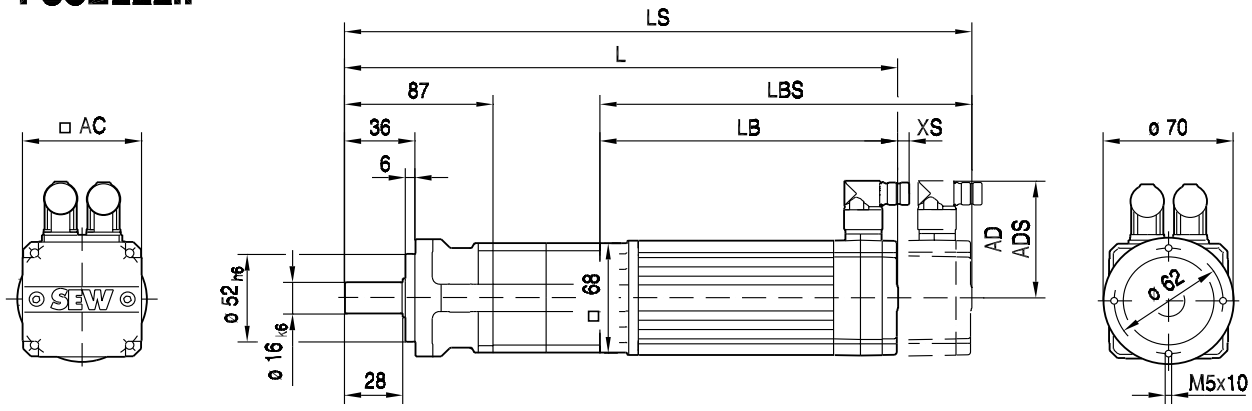

(→ 📖 150)	CMP40M	CMP50S	CMP50M	CMP50L	CMP63S	CMP63M	CMP63L				
AC	57	73	73	73	88	88	88				
AD	75	83	83	83	92	92	92				
ADS	75	83	83	83	92	92	92				
L	305	307	346	385	342	392	442				
LS	335	336	375	414	370	420	470				
LB	149	151	190	229	186	236	286				
LBS	179	180	219	258	215	265	314				
XS	19	18	18	18	14	14	14				

57 039 00 07

PSC221..

DS56..

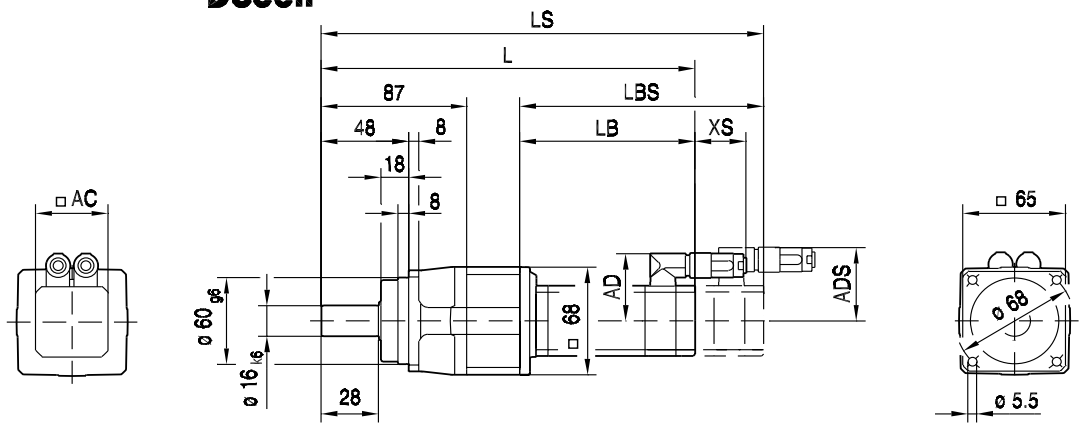

PSC

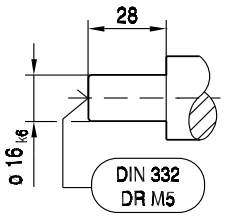

PSKC

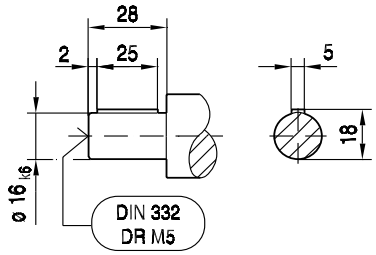

(→ 📖 150)	DS56M	DS56L	DS56H								
AC	73	73	73								
AD	71	71	77								
ADS	77	77	77								
L	265	297	400								
LS	295	327	400								
LB	144	176	279								
LBS	174	206	279								
XS	70	70	51								

57 040 00 07

PSC222..

DS56..

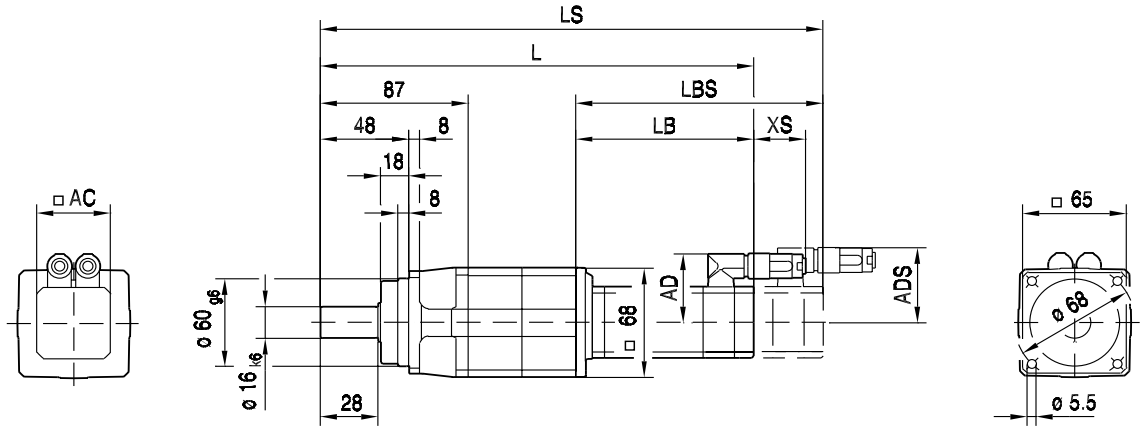

PSC

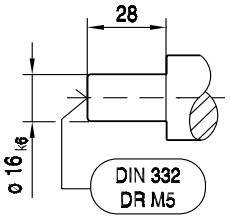

PSKC

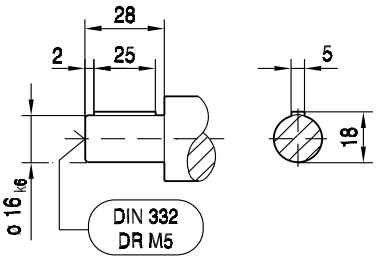

(→ 📖 150)	DS56M	DS56L	DS56H								
AC	73	73	73								
AD	71	71	77								
ADS	77	77	77								
L	300	332	435								
LS	330	362	435								
LB	144	176	279								
LBS	174	206	279								
XS	70	70	51								

57 047 00 07

PSCZ221..

DS56..

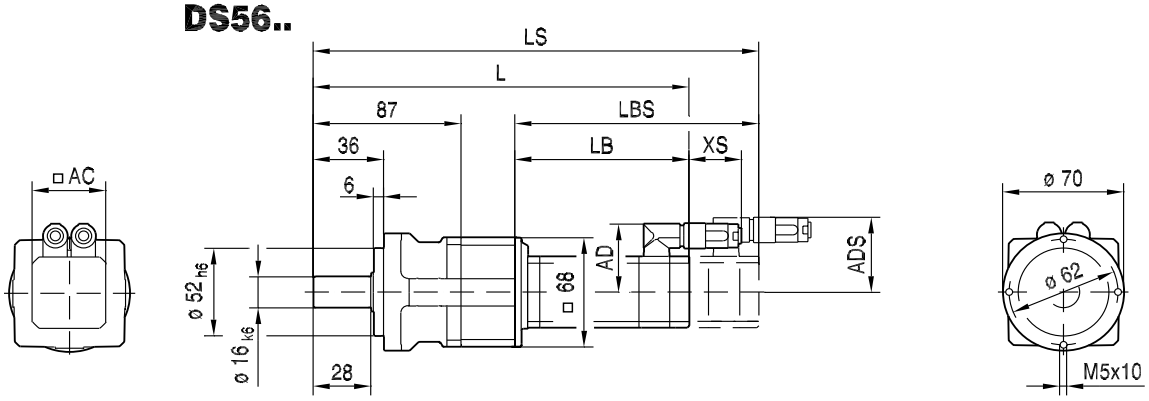

PSCZ

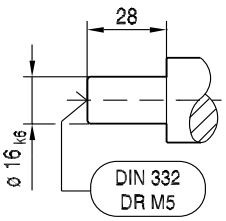

PSKCZ

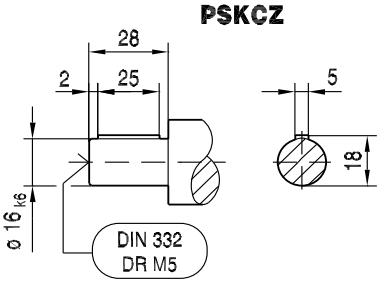

(→ 📖 150)	DS56M	DS56L	DS56H								
AC	73	73	73								
AD	71	71	77								
ADS	77	77	77								
L	265	297	400								
LS	295	327	400								
LB	144	176	279								
LBS	174	206	279								
XS	70	70	51								

57 048 00 07

PSCZ222..

DS56..

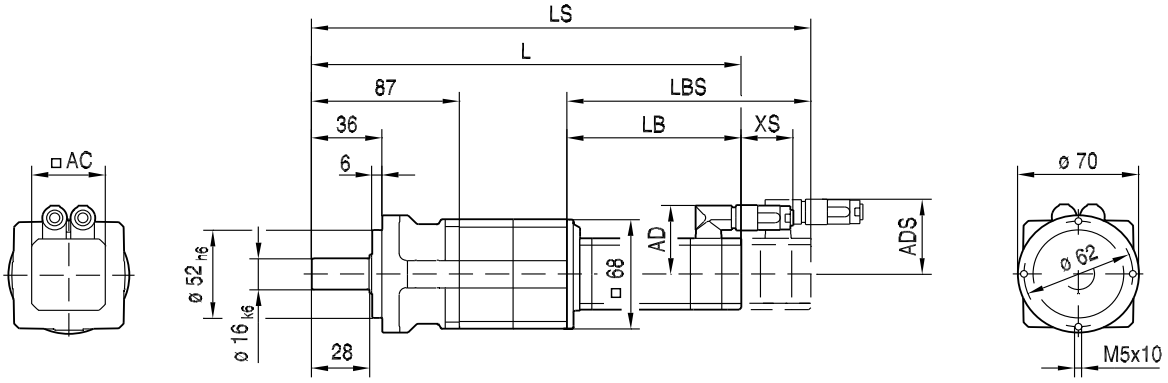

PSCZ

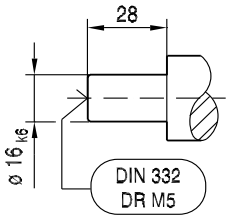

PSKCZ

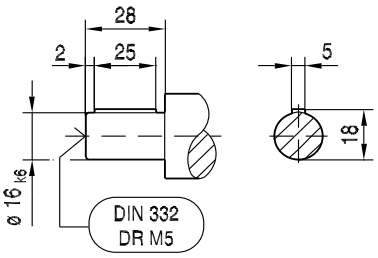

(→ 📖 150)	DS56M	DS56L	DS56H								
AC	73	73	73								
AD	71	71	77								
ADS	77	77	77								
L	300	332	435								
LS	330	362	435								
LB	144	176	279								
LBS	174	206	279								
XS	70	70	51								

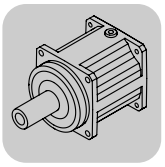

15.4 PS.C321/322 / CMP / DS / CM [Nm]

M_{aDyn} [Nm]		CMP						DS			CM		
	i	50S	50M	50L	63S	63M	63L	56M	56L	56H	71S	71M	71L
PSC321 1	3	15	31	46	33	64	>86	11	23	45	49	64	>86
	5	26	51	76	55	>91	>91	19	38	75	82	>91	>91
	7	36	71	>85	77	>85	>85	26	53	>85	>85	>85	>85
	10	51	>81	>81	>81			38	75	>81	>81		
PSC322 2	15	76	>86	>86	>86	>86	>86	56	>86	>86	>86	>86	>86
	21	>86	>86	>86	>86	>86	>86	78	>86	>86	>86	>86	>86
	25	>91	>91	>91	>91	>91	>91	>91	>91	>91	>91	>91	>91
	30	>86	>86	>86	>86			>86	>86	>86	>86		
	35	>85	>85	>85	>85	>85	>85	>85	>85	>85	>85	>85	>85
	49	>85	>85	>85	>85	>85	>85	>85	>85	>85	>85	>85	>85
	50	>91	>91	>91	>91			>91	>91	>91	>91		
	70	>85	>85	>85	>85			>85	>85	>85	>85		
	100	>81	>81	>81	>81			>81	>81	>81	>81		

m [kg]		CMP						DS			CM		
	s	50S	50M	50L	63S	63M	63L	56M	56L	56H	71S	71M	71L
PSC321	1	6.4	7.3	8.2	7.8	9.2	11	5.7	6.7	7.4	13	16	18
PSC322	2	7.8	8.7	9.6	9.2	11	12	7.1	8.1	8.8	14	17	19

				M1;M3;M5-6			M2			M4			φ
	i	n_{epk} [1/min]	η [%]	a_0	a_1	a_2	a_0	a_1	a_2	a_0	a_1	a_2	[']
PSC321 1	3	6500	99	183.00	-0.184	0	190.00	-0.201	0	191.00	-0.212	0	10
	5	6500	99	257.00	-0.296	0	262.00	-0.308	0	264.00	-0.324	0	10
	7	6500	99	257.00	-0.341	0	261.00	-0.350	0	259.00	-0.360	0	10
	10	6500	99	247.00	-0.395	0	251.00	-0.406	0	251.00	-0.418	0	10
PSC322 2	15	6500	98	296.00	-1.011	0	296.00	-1.026	0	299.00	-1.053	0	15
	21	6500	98	310.00	-1.219	0	308.00	-1.224	0	311.00	-1.250	0	15
	25	6500	98	539.00	-2.935	0	542.00	-3.004	0	545.00	-3.041	0	15
	30	6500	98	326.00	-1.546	0	323.00	-1.547	0	326.00	-1.575	0	15
	35	6500	98	571.00	-3.602	0	572.00	-3.666	0	575.00	-3.704	0	15
	49	6500	98	737.00	-6.438	0	739.00	-6.559	0	741.00	-6.599	0	15
	50	6500	98	1901.0	-21.769	0	1904.0	-22.556	0	1908.0	-22.648	0	15
	70	6500	98	777.00	-8.291	0	767.00	-8.289	0	769.00	-8.331	0	15
	100	6500	98	961.00	-14.560	0	947.00	-14.538	0	948.00	-14.571	0	15

CMP / DS / CM							c_T	F_{Ramax}	F_{Rapk}
	i	M_{amax} [Nm]	M_{apk} [Nm]	$M_{aNotaus}$ [Nm]	n_{ak} [1/min]	J_G 10^{-4} [kgm^2]	PSC [Nm/']	PSC [N]	PSC [N]
PSC321 1	3	62	86	129	633	0.52	10.5	1710	4000
	5	74	91	136	300	0.17	10.9	2030	4000
	7	69	85	128	329	0.092	10.3	2270	4000
	10	66	81	122	360	0.045	8.59	2560	4000
PSC322 2	15	62	86	129	467	0.16	8.26	2930	4000
	21	62	86	129	333	0.085	8.1	3280	4000
	25	74	91	136	280	0.15	9.02	3470	4000
	30	62	86	129	233	0.042	7.67	3690	4000
	35	69	85	128	200	0.078	8.88	3880	4000
	49	69	85	128	143	0.076	8.62	4000	4000
	50	74	91	136	140	0.038	8.53	4000	4000
	70	69	85	128	100	0.037	8.35	4000	4000
	100	66	81	122	70	0.037	7.33	4000	4000

15.5 PS.C321/322 / CMP / DS / CM [mm]

57 033 00 07

PSC321..

CMP..

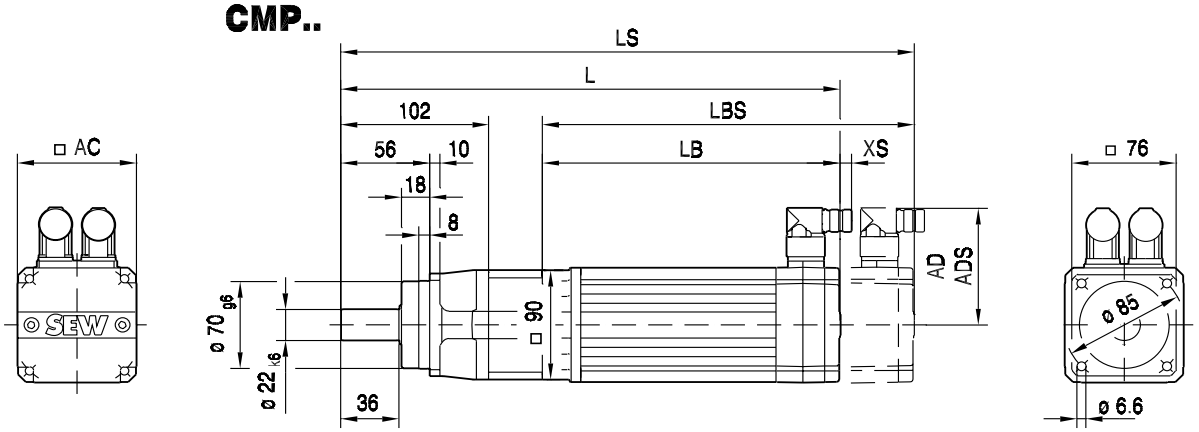

PSC / PSCZ

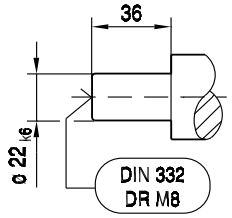

PSKC / PSKCZ

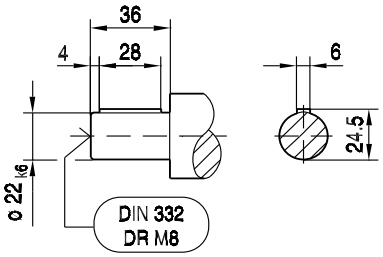

PSCZ321..

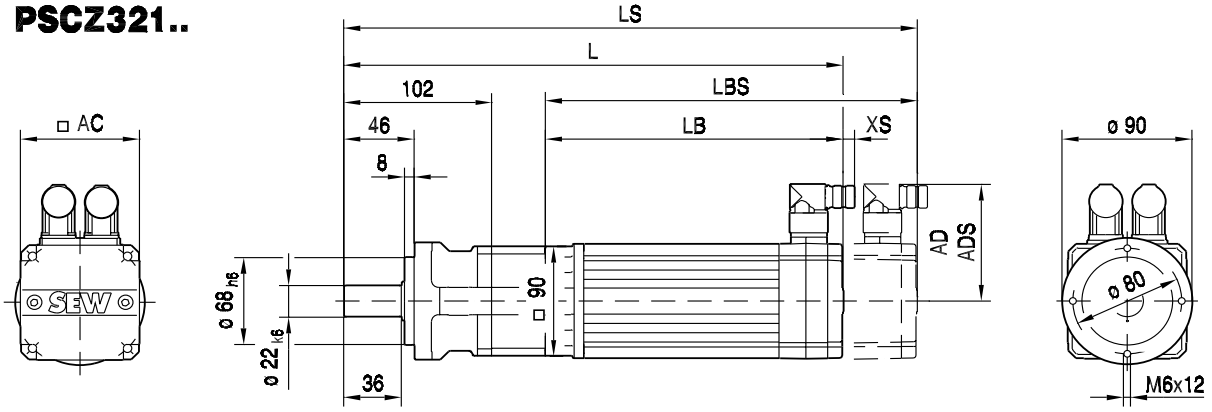

(→ 150)	CMP50S	CMP50M	CMP50L	CMP63S	CMP63M	CMP63L					
AC	73	73	73	88	88	88					
AD	83	83	83	92	92	92					
ADS	83	83	83	92	92	92					
L	290	329	368	325	375	425					
LS	319	358	397	354	404	454					
LB	146	185	224	181	231	281					
LBS	175	214	253	210	260	310					
XS	18	18	18	14	14	14					

57 034 00 07

PSC322..

CMP..

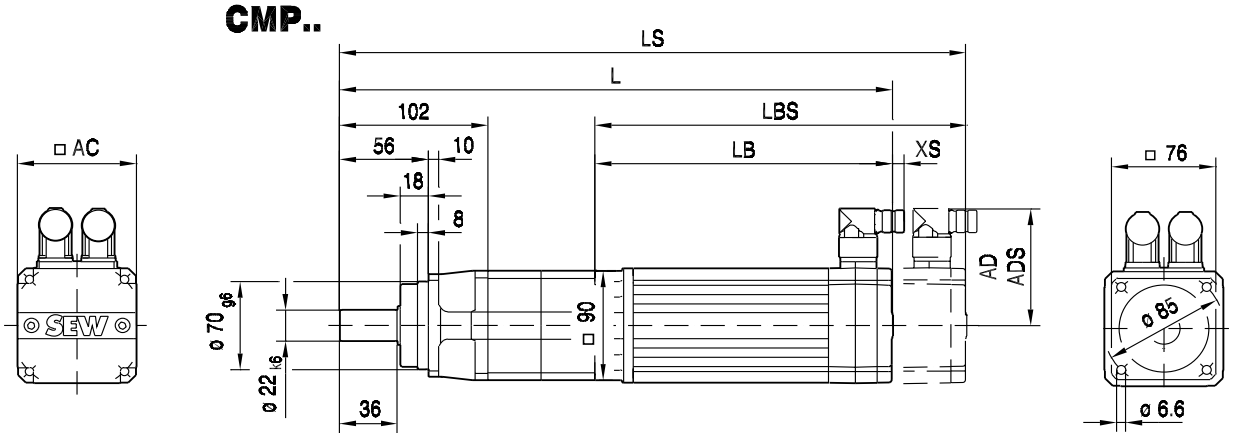

PSC / PSCZ

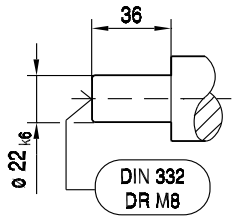

PSKC / PSCKZ

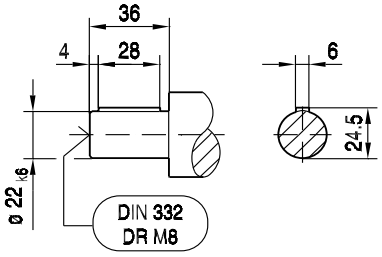

PSCZ322..

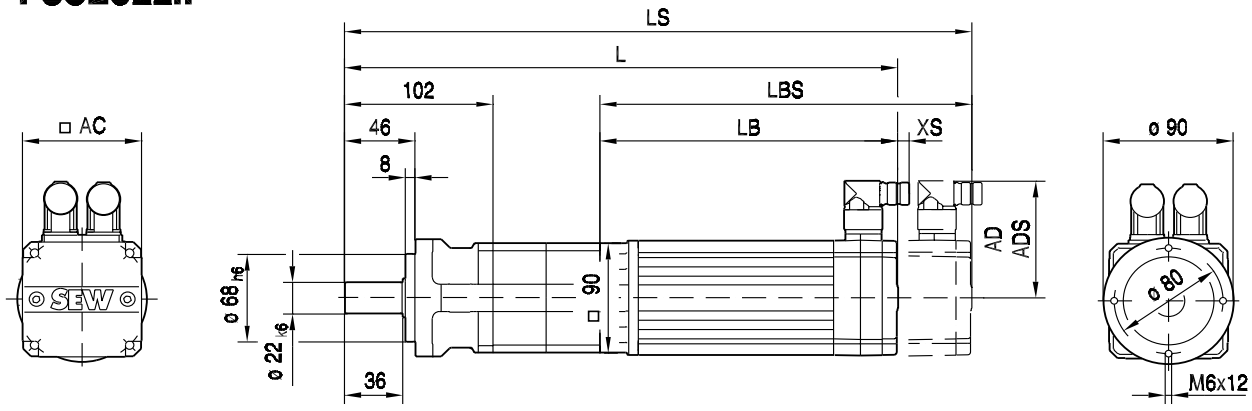

(→ 150)	CMP50S	CMP50M	CMP50L	CMP63S	CMP63M	CMP63L					
AC	73	73	73	88	88	88					
AD	83	83	83	92	92	92					
ADS	83	83	83	92	92	92					
L	332	371	410	367	417	467					
LS	361	400	439	395	445	495					
LB	146	185	224	181	231	281					
LBS	175	214	253	210	260	310					
XS	18	18	18	14	14	14					

57 041 00 07

PSC321..

DS56..

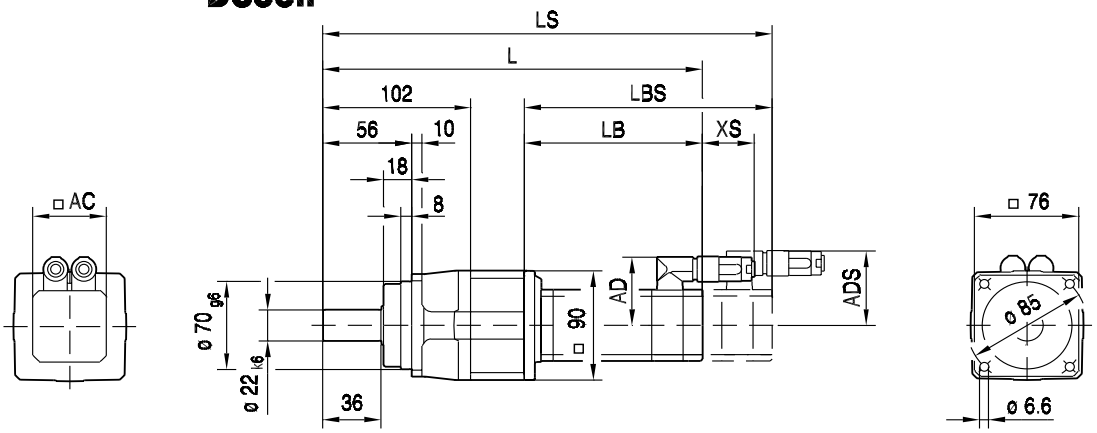

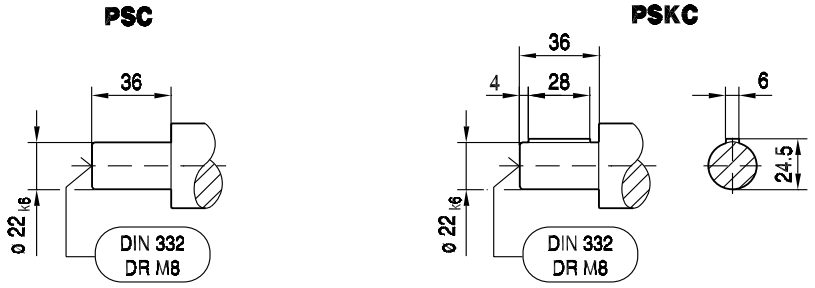

CM..

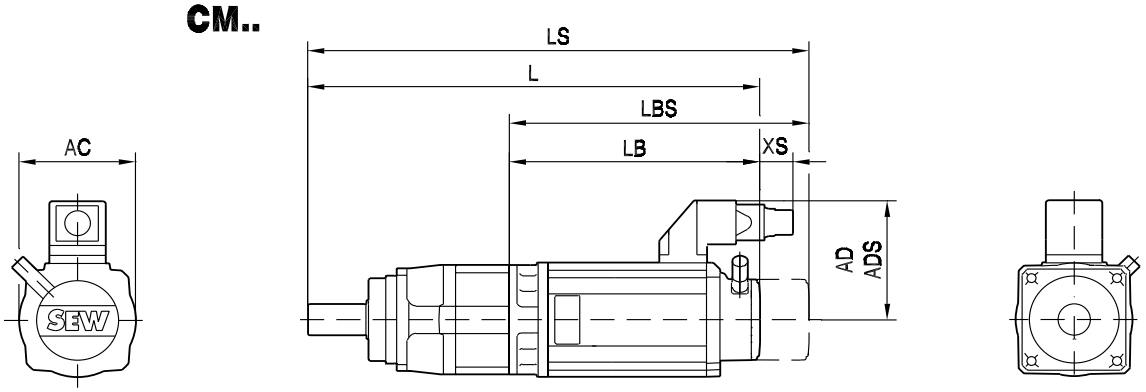

(→ 📖 150)	DS56M	DS56L	DS56H	CM71S	CM71M	CM71L					
AC	73	73	73	117	117	117					
AD	71	71	77	122	122	122					
ADS	77	77	77	122	122	122					
L	283	315	418	383	403	443					
LS	313	345	418	466	486	526					
LB	139	171	274	240	260	300					
LBS	169	201	274	322	342	382					
XS	70	70	51	45	45	45					

57 042 00 07

PSC322..

DS56..

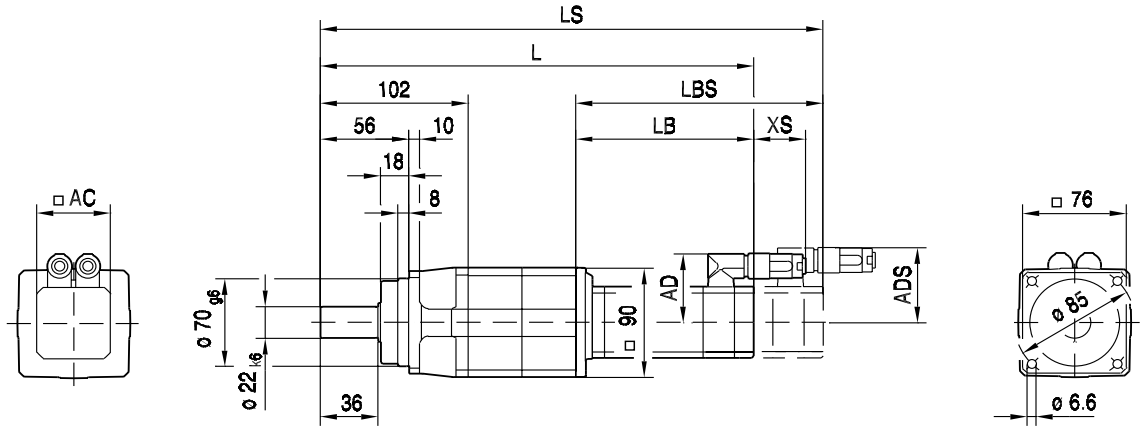

PSC

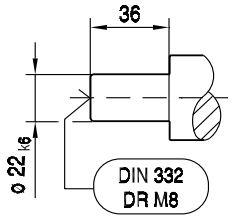

PSKC

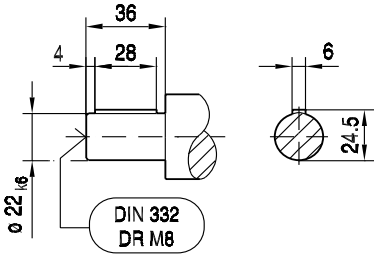

CM..

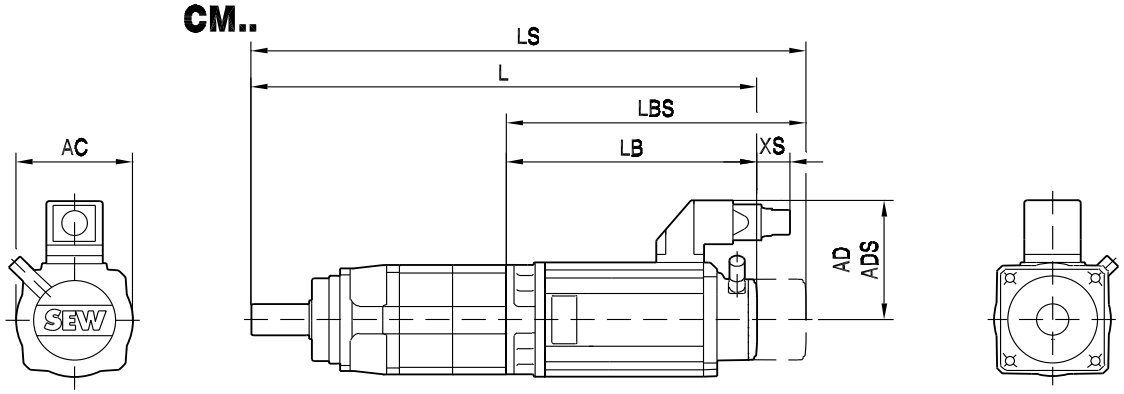

(→ 📖 150)	DS56M	DS56L	DS56H	CM71S	CM71M	CM71L					
AC	73	73	73	117	117	117					
AD	71	71	77	122	122	122					
ADS	77	77	77	122	122	122					
L	325	357	460	425	445	485					
LS	355	387	460	507	527	567					
LB	139	171	274	240	260	300					
LBS	169	201	274	322	342	382					
XS	70	70	51	45	45	45					

57 049 00 07

PSCZ321..

DS56..

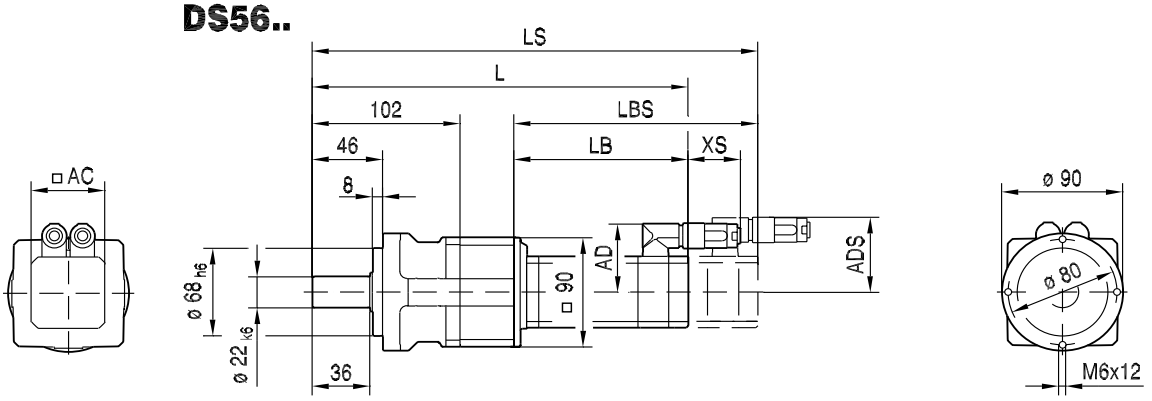

PSCZ

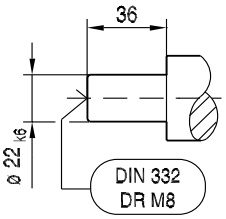

PSKCZ

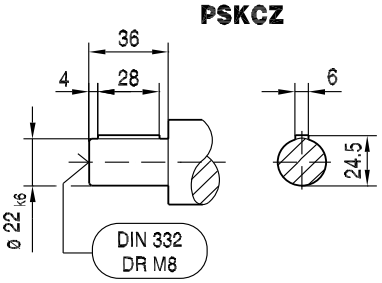

CM..

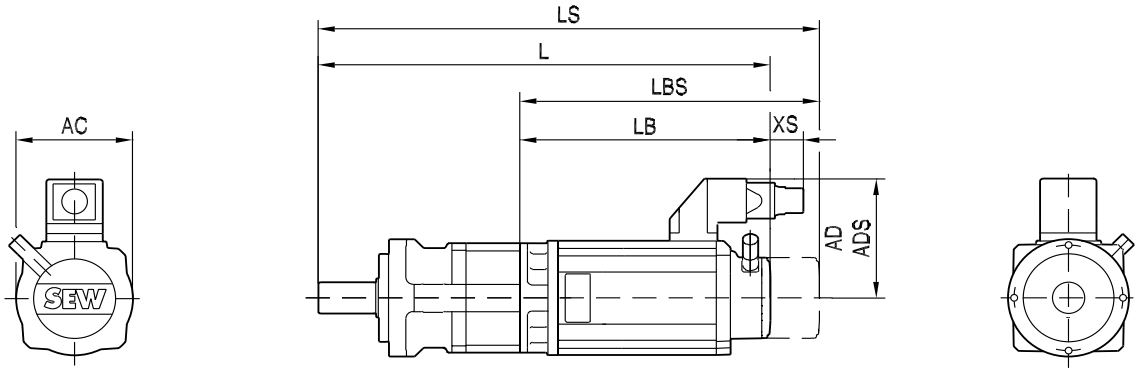

(→ 📖 150)	DS56M	DS56L	DS56H	CM71S	CM71M	CM71L					
AC	73	73	73	117	117	117					
AD	71	71	77	122	122	122					
ADS	77	77	77	122	122	122					
L	283	315	418	383	403	443					
LS	313	345	418	466	486	526					
LB	139	171	274	240	260	300					
LBS	169	201	274	322	342	382					
XS	70	70	51	45	45	45					

57 050 00 07

PSCZ322..

DS56..

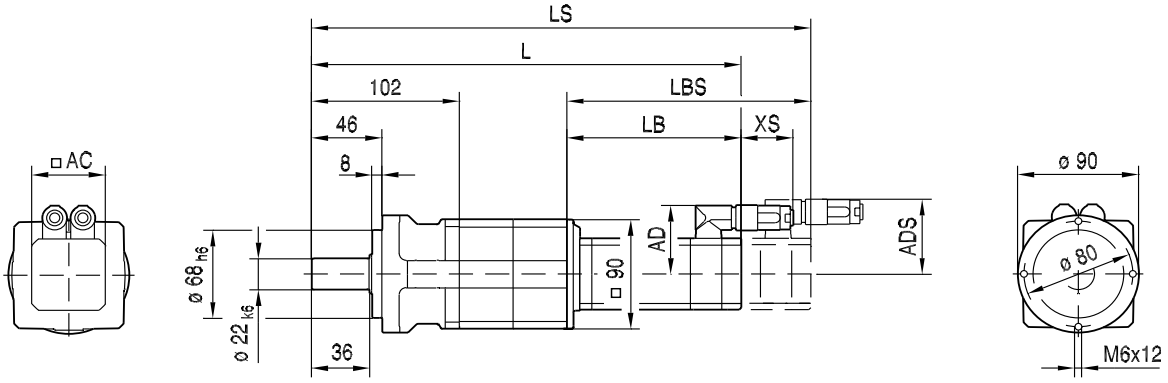

PSCZ

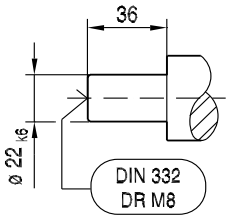

PSKCZ

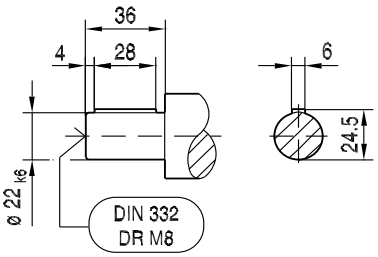

CM..

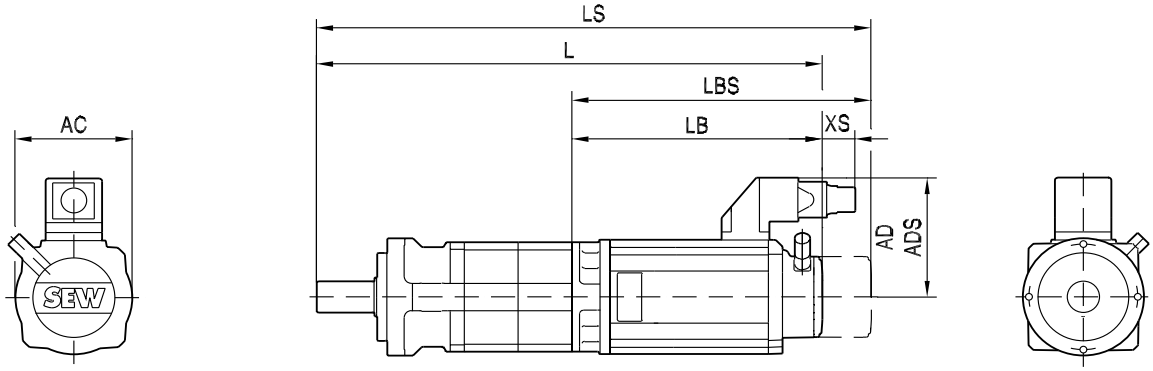

(→ 📖 150)	DS56M	DS56L	DS56H	CM71S	CM71M	CM71L					
AC	73	73	73	117	117	117					
AD	71	71	77	122	122	122					
ADS	77	77	77	122	122	122					
L	325	357	460	425	445	485					
LS	355	387	460	507	527	567					
LB	139	171	274	240	260	300					
LBS	169	201	274	322	342	382					
XS	70	70	51	45	45	45					

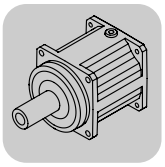

15.6 PS.C521/522 / CMP / DS / CM [Nm]

M_{aDyn} [Nm]		CMP					DS	CM					
	i	50M	50L	63S	63M	63L	56H	71S	71M	71L	90S	90M	90L
PSC521 1	3	31	46	33	64	90	45	49	64	93	118	155	>203
	5	51	76	55	106	150	75	82	106	155	196	>223	>223
	7	71	107	77	148	>209	105	114	149	>209	>209	>209	>209
	10	102	152	110	>199	>199	150	163	>199	>199	>199		
PSC522 2	15	151	>203	163	>203	>203	>203	>203	>203	>203	>203	>203	>203
	21	>203	>203	>203	>203	>203	>203	>203	>203	>203	>203	>203	>203
	25	>223	>223	>223	>223	>223	>223	>223	>223	>223	>223	>223	>223
	30	>203	>203	>203	>203	>203	>203	>203	>203	>203	>203		
	35	>209	>209	>209	>209	>209	>209	>209	>209	>209	>209	>209	>209
	49	>209	>209	>209	>209	>209	>209	>209	>209	>209	>209	>209	>209
	50	>223	>223	>223	>223	>223	>223	>223	>223	>223	>223		
	70	>209	>209	>209	>209	>209	>209	>209	>209	>209	>209		
	100	>199	>199	>199	>199	>199	>199	>199	>199	>199	>199		

m [kg]		CMP					DS	CM					
	s	50M	50L	63S	63M	63L	56H	71S	71M	71L	90S	90M	90L
PSC521	1	10	11	11	13	14	11	16	17	21	27	29	34
PSC522	2	13	14	14	16	17	14	19	20	24	30	32	37

				M1;M3;M5-6			M2			M4			φ
	i	n_{epk} [1/min]	η [%]	a_0	a_1	a_2	a_0	a_1	a_2	a_0	a_1	a_2	[°]
PSC521 1	3	6000	99	408.00	-0.482	0	421.00	-0.522	0	419.00	-0.543	0	10
	5	6000	99	607.00	-0.833	0	620.00	-0.867	0	610.00	-0.887	0	10
	7	6000	99	680.00	-1.083	0	693.00	-1.117	0	690.00	-1.158	0	10
	10	6000	99	781.00	-1.515	0	705.00	-1.383	0	718.00	-1.467	0	10
PSC522 2	15	6000	98	669.00	-2.850	0	661.00	-2.849	0	667.00	-2.913	0	15
	21	6000	98	729.00	-3.600	0	722.00	-3.607	0	729.00	-3.681	0	15
	25	6000	98	1280.0	-8.694	0	1273.0	-8.782	0	1279.0	-8.877	0	15
	30	6000	98	786.00	-4.717	0	782.00	-4.755	0	788.00	-4.830	0	15
	35	6000	98	1399.0	-11.090	0	1382.0	-11.117	0	1391.0	-11.241	0	15
	49	6000	98	1940.0	-21.291	0	1917.0	-21.345	0	1923.0	-21.472	0	15
	50	6000	98	4389.0	-62.376	0	4470.0	-65.385	0	4478.0	-65.603	0	15
	70	6000	98	2117.0	-28.597	0	2107.0	-28.880	0	2112.0	-29.007	0	15
	100	6000	98	2942.0	-56.440	0	2674.0	-52.085	0	2678.0	-52.214	0	15

CMP / DS / CM							c_T	F_{Ramax}	F_{Rapk}
	i	M_{amax} [Nm]	M_{apk} [Nm]	$M_{aNotaus}$ [Nm]	n_{ak} [1/min]	J_G 10^{-4} [kgm^2]	PSC [Nm/°]	PSC [N]	PSC [N]
PSC521 1	3	147	203	305	900	2.1	26.7	2900	6750
	5	181	223	334	360	0.85	28.0	3440	6750
	7	169	209	313	414	0.37	26.5	3850	6750
	10	161	199	298	440	0.18	22.2	4330	6750
PSC522 2	15	147	203	305	467	0.81	21.09	4960	6750
	21	147	203	305	333	0.35	20.66	5550	6750
	25	181	223	334	280	0.76	23.39	5880	6750
	30	147	203	305	233	0.17	19.57	6250	6750
	35	169	209	313	200	0.32	23.01	6580	6750
	49	169	209	313	143	0.31	22.47	6750	6750
	50	181	223	334	140	0.16	22.13	6750	6750
	70	169	209	313	100	0.15	21.8	6750	6750
	100	161	199	298	70	0.15	19.28	6750	6750

15.7 PS.C521/522 / CMP / DS / CM [mm]

57 035 00 07

PSC521..

CMP..

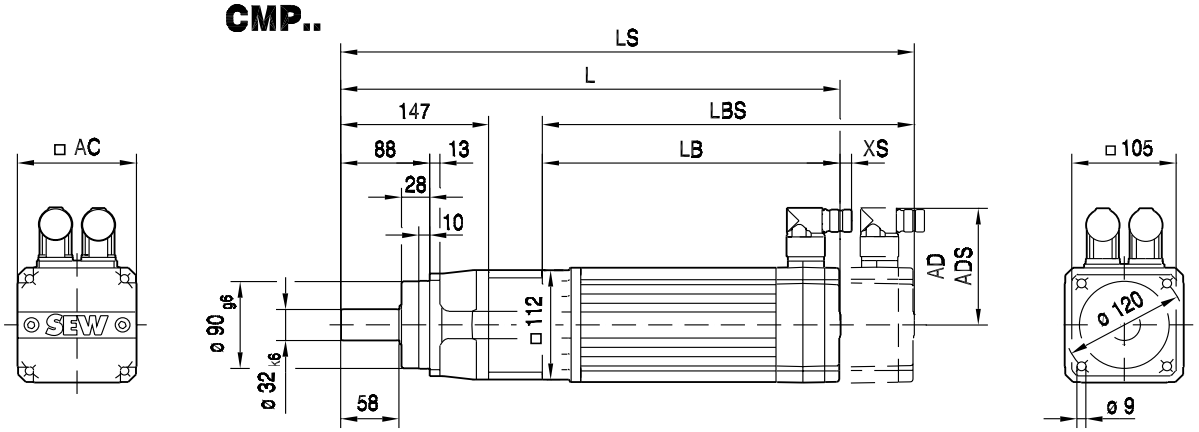

PSC / PSCZ

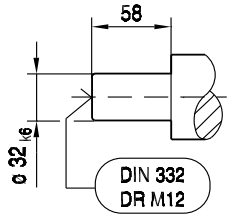

PSKC / PSKCZ

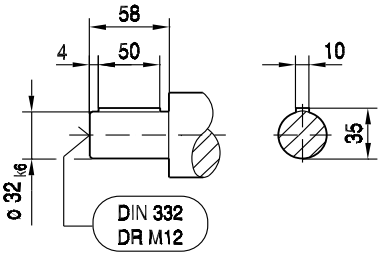

PSCZ521..

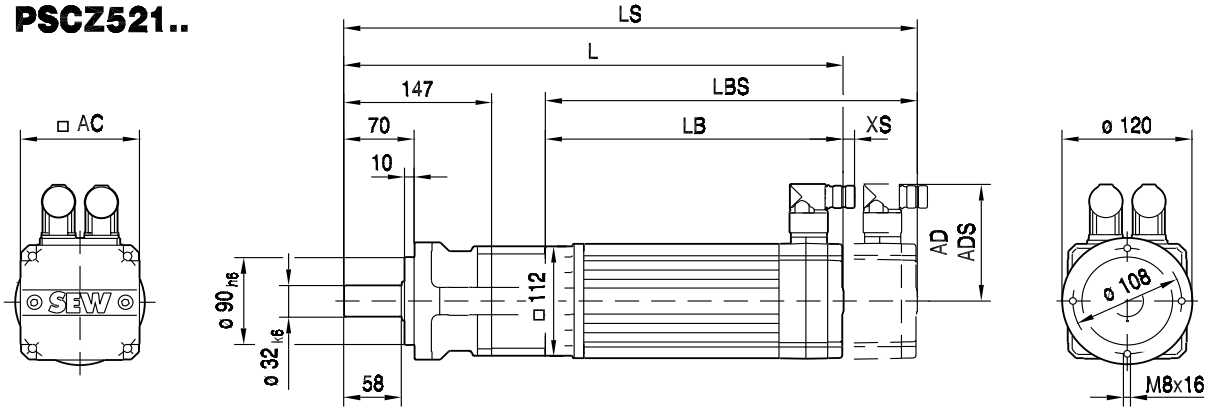

(→ 150)	CMP50M	CMP50L	CMP63S	CMP63M	CMP63L						
AC	73	73	88	88	88						
AD	83	83	92	92	92						
ADS	83	83	92	92	92						
L	381	420	377	427	477						
LS	410	449	405	455	505						
LB	180	219	176	226	276						
LBS	209	248	205	255	305						
XS	18	18	14	14	14						

57 036 00 07

PSC522..

CMP..

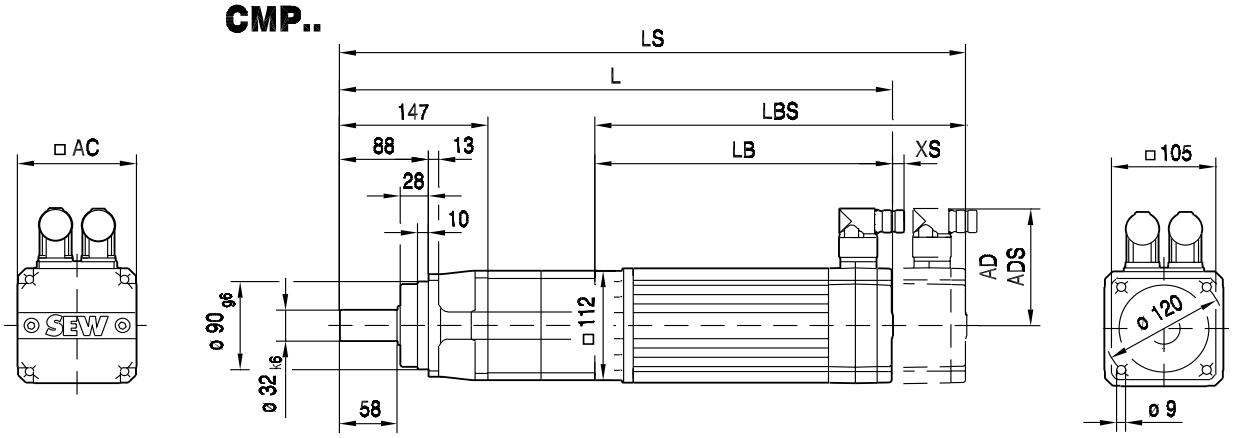

PSC / PSCZ

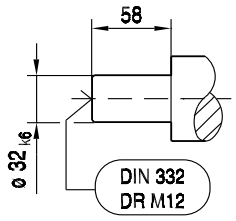

PSKC / PSCKZ

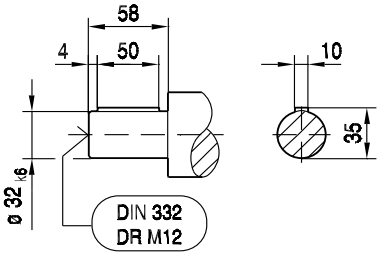

PSCZ522..

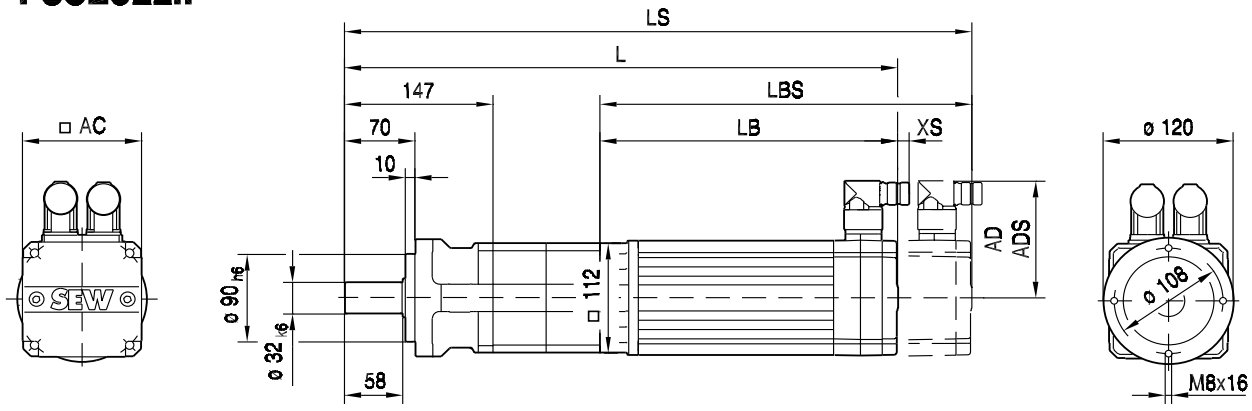

(→ 📖 150)	CMP50M	CMP50L	CMP63S	CMP63M	CMP63L						
AC	73	73	88	88	88						
AD	83	83	92	92	92						
ADS	83	83	92	92	92						
L	434	473	430	480	530						
LS	463	502	458	508	558						
LB	180	219	176	226	276						
LBS	209	248	205	255	305						
XS	18	18	14	14	14						

57 043 00 07

PSC521..

DS56..

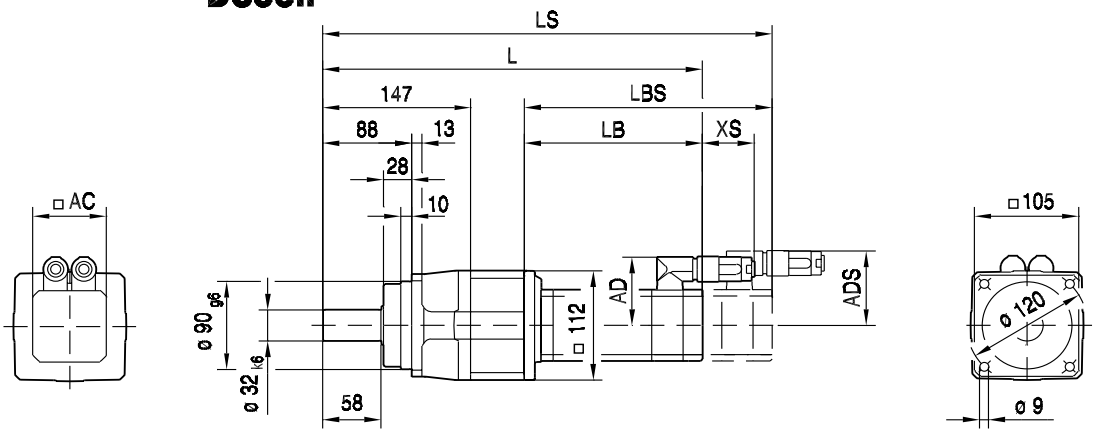

PSC

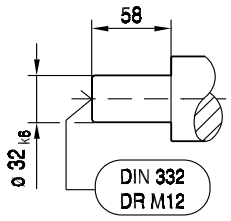

PSKC

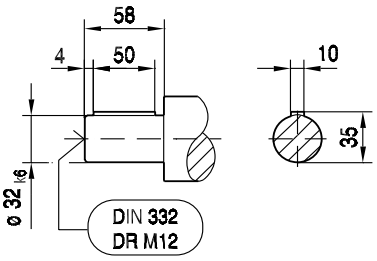

CM..

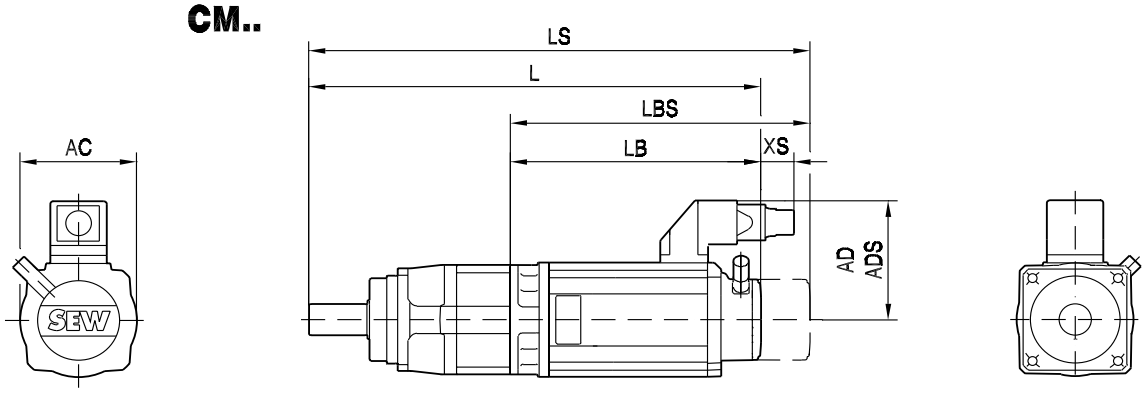

(→ 📖 150)	DS56H	CM71S	CM71M	CM71L	CM90S	CM90M	CM90L				
AC	73	117	117	117	142	142	142				
AD	77	122	122	122	140	140	140				
ADS	77	122	122	122	140	140	140				
L	469	435	455	495	487	514	568				
LS	469	517	537	577	582	609	663				
LB	269	235	255	295	287	314	368				
LBS	269	317	337	377	382	409	463				
XS	51	45	45	45	50	50	50				

57 044 00 07

PSC522..

DS56..

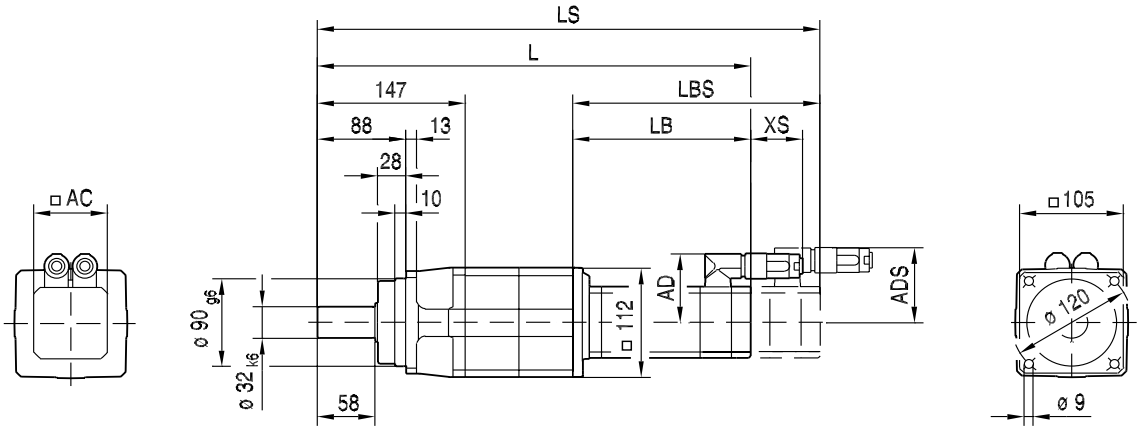

PSC

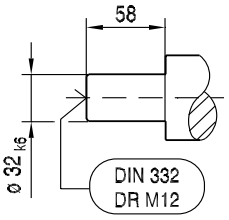

PSKC

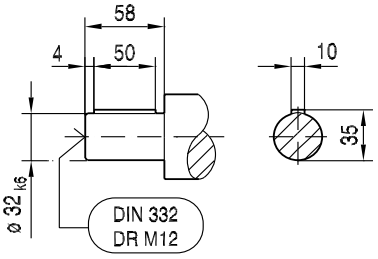

CM..

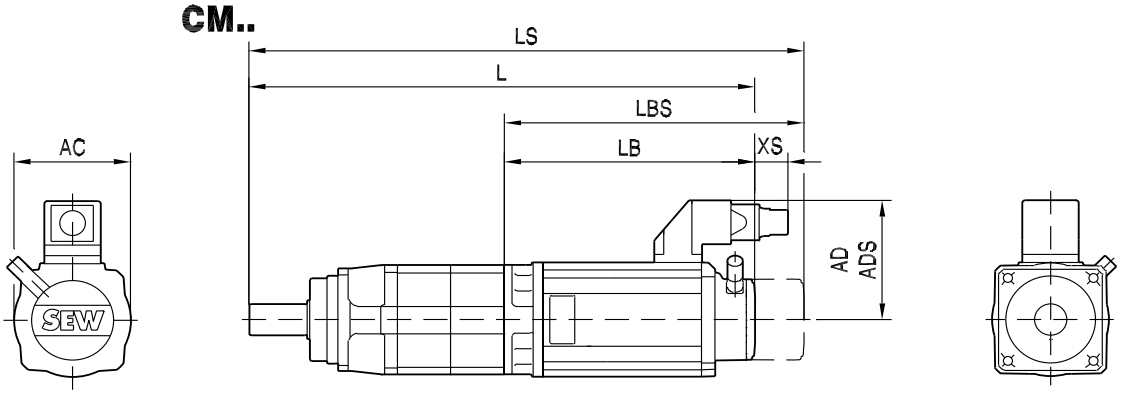

(→ 📖 150)	DS56H	CM71S	CM71M	CM71L	CM90S	CM90M	CM90L				
AC	73	117	117	117	142	142	142				
AD	77	122	122	122	140	140	140				
ADS	77	122	122	122	140	140	140				
L	522	488	508	548	540	567	621				
LS	522	570	590	630	635	662	716				
LB	269	235	255	295	287	314	368				
LBS	269	317	337	377	382	409	463				
XS	51	45	45	45	50	50	50				

57 051 00 07

PSCZ521..

DS56..

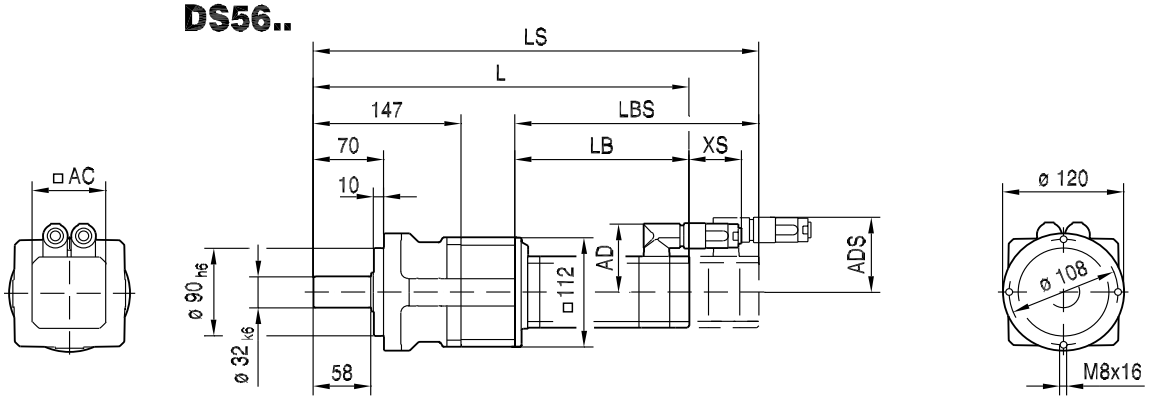

PSCZ

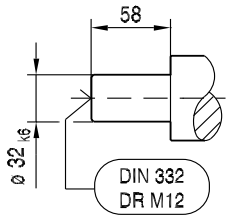

PSKCZ

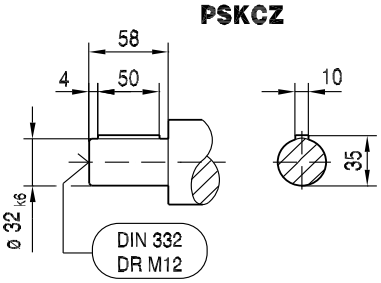

CM..

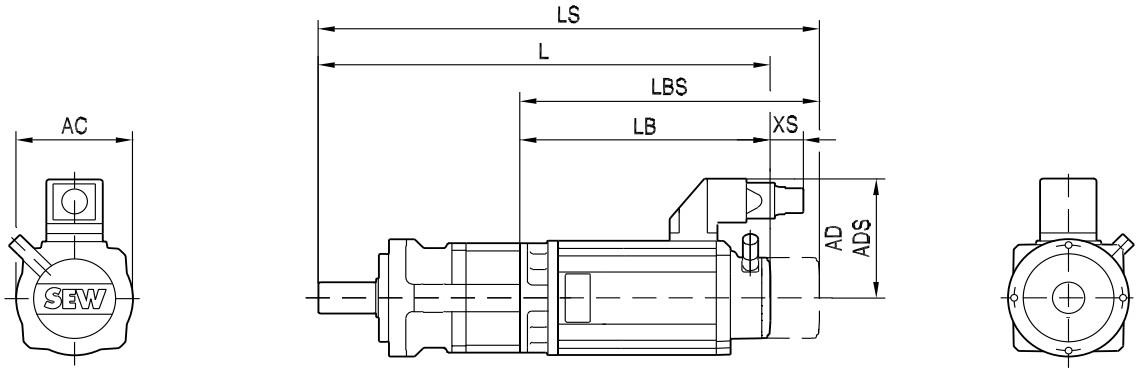

(→ 📖 150)	DS56H	CM71S	CM71M	CM71L	CM90S	CM90M	CM90L				
AC	73	117	117	117	142	142	142				
AD	77	122	122	122	140	140	140				
ADS	77	122	122	122	140	140	140				
L	469	435	455	495	487	514	568				
LS	469	517	537	577	582	609	663				
LB	269	235	255	295	287	314	368				
LBS	269	317	337	377	382	409	463				
XS	51	45	45	45	50	50	50				

57 052 00 07

PSCZ522..

DS56..

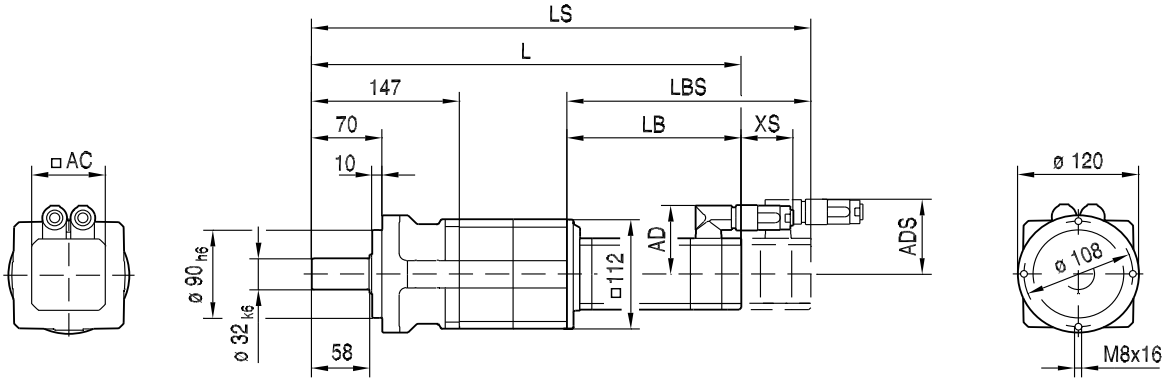

PSCZ

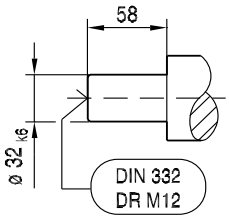

PSKCZ

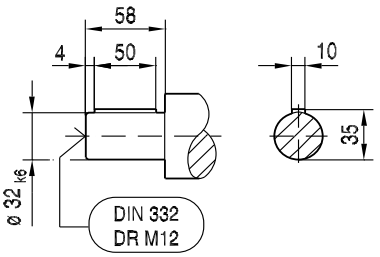

CM..

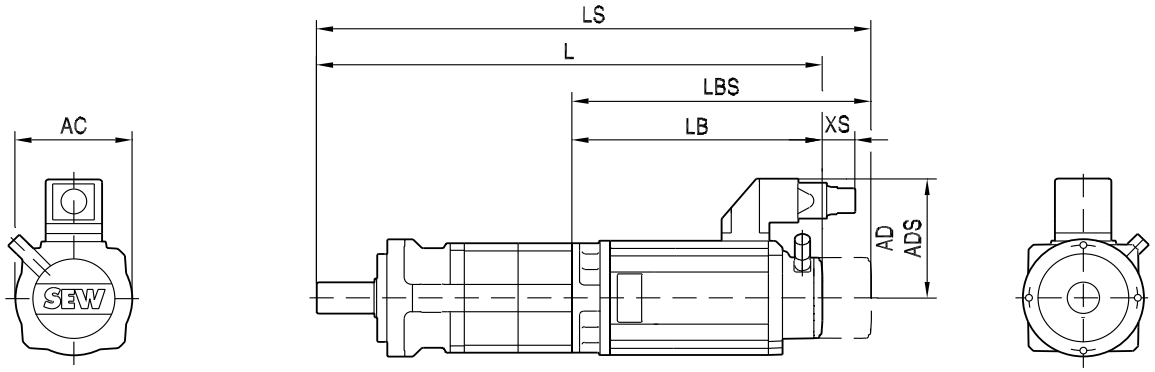

(→ 📖 150)	DS56H	CM71S	CM71M	CM71L	CM90S	CM90M	CM90L				
AC	73	117	117	117	142	142	142				
AD	77	122	122	122	140	140	140				
ADS	77	122	122	122	140	140	140				
L	522	488	508	548	540	567	621				
LS	522	570	590	630	635	662	716				
LB	269	235	255	295	287	314	368				
LBS	269	317	337	377	382	409	463				
XS	51	45	45	45	50	50	50				

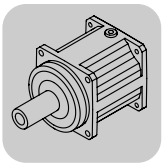

15.8 PS.C621/622 / CMP / CM [Nm]

M_{aDyn} [Nm]		CMP	CM							
	i	63L	71L	90S	90M	90L	112S	112M	112L	112H
PSC621 1	5	150	155	196	258	374	407	>427	>427	>427
	7	211	218	274	362	>398	>398	>398		
	10	301	311	>380	>380	>380				
PSC622 2	25	>427	>427	>427	>427	>427	>427	>427	>427	>427
	35	>398	>398	>398	>398	>398	>398	>398		
	49	>398	>398	>398	>398	>398	>398	>398		
	50	>427	>427	>427	>427	>427				
	70	>398	>398	>398	>398	>398				
	100	>380	>380	>380	>380	>380				

m [kg]		CMP	CM							
	s	63L	71L	90S	90M	90L	112S	112M	112L	112H
PSC621	1	19	26	32	34	39	42	46	62	69
PSC622	2	25	31	37	40	45	47	51	67	74

				M1;M3;M5-6			M2			M4			φ
	i	n_{epk} [1/min]	η [%]	a_0	a_1	a_2	a_0	a_1	a_2	a_0	a_1	a_2	[']
PSC621 1	5	5000	99	1028.0	-1.462	0	1050.0	-1.528	0	1024.0	-1.567	0	10
	7	5000	99	1139.0	-1.828	0	1163.0	-1.895	0	1164.0	-2.016	0	10
	10	5000	99	1094.0	-1.884	0	1108.0	-1.918	0	1123.0	-2.071	0	10
PSC622 2	25	5000	98	2054.0	-14.465	0	2207.0	-16.130	0	2213.0	-16.299	0	15
	35	5000	98	2307.0	-18.628	0	2506.0	-20.911	0	2520.0	-21.172	0	15
	49	5000	98	3179.0	-35.478	0	3438.0	-39.458	0	3453.0	-39.784	0	15
	50	5000	98	6285.0	-89.733	0	6539.0	-98.165	0	6553.0	-98.609	0	15
	70	5000	98	3140.0	-37.381	0	3408.0	-41.677	0	3421.0	-42.001	0	15
	100	5000	98	4084.0	-68.968	0	4441.0	-76.856	0	4451.0	-77.198	0	15

CMP / CM							c_T	F_{Ramax}	F_{Rapk}
	i	M_{amax} [Nm]	M_{apk} [Nm]	$M_{aNotaus}$ [Nm]	n_{ak} [1/min]	J_G 10^{-4} [kgm^2]	PSC [Nm/']	PSC [N]	PSC [N]
PSC621 1	5	347	427	640	820	2.2	59.8	5390	11000
	7	323	398	597	929	1.2	54.8	6030	11000
	10	308	380	569	700	0.58	46.3	6790	11000
PSC622 2	25	347	427	640	280	1.8	51.47	9220	11000
	35	323	398	597	200	0.96	50.73	10300	11000
	49	323	398	597	143	0.94	47.92	11000	11000
	50	347	427	640	140	0.48	48.97	11000	11000
	70	323	398	597	100	0.46	46.67	11000	11000
	100	308	380	569	70	0.46	40.87	11000	11000

15.9 PS.C621/622 / CMP / CM [mm]

57 037 00 07

PSC621..

CMP..

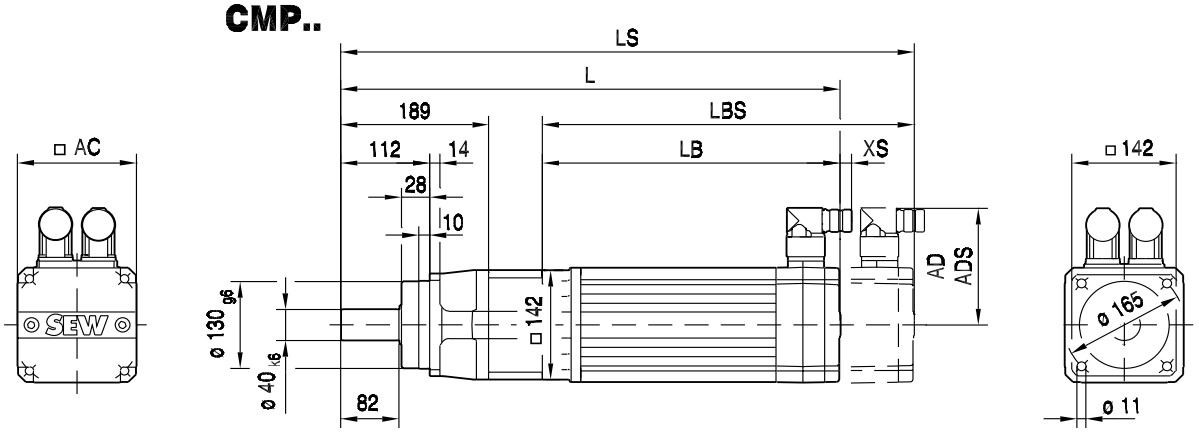

PSC / PSCZ

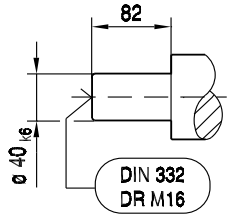

PSKC / PSKCZ

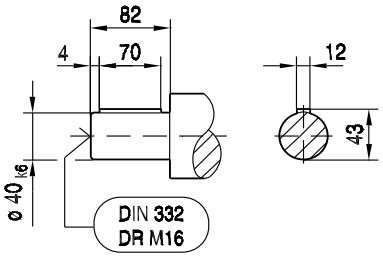

PSCZ621..

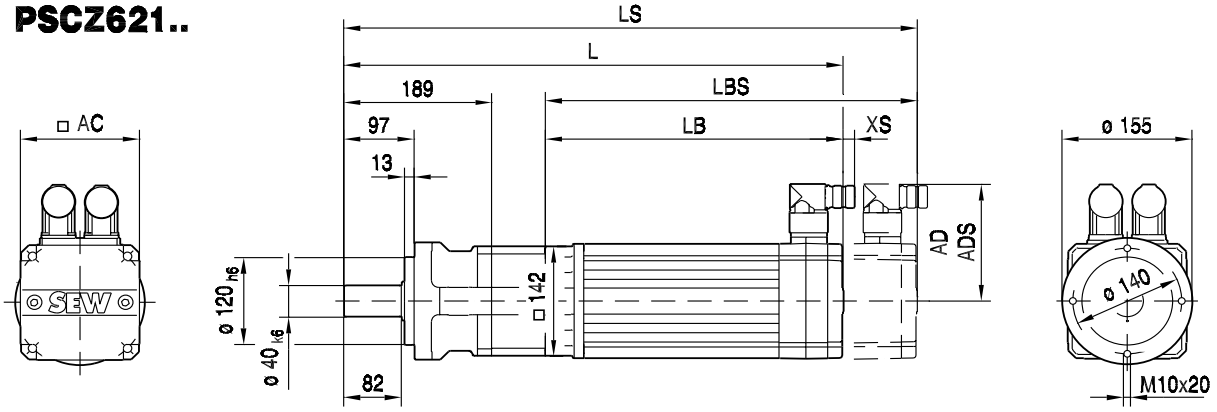

(→ 150)	CMP63L										
AC	88										
AD	92										
ADS	92										
L	516										
LS	545										
LB	268										
LBS	297										
XS	14										

57 038 00 07

PSC622..

CMP..

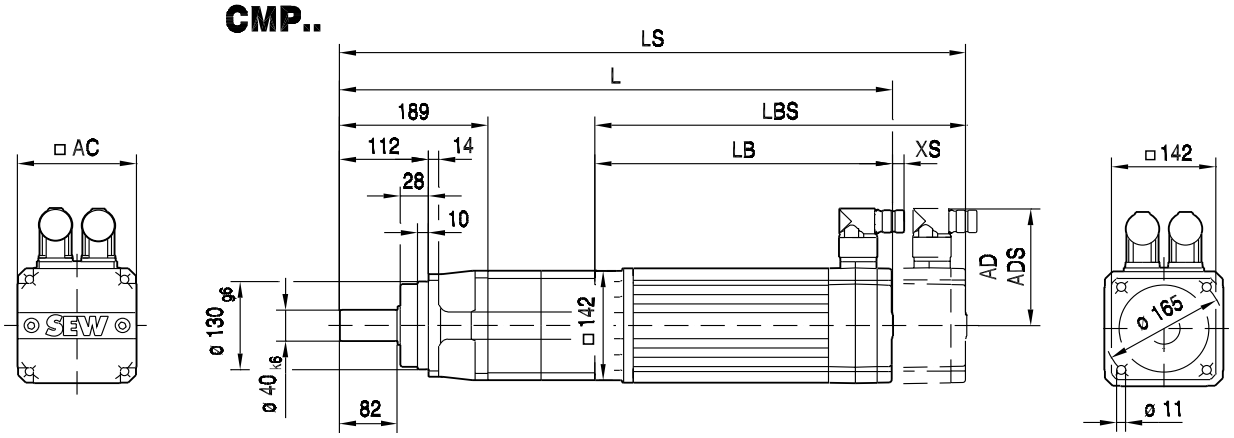

PSC / PSCZ

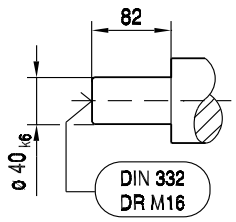

PSKC / PSCKZ

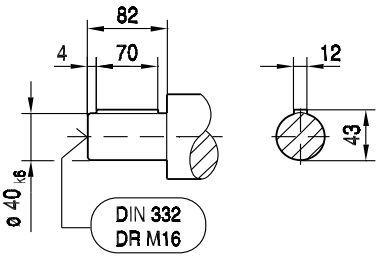

PSCZ622..

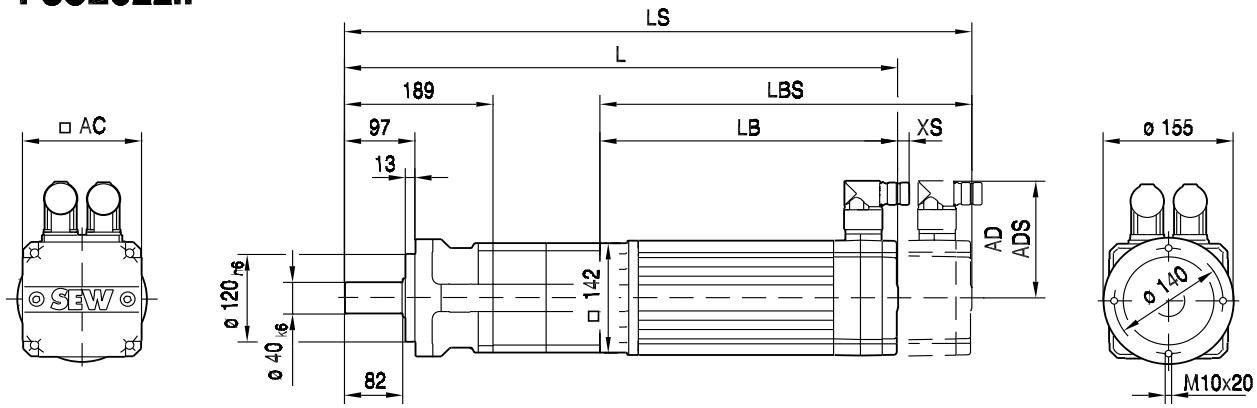

(→ 150)	CMP63L										
AC	88										
AD	92										
ADS	92										
L	575										
LS	604										
LB	268										
LBS	297										
XS	14										

57 045 00 07

PSC621..

CM..

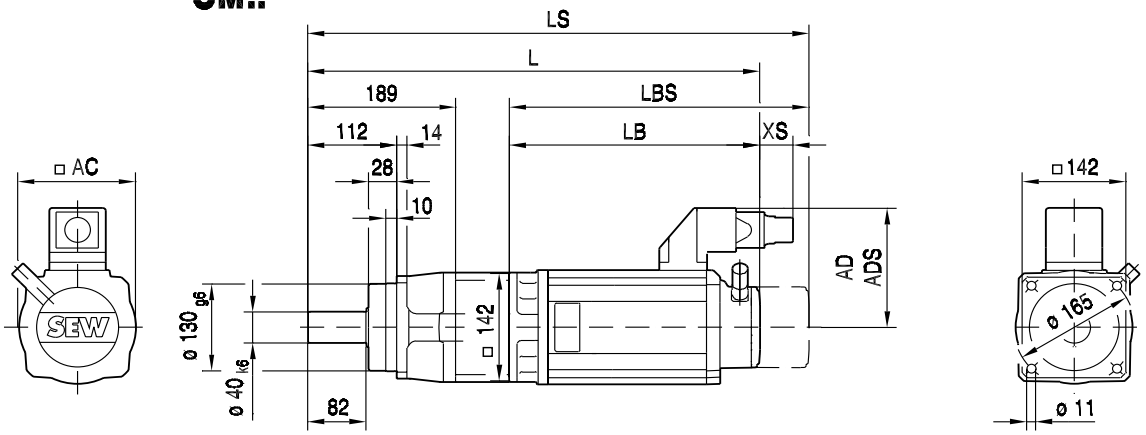

PSC

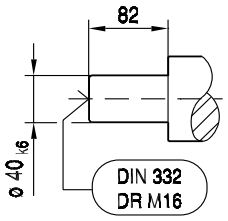

PSKC

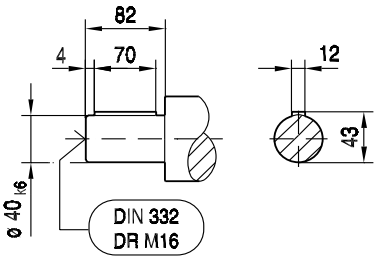

(→ 📖 150)	CM71L	CM90S	CM90M	CM90L	CM112S	CM112M	CM112L	CM112H			
AC	117	142	142	142	186	186	186	186			
AD	122	140	140	140	162	162	162	162			
ADS	122	140	140	140	162	162	162	162			
L	534	527	554	608	561	588	645	771			
LS	617	622	649	703	652	679	736	836			
LB	287	279	306	360	314	341	398	523			
LBS	369	374	401	455	404	431	488	588			
XS	45	50	50	50	36	36	36	36			

57 046 00 07

PSC622..

CM..

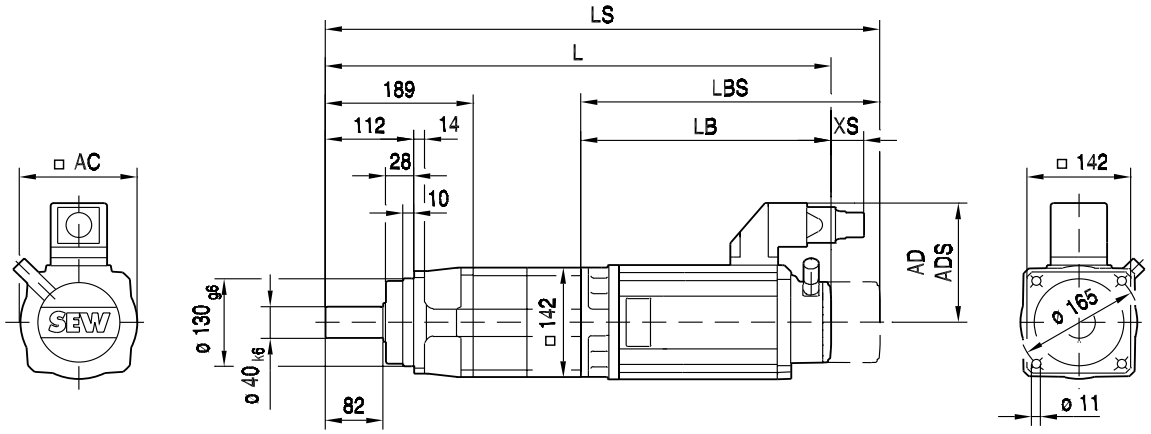

PSC

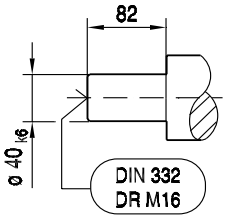

PSKC

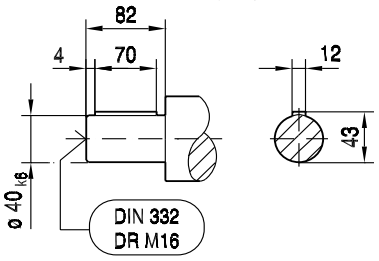

(→ 📖 150)	CM71L	CM90S	CM90M	CM90L	CM112S	CM112M	CM112L	CM112H			
AC	117	142	142	142	186	186	186	186			
AD	122	140	140	140	162	162	162	162			
ADS	122	140	140	140	162	162	162	162			
L	594	586	613	667	621	648	705	830			
LS	676	681	708	762	711	738	795	895			
LB	287	279	306	360	314	341	398	523			
LBS	369	374	401	455	404	431	488	588			
XS	45	50	50	50	36	36	36	36			

57 053 00 07

PSCZ621

CM..

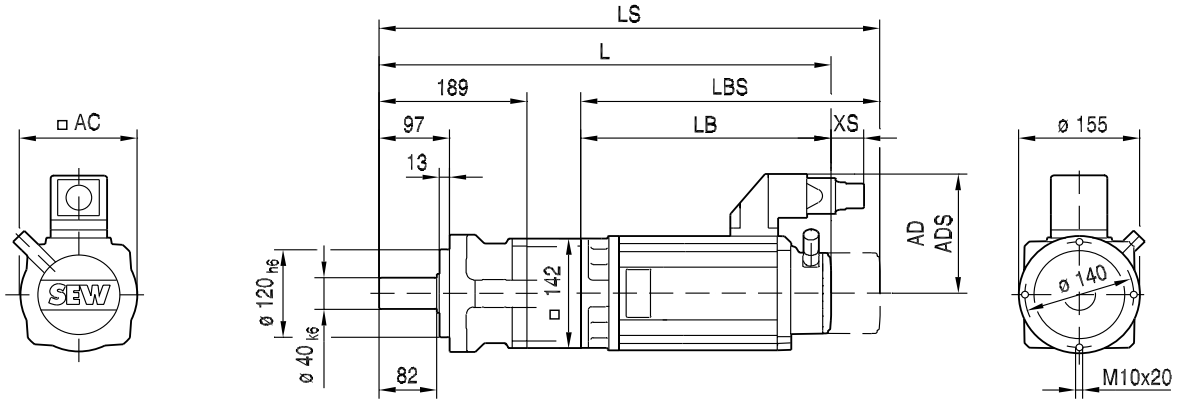

PSCZ

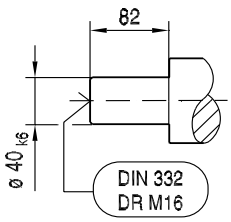

PSKCZ

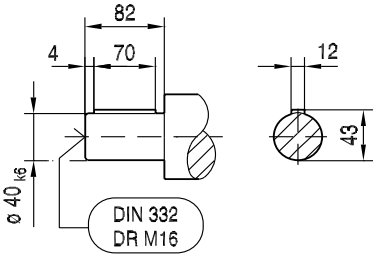

(→ 📖 150)	CM71L	CM90S	CM90M	CM90L	CM112S	CM112M	CM112L	CM112H			
AC	117	142	142	142	186	186	186	186			
AD	122	140	140	140	162	162	162	162			
ADS	122	140	140	140	162	162	162	162			
L	534	527	554	608	561	588	645	771			
LS	617	622	649	703	652	679	736	836			
LB	287	279	306	360	314	341	398	523			
LBS	369	374	401	455	404	431	488	588			
XS	45	50	50	50	36	36	36	36			

57 054 00 07

PSCZ622..

CM..

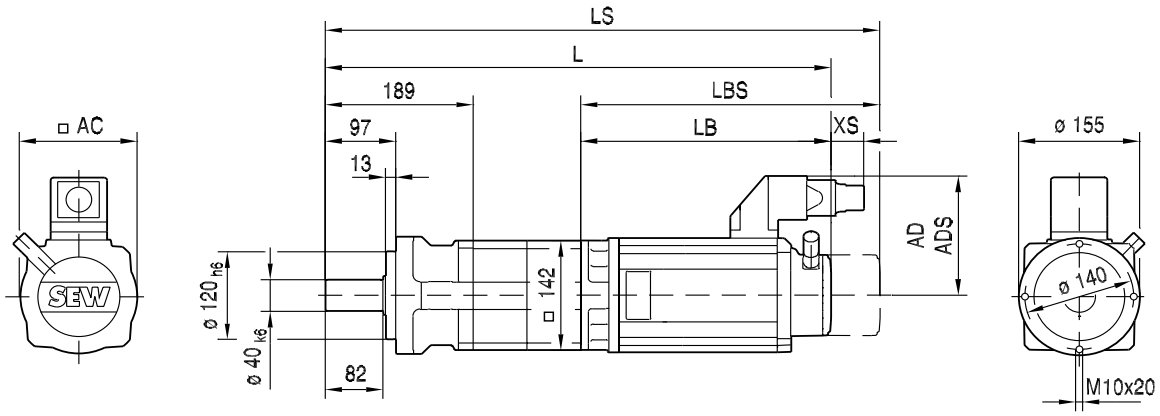

PSCZ

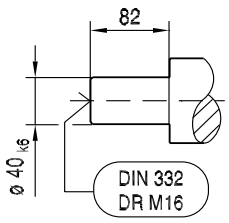

PSKCZ

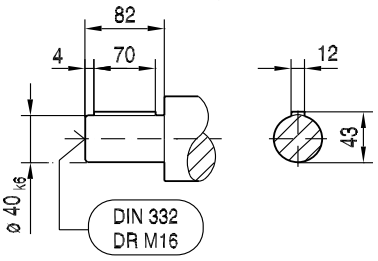

(→ 📖 150)	CM71L	CM90S	CM90M	CM90L	CM112S	CM112M	CM112L	CM112H			
AC	117	142	142	142	186	186	186	186			
AD	122	140	140	140	162	162	162	162			
ADS	122	140	140	140	162	162	162	162			
L	594	586	613	667	621	648	705	830			
LS	676	681	708	762	711	738	795	895			
LB	287	279	306	360	314	341	398	523			
LBS	369	374	401	455	404	431	488	588			
XS	45	50	50	50	36	36	36	36			

16 Main Technical Data of the Servomotors

Key to the technical data

n_N	Rated speed
M_0	Standstill torque (thermal continuous torque at low speeds)
I_0	Standstill current
M_{pk}	Dynamic limit torque
I_{max}	Maximum permitted motor current
M_{0VR}	Standstill torque with forced cooling fan
I_{0VR}	Standstill current with forced cooling fan
J_{mot}	Mass moment of inertia of the motor
J_{bmot}	Mass moment of inertia of the brakemotor
M_{B1}	Standard braking torque
M_{B2}	Optional braking torque
W_{max1}	Maximum possible braking work with standard braking torque during a maintenance interval
W_{max2}	Maximum possible braking work with optional braking torque during a maintenance interval
L_1	Inductivity between connection phase and star point
R_1	Resistance between connection phase and star point
U_{p0} cold	Internal voltage at 1000 min^{-1}
m_{mot}	Mass of the motor
m_{bmot}	Mass of the brake motor

16.1 Technical data of DFS/CFM motors

Synchronous servomotors with 400 V system voltage

n_N	Motor	M_0	I_0	M_{pk}	I_{max}	M_{0VR}	I_{0VR}	J_{mot}	J_{bmot}	M_{B1}	M_{B2}	W_{max1}	W_{max2}
[min^{-1}]		[Nm]	[A]	[Nm]	[A]	[Nm]	[A]	[10^{-4} kgm^2]		[Nm]		[kJ]	
2000	**CFM71S**	5	2.2	16.5	8.8	7.3	3.2	4.89	6.65	10	5	18	22
	CFM71M	6.5	3	21.5	12	9.4	4.2	6.27	8.03	14	7	15	20
	CFM71L	9.5	4.2	31.4	16.8	13.8	6.1	9.02	10.8	14	10	15	18
	CFM90S	11	4.9	39.6	19.6	16	7.1	17.4	21.2	28	14	17	24
	CFM90M	14.5	6.9	52.2	28	21	10	22.3	26.1	40	20	10.5	19.5
	CFM90L	21	9.9	75.6	40	30.5	14.4	32.1	35.9	40	28	10.5	17
	CFM112S	23.5	10	82.3	40	34	14.5	68.4	84	55	28	32	48
	CFM112M	31	13.5	108.5	54	45	19.6	88.2	104	90	40	18	44
	CFM112L	45	20	157.5	80	65	29	128	143	90	55	18	32
	CFM112H	68	30.5	238.0	122	95	42.5	190	209	90	55	18	32
3000	**DFS56M**	1	1.65	3.8	6.6	–	–	0.48	0.83	2.5	–	–	–
	DFS56L	2	2.4	7.6	9.6	–	–	0.83	1.18	2.5	–	–	–
	DFS56H	4	2.8	15.2	11.2	–	–	1.53	1.88	5	–	–	–
	CFM71S	5	3.3	16.5	13.2	7.3	4.8	4.89	6.65	10	5	14	20
	CFM71M	6.5	4.3	21.5	17.2	9.4	6.2	6.27	8.03	14	7	11	18
	CFM71L	9.5	6.2	31.4	25	13.8	9	9.02	10.8	14	10	11	14
	CFM90S	11	7.3	39.6	29	16	10.6	17.4	21.2	28	14	10	20
	CFM90M	14.5	10.1	52.2	40	21	14.6	22.3	26.1	40	20	4.5	15
	CFM90L	21	14.4	75.6	58	30.5	21	32.1	35.9	40	28	4.5	10
	CFM112S	23.5	15	82.3	60	34	22	68.4	84	55	28	18	36
	CFM112M	31	20.5	108.5	82	45	30	88.2	104	90	40	7	32
	CFM112L	45	30	157.5	120	65	44	128	143	90	55	7	18
	CFM112H	68	43	238.0	172	95	60	190	209	90	55	7	18
4500	**DFS56M**	1	1.65	3.8	6.6	–	–	0.48	0.83	2.5	–	–	–
	DFS56L	2	2.4	7.6	9.6	–	–	0.83	1.18	2.5	–	–	–
	DFS56H	4	4	15.2	16	–	–	1.53	1.88	5	–	–	–
	CFM71S	5	4.9	16.5	19.6	7.3	7.2	4.89	6.65	10	5	10	16
	CFM71M	6.5	6.6	21.5	26	9.4	9.6	6.27	8.03	14	7	6	14
	CFM71L	9.5	9.6	31.4	38	13.8	14	9.02	10.8	14	10	6	10
	CFM90S	11	11.1	39.6	44	16	16.2	17.4	21.2	28	14	5	15
	CFM90M	14.5	14.7	52.2	59	21	21.5	22.3	26.1	40	20	3	9
	CFM90L	21	21.6	75.6	86	30.5	31.5	32.1	35.9	40	28	3	5
	CFM112S	23.5	22.5	82.3	90	34	32.5	68.4	84	55	25	11	22
	CFM112M	31	30	108.5	120	45	44	88.2	104	90	40	4	18
	CFM112L	45	46	157.5	184	65	67	128	143	90	55	4	11
	CFM112H	68	66	238.0	264	95	92	190	209	90	55	4	11
6000	**DFS56M**	1	1.65	3.8	6.6	–	–	0.48	0.83	2.5	–	–	–
	DFS56L	2	2.75	7.6	11	–	–	0.83	1.18	2.5	–	–	–
	DFS56H	4	5.3	15.2	21	–	–	1.53	1.88	5	–	–	–
	CFM71S	5	6.5	16.5	26	7.3	9.5	4.89	–	–	–	–	–
	CFM71M	6.5	8.6	21.5	34	9.4	12.5	6.27	–	–	–	–	–
	CFM71L	9.5	12.5	31.4	50	13.8	18.2	9.02	–	–	–	–	–
	CFM90S	11	14.5	39.6	58	16	21	17.4	–	–	–	–	–
	CFM90M	14.5	19.8	52.2	79	21	29	22.3	–	–	–	–	–
	CFM90L	21	29.5	75.6	118	30.5	43	32.1	–	–	–	–	–

n_N	Motor	L_1	R_1	U_{p0}	m_{mot}	m_{bmot}
[min^{-1}]		[mH]	[?Ω]	[V/1000 min^{-1}]	[kg]	
2000	**CFM71S**	52	7090	151	9.5	11.8
	CFM71M	36	4440	148	10.8	13.0
	CFM71L	24	2500	152	13.0	15.3
	CFM90S	18	1910	147	15.7	19.6
	CFM90M	12.1	1180	141	17.8	21.6
	CFM90L	8.4	692	146	21.9	26.5
	CFM112S	10	731	155	26.2	31.8
	CFM112M	7.5	453	153	30.5	36.0
	CFM112L	4.6	240	151	39.3	44.9
	CFM112H	2.6	115	147	54.2	59.8
3000	**DFS56M**	9.7	5700	40	2.8	2.9
	DFS56L	8.8	3700	56	3.5	3.6
	DFS56H	12.7	4500	97	4.8	5.3
	CFM71S	23	3150	101	9.5	11.8
	CFM71M	16	2000	100	10.8	13.0
	CFM71L	11	1120	102	13.0	15.3
	CFM90S	8.1	838	98	15.7	19.6
	CFM90M	5.7	533	96	17.8	21.6
	CFM90L	3.9	324	99	21.9	26.5
	CFM112S	4.6	325	103	26.2	31.8
	CFM112M	3.1	193	99	30.5	36.0
	CFM112L	2	103	101	39.3	44.9
	CFM112H	1.3	57	104	54.2	59.8
4500	**DFS56M**	9.7	5700	40	2.8	2.9
	DFS56L	8.8	3700	56	3.5	3.6
	DFS56H	6.2	2200	67.5	4.8	5.3
	CFM71S	10	1380	66	9.5	11.8
	CFM71M	6.9	828	64	10.8	13.0
	CFM71L	4.9	446	65	13.0	15.3
	CFM90S	3.45	358	64	15.7	19.6
	CFM90M	2.65	249	65	17.8	21.6
	CFM90L	1.73	148	66	21.9	26.5
	CFM112S	2	149	69	26.2	31.8
	CFM112M	1.5	92	68	30.5	36.0
	CFM112L	0.85	44	66	39.3	44.9
	CFM112H	0.54	24	67	54.2	59.8
6000	**DFS56M**	9.70	5700	40	2.8	2.9
	DFS56L	6.80	2800	49	3.5	3.6
	DFS56H	3.50	1200	50.5	4.8	5.3
	CFM71S	5.75	780	50	9.5	–
	CFM71M	3.93	493	49	10.8	–
	CFM71L	2.68	277	50	13.0	–
	CFM90S	2.03	212	49	15.7	–
	CFM90M	1.48	136	48	17.8	–
	CFM90L	0.93	77	48	21.9	–

Synchronous servomotors with 230 V system voltage

n_N	Motor	M_0	I_0	M_{pk}	I_{max}	M_{0VR}	I_{0VR}	J_{mot}	J_{bmot}	M_{B1}	M_{B2}	W_{max1}	W_{max2}
[min^{-1}]		[Nm]	[A]	[Nm]	[A]	[Nm]	[A]	[10^{-4} kgm^2]		[Nm]		[kJ]	
2000	**CFM71S**	5	3.95	16.5	15.8	7.3	5.7	4.89	6.65	10	5	18	22
	CFM71M	6.5	5.3	21.5	21	9.4	7.7	6.27	8.03	14	7	15	20
	CFM71L	9.5	7.4	31.4	29.5	13.8	10.7	9.02	10.8	14	10	15	18
	CFM90S	11	8.7	39.6	35	16	12.6	17.4	21.2	28	14	17	24
	CFM90M	14.5	12.1	52.2	48.5	21	17.5	22.3	26.1	40	20	10.5	19.5
	CFM90L	21	17.1	75.6	68	30.5	25	32.1	35.9	40	28	10.5	17
	CFM112S	23.5	18	82.3	72	34	26	68.4	84	55	28	32	48
	CFM112M	31	24.5	108.5	98	45	35.5	88.2	104	90	40	18	44
	CFM112L	45	35.5	157.5	142	65	51	128	143	90	55	18	32
3000	**DFS56M**	1	1.65	3.8	6.6	–	–	0.48	0.83	2.5	–	–	–
	DFS56L	2	2.4	7.6	9.6	–	–	0.83	1.18	2.5	–	–	–
	CFM71S	5	5.9	16.5	23.5	7.3	8.6	4.89	6.65	10	5	14	20
	CFM71M	6.5	7.6	21.5	30.5	9.4	11	6.27	8.03	14	7	11	18
	CFM71L	9.5	11.1	31.4	44.5	13.8	16.1	9.02	10.8	14	10	11	14
	CFM90S	11	12.7	39.6	51	16	18.4	17.4	21.2	28	14	10	20
	CFM90M	14.5	17.4	52.2	70	21	25	22.3	26.1	40	20	4.5	15
	CFM90L	21	25.5	75.6	102	30.5	37	32.1	35.9	40	28	4.5	10
	CFM112S	23.5	27	82.3	108	34	39	68.4	84	55	28	18	36
	CFM112M	31	35	108.5	140	45	51	88.2	104	90	40	7	32
	CFM112L	45	48	157.5	192	65	70	128	143	90	55	7	18
4500	**CFM71S**	5	8.5	16.5	34	7.3	12.3	4.89	6.65	10	5	10	16
	CFM71M	6.5	11.3	21.5	45	9.4	16.4	6.27	8.03	14	7	6	14
	CFM71L	9.5	17.1	31.4	68	13.8	25	9.02	10.8	14	10	6	10
	CFM90S	11	18.9	39.6	76	16	27.5	17.4	21.2	28	14	5	15
	CFM90M	14.5	26	52.2	104	21	37.5	22.3	26.1	40	20	3	9
	CFM90L	21	39	75.6	156	30.5	57	32.1	35.9	40	28	3	5
	CFM112S	23.5	38.5	82.3	154	34	56	68.4	84	55	25	11	22
	CFM112M	31	54	108.5	216	45	78	88.2	104	90	40	4	18
6000	**CFM71S**	5	11.6	16.5	46.5	7.3	16.8	4.89	–	–	–	–	–
	CFM71M	6.5	14.1	21.5	56	9.4	20.5	6.27	–	–	–	–	–
	CFM71L	9.5	21.5	31.4	86	13.8	31	9.02	–	–	–	–	–
	CFM90S	11	23.5	39.6	94	16	34	17.4	–	–	–	–	–
	CFM90M	14.5	37	52.2	148	21	54	22.3	–	–	–	–	–
	CFM90L	21	51	75.6	204	30.5	74	32.1	–	–	–	–	–

n_N	Motor	L_1	R_1	U_{p0}	m_{mot}	m_{bmot}
[min^{-1}]		[mH]	[?Ω]	[V/1000 min^{-1}]	[kg]	
2000	**CFM71S**	16.3	2188	85	9.5	11.8
	CFM71M	11.4	1394	83	10.8	13.0
	CFM71L	7.7	802	86	13.0	15.3
	CFM90S	5.7	593	83	15.7	19.6
	CFM90M	3.95	382	81	17.8	21.6
	CFM90L	2.80	236	85	21.9	26.5
	CFM112S	3.10	225	86	26.2	31.8
	CFM112M	2.25	127	84	30.5	36.0
	CFM112L	1.46	76	85	39.3	44.9
3000	**DFS56M**	9.7	5700	40	2.8	2.9
	DFS56L	8.8	3700	56	3.5	3.6
	CFM71S	7.2	973	57	9.5	11.8
	CFM71M	5.2	642	57	10.8	13.0
	CFM71L	3.45	347	57	13.0	15.3
	CFM90S	2.7	271	57	15.7	19.6
	CFM90M	1.91	182	56	17.8	21.6
	CFM90L	1.24	105	56	21.9	26.5
	CFM112S	1.42	100	57	26.2	31.8
	CFM112M	1.08	67	58	30.5	36.0
	CFM112L	0.78	35	63	39.3	44.9
4500	**CFM71S**	3.30	449	38	9.5	11.8
	CFM71M	2.35	278	37.5	10.8	13.0
	CFM71L	1.55	149	36.5	13.0	15.3
	CFM90S	1.19	124	37.5	15.7	19.6
	CFM90M	0.84	81	36.5	17.8	21.6
	CFM90L	0.53	48	36.5	21.9	26.5
	CFM112S	0.68	50	40.5	26.2	31.8
	CFM112M	0.465	28	38	30.5	36.0
6000	**CFM71S**	1.80	243	28	9.5	–
	CFM71M	1.47	175	30	10.8	–
	CFM71L	0.91	89	29	13.0	–
	CFM90S	0.77	78	30	15.7	–
	CFM90M	0.42	42	25.5	17.8	–
	CFM90L	0.31	26	28	21.9	–

16.2 Technical data of CMP motors

Synchronous servomotors with 400 V system voltage

n_N	Motor	M_0	I_0	M_{pk}	I_{max}	M_{0VR}	I_{0VR}	J_{mot}	J_{bmot}	M_{B1}	M_{B2}	L_1	R_1	U_{p0} cold
[min^{-1}]		[Nm]	[A]	[Nm]	[A]	[Nm]	[A]	[kgcm^2]		[Nm]		[mH]	Ω	[V]
3000	CMP40S	0.5	1.2	1.9	6.1	–	–	0.1	0.13	0.95	–	23	11.94	27.5
	CMP40M	0.8	0.95	3.8	6.0	–	–	0.15	0.18	0.95	–	45.5	19.92	56
	CMP50S	1.3	0.96	5.2	5.1	1.7	1.25	0.42	0.48	3.1	4.3	71	22.49	86
	CMP50M	2.4	1.68	10.3	9.6	3.5	2.45	0.67	0.73	4.3	3.1	38.5	9.98	90
	CMP50L	3.3	2.2	15.4	13.6	4.8	3.2	0.92	0.99	4.3	3.1	30.5	7.41	98
	CMP63S	2.9	2.15	11.1	12.9	4	3	1.15	1.49	7	9.3	36.5	6.79	90
	CMP63M	5.3	3.6	21.4	21.6	7.5	5.1	1.92	2.26	9.3	7	22	3.57	100
	CMP63L	7.1	4.95	30.4	29.7	10.3	7.2	2.69	3.03	9.3	7	14.2	2.07	100
4500	CMP40S	0.5	1.2	1.9	6.1	–	–	0.1	0.13	0.85	–	23	11.94	27.5
	CMP40M	0.8	0.95	3.8	6.0	–	–	0.15	0.18	0.95	–	45.5	19.92	56
	CMP50S	1.3	1.32	5.2	7.0	1.7	1.7	0.42	0.48	3.1	4.3	37	11.6	62
	CMP50M	2.4	2.3	10.3	13.1	3.5	3.35	0.67	0.73	4.3	3.1	20.5	5.29	66
	CMP50L	3.3	3.15	15.4	19.5	4.8	4.6	0.92	0.99	4.3	3.1	14.6	3.56	68
	CMP63S	2.9	3.05	11.1	18.3	4	4.2	1.15	1.49	7	9.3	18.3	3.34	64
	CMP63M	5.3	5.4	21.4	32.4	7.5	7.6	1.92	2.26	9.3	7	9.8	1.49	67
	CMP63L	7.1	6.9	30.4	41.4	10.3	10	2.69	3.03	9.3	7	7.2	1.07	71
6000	CMP40S	0.5	1.2	1.9	6.1	–	–	0.1	0.13	0.95	–	23	11.94	27.5
	CMP40M	0.8	1.1	3.8	6.9	–	–	0.15	0.18	0.95	–	34	14.95	48.5
	CMP50S	1.3	1.7	5.2	9.0	1.7	2.2	0.42	0.48	3.1	4.3	22.5	7.11	48.5
	CMP50M	2.4	3	10.3	17.1	3.5	4.4	0.67	0.73	4.3	3.1	12	3.21	50.5
	CMP50L	3.3	4.2	15.4	26	4.8	6.1	0.92	0.99	4.3	3.1	8.2	1.91	51
	CMP63S	2.9	3.9	11.1	23.4	4	5.4	1.15	–	–	–	11.2	2.1	50
	CMP63M	5.3	6.9	21.4	41.4	7.5	9.8	1.92	–	–	–	5.9	0.92	52
	CMP63L	7.1	9.3	30.4	55.8	10.3	13.5	2.69	–	–	–	4	0.62	53

Motor	m_{mot} [kg]	m_{bmot} [kg]
CMP40S	1.3	1.7
CMP40M	1.6	2
CMP50S	2.3	2.9
CMP50M	3.3	3.9
CMP50L	4.1	4.7
CMP63S	4	5
CMP63M	5.7	6.7
CMP63L	7.5	8.5

17 Abbreviation Key and Index

17.1 Abbreviation key

For a detailed list of abbreviations used, refer to chapter 3 "Project Planning Notes for Servo Gearmotors".

17.2 Index

A

Abbreviation key 40, 664
Additional documentation 9
Ambient temperature
BS.F, PS.F, PS.C gear units 18
R, F, K, S, W gear units 15

B

Brakemotors 10
Breather valves 151

C

Chamfers of flange block gear units 153
Changing the mounting position 68
Churning losses 47, 81
Coating 10
Condition monitoring
Technical data 135
Content of this publication 9
Corrosion protection 11
Covers, fixed 133

D

Data for drive and gear unit selection 40
Definition of force application for BS.F, PS.F, PS.C gear units 52
Definition of sides A and B for the output shafts . 70
Design variants
Helical gearmotors 23
Designs, possible
Reduced backlash 16
Spiroplan® gearmotors 17
Diagnostic unit
DUV10A vibration sensor 137
Oil sensor DUO10A 135
Direction of rotation of output shaft 67, 71
Documentation, additional 9, 39

E

Efficiency of R, F, K, S, W gear units 46
Extended storage 13
Eyebolts, suspension eye lugs 151

F

Fastening the gear unit 129
Fill quantities
BS.F 146
PS.F 147
Fill quantities depending on the mounting positions
BS.F.. 146
PS.F.. 147
Fill quantities for R, F, K, S, W gear units 141
Fill quantity tolerances
BS.F 146
PS.F 148
Flange contours FAF.., KAF.., SAF.. and WAF.. 132
Flange contours FF.., KF.., SF.. and WF.. 131
Flange contours RF.. and R..F 130
Force application, definition 49
Front-end mounting of BS.F..B gear units 153

G

Gear unit
Extended storage 13
Gearmotor dimensions 153
Motor dimensions 153
General notes
BS.F, PS.F, PS.C gear units 18
R, F, K, S, W gear units 15

H

Helical gear unit
Unit designation 20, 32
Helical gear units
Unit designation 32
Helical gearmotors
Mounting positions 82
Types 23
Helical-bevel gear unit
Unit designation 21
Helical-bevel gearmotors
Mounting positions 90
Types 26
Helical-worm gear unit
Unit designation 21
Helical-worm gearmotors
Mounting positions 95
Types 28
Higher permitted overhung loads
BS.F, PS.F, PS.C gear units 52
R, F, K, S, W gear units 48
Hollow shaft, shouldered with shrink disc 122

I

Important notes on selection tables and dimension sheets 149
Installation of gear units with hollow shaft and key
Supplied fastening parts 115
Use the SEW installation/removal set 116
International markets 10

K

KS corrosion protection 11

L

Lubricant table
Gear unit oil for the BS.F servo gear units 146
Gear unit oil for the PS.F servo gear units 147
Lubricants
General information 138, 145
Lubricant table 140
Lubricants and fill quantities
BS.F, PS.F, PS.C gear units 145

R, F, K, S, W gear units 138

M

Main technical data of the servomotors 658
CMP motors 663
DFS/CFM motors 659
Key 658
Mounting positions
BS.F.. servo gear units 69
Helical-bevel gearmotors 90
Helical-worm gearmotors 95
Parallel shaft helical gearmotors 87
Planetary gearmotors 113
Spiroplan® gearmotors 101
Mounting system TorqLOC® 120

N

NOCO® fluid 13
Notes on mounting positions for BS.F, PS.F, PS.C gear units 69
Notes on mounting positions for R, F, K, S, W gear units 66
Notes on the combination overviews 149
Notes on the gearmotor dimension sheets 150

O

Oil aging sensor
Technical data and part numbers 135
Order information for servo gearmotors
BS.F, PS.F, PS.C gear units 70
R, F, K, S, W gear units 67
Order information for servomotors 72
Overhung and axial loads of R, F, K, S, W gear units 48
Overhung load calculation for BS.F, PS.F, PS.C gear units 51
Overhung load conversion
BS.F, PS.F, PS.C gear units 53
Gear unit constants for BS.F, PS.F, PS.C gear units 54
Gear unit constants of R, F, K, S, W gear units 50
Overview of types and unit designation 20
BS.F gear units 32
Helical gearmotors 23
R, F, K, S, W gear units 20

P

Parallel shaft helical gear unit
Unit designation 20
Parallel shaft helical gearmotors
Mounting positions 87
Types 24
Permitted axial load 49
Permitted axial loads for BS.F, PS.F, PS.C gear units 52
Permitted overhung load
BS.F, PS.F, PS.C gear units 52
R, F, K, S, W gear units 48
Plug connector for CFM motors
Cable entry with plug connector 73
Position of the cable entry 72
Plug connector for CMP servo motors
Position of the cable entry 79
Plug connector for DFS motors
Cable entry with plug connector 77
Plug connectors for CFM motors 72
Position of power plug connector and cable entry 72
Plug connectors for DFS motors 76
Position of power plug connector and cable entry 76
Plug connectors of CMP servomotors 79
Plug connectors of DFS motors
Position of the cable entry 76
Position of output end in right-angle gear units .. 68
Position of output shaft and output flange 67
Position of the torque arm 152
Product description
BS.F, PS.F, PS.C gear units 18
R, F, K, S, W gear units 15
Product groups 7
Project planning for drives
Additional documentation 39
Project planning of gear units
Off-center force application, overhung load conversion 49
Project planning procedure 41
Part 1, servo gear units 42
Part 2, servo gear units 43
Part 3, servomotors 44
Part 4, servomotors 45
Protection measures 12

R

Reduced backlash gear units 16
Removal of gear units with hollow shaft and key
using the SEW installation/removal set 118
Rolling bearing greases 139
Rubber buffer for FA/FH/FV/FT 152

S

Self-locking helical-worm or Spiroplan® gear units 46
SEW-EURODRIVE
Group of companies 6
Products 7
Systems 7
Shrink disk connection 151
Special protection measures 12
Spiroplan gearmotors
Types 30
Spiroplan® gear unit
Unit designation 22
Spiroplan® gearmotors 17

Mounting positions 101
Splined hollow shaft 152
Storage conditions 14
Surface protection 11
Surface protection OS 12

T

Terminal box 78
Tolerances 150
Flange block gear units 153
Flanges 151
Hollow shafts 151
Multiple-spline shafts 151
Shaft ends 150
Shaft heights 150
TorqLOC® mounting system 120
Torque arm 152
Torque arms
Available torque arms 129
Design proposals 129
Types
Helical-bevel gearmotors 26
Helical-worm gearmotors 28
Parallel shaft helical gearmotors 24
Spiroplan® gearmotors 30

U

Unit designation
Condition monitoring 22
Helical gear unit 20, 32
Helical gear units 32
Helical-bevel gear unit 21
Helical-worm gear unit 21
Options 22
Parallel shaft helical gear unit 20
Spiroplan® gear unit 22
Unit designation of servo gearmotors
PS.C gear units 36

V

Vibration sensor
Technical data and part numbers 137

W

Weight specifications 10

18 Address Directory

Germany			
Headquarters **Production** **Sales**	**Bruchsal**	SEW-EURODRIVE GmbH & Co KG Ernst-Blickle-Straße 42 D-76646 Bruchsal P.O. Box Postfach 3023 • D-76642 Bruchsal	Tel. +49 7251 75-0 Fax +49 7251 75-1970 http://www.sew-eurodrive.de sew@sew-eurodrive.de
Production	**Graben**	SEW-EURODRIVE GmbH & Co KG Ernst-Blickle-Straße 1 D-76676 Graben-Neudorf P.O. Box Postfach 1220 • D-76671 Graben-Neudorf	Tel. +49 7251 75-0 Fax +49 7251 75-2970
	Östringen	SEW-EURODRIVE Östringen GmbH Franz-Gurk-Straße 2 D-76684 Östringen P.O. Box Postfach 1174 • D-76677 Östringen	Tel. +49 7253 92540 Fax +49 7253 925490 oestringen@sew-eurodrive.de
Service Competence Center	**Central**	SEW-EURODRIVE GmbH & Co KG Ernst-Blickle-Straße 1 D-76676 Graben-Neudorf	Tel. +49 7251 75-1710 Fax +49 7251 75-1711 sc-mitte@sew-eurodrive.de
	North	SEW-EURODRIVE GmbH & Co KG Alte Ricklinger Straße 40-42 D-30823 Garbsen (near Hannover)	Tel. +49 5137 8798-30 Fax +49 5137 8798-55 sc-nord@sew-eurodrive.de
	East	SEW-EURODRIVE GmbH & Co KG Dänkritzer Weg 1 D-08393 Meerane (near Zwickau)	Tel. +49 3764 7606-0 Fax +49 3764 7606-30 sc-ost@sew-eurodrive.de
	South	SEW-EURODRIVE GmbH & Co KG Domagkstraße 5 D-85551 Kirchheim (near München)	Tel. +49 89 909552-10 Fax +49 89 909552-50 sc-sued@sew-eurodrive.de
	West	SEW-EURODRIVE GmbH & Co KG Siemensstraße 1 D-40764 Langenfeld (near Düsseldorf)	Tel. +49 2173 8507-30 Fax +49 2173 8507-55 sc-west@sew-eurodrive.de
	Electronics	SEW-EURODRIVE GmbH & Co KG Ernst-Blickle-Straße 42 D-76646 Bruchsal	Tel. +49 7251 75-1780 Fax +49 7251 75-1769 sc-elektronik@sew-eurodrive.de
	Drive Service Hotline / 24 Hour Service		+49 180 5 SEWHELP +49 180 5 7394357
Technical Offices	**Augsburg**	SEW-EURODRIVE GmbH & Co KG August-Wessels-Straße 29 D-86156 Augsburg	Tel. +49 821 22779-10 Fax +49 821 22779-50 tb-augsburg@sew-eurodrive.de
	Berlin	SEW-EURODRIVE GmbH & Co KG Lilienthalstraße 3a D-12529 Schönefeld	Tel. +49 33762 2266-30 Fax +49 33762 2266-36 tb-berlin@sew-eurodrive.de
	Bodensee	SEW-EURODRIVE GmbH & Co KG Burgbergring 91 D-88662 Überlingen	Tel. +49 7551 9226-30 Fax +49 7551 9226-56 tb-bodensee@sew-eurodrive.de
	Bremen	SEW-EURODRIVE GmbH & Co KG Bornstr.19 ... 22 D-28195 Bremen	Tel. +49 421 33918-10 Fax +49 421 33918-22 tb-bremen@sew-eurodrive.de
	Dortmund	SEW-EURODRIVE GmbH & Co KG Hildastraße 10 D-44145 Dortmund	Tel. +49 231 912050-10 Fax +49 231 912050-20 tb-dortmund@sew-eurodrive.de
	Dresden	SEW-EURODRIVE GmbH & Co KG Hauptstraße 32 D-01445 Radebeul	Tel. +49 351 26338-0 Fax +49 351 26338-38 tb-dresden@sew-eurodrive.de

Germany			
	Erfurt	SEW-EURODRIVE GmbH & Co KG Blumenstraße 70 D-99092 Erfurt	Tel. +49 361 21709-70 Fax +49 361 21709-79 tb-erfurt@sew-eurodrive.de
	Güstrow	SEW-EURODRIVE GmbH & Co KG Thünenweg 19 D-18273 Güstrow P.O. Box Postfach 1216 • D-18262 Güstrow	Tel. +49 3843 8557-80 Fax +49 3843 8557-88 tb-guestrow@sew-eurodrive.de
	Hamburg	SEW-EURODRIVE GmbH & Co KG Bramfelder Straße 119 D-22305 Hamburg	Tel. +49 40 298109-60 Fax +49 40 298109-70 tb-hamburg@sew-eurodrive.de
	Hannover/ Garbsen	SEW-EURODRIVE GmbH & Co KG Alte Ricklinger Str.40-42 D-30823 Garbsen P.O. Box Postfach 1104 53 • D-30804 Garbsen	Tel. +49 5137 8798-10 Fax +49 5137 8798-50 tb-hannover@sew-eurodrive.de
	Heilbronn	SEW-EURODRIVE GmbH & Co KG Zeppelinstraße 7 D-74357 Bönnigheim P.O. Box Postfach 68 • D-74355 Bönnigheim	Tel. +49 7143 8738-0 Fax +49 7143 8738-25 tb-heilbronn@sew-eurodrive.de
	Herford	SEW-EURODRIVE GmbH & Co KG Radewiger Straße 21 D-32052 Herford P.O. Box Postfach 4108 • D-32025 Herford	Tel. +49 5221 9141-0 Fax +49 5221 9141-20 tb-herford@sew-eurodrive.de
	Karlsruhe	SEW-EURODRIVE GmbH & Co KG Ettlinger Weg 2 D-76467 Bietigheim P.O. Box Postfach 43 • D-76463 Bietigheim	Tel. +49 7245 9190-10 Fax +49 7245 9190-20 tb-karlsruhe@sew-eurodrive.de
	Kassel	SEW-EURODRIVE GmbH & Co KG Lange Straße 14 D-34253 Lohfelden	Tel. +49 561 95144-80 Fax +49 561 95144-90 tb-kassel@sew-eurodrive.de
	Koblenz	SEW-EURODRIVE GmbH & Co KG Bahnstraße 17a D-56743 Mendig	Tel. +49 2652 9713-30 Fax +49 2652 9713-40 tb-koblenz@sew-eurodrive.de
	Lahr	SEW-EURODRIVE GmbH & Co KG Europastraße 3/1 D-77933 Lahr / Schwarzwald	Tel. +49 7821 90999-60 Fax +49 7821 90999-79 tb-lahr@sew-eurodrive.de
	Langenfeld	SEW-EURODRIVE GmbH & Co KG Siemensstraße 1 D-40764 Langenfeld	Tel. +49 2173 8507-10 Fax +49 2173 8507-50 tb-langenfeld@sew-eurodrive.de
	Magdeburg	SEW-EURODRIVE GmbH & Co KG Breiteweg 53 D-39789 Barleben	Tel. +49 39203 7577-1 Fax +49 39203 7577-9 tb-magdeburg@sew-eurodrive.de
	Mannheim	SEW-EURODRIVE GmbH & Co KG Radeberger Straße 2 D-68309 Mannheim	Tel. +49 621 71683-10 Fax +49 621 71683-22 tb-mannheim@sew-eurodrive.de
	München	SEW-EURODRIVE GmbH & Co KG Domagkstraße 5 D-85551 Kirchheim	Tel. +49 89 90955-110 Fax +49 89 90955-150 tb-muenchen@sew-eurodrive.de
	Münster	SEW-EURODRIVE GmbH & Co KG Von-Vincke-Straße 14 D-48143 Münster	Tel. +49 251 41475-11 Fax +49 251 41475-50 tb-muenster@sew-eurodrive.de



Germany			
	Nürnberg	SEW-EURODRIVE GmbH & Co KG Plattenäckerweg 6 D-90455 Nürnberg	Tel. +49 911 98884-50 Fax +49 911 98884-60 tb-nuernberg@sew-eurodrive.de
	Regensburg	SEW-EURODRIVE GmbH & Co KG Im Gewerbepark A15 D-93059 Regensburg	Tel. +49 941 46668-68 Fax +49 941 46668-66 tb-regensburg@sew-eurodrive.de
	Rhein-Main	SEW-EURODRIVE GmbH & Co KG Niederstedter Weg 5 D-61348 Bad Homburg	Tel. +49 6172 9617-0 Fax +49 6172 9617-50 tb-rheinmain@sew-eurodrive.de
	Stuttgart	SEW-EURODRIVE GmbH & Co KG Friedrich-List-Straße 46 D-70771 Leinfelden-Echterdingen	Tel. +49 711 16072-0 Fax +49 711 16072-72 tb-stuttgart@sew-eurodrive.de
	Ulm	SEW-EURODRIVE GmbH & Co KG Dieselstraße 14 D-89160 Dornstadt	Tel. +49 7348 9885-0 Fax +49 7348 9885-90 tb-ulm@sew-eurodrive.de
	Würzburg	SEW-EURODRIVE GmbH & Co KG Nürnbergerstraße 118 D-97076 Würzburg-Lengfeld	Tel. +49 931 27886-60 Fax +49 931 27886-66 tb-wuerzburg@sew-eurodrive.de
	Zwickau / Meerane	SEW-EURODRIVE GmbH & Co KG Dänkritzer Weg1 D-08393 Meerane	Tel. +49 3764 7606-0 Fax +49 3764 7606-20 tb-zwickau@sew-eurodrive.de

France			
Production **Sales** **Service**	**Haguenau**	SEW-USOCOME 48-54, route de Soufflenheim B. P. 20185 F-67506 Haguenau Cedex	Tel. +33 3 88 73 67 00 Fax +33 3 88 73 66 00 http://www.usocome.com sew@usocome.com
Production	**Forbach**	SEW-EUROCOME Zone Industrielle Technopôle Forbach Sud B. P. 30269 F-57604 Forbach Cedex	Tel. +33 3 87 29 38 00
Assembly **Sales** **Service**	**Bordeaux**	SEW-USOCOME Parc d'activités de Magellan 62, avenue de Magellan - B. P. 182 F-33607 Pessac Cedex	Tel. +33 5 57 26 39 00 Fax +33 5 57 26 39 09
	Lyon	SEW-USOCOME Parc d'Affaires Roosevelt Rue Jacques Tati F-69120 Vaulx en Velin	Tel. +33 4 72 15 37 00 Fax +33 4 72 15 37 15
	Paris	SEW-USOCOME Zone industrielle 2, rue Denis Papin F-77390 Verneuil l'Etang	Tel. +33 1 64 42 40 80 Fax +33 1 64 42 40 88
Technical Offices	**Alsace Franche-Comté**	SEW-USOCOME 1, rue Auguste Gasser F-68360 Soultz	Tel. +33 3 89 74 51 62 Fax +33 3 89 76 58 71
	Alsace Nord	SEW-USOCOME 15, rue Mambourg F-68240 Sigolsheim	Tel. +33 3 89 78 45 11 Fax +33 3 89 78 45 12
	Aquitaine	SEW-USOCOME Parc d'activités de Magellan 62, avenue de Magellan B.P.182 F-33607 Pessac Cedex	Tel. +33 5 57 26 39 00 Fax +33 5 57 26 39 09

France			
	Ardennes Lorraine	SEW-USOCOME 7, rue de Prény F-54000 Nancy	Tel. +33 3 83 96 28 04 Fax +33 3 83 96 28 07
	Bourgogne	SEW-USOCOME 10, rue de la Poste F-71350 Saint Loup Géanges	Tel. +33 3 85 49 92 18 Fax +33 3 85 49 92 19
	Bretagne Ouest	SEW-USOCOME 4, rue des Châtaigniers F-44830 Brains	Tel. +33 2 51 70 54 04 Fax +33 2 51 70 54 05
	Centre Auvergne	SEW-USOCOME 27, avenue du Colombier F-19150 Laguenne	Tel. +33 5 55 20 12 10 Fax +33 5 55 20 12 11
	Centre Pays de Loire	SEW-USOCOME 9, rue des Erables F-37540 Saint Cyr sur Loire	Tel. +33 2 47 41 33 23 Fax +33 2 47 41 34 03
	Champagne	SEW-USOCOME Impasse des Ouises F-10120 Saint André les Vergers	Tel. +33 3 25 79 63 24 Fax +33 3 25 79 63 25
	Lyon Nord-Est	SEW-USOCOME Parc d'Affaires Roosevelt Rue Jacques Tati F-69120 Vaulx en Velin	Tel. +33 4 72 15 37 03 Fax +33 4 72 15 37 15
	Lyon Ouest	SEW-USOCOME Parc d'Affaires Roosevelt Rue Jacques Tati F-69120 Vaulx en Velin	Tel. +33 4 72 15 37 04 Fax +33 4 72 15 37 15
	Lyon Sud-Est	SEW-USOCOME Montée de la Garenne F-26750 Génissieux	Tel. +33 4 75 05 65 95 Fax +33 4 75 05 65 96
	Nord	SEW-USOCOME 348, rue Léon Garet F-62520 Le Touquet	Tel. +33 3 21 90 21 40 Fax +33 3 21 90 21 44
	Normandie	SEW-USOCOME 5 rue de la Limare F-14250 Brouay	Tel. +33 2 31 37 92 86 Fax +33 2 31 74 68 15
	Paris Est	SEW-USOCOME Résidence Le Bois de Grâce 2, allée des Souches Vertes F-77420 Champs sur Marne	Tel. +33 1 64 68 40 50 Fax +33 1 64 68 45 00
	Paris Ouest	SEW-USOCOME 42 avenue Jean Jaurès F-78580 Maule	Tel. +33 1 30 90 89 86 Fax +33 1 30 90 93 15
	Paris Picardie	SEW-USOCOME 25 bis, rue Kléber F-92300 Levallois Perret	Tel. +33 1 41 05 92 74 Fax +33 1 41 05 92 75
	Paris Sud	SEW-USOCOME 6. chemin des Bergers Lieu-dit Marchais F-91410 Roinville sous Dourdan	Tel. +33 1 60 81 10 56 Fax +33 1 60 81 10 57
	Provence	SEW-USOCOME Résidence Les Hespérides Bât. B2 67, boulevard des Alpes F-13012 Marseille	Tel. +33 4 91 18 00 11 Fax +33 4 91 18 00 12
	Pyrénées	SEW-USOCOME 179, route de Grazac F-31190 Caujac	Tel. +33 5 61 08 15 85 Fax +33 5 61 08 16 44



France			
	Sud-Atlantique	SEW-USOCOME 12, rue des Pinsons F-44120 Vertou	Tel. +33 2 40 80 32 23 Fax +33 2 40 80 32 13

Algeria			
Sales	**Alger**	Réducom 16, rue des Frères Zaghnoun Bellevue El-Harrach 16200 Alger	Tel. +213 21 8222-84 Fax +213 21 8222-84 reducom_sew@yahoo.fr

Argentina			
Assembly **Sales** **Service**	**Buenos Aires**	SEW EURODRIVE ARGENTINA S.A. Centro Industrial Garin, Lote 35 Ruta Panamericana Km 37,5 1619 Garin	Tel. +54 3327 4572-84 Fax +54 3327 4572-21 sewar@sew-eurodrive.com.ar http://www.sew-eurodrive.com.ar

Australia			
Assembly **Sales** **Service**	**Melbourne**	SEW-EURODRIVE PTY. LTD. 27 Beverage Drive Tullamarine, Victoria 3043	Tel. +61 3 9933-1000 Fax +61 3 9933-1003 http://www.sew-eurodrive.com.au enquires@sew-eurodrive.com.au
	Sydney	SEW-EURODRIVE PTY. LTD. 9, Sleigh Place, Wetherill Park New South Wales, 2164	Tel. +61 2 9725-9900 Fax +61 2 9725-9905 enquires@sew-eurodrive.com.au
	Perth	SEW-EURODRIVE PTY. LTD. 105 Robinson Avenue Belmont, W.A. 6104	Tel. +61 8 9478-2688 Fax +61 8 9277-7572 enquires@sew-eurodrive.com.au
	Brisbane	SEW-EURODRIVE PTY.LTD. 1 /34 Collinsvale St Rocklea, Queensland, 4106	Tel. +61 7 3272-7900 Fax +61 7 3272-7901 enquires@sew-eurodrive.com.au
Technical Offices	**Adelaide**	SEW-EURODRIVE PTY. LTD. Unit 1/601 Anzac Highway Glenelg, S.A. 5045	Tel. +61 8 8294-8277 Fax +61 8 8294-2893 enquires@sew-eurodrive.com.au
	Townsville	SEW-EURODRIVE PTY. LTD. 12 Leyland Street Garbutt, QLD 4814	Tel. +61 7 4779 4333 Fax +61 7 4779 5333 enquires@sew-eurodrive.com.au

Austria			
Assembly **Sales** **Service**	**Wien**	SEW-EURODRIVE Ges.m.b.H. Richard-Strauss-Strasse 24 A-1230 Wien	Tel. +43 1 617 55 00-0 Fax +43 1 617 55 00-30 http://sew-eurodrive.at sew@sew-eurodrive.at
Technical Offices	**Linz**	SEW-EURODRIVE Ges.m.b.H. Reuchlinstr. 6/3 A-4020 Linz	Tel. +43 732 655 109-0 Fax +43 732 655 109-20 tb-linz@sew-eurodrive.at
	Graz	SEW-EURODRIVE Ges.m.b.H. Grabenstraße 231 A-8045 Graz	Tel. +43 316 685 756-0 Fax +43 316 685 755 tb-graz@sew-eurodrive.at
	Dornbirn	SEW-EURODRIVE Ges.m.b.H. Lustenauerstraße 27/1 A-6850 Dornbirn	Tel. +43 5572 3725 99-0 Fax +43 5572 3725 99-20 tb-dornbirn@sew-eurodrive.at

Bangladesh			
Sales	**Dhaka**	Jainex Industrial and Engineering Ltd B 12 Apon Nibash East Nasirabad Bangladesh	Tel. +880 1713103502 Fax +880 31 613041 jainexbd@onlinectg.net

Belarus			
Sales	**Minsk**	SEW-EURODRIVE BY RybalkoStr. 26 BY-220033 Minsk	Tel.+375 (17) 298 38 50 Fax +375 (17) 29838 50 sales@sew.by

Belgium			
Assembly **Sales** **Service**	**Brüssel**	SEW Caron-Vector S.A. Avenue Eiffel 5 B-1300 Wavre	Tel. +32 10 231-311 Fax +32 10 231-336 http://www.sew-eurodrive.be info@caron-vector.be
Service Competence Center	**Industrial Gears**	SEW Caron-Vector S.A. Rue de Parc Industriel, 31 BE-6900 Marche-en-Famenne	Tel. +32 84 219-878 Fax +32 84 219-879 http://www.sew-eurodrive.be service-wallonie@sew-eurodrive.be
Technical Office	**Vlaanderen**	SEW Caron-Vector S.A. Verlorenbroodstraat, 122, bus 6 B-9820 Merelbeke	Tel. +32 92 1686 25 Fax +32 92 2741 55

Brazil			
Production **Sales** **Service**	**Sao Paulo**	SEW-EURODRIVE Brasil Ltda. Avenida Amâncio Gaiolli, 152 – Rodovia Presidente Dutra Km 208 Guarulhos – 07251-250 - SP SAT – SEW ATENDE – 0800 7700496	Tel. +55 11 6489-9133 Fax +55 11 6480-3328 http://www.sew.com.br sew@sew.com.br
	Additional addresses for service in Brazil provided on request!		

Bulgaria			
Sales	**Sofia**	BEVER-DRIVE GmbH Bogdanovetz Str.1 BG-1606 Sofia	Tel. +359 2 9151160 Fax +359 2 9151166 bever@fastbg.net

Cameroon			
Sales	**Douala**	Electro-Services Rue Drouot Akwa B.P. 2024 Douala	Tel. +237 33 431137 Fax +237 33 431137

Canada			
Assembly **Sales** **Service**	**Toronto**	SEW-EURODRIVE CO. OF CANADA LTD. 210 Walker Drive Bramalea, Ontario L6T3W1	Tel. +1 905 791-1553 Fax +1 905 791-2999 http://www.sew-eurodrive.ca marketing@sew-eurodrive.ca
	Vancouver	SEW-EURODRIVE CO. OF CANADA LTD. 7188 Honeyman Street Delta. B.C. V4G 1 E2	Tel. +1 604 946-5535 Fax +1 604 946-2513 marketing@sew-eurodrive.ca
	Montreal	SEW-EURODRIVE CO. OF CANADA LTD. 2555 Rue Leger LaSalle, Quebec H8N 2V9	Tel. +1 514 367-1124 Fax +1 514 367-3677 marketing@sew-eurodrive.ca
	Additional addresses for service in Canada provided on request!		

Chile			
Assembly **Sales** **Service**	**Santiago de Chile**	SEW-EURODRIVE CHILE LTDA. Las Encinas 1295 Parque Industrial Valle Grande LAMPA RCH-Santiago de Chile P.O. Box Casilla 23 Correo Quilicura - Santiago - Chile	Tel. +56 2 75770-00 Fax +56 2 75770-01 http://www.sew-eurodrive.cl ventas@sew-eurodrive.cl



China			
Production **Assembly** **Sales** **Service**	**Tianjin**	SEW-EURODRIVE (Tianjin) Co., Ltd. No. 46, 7th Avenue, TEDA Tianjin 300457	Tel. +86 22 25322612 Fax +86 22 25322611 info@sew-eurodrive.cn http://www.sew-eurodrive.cn
Assembly **Sales** **Service**	**Suzhou**	SEW-EURODRIVE (Suzhou) Co., Ltd. 333, Suhong Middle Road Suzhou Industrial Park Jiangsu Province, 215021	Tel. +86 512 62581781 Fax +86 512 62581783 suzhou@sew-eurodrive.cn
	Guangzhou	SEW-EURODRIVE (Guangzhou) Co., Ltd. No. 9, JunDa Road East Section of GETDD Guangzhou 510530	Tel. +86 20 82267890 Fax +86 20 82267891 guangzhou@sew-eurodrive.cn
	Shenyang	SEW-EURODRIVE (Shenyang) Co., Ltd. 10A-2, 6th Road Shenyang Economic Technological Development Area Shenyang, 110141	Tel. +86 24 25382538 Fax +86 24 25382580 shenyang@sew-eurodrive.cn

Colombia			
Assembly **Sales** **Service**	**Bogotá**	SEW-EURODRIVE COLOMBIA LTDA. Calle 22 No. 132-60 Bodega 6, Manzana B Santafé de Bogotá	Tel. +57 1 54750-50 Fax +57 1 54750-44 http://www.sew-eurodrive.com.co sewcol@sew-eurodrive.com.co

Croatia			
Sales **Service**	**Zagreb**	KOMPEKS d. o. o. PIT Erdödy 4 II HR 10 000 Zagreb	Tel. +385 1 4613-158 Fax +385 1 4613-158 kompeks@inet.hr

Czech Republic			
Sales	**Praha**	SEW-EURODRIVE CZ S.R.O. Business Centrum Praha Lužná 591 CZ-16000 Praha 6 - Vokovice	Tel. +420 220121234 Fax +420 220121237 http://www.sew-eurodrive.cz sew@sew-eurodrive.cz
Technical Offices	**Brno**	SEW-EURODRIVE CZ S.R.O. Křenová 52 CZ -60200 Brno	Tel. +420 543256151 + 543256163 Fax +420 543256845
	Hradec Králové	SEW-EURODRIVE CZ S.R.O. Čechova 498 CZ-50202 Hradec Králové	Tel. +420 495510141 Fax +420 495521313
	Plzeň	SEW-EURODRIVE CZ S.R.O. Areal KRPA a.s. Zahradni 173/2 CZ-32600 Plzeň	Tel. +420 378775300 Fax +420 377970710
	Klatovy	SEW-EURODRIVE CZ S.R.O. Technická kancelář Klatovy Domažlická 800 CZ-33901 Klatovy	Tel. +420 376310729 Fax +420 376310725

Denmark			
Assembly **Sales** **Service**	**Kopenhagen**	SEW-EURODRIVEA/S Geminivej 28-30 DK-2670 Greve	Tel. +45 43 9585-00 Fax +45 43 9585-09 http://www.sew-eurodrive.dk sew@sew-eurodrive.dk

Egypt			
Sales **Service**	**Cairo**	Copam Egypt for Engineering & Agencies 33 El Hegaz ST, Heliopolis, Cairo	Tel. +20 2 22566-299 + 1 23143088 Fax +20 2 22594-757 http://www.copam-egypt.com/ copam@datum.com.eg

Estonia			
Sales	**Tallin**	ALAS-KUUL AS Reti tee 4 EE-75301 Peetri küla, Rae vald, Harjumaa	Tel. +372 6593230 Fax +372 6593231 veiko.soots@alas-kuul.ee

Finland			
Assembly **Sales** **Service**	**Lahti**	SEW-EURODRIVE OY Vesimäentie 4 FIN-15860 Hollola 2	Tel. +358 201 589-300 Fax +358 3 780-6211 sew@sew.fi http://www.sew-eurodrive.fi
Technical Offices	**Helsinki**	SEW-EURODRIVE OY Luutnantintie 5 FIN-00410 Helsinki	Tel. +358 201 589-300 Fax + 358 9 5666-311 sew@sew.fi
	Vaasa	SEW-EURODRIVE OY Hietasaarenkatu 18 FIN-65100 Vaasa	Tel. +358 201 589-300 Fax +358 6 3127-470 sew@sew.fi
	Rovaniemi	SEW-EURODRIVE OY Valtakatu 4 A FIN-96100 Rovaniemi	Tel. +358 201 589-300 Fax +358 201 589-239 sew@sew.fi
Production **Assembly** **Service**	**Karkkila**	SEW Industrial Gears OY Valurinkatu 6 FIN-03600 Karkkila	Tel. +358 201 589-300 Fax +358 201 589-310 sew@sew.fi http://www.sew-eurodrive.fi

Gabon			
Sales	**Libreville**	Electro-Services B.P. 1889 Libreville	Tel. +241 7340-11 Fax +241 7340-12

Great Britain			
Assembly **Sales** **Service**	**Normanton**	SEW-EURODRIVE Ltd. Beckbridge Industrial Estate P.O. Box No.1 GB-Normanton, West- Yorkshire WF6 1QR	Tel. +44 1924 893-855 Fax +44 1924 893-702 http://www.sew-eurodrive.co.uk info@sew-eurodrive.co.uk
Technical Offices	**London**	SEW-EURODRIVE Ltd. 764 Finchely Road, Temple Fortune GB-London N.W.11 7TH	Tel. +44 20 8458-8949 Fax +44 20 8458-7417
	Midlands	SEW-EURODRIVE Ltd. 5 Sugar Brook court, Aston Road, Bromsgrove, Worcs B60 3EX	Tel. +44 1527 877-319 Fax +44 1527 575-245
	Scotland	SEW-EURODRIVE Ltd. Scottish Office No 37 Enterprise House Springkerse Business Park GB-Stirling FK7 7UF Scotland	Tel. +44 17 8647-8730 Fax +44 17 8645-0223

Greece			
Sales **Service**	**Athen**	Christ. Boznos & Son S.A. 12, Mavromichali Street P.O. Box 80136, GR-18545 Piraeus	Tel. +30 2 1042 251-34 Fax +30 2 1042 251-59 http://www.boznos.gr info@boznos.gr



Greece			
Technical Office	**Thessaloniki**	Christ. Boznos & Son S.A. Maiandrou 21 562 24 Evosmos, Thessaloniki	Tel. +30 2 310 7054-00 Fax +30 2 310 7055-15 info@boznos.gr

Hong Kong			
Assembly **Sales** **Service**	**Hong Kong**	SEW-EURODRIVE LTD. Unit No. 801-806, 8th Floor Hong Leong Industrial Complex No. 4, Wang Kwong Road Kowloon, Hong Kong	Tel. +852 2 7960477 + 79604654 Fax +852 2 7959129 contact@sew-eurodrive.hk

Hungary			
Sales **Service**	**Budapest**	SEW-EURODRIVE Kft. H-1037 Budapest Kunigunda u. 18	Tel. +36 1 437 06-58 Fax +36 1 437 06-50 office@sew-eurodrive.hu

Iceland			
Sales	**Reykjavik**	Vélaverk ehf. Bolholti 8, 3h. IS - 105 Reykjavik	Tel. +354 568 3536 Fax +354 568 3537 velaverk@velaverk.is

India			
Assembly **Sales** **Service**	**Vadodara**	SEW-EURODRIVE India Private Limited Plot No. 4, GIDC POR Ramangamdi • Vadodara - 391 243 Gujarat	Tel. +91 265 2831086 Fax +91 265 2831087 http://www.seweurodriveindia.com sales@seweurodriveindia.com subodh.ladwa@seweurodriveindia.com
Technical Offices	**Bangalore**	SEW-EURODRIVE India Private Limited 308, Prestige Centre Point 7, Edward Road Bangalore - 560052 - Karnataka	Tel. +91 80 22266565 Fax +91 80 22266569 salesbang@seweurodriveindia.com ganesh@seweurodriveindia.com
	Kolkata	SEW EURODRIVE India Private Limited 2nd floor, Room No. 35 Chowringhee Court 55, Chowringhee Road Kolkata - 700 071 - West Bengal	Tel. +91 33 22827457 Fax +91 33 22894204 saleskal@seweurodriveindia.com a.j.biswas@seweurodriveindia.com
	Chandigarh	SEW EURODRIVE India Private Limited Sujit Kumar Mishra H.No.5464/3 Modern Housing Complex Manimajra Chandigarh -160101	Tel. +91 9878469579 Fax +91 1722738664 saleschand@seweurodriveindia.com
	Chennai	SEW-EURODRIVE India Private Limited 2nd Floor, Josmans Complex, No. 5, McNichols Road, Chetpet Chennai - 600031 - Tamil Nadu	Tel. +91 44 42849813 Fax +91 44 42849816 saleschen@seweurodriveindia.com c.v.shivkumar@seweurodriveindia.com
	Coimbatore	SEW-EURODRIVE India Private Limited Office No 60 Arpee Centre (Opp Annapoorna Hotel) 420 N, NSR Road, Saibaba Colony Coimbatore 641 0111 - Tamil Nadu	Tel. +91 422 2455420 Fax +91 422 2443988 salescmb@seweurodriveindia.com p.selvakumar@seweurodriveindia.com
	Madgaon	SEW-EURODRIVE India Private Limited Flat No.-G1, Shivas-Laxmi Prasad Co-Operative Housing Society, Padmanarayan Estate, Near Jivottaam Math, Gagole Madgao, Goa - 403 602	samrat.chakravorty@seweurodriveindia.com



India			
	Hyderabad	SEW-EURODRIVE India Private Limited 408, 4th Floor, Meridian Place Green Park Road Amerpeet Hyderabad - 500016 - Andhra Pradesh	Tel. +91 40 23414698 Fax +91 40 23413884 saleshyd@seweurodriveindia.com ma.choudary@seweurodriveindia.com
	Mumbai	SEW-EURODRIVE India Private Limited 312 A, 3rd Floor, Acme Plaza, J.B. Nagar, Andheri Kurla Road, Andheri (E) Mumbai - 400059 - Maharashtra	Tel. +91 22 28348440 Fax +91 22 28217858 salesmumbai@seweurodriveindia.com p.s.ray@seweurodriveindia.com
	New Delhi	SEW-EURODRIVE India Private Limited 418-419, Suneja Tower-1 District Centre, Janak Puri New Delhi 110 058	Tel. +91 11 25544111 Fax +91 11 25544113 salesdelhi@seweurodriveindia.com vikram.juneja@seweurodriveindia.com
	Pune	SEW-EURODRIVE India Private Limited Office No. 2 & 7, First Floor, Triveni Apartment Model Colony, Gokhale Road Pune 411016 - Maharashtra	Tel. +91 20 25671751 Fax +91 20 25661668 salespune@seweurodriveindia.com praveen.hosur@seweurodriveindia.com
	Raipur	SEW-EURODRIVE India Private Limited Flat No-0-102, First Floor Satyam Appt., Golchha Park Nr Mining Office, Ring Road-1 Raipur 492 001 - Chhattisgarh	Tel. +91 9893290624 sutanu.sarkar@seweurodriveindia.com

Indonesia			
Technical Office	**Jakarta**	SEW-EURODRIVE Pte Ltd. Jakarta Liaison Office, Menara Graha Kencana Jl. Perjuangan No. 88, LT 3 B, Kebun Jeruk, Jakarta 11530, Indonesia	Tel. +62 21 5359066 Fax +62 21 5363686 Service Hotline: +65 61000 739 sew@cbn.net.id

Ireland			
Sales **Service**	**Dublin**	Alperton Engineering Ltd. 48 Moyle Road Dublin Industrial Estate Glasnevin, Dublin 11	Tel. +353 1 830-6277 Fax +353 1 830-6458 info@alperton.ie http://www.alperton.ie

Israel			
Sales	**Tel-Aviv**	Liraz Handasa Ltd. Ahofer Str 34B / 228 58858 Holon	Tel. +972 3 5599511 Fax +972 3 5599512 http://www.liraz-handasa.co.il office@liraz-handasa.co.il

Italy			
Assembly **Sales** **Service**	**Milano**	SEW-EURODRIVE di R. Blickle & Co.s.a.s. Via Bernini,14 I-20020 Solaro (Milano)	Tel. +39 02 96 9801 Fax +39 02 96 799781 http://www.sew-eurodrive.it sewit@sew-eurodrive.it
Technical Offices	**Bologna**	SEW-EURODRIVE di R. Blickle & Co.s.a.s. Via della Grafica, 47 I-40064 Ozzano dell'Emilia (Bo)	Tel. +39 051 65-23-801 Fax +39 051 796-595
	Caserta	SEW-EURODRIVE di R. Blickle & Co.s.a.s. Viale Carlo III Km. 23,300 I-81020 S. Nicola la Strada (Caserta)	Tel. +39 0823 219011 Fax +39 0823 421414
	Firenze	RIMA Via Einstein, 14 I-50013 Campi Bisenzio (Firenze)	Tel. +39 055 898 58-21 Fax +39 055 898 58-30

Italy			
	Pescara	SEW-EURODRIVE di R. Blickle & Co.s.a.s. Viale Europa,132 I-65010 Villa Raspa di Spoltore (PE)	Tel. +39 085 41-59-427 Fax +39 085 41-59-643
	Torino	SEW-EURODRIVE di R. Blickle & Co.s.a.s. Filiale Torino c.so Unione Sovietica 612/15 - int. C I-11035 Torino	Tel. +39 011 3473780 Fax +39 011 3473783
	Verona	SEW-EURODRIVE di R. Blickle & Co.s.a.s. Via P. Sgulmero, 27/A I-37132 Verona	Tel. +39 045 89-239-11 Fax +39 045 97-6079

Ivory Coast			
Sales	**Abidjan**	SICA Ste industrielle et commerciale pour l'Afrique 165, Bld de Marseille B.P. 2323, Abidjan 08	Tel. +225 2579-44 Fax +225 2584-36

Japan			
Assembly **Sales** **Service**	**Iwata**	SEW-EURODRIVE JAPAN CO., LTD 250-1, Shimoman-no, Iwata Shizuoka 438-0818	Tel. +81 538 373811 Fax +81 538 373814 http://www.sew-eurodrive.co.jp sewjapan@sew-eurodrive.co.jp
Technical Offices	**Fukuoka**	SEW-EURODRIVE JAPAN CO., LTD. C-go, 5th-floor, Yakuin-Hiruzu-Bldg. 1-5-11, Yakuin, Chuo-ku Fukuoka, 810-0022	Tel. +81 92 713-6955 Fax +81 92 713-6860 sewkyushu@jasmine.ocn.ne.jp
	Osaka	SEW-EURODRIVE JAPAN CO., LTD. B-Space EIRAI Bldg., 3rd Floor 1-6-9 Kyoumachibori, Nishi-ku, Osaka, 550-0003	Tel. +81 6 6444--8330 Fax +81 6 6444--8338 sewosaka@crocus.ocn.ne.jp
	Tokyo	SEW-EURODRIVE JAPAN CO., LTD. Izumi-Bldg. 5 F 3-2-15 Misaki-cho Chiyoda-ku, Tokyo 101-0061	Tel. +81 3 3239-0469 Fax +81 3 3239-0943 sewtokyo@basil.ocn.ne.jp

Korea			
Assembly **Sales** **Service**	**Ansan-City**	SEW-EURODRIVE KOREA CO., LTD. B 601-4, Banweol Industrial Estate 1048-4, Shingil-Dong Ansan 425-120	Tel. +82 31 492-8051 Fax +82 31 492-8056 http://www.sew-korea.co.kr master@sew-korea.co.kr
	Busan	SEW-EURODRIVE KOREA Co., Ltd. No. 1720 - 11, Songjeong - dong Gangseo-ku Busan 618-270	Tel. +82 51 832-0204 Fax +82 51 832-0230 master@sew-korea.co.kr
Technical Offices	**Daegu**	SEW-EURODRIVE KOREA Co., Ltd. No.1108 Sungan officetel 87-36, Duryu 2-dong, Dalseo-ku Daegu 704-712	Tel. +82 53 650-7111 Fax +82 53 650-7112
	DaeJeon	SEW-EURODRIVE KOREA Co., Ltd. No. 1502, Hongin officetel 536-9, Bongmyung-dong, Yusung-ku Daejeon 305-301	Tel. +82 42 828-6461 Fax +82 42 828-6463
	Kwangju	SEW-EURODRIVE KOREA Co., Ltd. 4fl., Dae-Myeong B/D 96-16 Unam-dong, Buk-ku Kwangju 500-170	Tel. +82 62 511-9172 Fax +82 62 511-9174

Korea			
	Seoul	SEW-EURODRIVE KOREA Co., Ltd. No.504 Sunkyung officetel 106-4 Kuro 6-dong, Kuro-ku Seoul 152-054	Tel. +82 2 862-8051 Fax +82 2 862-8199

Latvia			
Sales	**Riga**	SIA Alas-Kuul Katlakalna 11C LV-1073 Riga	Tel. +371 7139253 Fax +371 7139386 http://www.alas-kuul.com info@alas-kuul.com

Lebanon			
Sales	**Beirut**	Gabriel Acar & Fils sarl B. P. 80484 Bourj Hammoud, Beirut	Tel. +961 1 4947-86 +961 1 4982-72 +961 3 2745-39 Fax +961 1 4949-71 gacar@beirut.com

Lithuania			
Sales	**Alytus**	UAB Irseva Naujoji 19 LT-62175 Alytus	Tel. +370 315 79204 Fax +370 315 56175 info@irseva.lt http://www.sew-eurodrive.lt

Luxembourg			
Assembly **Sales** **Service**	**Brüssel**	CARON-VECTOR S.A. Avenue Eiffel 5 B-1300 Wavre	Tel. +32 10 231-311 Fax +32 10 231-336 http://www.sew-eurodrive.lu info@caron-vector.be

Malaysia			
Assembly **Sales** **Service**	**Johore**	SEW-EURODRIVE SDN BHD No. 95, Jalan Seroja 39, Taman Johor Jaya 81000 Johor Bahru, Johor West Malaysia	Tel. +60 7 3549409 Fax +60 7 3541404 sales@sew-eurodrive.com.my
Technical Offices	**Kota Kinabalu**	SEW-EURODRIVE Sdn Bhd (Kota Kinabalu Branch) Lot No. 2,1st Floor, Inanam Baru Phase III, Miles 5.1 /2, Jalan Tuaran, Inanam 89350 Kota Kinabalu Sabah, Malaysia	Tel. +60 88 424792 Fax +60 88 424807
	Kuala Lumpur	SEW-EURODRIVE Sdn. Bhd. No. 2, Jalan Anggerik Mokara 31/46 Kota Kemuning Seksyen 31 40460 Shah Alam Selangor Darul Ehsan	Tel. +60 3 5229633 Fax +60 3 5229622 sewpjy@po.jaring.my
	Kuching	SEW-EURODRIVE Sdn. Bhd. Lot 268, Section 9 KTLD Lorong 9, Jalan Satok 93400 Kuching, Sarawak East Malaysia	Tel. +60 82 232380 Fax +60 82 242380
	Penang	SEW-EURODRIVE Sdn. Bhd. No. 38, Jalan Bawal Kimsar Garden 13700 Prai, Penang	Tel. +60 4 3999349 Fax +60 4 3999348 seweurodrive@po.jaring.my



Mexico			
Assembly **Sales** **Service**	**Queretaro**	SEW-EURODRIVE MEXIKO SA DE CV SEM-981118-M93 Tequisquiapan No. 102 Parque Industrial Queretaro C.P. 76220 Queretaro, Mexico	Tel. +52 442 1030-300 Fax +52 442 1030-301 http://www.sew-eurodrive.com.mx scmexico@seweurodrive.com.mx

Morocco			
Sales	**Casablanca**	Afit 5, rue Emir Abdelkader MA 20300 Casablanca	Tel. +212 22618372 Fax +212 22618351 ali.alami@premium.net.ma

Netherlands			
Assembly **Sales** **Service**	**Rotterdam**	VECTOR Aandrijftechniek B.V. Industrieweg 175 NL-3044 AS Rotterdam Postbus 10085 NL-3004 AB Rotterdam	Tel. +31 10 4463-700 Fax +31 10 4155-552 http://www.vector.nu info@vector.nu

New Zealand			
Assembly **Sales** **Service**	**Auckland**	SEW-EURODRIVE NEW ZEALAND LTD. P.O. Box 58-428 82 Greenmount drive East Tamaki Auckland	Tel. +64 9 2745627 Fax +64 9 2740165 http://www.sew-eurodrive.co.nz sales@sew-eurodrive.co.nz
	Christchurch	SEW-EURODRIVE NEW ZEALAND LTD. 10 Settlers Crescent, Ferrymead Christchurch	Tel. +64 3 384-6251 Fax +64 3 384-6455 sales@sew-eurodrive.co.nz
Technical Office	**Palmerston North**	SEW-EURODRIVE NEW ZEALAND LTD. C/-Grant Shearman, RD 5, Aronui Road Palmerston North	Tel. +64 6 355-2165 Fax +64 6 355-2316 sales@sew-eurodrive.co.nz

Norway			
Assembly **Sales** **Service**	**Moss**	SEW-EURODRIVE A/S Solgaard skog 71 N-1599 Moss	Tel. +47 69 24 10 20 Fax +47 69 24 10 40 http://www.sew-eurodrive.no sew@sew-eurodrive.no

Peru			
Assembly **Sales** **Service**	**Lima**	SEW DEL PERU MOTORES REDUCTORES S.A.C. Los Calderos, 120-124 Urbanizacion Industrial Vulcano, ATE, Lima	Tel. +51 1 3495280 Fax +51 1 3493002 http://www.sew-eurodrive.com.pe sewperu@sew-eurodrive.com.pe

Philippines			
Technical Office	**Manila**	SEW-EURODRIVE Pte Ltd Manila Liaison Office Suite 110, Ground Floor Comfoods Building Senator Gil Puyat Avenue 1200 Makati City	Tel. +63 2 894275254 Fax +63 2 8942744 sewmla@i-next.net

Poland			
Assembly **Sales** **Service**	**Lodz**	SEW-EURODRIVE Polska Sp.z.o.o. ul. Techniczna 5 PL-92-518 Łódź	Tel. +48 42 67710-90 Fax +48 42 67710-99 http://www.sew-eurodrive.pl sew@sew-eurodrive.pl
		24 Hour Service	Tel. +48 602 739 739 (+48 602 SEW SEW) serwis@sew-eurodrive.pl

Poland			
Technical Office	**Tychy**	SEW-EURODRIVE Polska Sp.z.o.o. ul. Nad Jeziorem 87 PL-43-100 Tychy	Tel. +48 32 2175026 + 32 2175027 Fax +48 32 2277910
	Bydgoszcz	SEW-EURODRIVE Polska Sp.z.o.o. ul. Fordońska 246 PL-85-959 Bydgoszcz	Tel. +48 52 3606590 Fax +48 52 3606591
	Poznań	SEW-EURODRIVE Polska Sp.z.o.o. ul. Romana Maya 1, pokój 202 PL-61-371 Poznań	Tel. +48 61 8741640 Fax +48 61 8741641
	Szczecinek	SEW-EURODRIVE Polska Sp.z.o.o. ul. Mickiewicza 2 pok. 36 PL-78-400 Szczecinek	Tel. +48 94 3728820 Fax +48 94 3728821

Portugal			
Assembly **Sales** **Service**	**Coimbra**	SEW-EURODRIVE, LDA. Apartado 15 P-3050-901 Mealhada	Tel. +351 231 20 9670 Fax +351 231 20 3685 http://www.sew-eurodrive.pt infosew@sew-eurodrive.pt
Technical Offices	**Lisboa**	SEW-EURODRIVE, LDA. Tertir Edifício Lisboa Gabinete 119 P-2615 Alverca do Ribatejo	Tel. +351 21 958-0198 Fax +351 21 958-0245 esc.lisboa@sew-eurodrive.pt
	Porto	SEW-EURODRIVE, LDA. Av. 25 de Abril, 68 4440-502 Valongo	Tel. +351 229 350 383 Fax +351 229 350 384 MobilTel. +351 9 32559110 esc.porto@sew-eurodrive.pt

Romania			
Sales **Service**	**Bucureşti**	Sialco Trading SRL str. Madrid nr.4 011785 Bucuresti	Tel. +40 21 230-1328 Fax +40 21 230-7170 sialco@sialco.ro

Russia			
Assembly **Sales** **Service**	**St. Petersburg**	ZAO SEW-EURODRIVE P.O. Box 36 195220 St. Petersburg Russia	Tel. +7 812 3332522 +7 812 5357142 Fax +7 812 3332523 http://www.sew-eurodrive.ru sew@sew-eurodrive.ru
Technical Office	**Yekaterinburg**	ZAO SEW-EURODRIVE Kominterna Str. 16 Office 614 RUS-620078 Ekaterinburg	Tel. +7 343 310 3977 Fax +7 343 310 3978 eso@sew-eurodrive.ru
	Irkutsk	ZAO SEW-EURODRIVE 5-Armii Str., 31 RUS-664011 Irkutsk	Tel. +7 3952 25 5880 Fax +7 3952 25 5881 iso@sew-eurodrive.ru
	Moskau	ZAO SEW-EURODRIVE RUS-107023 Moskau	Tel. +7 495 9337090 Fax +7 495 9337094 mso@sew-eurodrive.ru
	Novosibirsk	ZAO SEW-EURODRIVE pr. K Marksa, d.30 RUS-630087 Novosibirsk	Tel. +7 383 3350200 Fax +7 383 3462544 nso@sew-eurodrive.ru
	Togliatti	ZAO SEW-EURODRIVE Sportivnaya Str. 4B, office 2 Samarskaya obl. RUS-445057 Togliatti	Tel. +7 8482 710529 Fax +7 8482 810590

Senegal			
Sales	**Dakar**	SENEMECA Mécanique Générale Km 8, Route de Rufisque B.P. 3251, Dakar	Tel. +221 338 494 770 Fax +221 338 494 771 senemeca@sentoo.sn

Serbia			
Sales	**Beograd**	DIPAR d.o.o. Ustanicka 128a PC Košum, IV floor SCG-11000 Beograd	Tel. +381 11 347 3244 / +381 11 288 0393 Fax +381 11 347 1337 office@dipar.co.yu

Singapore			
Assembly **Sales** **Service**	**Singapore**	SEW-EURODRIVE PTE. LTD. No 9, Tuas Drive 2 Jurong Industrial Estate Singapore 638644	Tel. +65 68621701 Fax +65 68612827 http://www.sew-eurodrive.com.sg sewsingapore@sew-eurodrive.com

Slovakia			
Sales	**Bratislava**	SEW-Eurodrive SK s.r.o. Rybničná 40 SK-83554 Bratislava	Tel. +421 2 49595201 Fax +421 2 49595200 sew@sew-eurodrive.sk http://www.sew-eurodrive.sk
	Žilina	SEW-Eurodrive SK s.r.o. ul. Vojtecha Spanyola 33 SK-010 01 Žilina	Tel. +421 41 700 2513 Fax +421 41 700 2514 sew@sew-eurodrive.sk
	Banská Bystrica	SEW-Eurodrive SK s.r.o. Rudlovská cesta 85 SK-97411 Banská Bystrica	Tel. +421 48 414 6564 Fax +421 48 414 6566 sew@sew-eurodrive.sk

Slovenia			
Sales **Service**	**Celje**	Pakman - Pogonska Tehnika d.o.o. UI. XIV. divizije 14 SLO - 3000 Celje	Tel. +386 3 490 83-20 Fax +386 3 490 83-21 pakman@siol.net

South Africa			
Assembly **Sales** **Service**	**Johannesburg**	SEW-EURODRIVE (PROPRIETARY) LIMITED Eurodrive House Cnr. Adcock Ingram and Aerodrome Roads Aeroton Ext. 2 Johannesburg 2013 P.O.Box 90004 Bertsham 2013	Tel. +27 11 248-7000 Fax +27 11 494-3104 http://www.sew.co.za dross@sew.co.za
	Capetown	SEW-EURODRIVE (PROPRIETARY) LIMITED Rainbow Park Cnr. Racecourse & Omuramba Road Montague Gardens Cape Town P.O.Box 36556 Chempet 7442 Cape Town	Tel. +27 21 552-9820 Fax +27 21 552-9830 Telex 576 062 dswanepoel@sew.co.za
	Durban	SEW-EURODRIVE (PROPRIETARY) LIMITED 2 Monaceo Place Pinetown Durban P.O. Box 10433, Ashwood 3605	Tel. +27 31 700-3451 Fax +27 31 700-3847 dtait@sew.co.za



South Africa			
	Nelspruit	SEW-EURODRIVE (PTY) LTD. 7 Christie Crescent Vintonia P.O.Box 1942 Nelspruit 1200	Tel. +27 13 752-8007 Fax +27 13 752-8008 robermeyer@sew.co.za
Technical Offices	**Port Elizabeth**	SEW-EURODRIVE PTY LTD. 5 b Linsay Road Neave Township 6000 Port Elizabeth	Tel. +27 41 453-0303 Fax +27 41 453-0305 dswanepoel@sew.co.za
	Richards Bay	SEW-EURODRIVE PTY LTD. 25 Eagle Industrial Park Alton Richards Bay P.O. Box 458 Richards Bay 3900	Tel. +27 35 797-3805 Fax +27 35 797-3819 dtait@sew.co.za

Spain			
Assembly **Sales** **Service**	**Bilbao**	SEW-EURODRIVE ESPAÑA, S.L. Parque Tecnológico, Edificio, 302 E-48170 Zamudio (Vizcaya)	Tel. +34 94 43184-70 Fax +34 94 43184-71 http://www.sew-eurodrive.es sew.spain@sew-eurodrive.es
Technical Offices	**Barcelona**	Delegación Barcelona Avenida Francesc Maciá 40-44 Oficina 3.1 E-08206 Sabadell (Barcelona)	Tel. +34 93 7162200 Fax +34 93 7233007
	Lugo	Delegación Noroeste Apartado, 1003 E-27080 Lugo	Tel. +34 639 403348 Fax +34 982 202934
	Madrid	Delegación Madrid Gran Via. 48-2° A-D E-28220 Majadahonda (Madrid)	Tel. +34 91 6342250 Fax +34 91 6340899
	Seville	MEB Pólogono Calonge, C/A Nave 2 - C E-41.077 Sevilla	Tel. +34 954 356 361 Fax +34 954 356 274 mebsa.sevilla@mebsa.com
	Valencia	MEB Músico Andreu i Piqueres, 4 E-46.900 Torrente (Valencia)	Tel. +34 961 565 493 Fax +34 961 566 688 mebsa.valencia@mebsa.com

Sri Lanka			
Sales	**Colombo**	SM International (Pte) Ltd 254, Galle Raod Colombo 4, Sri Lanka	Tel. +94 1 2584887 Fax +94 1 2582981

Sweden			
Assembly **Sales** **Service**	**Jönköping**	SEW-EURODRIVE AB Gnejsvägen 6-8 S-55303 Jönköping Box 3100 S-55003 Jönköping	Tel. +46 36 3442-00 Fax +46 36 3442-80 http://www.sew-eurodrive.se info@sew-eurodrive.se
Technical Offices	**Göteborg**	SEW-EURODRIVE AB Gustaf Werners gata 8 S-42131 Västra Frölunda	Tel. +46 31 70968-80 Fax +46 31 70968-93
	Malmö	SEW-EURODRIVE AB Borrgatan 5 S-21124 Malmö	Tel. +46 40 68064-80 Fax +46 40 68064-93
	Stockholm	SEW-EURODRIVE AB Björkholmsvägen 10 S-14125 Huddinge	Tel. +46 8 44986-80 Fax +46 8 44986-93



Sweden			
	Skellefteå	SEW-EURODRIVE AB Trädgårdsgatan 8 S-93131 Skellefteå	Tel. +46 910 7153-80 Fax +46 910 7153-93

Switzerland			
Assembly **Sales** **Service**	**Basel**	Alfred Imhof A.G. Jurastrasse 10 CH-4142 Münchenstein bei Basel	Tel. +41 61 417 1717 Fax +41 61 417 1700 http://www.imhof-sew.ch info@imhof-sew.ch
Technical Offices	**Rhaetian Switzerland**	André Gerber Es Perreyres CH-1436 Chamblon	Tel. +41 24 445 3850 Fax +41 24 445 4887
	Bern / Solothurn	Rudolf Bühler Muntersweg 5 CH-2540 Grenchen	Tel. +41 32 652 2339 Fax +41 32 652 2331
	Central Switzerland and Ticino	Beat Lütolf Baumacher 11 CH-6244 Nebikon	Tel. +41 62 756 4780 Fax +41 62 756 4786
	Zürich	René Rothenbühler Nörgelbach 7 CH-8493 Saland	Tel. +41 52 386 3150 Fax +41 52 386 3213
	Bodensee and East Switzerland	Markus Künzle Eichweg 4 CH-9403 Goldach	Tel. +41 71 845 2808 Fax +41 71 845 2809

Taiwan (R.O.C.)			
Sales	**Nan Tou**	Ting Shou Trading Co., Ltd. No. 55 Kung Yeh N. Road Industrial District Nan Tou 540	Tel. +886 49 255353 Fax +886 49 257878
	Taipei	Ting Shou Trading Co., Ltd. 6F-3, No. 267, Sec. 2 Tung Hwa South Road, Taipei	Tel. +886 2 27383535 Fax +886 2 27368268 Telex 27 245 sewtwn@ms63.hinet.net

Thailand			
Assembly **Sales** **Service**	**Chonburi**	SEW-EURODRIVE (Thailand) Ltd. 700/456, Moo.7, Donhuaroh Muang Chonburi 20000	Tel. +66 38 454281 Fax +66 38 454288 sewthailand@sew-eurodrive.com
Technical Offices	**Bangkok**	SEW-EURODRIVE (Thailand) Ltd. 6th floor, TPS Building 1023, Phattanakarn Road Suanluang Bangkok,10250	Tel. +66 2 7178149 Fax +66 2 7178152 sewthailand@sew-eurodrive.com
	Hadyai	SEW-EURODRIVE (Thailand) Ltd. Hadyai Country Home Condominium 59/101 Soi.17/1 Rachas-Utid Road. Hadyai, Songkhla 90110	Tel. +66 74 359441 Fax +66 74 359442 sewthailand@sew-eurodrive.com
	Khonkaen	SEW-EURODRIVE (Thailand) Ltd. 4th Floor, Kaow-U-HA MOTOR Bldg, 359/2, Mitraphab Road. Muang District Khonkaen 40000	Tel. +66 43 225745 Fax +66 43 324871 sew-thailand@sew-eurodrive.com



Tunisia			
Sales	**Tunis**	T. M.S. Technic Marketing Service 5, Rue El Houdaibiah 1000 Tunis	Tel. +216 71 4340-64 + 71 4320-29 Fax +216 71 4329-76 tms@tms.com.tn

Turkey			
Assembly **Sales** **Service**	**Istanbul**	SEW-EURODRIVE Hareket Sistemleri San. ve Tic. Ltd. Sti. Bagdat Cad. Koruma Cikmazi No. 3 TR-34846 Maltepe ISTANBUL	Tel. +90 216 4419164, 3838014, 3738015 Fax +90 216 3055867 http://www.sew-eurodrive.com.tr sew@sew-eurodrive.com.tr
Technical Offices	**Adana**	SEW-EURODRIVE Hareket Sistemleri San. ve Tic. Ltd. Sti. Kizilay Caddesi 8 Sokak No 6 Daðtekin Is Merkezi Kat 4 Daire 2 TR-01170 SEYHAN / ADANA	Tel. +90 322 359 94 15 Fax +90 322 359 94 16
	Ankara	SEW-EURODRIVE Hareket Sistemleri San. ve Tic. Ltd. Sti. Özcelik Is Merkezi, 14. Sok, No. 4/42 TR-06370 Ostim/Ankara	Tel. +90 312 3853390 / +90 312 3544715 / +90 312 3546109 Fax +90 312 3853258
	Bursa	SEW-EURODRIVE Hareket Sistemleri San. ve Tic. Ltd. Sti. Besevler Küçük Sanayi Parkoop Parçacilar Sitesi 48. Sokak No. 47 TR Nilüfer/Bursa	Tel. +90 224 443 4556 Fax +90 224 443 4558
	Izmir	SEW-EURODRIVE Hareket Sistemleri San. ve Tic. Ltd. Sti. 1203/11 Sok. No. 4/613 Hasan Atli Is Merkezi TR-35110 Yenisehir-Izmir	Tel. +90 232 4696264 Fax +90 232 4336105

Ukraine			
Sales **Service**	**Dnepropetrovsk**	SEW-EURODRIVE Str. Rabochaja 23-B, Office 409 49008 Dnepropetrovsk	Tel. +380 56 370 3211 Fax +380 56 372 2078 http://www.sew-eurodrive.ua sew@sew-eurodrive.ua
Sales	**Kiev**	SEW-EURODRIVE GmbH S. Oleynika str. 21 02068 Kiev	Tel. +380 44 503 95 77 Fax +380 44 503 95 78 kso@sew-eurodrive.ua
	Donetsk	SEW-EURODRIVE GmbH 25th anniversary of RKKA av. 1-B, of. 805 Donetsk 83000	Tel. +380 62 38 80 545 Fax +380 62 38 80 533 dso@sew-eurodrive.ua

Uruguay			
Sales	**Montevideo**	SEW-EURODRIVE Uruguay, S. A. German Barbato 1526 CP 11200 Montevideo	Tel. +598 2 90181-89 Fax +598 2 90181-88 sewuy@sew-eurodrive.com.uy

USA			
Production **Assembly** **Sales** **Service**	**Greenville**	SEW-EURODRIVE INC. 1295 Old Spartanburg Highway P.O. Box 518 Lyman, S.C. 29365	Tel. +1 864 439-7537 Fax Sales +1 864 439-7830 Fax Manuf. +1 864 439-9948 Fax Ass. +1 864 439-0566 Telex 805 550 http://www.seweurodrive.com cslyman@seweurodrive.com
Assembly **Sales** **Service**	**San Francisco**	SEW-EURODRIVE INC. 30599 San Antonio St. Hayward, California 94544-7101	Tel. +1 510 487-3560 Fax +1 510 487-6433 cshayward@seweurodrive.com

USA			
	Philadelphia/PA	SEW-EURODRIVE INC. Pureland Ind. Complex 2107 High Hill Road, P.O. Box 481 Bridgeport, New Jersey 08014	Tel. +1 856 467-2277 Fax +1 856 845-3179 csbridgeport@seweurodrive.com
	Dayton	SEW-EURODRIVE INC. 2001 West Main Street Troy, Ohio 45373	Tel. +1 937 335-0036 Fax +1 937 440-3799 cstroy@seweurodrive.com
	Dallas	SEW-EURODRIVE INC. 3950 Platinum Way Dallas, Texas 75237	Tel. +1 214 330-4824 Fax +1 214 330-4724 csdallas@seweurodrive.com
	Additional addresses for service in the USA provided on request!		

Venezuela			
Assembly **Sales** **Service**	**Valencia**	SEW-EURODRIVE Venezuela S.A. Av. Norte Sur No. 3, Galpon 84-319 Zona Industrial Municipal Norte Valencia, Estado Carabobo	Tel. +58 241 832-9804 Fax +58 241 838-6275 http://www.sew-eurodrive.com.ve ventas@sew-eurodrive.com.ve sewfinanzas@cantv.net





SEW
EURODRIVE

How we're driving the world

With people who think fast and develop the future with you.

With a worldwide service network that is always close at hand.

With drives and controls that automatically improve your productivity.

With comprehensive knowledge in virtually every branch of industry today.

With uncompromising quality that reduces the cost and complexity of daily operations.

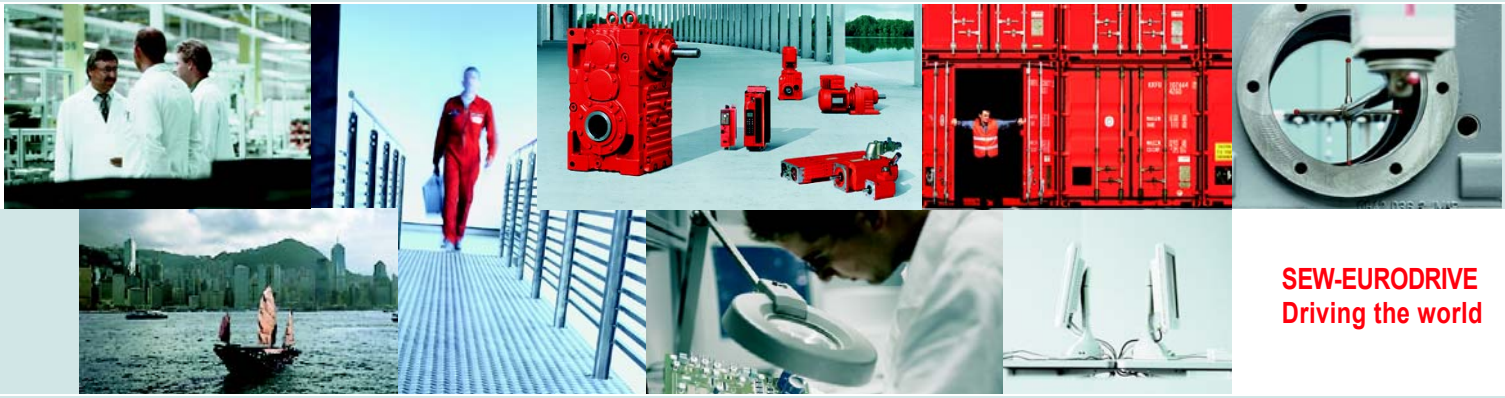

SEW-EURODRIVE
Driving the world

With a global presence that offers responsive and reliable solutions. Anywhere.

With innovative technology that solves tomorrow's problems today.

With online information and software updates, via the Internet, available around the clock.

SEW-EURODRIVE GmbH & Co KG
P.O. Box 3023 · D-76642 Bruchsal / Germany
Phone +49 7251 75-0 · Fax +49 7251 75-1970
sew@sew-eurodrive.com

→ **www.sew-eurodrive.com**