10 K..CMP, DS, CM

10.1 K, KA, KV, KH, KF, KAF, KAV, KHF, KA../T, KV../T, KH../T, KAZ, KVZ, KHZ..CMP / DS / CM

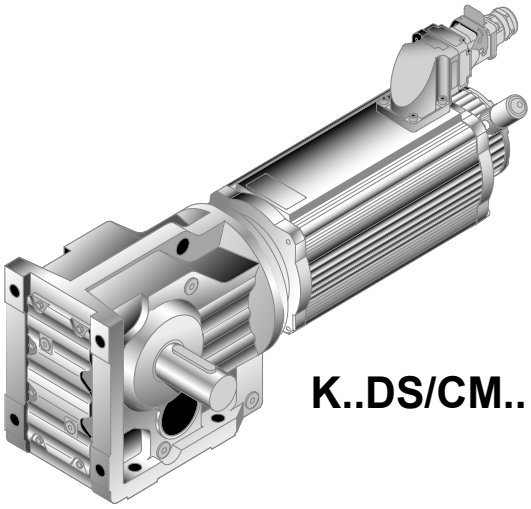

K..DS/CM..

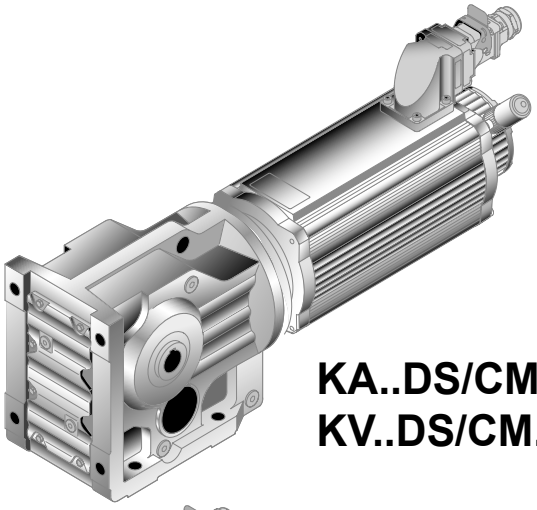

KA..DS/CM..
KV..DS/CM..

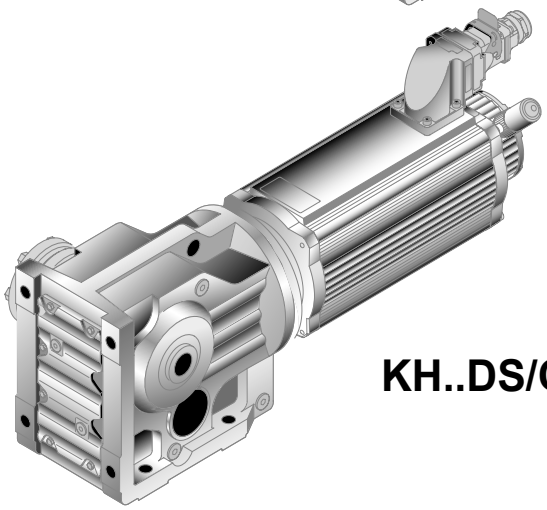

KH..DS/CM..

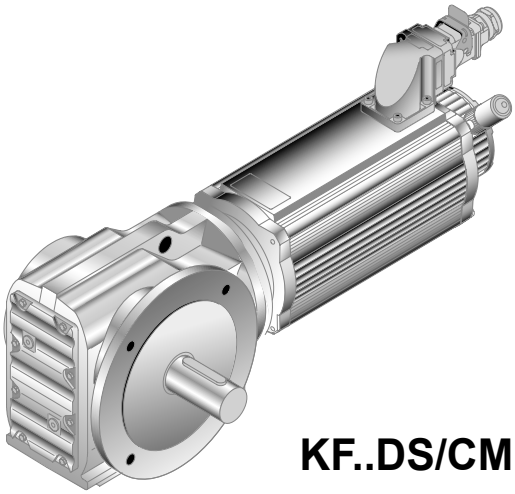

KF..DS/CM..

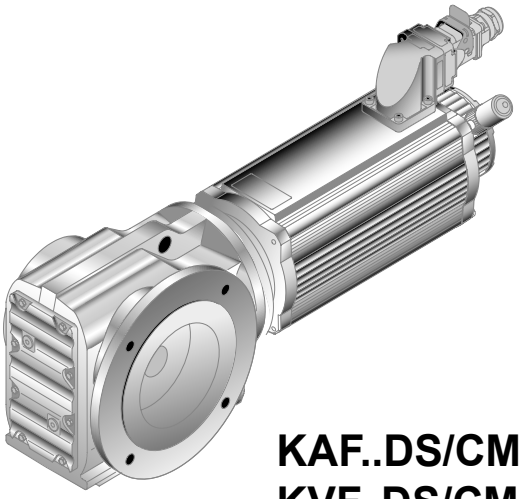

KAF..DS/CM..
KVF..DS/CM..

52501AXX

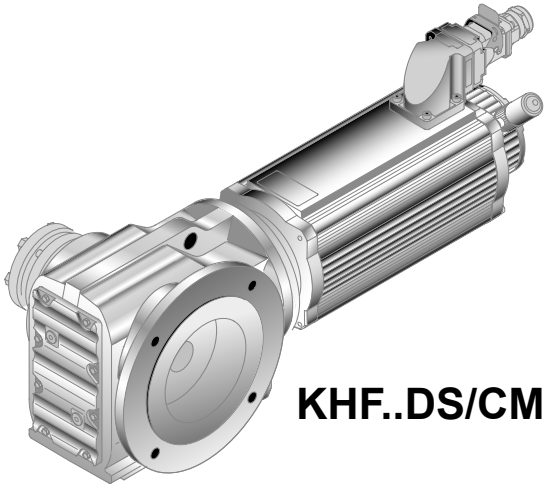

KHF..DS/CM..

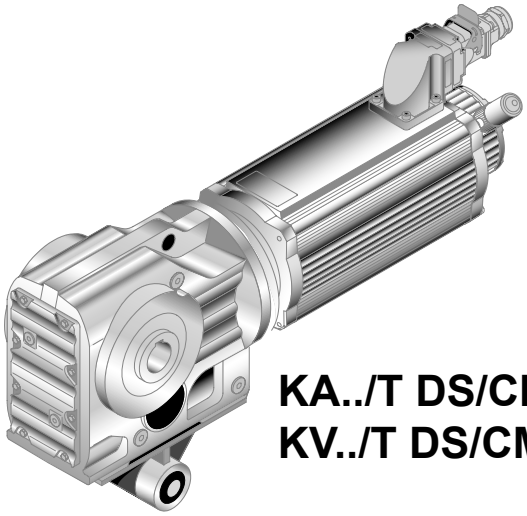

KA../T DS/CM..
KV../T DS/CM..

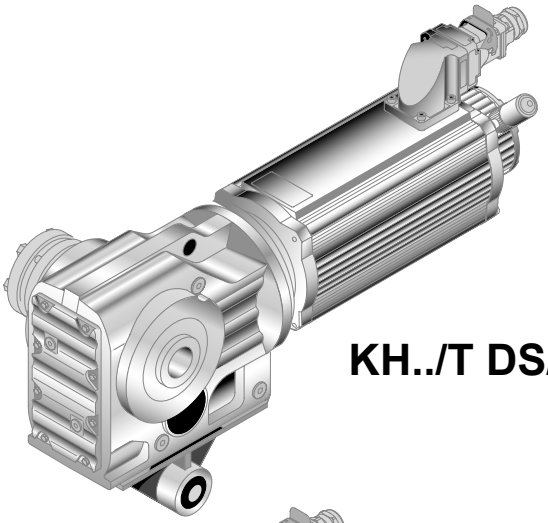

KH../T DS/CM..

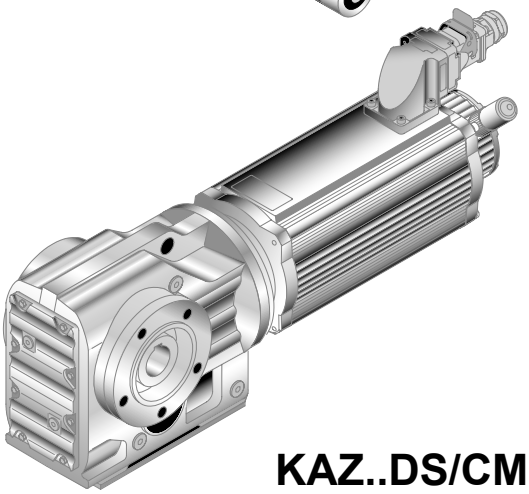

KAZ..DS/CM..
KVZ..DS/CM..

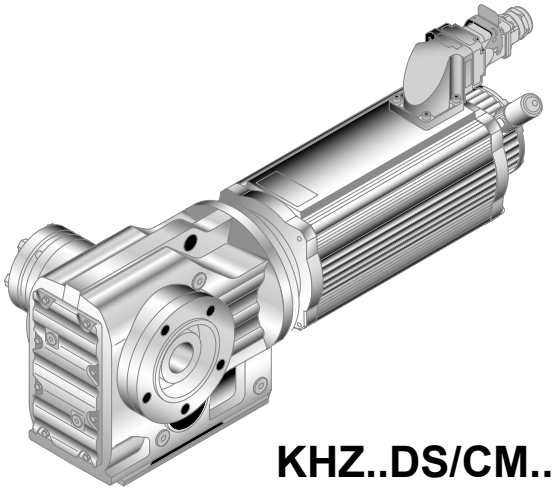

KHZ..DS/CM..

52502AXX

10.2 K 37 / CMP / DS / CM [Nm]

M_{aDyn} [Nm]		CMP							DS			CM			
	i	40M	50S	50M	50L	63S	63M	63L	56M	56L	56H	71S	71M	71L	90S
K37 3	3.98	15	20	39	59	42	82	116	15	29	58	63	82	120	151
	5.36	20	27	53	79	57	110	156	20	39	78	85	111	162	>199
	6.37	23	31	62	93	67	130	184	23	46	92	100	130	190	>199
	6.8	25	34	67	99	72	138	196	25	49	98	107	139	>199	>199
	7.96	29	39	78	116	84	162	>199	29	57	115	125	163	>199	>199
	8.91	32	44	87	130	94	181	>199	32	64	129	140	182	>199	>199
	10.49	38	52	103	153	111	>199	>199	38	76	151	164	>199	>199	>199
	12.14	43	59	118	176	127	>199		43	87	173	188	>199		
	13.08	47	64	127	189	136	>240	>240	47	93	187	203	>240	>240	>240
	15.31	55	75	148	222	160	>240	>240	55	109	219	237	>240	>240	>240
	17.15	61	84	166	>240	179	>240	>240	61	123	>240	>240	>240	>240	>240
	20.19	72	99	195	>240	211	>240	>240	72	144	>240	>240	>240	>240	>240
	23.36	83	114	226	>240	>240	>240		83	167	>240	>240	>240		
	24.99	89	122	>240	>240	>240	>240		89	179	>240	>240	>240		
	28.83	103	141	>240		>240			103	206	>240				
	29.96	105	143	>230	>230	>230	>230	>230	105	209	>230	>230	>230	>230	>230
	35.57	124	170	>230	>230	>230	>230	>230	124	>230	>230	>230	>230	>230	>230
	37.97	133	182	>230	>230	>230	>230	>230	133	>230	>230	>230	>230	>230	>230
	44.46	154	210	>230	>230	>230	>230	>230	154	>230	>230	>230	>230	>230	>230
	49.79	172	>230	>230	>230	>230	>230	>230	172	>230	>230	>230	>230	>230	>230
	58.6	203	>230	>230	>230	>230	>230	>230	203	>230	>230	>230	>230	>230	>230
	67.8	>230	>230	>230	>230	>230	>230		>230	>230	>230	>230	>230		
	72.54	>230	>230	>230	>230	>230	>230		>230	>230	>230	>230	>230		
	83.69	>230	>230	>230		>230			>230	>230	>230				
	97.81	>230	>230						>230	>230					
	106.38	>230	>230						>230	>230					

m [kg]		CMP							DS			CM			
	s	40M	50S	50M	50L	63S	63M	63L	56M	56L	56H	71S	71M	71L	90S
K37	3	13	15	16	17	17	19	20	14	15	15	20	21	25	29
KF: + 2.3 kg / KA: + -0.2 kg / KAF: + 1.5 kg															

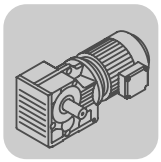

CMP.. / DS.. / CM..	i	n_{epk} [1/min]	η [%]	c_T K [Nm/']	KF [Nm/']	KA [Nm/']	KAF [Nm/']	φ /R [']
K37 3	3.98	4500	96	13.03	13.21	29.18	29.18	13
	5.36	4500	96	13.03	13.21	29.18	29.18	13
	6.37	4500	95	13.03	13.21	29.18	29.18	13
	6.8	4500	95	13.03	13.21	29.18	29.18	13
	7.96	4500	95	13.03	13.21	29.18	29.18	13
	8.91	4500	95	13.03	13.21	29.18	29.18	12
	10.49	4500	95	13.03	13.21	29.18	29.18	12
	12.14	4500	94	13.03	13.21	29.18	29.18	12
	13.08	4500	94	17.13	17.44	62.83	62.83	9
	15.31	4500	94	17.13	17.44	62.83	62.83	9
	17.15	4500	94	17.13	17.44	62.83	62.83	8
	20.19	4500	94	17.13	17.44	62.83	62.83	8
	23.36	4500	94	17.13	17.44	62.83	62.83	8
	24.99	4500	94	17.13	17.44	62.83	62.83	8
	28.83	4500	94	17.13	17.44	62.83	62.83	8
	29.96	4500	92	18.45	18.82	85.35	85.35	7
	35.57	4500	92	18.45	18.82	85.35	85.35	7
	37.97	4500	92	18.45	18.82	85.35	85.35	7
	44.46	4500	91	18.45	18.82	85.35	85.35	7
	49.79	4500	91	18.45	18.82	85.35	85.35	7
	58.6	4500	91	18.45	18.82	85.35	85.35	7
	67.8	4500	91	18.45	18.82	85.35	85.35	7
	72.54	4500	91	18.45	18.82	85.35	85.35	7
	83.69	4500	90	18.45	18.82	85.35	85.35	7
	97.81	4500	90	18.45	18.82	85.35	85.35	7
	106.38	4500	90	18.45	18.82	85.35	85.35	7

CMP.. / DS.. / CM..	i	M_{amax} [Nm]	M_{apk} [Nm]	$M_{aNotaus}$ [Nm]	n_{ak} [1/min]	J_G 10^{-4} [kgm^2]	F_{Ramax} K [N]	KF [N]	KA [N]	KAF [N]	F_{Rapk} K [N]	KF [N]	KA [N]	KAF [N]
K37 3	3.98	125	187	213	377	2.6	1660	2130	2310	2310	5780	5710	7000	7000
	5.36	140	199	238	317	1.7	1810	2340	2530	2530	5650	5640	7000	7000
	6.37	145	199	247	314	1.3	1950	2500	2720	2720	5650	5640	7000	7000
	6.8	150	199	255	294	1.1	1980	2540	2760	2760	5650	5640	7000	7000
	7.96	155	199	264	276	0.85	2110	2700	2940	2940	5650	5640	7000	7000
	8.91	160	199	272	258	0.70	2200	2810	3070	3070	5650	5640	7000	7000
	10.49	160	199	272	276	0.51	2410	3030	3340	3340	5650	5640	7000	7000
	12.14	160	199	272	297	0.40	2600	3240	3600	3600	5650	5640	7000	7000
	13.08	165	240	281	420	1.0	2650	3310	3660	3660	4100	4100	7000	7000
	15.31	175	240	298	346	0.76	2780	3480	3850	3850	4100	4100	7000	7000
	17.15	180	240	306	315	0.62	2900	3630	4020	4020	4100	4100	7000	7000
	20.19	185	240	315	287	0.46	3110	3870	4300	4300	4100	4100	7000	7000
	23.36	195	240	332	240	0.37	3260	4060	4510	4510	4100	4100	7000	7000
	24.99	200	240	340	220	0.33	3330	4150	4600	4600	4100	4100	7000	7000
	28.83	200	240	340	222	0.26	3580	4420	4940	4940	4100	4100	7000	7000
	29.96	200	230	340	157	0.76	3650	4500	5030	5030	5140	5140	7000	7000
	35.57	200	230	340	157	0.60	3970	4860	5460	5460	5140	5140	7000	7000
	37.97	200	230	340	158	0.54	4100	5000	5630	5630	5140	5140	7000	7000
	44.46	200	230	340	157	0.42	4420	5350	6060	6060	5140	5140	7000	7000
	49.79	200	230	340	141	0.36	4660	5610	6380	6380	5140	5140	7000	7000
	58.6	200	230	340	119	0.27	5020	5630	6860	6860	5140	5140	7000	7000
	67.8	200	230	340	103	0.23	5360	5630	7000	7000	5140	5140	7000	7000
	72.54	200	230	340	96	0.21	5520	5630	7000	7000	5140	5140	7000	7000
	83.69	200	230	340	84	0.17	5640	5630	7000	7000	5140	5140	7000	7000
	97.81	200	230	340	72	0.13	5640	5630	7000	7000	5140	5140	7000	7000
	106.38	200	230	340	66	0.12	5640	5630	7000	7000	5140	5140	7000	7000

10.3 K 37 / CMP / DS / CM [mm]

33 009 00 07

K37..

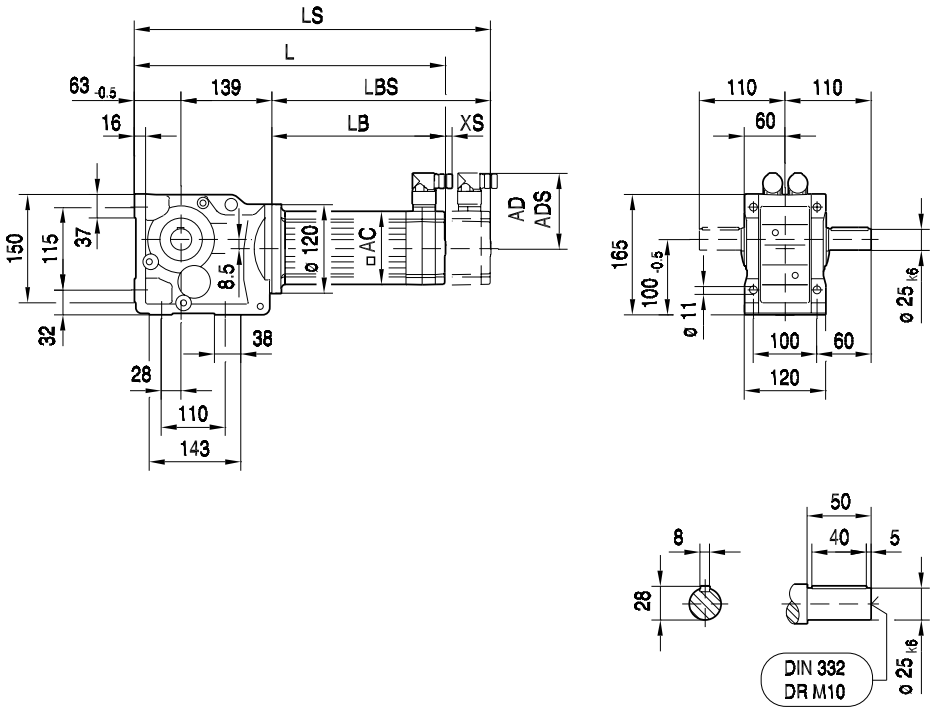

(→ 📖 150)	CMP40M	CMP50S	CMP50M	CMP50L	CMP63S	CMP63M	CMP63L	
AC	57	73	73	73	88	88	88	
AD	75	82	82	82	89	89	89	
ADS	75	82	82	82	89	89	89	
L	345	347	386	425	382	432	485	
LS	375	376	415	454	410	460	514	
LB	143	145	184	223	180	230	283	
LBS	173	174	213	252	208	258	312	
XS	19	18	18	18	14	14	14	

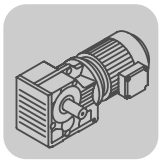

33 010 00 07

KF37..

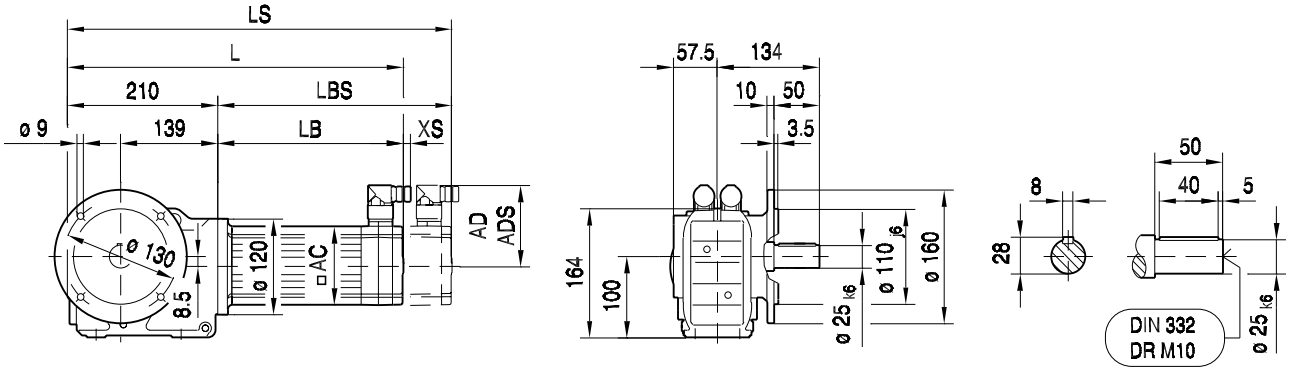

KAF37..

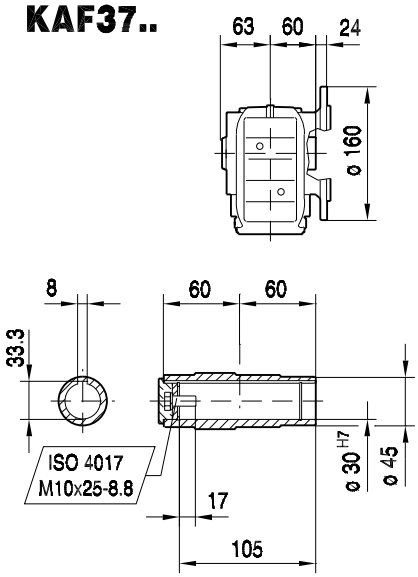

KHF37..

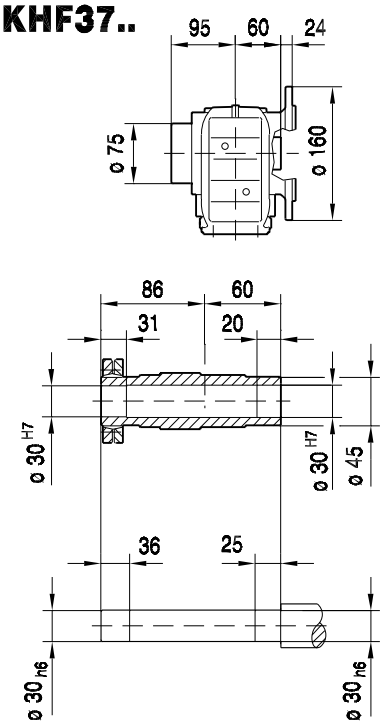

KVF37..

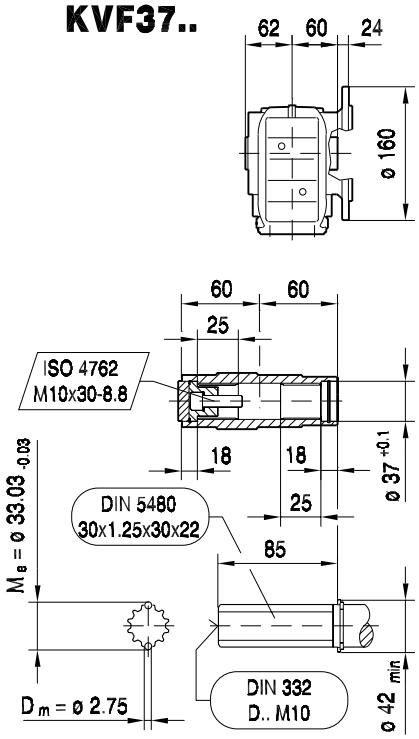

(→ 📖 150)	CMP40M	CMP50S	CMP50M	CMP50L	CMP63S	CMP63M	CMP63L	
AC	57	73	73	73	88	88	88	
AD	75	82	82	82	89	89	89	
ADS	75	82	82	82	89	89	89	
L	353	355	394	433	390	440	493	
LS	383	384	423	462	418	468	522	
LB	143	145	184	223	180	230	283	
LBS	173	174	213	252	208	258	312	
XS	19	18	18	18	14	14	14	

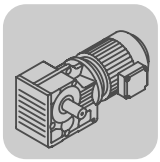

K..CMP, DS, CM
K 37 / CMP / DS / CM [mm]

KA37..

33 011 00 07

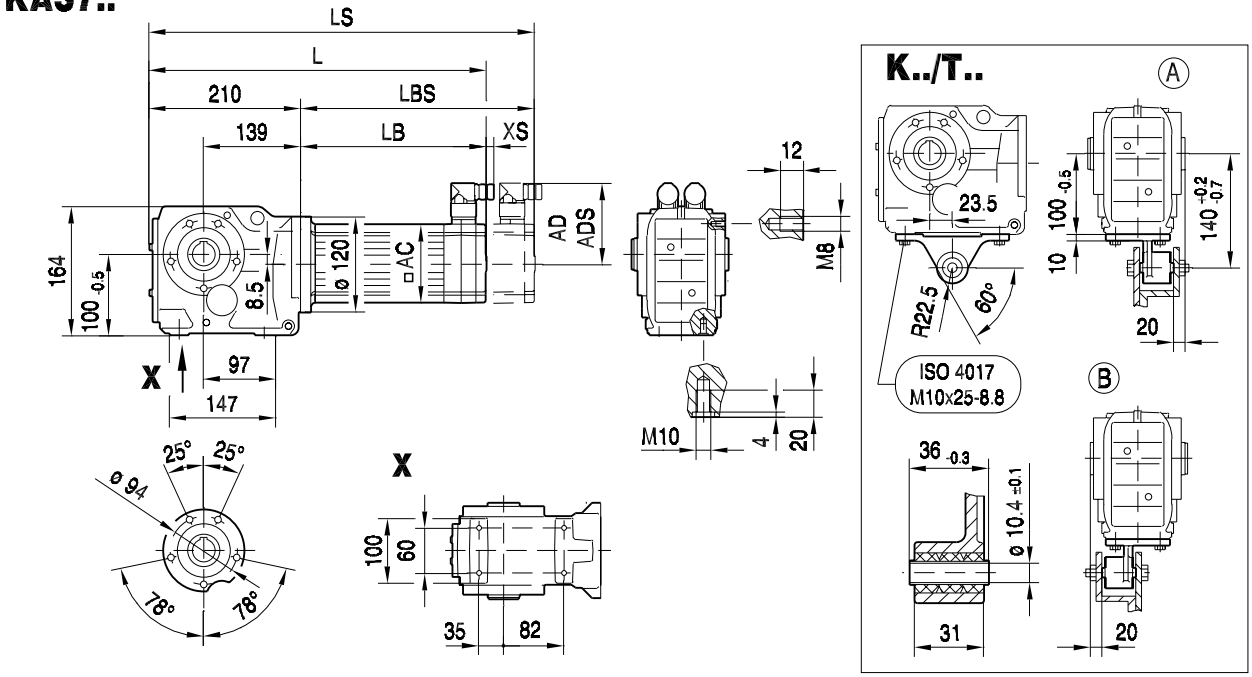

KA37..

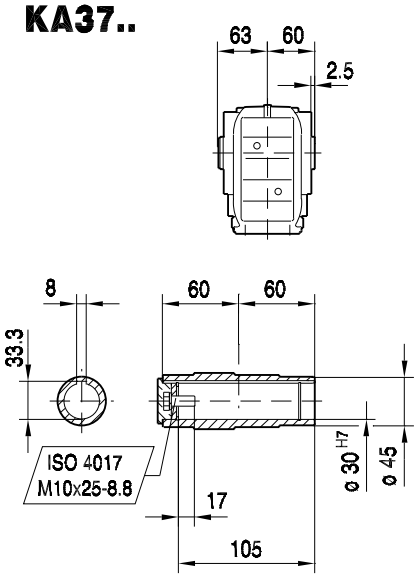

KH37..

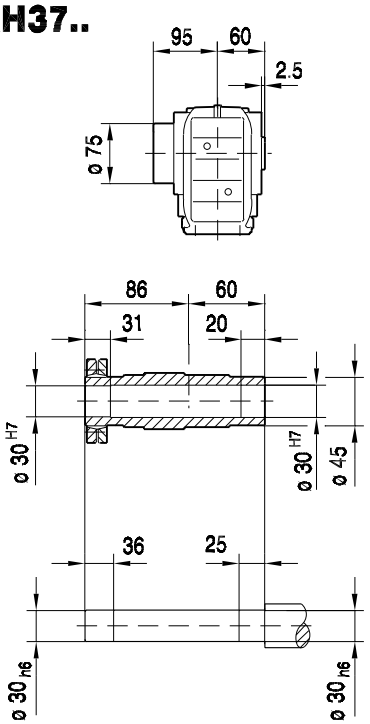

KV37..

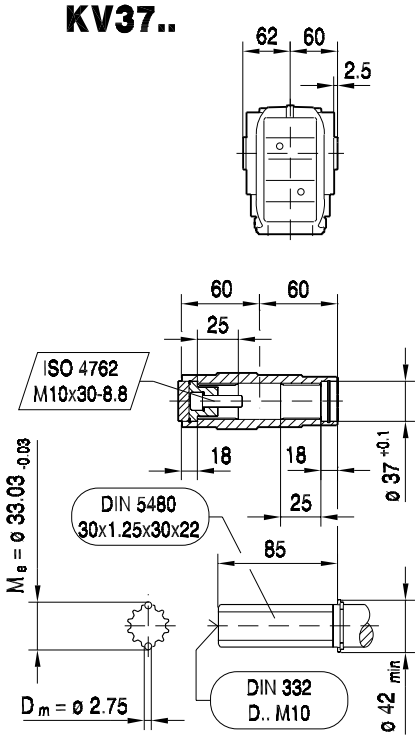

(→ 📖 150)	CMP40M	CMP50S	CMP50M	CMP50L	CMP63S	CMP63M	CMP63L	
AC	57	73	73	73	88	88	88	
AD	75	82	82	82	89	89	89	
ADS	75	82	82	82	89	89	89	
L	353	355	394	433	390	440	493	
LS	383	384	423	462	418	468	522	
LB	143	145	184	223	180	230	283	
LBS	173	174	213	252	208	258	312	
XS	19	18	18	18	14	14	14	

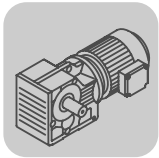

KAZ37..

33 012 00 07

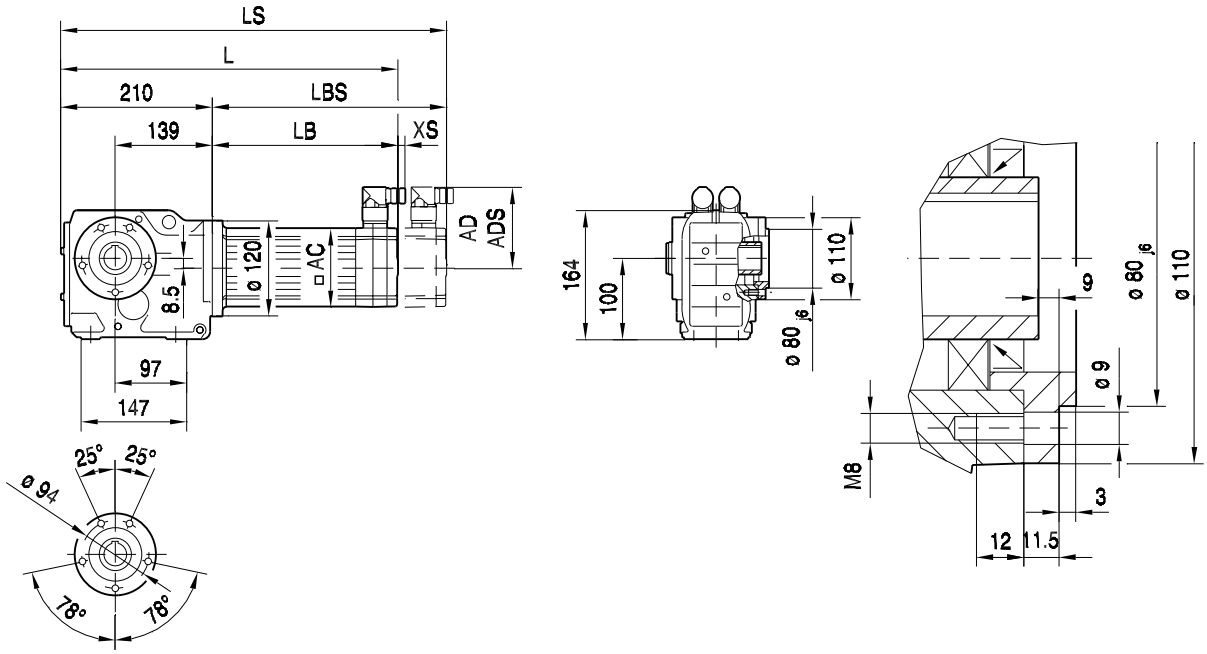

KAZ37..

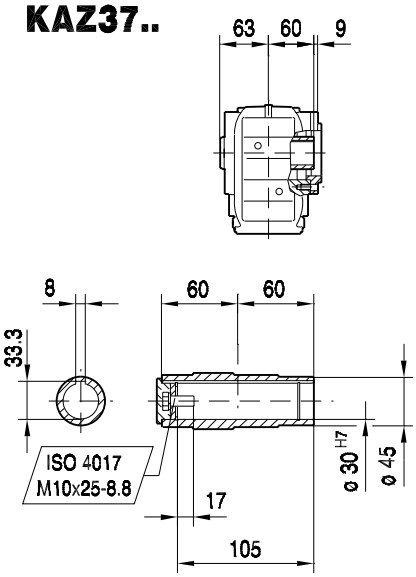

KHZ37..

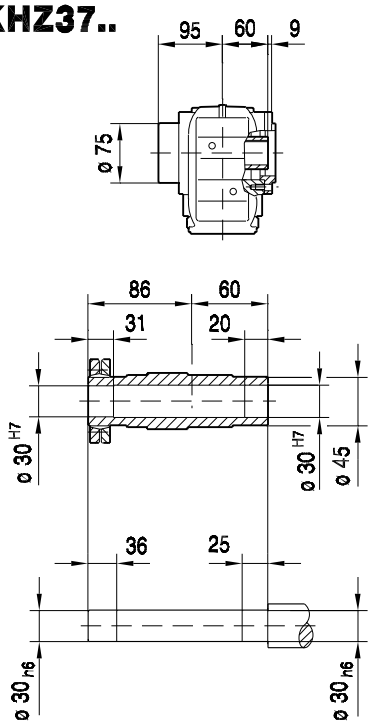

KVZ37..

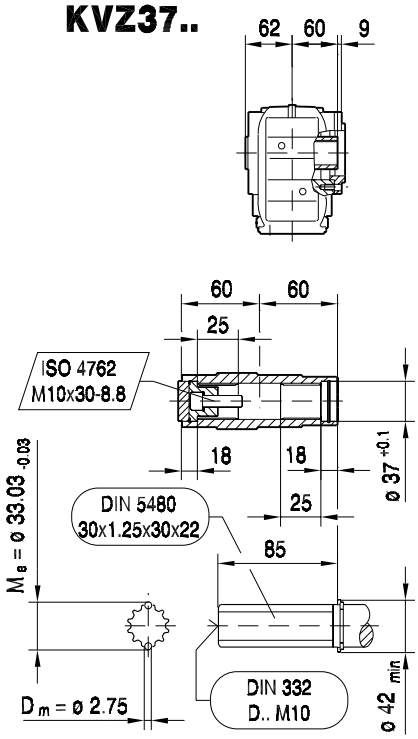

(→ 📖 150)	CMP40M	CMP50S	CMP50M	CMP50L	CMP63S	CMP63M	CMP63L	
AC	57	73	73	73	88	88	88	
AD	75	82	82	82	89	89	89	
ADS	75	82	82	82	89	89	89	
L	353	355	394	433	390	440	493	
LS	383	384	423	462	418	468	522	
LB	143	145	184	223	180	230	283	
LBS	173	174	213	252	208	258	312	
XS	19	18	18	18	14	14	14	

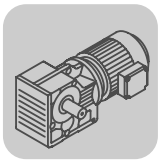

K..CMP, DS, CM
K 37 / CMP / DS / CM [mm]

KT37..

33 013 00 07

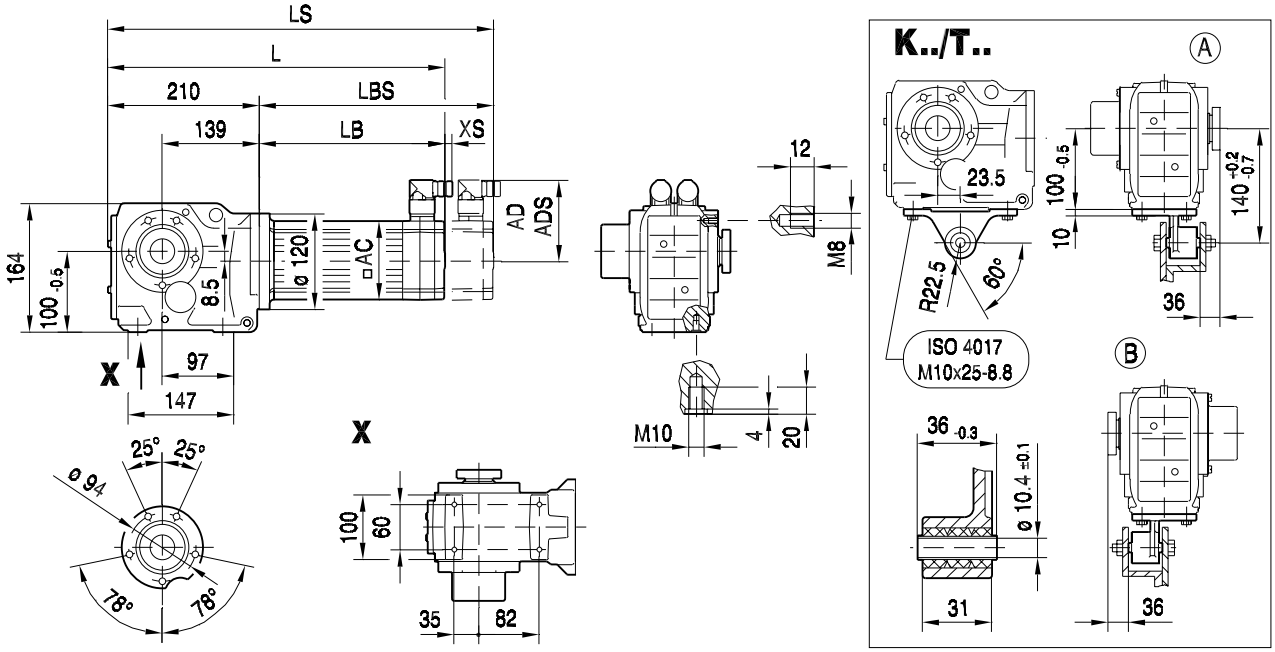

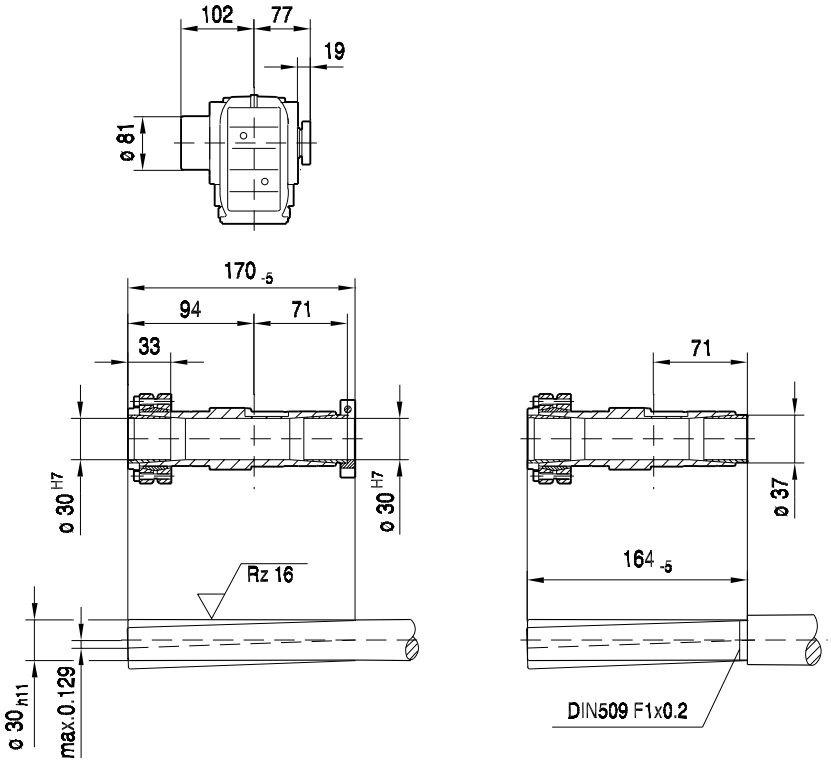

(→ 📖 150)	CMP40M	CMP50S	CMP50M	CMP50L	CMP63S	CMP63M	CMP63L	
AC	57	73	73	73	88	88	88	
AD	75	82	82	82	89	89	89	
ADS	75	82	82	82	89	89	89	
L	353	355	394	433	390	440	493	
LS	383	384	423	462	418	468	522	
LB	143	145	184	223	180	230	283	
LBS	173	174	213	252	208	258	312	
XS	19	18	18	18	14	14	14	

34 030 01 01

K37..

DS56..

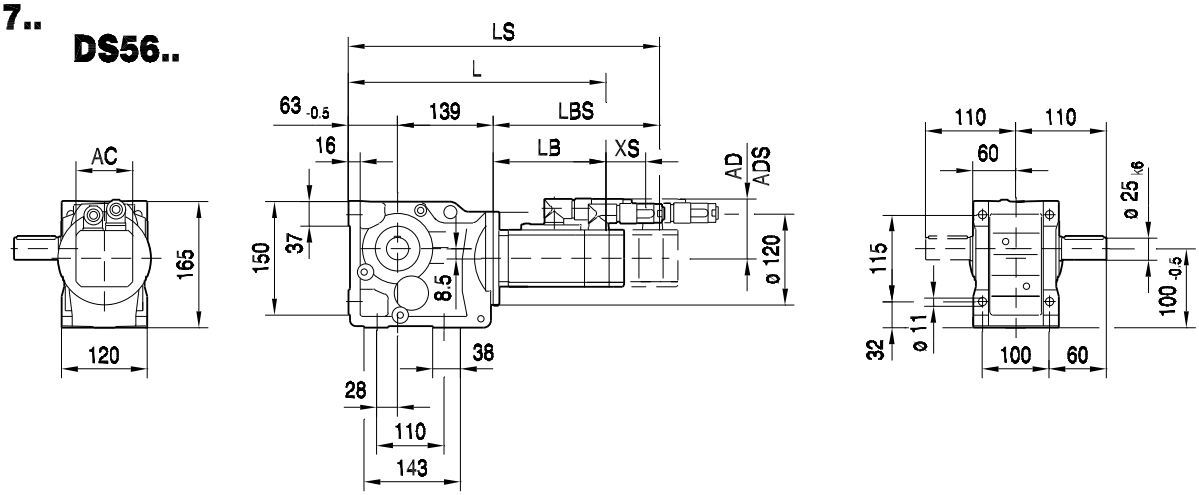

CM ..

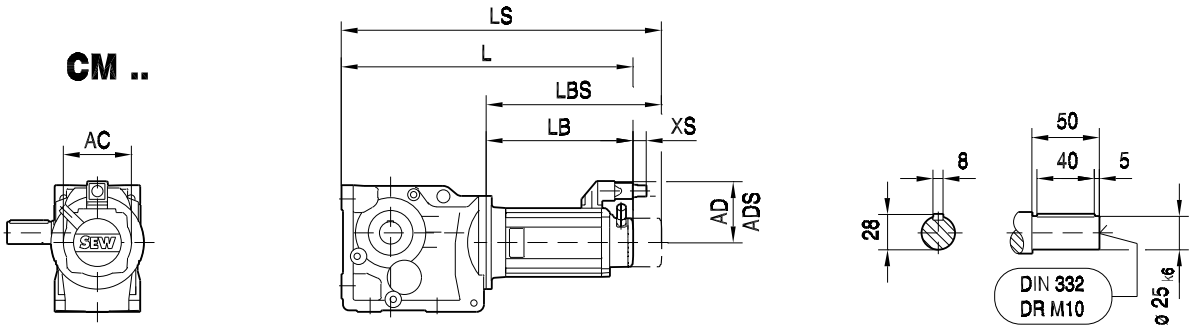

(→ 📖 150)	DS56M	DS56L	DS56H	CM71S	CM71M	CM71L	CM90S				
AC	73	73	73	117	117	117	142				
AD	71	71	77	122	122	122	140				
ADS	77	77	77	122	122	122	140				
L	339	371	474	440	460	503	495				
LS	369	401	474	522	542	585	591				
LB	137	169	272	238	258	301	293				
LBS	167	199	272	320	340	383	389				
XS	70	70	51	45	45	45	50				

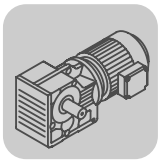

K..CMP, DS, CM
K 37 / CMP / DS / CM [mm]

KF37.. **DS56..** **34 031 01 01**

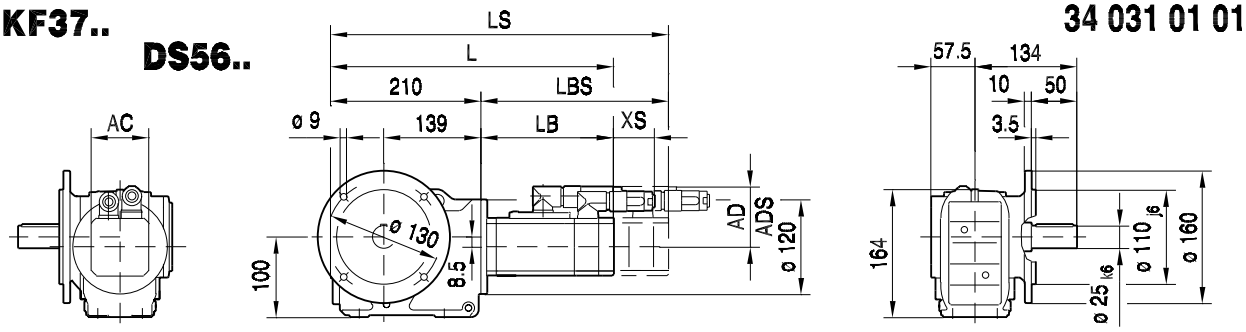

CM..

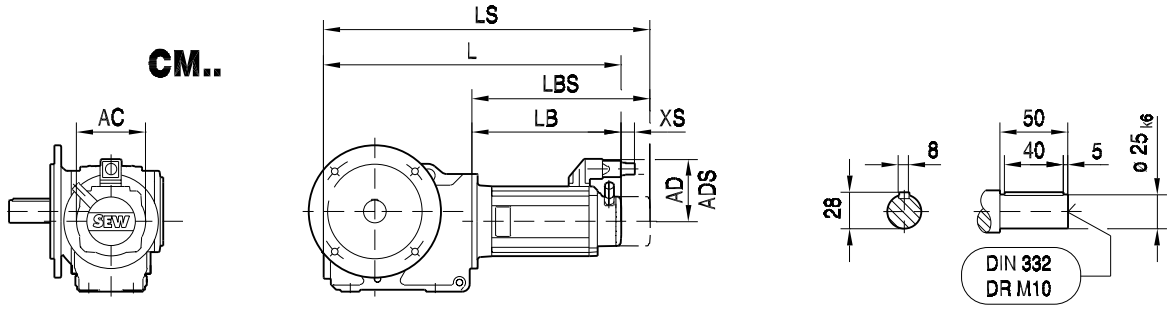

KAF37..

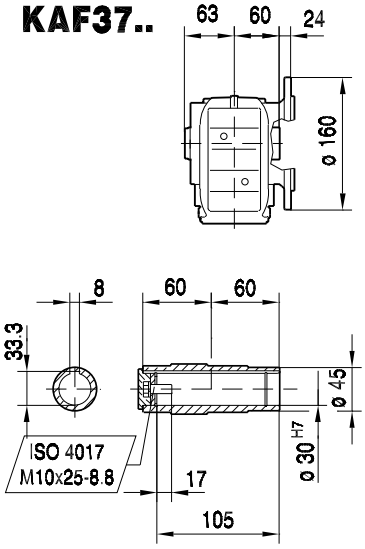

KHF37..

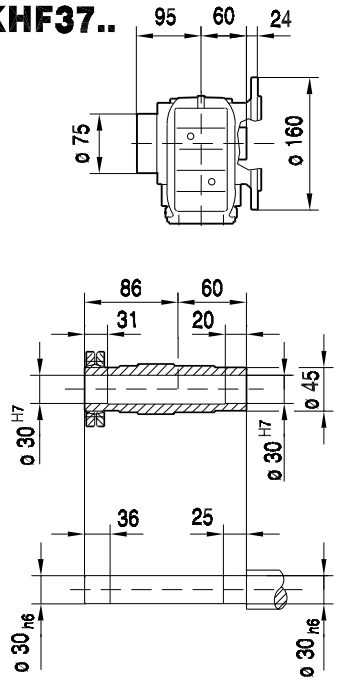

KVF37..

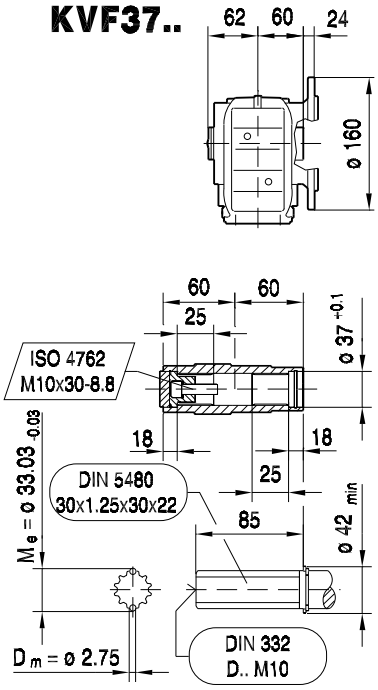

(→ 📖 150)	DS56M	DS56L	DS56H	CM71S	CM71M	CM71L	CM90S				
AC	73	73	73	117	117	117	142				
AD	71	71	77	122	122	122	140				
ADS	77	77	77	122	122	122	140				
L	347	379	482	448	468	511	503				
LS	377	409	482	530	550	593	599				
LB	137	169	272	238	258	301	293				
LBS	167	199	272	320	340	383	389				
XS	70	70	51	45	45	45	50				

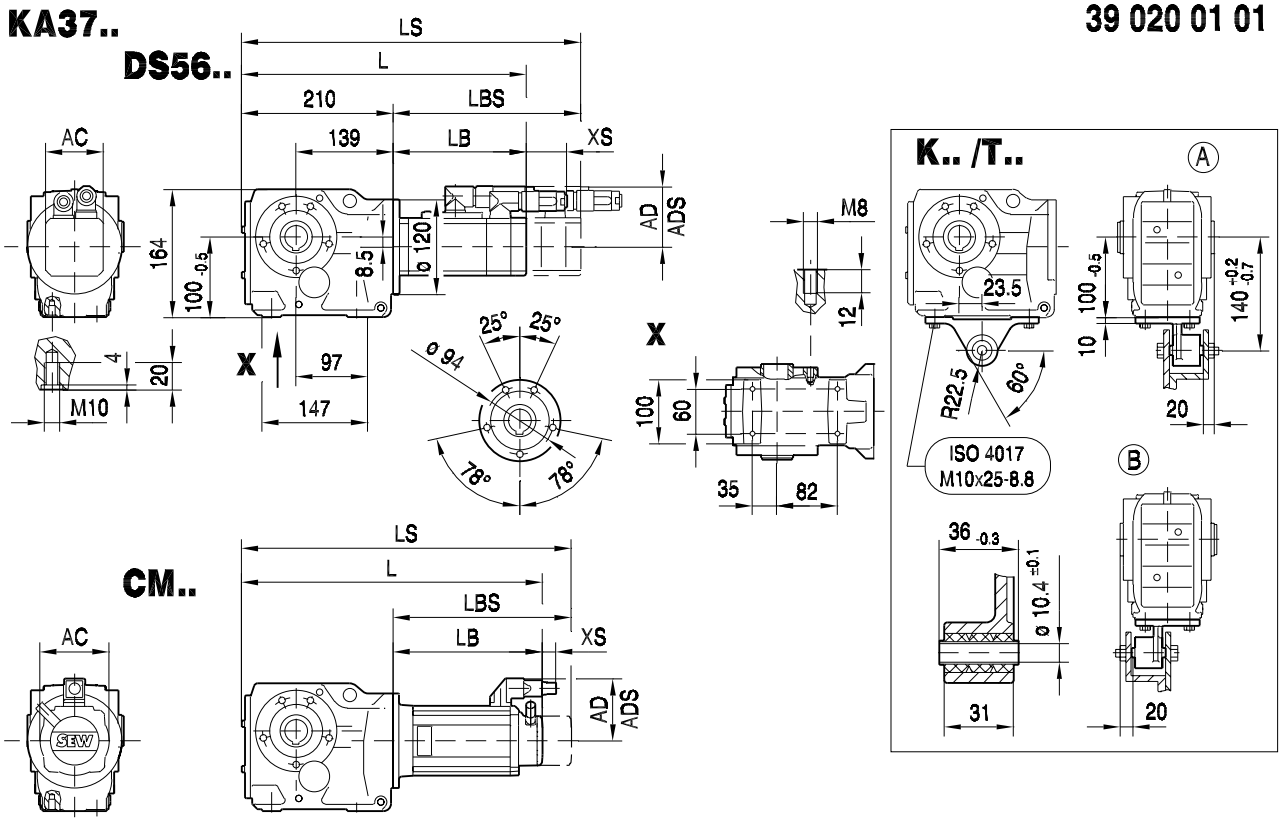

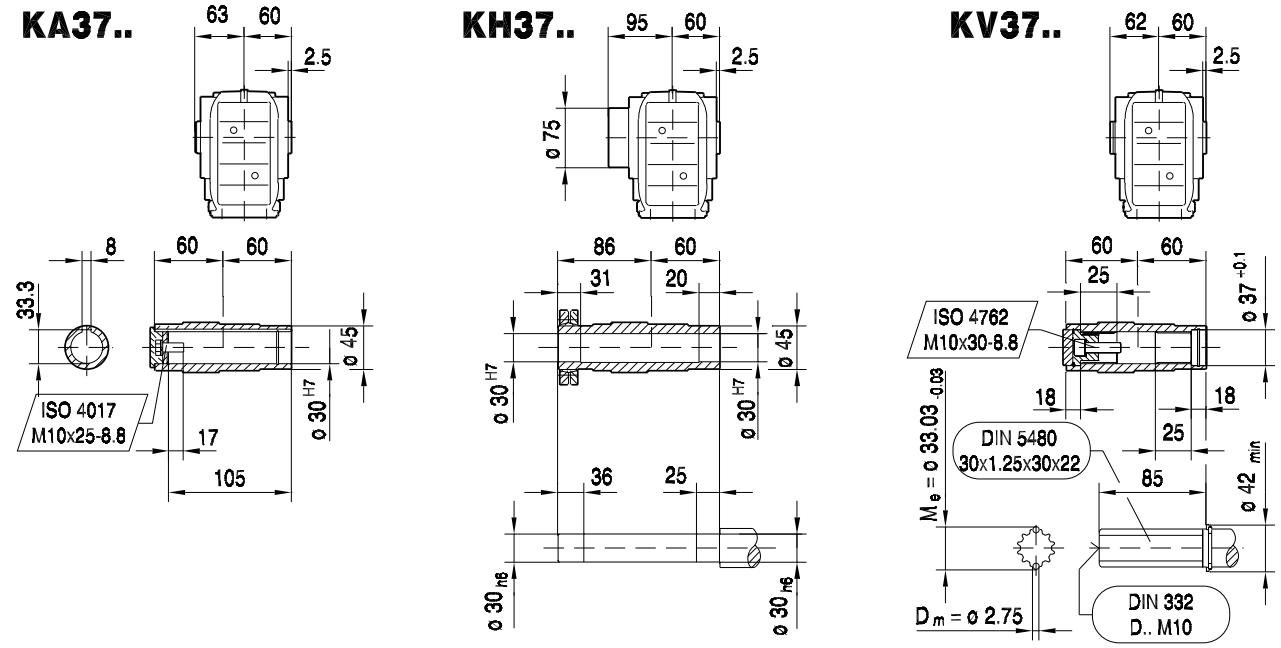

(→ 📖 150)	DS56M	DS56L	DS56H	CM71S	CM71M	CM71L	CM90S				
AC	73	73	73	117	117	117	142				
AD	71	71	77	122	122	122	140				
ADS	77	77	77	122	122	122	140				
L	347	379	482	448	468	511	503				
LS	377	409	482	530	550	593	599				
LB	137	169	272	238	258	301	293				
LBS	167	199	272	320	340	383	389				
XS	70	70	51	45	45	45	50				

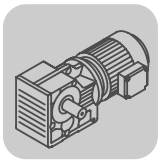

K..CMP, DS, CM
K 37 / CMP / DS / CM [mm]

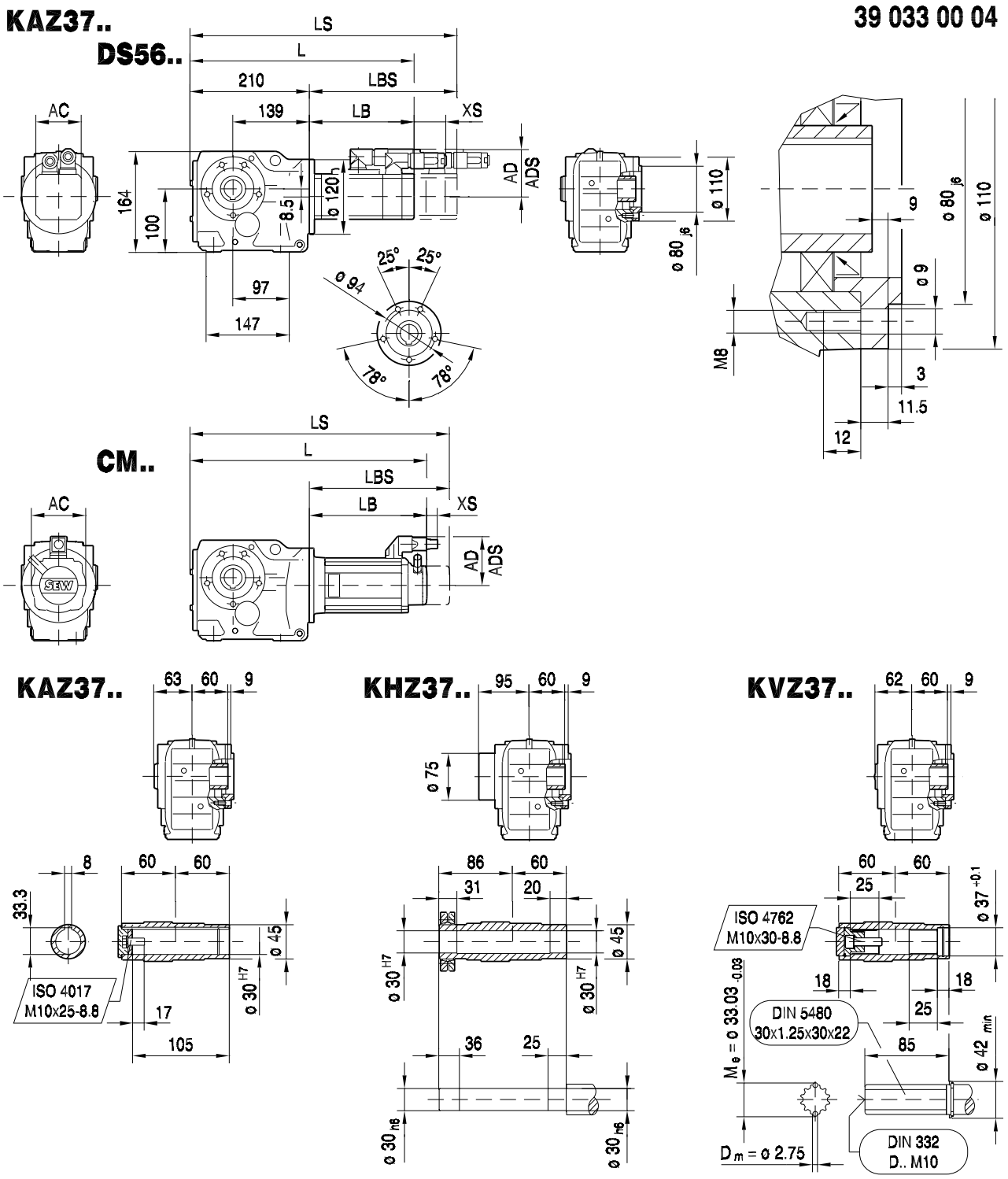

(→ 📖 150)	DS56M	DS56L	DS56H	CM71S	CM71M	CM71L	CM90S				
AC	73	73	73	117	117	117	142				
AD	71	71	77	122	122	122	140				
ADS	77	77	77	122	122	122	140				
L	347	379	482	448	468	511	503				
LS	377	409	482	530	550	593	599				
LB	137	169	272	238	258	301	293				
LBS	167	199	272	320	340	383	389				
XS	70	70	51	45	45	45	50				

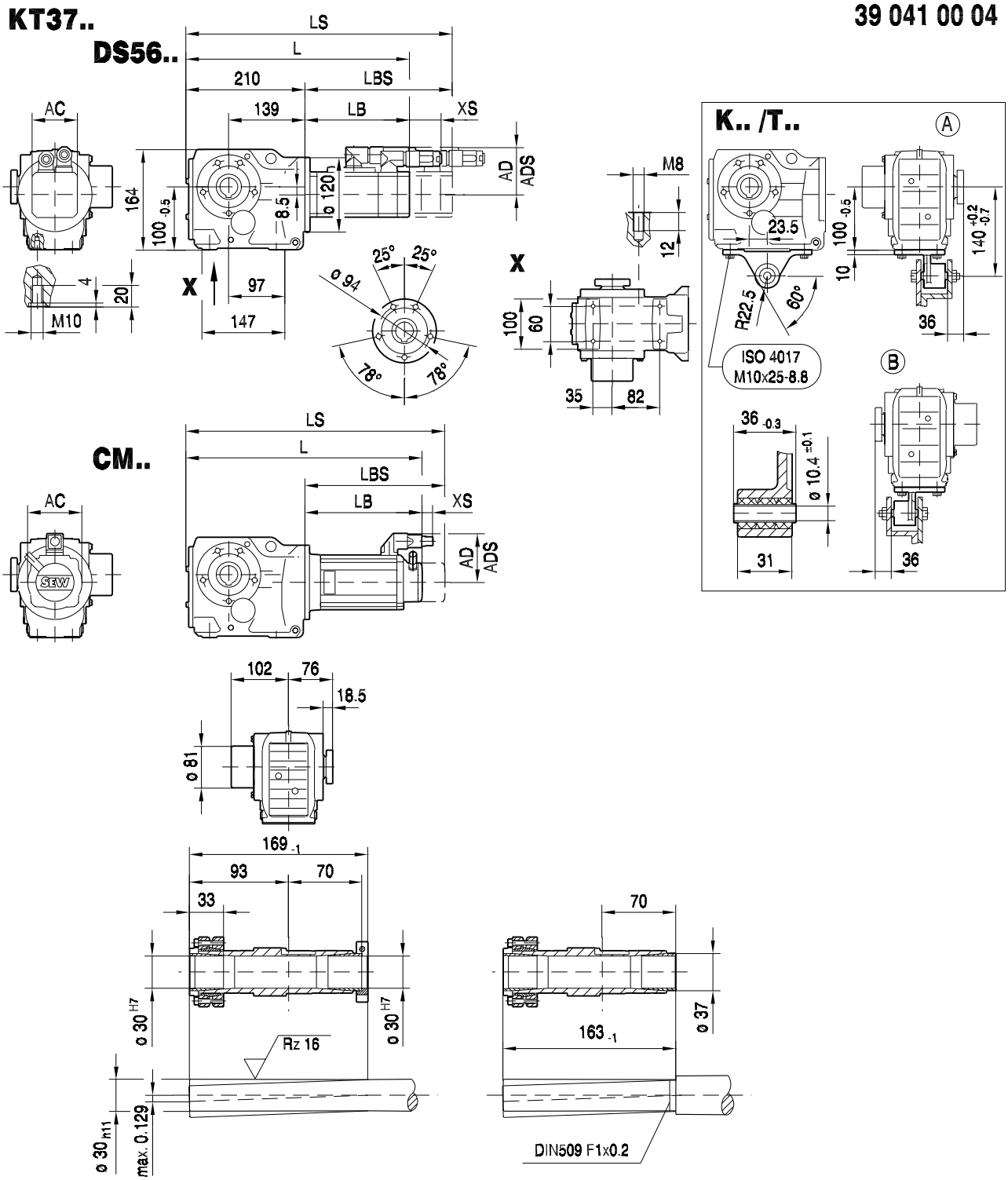

(→ 📖 150)	DS56M	DS56L	DS56H	CM71S	CM71M	CM71L	CM90S				
AC	73	73	73	117	117	117	142				
AD	71	71	77	122	122	122	140				
ADS	77	77	77	122	122	122	140				
L	347	379	482	448	468	511	503				
LS	377	409	482	530	550	593	599				
LB	137	169	272	238	258	301	293				
LBS	167	199	272	320	340	383	389				
XS	70	70	51	45	45	45	50				

10.4 K 47 / CMP / DS / CM [Nm]

M_{aDyn} [Nm]		CMP						DS			CM				
	i	50S	50M	50L	63S	63M	63L	56M	56L	56H	71S	71M	71L	90S	90M
	4.64		46	69	49	95	135			68	73	96	140	176	233
	5.81	29	57	86	62	119	170	21	42	85	92	120	175	221	291
	6.58	33	64	96	69	134	190	24	48	95	103	134	196	248	>310
	7.36	36	72	108	78	150	213	27	53	106	115	150	220	277	>310
	8.56	42	84	125	90	174	247	31	62	124	134	175	255	>310	>310
	9.1	45	89	133	96	185	263	33	66	131	143	186	271	>310	>310
	10.56	52	103	154	111	215	305	38	76	152	166	216	>315	>315	>315
	11.77	58	115	172	124	239	>315	42	85	170	184	240	>315	>315	>315
	12.19	60	119	178	129	248	352	44	88	176	191	249	364	>435	>435
	13.65	67	134	200	144	278	394	49	99	197	214	279	407	>435	>435
	15.86	78	155	232	167	322	>435	57	115	229	249	324	>435	>435	>435
	16.86	83	165	247	178	343	>435	61	122	243	264	344	>435	>435	>435
	19.58	97	192	286	206	398	>435	71	141	283	307	400	>435	>435	>435
	21.81	108	213	319	230	>435	>435	79	157	315	342	>435	>435	>435	>435
K47	24.06	118	233	348	251	>435		86	172	344	373	>435			
3	25.91	127	251	375	270	>435	>435	93	185	370	402	>435	>435	>435	
	29.32	143	284	424	306	>435		105	209	419	>435	>435			
	31.3	153	303	>435	327	>435		112	224	>435	>435	>435			
	35.39	171	339	>435	365	>435	>435	125	250	>435	>435	>435	>435	>435	>435
	39.61	192	379	>435	409	>435	>435	140	280	>435	>435	>435	>435	>435	>435
	46.03	223	>435	>435	>435	>435	>435	163	325	>435	>435	>435	>435	>435	>435
	48.95	237	>435	>435	>435	>435	>435	173	346	>435	>435	>435	>435	>435	>435
	56.83	275	>435	>435	>435	>435	>435	201	402	>435	>435	>435	>435	>435	>435
	63.3	303	>435	>435	>435	>435	>435	221	>435	>435	>435	>435	>435	>435	>435
	69.84	334	>435	>435	>435	>435		244	>435	>435	>435	>435			
	75.2	360	>435	>435	>435	>435	>435	263	>435	>435	>435	>435	>435	>435	
	85.12	407	>435	>435	>435	>435		298	>435	>435	>435	>435			
	90.86	435	>435	>435	>435	>435		318	>435	>435	>435	>435			
	104.37	>435	>435		>435			365	>435	>435					
	121.48	>435						425	>435						
	131.87	>435						>435	>435						

m [kg]		CMP						DS			CM				
	s	50S	50M	50L	63S	63M	63L	56M	56L	56H	71S	71M	71L	90S	90M
K47	3	21	22	23	23	25	26	21	22	22	27	28	31	36	38
KF: + 3.2 kg / KA: + -0.9 kg / KAF: + 2.0 kg															

CMP.. / DS.. / CM..	i	n_{epk} [1/min]	η [%]	c_T K [Nm/']	KF [Nm/']	KA [Nm/']	KAF [Nm/']	φ /R [']
K47 3	4.64	4500	96	25.53	23.31	50.12	50.12	12
	5.81	4500	96	25.53	23.31	50.12	50.12	12
	6.58	4500	95	25.53	23.31	50.12	50.12	12
	7.36	4500	95	25.53	23.31	50.12	50.12	11
	8.56	4500	95	25.53	23.31	50.12	50.12	11
	9.1	4500	95	25.53	23.31	50.12	50.12	11
	10.56	4500	95	25.53	23.31	50.12	50.12	11
	11.77	4500	95	25.53	23.31	50.12	50.12	10
	12.19	4500	95	33.04	29.4	90.48	90.48	8
	13.65	4500	95	33.04	29.4	90.48	90.48	8
	15.86	4500	95	33.04	29.4	90.48	90.48	8
	16.86	4500	95	33.04	29.4	90.48	90.48	8
	19.58	4500	95	33.04	29.4	90.48	90.48	8
	21.81	4500	95	33.04	29.4	90.48	90.48	8
	24.06	4500	94	33.04	29.4	90.48	90.48	8
	25.91	4500	94	33.04	29.4	90.48	90.48	8
	29.32	4500	94	33.04	29.4	90.48	90.48	8
	31.3	4500	94	33.04	29.4	90.48	90.48	7
	35.39	4500	93	36.02	31.74	117.01	117.01	7
	39.61	4500	93	36.02	31.74	117.01	117.01	7
	46.03	4500	93	36.02	31.74	117.01	117.01	7
	48.95	4500	93	36.02	31.74	117.01	117.01	7
	56.83	4500	93	36.02	31.74	117.01	117.01	7
	63.3	4500	92	36.02	31.74	117.01	117.01	7
	69.84	4500	92	36.02	31.74	117.01	117.01	6
	75.2	4500	92	36.02	31.74	117.01	117.01	6
	85.12	4500	92	36.02	31.74	117.01	117.01	6
	90.86	4500	92	36.02	31.74	117.01	117.01	6
	104.37	4500	92	36.02	31.74	117.01	117.01	6
	121.48	4500	92	36.02	31.74	117.01	117.01	6
	131.87	4500	92	36.02	31.74	117.01	117.01	6

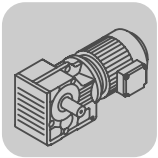

K..CMP, DS, CM
K 47 / CMP / DS / CM [Nm]

CMP.. / DS.. / CM..							F_{Ramax}				F_{Rapk}			
	i	M_{amax} [Nm]	M_{apk} [Nm]	$M_{aNotaus}$ [Nm]	n_{ak} [1/min]	J_G 10^{-4} [kgm^2]	K [N]	KF [N]	KA [N]	KAF [N]	K [N]	KF [N]	KA [N]	KAF [N]
K47 3	4.64	205	300	349	302	4.4	2980	2970	2040	2040	7060	7060	10000	10000
	5.81	230	305	391	258	3.6	3140	3140	2100	2100	7020	7020	10000	10000
	6.58	240	310	408	228	2.8	3270	3270	2190	2190	6970	6970	10000	10000
	7.36	250	310	425	217	2.3	3380	3390	2270	2270	6970	6970	10000	10000
	8.56	270	310	459	175	1.8	3500	3520	2310	2310	6970	6970	10000	10000
	9.1	280	310	476	165	1.6	3540	3560	2310	2310	6970	6970	10000	10000
	10.56	280	315	476	170	1.2	3830	3840	2580	2580	6920	6920	10000	10000
	11.77	280	315	476	178	1.0	4060	4050	2770	2770	6920	6920	10000	10000
	12.19	350	435	595	279	2.4	3720	3770	2330	2330	900	900	10000	10000
	13.65	360	435	612	249	2.0	3890	3940	2450	2450	900	900	10000	10000
	15.86	380	435	646	208	1.6	4080	4130	2570	2570	900	900	10000	10000
	16.86	380	435	646	214	1.4	4220	4270	2690	2690	900	900	10000	10000
	19.58	400	435	680	179	1.1	4440	4480	2820	2820	900	900	10000	10000
	21.81	400	435	680	179	0.91	4710	4740	3070	3070	900	900	10000	10000
	24.06	400	435	680	179	0.75	4970	4990	3300	3300	900	900	10000	10000
	25.91	400	435	680	178	0.68	5170	5180	3470	3470	900	900	10000	10000
	29.32	400	435	680	177	0.55	5520	5500	3780	3780	900	900	10000	10000
	31.3	400	435	680	179	0.50	5700	5680	3940	3940	900	900	10000	10000
	35.39	400	435	680	93	1.3	5920	5920	4270	4270	900	900	10000	10000
	39.61	400	435	680	96	1.1	5920	5920	4580	4580	900	900	10000	10000
	46.03	400	435	680	100	0.88	5920	5920	5000	5000	900	900	10000	10000
	48.95	400	435	680	100	0.80	5920	5920	5190	5190	900	900	10000	10000
	56.83	400	435	680	104	0.64	5920	5920	5640	5640	900	900	10000	10000
	63.3	400	435	680	104	0.54	5920	5920	5990	5990	900	900	10000	10000
	69.84	400	435	680	100	0.45	5920	5920	6320	6320	900	900	10000	10000
	75.2	400	435	680	93	0.42	5920	5920	6570	6570	900	900	10000	10000
	85.12	400	435	680	82	0.35	5920	5920	7000	7000	900	900	10000	10000
	90.86	400	435	680	77	0.32	5920	5920	7240	7240	900	900	10000	10000
	104.37	400	435	680	67	0.26	5920	5920	7760	7760	900	900	10000	10000
	121.48	400	435	680	58	0.21	5920	5920	8360	8360	900	900	10000	10000
	131.87	400	435	680	53	0.18	5920	5920	8700	8700	900	900	10000	10000

10.5 K 47 / CMP / DS / CM [mm]

K47..

33 014 00 07

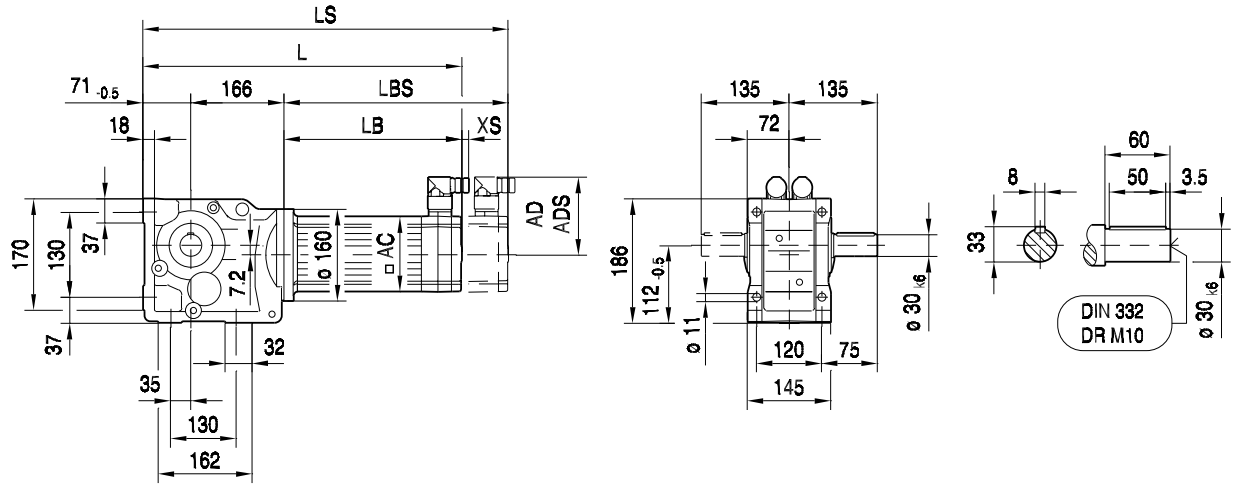

KA47B..

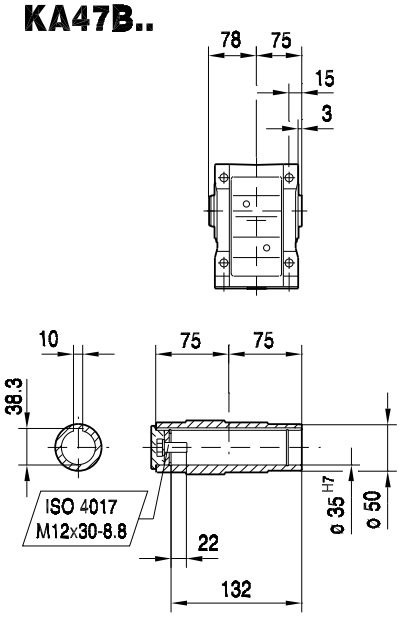

KH47B..

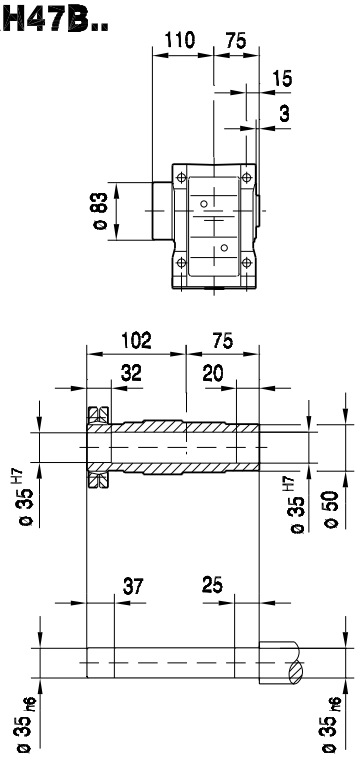

KV47B..

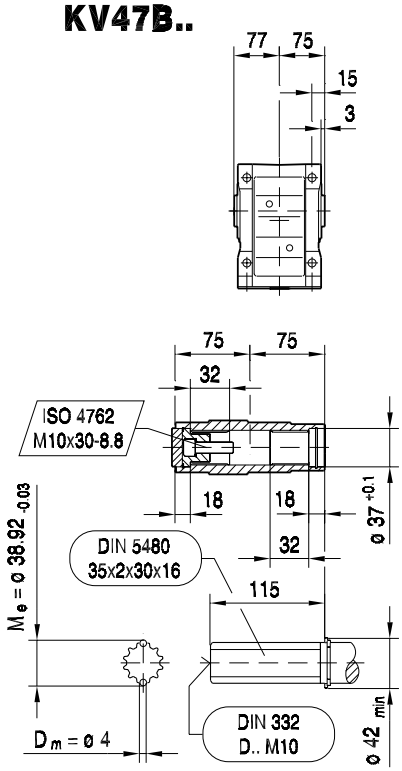

(→ 📖 150)	CMP50S	CMP50M	CMP50L	CMP63S	CMP63M	CMP63L		
AC	73	73	73	88	88	88		
AD	82	82	82	89	89	89		
ADS	82	82	82	89	89	89		
L	376	415	454	410	460	510		
LS	405	444	483	439	489	539		
LB	139	178	217	173	223	273		
LBS	168	207	246	202	252	302		
XS	18	18	18	14	14	14		

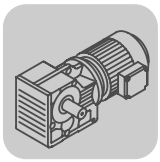

K..CMP, DS, CM
K 47 / CMP / DS / CM [mm]

33 015 00 07

KF47..

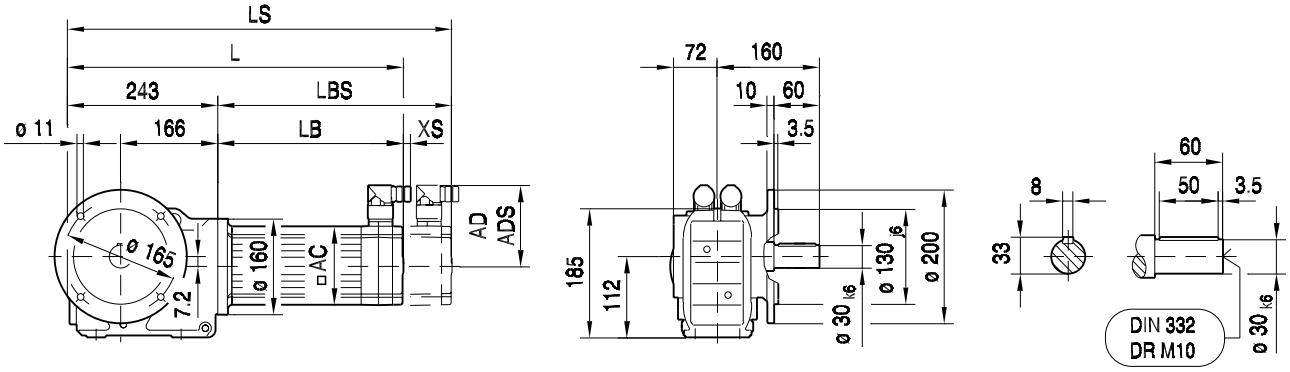

KAF47..

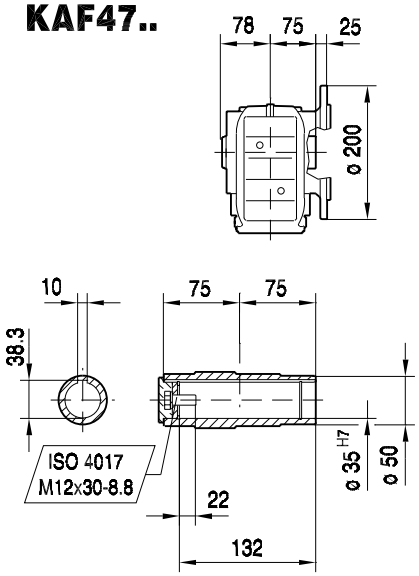

KHF47..

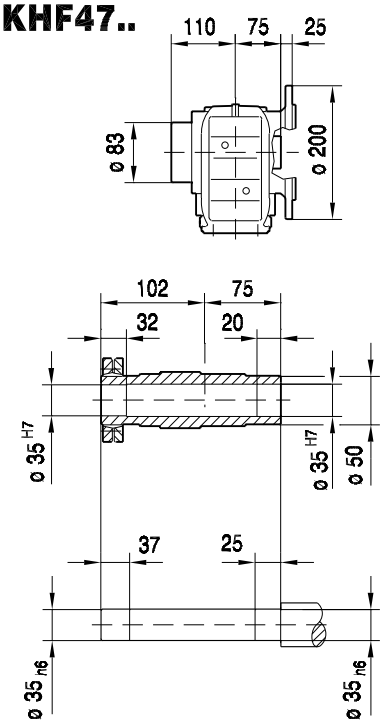

KVF47..

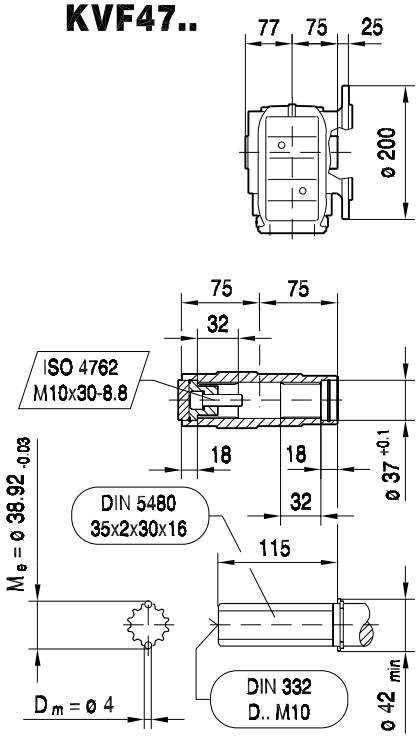

(→ 📖 150)	CMP50S	CMP50M	CMP50L	CMP63S	CMP63M	CMP63L		
AC	73	73	73	88	88	88		
AD	82	82	82	89	89	89		
ADS	82	82	82	89	89	89		
L	382	421	460	416	466	516		
LS	411	450	489	445	495	545		
LB	139	178	217	173	223	273		
LBS	168	207	246	202	252	302		
XS	18	18	18	14	14	14		

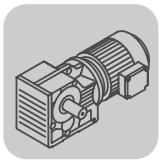

KA47..

33 016 00 07

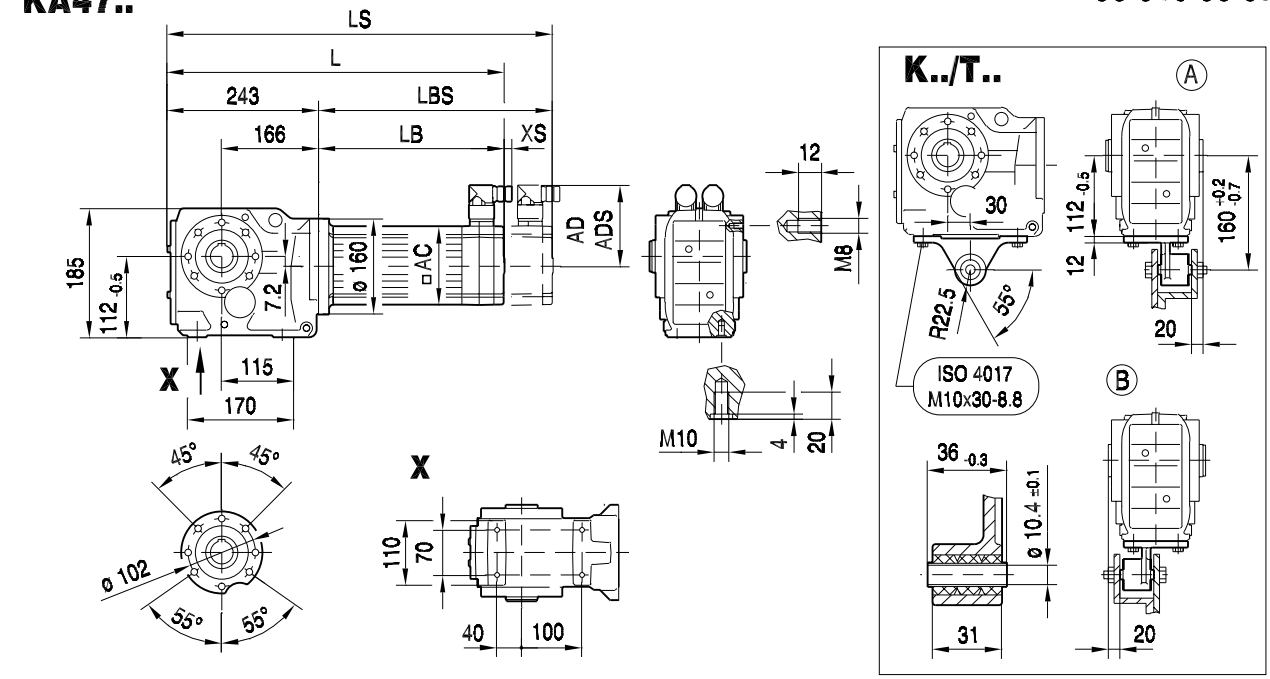

KA47..

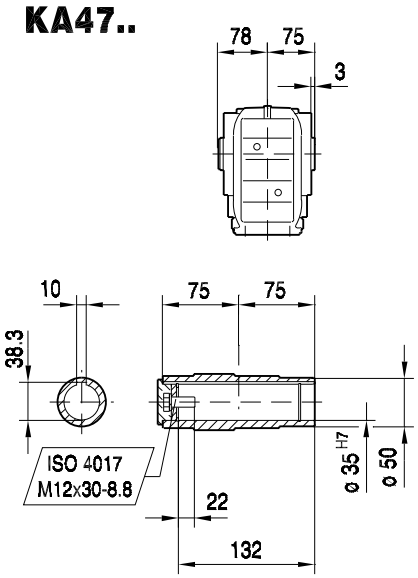

KH47..

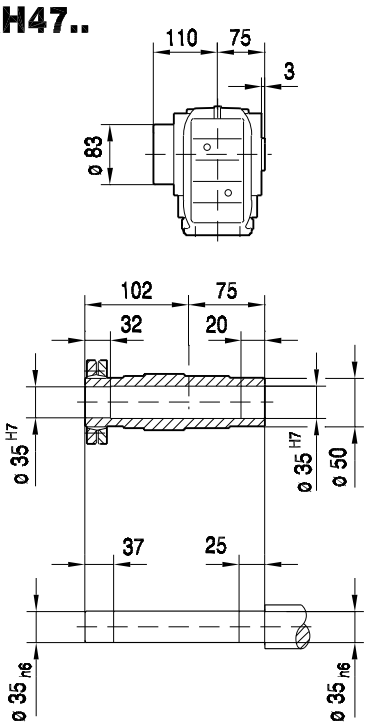

KV47..

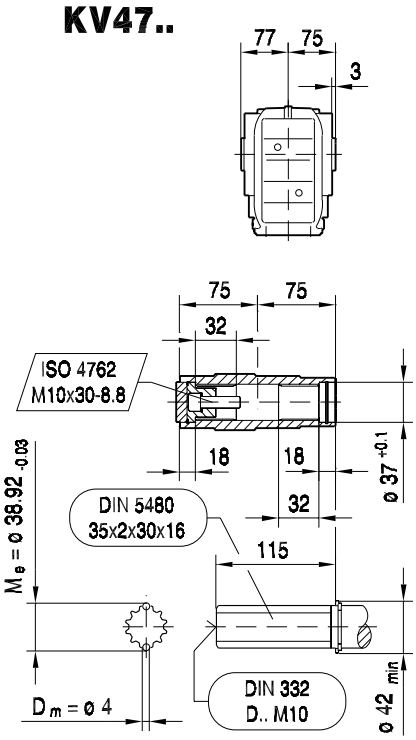

(→ 📖 150)	CMP50S	CMP50M	CMP50L	CMP63S	CMP63M	CMP63L		
AC	73	73	73	88	88	88		
AD	82	82	82	89	89	89		
ADS	82	82	82	89	89	89		
L	382	421	460	416	466	516		
LS	411	450	489	445	495	545		
LB	139	178	217	173	223	273		
LBS	168	207	246	202	252	302		
XS	18	18	18	14	14	14		

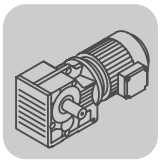

K..CMP, DS, CM
K 47 / CMP / DS / CM [mm]

KAZ47..

33 017 00 07

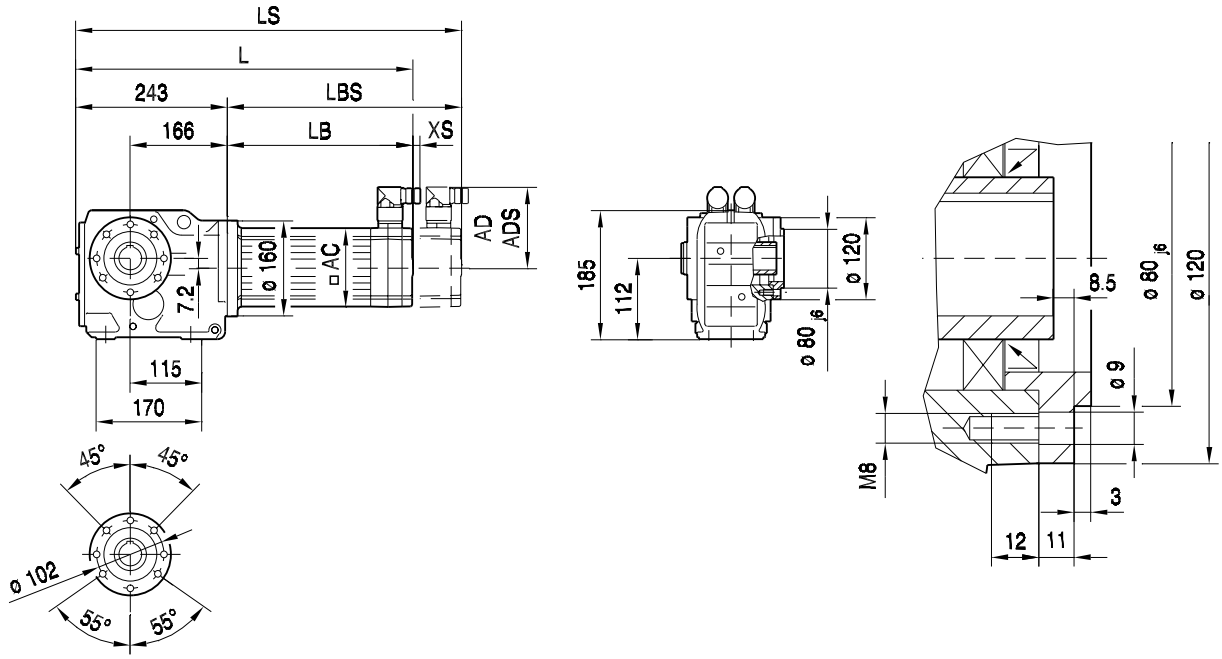

KAZ47..

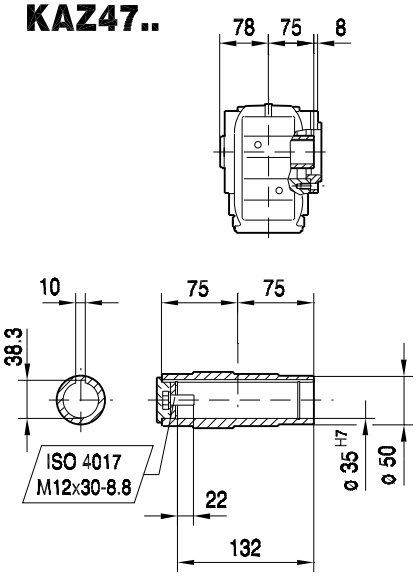

KHZ47..

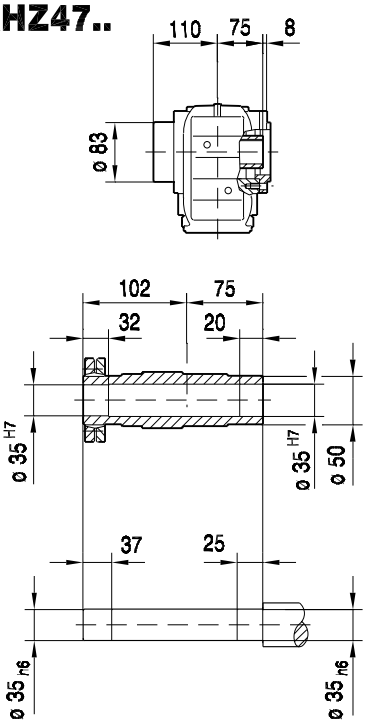

KVZ47..

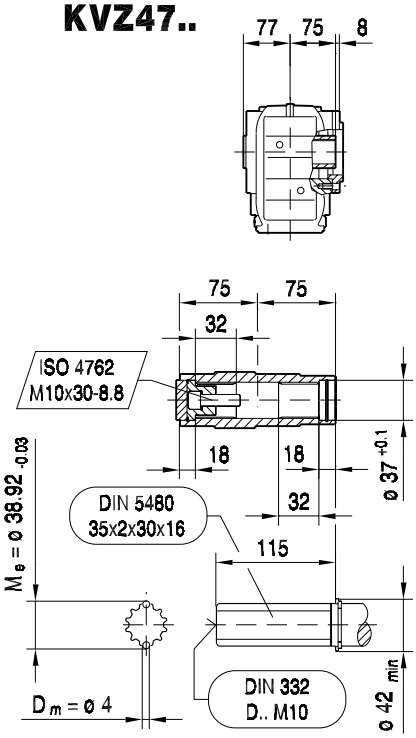

(→ 📖 150)	CMP50S	CMP50M	CMP50L	CMP63S	CMP63M	CMP63L		
AC	73	73	73	88	88	88		
AD	82	82	82	89	89	89		
ADS	82	82	82	89	89	89		
L	382	421	460	416	466	516		
LS	411	450	489	445	495	545		
LB	139	178	217	173	223	273		
LBS	168	207	246	202	252	302		
XS	18	18	18	14	14	14		

KT47..

33 018 00 07

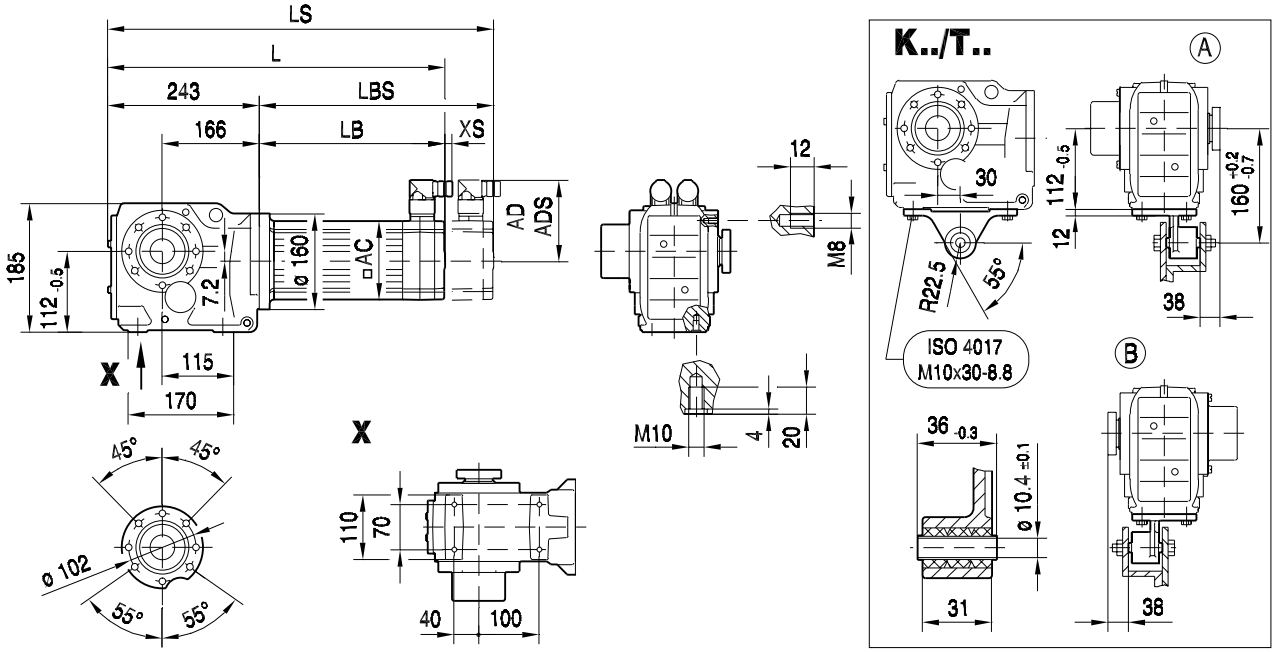

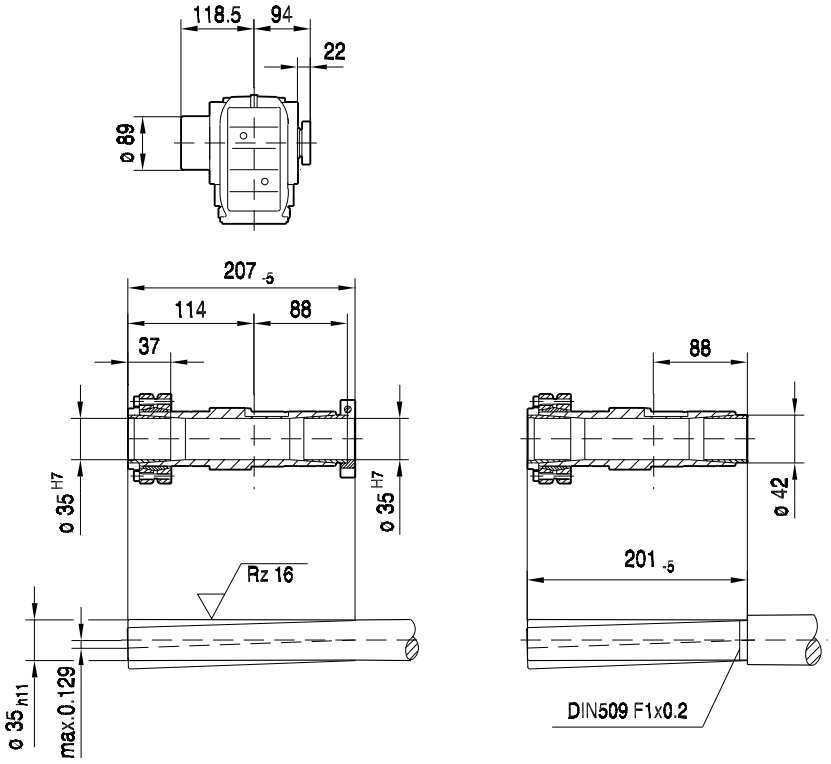

(→ 📖 150)	CMP50S	CMP50M	CMP50L	CMP63S	CMP63M	CMP63L		
AC	73	73	73	88	88	88		
AD	82	82	82	89	89	89		
ADS	82	82	82	89	89	89		
L	382	421	460	416	466	516		
LS	411	450	489	445	495	545		
LB	139	178	217	173	223	273		
LBS	168	207	246	202	252	302		
XS	18	18	18	14	14	14		

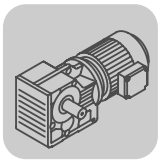

K..CMP, DS, CM
K 47 / CMP / DS / CM [mm]

34 032 01 01

K47..

DS56..

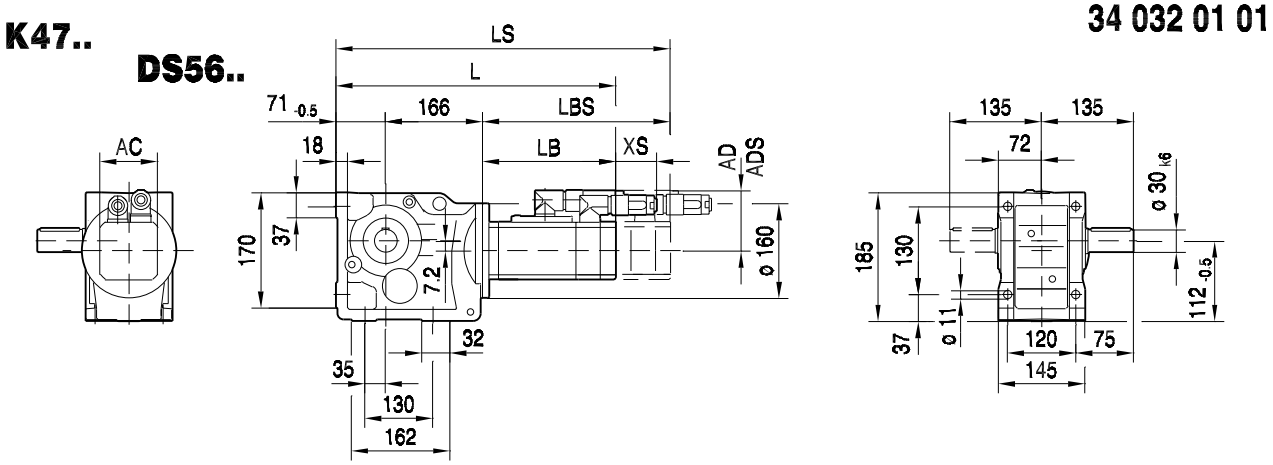

CM..

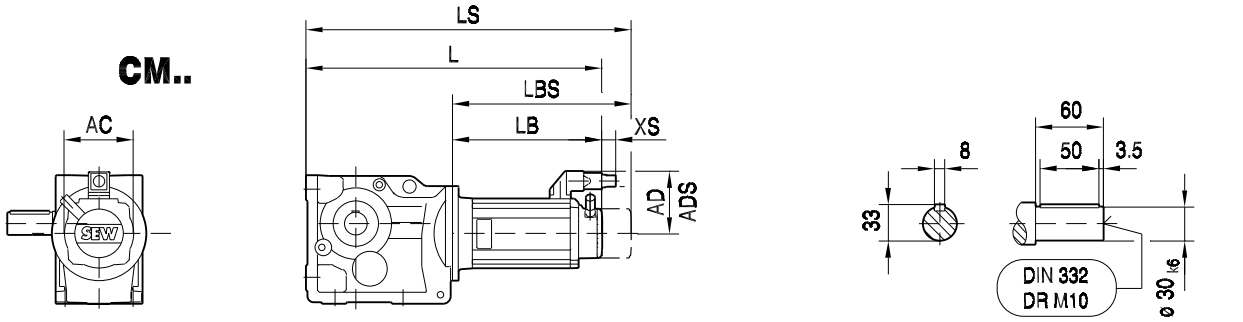

KA47B..

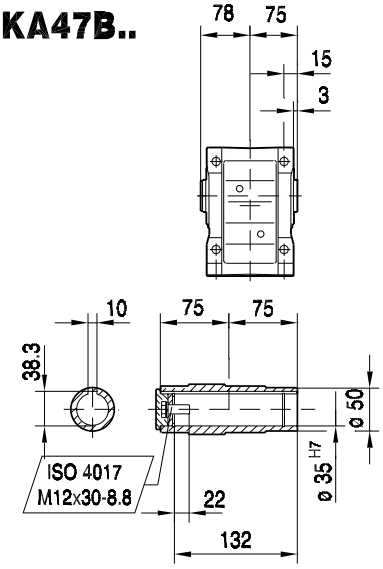

KH47B..

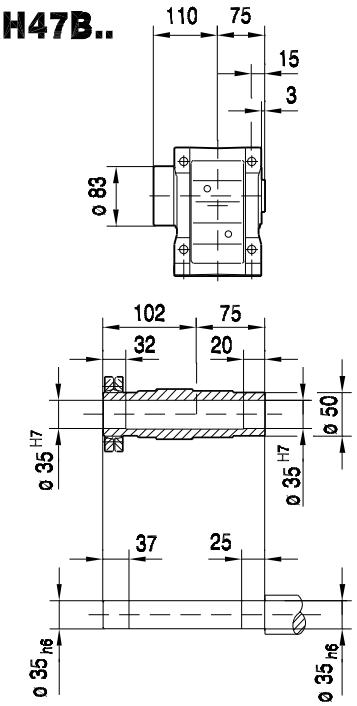

KV47B..

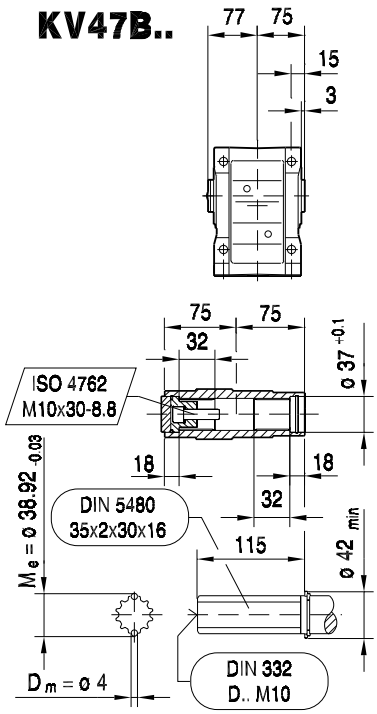

(→ 📖 150)	DS56H	CM71S	CM71M	CM71L	CM90S	CM90M					
AC	73	117	117	117	142	142					
AD	77	122	122	122	140	140					
ADS	77	122	122	122	140	140					
L	503	469	489	529	521	548					
LS	503	551	571	611	617	644					
LB	266	232	252	292	284	311					
LBS	266	314	334	374	380	407					
XS	51	45	45	45	50	50					

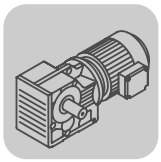

KF47..

DS56..

34 033 01 01

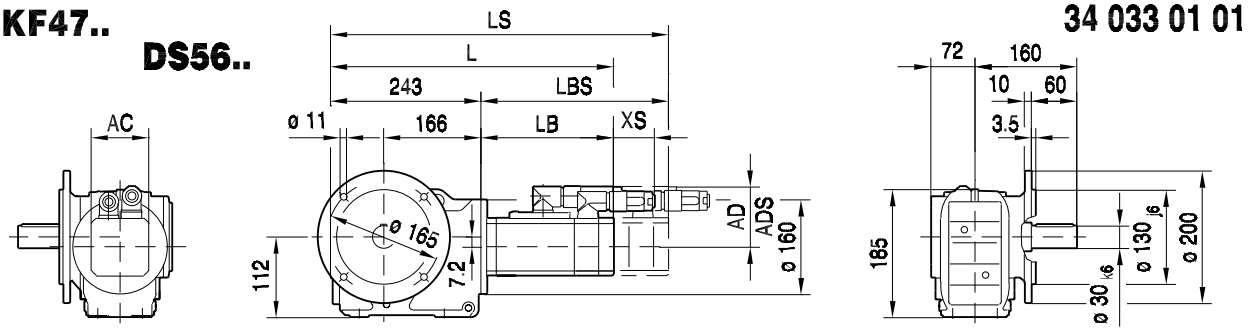

CM..

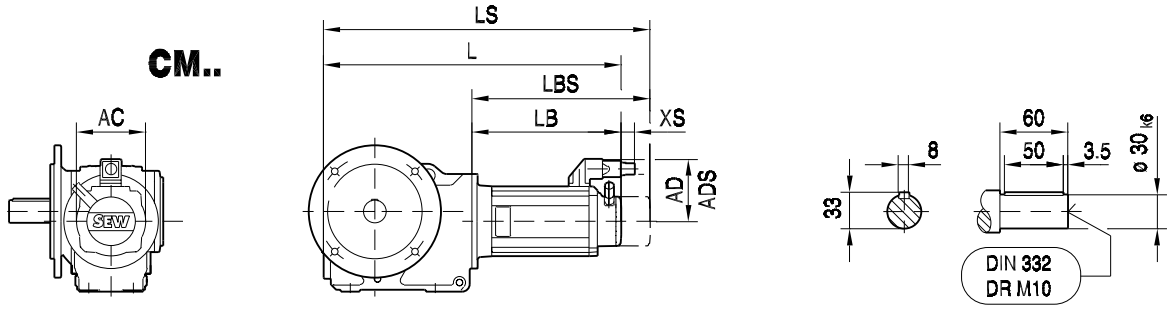

KAF47..

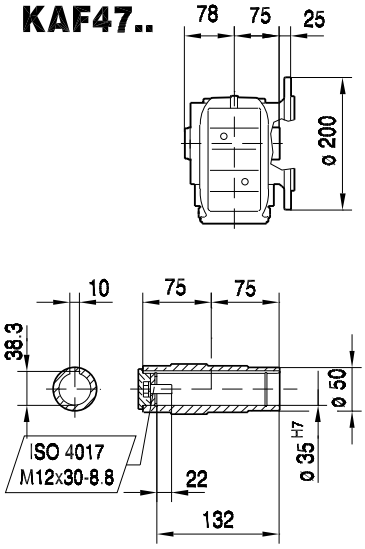

KHF47..

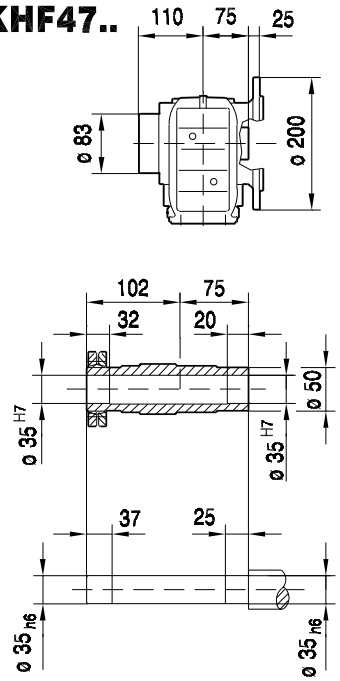

KVF47..

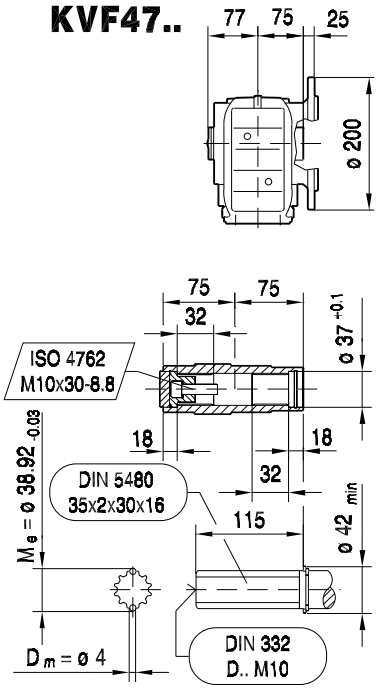

(→ 📖 150)	DS56H	CM71S	CM71M	CM71L	CM90S	CM90M					
AC	73	117	117	117	142	142					
AD	77	122	122	122	140	140					
ADS	77	122	122	122	140	140					
L	509	475	495	535	527	554					
LS	509	557	577	617	623	650					
LB	266	232	252	292	284	311					
LBS	266	314	334	374	380	407					
XS	51	45	45	45	50	50					

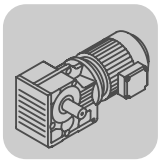

K..CMP, DS, CM
K 47 / CMP / DS / CM [mm]

KA47..

DS56..

39 021 01 01

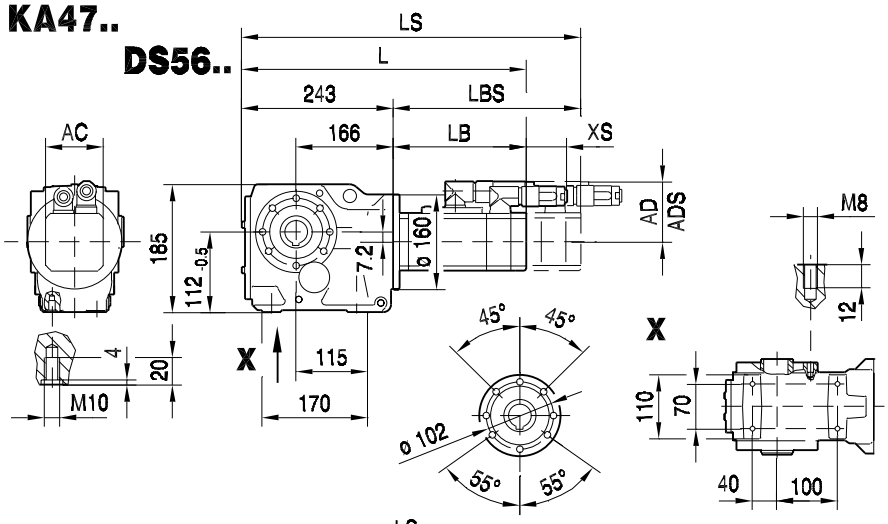

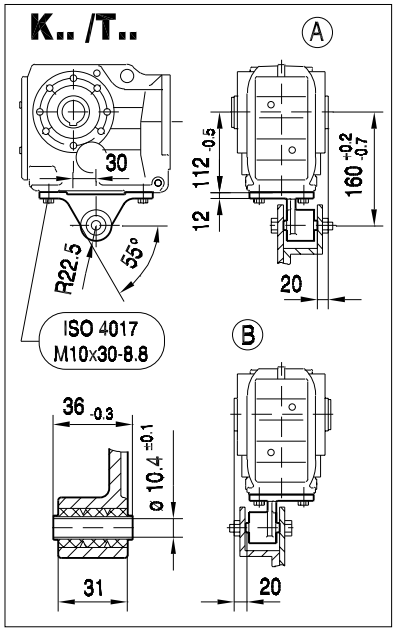

CM..

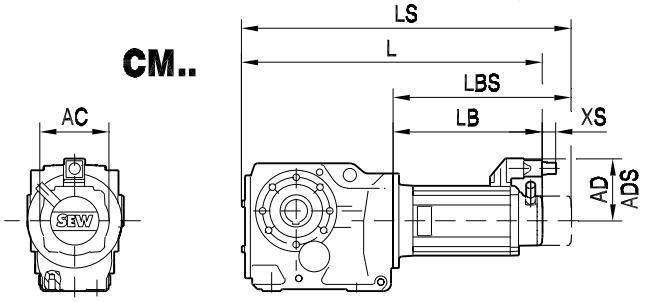

KA47..

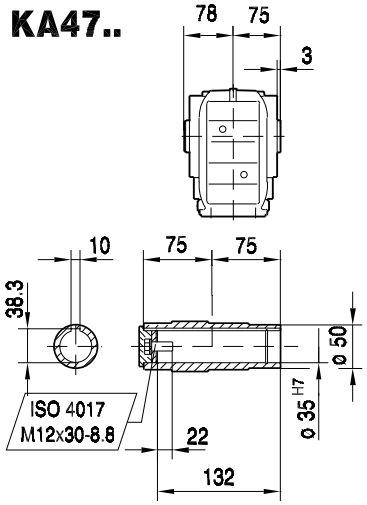

KH47..

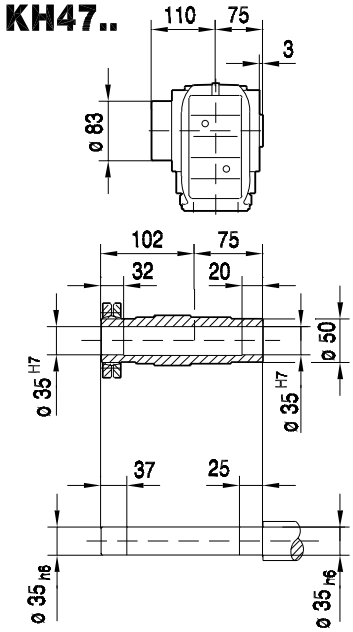

KV47..

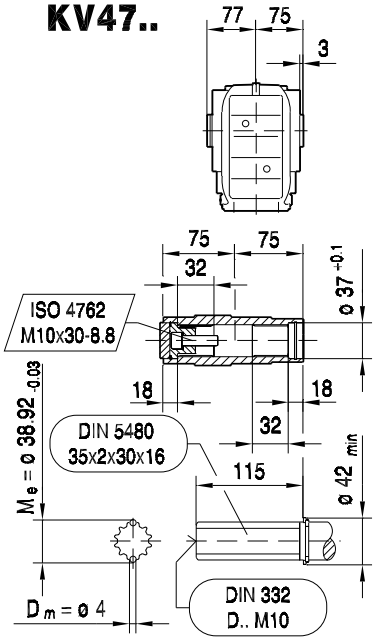

(→ 📖 150)	DS56H	CM71S	CM71M	CM71L	CM90S	CM90M					
AC	73	117	117	117	142	142					
AD	77	122	122	122	140	140					
ADS	77	122	122	122	140	140					
L	509	475	495	535	527	554					
LS	509	557	577	617	623	650					
LB	266	232	252	292	284	311					
LBS	266	314	334	374	380	407					
XS	51	45	45	45	50	50					

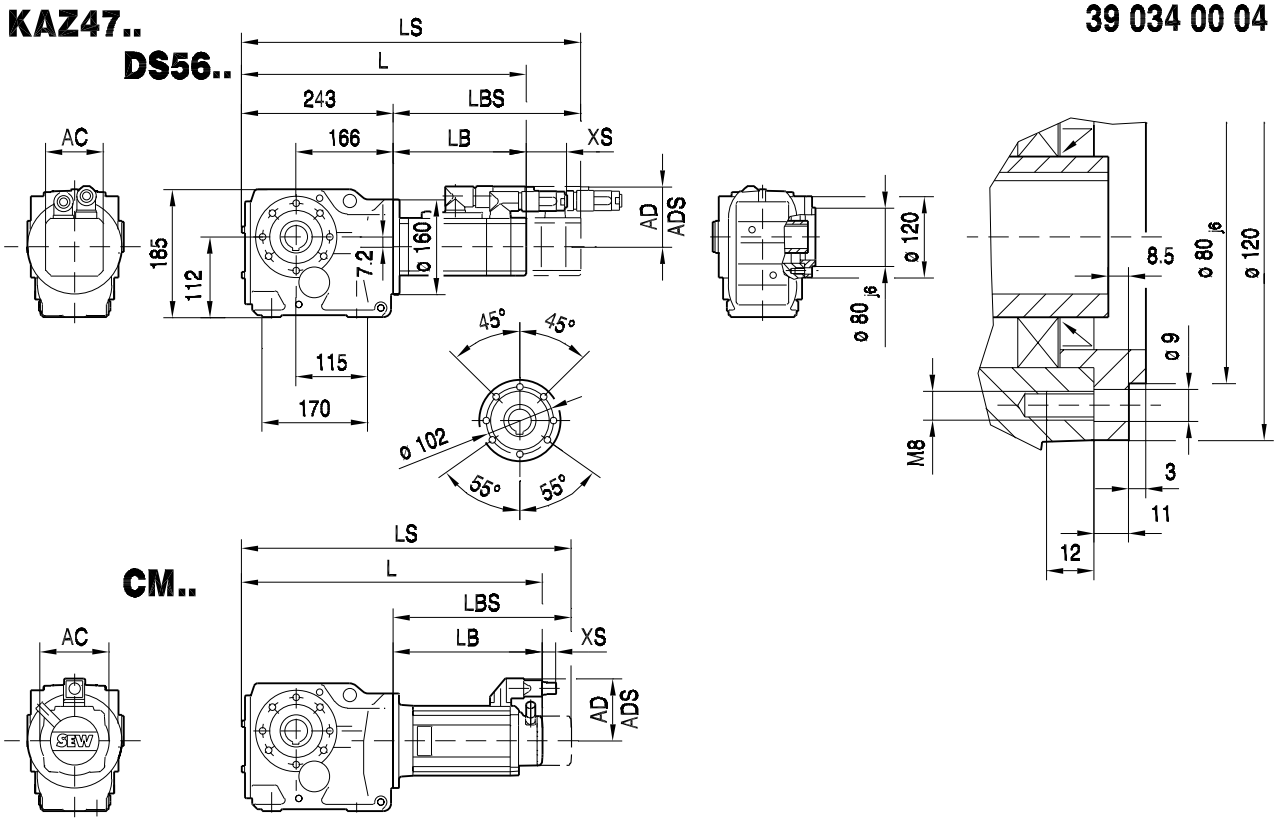

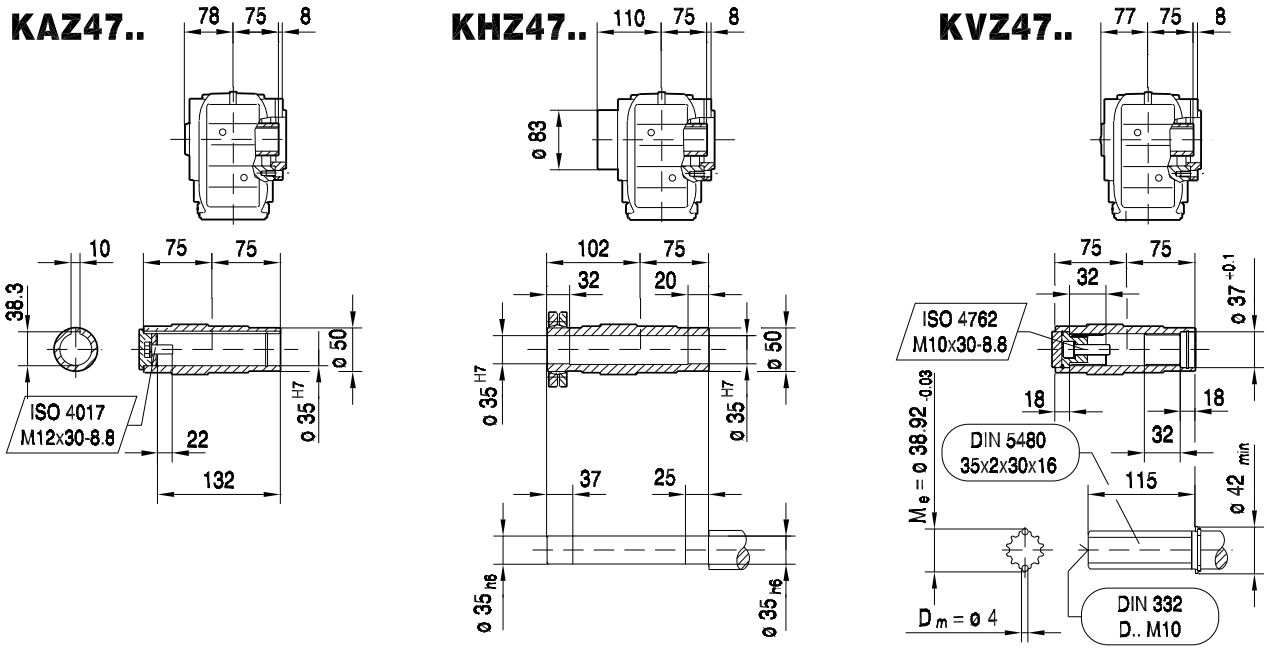

(→ 📖 150)	DS56H	CM71S	CM71M	CM71L	CM90S	CM90M					
AC	73	117	117	117	142	142					
AD	77	122	122	122	140	140					
ADS	77	122	122	122	140	140					
L	509	475	495	535	527	554					
LS	509	557	577	617	623	650					
LB	266	232	252	292	284	311					
LBS	266	314	334	374	380	407					
XS	51	45	45	45	50	50					

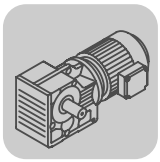

K..CMP, DS, CM
K 47 / CMP / DS / CM [mm]

KT47..

DS56..

39 042 00 04

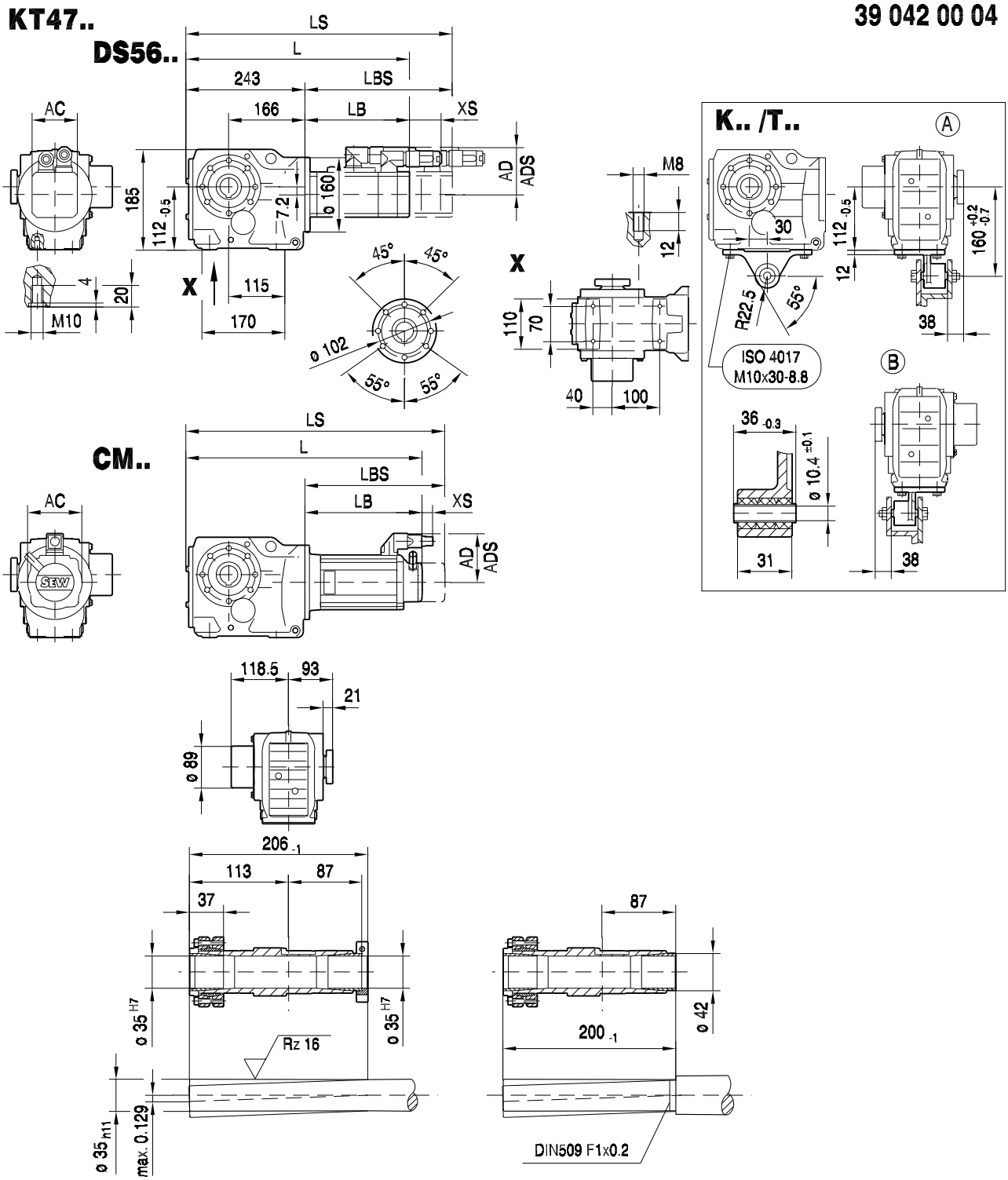

(→ 📖 150)	DS56H	CM71S	CM71M	CM71L	CM90S	CM90M					
AC	73	117	117	117	142	142					
AD	77	122	122	122	140	140					
ADS	77	122	122	122	140	140					
L	509	475	495	535	527	554					
LS	509	557	577	617	623	650					
LB	266	232	252	292	284	311					
LBS	266	314	334	374	380	407					
XS	51	45	45	45	50	50					

10.6 K 57 / CMP / DS / CM [Nm]

M_{aDyn} [Nm]		CMP						DS			CM						
	i	50S	50M	50L	63S	63M	63L	56M	56L	56H	71S	71M	71L	90S	90M	90L	112S
K57 3	4.69		46	69	50	96	137			68	74	97	141	178	235	340	371
	6.57		64	96	69	134	190			95	103	134	196	247	326	472	514
	7.55	37	74	110	80	153	218	27	55	109	118	154	225	284	374	542	>547
	8.71	43	85	127	92	177	252	31	63	126	137	178	260	328	432	>585	>585
	9.59	47	94	140	101	195	277	35	69	138	150	196	286	361	476	>585	>585
	11.26	56	110	165	119	229	325	41	81	163	177	230	336	424	558	>585	>585
	11.92	59	117	174	126	242	344	43	86	172	187	243	356	448	>585	>585	>585
	13.25		130	194	140	269	383			191	208	271	395	498	657	>665	>665
	15.22	75	149	223	160	309	440	55	110	220	239	311	454	573	>665	>665	>665
	17.57	87	172	257	185	357	507	63	127	254	275	359	524	661	>665	>665	>665
	19.34	96	189	283	204	393	559	70	140	279	303	395	577	>665	>665	>665	>665
	22.71	112	222	332	239	462	656	82	164	328	356	464	>665	>665	>665	>665	>665
	24.05	119	235	352	254	489	>665	87	174	347	377	491	>665	>665	>665	>665	>665
	27.34	134	265	396	285	550	>665	98	195	391	424	553	>665	>665	>665		
	30.28	148	293	438	316	609	>665	108	216	433	470	612	>665	>665	>665		
	35.7	175	346	517	372	>665	>665	128	255	510	554	>665	>665	>665			
	38.49	186	369	551	397	>665	>665	136	272	544	591	>665	>665	>665	>665	>665	>665
	44.43	215	426	636	459	>665	>665	157	314	628	>665	>665	>665	>665	>665	>665	>665
	48.89	236	468	>665	505	>665	>665	173	346	>665	>665	>665	>665	>665	>665	>665	>665
	57.42	278	550	>665	593	>665	>665	203	406	>665	>665	>665	>665	>665	>665	>665	>665
	60.81	294	582	>665	628	>665	>665	215	430	>665	>665	>665	>665	>665	>665	>665	>665
	69.12	334	662	>665	>665	>665	>665	244	489	>665	>665	>665	>665	>665	>665		
	76.56	370	>665	>665	>665	>665	>665	271	541	>665	>665	>665	>665	>665	>665		
	90.26	436	>665	>665	>665	>665	>665	319	638	>665	>665	>665	>665	>665			
	102.88	492	>665	>665	>665	>665		360	>665	>665	>665	>665					
	108.29	518	>665	>665	>665	>665		379	>665	>665	>665	>665					
	123.85	592	>665		>665			433	>665	>665							
	145.14	>665						507	>665								

m [kg]		CMP						DS			CM						
	s	50S	50M	50L	63S	63M	63L	56M	56L	56H	71S	71M	71L	90S	90M	90L	112S
K57	3	27	28	29	29	31	32	26	27	28	32	34	37	41	44	49	50
KF: + 4.7 kg / KA: + -2.1 kg / KAF: + 3.6 kg																	

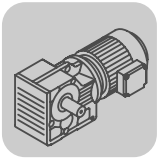

K..CMP, DS, CM
K 57 / CMP / DS / CM [Nm]

CMP.. / DS.. / CM..	i	n_{epk} [1/min]	η [%]	c_T K [Nm/']	KF [Nm/']	KA [Nm/']	KAF [Nm/']	φ /R [']
K57 3	4.69	4045	96	34.23	32.72	81.26	81.26	11
	6.57	4500	95	34.23	32.72	81.26	81.26	10
	7.55	4500	95	34.23	32.72	81.26	81.26	10
	8.71	4500	95	34.23	32.72	81.26	81.26	10
	9.59	4500	95	34.23	32.72	81.26	81.26	10
	11.26	4500	95	34.23	32.72	81.26	81.26	9
	11.92	4500	95	34.23	32.72	81.26	81.26	9
	13.25	4500	95	41.31	39.0	135.41	135.41	7
	15.22	4500	95	41.31	39.0	135.41	135.41	7
	17.57	4500	95	41.31	39.0	135.41	135.41	7
	19.34	4500	95	41.31	39.0	135.41	135.41	7
	22.71	4500	95	41.31	39.0	135.41	135.41	7
	24.05	4500	95	41.31	39.0	135.41	135.41	7
	27.34	4500	94	41.31	39.0	135.41	135.41	7
	30.28	4500	94	41.31	39.0	135.41	135.41	7
	35.7	4500	94	41.31	39.0	135.41	135.41	7
	38.49	4500	93	42.6	40.15	150.38	150.38	6
	44.43	4500	93	42.6	40.15	150.38	150.38	6
	48.89	4500	93	42.6	40.15	150.38	150.38	6
	57.42	4500	93	42.6	40.15	150.38	150.38	6
	60.81	4500	93	42.6	40.15	150.38	150.38	6
	69.12	4500	93	42.6	40.15	150.38	150.38	6
	76.56	4500	93	42.6	40.15	150.38	150.38	6
	90.26	4500	93	42.6	40.15	150.38	150.38	6
	102.88	4500	92	42.6	40.15	150.38	150.38	6
	108.29	4500	92	42.6	40.15	150.38	150.38	6
	123.85	4500	92	42.6	40.15	150.38	150.38	6
	145.14	4500	92	42.6	40.15	150.38	150.38	6

CMP.. / DS.. / CM..							F_{Ramax}				F_{Rapk}			
	i	M_{amax} [Nm]	M_{apk} [Nm]	$M_{aNotaus}$ [Nm]	n_{ak} [1/min]	J_G 10^{-4} [kgm^2]	K [N]	KF [N]	KA [N]	KAF [N]	K [N]	KF [N]	KA [N]	KAF [N]
K57 3	4.69	300	450	510	320	9.0	3800	3980	2580	2580	8520	8520	11500	11500
	6.57	345	517	587	244	5.6	4180	4400	2800	2800	7990	8110	11500	11500
	7.55	365	547	621	225	4.4	4360	4580	2900	2900	7740	7920	11500	11500
	8.71	390	585	663	195	3.5	4520	4760	2980	2980	7420	7660	11500	11500
	9.59	405	585	689	177	3.0	4650	4900	3050	3050	7420	7660	11500	11500
	11.26	415	585	706	178	2.3	4990	5250	3340	3340	7420	7660	11500	11500
	11.92	415	585	706	176	2.1	5150	5400	3470	3470	7420	7660	11500	11500
	13.25	510	665	867	226	4.8	5190	5350	3240	3240	4700	4700	11500	11500
	15.22	535	665	910	197	3.8	5430	5600	3390	3390	4700	4700	11500	11500
	17.57	555	665	944	171	3.0	5740	5910	3610	3610	4700	4700	11500	11500
	19.34	575	665	978	155	2.6	5910	6080	3710	3710	4700	4700	11500	11500
	22.71	600	665	1020	132	2.0	6280	6460	3970	3970	4700	4700	11500	11500
	24.05	600	665	1020	133	1.9	6480	6650	4140	4140	4700	4700	11500	11500
	27.34	600	665	1020	132	1.5	6930	7090	4550	4550	4700	4700	11500	11500
	30.28	600	665	1020	132	1.2	7300	7460	4880	4880	4700	4700	11500	11500
	35.7	600	665	1020	134	0.95	7630	7720	5440	5440	4700	4700	11500	11500
	38.49	600	665	1020	70	2.3	7630	7720	5710	5710	4700	4700	11500	11500
	44.43	600	665	1020	72	1.9	7630	7720	6240	6240	4700	4700	11500	11500
	48.89	600	665	1020	74	1.6	7630	7720	6610	6610	4700	4700	11500	11500
	57.42	600	665	1020	75	1.3	7630	7720	7260	7260	4700	4700	11500	11500
	60.81	600	665	1020	76	1.2	7630	7720	7490	7490	4700	4700	11500	11500
	69.12	600	665	1020	77	0.98	7630	7720	8040	8040	4700	4700	11500	11500
	76.56	600	665	1020	78	0.85	7630	7720	8500	8500	4700	4700	11500	11500
	90.26	600	665	1020	78	0.67	7630	7720	9260	9260	4700	4700	11500	11500
	102.88	600	665	1020	68	0.46	7630	7720	9900	9900	4700	4700	11500	11500
	108.29	600	665	1020	65	0.41	7630	7720	10200	10200	4700	4700	11500	11500
	123.85	600	665	1020	57	0.33	7630	7720	10900	10900	4700	4700	11500	11500
	145.14	600	665	1020	48	0.27	7630	7720	11500	11500	4700	4700	11500	11500

10.7 K 57 / CMP / DS / CM [mm]

33 019 00 07

K57..

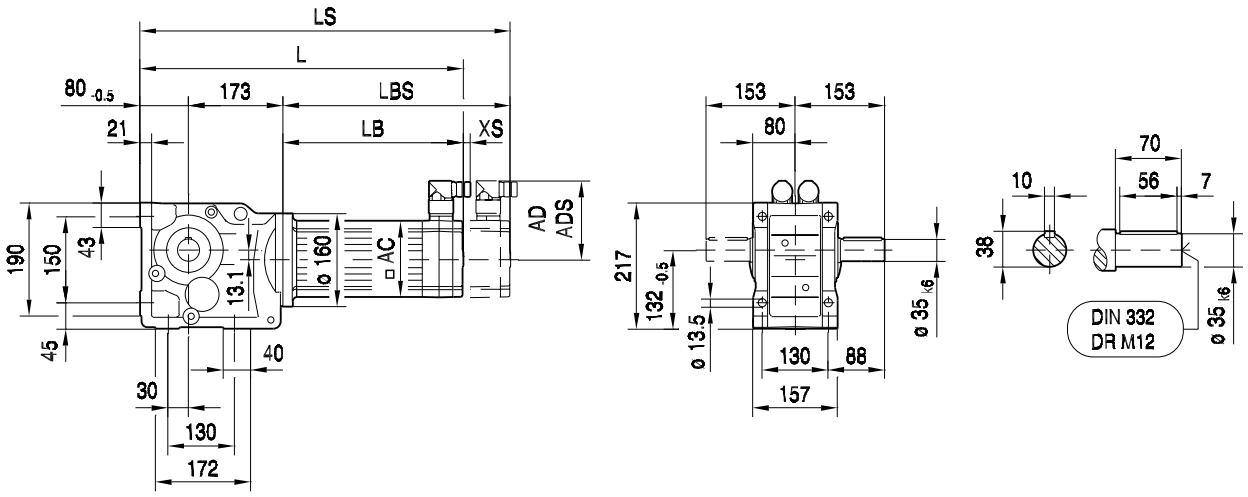

KA57B..

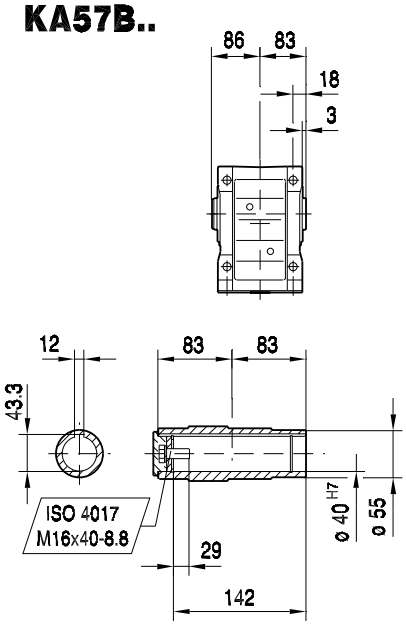

KH57B..

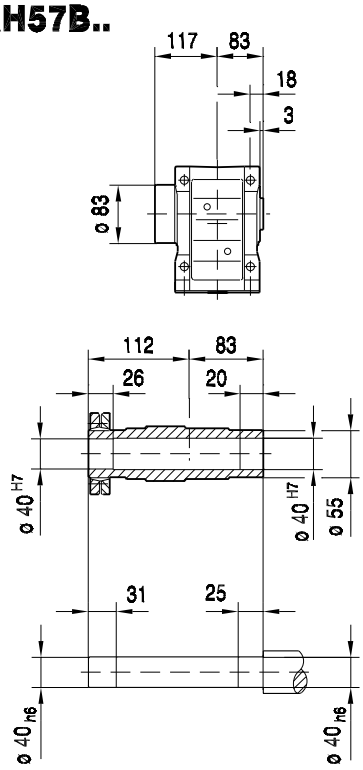

KV57B..

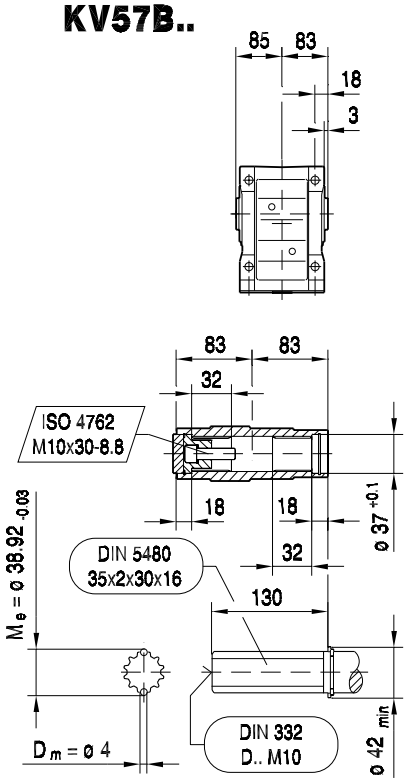

(→ 📖 150)	CMP50S	CMP50M	CMP50L	CMP63S	CMP63M	CMP63L		
AC	73	73	73	88	88	88		
AD	82	82	82	89	89	89		
ADS	82	82	82	89	89	89		
L	392	431	470	426	476	526		
LS	421	460	499	455	505	555		
LB	139	178	217	173	223	273		
LBS	168	207	246	202	252	302		
XS	18	18	18	14	14	14		

33 020 00 07

KF57..

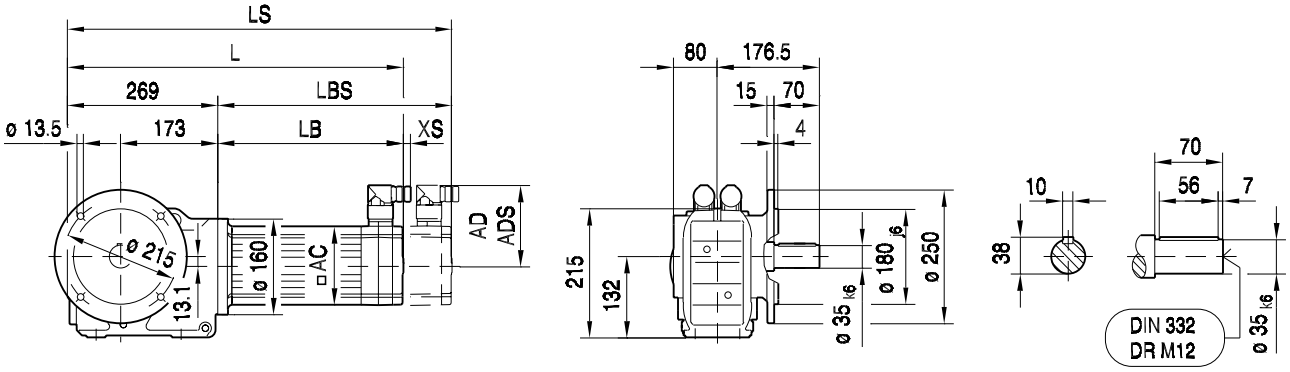

KAF57..

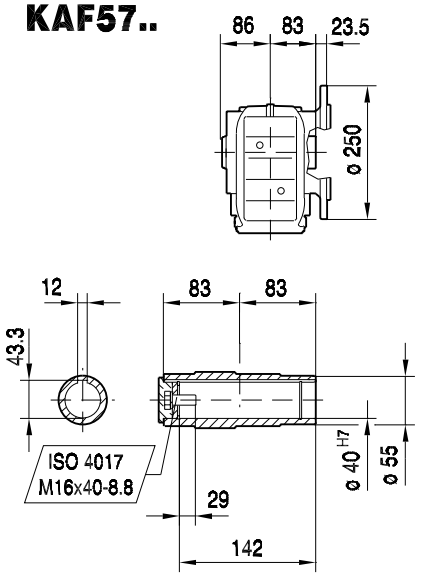

KHF57..

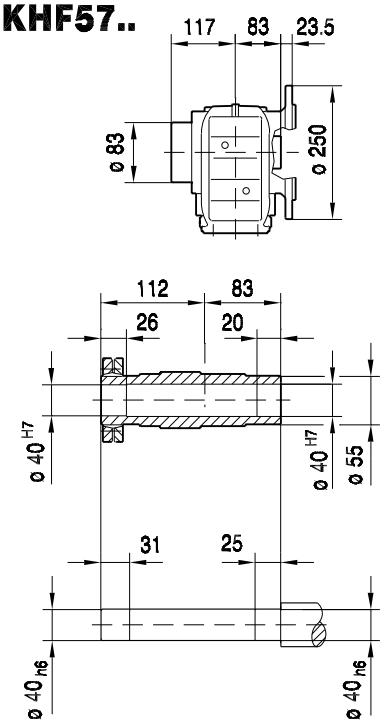

KVF57..

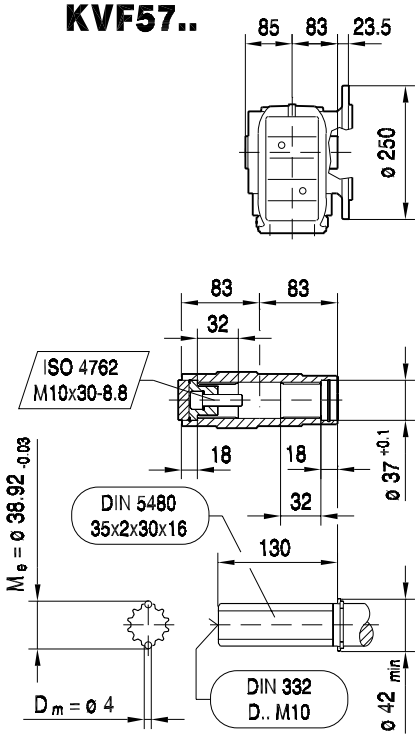

(→ 📖 150)	CMP50S	CMP50M	CMP50L	CMP63S	CMP63M	CMP63L		
AC	73	73	73	88	88	88		
AD	82	82	82	89	89	89		
ADS	82	82	82	89	89	89		
L	408	447	486	442	492	542		
LS	437	476	515	471	521	571		
LB	139	178	217	173	223	273		
LBS	168	207	246	202	252	302		
XS	18	18	18	14	14	14		

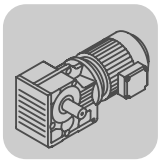

K..CMP, DS, CM
K 57 / CMP / DS / CM [mm]

KA57..

33 021 00 07

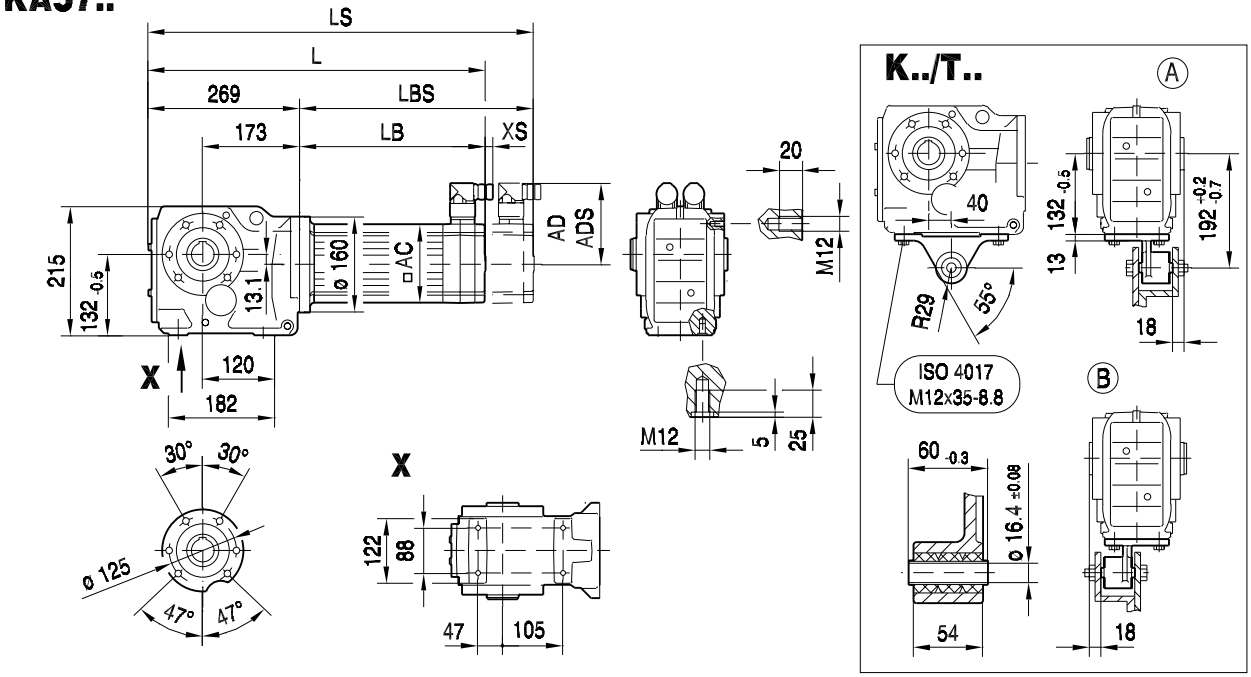

KA57..

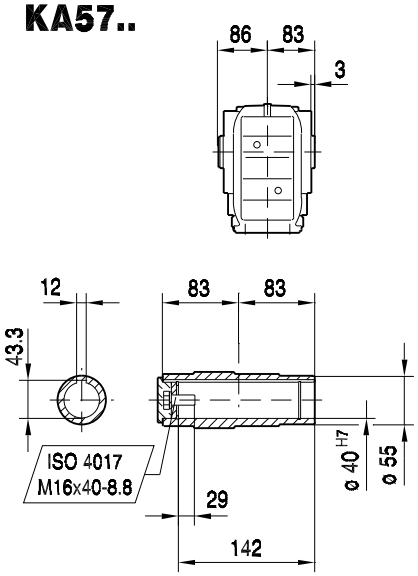

KH57..

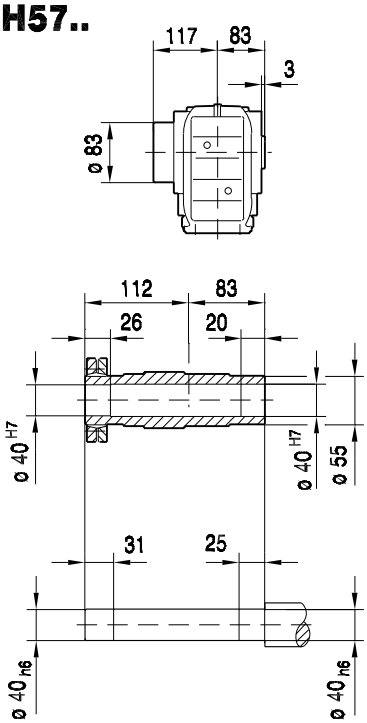

KV57..

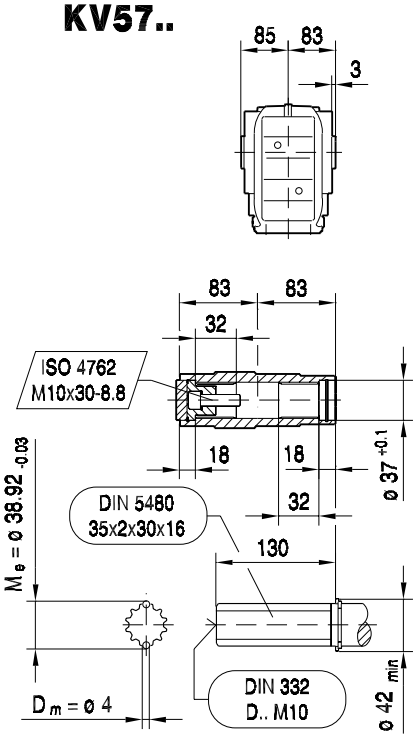

(→ 📖 150)	CMP50S	CMP50M	CMP50L	CMP63S	CMP63M	CMP63L		
AC	73	73	73	88	88	88		
AD	82	82	82	89	89	89		
ADS	82	82	82	89	89	89		
L	408	447	486	442	492	542		
LS	437	476	515	471	521	571		
LB	139	178	217	173	223	273		
LBS	168	207	246	202	252	302		
XS	18	18	18	14	14	14		

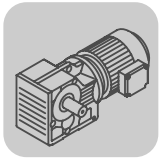

KAZ57..

33 022 00 07

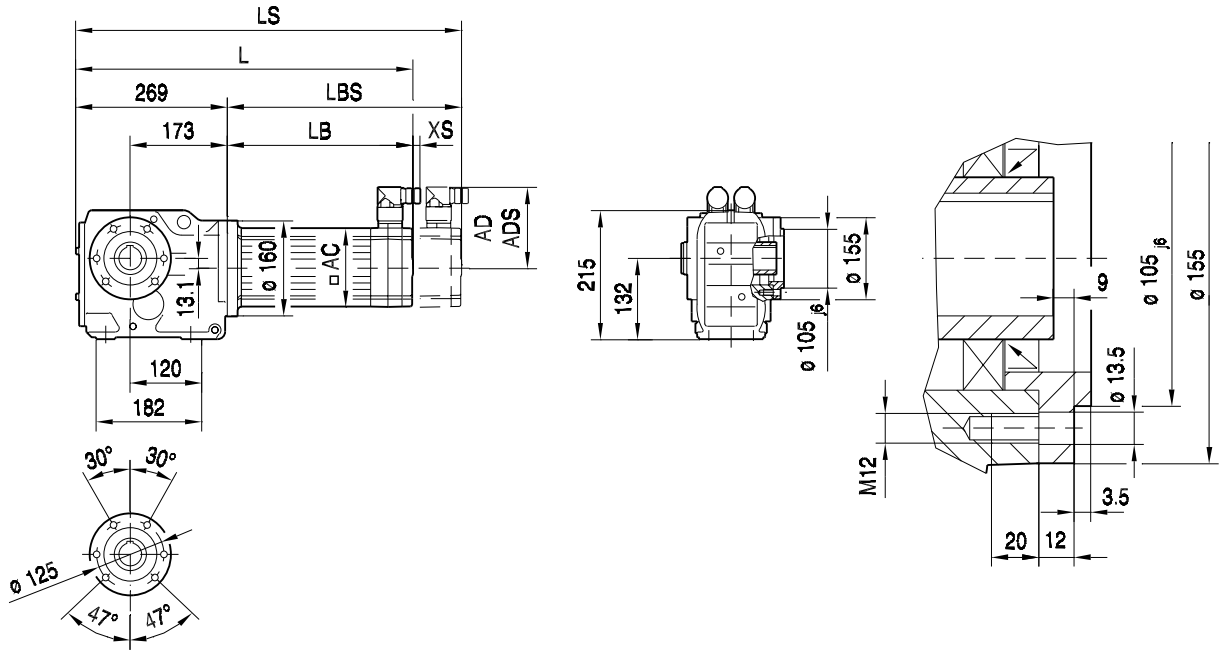

KAZ57..

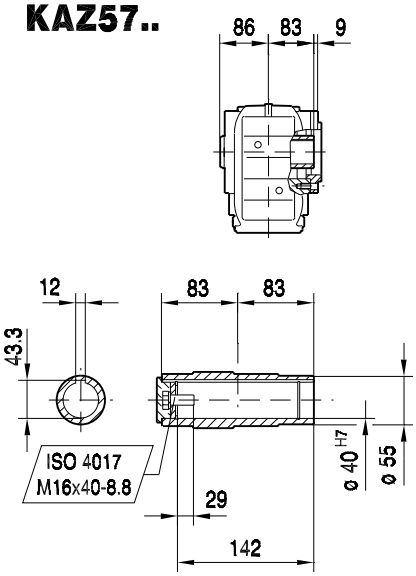

KHZ57..

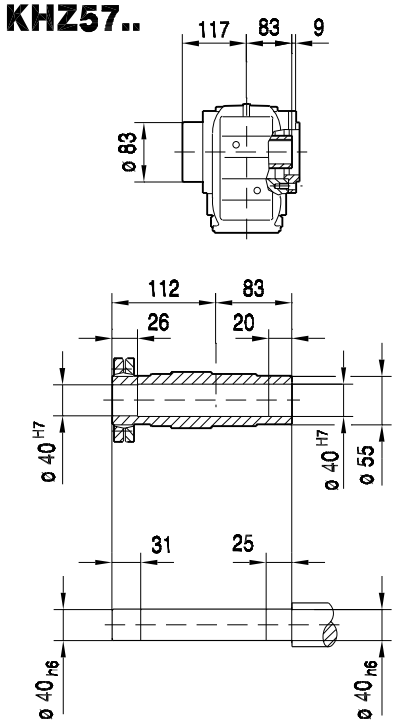

KVZ57..

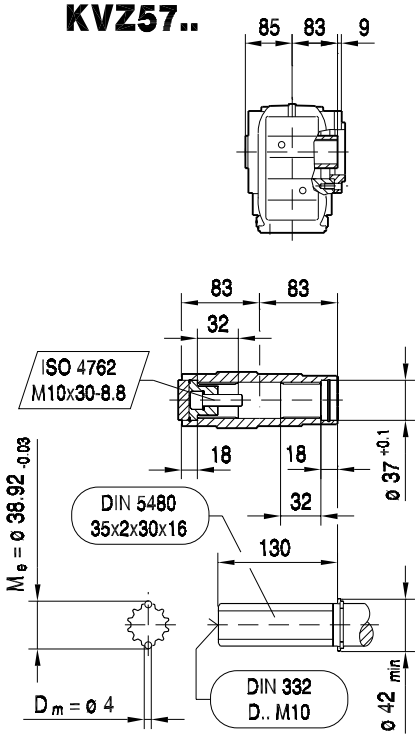

(→ 📖 150)	CMP50S	CMP50M	CMP50L	CMP63S	CMP63M	CMP63L		
AC	73	73	73	88	88	88		
AD	82	82	82	89	89	89		
ADS	82	82	82	89	89	89		
L	408	447	486	442	492	542		
LS	437	476	515	471	521	571		
LB	139	178	217	173	223	273		
LBS	168	207	246	202	252	302		
XS	18	18	18	14	14	14		

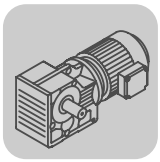

K..CMP, DS, CM
K 57 / CMP / DS / CM [mm]

KT57..

33 023 00 07

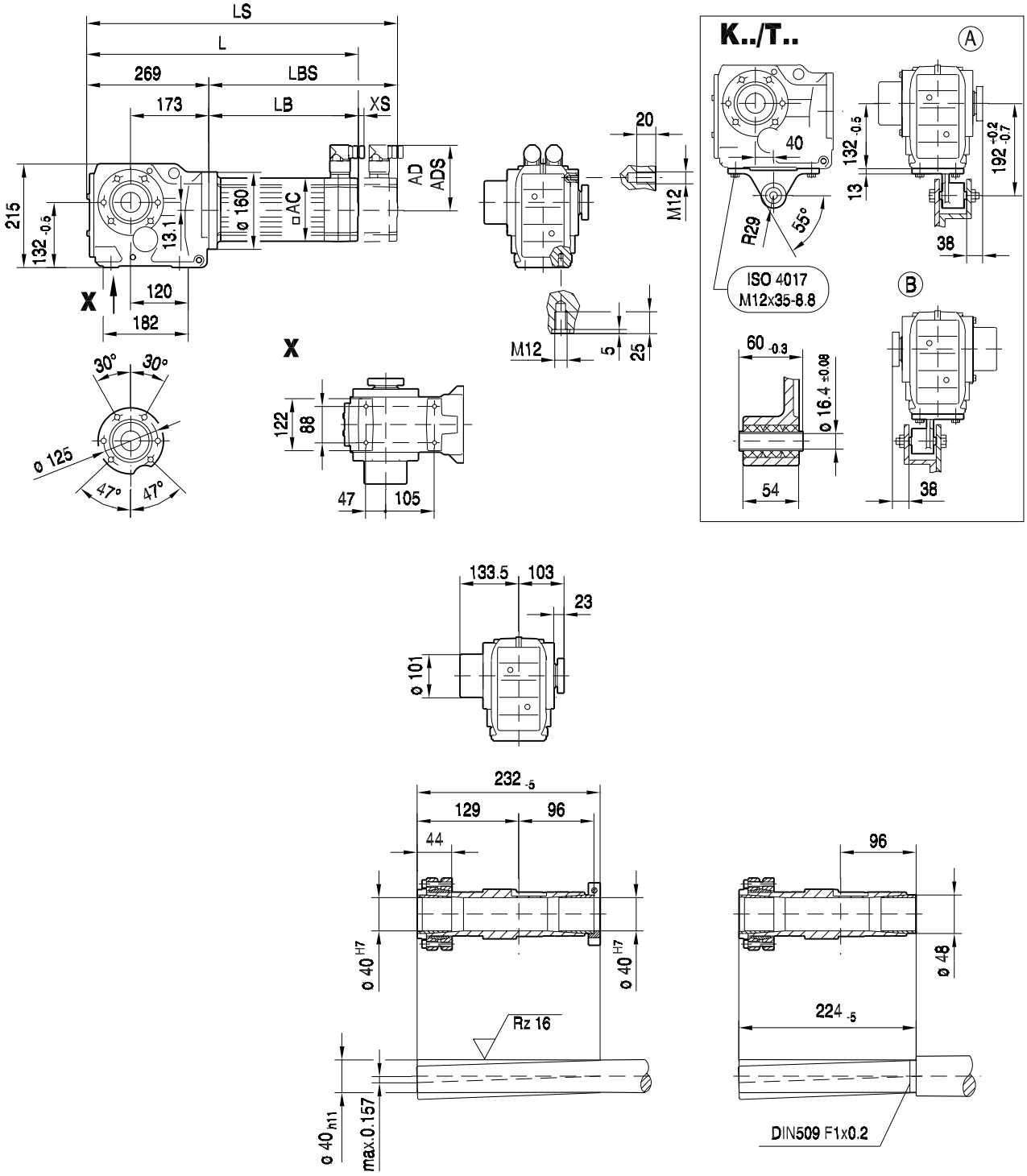

(→ 📖 150)	CMP50S	CMP50M	CMP50L	CMP63S	CMP63M	CMP63L		
AC	73	73	73	88	88	88		
AD	82	82	82	89	89	89		
ADS	82	82	82	89	89	89		
L	408	447	486	442	492	542		
LS	437	476	515	471	521	571		
LB	139	178	217	173	223	273		
LBS	168	207	246	202	252	302		
XS	18	18	18	14	14	14		

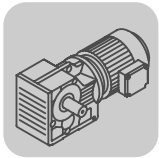

34 034 01 01

K57..

DS56..

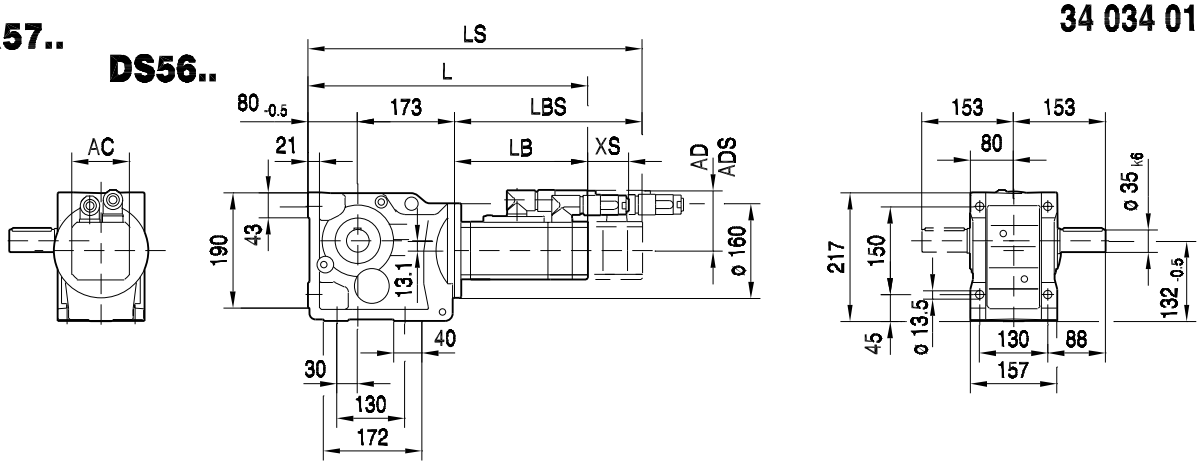

CM..

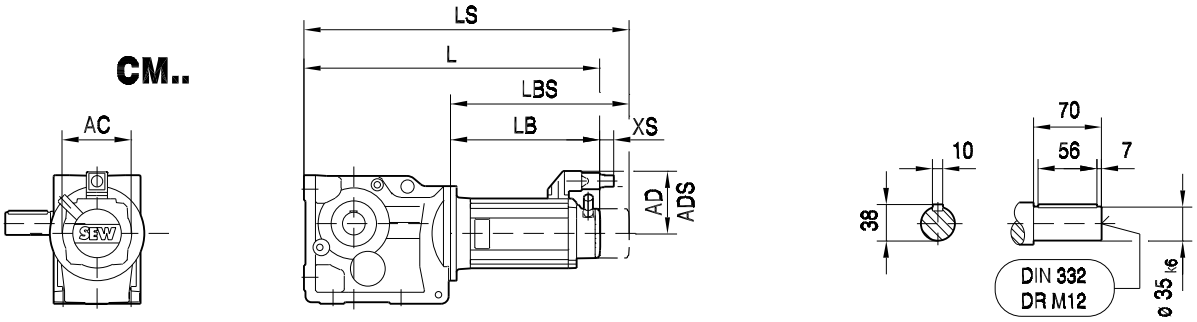

KA57B..

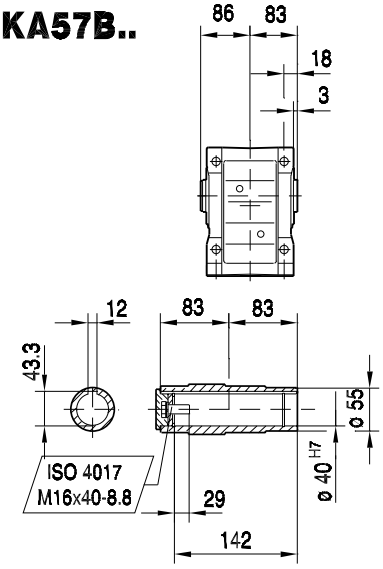

KH57B..

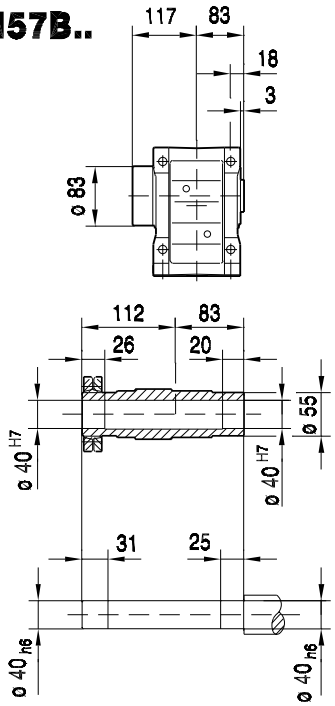

KV57B..

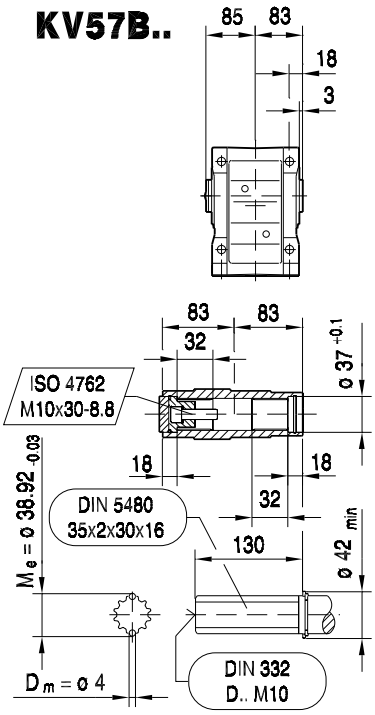

(→ 📖 150)	DS56H	CM71S	CM71M	CM71L	CM90S	CM90M	CM90L	CM112S			
AC	73	117	117	117	142	142	142	186			
AD	77	122	122	122	140	140	140	162			
ADS	77	122	122	122	140	140	140	162			
L	519	485	505	545	537	564	622	577			
LS	519	567	587	627	633	660	718	667			
LB	266	232	252	292	284	311	369	324			
LBS	266	314	334	374	380	407	465	414			
XS	51	45	45	45	50	50	50	36			

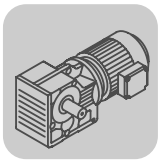

K..CMP, DS, CM
K 57 / CMP / DS / CM [mm]

KF57..

DS56..

34 035 01 01

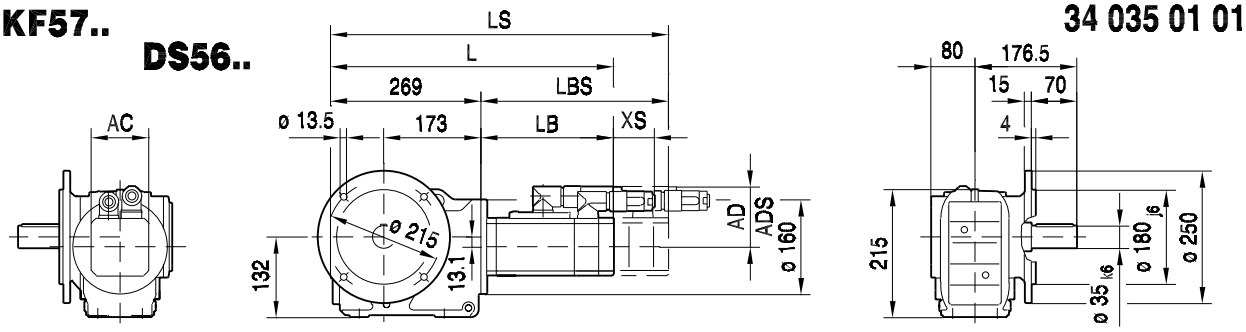

CM..

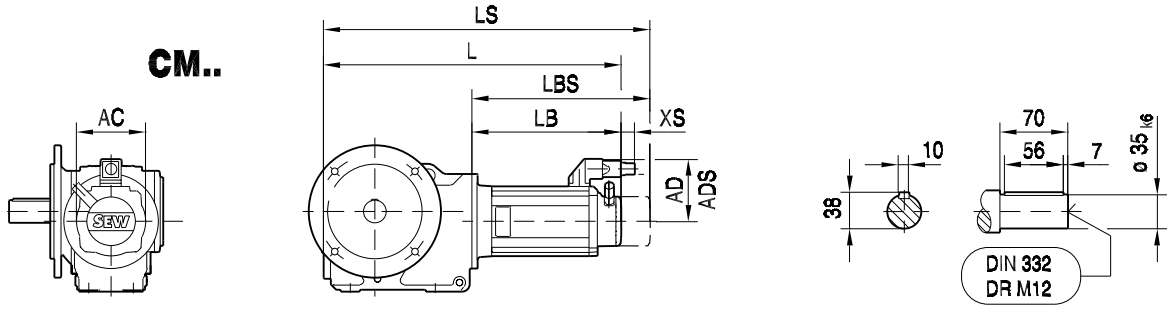

KAF57..

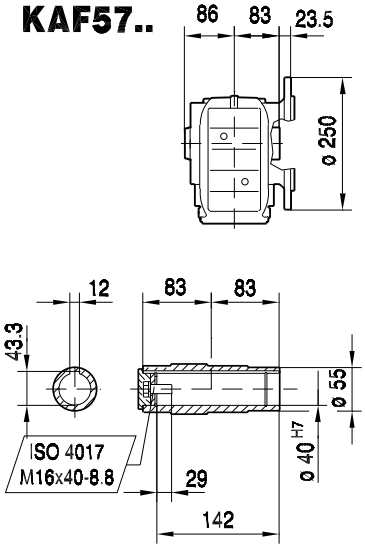

KHF57..

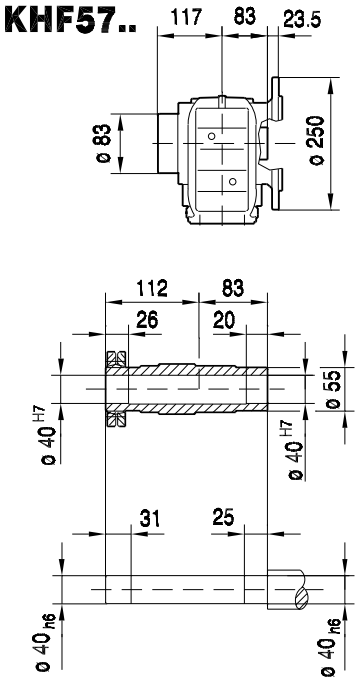

KVF57..

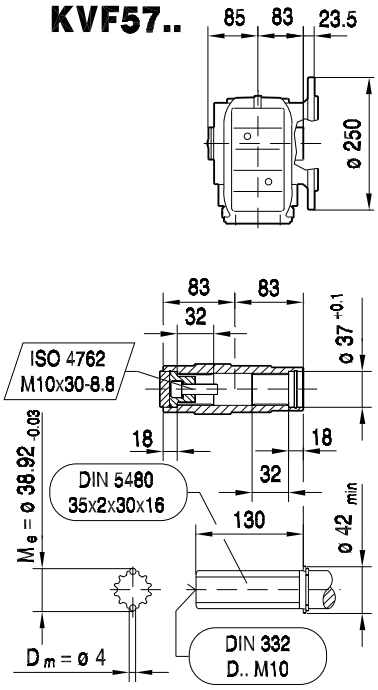

(→ 📖 150)	DS56H	CM71S	CM71M	CM71L	CM90S	CM90M	CM90L	CM112S			
AC	73	117	117	117	142	142	142	186			
AD	77	122	122	122	140	140	140	162			
ADS	77	122	122	122	140	140	140	162			
L	535	501	521	561	553	580	638	593			
LS	535	583	603	643	649	676	734	683			
LB	266	232	252	292	284	311	369	324			
LBS	266	314	334	374	380	407	465	414			
XS	51	45	45	45	50	50	50	36			

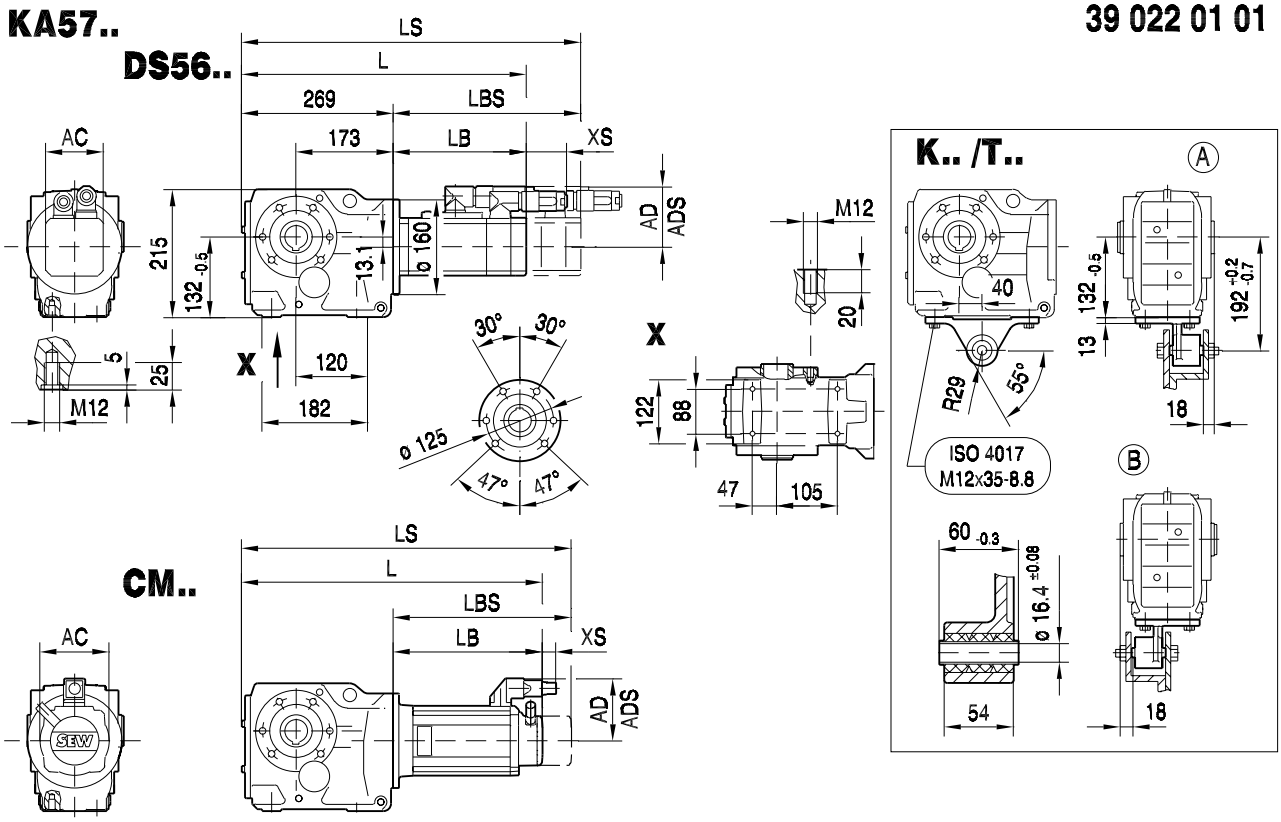

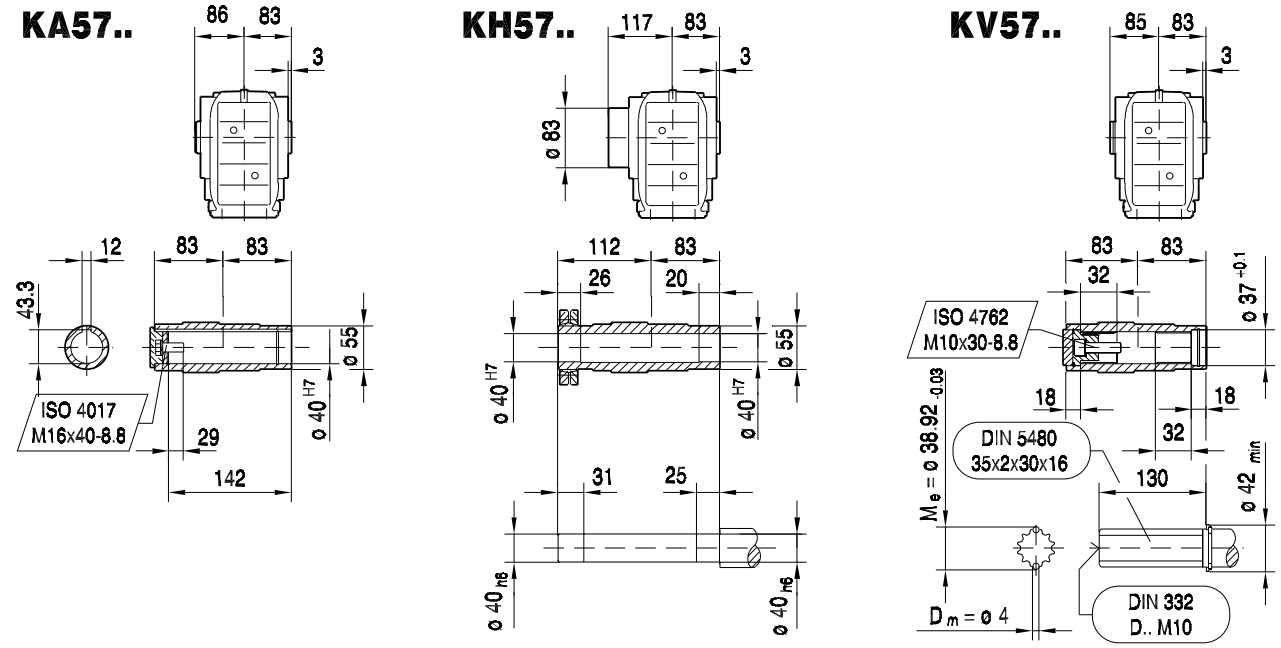

(→ 📖 150)	DS56H	CM71S	CM71M	CM71L	CM90S	CM90M	CM90L	CM112S			
AC	73	117	117	117	142	142	142	186			
AD	77	122	122	122	140	140	140	162			
ADS	77	122	122	122	140	140	140	162			
L	535	501	521	561	553	580	638	593			
LS	535	583	603	643	649	676	734	683			
LB	266	232	252	292	284	311	369	324			
LBS	266	314	334	374	380	407	465	414			
XS	51	45	45	45	50	50	50	36			

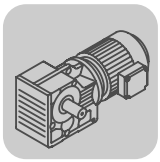

K..CMP, DS, CM
K 57 / CMP / DS / CM [mm]

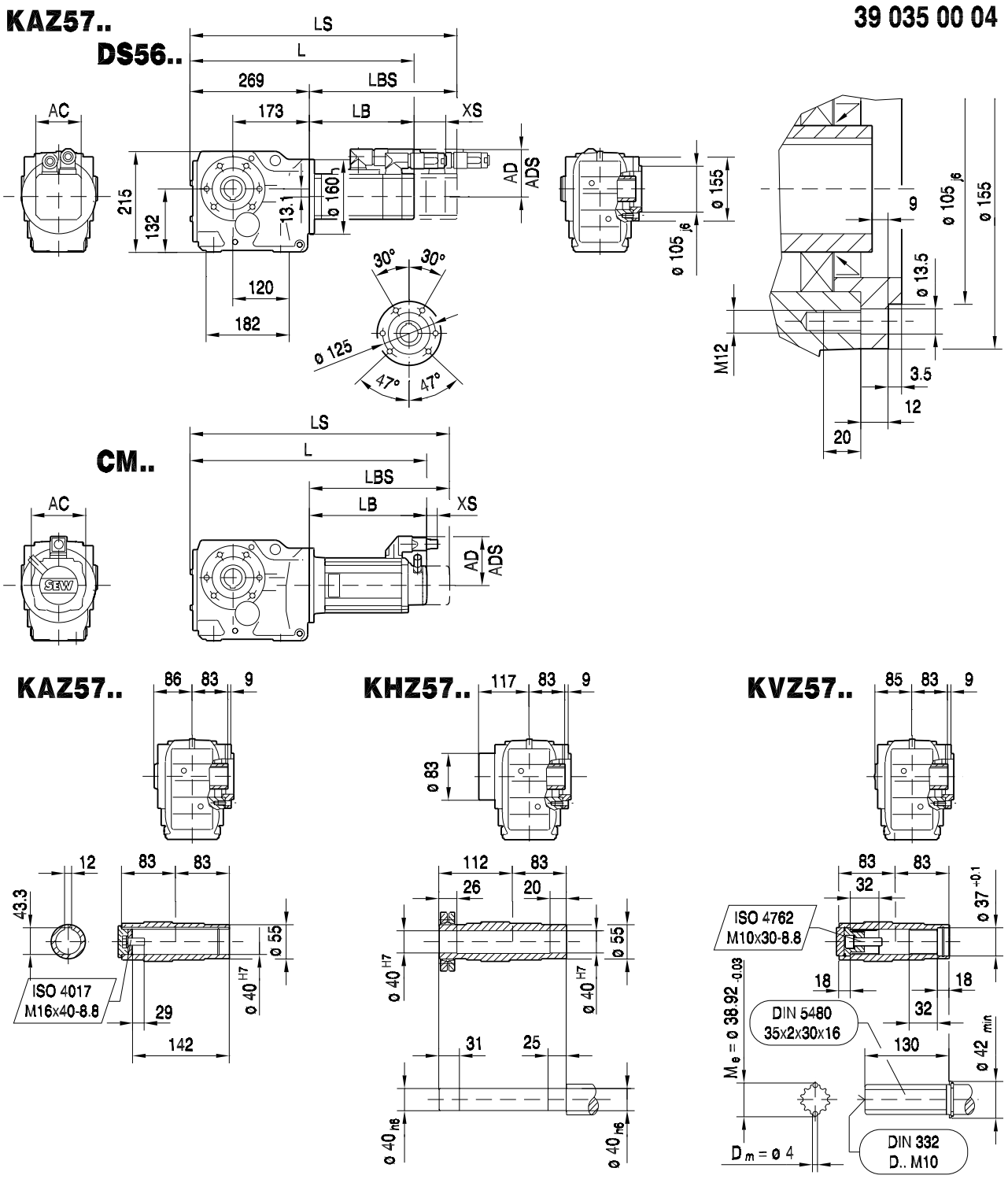

(→ 📖 150)	DS56H	CM71S	CM71M	CM71L	CM90S	CM90M	CM90L	CM112S			
AC	73	117	117	117	142	142	142	186			
AD	77	122	122	122	140	140	140	162			
ADS	77	122	122	122	140	140	140	162			
L	535	501	521	561	553	580	638	593			
LS	535	583	603	643	649	676	734	683			
LB	266	232	252	292	284	311	369	324			
LBS	266	314	334	374	380	407	465	414			
XS	51	45	45	45	50	50	50	36			

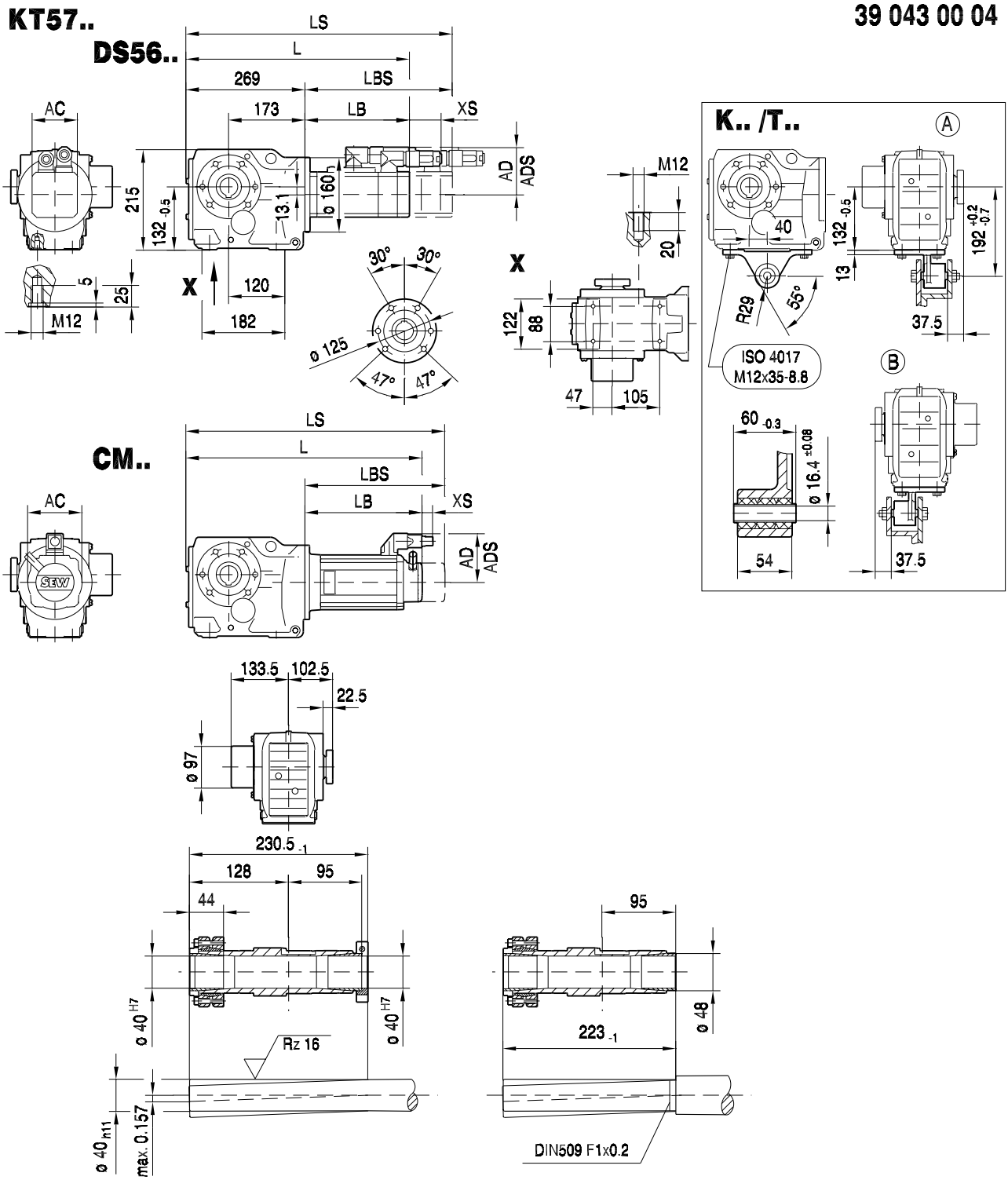

(→ 📖 150)	DS56H	CM71S	CM71M	CM71L	CM90S	CM90M	CM90L	CM112S			
AC	73	117	117	117	142	142	142	186			
AD	77	122	122	122	140	140	140	162			
ADS	77	122	122	122	140	140	140	162			
L	535	501	521	561	553	580	638	593			
LS	535	583	603	643	649	676	734	683			
LB	266	232	252	292	284	311	369	324			
LBS	266	314	334	374	380	407	465	414			
XS	51	45	45	45	50	50	50	36			

10.8 K 67 / CMP / DS / CM [Nm]

M_{aDyn} [Nm]		CMP						DS			CM							
	i	50S	50M	50L	63S	63M	63L	56M	56L	56H	71S	71M	71L	90S	90M	90L	112S	112M
	5.2		51	77	55	107	152			76	82	107	157	198	261	377	411	
	7.28		71	107	77	148	210			105	114	149	217	274	361	523	569	>630
	8.37	41	82	122	88	170	242	30	60	121	131	171	250	315	415	601	654	>660
	9.66	48	95	141	102	196	279	35	70	139	151	197	288	363	479	>685	>685	>685
	10.63	53	104	156	112	216	307	38	77	153	167	217	317	400	527	>690	>690	
	12.48	62	122	183	132	254	360	45	90	180	196	255	372	469	619	>695	>695	
	13.22		129	193	139	269	382			191	207	270	394	497	656	>920	>920	>920
	15.19	75	149	222	160	309	439	55	110	219	238	310	453	571	753	>920	>920	>920
	17.54	87	172	257	185	357	507	63	127	253	275	358	523	660	870	>920	>920	>920
	19.3	95	189	282	204	392	557	70	139	279	303	394	576	726	>920	>920	>920	
	22.66	112	222	332	239	461	654	82	164	327	355	463	676	852	>920	>920	>920	
	24	119	235	351	253	488	693	87	173	347	376	490	716	903	>920	>920	>920	
K67	27.28	135	267	399	288	555	788	98	197	394	428	557	814	>920	>920			
3	30.22	149	296	442	319	614	873	109	218	436	474	617	901	>920	>920			
	35.62	176	349	521	376	724	>920	129	257	514	558	728	>920	>920				
	38.39	188	372	556	401	772	>920	137	274	549	595	776	>920	>920	>920	>920	>920	>920
	44.32	217	429	642	462	892	>920	158	317	633	687	896	>920	>920	>920	>920	>920	>920
	48.77	238	472	706	509	>920	>920	174	348	697	756	>920	>920	>920	>920	>920	>920	
	57.28	280	555	829	598	>920	>920	205	409	818	888	>920	>920	>920	>920	>920	>920	
	60.66	297	587	878	633	>920	>920	217	433	867	>920	>920	>920	>920	>920	>920	>920	
	68.95	337	668	>920	719	>920	>920	246	493	>920	>920	>920	>920	>920	>920			
	76.37	373	739	>920	797	>920	>920	273	546	>920	>920	>920	>920	>920	>920			
	90.04	435	862	>920	>920	>920	>920	318	636	>920	>920	>920	>920	>920				
	102.62	496	>920	>920	>920	>920		363	725	>920	>920	>920						
	108.03	522	>920	>920	>920	>920		382	764	>920	>920	>920						
	123.54	597	>920		>920			437	873	>920								
	144.79	700						512	>920									

m [kg]		CMP						DS			CM							
	s	50S	50M	50L	63S	63M	63L	56M	56L	56H	71S	71M	71L	90S	90M	90L	112S	112M
K67	3	33	34	35	35	37	38	32	33	34	38	39	43	47	50	55	56	60
KF: + 5.6 kg / KA: + -2.7 kg / KAF: + 3.0 kg																		

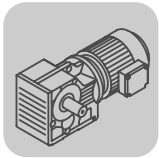

CMP.. / DS.. / CM..	i	n_{epk} [1/min]	η [%]	c_T K [Nm/']	KF [Nm/']	KA [Nm/']	KAF [Nm/']	φ /R [']
K67 3	5.2	3862	96	57.99	53.57	96.17	96.17	10
	7.28	4500	95	57.99	53.57	96.17	96.17	9
	8.37	4500	95	57.99	53.57	96.17	96.17	9
	9.66	4500	95	57.99	53.57	96.17	96.17	9
	10.63	4500	95	57.99	53.57	96.17	96.17	9
	12.48	4500	95	57.99	53.57	96.17	96.17	9
	13.22	4500	95	72.94	66.08	145.68	145.68	8
	15.19	4500	95	72.94	66.08	145.68	145.68	8
	17.54	4500	95	72.94	66.08	145.68	145.68	7
	19.3	4500	95	72.94	66.08	145.68	145.68	7
	22.66	4500	95	72.94	66.08	145.68	145.68	7
	24	4500	95	72.94	66.08	145.68	145.68	7
	27.28	4500	95	72.94	66.08	145.68	145.68	7
	30.22	4500	95	72.94	66.08	145.68	145.68	7
	35.62	4500	95	72.94	66.08	145.68	145.68	7
	38.39	4500	94	77.39	69.72	164.59	164.59	6
	44.32	4500	94	77.39	69.72	164.59	164.59	6
	48.77	4500	94	77.39	69.72	164.59	164.59	6
	57.28	4500	94	77.39	69.72	164.59	164.59	6
	60.66	4500	94	77.39	69.72	164.59	164.59	6
	68.95	4500	94	77.39	69.72	164.59	164.59	6
	76.37	4500	94	77.39	69.72	164.59	164.59	6
	90.04	4500	93	77.39	69.72	164.59	164.59	6
	102.62	4500	93	77.39	69.72	164.59	164.59	6
	108.03	4500	93	77.39	69.72	164.59	164.59	6
	123.54	4500	93	77.39	69.72	164.59	164.59	6
	144.79	4500	93	77.39	69.72	164.59	164.59	6

CMP.. / DS.. / CM..	i	M_{amax} [Nm]	M_{apk} [Nm]	$M_{aNotaus}$ [Nm]	n_{ak} [1/min]	J_G 10^{-4} [kgm^2]	F_{Ramax} K [N]	KF [N]	KA [N]	KAF [N]	F_{Rapk} K [N]	KF [N]	KA [N]	KAF [N]
K67 3	5.2	350	525	595	192	11	9860	10000	2450	2450	12300	12300	13000	13000
	7.28	420	630	714	206	6.3	10700	10900	2480	2480	11700	11700	13000	13000
	8.37	440	660	748	179	4.9	11100	11400	2590	2590	11500	11500	13000	13000
	9.66	480	685	816	155	3.8	11500	11700	2550	2550	11400	11400	13000	13000
	10.63	500	690	850	141	3.2	11800	12000	2590	2590	11300	11300	13000	13000
	12.48	530	695	901	120	2.5	12300	12300	2710	2710	11300	11300	13000	13000
	13.22	670	920	1139	113	5.6	11500	11500	2420	2420	9310	9310	13000	13000
	15.19	700	920	1190	105	4.4	11300	11300	2550	2550	9310	9310	13000	13000
	17.54	740	920	1258	97	3.4	11000	11000	2630	2630	9310	9310	13000	13000
	19.3	760	920	1292	93	2.9	10800	10800	2740	2740	9310	9310	13000	13000
	22.66	780	920	1326	93	2.2	10700	10700	3070	3070	9310	9310	13000	13000
	24	800	920	1360	88	2.0	10500	10500	3090	3090	9310	9310	13000	13000
	27.28	820	920	1394	84	1.6	10300	10300	3340	3340	9310	9310	13000	13000
	30.22	820	920	1394	86	1.3	10300	10300	3680	3680	9310	9310	13000	13000
	35.62	820	920	1394	90	1.0	10300	10300	4260	4260	9310	9310	13000	13000
	38.39	800	920	1360	52	2.4	10500	10500	4690	4690	9310	9310	13000	13000
	44.32	820	920	1394	50	1.9	10300	10300	5070	5070	9310	9310	13000	13000
	48.77	820	920	1394	49	1.7	10300	10300	5440	5440	9310	9310	13000	13000
	57.28	820	920	1394	52	1.4	10300	10300	6100	6100	9310	9310	13000	13000
	60.66	820	920	1394	53	1.2	10300	10300	6340	6340	9310	9310	13000	13000
	68.95	820	920	1394	52	1.0	10300	10300	6900	6900	9310	9310	13000	13000
	76.37	820	920	1394	54	0.87	10300	10300	7360	7360	9310	9310	13000	13000
	90.04	820	920	1394	54	0.68	10300	10300	8140	8140	9310	9310	13000	13000
	102.62	820	920	1394	56	0.47	10300	10300	8800	8800	9310	9310	13000	13000
	108.03	820	920	1394	56	0.42	10300	10300	9060	9060	9310	9310	13000	13000
	123.54	820	920	1394	56	0.34	10300	10300	9770	9770	9310	9310	13000	13000
	144.79	820	920	1394	48	0.28	10300	10300	10700	10700	9310	9310	13000	13000

10.9 K 67 / CMP / DS / CM [mm]

33 024 00 07

K67..

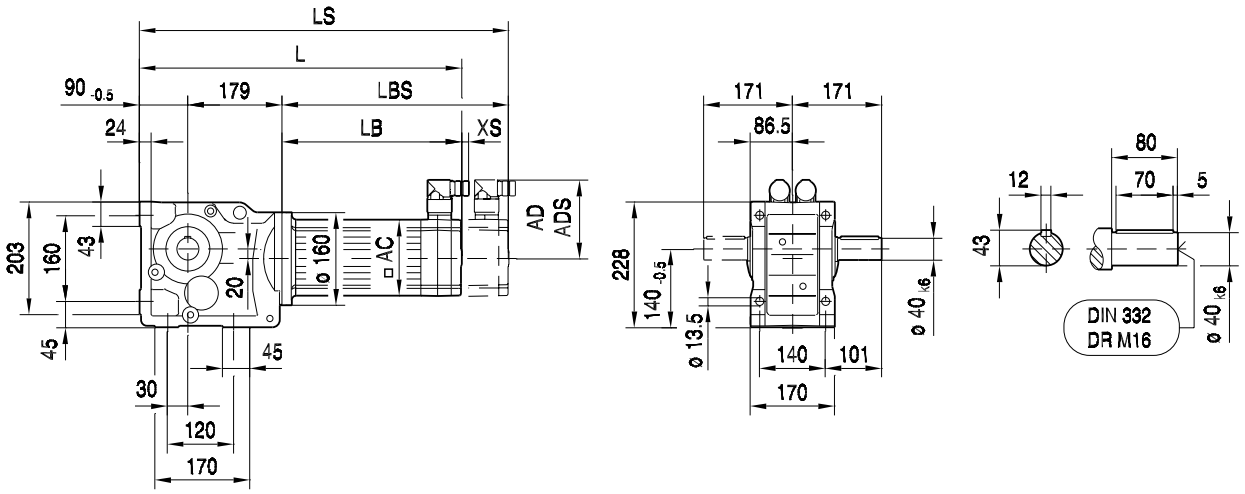

KA67B..

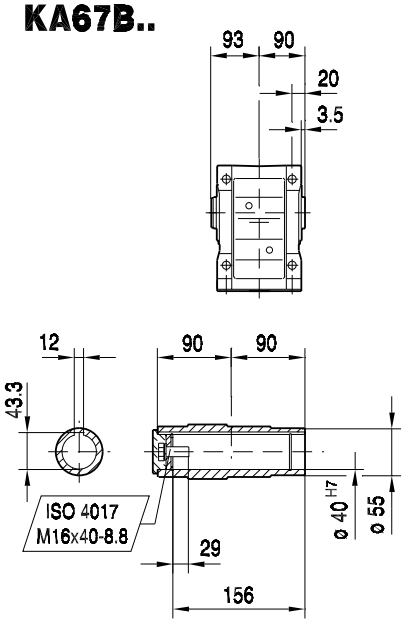

KH67B..

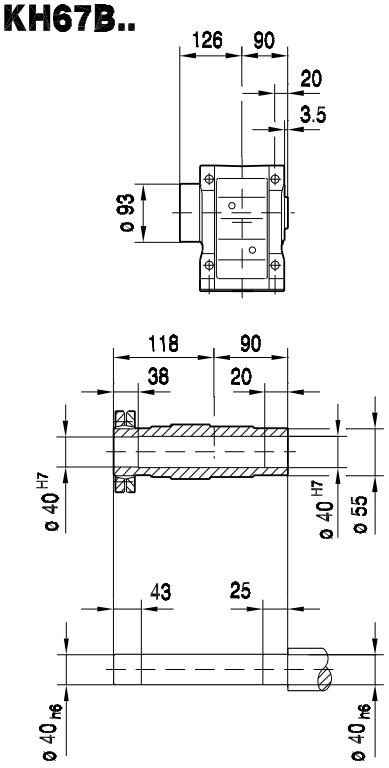

KV67B..

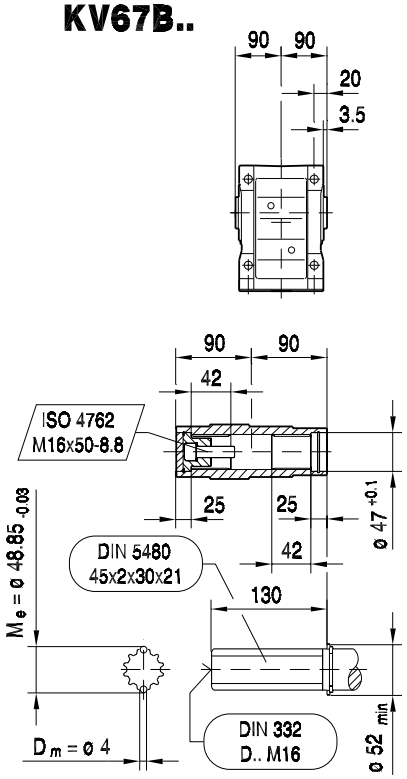

(→ 📖 150)	CMP50S	CMP50M	CMP50L	CMP63S	CMP63M	CMP63L		
AC	73	73	73	88	88	88		
AD	82	82	82	89	89	89		
ADS	82	82	82	89	89	89		
L	408	447	486	442	492	542		
LS	437	476	515	471	521	571		
LB	139	178	217	173	223	273		
LBS	168	207	246	202	252	302		
XS	18	18	18	14	14	14		

33 025 00 07

KF67..

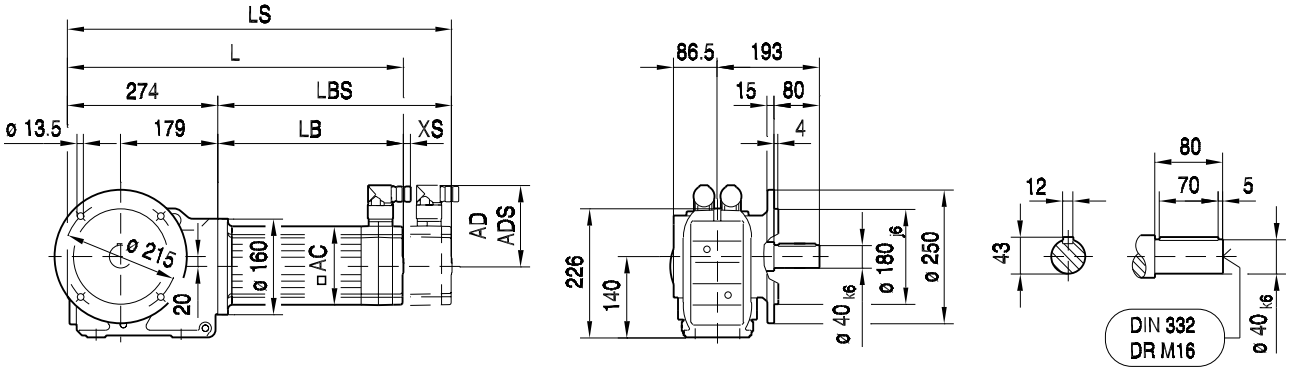

KAF67..

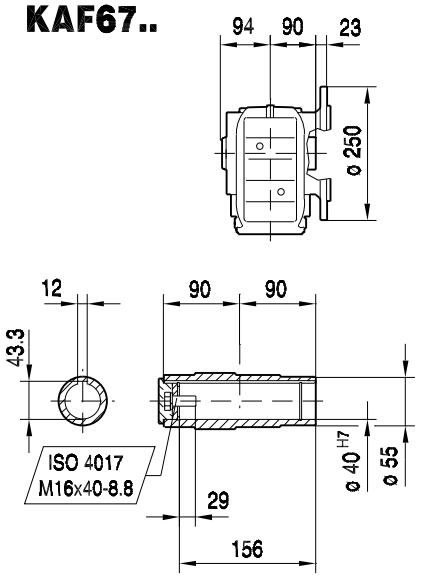

KHF67..

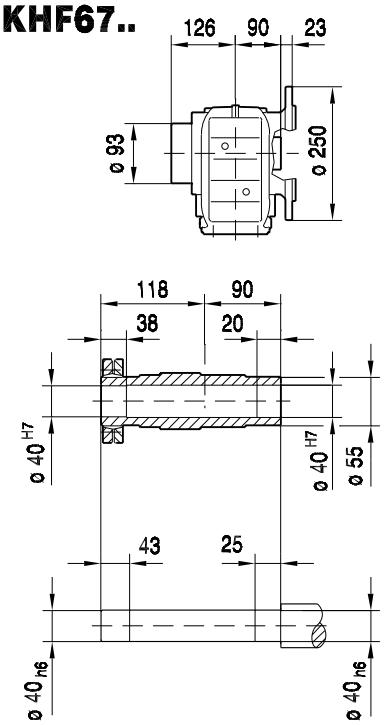

KVF67..

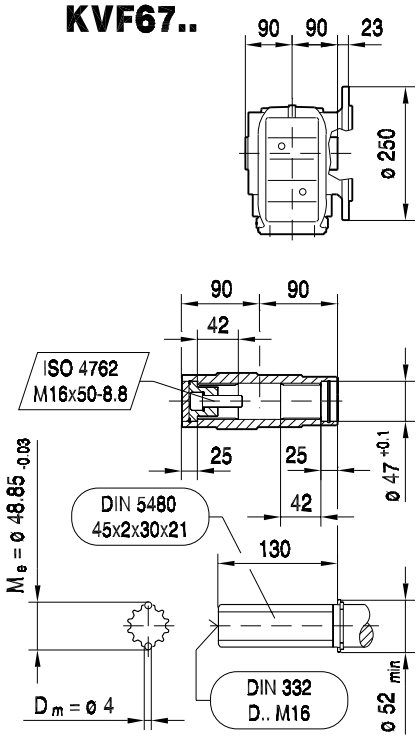

(→ 📖 150)	CMP50S	CMP50M	CMP50L	CMP63S	CMP63M	CMP63L		
AC	73	73	73	88	88	88		
AD	82	82	82	89	89	89		
ADS	82	82	82	89	89	89		
L	413	452	491	447	497	547		
LS	442	481	520	476	526	576		
LB	139	178	217	173	223	273		
LBS	168	207	246	202	252	302		
XS	18	18	18	14	14	14		

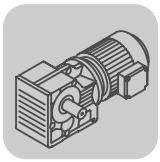

K..CMP, DS, CM
K 67 / CMP / DS / CM [mm]

KA67..

33 026 00 07

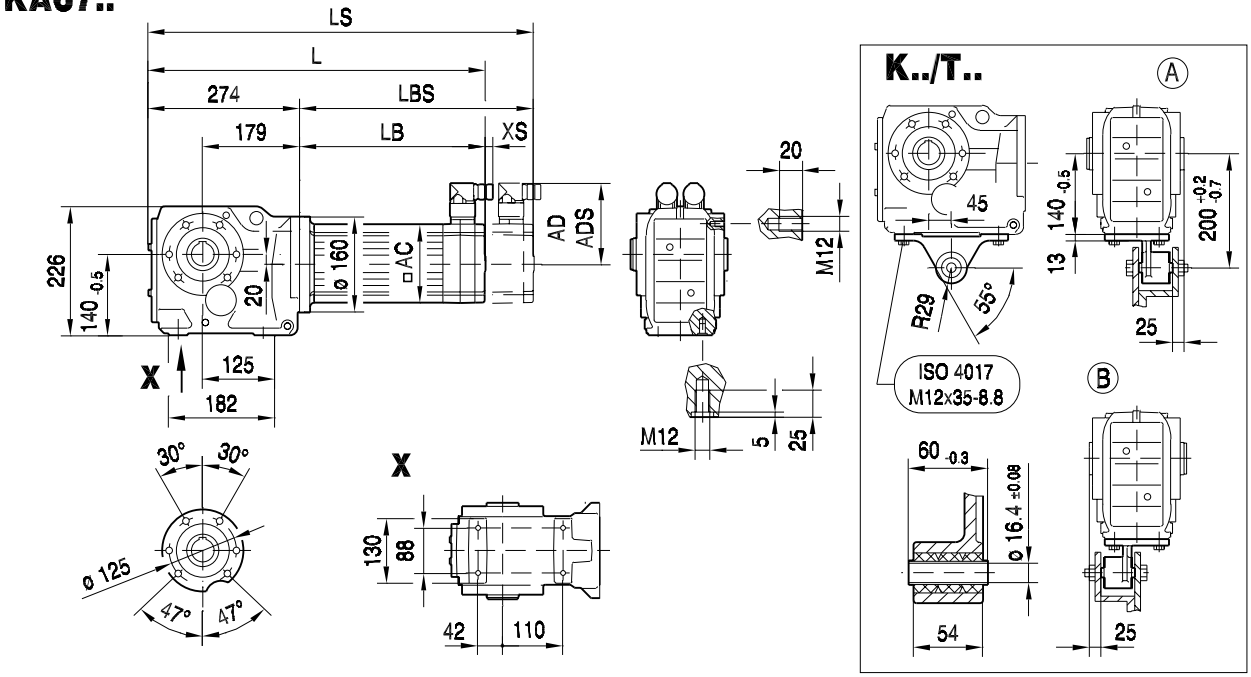

KA67..

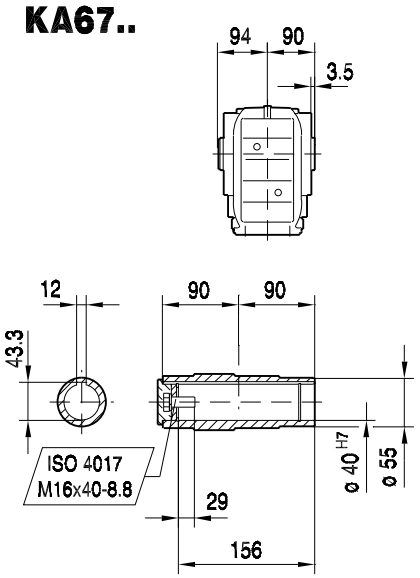

KH67..

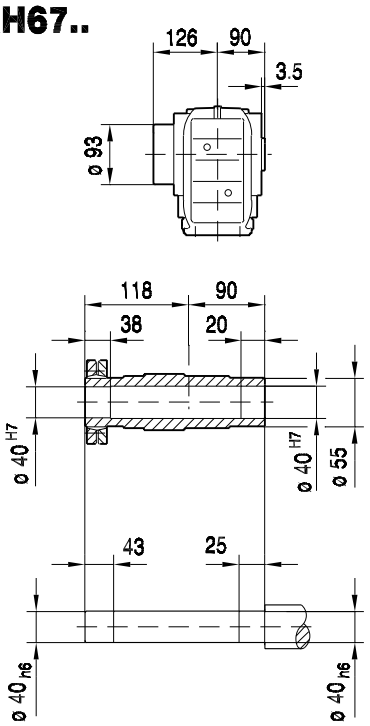

KV67..

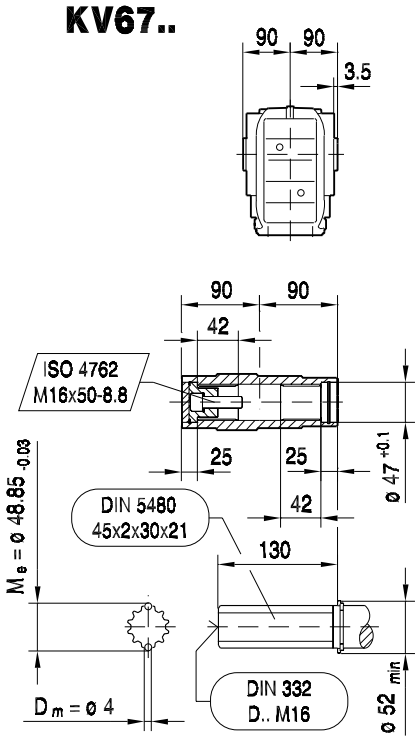

(→ 📖 150)	CMP50S	CMP50M	CMP50L	CMP63S	CMP63M	CMP63L		
AC	73	73	73	88	88	88		
AD	82	82	82	89	89	89		
ADS	82	82	82	89	89	89		
L	413	452	491	447	497	547		
LS	442	481	520	476	526	576		
LB	139	178	217	173	223	273		
LBS	168	207	246	202	252	302		
XS	18	18	18	14	14	14		

KAZ67..

33 027 00 07

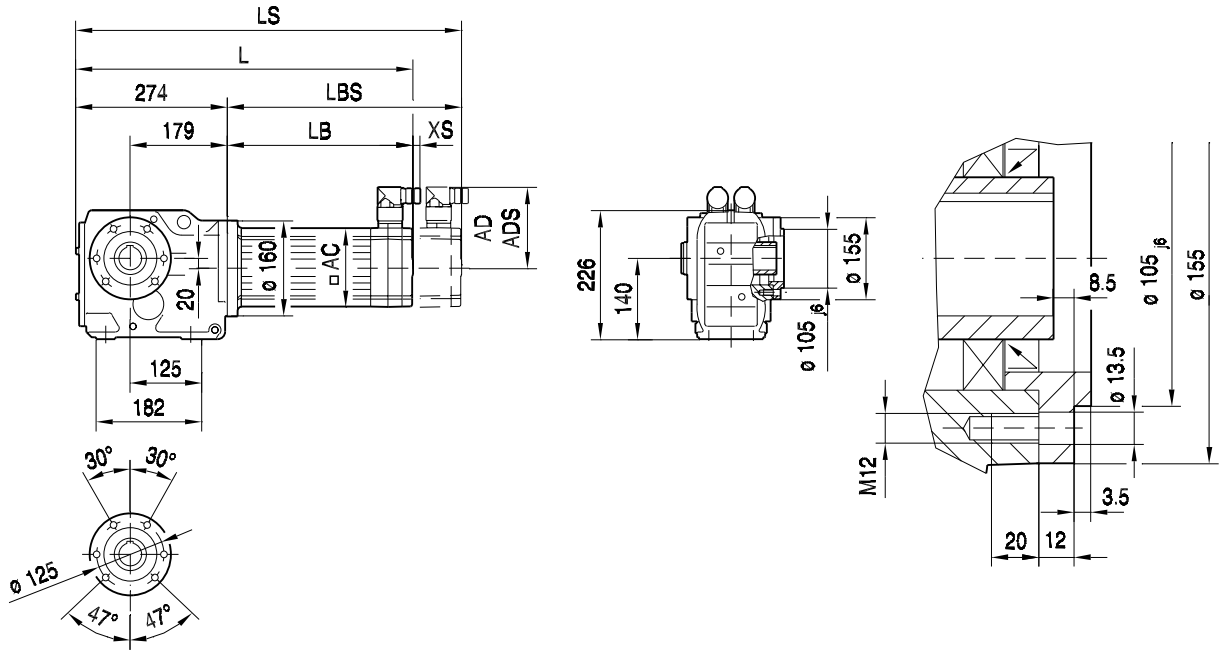

KAZ67..

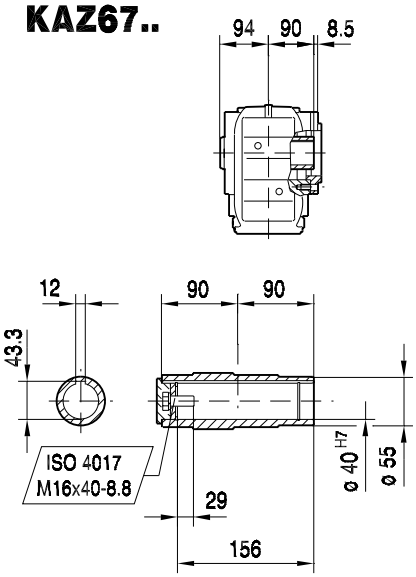

KHZ67..

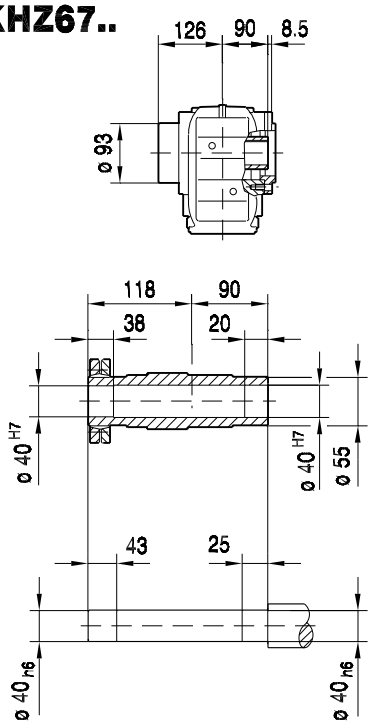

KVZ67..

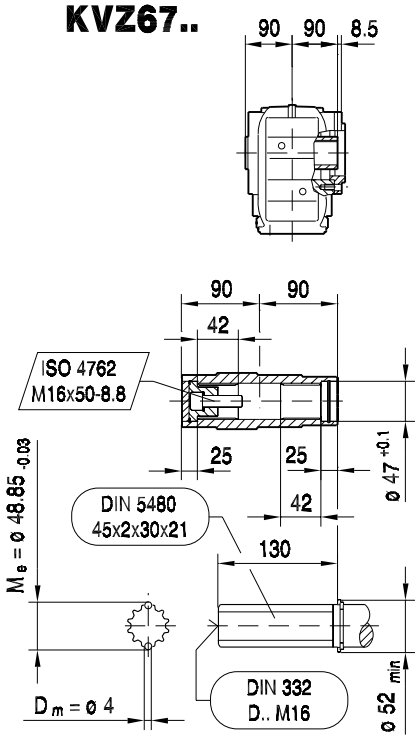

(→ 📖 150)	CMP50S	CMP50M	CMP50L	CMP63S	CMP63M	CMP63L		
AC	73	73	73	88	88	88		
AD	82	82	82	89	89	89		
ADS	82	82	82	89	89	89		
L	413	452	491	447	497	547		
LS	442	481	520	476	526	576		
LB	139	178	217	173	223	273		
LBS	168	207	246	202	252	302		
XS	18	18	18	14	14	14		

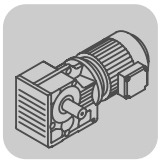

K..CMP, DS, CM
K 67 / CMP / DS / CM [mm]

KT67..

33 028 00 07

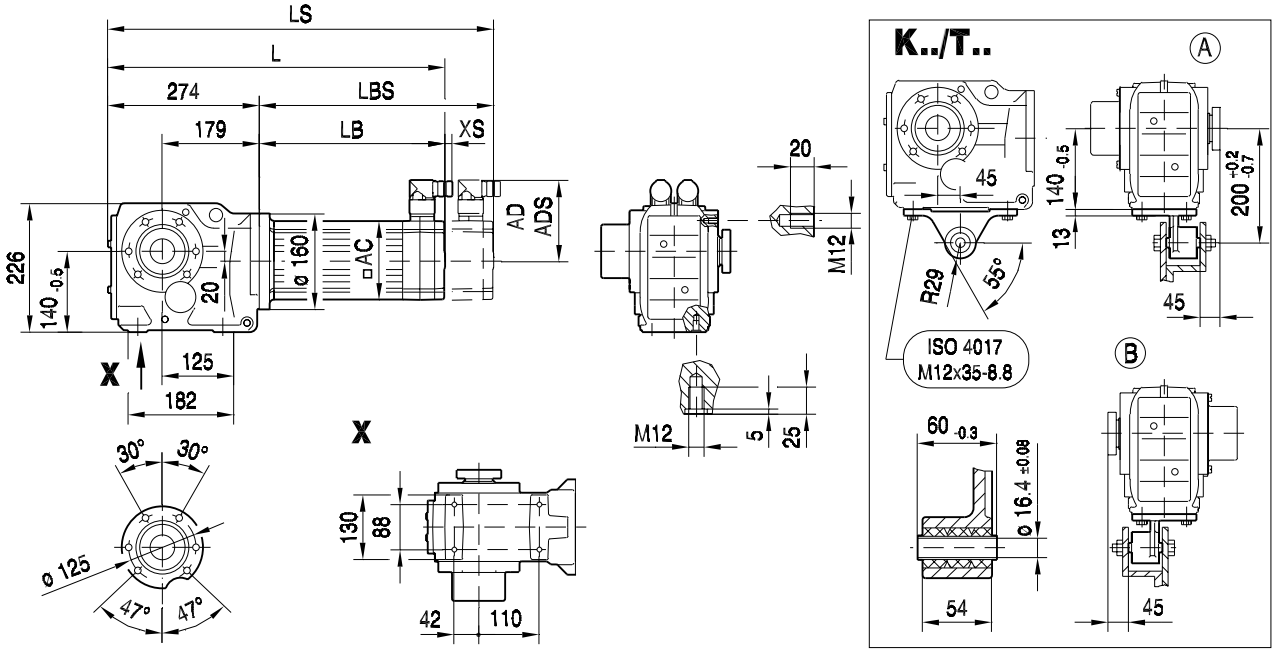

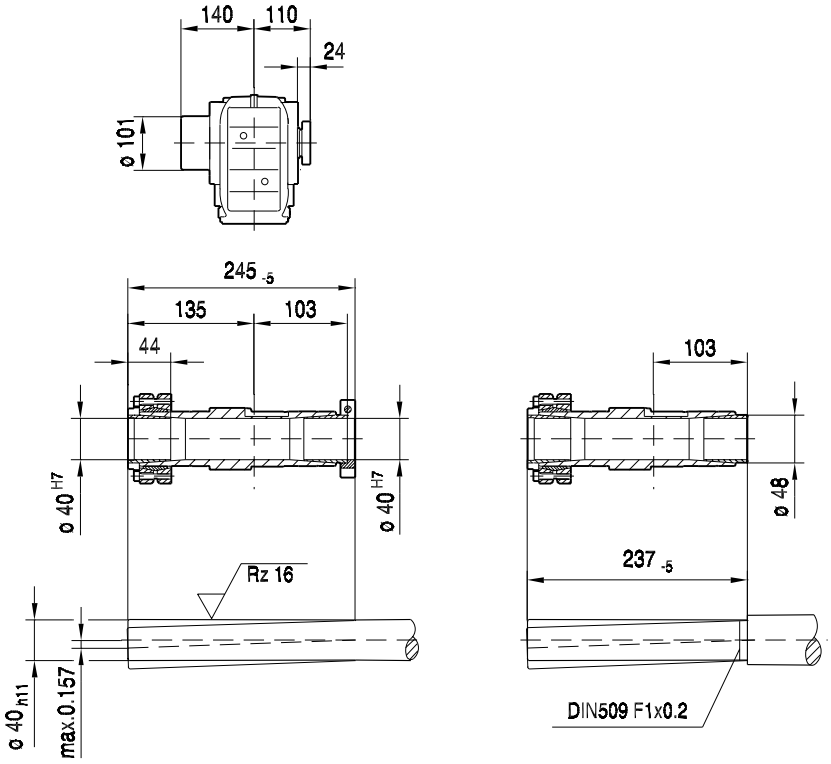

(→ 📖 150)	CMP50S	CMP50M	CMP50L	CMP63S	CMP63M	CMP63L		
AC	73	73	73	88	88	88		
AD	82	82	82	89	89	89		
ADS	82	82	82	89	89	89		
L	413	452	491	447	497	547		
LS	442	481	520	476	526	576		
LB	139	178	217	173	223	273		
LBS	168	207	246	202	252	302		
XS	18	18	18	14	14	14		

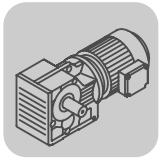

34 036 01 01

K67..

DS56..

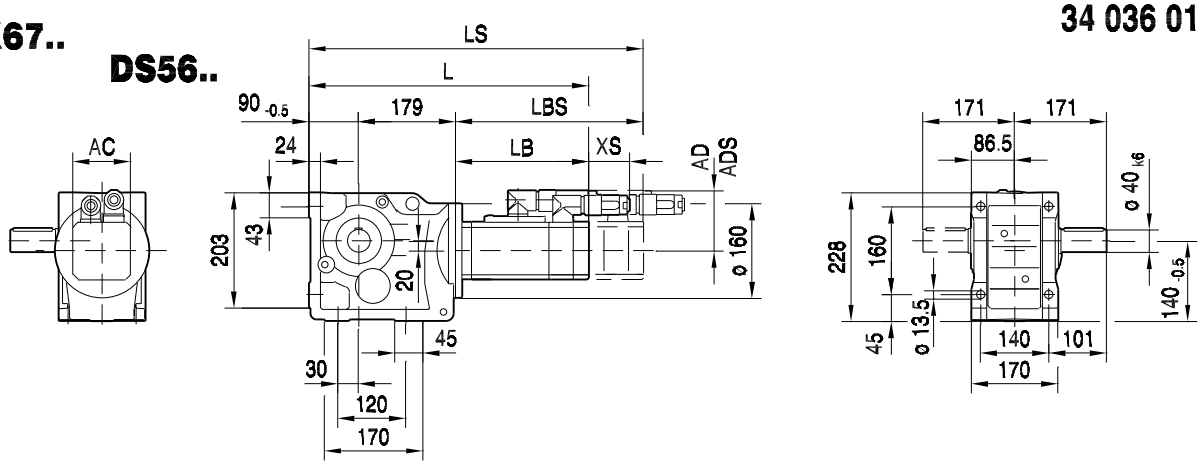

CM..

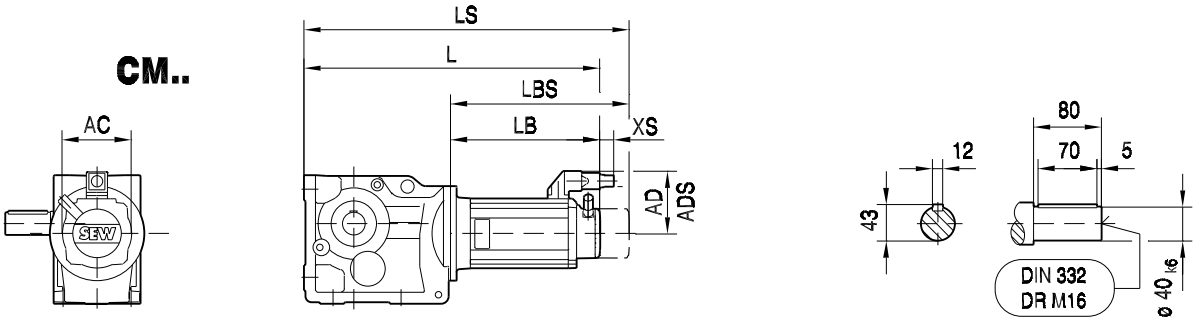

KA67B..

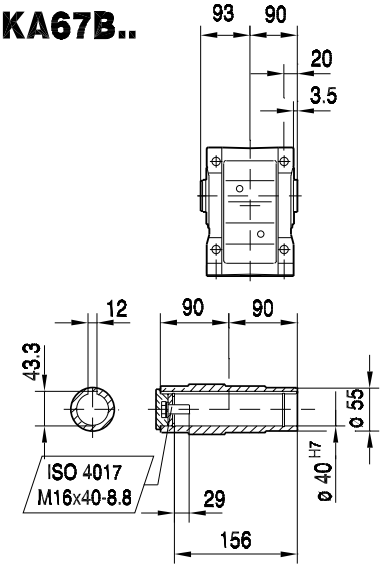

KH67B..

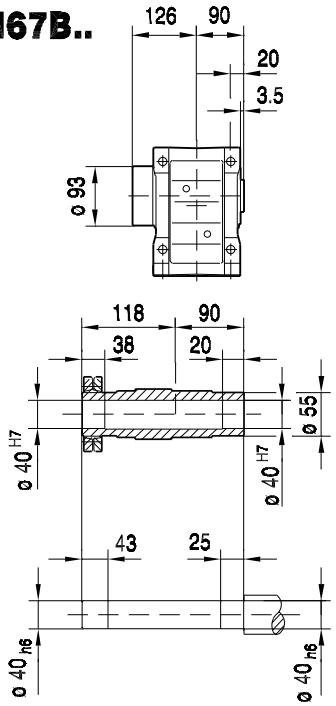

KV67B..

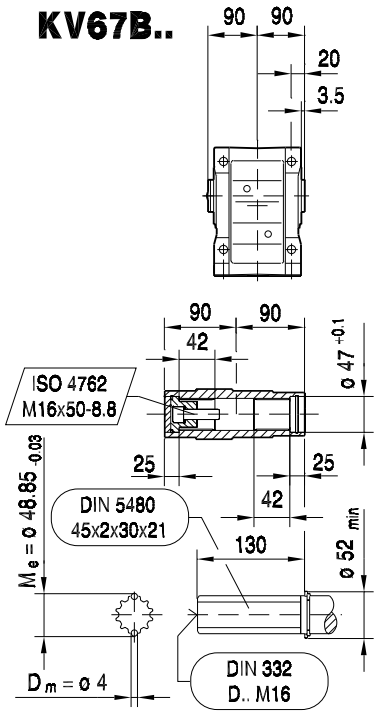

(→ 📖 150)	DS56H	CM71S	CM71M	CM71L	CM90S	CM90M	CM90L	CM112S	CM112M		
AC	73	117	117	117	142	142	142	186	186		
AD	77	122	122	122	140	140	140	162	162		
ADS	77	122	122	122	140	140	140	162	162		
L	535	501	521	561	553	580	638	593	617		
LS	535	583	603	643	649	676	734	683	707		
LB	266	232	252	292	284	311	369	324	348		
LBS	266	314	334	374	380	407	465	414	438		
XS	51	45	45	45	50	50	50	36	36		

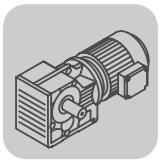

K..CMP, DS, CM
K 67 / CMP / DS / CM [mm]

KF67.. **DS56..**

34 037 01 01

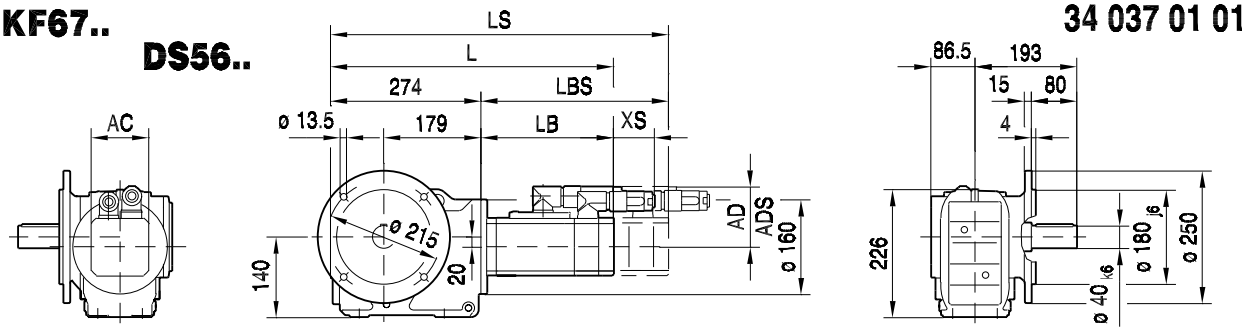

CM..

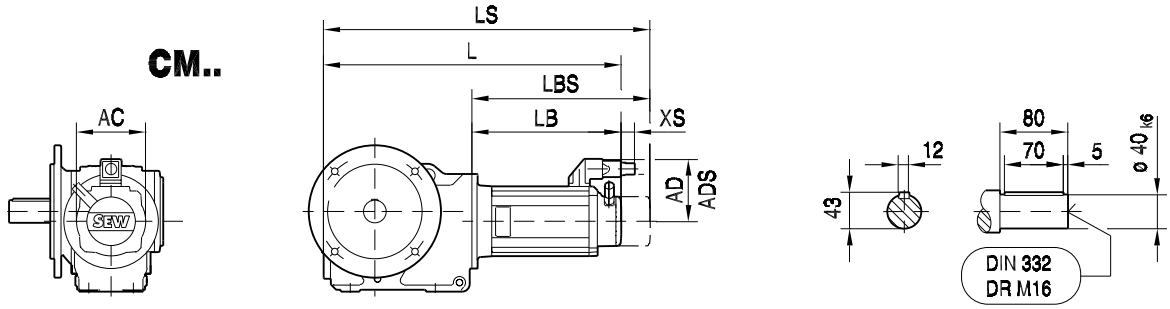

KAF67..

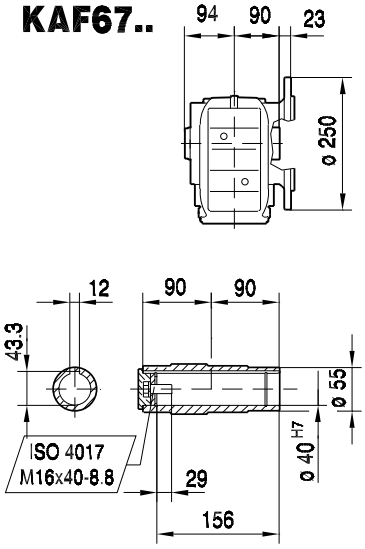

KHF67..

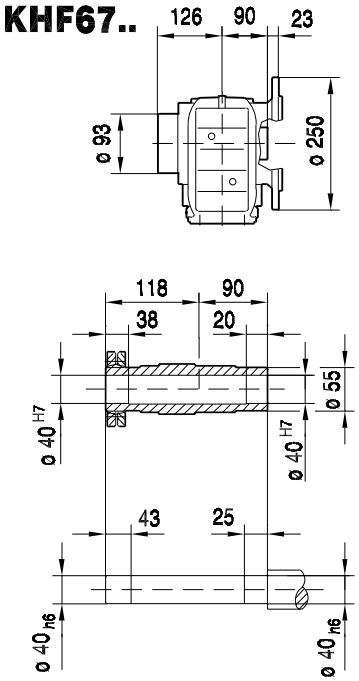

KVF67..

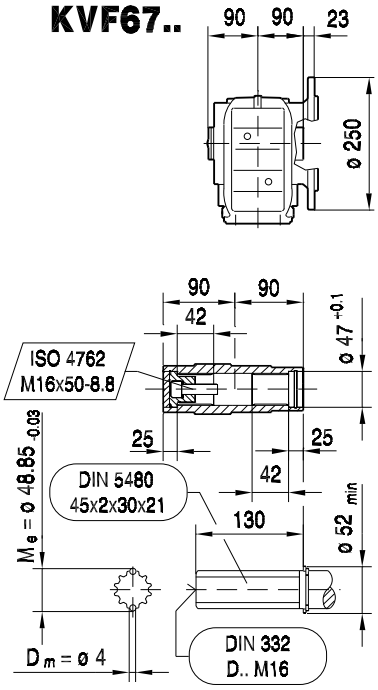

(→ 📖 150)	DS56H	CM71S	CM71M	CM71L	CM90S	CM90M	CM90L	CM112S	CM112M		
AC	73	117	117	117	142	142	142	186	186		
AD	77	122	122	122	140	140	140	162	162		
ADS	77	122	122	122	140	140	140	162	162		
L	540	506	526	566	558	585	643	598	622		
LS	540	588	608	648	654	681	739	688	712		
LB	266	232	252	292	284	311	369	324	348		
LBS	266	314	334	374	380	407	465	414	438		
XS	51	45	45	45	50	50	50	36	36		

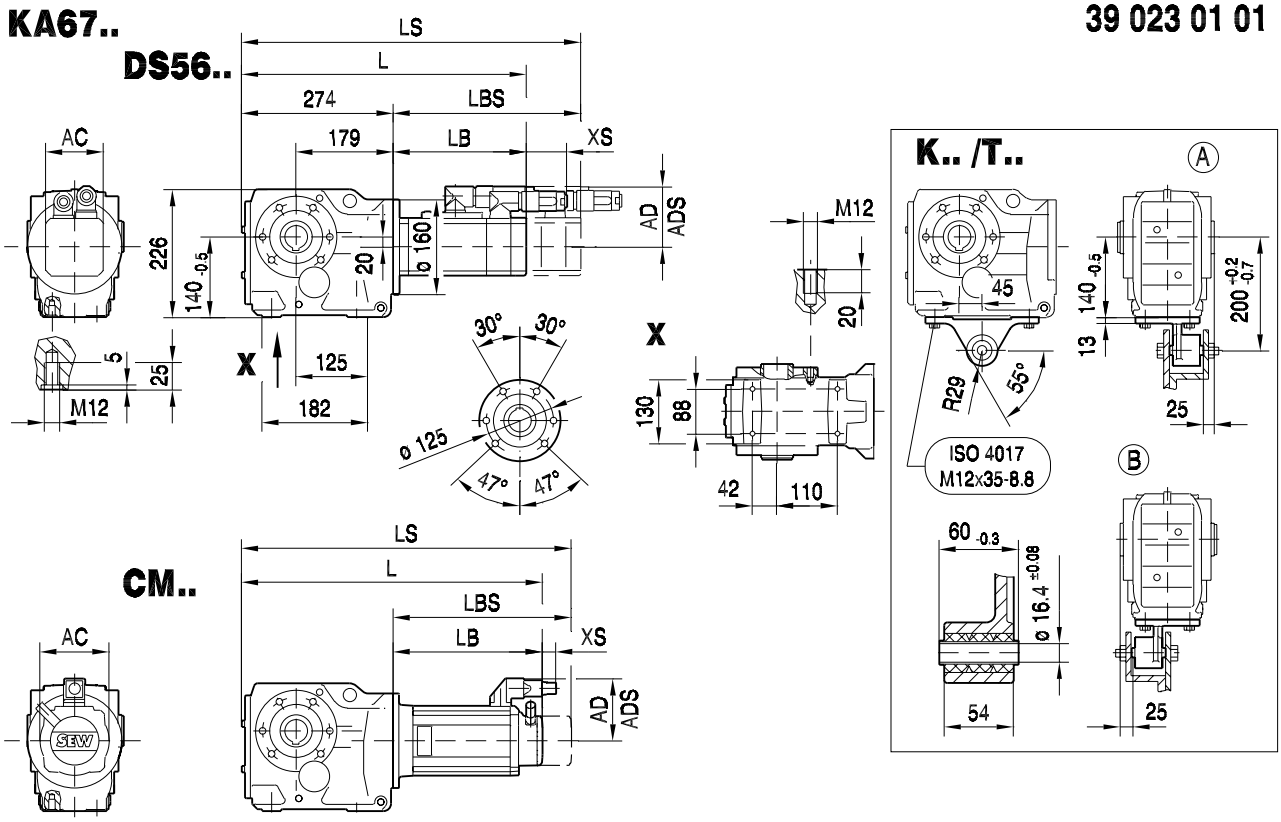

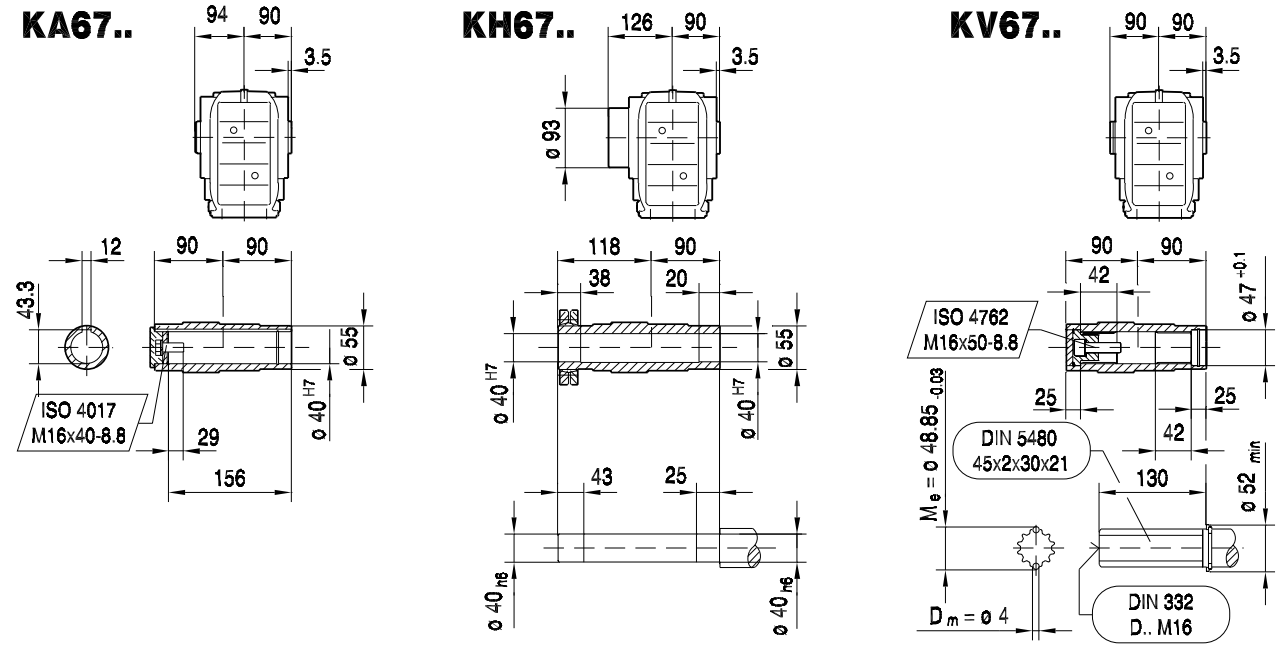

(→ 📖 150)	DS56H	CM71S	CM71M	CM71L	CM90S	CM90M	CM90L	CM112S	CM112M		
AC	73	117	117	117	142	142	142	186	186		
AD	77	122	122	122	140	140	140	162	162		
ADS	77	122	122	122	140	140	140	162	162		
L	540	506	526	566	558	585	643	598	622		
LS	540	588	608	648	654	681	739	688	712		
LB	266	232	252	292	284	311	369	324	348		
LBS	266	314	334	374	380	407	465	414	438		
XS	51	45	45	45	50	50	50	36	36		

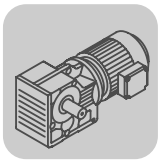

K..CMP, DS, CM
K 67 / CMP / DS / CM [mm]

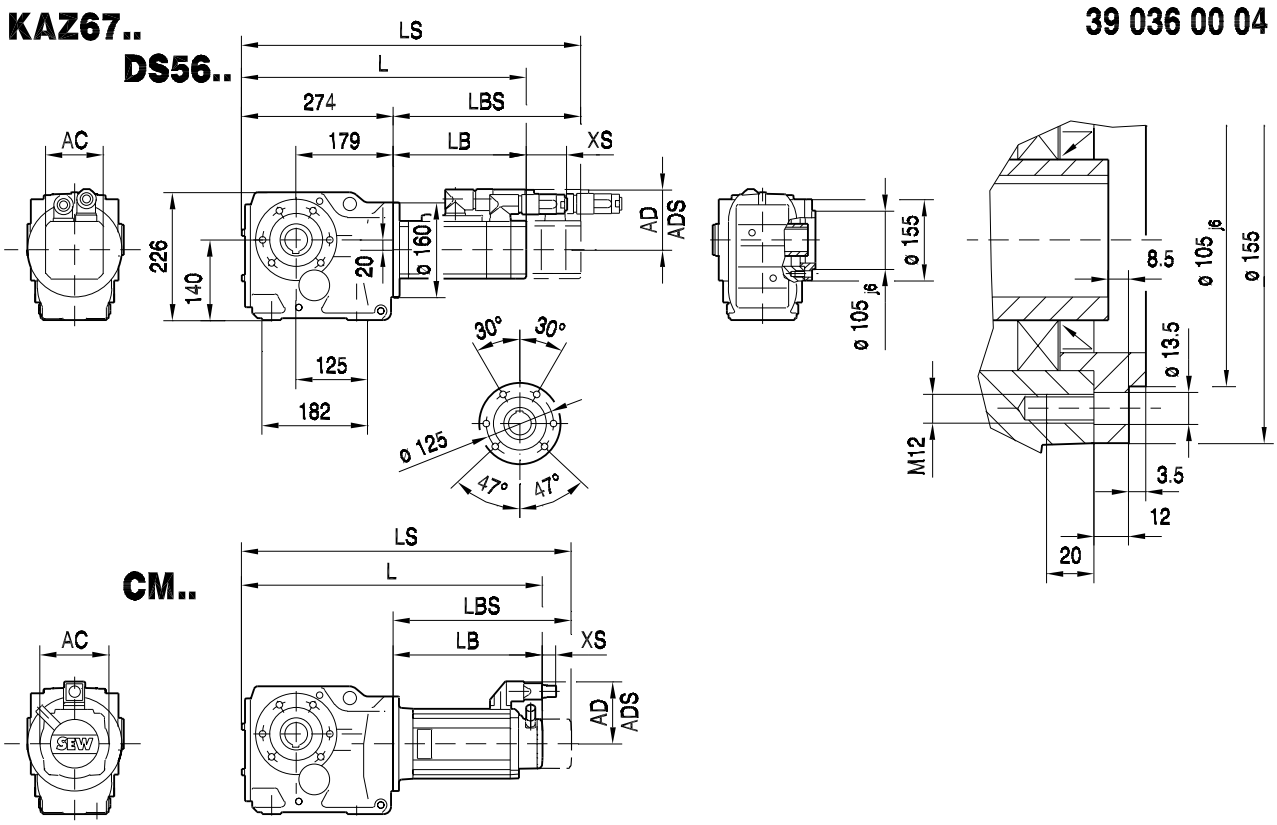

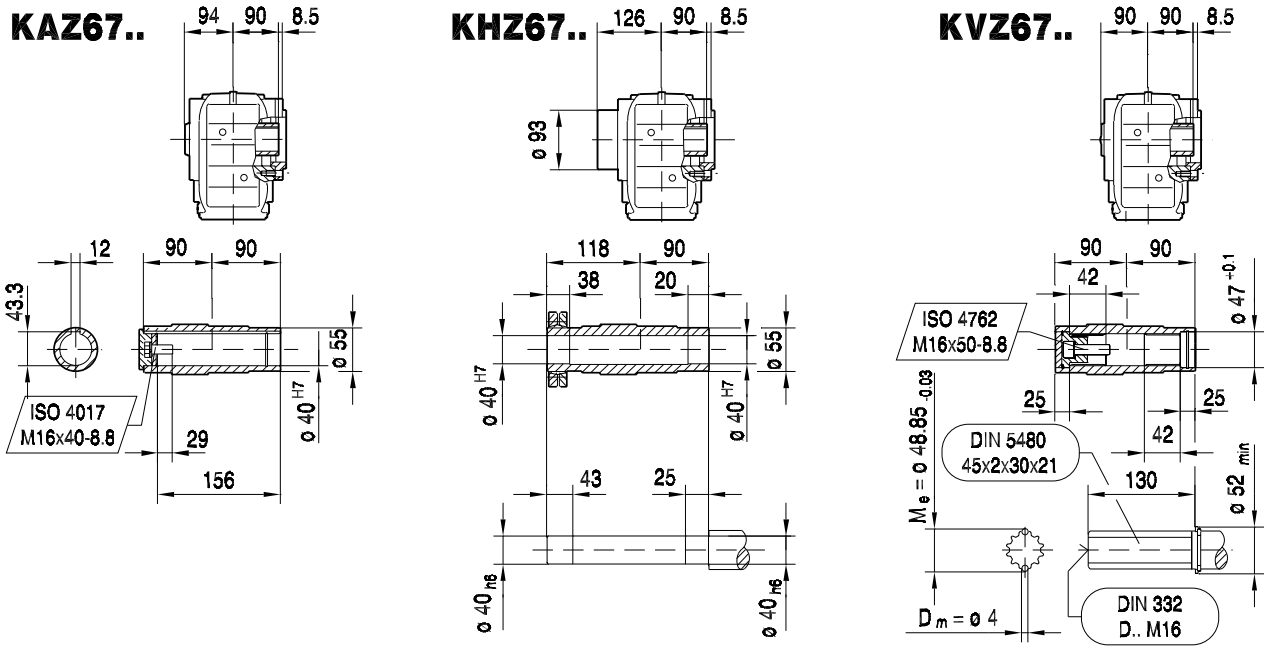

(→ 📖 150)	DS56H	CM71S	CM71M	CM71L	CM90S	CM90M	CM90L	CM112S	CM112M		
AC	73	117	117	117	142	142	142	186	186		
AD	77	122	122	122	140	140	140	162	162		
ADS	77	122	122	122	140	140	140	162	162		
L	540	506	526	566	558	585	643	598	622		
LS	540	588	608	648	654	681	739	688	712		
LB	266	232	252	292	284	311	369	324	348		
LBS	266	314	334	374	380	407	465	414	438		
XS	51	45	45	45	50	50	50	36	36		

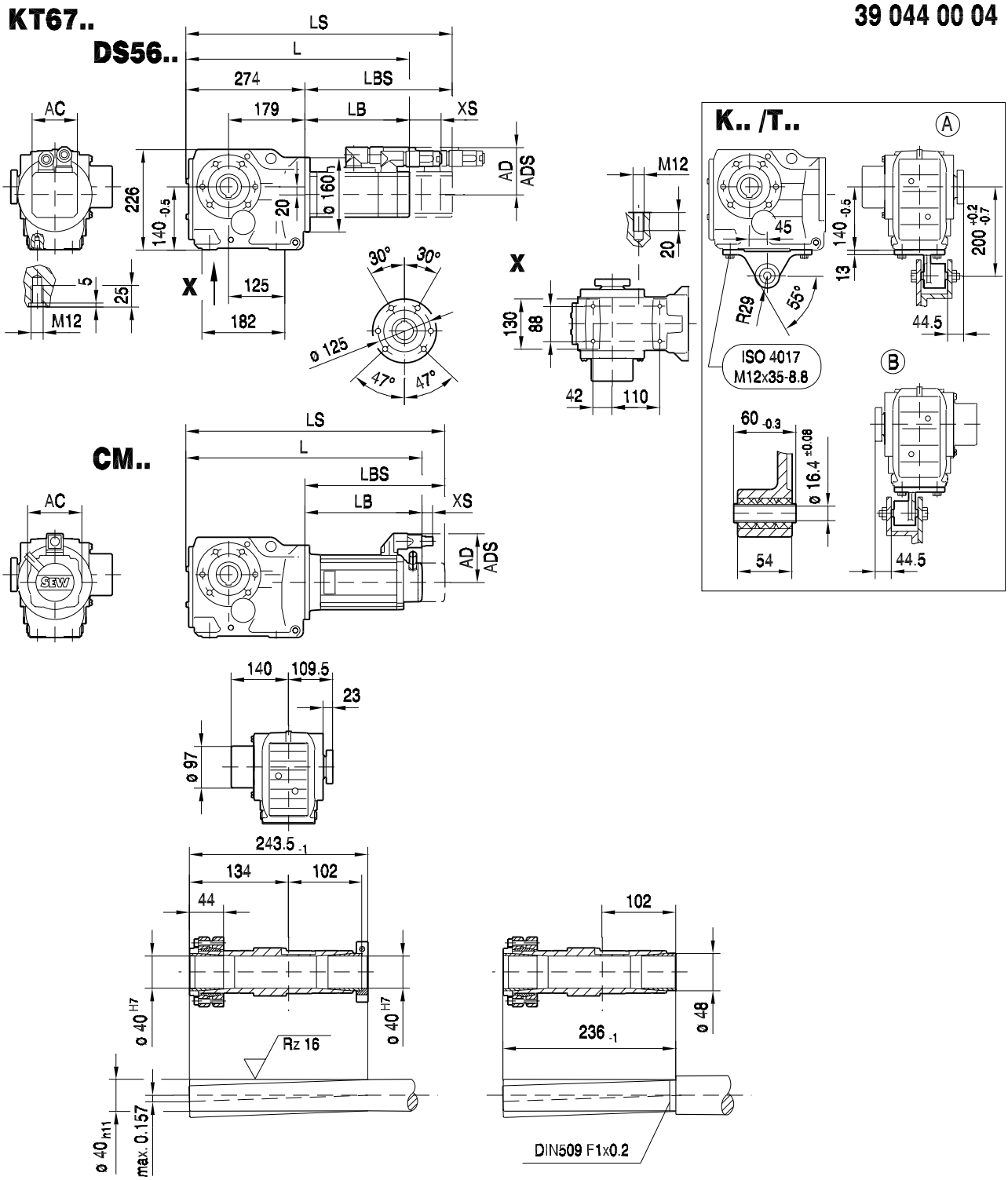

(→ 📖 150)	DS56H	CM71S	CM71M	CM71L	CM90S	CM90M	CM90L	CM112S	CM112M		
AC	73	117	117	117	142	142	142	186	186		
AD	77	122	122	122	140	140	140	162	162		
ADS	77	122	122	122	140	140	140	162	162		
L	540	506	526	566	558	585	643	598	622		
LS	540	588	608	648	654	681	739	688	712		
LB	266	232	252	292	284	311	369	324	348		
LBS	266	314	334	374	380	407	465	414	438		
XS	51	45	45	45	50	50	50	36	36		

10.10 K 77 / CMP / CM [Nm]

M_{aDyn} [Nm]		CMP			CM								
	i	63S	63M	63L	71S	71M	71L	90S	90M	90L	112S	112M	112L
K77 3	7.24	76	147	209	113	148	216	272	359	520	566	746	1083
	8.48	89	172	245	133	173	253	319	421	609	663	874	>1160
	9.56	101	194	276	150	195	285	360	474	687	747	985	>1160
	10.84	114	220	313	170	221	323	408	538	779	848	1117	>1170
	12.36	130	251	357	194	252	369	465	613	888	966	>1170	>1170
	13.52	143	275	390	212	276	403	509	670	971	1057	1394	>1550
	15.84	167	322	457	248	324	473	596	786	1138	1238	>1550	>1550
	17.87	188	363	516	280	365	533	672	886	1283	1397	>1550	>1550
	20.25	214	412	585	317	414	604	762	1004	1454	>1550	>1550	>1550
	23.08	243	469	667	362	471	688	868	1145	>1550	>1550	>1550	>1550
	25.62	270	521	740	402	523	764	964	1270	>1550	>1550		
	29.27	309	595	845	459	598	873	1101	1451	>1550	>1550		
	30.89	326	628	892	484	631	921	1162	1532	>1550	>1550		
	35.2	371	716	1017	552	719	1050	1324	>1550				
	38.39	405	780	1109	602	784	1145	1444	>1550				
	40.04	418	805	1144	621	809	1182	1490	>1550	>1550	>1550	>1550	>1550
	45.16	471	908	1290	700	913	1333	>1550	>1550	>1550	>1550	>1550	>1550
	51.18	534	1030	1463	794	1034	1511	>1550	>1550	>1550	>1550	>1550	>1550
	58.34	609	1174	>1550	905	1179	>1550	>1550	>1550	>1550	>1550	>1550	>1550
	64.75	676	1303	>1550	1004	1309	>1550	>1550	>1550	>1550	>1550		
	73.99	772	1488	>1550	1148	1495	>1550	>1550	>1550	>1550	>1550		
	78.07	815	>1550	>1550	1211	>1550	>1550	>1550	>1550	>1550	>1550		
	88.97	928	>1550	>1550	1380	>1550	>1550	>1550	>1550				
	97.05	1013	>1550	>1550	1505	>1550	>1550	>1550	>1550				
	113.56	1185	>1550	>1550	>1550	>1550	>1550	>1550					
	128.52	1341	>1550		>1550	>1550							
	135.28	1412	>1550		>1550	>1550							
	154.02	>1550											
	179.37												
	192.18												

m [kg]		CMP			CM								
	s	63S	63M	63L	71S	71M	71L	90S	90M	90L	112S	112M	112L
K77	3	59	60	62	63	64	68	72	75	80	80	85	100
KF: + 8.3 kg / KA: + -7.5 kg / KAF: + 0.4 kg													

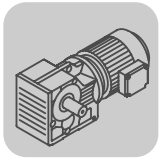

CMP.. / CM..	i	n_{epk} [1/min]	η [%]	c_T K [Nm/']	KF [Nm/']	KA [Nm/']	KAF [Nm/']	φ /R [']
K77 3	7.24	4500	95	109.85	91.4	187.84	187.84	8
	8.48	4500	95	109.85	91.4	187.84	187.84	8
	9.56	4500	95	109.85	91.4	187.84	187.84	8
	10.84	4500	95	109.85	91.4	187.84	187.84	8
	12.36	4500	95	109.85	91.4	187.84	187.84	8
	13.52	4500	95	140.68	111.79	300.46	300.46	7
	15.84	4500	95	140.68	111.79	300.46	300.46	6
	17.87	4500	95	140.68	111.79	300.46	300.46	6
	20.25	4500	95	140.68	111.79	300.46	300.46	6
	23.08	4500	95	140.68	111.79	300.46	300.46	6
	25.62	4500	95	140.68	111.79	300.46	300.46	6
	29.27	4500	95	140.68	111.79	300.46	300.46	6
	30.89	4500	95	140.68	111.79	300.46	300.46	6
	35.2	4500	95	140.68	111.79	300.46	300.46	6
	38.39	4500	95	140.68	111.79	300.46	300.46	6
	40.04	4500	94	150.31	117.79	348.11	348.11	6
	45.16	4500	94	150.31	117.79	348.11	348.11	6
	51.18	4500	94	150.31	117.79	348.11	348.11	6
	58.34	4500	94	150.31	117.79	348.11	348.11	6
	64.75	4500	94	150.31	117.79	348.11	348.11	5
	73.99	4500	94	150.31	117.79	348.11	348.11	5
	78.07	4500	94	150.31	117.79	348.11	348.11	5
	88.97	4500	94	150.31	117.79	348.11	348.11	5
	97.05	4500	94	150.31	117.79	348.11	348.11	5
	113.56	4500	94	150.31	117.79	348.11	348.11	5
	128.52	4500	94	150.31	117.79	348.11	348.11	5
	135.28	4500	94	150.31	117.79	348.11	348.11	5
	154.02	4500	94	150.31	117.79	348.11	348.11	5
	179.37	4500	94	150.31	117.79	348.11	348.11	5
	192.18	4500	94	150.31	117.79	348.11	348.11	5

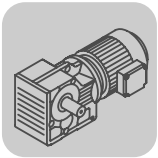

K..CMP, DS, CM
K 77 / CMP / CM [Nm]

CMP.. / CM..							F_{Ramax}				F_{Rapk}			
	i	M_{amax} [Nm]	M_{apk} [Nm]	$M_{aNotaus}$ [Nm]	n_{ak} [1/min]	J_G 10^{-4} [kgm^2]	K [N]	KF [N]	KA [N]	KAF [N]	K [N]	KF [N]	KA [N]	KAF [N]
K77 3	7.24	820	1150	1394	207	17	13100	13800	2490	2490	17700	17700	20000	20000
	8.48	890	1160	1513	177	13	13500	14300	2430	2430	17600	17700	20000	20000
	9.56	940	1160	1598	157	10	13900	14700	2430	2430	17600	17700	20000	20000
	10.84	990	1170	1683	138	8.2	14400	15200	2460	2460	17600	17700	20000	20000
	12.36	1000	1170	1700	121	6.5	15100	16000	2820	2820	17600	17700	20000	20000
	13.52	1340	1550	2278	155	15	14800	15800	1850	1850	15400	16600	20000	20000
	15.84	1400	1550	2380	145	11	15500	16600	2030	2030	15400	16600	20000	20000
	17.87	1450	1550	2465	140	9.0	16100	16900	2160	2160	15400	16600	20000	20000
	20.25	1500	1550	2550	128	7.2	15700	16800	2330	2330	15400	16600	20000	20000
	23.08	1550	1550	2635	126	5.8	15400	16600	2550	2550	15400	16600	20000	20000
	25.62	1550	1550	2635	133	5.0	15400	16600	2990	2990	15400	16600	20000	20000
	29.27	1550	1550	2635	137	4.0	15400	16600	3590	3590	15400	16600	20000	20000
	30.89	1550	1550	2635	142	3.6	15400	16600	3840	3840	15400	16600	20000	20000
	35.2	1550	1550	2635	142	2.9	15400	16600	4460	4460	15400	16600	20000	20000
	38.39	1500	1550	2550	159	2.5	15700	16800	5210	5210	15400	16600	20000	20000
	40.04	1550	1550	2635	37	6.0	15400	16600	5100	5100	15400	16600	20000	20000
	45.16	1550	1550	2635	33	4.9	15400	16600	5720	5720	15400	16600	20000	20000
	51.18	1550	1550	2635	29	4.1	15400	16600	6390	6390	15400	16600	20000	20000
	58.34	1550	1550	2635	31	3.3	15400	16600	7130	7130	15400	16600	20000	20000
	64.75	1550	1550	2635	31	3.0	15400	16600	7740	7740	15400	16600	20000	20000
	73.99	1550	1550	2635	31	2.4	15400	16600	8550	8550	15400	16600	20000	20000
	78.07	1550	1550	2635	32	2.3	15400	16600	8890	8890	15400	16600	20000	20000
	88.97	1550	1550	2635	33	1.9	15400	16600	9730	9730	15400	16600	20000	20000
	97.05	1550	1550	2635	32	1.6	15400	16600	10300	10300	15400	16600	20000	20000
	113.56	1550	1550	2635	33	1.3	15400	16600	11400	11400	15400	16600	20000	20000
	128.52	1550	1550	2635	33	0.90	15400	16600	12300	12300	15400	16600	20000	20000
	135.28	1550	1550	2635	33	0.81	15400	16600	12700	12700	15400	16600	20000	20000
	154.02	1550	1550	2635	33	0.66	15400	16600	13700	13700	15400	16600	20000	20000
	179.37	1450	1550	2465	39	0.53	16100	16900	15600	15600	15400	16600	20000	20000
	192.18	1450	1550	2465	36	0.46	16100	16900	16200	16200	15400	16600	20000	20000

10.11 K 77 / CMP / CM [mm]

33 029 00 07

K77..

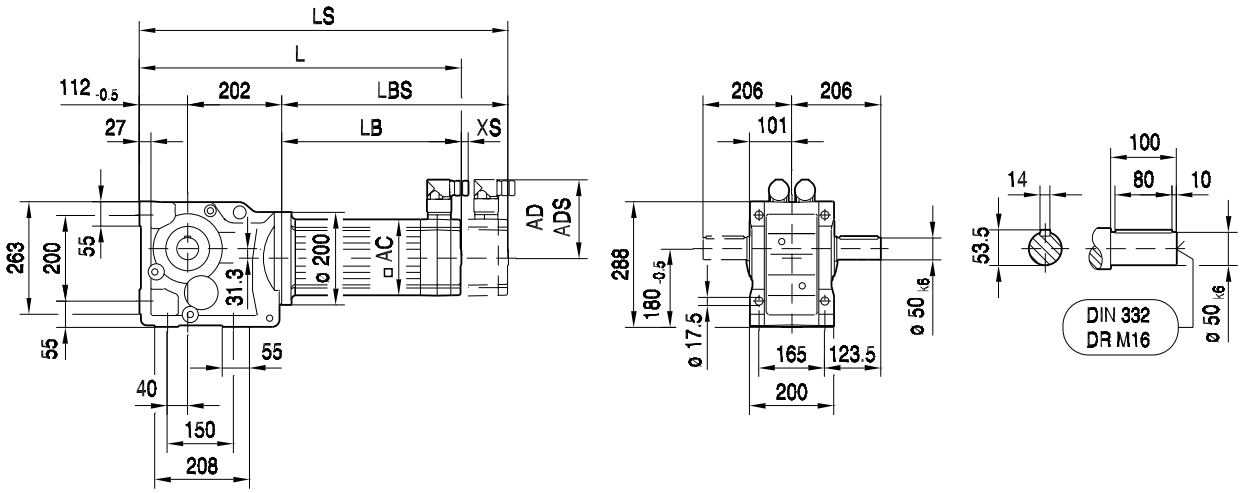

10

KA77B..

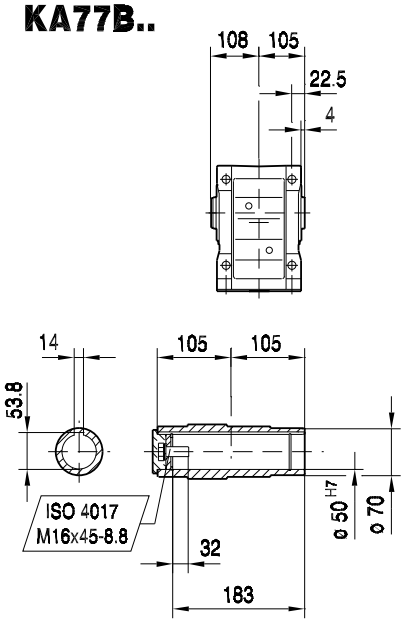

KH77B..

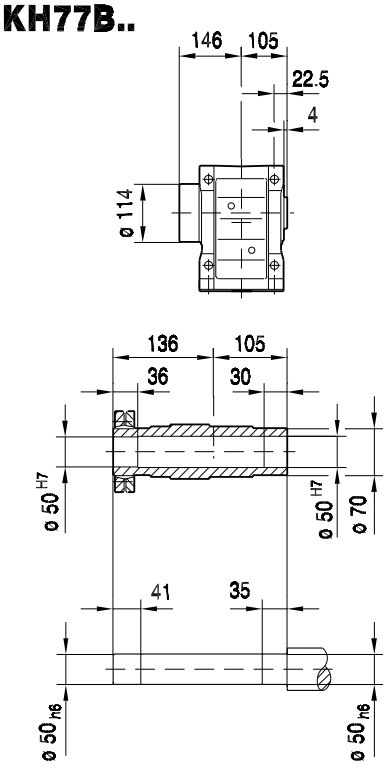

KV77B..

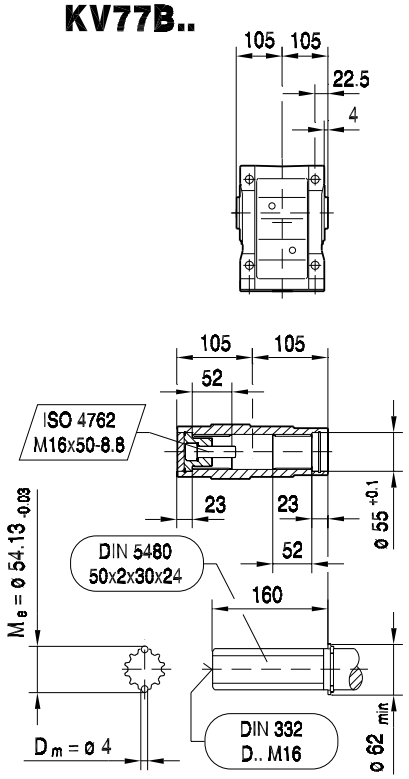

(→ 📖 150)	CMP63S	CMP63M	CMP63L					
AC	88	88	88					
AD	89	89	89					
ADS	89	89	89					
L	481	531	581					
LS	510	560	610					
LB	167	217	267					
LBS	196	246	296					
XS	14	14	14					

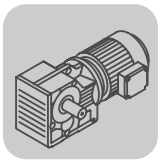

K..CMP, DS, CM
K 77 / CMP / CM [mm]

33 030 00 07

KF77..

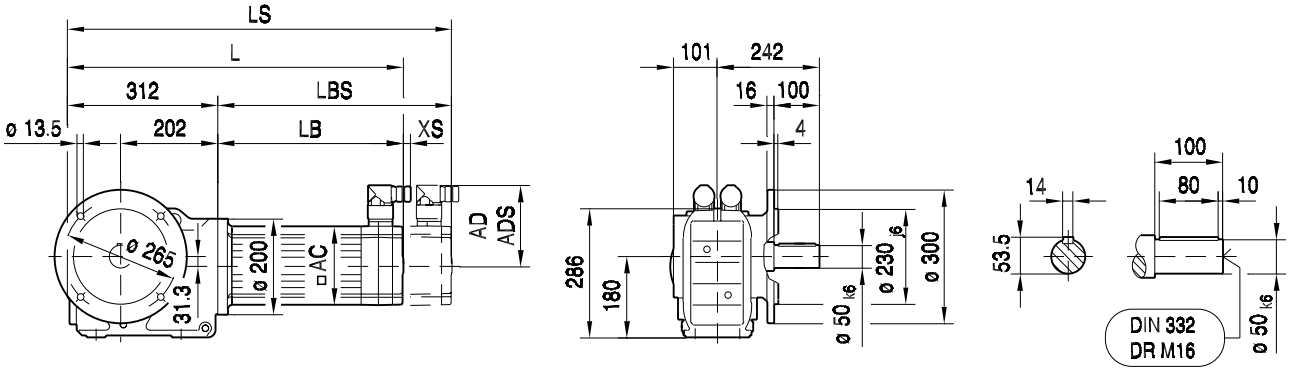

KAF77..

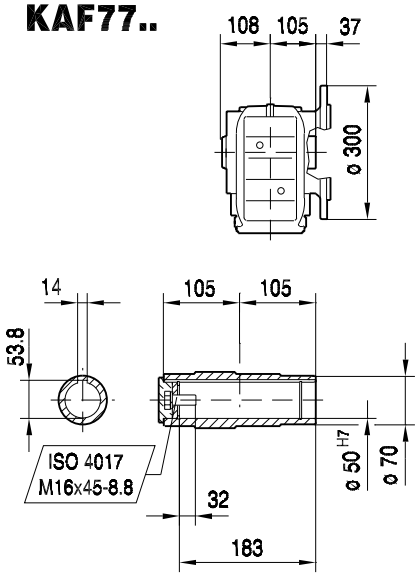

KHF77..

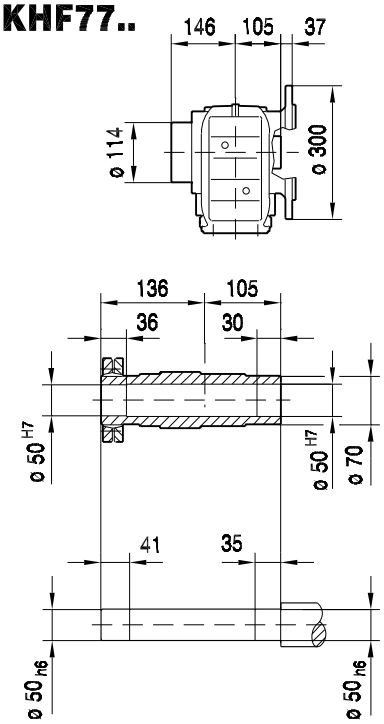

KVF77..

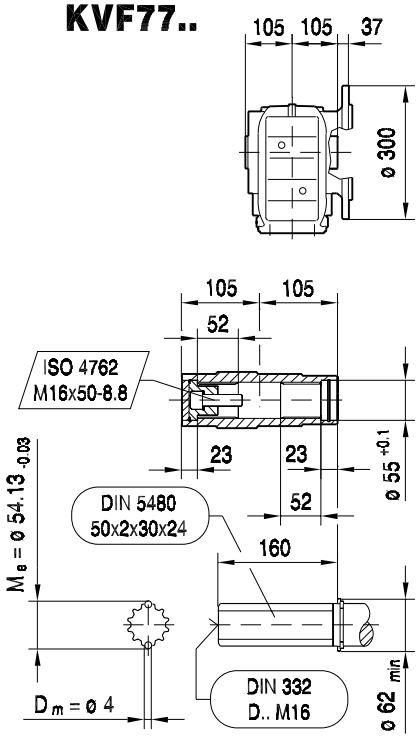

(→ 📖 150)	CMP63S	CMP63M	CMP63L					
AC	88	88	88					
AD	89	89	89					
ADS	89	89	89					
L	479	529	579					
LS	508	558	608					
LB	167	217	267					
LBS	196	246	296					
XS	14	14	14					

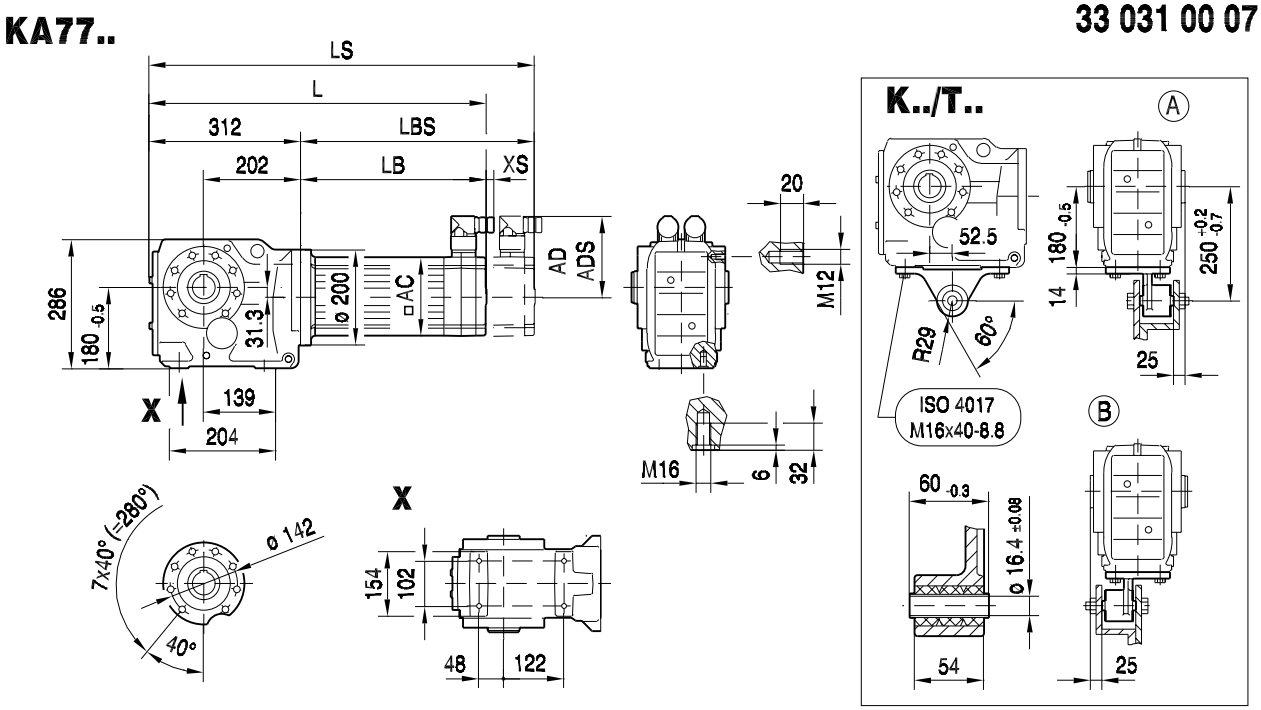

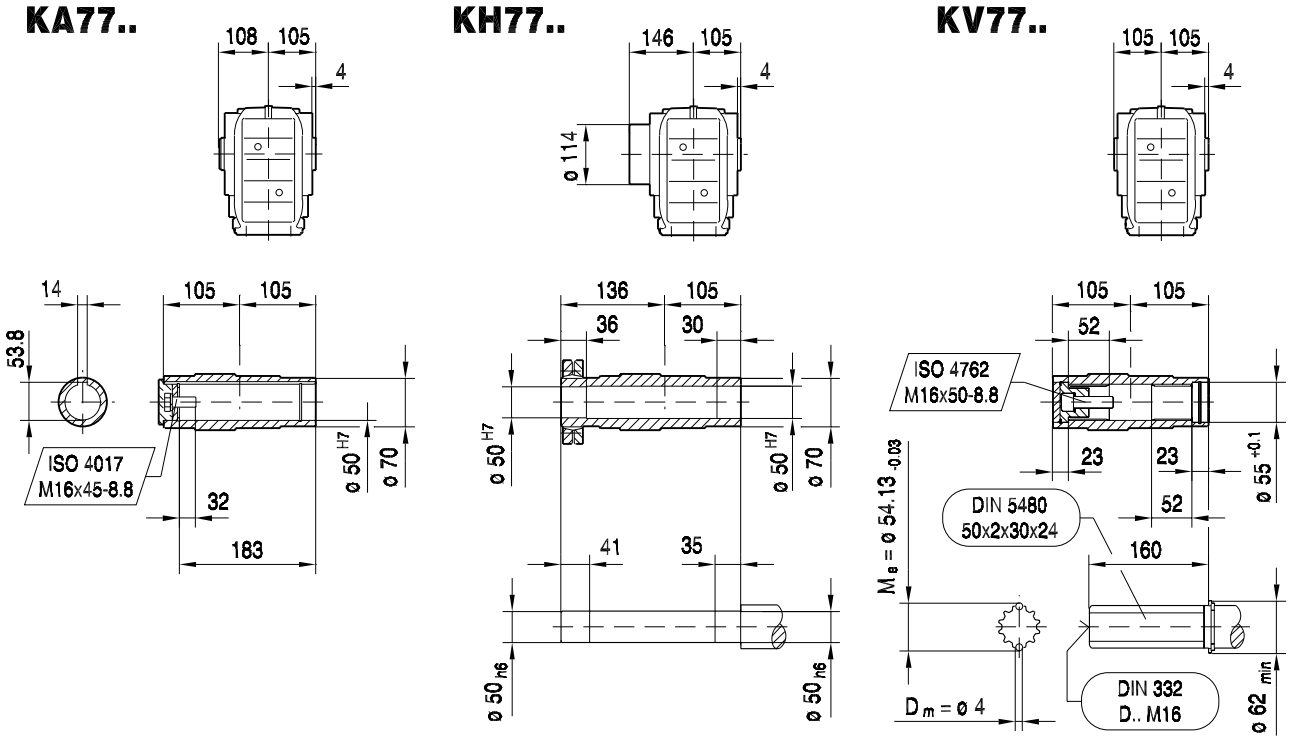

(→ 📖 150)	CMP63S	CMP63M	CMP63L					
AC	88	88	88					
AD	89	89	89					
ADS	89	89	89					
L	479	529	579					
LS	508	558	608					
LB	167	217	267					
LBS	196	246	296					
XS	14	14	14					

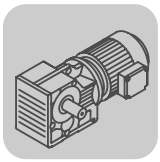

K..CMP, DS, CM
K 77 / CMP / CM [mm]

KAZ77..

33 032 00 07

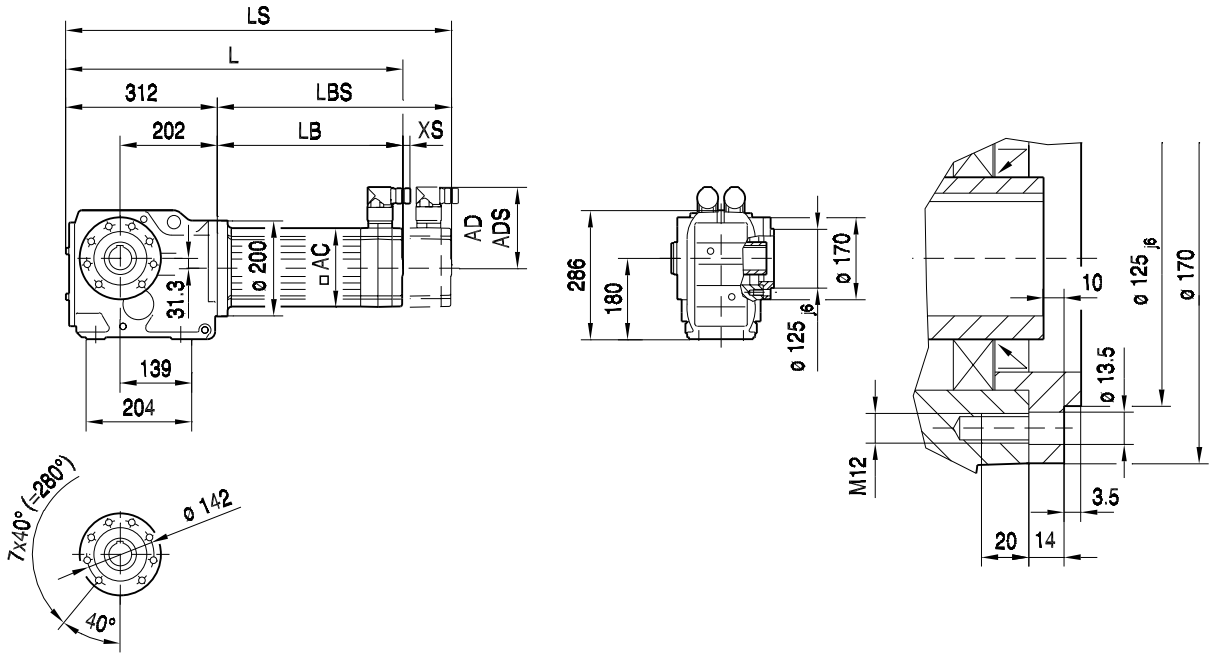

KAZ77..

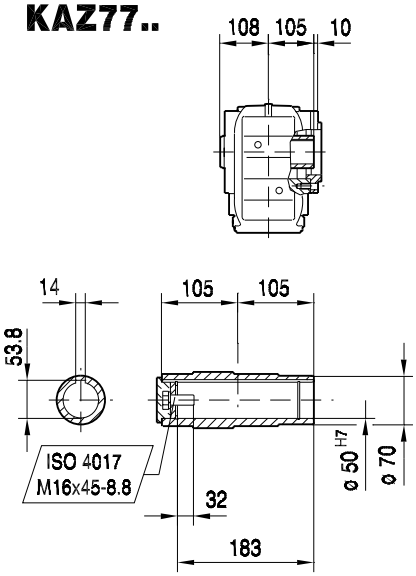

KHZ77..

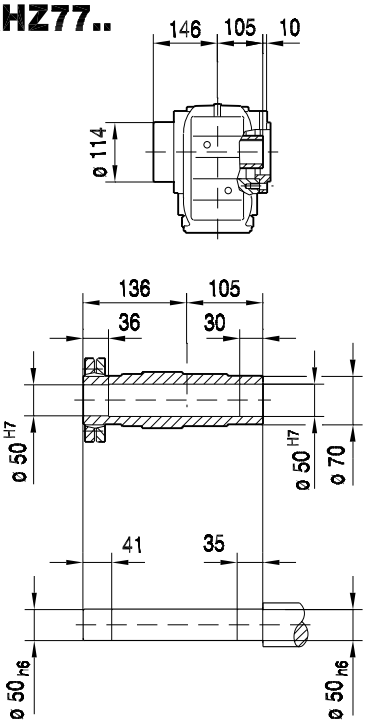

KVZ77..

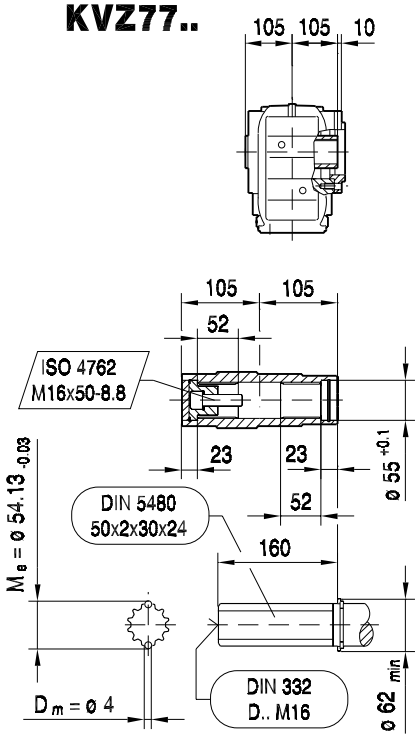

(→ 📖 150)	CMP63S	CMP63M	CMP63L					
AC	88	88	88					
AD	89	89	89					
ADS	89	89	89					
L	479	529	579					
LS	508	558	608					
LB	167	217	267					
LBS	196	246	296					
XS	14	14	14					

KT77..

33 033 00 07

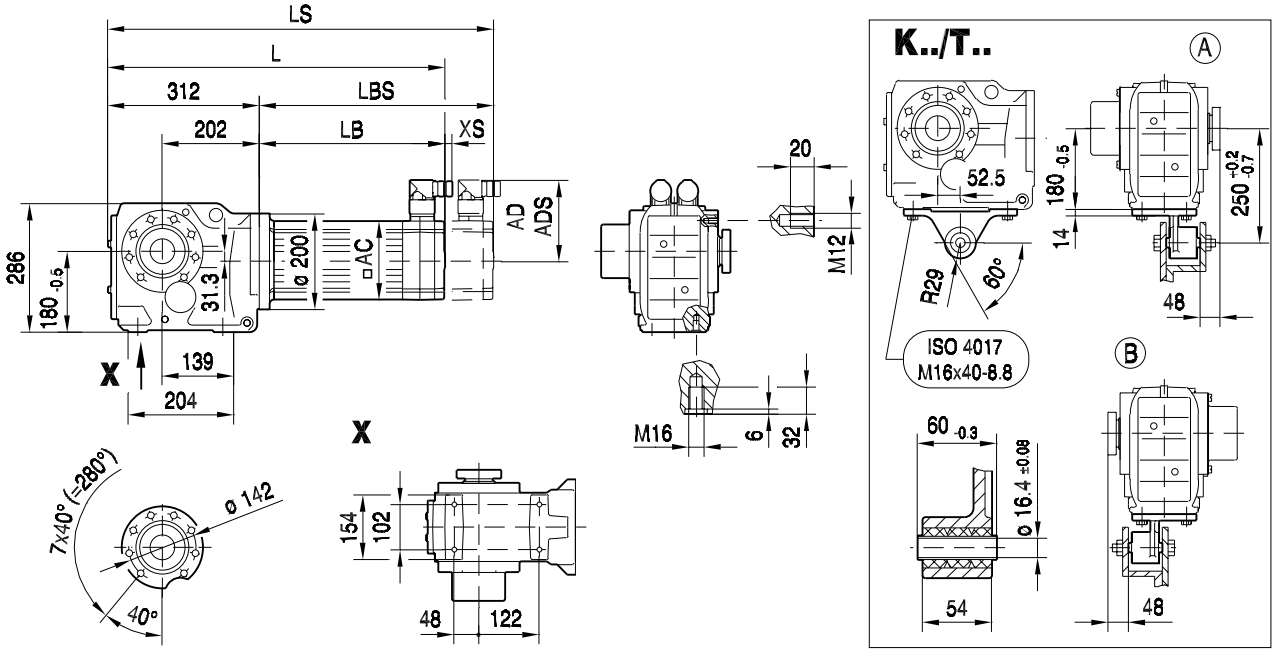

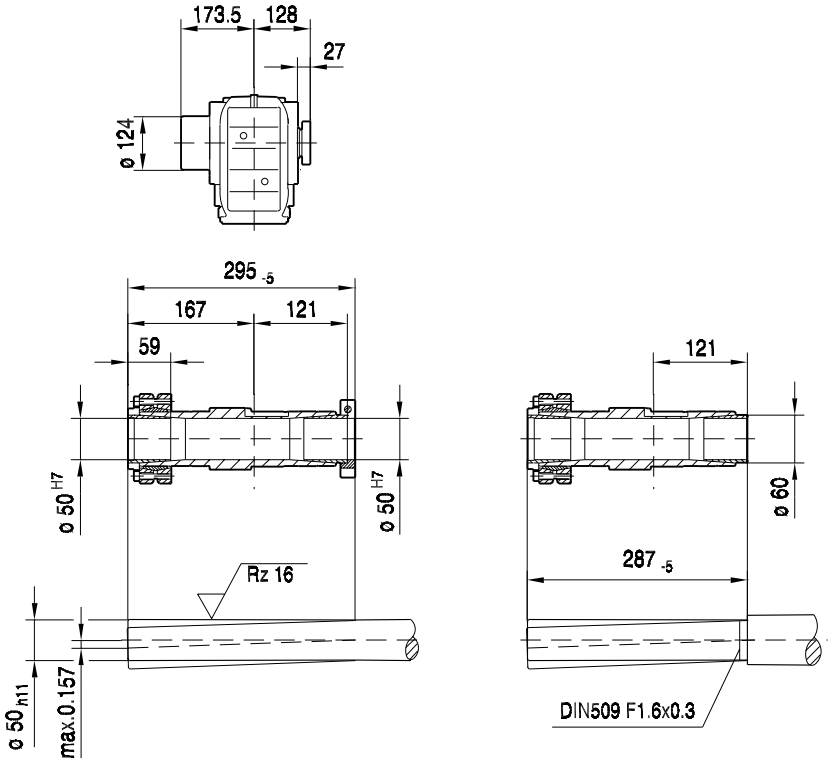

(→ 📖 150)	CMP63S	CMP63M	CMP63L					
AC	88	88	88					
AD	89	89	89					
ADS	89	89	89					
L	479	529	579					
LS	508	558	608					
LB	167	217	267					
LBS	196	246	296					
XS	14	14	14					

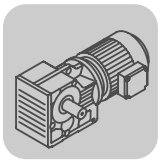

K..CMP, DS, CM
K 77 / CMP / CM [mm]

K77..

34 038 01 01

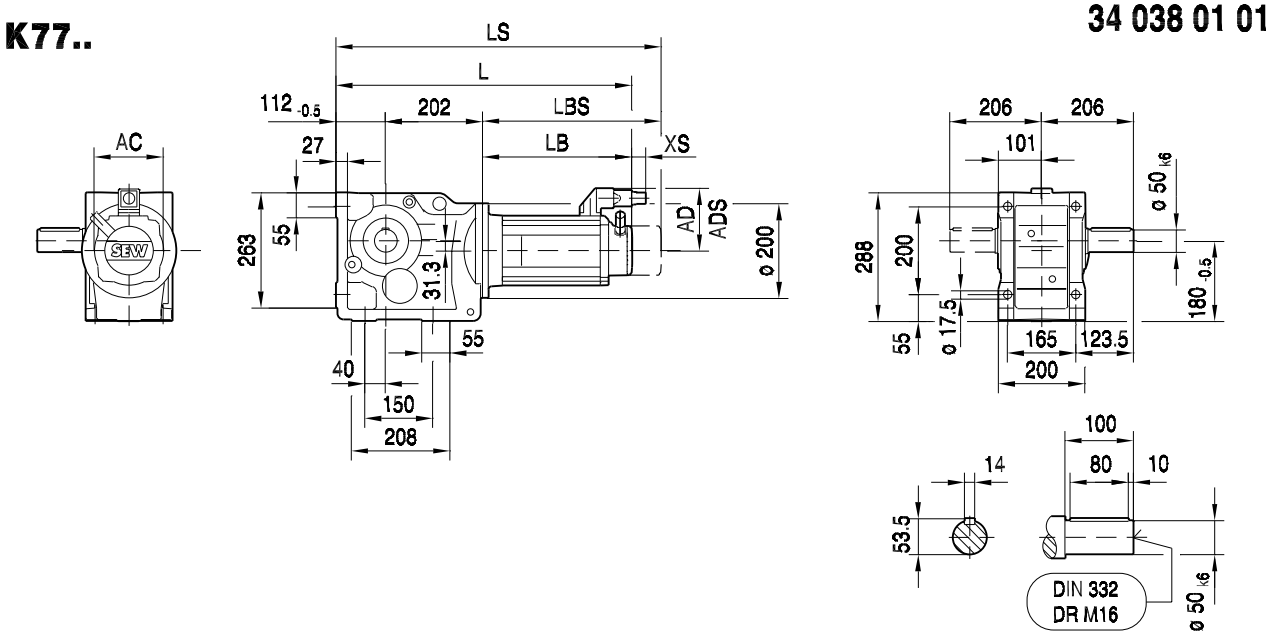

KA77B..

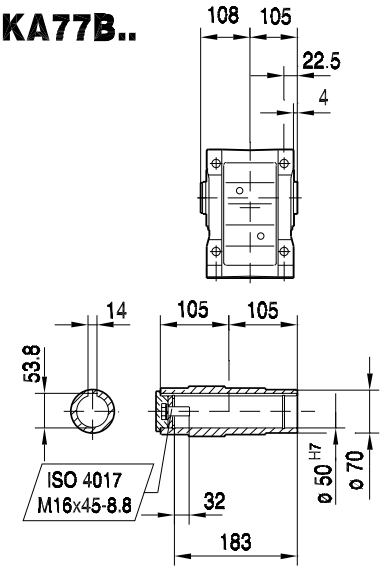

KH77B..

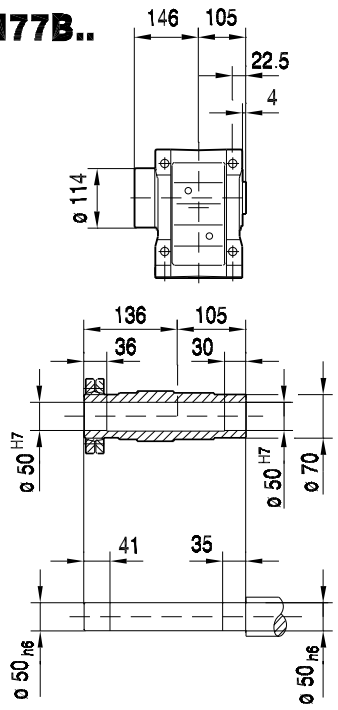

KV77B..

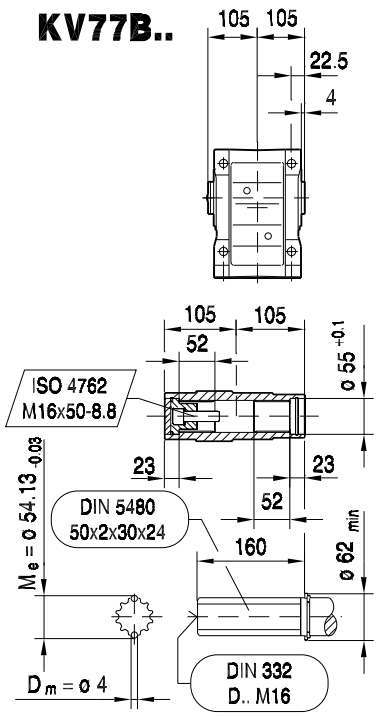

(→ 📖 150)	CM71S	CM71M	CM71L	CM90S	CM90M	CM90L	CM112S	CM112M	CM112L		
AC	117	117	117	142	142	142	186	186	186		
AD	122	122	122	140	140	140	162	162	162		
ADS	122	122	122	140	140	140	162	162	162		
L	540	560	599	590	617	671	626	653	715		
LS	622	642	681	686	713	767	716	743	805		
LB	226	246	285	276	303	357	312	339	401		
LBS	308	328	367	372	399	453	402	429	491		
XS	45	45	45	50	50	50	36	36	36		

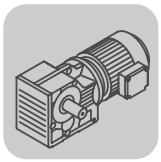

KF77..

34 039 01 01

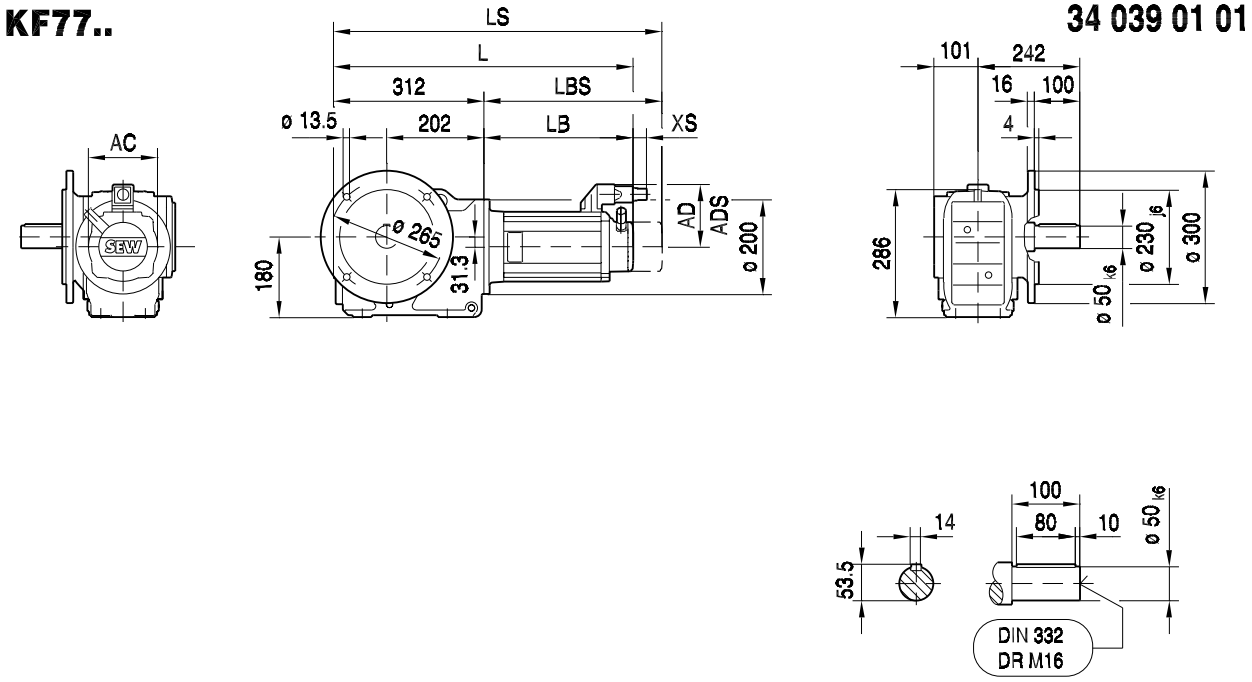

KAF77..

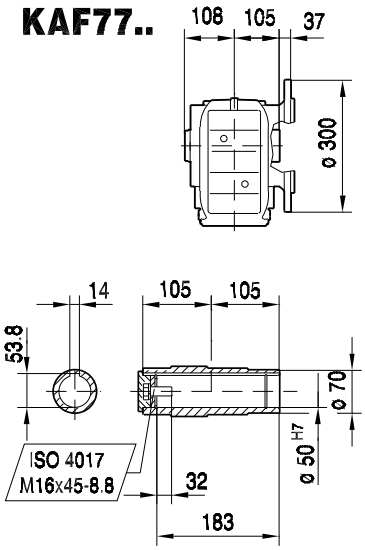

KHF77..

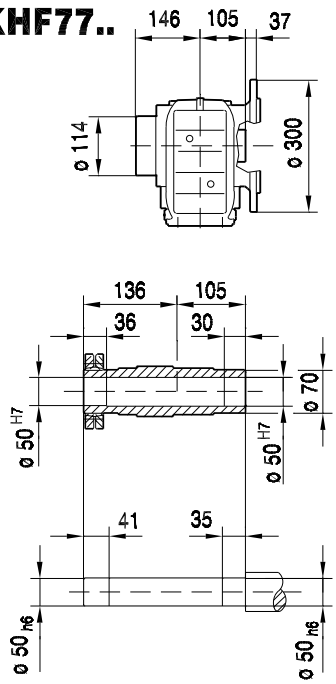

KVF77..

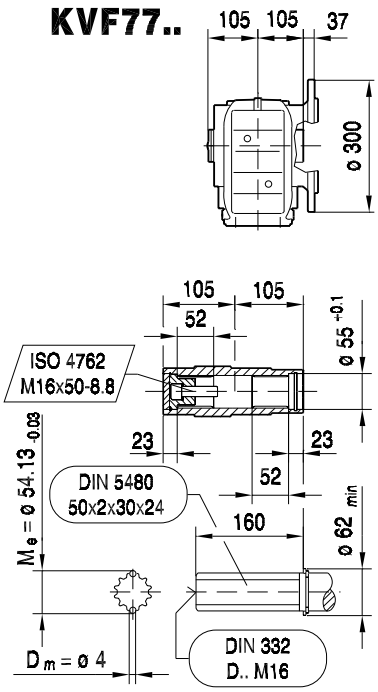

(→ 📖 150)	CM71S	CM71M	CM71L	CM90S	CM90M	CM90L	CM112S	CM112M	CM112L		
AC	117	117	117	142	142	142	186	186	186		
AD	122	122	122	140	140	140	162	162	162		
ADS	122	122	122	140	140	140	162	162	162		
L	538	558	597	588	615	669	624	651	713		
LS	620	640	679	684	711	765	714	741	803		
LB	226	246	285	276	303	357	312	339	401		
LBS	308	328	367	372	399	453	402	429	491		
XS	45	45	45	50	50	50	36	36	36		

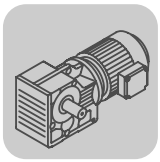

K..CMP, DS, CM
K 77 / CMP / CM [mm]

KA77..

39 024 01 01

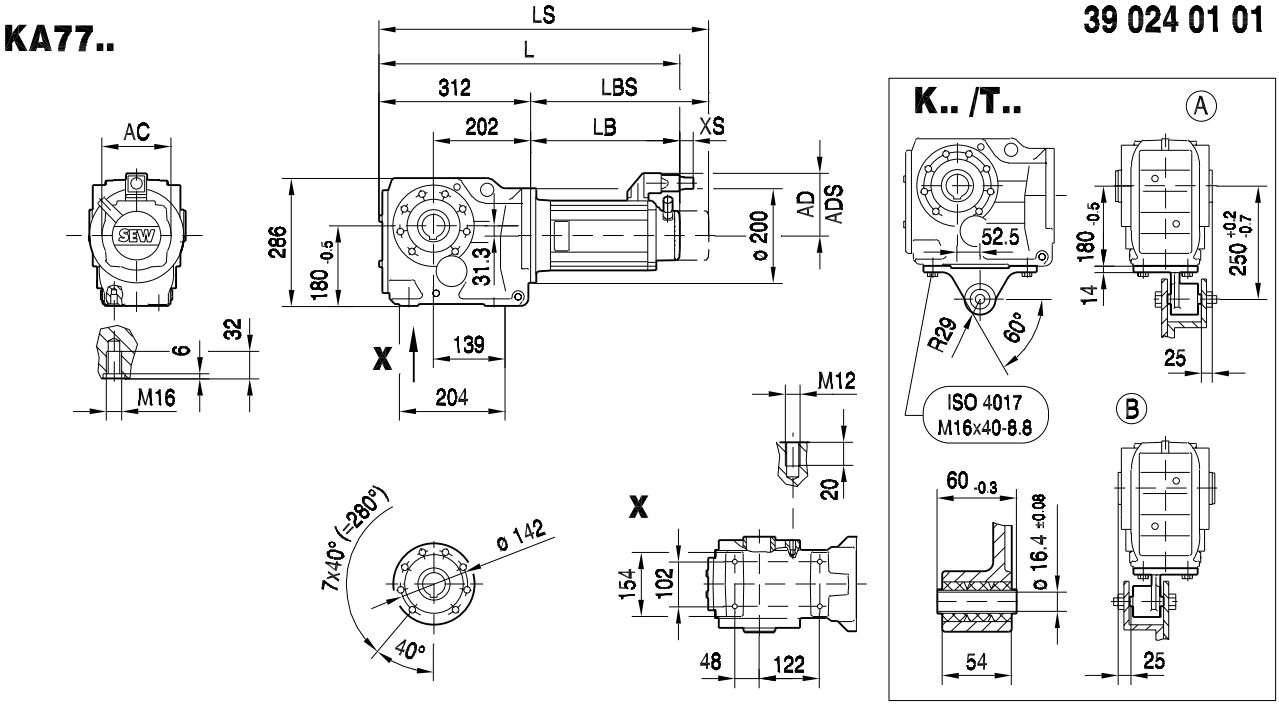

KA77..

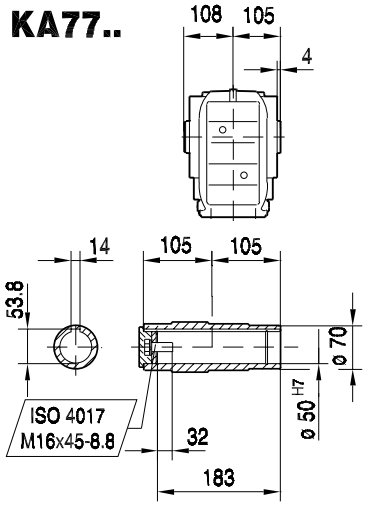

KH77..

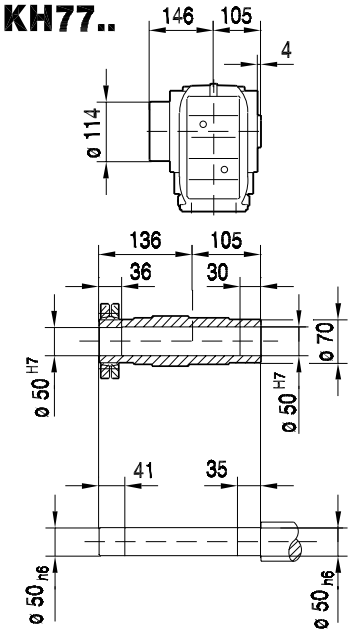

KV77..

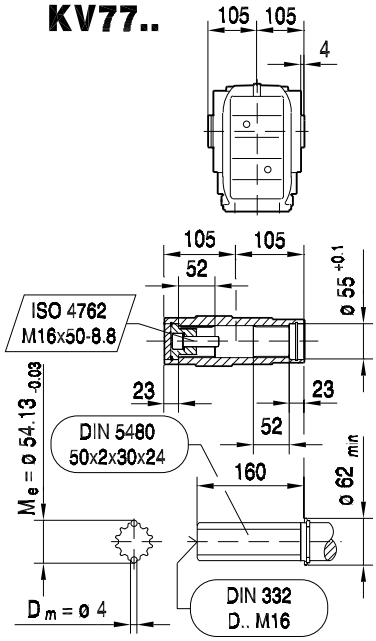

(→ 📖 150)	CM71S	CM71M	CM71L	CM90S	CM90M	CM90L	CM112S	CM112M	CM112L		
AC	117	117	117	142	142	142	186	186	186		
AD	122	122	122	140	140	140	162	162	162		
ADS	122	122	122	140	140	140	162	162	162		
L	538	558	597	588	615	669	624	651	713		
LS	620	640	679	684	711	765	714	741	803		
LB	226	246	285	276	303	357	312	339	401		
LBS	308	328	367	372	399	453	402	429	491		
XS	45	45	45	50	50	50	36	36	36		

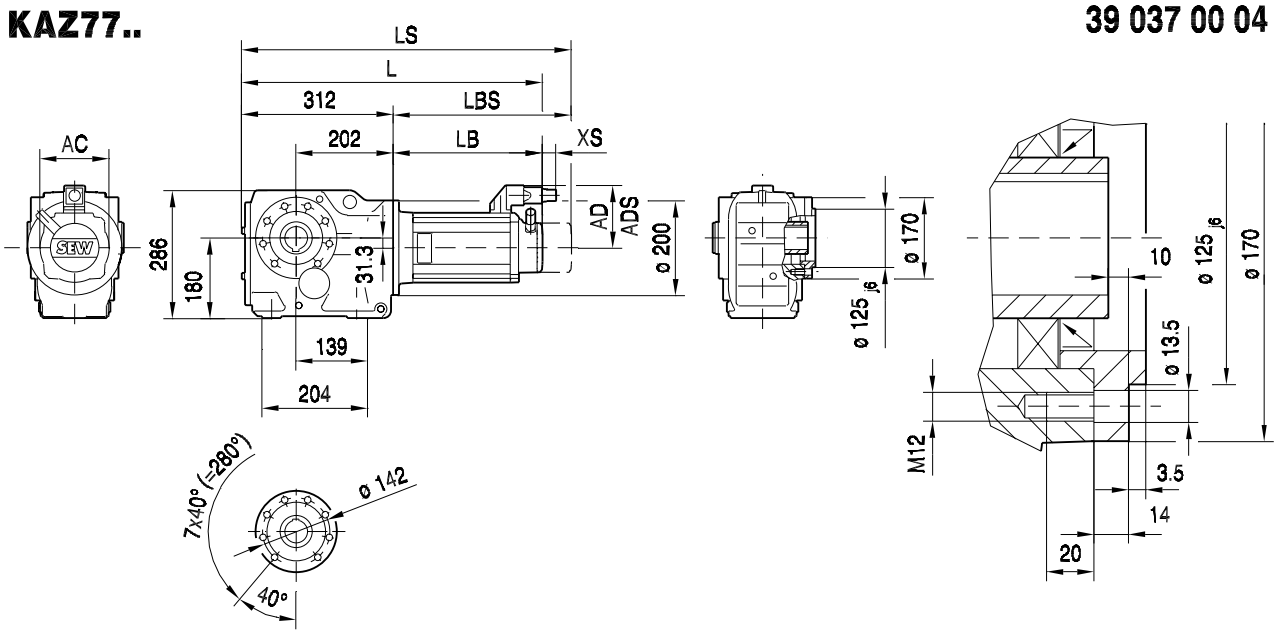

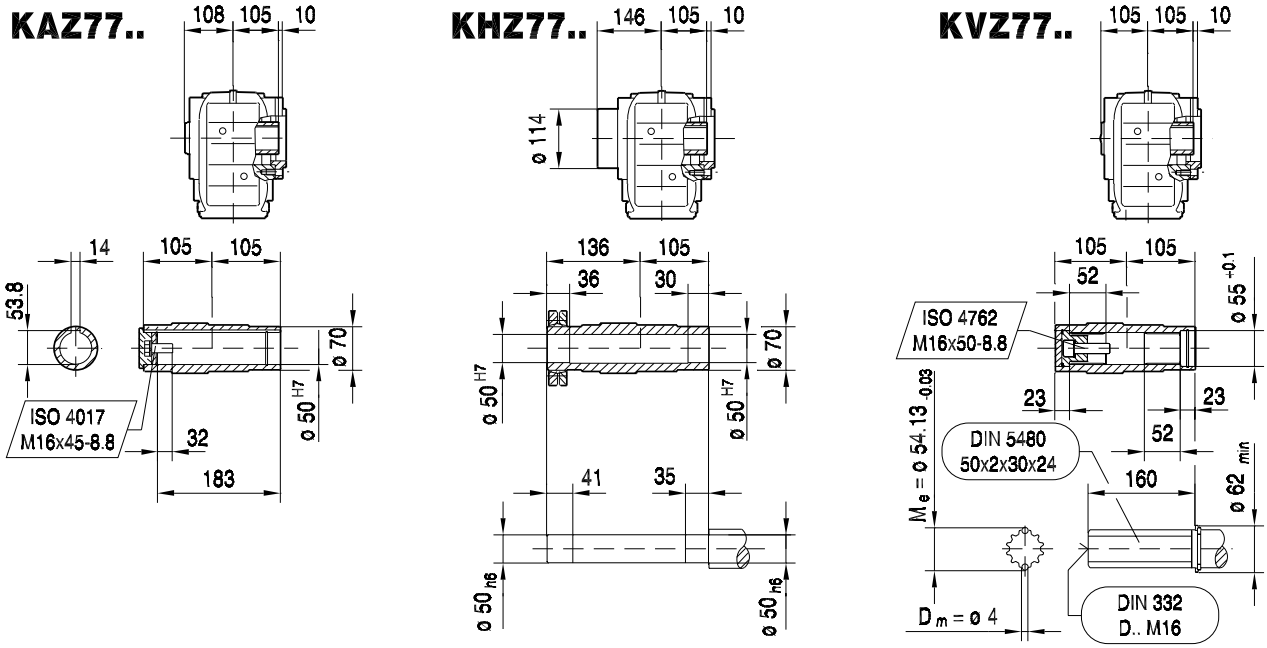

(→ 📖 150)	CM71S	CM71M	CM71L	CM90S	CM90M	CM90L	CM112S	CM112M	CM112L		
AC	117	117	117	142	142	142	186	186	186		
AD	122	122	122	140	140	140	162	162	162		
ADS	122	122	122	140	140	140	162	162	162		
L	538	558	597	588	615	669	624	651	713		
LS	620	640	679	684	711	765	714	741	803		
LB	226	246	285	276	303	357	312	339	401		
LBS	308	328	367	372	399	453	402	429	491		
XS	45	45	45	50	50	50	36	36	36		

KT77..

39 045 00 04

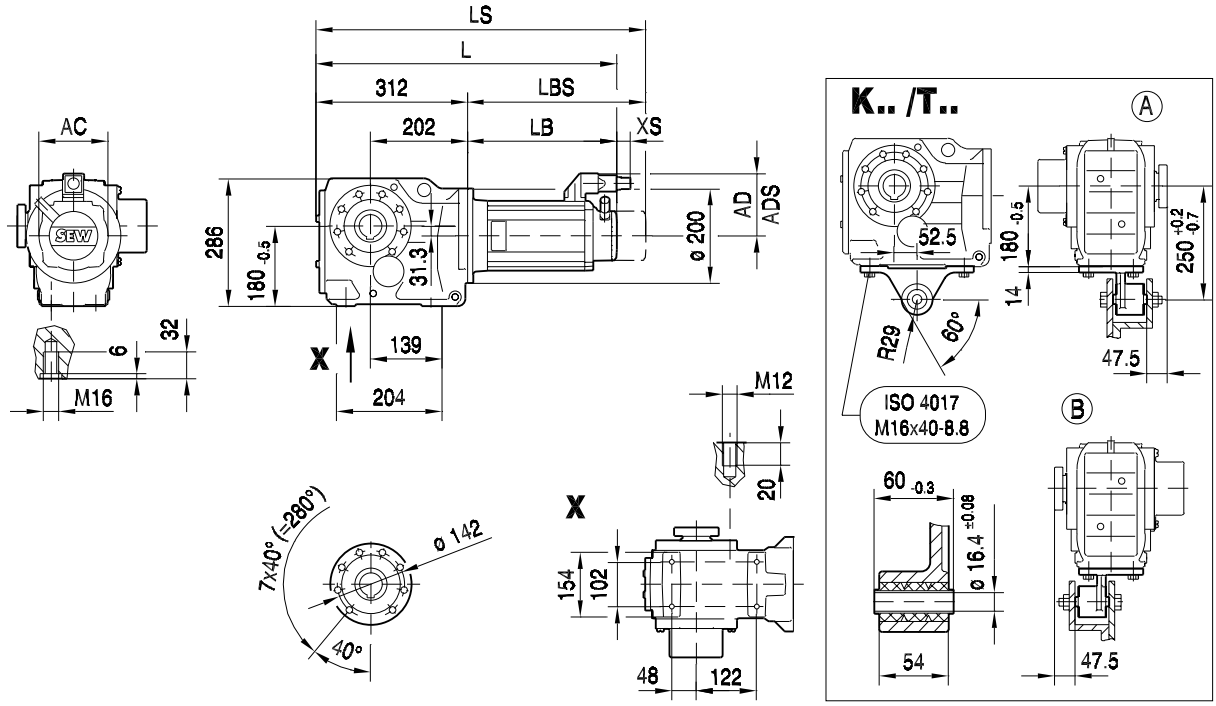

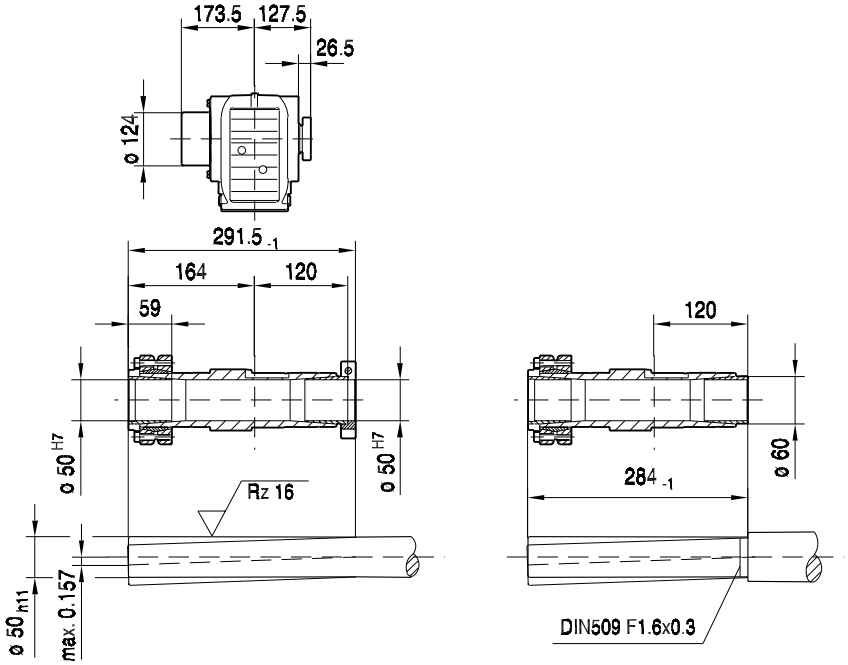

(→ 📖 150)	CM71S	CM71M	CM71L	CM90S	CM90M	CM90L	CM112S	CM112M	CM112L		
AC	117	117	117	142	142	142	186	186	186		
AD	122	122	122	140	140	140	162	162	162		
ADS	122	122	122	140	140	140	162	162	162		
L	538	558	597	588	615	669	624	651	713		
LS	620	640	679	684	711	765	714	741	803		
LB	226	246	285	276	303	357	312	339	401		
LBS	308	328	367	372	399	453	402	429	491		
XS	45	45	45	50	50	50	36	36	36		

10.12 K 87 / CM [Nm]

M_{aDyn} [Nm]		CM						
	i	90S	90M	90L	112S	112M	112L	112H
K87 3	7.21			518	564	743	1079	1630
	8.29	312	411	595	648	854	1240	1874
	10	376	496	718	782	1031	1496	>2240
	11.17	420	554	802	873	1151	1671	>2250
	12.56			902	982	1295	1879	2840
	14.45	544	717	1038	1130	1489	2162	>3150
	16	602	793	1149	1251	1649	>2270	
	17.42	655	864	1251	1362	1796	2606	>3240
	19.45	732	965	1397	1521	2005	2910	>3240
	22.41	843	1111	1609	1752	2310	>3240	>3240
	24.92	937	1236	1790	1948	2569	>3240	>3240
	27.88	1049	1383	2002	2180	2874	>3240	
	31.39	1181	1557	2254	2454	3236	>3240	
	36.52	1359	1792	2595	2825	>3240	>3240	>3240
	44.02	1639	2160	3128	>3240	>3240	>3240	>3240
	49.16	1830	2412	>3240	>3240	>3240	>3240	>3240
	56.64	2108	2779	>3240	>3240	>3240	>3240	>3240
	63	2345	3091	>3240	>3240	>3240	>3240	>3240
	70.46	2623	>3240	>3240	>3240	>3240	>3240	
	79.34	2953	>3240	>3240	>3240	>3240	>3240	
	86.34	3214	>3240	>3240	>3240			
	102.71	>3240	>3240	>3240	>3240			
	115.82	>3240	>3240					
	126.91	>3240	>3240					
	147.32	>3240						
	164.34							
	174.19							
	197.37							

m [kg]		CM						
	s	90S	90M	90L	112S	112M	112L	112H
K87	3	110	110	115	115	120	135	140
KF: + 9.2 kg / KA: + -12.1 kg / KAF: + 1.1 kg								

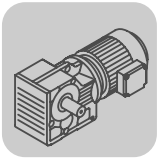

K..CMP, DS, CM
K 87 / CM [Nm]

CM..	i	n_{epk} [1/min]	η [%]	c_T K [Nm/']	KF [Nm/']	KA [Nm/']	KAF [Nm/']	φ /R [']
K87 3	7.21	4378	95	168.63	156.02	410.92	410.92	7
	8.29	4500	95	168.63	156.02	410.92	410.92	7
	10	4500	95	168.63	156.02	410.92	410.92	7
	11.17	4500	95	168.63	156.02	410.92	410.92	7
	12.56	4378	95	197.65	180.56	639.96	639.96	6
	14.45	4500	95	197.65	180.56	639.96	639.96	6
	16	4500	95	168.63	156.02	410.92	410.92	6
	17.42	4500	95	197.65	180.56	639.96	639.96	6
	19.45	4500	95	197.65	180.56	639.96	639.96	6
	22.41	4500	95	197.65	180.56	639.96	639.96	6
	24.92	4500	95	197.65	180.56	639.96	639.96	6
	27.88	4500	95	197.65	180.56	639.96	639.96	6
	31.39	4500	95	197.65	180.56	639.96	639.96	6
	36.52	4500	94	206.55	187.95	743.68	743.68	6
	44.02	4500	94	206.55	187.95	743.68	743.68	6
	49.16	4500	94	206.55	187.95	743.68	743.68	5
	56.64	4500	94	206.55	187.95	743.68	743.68	5
	63	4500	94	206.55	187.95	743.68	743.68	5
	70.46	4500	94	206.55	187.95	743.68	743.68	5
	79.34	4500	94	206.55	187.95	743.68	743.68	5
	86.34	4500	94	206.55	187.95	743.68	743.68	5
	102.71	4500	94	206.55	187.95	743.68	743.68	5
	115.82	4500	94	206.55	187.95	743.68	743.68	5
	126.91	4500	94	206.55	187.95	743.68	743.68	5
	147.32	4500	94	206.55	187.95	743.68	743.68	5
	164.34	4500	94	206.55	187.95	743.68	743.68	5
	174.19	4500	94	206.55	187.95	743.68	743.68	5
	197.37	4500	94	206.55	187.95	743.68	743.68	5

CM..	i	M_{amax} [Nm]	M_{apk} [Nm]	$M_{aNotaus}$ [Nm]	n_{ak} [1/min]	J_G 10^{-4} [kgm^2]	F_{Ramax} K [N]	KF [N]	KA [N]	KAF [N]	F_{Rapk} K [N]	KF [N]	KA [N]	KAF [N]
K87 3	7.21	1300	1950	2210	250	46	13200	15100	4970	4970	28100	27000	30000	30000
	8.29	1400	2100	2380	205	35	13500	15600	4960	4960	27900	26900	30000	30000
	10	1500	2240	2550	180	26	14200	16400	5210	5210	27800	26700	30000	30000
	11.17	1500	2250	2550	188	22	14900	17100	5770	5770	27800	26700	30000	30000
	12.56	2000	3000	3400	223	42	14800	17000	5030	5030	26900	25900	30000	30000
	14.45	2100	3150	3570	201	32	15300	17700	5240	5240	26700	25700	30000	30000
	16	1800	2270	3060	119	12	16000	18500	5810	5810	27700	26700	30000	30000
	17.42	2200	3240	3740	189	24	16300	18800	5770	5770	26500	25600	30000	30000
	19.45	2300	3240	3910	170	20	16800	19300	5890	5890	26500	25600	30000	30000
	22.41	2300	3240	3910	178	16	17900	20600	6790	6790	26500	25600	30000	30000
	24.92	2500	3240	4250	140	14	18000	20700	6390	6390	26500	25600	30000	30000
	27.88	2600	3240	4420	122	12	18500	21400	6600	6600	26500	25600	30000	30000
	31.39	2700	3240	4590	108	9.6	19200	22100	6900	6900	26500	25600	30000	30000
	36.52	2500	3240	4250	41	20	21400	24500	9140	9140	26500	25600	30000	30000
	44.02	2600	3240	4420	39	16	22800	26000	10100	10100	26500	25600	30000	30000
	49.16	2700	3240	4590	35	14	23500	26300	10400	10400	26500	25600	30000	30000
	56.64	2700	3240	4590	35	11	25000	26300	11600	11600	26500	25600	30000	30000
	63	2700	3240	4590	35	9.8	26200	26300	12600	12600	26500	25600	30000	30000
	70.46	2700	3240	4590	35	8.4	27300	26300	13700	13700	26500	25600	30000	30000
	79.34	2700	3240	4590	37	7.1	27300	26300	14800	14800	26500	25600	30000	30000
	86.34	2700	3240	4590	37	6.3	27300	26300	15700	15700	26500	25600	30000	30000
	102.71	2700	3240	4590	38	4.9	27300	26300	17500	17500	26500	25600	30000	30000
	115.82	2700	3240	4590	38	4.0	27300	26300	18800	18800	26500	25600	30000	30000
	126.91	2700	3240	4590	39	3.5	27300	26300	19900	19900	26500	25600	30000	30000
	147.32	2700	3240	4590	39	2.8	27300	26300	21600	21600	26500	25600	30000	30000
	164.34	2700	3240	4590	39	1.8	27300	26300	23000	23000	26500	25600	30000	30000
	174.19	2700	3240	4590	39	1.6	27300	26300	23700	23700	26500	25600	30000	30000
	197.37	2700	3240	4590	35	1.3	27300	26300	25400	25400	26500	25600	30000	30000

10.13 K 87 / CM [mm]

K87..

34 040 01 01

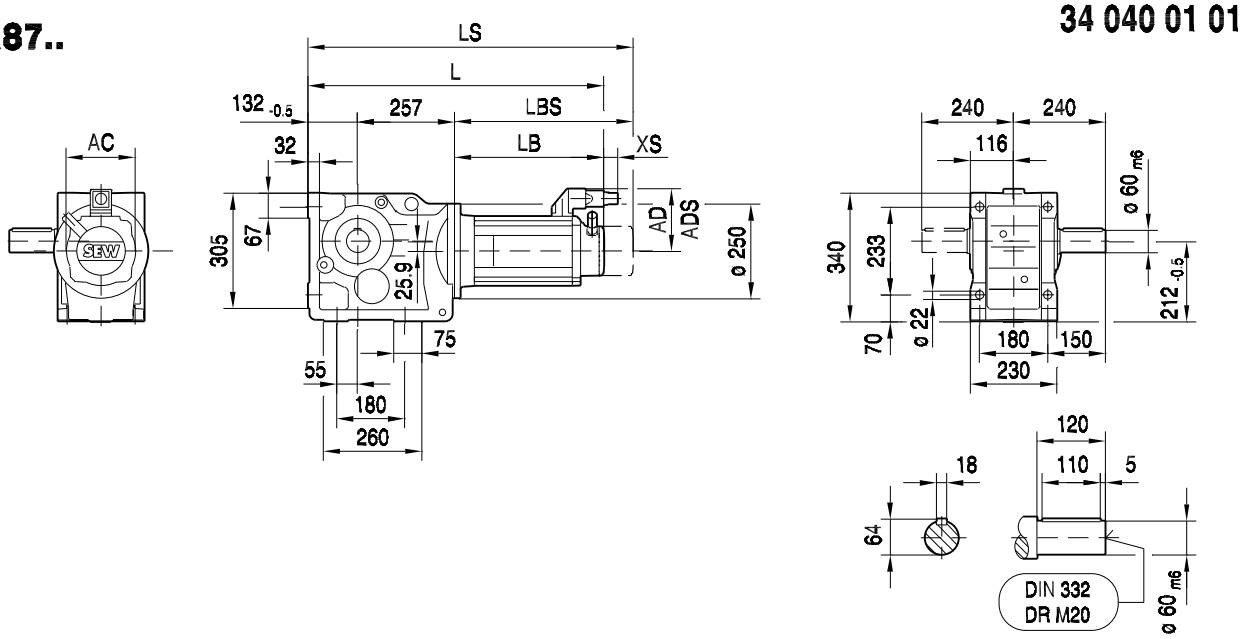

KA87B..

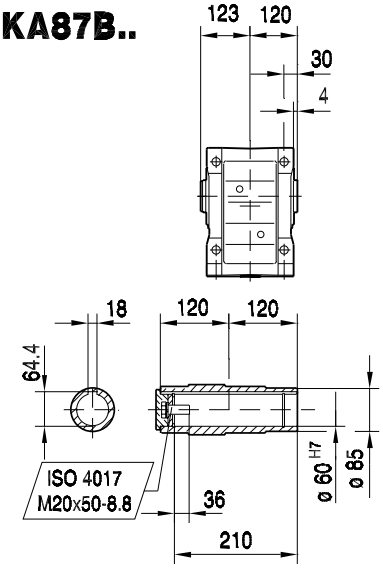

KH87B..

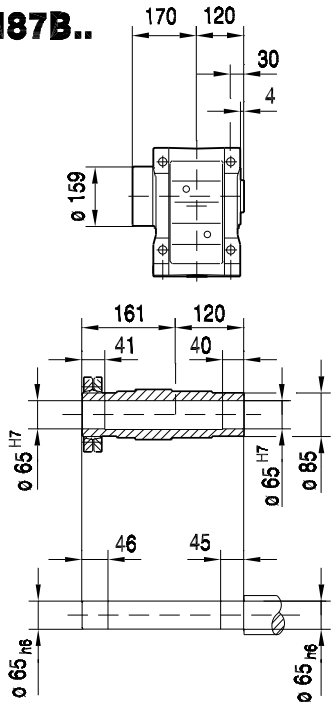

KV87B..

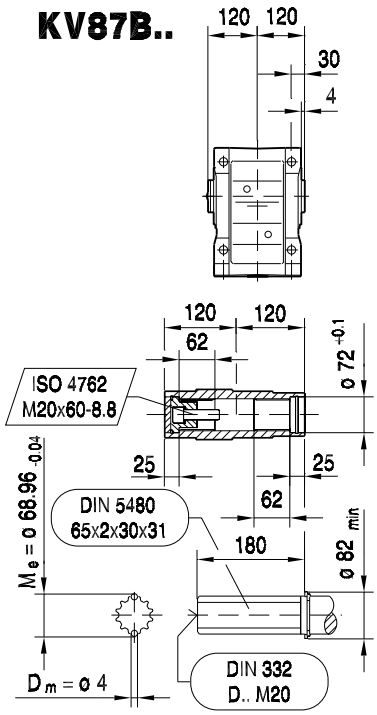

(→ 📖 150)	CM90S	CM90M	CM90L	CM112S	CM112M	CM112L	CM112H				
AC	142	142	142	186	186	186	186				
AD	140	140	140	162	162	162	162				
ADS	140	140	140	162	162	162	162				
L	661	688	742	696	723	785	915				
LS	757	784	838	786	813	875	980				
LB	272	299	353	307	334	396	526				
LBS	368	395	449	397	424	486	591				
XS	50	50	50	36	36	36	36				

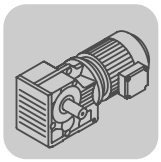

KF87..

34 041 01 01

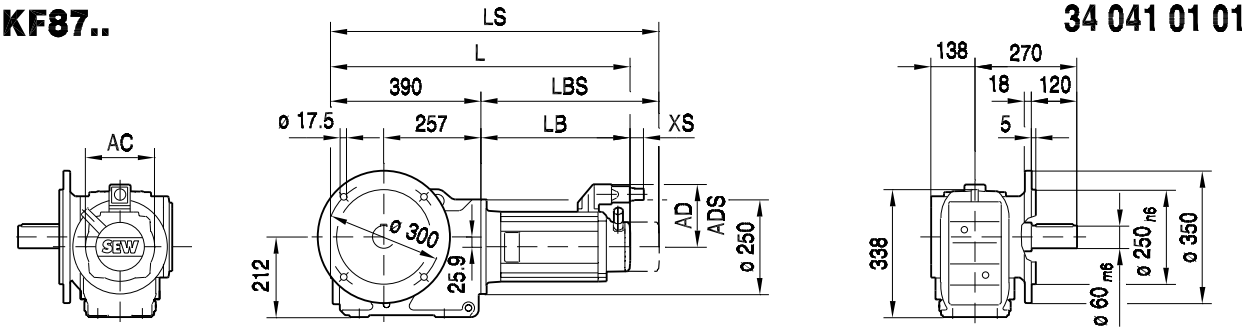

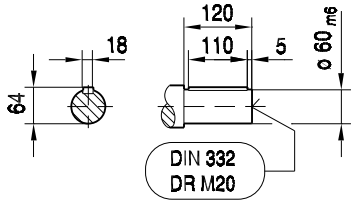

KAF87..

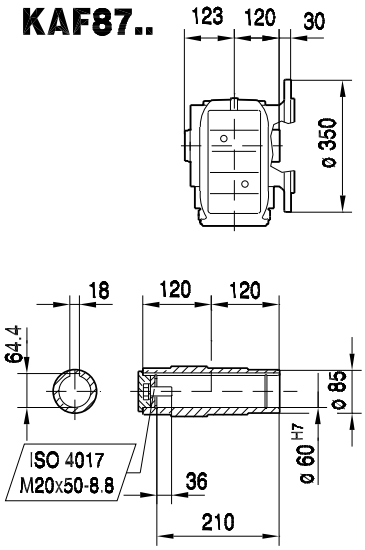

KHF87..

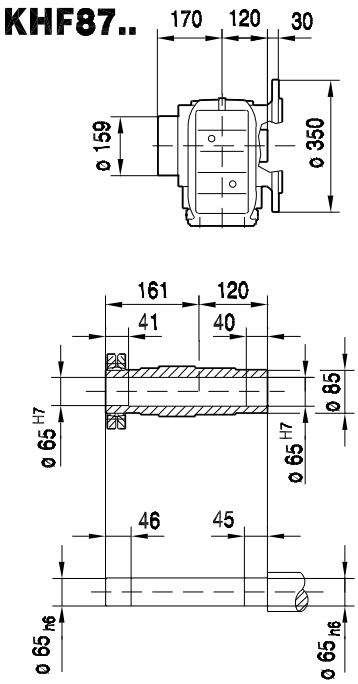

KVF87..

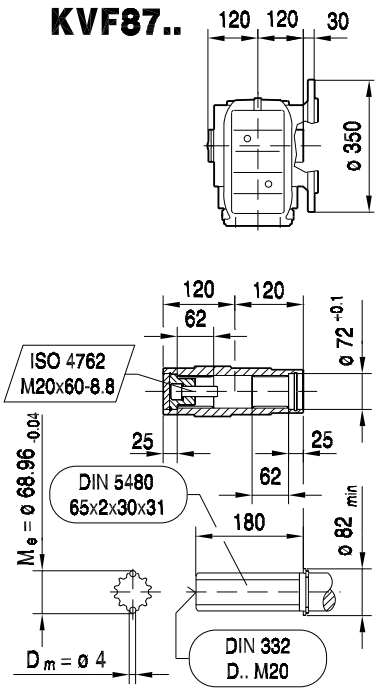

(→ 📖 150)	CM90S	CM90M	CM90L	CM112S	CM112M	CM112L	CM112H				
AC	142	142	142	186	186	186	186				
AD	140	140	140	162	162	162	162				
ADS	140	140	140	162	162	162	162				
L	662	689	743	697	724	786	916				
LS	758	785	839	787	814	876	981				
LB	272	299	353	307	334	396	526				
LBS	368	395	449	397	424	486	591				
XS	50	50	50	36	36	36	36				

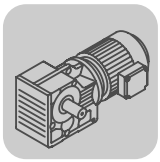

K..CMP, DS, CM
K 87 / CM [mm]

KA87..

39 025 01 01

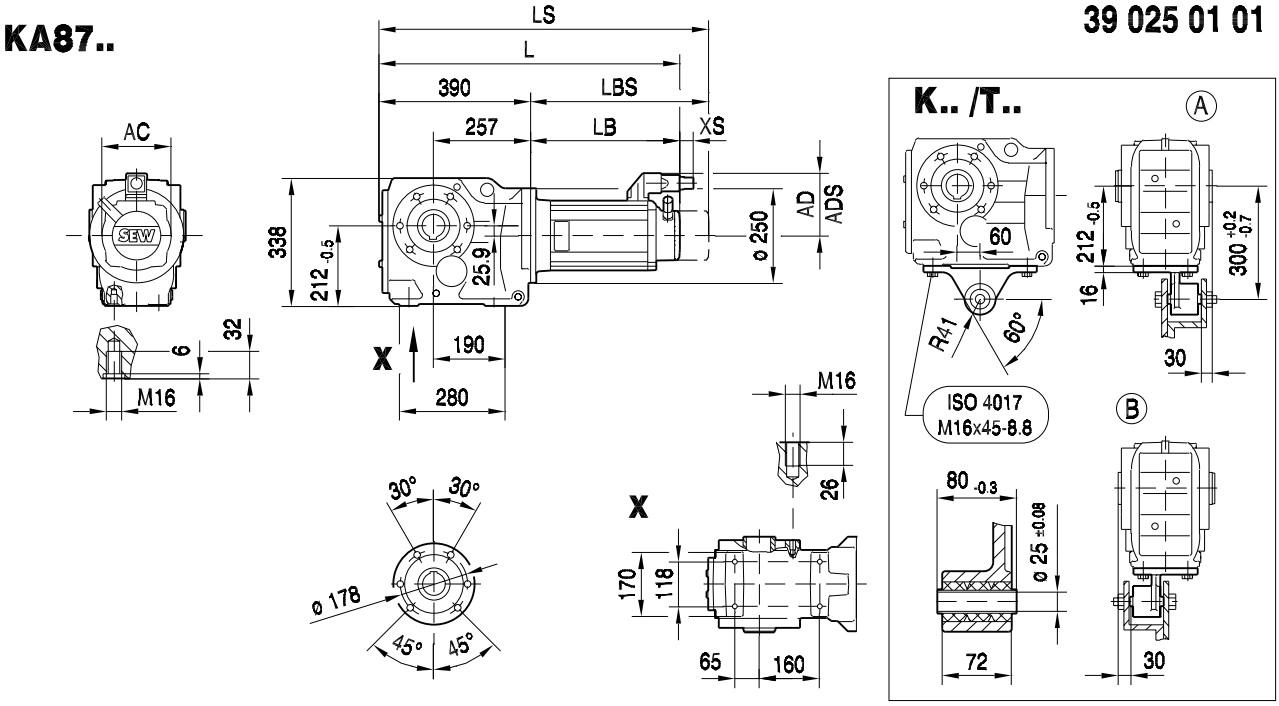

KA87..

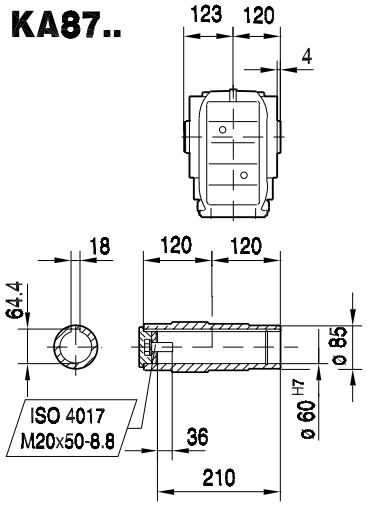

KH87..

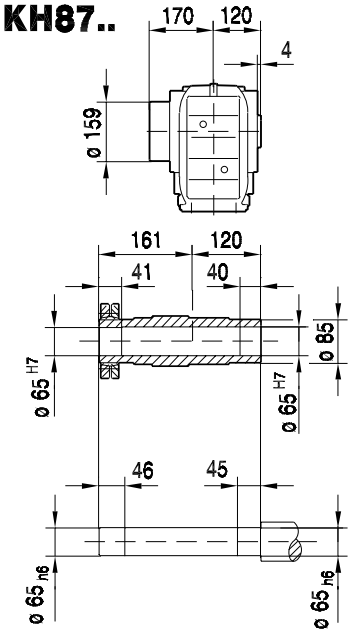

KV87..

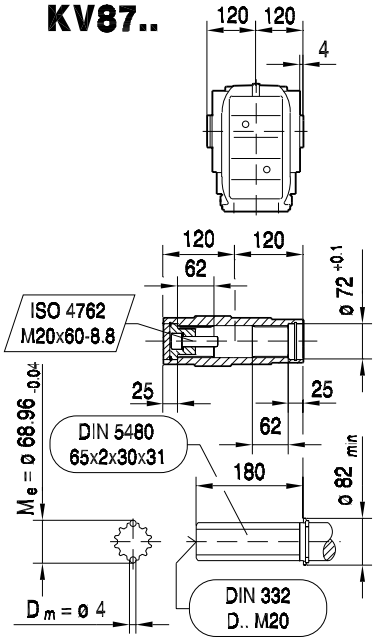

(→ 📖 150)	CM90S	CM90M	CM90L	CM112S	CM112M	CM112L	CM112H				
AC	142	142	142	186	186	186	186				
AD	140	140	140	162	162	162	162				
ADS	140	140	140	162	162	162	162				
L	662	689	743	697	724	786	916				
LS	758	785	839	787	814	876	981				
LB	272	299	353	307	334	396	526				
LBS	368	395	449	397	424	486	591				
XS	50	50	50	36	36	36	36				

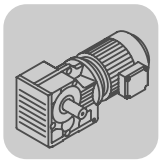

KAZ87..

39 038 00 04

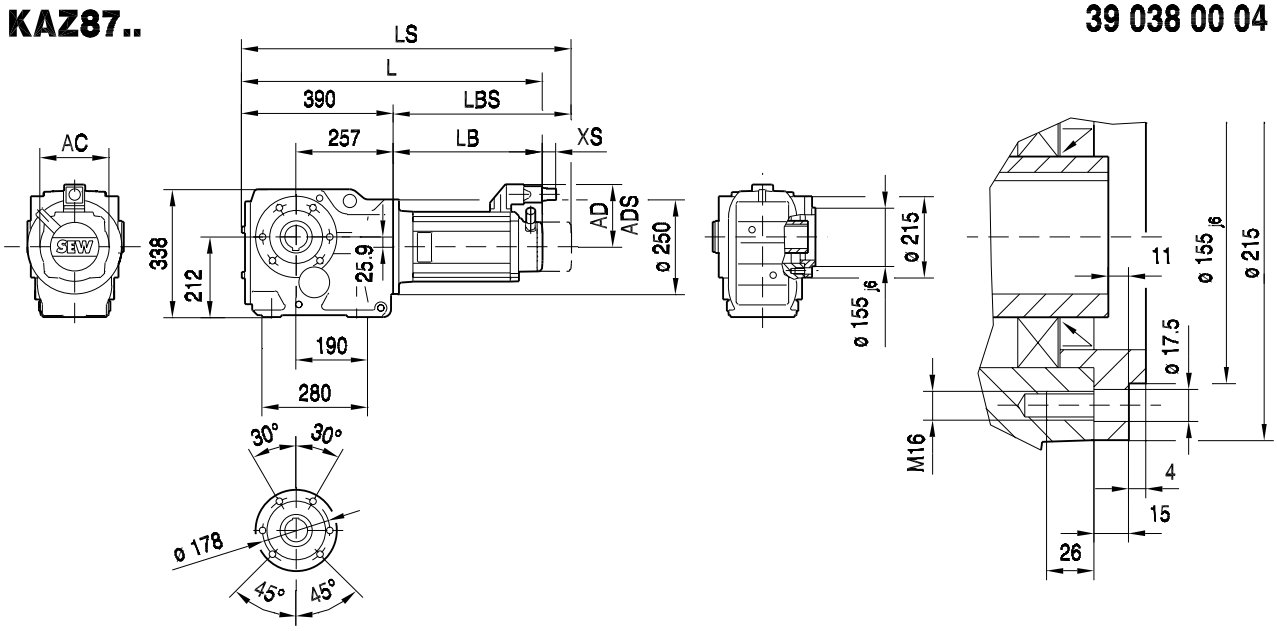

KAZ87..

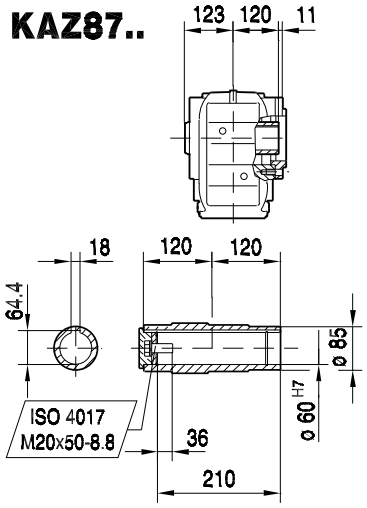

KHZ87..

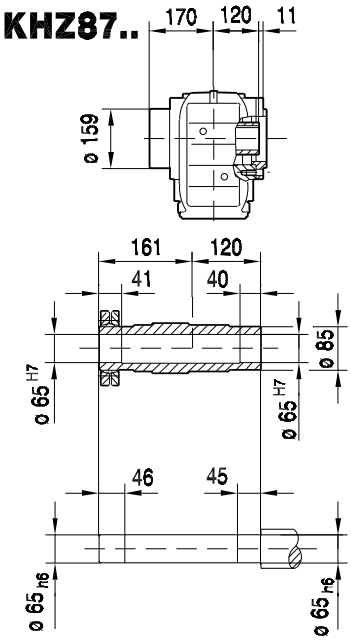

KVZ87..

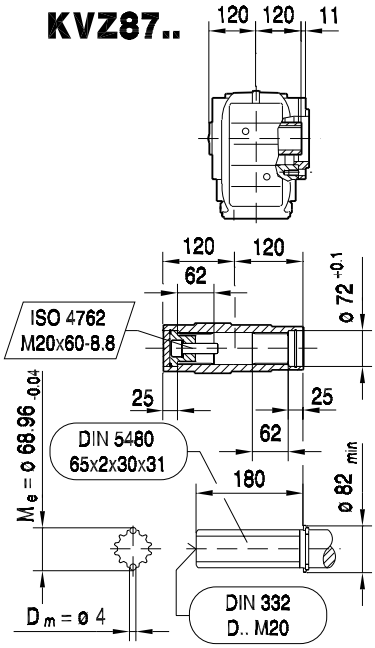

(→ 📖 150)	CM90S	CM90M	CM90L	CM112S	CM112M	CM112L	CM112H				
AC	142	142	142	186	186	186	186				
AD	140	140	140	162	162	162	162				
ADS	140	140	140	162	162	162	162				
L	662	689	743	697	724	786	916				
LS	758	785	839	787	814	876	981				
LB	272	299	353	307	334	396	526				
LBS	368	395	449	397	424	486	591				
XS	50	50	50	36	36	36	36				

KT87..

39 046 00 04

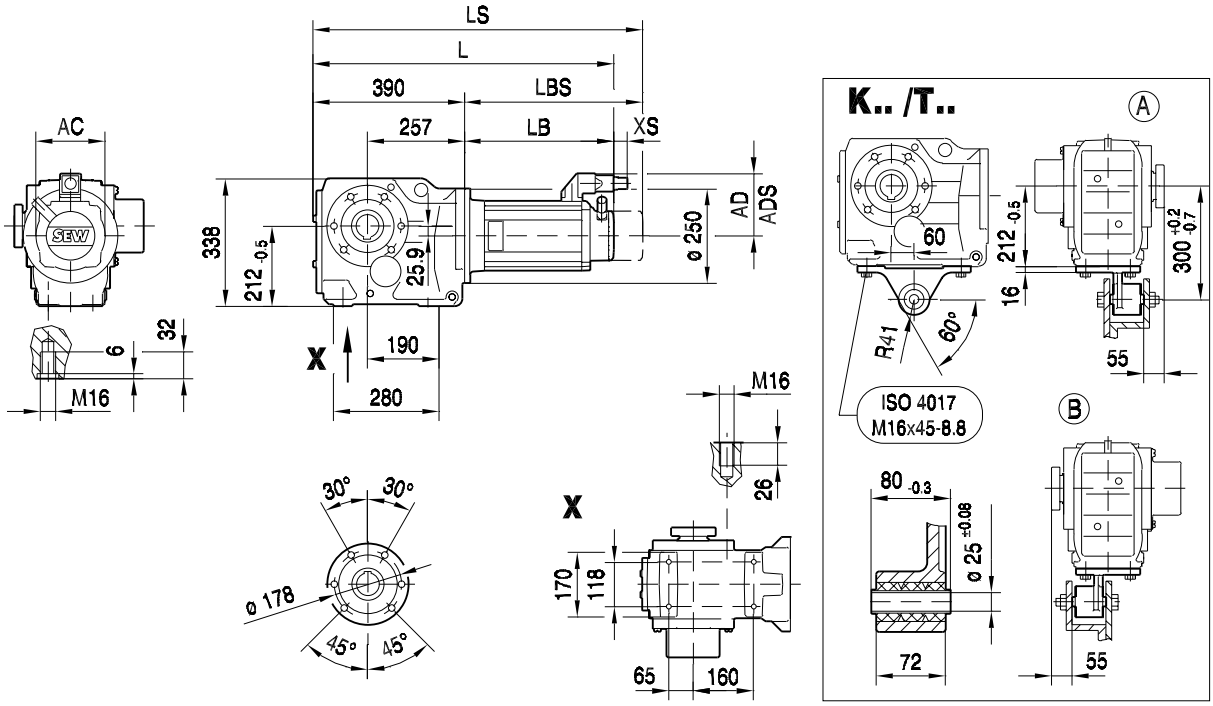

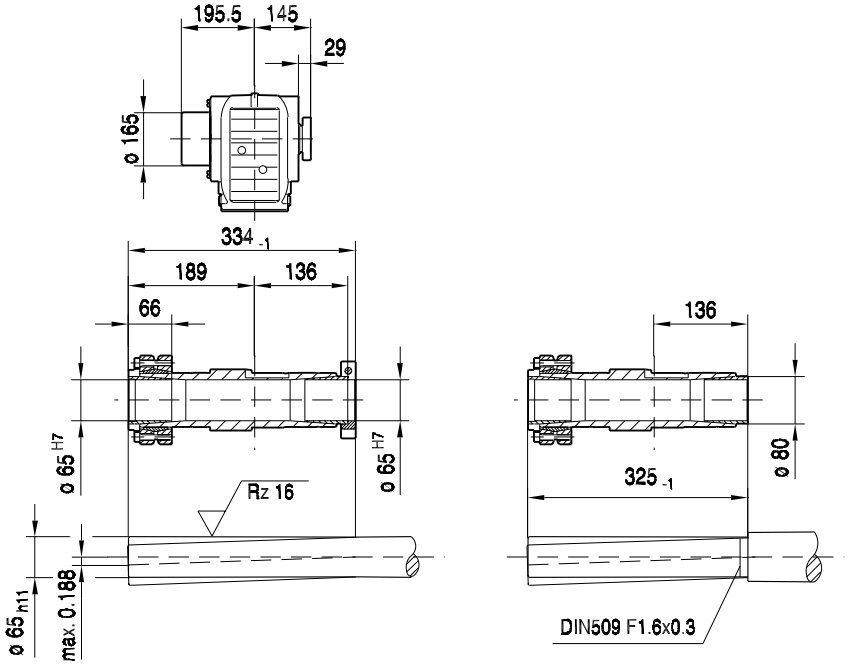

(→ 📖 150)	CM90S	CM90M	CM90L	CM112S	CM112M	CM112L	CM112H				
AC	142	142	142	186	186	186	186				
AD	140	140	140	162	162	162	162				
ADS	140	140	140	162	162	162	162				
L	662	689	743	697	724	786	916				
LS	758	785	839	787	814	876	981				
LB	272	299	353	307	334	396	526				
LBS	368	395	449	397	424	486	591				
XS	50	50	50	36	36	36	36				

10.14 K 97 / CM [Nm]

M_{aDyn} [Nm]		CM						
	i	90S	90M	90L	112S	112M	112L	112H
K97 3	7.54			547	596	785	1140	1723
	8.71			626	681	898	1303	1969
	10.41			748	814	1073	1558	2354
	11.99			861	937	1236	1794	2711
	13.85			995	1083	1428	2072	3131
	16.56			1189	1295	1707	2478	3744
	18.96	713	940	1362	1482	1954	2837	4287
	22.37	842	1109	1607	1749	2306	3347	>4710
	24.75	931	1227	1778	1935	2551	3703	>4710
	27.91	1050	1384	2004	2182	2877	4176	>4710
	30.82	1159	1528	2213	2410	3177	4611	>4710
	34.23	1288	1697	2458	2676	3528	>4710	
	38.3	1441	1899	2751	2994	3948	>4710	
	41.87			2975	3239	4270	>4710	>4710
	47.93	1784	2352	3406	3708	>4710	>4710	>4710
	56.55	2105	2775	4019	4375	>4710	>4710	>4710
	62.55	2328	3069	4445	>4710	>4710	>4710	>4710
	70.54	2626	3461	>4710	>4710	>4710	>4710	>4710
	77.89	2899	3822	>4710	>4710	>4710	>4710	>4710
	86.52	3221	4245	>4710	>4710	>4710	>4710	
	96.8	3603	>4710	>4710	>4710	>4710	>4710	
	105.13	3913	>4710	>4710	>4710			
	123.93	4613	>4710	>4710	>4710			
	140.28	>4710	>4710					
	153.21	>4710	>4710					
	176.05	>4710						

m [kg]		CM						
	s	90S	90M	90L	112S	112M	112L	112H
K97	3	170	170	175	175	180	195	200
KF: + 20.1 kg / KA: + -18.2 kg / KAF: + 6.7 kg								

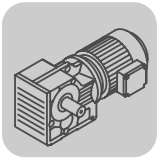

K..CMP, DS, CM
K 97 / CM [Nm]

CM..	i	n_{epk} [1/min]	η [%]	c_T K [Nm/']	KF [Nm/']	KA [Nm/']	KAF [Nm/']	φ /R [']
K97 3	7.54	3597	96	263.58	237.42	580.89	580.89	10
	8.71	4500	95	263.58	237.42	580.89	580.89	10
	10.41	4500	95	263.58	237.42	580.89	580.89	10
	11.99	4500	95	300.61	267.05	790.78	790.78	8
	13.85	4500	95	300.61	267.05	790.78	790.78	8
	16.56	4500	95	300.61	267.05	790.78	790.78	8
	18.96	4500	95	300.61	267.05	790.78	790.78	8
	22.37	4500	95	300.61	267.05	790.78	790.78	8
	24.75	4500	95	300.61	267.05	790.78	790.78	8
	27.91	4500	95	300.61	267.05	790.78	790.78	8
	30.82	4500	95	300.61	267.05	790.78	790.78	7
	34.23	4500	95	300.61	267.05	790.78	790.78	7
	38.3	4500	95	300.61	267.05	790.78	790.78	7
	41.87	4378	94	314.14	277.67	891.83	891.83	7
	47.93	4500	94	314.14	277.67	891.83	891.83	7
	56.55	4500	94	314.14	277.67	891.83	891.83	7
	62.55	4500	94	314.14	277.67	891.83	891.83	7
	70.54	4500	94	314.14	277.67	891.83	891.83	7
	77.89	4500	94	314.14	277.67	891.83	891.83	7
	86.52	4500	94	314.14	277.67	891.83	891.83	7
	96.8	4500	94	314.14	277.67	891.83	891.83	7
	105.13	4500	94	314.14	277.67	891.83	891.83	7
	123.93	4500	94	314.14	277.67	891.83	891.83	7
	140.28	4500	94	314.14	277.67	891.83	891.83	7
	153.21	4500	94	314.14	277.67	891.83	891.83	7
	176.05	4500	94	314.14	277.67	891.83	891.83	7

CM..	i	M_{amax} [Nm]	M_{apk} [Nm]	$M_{aNotaus}$ [Nm]	n_{ak} [1/min]	J_G 10^{-4} [kgm²]	F_{Ramax} K [N]	KF [N]	KA [N]	KAF [N]	F_{Rapk} K [N]	KF [N]	KA [N]	KAF [N]
K97 3	7.54	2400	3560	4080	279	120	15700	18100	10200	10200	40000	39300	40000	40000
	8.71	2660	3590	4522	218	94	15800	18200	9930	9930	40000	39300	40000	40000
	10.41	2870	3610	4879	183	71	16400	19000	10300	10300	40000	39300	40000	40000
	11.99	3890	4710	6613	167	115	16200	18800	9100	9100	40000	38300	40000	40000
	13.85	4300	4710	7310	130	91	16100	18900	8520	8520	40000	38300	40000	40000
	16.56	4300	4710	7310	139	69	17800	20700	10300	10300	40000	38300	40000	40000
	18.96	4300	4710	7310	148	55	19100	22100	11700	11700	40000	38300	40000	40000
	22.37	4300	4710	7310	156	43	20900	24000	13500	13500	40000	38300	40000	40000
	24.75	4300	4710	7310	166	37	22000	25200	14700	14700	40000	38300	40000	40000
	27.91	4300	4710	7310	168	30	23300	26600	16100	16100	40000	38300	40000	40000
	30.82	4300	4710	7310	172	26	24500	27800	17300	17300	40000	38300	40000	40000
	34.23	4300	4710	7310	178	22	25700	29200	18600	18600	40000	38300	40000	40000
	38.3	4300	4710	7310	183	18	27100	30700	20100	20100	40000	38300	40000	40000
	41.87	4300	4710	7310	36	42	28300	31900	21300	21300	40000	38300	40000	40000
	47.93	4300	4710	7310	31	35	30000	33800	23300	23300	40000	38300	40000	40000
	56.55	4300	4710	7310	30	28	32300	36300	25700	25700	40000	38300	40000	40000
	62.55	4300	4710	7310	30	25	33800	37800	27300	27300	40000	38300	40000	40000
	70.54	4300	4710	7310	31	21	35600	38700	29200	29200	40000	38300	40000	40000
	77.89	4300	4710	7310	32	18	37100	38700	30900	30900	40000	38300	40000	40000
	86.52	4300	4710	7310	32	16	38800	38700	32700	32700	40000	38300	40000	40000
	96.8	4300	4710	7310	33	13	40000	38700	34700	34700	40000	38300	40000	40000
	105.13	4300	4710	7310	33	12	40000	38700	36300	36300	40000	38300	40000	40000
	123.93	4300	4710	7310	33	9.3	40000	38700	39500	39500	40000	38300	40000	40000
	140.28	4300	4710	7310	34	5.9	40000	38700	40000	40000	40000	38300	40000	40000
	153.21	4300	4710	7310	34	5.2	40000	38700	40000	40000	40000	38300	40000	40000
	176.05	4300	4710	7310	34	4.0	40000	38700	40000	40000	40000	38300	40000	40000

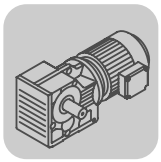

10.15 K 97 / CM [mm]

K97..

34 042 01 01

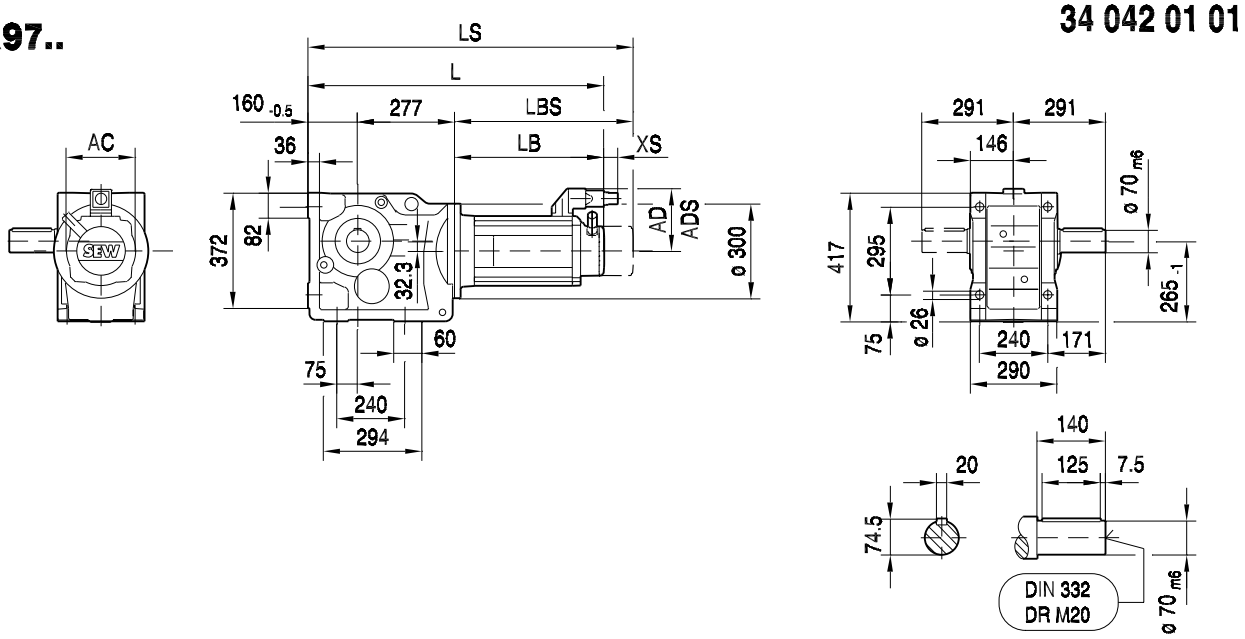

KA97B..

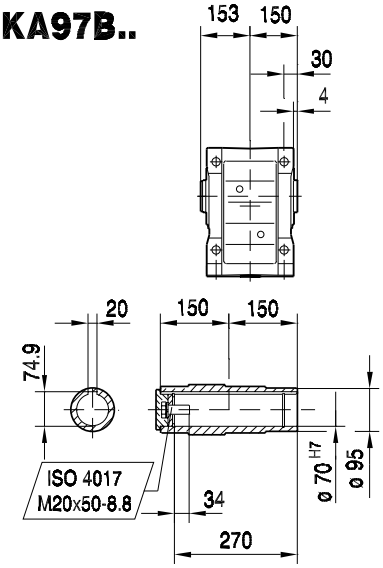

KH97B..

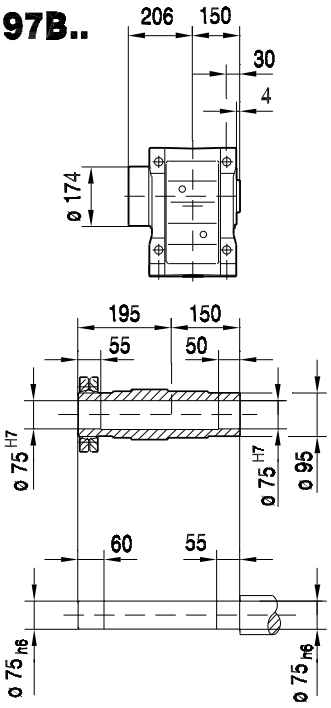

KV97B..

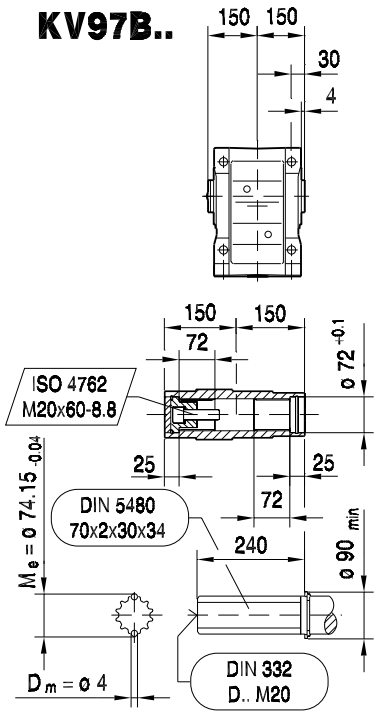

(→ 📖 150)	CM90S	CM90M	CM90L	CM112S	CM112M	CM112L	CM112H				
AC	142	142	142	186	186	186	186				
AD	140	140	140	162	162	162	162				
ADS	140	140	140	162	162	162	162				
L	703	730	784	739	766	828	958				
LS	799	826	880	829	856	918	1023				
LB	266	293	347	302	329	391	521				
LBS	362	389	443	392	419	481	586				
XS	50	50	50	36	36	36	36				

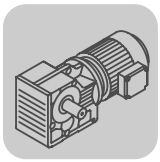

K..CMP, DS, CM
K 97 / CM [mm]

KF97.. **34 043 01 01**

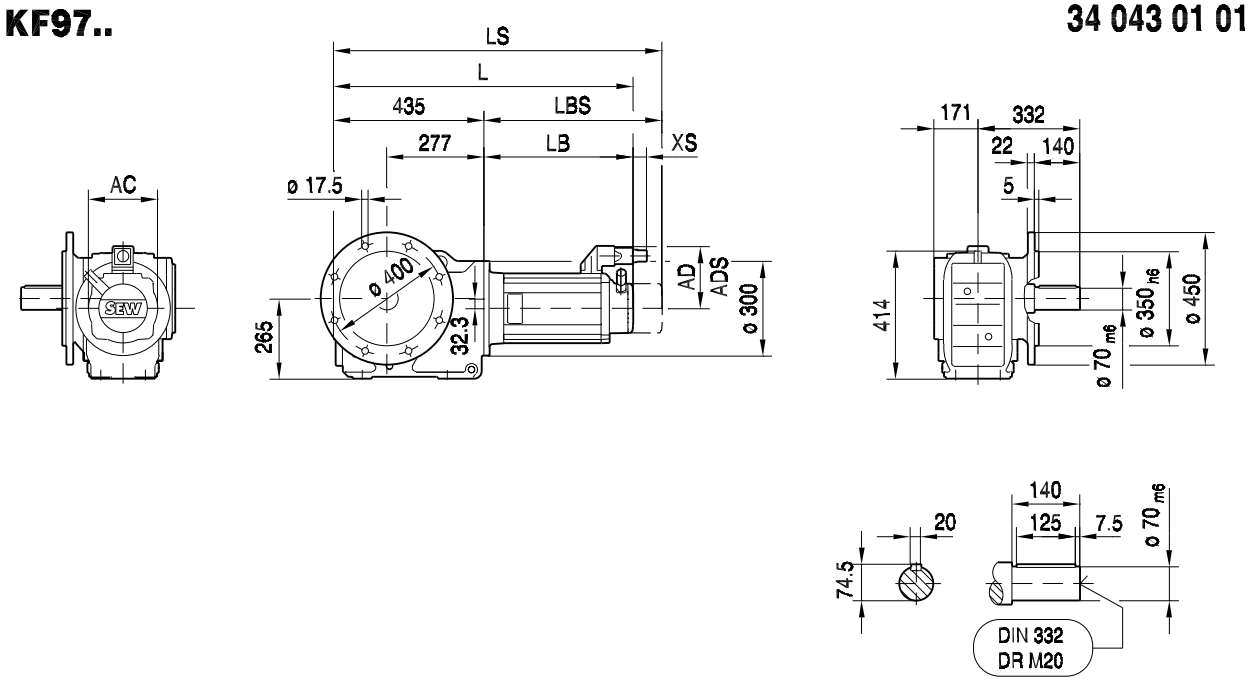

KAF97..

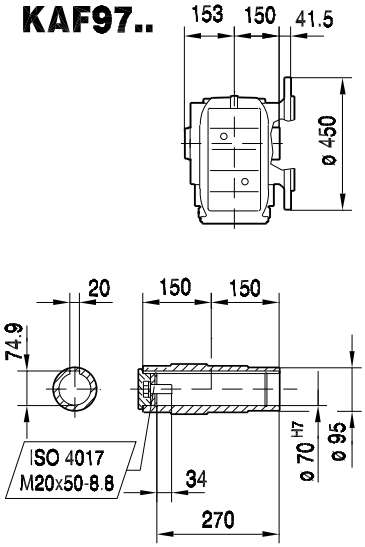

KHF97..

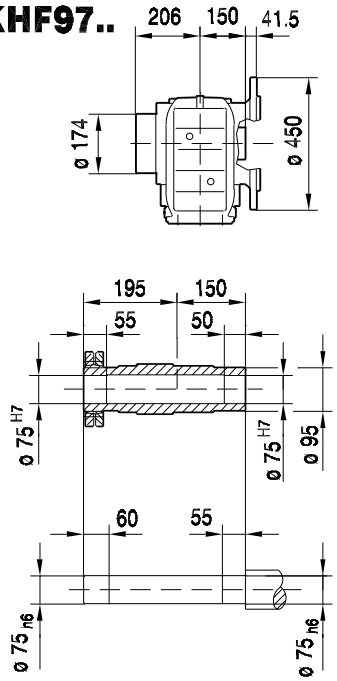

KVF97..

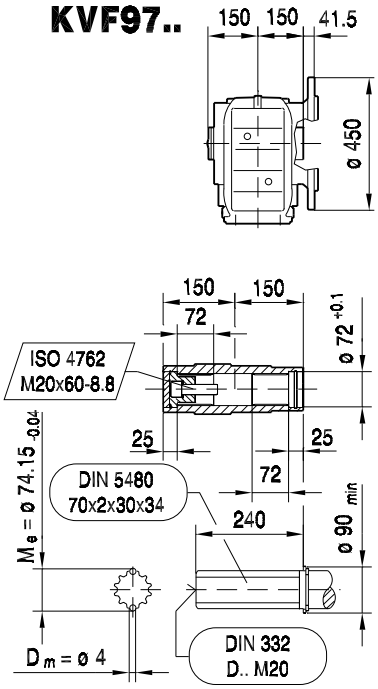

(→ 📖 150)	CM90S	CM90M	CM90L	CM112S	CM112M	CM112L	CM112H				
AC	142	142	142	186	186	186	186				
AD	140	140	140	162	162	162	162				
ADS	140	140	140	162	162	162	162				
L	701	728	782	737	764	826	956				
LS	797	824	878	827	854	916	1021				
LB	266	293	347	302	329	391	521				
LBS	362	389	443	392	419	481	586				
XS	50	50	50	36	36	36	36				

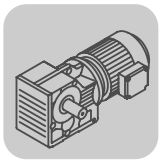

KA97..

39 026 01 01

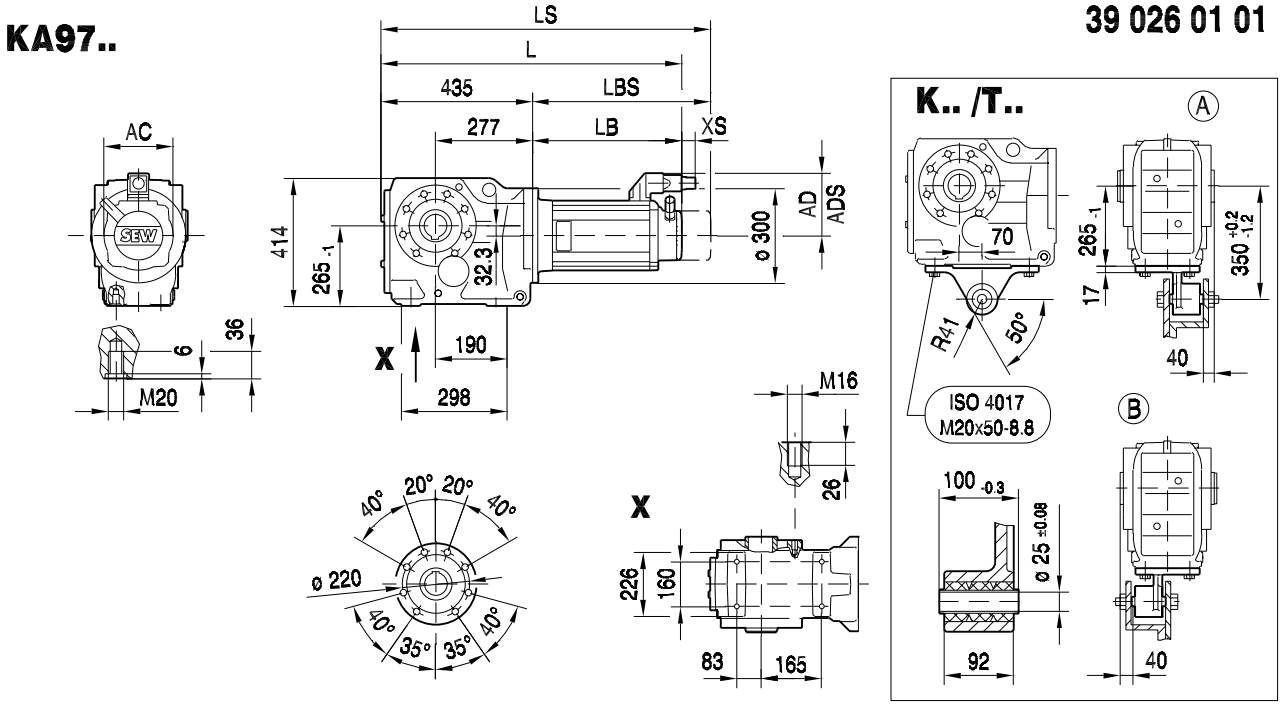

KA97..

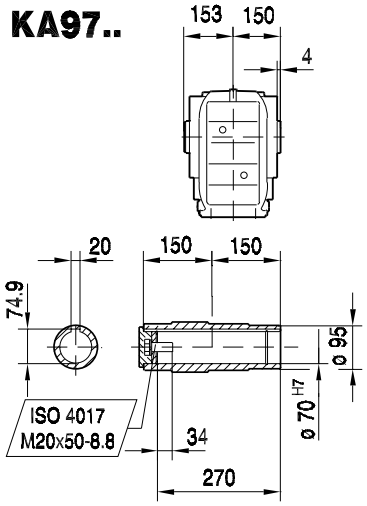

KH97..

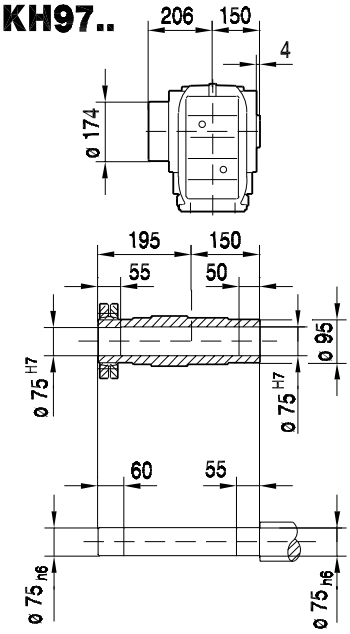

KV97..

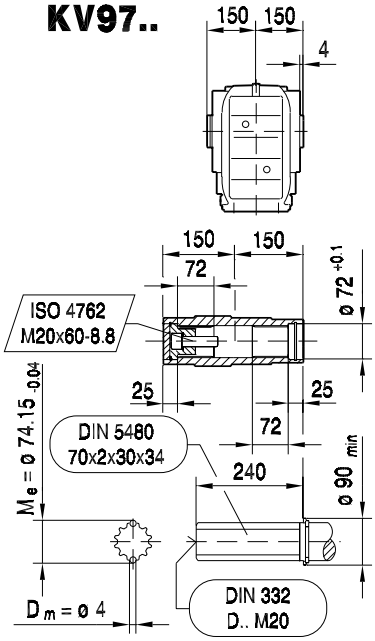

(→ 📖 150)	CM90S	CM90M	CM90L	CM112S	CM112M	CM112L	CM112H				
AC	142	142	142	186	186	186	186				
AD	140	140	140	162	162	162	162				
ADS	140	140	140	162	162	162	162				
L	701	728	782	737	764	826	956				
LS	797	824	878	827	854	916	1021				
LB	266	293	347	302	329	391	521				
LBS	362	389	443	392	419	481	586				
XS	50	50	50	36	36	36	36				

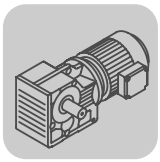

K..CMP, DS, CM
K 97 / CM [mm]

KAZ97.. **39 039 00 04**

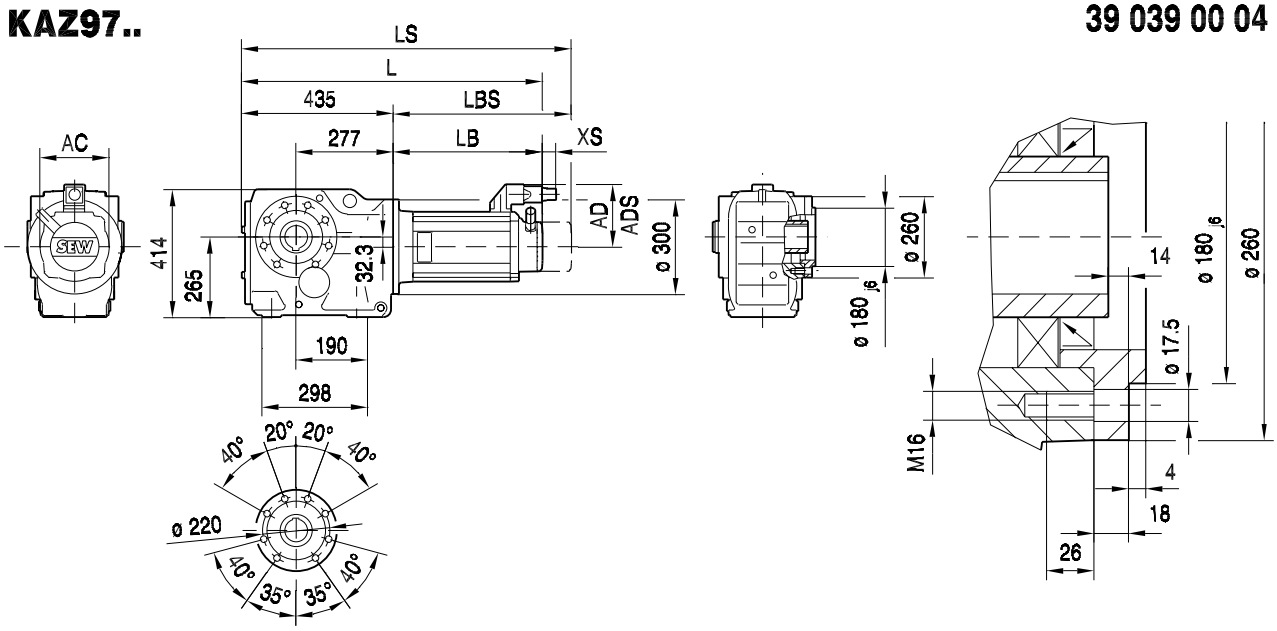

KAZ97..

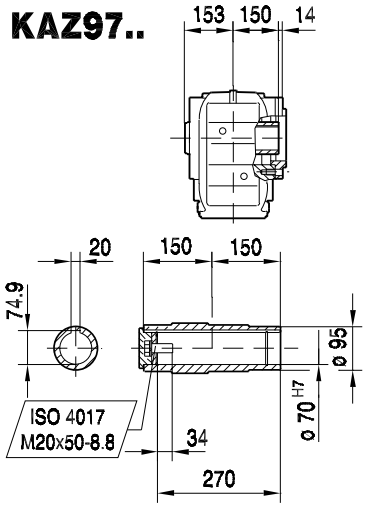

KHZ97..

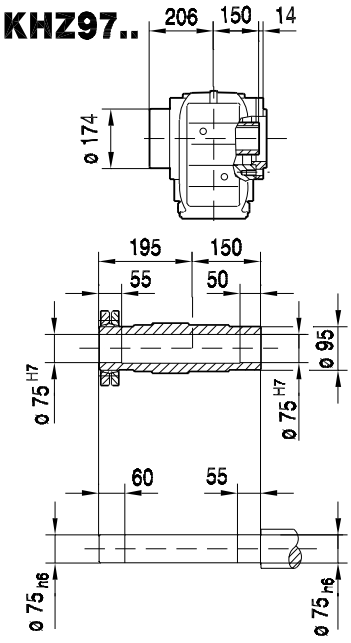

KVZ97..

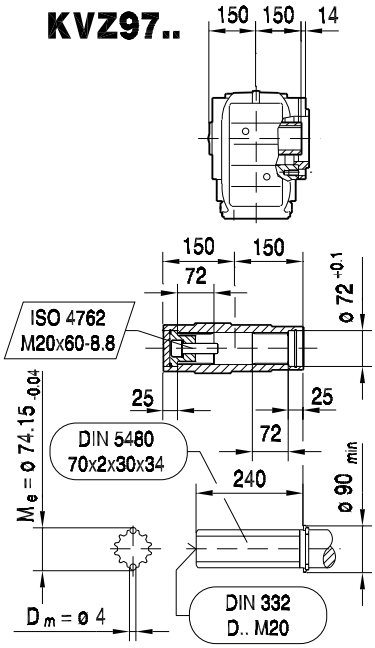

(→ 📖 150)	CM90S	CM90M	CM90L	CM112S	CM112M	CM112L	CM112H				
AC	142	142	142	186	186	186	186				
AD	140	140	140	162	162	162	162				
ADS	140	140	140	162	162	162	162				
L	701	728	782	737	764	826	956				
LS	797	824	878	827	854	916	1021				
LB	266	293	347	302	329	391	521				
LBS	362	389	443	392	419	481	586				
XS	50	50	50	36	36	36	36				

KT97..

39 047 00 04

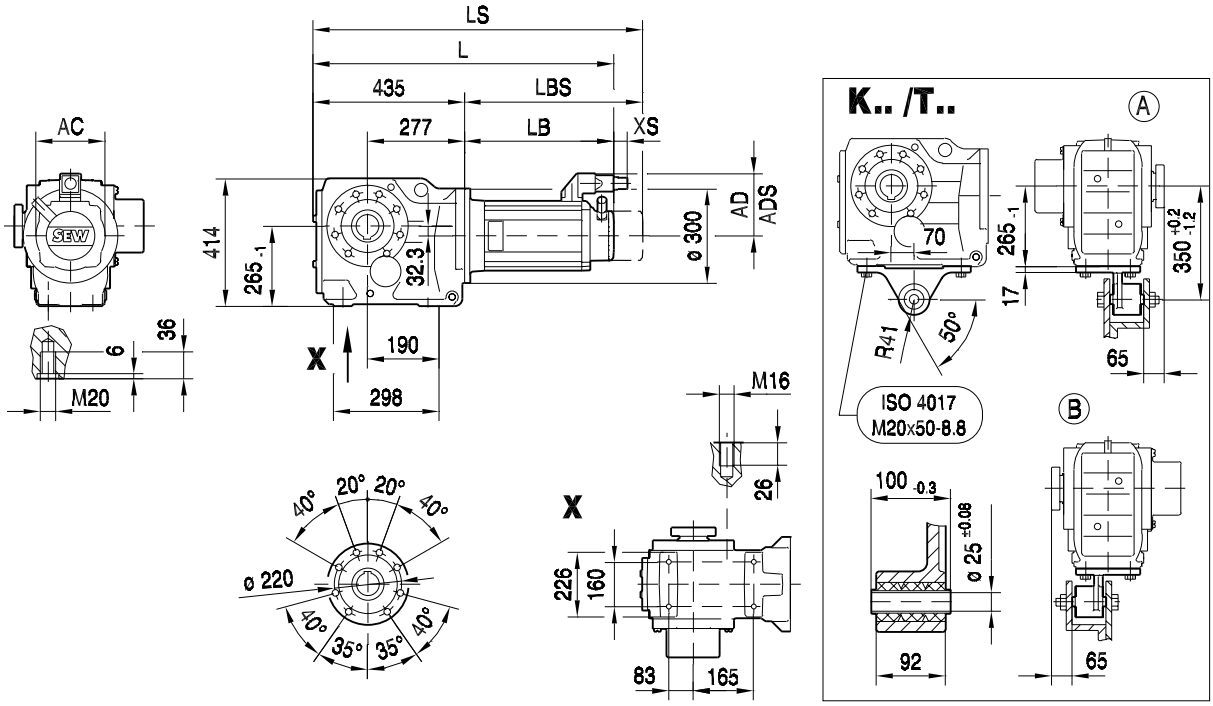

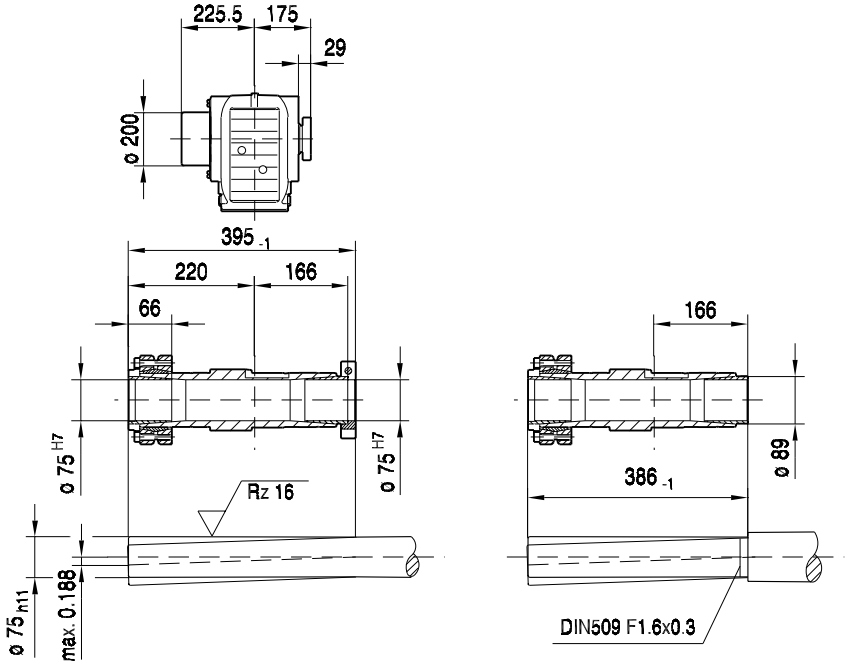

(→ 📖 150)	CM90S	CM90M	CM90L	CM112S	CM112M	CM112L	CM112H				
AC	142	142	142	186	186	186	186				
AD	140	140	140	162	162	162	162				
ADS	140	140	140	162	162	162	162				
L	701	728	782	737	764	826	956				
LS	797	824	878	827	854	916	1021				
LB	266	293	347	302	329	391	521				
LBS	362	389	443	392	419	481	586				
XS	50	50	50	36	36	36	36				

10.16 K 107 / CM [Nm]

M_{aDyn} [Nm]		CM			
	i	112S	112M	112L	112H
K107 3	7.35		766	1111	1679
	8.69	679	896	1300	1965
	9.94	777	1025	1487	2247
	11.73	917	1209	1755	2652
	13.43	1050	1384	2009	3037
	14.64	1145	1509	2191	3310
	16.75	1310	1727	2506	3787
	19.74	1543	2035	2954	4463
	22.62	1769	2332	3385	5114
	26.32	2058	2713	3938	5951
	29	2267	2989	4339	6557
	31.28		3224	4680	7072
	32.69	2556	3370	4891	7391
	37	2893	3814	5536	8366
	42.33	3310	4363	6334	>9090
	49.9	3901	5143	7466	>9090
	57.17	4470	5893	8554	>9090
	66.52	5201	6857	>9090	>9090
	73.3	5731	7555	>9090	>9090
	82.61	6459	8515	>9090	>9090
	90.96	7112	>9090	>9090	>9090
	100.75	7877	>9090	>9090	
	112.41	8789	>9090	>9090	
	121.46	>9090			
	143.47	>9090			

m [kg]		CM			
	s	112S	112M	112L	112H
K107	3	290	295	310	315
KF: + 12.1 kg / KA: + -27.2 kg / KAF: + -3.2 kg					

CM..				c_T				φ
	i	n_{epk} [1/min]	η [%]	K [Nm/']	KF [Nm/']	KA [Nm/']	KAF [Nm/']	/R [']
K107 3	7.35	3197	96	518.94	488.07	862.15	862.15	9
	8.69	3597	95	518.94	488.07	862.15	862.15	9
	9.94	4500	95	518.94	488.07	862.15	862.15	9
	11.73	4500	95	518.94	488.07	862.15	862.15	9
	13.43	4500	95	518.94	488.07	862.15	862.15	9
	14.64	4500	95	660.92	611.66	1340.65	1340.65	7
	16.75	4500	95	660.92	611.66	1340.65	1340.65	7
	19.74	4500	95	660.92	611.66	1340.65	1340.65	6
	22.62	4500	95	660.92	611.66	1340.65	1340.65	6
	26.32	4500	95	660.92	611.66	1340.65	1340.65	6
	29	4500	95	660.92	611.66	1340.65	1340.65	6
	31.28	3197	95	730.16	670.5	1659.95	1659.95	6
	32.69	4500	95	660.92	611.66	1340.65	1340.65	6
	37	3597	95	730.16	670.5	1659.95	1659.95	6
	42.33	3924	95	730.16	670.5	1659.95	1659.95	6
	49.9	4378	95	730.16	670.5	1659.95	1659.95	6
	57.17	4500	95	730.16	670.5	1659.95	1659.95	6
	66.52	4500	95	730.16	670.5	1659.95	1659.95	6
	73.3	4500	95	730.16	670.5	1659.95	1659.95	6
	82.61	4500	95	730.16	670.5	1659.95	1659.95	6
	90.96	4500	95	730.16	670.5	1659.95	1659.95	6
	100.75	4500	95	730.16	670.5	1659.95	1659.95	6
	112.41	4500	95	730.16	670.5	1659.95	1659.95	6
	121.46	4500	95	730.16	670.5	1659.95	1659.95	6
	143.47	4500	95	730.16	670.5	1659.95	1659.95	6

CM..	i	M_{amax} [Nm]	M_{apk} [Nm]	$M_{aNotaus}$ [Nm]	n_{ak} [1/min]	J_G 10^{-4} [kgm^2]	F_{Ramax} K [N]	F_{Ramax} KF [N]	F_{Ramax} KA [N]	F_{Ramax} KAF [N]	F_{Rapk} K [N]	F_{Rapk} KF [N]	F_{Rapk} KA [N]	F_{Rapk} KAF [N]
	7.35	3600	4720	6120	286	231	24400	28500	9900	47100	65000	65000	65000	65000
	8.69	4070	4780	6919	207	170	24600	29100	9270	48300	65000	65000	65000	65000
	9.94	4190	4840	7123	201	136	25800	30500	10000	50500	65000	65000	65000	65000
	11.73	4300	4910	7310	196	104	27500	32300	11100	53500	65000	65000	65000	65000
	13.43	4300	4940	7310	201	82	29200	34200	12600	56500	65000	65000	65000	65000
	14.64	6890	8060	11713	123	163	19500	23000	6180	51700	65000	65000	65000	65000
	16.75	7050	8160	11985	119	131	21000	24800	7080	54200	65000	65000	65000	65000
	19.74	7200	8270	12240	117	100	23200	27300	8440	57700	65000	65000	65000	65000
	22.62	7200	8320	12240	124	80	25800	30300	10100	61200	65000	65000	65000	65000
	26.32	7200	8370	12240	129	63	28800	33600	12100	65000	65000	65000	65000	65000
	29	7200	8400	12240	134	54	30700	35800	13400	65000	65000	65000	65000	65000
K107	31.28	6800	9090	11560	48	112	34200	39700	16100	65000	65000	65000	65000	65000
3	32.69	7200	8430	12240	138	45	33200	38600	15100	65000	65000	65000	65000	65000
	37	7200	9090	12240	41	86	35800	41500	17000	65000	65000	65000	65000	65000
	42.33	7360	9090	12512	38	72	37900	44000	18400	65000	65000	65000	65000	65000
	49.9	7840	9090	13328	30	58	39300	45600	19200	65000	65000	65000	65000	65000
	57.17	8000	9090	13600	30	48	41700	48400	20900	65000	65000	65000	65000	65000
	66.52	8000	9090	13600	30	40	45400	52500	23600	65000	65000	65000	65000	65000
	73.3	8000	9090	13600	30	35	47900	55300	25400	65000	65000	65000	65000	65000
	82.61	8000	9090	13600	30	29	50900	58700	27700	65000	65000	65000	65000	65000
	90.96	8000	9090	13600	31	25	53500	61600	29600	65000	65000	65000	65000	65000
	100.75	8000	9090	13600	32	20	56200	64700	31700	65000	65000	65000	65000	65000
	112.41	8000	9090	13600	32	17	59300	65000	34000	65000	65000	65000	65000	65000
	121.46	8000	9090	13600	32	15	61500	65000	35700	65000	65000	65000	65000	65000
	143.47	8000	9090	13600	32	12	65000	65000	39600	65000	65000	65000	65000	65000

10.17 K 107 / CM [mm]

K107..

34 044 01 01

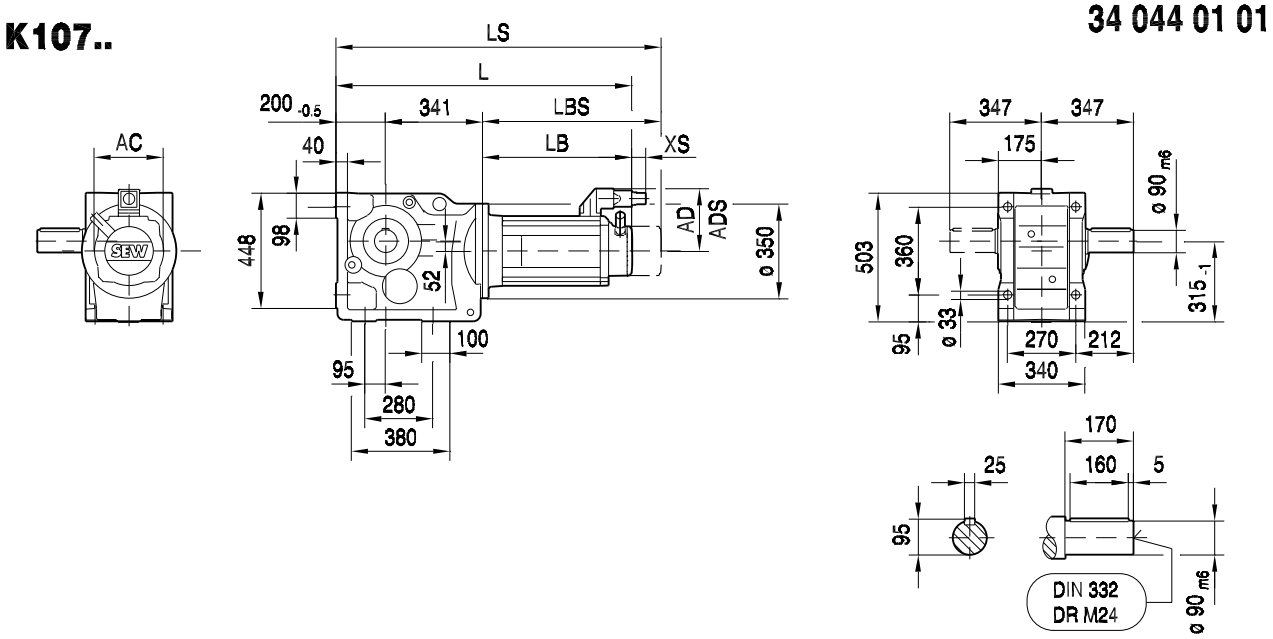

KA107B..

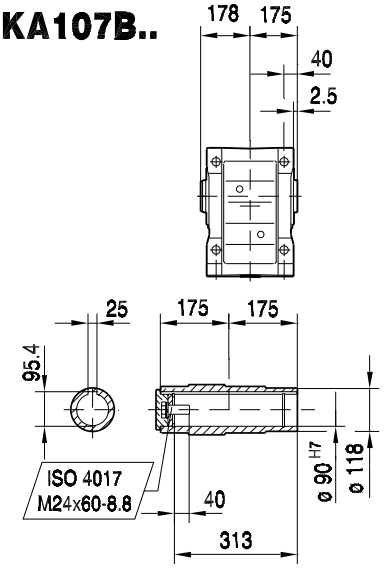

KH107B..

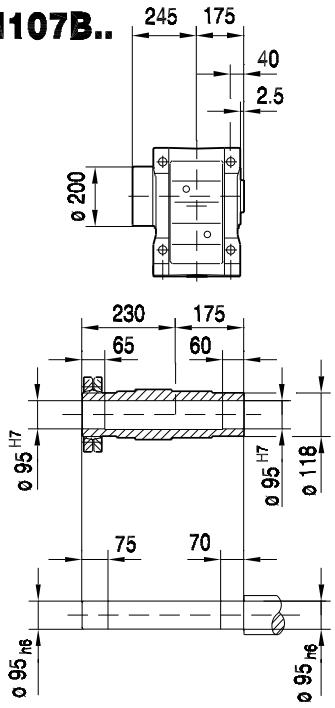

KV107B..

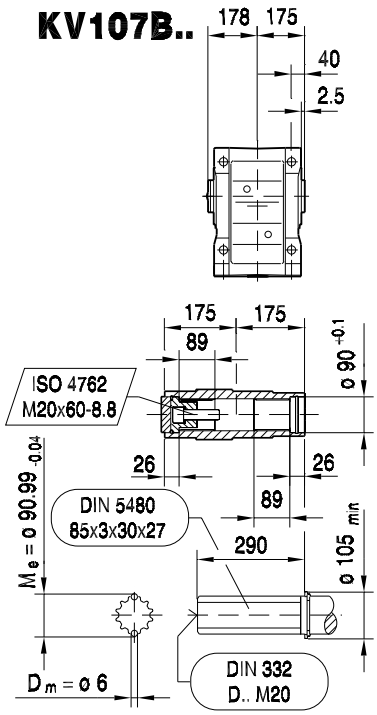

(→ 📖 150)	CM112S	CM112M	CM112L	CM112H							
AC	186	186	186	186							
AD	162	162	162	162							
ADS	162	162	162	162							
L	837	864	926	1056							
LS	927	954	1016	1121							
LB	296	323	385	515							
LBS	386	413	475	580							
XS	36	36	36	36							

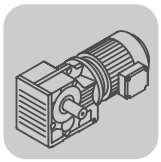

KF107..

34 045 01 01

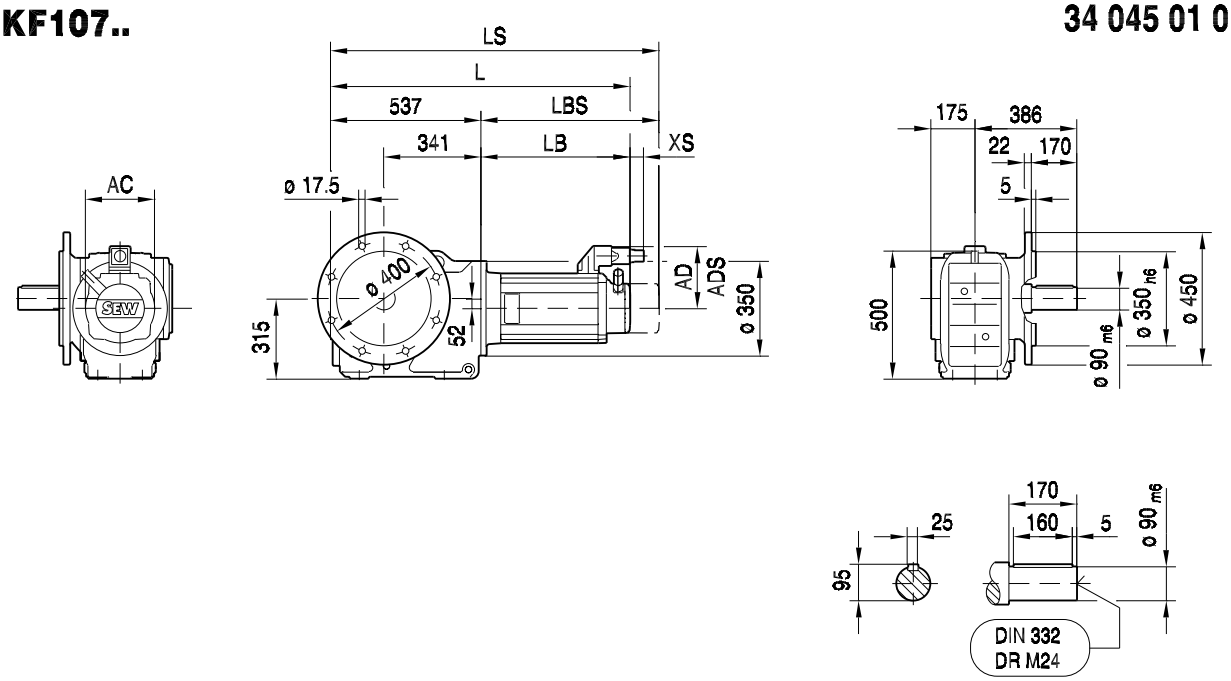

KAF107..

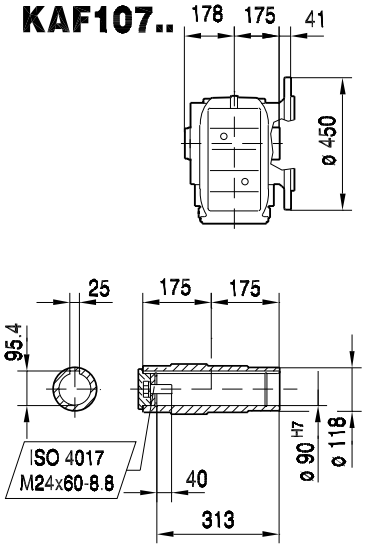

KHF107..

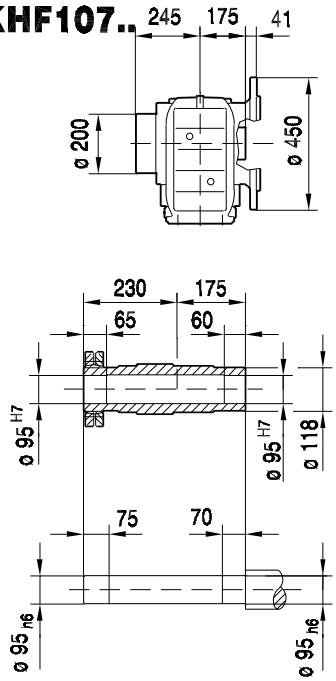

KVF107..

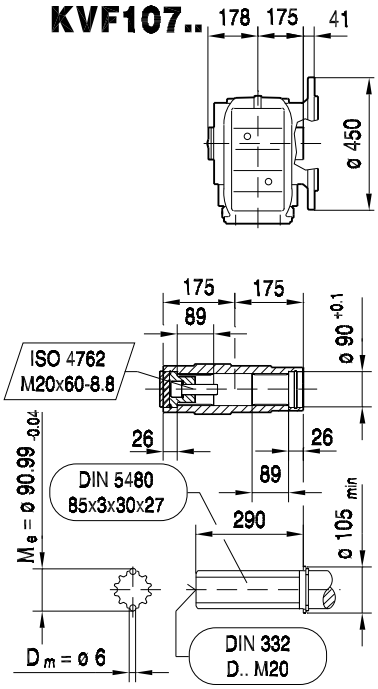

(→ 📖 150)	CM112S	CM112M	CM112L	CM112H							
AC	186	186	186	186							
AD	162	162	162	162							
ADS	162	162	162	162							
L	833	860	922	1052							
LS	923	950	1012	1117							
LB	296	323	385	515							
LBS	386	413	475	580							
XS	36	36	36	36							

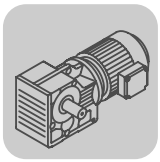

K..CMP, DS, CM
K 107 / CM [mm]

KA107..

39 027 01 01

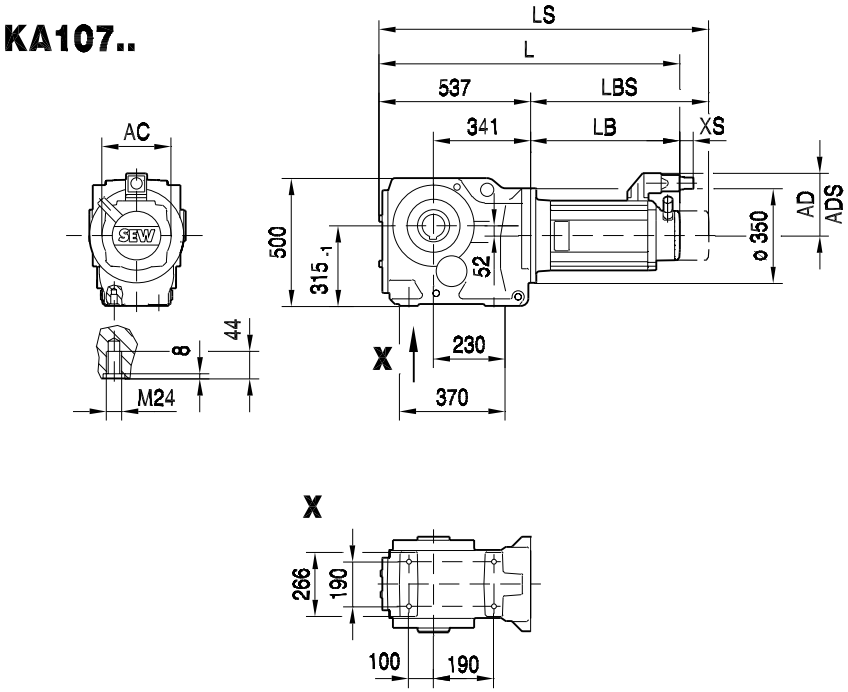

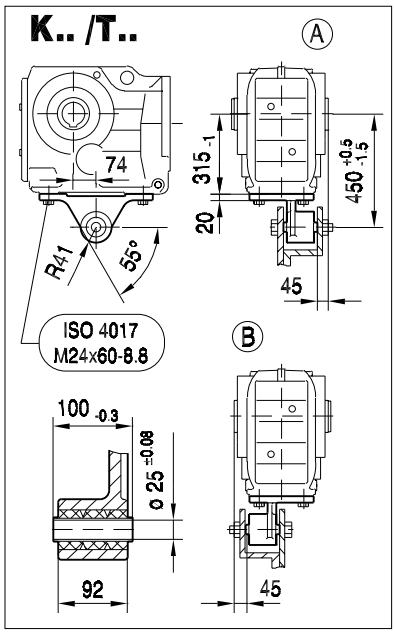

KA107..

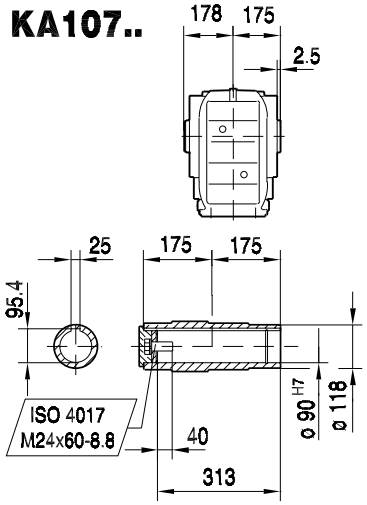

KH107..

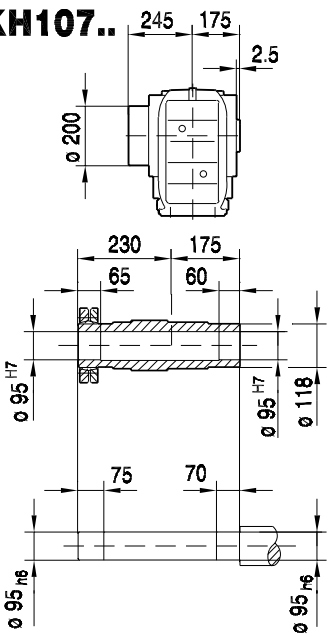

KV107..

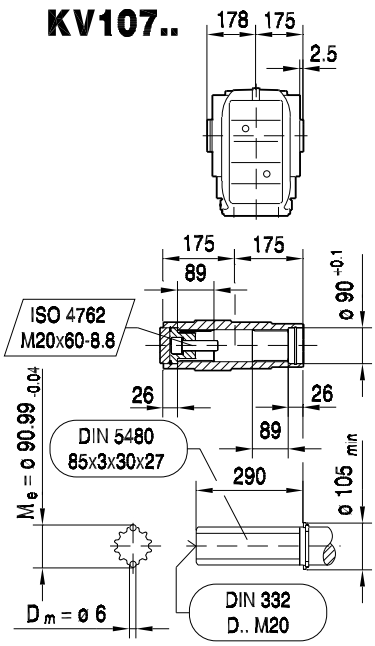

(→ 📖 150)	CM112S	CM112M	CM112L	CM112H							
AC	186	186	186	186							
AD	162	162	162	162							
ADS	162	162	162	162							
L	833	860	922	1052							
LS	923	950	1012	1117							
LB	296	323	385	515							
LBS	386	413	475	580							
XS	36	36	36	36							

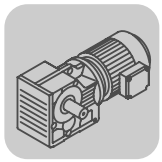

KAZ107..

39 040 00 04

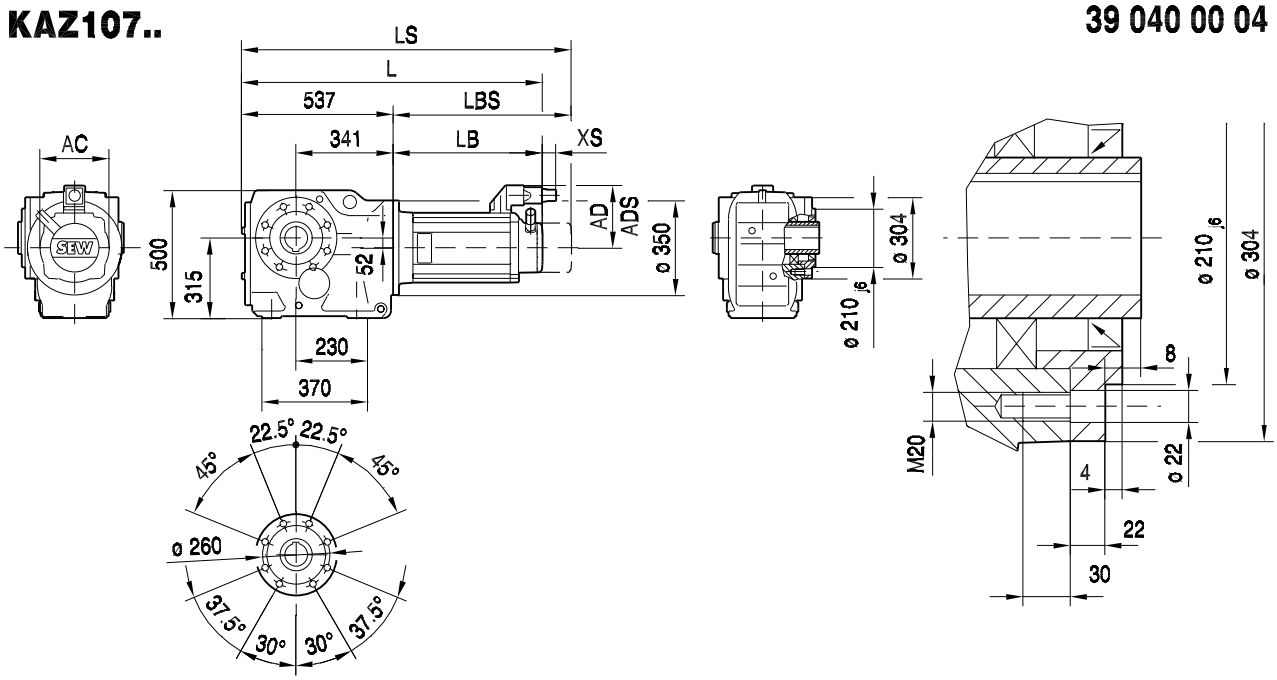

10

KAZ107..

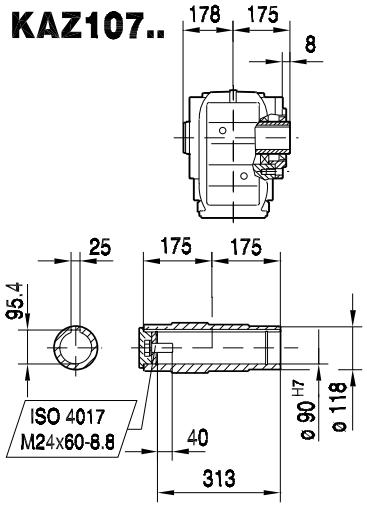

KHZ107..

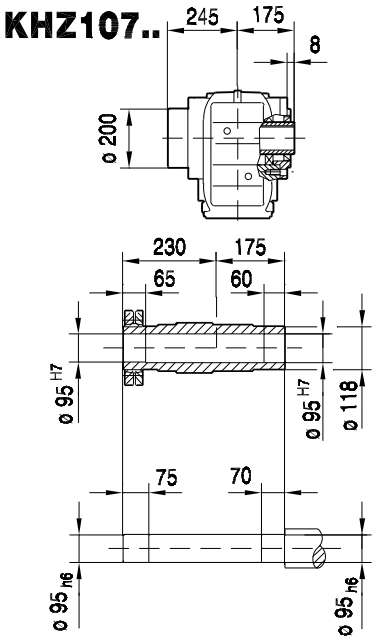

KVZ107..

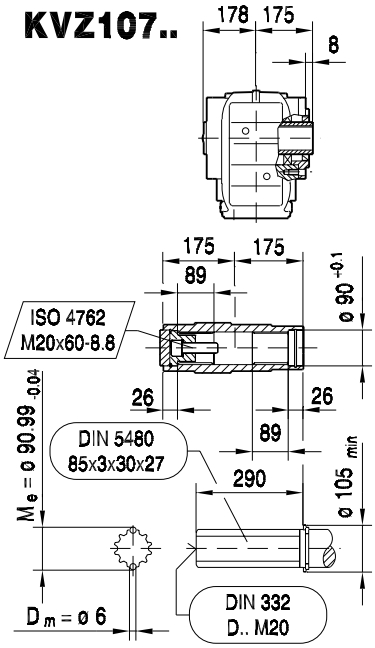

(→ 📖 150)	CM112S	CM112M	CM112L	CM112H							
AC	186	186	186	186							
AD	162	162	162	162							
ADS	162	162	162	162							
L	833	860	922	1052							
LS	923	950	1012	1117							
LB	296	323	385	515							
LBS	386	413	475	580							
XS	36	36	36	36							

11 S..CMP, DS, CM

11.1 S, SF, SAF, SHF, SA../T, SH, SAZ, SHZ..CMP / DS / CM

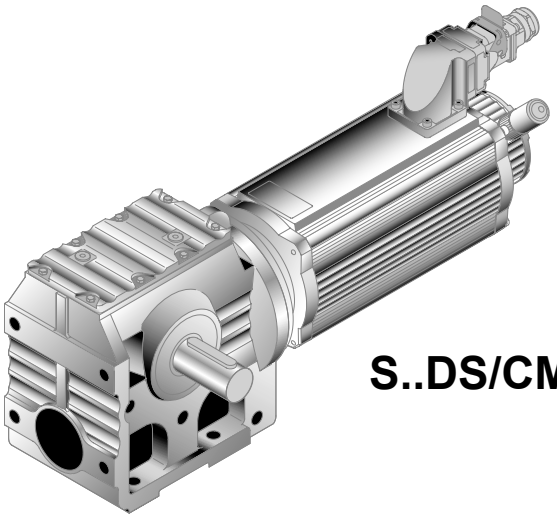

S..DS/CM..

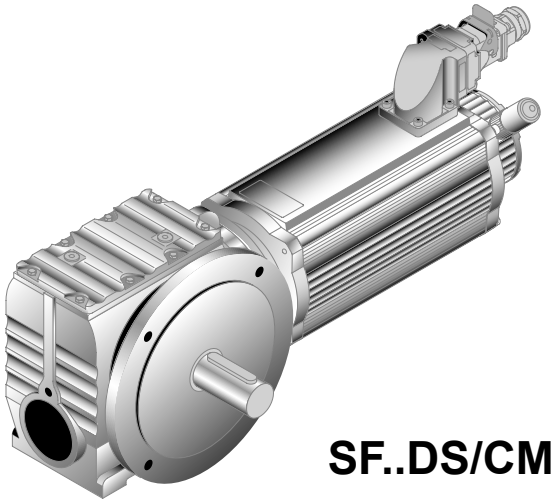

SF..DS/CM..

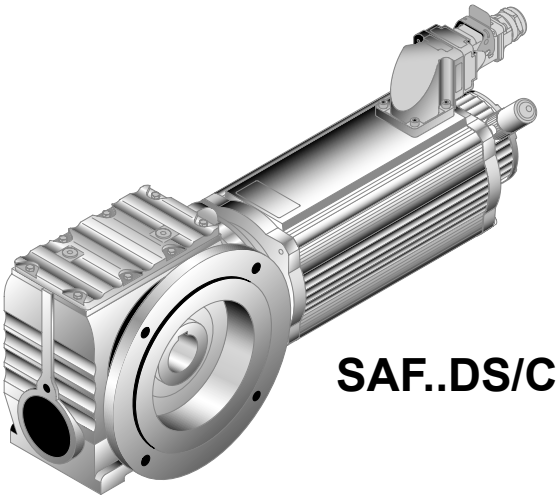

SAF..DS/CM..

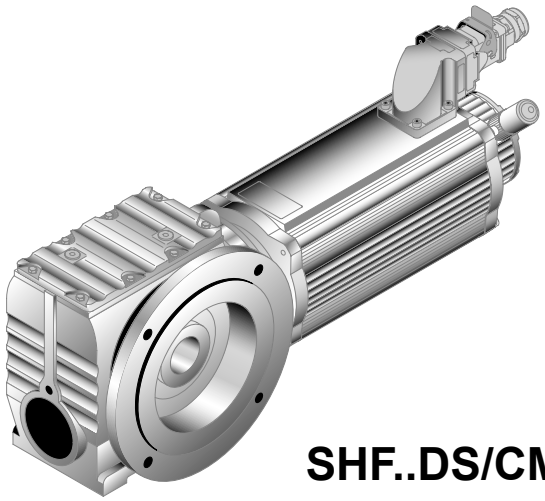

SHF..DS/CM..

52503AXX

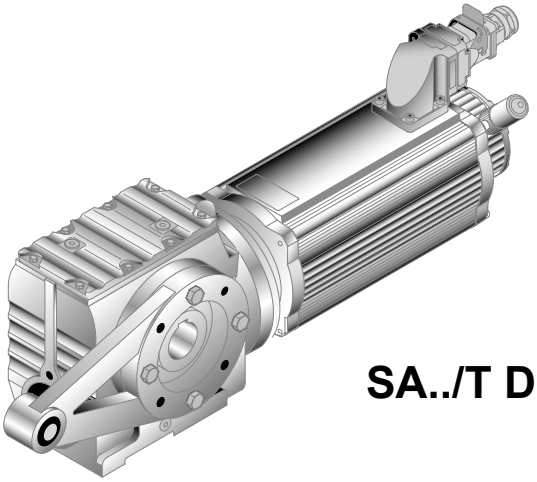

SA../T DS/CM..

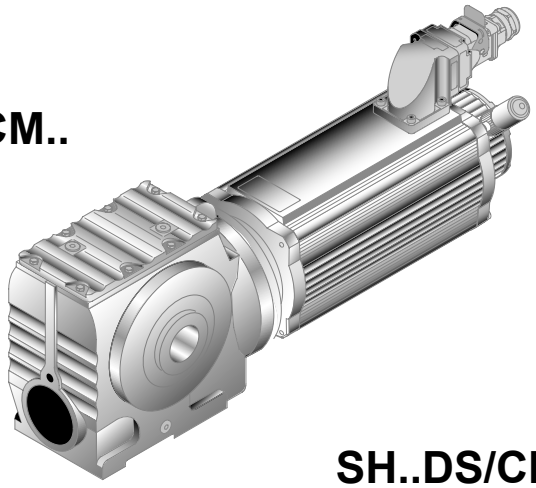

SH..DS/CM..

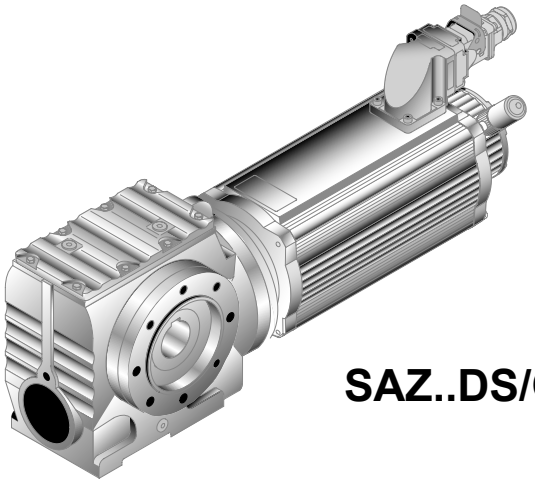

SAZ..DS/CM..

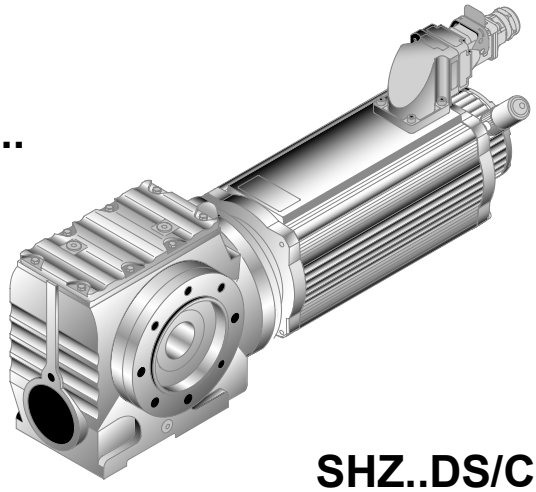

SHZ..DS/CM..

52504AXX

11.2 S 37 / CMP / DS / CM [Nm]

M_{aDyn} [Nm]		CMP						DS			CM	
	i	40M	50S	50M	50L	63S	63M	56M	56L	56H	71S	71M
S37 2	6.8	22	31	>60	>60	>60	>60	22	45	>60	>60	>60
	8	26	36	>61	>61	>61	>61	26	52	>61	>61	>61
	9.02	30	41	>62	>62	>62	>62	30	60	>62	>62	>62
	10.23	33	46	>63	>63	>63	>63	33	>63	>63	>63	>63
	10.91	36	49	>64	>64	>64	>64	36	>64	>64	>64	>64
	12.48	41	56	>64	>64	>64	>64	41	>64	>64	>64	>64
	13.39	43	59	>65	>65	>65	>65	43	>65	>65	>65	>65
	15.53	50	>66	>66		>66		50	>66	>66		
	18.24	58	>67					58	>67			
	19.13	57	79	>93	>93	>93	>93	57	>93	>93	>93	>93
	19.89	63	>68					63	>68			
	22.5	67	91	>95	>95	>95	>95	67	>95	>95	>95	>95
	25.38	75	>96	>96	>96	>96	>96	75	>96	>96	>96	>96
	28.76	84	>97	>97	>97	>97	>97	84	>97	>97	>97	>97
	30.68	90	>98	>98	>98	>98	>98	90	>98	>98	>98	>98
	35.1	>99	>99	>99	>99	>99	>99	>99	>99	>99	>99	>99
	37.66	>100	>100	>100	>100	>100	>100	>100	>100	>100	>100	>100
	43.68	>101	>101	>101		>101		>101	>101	>101		
	51.3	>103	>103					>103	>103			
	55.93	>104	>104					>104	>104			

m [kg]		CMP						DS			CM	
	s	40M	50S	50M	50L	63S	63M	56M	56L	56H	71S	71M
S37	2	8.0	9.7	11	12	12	13	8.3	9.3	10	14	16
SF: + 1.3 kg / SA: + -0.3 kg / SAF: + 1.3 kg												

CMP.. / DS.. / CM..				c_T			
	i	n_{epk} [1/min]	η [%]	S [Nm/']	SF [Nm/']	SA [Nm/']	SAF [Nm/']
S37 2	6.8	4500	87	-	-	-	-
	8	4500	86	-	-	-	-
	9.02	4500	87	-	-	-	-
	10.23	4500	86	-	-	-	-
	10.91	4500	86	-	-	-	-
	12.48	4500	86	-	-	-	-
	13.39	4500	85	-	-	-	-
	15.53	4500	85	-	-	-	-
	18.24	4500	84	-	-	-	-
	19.13	4500	79	-	-	-	-
	19.89	4500	84	-	-	-	-
	22.5	4500	78	-	-	-	-
	25.38	4500	78	-	-	-	-
	28.76	4500	77	-	-	-	-
	30.68	4500	77	-	-	-	-
	35.1	4500	76	-	-	-	-
	37.66	4500	76	-	-	-	-
	43.68	4500	75	-	-	-	-
	51.3	4500	74	-	-	-	-
	55.93	4500	73	-	-	-	-

CMP.. / DS.. / CM..							F_{Ramax}				F_{Rapk}			
	i	M_{amax} [Nm]	M_{apk} [Nm]	$M_{aNotaus}$ [Nm]	n_{ak} [1/min]	J_G 10^{-4} [kgm^2]	S [N]	SF [N]	SA [N]	SAF [N]	S [N]	SF [N]	SA [N]	SAF [N]
S37 2	6.8	43	60	73	29	0.47	1630	1840	2360	2360	3000	3000	4000	4000
	8	45	61	77	25	0.36	1730	1950	2500	2500	3000	3000	4000	4000
	9.02	46	62	78	22	0.30	1810	2040	2610	2610	3000	3000	4000	4000
	10.23	47	63	80	20	0.24	1900	2140	2740	2740	3000	3000	4000	4000
	10.91	48	64	82	18	0.22	1940	2190	2800	2800	3000	3000	4000	4000
	12.48	48	64	82	16	0.18	2060	2320	2970	2970	3000	3000	4000	4000
	13.39	49	65	83	15	0.16	2110	2370	3040	3040	3000	3000	4000	4000
	15.53	50	66	85	13	0.13	2240	2510	3220	3220	3000	3000	4000	4000
	18.24	52	67	88	11	0.10	2380	2660	3410	3410	3000	3000	4000	4000
	19.13	71	93	121	10	0.43	2380	2670	3420	3420	3000	3000	4000	4000
	19.89	52	68	88	10	0.090	2470	2760	3540	3540	3000	3000	4000	4000
	22.5	73	95	124	9	0.32	2530	2840	3630	3630	3000	3000	4000	4000
	25.38	74	96	126	8	0.27	2660	2980	3810	3810	3000	3000	4000	4000
	28.76	75	97	128	7	0.22	2800	3000	4000	4000	3000	3000	4000	4000
	30.68	76	98	129	16	0.20	2860	3000	4000	4000	3000	3000	4000	4000
	35.1	78	99	133	14	0.16	3000	3000	4000	4000	3000	3000	4000	4000
	37.66	79	100	134	13	0.15	3000	3000	4000	4000	3000	3000	4000	4000
	43.68	81	101	138	16	0.12	3000	3000	4000	4000	3000	3000	4000	4000
	51.3	81	103	138	14	0.090	3000	3000	4000	4000	3000	3000	4000	4000
	55.93	81	104	138	13	0.080	3000	3000	4000	4000	3000	3000	4000	4000

11.3 S 37 / CMP / DS / CM [mm]

02 001 00 07

S37..

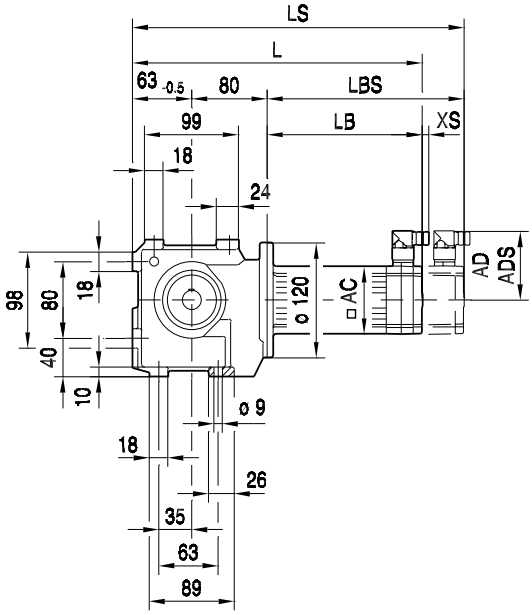

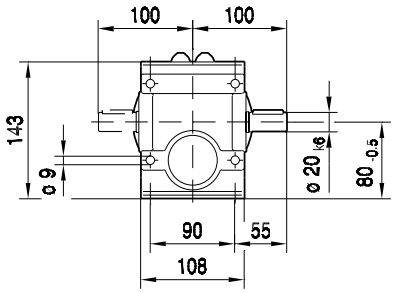

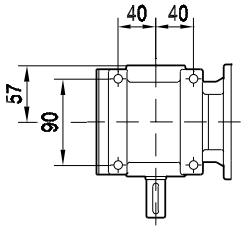

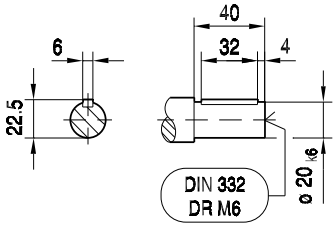

(→ 📖 150)	CMP40M	CMP50S	CMP50M	CMP50L	CMP63S	CMP63M		
AC	57	73	73	73	88	88		
AD	75	82	82	82	89	89		
ADS	75	82	82	82	89	89		
L	286	288	327	366	323	373		
LS	316	317	356	395	351	401		
LB	143	145	184	223	180	230		
LBS	173	174	213	252	208	258		
XS	19	18	18	18	14	14		

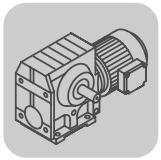

02 002 00 07

SF37..

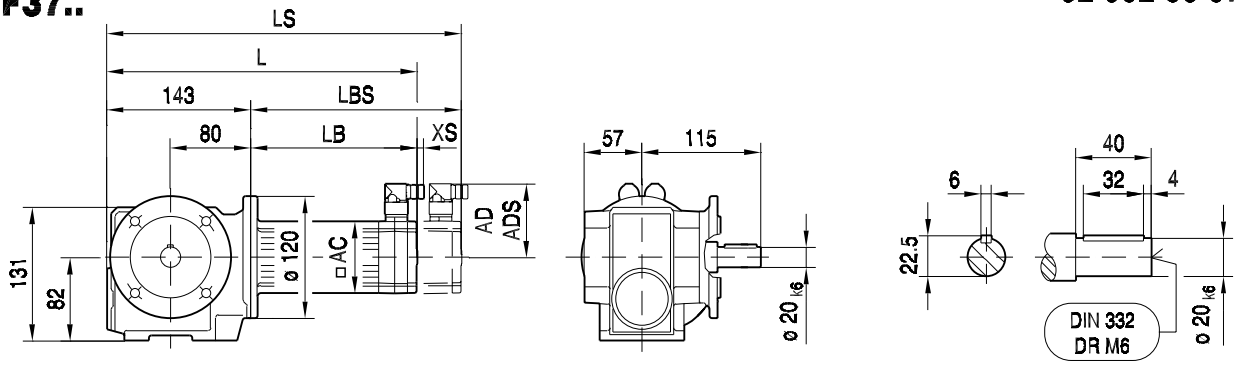

ø 120

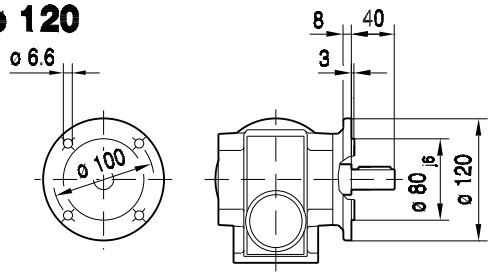

ø 160

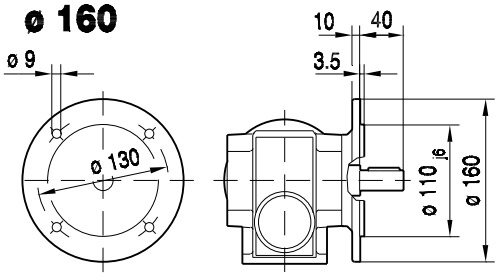

SAF37..

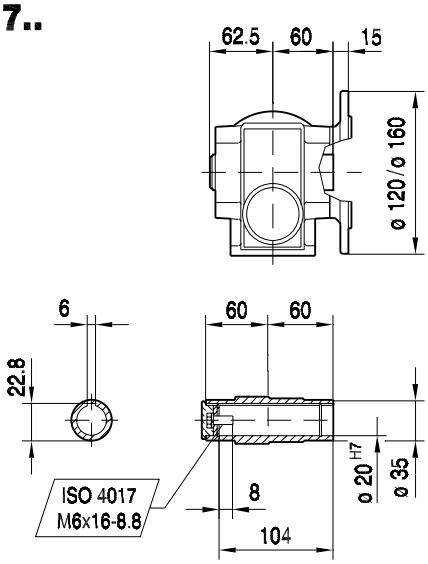

SHF37..

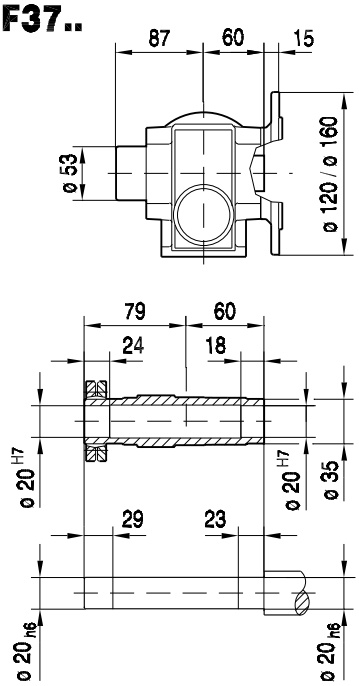

(→ 📖 150)	CMP40M	CMP50S	CMP50M	CMP50L	CMP63S	CMP63M		
AC	57	73	73	73	88	88		
AD	75	82	82	82	89	89		
ADS	75	82	82	82	89	89		
L	286	288	327	366	323	373		
LS	316	317	356	395	351	401		
LB	143	145	184	223	180	230		
LBS	173	174	213	252	208	258		
XS	19	18	18	18	14	14		

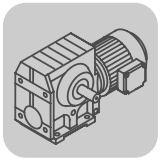

S..CMP, DS, CM
S 37 / CMP / DS / CM [mm]

02 003 00 07

SA37..

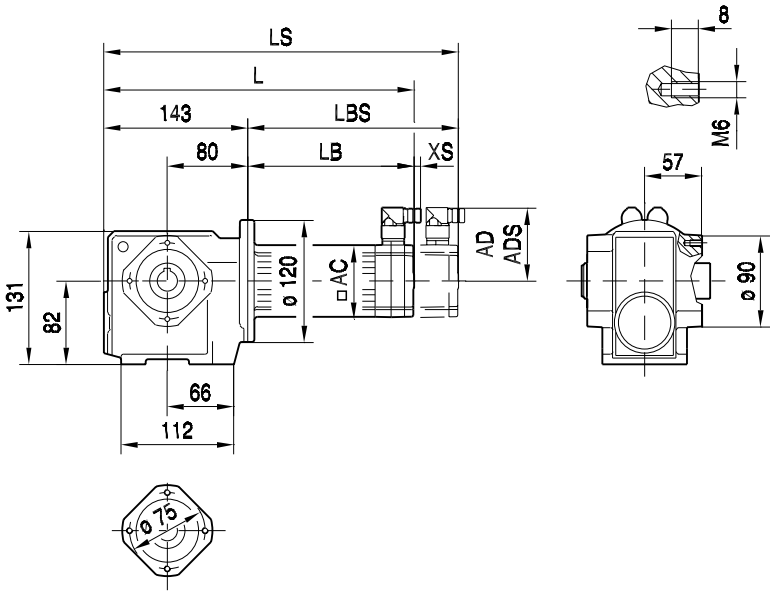

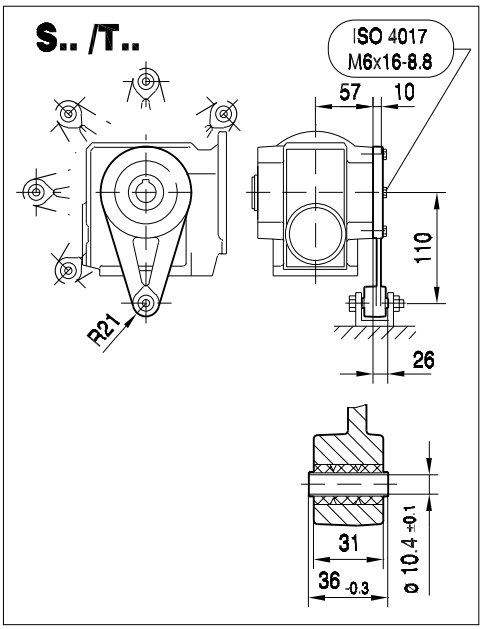

SA37..

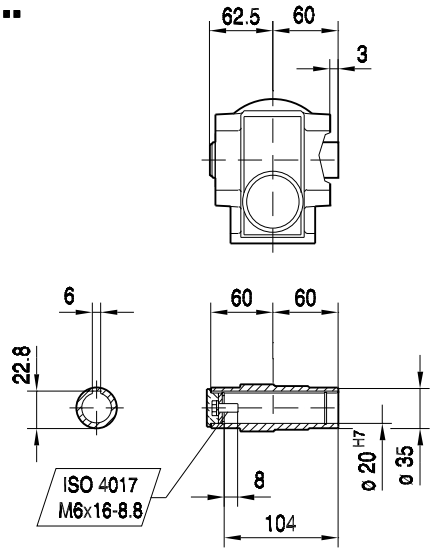

SH37..

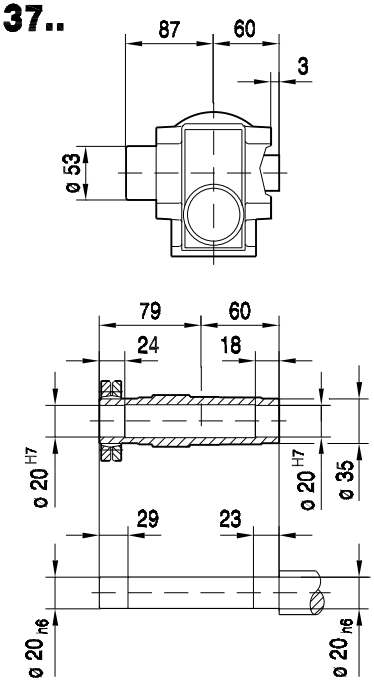

(→ 📖 150)	CMP40M	CMP50S	CMP50M	CMP50L	CMP63S	CMP63M		
AC	57	73	73	73	88	88		
AD	75	82	82	82	89	89		
ADS	75	82	82	82	89	89		
L	286	288	327	366	323	373		
LS	316	317	356	395	351	401		
LB	143	145	184	223	180	230		
LBS	173	174	213	252	208	258		
XS	19	18	18	18	14	14		

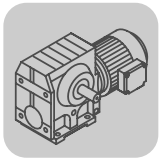

02 004 00 07

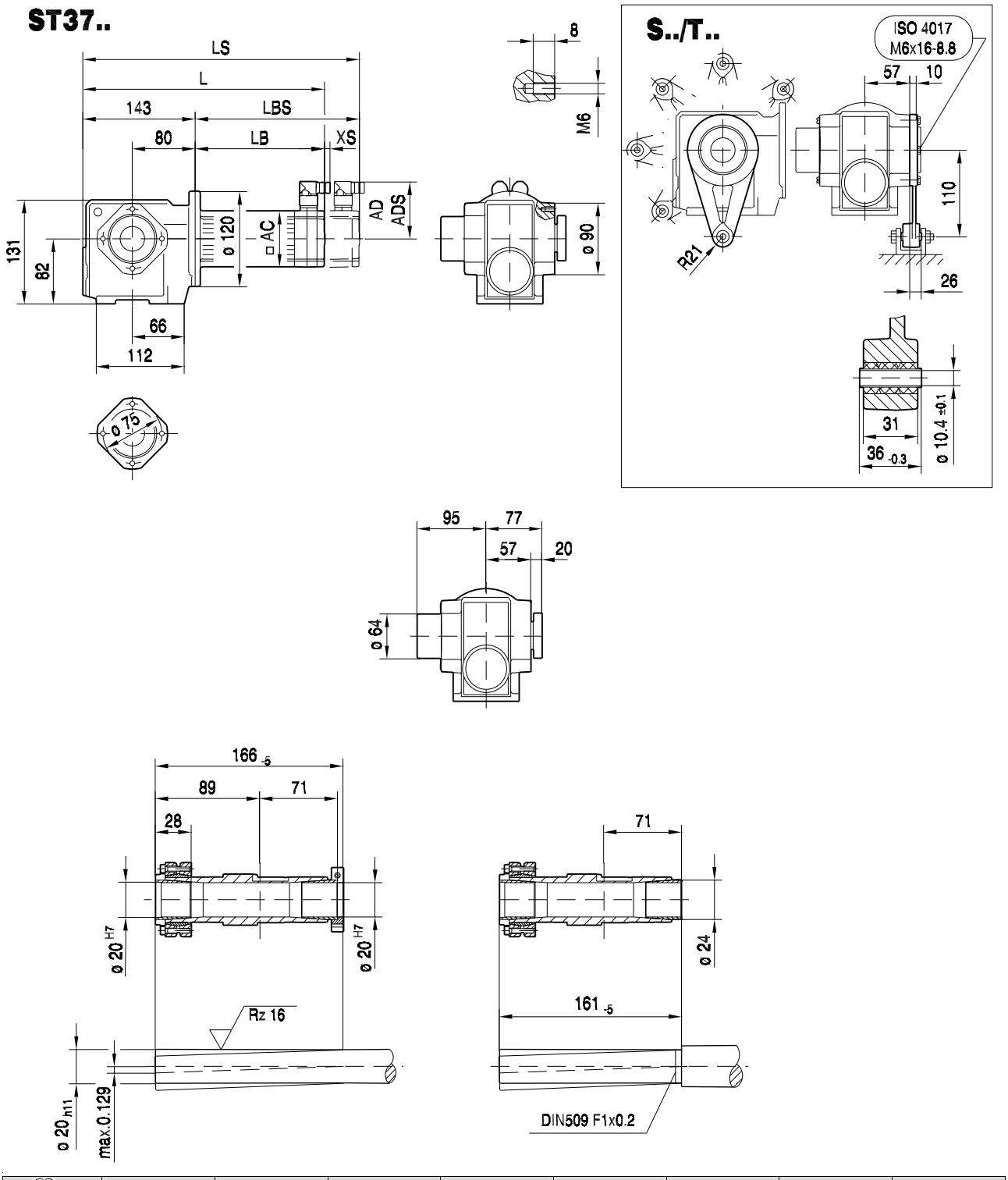

(→ 📖 150)	CMP40M	CMP50S	CMP50M	CMP50L	CMP63S	CMP63M		
AC	57	73	73	73	88	88		
AD	75	82	82	82	89	89		
ADS	75	82	82	82	89	89		
L	286	288	327	366	323	373		
LS	316	317	356	395	351	401		
LB	143	145	184	223	180	230		
LBS	173	174	213	252	208	258		
XS	19	18	18	18	14	14		

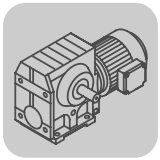

S..CMP, DS, CM
S 37 / CMP / DS / CM [mm]

05 036 01 01

S37..

DS56..

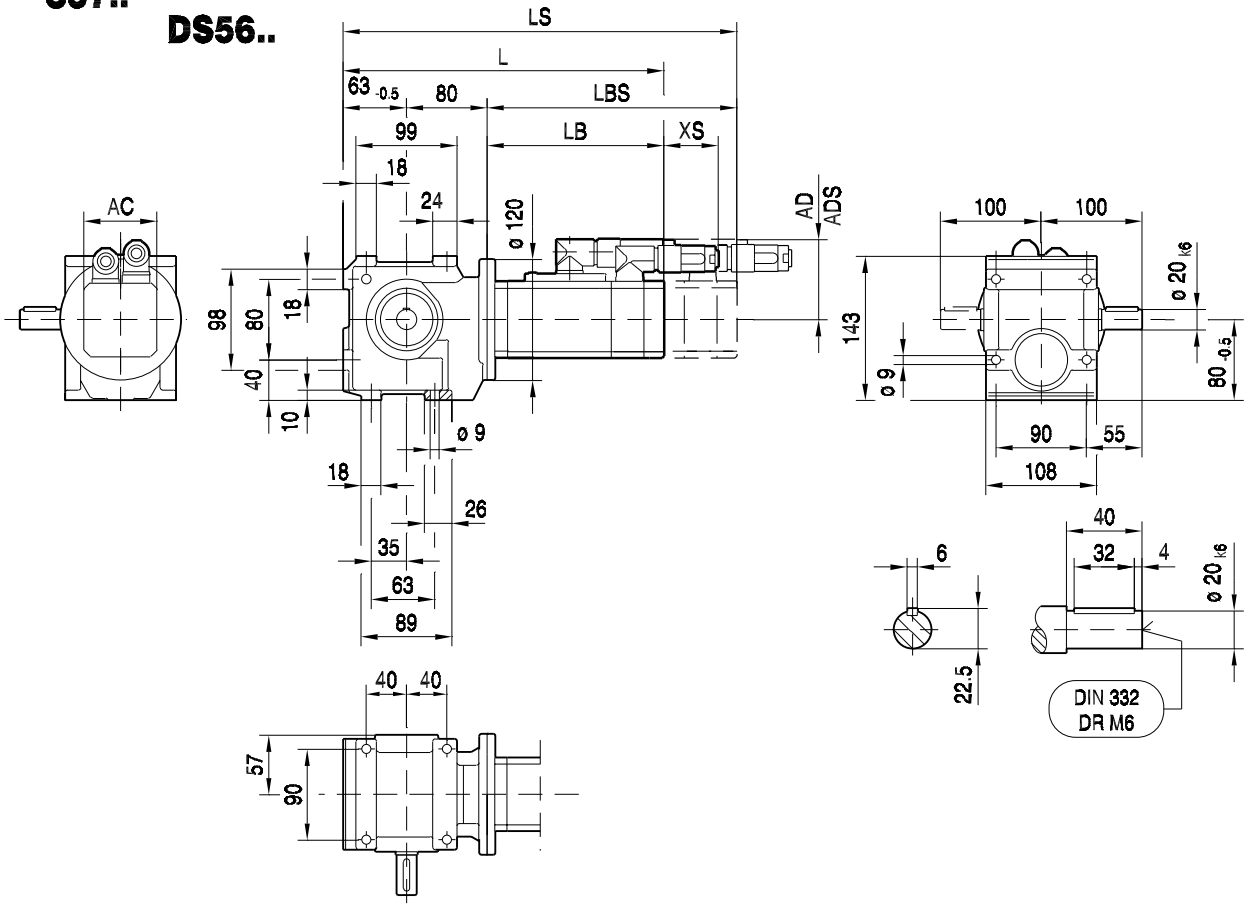

CM..

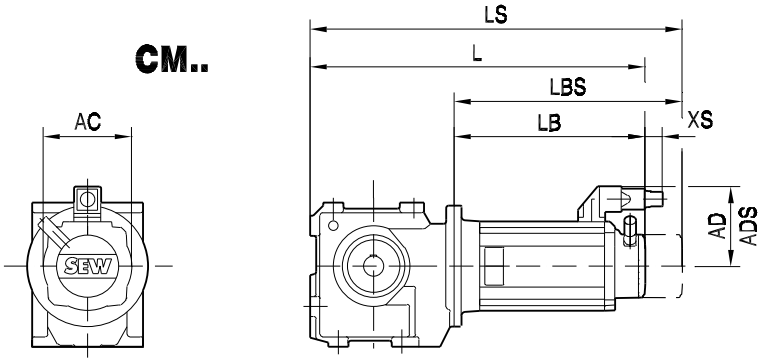

(→ 📖 150)	DS56M	DS56L	DS56H	CM71S	CM71M						
AC	73	73	73	117	117						
AD	71	71	77	122	122						
ADS	77	77	77	122	122						
L	280	312	415	381	401						
LS	310	342	415	463	483						
LB	137	169	272	238	258						
LBS	167	199	272	320	340						
XS	70	70	51	45	45						

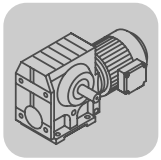

SF37.. **DS56..**

05 037 01 01

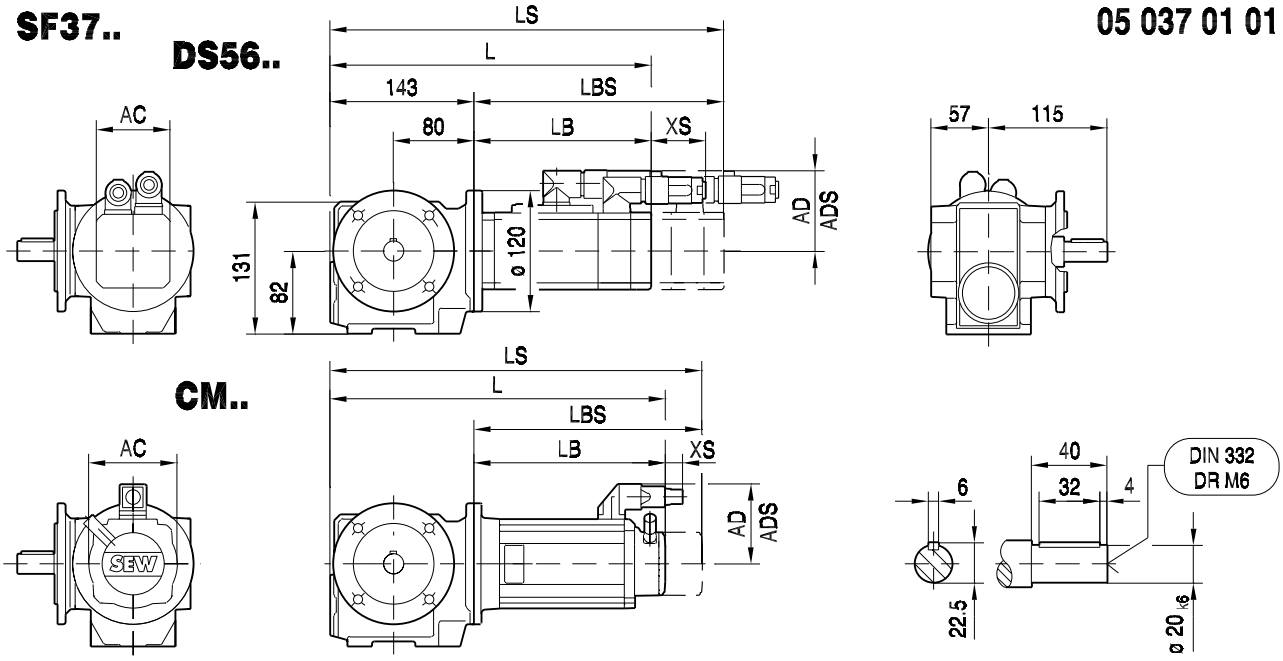

ø 120

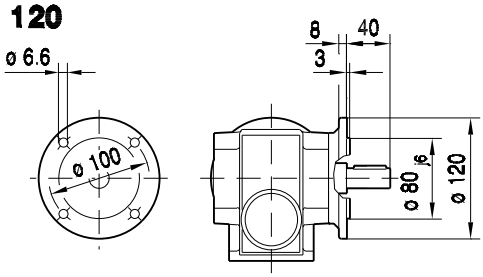

ø 160

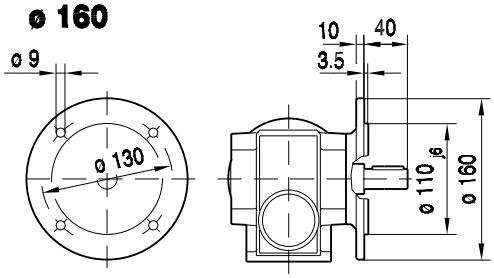

SAF37..

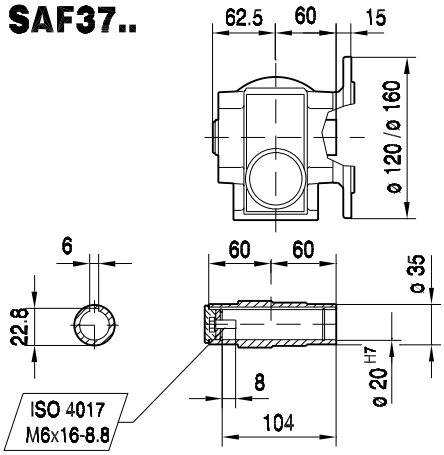

SHF37..

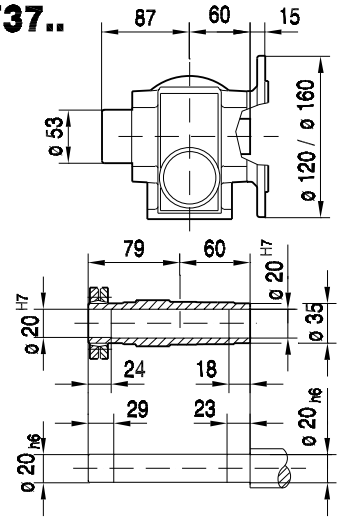

(→ 📖 150)	DS56M	DS56L	DS56H	CM71S	CM71M						
AC	73	73	73	117	117						
AD	71	71	77	122	122						
ADS	77	77	77	122	122						
L	280	312	415	381	401						
LS	310	342	415	463	483						
LB	137	169	272	238	258						
LBS	167	199	272	320	340						
XS	70	70	51	45	45						

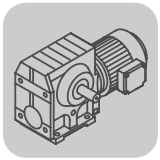

S..CMP, DS, CM
S 37 / CMP / DS / CM [mm]

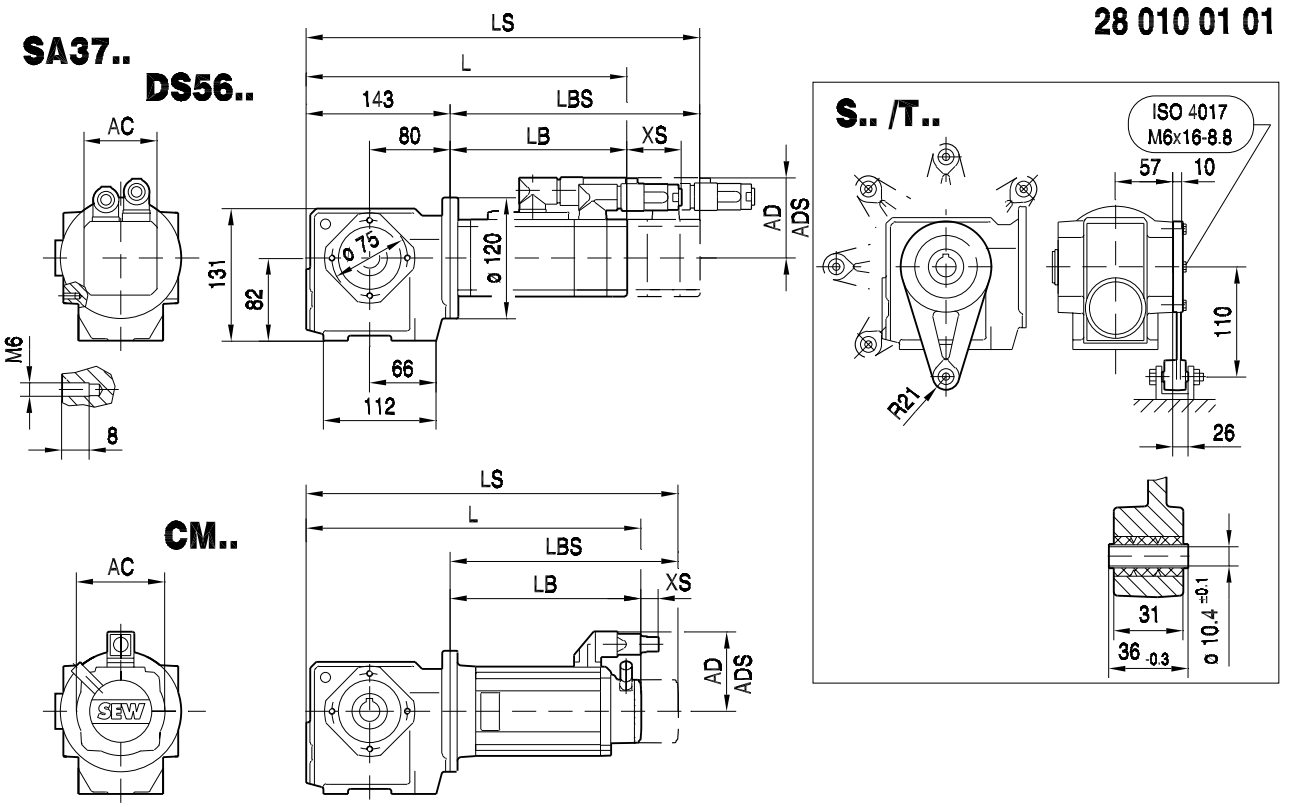

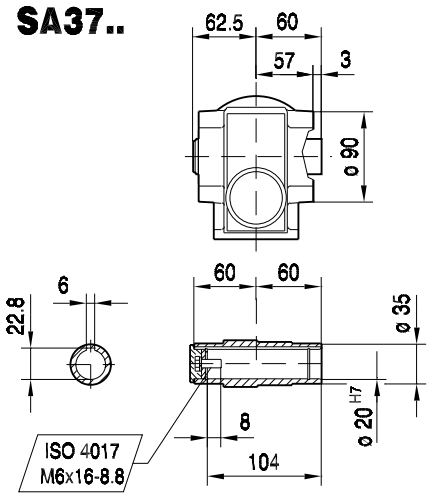

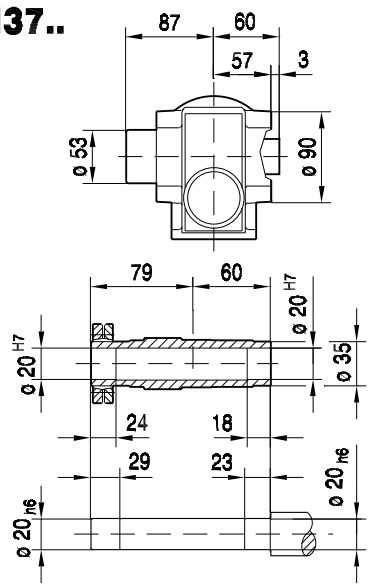

(→ 📖 150)	DS56M	DS56L	DS56H	CM71S	CM71M						
AC	73	73	73	117	117						
AD	71	71	77	122	122						
ADS	77	77	77	122	122						
L	280	312	415	381	401						
LS	310	342	415	463	483						
LB	137	169	272	238	258						
LBS	167	199	272	320	340						
XS	70	70	51	45	45						

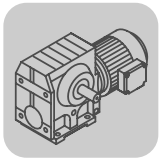

28 019 00 04

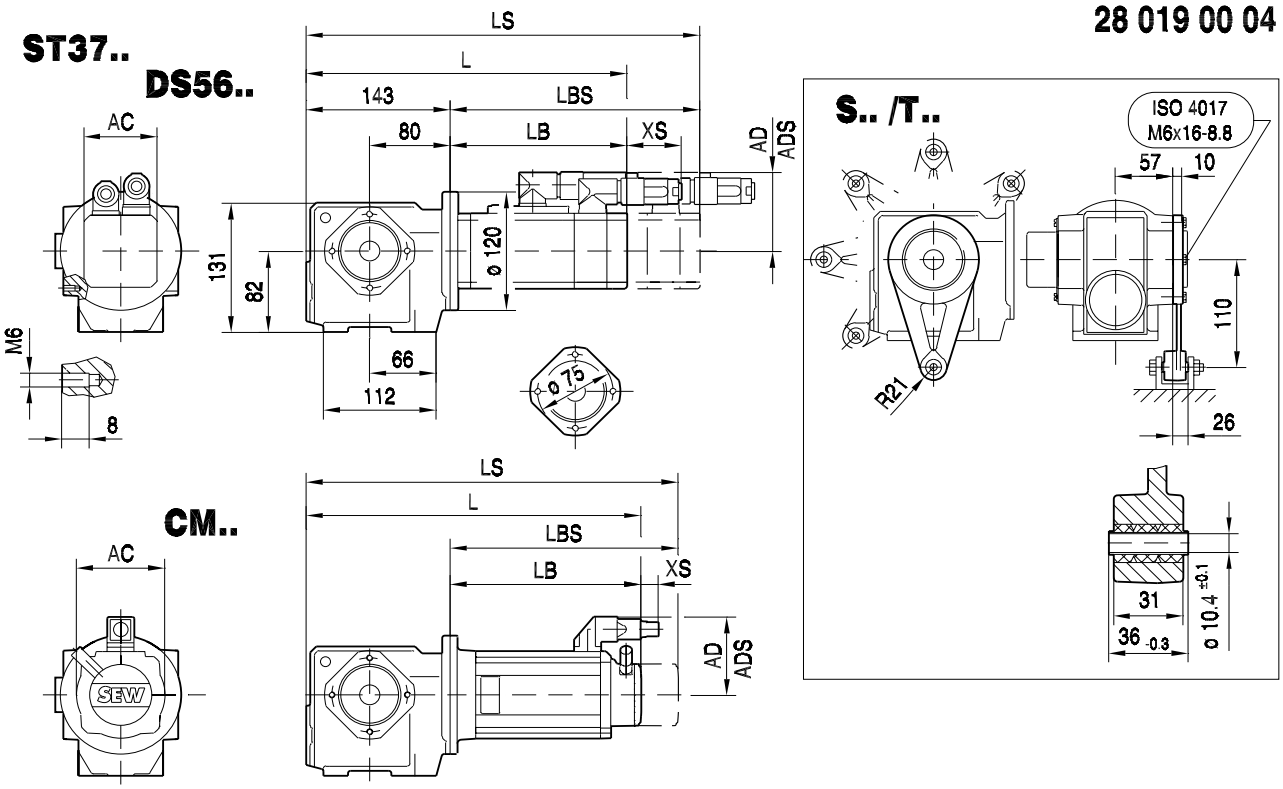

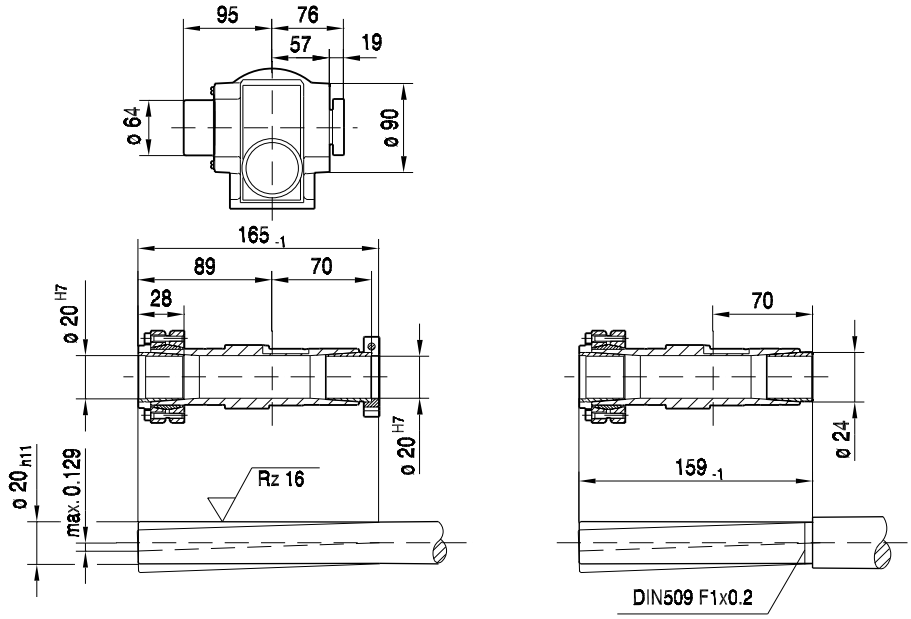

(→ 📖 150)	DS56M	DS56L	DS56H	CM71S	CM71M						
AC	73	73	73	117	117						
AD	71	71	77	122	122						
ADS	77	77	77	122	122						
L	280	312	415	381	401						
LS	310	342	415	463	483						
LB	137	169	272	238	258						
LBS	167	199	272	320	340						
XS	70	70	51	45	45						

11.4 S 47 / CMP / DS / CM [Nm]

M_{aDyn} [Nm]		CMP							DS			CM			
	i	40M	50S	50M	50L	63S	63M	63L	56M	56L	56H	71S	71M	71L	90S
S47 2	7.28	24	33	65	98	70	>129	>129	24	48	96	105	>129	>129	>129
	8.64	29	40	78	117	84	>146	>146	29	58	116	125	>146	>146	>146
	9.23	31	42	84	125	90	>146	>146	31	62	123	134	>146	>146	>146
	10.8	36	49	98	>145	105	>145	>145	36	72	144	>145	>145	>145	>145
	12.1	40	55	110	>145	118	>145	>145	40	81	>145	>145	>145	>145	>145
	14.24	47	64	128	>144	138	>144	>144	47	94	>144	>144	>144	>144	>144
	16.47	54	75	>144	>144	>144	>144		54	109	>144	>144	>144		
	17.62	58	79	>144	>144	>144	>144		58	115	>144	>144	>144		
	19.54			163	>184	176	>184	>184			>184	>184	>184	>184	>184
	20.33	66	91	>143		>143			66	133	>143				
	23.2	71	97	191	>200	>200	>200	>200	71	141	>200	>200	>200	>200	>200
	24.77	75	103	204	>205	>205	>205	>205	75	151	>205	>205	>205	>205	>205
	29	87	119	>215	>215	>215	>215	>215	87	174	>215	>215	>215	>215	>215
	32.48	98	133	>215	>215	>215	>215	>215	98	195	>215	>215	>215	>215	>215
	38.23	113	155	>215	>215	>215	>215	>215	113	>215	>215	>215	>215	>215	>215
	44.22	129	177	>210	>210	>210	>210		129	>210	>210	>210	>210		
	47.32	138	189	>210	>210	>210	>210		138	>210	>210	>210	>210		
	54.59	158	>210	>210		>210			158	>210	>210				
	63.8	182	>210						182	>210					
	69.39	198	>210						198	>210					

m [kg]		CMP							DS			CM			
	s	40M	50S	50M	50L	63S	63M	63L	56M	56L	56H	71S	71M	71L	90S
S47	2	11	13	14	15	15	16	18	11	12	13	17	19	22	26
SF: + 3.6 kg / SA: + 1.1 kg / SAF: + 2.8 kg															

CMP.. / DS.. / CM..				c_T			
	i	n_{epk} [1/min]	η [%]	S [Nm/']	SF [Nm/']	SA [Nm/']	SAF [Nm/']
S47 2	7.28	4500	87	-	-	-	-
	8.64	4500	88	-	-	-	-
	9.23	4500	88	-	-	-	-
	10.8	4500	88	-	-	-	-
	12.1	4500	88	-	-	-	-
	14.24	4500	87	-	-	-	-
	16.47	4500	87	-	-	-	-
	17.62	4500	86	-	-	-	-
	19.54	4500	81	-	-	-	-
	20.33	4500	86	-	-	-	-
	23.2	4500	80	-	-	-	-
	24.77	4500	80	-	-	-	-
	29	4500	79	-	-	-	-
	32.48	4500	79	-	-	-	-
	38.23	4500	78	-	-	-	-
	44.22	4500	77	-	-	-	-
	47.32	4500	77	-	-	-	-
	54.59	4500	76	-	-	-	-
	63.8	4500	75	-	-	-	-
	69.39	4500	75	-	-	-	-

CMP.. / DS.. / CM..							F_{Ramax}				F_{Rapk}			
	i	M_{amax} [Nm]	M_{apk} [Nm]	$M_{aNotaus}$ [Nm]	n_{ak} [1/min]	J_G 10^{-4} [kgm^2]	S [N]	SF [N]	SA [N]	SAF [N]	S [N]	SF [N]	SA [N]	SAF [N]
S47 2	7.28	103	129	175	27	1.1	2110	2690	2940	2940	5360	5870	7000	7000
	8.64	109	146	185	23	0.83	2230	2840	3110	3110	5260	5780	7000	7000
	9.23	109	146	185	22	0.74	2310	2930	3210	3210	5260	5780	7000	7000
	10.8	109	145	185	19	0.57	2500	3150	3480	3480	5270	5790	7000	7000
	12.1	109	145	185	17	0.47	2650	3310	3670	3670	5270	5790	7000	7000
	14.24	110	144	187	14	0.35	2850	3540	3950	3950	5270	5790	7000	7000
	16.47	110	144	187	12	0.28	3060	3770	4230	4230	5270	5790	7000	7000
	17.62	110	144	187	11	0.26	3160	3880	4360	4360	5270	5790	7000	7000
	19.54	144	184	245	10	0.94	3370	4120	4660	4660	5200	5710	7000	7000
	20.33	110	143	187	10	0.20	3370	4130	4650	4650	5280	5800	7000	7000
	23.2	152	200	258	9	0.72	3570	4360	4940	4940	5110	5620	7000	7000
	24.77	155	205	264	8	0.65	3650	4460	5050	5050	5080	5590	7000	7000
	29	155	215	264	7	0.49	3920	4760	5420	5420	5020	5530	7000	7000
	32.48	155	215	264	6	0.41	4120	4990	5690	5690	5020	5530	7000	7000
	38.23	155	215	264	5	0.31	4420	5330	6100	6100	5020	5530	7000	7000
	44.22	155	210	264	5	0.25	4710	5660	6490	6490	5050	5560	7000	7000
	47.32	155	210	264	4	0.23	4850	5810	6680	6680	5050	5560	7000	7000
	54.59	155	210	264	9	0.18	5150	5870	7000	7000	5050	5560	7000	7000
	63.8	155	210	264	8	0.15	5370	5870	7000	7000	5050	5560	7000	7000
	69.39	155	210	264	7	0.13	5370	5870	7000	7000	5050	5560	7000	7000

11.5 S 47 / CMP / DS / CM [mm]

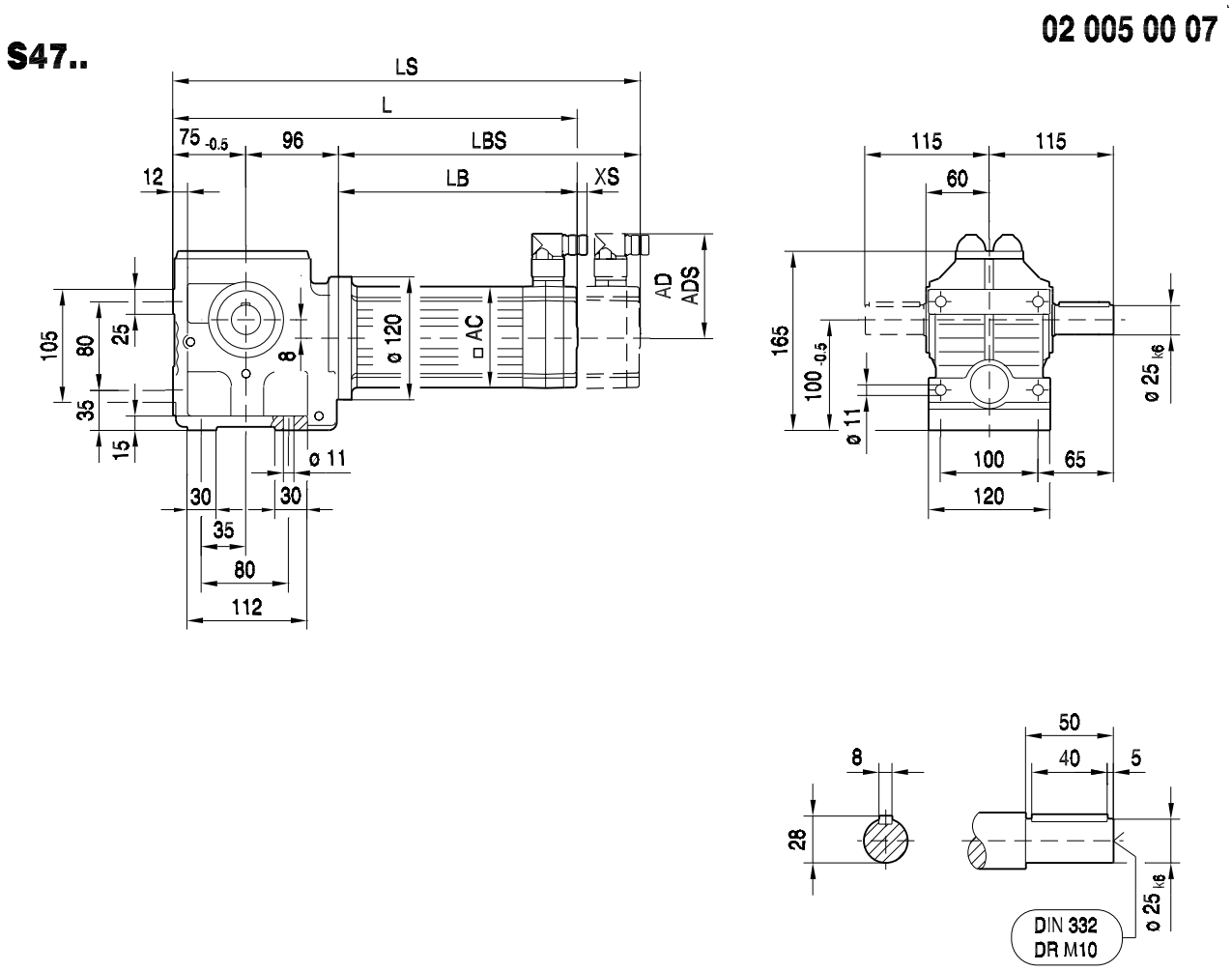

(→ 📖 150)	CMP40M	CMP50S	CMP50M	CMP50L	CMP63S	CMP63M	CMP63L	
AC	57	73	73	73	88	88	88	
AD	75	82	82	82	89	89	89	
ADS	75	82	82	82	89	89	89	
L	314	316	355	394	351	401	454	
LS	344	345	384	423	379	429	483	
LB	143	145	184	223	180	230	283	
LBS	173	174	213	252	208	258	312	
XS	19	18	18	18	14	14	14	

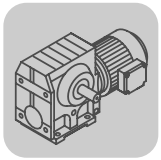

02 006 00 07

SF47..

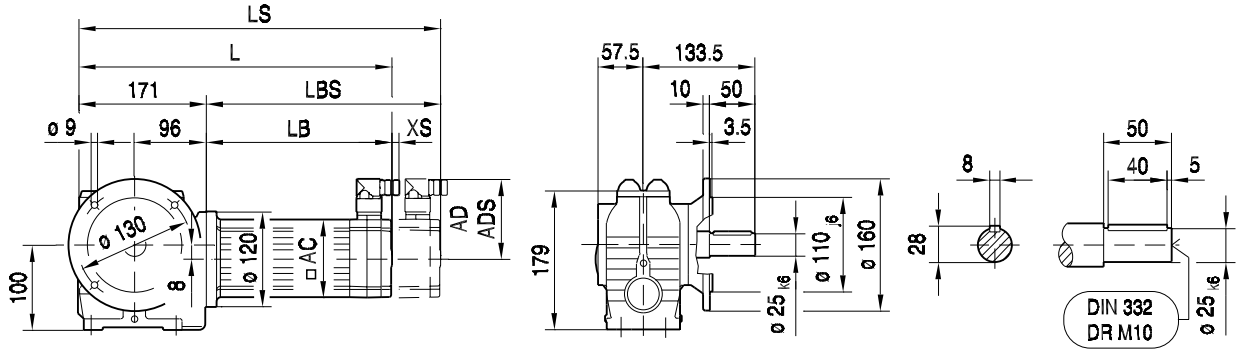

SAF47..

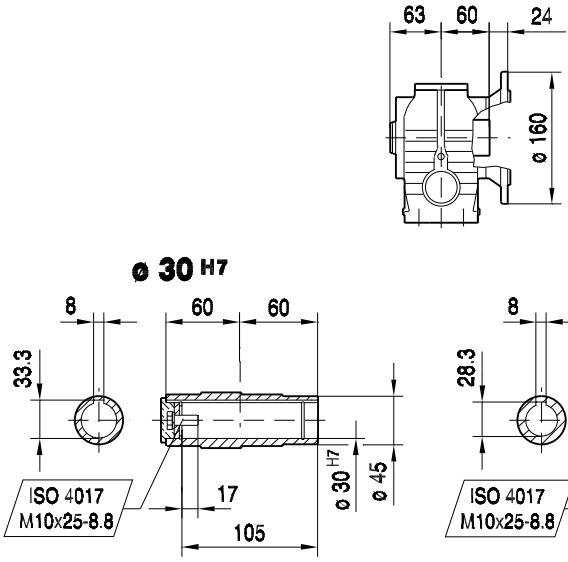

SHF47..

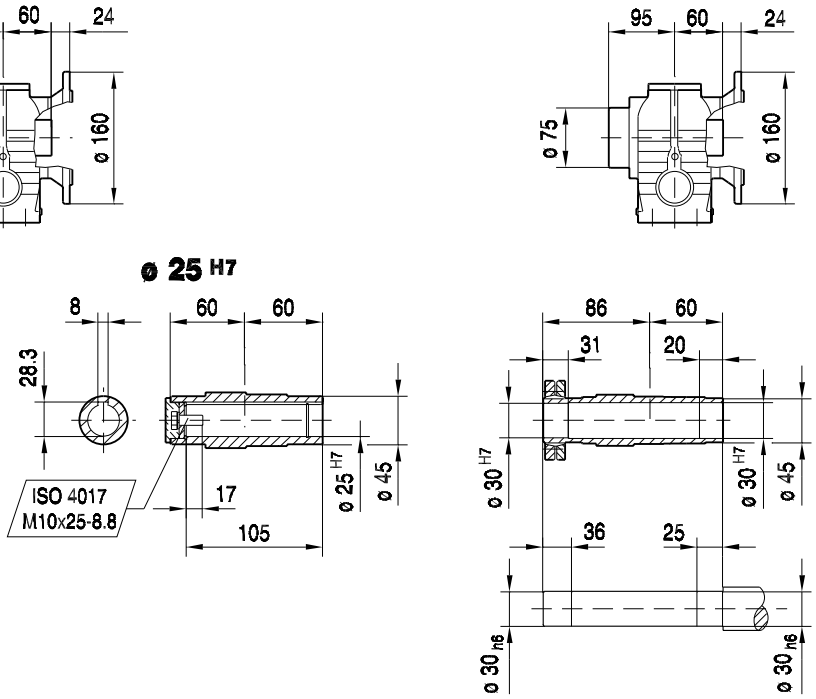

(→ 📖 150)	CMP40M	CMP50S	CMP50M	CMP50L	CMP63S	CMP63M	CMP63L	
AC	57	73	73	73	88	88	88	
AD	75	82	82	82	89	89	89	
ADS	75	82	82	82	89	89	89	
L	314	316	355	394	351	401	454	
LS	344	345	384	423	379	429	483	
LB	143	145	184	223	180	230	283	
LBS	173	174	213	252	208	258	312	
XS	19	18	18	18	14	14	14	

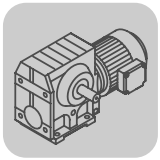

S..CMP, DS, CM
S 47 / CMP / DS / CM [mm]

02 007 00 07

SA47..

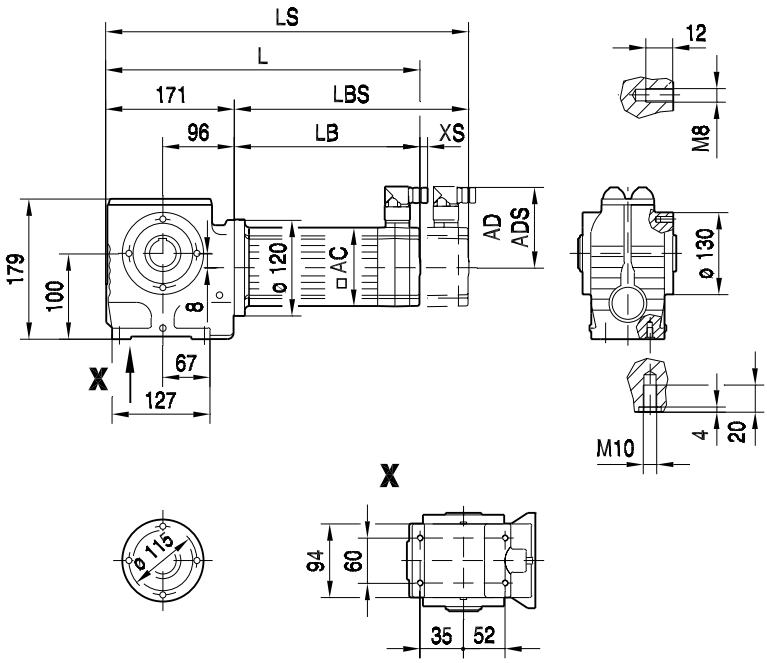

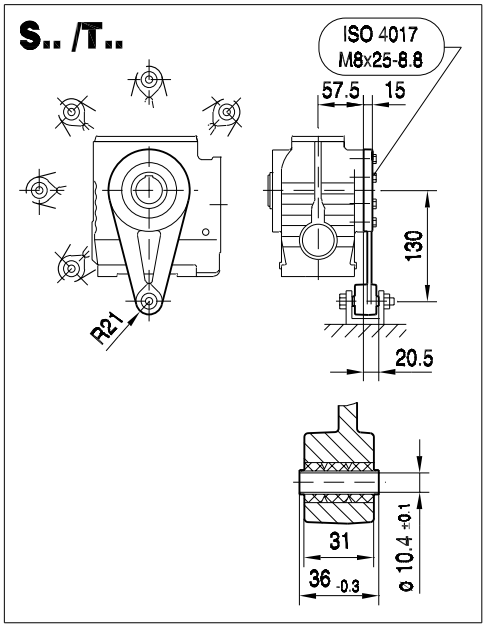

SA47..

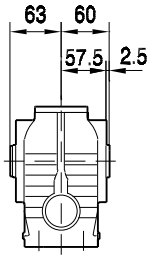

SH47..

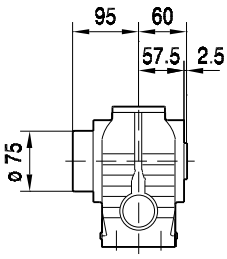

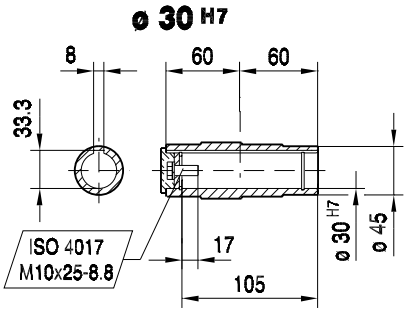

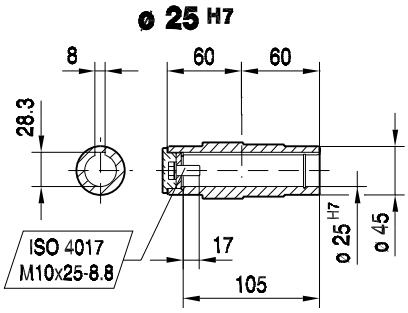

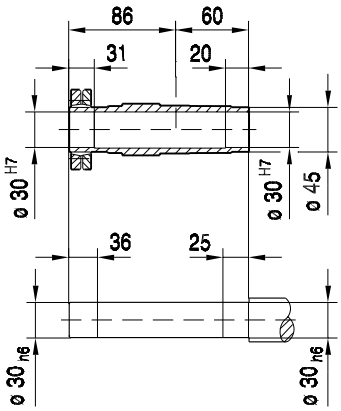

(→ 📖 150)	CMP40M	CMP50S	CMP50M	CMP50L	CMP63S	CMP63M	CMP63L	
AC	57	73	73	73	88	88	88	
AD	75	82	82	82	89	89	89	
ADS	75	82	82	82	89	89	89	
L	314	316	355	394	351	401	454	
LS	344	345	384	423	379	429	483	
LB	143	145	184	223	180	230	283	
LBS	173	174	213	252	208	258	312	
XS	19	18	18	18	14	14	14	

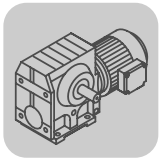

02 008 00 07

SAZ47..

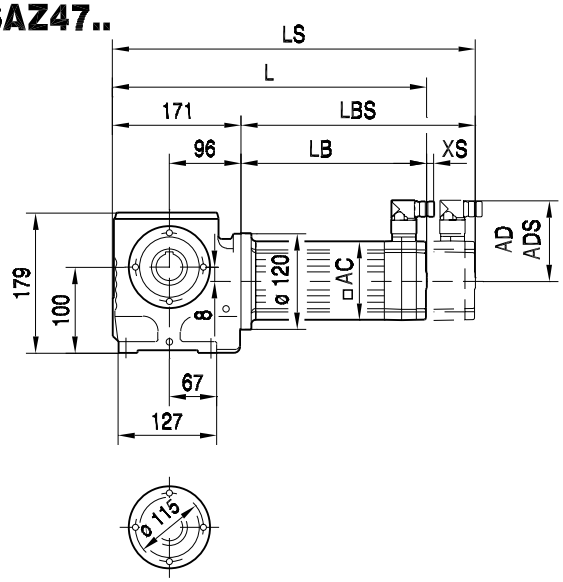

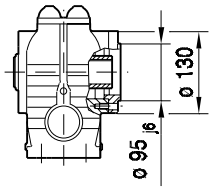

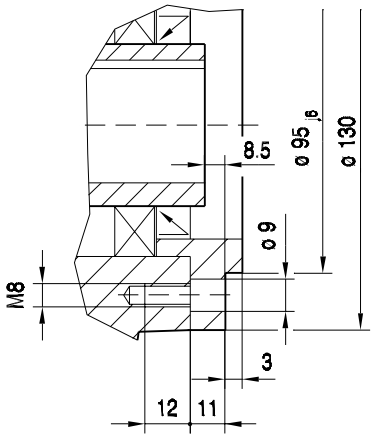

SAZ47..

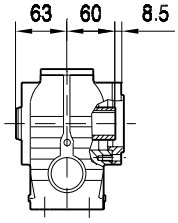

SHZ47..

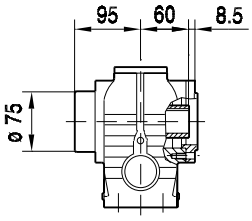

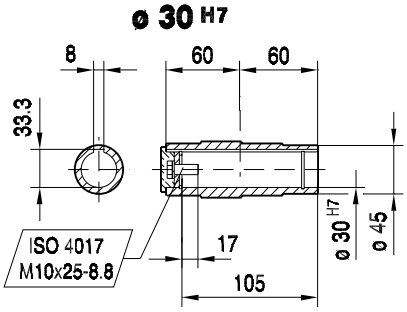

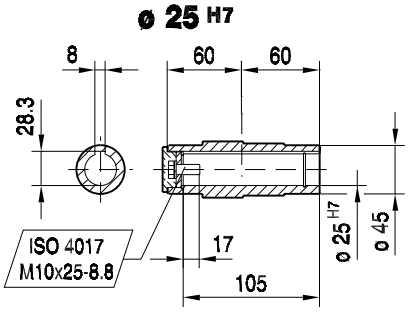

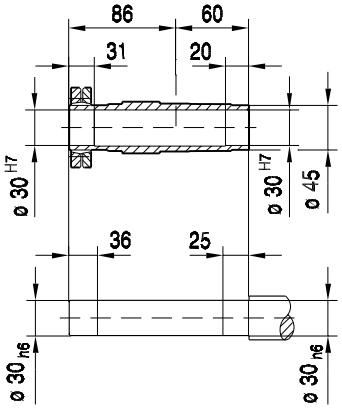

(→ 📖 150)	CMP40M	CMP50S	CMP50M	CMP50L	CMP63S	CMP63M	CMP63L	
AC	57	73	73	73	88	88	88	
AD	75	82	82	82	89	89	89	
ADS	75	82	82	82	89	89	89	
L	314	316	355	394	351	401	454	
LS	344	345	384	423	379	429	483	
LB	143	145	184	223	180	230	283	
LBS	173	174	213	252	208	258	312	
XS	19	18	18	18	14	14	14	

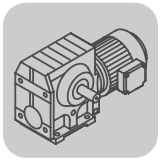

S..CMP, DS, CM
S 47 / CMP / DS / CM [mm]

02 009 00 07

ST47..

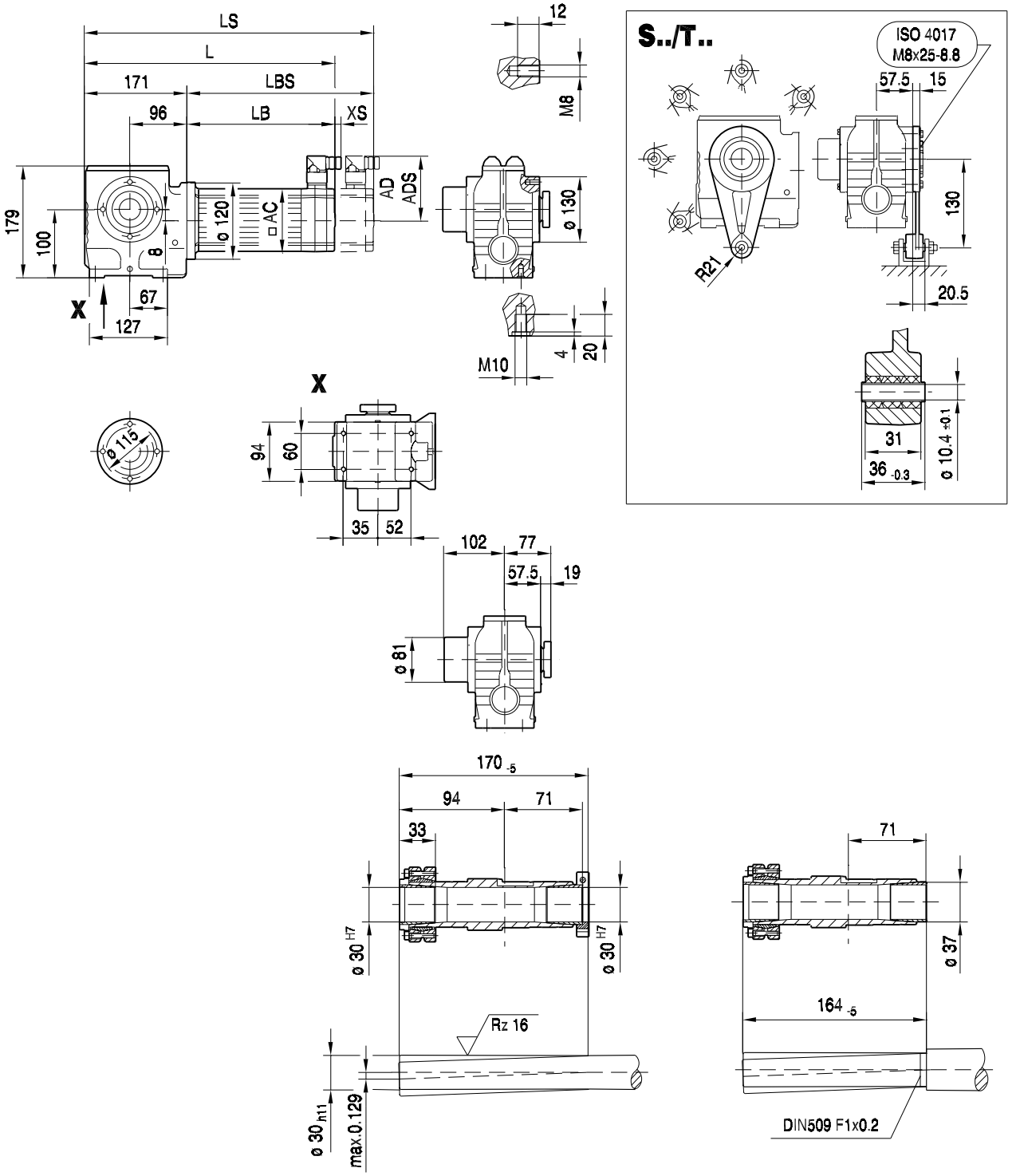

(→ 📖 150)	CMP40M	CMP50S	CMP50M	CMP50L	CMP63S	CMP63M	CMP63L	
AC	57	73	73	73	88	88	88	
AD	75	82	82	82	89	89	89	
ADS	75	82	82	82	89	89	89	
L	314	316	355	394	351	401	454	
LS	344	345	384	423	379	429	483	
LB	143	145	184	223	180	230	283	
LBS	173	174	213	252	208	258	312	
XS	19	18	18	18	14	14	14	

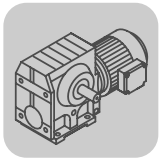

S47..

05 038 01 01

DS56..

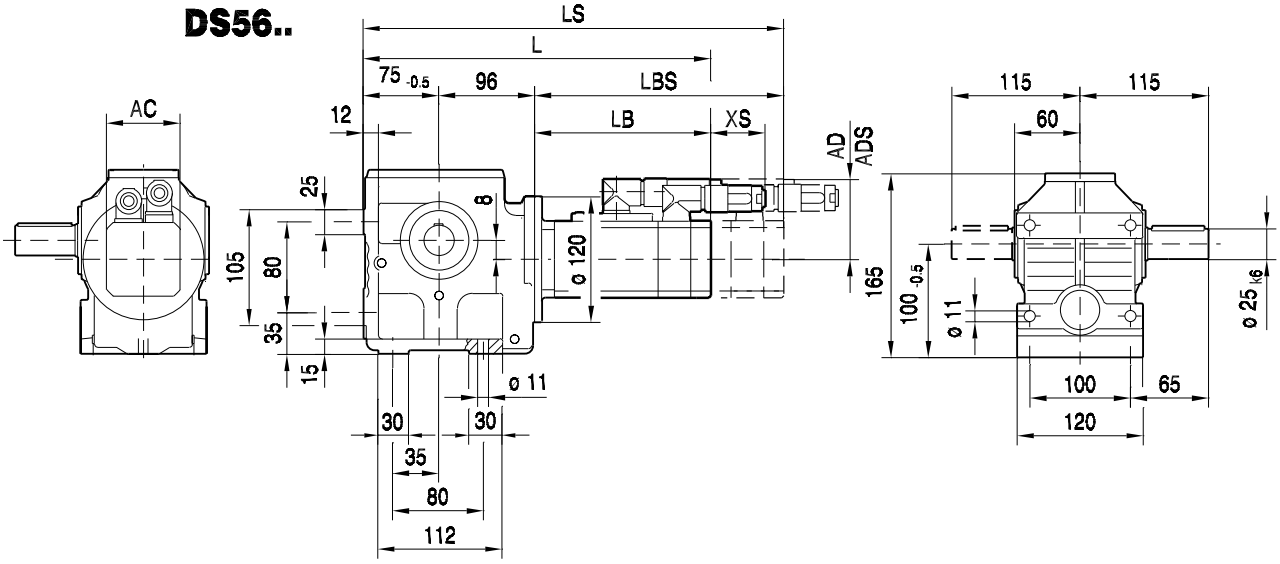

CM..

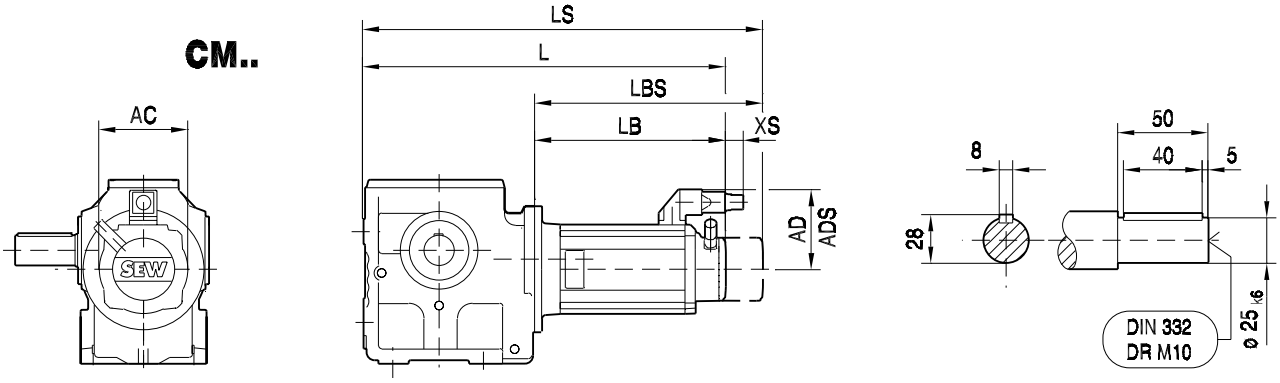

(→ 📖 150)	DS56M	DS56L	DS56H	CM71S	CM71M	CM71L	CM90S				
AC	73	73	73	117	117	117	142				
AD	71	71	77	122	122	122	140				
ADS	77	77	77	122	122	122	140				
L	308	340	443	409	429	472	464				
LS	338	370	443	491	511	554	560				
LB	137	169	272	238	258	301	293				
LBS	167	199	272	320	340	383	389				
XS	70	70	51	45	45	45	50				

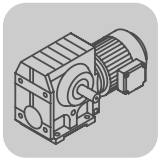

S..CMP, DS, CM
S 47 / CMP / DS / CM [mm]

05 039 01 01

SF47..
DS56..

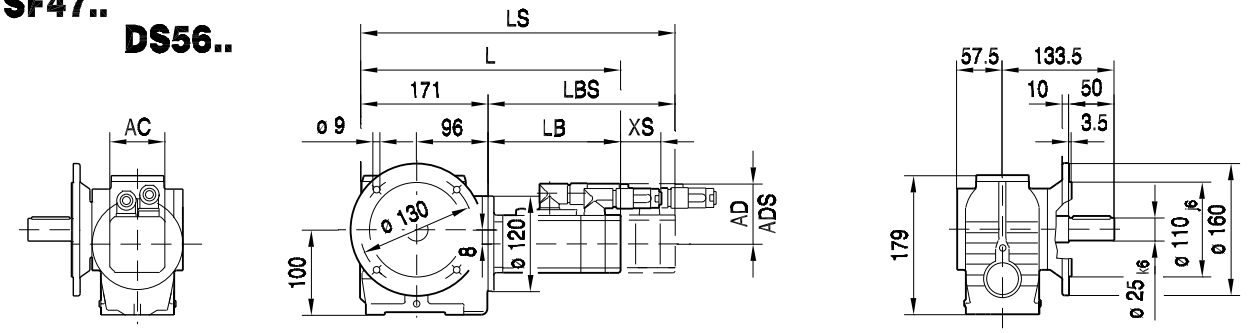

CM..

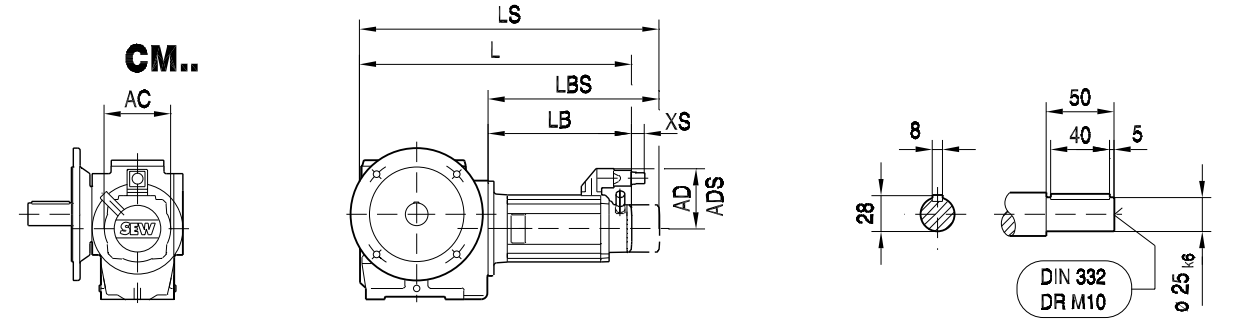

SAF47..

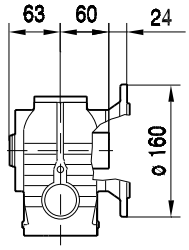

SHF47..

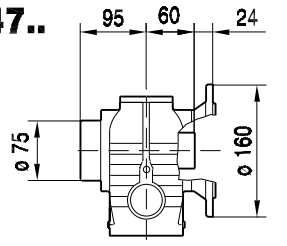

ø 30 H7

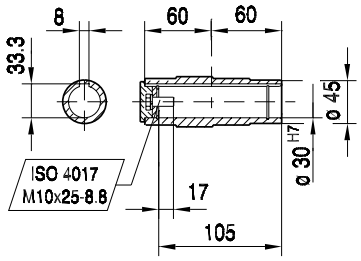

ø 25 H7

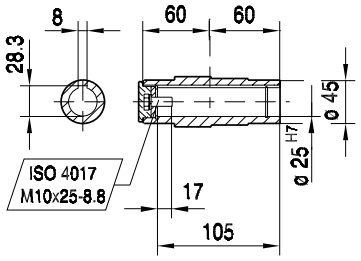

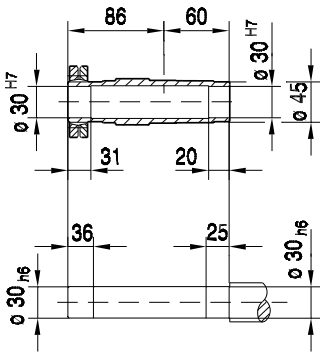

(→ 📖 150)	DS56M	DS56L	DS56H	CM71S	CM71M	CM71L	CM90S				
AC	73	73	73	117	117	117	142				
AD	71	71	77	122	122	122	140				
ADS	77	77	77	122	122	122	140				
L	308	340	443	409	429	472	464				
LS	338	370	443	491	511	554	560				
LB	137	169	272	238	258	301	293				
LBS	167	199	272	320	340	383	389				
XS	70	70	51	45	45	45	50				

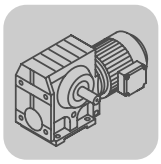

28 011 01 01

SA47.. **DS56..**

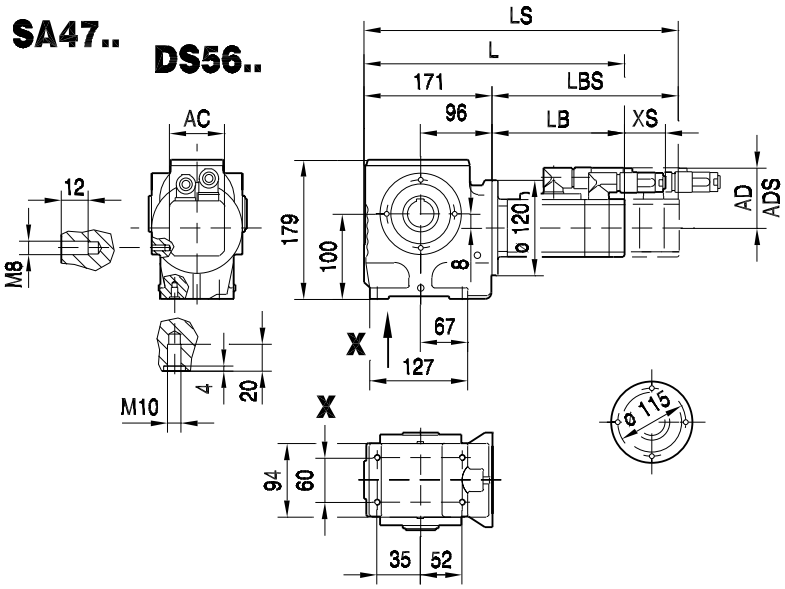

S.. /T..

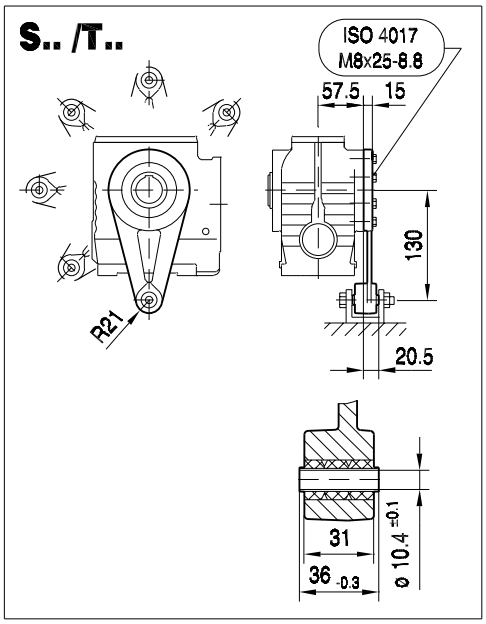

CM..

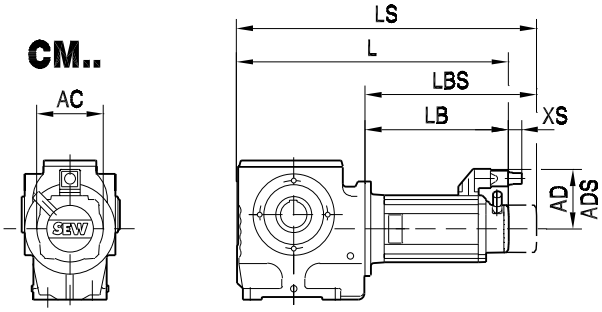

SA47..

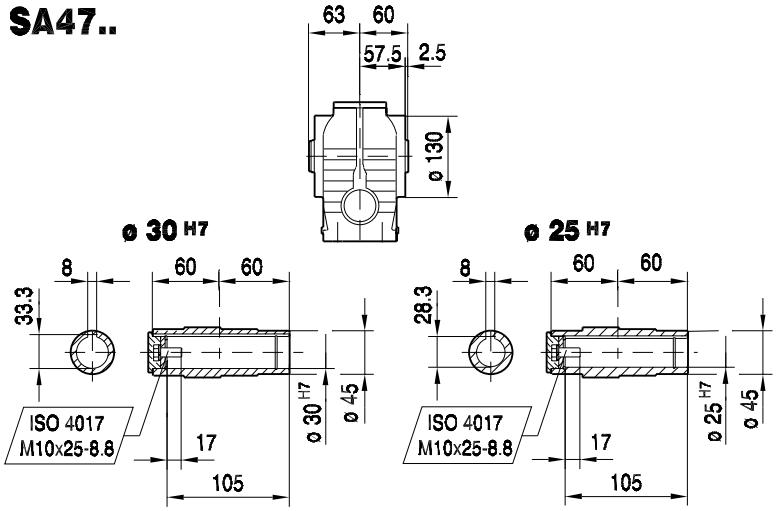

SH47..

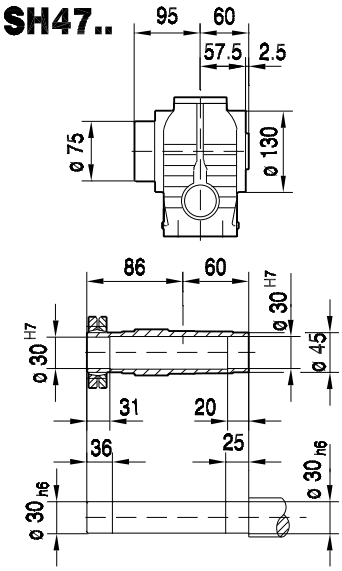

(→ 📖 150)	DS56M	DS56L	DS56H	CM71S	CM71M	CM71L	CM90S				
AC	73	73	73	117	117	117	142				
AD	71	71	77	122	122	122	140				
ADS	77	77	77	122	122	122	140				
L	308	340	443	409	429	472	464				
LS	338	370	443	491	511	554	560				
LB	137	169	272	238	258	301	293				
LBS	167	199	272	320	340	383	389				
XS	70	70	51	45	45	45	50				

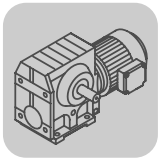

S..CMP, DS, CM
S 47 / CMP / DS / CM [mm]

28 016 00 04

SAZ47.. DS56..

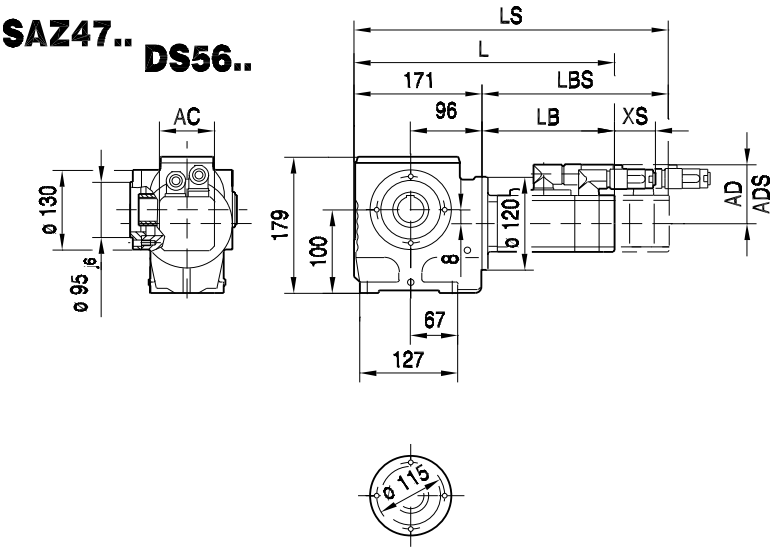

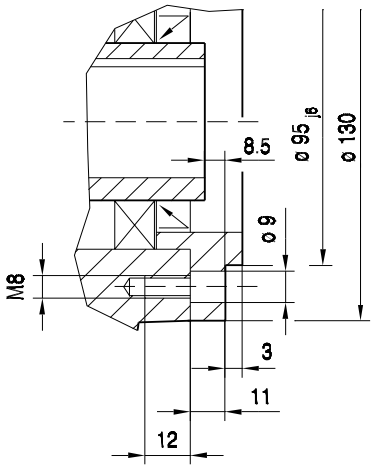

CM..

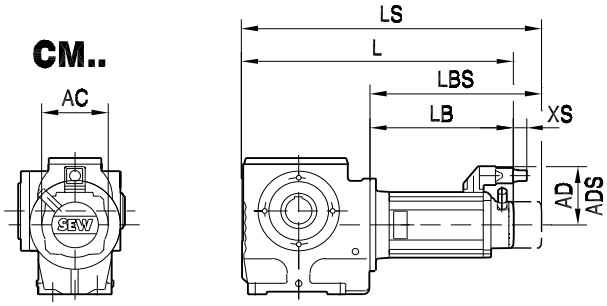

SAZ47..

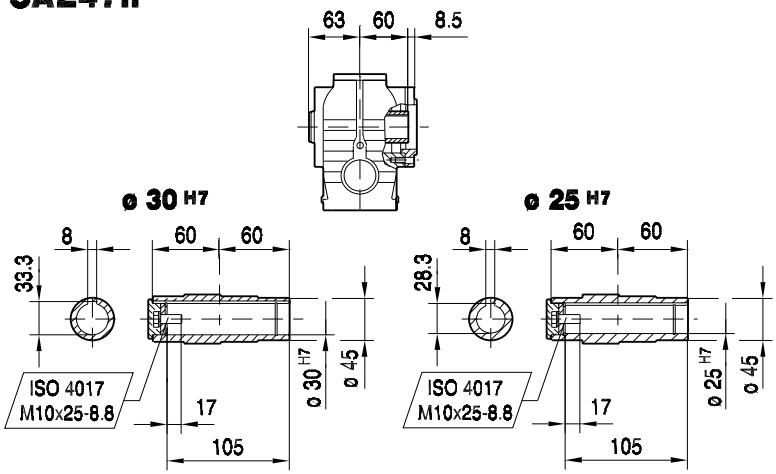

SHZ47..

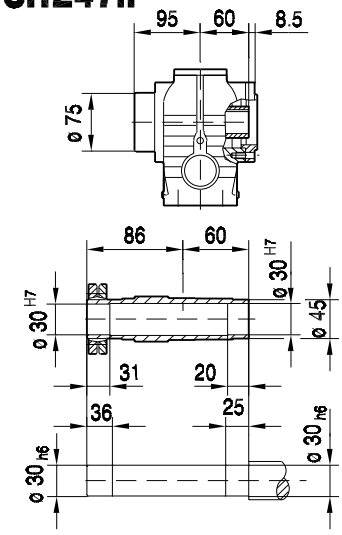

(→ 📖 150)	DS56M	DS56L	DS56H	CM71S	CM71M	CM71L	CM90S				
AC	73	73	73	117	117	117	142				
AD	71	71	77	122	122	122	140				
ADS	77	77	77	122	122	122	140				
L	308	340	443	409	429	472	464				
LS	338	370	443	491	511	554	560				
LB	137	169	272	238	258	301	293				
LBS	167	199	272	320	340	383	389				
XS	70	70	51	45	45	45	50				

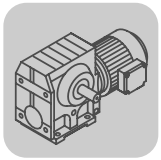

28 020 00 04

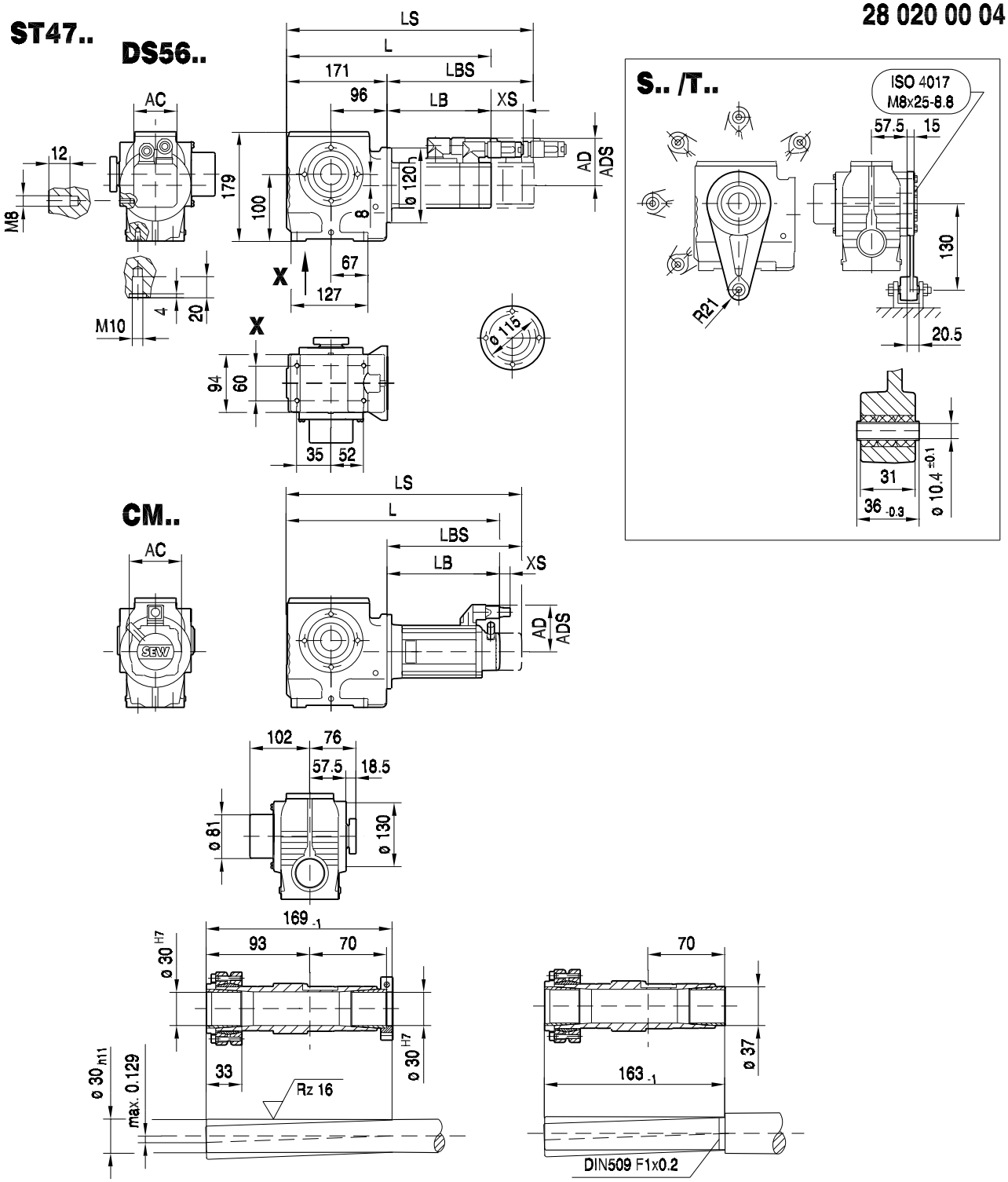

(→ 📖 150)	DS56M	DS56L	DS56H	CM71S	CM71M	CM71L	CM90S				
AC	73	73	73	117	117	117	142				
AD	71	71	77	122	122	122	140				
ADS	77	77	77	122	122	122	140				
L	308	340	443	409	429	472	464				
LS	338	370	443	491	511	554	560				
LB	137	169	272	238	258	301	293				
LBS	167	199	272	320	340	383	389				
XS	70	70	51	45	45	45	50				

11.6 S 57 / CMP / DS / CM [Nm]

M_{aDyn} [Nm]		CMP							DS			CM			
	i	40M	50S	50M	50L	63S	63M	63L	56M	56L	56H	71S	71M	71L	90S
S57 2	7.28	25	34	67	100	72	139	>183	25	49	98	107	139	>183	>183
	8.64	29	40	79	118	85	165	>211	29	58	117	127	165	>211	>211
	9.23	31	43	85	127	91	176	>223	31	62	125	136	177	>223	>223
	10.8	37	50	99	148	107	206	>220	37	73	146	159	207	>220	>220
	12.1	40	55	110	164	118	>220	>220	40	81	162	176	>220	>220	>220
	14.24	48	65	129	193	139	>220	>220	48	95	190	207	>220	>220	>220
	16.47	54	75	148	>220	159	>220		54	109	218	>220	>220		
	17.62	58	80	158	>215	170	>215		58	117	>215	>215	>215		
	19.54			165	247	178	>274	>274			244	264	>274	>274	>274
	20.33	67	92	182		196			67	134	>215				
	23.2	72	99	196	293	211	>315	>315	72	145	289	314	>315	>315	>315
	24.77	76	104	207	309	223	>330	>330	76	152	305	>330	>330	>330	>330
	29	89	122	242	>360	261	>360	>360	89	179	357	>360	>360	>360	>360
	32.48	99	135	268	>367	288	>367	>367	99	197	>367	>367	>367	>367	>367
	38.23	116	159	315	>367	339	>367	>367	116	232	>367	>367	>367	>367	>367
	44.22	133	182	360	>367	>367	>367		133	265	>367	>367	>367		
	47.32	142	194	>367	>367	>367	>367		142	284	>367	>367	>367		
	54.59	162	221	>367		>367			162	324	>367				
	63.8	187	255						187	>360					
	69.39	203	278						203	>360					

m [kg]		CMP							DS			CM			
	s	40M	50S	50M	50L	63S	63M	63L	56M	56L	56H	71S	71M	71L	90S
S57	2	15	17	17	18	19	20	22	15	16	17	21	22	26	30
SF: + 3.8 kg / SA: + -0.3 kg / SAF: + 2.6 kg															

CMP.. / DS.. / CM..				c_T			
	i	n_{epk} [1/min]	η [%]	S [Nm/']	SF [Nm/']	SA [Nm/']	SAF [Nm/']
S57 2	7.28	4500	89	-	-	-	-
	8.64	4500	89	-	-	-	-
	9.23	4500	89	-	-	-	-
	10.8	4500	89	-	-	-	-
	12.1	4500	88	-	-	-	-
	14.24	4500	88	-	-	-	-
	16.47	4500	87	-	-	-	-
	17.62	4500	87	-	-	-	-
	19.54	4500	82	-	-	-	-
	20.33	4500	87	-	-	-	-
	23.2	4500	82	-	-	-	-
	24.77	4500	81	-	-	-	-
	29	4500	81	-	-	-	-
	32.48	4500	80	-	-	-	-
	38.23	4500	80	-	-	-	-
	44.22	4500	79	-	-	-	-
	47.32	4500	79	-	-	-	-
	54.59	4500	78	-	-	-	-
	63.8	4500	77	-	-	-	-
	69.39	4500	77	-	-	-	-

CMP.. / DS.. / CM..							F_{Ramax}				F_{Rapk}			
	i	M_{amax} [Nm]	M_{apk} [Nm]	$M_{aNotaus}$ [Nm]	n_{ak} [1/min]	J_G 10^{-4} [kgm^2]	S [N]	SF [N]	SA [N]	SAF [N]	S [N]	SF [N]	SA [N]	SAF [N]
S57 2	7.28	146	183	248	27	1.7	3790	3770	2620	2620	7880	7880	10000	10000
	8.64	166	211	282	23	1.3	3900	3890	2430	2430	7730	7730	10000	10000
	9.23	169	223	287	22	1.1	3990	3980	2530	2530	7660	7660	10000	10000
	10.8	169	220	287	19	0.85	4290	4270	3000	3000	7680	7680	10000	10000
	12.1	169	220	287	17	0.70	4520	4490	3360	3360	7680	7680	10000	10000
	14.24	169	220	287	14	0.51	4860	4820	3810	3810	7680	7680	10000	10000
	16.47	168	220	286	12	0.40	5200	5130	4120	4120	7680	7680	10000	10000
	17.62	168	215	286	11	0.36	5350	5280	4260	4260	7710	7710	10000	10000
	19.54	215	274	366	26	1.3	5720	5620	4610	4610	7300	7300	10000	10000
	20.33	168	215	286	10	0.28	5690	5600	4560	4560	7710	7710	10000	10000
	23.2	245	315	417	9	0.95	5930	5840	4710	4710	6950	6950	10000	10000
	24.77	245	330	417	8	0.85	6100	6000	4870	4870	6800	6800	10000	10000
	29	245	360	417	7	0.65	6520	6410	5250	5250	6470	6470	10000	10000
	32.48	245	367	417	6	0.54	6840	6710	5540	5540	6380	6380	10000	10000
	38.23	245	367	417	5	0.39	7320	7170	5970	5970	6380	6380	10000	10000
	44.22	245	367	417	11	0.32	7520	7520	6380	6380	6380	6380	10000	10000
	47.32	245	367	417	11	0.28	7520	7520	6580	6580	6380	6380	10000	10000
	54.59	245	367	417	9	0.23	7520	7520	7000	7000	6380	6380	10000	10000
	63.8	245	360	417	8	0.18	7520	7520	7500	7500	6470	6470	10000	10000
	69.39	245	360	417	7	0.15	7520	7520	7770	7770	6470	6470	10000	10000

11.7 S 57 / CMP / DS / CM [mm]

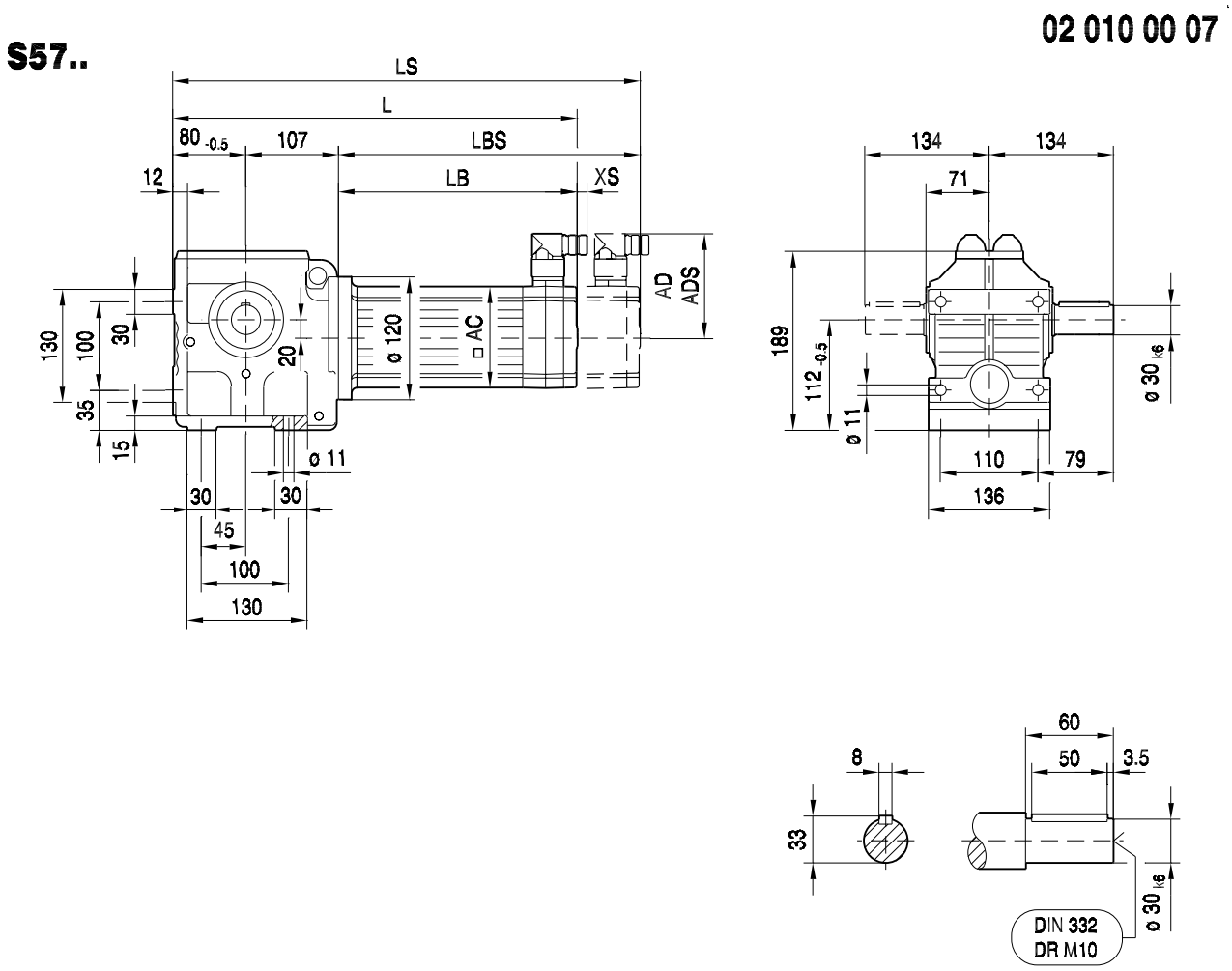

(→ 📖 150)	CMP40M	CMP50S	CMP50M	CMP50L	CMP63S	CMP63M	CMP63L	
AC	57	73	73	73	88	88	88	
AD	75	82	82	82	89	89	89	
ADS	75	82	82	82	89	89	89	
L	330	332	371	410	367	417	470	
LS	360	361	400	439	395	445	499	
LB	143	145	184	223	180	230	283	
LBS	173	174	213	252	208	258	312	
XS	19	18	18	18	14	14	14	

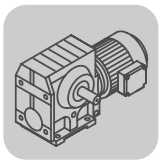

02 011 00 07

SF57..

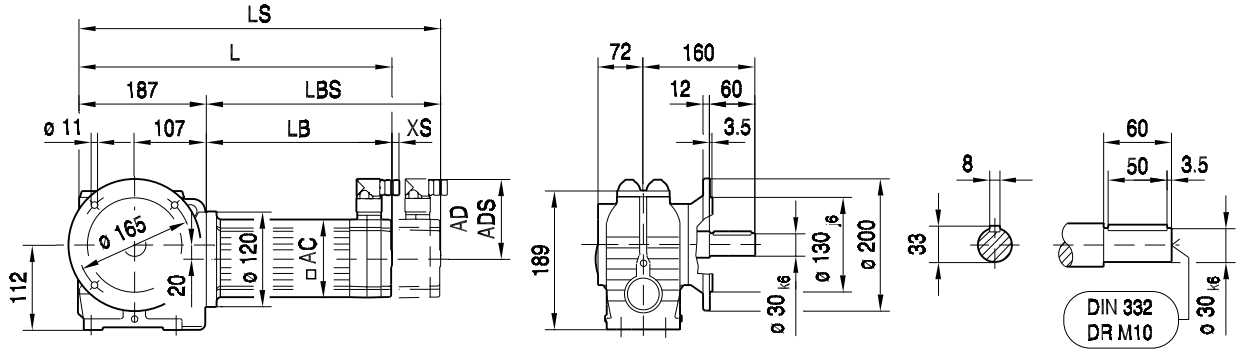

SAF57..

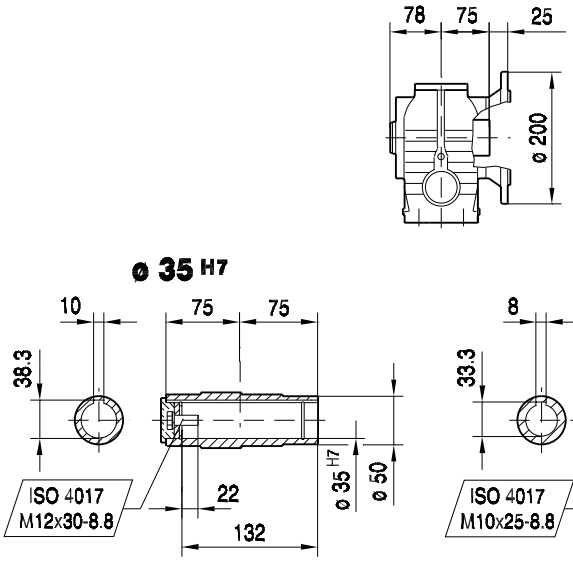

SHF57..

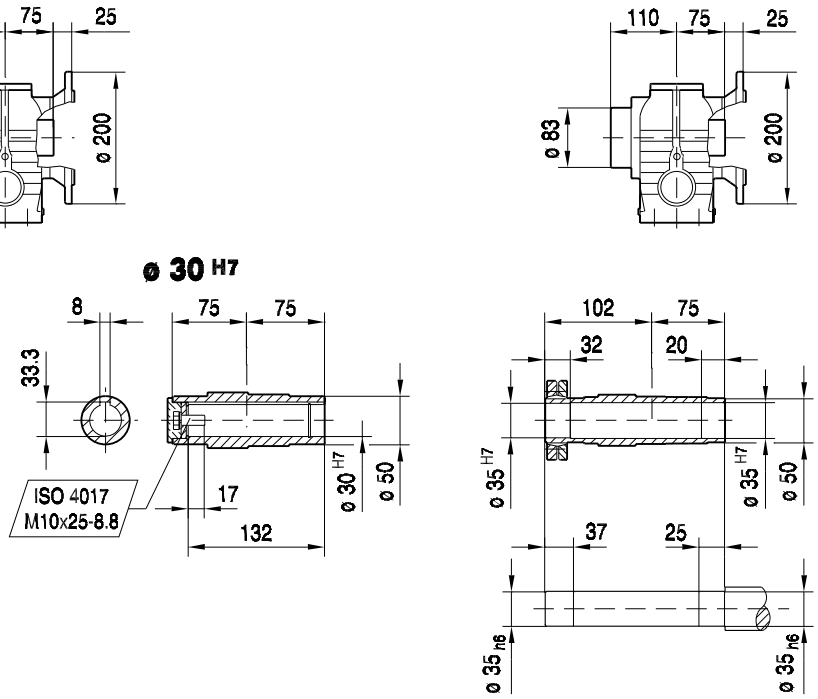

(→ 📖 150)	CMP40M	CMP50S	CMP50M	CMP50L	CMP63S	CMP63M	CMP63L	
AC	57	73	73	73	88	88	88	
AD	75	82	82	82	89	89	89	
ADS	75	82	82	82	89	89	89	
L	330	332	371	410	367	417	470	
LS	360	361	400	439	395	445	499	
LB	143	145	184	223	180	230	283	
LBS	173	174	213	252	208	258	312	
XS	19	18	18	18	14	14	14	

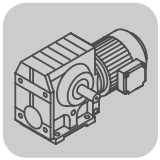

S..CMP, DS, CM
S 57 / CMP / DS / CM [mm]

02 012 00 07

SA57..

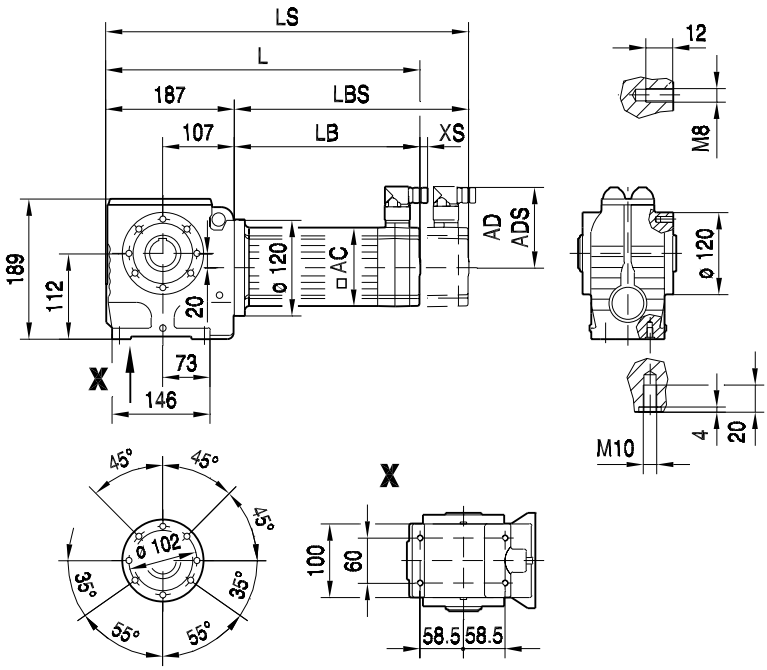

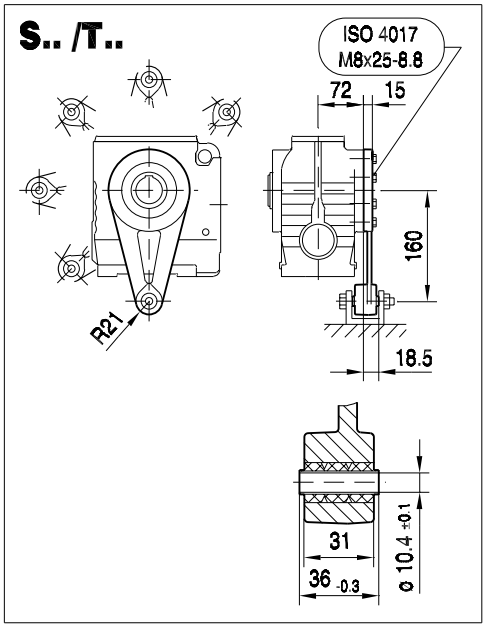

SA57..

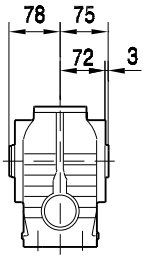

SH57..

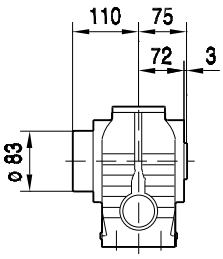

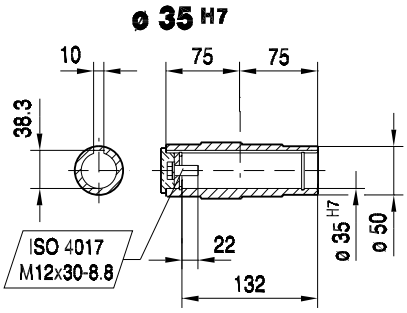

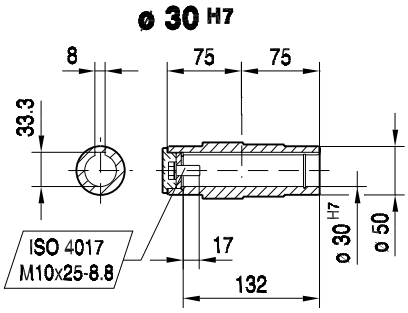

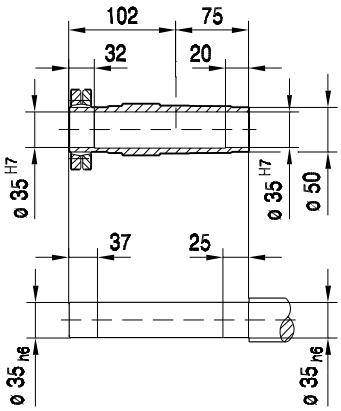

(→ 📖 150)	CMP40M	CMP50S	CMP50M	CMP50L	CMP63S	CMP63M	CMP63L	
AC	57	73	73	73	88	88	88	
AD	75	82	82	82	89	89	89	
ADS	75	82	82	82	89	89	89	
L	330	332	371	410	367	417	470	
LS	360	361	400	439	395	445	499	
LB	143	145	184	223	180	230	283	
LBS	173	174	213	252	208	258	312	
XS	19	18	18	18	14	14	14	

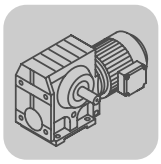

02 013 00 07

SAZ57..

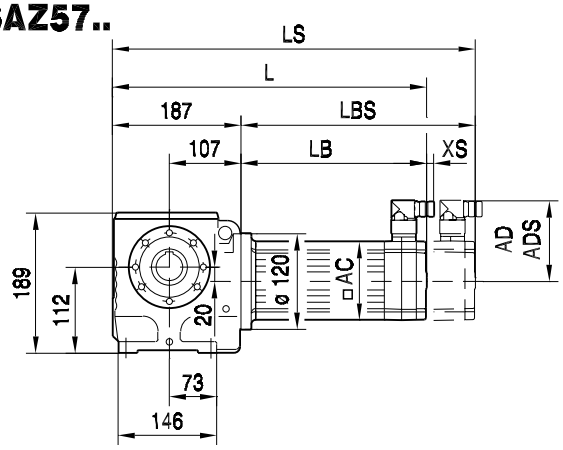

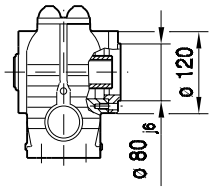

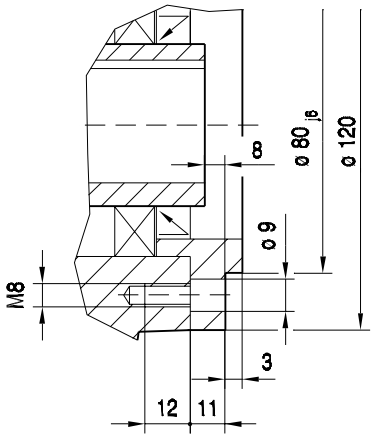

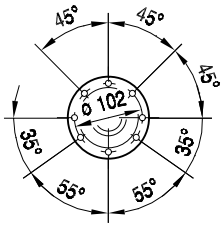

SAZ57..

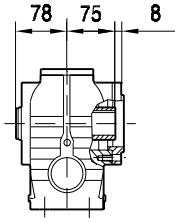

SHZ57..

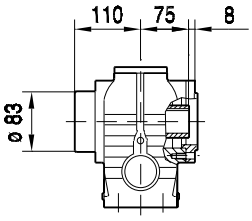

ø 35 H7

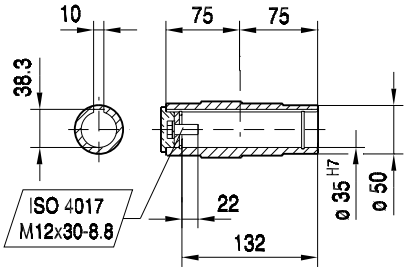

ø 30 H7

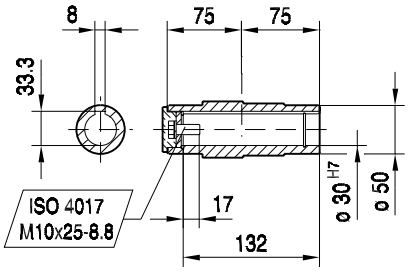

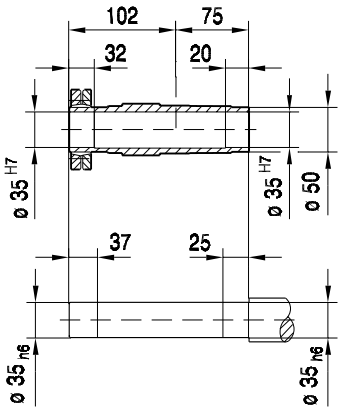

(→ 📖 150)	CMP40M	CMP50S	CMP50M	CMP50L	CMP63S	CMP63M	CMP63L	
AC	57	73	73	73	88	88	88	
AD	75	82	82	82	89	89	89	
ADS	75	82	82	82	89	89	89	
L	330	332	371	410	367	417	470	
LS	360	361	400	439	395	445	499	
LB	143	145	184	223	180	230	283	
LBS	173	174	213	252	208	258	312	
XS	19	18	18	18	14	14	14	

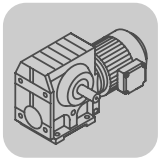

S..CMP, DS, CM
S 57 / CMP / DS / CM [mm]

02 014 00 07

ST57..

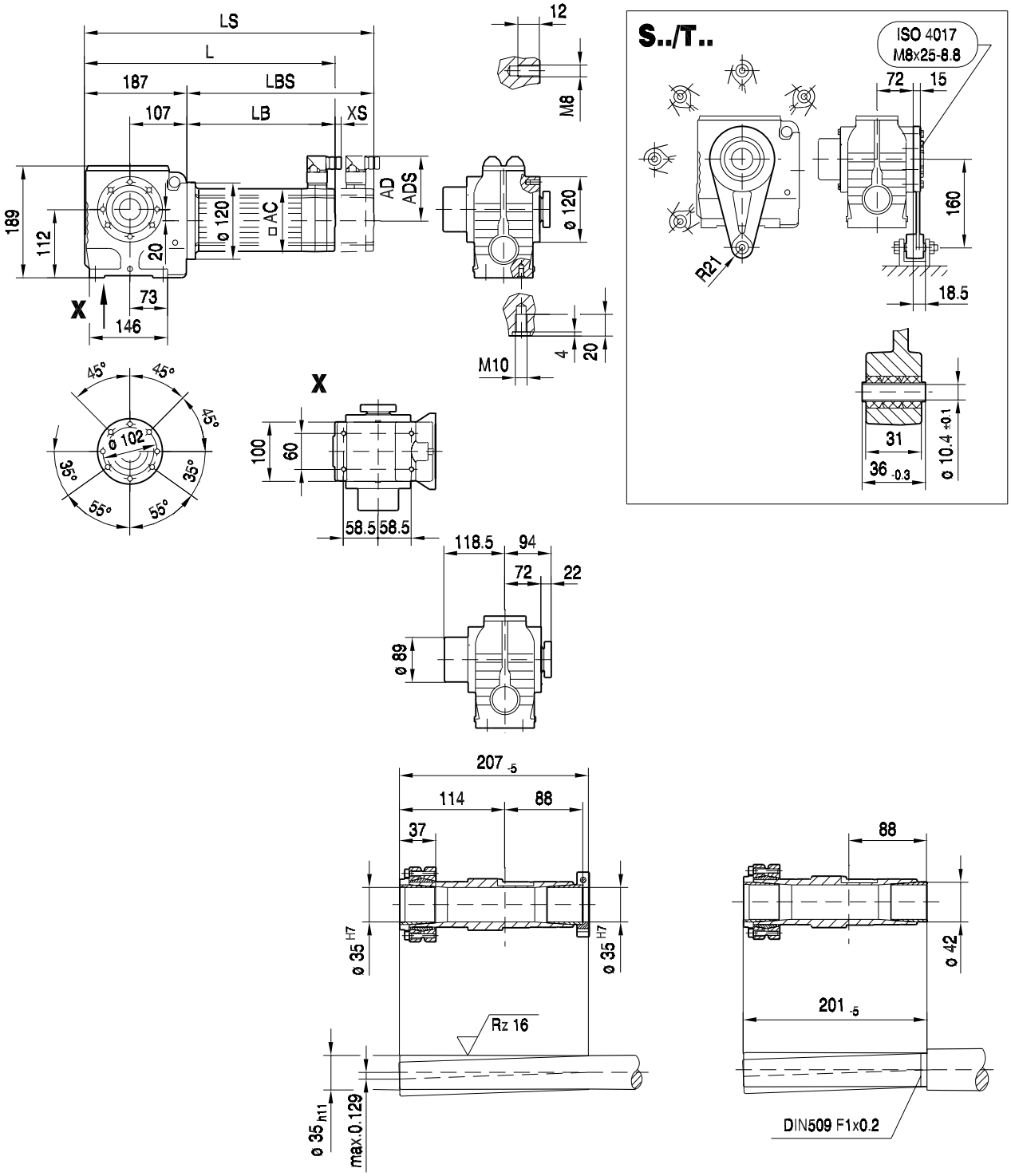

(→ 📖 150)	CMP40M	CMP50S	CMP50M	CMP50L	CMP63S	CMP63M	CMP63L	
AC	57	73	73	73	88	88	88	
AD	75	82	82	82	89	89	89	
ADS	75	82	82	82	89	89	89	
L	330	332	371	410	367	417	470	
LS	360	361	400	439	395	445	499	
LB	143	145	184	223	180	230	283	
LBS	173	174	213	252	208	258	312	
XS	19	18	18	18	14	14	14	

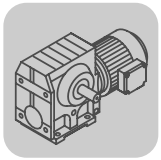

S57.. **05 040 01 01**

DS56..

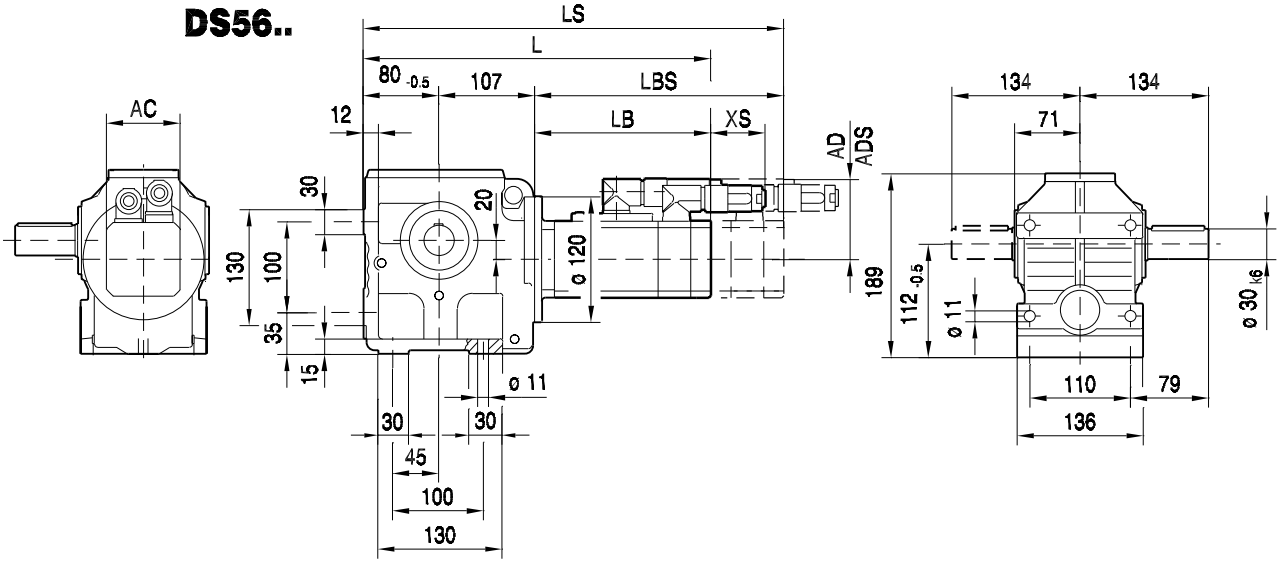

CM..

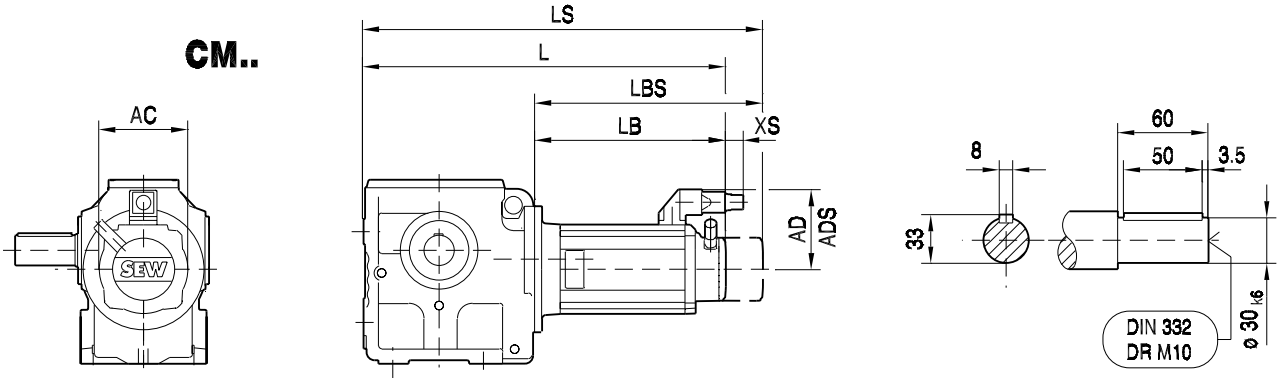

(→ 📖 150)	DS56M	DS56L	DS56H	CM71S	CM71M	CM71L	CM90S				
AC	73	73	73	117	117	117	142				
AD	71	71	77	122	122	122	140				
ADS	77	77	77	122	122	122	140				
L	324	356	459	425	445	488	480				
LS	354	386	459	507	527	570	576				
LB	137	169	272	238	258	301	293				
LBS	167	199	272	320	340	383	389				
XS	70	70	51	45	45	45	50				

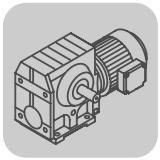

S..CMP, DS, CM
S 57 / CMP / DS / CM [mm]

05 041 01 01

SF57.. DS56..

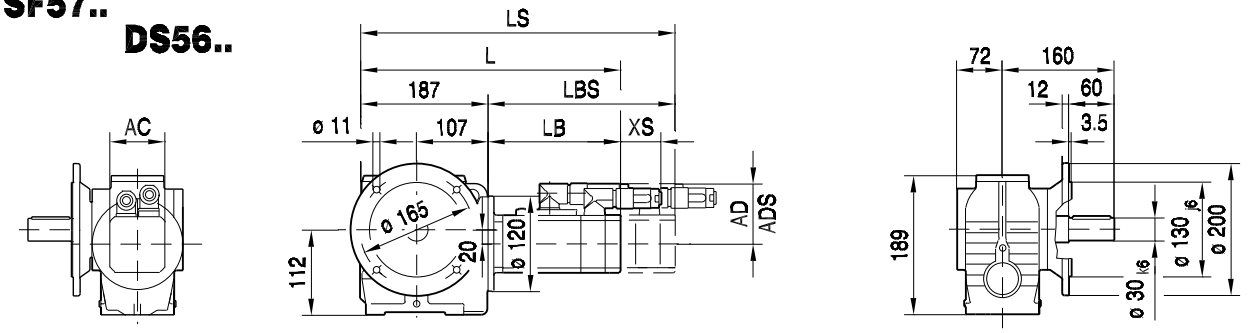

CM..

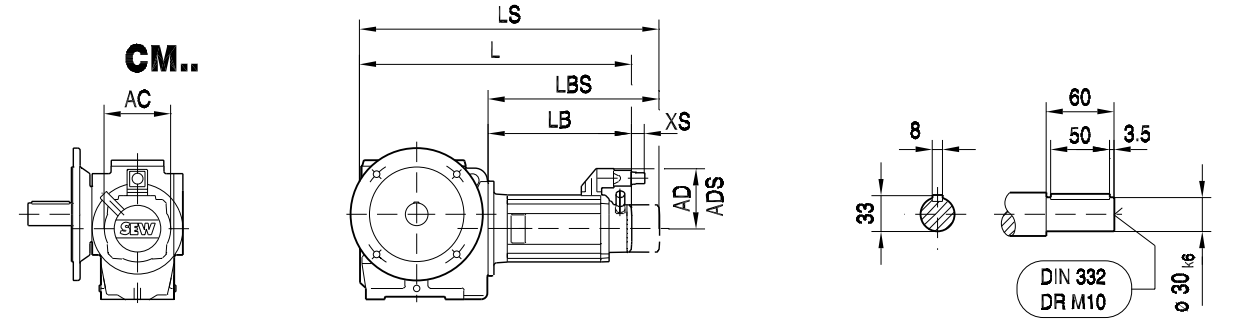

SAF57..

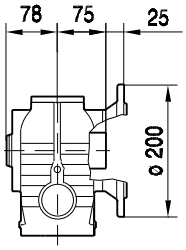

SHF57..

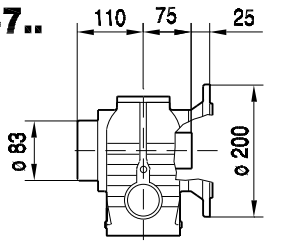

ø 35 H7

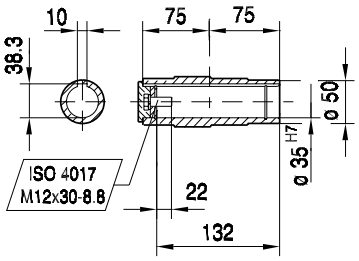

ø 30 H7

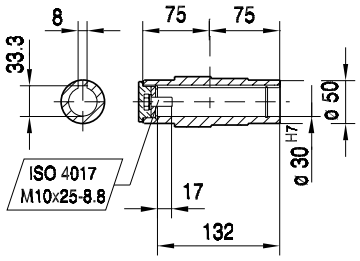

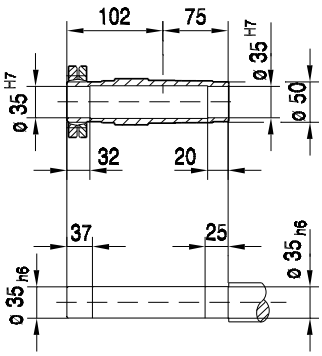

(→ 📖 150)	DS56M	DS56L	DS56H	CM71S	CM71M	CM71L	CM90S				
AC	73	73	73	117	117	117	142				
AD	71	71	77	122	122	122	140				
ADS	77	77	77	122	122	122	140				
L	324	356	459	425	445	488	480				
LS	354	386	459	507	527	570	576				
LB	137	169	272	238	258	301	293				
LBS	167	199	272	320	340	383	389				
XS	70	70	51	45	45	45	50				

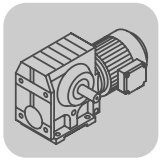

28 012 01 01

SA57.. **DS56..**

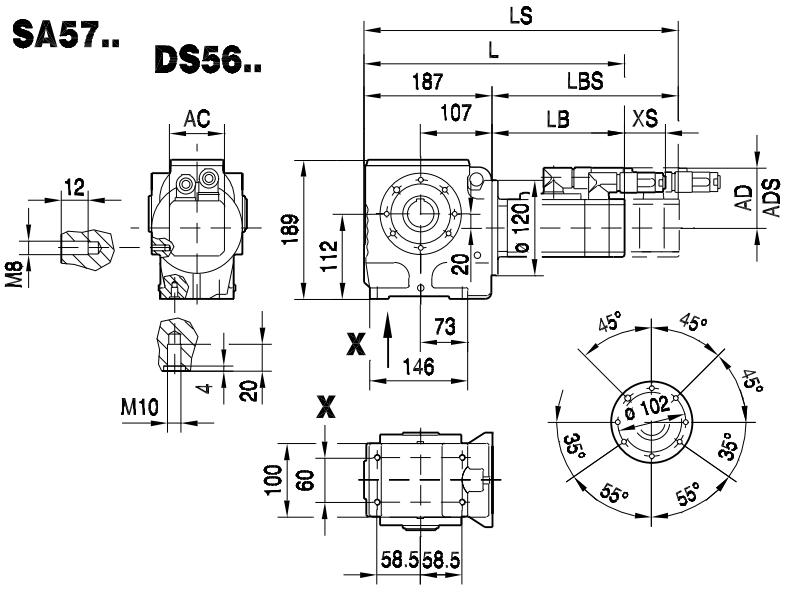

S.. /T..

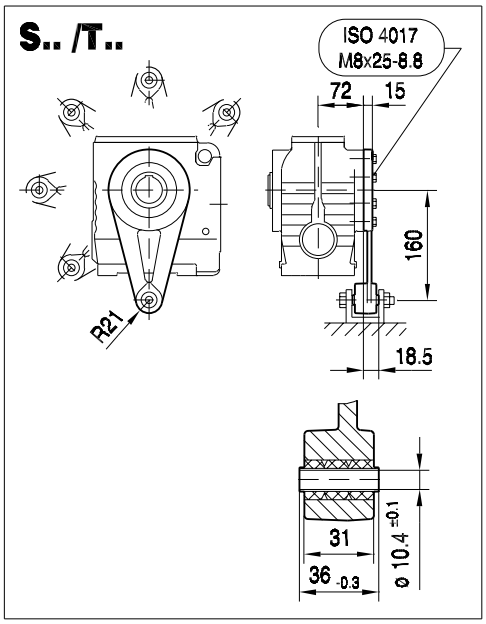

CM..

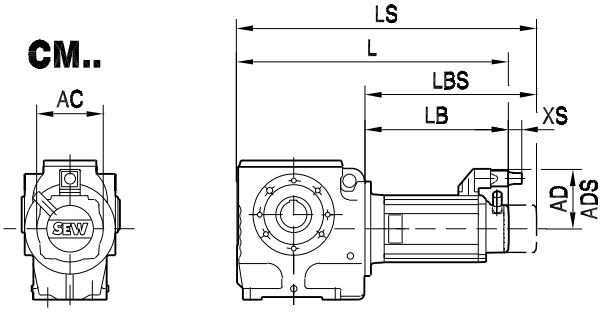

SA57..

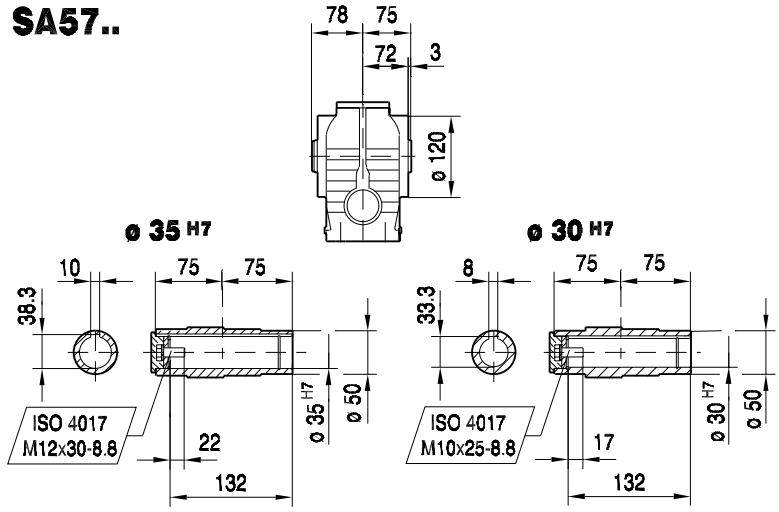

SH57..

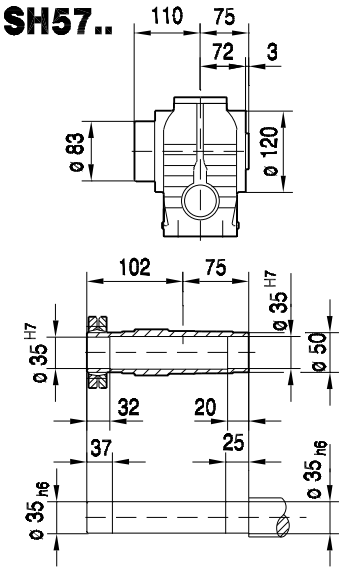

(→ 📖 150)	DS56M	DS56L	DS56H	CM71S	CM71M	CM71L	CM90S				
AC	73	73	73	117	117	117	142				
AD	71	71	77	122	122	122	140				
ADS	77	77	77	122	122	122	140				
L	324	356	459	425	445	488	480				
LS	354	386	459	507	527	570	576				
LB	137	169	272	238	258	301	293				
LBS	167	199	272	320	340	383	389				
XS	70	70	51	45	45	45	50				

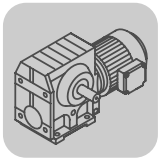

S..CMP, DS, CM
S 57 / CMP / DS / CM [mm]

28 017 00 04

SAZ57.. DS56..

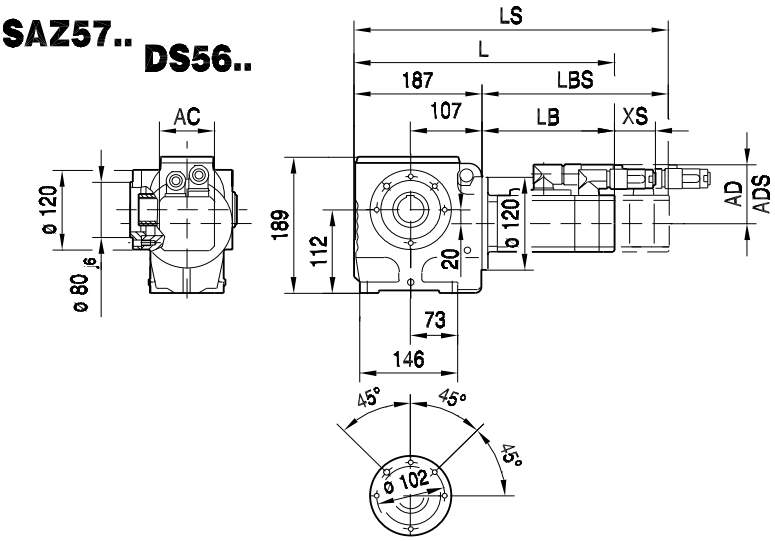

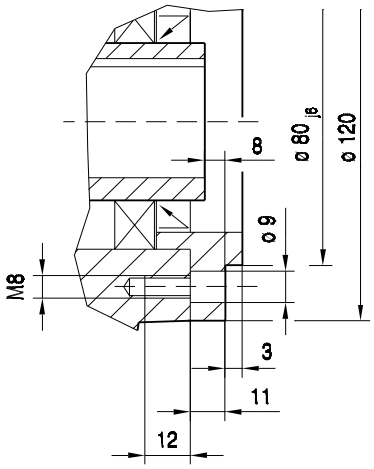

CM..

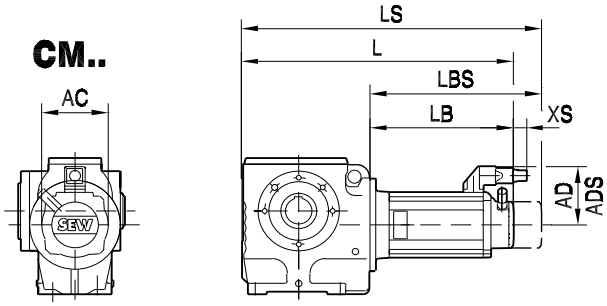

SAZ57..

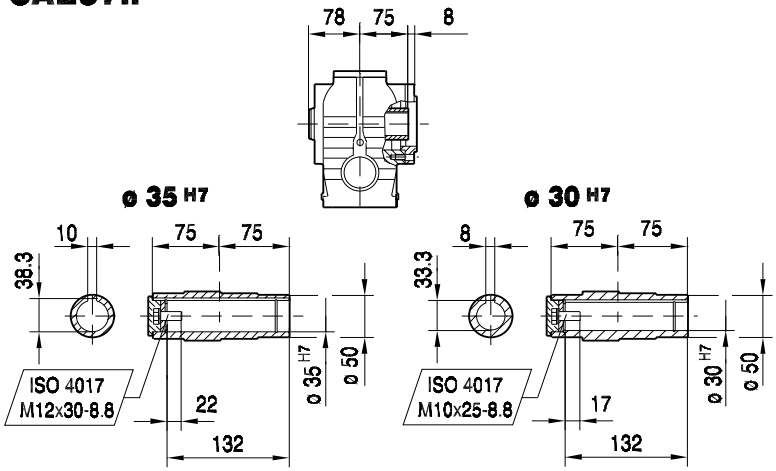

SHZ57..

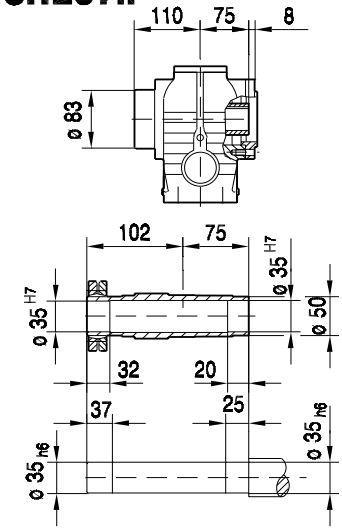

(→ 📖 150)	DS56M	DS56L	DS56H	CM71S	CM71M	CM71L	CM90S				
AC	73	73	73	117	117	117	142				
AD	71	71	77	122	122	122	140				
ADS	77	77	77	122	122	122	140				
L	324	356	459	425	445	488	480				
LS	354	386	459	507	527	570	576				
LB	137	169	272	238	258	301	293				
LBS	167	199	272	320	340	383	389				
XS	70	70	51	45	45	45	50				

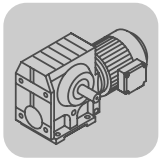

28 021 00 04

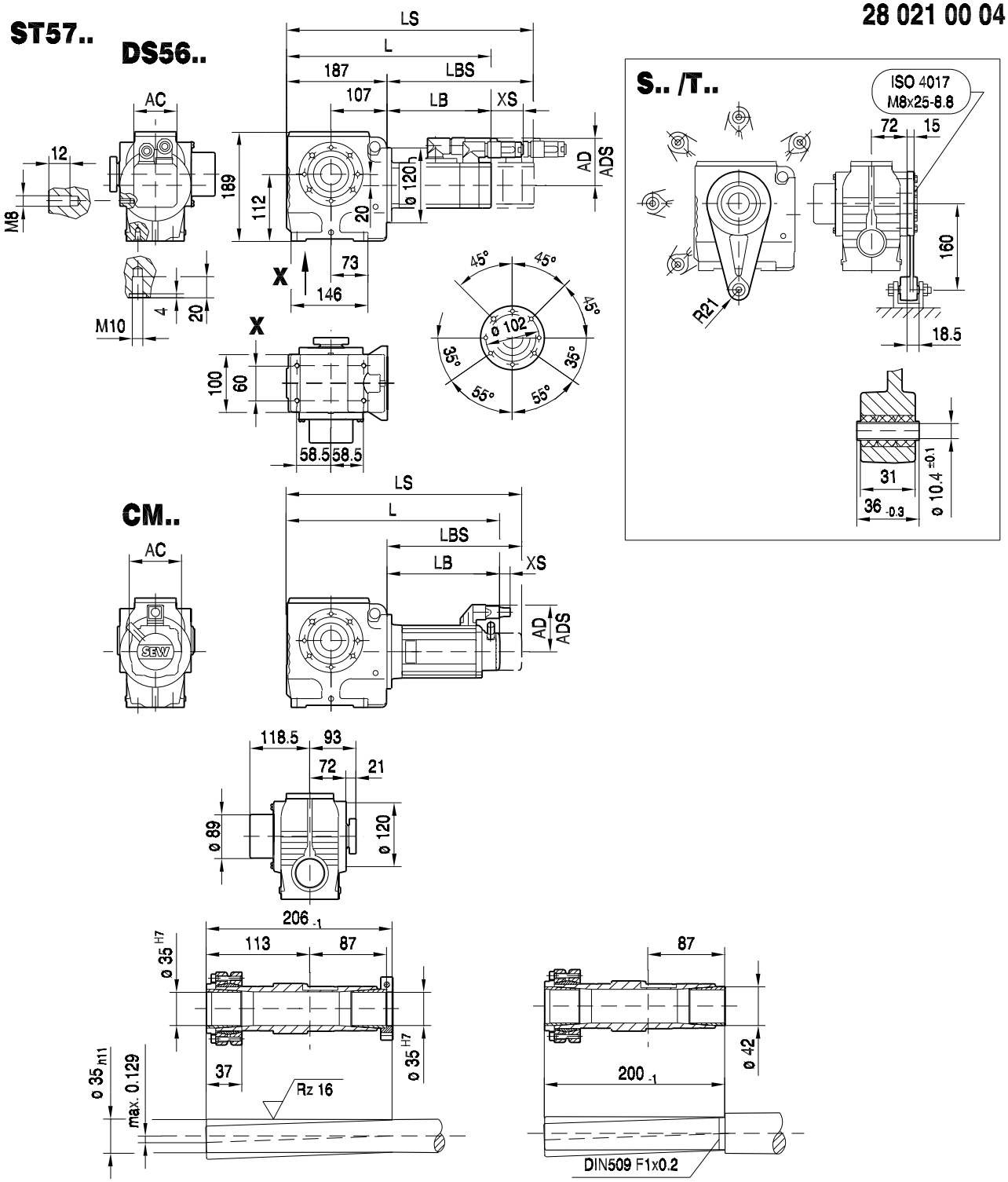

(→ 📖 150)	DS56M	DS56L	DS56H	CM71S	CM71M	CM71L	CM90S				
AC	73	73	73	117	117	117	142				
AD	71	71	77	122	122	122	140				
ADS	77	77	77	122	122	122	140				
L	324	356	459	425	445	488	480				
LS	354	386	459	507	527	570	576				
LB	137	169	272	238	258	301	293				
LBS	167	199	272	320	340	383	389				
XS	70	70	51	45	45	45	50				

11.8 S 67 / CMP / DS / CM [Nm]

M_{aDyn} [Nm]		CMP						DS			CM						
	i	50S	50M	50L	63S	63M	63L	56M	56L	56H	71S	71M	71L	90S	90M	90L	112S
	7.56		71	106	76	147	209			105	114	148	216	272	359	>375	>375
	8.69	41	81	120	87	167	238	30	59	119	129	168	246	310	408	>420	>420
	10.03	47	93	139	100	193	274	34	69	137	149	194	283	357	>450	>450	>450
	11.03	52	102	153	110	212	302	38	75	151	164	213	312	393	>455	>455	>455
	12.96	61	120	180	129	250	355	44	89	177	192	251	366	>455	>455	>455	>455
	13.73	64	126	188	136	262	371	46	93	186	202	263	384	>455	>455	>455	>455
	15.6	72	143	214	154	297	422	53	106	211	229	299	436	>455	>455		
	17.28	80	158	237	171	329	>455	58	117	234	254	331	>455	>455	>455		
	20.3														>490	>490	>490
	20.37	93	185	276	199	384	>450	68	136	272	296	385	>450	>450			
S67	23.22	106	210	315	227	437		78	155	311	337	439					
2	23.33						>515						>515	>515	>515	>515	>515
	24.44	112	222	331	239	>450		82	163	327	355	>450					
	26.93	116	230	344	248	478	>535	85	170	340	369	481	>535	>535	>535	>535	>535
	29.63	128	253	379	273	526	>550	93	187	374	406	529	>550	>550	>550	>550	>550
	34.8	148	294	439	317	>575	>575	108	217	434	471	>575	>575	>575	>575	>575	>575
	36.85	157	311	465	335	>580	>580	115	230	459	499	>580	>580	>580	>580	>580	>580
	41.89	176	349	523	377	>595	>595	129	258	516	560	>595	>595	>595	>595		
	46.4	195	387	579	417	>610	>610	143	286	571	>610	>610	>610	>610	>610		
	54.7	228	451	>625	486	>625	>625	166	333	>625	>625	>625	>625	>625			
	62.35	256	507	>640	547	>640		187	374	>640	>640	>640					
	65.63	270	534	>645	576	>645		197	394	>645	>645	>645					
	75.06	308	611		>655			225	451	>655							

m [kg]		CMP						DS			CM						
	s	50S	50M	50L	63S	63M	63L	56M	56L	56H	71S	71M	71L	90S	90M	90L	112S
S67	2	27	28	29	29	31	32	26	27	28	32	34	37	41	44	49	50
SF: + 6.5 kg / SA: + 1.0 kg / SAF: + 5.5 kg																	

CMP.. / DS.. / CM..				c_T			
	i	n_{epk} [1/min]	η [%]	S [Nm/']	SF [Nm/']	SA [Nm/']	SAF [Nm/']
	7.56	4500	91	-	-	-	-
	8.69	4500	90	-	-	-	-
	10.03	4500	90	-	-	-	-
	11.03	4500	90	-	-	-	-
	12.96	4500	90	-	-	-	-
	13.73	4500	89	-	-	-	-
	15.6	4500	89	-	-	-	-
	17.28	4500	89	-	-	-	-
	20.3	4500	84	-	-	-	-
	20.37	4500	88	-	-	-	-
S67	23.22	4500	88	-	-	-	-
2	23.33	4500	83	-	-	-	-
	24.44	4500	88	-	-	-	-
	26.93	4500	83	-	-	-	-
	29.63	4500	83	-	-	-	-
	34.8	4500	82	-	-	-	-
	36.85	4500	82	-	-	-	-
	41.89	4500	81	-	-	-	-
	46.4	4500	81	-	-	-	-
	54.7	4500	80	-	-	-	-
	62.35	4500	79	-	-	-	-
	65.63	4500	79	-	-	-	-
	75.06	4500	79	-	-	-	-

CMP.. / DS.. / CM..							F_{Ramax}				F_{Rapk}			
	i	M_{amax} [Nm]	M_{apk} [Nm]	$M_{aNotaus}$ [Nm]	n_{ak} [1/min]	J_G 10^{-4} [kgm^2]	S [N]	SF [N]	SA [N]	SAF [N]	S [N]	SF [N]	SA [N]	SAF [N]
	7.56	295	375	502	26	5.4	3220	3890	2540	2540	9740	9740	12000	12000
	8.69	335	420	570	23	4.3	2860	3590	2020	2020	9460	9460	12000	12000
	10.03	340	450	578	20	3.3	3290	4050	2480	2480	9250	9250	12000	12000
	11.03	340	455	578	18	2.8	3660	4430	2890	2890	9210	9210	12000	12000
	12.96	340	455	578	15	2.2	4310	5110	3610	3610	9210	9210	12000	12000
	13.73	340	455	578	15	2.0	4510	5310	3870	3870	9210	9210	12000	12000
	15.6	340	455	578	13	1.5	4820	5640	4480	4480	9210	9210	12000	12000
	17.28	340	455	578	12	1.3	5080	5910	4990	4990	9210	9210	12000	12000
	20.3	425	490	723	10	4.0	5760	6650	6090	6090	8940	8940	12000	12000
	20.37	340	450	578	34	0.99	5520	6360	5700	5700	9250	9250	12000	12000
S67	23.22	340	450	578	47	0.71	5890	6740	6110	6110	9250	9250	12000	12000
2	23.33	480	515	816	9	3.2	5810	6800	6120	6120	8720	8720	12000	12000
	24.44	340	450	578	45	0.63	6040	6900	6270	6270	9250	9250	12000	12000
	26.93	480	535	816	7	2.6	6240	7240	6590	6590	8540	8540	12000	12000
	29.63	480	550	816	7	2.2	6540	7540	6920	6920	8390	8390	12000	12000
	34.8	480	575	816	14	1.8	7060	8080	7490	7490	8140	8140	12000	12000
	36.85	480	580	816	14	1.6	7250	8280	7710	7710	8080	8080	12000	12000
	41.89	480	595	816	12	1.3	7690	8740	8200	8200	7920	7920	12000	12000
	46.4	480	610	816	11	1.1	8060	9020	8600	8600	7740	7740	12000	12000
	54.7	480	625	816	9	0.84	8670	9020	9280	9280	7560	7560	12000	12000
	62.35	480	640	816	8	0.59	9020	9020	9850	9850	7370	7370	12000	12000
	65.63	480	645	816	8	0.53	9020	9020	10100	10100	6930	7300	12000	12000
	75.06	480	655	816	7	0.43	9020	9020	10700	10700	5930	7170	12000	12000

11.9 S 67 / CMP / DS / CM [mm]

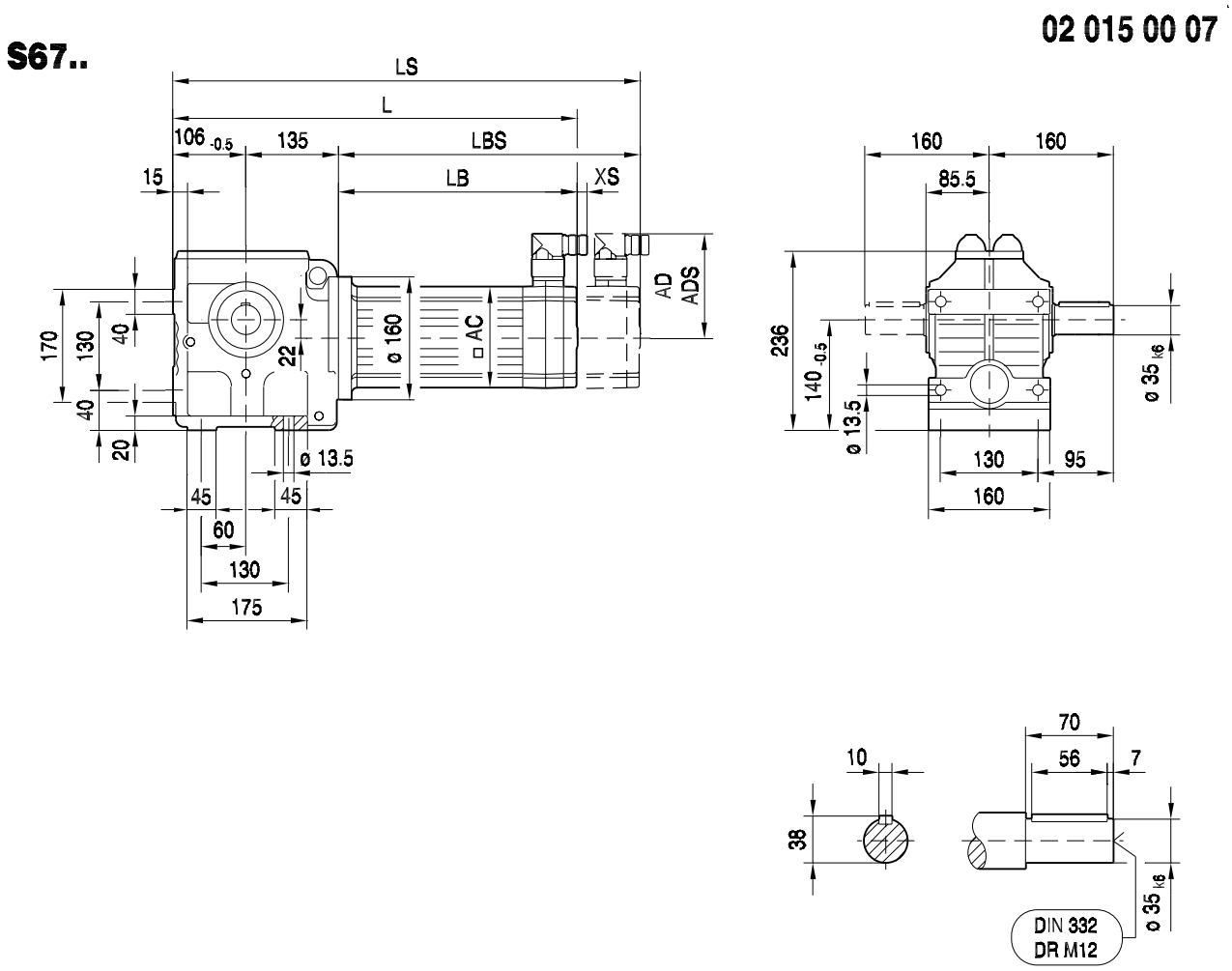

(→ 📖 150)	CMP50S	CMP50M	CMP50L	CMP63S	CMP63M	CMP63L		
AC	73	73	73	88	88	88		
AD	82	82	82	89	89	89		
ADS	82	82	82	89	89	89		
L	380	419	458	414	464	514		
LS	409	448	487	443	493	543		
LB	139	178	217	173	223	273		
LBS	168	207	246	202	252	302		
XS	18	18	18	14	14	14		

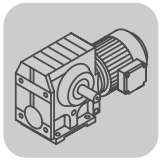

02 016 00 07

SF67..

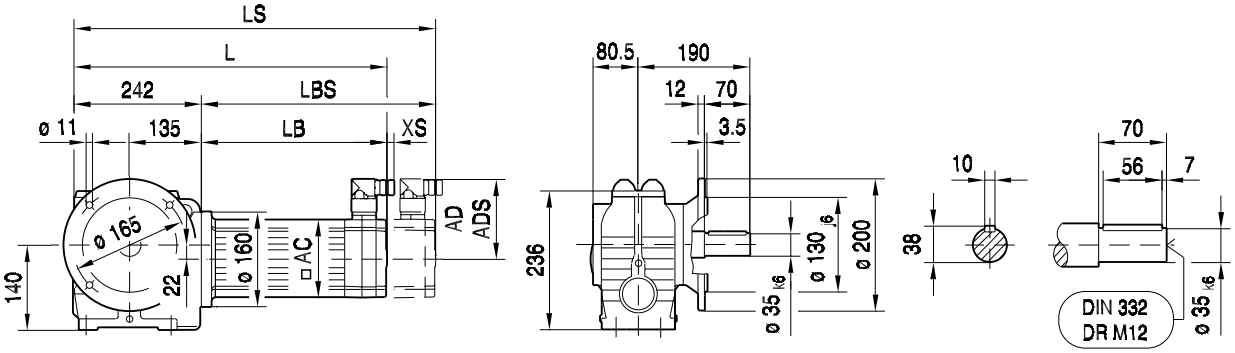

SAF67..

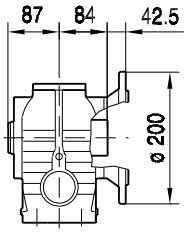

ø 45 H7

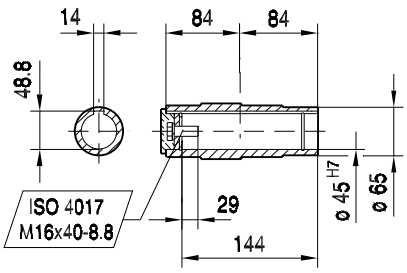

SHF67..

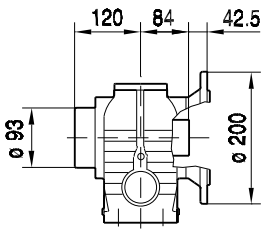

ø 40 H7

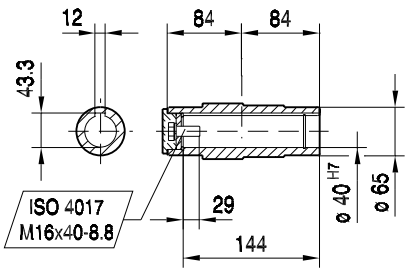

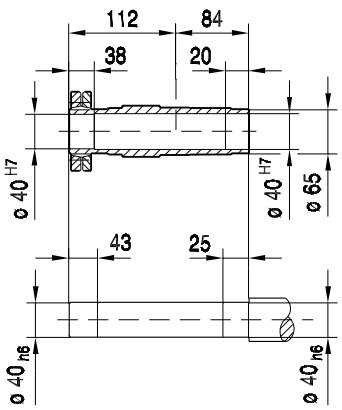

(→ 📖 150)	CMP50S	CMP50M	CMP50L	CMP63S	CMP63M	CMP63L		
AC	73	73	73	88	88	88		
AD	82	82	82	89	89	89		
ADS	82	82	82	89	89	89		
L	381	420	459	415	465	515		
LS	410	449	488	444	494	544		
LB	139	178	217	173	223	273		
LBS	168	207	246	202	252	302		
XS	18	18	18	14	14	14		

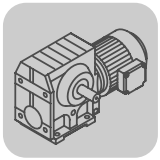

S..CMP, DS, CM
S 67 / CMP / DS / CM [mm]

02 017 00 07

SA67..

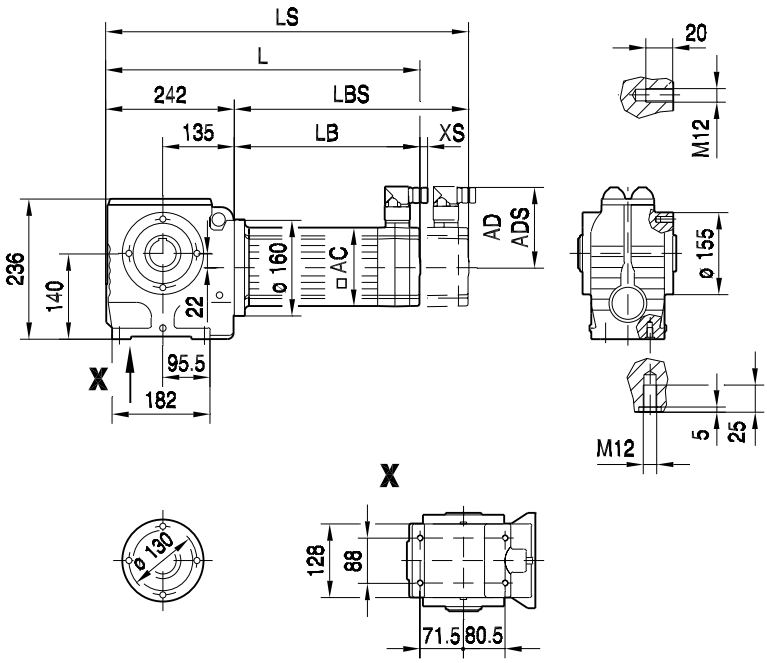

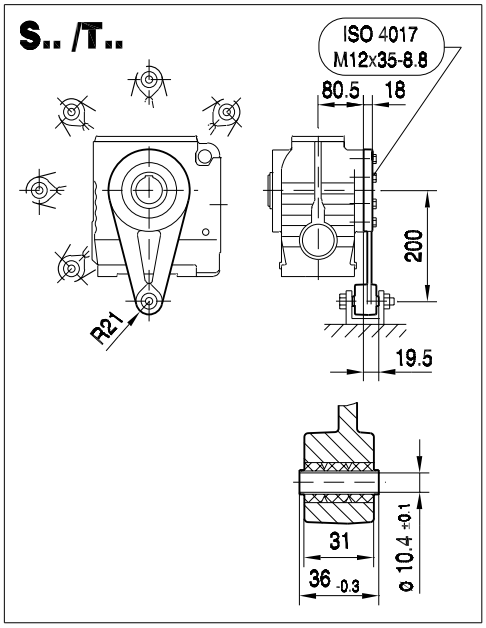

SA67..

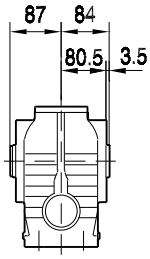

SH67..

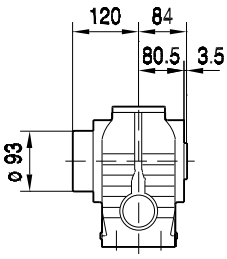

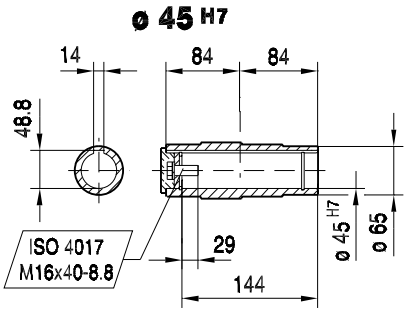

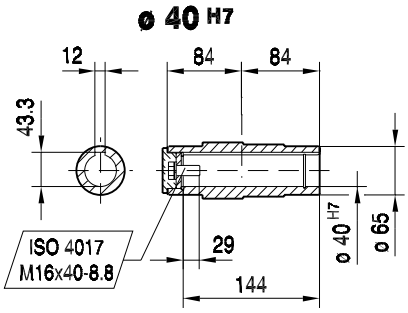

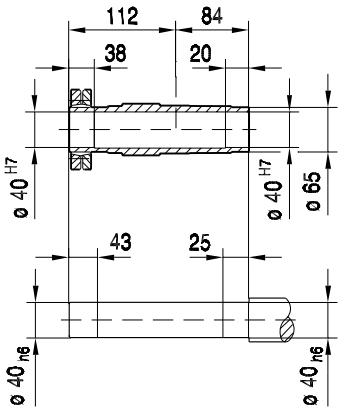

(→ 📖 150)	CMP50S	CMP50M	CMP50L	CMP63S	CMP63M	CMP63L		
AC	73	73	73	88	88	88		
AD	82	82	82	89	89	89		
ADS	82	82	82	89	89	89		
L	381	420	459	415	465	515		
LS	410	449	488	444	494	544		
LB	139	178	217	173	223	273		
LBS	168	207	246	202	252	302		
XS	18	18	18	14	14	14		

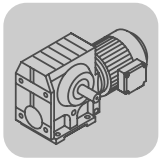

02 018 00 07

SAZ67..

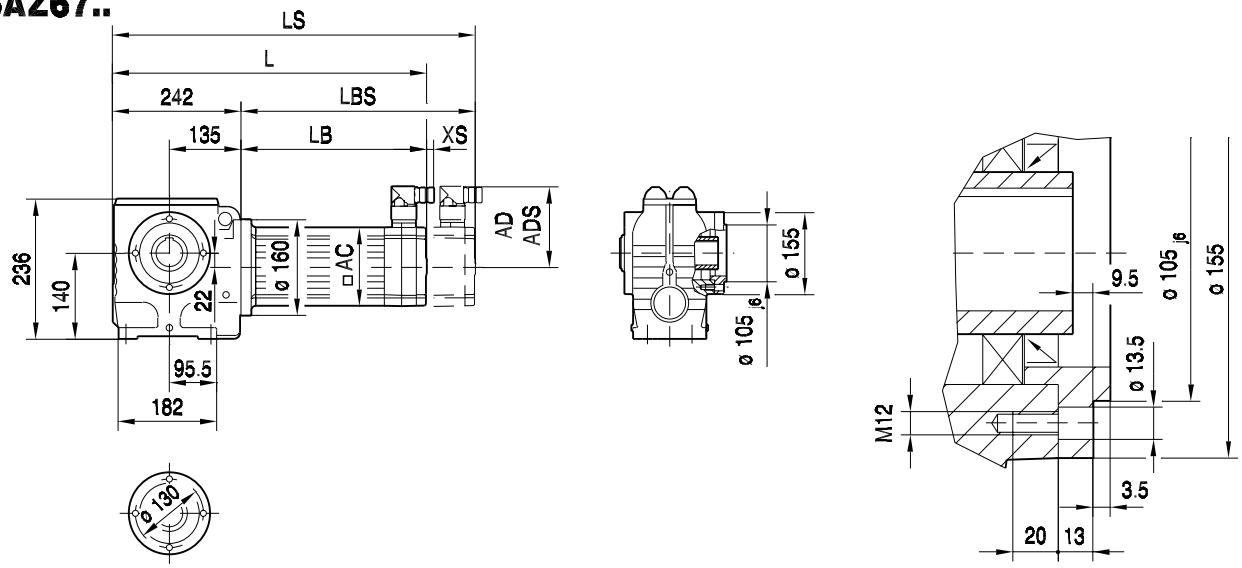

SAZ67..

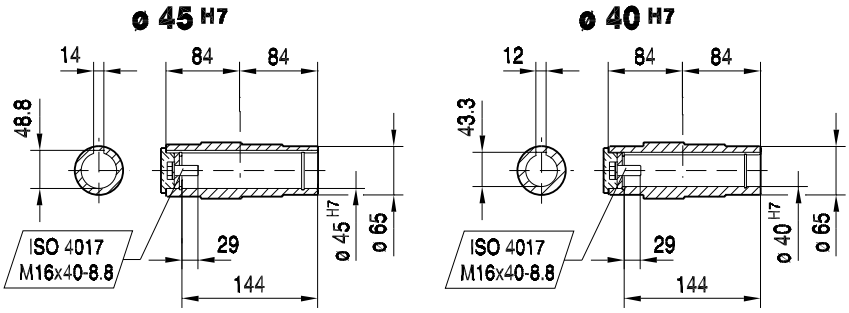

SHZ67..

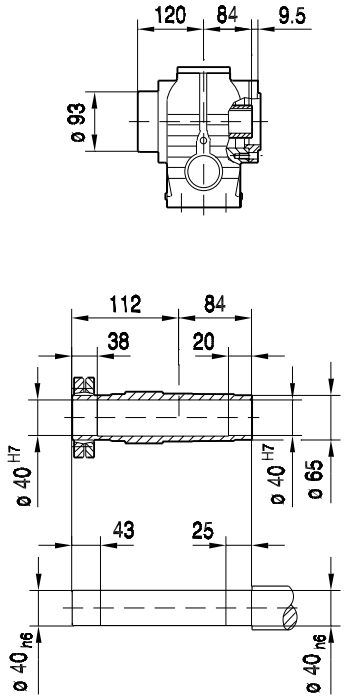

(→ 📖 150)	CMP50S	CMP50M	CMP50L	CMP63S	CMP63M	CMP63L		
AC	73	73	73	88	88	88		
AD	82	82	82	89	89	89		
ADS	82	82	82	89	89	89		
L	381	420	459	415	465	515		
LS	410	449	488	444	494	544		
LB	139	178	217	173	223	273		
LBS	168	207	246	202	252	302		
XS	18	18	18	14	14	14		

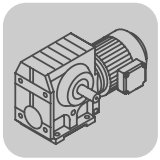

S..CMP, DS, CM
S 67 / CMP / DS / CM [mm]

02 019 00 07

ST67..

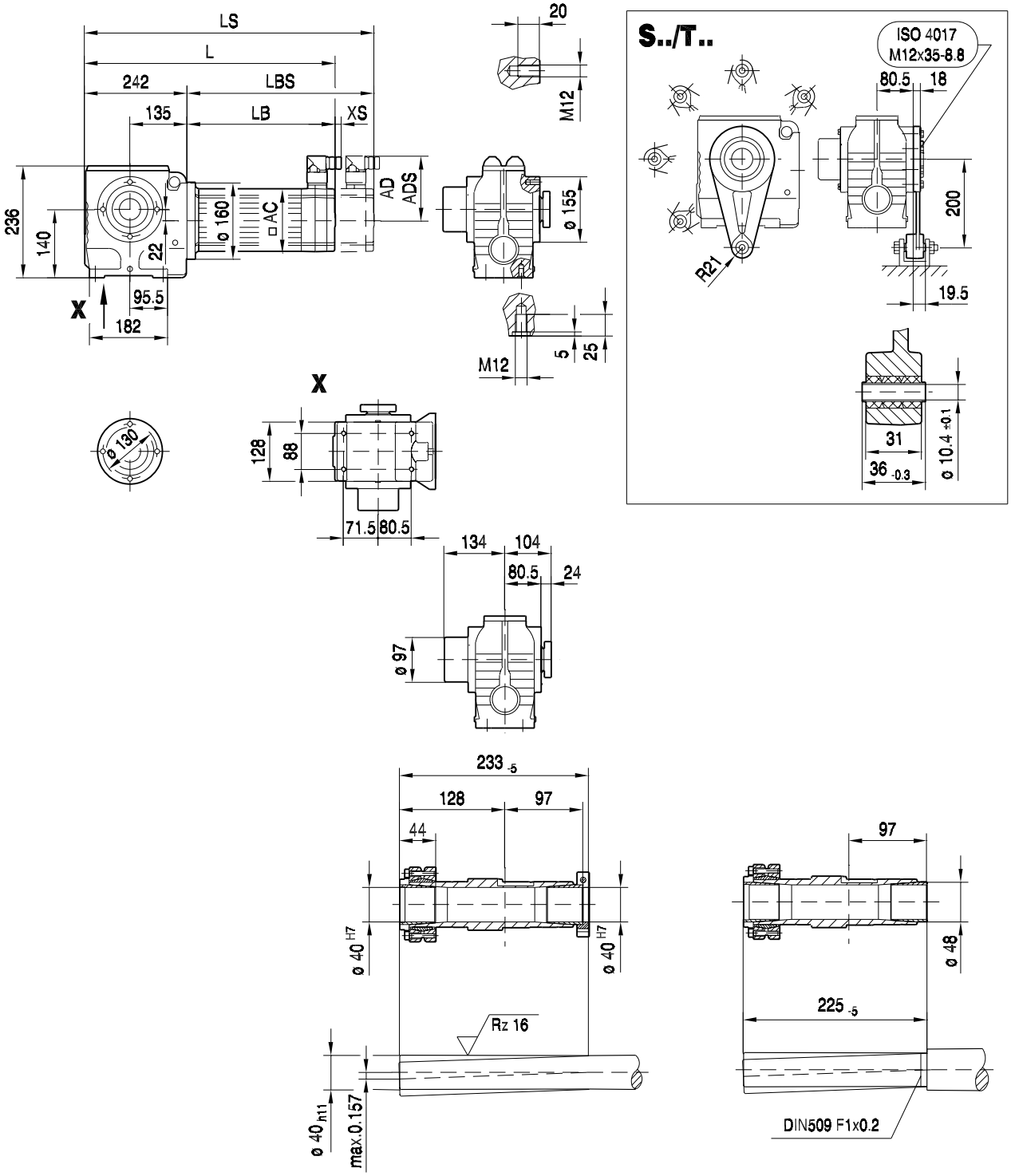

(→ 📖 150)	CMP50S	CMP50M	CMP50L	CMP63S	CMP63M	CMP63L		
AC	73	73	73	88	88	88		
AD	82	82	82	89	89	89		
ADS	82	82	82	89	89	89		
L	381	420	459	415	465	515		
LS	410	449	488	444	494	544		
LB	139	178	217	173	223	273		
LBS	168	207	246	202	252	302		
XS	18	18	18	14	14	14		

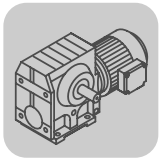

S67.. **05 042 01 01**

DS56..

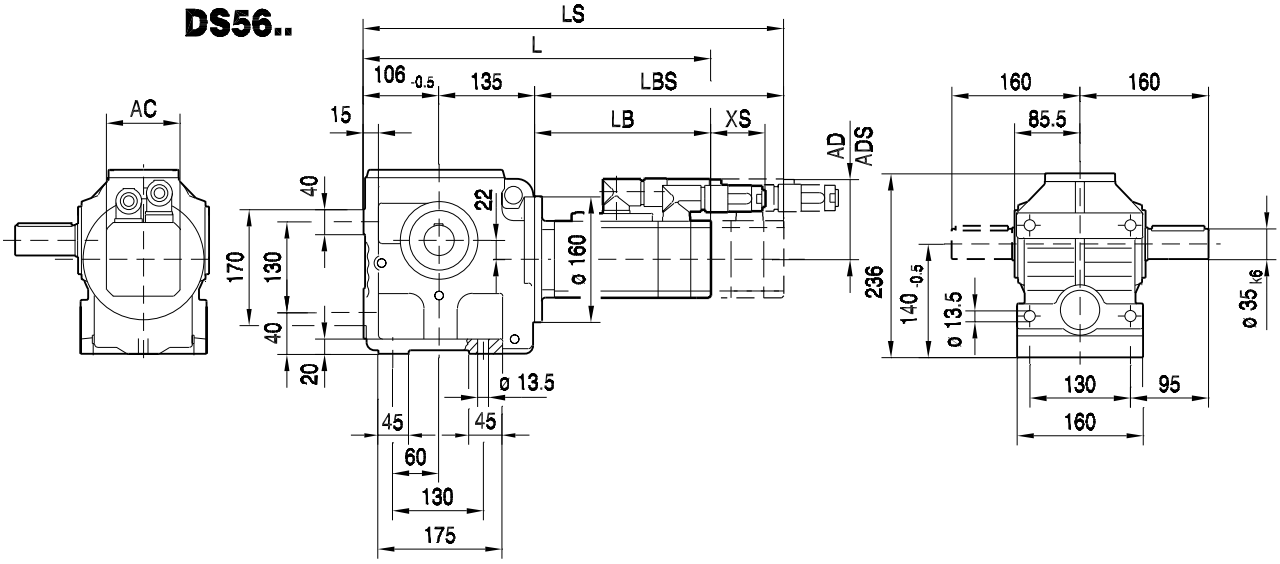

CM..

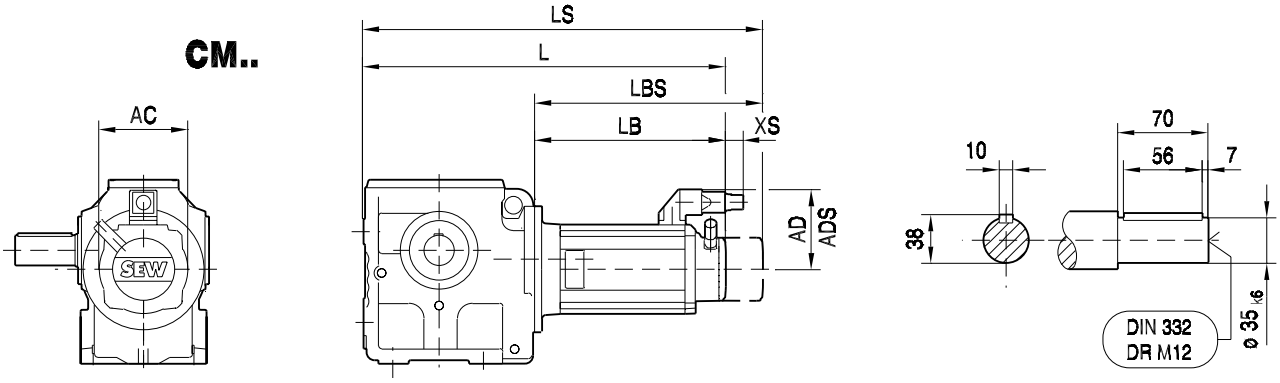

(→ 📖 150)	DS56H	CM71S	CM71M	CM71L	CM90S	CM90M	CM90L	CM112S			
AC	73	117	117	117	142	142	142	186			
AD	77	122	122	122	140	140	140	162			
ADS	77	122	122	122	140	140	140	162			
L	507	473	493	533	525	552	610	565			
LS	507	555	575	615	621	648	706	655			
LB	266	232	252	292	284	311	369	324			
LBS	266	314	334	374	380	407	465	414			
XS	51	45	45	45	50	50	50	36			

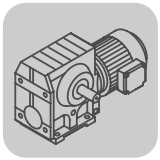

S..CMP, DS, CM
S 67 / CMP / DS / CM [mm]

05 043 01 01

SF67.. DS56..

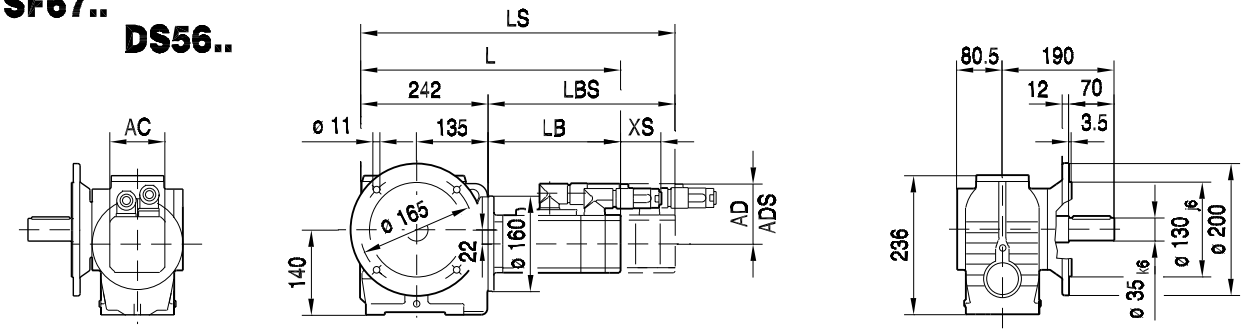

CM..

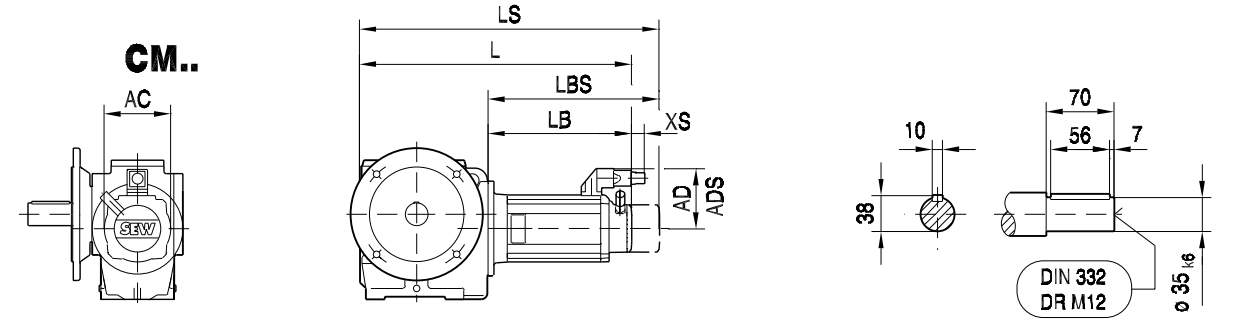

SAF67..

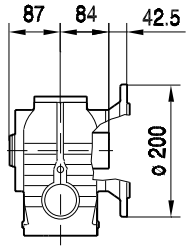

SHF67..

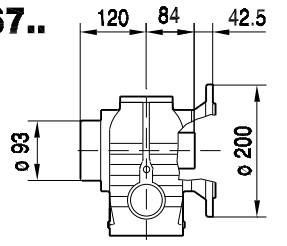

ø 45 H7

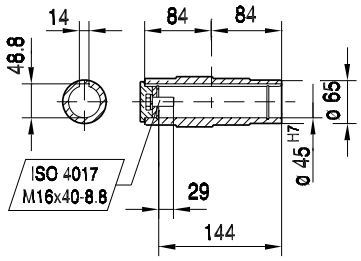

ø 40 H7

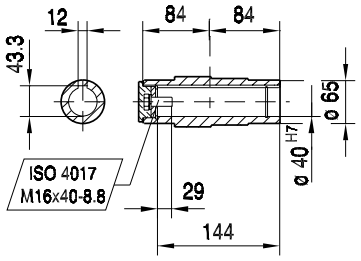

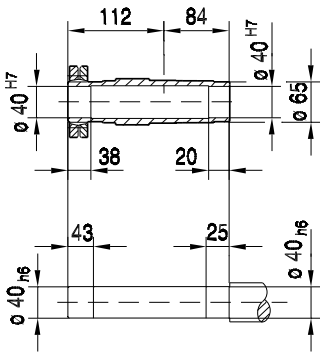

(→ 📖 150)	DS56H	CM71S	CM71M	CM71L	CM90S	CM90M	CM90L	CM112S			
AC	73	117	117	117	142	142	142	186			
AD	77	122	122	122	140	140	140	162			
ADS	77	122	122	122	140	140	140	162			
L	508	474	494	534	526	553	611	566			
LS	508	556	576	616	622	649	707	656			
LB	266	232	252	292	284	311	369	324			
LBS	266	314	334	374	380	407	465	414			
XS	51	45	45	45	50	50	50	36			

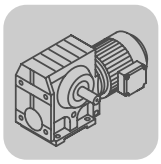

28 013 01 01

SA67.. **DS56..**

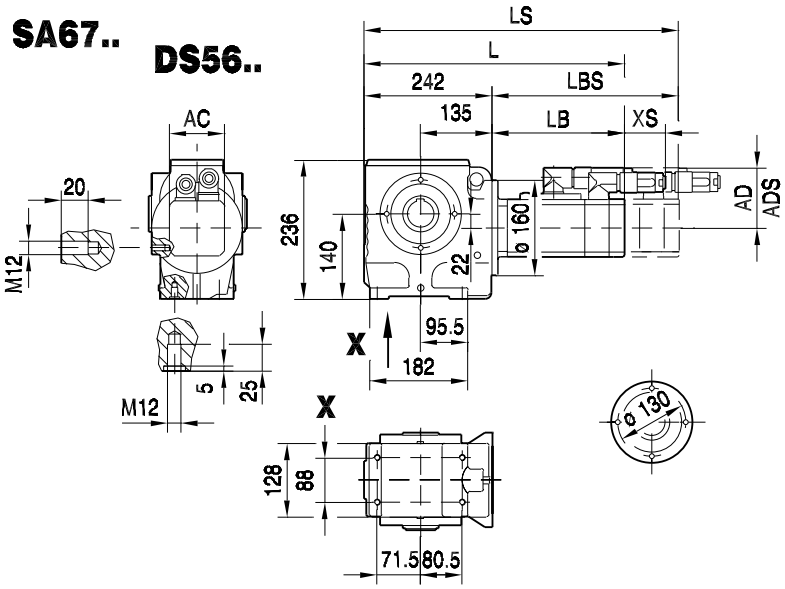

S.. /T..

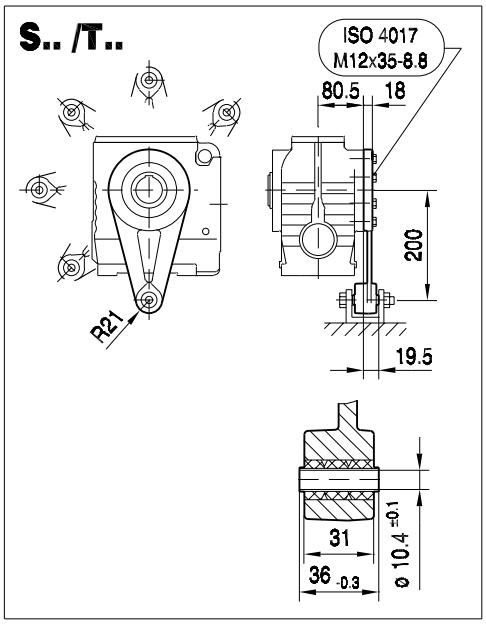

CM..

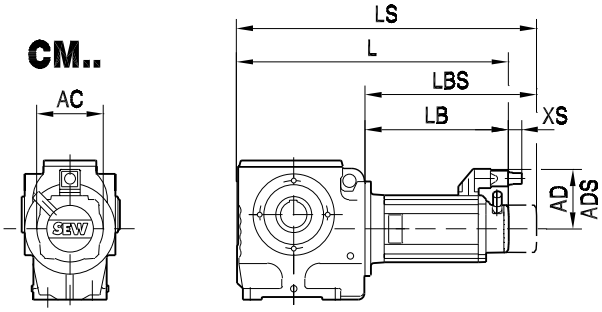

SA67..

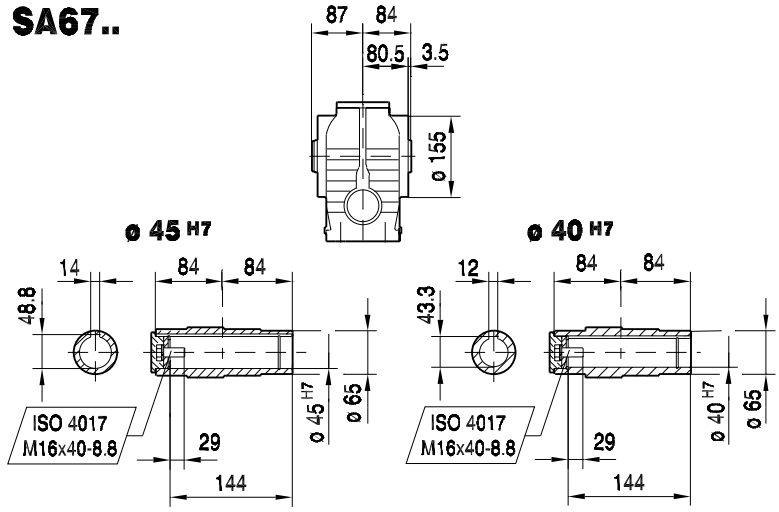

SH67..

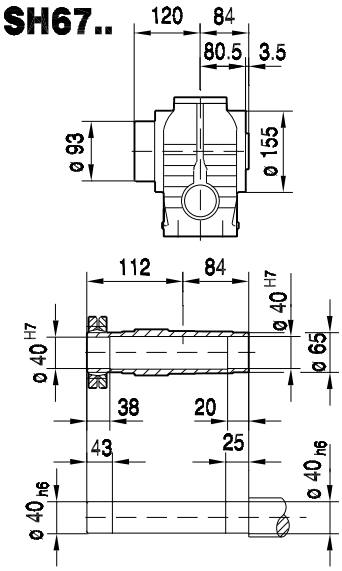

(→ 📖 150)	DS56H	CM71S	CM71M	CM71L	CM90S	CM90M	CM90L	CM112S			
AC	73	117	117	117	142	142	142	186			
AD	77	122	122	122	140	140	140	162			
ADS	77	122	122	122	140	140	140	162			
L	508	474	494	534	526	553	611	566			
LS	508	556	576	616	622	649	707	656			
LB	266	232	252	292	284	311	369	324			
LBS	266	314	334	374	380	407	465	414			
XS	51	45	45	45	50	50	50	36			

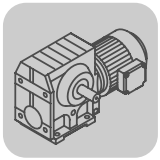

S..CMP, DS, CM
S 67 / CMP / DS / CM [mm]

SAZ67.. DS56..

28 018 00 04

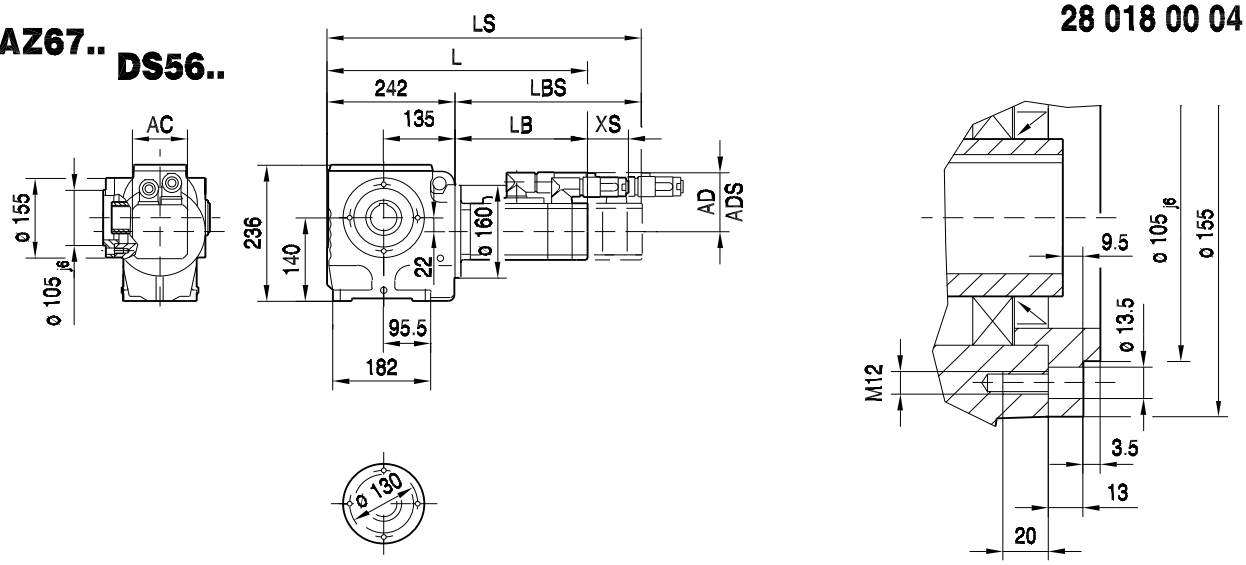

CM..

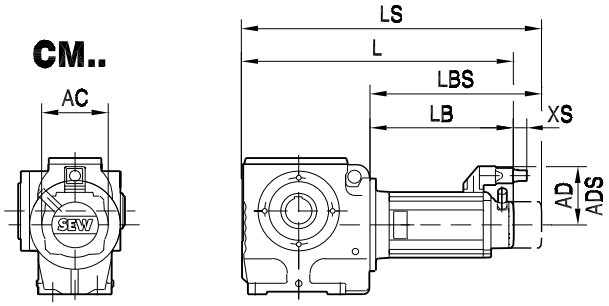

SAZ67..

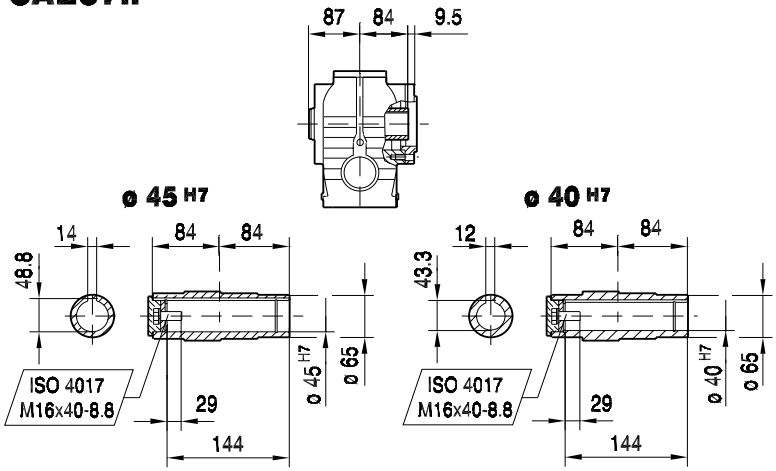

SHZ67..

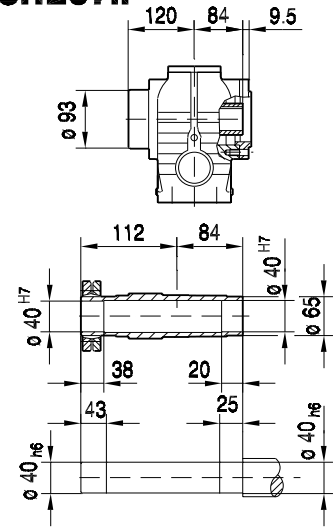

(→ 📖 150)	DS56H	CM71S	CM71M	CM71L	CM90S	CM90M	CM90L	CM112S			
AC	73	117	117	117	142	142	142	186			
AD	77	122	122	122	140	140	140	162			
ADS	77	122	122	122	140	140	140	162			
L	508	474	494	534	526	553	611	566			
LS	508	556	576	616	622	649	707	656			
LB	266	232	252	292	284	311	369	324			
LBS	266	314	334	374	380	407	465	414			
XS	51	45	45	45	50	50	50	36			

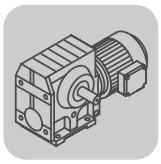

28 022 00 04

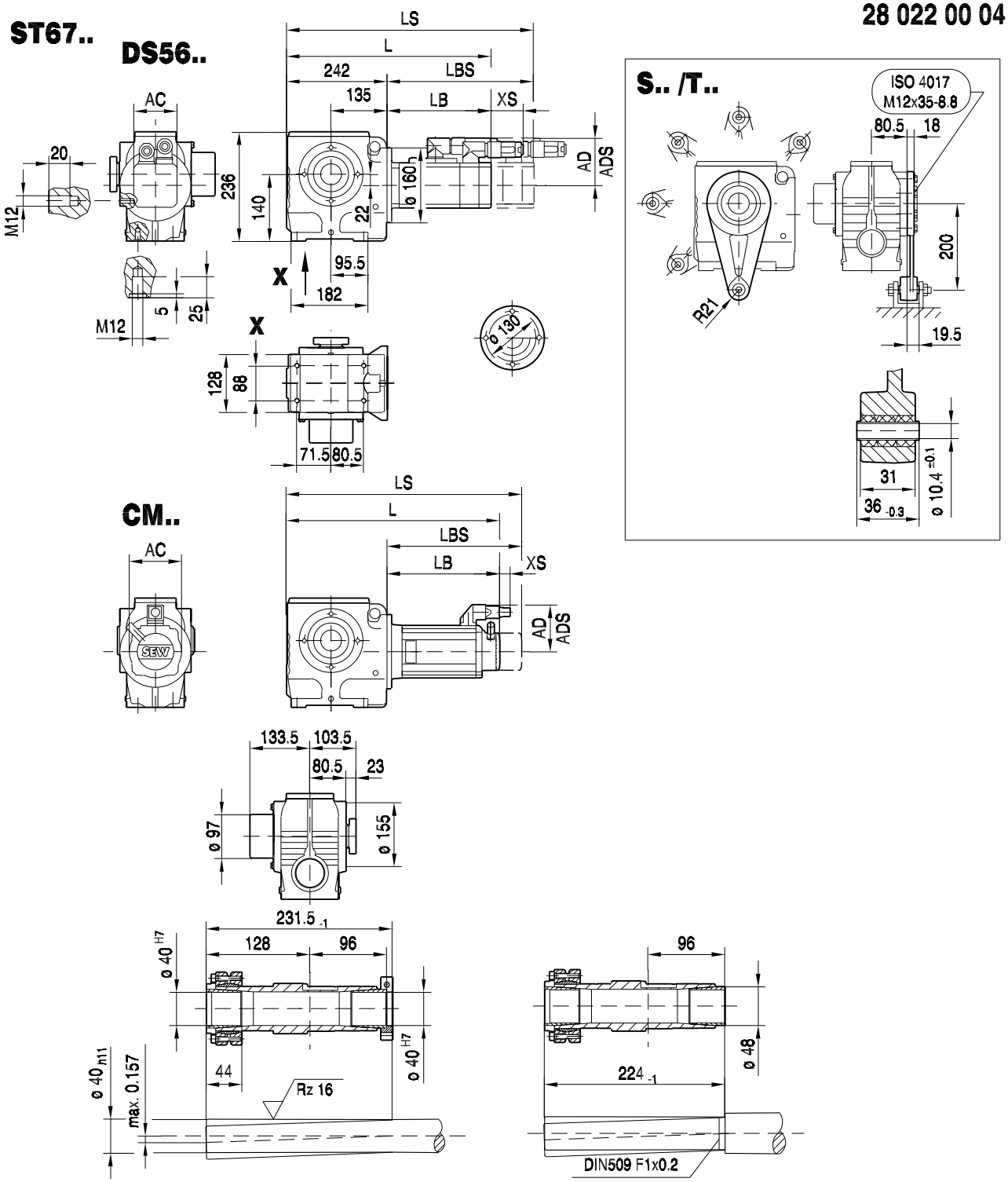

(→ 📖 150)	DS56H	CM71S	CM71M	CM71L	CM90S	CM90M	CM90L	CM112S			
AC	73	117	117	117	142	142	142	186			
AD	77	122	122	122	140	140	140	162			
ADS	77	122	122	122	140	140	140	162			
L	508	474	494	534	526	553	611	566			
LS	508	556	576	616	622	649	707	656			
LB	266	232	252	292	284	311	369	324			
LBS	266	314	334	374	380	407	465	414			
XS	51	45	45	45	50	50	50	36			

12 W37..CMP, DS, CM

12.1 W37..CMP / DS / CM

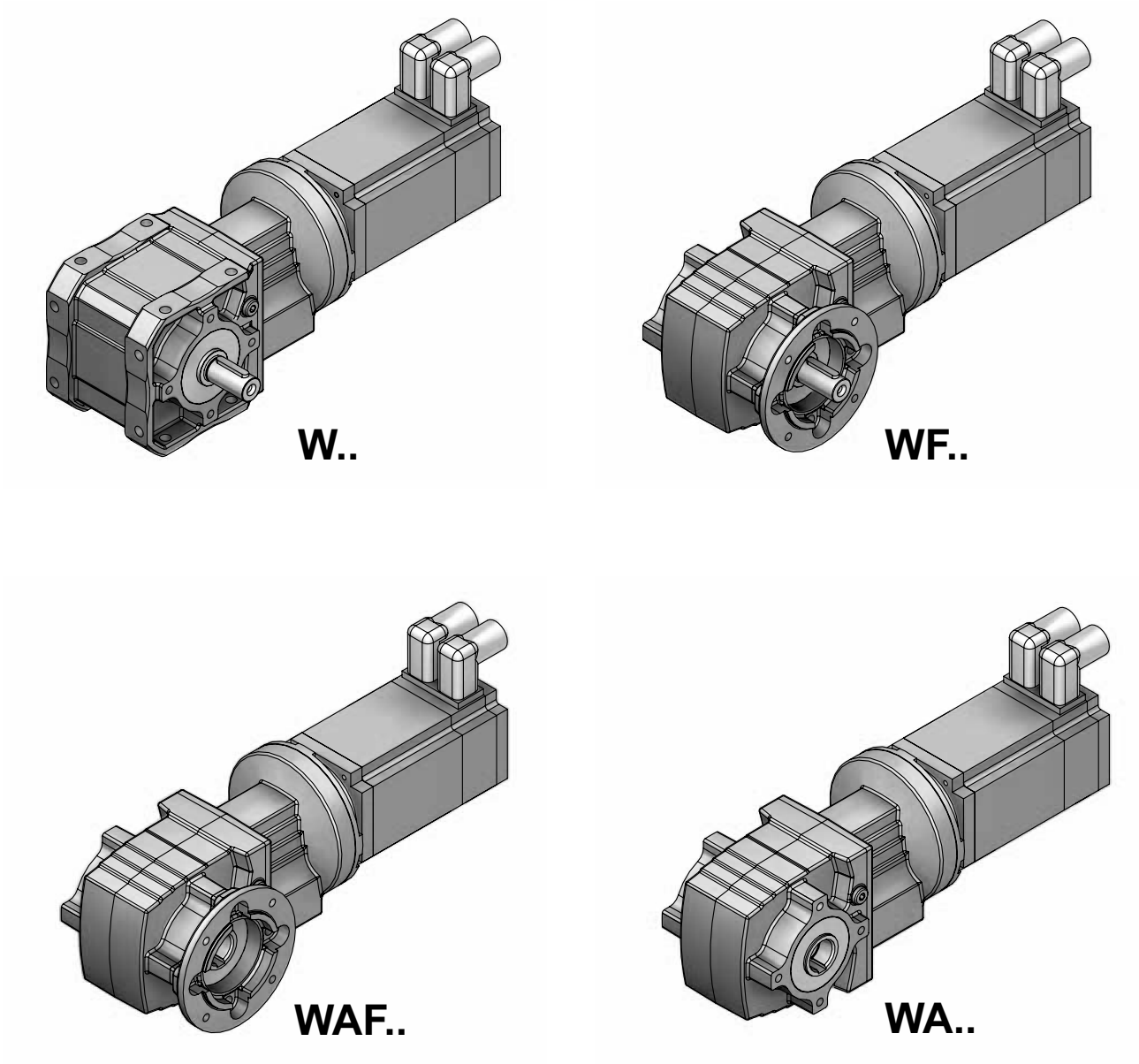

63324axx

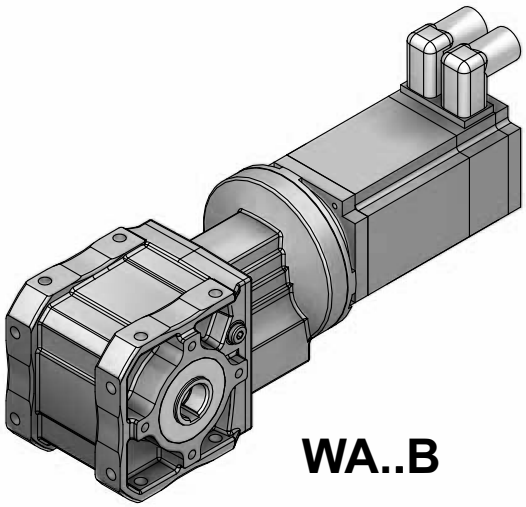

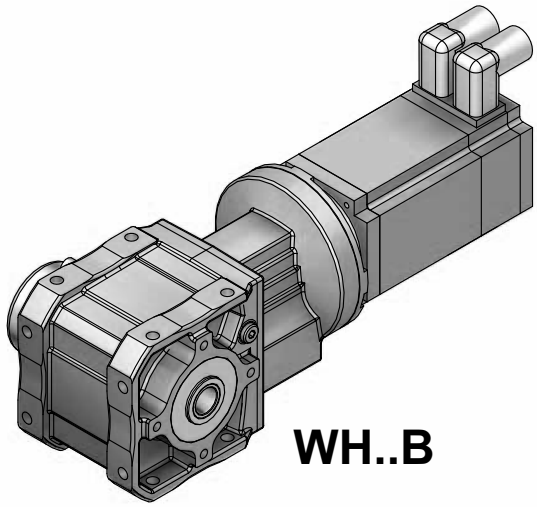

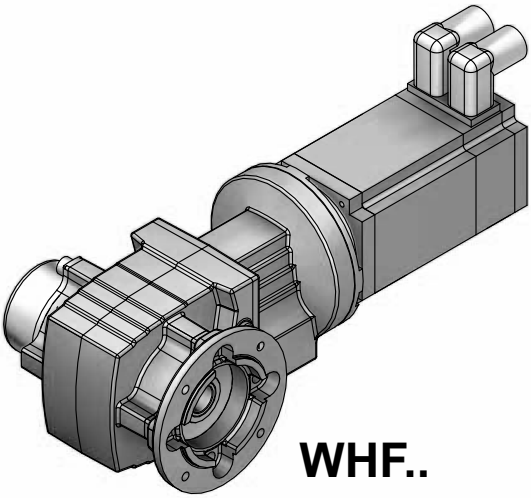

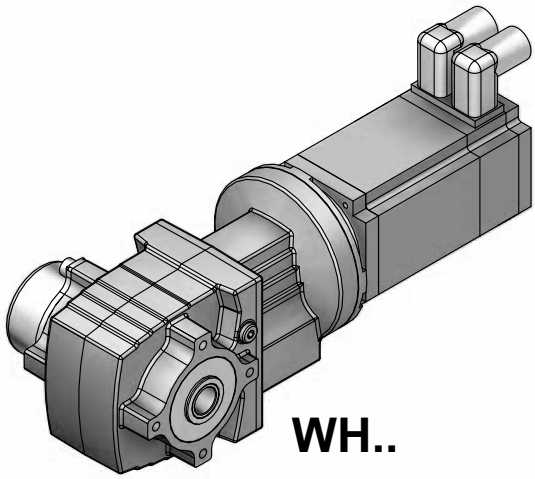

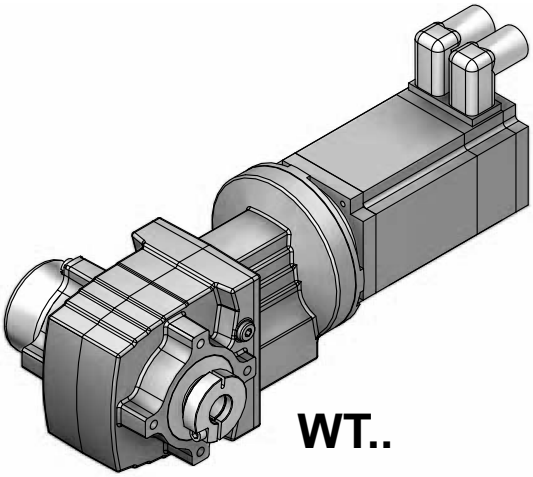

63325axx

12.2 W37 / CMP / DS / CM [Nm]

M_{aDyn} [Nm]		CMP							DS			CM			
	i	40M	50S	50M	50L	63S	63M	63L	56M	56L	56H	71S	71M	71L	90S
W37 2	3.2	11	15	31	46	33	64	>84	11	23	45	49	64	>84	>84
	3.93	14	19	37	56	40	77	>84	14	27	55	60	78	>84	>84
	5.11	18	24	48	72	52	>84	>84	18	36	71	78	>84	>84	>84
	5.77	20	27	54	81	58	>84	>84	20	40	80	>84	>84	>84	>84
	6.97	24	33	65	>84	70	>84	>84	24	48	>84	>84	>84	>84	>84
	8.55	30	40	80	>84	>84	>84		30	59	>84	>84	>84		
	9.92	34	47	>84		>84			34	69	>84				
	10.67	35	48	96	>108	103	>108	>108	35	71	>108	>108	>108	>108	>108
	11.65	40	55						40	81					
	12.7	44	60						44	>84					
	13.89	45	62	>108	>108	>108	>108	>108	45	91	>108	>108	>108	>108	>108
	15.67	51	70	>108	>108	>108	>108	>108	51	102	>108	>108	>108	>108	>108
	18.94	61	84	>108	>108	>108	>108	>108	61	>108	>108	>108	>108	>108	>108
	21.33	62	84	>102	>102	>102	>102	>102	62	>102	>102	>102	>102	>102	>102
	23.25	74	102	>108	>108	>108	>108		74	>108	>108	>108	>108		
	26.96	85	>108	>108		>108			85	>108	>108				
	27.78	78	107	>111	>111	>111	>111	>111	78	>111	>111	>111	>111	>111	>111
	31.33	87	>117	>117	>117	>117	>117	>117	87	>117	>117	>117	>117	>117	>117
	31.67	99	>108						99	>108					
	34.52	108	>108						108	>108					
	37.88	104	>126	>126	>126	>126	>126	>126	104	>126	>126	>126	>126	>126	>126
	46.49	124	>130	>130	>130	>130	>130		124	>130	>130	>130	>130		
	53.92	>130	>130	>130		>130			>130	>130	>130				
	63.33	>126	>126						>126	>126					
	69.05	>130	>130						>130	>130					

m [kg]		CMP							DS			CM			
	s	40M	50S	50M	50L	63S	63M	63L	56M	56L	56H	71S	71M	71L	90S
W37	2	7.4	9.2	10	11	11	13	14	7.8	8.8	9.5	14	15	19	23
WF: + 0.0 kg / WA: + 0.0 kg / WAF: + 0.0 kg															

CMP.. / DS.. / CM..				c_T			
	i	n_{epk} [1/min]	η [%]	W [Nm/']	WF [Nm/']	WA [Nm/']	WAF [Nm/']
W37 2	3.2	4500	93	-	-	-	-
	3.93	4500	92	-	-	-	-
	5.11	4500	92	-	-	-	-
	5.77	4500	91	-	-	-	-
	6.97	4500	91	-	-	-	-
	8.55	4500	91	-	-	-	-
	9.92	4500	91	-	-	-	-
	10.67	4500	87	-	-	-	-
	11.65	4500	91	-	-	-	-
	12.7	4500	91	-	-	-	-
	13.89	4500	86	-	-	-	-
	15.67	4500	86	-	-	-	-
	18.94	4500	85	-	-	-	-
	21.33	4500	76	-	-	-	-
	23.25	4500	84	-	-	-	-
	26.96	4500	83	-	-	-	-
	27.78	4500	74	-	-	-	-
	31.33	4500	73	-	-	-	-
	31.67	4500	82	-	-	-	-
	34.52	4500	82	-	-	-	-
	37.88	4500	72	-	-	-	-
	46.49	4500	70	-	-	-	-
	53.92	4500	69	-	-	-	-
	63.33	4500	67	-	-	-	-
	69.05	4500	67	-	-	-	-

CMP.. / DS.. / CM..							F_{Ramax}				F_{Rapk}			
	i	M_{amax} [Nm]	M_{apk} [Nm]	$M_{aNotaus}$ [Nm]	n_{ak} [1/min]	J_G 10^{-4} [kgm^2]	W [N]	WF [N]	WA [N]	WAF [N]	W [N]	WF [N]	WA [N]	WAF [N]
W37 2	3.2	70	84	119	2188	2.0	2220	2350	2050	2050	3690	3690	5000	5000
	3.93	70	84	119	1781	1.4	2410	2550	2240	2240	3690	3690	5000	5000
	5.11	70	84	119	1370	0.85	2680	2820	2490	2490	3690	3690	5000	5000
	5.77	70	84	119	1213	0.68	2810	2950	2620	2620	3690	3690	5000	5000
	6.97	70	84	119	1004	0.48	3020	3170	2830	2830	3690	3690	5000	5000
	8.55	70	84	119	819	0.33	3270	3420	3070	3070	3690	3690	5000	5000
	9.92	70	84	119	706	0.25	3460	3620	3250	3250	3690	3690	5000	5000
	10.67	90	108	153	150	0.78	2880	3140	2530	2530	3360	3360	5000	5000
	11.65	70	84	119	601	0.19	3680	3830	3460	3460	3690	3690	5000	5000
	12.7	70	84	119	551	0.16	3800	3830	3580	3580	3690	3690	5000	5000
	13.89	90	108	153	151	0.50	3250	3510	2890	2890	3360	3360	5000	5000
	15.67	90	108	153	147	0.41	3430	3610	3070	3070	3360	3360	5000	5000
	18.94	90	108	153	148	0.29	3610	3610	3360	3360	3360	3360	5000	5000
	21.33	85	102	144	66	0.71	3680	3680	3400	3400	3450	3450	5000	5000
	23.25	90	108	153	146	0.21	3610	3610	3690	3690	3360	3360	5000	5000
	26.96	90	108	153	145	0.16	3610	3610	3950	3950	3360	3360	5000	5000
	27.78	93	111	158	50	0.46	3580	3580	3710	3710	3300	3300	5000	5000
	31.33	98	117	166	45	0.38	3510	3510	3840	3840	2960	2960	5000	5000
	31.67	90	108	153	145	0.12	3610	3610	4240	4240	3360	3360	5000	5000
	34.52	90	108	153	145	0.11	3610	3610	4410	4410	3360	3360	5000	5000
	37.88	105	126	178	37	0.27	3400	3400	4080	4080	2080	2080	5000	5000
	46.49	110	130	187	32	0.19	3320	3320	4410	4410	1490	1490	5000	5000
	53.92	110	130	187	32	0.15	3320	3320	4730	4730	1490	1490	5000	5000
	63.33	105	126	178	36	0.12	3400	3400	5000	5000	2080	2080	5000	5000
	69.05	110	130	187	32	0.10	3320	3320	5000	5000	1490	1490	5000	5000

12.3 W37 / *CMP / DS / CM [mm]*

20 031 00 07

W37..

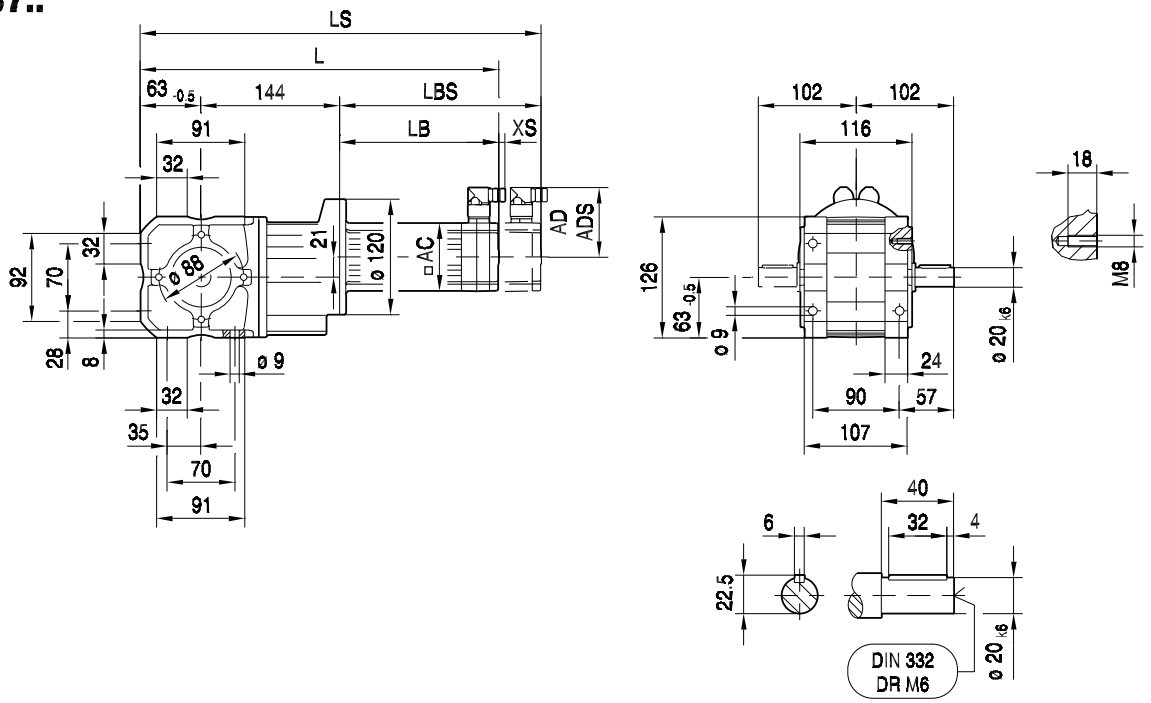

WA37B..

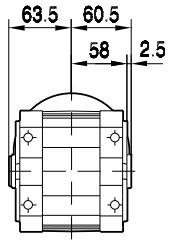

WH37B..

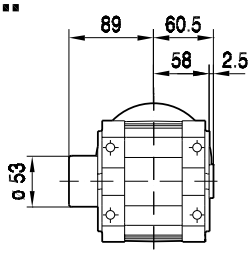

ø 25 H7

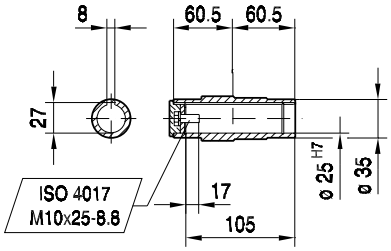

ø 20 H7

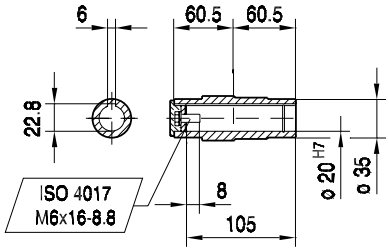

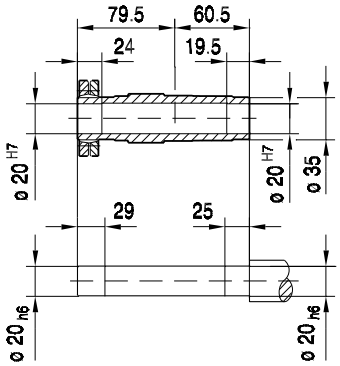

(→ 📖 150)	CMP40M	CMP50S	CMP50M	CMP50L	CMP63S	CMP63M	CMP63L	
AC	57	73	73	73	88	88	88	
AD	75	82	82	82	89	89	89	
ADS	75	82	82	82	89	89	89	
L	350	352	391	430	387	437	490	
LS	380	381	420	459	415	465	519	
LB	143	145	184	223	180	230	283	
LBS	173	174	213	252	208	258	312	
XS	19	18	18	18	14	14	14	

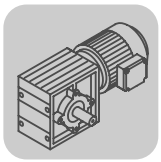

20 032 00 07

WF37..

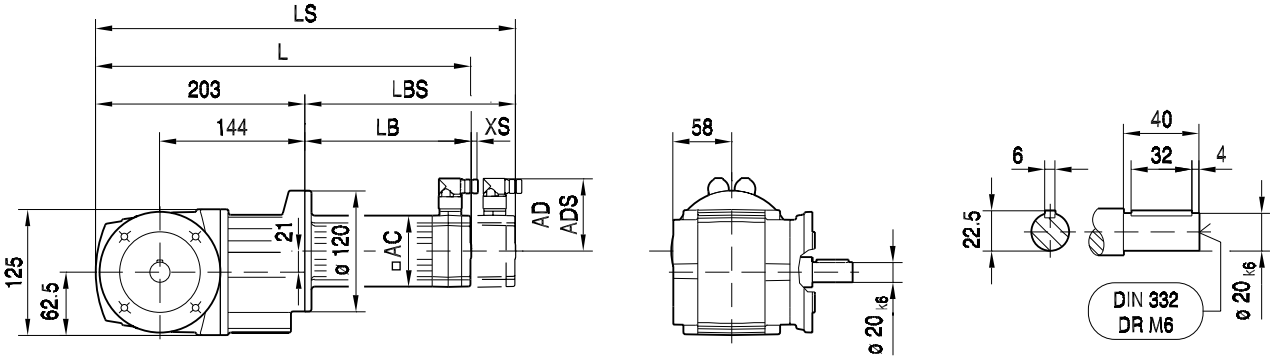

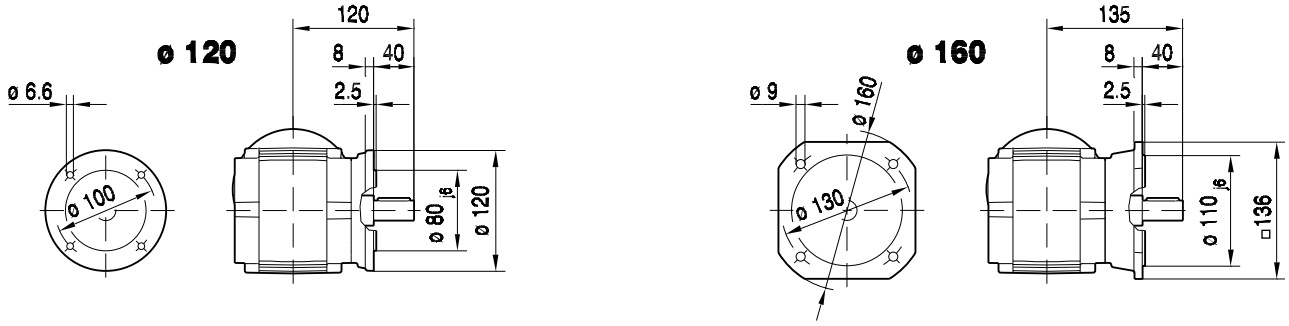

WAF37..

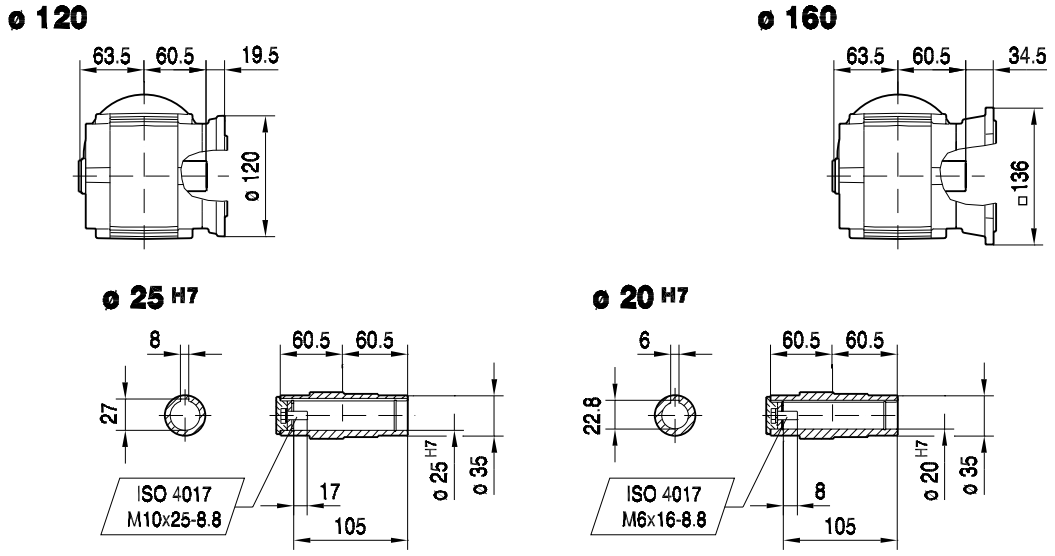

(→ 📖 150)	CMP40M	CMP50S	CMP50M	CMP50L	CMP63S	CMP63M	CMP63L	
AC	57	73	73	73	88	88	88	
AD	75	82	82	82	89	89	89	
ADS	75	82	82	82	89	89	89	
L	346	348	387	426	383	433	486	
LS	376	377	416	455	411	461	515	
LB	143	145	184	223	180	230	283	
LBS	173	174	213	252	208	258	312	
XS	19	18	18	18	14	14	14	

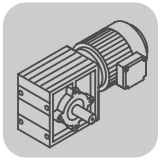

W37..CMP, DS, CM
W37 / CMP / DS / CM [mm]

20 033 00 07

WHF37..

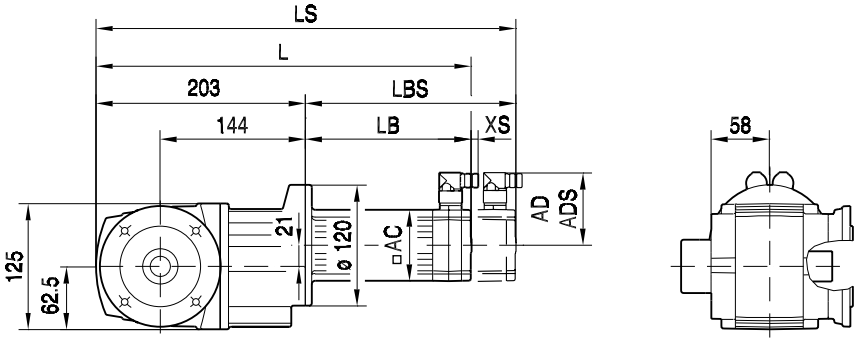

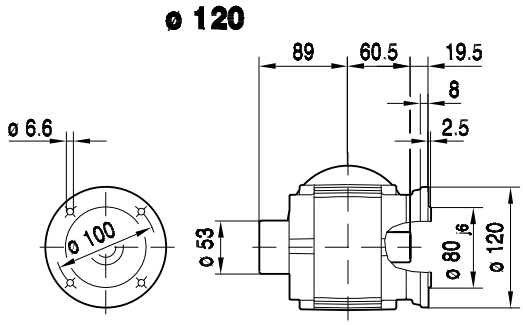

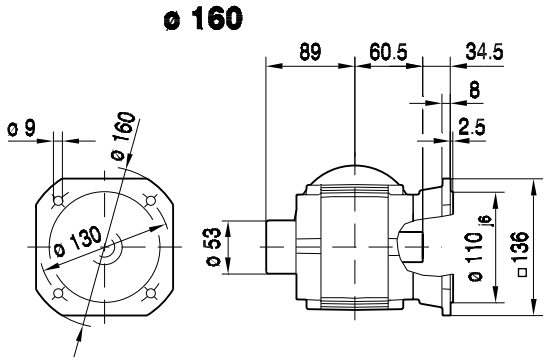

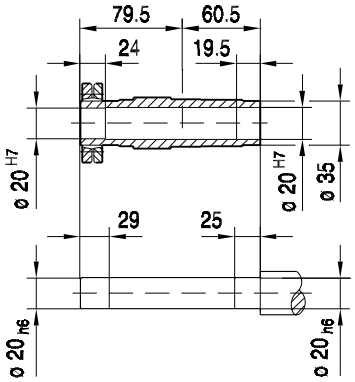

(→ 📖 150)	CMP40M	CMP50S	CMP50M	CMP50L	CMP63S	CMP63M	CMP63L	
AC	57	73	73	73	88	88	88	
AD	75	82	82	82	89	89	89	
ADS	75	82	82	82	89	89	89	
L	346	348	387	426	383	433	486	
LS	376	377	416	455	411	461	515	
LB	143	145	184	223	180	230	283	
LBS	173	174	213	252	208	258	312	
XS	19	18	18	18	14	14	14	

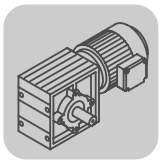

20 034 00 07

WA37..

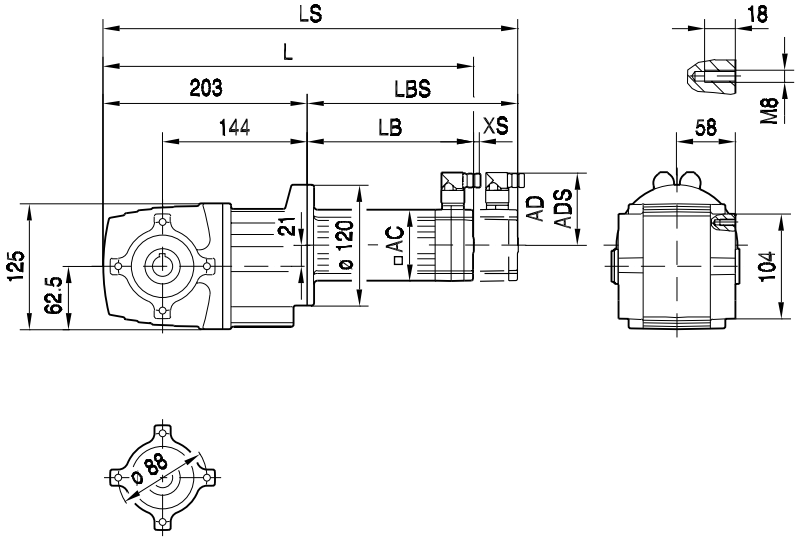

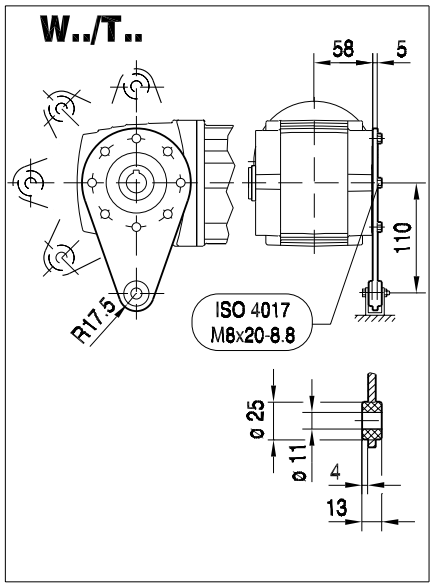

WA37..

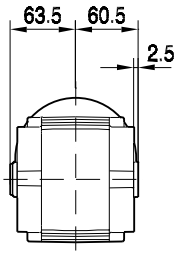

ø 25 H7

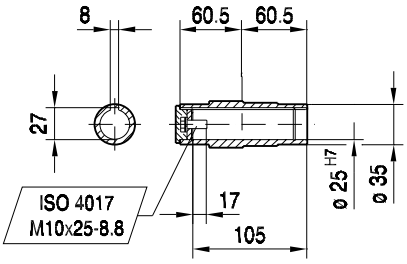

ø 20 H7

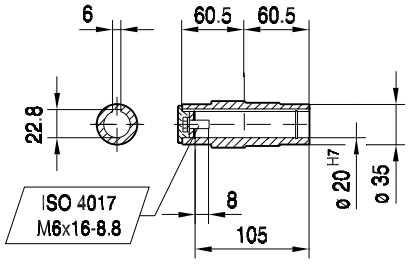

WH37..

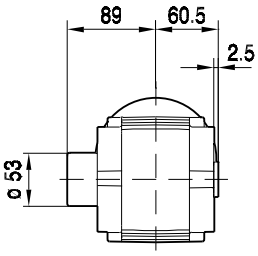

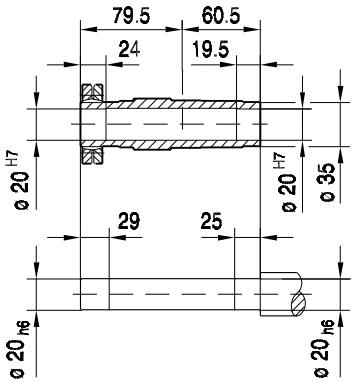

(→ 📖 150)	CMP40M	CMP50S	CMP50M	CMP50L	CMP63S	CMP63M	CMP63L	
AC	57	73	73	73	88	88	88	
AD	75	82	82	82	89	89	89	
ADS	75	82	82	82	89	89	89	
L	346	348	387	426	383	433	486	
LS	376	377	416	455	411	461	515	
LB	143	145	184	223	180	230	283	
LBS	173	174	213	252	208	258	312	
XS	19	18	18	18	14	14	14	

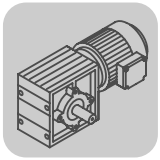

W37..CMP, DS, CM
W37 / CMP / DS / CM [mm]

20 035 00 07

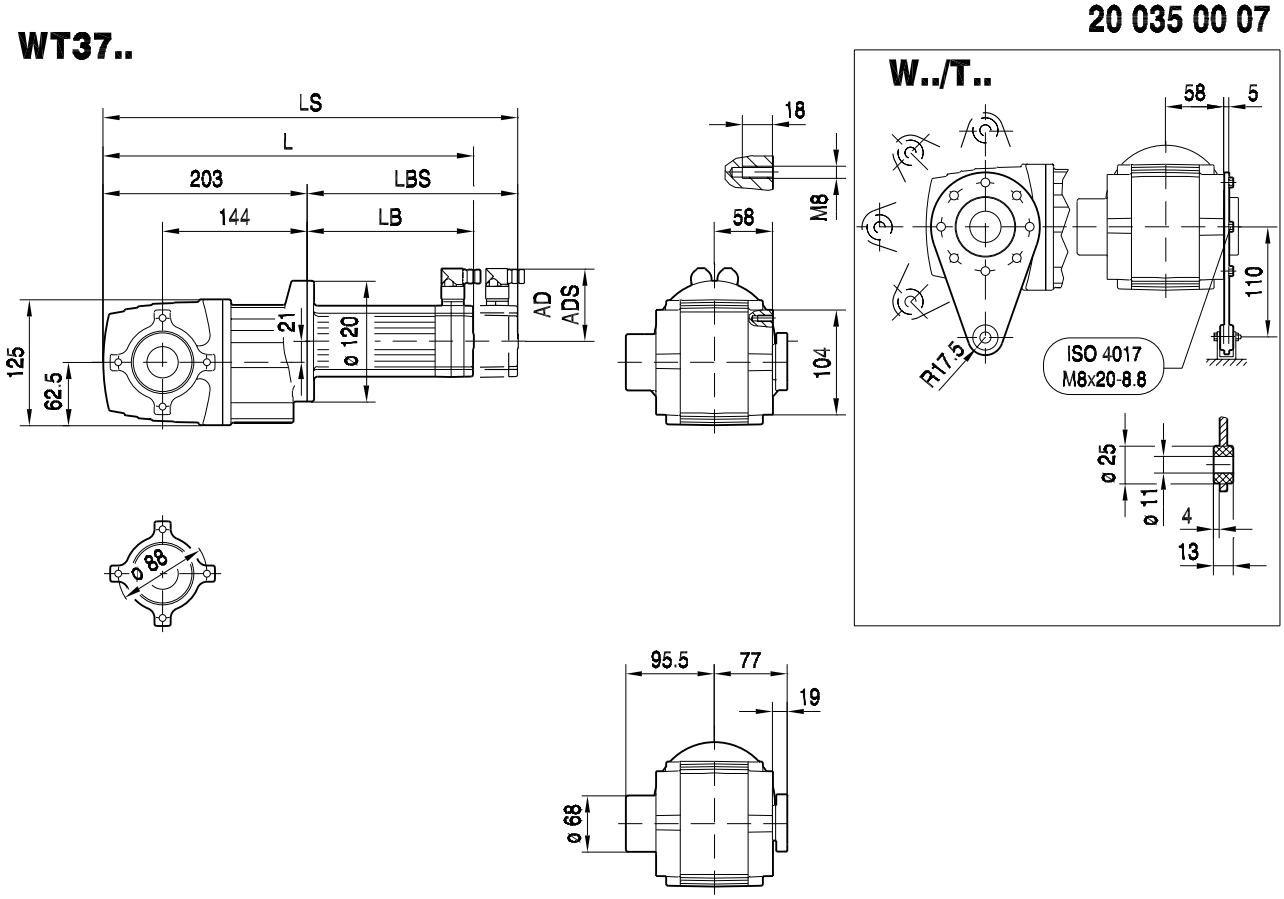

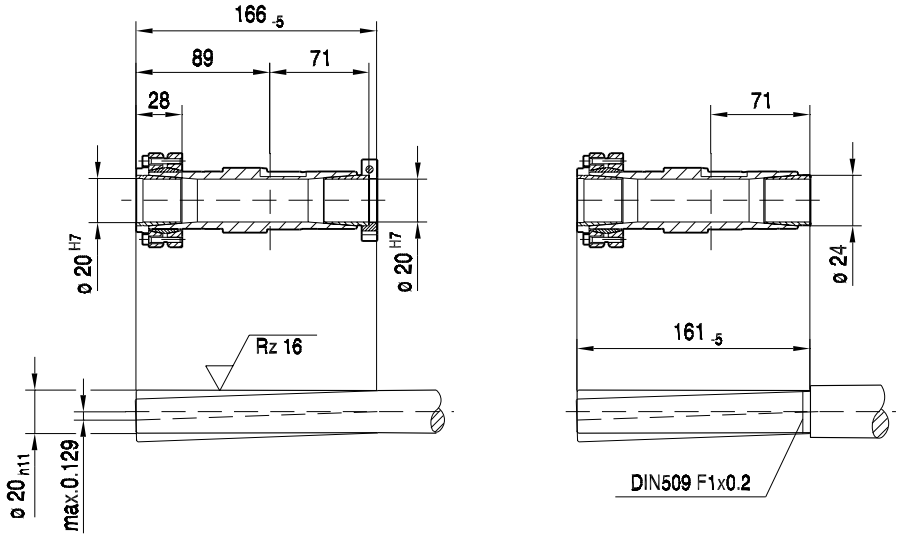

(→ 📖 150)	CMP40M	CMP50S	CMP50M	CMP50L	CMP63S	CMP63M	CMP63L	
AC	57	73	73	73	88	88	88	
AD	75	82	82	82	89	89	89	
ADS	75	82	82	82	89	89	89	
L	346	348	387	426	383	433	486	
LS	376	377	416	455	411	461	515	
LB	143	145	184	223	180	230	283	
LBS	173	174	213	252	208	258	312	
XS	19	18	18	18	14	14	14	

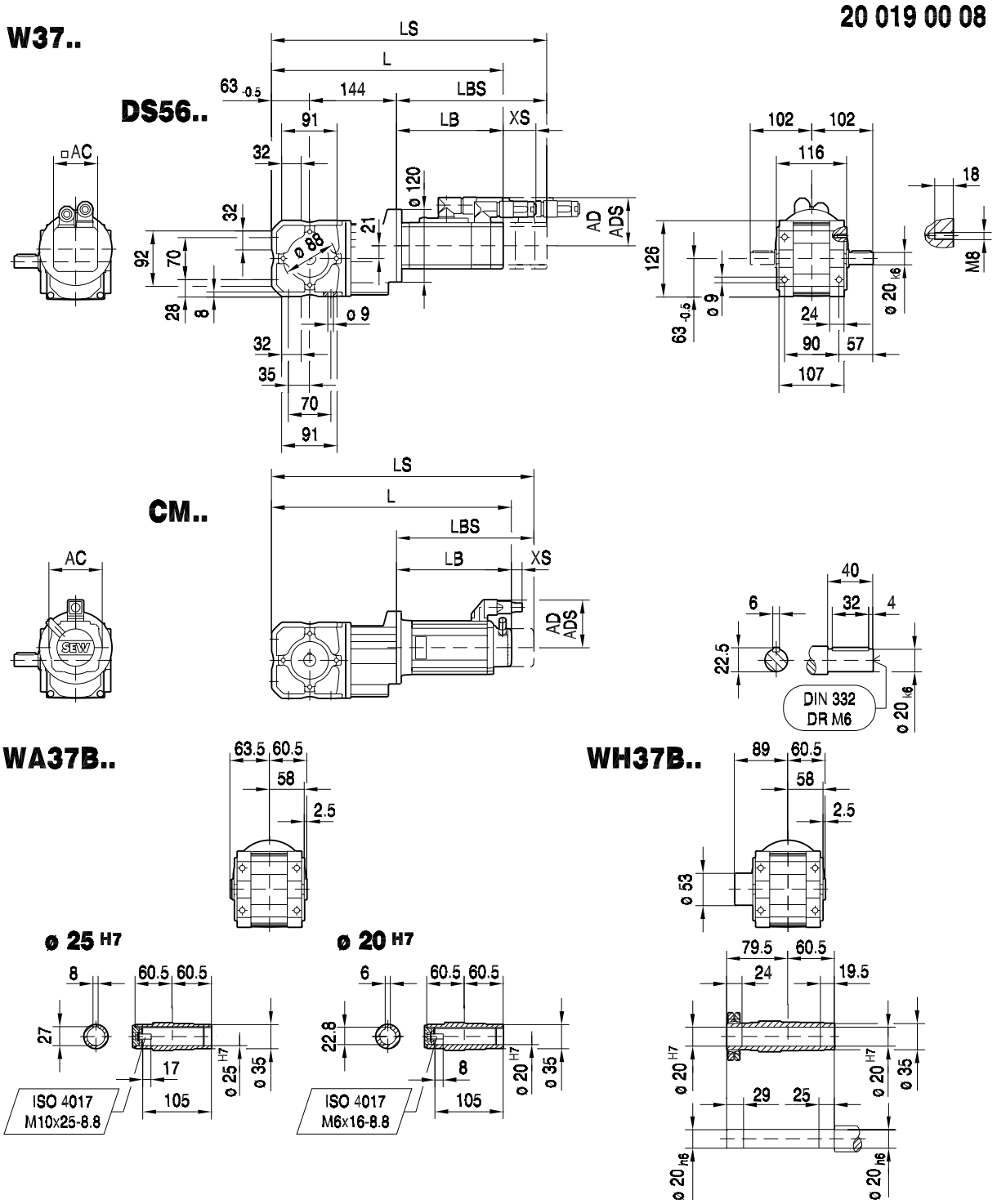

(→ 📖 150)	DS56M	DS56L	DS56H	CM71S	CM71M	CM71L	CM90S	
AC	73	73	73	117	117	117	142	
AD	71	71	77	122	122	122	140	
ADS	77	77	77	122	122	122	140	
L	344	376	479	446	466	508	501	
LS	374	406	479	528	548	590	596	
LB	137	169	272	239	259	301	294	
LBS	167	199	272	321	341	383	389	
XS	70	70	51	45	45	45	50	

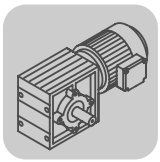

W37..CMP, DS, CM
W37 / CMP / DS / CM [mm]

WF37..

20 020 00 08

DS56..

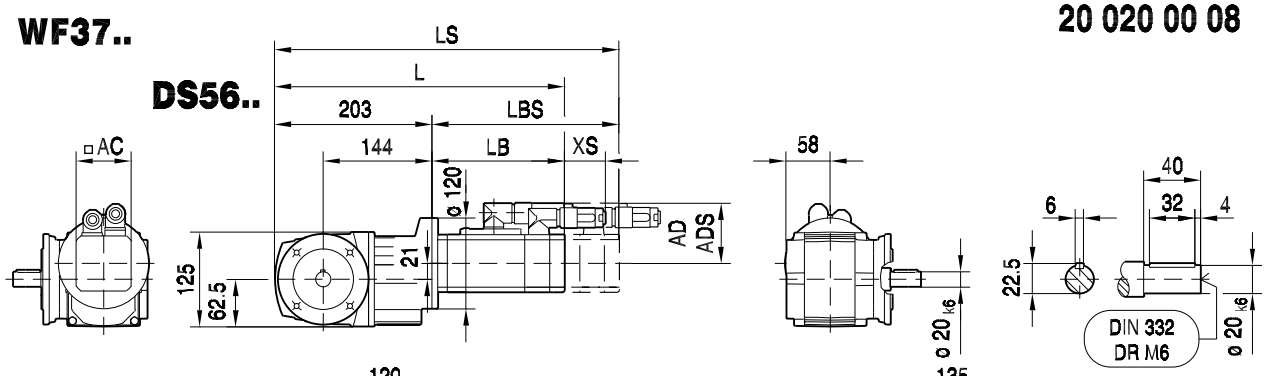

ø 120

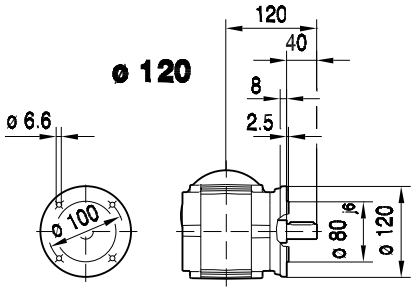

ø 160

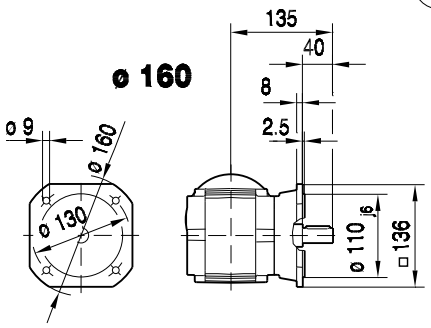

CM..

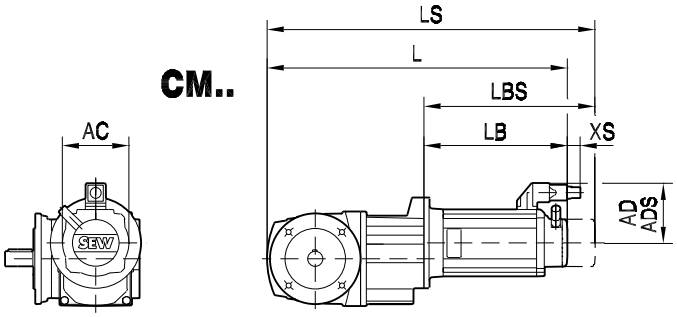

WAF37..

ø 120

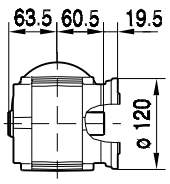

ø 160

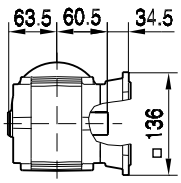

ø 25 H7

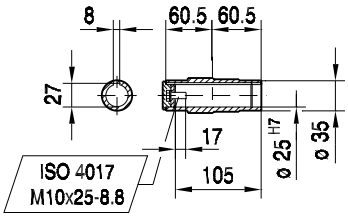

ø 20 H7

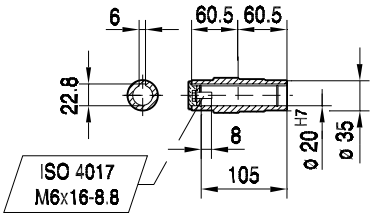

(→ 📖 150)	DS56M	DS56L	DS56H	CM71S	CM71M	CM71L	CM90S	
AC	73	73	73	117	117	117	142	
AD	71	71	77	122	122	122	140	
ADS	77	77	77	122	122	122	140	
L	340	372	475	442	462	504	497	
LS	370	402	475	524	544	586	592	
LB	137	169	272	239	259	301	294	
LBS	167	199	272	321	341	383	389	
XS	70	70	51	45	45	45	50	

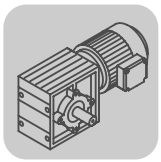

20 021 00 08

WHF37..

DS56..

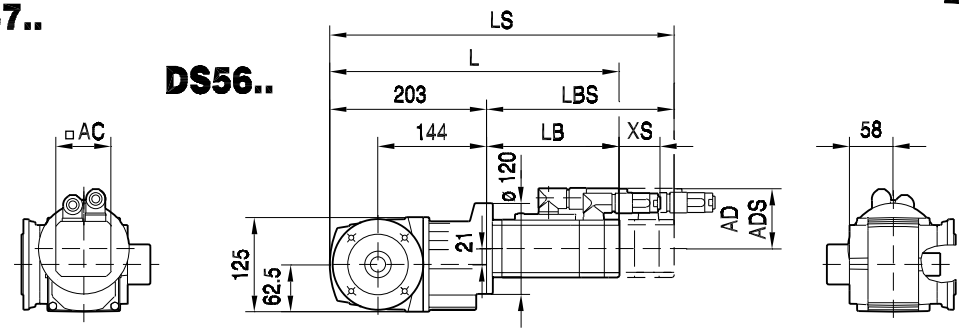

ø 120

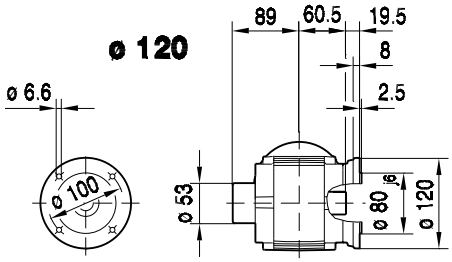

ø 160

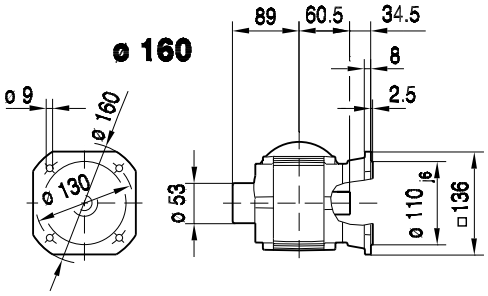

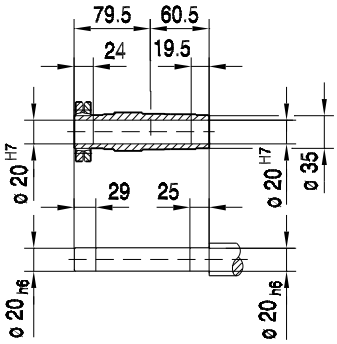

CM..

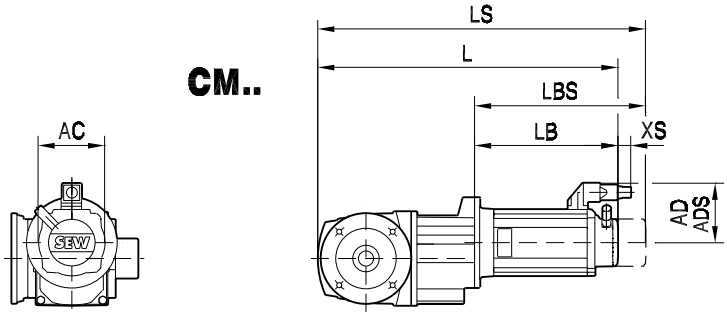

(→ 📖 150)	DS56M	DS56L	DS56H	CM71S	CM71M	CM71L	CM90S	
AC	73	73	73	117	117	117	142	
AD	71	71	77	122	122	122	140	
ADS	77	77	77	122	122	122	140	
L	340	372	475	442	462	504	497	
LS	370	402	475	524	544	586	592	
LB	137	169	272	239	259	301	294	
LBS	167	199	272	321	341	383	389	
XS	70	70	51	45	45	45	50	

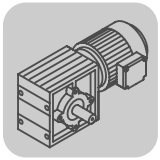

W37..CMP, DS, CM
W37 / CMP / DS / CM [mm]

20 022 00 08

WA37..

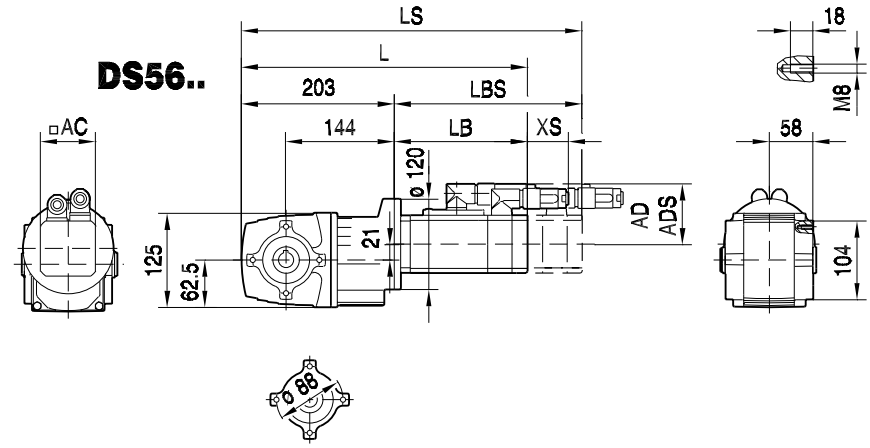

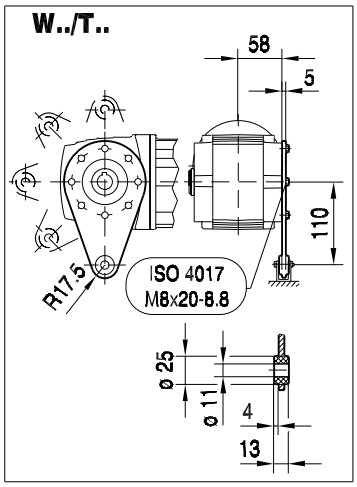

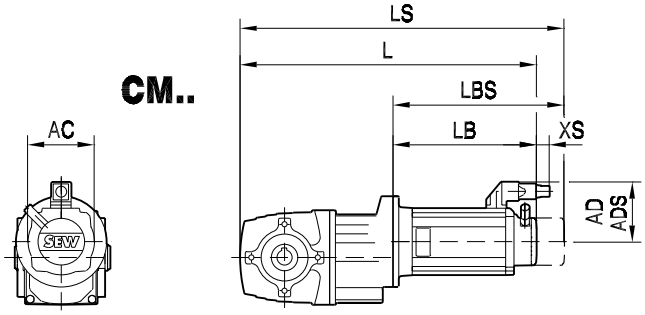

WA37..

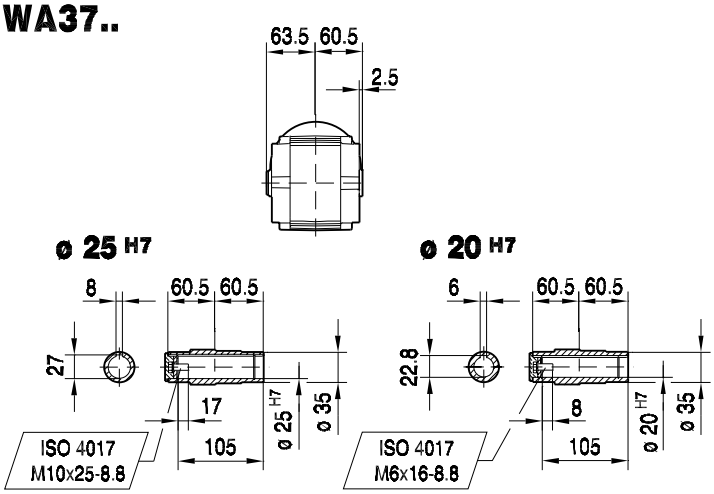

WH37..

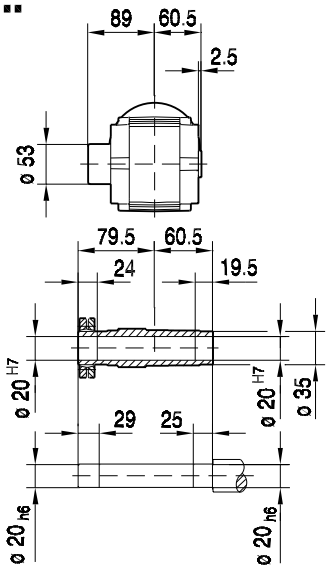

(→ 📖 150)	DS56M	DS56L	DS56H	CM71S	CM71M	CM71L	CM90S	
AC	73	73	73	117	117	117	142	
AD	71	71	77	122	122	122	140	
ADS	77	77	77	122	122	122	140	
L	340	372	475	442	462	504	497	
LS	370	402	475	524	544	586	592	
LB	137	169	272	239	259	301	294	
LBS	167	199	272	321	341	383	389	
XS	70	70	51	45	45	45	50	

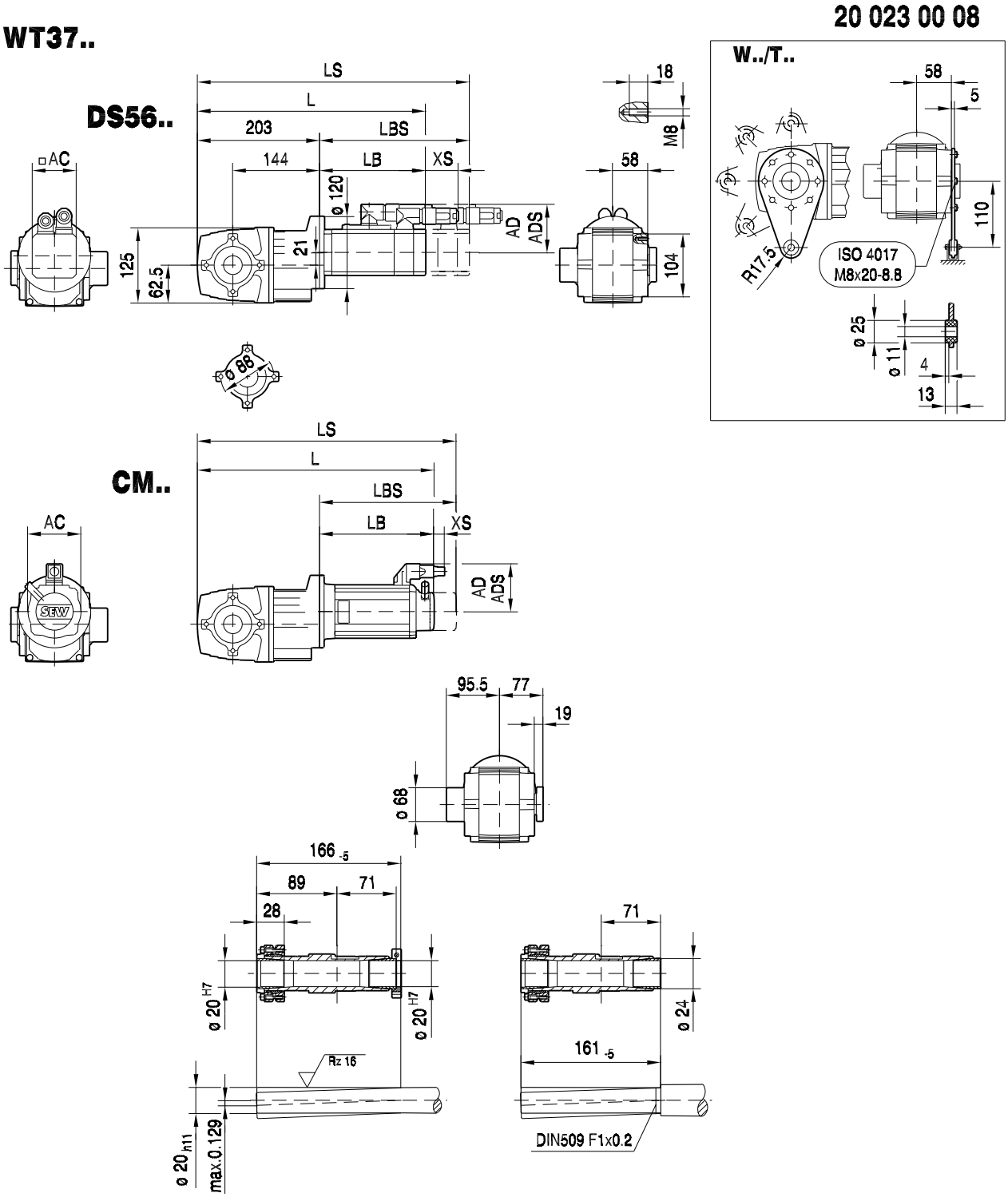

(→ 📖 150)	DS56M	DS56L	DS56H	CM71S	CM71M	CM71L	CM90S	
AC	73	73	73	117	117	117	142	
AD	71	71	77	122	122	122	140	
ADS	77	77	77	122	122	122	140	
L	340	372	475	442	462	504	497	
LS	370	402	475	524	544	586	592	
LB	137	169	272	239	259	301	294	
LBS	167	199	272	321	341	383	389	
XS	70	70	51	45	45	45	50	