SEW EURODRIVE

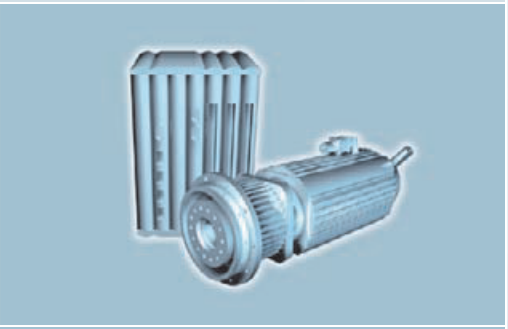

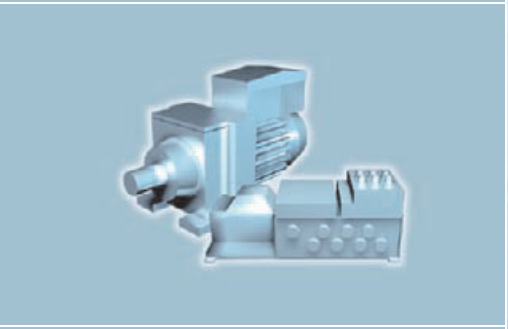

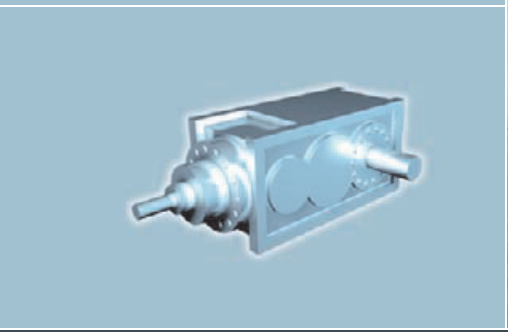

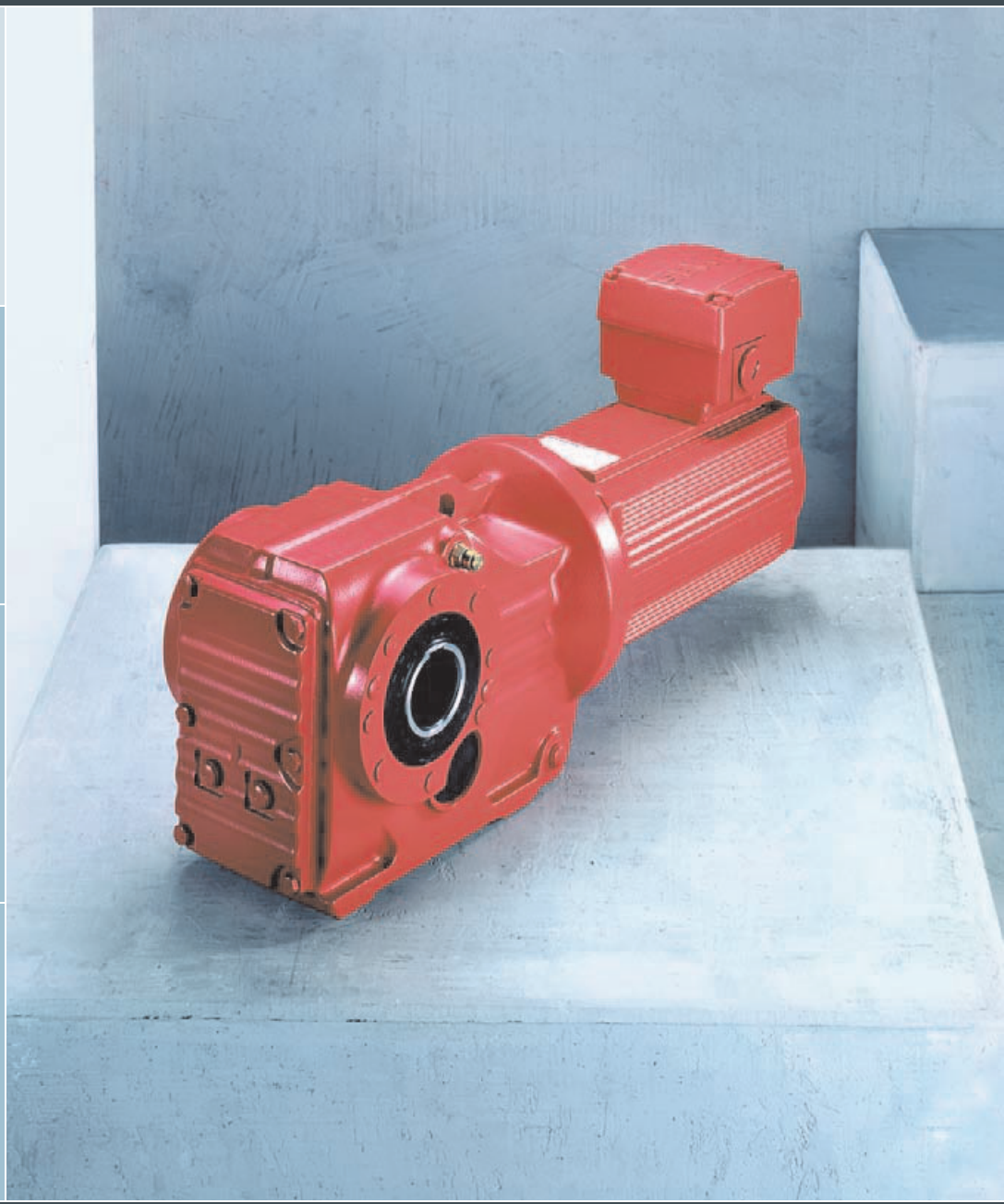

ASEPTIC Gearmotors

A3.C03

Edition 02/2005
11312319 / EN

Catalog

SEW EURODRIVE

SEW EURODRIVE

NEW CATALOG
ASEPTIC Gearmotors

(Valid from February 2005)

SEW-EURODRIVE is pleased to present its new **ASEPTIC Gearmotors** catalog. We have optimized the contents to provide you with more information and and make it even easier for you to work with the catalog:

Compared to the previous edition of the "ASEPTIC Gearmotors" catalog (publication number: 11223510, Edition 02/2004), changes and additions have been made in the following sections and subsections:

Section: Product Description and Overview of Types

- When ASEPTIC gearmotors are used
- Optimum protection under all ambient conditions
- Product characteristics of ASEPTIC^{plus}
- Corrosion and surface protection
- Resistance of OS4 surface coating against cleansing agents
- General information
- Unit designation for gear units and options

Section: Project Planning

- Thermal limit rating in ASEPTIC gearmotors

Section: Lubricants

- Anti-friction bearing greases
- Lubricants table

Section: Selection Tables

- Selection tables for:
  - ASEPTIC helical gearmotors
  - ASEPTIC parallel shaft helical gearmotors
  - ASEPTIC helical-bevel gearmotors
  - ASEPTIC Spiroplan® gearmotors
  - ASEPTIC helical worm gearmotors

Section: Technical Data on ASEPTIC Motors

- Section is new

See for yourself: *Made by* **SEW-EURODRIVE** is known throughout the world for its competence in drive engineering because

Development, production, consulting, sales and service

are available from one source at SEW-EURODRIVE.

Bruchsal, February 2005

SEW-EURODRIVE GmbH & Co KG

1 The SEW-EURODRIVE Group of Companies 4

2 Product Description and Overview of Types 6
2.1 Why ASEPTIC gearmotors? 6
2.2 Always the right choice 7
2.3 Optimum protection in all ambient conditions 7
2.4 Product characteristics 8
2.5 Corrosion and surface protection 10
2.6 Resistance of OS4 surface coating against cleansing agents 12
2.7 Certificate from Henkel-ECOLAB® 13
2.8 General information 15
2.9 Unit designations for gear units and options 16
2.10 Unit designation 18

3 Project Planning 19
3.1 Additional documentation 19
3.2 Thermal limit rating in ASEPTIC gearmotors 20
3.3 Checklist/request form for ASEPTIC gearmotors 21

4 Mounting Positions 23
4.1 General information on mounting positions 23
4.2 Position of motor terminal box and cable entry 24

5 Lubricants 25
5.1 General information 25
5.2 Lubricant table 26

6 Notes on Selection Tables 27

7 ASEPTIC Helical Gearmotors 28
7.1 Selection tables R..DAS 28

8 ASEPTIC Parallel Shaft Helical Gearmotors 45
8.1 Selection tables F..DAS.. 45

9 ASEPTIC Helical-Bevel Gearmotors 57
9.1 Selection tables K..DAS.. 57

10 ASEPTIC Spiroplan® gearmotors 70
10.1 Selection tables W..DAS.. 70

11 ASEPTIC Helical-Worm Gearmotors 72
11.1 Selection tables S..DAS.. 72

12 Technical Data on ASEPTIC Motors 81
12.1 Basic structure 82
12.2 Motor data 83
12.3 Gear unit gaskets and washers 84
12.4 Motor gaskets 84
12.5 Available motor options 85
12.6 Standards and regulations 85
12.7 Nameplate 85
12.8 Electrical characteristics 86
12.9 Enclosures 86
12.10 Brakes 87
12.11 Braking torques BR1, BR2 91
12.12 Operating currents 91
12.13 Operation on inverter 92

13 Dimension Sheets 93
13.1 Dimension sheet notes 93

14 Index 100

1 The SEW-EURODRIVE Group of Companies

Introduction

SEW-EURODRIVE is a leading company in the global market for electrical drive engineering. Its global presence, extensive product range and broad spectrum of services make SEW-EURODRIVE the ideal partner for the machinery and plant construction industry when it comes to providing drive systems for demanding applications.

SEW-EURODRIVE possesses many years of experience in drive engineering which it puts to good use when developing, producing and selling all its drives with components drawn from mechanical and electrical engineering and electronics.

The company headquarters are in Bruchsal, Germany. Components for SEW-EURODRIVE's modular drive system are manufactured to the highest quality standards in production plants sited in Germany, France, the USA, Brazil and China. The individual drive systems are assembled with a consistently high quality standard and very short delivery times from stocked components in our assembly plants located in more than 30 industrialized countries all over the world. SEW-EURODRIVE sales, consulting, customer and spare parts services are available in more than 50 countries around the globe.

The product range

- Gearmotors, gear units and motors
  - Helical gear units/gearmotors
  - Parallel shaft helical gear units/gearmotors
  - Helical-bevel gear units/gearmotors
  - Helical-worm gear units/gearmotors
  - Spiroplan® right-angle gearmotors
  - Planetary gearmotors
  - Industrial gear units
  - Low backlash gear units/gearmotors
  - Brake motors
  - Drives for overhead trolley systems
  - Geared torque motors
  - Pole-changing gearmotors

- Electronically controlled drives
  - MOVITRAC® frequency inverters
  - MOVIDRIVE® drive inverters
  - MOVIDYN® servo controllers
  - Technology and communication options for the inverters
  - Asynchronous AC motors and AC gearmotors
  - Asynchronous and synchronous servomotors and geared servomotors
  - DC motors, brake motors and gearmotors
  - Asynchronous and synchronous linear motors

- Components for decentralized installation
  - MOVIMOT® gearmotors with integrated frequency inverter
  - MOVI-SWITCH® gearmotors with integrated switching and protection function
  - Field distributors, fieldbus interfaces

- Mechanical variable speed drives
  - VARIBLOC® wide V-belt variable speed gearmotors
  - VARIMOT® friction disk variable speed gearmotors

- Explosion-proof drives to ATEX 95/9/EC for categories 2 and 3

- Services
  - Technical consulting
  - User software
  - Seminars and training
  - Extensive technical documentation
  - Worldwide customer service

Content of the catalog

This catalog describes SEW-EURODRIVE AC gearmotors and brake motors in "Aseptic" design. It contains project planning notes, mounting positions, technical data, selection tables and dimension sheets. Please refer to separate catalogs for more information about gear units, pole-changing gearmotors, variable speed gearmotors, geared servomotors and DC gearmotors.

Consult our Gearmotors main catalog to make a preselection of motor and gear combinations.

Use the EKAT for a customer-specific design or contact SEW-EURODRIVE.

Additional catalogs

- Gearmotors
- Gear units
- Low backlash planetary gear units
- MOVIMOT® Gearmotors
- Geared servomotors
- Pole-changing gearmotors
- Variable speed gearmotors
- Drives for overhead trolley systems
- Explosion-proof drives
- Geared torque motors
- Planetary gearmotors
- Compact gear units
- SL2 synchronous linear motors

2 Product Description and Overview of Types

2.1 Why ASEPTIC gearmotors?

Each end user is grateful to know that high demands are made on hygiene in all "sensitive production areas." This statement applies to employees as well as all machines and systems involved. This approach is the only way to ensure that contaminated food products, cosmetics or drugs do not enter the market. This is particularly important for certain branches of industry, such as the beverage and food industry as well as the chemical and pharmaceutical industry. Often, regulations stipulate a completely germ-free environment.

The drive solutions used in such production areas have often seriously impaired the necessary cleaning processes of the production system. Standard motors often come equipped with cooling fins and fans in which dirt can accumulate and germs and bacteria may be distributed via air swirls. It may also be impossible to remove the dirt completely due to poor accessibility of the drive components within the system. Another problem occurs if the drive components are not resistant to the aggressive cleansing agents and disinfectants, the surfaces can be damaged (such as paint damages) and the hygienic guidelines cannot be maintained.

Application ranges

- Beverage industry
- Foodstuffs and luxury goods industry
- Packaging industry
- Chemical industry
- Dairy / cheese dairy
- Meat and poultry processing
- Pharmaceutical industry
- Cosmetics industry
- ...

2.2 Always the right choice

Drive engineering solutions from SEW-EURODRIVE not only meet the operating requirements in the standard hygienic range but can also be used if there is a need for resistance to aggressive cleansing agents and disinfectants.

Ambient conditions

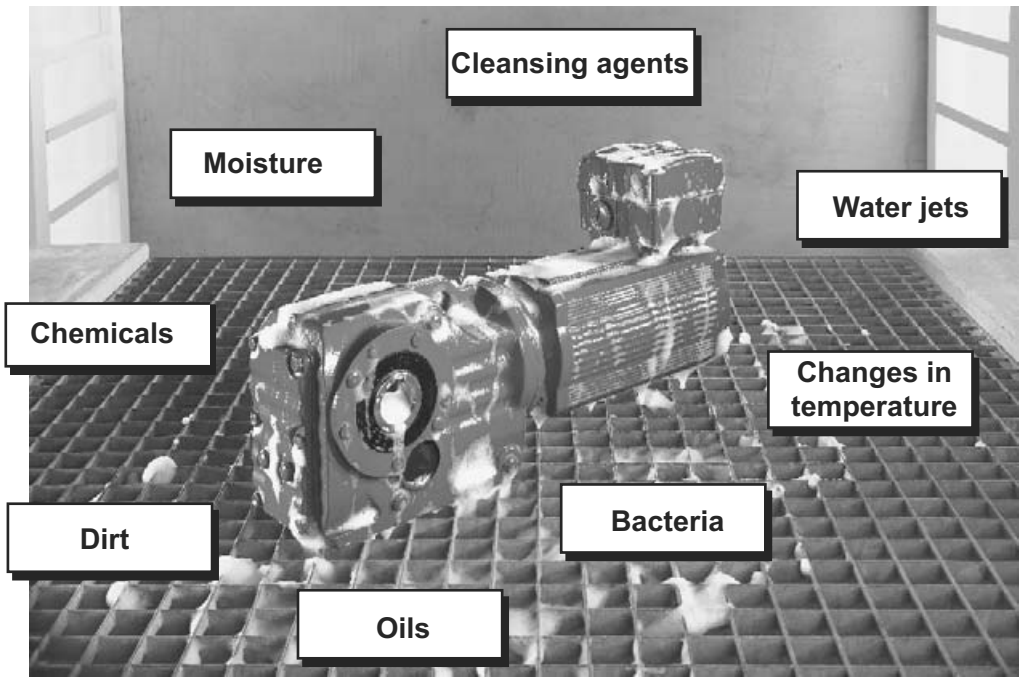

55563AEN

Figure 1: Ambient conditions

2.3 Optimum protection in all ambient conditions

For optimum protection under all conditions, SEW-EURODRIVE offers two variants/designs for hygienic production areas:

- ASEPTIC gearmotors for drive solutions without fans and smooth surfaces that can be cleaned with clear water
- ASEPTIC^{plus} drive package for extensive resistance to chemicals, cleansing agents and disinfectants

That means all systems can be designed and equipped individually according to the hygienic design. Regardless if it involves operations in production, filling or packaging. The flexible drive engineering from SEW-EURODRIVE offers the matching solution for every branch of industry and application.

2.4 Product characteristics

ASEPTIC gearmotors DAS

ASEPTIC gearmotors are not equipped with fans, which prevents a distribution of germs by air swirls. They are available in three motor sizes of types DAS80, DAS90 and DAS100 that can be mounted directly on helical, parallel shaft helical, helical-worm, helical-bevel or SPIROPLAN® gear units. The smooth surface of ASEPTIC gearmotors makes for easy cleaning. This design prevents the accumulation of dirt and almost completely prevents the formation of germs or bacteria.

An overview of the properties of the DAS series:

- Three motor sizes DAS80, DAS90 and DAS100
- Motor power from 0.25 kW to 1.5 kW in S1 continuous duty
- Smooth surfaces; no dirt build-up
- No fans, pure convection cooling and no air swirls
- Good protection against humidity
- Motor enclosure IP66 as standard, optionally IP69k (brake motors IP65)
- Thermal classification F as standard
- TF motor protection thermistor in thermal class F, TH winding thermostat optional
- Plug-in connection, resulting in low maintenance and service requirements
- Connection via integrated IS connector in enclosure IP69k (reliable four-bolt connection and high flexibility through star or delta connection in connector)
- Motor to be mounted directly on standard R, F, K, S and W gear units
- Optional brake for 110 V_{AC}, 230 V_{AC}, 400 V_{AC}, 460 V_{AC} and 24 V_{DC}
- Anticorrosion protection through KS internal motor treatment
- Surface protection coating OS1, optional OS2, OS3 and OS4

ASEPTIC^{plus} drive package

The ASEPTIC^{plus} drive package for the aseptic gearmotor offers a high degree of protection against corrosion as well as aggressive cleansing agents and disinfectants. In addition to the high-quality materials used for bolts, oil seals and output shafts, the drives are completely protected by an innovative surface protection coating. The resistance of this OS4 surface protection coating has been independently tested and certified for those cleansing agents and disinfectants customary in the different branches of industry. Such a coating meets the high requirements made on a hygienic environment. It also dramatically increases the service life of the drives and therefore the availability of the entire system.

An overview of the properties of the ASEPTIC^{plus} drive package:

- Standard motor enclosure IP69k
- The cable entries on the IS plug connector are sealed with stainless steel screw plugs
- Available for gear units with solid shaft, hollow shaft with key or TorqLOC® for the following gear unit sizes: R17-97, F27-97, K37-97, S37-97 and W30
- Gear unit output shaft including all retaining parts on the output shaft, such as screws, keys, shrink disc, etc., are made of stainless steel
- If technically possible, the oil seals on the output are configured as double oil seals made from FKM (Viton®)
- The breather valve of the gear units is made from stainless steel
- Surface protection coating OS4 for compatibility with common cleansing agents and disinfectants
- All surface recesses sprayed with elastic rubber compound
- All gear unit options can be selected
- All mounting positions M1 to M6 are available

2.5 Corrosion and surface protection

General information

SEW-EURODRIVE offers various optional protective measures for operating motors and gear units under special ambient conditions.

The protective measures are made up of two groups:

- Corrosion protection KS for motors (standard)
- Surface protection OS for motors and gear units (optional)

For motors, optimum protection is offered by a combination of corrosion protection KS and surface protection OS.

In addition, special optional protective measures for the gear unit output shafts are also possible.

Corrosion protection KS

Corrosion protection KS for motors comprises the following measures:

- All external retaining screws have an anti-corrosion coating.
- The nameplates are made from polyester film.
- The flange contact surfaces and shaft ends are treated with a temporary anti-corrosion agent.
- Motors are always treated with anti-corrosion paint on the inside.
- The brakes are always protected against corrosion

NOCO-FLUID®

As standard, SEW-EURODRIVE supplies NOCO® fluid corrosion protection and lubricant with every hollow shaft gear unit. Use NOCO® fluid when installing hollow shaft gear units. This will reduce any possible fretting corrosion and facilitate possible removal later on.

Furthermore, NOCO® fluid is also suitable for protecting machined metal surfaces that do not have corrosion protection. These include parts of shaft ends or flanges. You can also order larger quantities of NOCO® fluid from SEW-EURODRIVE.

NOCO® fluid is food grade according to USDA-H1. You can tell that NOCO® fluid is a food grade oil by the USDA-H1 identification label on its packaging.

Special protective measures

Gearmotor output shafts can be treated with special optional protective measures for operation subject to severe environmental pollution or in particularly demanding applications.

Action	Protection principle	Suitable for
Kanisil coating	Surface coating of the contact surface of the oil seal	Severe environmental pollution and in conjunction with FKM oil seal (Viton®)
Output shaft made of stainless steel	Surface protection through high-quality material	Particularly exacting applications in terms of exterior surface protection (if necessary, check resistance against the cleansing agents used)

Surface protection OS

Instead of the standard surface protection OS1, all ASEPTIC gearmotors are available with exterior surface protection OS2, OS3 or OS4. The special procedure Z can also be performed in addition to OS1, OS2, OS3 and OS4. The special procedure Z means that large surface recesses are sprayed with a rubber filling prior to painting.

Surface protection	Coating structure	Required coating thickness (nominal dry film thickness) DIN EN ISO 12 944-5 [NDFT]	Suitable for
Standard OS1	1 × dip priming 1 × two-pack base coat 1 × two-pack top coat	150 µm	• Low environmental pollution • Relative humidity max. 95 % • Surface temperature up to max. 120 °C • Corrosivity category C2[1)] (low)
OS2	1 × dip priming 2 × two-pack base coat 1 × two-pack top coat	210 µm	• Medium environmental pollution • Relative humidity up to 100 % • Surface temperature up to max. 120 °C • Corrosivity category C3[1)] (moderate)
OS3	1 × dip priming 2 × two-pack base coat 2 × two-pack top coat	270 µm	• High environmental pollution • Relative humidity up to 100 % • Surface temperature up to max. 120 °C • Corrosivity category C4[1)] (high)
OS4	1 x dip priming 2 x two-pack base coat 2 x two-pack top coat	320 µm	• Severe environmental impact • Relative humidity up to 100 % • Surface temperature up to max. 120 °C • Corrosivity category C5-I[1)] (very high)

1) according to DIN EN ISO 12 944-2

2.6 Resistance of OS4 surface coating against cleansing agents

SEW-EURODRIVE has had the resistance of the base coat and top coat of OS4 surface coating independently tested and certified for cleansing agents and disinfectants by leading manufacturers.

Providing these recommended cleansing agents and disinfectants are used and that the specified cleansing intervals, temperatures and cleansing schedules are complied with, the best possible results can be achieved with ASEPTIC gearmotors in terms of service life and performance.

The following prerequisites were applied to the testing cycle:

- The testing cycle (1500 cycles) simulated daily cleaning according to product-specific instructions for a time period of five (5) years.
- Evaluation took place approximately seven (7) days after regeneration.
- Evaluation of decorative changes (color, degree of lustre) and changes in protective properties according to DIN EN ISO 4628-1
- OS4 coating system on steel or aluminum base
- Cleansing agents supplied by Henkel-ECOLAB®

Cleansing agents	Product specification	Major ingredients	Con-centra-tion	Load cycle	Test temper-ature	Decorative changes[1)]	Changes of protective properties[1)]
P3-topax 19	Alkaline foam cleansing agent	Alkalis, surfac-tants, complexing agents	3 %	20 min	60 °C	1	0
P3-topax 56	Acid foam cleansing agent	Acids, surfactants, inhibitors	3 %	20 min	60 °C	4	0
P3-topax 58	Acid foam cleansing agent based on organic acids	Surfactants, organic acids	5 %	20 min	60 °C	0	0
P3-topax 66	Alkaline foam cleansing agent and disinfectant based on active chlorine	Alkalis, active chlo-rine, surfactants	5 %	20 min	60 °C	2	0
P3-topax 68	Alkaline foam cleansing agent with active chlorine (aluminum proof)	Alkalis, active chlo-rine, surfactants	5 %	20 min	60 °C	1	0
P3-topax 99	Alkaline foam disinfectant	Base: Salts, organic acids	2 %	20 min	60 °C	3	0
P3-topactive 200	Alkaline cleansing agent for operational cleansing as TFC application	Alkalis, surfac-tants, complexing agents	4 %	20 min	60 °C	1	0
P3-topactive 500	Acid cleansing agent for operational cleansing as TFC application	Inorganic acids, surfactants	3 %	20 min	60 °C	4	0
P3-oxonia	Disinfectant for closed sys-tems	Base: Hydrogen peroxide	1 %	30 min	60 °C	1	0
P3-oxonia active	Disinfectant for closed sys-tems	Base: Hydrogen peroxide, peracetic acid	3 %	10 min	20 °C	0	0
P3-topactive DES	Foam and TFC capable disinfectant	Base: Peracetic acid, surfactants	3 %	30 min	20 °C	0	0
P3-oxysan ZS	Disinfectant for closed sys-tems	Base: Peroxide compounds	1 %	30 min	20 °C	0	0

1) Assessment: 0 = No changes... 5 = Very severe changes

2.7 Certificate from Henkel-ECOLAB ®

Driving the world

SEW EURODRIVE

Material resistance test

ECOLAB

Ecolab GmbH & Co. OHG
P.O. Box 13 04 06
D-40551 Düsseldorf

certifies that

a material resistance test

was performed for

SEW-EURODRIVE GmbH & Co KG
Ernst-Blickle-Straße 42

D-76646 Bruchsal

with

the cleansing agents/disinfectants P3-oxonia, P3-oxonia active, P3-oxysan ZS, P3-topactive ZS, P3-topactive 200, P3-topactive 500, P3-topax 19, P3-topax 56, P3-topax 58, P3-topax 66, P3-topax 68 and P3-topax 99.

The protective properties of the tested **OS4 surface protection coating** against the P3 products used in the test can be considered to be positive according to the cleaning procedure mentioned overleaf.

November 8, 2004

Ecolab GmbH & Co. OHG

i. V.

Ulrich Hölzgen
Service Manager

i. V.

Reimund Laaff
Marketing Manager

SEW-EURODRIVE GmbH & Co KG

ppa.

Ekkehard Dörr
Sales Manager Germany

i. V.

Heinrich Zimmermann
Gear Development Manager

This certificate is based on

- Documented test procedures on material resistance
- Defined product descriptions
- Standardized cleaning procedure

Test procedure

Dipping test:
- Complete immersion in the test medium

Test period:
- 1500 cycles (simulates daily cleaning for a time period of 5 years)

Temperatures:
- 20 – 60 °C

Evaluation:
- Evaluation takes place approximately 7 days after regeneration
- Evaluation of changes of the protective properties according to DIN EN ISO 4628-1
- Evaluation of decorative changes (color, brightness)
  (+) no changes
  (o) possible minor changes
  (-) possible changes under long-term influence

Product specifications:

P3-oxonia (o)
Disinfectant based on H_2O_2
P3-oxonia active (+)
Disinfectant based on H_2O_2 and peracidic acid
P3-oxysan ZS (+)
Disinfectant based on peroxide compounds
P3-topactive DES (+)
Foam and TFC capable disinfectant based on H_2O_2 and peracidic acid
P3-topactive 200 (o)
Alkaline cleansing agent for operational cleansing as TFC application
P3-topactive 500 (-)
Acid cleansing agent for operational cleansing as TFC application
P3-topax 19 (o)
Alkaline foam cleansing agent
P3-topax 56 (-)
Acid foam cleansing agent
P3-topax 58 (+)
Acid foam cleansing agent based on organic acids
P3-topax 66 (o)
Alkaline foam cleansing agent and disinfectant based on active chlorine
P3-topax 68 (o)
Alkaline foam cleansing agent with active chloride
P3-topax 99 (o)
Alkaline foam disinfectant based on alkylamin acetate

Cleansing schedule for food processing plants*

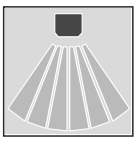

Rinsing with cold water from 40 ... 50 °C
- Rinsing with low pressure from top to bottom in the direction of the drains.
- Cleaning of the drains.

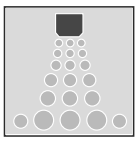

Foaming from bottom to top
- Concentration: 1 ... 5 %
- Application: daily (P3-topax 56, P3-topax 99 and P3-topactive 500 if required)
- Temperature: cold up to 60 °C

Contact time
- A contact of approximately 10 to 30 minutes is recommended.

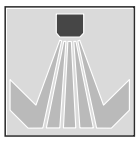

Rinsing with cold drinking water from 40 ... 50 °C
- Rinsing from top to bottom with low pressure.

*Summary, detailed cleansing schedule according to specification by Ecolab

1133 2115 / 0305

2.8 General information

Power and torque

Please note that the motor power shown in the selection tables for ASEPTIC gearmotors is subject to selection. However, the output torque and the desired output speed are essential for the application and need to be checked.

Speeds

The quoted output speeds of the ASEPTIC gearmotors are recommended values. Please note that the actual output speed depends on the motor load and the supply system conditions.

Noise levels

The noise levels of all ASEPTIC gearmotors (brake motors) are well within the maximum permitted noise levels laid down by VDI Directive 2159 for gear units and in EN 60034 for motors.

Coating

ASEPTIC gearmotors (brake motors) are painted with "blue gray" machine paint RAL 7031 as per DIN 1843 as standard. Special coatings are available on request.

Weights

Please note that all weights shown for the ASEPTIC gearmotors in this catalog exclude the oil fill. The weights vary according to gear unit design and gear unit size. The exact weight is given in the order confirmation.

Air admission and accessibility

ASEPTIC gearmotors (brake motors) must be mounted on the driven machine in such a way that there is enough space left both axially and radially for unimpeded air admission and for the purposes of maintenance of the brake.

2.9 Unit designations for gear units and options

* = Available in ASEPTIC^{plus} design up to gear unit size 97

Helical gear units

RX..	Single-stage foot-mounted
RXF..	Single-stage flange-mounted
*R..**	Foot-mounted version
*R..F**	Foot and flange-mounted
*RF..**	Flange-mounted design
RM..	Flange-mounted with extended bearing hub

Parallel shaft helical gear units

*F..**	Foot-mounted version
*FA..B**	Foot-mounted and hollow shaft
FH..B	Foot-mounted and hollow shaft with shrink disc
FV..B	Foot-mounted and splined hollow shaft to DIN 5480
*FF..**	B5 flange-mounted
*FAF..**	B5 flange-mounted and hollow shaft
FHF..	B5 flange-mounted and hollow shaft with shrink disc
FVF..	B5 flange-mounted and splined hollow shaft to DIN 5480
*FA..**	Hollow shaft
*FH..**	Hollow shaft with shrink disc
*FT..**	Hollow shaft with TorqLOC® hollow shaft mounting system
FV..	Splined hollow shaft to DIN 5480
*FAZ..**	B14 flange-mounted and hollow shaft
FHZ..	B14 flange-mounted and hollow shaft with shrink disc
FVZ..	B14 flange-mounted and splined hollow shaft to DIN 5480

Helical-bevel gear units

*K..**	Foot-mounted version
*KA..B**	Foot-mounted and hollow shaft
KH..B	Foot-mounted and hollow shaft with shrink disc
KV..B	Foot-mounted and splined hollow shaft to DIN 5480
*KF..**	B5 flange-mounted
*KAF..**	B5 flange-mounted and hollow shaft
KHF..	B5 flange-mounted and hollow shaft with shrink disc
KVF..	B5 flange-mounted and splined hollow shaft to DIN 5480

*KA..**	Hollow shaft
KH..	Hollow shaft with shrink disc
*KT..**	Hollow shaft with TorqLOC® hollow shaft mounting system
KV..	Splined hollow shaft to DIN 5480
*KAZ..**	B14 flange-mounted and hollow shaft
KHZ..	B14 flange-mounted and hollow shaft with shrink disc
KVZ..	B14 flange-mounted and splined hollow shaft to DIN 5480

Spiroplan® right-angle gear units

*W..**	Foot-mounted version
*WF..**	Flange-mounted design
*WA..**	Hollow shaft
*WAF..**	Flange-mounted and hollow shaft

Helical-worm gear unit

*S..**	Foot-mounted version
*SF..**	B5 flange-mounted
*SAF..**	B5 flange-mounted and hollow shaft
SHF..	B5 flange-mounted and hollow shaft with shrink disc
*SA..**	Hollow shaft
SH..	Hollow shaft with shrink disc
*ST..**	Hollow shaft with TorqLOC® hollow shaft mounting system
*SAZ..**	B14 flange-mounted and hollow shaft
SHZ..	B14 flange-mounted and hollow shaft with shrink disc

R, F, K gear unit option

/R	Reduced backlash

K, W and S gear unit option

/T	With torque arm

F gear unit option

/G	With rubber buffer

2.10 Unit designation

Unit designation

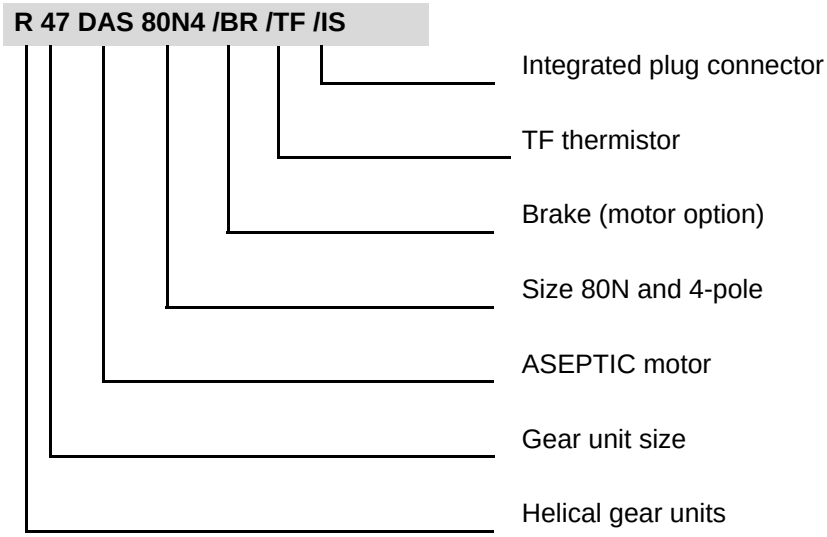

Example: Serial number

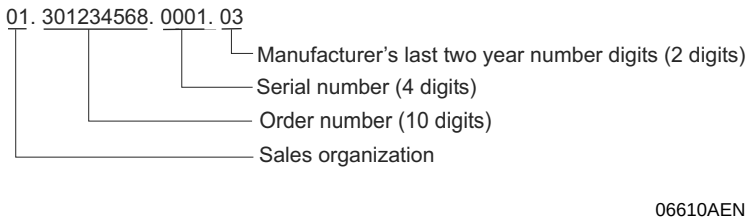

Figure 2: Serial number

3 Project Planning

3.1 Additional documentation

In addition to the information provided in this catalog, Secs. "Project Planning of Drives" and "Dimension Sheets for Gearmotors" in the Gearmotors catalog contain more detailed information.

You will find additional links to a wide selection of our documentation in many languages for download on the SEW-EURODRIVE homepage (http://www.sew-eurodrive.com).

Selection of motors and gearmotors is based on the same project planning guideline described in the Gearmotors catalog.

Drive Engineering - Practical Implementation

- Project Planning for Drives
- Controlled AC Drives
- Servo Drives
- EMC in Drive Engineering
- Explosion-Proof Drives to EU Directive 94/9/EC

Electronic documentation

- "Decentralized Installation" system manual (MOVIMOT®, MOVI-SWITCH®, communication and supply interfaces)
- "MOVITRAC® 07" system manual
- "MOVIDRIVE® MDX60/61B" system manual

Mechanical brakes

- "Brakes and Accessories" manual

3.2 Thermal limit rating in ASEPTIC gearmotors

The power values given in the selection tables for ASEPTIC gearmotors are mechanical power limits. Depending on the mounting position, however, gear units may become thermally overloaded before they reach the mechanical power limit. For mineral oils, such cases are indicated in the selection tables by the mounting position specification (see the column marked with [1]).

P_m [kW]	n_a [rpm]	M_a [Nm]	i	F_{Ra} [1)] [N]	SEW f_B	⚠	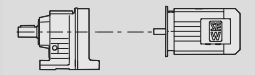	m [kg]	ASEPTIC^{plus}

[1]

Please contact SEW if the mounting position you require is the same as one of those indicated. By considering the actual operating conditions, it will then be possible to recalculate the thermal limit rating based on the specific application. Alternatively, suitable measures can be taken (e.g. using a synthetic lubricant with higher thermal stability) to increase the thermal limit rating of the gear unit. The following data are required for recalculation:

Gear unit type .....

Output speed [n_a]	..... rpm	**Gear ratio i**	.....
Ambient temperature	..... °C	**Cyclic duration factor cdf**	.....%
Power drawn [P]	..... kW		

Installation site: .....
...in small, enclosed rooms
...in large rooms, halls
...in the open

Installation situation:
.....
e.g. steel foundation, concrete foundation

3.3 Checklist/request form for ASEPTIC gearmotors

Fill in the requested information and submit the form to your respective SEW office

Customer/company: .....

Contact person: .....

Phone/fax: .....

E-mail: .....

Street: .....

Zip code: .....

Place, date: .....

1. Information on location

- Detailed description of system (e.g. bottle filling, transportation of empty bottles, cans etc.?)

.....

.....

.....

- What is the ambient temperature in the plant?

  In summer approx.: ..... In winter approx.: .....

- What is the relative humidity in the vicinity of the motor?

  min.: max.: .....
  .....

- In which duty type does the motor run? (e.g. S1, S3 etc.)

.....

.....

- Are there extreme temperature fluctuations at the motor/inverter? (e.g. does the motor run for an extended period of time and then cool down or does the operating environment heat up and then cool down again?)

.....

.....

.....

- Are you operating other products not supplied by SEW in the same area?

.....

.....

2. Cleaning the location

- How often does the cleaning take place?

  ..... times daily ..... times weekly

- Are you using pressure washers to clean the location? (e.g. Kärcher)

  Yes, with..... No.....

- Does the water contain solvents or cleansing agents?

  Yes, with..... No.....

- Does the motor regularly come into contact with liquids, emulsions or other substances used in the current production?

  Yes, with..... No.....

- Are the components compatible with sealing compounds?

  ☐ Yes ☐ No

4 Mounting Positions

4.1 General information on mounting positions

SEW-EURODRIVE differentiates between six mounting positions M1...M6 for ASEPTIC gearmotors. The following figure shows the spatial orientation of the ASEPTIC gearmotor in mounting positions M1...M6.

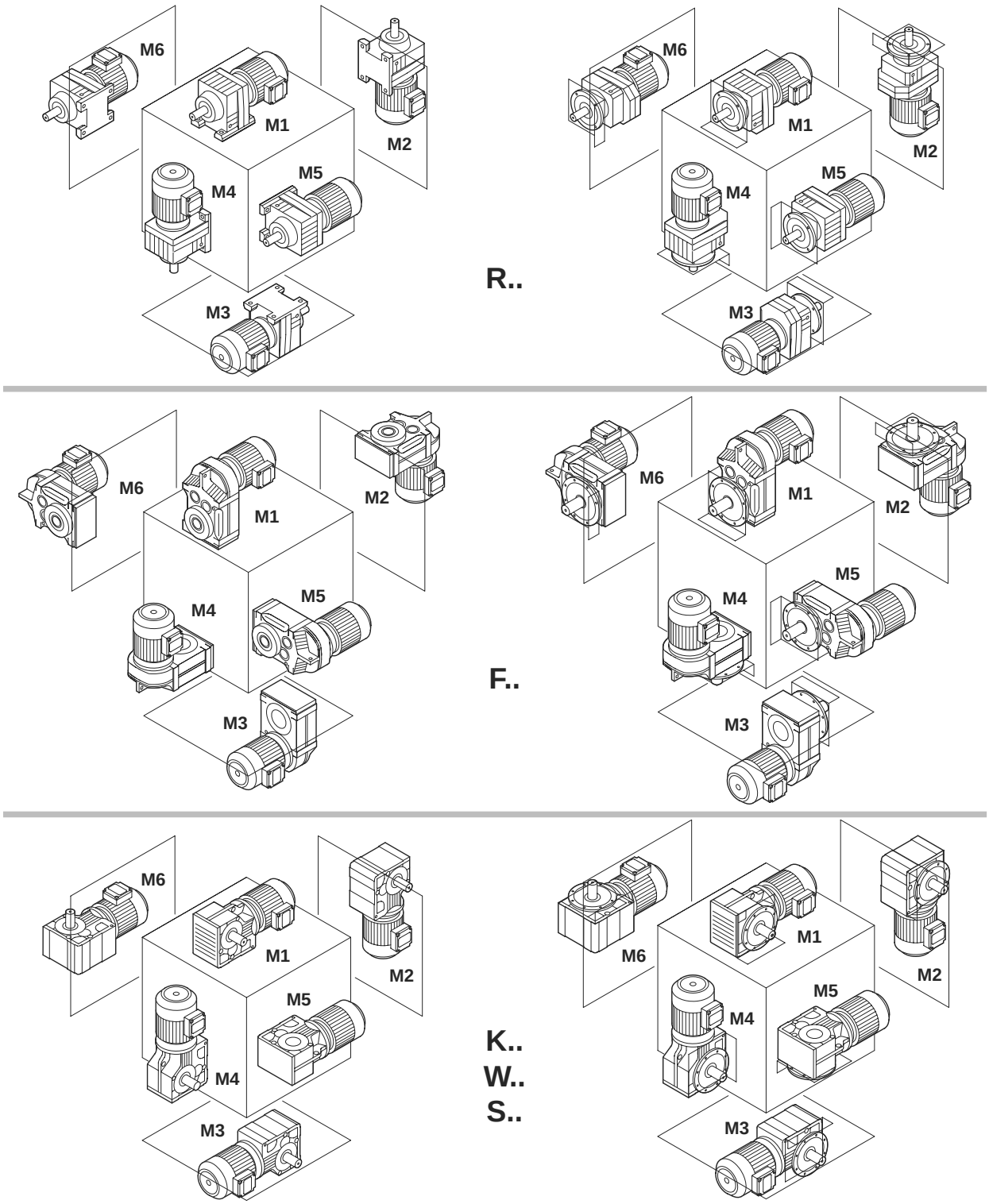

4.2 Position of motor terminal box and cable entry

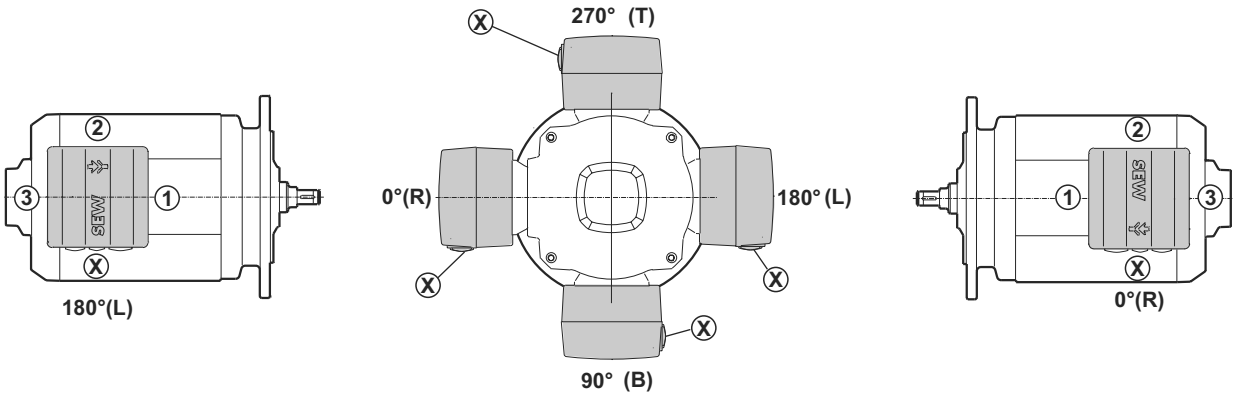

52830AXX

Figure 3: Position of terminal box and cable entry

For important order information about ASEPTIC gearmotors, refer to the Gearmotors catalog, Sec. "Mounting positions and important order information".

5 Lubricants

5.1 General information

Unless a special arrangement is made, SEW-EURODRIVE supplies the drives with a lubricant fill adapted for the specific gear unit and mounting position. The decisive factor is the mounting position (M1–M6, → Sec. "Mounting positions and important order information" in the Gearmotor catalog) specified when ordering the drive. You must adapt the lubricant fill in case of any subsequent changes made to the mounting position (→ Lubricant fill quantities).

Lubricant table

The lubricant table on the following page shows the permitted lubricants for SEW-EURODRIVE gear units. Please note the following key to the lubricant table.

Key to the lubricant table

Abbreviations used, meaning of shading and notes:

CLP	= Mineral oil
CLP PG	= Polyglycol (W gear units, conforms to USDA-H1)
CLP HC	= Synthetic hydrocarbons
E	= Ester oil (water pollution danger category WGK 1)
HCE	= Synthetic hydrocarbons + ester oil (USDA - H1 certification)
HLP	= Hydraulic oil
	= Synthetic lubricant (= synthetic anti-friction bearing grease)
	= Mineral lubricant (= mineral-based anti-friction bearing grease)
1)	Helical-worm gear units with PG oil: Please contact SEW-EURODRIVE
2)	Special lubricant for Spiroplan® gear units only
3)	Select SEW $f_B \geq 1.2$
4)	Pay attention to critical starting behavior at low temperatures!
5)	Low-viscosity grease
6)	Ambient temperature
	Lubricant for the food industry (food grade oil)
	Biodegradable oil (lubricant for use in agriculture, forestry and water resources)

Anti-friction bearing greases

The anti-friction bearings of the motors are sealed and have lubrication for life. The anti-friction bearing grease is suitable for a temperature range from –40 °C to +40 °C.

5.2 Lubricant table

	6) °C -50 0 +50 +100	DIN (ISO)	ISO,NLGI	Mobil®	Shell	Klüber	Aral	BP	Tribol	Texaco	Optimol	Fuchs
R... K...(HK...) F...	Standard -10 +40	CLP(CC)	VG 220	Mobilgear 630	Shell Omala 220	Klüberoil GEM 1-220	Aral Degol BG 220	BP Energol GR-XP 220	Tribol 1100/220	Meropa 220	Optigear BM 220	Renolin CLP 220
	-25 +80	CLP PG	VG 220	Mobil Glygolyle 30	Shell Tivela WB	Klübersynth GH 6-220	Aral Degol GS 220	BP Enersyn SG-XP 220	Tribol 800/220	Synlube CLP 220	Optiflex A 220	
	4) -40 +80	CLP HC	VG 220	Mobil SHC 630	Shell Omala 220 HD	Klübersynth EG 4-220	Aral Degol PAS 220		Tribol 1510/220	Pinnacle EP 220	Optigear Synthetic A 220	Renolin Unisyn CLP 220
	4) -40 +40		VG 150	Mobil SHC 629		Klübersynth EG 4-150				Pinnacle EP 150		
	-20 +25	CLP (CC)	VG 150 VG 100	Mobilgear 627	Shell Omala 100	Klüberoil GEM 1-150	Aral Degol BG 100	BP Energol GR-XP 100	Tribol 1100/100	Meropa 150	Optigear BM 100	Renolin CLP 150
	-30 +10	HLP (HM)	VG 68-46 VG 32	Mobil D.T.E. 13M	Shell Tellus T 32	Klüberoil GEM 1-68	Aral Degol BG 46		Tribol 1100/68	Rando EP Ashless 46	Optigear 32	Renolin B 46 HVI
	4) -40 +10	CLP HC	VG 32	Mobil SHC 624		Klüber-Summit HySyn FG-32				Cetus PAO 46		
	4) -40 -20	HLP (HM)	VG 22 VG 15	Mobil D.T.E. 11M	Shell Tellus T 15	Isoflex MT 30 ROT		BP Energol HLP-HM 10		Rando HDZ 15		
S...(HS...)	Standard 0 +40	CLP (CC)	VG 680	Mobilgear 636	Shell Omala 680	Klüberoil GEM 1-680	Aral Degol BG 680	BP Energol GR-XP 680	Tribol 1100/680	Meropa 680	Optigear BM 680	Renolin CLP 680
	-20 +60	CLP PG	VG 680 1)	Mobil Glygoyle HE 680		Klübersynth GH 6-680		BP Enersyn SG-XP 680	Tribol 800/680	Synlube CLP 680		
	4) -30 +80	CLP HC	VG 460	Mobil SHC 634	Shell Omala 460 HD	Klübersynth EG 4-460				Pinnacle EP 460		
	4) -40 +10		VG 150	Mobil SHC 629		Klübersynth EG 4-150				Pinnacle EP 150		
	-20 +10	CLP (CC)	VG 150 VG 100	Mobilgear 627	Shell Omala 100	Klüberoil GEM 1-150	Aral Degol BG 100	BP Energol GR-XP 100	Tribol 1100/100	Meropa 100	Optigear BM 100	Renolin CLP 150
	-25 +20	CLP PG	VG 220 1)	Mobil Glygoyle 30		Klübersynth GH 6-220			Tribol 800/220	Synlube CLP 220	Optiflex A 220	
	4) -40 0	CLP HC	VG 32	Mobil SHC 624		Klüber-Summit HySyn FG-32				Cetus PAO 46		
R...,K...(HK...), F...,S...(HS...)	4) -30 +40	HCE	VG 460		Shell Cassida Fluid GL 460	Klüberoil 4UH1-460	Aral Eural Gear 460				Optileb GT 460	
	-20 +40	E	VG 460			Klüberbio CA2-460	Aral Degol BAB 460				Optisynt BS 460	
W...(HW...)	Standard -20 +40	SEW PG	VG 460 2)			Klüber SEW HT-460-5						
	4) -40 +10	API GL5	SAE 75W90 (~VG 100)	Mobilube SHC 75 W90-LS								
	-20 +40	CLP PG	VG 460 3)			Klübersynth UH1 6-460						
R32 R302	-25 +60	DIN 51 818 5)	00	Glygoyle Grease 00	Shell Tivela GL 00	Klübersynth GE 46-1200				Multifak 6833 EP 00		
	Standard -15 +40		000 - 0	Mobilux EP 004	Shell Alvania GL 00		Aralub MFL 00	BP Energrease LS-EP 00		Multifak EP 000	Longtime PD 00	Renolin SF 7 - 041

01 805 792

6 Notes on Selection Tables

P_m [kW]	n_a [rpm]	M_a [Nm]	i	F_{Ra} 1) [N]	SEW f_B	⚠			m [kg]	ASEPTIC^{plus}
[1]	[2]	[3]	[4]	[5]	[6]	[7]	[8]	[9]	[10]	[11]

[1] Rated power of driving motor

[2] Output speed

[3] Output torque

[4] Gear unit reduction ratio

[5] Permitted overhung load on the output side

[6] Service factor

[7] Please refer to Sec. 3.2 "Thermal limit rating in ASEPTIC gearmotors"

[8] Gear unit type

[9] Motor type

[10] Weight

[11] Available in ASEPTIC^{plus} design

1) Overhung load applies to foot-mounted gear units with solid shaft; overhung loads for other gear unit types upon request

7 ASEPTIC Helical Gearmotors

7.1 Selection tables R..DAS..

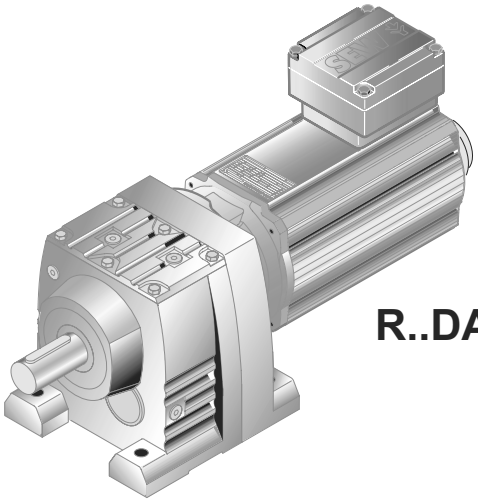

R..DAS..

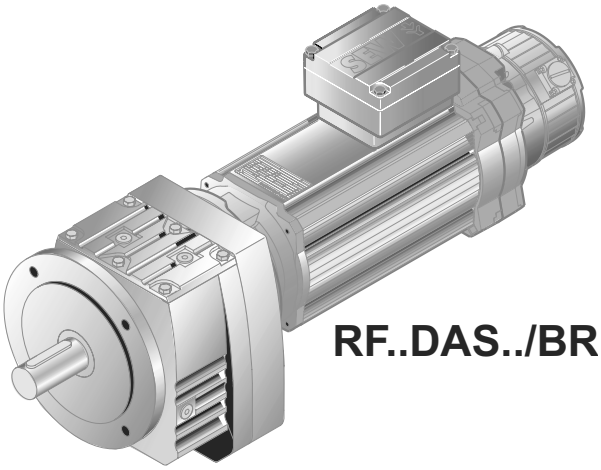

RF..DAS../BR

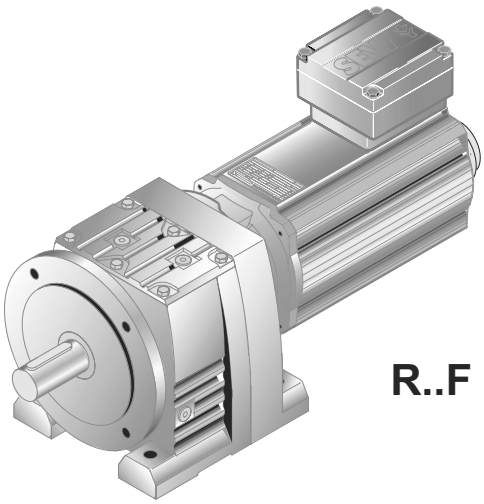

R..F DAS..

55743AXX

P_m [kW]	n_a [rpm]	M_a [Nm]	i	F_{Ra} 1) [N]	SEW f_B	⚠				m [kg]	ASEPTIC^{plus}
0.25	**0.15**	13700	9743	-	0.95	-					
	0.17	11500	8443	-	1.15	-					
	0.19	9960	7307	-	1.30	-					
	0.22	8790	6447	-	1.50	-					
	0.26	7590	5568	-	1.70	-	**R**	**147 R77**	**DAS 80K4**	425	-
	0.29	6870	4926	-	1.90	-	**RF**	**147 R77**	**DAS 80K4**	435	
	0.33	5940	4325	-	2.2	-					
	0.38	5240	3754	-	2.5	-					
	0.43	4530	3302	-	2.9	-					
	0.49	3950	2898	-	3.3	-					
	0.24	7800	5834	-	1.05	-					
	0.28	7210	5116	-	1.10	-	**R**	**137 R77**	**DAS 80K4**	295	-
	0.32	6080	4464	-	1.30	-	**RF**	**137 R77**	**DAS 80K4**	315	
	0.36	5350	3928	-	1.50	-					
	0.35	5760	4018	-	1.40	-					
	0.40	5030	3514	-	1.60	-	**R**	**137 R77**	**DAS 80K4**	285	-
	0.43	4780	3338	-	1.65	-	**RF**	**137 R77**	**DAS 80K4**	305	
	0.48	4190	2929	-	1.90	-					
	0.53	3790	2658	-	2.1	-					
	0.59	3440	2412	-	2.3	-					
	0.68	2960	2073	-	2.7	-	**R**	**137 R77**	**DAS 80K4**	290	-
	0.77	2540	1839	-	3.2	-	**RF**	**137 R77**	**DAS 80K4**	315	
	1.0	1970	1397	-	4.1	-					
	1.2	1700	1226	-	4.7	-					
	0.47	4280	3039	-	1.00	-	**R**	**107 R77**	**DAS 80K4**	205	-
							RF	**107 R77**	**DAS 80K4**	210	
	0.47	4340	3034	-	1.00	-	**R**	**107 R77**	**DAS 80K4**	200	-
							RF	**107 R77**	**DAS 80K4**	205	
	0.71	2810	1987	-	1.55	-					
	0.78	2520	1827	-	1.70	-					
	0.89	2160	1599	-	2.0	-					
	1.0	1930	1400	-	2.2	-	**R**	**107 R77**	**DAS 80K4**	205	-
	1.2	1660	1226	-	2.6	-	**RF**	**107 R77**	**DAS 80K4**	210	
	1.5	1300	939	-	3.3	-					
	1.7	1110	822	-	3.9	-					
	0.82	2590	1733	23600	1.15	-	**R**	**97 R57**	**DAS 80K4**	130	ASEPTIC^{plus}
	0.87	2420	1623	24500	1.25	-	**RF**	**97 R57**	**DAS 80K4**	150	
	0.78	2690	1823	23000	1.10	-					
	0.90	2340	1583	24900	1.30	-					
	1.0	2020	1396	26300	1.50	-					
	1.2	1760	1228	27300	1.70	-					
	1.3	1590	1069	27500	1.90	-	**R**	**97 R57**	**DAS 80K4**	135	ASEPTIC^{plus}
	1.5	1390	938	27800	2.2	-	**RF**	**97 R57**	**DAS 80K4**	150	
	1.7	1180	824	28000	2.5	-					
	1.9	1050	737	28200	2.8	-					
	2.2	900	632	28300	3.3	-					
	1.2	1690	1145	13100	0.90	-					
	1.4	1520	1037	14500	1.00	-	**R**	**87 R57**	**DAS 80K4**	90	ASEPTIC^{plus}
	1.5	1350	931	15600	1.15	-	**RF**	**87 R57**	**DAS 80K4**	97	
	1.8	1150	802	16600	1.35	-					
	1.2	1630	1143	13600	0.95	-					
	1.6	1290	885	15900	1.20	-					
	1.8	1130	776	16700	1.35	-					
	2.1	1000	685	17300	1.55	-	**R**	**87 R57**	**DAS 80K4**	90	ASEPTIC^{plus}
	2.4	840	599	17900	1.85	-	**RF**	**87 R57**	**DAS 80K4**	98	
	2.7	735	525	18200	2.1	-					
	3.1	650	456	18400	2.4	-					
	5.3	375	268	18900	4.1	-					
	2.5	830	571	9800	1.00	-	**R**	**77 R37**	**DAS 80K4**	50	ASEPTIC^{plus}
							RF	**77 R37**	**DAS 80K4**	56	

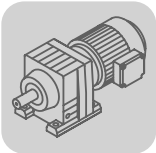

ASEPTIC Helical Gearmotors
Selection tables R..DAS..

P_m [kW]	n_a [rpm]	M_a [Nm]	i	F_{Ra} 1) [N]	SEW f_B	⚠				m [kg]	ASEPTIC plus
0.25	**2.5**	850	560	9670	0.95	-					
	2.9	725	488	10700	1.15	-					
	3.3	645	436	11300	1.30	-					
	3.8	555	373	11800	1.50	-	**R**	**77 R37**	**DAS 80K4**	51	ASEPTIC plus
	4.4	485	327	12100	1.70	-	**RF**	**77 R37**	**DAS 80K4**	57	
	4.9	430	289	12400	1.90	-					
	5.5	385	260	12500	2.1	-					
	6.3	320	224	12700	2.5	-					
	3.7	565	388	7960	1.05	-					
	4.1	515	344	8450	1.15	-					
	4.8	420	294	9190	1.40	-					
	5.4	385	261	9430	1.55	-	**R**	**67 R37**	**DAS 80K4**	45	ASEPTIC plus
	6.1	345	234	9660	1.75	-	**RF**	**67 R37**	**DAS 80K4**	49	
	7.1	290	200	9920	2.1	-					
	8.1	255	176	10100	2.4	-					
	9.0	225	158	10200	2.6	-					
	3.7	585	384	7710	1.00	-					
	4.0	545	359	8140	1.10	-					
	4.6	470	310	8830	1.30	-					
	5.4	395	264	9360	1.50	-	**R**	**67 R37**	**DAS 80K4**	45	ASEPTIC plus
	6.0	350	235	9630	1.70	-	**RF**	**67 R37**	**DAS 80K4**	48	
	7.1	295	201	9900	2.0	-					
	7.8	270	181	10000	2.2	-					
	4.5	470	319	7010	0.95	-					
	5.2	400	273	7320	1.15	-					
	5.9	345	241	7500	1.30	-					
	6.6	310	215	7610	1.45	-	**R**	**57 R37**	**DAS 80K4**	39	ASEPTIC plus
	7.6	275	187	7700	1.65	-	**RF**	**57 R37**	**DAS 80K4**	42	
	8.6	235	164	7780	1.90	-					
	10	205	142	7840	2.2	-					
	4.4	495	324	6850	0.90	-					
	4.9	440	290	7150	1.00	-					
	5.4	395	262	7320	1.15	-	**R**	**57 R37**	**DAS 80K4**	38	ASEPTIC plus
	5.8	370	246	7420	1.20	-	**RF**	**57 R37**	**DAS 80K4**	41	
	6.5	330	220	7550	1.35	-					
	6.2	340	228	4570	0.90	-					
	7.3	290	195	5480	1.05	-	**R**	**47 R37**	**DAS 80K4**	33	ASEPTIC plus
	7.8	270	182	5580	1.10	-	**RF**	**47 R37**	**DAS 80K4**	33	
	9.2	225	154	5770	1.35	-					
	9.5	225	150	4580	0.90	-					
	11	192	130	5040	1.05	-					
	11	183	124	5150	1.10	-	**R**	**37 R17**	**DAS 80K4**	22	ASEPTIC plus
	13	162	110	5360	1.25	-	**RF**	**37 R17**	**DAS 80K4**	23	
	15	138	94	5570	1.45	-					
	11	200	135	4940	1.00	-					
	11	195	127	5010	1.05	-	**R**	**37 R17**	**DAS 80K4**	21	ASEPTIC plus
	14	158	104	5400	1.25	-	**RF**	**37 R17**	**DAS 80K4**	23	
	16	137	90	5580	1.45	-					
	8.5	280	166.59	12900	2.9	-					
	9.8	245	145.67	12900	3.4	-	**R**	**77**	**DAS 80K4**	41	ASEPTIC plus
	10	235	138.39	13000	3.5	-	**RF**	**77**	**DAS 80K4**	47	
	12	205	121.42	13000	4.0	-					
	9.0	265	158.14	10000	2.3	-					
	10	230	137.67	10200	2.6	-					
	11	215	128.97	10200	2.8	-					
	12	192	113.94	10300	3.1	-	**R**	**67**	**DAS 80K4**	35	ASEPTIC plus
	13	178	105.83	10300	3.4	-	**RF**	**67**	**DAS 80K4**	38	
	15	161	95.91	10400	3.7	-					
	16	145	86.11	10400	4.1	-					

P_m [kW]	n_a [rpm]	M_a [Nm]	i	F_{Ra} 1) [N]	SEW f_B	⚠				m [kg]	ASEPTIC^{plus}
0.25	**9.6**	250	147.92	7760	1.80	-					
	11	215	128.77	7820	2.1	-					
	12	205	120.63	7850	2.2	-					
	13	179	106.58	7890	2.5	-	**R**	**57**	**DAS 80K4**	29	ASEPTIC^{plus}
	14	166	98.99	7910	2.7	-	**RF**	**57**	**DAS 80K4**	32	
	16	151	89.71	7930	3.0	-					
	18	135	80.55	7950	3.3	-					
	21	116	69.23	7970	3.9	-					
	10	235	139.99	5720	1.25	-					
	12	205	121.87	5840	1.45	-					
	12	192	114.17	5880	1.55	-					
	14	170	100.86	5950	1.75	-					
	15	158	93.68	5980	1.90	-					
	17	143	84.90	6010	2.1	-	**R**	**47**	**DAS 80K4**	23	ASEPTIC^{plus}
	19	128	76.23	6050	2.3	-	**RF**	**47**	**DAS 80K4**	23	
	21	115	68.54	6070	2.6	-					
	22	108	64.21	6080	2.8	-					
	25	95	56.73	6100	3.1	-					
	27	89	52.69	6090	3.4	-					
	30	80	47.75	5920	3.7	-					
	13	177	105.28	5210	1.15	-					
	16	153	90.77	5450	1.30	-					
	17	142	84.61	5540	1.40	-					
	19	124	73.96	5670	1.60	-					
	20	117	69.33	5720	1.70	-					
	23	103	61.18	5800	1.95	-	**R**	**37**	**DAS 80K4**	19	ASEPTIC^{plus}
	25	94	55.76	5850	2.1	-	**RF**	**37**	**DAS 80K4**	20	
	30	81	48.08	5730	2.5	-					
	32	75	44.81	5610	2.7	-					
	36	66	39.17	5390	3.0	-					
	39	62	36.72	5290	3.2	-					
	44	55	32.40	5100	3.7	-					
	17	143	84.78	4170	0.90	-					
	19	125	74.11	4260	1.05	-					
	20	117	69.47	4220	1.10	-					
	23	103	61.30	4100	1.25	-					
	25	94	55.87	4000	1.40	-					
	29	81	48.17	3850	1.60	-	**R**	**27**	**DAS 80K4**	13	ASEPTIC^{plus}
	32	76	44.90	3780	1.70	-	**RF**	**27**	**DAS 80K4**	13	
	36	66	39.25	3640	1.95	-					
	39	62	36.79	3580	2.1	-					
	44	55	32.47	3450	2.4	-					
	49	48	28.78	3340	2.7	-					
	58	41	24.47	3190	3.2	-					
	64	38	22.32	3100	3.5	-					
	73	33	19.35	2970	4.0	-					
	79	30	18.08	2910	4.3	-					
	91	26	15.63	2790	4.9	-					
	107	22	13.28*	2650	5.8	-					
	120	20	11.86	2560	6.5	-					
	140	17	10.13	2440	7.2	-					
	151	16	9.41	2370	7.7	-	**R**	**27**	**DAS 80K4**	13	ASEPTIC^{plus}
	174	14	8.16	2270	8.5	-	**RF**	**27**	**DAS 80K4**	13	
	186	13	7.63*	2220	8.8	-					
	215	11	6.59	2120	9.6	-					
	254	9.4	5.60*	2020	11	-					
	284	8.4	5.00*	1950	11	-					
	332	7.2	4.27	1850	12	-					
	355	6.7	4.00*	1810	13	-					
	421	5.7	3.37	1720	14	-					
	25	96	57.35	970	0.90	-					
	26	90	53.76	1420	0.95	-					
	30	80	47.44	2080	1.05	-					
	32	74	44.18	2220	1.15	-					
	37	65	38.61	2170	1.30	-	**R**	**17**	**DAS 80K4**	12	ASEPTIC^{plus}
	39	61	36.20	2140	1.40	-	**RF**	**17**	**DAS 80K4**	12	
	44	54	31.94	2090	1.60	-					
	50	48	28.32	2030	1.80	-					
	59	41	24.07	1960	2.1	-					

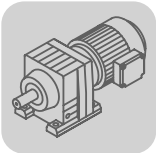

ASEPTIC Helical Gearmotors
Selection tables R..DAS..

P_m [kW]	n_a [rpm]	M_a [Nm]	i	F_{Ra} 1) [N]	SEW f_B	⚠				m [kg]	ASEPTIC plus
0.25	**72**	33	19.71	1870	2.6	-					
	84	29	16.99	1800	3.0	-					
	90	27	15.84	1770	3.2	-	**R**	**17**	**DAS 80K4**	12	ASEPTIC plus
	103	23	13.84	1700	3.7	-	**RF**	**17**	**DAS 80K4**	12	
	109	22	12.98	1680	3.9	-					
	124	19	11.45	1620	4.2	-					
0.37	**0.19**	15700	7307	-	0.85	-					
	0.22	13800	6447	-	0.95	-					
	0.25	12000	5568	-	1.10	-					
	0.28	10700	4926	-	1.20	-	**R**	**147 R77**	**DAS 80N4**	430	-
	0.32	9330	4325	-	1.40	-	**RF**	**147 R77**	**DAS 80N4**	435	
	0.37	8180	3754	-	1.60	-					
	0.42	7120	3302	-	1.85	-					
	0.48	6220	2898	-	2.1	-					
	0.31	9590	4464	-	0.85	-	**R**	**137 R77**	**DAS 80N4**	295	-
	0.36	8430	3928	-	0.95	-	**RF**	**137 R77**	**DAS 80N4**	320	
	0.35	8940	4018	-	0.90	-					
	0.40	7820	3514	-	1.00	-					
	0.42	7430	3338	-	1.10	-	**R**	**137 R77**	**DAS 80N4**	285	-
	0.48	6520	2929	-	1.25	-	**RF**	**137 R77**	**DAS 80N4**	310	
	0.56	5520	2484	-	1.45	-					
	0.62	4950	2242	-	1.60	-					
	0.53	5900	2658	-	1.35	-					
	0.58	5360	2412	-	1.50	-					
	0.68	4600	2073	-	1.75	-					
	0.76	4000	1839	-	2.0	-	**R**	**137 R77**	**DAS 80N4**	295	-
	1.0	3080	1397	-	2.6	-	**RF**	**137 R77**	**DAS 80N4**	320	
	1.1	2680	1226	-	3.0	-					
	1.3	2400	1090	-	3.3	-					
	1.5	2100	951	-	3.8	-					
	0.68	4590	2067	-	0.95	-					
	0.83	3730	1693	-	1.15	-					
	0.90	3370	1550	-	1.30	-	**R**	**107 R77**	**DAS 80N4**	205	-
	1.0	3060	1407	-	1.40	-	**RF**	**107 R77**	**DAS 80N4**	210	
	1.2	2630	1209	-	1.65	-					
	1.3	2290	1055	-	1.90	-					
	0.70	4380	1987	-	1.00	-					
	0.77	3970	1827	-	1.10	-					
	0.88	3430	1599	-	1.25	-	**R**	**107 R77**	**DAS 80N4**	210	-
	1.0	3040	1400	-	1.40	-	**RF**	**107 R77**	**DAS 80N4**	215	
	1.1	2630	1226	-	1.65	-					
	1.5	2040	939	-	2.1	-					
	1.7	1760	822	-	2.4	-					
	1.2	2720	1207	22800	1.10	-	**R**	**97 R57**	**DAS 80N4**	135	ASEPTIC plus
	1.3	2430	1084	24400	1.25	-	**RF**	**97 R57**	**DAS 80N4**	150	
	1.0	3130	1396	13900	0.95	-					
	1.1	2730	1228	22700	1.10	-					
	1.3	2440	1069	24400	1.25	-					
	1.5	2130	938	25900	1.40	-					
	1.7	1830	824	27000	1.65	-	**R**	**97 R57**	**DAS 80N4**	135	ASEPTIC plus
	1.9	1640	737	27400	1.85	-	**RF**	**97 R57**	**DAS 80N4**	150	
	2.2	1410	632	27800	2.1	-					
	3.2	970	431	28300	3.1	-					
	3.7	840	379	28400	3.6	-					
	4.2	755	336	28400	4.0	-					
	1.8	1780	802	12200	0.85	-	**R**	**87 R57**	**DAS 80N4**	92	ASEPTIC plus
	1.9	1670	754	13200	0.95	-	**RF**	**87 R57**	**DAS 80N4**	99	
	2.2	1430	649	15100	1.10	-					

P_m [kW]	n_a [rpm]	M_a [Nm]	i	F_{Ra} 1) [N]	SEW f_B	⚠				m [kg]	ASEPTIC^{plus}
0.37	**1.8**	1750	776	12500	0.90	-					
	2.0	1540	685	14300	1.00	-					
	2.3	1310	599	15800	1.20	-					
	2.7	1150	525	16600	1.35	-	**R**	**87 R57**	**DAS 80N4**	93	ASEPTIC^{plus}
	3.1	1010	456	17300	1.55	-	**RF**	**87 R57**	**DAS 80N4**	100	
	5.2	590	268	18600	2.6	-					
	5.9	520	236	18700	3.0	-					
	2.6	1240	538	16200	1.25	-					
	3.0	1080	472	16900	1.45	-	**R**	**87 R57**	**DAS 80N4**	91	ASEPTIC^{plus}
	3.5	910	400	17600	1.70	-	**RF**	**87 R57**	**DAS 80N4**	98	
	3.9	820	361	17900	1.90	-					
	3.8	850	373	9650	0.95	-					
	4.3	745	327	10600	1.10	-					
	4.9	660	289	11200	1.25	-					
	5.4	590	260	11600	1.40	-	**R**	**77 R37**	**DAS 80N4**	53	ASEPTIC^{plus}
	6.2	500	224	12100	1.65	-	**RF**	**77 R37**	**DAS 80N4**	59	
	7.1	440	197	12300	1.85	-					
	8.3	385	169	12500	2.1	-					
	9.4	335	149	12700	2.5	-					
	4.8	655	294	5930	0.90	-					
	5.4	590	261	7660	1.00	-	**R**	**67 R37**	**DAS 80N4**	48	ASEPTIC^{plus}
	6.0	530	234	8300	1.15	-	**RF**	**67 R37**	**DAS 80N4**	51	
	7.0	450	200	8980	1.35	-					
	8.4	420	166.59	12400	1.95	-					
	9.6	370	145.67	12600	2.2	-	**R**	**77**	**DAS 80N4**	44	ASEPTIC^{plus}
	10	350	138.39	12700	2.4	-	**RF**	**77**	**DAS 80N4**	50	
	12	305	121.42	12800	2.7	-					
	14	260	102.99	12900	3.2	-	**R**	**77**	**DAS 80N4**	44	ASEPTIC^{plus}
	15	235	92.97	13000	3.5	-	**RF**	**77**	**DAS 80N4**	50	
	8.8	400	158.14	9340	1.50	-					
	10	345	137.67	9650	1.75	-					
	11	325	128.97	9760	1.85	-					
	12	290	113.94	9940	2.1	-					
	13	265	105.83	10000	2.3	-					
	15	240	95.91	10100	2.5	-	**R**	**67**	**DAS 80N4**	37	ASEPTIC^{plus}
	16	215	86.11	10200	2.8	-	**RF**	**67**	**DAS 80N4**	40	
	19	187	74.17	10300	3.2	-					
	20	176	69.75	10300	3.4	-					
	23	155	61.26	10400	3.9	-					
	25	144	56.89	10400	4.2	-					
	9.5	375	147.92	7400	1.20	-					
	11	325	128.77	7560	1.40	-					
	12	305	120.63	7620	1.50	-					
	13	270	106.58	7710	1.65	-					
	14	250	98.99	7750	1.80	-	**R**	**57**	**DAS 80N4**	31	ASEPTIC^{plus}
	16	225	89.71	7800	2.0	-	**RF**	**57**	**DAS 80N4**	34	
	17	205	80.55	7850	2.2	-					
	20	175	69.23	7890	2.6	-					
	22	164	64.85	7910	2.8	-					
	24	145	57.29	7730	3.1	-					
	26	134	53.22	7560	3.4	-	**R**	**57**	**DAS 80N4**	31	ASEPTIC^{plus}
	29	122	48.23	7350	3.7	-	**RF**	**57**	**DAS 80N4**	34	
	10	355	139.99	3810	0.85	-					
	11	310	121.87	5380	1.00	-					
	12	290	114.17	5480	1.05	-					
	14	255	100.86	5640	1.20	-					
	15	235	93.68	5720	1.25	-	**R**	**47**	**DAS 80N4**	25	ASEPTIC^{plus}
	16	215	84.90	5800	1.40	-	**RF**	**47**	**DAS 80N4**	26	
	18	192	76.23	5880	1.55	-					
	20	173	68.54	5940	1.75	-					
	22	162	64.21	5970	1.85	-					
	25	143	56.73	6010	2.1	-					
	27	133	52.69	5960	2.3	-					
	29	121	47.75	5800	2.5	-					
	33	108	42.87	5630	2.8	-	**R**	**47**	**DAS 80N4**	25	ASEPTIC^{plus}
	38	93	36.93	5390	3.2	-	**RF**	**47**	**DAS 80N4**	26	
	40	88	34.73	5290	3.4	-					

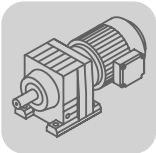

ASEPTIC Helical Gearmotors
Selection tables R..DAS..

P_m [kW]	n_a [rpm]	M_a [Nm]	i	F_{Ra} 1) [N]	SEW f_B	⚠				m [kg]	ASEPTIC plus
0.37	52	68	26.74	4900	4.4	-	R	47	DAS 80N4	25	ASEPTIC plus
	60	59	23.28	4700	5.1	-	RF	47	DAS 80N4	25	
	64	55	21.81	4600	5.5	-					
	15	230	90.77	4510	0.85	-	R	37	DAS 80N4	21	ASEPTIC plus
	17	215	84.61	4760	0.95	-	RF	37	DAS 80N4	22	
	19	187	73.96	5110	1.05	-					
	20	175	69.33	5230	1.15	-					
	23	154	61.18	5430	1.30	-					
	25	141	55.76	5550	1.40	-					
	29	121	48.08	5560	1.65	-					
	31	113	44.81	5460	1.75	-					
	36	99	39.17	5260	2.0	-					
	38	93	36.72	5170	2.2	-	R	37	DAS 80N4	21	ASEPTIC plus
	43	82	32.40	4990	2.4	-	RF	37	DAS 80N4	22	
	49	73	28.73	4830	2.8	-					
	57	62	24.42	4610	3.3	-					
	63	56	22.27	4480	3.6	-	R	37	DAS 80N4	21	ASEPTIC plus
	73	49	19.31	4300	4.1	-	RF	37	DAS 80N4	22	
	78	46	18.05	4210	4.4	-					
	90	39	15.60	4030	5.1	-					
	106	33	13.25	3840	5.7	-					
	118	30	11.83	3710	6.1	-					
	23	155	61.30	3860	0.85	-	R	27	DAS 80N4	15	ASEPTIC plus
	25	141	55.87	3790	0.90	-	RF	27	DAS 80N4	15	
	29	122	48.17	3670	1.05	-					
	31	113	44.90	3610	1.15	-					
	36	99	39.25	3500	1.30	-					
	38	93	36.79	3440	1.40	-					
	43	82	32.47	3340	1.60	-					
	49	73	28.78	3240	1.80	-					
	57	62	24.47	3100	2.1	-					
	63	56	22.32	3020	2.3	-	R	27	DAS 80N4	15	ASEPTIC plus
	72	49	19.35	2910	2.7	-	RF	27	DAS 80N4	15	
	77	46	18.08	2850	2.9	-					
	90	39	15.63	2740	3.3	-					
	105	34	13.28*	2610	3.9	-					
	36	98	38.61	890	0.85	-	R	17	DAS 80N4	14	ASEPTIC plus
	39	91	36.20	1350	0.95	-	RF	17	DAS 80N4	14	
	44	81	31.94	1900	1.05	-					
	49	72	28.32	1870	1.20	-					
	58	61	24.07	1820	1.40	-					
	71	50	19.71	1760	1.70	-	R	17	DAS 80N4	14	ASEPTIC plus
	82	43	16.99	1710	2.0	-	RF	17	DAS 80N4	14	
	88	40	15.84	1680	2.1	-					
	101	35	13.84	1630	2.4	-					
	108	33	12.98	1610	2.6	-					
	122	29	11.45	1560	2.8	-					
	138	26	10.15	1510	3.0	-					
	162	22	8.63	1450	3.3	-					
	185	19	7.55	1370	3.0	-					
	199	18	7.04	1340	3.1	-					
	228	16	6.15	1300	3.5	-					
	243	15	5.76	1280	3.7	-					
	275	13	5.09	1230	4.0	-					
	310	11	4.51	1190	4.2	-					
	365	9.7	3.83	1140	4.6	-					
0.55	0.24	18400	6077	-	1.00	-	R	167 R97	DAS 90S4	770	-
	0.27	16400	5407	-	1.10	-	RF	167 R97	DAS 90S4	770	
	0.31	13900	4650	-	1.30	-					
	0.35	12100	4129	-	1.50	-					
	0.29	15800	4926	-	0.80	-	R	147 R77	DAS 90S4	435	-
	0.34	13700	4325	-	0.95	-	RF	147 R77	DAS 90S4	445	
	0.39	12000	3754	-	1.10	-					
	0.44	10500	3302	-	1.25	-					
	0.50	9180	2898	-	1.40	-					

P_m [kW]	n_a [rpm]	M_a [Nm]	i	F_{Ra} 1) [N]	SEW f_B	⚠				m [kg]	ASEPTIC^{plus}
0.55	**0.57**	8310	2555	-	1.55	-					
	0.66	7190	2211	-	1.80	-					
	0.74	6350	1951	-	2.1	-	**R**	**147 R77**	**DAS 90S4**	435	-
	0.85	5420	1705	-	2.4	-	**RF**	**147 R77**	**DAS 90S4**	445	
	0.94	4860	1536	-	2.7	-					
	1.1	4200	1329	-	3.1	-					
	1.2	3650	1166	-	3.6	-					
	0.58	8080	2484	-	1.00	-	**R**	**137 R77**	**DAS 90S4**	295	-
							RF	**137 R77**	**DAS 90S4**	320	
	0.55	8650	2658	-	0.90	-					
	0.60	7850	2412	-	1.00	-					
	0.70	6750	2073	-	1.20	-					
	0.79	5900	1839	-	1.35	-					
	0.91	5050	1598	-	1.60	-	**R**	**137 R77**	**DAS 90S4**	305	-
	1.0	4530	1397	-	1.75	-	**RF**	**137 R77**	**DAS 90S4**	325	
	1.2	3940	1226	-	2.0	-					
	1.3	3530	1090	-	2.3	-					
	1.5	3080	951	-	2.6	-					
	1.7	2630	831	-	3.0	-					
	1.0	4510	1407	-	0.95	-					
	1.2	3880	1209	-	1.10	-					
	1.4	3380	1055	-	1.25	-	**R**	**107 R77**	**DAS 90S4**	210	-
	1.6	2960	919	-	1.45	-	**RF**	**107 R77**	**DAS 90S4**	220	
	1.8	2640	815	-	1.65	-					
	2.0	2310	717	-	1.85	-					
	2.3	2010	626	-	2.1	-					
	1.0	4490	1400	-	0.95	-					
	1.2	3900	1226	-	1.10	-					
	1.3	3490	1104	-	1.25	-	**R**	**107 R77**	**DAS 90S4**	215	-
	1.5	3010	939	-	1.45	-	**RF**	**107 R77**	**DAS 90S4**	225	
	1.8	2610	822	-	1.65	-					
	1.8	2690	824	23000	1.10	-					
	2.0	2400	737	24600	1.25	-					
	2.3	2060	632	26200	1.45	-					
	2.6	1790	560	27200	1.70	-					
	3.0	1560	484	27600	1.95	-	**R**	**97 R57**	**DAS 90S4**	145	ASEPTIC^{plus}
	3.4	1410	431	27800	2.1	-	**RF**	**97 R57**	**DAS 90S4**	160	
	3.8	1240	379	28000	2.4	-					
	4.3	1100	336	28100	2.7	-					
	4.9	960	296	28300	3.1	-					
	5.8	800	249	28400	3.7	-					
	2.8	1700	525	13000	0.90	-					
	3.2	1480	456	14700	1.05	-					
	3.6	1280	398	16000	1.20	-	**R**	**87 R57**	**DAS 90S4**	100	ASEPTIC^{plus}
	4.1	1130	352	16700	1.35	-	**RF**	**87 R57**	**DAS 90S4**	110	
	4.8	970	305	17400	1.60	-					
	3.1	1580	472	14000	1.00	-					
	3.6	1330	400	15700	1.15	-	**R**	**87 R57**	**DAS 90S4**	100	ASEPTIC^{plus}
	4.0	1200	361	16400	1.30	-	**RF**	**87 R57**	**DAS 90S4**	105	
	5.2	920	276	8830	0.90	-					
	6.1	785	236	10200	1.05	-	**R**	**77 R37**	**DAS 90S4**	61	ASEPTIC^{plus}
	6.5	735	221	10600	1.10	-	**RF**	**77 R37**	**DAS 90S4**	67	
	7.8	615	186	11500	1.35	-					
	5.7	930	255.71	28300	3.2	-					
	6.0	870	241.25	28300	3.4	-	**R**	**97**	**DAS 90S4**	120	ASEPTIC^{plus}
	6.7	785	216.28	28400	3.8	-	**RF**	**97**	**DAS 90S4**	135	
	6.7	785	216.54	18100	2.0	-					
	7.0	745	205.71	18200	2.1	-	**R**	**87**	**DAS 90S4**	79	ASEPTIC^{plus}
	8.0	660	181.77	18400	2.4	-	**RF**	**87**	**DAS 90S4**	86	
	9.3	565	155.34	18600	2.8	-					
	10	515	142.41	18700	3.0	-					
	12	455	124.97	18800	3.4	-	**R**	**87**	**DAS 90S4**	79	ASEPTIC^{plus}
	12	430	118.43*	18900	3.6	-	**RF**	**87**	**DAS 90S4**	86	
	14	375	103.65	18900	4.1	-					

P_m [kW]	n_a [rpm]	M_a [Nm]	i	F_{Ra} 1) [N]	SEW f_B	⚠					m [kg]	ASEPTIC plus
0.55	**10**	530	145.67	11900	1.55	-						
	10	500	138.39	12100	1.65	-						
	12	440	121.42	12300	1.85	-	**R**	**77**	**DAS**	**90S4**	53	ASEPTIC plus
	14	375	102.99	12600	2.2	-	**RF**	**77**	**DAS**	**90S4**	59	
	16	335	92.97	12700	2.4	-						
	18	295	81.80	12800	2.8	-						
	19	280	77.24	12900	2.9	-	**R**	**77**	**DAS**	**90S4**	53	ASEPTIC plus
	22	240	65.77	12900	3.4	-	**RF**	**77**	**DAS**	**90S4**	59	
	11	500	137.67	8590	1.20	-						
	11	465	128.97	8860	1.30	-						
	13	415	113.94	9250	1.45	-						
	14	385	105.83	9440	1.55	-						
	15	345	95.91	9650	1.75	-	**R**	**67**	**DAS**	**90S4**	46	ASEPTIC plus
	17	310	86.11	9830	1.90	-	**RF**	**67**	**DAS**	**90S4**	49	
	20	270	74.17	10000	2.2	-						
	21	255	69.75	10100	2.4	-						
	24	220	61.26	10200	2.7	-						
	25	205	56.89	10200	2.9	-						
	12	435	120.63	7160	1.05	-						
	14	385	106.58	7360	1.15	-						
	15	360	98.99	7450	1.25	-						
	16	325	89.71	7560	1.40	-	**R**	**57**	**DAS**	**90S4**	40	ASEPTIC plus
	18	290	80.55	7650	1.55	-	**RF**	**57**	**DAS**	**90S4**	43	
	21	250	69.23	7750	1.80	-						
	22	235	64.85	7650	1.90	-						
	25	210	57.29	7400	2.2	-						
	27	193	53.22	7260	2.3	-						
	30	175	48.23	7070	2.6	-						
	33	157	43.30	6860	2.9	-	**R**	**57**	**DAS**	**90S4**	40	ASEPTIC plus
	39	135	37.30*	6580	3.3	-	**RF**	**57**	**DAS**	**90S4**	43	
	41	127	35.07	6460	3.5	-						
	55	95	26.31	5950	4.7	-						
	58	91	24.99*	5860	5.0	-	**R**	**57**	**DAS**	**90S4**	39	ASEPTIC plus
	66	79	21.93	5630	5.7	-	**RF**	**57**	**DAS**	**90S4**	42	
	78	67	18.60*	5360	6.7	-						
	15	340	93.68	4610	0.90	-						
	17	310	84.90	5380	1.00	-						
	19	275	76.23	5540	1.10	-						
	21	250	68.54	5670	1.20	-						
	23	235	64.21	5730	1.30	-						
	26	205	56.73	5780	1.45	-	**R**	**47**	**DAS**	**90S4**	34	ASEPTIC plus
	28	191	52.69	5680	1.55	-	**RF**	**47**	**DAS**	**90S4**	35	
	30	173	47.75	5540	1.75	-						
	34	155	42.87	5380	1.95	-						
	39	134	36.93	5170	2.2	-						
	42	126	34.73	5090	2.4	-						
	49	108	29.88	4880	2.8	-						
	62	84	23.28	4550	3.6	-	**R**	**47**	**DAS**	**90S4**	34	ASEPTIC plus
	66	79	21.81	4460	3.8	-	**RF**	**47**	**DAS**	**90S4**	34	
	24	220	61.18	4650	0.90	-						
	30	174	48.08	5240	1.15	-						
	32	162	44.81	5160	1.25	-						
	37	142	39.17	4990	1.40	-	**R**	**37**	**DAS**	**90S4**	30	ASEPTIC plus
	39	133	36.72	4920	1.50	-	**RF**	**37**	**DAS**	**90S4**	32	
	45	117	32.40	4760	1.70	-						
	50	104	28.73	4620	1.90	-						
	59	88	24.42	4420	2.3	-						
	75	70	19.31	4140	2.9	-						
	80	65	18.05	4070	3.1	-	**R**	**37**	**DAS**	**90S4**	30	ASEPTIC plus
	93	57	15.60	3900	3.5	-	**RF**	**37**	**DAS**	**90S4**	31	
	109	48	13.25	3720	4.0	-	**R**	**37**	**DAS**	**90S4**	30	ASEPTIC plus
	123	43	11.83	3600	4.3	-	**RF**	**37**	**DAS**	**90S4**	31	
	37	142	39.25	3240	0.90	-						
	39	133	36.79	3200	1.00	-						
	45	118	32.47	3120	1.10	-	**R**	**27**	**DAS**	**90S4**	24	ASEPTIC plus
	50	104	28.78	3040	1.25	-	**RF**	**27**	**DAS**	**90S4**	24	
	59	89	24.47	2930	1.45	-						

P_m [kW]	n_a [rpm]	M_a [Nm]	i	F_{Ra} 1) [N]	SEW f_B	⚠				m [kg]	ASEPTIC^{plus}
0.55	**75**	70	19.35	2770	1.85	-					
	80	66	18.08	2720	2.0	-					
	93	57	15.63	2620	2.3	-					
	109	48	13.28*	2510	2.7	-					
	122	43	11.86	2430	3.0	-					
	143	37	10.13	2330	3.3	-					
	178	30	8.16	2160	3.9	-	**R**	**27**	**DAS 90S4**	24	ASEPTIC^{plus}
	190	28	7.63*	2120	4.1	-	**RF**	**27**	**DAS 90S4**	24	
	220	24	6.59	2040	4.4	-					
	259	20	5.60*	1940	4.9	-					
	290	18	5.00*	1880	5.3	-					
	340	16	4.27	1790	5.6	-					
	363	15	4.00*	1760	5.9	-					
	430	12	3.37	1670	6.5	-					
0.75	**0.31**	19800	4650	-	0.90	-	**R**	**167 R97**	**DAS 90L4**	770	-
	0.35	17400	4129	-	1.05	-	**RF**	**167 R97**	**DAS 90L4**	770	
	0.54	11600	2657	-	1.55	-					
	0.62	10100	2333	-	1.80	-	**R**	**167 R97**	**DAS 90L4**	760	-
	0.69	8890	2085	-	2.0	-	**RF**	**167 R97**	**DAS 90L4**	770	
	1.0	6280	1438	-	2.9	-					
	0.43	14700	3302	-	0.90	-	**R**	**147 R77**	**DAS 90L4**	435	-
	0.50	12900	2898	-	1.00	-	**RF**	**147 R77**	**DAS 90L4**	445	
	0.56	11600	2555	-	1.10	-					
	0.65	10000	2211	-	1.30	-					
	0.74	8860	1951	-	1.45	-					
	0.84	7620	1705	-	1.70	-	**R**	**147 R77**	**DAS 90L4**	435	-
	0.93	6840	1536	-	1.90	-	**RF**	**147 R77**	**DAS 90L4**	445	
	1.1	5920	1329	-	2.2	-					
	1.2	5160	1166	-	2.5	-					
	0.77	8380	1863	-	0.95	-					
	0.90	7090	1586	-	1.15	-	**R**	**137 R77**	**DAS 90L4**	295	-
	1.0	6320	1391	-	1.25	-	**RF**	**137 R77**	**DAS 90L4**	320	
	1.1	5690	1256	-	1.40	-					
	0.69	9420	2073	-	0.85	-					
	0.78	8270	1839	-	0.95	-					
	0.90	7110	1598	-	1.10	-					
	1.0	6330	1397	-	1.25	-					
	1.2	5520	1226	-	1.45	-	**R**	**137 R77**	**DAS 90L4**	305	-
	1.3	4930	1090	-	1.60	-	**RF**	**137 R77**	**DAS 90L4**	325	
	1.5	4310	951	-	1.85	-					
	1.7	3700	831	-	2.2	-					
	2.0	3230	730	-	2.5	-					
	1.4	4740	1055	-	0.90	-					
	1.6	4140	919	-	1.05	-	**R**	**107 R77**	**DAS 90L4**	210	-
	1.8	3690	815	-	1.15	-	**RF**	**107 R77**	**DAS 90L4**	220	
	1.5	4220	939	-	1.00	-					
	1.8	3670	822	-	1.15	-	**R**	**107 R77**	**DAS 90L4**	215	-
	3.9	1640	369	-	2.6	-	**RF**	**107 R77**	**DAS 90L4**	225	
	4.4	1430	323	-	3.0	-					
	2.3	2870	632	21800	1.05	-					
	2.6	2510	560	24000	1.20	-					
	3.0	2180	484	25600	1.40	-					
	3.3	1970	431	26500	1.50	-	**R**	**97 R57**	**DAS 90L4**	145	ASEPTIC^{plus}
	3.8	1720	379	27300	1.75	-	**RF**	**97 R57**	**DAS 90L4**	160	
	4.3	1540	336	27600	1.95	-					
	4.9	1350	296	27900	2.2	-					
	5.8	1120	249	28100	2.7	-					
	3.6	1790	398	12100	0.85	-					
	4.1	1590	352	13900	1.00	-					
	4.7	1370	305	15500	1.15	-	**R**	**87 R57**	**DAS 90L4**	100	ASEPTIC^{plus}
	5.4	1210	268	16300	1.30	-	**RF**	**87 R57**	**DAS 90L4**	110	
	6.1	1070	236	17000	1.45	-					

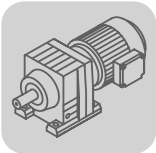

ASEPTIC Helical Gearmotors
Selection tables R..DAS..

P_m [kW]	n_a [rpm]	M_a [Nm]	i	F_{Ra} 1) [N]	SEW f_B	⚠				m [kg]	ASEPTIC plus
0.75	4.0	1670	361	13300	0.95	-	R	87 R57	DAS 90L4	100	ASEPTIC plus
	4.8	1380	300	15400	1.10	-	RF	87 R57	DAS 90L4	110	
	5.6	1170	256	16600	1.35	-					
	5.6	1280	255.71	27900	2.4	-	R	97	DAS 90L4	120	ASEPTIC plus
	6.0	1200	241.25	28000	2.5	-	RF	97	DAS 90L4	135	
	6.6	1080	216.28	28100	2.8	-					
	7.7	930	186.30	28300	3.2	-					
	8.4	850	170.02	28400	3.5	-					
	6.6	1080	216.54	17000	1.45	-	R	87	DAS 90L4	79	ASEPTIC plus
	7.0	1030	205.71	17200	1.50	-	RF	87	DAS 90L4	86	
	7.9	910	181.77	17600	1.70	-					
	9.2	775	155.34	18100	2.0	-					
	10	710	142.41	18300	2.2	-					
	11	625	124.97	18500	2.5	-					
	12	590	118.43*	18600	2.6	-					
	14	515	103.65	18700	3.0	-					
	15	465	93.38	18800	3.3	-	R	87	DAS 90L4	79	ASEPTIC plus
							RF	87	DAS 90L4	86	
	9.8	725	145.67	10700	1.15	-	R	77	DAS 90L4	53	ASEPTIC plus
	10	690	138.39	11000	1.20	-	RF	77	DAS 90L4	59	
	12	605	121.42	11500	1.35	-					
	14	515	102.99	12000	1.60	-					
	15	465	92.97	12200	1.75	-					
	18	410	81.80	12500	2.0	-					
	19	385	77.24	12500	2.1	-					
	22	330	65.77	12700	2.5	-					
	25	290	57.68	12800	2.9	-	R	77	DAS 90L4	53	ASEPTIC plus
	28	260	52.07	12900	3.2	-	RF	77	DAS 90L4	59	
	31	230	45.81	13000	3.6	-					
	33	215	43.26	13000	3.8	-					
	11	645	128.97	7000	0.95	-	R	67	DAS 90L4	47	ASEPTIC plus
	13	570	113.94	7920	1.05	-	RF	67	DAS 90L4	50	
	14	530	105.83	8330	1.15	-					
	15	480	95.91	8760	1.25	-					
	17	430	86.11	9140	1.40	-					
	19	370	74.17	9520	1.60	-					
	21	350	69.75	9640	1.70	-					
	23	305	61.26	9860	1.95	-					
	25	285	56.89	9960	2.1	-					
	28	255	51.56	10100	2.3	-					
	31	230	46.29	10200	2.6	-					
	13	530	106.58	5490	0.85	-	R	57	DAS 90L4	40	ASEPTIC plus
	15	495	98.99	6900	0.90	-	RF	57	DAS 90L4	44	
	16	450	89.71	7120	1.00	-					
	18	400	80.55	7300	1.10	-					
	21	345	69.23	7470	1.30	-					
	22	325	64.85	7360	1.40	-					
	25	285	57.29	7150	1.55	-					
	27	265	53.22	7030	1.70	-					
	30	240	48.23	6860	1.85	-					
	33	215	43.30	6670	2.1	-					
	38	186	37.30*	6420	2.4	-	R	57	DAS 90L4	40	ASEPTIC plus
	41	175	35.07	6320	2.6	-	RF	57	DAS 90L4	44	
	48	151	30.18	6060	3.0	-					
	53	135	26.97	5880	3.3	-					
	55	131	26.31	5840	3.4	-	R	57	DAS 90L4	39	ASEPTIC plus
	57	125	24.99*	5760	3.6	-	RF	57	DAS 90L4	43	
	65	109	21.93	5550	4.1	-					
	77	93	18.60*	5290	4.9	-					

P_m [kW]	n_a [rpm]	M_a [Nm]	i	F_{Ra} 1) [N]	SEW f_B	⚠				m [kg]	ASEPTIC^{plus}
0.75	**21**	340	68.54	4460	0.90	-					
	22	320	64.21	5300	0.95	-					
	25	285	56.73	5510	1.05	-					
	27	265	52.69	5440	1.15	-					
	30	240	47.75	5320	1.25	-					
	33	215	42.87	5190	1.40	-	**R**	**47**	**DAS 90L4**	35	ASEPTIC^{plus}
	39	184	36.93	5010	1.65	-	**RF**	**47**	**DAS 90L4**	35	
	41	173	34.73	4930	1.75	-					
	48	149	29.88	4750	2.0	-					
	54	133	26.70	4610	2.3	-					
	61	118	23.59	4460	2.6	-					
	62	116	23.28	4450	2.6	-					
	66	109	21.81	4370	2.8	-					
	74	96	19.27	4220	3.1	-	**R**	**47**	**DAS 90L4**	34	ASEPTIC^{plus}
	80	89	17.89	4140	3.3	-	**RF**	**47**	**DAS 90L4**	35	
	88	81	16.22	4020	3.4	-					
	30	240	48.08	3550	0.85	-					
	32	225	44.81	4480	0.90	-					
	37	196	39.17	4760	1.00	-					
	39	183	36.72	4700	1.10	-	**R**	**37**	**DAS 90L4**	30	ASEPTIC^{plus}
	44	162	32.40	4570	1.25	-	**RF**	**37**	**DAS 90L4**	32	
	50	143	28.73	4450	1.40	-					
	59	122	24.42	4280	1.65	-					
	74	96	19.31	4040	2.1	-					
	80	90	18.05	3970	2.2	-	**R**	**37**	**DAS 90L4**	30	ASEPTIC^{plus}
	92	78	15.60	3810	2.6	-	**RF**	**37**	**DAS 90L4**	31	
	108	66	13.25	3650	2.9	-					
	121	59	11.83	3540	3.1	-	**R**	**37**	**DAS 90L4**	30	ASEPTIC^{plus}
	142	50	10.11	3380	3.4	-	**RF**	**37**	**DAS 90L4**	31	
	152	47	9.47	3320	3.5	-					
	50	144	28.78	2860	0.90	-	**R**	**27**	**DAS 90L4**	24	ASEPTIC^{plus}
	59	122	24.47	2780	1.05	-	**RF**	**27**	**DAS 90L4**	24	
	74	97	19.35	2650	1.35	-					
	79	90	18.08	2610	1.45	-					
	92	78	15.63	2520	1.65	-					
	108	66	13.28*	2430	1.95	-					
	121	59	11.86	2360	2.2	-					
	142	51	10.13	2270	2.4	-	**R**	**27**	**DAS 90L4**	24	ASEPTIC^{plus}
	176	41	8.16	2110	2.9	-	**RF**	**27**	**DAS 90L4**	24	
	188	38	7.63*	2070	2.9	-					
	218	33	6.59	1990	3.2	-					
	256	28	5.60*	1910	3.6	-					
	287	25	5.00*	1850	3.8	-					
1.1	**0.54**	17300	2657	-	1.05	-					
	0.62	15100	2333	-	1.20	-					
	0.69	13400	2085	-	1.35	-					
	0.77	11900	1877	-	1.50	-	**R**	**167 R97**	**DAS 100M4**	770	-
	0.87	10600	1670	-	1.70	-	**RF**	**167 R97**	**DAS 100M4**	780	
	1.0	9370	1438	-	1.90	-					
	1.1	8330	1279	-	2.2	-					
	1.3	7260	1123	-	2.5	-					
	0.65	14800	2211	-	0.90	-					
	0.74	13000	1951	-	1.00	-					
	0.85	11300	1705	-	1.15	-					
	0.94	10100	1536	-	1.30	-					
	1.1	8770	1329	-	1.50	-	**R**	**147 R77**	**DAS 100M4**	440	-
	1.2	7660	1166	-	1.70	-	**RF**	**147 R77**	**DAS 100M4**	450	
	1.4	6730	1029	-	1.95	-					
	1.6	5840	889	-	2.2	-					
	1.8	5130	784	-	2.5	-					
	2.1	4520	695	-	2.9	-					
	1.0	9300	1391	-	0.85	-					
	1.2	8380	1256	-	0.95	-					
	1.3	7350	1105	-	1.10	-	**R**	**137 R77**	**DAS 100M4**	300	-
	1.4	6930	1043	-	1.15	-	**RF**	**137 R77**	**DAS 100M4**	325	
	1.6	5880	888	-	1.35	-					

P_m [kW]	n_a [rpm]	M_a [Nm]	i	F_{Ra} 1) [N]	SEW f_B	⚠				m [kg]	ASEPTIC^{plus}
1.1	**1.0**	9320	1397	-	0.85	-					
	1.2	8150	1226	-	1.00	-					
	1.3	7270	1090	-	1.10	-					
	1.5	6350	951	-	1.25	-					
	1.7	5480	831	-	1.45	-	**R**	**137 R77**	**DAS 100M4**	310	-
	2.0	4790	730	-	1.65	-	**RF**	**137 R77**	**DAS 100M4**	335	
	2.3	4090	629	-	1.95	-					
	2.6	3710	560	-	2.2	-					
	3.0	3190	490	-	2.5	-					
	2.0	4770	717	-	0.90	-	**R**	**107 R77**	**DAS 100M4**	220	-
							RF	**107 R77**	**DAS 100M4**	225	
	2.4	4020	614	-	1.05	-					
	2.6	3550	544	-	1.20	-					
	2.9	3210	492	-	1.35	-					
	3.5	2720	417	-	1.60	-	**R**	**107 R77**	**DAS 100M4**	225	-
	3.9	2430	369	-	1.75	-	**RF**	**107 R77**	**DAS 100M4**	230	
	4.5	2120	323	-	2.0	-					
	5.1	1870	285	-	2.3	-					
	5.7	1650	253	-	2.6	-					
	3.4	2890	431	21700	1.05	-					
	3.8	2540	379	23900	1.20	-					
	4.3	2260	336	25300	1.35	-					
	4.9	1980	296	26500	1.50	-	**R**	**97 R57**	**DAS 100M4**	150	ASEPTIC^{plus}
	5.8	1660	249	27400	1.80	-	**RF**	**97 R57**	**DAS 100M4**	170	
	6.2	1540	234	27600	1.95	-					
	6.9	1380	209	27800	2.2	-					
	5.4	1780	268	12200	0.85	-					
	6.1	1570	236	14000	1.00	-	**R**	**87 R57**	**DAS 100M4**	110	ASEPTIC^{plus}
	6.9	1380	209	15400	1.10	-	**RF**	**87 R57**	**DAS 100M4**	115	
	5.7	1720	256	12800	0.90	-					
	6.2	1560	232	14100	1.00	-	**R**	**87 R57**	**DAS 100M4**	110	ASEPTIC^{plus}
	7.4	1320	195	15700	1.15	-	**RF**	**87 R57**	**DAS 100M4**	115	
	6.7	1570	216.28	27500	1.90	-					
	7.8	1350	186.30	27800	2.2	-	**R**	**97**	**DAS 100M4**	130	ASEPTIC^{plus}
	8.5	1240	170.02	28000	2.4	-	**RF**	**97**	**DAS 100M4**	145	
	9.6	1100	150.78	28100	2.7	-					
	11	920	126.75	28300	3.3	-	**R**	**97**	**DAS 100M4**	130	ASEPTIC^{plus}
	12	850	116.48	28400	3.5	-	**RF**	**97**	**DAS 100M4**	145	
	8.0	1320	181.77	15700	1.15	-					
	9.3	1130	155.34	16700	1.35	-					
	10	1040	142.41	17200	1.50	-					
	12	910	124.97	17600	1.70	-	**R**	**87**	**DAS 100M4**	87	ASEPTIC^{plus}
	12	860	118.43*	17800	1.80	-	**RF**	**87**	**DAS 100M4**	94	
	14	755	103.65	18100	2.1	-					
	15	680	93.38	18300	2.3	-					
	18	595	81.92	18500	2.6	-					
	20	530	72.57	18700	2.9	-					
	23	465	63.68*	18800	3.4	-	**R**	**87**	**DAS 100M4**	87	ASEPTIC^{plus}
	24	440	60.35*	18800	3.5	-	**RF**	**87**	**DAS 100M4**	94	
	27	385	52.82	18900	4.0	-					
	12	880	121.42	9300	0.95	-					
	14	750	102.99	10500	1.10	-					
	16	675	92.97	11100	1.20	-					
	18	595	81.80	11600	1.40	-					
	19	560	77.24	11800	1.45	-	**R**	**77**	**DAS 100M4**	60	ASEPTIC^{plus}
	22	480	65.77	12200	1.70	-	**RF**	**77**	**DAS 100M4**	66	
	25	420	57.68	12400	1.95	-					
	28	380	52.07	12600	2.2	-					
	32	335	45.81	12700	2.5	-					
	33	315	43.26	12800	2.6	-					
	39	270	36.83	12900	3.1	-	**R**	**77**	**DAS 100M4**	60	ASEPTIC^{plus}
	43	245	33.47	12900	3.4	-	**RF**	**77**	**DAS 100M4**	66	

P_m [kW]	n_a [rpm]	M_a [Nm]	i	F_{Ra} 1) [N]	SEW f_B	⚠				m [kg]	ASEPTIC^{plus}
1.1	**17**	625	86.11	7240	0.95	-					
	19	540	74.17	8220	1.10	-					
	21	505	69.75	8520	1.20	-					
	24	445	61.26	9020	1.35	-					
	28	375	51.56	9490	1.60	-	**R**	**67**	**DAS 100M4**	54	ASEPTIC^{plus}
	31	335	46.29	9710	1.80	-	**RF**	**67**	**DAS 100M4**	57	
	36	290	39.88*	9930	2.0	-					
	39	275	37.50	10000	2.1	-					
	45	235	32.27	10100	2.3	-					
	50	210	28.83	10200	2.5	-					
	62	170	23.44	9640	3.3	-	**R**	**67**	**DAS 100M4**	53	ASEPTIC^{plus}
	73	145	19.89	9180	4.2	-	**RF**	**67**	**DAS 100M4**	56	
	25	415	57.29	6670	1.10	-					
	30	350	48.23	6450	1.30	-					
	33	315	43.30	6300	1.45	-					
	39	270	37.30*	6100	1.65	-	**R**	**57**	**DAS 100M4**	48	ASEPTIC^{plus}
	41	255	35.07	6010	1.75	-	**RF**	**57**	**DAS 100M4**	51	
	48	220	30.18	5800	2.1	-					
	54	196	26.97	5640	2.3	-					
	66	159	21.93	5350	2.8	-					
	78	135	18.60*	5120	3.3	-	**R**	**57**	**DAS 100M4**	47	ASEPTIC^{plus}
	86	122	16.79	4980	3.7	-	**RF**	**57**	**DAS 100M4**	50	
	30	345	47.75	4170	0.85	-					
	34	310	42.87	4820	0.95	-					
	39	270	36.93	4690	1.10	-					
	42	250	34.73	4630	1.20	-	**R**	**47**	**DAS 100M4**	42	ASEPTIC^{plus}
	48	215	29.88	4490	1.40	-	**RF**	**47**	**DAS 100M4**	42	
	54	194	26.70	4380	1.55	-					
	61	172	23.59	4260	1.75	-					
	75	140	19.27	4050	2.1	-					
	89	118	16.22	3880	2.3	-					
	99	106	14.56	3770	2.5	-					
	115	91	12.54	3620	2.7	-	**R**	**47**	**DAS 100M4**	42	ASEPTIC^{plus}
	123	86	11.79	3560	2.9	-	**RF**	**47**	**DAS 100M4**	42	
	142	74	10.15	3420	3.1	-					
	159	66	9.07	3310	3.3	-					
	45	235	32.40	3010	0.85	-					
	50	210	28.73	3390	0.95	-	**R**	**37**	**DAS 100M4**	37	ASEPTIC^{plus}
	59	178	24.42	3780	1.15	-	**RF**	**37**	**DAS 100M4**	38	
	93	113	15.60	3640	1.75	-					
	109	96	13.25	3500	1.95	-	**R**	**37**	**DAS 100M4**	36	ASEPTIC^{plus}
	122	86	11.83	3400	2.1	-	**RF**	**37**	**DAS 100M4**	38	
	143	74	10.11	3260	2.3	-					
	153	69	9.47	3210	2.4	-					
	181	58	7.97	3060	2.7	-	**R**	**37**	**DAS 100M4**	36	ASEPTIC^{plus}
	217	49	6.67	2890	3.0	-	**RF**	**37**	**DAS 100M4**	38	
	255	41	5.67	2770	3.5	-					
	286	37	5.06	2680	3.7	-					
	92	114	15.63	2340	1.15	-					
	109	97	13.28*	2270	1.35	-					
	122	86	11.86	2220	1.50	-					
	143	74	10.13	2150	1.65	-					
	219	48	6.59	1900	2.2	-	**R**	**27**	**DAS 100M4**	31	ASEPTIC^{plus}
	258	41	5.60*	1830	2.4	-	**RF**	**27**	**DAS 100M4**	30	
	289	36	5.00*	1780	2.6	-					
	338	31	4.27	1710	2.8	-					
	361	29	4.00*	1680	2.9	-					
	429	25	3.37	1600	3.2	-					

P_m [kW]	n_a [rpm]	M_a [Nm]	i	F_{Ra} 1) [N]	SEW f_B	⚠				m [kg]	ASEPTIC plus
1.5	**0.63**	20600	2333	-	0.85	-					
	0.70	18300	2085	-	1.00	-					
	0.78	16300	1877	-	1.10	-					
	0.88	14500	1670	-	1.25	-	**R**	**167 R97**	**DAS 100L4**	780	-
	1.0	12800	1438	-	1.40	-	**RF**	**167 R97**	**DAS 100L4**	780	
	1.2	11400	1279	-	1.60	-					
	1.3	9910	1123	-	1.80	-					
	1.5	8820	999	-	2.0	-					
	3.4	3760	426	-	3.5	-	**R**	**147 R87**	**DAS 100L4**	470	-
	4.0	3250	368	-	4.0	-	**RF**	**147 R87**	**DAS 100L4**	480	
	0.86	15300	1705	-	0.85	-					
	0.95	13800	1536	-	0.95	-					
	1.1	11900	1329	-	1.10	-					
	1.3	10400	1166	-	1.25	-					
	1.4	9160	1029	-	1.40	-	**R**	**147 R77**	**DAS 100L4**	450	-
	1.7	7930	889	-	1.65	-	**RF**	**147 R77**	**DAS 100L4**	460	
	1.9	6980	784	-	1.85	-					
	2.1	6170	695	-	2.1	-					
	2.4	5560	619	-	2.3	-					
	2.6	5000	558	-	2.6	-					
	1.4	9390	1043	-	0.85	-					
	1.7	7970	888	-	1.00	-	**R**	**137 R77**	**DAS 100L4**	310	-
	2.1	6240	699	-	1.30	-	**RF**	**137 R77**	**DAS 100L4**	330	
	2.4	5420	609	-	1.50	-					
	1.3	9840	1090	-	0.80	-					
	1.5	8590	951	-	0.95	-					
	1.8	7450	831	-	1.05	-					
	2.0	6510	730	-	1.25	-					
	2.3	5580	629	-	1.45	-	**R**	**137 R77**	**DAS 100L4**	320	-
	2.6	5030	560	-	1.60	-	**RF**	**137 R77**	**DAS 100L4**	340	
	3.0	4350	490	-	1.85	-					
	3.4	3800	428	-	2.1	-					
	3.8	3420	381	-	2.3	-					
	4.5	2900	323	-	2.8	-					
	2.8	4710	528	-	0.90	-	**R**	**107 R77**	**DAS 100L4**	225	-
							RF	**107 R77**	**DAS 100L4**	230	
	2.7	4830	544	-	0.90	-					
	3.0	4370	492	-	1.00	-	**R**	**107 R77**	**DAS 100L4**	230	-
	3.5	3700	417	-	1.15	-	**RF**	**107 R77**	**DAS 100L4**	240	
	4.0	3300	369	-	1.30	-					
	4.5	2890	323	-	1.50	-					
	3.1	4300	469	-	1.00	-	**R**	**107 R77**	**DAS 100L4**	225	-
							RF	**107 R77**	**DAS 100L4**	230	
	4.4	3050	336	17800	1.00	-					
	5.0	2680	296	23100	1.10	-	**R**	**97 R57**	**DAS 100L4**	160	ASEPTIC plus
	5.9	2240	249	25300	1.35	-	**RF**	**97 R57**	**DAS 100L4**	175	
	6.3	2090	234	26000	1.45	-					
	7.0	1870	209	26900	1.60	-					
	6.8	2110	216.28	25900	1.40	-					
	7.9	1820	186.30	27000	1.65	-					
	8.6	1660	170.02	27400	1.80	-					
	9.7	1470	150.78	27700	2.0	-	**R**	**97**	**DAS 100L4**	135	ASEPTIC plus
	12	1240	126.75	28000	2.4	-	**RF**	**97**	**DAS 100L4**	150	
	13	1140	116.48	28100	2.6	-					
	14	1010	103.44	28200	3.0	-					
	16	900	92.48	28300	3.3	-					

P_m [kW]	n_a [rpm]	M_a [Nm]	i	F_{Ra} 1) [N]	SEW f_B	⚠				m [kg]	ASEPTIC^{plus}
1.5	**8.1**	1780	181.77	12200	0.85	-					
	9.4	1520	155.34	14400	1.00	-					
	10	1390	142.41	15300	1.10	-					
	12	1220	124.97	16300	1.25	-					
	12	1160	118.43*	16600	1.35	-	**R**	**87**	**DAS 100L4**	95	ASEPTIC^{plus}
	14	1010	103.65	17200	1.55	-	**RF**	**87**	**DAS 100L4**	100	
	16	910	93.38	17600	1.70	-					
	18	800	81.92	18000	1.95	-					
	20	710	72.57	18300	2.2	-					
	23	625	63.68*	18500	2.5	-					
	24	590	60.35*	18600	2.6	-					
	28	515	52.82	18700	3.0	-					
	31	465	47.58	18800	3.3	-	**R**	**87**	**DAS 100L4**	95	ASEPTIC^{plus}
	35	410	41.74	18900	3.8	-	**RF**	**87**	**DAS 100L4**	100	
	40	360	36.84*	19000	4.3	-					
	16	910	92.97	9010	0.90	-					
	18	800	81.80	10100	1.05	-					
	19	755	77.24	10500	1.10	-					
	22	645	65.77	11300	1.30	-					
	25	565	57.68	11800	1.45	-	**R**	**77**	**DAS 100L4**	68	ASEPTIC^{plus}
	28	510	52.07	12000	1.60	-	**RF**	**77**	**DAS 100L4**	73	
	32	450	45.81	12300	1.85	-					
	34	425	43.26	12400	1.95	-					
	40	360	36.83	12600	2.3	-					
	44	325	33.47	12700	2.5	-					
	51	285	29.00	12400	2.9	-	**R**	**77**	**DAS 100L4**	68	ASEPTIC^{plus}
	58	245	25.23	11900	3.2	-	**RF**	**77**	**DAS 100L4**	73	
	63	230	23.37	11600	3.6	-	**R**	**77**	**DAS 100L4**	66	ASEPTIC^{plus}
	68	210	21.43	11300	3.9	-	**RF**	**77**	**DAS 100L4**	72	
	78	184	18.80	10900	4.2	-					
	24	600	61.26	7570	1.00	-					
	28	505	51.56	8550	1.20	-					
	32	455	46.29	8970	1.35	-					
	37	390	39.88*	9400	1.50	-	**R**	**67**	**DAS 100L4**	62	ASEPTIC^{plus}
	39	365	37.50	9540	1.55	-	**RF**	**67**	**DAS 100L4**	65	
	45	315	32.27	9810	1.70	-					
	51	280	28.83	9950	1.85	-					
	62	230	23.44	9400	2.4	-	**R**	**67**	**DAS 100L4**	61	ASEPTIC^{plus}
	74	194	19.89	8970	3.1	-	**RF**	**67**	**DAS 100L4**	64	
	82	176	17.95	8710	3.4	-					
	30	470	48.23	5980	0.95	-					
	34	425	43.30	5880	1.05	-					
	39	365	37.30*	5730	1.25	-	**R**	**57**	**DAS 100L4**	55	ASEPTIC^{plus}
	42	345	35.07	5670	1.30	-	**RF**	**57**	**DAS 100L4**	58	
	49	295	30.18	5500	1.50	-					
	54	265	26.97	5370	1.70	-					
	67	215	21.93	5130	2.1	-	**R**	**57**	**DAS 100L4**	54	ASEPTIC^{plus}
	79	182	18.60*	4930	2.5	-	**RF**	**57**	**DAS 100L4**	57	
	87	164	16.79	4810	2.7	-					
	99	144	14.77*	4650	3.0	-	**R**	**57**	**DAS 100L4**	54	ASEPTIC^{plus}
	105	136	13.95*	4580	3.2	-	**RF**	**57**	**DAS 100L4**	57	
	123	116	11.88	4390	3.5	-					
	40	360	36.93	3330	0.85	-					
	42	340	34.73	4290	0.90	-					
	49	290	29.88	4190	1.05	-	**R**	**47**	**DAS 100L4**	50	ASEPTIC^{plus}
	55	260	26.70	4110	1.15	-	**RF**	**47**	**DAS 100L4**	50	
	62	230	23.59	4020	1.30	-					

P_m [kW]	n_a [rpm]	M_a [Nm]	i	F_{Ra} 1) [N]	SEW f_B	⚠				m [kg]	ASEPTIC^{plus}
1.5	**76**	188	19.27	3850	1.55	-					
	90	159	16.22	3710	1.75	-	**R**	**47**	**DAS 100L4**	49	ASEPTIC^{plus}
	101	142	14.56	3620	1.85	-	**RF**	**47**	**DAS 100L4**	49	
	117	123	12.54	3490	2.0	-					
	124	115	11.79	3440	2.1	-					
	144	99	10.15	3310	2.3	-					
	162	89	9.07	3210	2.5	-					
	183	78	8.01	3100	2.6	-					
	189	76	7.76*	3030	2.2	-					
	210	68	6.96	2950	2.3	-	**R**	**47**	**DAS 100L4**	49	ASEPTIC^{plus}
	244	59	6.00	2830	2.7	-	**RF**	**47**	**DAS 100L4**	49	
	260	55	5.64*	2780	2.8	-					
	302	48	4.85	2670	3.2	-					
	338	42	4.34	2580	3.4	-					
	382	38	3.83	2490	3.8	-					
	94	153	15.60	3230	1.30	-					
	111	130	13.25	3320	1.45	-					
	124	116	11.83	3240	1.60	-	**R**	**37**	**DAS 100L4**	44	ASEPTIC^{plus}
	145	99	10.11	3130	1.70	-	**RF**	**37**	**DAS 100L4**	45	
	155	93	9.47	3080	1.80	-					
	184	78	7.97	2950	2.0	-					
	220	65	6.67	2790	2.2	-					
	259	55	5.67	2680	2.6	-					
	290	50	5.06	2600	2.7	-	**R**	**37**	**DAS 100L4**	44	ASEPTIC^{plus}
	339	42	4.32	2490	3.0	-	**RF**	**37**	**DAS 100L4**	45	
	362	40	4.05	2450	3.1	-					
	430	33	3.41	2330	3.4	-					
	94	153	15.63	1790	0.85	-					
	110	130	13.28*	2090	1.00	-					
	124	116	11.86	2060	1.10	-					
	145	99	10.13	2010	1.25	-					
	222	64	6.59	1800	1.65	-	**R**	**27**	**DAS 100L4**	38	ASEPTIC^{plus}
	262	55	5.60*	1740	1.80	-	**RF**	**27**	**DAS 100L4**	38	
	293	49	5.00*	1700	1.95	-					
	343	42	4.27	1640	2.1	-					
	366	39	4.00*	1610	2.2	-					
	435	33	3.37	1540	2.4	-					

8 ASEPTIC Parallel Shaft Helical Gearmotors

8.1 Selection tables F..DAS..

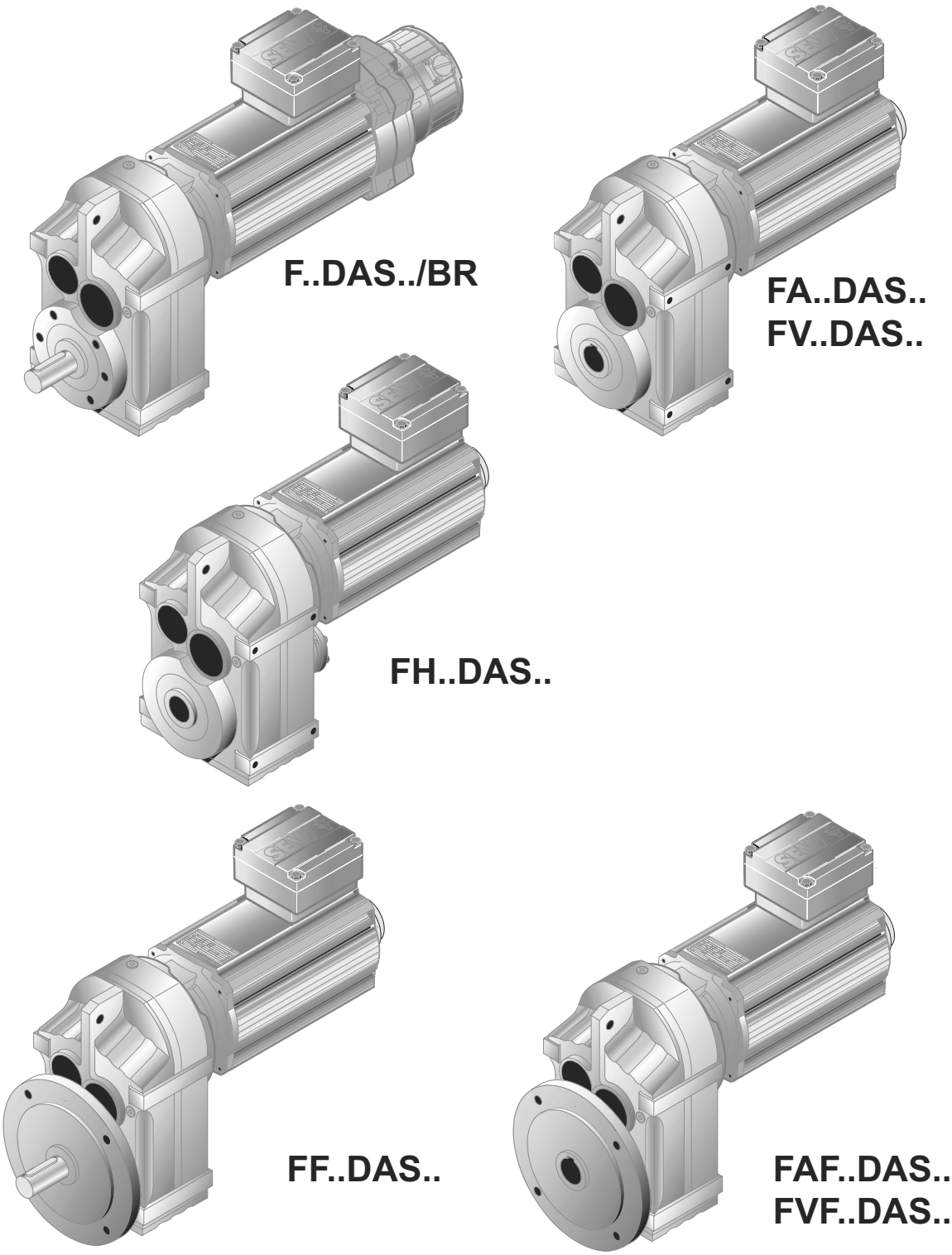

55745AXX

ASEPTIC Parallel Shaft Helical Gearmotors

Selection tables F..DAS..

P_m [kW]	n_a [rpm]	M_a [Nm]	i	F_{Ra} 1) [N]	SEW f_B	⚠				m [kg]	ASEPTIC plus
0.25	**0.16**	12000	8831	-	1.00	-					
	0.19	10400	7643	-	1.15	-	**FA**	**127 R77**	**DAS 80K4**	430	
	0.21	9500	6715	-	1.25	-	**FAF**	**127 R77**	**DAS 80K4**	465	-
	0.24	8380	5925	-	1.45	-	**F**	**127 R77**	**DAS 80K4**	465	
	0.28	7190	5153	-	1.65	-	**FF**	**127 R77**	**DAS 80K4**	510	
	0.31	6220	4533	-	1.95	-					
	0.24	8170	5954	-	0.95	-	**FA**	**107 R77**	**DAS 80K4**	280	
	0.27	7120	5223	-	1.10	-	**FAF**	**107 R77**	**DAS 80K4**	300	-
	0.31	6460	4567	-	1.20	-	**F**	**107 R77**	**DAS 80K4**	295	
	0.40	4910	3521	-	1.55	-	**FF**	**107 R77**	**DAS 80K4**	325	
	0.47	4340	3037	-	1.75	-					
	0.52	3930	2756	-	1.95	-	**FA**	**107 R77**	**DAS 80K4**	280	
	0.60	3380	2369	-	2.3	-	**FAF**	**107 R77**	**DAS 80K4**	300	-
	0.69	2950	2068	-	2.6	-	**F**	**107 R77**	**DAS 80K4**	295	
	0.89	2250	1597	-	3.4	-	**FF**	**107 R77**	**DAS 80K4**	320	
	1.0	1950	1401	-	4.0	-					
	0.49	4250	2907	30100	1.00	-					
	0.56	3800	2553	31300	1.15	-					
	0.63	3340	2245	32500	1.30	-					
	0.72	2910	1970	33500	1.50	-	**FA**	**97 R57**	**DAS 80K4**	190	
	0.82	2570	1722	34300	1.65	-	**FAF**	**97 R57**	**DAS 80K4**	210	ASEPTIC plus
	0.93	2280	1527	34900	1.90	-	**F**	**97 R57**	**DAS 80K4**	195	
	1.1	1900	1327	35600	2.3	-	**FF**	**97 R57**	**DAS 80K4**	230	
	1.2	1750	1171	35800	2.5	-					
	1.4	1530	1022	36200	2.8	-					
	0.74	2850	1930	23500	1.05	-					
	0.83	2550	1709	24600	1.20	-					
	0.95	2230	1493	25700	1.35	-					
	1.1	1860	1300	26800	1.60	-	**FA**	**87 R57**	**DAS 80K4**	120	
	1.2	1660	1148	27400	1.80	-	**FAF**	**87 R57**	**DAS 80K4**	135	ASEPTIC plus
	1.4	1450	1010	28000	2.1	-	**F**	**87 R57**	**DAS 80K4**	130	
	1.6	1290	887	28300	2.3	-	**FF**	**87 R57**	**DAS 80K4**	145	
	1.8	1120	780	28700	2.7	-					
	2.1	950	674	29100	3.2	-					
	1.4	1590	1053	15100	0.95	-					
	1.6	1360	910	16600	1.10	-					
	1.8	1180	810	17600	1.25	-	**FA**	**77 R37**	**DAS 80K4**	70	
	2.0	1030	710	18200	1.45	-	**FAF**	**77 R37**	**DAS 80K4**	76	ASEPTIC plus
	2.3	910	615	18600	1.65	-	**F**	**77 R37**	**DAS 80K4**	74	
	2.6	800	538	19000	1.90	-	**FF**	**77 R37**	**DAS 80K4**	84	
	3.0	710	480	19200	2.1	-					
	3.4	600	413	19500	2.5	-					
	2.5	850	572	10000	0.95	-	**FA**	**67 R37**	**DAS 80K4**	48	
	2.8	740	509	11000	1.10	-	**FAF**	**67 R37**	**DAS 80K4**	54	ASEPTIC plus
	3.2	635	437	11700	1.30	-	**F**	**67 R37**	**DAS 80K4**	50	
							FF	**67 R37**	**DAS 80K4**	57	
	2.8	760	500	10800	1.10	-					
	3.1	690	454	11300	1.20	-					
	3.6	595	392	11900	1.40	-	**FA**	**67 R37**	**DAS 80K4**	46	
	4.3	500	333	12400	1.65	-	**FAF**	**67 R37**	**DAS 80K4**	53	ASEPTIC plus
	4.8	445	297	12600	1.85	-	**F**	**67 R37**	**DAS 80K4**	49	
	5.4	390	261	12800	2.1	-	**FF**	**67 R37**	**DAS 80K4**	55	
	6.0	350	238	13000	2.3	-					
	3.7	565	386	9470	1.05	-	**FA**	**57 R37**	**DAS 80K4**	44	
	4.2	490	338	9990	1.20	-	**FAF**	**57 R37**	**DAS 80K4**	49	ASEPTIC plus
	5.6	370	255	10700	1.60	-	**F**	**57 R37**	**DAS 80K4**	44	
							FF	**57 R37**	**DAS 80K4**	50	
	3.7	585	382	9330	1.05	-					
	4.3	500	330	9920	1.20	-					
	4.8	450	298	10200	1.35	-	**FA**	**57 R37**	**DAS 80K4**	43	
	5.4	400	262	10600	1.50	-	**FAF**	**57 R37**	**DAS 80K4**	49	ASEPTIC plus
	6.3	340	226	10900	1.80	-	**F**	**57 R37**	**DAS 80K4**	43	
	7.1	295	200	11200	2.0	-	**FF**	**57 R37**	**DAS 80K4**	50	
	8.4	250	170	11400	2.4	-					

P_m [kW]	n_a [rpm]	M_a [Nm]	i	F_{Ra} 1) [N]	SEW f_B	⚠				m [kg]	ASEPTIC plus
0.25	**5.7**	365	249	6370	1.10	-	**FA**	**47 R17**	**DAS 80K4**	28	ASEPTIC plus
	6.5	325	218	6820	1.25	-	**FAF**	**47 R17**	**DAS 80K4**	31	
	7.4	285	193	7180	1.40	-	**F**	**47 R17**	**DAS 80K4**	29	
	8.1	260	175	7390	1.55	-	**FF**	**47 R17**	**DAS 80K4**	32	
	5.6	375	253	6240	1.05	-					ASEPTIC plus
	6.5	335	217	6750	1.20	-	**FA**	**47 R17**	**DAS 80K4**	28	
	7.5	290	190	7160	1.40	-	**FAF**	**47 R17**	**DAS 80K4**	30	
	8.0	270	178	7310	1.50	-	**F**	**47 R17**	**DAS 80K4**	28	
	9.5	225	149	7620	1.80	-	**FF**	**47 R17**	**DAS 80K4**	32	
	11	198	131	7780	2.0	-					
	9.8	225	145	3920	0.90	-					ASEPTIC plus
	11	197	129	4330	1.00	-	**FA**	**37 R17**	**DAS 80K4**	23	
	12	180	118	4560	1.10	-	**FAF**	**37 R17**	**DAS 80K4**	25	
	14	149	98	4890	1.35	-	**F**	**37 R17**	**DAS 80K4**	24	
	16	131	87	5040	1.55	-	**FF**	**37 R17**	**DAS 80K4**	26	
	7.3	330	195.39	13000	2.5	-	**FA**	**67**	**DAS 80K4**	37	ASEPTIC plus
	8.3	285	170.85	13000	2.9	-	**FAF**	**67**	**DAS 80K4**	44	
	8.8	275	162.31	13000	3.0	-	**F**	**67**	**DAS 80K4**	40	
	10	240	142.40	13000	3.4	-	**FF**	**67**	**DAS 80K4**	46	
	9.0	265	157.09	11300	2.3	-	**FA**	**57**	**DAS 80K4**	33	ASEPTIC plus
	10	230	136.16	11500	2.6	-	**FAF**	**57**	**DAS 80K4**	39	
	11	215	127.27	11500	2.8	-	**F**	**57**	**DAS 80K4**	34	
	13	185	110.01	11500	3.2	-	**FF**	**57**	**DAS 80K4**	40	
	9.5	250	150.06	7440	1.60	-					ASEPTIC plus
	11	220	130.07	7660	1.85	-	**FA**	**47**	**DAS 80K4**	26	
	12	205	121.57	7750	1.95	-	**FAF**	**47**	**DAS 80K4**	28	
	14	177	105.09	7890	2.3	-	**F**	**47**	**DAS 80K4**	26	
	16	150	89.29	8010	2.7	-	**FF**	**47**	**DAS 80K4**	29	
	14	169	100.36	4690	1.20	-					ASEPTIC plus
	16	146	86.53	4920	1.35	-					
	18	136	80.65	5010	1.45	-					
	20	119	70.50	5140	1.70	-					
	21	111	66.09	5190	1.80	-					
	24	98	58.32	5270	2.0	-	**FA**	**37**	**DAS 80K4**	21	
	26	92	54.54	5300	2.2	-	**FAF**	**37**	**DAS 80K4**	22	
	27	87	51.70	5330	2.3	-	**F**	**37**	**DAS 80K4**	21	
	30	79	47.02	5360	2.5	-	**FF**	**37**	**DAS 80K4**	23	
	32	74	43.83	5390	2.7	-					
	37	64	38.31	5420	3.1	-					
	40	60	35.91	5440	3.3	-					
	45	53	31.69	5460	3.8	-					
	18	130	77.21	4500	1.00	-					ASEPTIC plus
	20	122	72.37	4500	1.05	-					
	22	107	63.86	4500	1.20	-					
	25	95	56.62	4470	1.35	-	**FA**	**27**	**DAS 80K4**	15	
	28	84	50.19	4360	1.55	-	**FAF**	**27**	**DAS 80K4**	15	
	30	79	46.78	4290	1.65	-	**F**	**27**	**DAS 80K4**	15	
	35	69	40.89	4160	1.90	-	**FF**	**27**	**DAS 80K4**	16	
	37	64	38.33	4090	2.0	-					
	42	57	33.83	3970	2.3	-					
	61	39	23.25	3600	3.3	-					ASEPTIC plus
	70	34	20.15	3470	3.8	-					
	75	32	18.84	3400	4.1	-					
	87	27	16.28	3260	4.7	-					
	103	23	13.84	3120	5.6	-					
	115	21	12.35	3020	6.3	-					
	135	18	10.55	2880	7.3	-	**FA**	**27**	**DAS 80K4**	14	
	144	17	9.88	2820	7.8	-	**FAF**	**27**	**DAS 80K4**	15	
	151	16	9.40	2770	8.2	-	**F**	**27**	**DAS 80K4**	15	
	175	14	8.13	2650	9.0	-	**FF**	**27**	**DAS 80K4**	16	
	206	12	6.91	2520	9.8	-					
	230	10	6.17	2440	10	-					
	270	8.9	5.27	2320	11	-					
	288	8.3	4.93	2270	12	-					
	342	7.0	4.16	2160	12	-					

ASEPTIC Parallel Shaft Helical Gearmotors

Selection tables F..DAS..

P_m [kW]	n_a [rpm]	M_a [Nm]	i	F_{Ra} 1) [N]	SEW f_B	⚠				m [kg]	ASEPTIC plus
0.37	**0.21**	14800	6715	-	0.80	-					
	0.24	13000	5925	-	0.90	-	**FA**	**127 R77**	**DAS 80N4**	435	
	0.27	11200	5153	-	1.05	-	**FAF**	**127 R77**	**DAS 80N4**	470	
	0.31	9780	4533	-	1.25	-	**F**	**127 R77**	**DAS 80N4**	470	-
	0.36	8560	3926	-	1.40	-	**FF**	**127 R77**	**DAS 80N4**	510	
	0.41	7450	3454	-	1.60	-					
	0.46	6510	3031	-	1.85	-					
	0.46	6750	3037	-	1.15	-	**FA**	**107 R77**	**DAS 80N4**	280	
	0.51	6120	2756	-	1.25	-	**FAF**	**107 R77**	**DAS 80N4**	300	
	0.59	5260	2369	-	1.45	-	**F**	**107 R77**	**DAS 80N4**	300	-
	0.68	4590	2068	-	1.65	-	**FF**	**107 R77**	**DAS 80N4**	325	
	0.88	3520	1597	-	2.2	-					
	0.71	4480	1970	29400	0.95	-					
	0.81	3940	1722	30900	1.10	-	**FA**	**97 R57**	**DAS 80N4**	190	
	0.92	3490	1527	32100	1.25	-	**FAF**	**97 R57**	**DAS 80N4**	210	ASEPTIC plus
	1.1	2950	1327	33400	1.45	-	**F**	**97 R57**	**DAS 80N4**	195	
	1.2	2680	1171	34000	1.60	-	**FF**	**97 R57**	**DAS 80N4**	230	
	1.4	2340	1022	34700	1.85	-					
	1.6	1970	898	35400	2.2	-					
	1.1	2890	1300	23300	1.05	-					
	1.2	2580	1148	24500	1.15	-					
	1.4	2250	1010	25700	1.35	-	**FA**	**87 R57**	**DAS 80N4**	125	
	1.6	1990	887	26500	1.50	-	**FAF**	**87 R57**	**DAS 80N4**	135	ASEPTIC plus
	1.8	1740	780	27200	1.75	-	**F**	**87 R57**	**DAS 80N4**	130	
	2.1	1480	674	27900	2.0	-	**FF**	**87 R57**	**DAS 80N4**	145	
	2.3	1350	609	28200	2.2	-					
	2.7	1140	515	28700	2.6	-					
	3.1	1010	452	29000	3.0	-					
	1.7	1820	810	13100	0.80	-					
	2.0	1600	710	15000	0.95	-					
	2.3	1400	615	16400	1.05	-	**FA**	**77 R37**	**DAS 80N4**	72	
	2.6	1220	538	17300	1.20	-	**FAF**	**77 R37**	**DAS 80N4**	79	ASEPTIC plus
	2.9	1090	480	17900	1.40	-	**F**	**77 R37**	**DAS 80N4**	76	
	3.4	930	413	18600	1.60	-	**FF**	**77 R37**	**DAS 80N4**	87	
	3.8	830	367	18900	1.80	-					
	4.3	740	323	19200	2.0	-					
	3.6	870	384	9810	0.95	-	**FA**	**67 R37**	**DAS 80N4**	50	
	4.1	775	338	10700	1.05	-	**FAF**	**67 R37**	**DAS 80N4**	56	ASEPTIC plus
	4.6	695	305	11300	1.20	-	**F**	**67 R37**	**DAS 80N4**	53	
	5.5	580	257	12000	1.40	-	**FF**	**67 R37**	**DAS 80N4**	59	
	6.1	515	231	12300	1.60	-					
	5.5	575	255	9400	1.05	-	**FA**	**57 R37**	**DAS 80N4**	46	
	7.0	450	201	10300	1.35	-	**FAF**	**57 R37**	**DAS 80N4**	51	ASEPTIC plus
	7.7	405	181	10500	1.45	-	**F**	**57 R37**	**DAS 80N4**	46	
							FF	**57 R37**	**DAS 80N4**	53	
	5.3	610	262	9140	1.00	-					
	6.2	520	226	9790	1.15	-	**FA**	**57 R37**	**DAS 80N4**	45	
	7.0	455	200	10200	1.30	-	**FAF**	**57 R37**	**DAS 80N4**	51	ASEPTIC plus
	8.2	390	170	10600	1.55	-	**F**	**57 R37**	**DAS 80N4**	46	
	9.2	345	152	10900	1.75	-	**FF**	**57 R37**	**DAS 80N4**	52	
	10	305	134	11100	2.0	-					
	8.0	400	175	5940	1.00	-	**FA**	**47 R17**	**DAS 80N4**	31	
	9.5	335	147	6710	1.20	-	**FAF**	**47 R17**	**DAS 80N4**	33	ASEPTIC plus
	11	295	130	7090	1.35	-	**F**	**47 R17**	**DAS 80N4**	32	
							FF	**47 R17**	**DAS 80N4**	35	
	6.2	570	225.79	19600	2.6	-	**FA**	**77**	**DAS 80N4**	63	
	7.1	500	198.31	19700	3.0	-	**FAF**	**77**	**DAS 80N4**	70	ASEPTIC plus
							F	**77**	**DAS 80N4**	67	
							FF	**77**	**DAS 80N4**	78	
	7.2	495	195.39	12400	1.65	-	**FA**	**67**	**DAS 80N4**	40	
	8.2	430	170.85	12700	1.90	-	**FAF**	**67**	**DAS 80N4**	46	ASEPTIC plus
	8.6	410	162.31	12800	2.0	-	**F**	**67**	**DAS 80N4**	42	
	9.8	360	142.40	12900	2.3	-	**FF**	**67**	**DAS 80N4**	48	
	12	305	120.79	13000	2.7	-					

P_m [kW]	n_a [rpm]	M_a [Nm]	i	F_{Ra} 1) [N]	SEW f_B	⚠				m [kg]	ASEPTIC^{plus}
0.37	**8.9**	395	157.09	10600	1.50	-					
	10	345	136.16	10900	1.75	-	**FA**	**57**	**DAS 80N4**	36	ASEPTIC^{plus}
	11	320	127.27	11000	1.85	-	**FAF**	**57**	**DAS 80N4**	41	
	13	280	110.01	11300	2.2	-	**F**	**57**	**DAS 80N4**	36	
	15	235	93.47	11500	2.5	-	**FF**	**57**	**DAS 80N4**	42	
	17	210	83.46	11500	2.9	-					
	9.3	380	150.06	6210	1.05	-					
	11	330	130.07	6790	1.20	-					
	13	265	105.09	7350	1.50	-	**FA**	**47**	**DAS 80N4**	28	ASEPTIC^{plus}
	16	225	89.29	7620	1.80	-	**FAF**	**47**	**DAS 80N4**	30	
	18	200	79.72	7770	2.0	-	**F**	**47**	**DAS 80N4**	29	
	21	172	68.09	7910	2.3	-	**FF**	**47**	**DAS 80N4**	32	
	21	165	65.36	7940	2.4	-					
	16	220	86.53	4010	0.90	-					
	17	205	80.65	4240	1.00	-					
	20	178	70.50	4580	1.10	-					
	21	167	66.09	4710	1.20	-					
	24	147	58.32	4900	1.35	-					
	26	138	54.54	4990	1.45	-	**FA**	**37**	**DAS 80N4**	23	ASEPTIC^{plus}
	27	131	51.70	5050	1.55	-	**FAF**	**37**	**DAS 80N4**	24	
	30	119	47.02	5140	1.70	-	**F**	**37**	**DAS 80N4**	23	
	32	111	43.83	5190	1.80	-	**FF**	**37**	**DAS 80N4**	25	
	37	97	38.31	5280	2.1	-					
	39	91	35.91	5310	2.2	-					
	44	80	31.69	5280	2.5	-					
	50	71	28.09	5120	2.8	-					
	59	60	23.88	4910	3.3	-					
	25	143	56.62	4070	0.90	-					
	28	127	50.19	4010	1.05	-	**FA**	**27**	**DAS 80N4**	17	ASEPTIC^{plus}
	30	118	46.78	3960	1.10	-	**FAF**	**27**	**DAS 80N4**	18	
	34	103	40.89	3870	1.25	-	**F**	**27**	**DAS 80N4**	17	
	37	97	38.33	3830	1.35	-	**FF**	**27**	**DAS 80N4**	18	
	41	85	33.83	3740	1.50	-					
	60	59	23.25	3450	2.2	-					
	69	51	20.15	3330	2.6	-					
	74	48	18.84	3280	2.7	-					
	86	41	16.28	3160	3.2	-					
	101	35	13.84	3030	3.7	-					
	113	31	12.35	2940	4.2	-					
	133	27	10.55	2810	4.9	-	**FA**	**27**	**DAS 80N4**	17	ASEPTIC^{plus}
	142	25	9.88	2760	5.2	-	**FAF**	**27**	**DAS 80N4**	17	
	149	24	9.40	2700	5.5	-	**F**	**27**	**DAS 80N4**	17	
	172	21	8.13	2590	6.0	-	**FF**	**27**	**DAS 80N4**	18	
	203	17	6.91	2480	6.6	-					
	227	16	6.17	2400	7.0	-					
	266	13	5.27	2290	7.5	-					
	284	13	4.93	2240	7.7	-					
	337	11	4.16	2130	8.3	-					
0.55	**0.23**	19100	6295	-	0.95	-	**FA**	**157 R97**	**DAS 90S4**	780	-
	0.27	15900	5404	-	1.15	-	**FAF**	**157 R97**	**DAS 90S4**	840	
	0.52	8160	2780	-	2.2	-	**F**	**157 R97**	**DAS 90S4**	800	
							FF	**157 R97**	**DAS 90S4**	910	
	0.60	7210	2427	-	2.5	-	**FA**	**157 R97**	**DAS 90S4**	780	-
	0.87	5160	1674	-	3.5	-	**FAF**	**157 R97**	**DAS 90S4**	830	
	1.1	3960	1308	-	4.5	-	**F**	**157 R97**	**DAS 90S4**	800	
	1.2	3470	1169	-	5.2	-	**FF**	**157 R97**	**DAS 90S4**	900	
	0.37	12600	3926	-	0.95	-	**FA**	**127 R77**	**DAS 90S4**	440	-
	0.42	11000	3454	-	1.10	-	**FAF**	**127 R77**	**DAS 90S4**	480	
	0.48	9600	3031	-	1.25	-	**F**	**127 R77**	**DAS 90S4**	480	
							FF	**127 R77**	**DAS 90S4**	520	

ASEPTIC Parallel Shaft Helical Gearmotors

Selection tables F..DAS..

P_m [kW]	n_a [rpm]	M_a [Nm]	i	F_{Ra} 1) [N]	SEW f_B	⚠				m [kg]	ASEPTIC plus
0.55	**0.61**	7710	2369	-	1.00	-					
	0.70	6730	2068	-	1.15	-					
	0.79	5770	1826	-	1.35	-					
	0.91	5170	1597	-	1.50	-	**FA**	**107 R77**	**DAS 90S4**	290	
	1.0	4510	1401	-	1.70	-	**FAF**	**107 R77**	**DAS 90S4**	310	-
	1.2	3930	1243	-	1.95	-	**F**	**107 R77**	**DAS 90S4**	305	
	1.3	3520	1087	-	2.2	-	**FF**	**107 R77**	**DAS 90S4**	335	
	1.5	3000	950	-	2.6	-					
	1.7	2610	834	-	2.9	-					
	2.3	2040	640	-	3.8	-					
	1.1	4320	1327	29800	1.00	-					
	1.2	3890	1171	31100	1.10	-					
	1.4	3390	1022	32400	1.25	-					
	1.6	2900	898	33500	1.50	-					
	1.9	2570	784	34300	1.65	-	**FA**	**97 R57**	**DAS 90S4**	200	
	2.1	2230	690	35000	1.95	-	**FAF**	**97 R57**	**DAS 90S4**	220	ASEPTIC plus
	2.4	1960	605	35500	2.2	-	**F**	**97 R57**	**DAS 90S4**	205	
	2.7	1710	529	35900	2.5	-	**FF**	**97 R57**	**DAS 90S4**	240	
	3.1	1500	467	36300	2.9	-					
	3.6	1290	406	36600	3.3	-					
	4.0	1160	363	36800	3.7	-					
	1.6	2910	887	23000	1.05	-					
	1.9	2540	780	24700	1.20	-					
	2.1	2180	674	25900	1.40	-	**FA**	**87 R57**	**DAS 90S4**	135	
	2.4	1980	609	26500	1.50	-	**FAF**	**87 R57**	**DAS 90S4**	145	ASEPTIC plus
	2.8	1670	515	27400	1.80	-	**F**	**87 R57**	**DAS 90S4**	140	
	3.2	1470	452	27900	2.0	-	**FF**	**87 R57**	**DAS 90S4**	155	
	4.2	1100	345	28800	2.7	-					
	3.0	1590	480	15100	0.95	-	**FA**	**77 R37**	**DAS 90S4**	81	
	3.5	1350	413	16600	1.10	-	**FAF**	**77 R37**	**DAS 90S4**	88	ASEPTIC plus
	4.0	1210	367	17400	1.25	-	**F**	**77 R37**	**DAS 90S4**	85	
	4.5	1070	323	18000	1.40	-	**FF**	**77 R37**	**DAS 90S4**	96	
	5.7	850	257	10100	0.95	-	**FA**	**67 R37**	**DAS 90S4**	59	
	6.3	755	231	10900	1.10	-	**FAF**	**67 R37**	**DAS 90S4**	65	ASEPTIC plus
	7.1	675	205	11400	1.20	-	**F**	**67 R37**	**DAS 90S4**	62	
	8.3	575	175	12000	1.45	-	**FF**	**67 R37**	**DAS 90S4**	68	
	7.3	720	198.31	19200	2.1	-	**FA**	**77**	**DAS 90S4**	72	
	7.7	680	188.40	19300	2.2	-	**FAF**	**77**	**DAS 90S4**	79	ASEPTIC plus
	8.7	605	166.47	19500	2.5	-	**F**	**77**	**DAS 90S4**	76	
	10	515	142.27	19700	2.9	-	**FF**	**77**	**DAS 90S4**	87	
	11	470	130.42	19700	3.2	-	**FA**	**77**	**DAS 90S4**	72	
	13	415	114.45	19800	3.6	-	**FAF**	**77**	**DAS 90S4**	79	ASEPTIC plus
	13	395	108.46*	19900	3.8	-	**F**	**77**	**DAS 90S4**	76	
	15	345	94.93	19900	4.4	-	**FF**	**77**	**DAS 90S4**	87	
	8.5	620	170.85	11800	1.35	-					
	8.9	590	162.31	12000	1.40	-					
	10	515	142.40	12300	1.60	-	**FA**	**67**	**DAS 90S4**	48	
	12	440	120.79	12700	1.85	-	**FAF**	**67**	**DAS 90S4**	55	ASEPTIC plus
	13	395	109.04	12800	2.1	-	**F**	**67**	**DAS 90S4**	51	
	15	350	95.94	13000	2.4	-	**FF**	**67**	**DAS 90S4**	57	
	16	330	90.59	13000	2.5	-					
	18	290	79.76	13000	2.8	-					
	11	495	136.16	9970	1.20	-					
	11	460	127.27	10200	1.30	-					
	13	400	110.01	10600	1.50	-	**FA**	**57**	**DAS 90S4**	45	
	16	340	93.47	10900	1.75	-	**FAF**	**57**	**DAS 90S4**	50	ASEPTIC plus
	17	300	83.46	11100	2.0	-	**F**	**57**	**DAS 90S4**	45	
	20	265	72.98	11300	2.3	-	**FF**	**57**	**DAS 90S4**	51	
	21	245	68.22	11400	2.4	-					
	25	215	58.97	11500	2.8	-					

P_m [kW]	n_a [rpm]	M_a [Nm]	i	F_{Ra} 1) [N]	SEW f_B	⚠				m [kg]	ASEPTIC^{plus}
0.55	**14**	380	105.09	6190	1.05	-					
	16	325	89.29	6840	1.25	-					
	18	290	79.72	7160	1.40	-	**FA**	**47**	**DAS 90S4**	37	ASEPTIC^{plus}
	21	245	68.09	7480	1.60	-	**FAF**	**47**	**DAS 90S4**	40	
	22	235	65.36	7550	1.70	-	**F**	**47**	**DAS 90S4**	38	
	26	205	56.49	7750	1.95	-	**FF**	**47**	**DAS 90S4**	41	
	30	174	48.00*	7900	2.3	-					
	34	155	42.86	7980	2.6	-	**FA**	**47**	**DAS 90S4**	37	ASEPTIC^{plus}
							FAF	**47**	**DAS 90S4**	40	
							F	**47**	**DAS 90S4**	38	
							FF	**47**	**DAS 90S4**	41	
	25	210	58.32	4130	0.95	-					
	28	187	51.70	4470	1.05	-					
	31	170	47.02	4670	1.15	-	**FA**	**37**	**DAS 90S4**	32	ASEPTIC^{plus}
	33	159	43.83	4790	1.25	-	**FAF**	**37**	**DAS 90S4**	34	
	38	139	38.31	4980	1.45	-	**F**	**37**	**DAS 90S4**	33	
	40	130	35.91	5050	1.55	-	**FF**	**37**	**DAS 90S4**	34	
	46	115	31.69	4930	1.75	-					
	52	102	28.09	4800	1.95	-					
	61	87	23.88	4630	2.3	-					
	70	75	20.57	4470	2.7	-	**FA**	**37**	**DAS 90S4**	32	ASEPTIC^{plus}
	75	70	19.27	4400	2.9	-	**FAF**	**37**	**DAS 90S4**	33	
	85	62	17.03	4270	3.2	-	**F**	**37**	**DAS 90S4**	32	
	101	52	14.33	4080	3.9	-	**FF**	**37**	**DAS 90S4**	34	
	72	73	20.15	3090	1.80	-					
	77	68	18.84	3050	1.90	-					
	89	59	16.28	2960	2.2	-					
	105	50	13.84	2850	2.6	-					
	117	45	12.35	2780	2.9	-					
	137	38	10.55	2680	3.4	-	**FA**	**27**	**DAS 90S4**	26	ASEPTIC^{plus}
	147	36	9.88	2630	3.6	-	**FAF**	**27**	**DAS 90S4**	26	
	154	34	9.40	2570	3.8	-	**F**	**27**	**DAS 90S4**	26	
	178	29	8.13	2470	4.2	-	**FF**	**27**	**DAS 90S4**	27	
	210	25	6.91	2370	4.6	-					
	235	22	6.17	2300	4.9	-					
	275	19	5.27	2200	5.2	-					
	294	18	4.93	2160	5.4	-					
	349	15	4.16	2060	5.8	-					
0.75	**0.52**	11700	2780	-	1.55	-	**FA**	**157 R97**	**DAS 90L4**	780	-
							FAF	**157 R97**	**DAS 90L4**	840	
							F	**157 R97**	**DAS 90L4**	800	
							FF	**157 R97**	**DAS 90L4**	910	
	0.59	10300	2427	-	1.75	-	**FA**	**157 R97**	**DAS 90L4**	780	-
	0.86	7310	1674	-	2.5	-	**FAF**	**157 R97**	**DAS 90L4**	830	
	1.1	5650	1308	-	3.2	-	**F**	**157 R97**	**DAS 90L4**	800	
	1.2	4980	1169	-	3.6	-	**FF**	**157 R97**	**DAS 90L4**	900	
	0.47	13500	3031	-	0.90	-	**FA**	**127 R77**	**DAS 90L4**	440	-
							FAF	**127 R77**	**DAS 90L4**	480	
							F	**127 R77**	**DAS 90L4**	480	
							FF	**127 R77**	**DAS 90L4**	520	
	0.54	12100	2672	-	1.00	-	**FA**	**127 R77**	**DAS 90L4**	440	-
	0.61	10600	2357	-	1.15	-	**FAF**	**127 R77**	**DAS 90L4**	480	
	0.70	9160	2038	-	1.30	-	**F**	**127 R77**	**DAS 90L4**	475	
	0.80	7970	1784	-	1.50	-	**FF**	**127 R77**	**DAS 90L4**	520	
	0.89	7150	1606	-	1.70	-					
	0.79	8130	1826	-	0.95	-					
	0.90	7230	1597	-	1.05	-					
	1.0	6310	1401	-	1.20	-	**FA**	**107 R77**	**DAS 90L4**	290	-
	1.2	5530	1243	-	1.40	-	**FAF**	**107 R77**	**DAS 90L4**	310	
	1.3	4920	1087	-	1.55	-	**F**	**107 R77**	**DAS 90L4**	305	
	1.5	4230	950	-	1.80	-	**FF**	**107 R77**	**DAS 90L4**	335	
	1.7	3690	834	-	2.1	-					
	2.2	2860	640	-	2.7	-					
	3.3	1950	436	-	3.9	-					

ASEPTIC Parallel Shaft Helical Gearmotors

Selection tables F..DAS..

P_m [kW]	n_a [rpm]	M_a [Nm]	i	F_{Ra} 1) [N]	SEW f_B	⚠				m [kg]	ASEPTIC plus
0.75	**1.4**	4710	1022	26300	0.90	-					
	1.6	4060	898	30600	1.05	-					
	1.8	3580	784	31900	1.20	-	**FA**	**97 R57**	**DAS 90L4**	200	ASEPTIC plus
	2.1	3120	690	33000	1.40	-	**FAF**	**97 R57**	**DAS 90L4**	220	
	2.4	2740	605	33900	1.55	-	**F**	**97 R57**	**DAS 90L4**	205	
	2.7	2390	529	34600	1.80	-	**FF**	**97 R57**	**DAS 90L4**	240	
	3.1	2110	467	35200	2.0	-					
	3.5	1820	406	35700	2.4	-					
	4.0	1630	363	36100	2.6	-					
	2.1	3050	674	18000	1.00	-	**FA**	**87 R57**	**DAS 90L4**	135	ASEPTIC plus
	2.4	2770	609	23800	1.10	-	**FAF**	**87 R57**	**DAS 90L4**	145	
	2.8	2340	515	25400	1.30	-	**F**	**87 R57**	**DAS 90L4**	140	
	3.2	2060	452	26300	1.45	-	**FF**	**87 R57**	**DAS 90L4**	155	
	4.2	1550	345	27700	1.95	-					
	3.9	1680	367	14400	0.90	-	**FA**	**77 R37**	**DAS 90L4**	81	ASEPTIC plus
	4.5	1490	323	15800	1.00	-	**FAF**	**77 R37**	**DAS 90L4**	88	
	5.1	1280	280	17000	1.15	-	**F**	**77 R37**	**DAS 90L4**	85	
							FF	**77 R37**	**DAS 90L4**	96	
	5.3	1350	270.68	28200	2.2	-	**FA**	**87**	**DAS 90L4**	110	ASEPTIC plus
	5.6	1270	255.37	28400	2.4	-	**FAF**	**87**	**DAS 90L4**	125	
	6.3	1140	228.93	28700	2.6	-	**F**	**87**	**DAS 90L4**	115	
							FF	**87**	**DAS 90L4**	130	
	7.2	990	198.31	18300	1.50	-					
	7.6	940	188.40	18500	1.60	-	**FA**	**77**	**DAS 90L4**	72	ASEPTIC plus
	8.6	830	166.47	18900	1.80	-	**FAF**	**77**	**DAS 90L4**	79	
	10	710	142.27	19200	2.1	-	**F**	**77**	**DAS 90L4**	76	
	11	650	130.42	19400	2.3	-	**FF**	**77**	**DAS 90L4**	86	
	13	570	114.45	19600	2.6	-					
	13	540	108.46*	19600	2.8	-	**FA**	**77**	**DAS 90L4**	72	ASEPTIC plus
							FAF	**77**	**DAS 90L4**	79	
							F	**77**	**DAS 90L4**	76	
							FF	**77**	**DAS 90L4**	86	
	8.4	850	170.85	10000	0.95	-					
	8.8	810	162.31	10400	1.00	-					
	10	710	142.40	11200	1.15	-					
	12	605	120.79	11900	1.35	-	**FA**	**67**	**DAS 90L4**	49	ASEPTIC plus
	13	545	109.04	12200	1.50	-	**FAF**	**67**	**DAS 90L4**	55	
	15	480	95.94	12500	1.70	-	**F**	**67**	**DAS 90L4**	52	
	16	450	90.59	12600	1.80	-	**FF**	**67**	**DAS 90L4**	58	
	18	400	79.76	12800	2.1	-					
	21	340	67.65	13000	2.4	-					
	24	305	61.07	13000	2.7	-					
	11	635	127.27	7770	0.95	-					
	13	550	110.01	9580	1.10	-					
	15	465	93.47	10100	1.30	-					
	17	415	83.46	10500	1.45	-	**FA**	**57**	**DAS 90L4**	45	ASEPTIC plus
	20	365	72.98	10800	1.65	-	**FAF**	**57**	**DAS 90L4**	51	
	21	340	68.22	10900	1.75	-	**F**	**57**	**DAS 90L4**	45	
	24	295	58.97	11200	2.0	-	**FF**	**57**	**DAS 90L4**	52	
	29	250	50.10	11400	2.4	-					
	32	225	44.73	11300	2.7	-					
	18	400	79.72	5950	1.00	-					
	21	340	68.09	6670	1.20	-					
	22	325	65.36	6810	1.25	-					
	25	280	56.49	7220	1.40	-	**FA**	**47**	**DAS 90L4**	37	ASEPTIC plus
	30	240	48.00*	7530	1.65	-	**FAF**	**47**	**DAS 90L4**	40	
	33	215	42.86	7690	1.85	-	**F**	**47**	**DAS 90L4**	38	
	39	183	36.61	7860	2.2	-	**FF**	**47**	**DAS 90L4**	41	
	42	171	34.29	7780	2.3	-					
	50	144	28.88	7460	2.8	-					
	31	235	47.02	3720	0.85	-					
	33	220	43.83	4010	0.90	-	**FA**	**37**	**DAS 90L4**	32	ASEPTIC plus
	37	191	38.31	4420	1.05	-	**FAF**	**37**	**DAS 90L4**	34	
	40	179	35.91	4570	1.10	-	**F**	**37**	**DAS 90L4**	33	
	45	158	31.69	4590	1.25	-	**FF**	**37**	**DAS 90L4**	34	
	51	140	28.09	4510	1.45	-					

P_m [kW]	n_a [rpm]	M_a [Nm]	i	F_{Ra} 1) [N]	SEW f_B	⚠				m [kg]	ASEPTIC^{plus}
0.75	**70**	103	20.57	4260	1.95	-	**FA**	**37**	**DAS 90L4**	32	ASEPTIC^{plus}
	74	96	19.27	4200	2.1	-	**FAF**	**37**	**DAS 90L4**	33	
	84	85	17.03	4090	2.4	-	**F**	**37**	**DAS 90L4**	32	
	100	72	14.33	3930	2.8	-	**FF**	**37**	**DAS 90L4**	34	
	112	64	12.87	3840	3.1	-					
	71	101	20.15	2860	1.30	-					ASEPTIC^{plus}
	76	94	18.84	2840	1.40	-					
	88	81	16.28	2770	1.60	-					
	104	69	13.84	2700	1.90	-					
	116	62	12.35	2640	2.1	-					
	136	53	10.55	2560	2.5	-	**FA**	**27**	**DAS 90L4**	26	
	145	49	9.88	2520	2.6	-	**FAF**	**27**	**DAS 90L4**	26	
	153	47	9.40	2450	2.8	-	**F**	**27**	**DAS 90L4**	26	
	177	41	8.13	2370	3.0	-	**FF**	**27**	**DAS 90L4**	27	
	208	35	6.91	2290	3.3	-					
	233	31	6.17	2230	3.5	-					
	272	26	5.27	2140	3.8	-					
	291	25	4.93	2110	3.9	-					
	345	21	4.16	2010	4.2	-					
1.1	**0.52**	17600	2780	-	1.00	-	**FA**	**157 R97**	**DAS 100M4**	790	-
							FAF	**157 R97**	**DAS 100M4**	850	
							F	**157 R97**	**DAS 100M4**	810	
							FF	**157 R97**	**DAS 100M4**	910	
	0.60	15500	2427	-	1.15	-					-
	0.66	13900	2185	-	1.30	-					
	0.74	12300	1944	-	1.45	-					
	0.86	10900	1674	-	1.65	-	**FA**	**157 R97**	**DAS 100M4**	780	
	1.1	8450	1308	-	2.1	-	**FAF**	**157 R97**	**DAS 100M4**	840	
	1.2	7490	1169	-	2.4	-	**F**	**157 R97**	**DAS 100M4**	800	
	1.5	5980	953	-	3.0	-	**FF**	**157 R97**	**DAS 100M4**	910	
	1.7	5230	845	-	3.4	-					
	3.2	2760	446	-	6.5	-					
	4.8	1870	302	-	9.6	-					
	0.71	13500	2038	-	0.90	-					-
	0.81	11800	1784	-	1.00	-	**FA**	**127 R77**	**DAS 100M4**	450	
	0.90	10600	1606	-	1.15	-	**FAF**	**127 R77**	**DAS 100M4**	485	
	1.0	9170	1390	-	1.30	-	**F**	**127 R77**	**DAS 100M4**	485	
	1.2	8010	1220	-	1.50	-	**FF**	**127 R77**	**DAS 100M4**	530	
	1.3	7120	1077	-	1.70	-					
	1.2	8200	1243	-	0.95	-					-
	1.3	7250	1087	-	1.05	-	**FA**	**107 R77**	**DAS 100M4**	295	
	1.5	6270	950	-	1.25	-	**FAF**	**107 R77**	**DAS 100M4**	320	
	1.7	5470	834	-	1.40	-	**F**	**107 R77**	**DAS 100M4**	315	
	2.0	4810	736	-	1.60	-	**FF**	**107 R77**	**DAS 100M4**	340	
	2.3	4230	640	-	1.80	-					
	2.1	4590	690	29000	0.95	-					ASEPTIC^{plus}
	2.4	4040	605	30700	1.05	-	**FA**	**97 R57**	**DAS 100M4**	205	
	2.7	3520	529	32000	1.20	-	**FAF**	**97 R57**	**DAS 100M4**	230	
	3.1	3110	467	33100	1.40	-	**F**	**97 R57**	**DAS 100M4**	215	
	3.6	2690	406	34000	1.60	-	**FF**	**97 R57**	**DAS 100M4**	245	
	4.0	2410	363	34600	1.80	-					
	3.2	3030	452	18800	1.00	-	**FA**	**87 R57**	**DAS 100M4**	140	ASEPTIC^{plus}
	4.2	2290	345	25500	1.30	-	**FAF**	**87 R57**	**DAS 100M4**	155	
	4.8	1980	300	26500	1.50	-	**F**	**87 R57**	**DAS 100M4**	145	
	5.8	1650	249	27400	1.80	-	**FF**	**87 R57**	**DAS 100M4**	165	
	5.2	2010	276.77	35400	2.1	-	**FA**	**97**	**DAS 100M4**	185	ASEPTIC^{plus}
	5.7	1840	253.41	35700	2.3	-	**FAF**	**97**	**DAS 100M4**	205	
	6.5	1630	223.88	36100	2.6	-	**F**	**97**	**DAS 100M4**	190	
							FF	**97**	**DAS 100M4**	225	
	6.3	1660	228.93	27400	1.80	-	**FA**	**87**	**DAS 100M4**	120	ASEPTIC^{plus}
	7.3	1430	197.20	28000	2.1	-	**FAF**	**87**	**DAS 100M4**	130	
	8.0	1310	179.97	28300	2.3	-	**F**	**87**	**DAS 100M4**	125	
	9.1	1160	159.61	28600	2.6	-	**FF**	**87**	**DAS 100M4**	140	
	11	980	134.16	29000	3.1	-					
	12	900	123.29	29200	3.4	-	**FA**	**87**	**DAS 100M4**	120	ASEPTIC^{plus}
							FAF	**87**	**DAS 100M4**	130	
							F	**87**	**DAS 100M4**	125	
							FF	**87**	**DAS 100M4**	140	

P_m [kW]	n_a [rpm]	M_a [Nm]	i	F_{Ra} 1) [N]	SEW f_B	⚠				m [kg]	ASEPTIC^{plus}
1.1	**8.7**	1210	166.47	17400	1.25	-					
	10	1030	142.27	18200	1.45	-					
	11	950	130.42	18500	1.60	-	**FA**	**77**	**DAS 100M4**	79	ASEPTIC^{plus}
	13	830	114.45	18900	1.80	-	**FAF**	**77**	**DAS 100M4**	86	
	13	790	108.46*	19000	1.90	-	**F**	**77**	**DAS 100M4**	83	
	15	690	94.93	19300	2.2	-	**FF**	**77**	**DAS 100M4**	94	
	17	620	85.52	19500	2.4	-					
	19	545	75.02	19600	2.8	-	**FA**	**77**	**DAS 100M4**	79	ASEPTIC^{plus}
							FAF	**77**	**DAS 100M4**	86	
							F	**77**	**DAS 100M4**	83	
							FF	**77**	**DAS 100M4**	94	
	12	880	120.79	9760	0.95	-					
	13	795	109.04	10500	1.05	-					
	15	695	95.94	11300	1.20	-					
	16	660	90.59	11500	1.25	-					
	18	580	79.76	12000	1.40	-	**FA**	**67**	**DAS 100M4**	56	ASEPTIC^{plus}
	21	490	67.65	12400	1.65	-	**FAF**	**67**	**DAS 100M4**	63	
	24	445	61.07	12600	1.85	-	**F**	**67**	**DAS 100M4**	59	
	27	390	53.73	12800	2.1	-	**FF**	**67**	**DAS 100M4**	65	
	28	370	50.74	12900	2.2	-					
	33	315	43.20	13000	2.6	-					
	37	285	39.26	13000	2.7	-					
	42	245	34.01	13000	3.0	-					
	17	605	83.46	9150	1.00	-					
	25	430	58.97	10400	1.40	-					
	29	365	50.10	10800	1.65	-	**FA**	**57**	**DAS 100M4**	52	ASEPTIC^{plus}
	32	325	44.73	10700	1.85	-	**FAF**	**57**	**DAS 100M4**	58	
	38	280	38.21	10300	2.2	-	**F**	**57**	**DAS 100M4**	53	
	40	260	35.79	10100	2.3	-	**FF**	**57**	**DAS 100M4**	59	
	48	220	30.15	9730	2.7	-					
	26	410	56.49	5400	0.95	-					
	30	350	48.00*	6570	1.15	-	**FA**	**47**	**DAS 100M4**	43	ASEPTIC^{plus}
	34	310	42.86	6950	1.30	-	**FAF**	**47**	**DAS 100M4**	46	
	39	265	36.61	7310	1.50	-	**F**	**47**	**DAS 100M4**	44	
	42	250	34.29	7220	1.60	-	**FF**	**47**	**DAS 100M4**	47	
	50	210	28.88	7000	1.90	-					
	56	187	25.72	6830	2.1	-	**FA**	**47**	**DAS 100M4**	43	ASEPTIC^{plus}
	66	159	21.82	6590	2.5	-	**FAF**	**47**	**DAS 100M4**	45	
	73	143	19.70	6440	2.8	-	**F**	**47**	**DAS 100M4**	43	
							FF	**47**	**DAS 100M4**	47	
	46	230	31.69	3800	0.85	-	**FA**	**37**	**DAS 100M4**	39	ASEPTIC^{plus}
	51	205	28.09	3970	1.00	-	**FAF**	**37**	**DAS 100M4**	40	
	61	174	23.88	3920	1.15	-	**F**	**37**	**DAS 100M4**	39	
							FF	**37**	**DAS 100M4**	41	
	85	124	17.03	3760	1.60	-					
	101	104	14.33	3660	1.90	-	**FA**	**37**	**DAS 100M4**	38	ASEPTIC^{plus}
	112	94	12.87	3580	2.1	-	**FAF**	**37**	**DAS 100M4**	40	
	130	81	11.08	3480	2.4	-	**F**	**37**	**DAS 100M4**	39	
	139	76	10.42	3440	2.4	-	**FF**	**37**	**DAS 100M4**	41	
	161	65	8.97	3320	2.7	-					
	89	118	16.28	2440	1.10	-					
	104	101	13.84	2410	1.30	-					
	117	90	12.35	2380	1.45	-					
	137	77	10.55	2340	1.70	-					
	146	72	9.88	2320	1.80	-	**FA**	**27**	**DAS 100M4**	32	ASEPTIC^{plus}
	178	59	8.13	2190	2.1	-	**FAF**	**27**	**DAS 100M4**	33	
	209	50	6.91	2130	2.3	-	**F**	**27**	**DAS 100M4**	33	
	234	45	6.17	2080	2.4	-	**FF**	**27**	**DAS 100M4**	33	
	274	38	5.27	2020	2.6	-					
	293	36	4.93	1990	2.7	-					
	348	30	4.16	1920	2.9	-					

P_m [kW]	n_a [rpm]	M_a [Nm]	i	F_{Ra} 1) [N]	SEW f_B	⚠				m [kg]	ASEPTIC^{plus}
1.5	**0.60**	21300	2427	-	0.85	-					
	0.67	19000	2185	-	0.95	-					
	0.75	16900	1944	-	1.05	-					
	0.88	14900	1674	-	1.20	-	**FA**	**157 R97**	**DAS 100L4**	790	
	1.1	11500	1308	-	1.55	-	**FAF**	**157 R97**	**DAS 100L4**	850	-
	1.2	10200	1169	-	1.75	-	**F**	**157 R97**	**DAS 100L4**	810	
	1.5	8230	953	-	2.2	-	**FF**	**157 R97**	**DAS 100L4**	920	
	1.7	7220	845	-	2.5	-					
	3.3	3820	446	-	4.7	-					
	4.9	2580	302	-	7.0	-					
	0.91	14400	1606	-	0.85	-					
	1.1	12500	1390	-	0.95	-					
	1.2	10900	1220	-	1.10	-	**FA**	**127 R77**	**DAS 100L4**	455	
	1.4	9670	1077	-	1.25	-	**FAF**	**127 R77**	**DAS 100L4**	495	-
	1.6	8300	930	-	1.45	-	**F**	**127 R77**	**DAS 100L4**	490	
	1.8	7300	820	-	1.65	-	**FF**	**127 R77**	**DAS 100L4**	540	
	2.0	6450	727	-	1.85	-					
	2.3	5810	648	-	2.1	-					
	1.5	8510	950	-	0.90	-					
	1.8	7440	834	-	1.05	-					
	2.0	6540	736	-	1.15	-	**FA**	**107 R77**	**DAS 100L4**	305	
	2.3	5750	640	-	1.35	-	**FAF**	**107 R77**	**DAS 100L4**	325	-
	2.6	4970	560	-	1.55	-	**F**	**107 R77**	**DAS 100L4**	320	
	3.0	4340	489	-	1.75	-	**FF**	**107 R77**	**DAS 100L4**	350	
	3.4	3910	436	-	1.95	-					
	4.0	3320	370	-	2.3	-					
	2.8	4770	529	24300	0.90	-	**FA**	**97 R57**	**DAS 100L4**	215	
	3.1	4210	467	30200	1.00	-	**FAF**	**97 R57**	**DAS 100L4**	235	ASEPTIC^{plus}
	3.6	3640	406	31700	1.20	-	**F**	**97 R57**	**DAS 100L4**	220	
	4.0	3270	363	32700	1.30	-	**FF**	**97 R57**	**DAS 100L4**	255	
	4.9	2690	300	24100	1.10	-	**FA**	**87 R57**	**DAS 100L4**	150	
	5.9	2230	249	25700	1.35	-	**FAF**	**87 R57**	**DAS 100L4**	160	ASEPTIC^{plus}
							F	**87 R57**	**DAS 100L4**	155	
							FF	**87 R57**	**DAS 100L4**	170	
	5.3	2710	276.77	34000	1.60	-	**FA**	**97**	**DAS 100L4**	190	
	5.8	2480	253.41	34500	1.75	-	**FAF**	**97**	**DAS 100L4**	210	ASEPTIC^{plus}
	6.5	2190	223.88	35000	1.95	-	**F**	**97**	**DAS 100L4**	200	
	7.7	1860	189.92	35700	2.3	-	**FF**	**97**	**DAS 100L4**	230	
	8.4	1710	174.87	35900	2.5	-					
	6.4	2240	228.93	25700	1.35	-					
	7.4	1930	197.20	26700	1.55	-	**FA**	**87**	**DAS 100L4**	125	
	8.1	1760	179.97	27100	1.70	-	**FAF**	**87**	**DAS 100L4**	140	ASEPTIC^{plus}
	9.2	1560	159.61	27700	1.90	-	**F**	**87**	**DAS 100L4**	130	
	11	1310	134.16	28300	2.3	-	**FF**	**87**	**DAS 100L4**	150	
	13	1070	109.49	28800	2.8	-					
	15	960	97.89	29100	3.1	-	**FA**	**87**	**DAS 100L4**	125	
							FAF	**87**	**DAS 100L4**	140	ASEPTIC^{plus}
							F	**87**	**DAS 100L4**	130	
							FF	**87**	**DAS 100L4**	150	
	8.8	1630	166.47	14800	0.90	-					
	10	1390	142.27	16400	1.10	-					
	11	1280	130.42	17100	1.20	-					
	13	1120	114.45	17800	1.35	-	**FA**	**77**	**DAS 100L4**	87	
	14	1060	108.46*	18100	1.40	-	**FAF**	**77**	**DAS 100L4**	93	ASEPTIC^{plus}
	15	930	94.93	18600	1.60	-	**F**	**77**	**DAS 100L4**	90	
	17	840	85.52	18900	1.80	-	**FF**	**77**	**DAS 100L4**	100	
	20	735	75.02	19200	2.0	-					
	20	710	72.50	19200	2.1	-					
	22	650	66.46	19400	2.3	-					
	25	570	58.32	19600	2.6	-					
	27	540	55.27	19600	2.8	-	**FA**	**77**	**DAS 100L4**	87	
	30	475	48.37	19700	3.2	-	**FAF**	**77**	**DAS 100L4**	93	ASEPTIC^{plus}
	34	425	43.58	19800	3.5	-	**F**	**77**	**DAS 100L4**	90	
	38	375	38.23	19900	4.0	-	**FF**	**77**	**DAS 100L4**	100	
	40	360	36.58	19900	3.1	-	**FA**	**77**	**DAS 100L4**	85	
	47	310	31.51	20000	4.5	-	**FAF**	**77**	**DAS 100L4**	92	ASEPTIC^{plus}
							F	**77**	**DAS 100L4**	89	
							FF	**77**	**DAS 100L4**	100	

P_m [kW]	n_a [rpm]	M_a [Nm]	i	F_{Ra} 1) [N]	SEW f_B	⚠				m [kg]	ASEPTIC^{plus}
1.5	**16**	890	90.59	9680	0.95	-					
	18	780	79.76	10700	1.05	-					
	22	660	67.65	11500	1.25	-	**FA**	**67**	**DAS 100L4**	64	ASEPTIC^{plus}
	24	595	61.07	11900	1.35	-	**FAF**	**67**	**DAS 100L4**	70	
	27	525	53.73	12300	1.55	-	**F**	**67**	**DAS 100L4**	67	
	29	495	50.74	12400	1.65	-	**FF**	**67**	**DAS 100L4**	73	
	34	420	43.20	12700	1.95	-					
	37	385	39.26	12900	2.0	-					
	46	315	32.08	13000	2.6	-	**FA**	**67**	**DAS 100L4**	63	ASEPTIC^{plus}
	53	270	27.41	13000	3.1	-	**FAF**	**67**	**DAS 100L4**	69	
	58	245	25.13	13000	3.3	-	**F**	**67**	**DAS 100L4**	65	
							FF	**67**	**DAS 100L4**	72	
	25	575	58.97	9380	1.05	-					
	29	490	50.10	9990	1.20	-	**FA**	**57**	**DAS 100L4**	60	ASEPTIC^{plus}
	33	435	44.73	9930	1.35	-	**FAF**	**57**	**DAS 100L4**	65	
	38	375	38.21	9670	1.60	-	**F**	**57**	**DAS 100L4**	60	
	41	350	35.79	9550	1.70	-	**FF**	**57**	**DAS 100L4**	67	
	49	295	30.15	9240	2.0	-					
	34	420	42.86	4420	0.95	-	**FA**	**47**	**DAS 100L4**	51	ASEPTIC^{plus}
	40	360	36.61	6470	1.10	-	**FAF**	**47**	**DAS 100L4**	54	
	43	335	34.29	6600	1.20	-	**F**	**47**	**DAS 100L4**	52	
	51	280	28.88	6460	1.40	-	**FF**	**47**	**DAS 100L4**	55	
	57	250	25.72	6360	1.60	-					
	67	215	21.82	6190	1.90	-	**FA**	**47**	**DAS 100L4**	50	ASEPTIC^{plus}
	74	193	19.70	6070	2.1	-	**FAF**	**47**	**DAS 100L4**	53	
	85	169	17.33	5920	2.4	-	**F**	**47**	**DAS 100L4**	51	
	90	160	16.36	5850	2.5	-	**FF**	**47**	**DAS 100L4**	54	
	105	136	13.93	5650	2.9	-					
	86	167	17.03	3390	1.20	-					
	102	140	14.33	3340	1.45	-	**FA**	**37**	**DAS 100L4**	46	ASEPTIC^{plus}
	114	126	12.87	3300	1.60	-	**FAF**	**37**	**DAS 100L4**	47	
	132	108	11.08	3230	1.75	-	**F**	**37**	**DAS 100L4**	46	
	141	102	10.42	3200	1.80	-	**FF**	**37**	**DAS 100L4**	48	
	163	88	8.97	3120	2.0	-					
	183	78	8.01	3060	2.2	-					
	106	135	13.84	2090	0.95	-					
	119	121	12.35	2090	1.10	-					
	139	103	10.55	2090	1.25	-					
	148	97	9.88	2080	1.35	-	**FA**	**27**	**DAS 100L4**	40	ASEPTIC^{plus}
	180	80	8.13	1970	1.55	-	**FAF**	**27**	**DAS 100L4**	40	
	212	68	6.91	1940	1.70	-	**F**	**27**	**DAS 100L4**	40	
	238	60	6.17	1920	1.80	-	**FF**	**27**	**DAS 100L4**	41	
	278	52	5.27	1880	1.95	-					
	297	48	4.93	1860	2.0	-					
	353	41	4.16	1800	2.1	-					

9 ASEPTIC Helical-Bevel Gearmotors

9.1 Selection tables K..DAS..

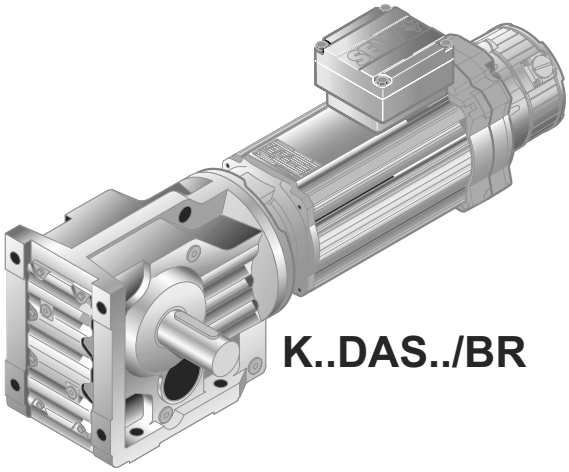

K..DAS../BR

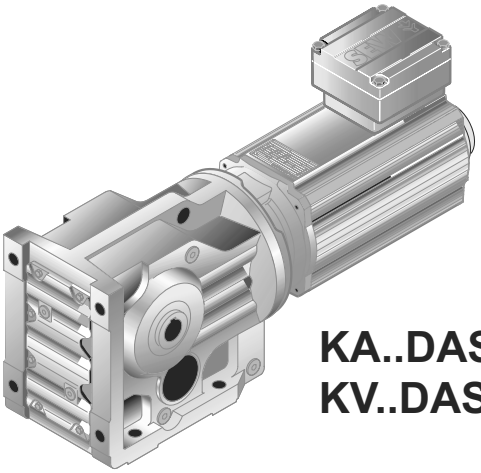

KA..DAS..
KV..DAS..

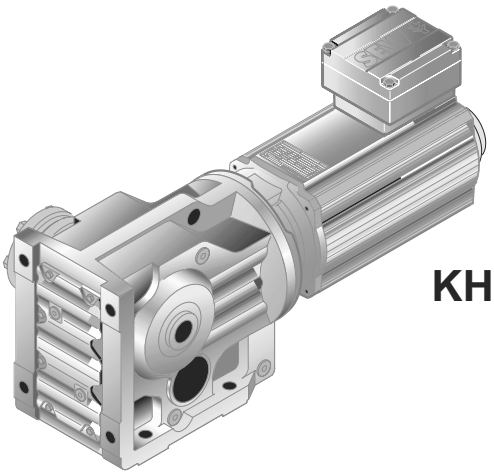

KH..DAS..

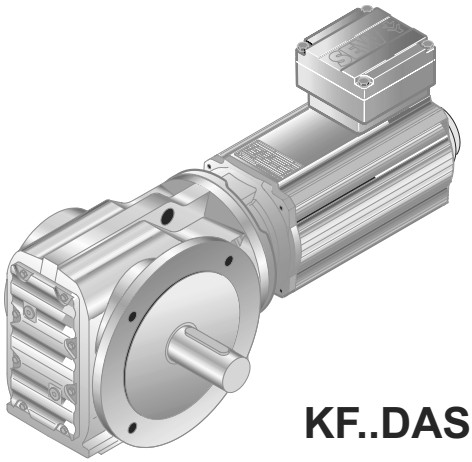

KF..DAS..

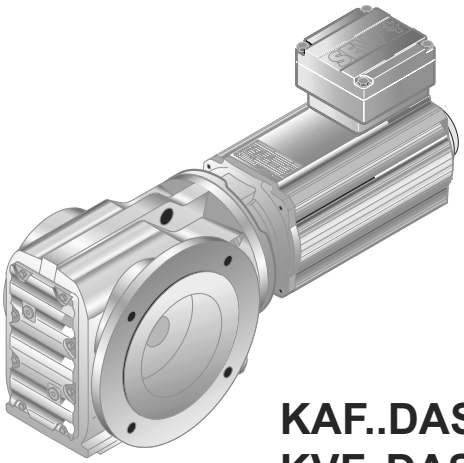

KAF..DAS..
KVF..DAS..

55746AXX

P_m [kW]	n_a [rpm]	M_a [Nm]	i	F_{Ra} 1) [N]	SEW f_B	⚠				m [kg]	ASEPTIC^{PLUS}
0.25	**0.14**	13800	9819	-	0.95	-					
	0.17	11800	8443	-	1.10	-					
	0.19	10500	7482	-	1.25	-					
	0.22	9210	6565	-	1.40	-	**K**	**127 R77**	**DAS 80K4**	475	
	0.24	7900	5804	-	1.65	-	**KF**	**127 R77**	**DAS 80K4**	520	-
	0.28	6960	5027	-	1.85	-	**KA**	**127 R77**	**DAS 80K4**	445	
	0.32	6020	4423	-	2.2	-	**KAF**	**127 R77**	**DAS 80K4**	485	
	0.37	5260	3889	-	2.5	-					
	0.43	4390	3311	-	3.0	-					
	0.23	8560	6184	-	0.95	-					
	0.25	7650	5662	-	1.05	-					
	0.28	6950	5138	-	1.15	-					
	0.33	6100	4359	-	1.30	-	**K**	**107 R77**	**DAS 80K4**	315	
	0.37	5330	3810	-	1.50	-	**KF**	**107 R77**	**DAS 80K4**	325	-
	0.42	4570	3358	-	1.75	-	**KA**	**107 R77**	**DAS 80K4**	285	
	0.48	4120	2977	-	1.95	-	**KAF**	**107 R77**	**DAS 80K4**	310	
	0.55	3600	2599	-	2.2	-					
	0.62	3110	2286	-	2.6	-					
	0.73	2640	1939	-	3.0	-					
	0.83	2430	1713	-	3.3	-	**K**	**107 R77**	**DAS 80K4**	310	
	0.91	2200	1554	-	3.6	-	**KF**	**107 R77**	**DAS 80K4**	325	-
	1.1	1890	1336	-	4.2	-	**KA**	**107 R77**	**DAS 80K4**	285	
							KAF	**107 R77**	**DAS 80K4**	310	
	0.46	4540	3108	40000	0.95	-	**K**	**97 R57**	**DAS 80K4**	185	
	0.52	3950	2757	40000	1.10	-	**KF**	**97 R57**	**DAS 80K4**	205	ASEPTIC^{PLUS}
							KA	**97 R57**	**DAS 80K4**	165	
							KAF	**97 R57**	**DAS 80K4**	190	
	0.59	3570	2419	40000	1.20	-					
	0.67	3110	2123	40000	1.40	-					
	0.77	2750	1856	40000	1.55	-					
	0.87	2340	1625	40000	1.85	-	**K**	**97 R57**	**DAS 80K4**	185	
	0.99	2030	1430	40000	2.1	-	**KF**	**97 R57**	**DAS 80K4**	205	ASEPTIC^{PLUS}
	1.1	1870	1261	40000	2.3	-	**KA**	**97 R57**	**DAS 80K4**	165	
	1.3	1630	1102	40000	2.6	-	**KAF**	**97 R57**	**DAS 80K4**	190	
	1.5	1430	957	40000	3.0	-					
	1.7	1280	855	40000	3.4	-					
	0.68	3090	2088	26800	0.85	-					
	0.77	2750	1854	27200	1.00	-					
	0.86	2460	1657	27600	1.10	-					
	1.0	2090	1415	28000	1.30	-	**K**	**87 R57**	**DAS 80K4**	125	
	1.2	1820	1229	28200	1.50	-	**KF**	**87 R57**	**DAS 80K4**	130	ASEPTIC^{PLUS}
	1.3	1580	1078	28400	1.70	-	**KA**	**87 R57**	**DAS 80K4**	110	
	1.5	1370	951	28600	2.0	-	**KAF**	**87 R57**	**DAS 80K4**	125	
	1.7	1190	837	28700	2.3	-					
	2.0	1030	726	28800	2.6	-					
	2.2	920	638	28800	2.9	-					
	1.4	1570	1053	15200	1.00	-					
	1.5	1380	924	16500	1.10	-					
	1.7	1220	815	17400	1.25	-					
	2.0	1010	709	18300	1.55	-					
	2.3	890	622	18700	1.75	-					
	2.6	795	552	19000	1.95	-	**K**	**77 R37**	**DAS 80K4**	74	
	2.9	700	485	19300	2.2	-	**KF**	**77 R37**	**DAS 80K4**	82	ASEPTIC^{PLUS}
	3.3	615	428	19500	2.5	-	**KA**	**77 R37**	**DAS 80K4**	66	
	3.9	540	367	19600	2.9	-	**KAF**	**77 R37**	**DAS 80K4**	74	
	4.3	480	328	19700	3.2	-					
	4.9	425	290	19800	3.6	-					
	5.6	365	252	19900	4.3	-					
	6.4	320	221	20000	4.8	-					
	7.3	285	195	20000	5.5	-					
	8.1	250	175	20000	6.2	-					

P_m [kW]	n_a [rpm]	M_a [Nm]	i	F_{Ra} 1) [N]	SEW f_B	⚠				m [kg]	ASEPTIC^{PLUS}
0.25	**2.3**	890	613	9650	0.90	-					
	2.6	780	542	10600	1.05	-					
	3.0	705	471	11200	1.15	-					
	3.4	605	420	11900	1.35	-	**K**	**67 R37**	**DAS 80K4**	50	ASEPTIC^{PLUS}
	3.9	535	361	12200	1.55	-	**KF**	**67 R37**	**DAS 80K4**	55	
	4.4	475	323	12500	1.70	-	**KA**	**67 R37**	**DAS 80K4**	47	
	5.1	400	279	12800	2.0	-	**KAF**	**67 R37**	**DAS 80K4**	53	
	5.8	355	246	13000	2.3	-					
	6.5	315	217	13000	2.6	-					
	3.4	605	421	7580	1.00	-					
	3.9	540	362	8120	1.10	-					
	4.5	475	319	8540	1.25	-					
	5.1	405	280	8870	1.50	-					
	5.8	355	246	9070	1.70	-	**K**	**57 R37**	**DAS 80K4**	44	ASEPTIC^{PLUS}
	6.6	315	215	9240	1.90	-	**KF**	**57 R37**	**DAS 80K4**	49	
	7.4	280	192	9370	2.2	-	**KA**	**57 R37**	**DAS 80K4**	42	
	8.5	240	166	9500	2.5	-	**KAF**	**57 R37**	**DAS 80K4**	47	
	9.8	210	145	9600	2.9	-					
	11	191	129	9660	3.1	-					
	13	161	111	9750	3.7	-					
	15	142	97	9810	4.2	-					
	11	210	123.54	13000	4.0	-	**K**	**67**	**DAS 80K4**	39	ASEPTIC^{PLUS}
	13	182	108.03	13000	4.5	-	**KF**	**67**	**DAS 80K4**	45	
	14	173	102.62	13000	4.8	-	**KA**	**67**	**DAS 80K4**	37	
							KAF	**67**	**DAS 80K4**	42	
	11	210	123.85	9610	2.9	-	**K**	**57**	**DAS 80K4**	33	ASEPTIC^{PLUS}
	13	182	108.29	9690	3.3	-	**KF**	**57**	**DAS 80K4**	38	
	14	173	102.88*	9720	3.5	-	**KA**	**57**	**DAS 80K4**	31	
	16	152	90.26*	9780	4.0	-	**KAF**	**57**	**DAS 80K4**	37	
	19	129	76.56*	9850	4.7	-					
	14	176	104.37	7900	2.3	-	**K**	**47**	**DAS 80K4**	28	ASEPTIC^{PLUS}
	16	153	90.86	7990	2.6	-	**KF**	**47**	**DAS 80K4**	31	
	17	143	85.12*	8030	2.8	-	**KA**	**47**	**DAS 80K4**	27	
							KAF	**47**	**DAS 80K4**	30	
	17	141	83.69	6190	1.40	-					
	20	122	72.54	6200	1.65	-					
	21	114	67.80	6110	1.75	-					
	24	99	58.60	5910	2.0	-					
	29	84	49.79	5680	2.4	-					
	32	75	44.46	5530	2.7	-					
	37	64	37.97	5310	3.1	-					
	40	60	35.57	5220	3.3	-					
	47	50	29.96	4980	4.0	-					
	49	49	28.83	4930	4.1	-	**K**	**37**	**DAS 80K4**	21	ASEPTIC^{PLUS}
	57	42	24.99	4740	4.8	-	**KF**	**37**	**DAS 80K4**	23	
	61	39	23.36	4650	5.0	-	**KA**	**37**	**DAS 80K4**	20	
	70	34	20.19	4460	5.5	-	**KAF**	**37**	**DAS 80K4**	22	
	83	29	17.15	4260	6.3	-					
	93	26	15.31	4120	6.8	-					
	109	22	13.08	3930	7.5	-					
	117	20	12.14	3840	7.8	-					
	135	18	10.49	3680	9.1	-					
	159	15	8.91	3500	11	-					
	178	13	7.96	3380	12	-					
	209	11	6.80	3220	13	-					
	223	11	6.37	3150	14	-					
0.37	**0.19**	16300	7482	-	0.80	-					
	0.21	14300	6565	-	0.90	-					
	0.24	12400	5804	-	1.05	-	**K**	**127 R77**	**DAS 80N4**	475	-
	0.28	10900	5027	-	1.20	-	**KF**	**127 R77**	**DAS 80N4**	520	
	0.32	9460	4423	-	1.35	-	**KA**	**127 R77**	**DAS 80N4**	450	
	0.36	8280	3889	-	1.55	-	**KAF**	**127 R77**	**DAS 80N4**	485	
	0.42	6970	3311	-	1.85	-					
	0.73	4210	1926	-	3.1	-	**K**	**127 R77**	**DAS 80N4**	475	-
	0.80	3840	1757	-	3.4	-	**KF**	**127 R77**	**DAS 80N4**	520	
	0.91	3340	1541	-	3.9	-	**KA**	**127 R77**	**DAS 80N4**	450	
							KAF	**127 R77**	**DAS 80N4**	485	

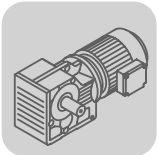

ASEPTIC Helical-Bevel Gearmotors
Selection tables K..DAS..

P_m [kW]	n_a [rpm]	M_a [Nm]	i	F_{Ra} 1) [N]	SEW f_B	⚠				m [kg]	ASEPTIC PLUS
0.37	**0.37**	8290	3810	-	0.95	-					
	0.42	7180	3358	-	1.10	-	**K**	**107 R77**	**DAS 80N4**	315	
	0.47	6440	2977	-	1.25	-	**KF**	**107 R77**	**DAS 80N4**	330	-
	0.54	5620	2599	-	1.40	-	**KA**	**107 R77**	**DAS 80N4**	290	
	0.61	4890	2286	-	1.65	-	**KAF**	**107 R77**	**DAS 80N4**	315	
	0.72	4150	1939	-	1.95	-					
	0.82	3770	1713	-	2.1	-	**K**	**107 R77**	**DAS 80N4**	315	
	0.90	3420	1554	-	2.3	-	**KF**	**107 R77**	**DAS 80N4**	330	-
	1.1	2940	1336	-	2.7	-	**KA**	**107 R77**	**DAS 80N4**	290	
	1.2	2570	1166	-	3.1	-	**KAF**	**107 R77**	**DAS 80N4**	310	
	0.66	4780	2123	40000	0.90	-					
	0.75	4210	1856	40000	1.00	-					
	0.86	3620	1625	40000	1.20	-					
	0.98	3160	1430	40000	1.35	-					
	1.1	2860	1261	40000	1.50	-	**K**	**97 R57**	**DAS 80N4**	185	
	1.3	2500	1102	40000	1.70	-	**KF**	**97 R57**	**DAS 80N4**	205	ASEPTIC PLUS
	1.5	2190	957	40000	1.95	-	**KA**	**97 R57**	**DAS 80N4**	165	
	1.6	1960	855	40000	2.2	-	**KAF**	**97 R57**	**DAS 80N4**	190	
	1.9	1620	743	40000	2.7	-					
	2.1	1430	652	40000	3.0	-					
	2.4	1290	573	40000	3.3	-					
	0.99	3210	1415	26600	0.85	-					
	1.1	2780	1229	27200	0.95	-					
	1.3	2430	1078	27600	1.10	-					
	1.5	2120	951	27900	1.30	-					
	1.7	1850	837	28200	1.45	-	**K**	**87 R57**	**DAS 80N4**	125	
	1.9	1600	726	28400	1.70	-	**KF**	**87 R57**	**DAS 80N4**	135	ASEPTIC PLUS
	2.2	1420	638	28500	1.90	-	**KA**	**87 R57**	**DAS 80N4**	115	
	2.5	1240	562	28600	2.2	-	**KAF**	**87 R57**	**DAS 80N4**	125	
	3.0	1040	474	28800	2.6	-					
	3.3	940	426	28800	2.9	-					
	3.8	820	373	28900	3.3	-					
	1.7	1860	815	10300	0.85	-					
	2.0	1570	709	15200	1.00	-					
	2.2	1380	622	16500	1.15	-					
	2.5	1230	552	17300	1.25	-					
	2.9	1080	485	18000	1.45	-					
	3.3	950	428	18500	1.65	-	**K**	**77 R37**	**DAS 80N4**	76	
	3.8	830	367	18900	1.85	-	**KF**	**77 R37**	**DAS 80N4**	84	ASEPTIC PLUS
	4.3	735	328	19200	2.1	-	**KA**	**77 R37**	**DAS 80N4**	69	
	4.8	655	290	19400	2.4	-	**KAF**	**77 R37**	**DAS 80N4**	76	
	5.5	565	252	19600	2.8	-					
	6.3	495	221	19700	3.1	-					
	7.2	435	195	19800	3.6	-					
	8.0	385	175	19900	4.0	-					
	9.1	340	154	19900	4.6	-					
	3.3	940	420	9120	0.90	-					
	3.9	820	361	10300	1.00	-					
	4.3	735	323	11000	1.10	-					
	5.0	620	279	11800	1.30	-	**K**	**67 R37**	**DAS 80N4**	52	
	5.7	545	246	12200	1.50	-	**KF**	**67 R37**	**DAS 80N4**	57	ASEPTIC PLUS
	6.4	485	217	12500	1.70	-	**KA**	**67 R37**	**DAS 80N4**	49	
	7.3	430	191	12700	1.90	-	**KAF**	**67 R37**	**DAS 80N4**	55	
	8.4	370	166	12900	2.2	-					
	9.7	325	144	13000	2.5	-					
	11	275	122	13000	3.0	-					
	5.0	625	280	7440	0.95	-					
	5.7	550	246	8050	1.10	-					
	6.5	485	215	8500	1.25	-					
	7.3	430	192	8750	1.40	-	**K**	**57 R37**	**DAS 80N4**	46	
	8.4	370	166	9000	1.60	-	**KF**	**57 R37**	**DAS 80N4**	51	ASEPTIC PLUS
	9.7	325	145	9190	1.85	-	**KA**	**57 R37**	**DAS 80N4**	44	
	11	295	129	9310	2.0	-	**KAF**	**57 R37**	**DAS 80N4**	50	
	13	250	111	9470	2.4	-					
	14	220	97	9570	2.7	-					
	9.1	390	154.02	19900	4.0	-	**K**	**77**	**DAS 80N4**	67	
							KF	**77**	**DAS 80N4**	76	ASEPTIC PLUS
							KA	**77**	**DAS 80N4**	60	
							KAF	**77**	**DAS 80N4**	68	

P_m [kW]	n_a [rpm]	M_a [Nm]	i	F_{Ra} 1) [N]	SEW f_B	⚠				m [kg]	ASEPTIC^{PLUS}
0.37	**11**	310	123.54	13000	2.6	-	**K**	**67**	**DAS 80N4**	42	ASEPTIC^{PLUS}
	13	275	108.03	13000	3.0	-	**KF**	**67**	**DAS 80N4**	47	
	16	225	90.04	13000	3.6	-	**KA**	**67**	**DAS 80N4**	39	
							KAF	**67**	**DAS 80N4**	45	
	18	193	76.37	13000	4.3	-	**K**	**67**	**DAS 80N4**	42	ASEPTIC^{PLUS}
							KF	**67**	**DAS 80N4**	47	
							KA	**67**	**DAS 80N4**	39	
							KAF	**67**	**DAS 80N4**	45	
	11	315	123.85	9240	1.90	-					ASEPTIC^{PLUS}
	13	275	108.29	9380	2.2	-	**K**	**57**	**DAS 80N4**	36	
	14	260	102.88*	9430	2.3	-	**KF**	**57**	**DAS 80N4**	40	
	16	230	90.26*	9540	2.6	-	**KA**	**57**	**DAS 80N4**	34	
	18	193	76.56*	9650	3.1	-	**KAF**	**57**	**DAS 80N4**	39	
	20	174	69.12	9710	3.4	-					
	13	265	104.37	7360	1.50	-					ASEPTIC^{PLUS}
	15	230	90.86	7600	1.75	-	**K**	**47**	**DAS 80N4**	30	
	16	215	85.12*	7690	1.85	-	**KF**	**47**	**DAS 80N4**	33	
	19	190	75.20*	7830	2.1	-	**KA**	**47**	**DAS 80N4**	29	
	20	176	69.84	7890	2.3	-	**KAF**	**47**	**DAS 80N4**	32	
	22	160	63.30*	7970	2.5	-					
	17	210	83.69	5500	0.95	-					ASEPTIC^{PLUS}
	19	183	72.54	5680	1.10	-					
	21	171	67.80	5620	1.15	-					
	24	148	58.60	5490	1.35	-					
	28	126	49.79	5330	1.60	-					
	31	112	44.46	5220	1.80	-					
	37	96	37.97	5050	2.1	-					
	39	90	35.57	4970	2.2	-					
	47	76	29.96	4780	2.7	-					
	49	73	28.83	4740	2.8	-					
	56	63	24.99	4570	3.2	-	**K**	**37**	**DAS 80N4**	23	
	60	59	23.36	4500	3.3	-	**KF**	**37**	**DAS 80N4**	25	
	69	51	20.19	4330	3.6	-	**KA**	**37**	**DAS 80N4**	23	
	82	43	17.15	4150	4.2	-	**KAF**	**37**	**DAS 80N4**	24	
	91	39	15.31	4020	4.5	-					
	107	33	13.08	3850	5.0	-					
	115	31	12.14	3770	5.2	-					
	133	27	10.49	3610	6.0	-					
	157	23	8.91	3450	7.1	-					
	176	20	7.96	3330	7.7	-					
	206	17	6.80	3180	8.7	-					
	220	16	6.37	3120	9.0	-					
	261	14	5.36	2960	10	-					
0.55	**0.09**	51300	16978	-	1.00	-					-
	0.10	42900	14272	-	1.15	-					
	0.11	38900	13116	-	1.30	-	**K**	**187 R97**	**DAS 90S4**	1780	
	0.12	33900	11647	-	1.45	-	**KH**	**187 R97**	**DAS 90S4**	1710	
	0.20	22100	7343	-	2.3	-					
	0.13	34900	11573	-	0.90	-					-
	0.14	31000	10264	-	1.05	-					
	0.17	25900	8628	-	1.25	-	**K**	**167 R97**	**DAS 90S4**	1200	
	0.22	19700	6562	-	1.60	-	**KH**	**167 R97**	**DAS 90S4**	1160	
	0.27	15600	5355	-	2.1	-					
	0.36	12100	4079	-	2.6	-					
	0.21	20700	6881	-	0.85	-	**K**	**157 R97**	**DAS 90S4**	800	-
	0.24	17800	5931	-	1.00	-	**KF**	**157 R97**	**DAS 90S4**	880	
	0.36	12000	3979	-	1.50	-	**KA**	**157 R97**	**DAS 90S4**	770	
	0.48	9170	3051	-	1.95	-	**KAF**	**157 R97**	**DAS 90S4**	820	
	0.33	13900	4423	-	0.95	-					-
	0.37	12200	3889	-	1.05	-	**K**	**127 R77**	**DAS 90S4**	485	
	0.44	10300	3311	-	1.25	-	**KF**	**127 R77**	**DAS 90S4**	530	
	0.48	9320	3009	-	1.40	-	**KA**	**127 R77**	**DAS 90S4**	460	
	0.56	8000	2607	-	1.60	-	**KAF**	**127 R77**	**DAS 90S4**	495	
	0.75	6190	1926	-	2.1	-					-
	0.83	5640	1757	-	2.3	-	**K**	**127 R77**	**DAS 90S4**	485	
	0.94	4920	1541	-	2.6	-	**KF**	**127 R77**	**DAS 90S4**	530	
	1.1	4310	1342	-	3.0	-	**KA**	**127 R77**	**DAS 90S4**	455	
	1.2	3750	1177	-	3.5	-	**KAF**	**127 R77**	**DAS 90S4**	495	
	1.4	3290	1025	-	4.0	-					

P_m [kW]	n_a [rpm]	M_a [Nm]	i	F_{Ra} 1) [N]	SEW f_B	⚠				m [kg]	ASEPTIC PLUS
0.55	**0.49**	9450	2977	-	0.85	-	**K**	**107 R77**	**DAS 90S4**	325	-
	0.56	8250	2599	-	0.95	-	**KF**	**107 R77**	**DAS 90S4**	340	
	0.63	7200	2286	-	1.10	-	**KA**	**107 R77**	**DAS 90S4**	300	
	0.75	6110	1939	-	1.30	-	**KAF**	**107 R77**	**DAS 90S4**	320	
	0.85	5530	1713	-	1.45	-					-
	0.93	5020	1554	-	1.60	-					
	1.1	4310	1336	-	1.85	-	**K**	**107 R77**	**DAS 90S4**	325	
	1.2	3760	1166	-	2.1	-	**KF**	**107 R77**	**DAS 90S4**	335	
	1.4	3230	1030	-	2.5	-	**KA**	**107 R77**	**DAS 90S4**	295	
	1.6	2810	904	-	2.9	-	**KAF**	**107 R77**	**DAS 90S4**	320	
	1.8	2550	793	-	3.1	-					
	2.1	2220	696	-	3.6	-					
	2.4	1910	615	-	4.2	-					
	1.0	4620	1430	40000	0.95	-					ASEPTIC PLUS
	1.2	4150	1261	40000	1.05	-					
	1.3	3630	1102	40000	1.20	-					
	1.5	3180	957	40000	1.35	-					
	1.7	2840	855	40000	1.50	-	**K**	**97 R57**	**DAS 90S4**	195	
	1.9	2380	743	40000	1.80	-	**KF**	**97 R57**	**DAS 90S4**	215	
	2.2	2100	652	40000	2.1	-	**KA**	**97 R57**	**DAS 90S4**	175	
	2.5	1890	573	40000	2.3	-	**KAF**	**97 R57**	**DAS 90S4**	200	
	2.9	1610	504	40000	2.7	-					
	3.3	1380	437	40000	3.1	-					
	3.8	1230	382	40000	3.5	-					
	4.8	1000	305	40000	4.3	-					
	1.5	3090	951	26800	0.85	-					ASEPTIC PLUS
	1.7	2700	837	27300	1.00	-					
	2.0	2350	726	27700	1.15	-					
	2.3	2070	638	28000	1.30	-					
	2.6	1810	562	28200	1.50	-	**K**	**87 R57**	**DAS 90S4**	135	
	3.1	1530	474	28500	1.75	-	**KF**	**87 R57**	**DAS 90S4**	145	
	3.4	1370	426	28600	1.95	-	**KA**	**87 R57**	**DAS 90S4**	120	
	3.9	1210	373	28700	2.2	-	**KAF**	**87 R57**	**DAS 90S4**	135	
	4.4	1050	330	28800	2.6	-					
	4.9	940	294	28800	2.9	-					
	5.8	820	250	28900	3.3	-					
	6.1	770	236	28900	3.5	-					
	7.2	650	201	28900	4.2	-					
	3.0	1580	485	15200	1.00	-					ASEPTIC PLUS
	3.4	1390	428	16400	1.10	-					
	4.0	1200	367	17400	1.30	-					
	4.4	1070	328	18000	1.45	-	**K**	**77 R37**	**DAS 90S4**	85	
	5.0	950	290	18500	1.65	-	**KF**	**77 R37**	**DAS 90S4**	93	
	5.8	820	252	18900	1.90	-	**KA**	**77 R37**	**DAS 90S4**	78	
	6.6	720	221	19200	2.2	-	**KAF**	**77 R37**	**DAS 90S4**	86	
	7.4	635	195	19400	2.4	-					
	8.3	565	175	19600	2.7	-					
	9.4	500	154	19700	3.1	-					
	5.2	910	279	9440	0.90	-					ASEPTIC PLUS
	5.9	800	246	10500	1.05	-					
	6.7	710	217	11200	1.15	-	**K**	**67 R37**	**DAS 90S4**	61	
	7.6	625	191	11800	1.30	-	**KF**	**67 R37**	**DAS 90S4**	67	
	8.7	540	166	12200	1.50	-	**KA**	**67 R37**	**DAS 90S4**	58	
	10	475	144	12500	1.75	-	**KAF**	**67 R37**	**DAS 90S4**	64	
	12	400	122	12800	2.0	-					
	7.5	625	192	7420	0.95	-					ASEPTIC PLUS
	8.7	540	166	8100	1.10	-	**K**	**57 R37**	**DAS 90S4**	55	
	10	475	145	8540	1.25	-	**KF**	**57 R37**	**DAS 90S4**	60	
	11	425	129	8760	1.40	-	**KA**	**57 R37**	**DAS 90S4**	53	
	13	365	111	9040	1.65	-	**KAF**	**57 R37**	**DAS 90S4**	59	
	15	320	97	9210	1.90	-					
	11	490	135.28	19700	3.2	-	**K**	**77**	**DAS 90S4**	76	ASEPTIC PLUS
	11	465	128.52	19800	3.3	-	**KF**	**77**	**DAS 90S4**	84	
	13	410	113.56	19800	3.8	-	**KA**	**77**	**DAS 90S4**	69	
							KAF	**77**	**DAS 90S4**	77	
	15	350	97.05	19900	4.4	-	**K**	**77**	**DAS 90S4**	76	ASEPTIC PLUS
							KF	**77**	**DAS 90S4**	84	
							KA	**77**	**DAS 90S4**	69	
							KAF	**77**	**DAS 90S4**	77	

P_m [kW]	n_a [rpm]	M_a [Nm]	i	F_{Ra} 1) [N]	SEW f_B	⚠				m [kg]	ASEPTIC^{PLUS}
0.55	**13**	390	108.03	12800	2.1	-	**K**	**67**	**DAS 90S4**	50	ASEPTIC^{PLUS}
	16	325	90.04	13000	2.5	-	**KF**	**67**	**DAS 90S4**	56	
	19	275	76.37	13000	3.0	-	**KA**	**67**	**DAS 90S4**	48	
							KAF	**67**	**DAS 90S4**	53	
	13	390	108.29	8920	1.55	-					ASEPTIC^{PLUS}
	14	375	102.88*	9000	1.60	-	**K**	**57**	**DAS 90S4**	45	
	16	325	90.26*	9180	1.85	-	**KF**	**57**	**DAS 90S4**	49	
	19	275	76.56*	9370	2.2	-	**KA**	**57**	**DAS 90S4**	42	
	21	250	69.12	9470	2.4	-	**KAF**	**57**	**DAS 90S4**	48	
	24	220	60.81*	9570	2.7	-					
	25	210	57.42*	9610	2.9	-					
	16	330	90.86	6780	1.20	-					ASEPTIC^{PLUS}
	17	310	85.12*	6990	1.30	-					
	19	270	75.20*	7290	1.45	-	**K**	**47**	**DAS 90S4**	39	
	21	255	69.84	7440	1.60	-	**KF**	**47**	**DAS 90S4**	42	
	23	230	63.30*	7600	1.75	-	**KA**	**47**	**DAS 90S4**	38	
	26	205	56.83	7740	1.95	-	**KAF**	**47**	**DAS 90S4**	41	
	30	177	48.95*	7890	2.3	-					
	32	167	46.03*	7940	2.4	-					
	25	210	58.60	4830	0.95	-					ASEPTIC^{PLUS}
	29	180	49.79	4760	1.10	-					
	33	161	44.46	4700	1.25	-					
	38	138	37.97	4600	1.45	-					
	41	129	35.57	4550	1.55	-					
	48	109	29.96	4420	1.85	-					
	58	91	24.99	4260	2.2	-					
	62	85	23.36	4200	2.3	-					
	72	73	20.19	4070	2.5	-	**K**	**37**	**DAS 90S4**	32	
	85	62	17.15	3920	2.9	-	**KF**	**37**	**DAS 90S4**	34	
	95	56	15.31	3820	3.2	-	**KA**	**37**	**DAS 90S4**	32	
	111	47	13.08	3670	3.5	-	**KAF**	**37**	**DAS 90S4**	33	
	119	44	12.14	3600	3.6	-					
	138	38	10.49	3460	4.2	-					
	163	32	8.91	3320	5.0	-					
	182	29	7.96	3210	5.4	-					
	213	25	6.80	3070	6.1	-					
	228	23	6.37	3020	6.3	-					
	270	19	5.36	2870	7.2	-					
	364	14	3.98	2630	8.7	-					
0.75	**0.11**	55500	13116	-	0.90	-					-
	0.12	48700	11647	-	1.05	-	**K**	**187 R97**	**DAS 90L4**	1780	
	0.20	31300	7343	-	1.60	-	**KH**	**187 R97**	**DAS 90L4**	1710	
	0.21	28600	6747	-	1.75	-					
	0.24	25000	5991	-	2.0	-					
	0.17	36800	8628	-	0.85	-					-
	0.22	28000	6562	-	1.15	-	**K**	**167 R97**	**DAS 90L4**	1190	
	0.27	22400	5355	-	1.45	-	**KH**	**167 R97**	**DAS 90L4**	1160	
	0.35	17300	4079	-	1.85	-					
	0.43	14400	3376	-	2.2	-					
	0.36	17000	3979	-	1.05	-	**K**	**157 R97**	**DAS 90L4**	800	-
	0.47	13000	3051	-	1.40	-	**KF**	**157 R97**	**DAS 90L4**	880	
							KA	**157 R97**	**DAS 90L4**	760	
							KAF	**157 R97**	**DAS 90L4**	820	
	0.87	7170	1659	-	2.5	-	**K**	**157 R97**	**DAS 90L4**	800	-
	1.1	5770	1365	-	3.1	-	**KF**	**157 R97**	**DAS 90L4**	880	
							KA	**157 R97**	**DAS 90L4**	760	
							KAF	**157 R97**	**DAS 90L4**	820	
	0.43	14500	3311	-	0.90	-	**K**	**127 R77**	**DAS 90L4**	485	-
	0.48	13100	3009	-	1.00	-	**KF**	**127 R77**	**DAS 90L4**	530	
	0.55	11300	2607	-	1.15	-	**KA**	**127 R77**	**DAS 90L4**	460	
							KAF	**127 R77**	**DAS 90L4**	495	

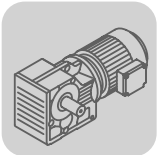

ASEPTIC Helical-Bevel Gearmotors

Selection tables K..DAS..

P_m [kW]	n_a [rpm]	M_a [Nm]	i	F_{Ra} 1) [N]	SEW f_B	⚠				m [kg]	ASEPTIC PLUS
0.75	**0.74**	8650	1926	-	1.50	-					
	0.82	7890	1757	-	1.65	-					
	0.93	6890	1541	-	1.90	-	**K**	**127 R77**	**DAS 90L4**	485	
	1.1	6020	1342	-	2.2	-	**KF**	**127 R77**	**DAS 90L4**	530	-
	1.2	5260	1177	-	2.5	-	**KA**	**127 R77**	**DAS 90L4**	455	
	1.4	4600	1025	-	2.8	-	**KAF**	**127 R77**	**DAS 90L4**	495	
	1.6	4020	899	-	3.2	-					
	0.84	7720	1713	-	1.05	-					
	0.92	7010	1554	-	1.15	-					
	1.1	6020	1336	-	1.35	-					
	1.2	5260	1166	-	1.50	-	**K**	**107 R77**	**DAS 90L4**	325	
	1.4	4550	1030	-	1.75	-	**KF**	**107 R77**	**DAS 90L4**	335	-
	1.6	3960	904	-	2.0	-	**KA**	**107 R77**	**DAS 90L4**	295	
	1.8	3560	793	-	2.3	-	**KAF**	**107 R77**	**DAS 90L4**	320	
	2.1	3110	696	-	2.6	-					
	2.3	2700	615	-	3.0	-					
	1.3	5040	1102	39900	0.85	-					
	1.5	4420	957	40000	0.95	-					
	1.7	3950	855	40000	1.10	-					
	1.9	3330	743	40000	1.30	-					
	2.2	2930	652	40000	1.45	-					
	2.5	2630	573	40000	1.65	-	**K**	**97 R57**	**DAS 90L4**	195	
	2.9	2250	504	40000	1.90	-	**KF**	**97 R57**	**DAS 90L4**	215	ASEPTIC PLUS
	3.3	1940	437	40000	2.2	-	**KA**	**97 R57**	**DAS 90L4**	175	
	3.8	1720	382	40000	2.5	-	**KAF**	**97 R57**	**DAS 90L4**	200	
	4.7	1390	305	40000	3.1	-					
	5.6	1170	258	40000	3.7	-					
	6.2	1050	232	40000	4.1	-					
	7.2	900	199	40000	4.8	-					
	2.0	3280	726	26500	0.80	-					
	2.2	2890	638	27000	0.95	-					
	2.6	2530	562	27500	1.05	-					
	3.0	2130	474	27900	1.25	-					
	3.4	1920	426	28100	1.40	-	**K**	**87 R57**	**DAS 90L4**	135	
	3.9	1690	373	28300	1.60	-	**KF**	**87 R57**	**DAS 90L4**	145	ASEPTIC PLUS
	4.4	1470	330	28500	1.85	-	**KA**	**87 R57**	**DAS 90L4**	125	
	4.9	1320	294	28600	2.1	-	**KAF**	**87 R57**	**DAS 90L4**	135	
	5.7	1140	250	28700	2.4	-					
	6.1	1070	236	28700	2.5	-					
	7.1	910	201	28800	3.0	-					
	3.9	1670	367	14400	0.95	-					
	4.4	1490	328	15800	1.05	-	**K**	**77 R37**	**DAS 90L4**	85	
	5.0	1320	290	16800	1.15	-	**KF**	**77 R37**	**DAS 90L4**	93	ASEPTIC PLUS
	5.7	1140	252	17700	1.35	-	**KA**	**77 R37**	**DAS 90L4**	78	
	6.5	1000	221	18300	1.55	-	**KAF**	**77 R37**	**DAS 90L4**	86	
	8.2	870	174.19	24200	3.1	-	**K**	**87**	**DAS 90L4**	110	
	8.7	820	164.34*	24200	3.3	-	**KF**	**87**	**DAS 90L4**	120	ASEPTIC PLUS
	9.7	735	147.32*	24200	3.7	-	**KA**	**87**	**DAS 90L4**	99	
							KAF	**87**	**DAS 90L4**	110	
	11	675	135.28	19300	2.3	-	**K**	**77**	**DAS 90L4**	76	
	11	640	128.52	19400	2.4	-	**KF**	**77**	**DAS 90L4**	84	ASEPTIC PLUS
	13	565	113.56	19600	2.7	-	**KA**	**77**	**DAS 90L4**	68	
	15	485	97.05	19700	3.2	-	**KAF**	**77**	**DAS 90L4**	76	
	13	540	108.03	12200	1.50	-					
	16	450	90.04	12600	1.80	-	**K**	**67**	**DAS 90L4**	51	
	19	380	76.37	12900	2.2	-	**KF**	**67**	**DAS 90L4**	57	ASEPTIC PLUS
	21	345	68.95	13000	2.4	-	**KA**	**67**	**DAS 90L4**	48	
	24	305	60.66	13000	2.7	-	**KAF**	**67**	**DAS 90L4**	54	
	25	285	57.28	13000	2.9	-					

P_m [kW]	n_a [rpm]	M_a [Nm]	i	F_{Ra} 1) [N]	SEW f_B	⚠				m [kg]	ASEPTIC^{PLUS}
0.75	**13**	540	108.29	8110	1.10	-					
	14	515	102.88*	8320	1.15	-					
	16	450	90.26*	8660	1.35	-					
	19	380	76.56*	8960	1.55	-	**K**	**57**	**DAS 90L4**	45	ASEPTIC^{PLUS}
	21	345	69.12	9110	1.75	-	**KF**	**57**	**DAS 90L4**	50	
	24	305	60.81*	9270	2.0	-	**KA**	**57**	**DAS 90L4**	43	
	25	285	57.42*	9340	2.1	-	**KAF**	**57**	**DAS 90L4**	49	
	29	245	48.89	9490	2.5	-					
	32	220	44.43	9560	2.7	-					
	19	375	75.20*	6260	1.05	-					
	21	350	69.84	6570	1.15	-					
	23	315	63.30*	6910	1.25	-					
	25	285	56.83	7200	1.40	-	**K**	**47**	**DAS 90L4**	39	ASEPTIC^{PLUS}
	29	245	48.95*	7500	1.65	-	**KF**	**47**	**DAS 90L4**	43	
	31	230	46.03*	7600	1.75	-	**KA**	**47**	**DAS 90L4**	39	
	36	198	39.61	7780	2.0	-	**KAF**	**47**	**DAS 90L4**	41	
	41	177	35.39	7700	2.3	-					
	46	156	31.30	7490	2.6	-					
	32	220	44.46	4170	0.90	-					
	38	190	37.97	4140	1.05	-					
	40	178	35.57	4130	1.15	-					
	48	150	29.96	4060	1.35	-					
	57	125	24.99	3970	1.60	-					
	61	117	23.36	3930	1.65	-					
	71	101	20.19	3840	1.85	-					
	84	86	17.15	3720	2.1	-	**K**	**37**	**DAS 90L4**	32	ASEPTIC^{PLUS}
	94	76	15.31	3640	2.3	-	**KF**	**37**	**DAS 90L4**	34	
	110	65	13.08	3520	2.5	-	**KA**	**37**	**DAS 90L4**	32	
	118	61	12.14	3460	2.6	-	**KAF**	**37**	**DAS 90L4**	33	
	137	52	10.49	3350	3.1	-					
	161	45	8.91	3220	3.6	-					
	180	40	7.96	3130	3.9	-					
	211	34	6.80	3000	4.4	-					
	225	32	6.37	2950	4.6	-					
	268	27	5.36	2810	5.2	-					
	361	20	3.98	2590	6.3	-					
1.1	**0.15**	57600	9363	-	0.85	-					
	0.18	49300	8126	-	1.00	-					
	0.20	46800	7343	-	1.05	-					
	0.21	42700	6747	-	1.15	-	**K**	**187 R97**	**DAS 100M4**	1790	-
	0.24	37600	5991	-	1.35	-	**KH**	**187 R97**	**DAS 100M4**	1720	
	0.27	33300	5358	-	1.50	-					
	0.30	29600	4817	-	1.70	-					
	0.33	26900	4370	-	1.85	-					
	0.27	33600	5355	-	0.95	-					
	0.30	29800	4788	-	1.05	-					
	0.35	25800	4079	-	1.25	-	**K**	**167 R97**	**DAS 100M4**	1200	-
	0.43	21500	3376	-	1.50	-	**KH**	**167 R97**	**DAS 100M4**	1170	
	0.52	17300	2755	-	1.85	-					
	0.66	14100	2182	-	2.3	-					
	0.85	10900	1704	-	2.9	-	**K**	**167 R97**	**DAS 100M4**	1200	-
	1.0	9070	1408	-	3.5	-	**KH**	**167 R97**	**DAS 100M4**	1160	
	1.1	8310	1296	-	3.9	-					
	0.41	21900	3516	-	0.80	-	**K**	**157 R97**	**DAS 100M4**	810	
	0.47	19400	3051	-	0.95	-	**KF**	**157 R97**	**DAS 100M4**	890	-
	0.55	16100	2610	-	1.10	-	**KA**	**157 R97**	**DAS 100M4**	770	
	0.62	14300	2322	-	1.25	-	**KAF**	**157 R97**	**DAS 100M4**	830	
	0.87	10700	1659	-	1.70	-					
	1.1	8670	1365	-	2.1	-	**K**	**157 R97**	**DAS 100M4**	810	
	1.2	7730	1229	-	2.3	-	**KF**	**157 R97**	**DAS 100M4**	890	-
	1.3	6880	1093	-	2.6	-	**KA**	**157 R97**	**DAS 100M4**	770	
	1.5	5930	942	-	3.0	-	**KAF**	**157 R97**	**DAS 100M4**	830	
	1.7	5320	854	-	3.4	-					

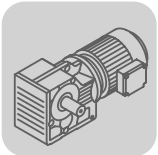

ASEPTIC Helical-Bevel Gearmotors
Selection tables K..DAS..

P_m [kW]	n_a [rpm]	M_a [Nm]	i	F_{Ra} 1) [N]	SEW f_B	⚠				m [kg]	ASEPTIC PLUS
1.1	**0.75**	12700	1926	-	1.00	-					
	0.82	11600	1757	-	1.10	-					
	0.94	10200	1541	-	1.30	-					
	1.1	8880	1342	-	1.45	-					
	1.2	7760	1177	-	1.65	-	**K**	**127 R77**	**DAS 100M4**	490	
	1.4	6780	1025	-	1.90	-	**KF**	**127 R77**	**DAS 100M4**	530	-
	1.6	5930	899	-	2.2	-	**KA**	**127 R77**	**DAS 100M4**	465	
	1.8	5100	790	-	2.6	-	**KAF**	**127 R77**	**DAS 100M4**	500	
	2.0	4620	704	-	2.8	-					
	2.4	3980	610	-	3.3	-					
	2.6	3590	549	-	3.6	-					
	3.0	3080	477	-	4.2	-					
	1.2	7740	1166	-	1.05	-					
	1.4	6740	1030	-	1.20	-					
	1.6	5890	904	-	1.35	-					
	1.8	5250	793	-	1.50	-					
	2.1	4590	696	-	1.75	-	**K**	**107 R77**	**DAS 100M4**	330	
	2.4	4010	615	-	2.0	-	**KF**	**107 R77**	**DAS 100M4**	345	-
	2.8	3400	522	-	2.4	-	**KA**	**107 R77**	**DAS 100M4**	305	
	3.1	2990	461	-	2.7	-	**KAF**	**107 R77**	**DAS 100M4**	330	
	3.5	2640	408	-	3.0	-					
	4.0	2390	364	-	3.4	-					
	4.5	2090	318	-	3.8	-					
	1.9	4910	743	40000	0.90	-					
	2.2	4320	652	40000	1.00	-					
	2.5	3860	573	40000	1.10	-	**K**	**97 R57**	**DAS 100M4**	200	
	2.9	3320	504	40000	1.30	-	**KF**	**97 R57**	**DAS 100M4**	225	ASEPTIC PLUS
	3.3	2870	437	40000	1.50	-	**KA**	**97 R57**	**DAS 100M4**	185	
	3.8	2540	382	40000	1.70	-	**KAF**	**97 R57**	**DAS 100M4**	210	
	4.2	2240	342	40000	1.90	-					
	3.1	3140	474	26700	0.85	-					
	3.4	2830	426	27100	0.95	-					
	3.9	2490	373	27500	1.10	-	**K**	**87 R57**	**DAS 100M4**	140	
	4.4	2180	330	27900	1.25	-	**KF**	**87 R57**	**DAS 100M4**	150	ASEPTIC PLUS
	4.9	1950	294	28100	1.40	-	**KA**	**87 R57**	**DAS 100M4**	130	
	5.8	1680	250	28300	1.60	-	**KAF**	**87 R57**	**DAS 100M4**	145	
	6.1	1580	236	28400	1.70	-					
	7.2	1340	201	28600	2.0	-					
	8.2	1280	176.05*	31300	3.4	-	**K**	**97**	**DAS 100M4**	180	
	9.4	1110	153.21*	31300	3.9	-	**KF**	**97**	**DAS 100M4**	200	ASEPTIC PLUS
	10	1020	140.28	31300	4.2	-	**KA**	**97**	**DAS 100M4**	160	
							KAF	**97**	**DAS 100M4**	185	
	9.8	1070	147.32*	24000	2.5	-	**K**	**87**	**DAS 100M4**	120	
	11	920	126.91*	24100	2.9	-	**KF**	**87**	**DAS 100M4**	130	ASEPTIC PLUS
	12	840	115.82	24200	3.2	-	**KA**	**87**	**DAS 100M4**	105	
							KAF	**87**	**DAS 100M4**	120	
	13	830	113.56	18900	1.90	-	**K**	**77**	**DAS 100M4**	83	
	15	705	97.05	19200	2.2	-	**KF**	**77**	**DAS 100M4**	91	ASEPTIC PLUS
	16	645	88.97	19400	2.4	-	**KA**	**77**	**DAS 100M4**	76	
	19	570	78.07	19600	2.7	-	**KAF**	**77**	**DAS 100M4**	83	
	20	540	73.99	19600	2.9	-					
	16	655	90.04	11600	1.25	-					
	19	555	76.37	12100	1.50	-					
	21	500	68.95	12400	1.65	-	**K**	**67**	**DAS 100M4**	58	
	24	440	60.66	12700	1.85	-	**KF**	**67**	**DAS 100M4**	64	ASEPTIC PLUS
	25	415	57.28	12800	1.95	-	**KA**	**67**	**DAS 100M4**	56	
	30	355	48.77	13000	2.3	-	**KAF**	**67**	**DAS 100M4**	61	
	33	320	44.32	13000	2.6	-					
	38	280	38.39	13000	2.9	-					

P_m [kW]	n_a [rpm]	M_a [Nm]	i	F_{Ra} 1) [N]	SEW f_B	⚠				m [kg]	ASEPTIC PLUS
1.1	**16**	655	90.26*	5800	0.90	-					
	19	555	76.56*	7980	1.10	-					
	21	500	69.12	8400	1.20	-					
	24	440	60.81*	8700	1.35	-	**K**	**57**	**DAS 100M4**	52	ASEPTIC PLUS
	25	415	57.42*	8810	1.45	-	**KF**	**57**	**DAS 100M4**	57	
	30	355	48.89	9070	1.70	-	**KA**	**57**	**DAS 100M4**	50	
	33	325	44.43	9200	1.85	-	**KAF**	**57**	**DAS 100M4**	56	
	38	280	38.49	9360	2.1	-					
	40	260	35.70	9430	2.3	-					
	48	220	30.28	9570	2.7	-					
	53	199	27.34	9440	3.0	-					
	60	175	24.05	9150	3.4	-					
	64	165	22.71	9020	3.6	-					
	75	141	19.34	8650	4.1	-					
	82	128	17.57	8440	4.3	-					
	95	111	15.22	8110	4.8	-	**K**	**57**	**DAS 100M4**	52	ASEPTIC PLUS
	109	96	13.25	7810	5.3	-	**KF**	**57**	**DAS 100M4**	57	
	121	87	11.92	7500	4.8	-	**KA**	**57**	**DAS 100M4**	50	
	128	82	11.26	7380	5.1	-	**KAF**	**57**	**DAS 100M4**	56	
	151	70	9.59	7060	5.8	-					
	166	63	8.71	6870	6.2	-					
	191	55	7.55	6590	6.7	-					
	220	48	6.57	6320	7.2	-					
	308	34	4.69	5720	8.8	-					
	25	415	56.83	5130	0.95	-					
	30	355	48.95*	6490	1.10	-					
	31	335	46.03*	6720	1.20	-	**K**	**47**	**DAS 100M4**	47	ASEPTIC PLUS
	36	290	39.61	7170	1.40	-	**KF**	**47**	**DAS 100M4**	50	
	41	255	35.39	7060	1.55	-	**KA**	**47**	**DAS 100M4**	46	
	56	188	25.91	6690	2.1	-	**KAF**	**47**	**DAS 100M4**	49	
	66	159	21.81	6470	2.5	-					
	74	142	19.58	6320	2.8	-					
	48	220	29.96	3430	0.90	-					
	72	147	20.19	3410	1.25	-					
	84	125	17.15	3360	1.45	-					
	94	111	15.31	3310	1.55	-					
	110	95	13.08	3240	1.75	-	**K**	**37**	**DAS 100M4**	38	ASEPTIC PLUS
	138	76	10.49	3120	2.1	-	**KF**	**37**	**DAS 100M4**	41	
	162	65	8.91	3030	2.5	-	**KA**	**37**	**DAS 100M4**	38	
	182	58	7.96	2950	2.7	-	**KAF**	**37**	**DAS 100M4**	40	
	213	49	6.80	2850	3.0	-					
	227	46	6.37	2810	3.1	-					
	269	39	5.36	2700	3.6	-					
	363	29	3.98	2500	4.3	-					
1.5	**0.22**	58300	6747	-	0.85	-					
	0.24	51500	5991	-	0.95	-					
	0.27	45700	5358	-	1.10	-	**K**	**187 R97**	**DAS 100L4**	1790	-
	0.30	40800	4817	-	1.25	-	**KH**	**187 R97**	**DAS 100L4**	1730	
	0.34	37000	4370	-	1.35	-					
	0.41	31800	3609	-	1.55	-					
	0.48	26900	3062	-	1.85	-	**K**	**187 R97**	**DAS 100L4**	1790	-
	0.58	21900	2519	-	2.3	-	**KH**	**187 R97**	**DAS 100L4**	1720	
	0.65	19600	2268	-	2.6	-					
	0.36	35300	4079	-	0.90	-	**K**	**167 R97**	**DAS 100L4**	1210	-
	0.43	29300	3376	-	1.10	-	**KH**	**167 R97**	**DAS 100L4**	1170	
	0.53	23700	2755	-	1.35	-					
	0.67	19200	2182	-	1.65	-					
	0.86	14900	1704	-	2.2	-	**K**	**167 R97**	**DAS 100L4**	1210	-
	1.0	12400	1408	-	2.6	-	**KH**	**167 R97**	**DAS 100L4**	1170	
	1.1	11300	1296	-	2.8	-					
	0.63	19700	2322	-	0.90	-	**K**	**157 R97**	**DAS 100L4**	820	-
							KF	**157 R97**	**DAS 100L4**	900	
							KA	**157 R97**	**DAS 100L4**	780	
							KAF	**157 R97**	**DAS 100L4**	840	

P_m [kW]	n_a [rpm]	M_a [Nm]	i	F_{Ra} 1) [N]	SEW f_B	⚠				m [kg]	ASEPTIC PLUS
1.5	**0.88**	14600	1659	-	1.25	-					
	1.1	11900	1365	-	1.50	-					
	1.2	10600	1229	-	1.70	-	**K**	**157 R97**	**DAS 100L4**	810	
	1.3	9440	1093	-	1.90	-	**KF**	**157 R97**	**DAS 100L4**	890	-
	1.6	8130	942	-	2.2	-	**KA**	**157 R97**	**DAS 100L4**	780	
	1.7	7310	854	-	2.5	-	**KAF**	**157 R97**	**DAS 100L4**	840	
	2.6	4800	567	-	3.8	-					
	2.9	4270	504	-	4.2	-					
	2.7	4630	536	-	2.8	-	**K**	**127 R87**	**DAS 100L4**	520	
	3.5	3650	418	-	3.6	-	**KF**	**127 R87**	**DAS 100L4**	560	-
	4.0	3210	367	-	4.0	-	**KA**	**127 R87**	**DAS 100L4**	490	
							KAF	**127 R87**	**DAS 100L4**	530	
	0.83	15700	1757	-	0.85	-					
	0.95	13800	1541	-	0.95	-					
	1.1	12000	1342	-	1.10	-					
	1.2	10500	1177	-	1.25	-					
	1.4	9180	1025	-	1.40	-	**K**	**127 R77**	**DAS 100L4**	500	
	1.6	8040	899	-	1.60	-	**KF**	**127 R77**	**DAS 100L4**	540	-
	1.9	6950	790	-	1.85	-	**KA**	**127 R77**	**DAS 100L4**	470	
	2.1	6270	704	-	2.1	-	**KAF**	**127 R77**	**DAS 100L4**	510	
	2.4	5410	610	-	2.4	-					
	2.7	4880	549	-	2.7	-					
	3.1	4200	477	-	3.1	-					
	3.5	3720	418	-	3.5	-					
	1.4	9150	1030	-	0.85	-					
	1.6	8000	904	-	1.00	-					
	1.9	7100	793	-	1.15	-					
	2.1	6220	696	-	1.30	-	**K**	**107 R77**	**DAS 100L4**	340	
	2.4	5450	615	-	1.45	-	**KF**	**107 R77**	**DAS 100L4**	350	-
	2.8	4620	522	-	1.75	-	**KA**	**107 R77**	**DAS 100L4**	310	
	3.2	4060	461	-	1.95	-	**KAF**	**107 R77**	**DAS 100L4**	335	
	3.6	3590	408	-	2.2	-					
	4.0	3240	364	-	2.5	-					
	4.6	2830	318	-	2.8	-					
	2.6	5210	573	39700	0.80	-					
	2.9	4500	504	40000	0.95	-					
	3.4	3890	437	40000	1.10	-	**K**	**97 R57**	**DAS 100L4**	210	
	3.8	3430	382	40000	1.25	-	**KF**	**97 R57**	**DAS 100L4**	230	ASEPTIC PLUS
	4.3	3040	342	40000	1.40	-	**KA**	**97 R57**	**DAS 100L4**	190	
	4.8	2770	305	40000	1.55	-	**KAF**	**97 R57**	**DAS 100L4**	215	
	5.7	2330	258	40000	1.85	-					
	6.3	2100	232	40000	2.1	-					
	7.4	1800	199	40000	2.4	-					
	4.4	2950	330	27000	0.90	-					
	5.0	2640	294	27400	1.00	-	**K**	**87 R57**	**DAS 100L4**	150	
	5.9	2270	250	27800	1.20	-	**KF**	**87 R57**	**DAS 100L4**	160	ASEPTIC PLUS
	6.2	2140	236	27900	1.25	-	**KA**	**87 R57**	**DAS 100L4**	135	
	7.3	1820	201	28200	1.50	-	**KAF**	**87 R57**	**DAS 100L4**	150	
	8.0	1650	183	28400	1.65	-					
	8.3	1720	176.05*	31100	2.5	-	**K**	**97**	**DAS 100L4**	185	
	9.6	1500	153.21*	31200	2.9	-	**KF**	**97**	**DAS 100L4**	205	ASEPTIC PLUS
	10	1370	140.28	31200	3.1	-	**KA**	**97**	**DAS 100L4**	170	
	12	1210	123.93*	31300	3.6	-	**KAF**	**97**	**DAS 100L4**	195	
	9.9	1440	147.32*	23800	1.85	-	**K**	**87**	**DAS 100L4**	125	
	12	1240	126.91*	23900	2.2	-	**KF**	**87**	**DAS 100L4**	135	ASEPTIC PLUS
	13	1130	115.82	24000	2.4	-	**KA**	**87**	**DAS 100L4**	115	
	14	1000	102.71*	24100	2.7	-	**KAF**	**87**	**DAS 100L4**	130	
	17	840	86.34	24200	3.2	-	**K**	**87**	**DAS 100L4**	125	
							KF	**87**	**DAS 100L4**	135	ASEPTIC PLUS
							KA	**87**	**DAS 100L4**	115	
							KAF	**87**	**DAS 100L4**	130	

P_m [kW]	n_a [rpm]	M_a [Nm]	i	F_{Ra} 1) [N]	SEW f_B	⚠				m [kg]	ASEPTIC PLUS
1.5	**13**	1110	113.56	17900	1.40	-					
	15	950	97.05	18500	1.65	-					
	16	870	88.97	18800	1.80	-	**K**	**77**	**DAS 100L4**	91	ASEPTIC PLUS
	19	765	78.07	19100	2.0	-	**KF**	**77**	**DAS 100L4**	99	
	20	725	73.99	19200	2.1	-	**KA**	**77**	**DAS 100L4**	83	
	23	635	64.75	19400	2.5	-	**KAF**	**77**	**DAS 100L4**	91	
	25	570	58.34	19600	2.7	-					
	29	500	51.18	19700	3.1	-					
	32	440	45.16	19800	3.5	-	**K**	**77**	**DAS 100L4**	91	ASEPTIC PLUS
	37	390	40.04	19900	4.0	-	**KF**	**77**	**DAS 100L4**	99	
							KA	**77**	**DAS 100L4**	83	
							KAF	**77**	**DAS 100L4**	91	
	16	880	90.04	9730	0.95	-					
	19	745	76.37	10900	1.10	-					
	21	675	68.95	11400	1.20	-					
	24	595	60.66	11900	1.40	-					
	26	560	57.28	12100	1.45	-	**K**	**67**	**DAS 100L4**	66	ASEPTIC PLUS
	30	475	48.77	12500	1.70	-	**KF**	**67**	**DAS 100L4**	71	
	33	435	44.32	12700	1.90	-	**KA**	**67**	**DAS 100L4**	63	
	38	375	38.39	12900	2.1	-	**KAF**	**67**	**DAS 100L4**	69	
	41	350	35.62	13000	2.4	-					
	49	295	30.22	13000	2.8	-					
	54	265	27.28	13000	3.1	-					
	61	235	24.00	13000	3.4	-					
	24	595	60.81*	7680	1.00	-					
	26	560	57.42*	7940	1.05	-					
	30	480	48.89	8530	1.25	-					
	33	435	44.43	8730	1.40	-	**K**	**57**	**DAS 100L4**	60	ASEPTIC PLUS
	38	375	38.49	8980	1.60	-	**KF**	**57**	**DAS 100L4**	65	
	41	350	35.70	9100	1.70	-	**KA**	**57**	**DAS 100L4**	58	
	48	295	30.28	9130	2.0	-	**KAF**	**57**	**DAS 100L4**	64	
	54	265	27.34	8940	2.2	-					
	61	235	24.05	8710	2.6	-					
	65	220	22.71	8600	2.7	-	**K**	**57**	**DAS 100L4**	60	ASEPTIC PLUS
	76	189	19.34	8290	3.0	-	**KF**	**57**	**DAS 100L4**	65	
							KA	**57**	**DAS 100L4**	58	
							KAF	**57**	**DAS 100L4**	64	
	37	385	39.61	6100	1.05	-					
	41	345	35.39	6340	1.15	-					
	57	255	25.91	6160	1.60	-	**K**	**47**	**DAS 100L4**	54	ASEPTIC PLUS
	67	215	21.81	6020	1.90	-	**KF**	**47**	**DAS 100L4**	57	
	75	191	19.58	5910	2.1	-	**KA**	**47**	**DAS 100L4**	53	
	87	165	16.86	5760	2.3	-	**KAF**	**47**	**DAS 100L4**	56	
	92	155	15.86	5690	2.5	-					
	107	133	13.65	5520	2.7	-	**K**	**47**	**DAS 100L4**	54	ASEPTIC PLUS
	120	119	12.19	5390	2.9	-	**KF**	**47**	**DAS 100L4**	57	
	125	115	11.77	5290	2.4	-	**KA**	**47**	**DAS 100L4**	53	
							KAF	**47**	**DAS 100L4**	56	
	73	197	20.19	2930	0.95	-					
	85	168	17.15	2950	1.05	-					
	96	150	15.31	2940	1.15	-					
	112	128	13.08	2920	1.30	-					
	140	103	10.49	2870	1.55	-	**K**	**37**	**DAS 100L4**	46	ASEPTIC PLUS
	164	87	8.91	2810	1.85	-	**KF**	**37**	**DAS 100L4**	48	
	184	78	7.96	2760	2.0	-	**KA**	**37**	**DAS 100L4**	46	
	216	67	6.80	2680	2.3	-	**KAF**	**37**	**DAS 100L4**	47	
	230	62	6.37	2650	2.3	-					
	273	52	5.36	2560	2.7	-					
	368	39	3.98	2400	3.2	-					

10 ASEPTIC Spiroplan® gearmotors

10.1 Selection tables W..DAS..

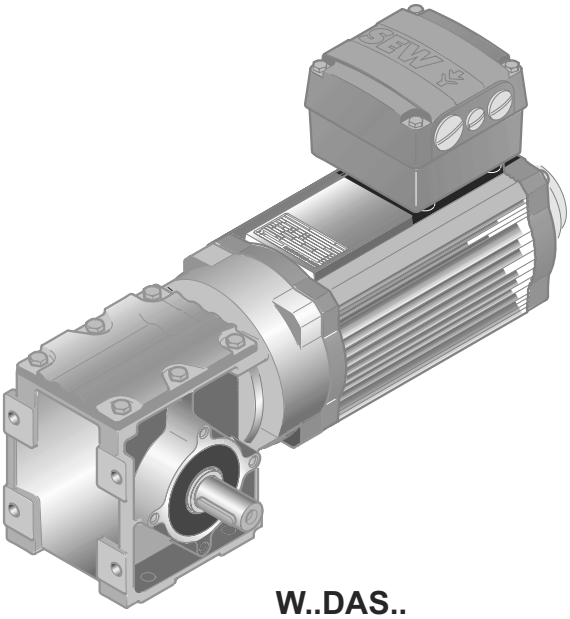

W..DAS..

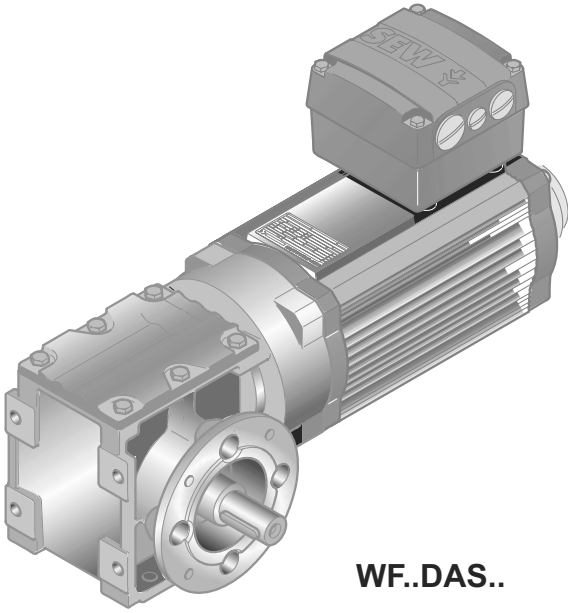

WF..DAS..

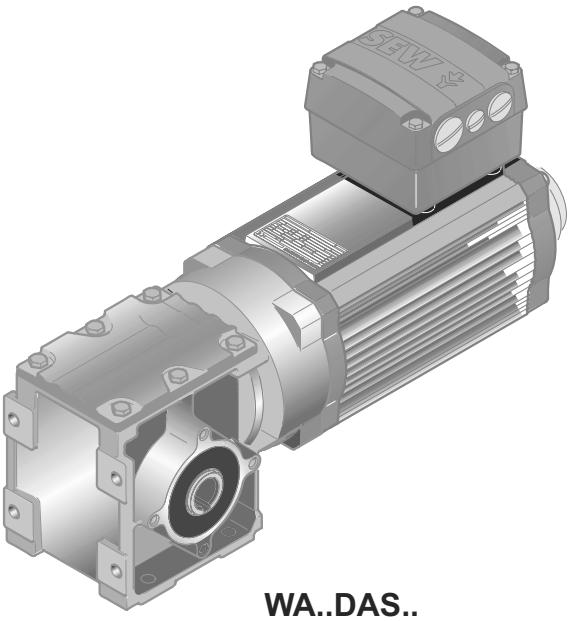

WA..DAS..

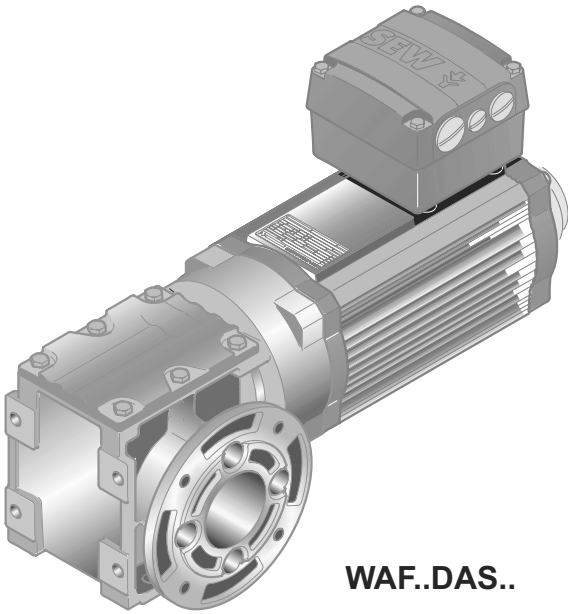

WAF..DAS..

55749AXX

P_m [kW]	n_a [rpm]	M_a [Nm]	i	F_{Ra} 1) [N]	SEW f_B	⚠				m [kg]	ASEPTIC^{plus}
0.25	**19**	57	75.00*	3000	1.25	-					
	24	53	60.00*	3000	1.35	-					
	30	46	48.00*	3000	1.55	-					
	44	35	32.50*	3000	2.0	-					
	52	32	27.50*	3000	2.2	-	**W**	**30**	**DAS 80K4**	14	ASEPTIC^{plus}
	58	30	24.50*	3000	2.3	-	**WF**	**30**	**DAS 80K4**	14	
	87	22	16.33	3000	2.7	-	**WA**	**30**	**DAS 80K4**	13	
	99	20	14.33	3000	3.0	-	**WAF**	**30**	**DAS 80K4**	14	
	139	15	10.25*	3000	3.3	-					
	173	12	8.20*	3000	3.3	-					
	216	10	6.57	2880	3.9	-					
0.37	**19**	85	75.00*	3000	0.80	-					
	23	79	60.00*	3000	0.90	-					
	29	69	48.00*	3000	1.00	-					
	43	52	32.50*	3000	1.35	-					
	51	49	27.50*	3000	1.45	-	**W**	**30**	**DAS 80N4**	16	ASEPTIC^{plus}
	57	45	24.50*	3000	1.55	-	**WF**	**30**	**DAS 80N4**	16	
	86	33	16.33	3000	1.80	-	**WA**	**30**	**DAS 80N4**	16	
	98	30	14.33	3000	2.0	-	**WAF**	**30**	**DAS 80N4**	16	
	137	23	10.25*	3000	2.2	-					
	171	18	8.20*	3000	2.2	-					
	213	16	6.57	2850	2.6	-					

11 ASEPTIC Helical-Worm Gearmotors

11.1 Selection tables S..DAS..

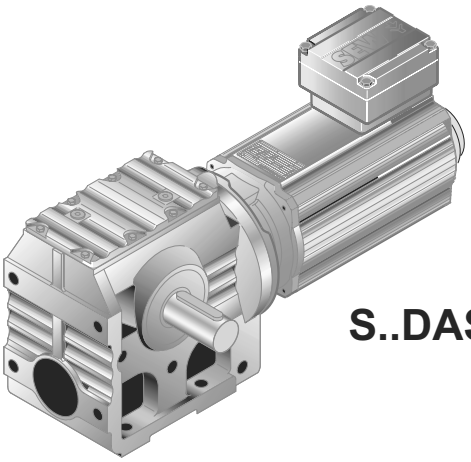

S..DAS..

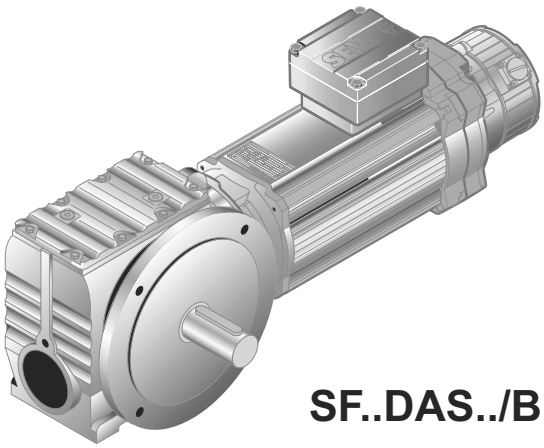

SF..DAS../BR

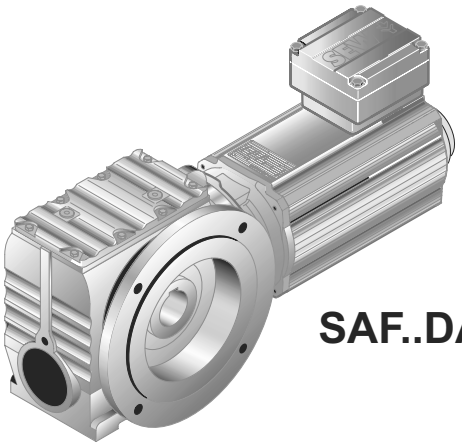

SAF..DAS..

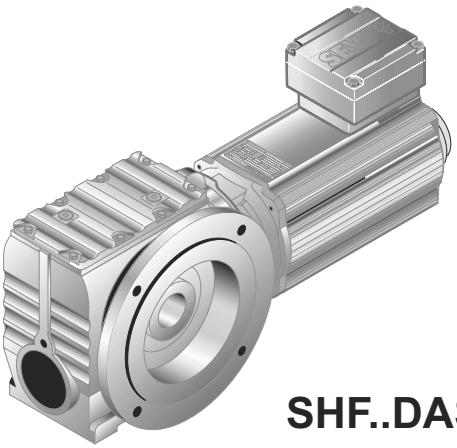

SHF..DAS..

55747AXX

P_m [kW]	n_a [rpm]	M_a [Nm]	i	F_{Ra} 1) [N]	SEW f_B	⚠				m [kg]	ASEPTIC^{plus}
0.25	**0.49**	2670	2905	27100	0.95	-					
	0.55	2330	2586	27900	1.10	-					
	0.61	2080	2335	28300	1.20	-	**S**	**87 R57**	**DAS 80K4**	110	ASEPTIC^{plus}
	0.69	1810	2054	28700	1.40	-	**SF**	**87 R57**	**DAS 80K4**	135	
	0.78	1610	1824	29000	1.55	-	**SA**	**87 R57**	**DAS 80K4**	110	
	0.87	1440	1631	29200	1.75	-	**SAF**	**87 R57**	**DAS 80K4**	125	
	1.5	850	930	29800	2.9	-					
	1.5	1150	954	12800	1.10	-					
	1.7	1010	837	13800	1.25	-	**S**	**77 R37**	**DAS 80K4**	63	ASEPTIC^{plus}
	2.0	840	714	14700	1.45	-	**SF**	**77 R37**	**DAS 80K4**	73	
	2.2	750	637	15100	1.65	-	**SA**	**77 R37**	**DAS 80K4**	63	
	2.5	680	574	15400	1.85	-	**SAF**	**77 R37**	**DAS 80K4**	69	
	2.8	580	499	15800	2.1	-					
	2.6	595	543	7940	0.95	-					
	3.0	500	469	8860	1.15	-	**S**	**67 R37**	**DAS 80K4**	44	ASEPTIC^{plus}
	3.4	450	424	9240	1.25	-	**SF**	**67 R37**	**DAS 80K4**	50	
	3.9	405	365	9570	1.40	-	**SA**	**67 R37**	**DAS 80K4**	45	
	4.5	350	319	9880	1.65	-	**SAF**	**67 R37**	**DAS 80K4**	49	
	5.1	305	281	10100	1.85	-					
	4.8	315	294	6940	0.95	-					
	5.3	295	269	7130	1.00	-					
	6.2	255	229	7460	1.20	-	**S**	**57 R17**	**DAS 80K4**	25	ASEPTIC^{plus}
	7.0	230	204	7630	1.30	-	**SF**	**57 R17**	**DAS 80K4**	29	
	7.6	210	187	7740	1.45	-	**SA**	**57 R17**	**DAS 80K4**	25	
	8.6	185	165	7870	1.60	-	**SAF**	**57 R17**	**DAS 80K4**	27	
	11	148	131	8030	2.0	-					
	6.5	230	217.41	10400	2.3	-					
	7.5	205	190.11	10500	2.6	-					
	7.9	194	180.60*	10500	2.7	-	**S**	**67**	**DAS 80K4**	34	ASEPTIC^{plus}
	9.0	173	158.45	10600	3.0	-	**SF**	**67**	**DAS 80K4**	40	
	11	149	134.40*	10600	3.5	-	**SA**	**67**	**DAS 80K4**	35	
	12	136	121.33	10600	3.8	-	**SAF**	**67**	**DAS 80K4**	39	
	13	121	106.75*	10700	4.3	-					
	9.0	163	158.12	7980	1.80	-					
	10	143	137.05	8050	2.1	-	**S**	**57**	**DAS 80K4**	22	ASEPTIC^{plus}
	11	135	128.10*	8080	2.2	-	**SF**	**57**	**DAS 80K4**	26	
	13	119	110.73	8140	2.5	-	**SA**	**57**	**DAS 80K4**	22	
	15	103	94.08*	8180	2.9	-	**SAF**	**57**	**DAS 80K4**	25	
	17	93	84.00*	8210	3.2	-					
	9.0	157	158.12	5400	1.10	-					
	10	139	137.05	5490	1.20	-					
	11	131	128.10*	5530	1.30	-					
	13	115	110.73	5600	1.45	-	**S**	**47**	**DAS 80K4**	18	ASEPTIC^{plus}
	15	100	94.08*	5660	1.70	-	**SF**	**47**	**DAS 80K4**	22	
	17	90	84.00*	5700	1.85	-	**SA**	**47**	**DAS 80K4**	19	
	20	78	71.75*	5740	2.1	-	**SAF**	**47**	**DAS 80K4**	21	
	21	74	67.20*	5760	2.3	-					
	26	72	54.59	5740	2.2	-					
	30	63	47.32	5650	2.5	-					

ASEPTIC Helical-Worm Gearmotors
Selection tables S..DAS..

P_m [kW]	n_a [rpm]	M_a [Nm]	i	F_{Ra} 1) [N]	SEW f_B	⚠				m [kg]	ASEPTIC plus
0.25	**14**	100	98.80*	3000	0.85	-					
	16	89	86.36	3000	0.95	-					
	18	84	80.96	3000	1.00	-					
	20	75	71.44*	3000	1.10	-					
	22	68	63.33	3000	1.20	-					
	33	57	43.68	3000	1.40	-					
	38	50	37.66	3000	1.60	-					
	40	47	35.10*	3000	1.65	-					
	46	41	30.68	3000	1.85	-	**S**	**37**	**DAS 80K4**	15	ASEPTIC plus
	49	39	28.76	3000	1.95	-	**SF**	**37**	**DAS 80K4**	17	
	56	34	25.38*	3000	2.2	-	**SA**	**37**	**DAS 80K4**	15	
	63	31	22.50*	3000	2.4	-	**SAF**	**37**	**DAS 80K4**	17	
	91	23	15.53	2660	2.2	-					
	106	20	13.39	2560	2.5	-					
	114	19	12.48*	2510	2.6	-					
	130	16	10.91	2430	2.9	-					
	139	15	10.23	2380	3.1	-					
	157	14	9.02*	2310	3.4	-					
	178	12	8.00*	2230	3.7	-					
	209	10	6.80*	2130	4.2	-					
0.37	**0.68**	2810	2054	25300	0.90	-					
	0.77	2500	1824	27500	1.00	-	**S**	**87 R57**	**DAS 80N4**	115	ASEPTIC plus
	0.86	2230	1631	28000	1.10	-	**SF**	**87 R57**	**DAS 80N4**	135	
	1.5	1320	930	29400	1.90	-	**SA**	**87 R57**	**DAS 80N4**	110	
	1.7	1190	831	29500	2.1	-	**SAF**	**87 R57**	**DAS 80N4**	130	
	2.0	1290	714	11500	0.95	-					
	2.2	1150	637	12700	1.10	-	**S**	**77 R37**	**DAS 80N4**	65	ASEPTIC plus
	2.4	1040	574	13500	1.20	-	**SF**	**77 R37**	**DAS 80N4**	75	
	2.8	900	499	14400	1.40	-	**SA**	**77 R37**	**DAS 80N4**	65	
	3.2	785	438	15000	1.60	-	**SAF**	**77 R37**	**DAS 80N4**	71	
	3.6	700	389	15400	1.75	-					
	3.8	615	365	7670	0.95	-	**S**	**67 R37**	**DAS 80N4**	46	ASEPTIC plus
	4.4	535	319	8520	1.05	-	**SF**	**67 R37**	**DAS 80N4**	53	
	5.0	470	281	9080	1.20	-	**SA**	**67 R37**	**DAS 80N4**	47	
	5.7	425	246	9420	1.35	-	**SAF**	**67 R37**	**DAS 80N4**	52	
	6.4	340	217.41	9920	1.50	-					
	7.4	305	190.11	10100	1.70	-	**S**	**67**	**DAS 80N4**	36	ASEPTIC plus
	7.8	290	180.60*	10200	1.80	-	**SF**	**67**	**DAS 80N4**	42	
	8.8	260	158.45	10300	2.0	-	**SA**	**67**	**DAS 80N4**	37	
	10	225	134.40*	10400	2.3	-	**SAF**	**67**	**DAS 80N4**	41	
	12	205	121.33	10500	2.6	-					
	8.8	245	158.12	7530	1.20	-					
	10	215	137.05	7710	1.35	-					
	11	205	128.10*	7780	1.45	-	**S**	**57**	**DAS 80N4**	24	ASEPTIC plus
	13	178	110.73	7910	1.65	-	**SF**	**57**	**DAS 80N4**	28	
	15	154	94.08*	8010	1.90	-	**SA**	**57**	**DAS 80N4**	24	
	17	139	84.00*	8070	2.1	-	**SAF**	**57**	**DAS 80N4**	27	
	20	121	71.75*	8130	2.4	-					
	21	114	67.20*	8150	2.5	-					
	10	210	137.05	5130	0.80	**M1-6**					
	11	196	128.10*	5200	0.85	**M1-6**					
	13	173	110.73	5330	0.95	**M1-6**					
	15	150	94.08*	5440	1.10	**M2-6**					
	17	135	84.00*	5510	1.25	**M2-6**	**S**	**47**	**DAS 80N4**	20	ASEPTIC plus
	20	118	71.75*	5590	1.40	**M2-6**	**SF**	**47**	**DAS 80N4**	24	
	21	111	67.20*	5620	1.50	**M2-6**	**SA**	**47**	**DAS 80N4**	22	
	26	108	54.59	5580	1.45	-	**SAF**	**47**	**DAS 80N4**	23	
	30	94	47.32	5400	1.65	-					
	32	89	44.22*	5310	1.75	-					
	37	77	38.23	5120	2.0	-					
	43	66	32.48*	4910	2.3	-					
	48	60	29.00*	4770	2.6	-					
	57	51	24.77	4570	3.0	-					
	60	48	23.20*	4490	3.2	-	**S**	**47**	**DAS 80N4**	20	ASEPTIC plus
	69	45	20.33	4160	2.4	-	**SF**	**47**	**DAS 80N4**	24	
	79	39	17.62	4010	2.8	-	**SA**	**47**	**DAS 80N4**	22	
	85	37	16.47*	3950	3.0	-	**SAF**	**47**	**DAS 80N4**	23	

P_m [kW]	n_a [rpm]	M_a [Nm]	i	F_{Ra} 1) [N]	SEW f_B	⚠				m [kg]	ASEPTIC^{plus}
0.37	**22**	101	63.33	3000	0.80	**M1-6**					
	32	86	43.68	3000	0.95	**-**					
	37	75	37.66	3000	1.05	**-**					
	40	70	35.10*	3000	1.10	**-**					
	46	62	30.68	3000	1.25	**-**					
	49	58	28.76	3000	1.30	**-**					
	55	52	25.38*	2930	1.45	**-**	**S**	**37**	**DAS 80N4**	17	ASEPTIC^{plus}
	62	46	22.50*	2860	1.60	**-**	**SF**	**37**	**DAS 80N4**	19	
	90	34	15.53	2490	1.45	**-**	**SA**	**37**	**DAS 80N4**	17	
	105	30	13.39	2420	1.65	**-**	**SAF**	**37**	**DAS 80N4**	19	
	112	28	12.48*	2380	1.75	**-**					
	128	25	10.91	2310	1.95	**-**					
	137	23	10.23	2280	2.0	**-**					
	155	20	9.02*	2210	2.3	**-**					
	175	18	8.00*	2150	2.5	**-**					
	206	16	6.80*	2060	2.8	**-**					
0.55	**1.1**	2670	1332	27100	0.95	**-**					
	1.2	2410	1191	27700	1.05	**-**					
	1.4	2100	1032	28300	1.20	**-**	**S**	**87 R57**	**DAS 90S4**	125	ASEPTIC^{plus}
	1.6	1940	930	28500	1.30	**-**	**SF**	**87 R57**	**DAS 90S4**	145	
	1.7	1760	831	28800	1.40	**-**	**SA**	**87 R57**	**DAS 90S4**	120	
	2.0	1530	719	29100	1.65	**-**	**SAF**	**87 R57**	**DAS 90S4**	135	
	2.3	1330	624	29400	1.90	**-**					
	2.6	1200	558	29500	2.1	**-**					
	3.3	960	435	29700	2.6	**-**					
	3.3	1150	438	12800	1.10	**-**	**S**	**77 R37**	**DAS 90S4**	74	ASEPTIC^{plus}
	3.7	1020	389	13700	1.20	**-**	**SF**	**77 R37**	**DAS 90S4**	84	
	4.4	860	327	14600	1.45	**-**	**SA**	**77 R37**	**DAS 90S4**	74	
	5.0	780	289	15000	1.60	**-**	**SAF**	**77 R37**	**DAS 90S4**	81	
	5.8	675	250	15400	1.85	**-**					
	5.9	620	246	7630	0.90	**-**	**S**	**67 R37**	**DAS 90S4**	55	ASEPTIC^{plus}
	6.6	555	221	8370	1.05	**-**	**SF**	**67 R37**	**DAS 90S4**	62	
	7.3	505	198	8810	1.15	**-**	**SA**	**67 R37**	**DAS 90S4**	56	
	8.6	435	168	9380	1.30	**-**	**SAF**	**67 R37**	**DAS 90S4**	61	
	6.4	555	225.26	15900	2.3	**-**	**S**	**77**	**DAS 90S4**	65	ASEPTIC^{plus}
	6.8	530	214.00*	15900	2.4	**-**	**SF**	**77**	**DAS 90S4**	75	
	7.7	475	189.09	16000	2.7	**-**	**SA**	**77**	**DAS 90S4**	65	
							SAF	**77**	**DAS 90S4**	72	
	7.6	440	190.11	9330	1.20	**-**					
	8.0	420	180.60*	9470	1.25	**-**					
	9.2	375	158.45	9750	1.40	**-**	**S**	**67**	**DAS 90S4**	45	ASEPTIC^{plus}
	11	320	134.40*	10000	1.60	**-**	**SF**	**67**	**DAS 90S4**	51	
	12	295	121.33	10200	1.75	**-**	**SA**	**67**	**DAS 90S4**	46	
	14	260	106.75*	10300	2.0	**-**	**SAF**	**67**	**DAS 90S4**	50	
	14	250	100.80*	10300	2.1	**-**					
	17	215	85.83	10400	2.4	**-**					
	22	192	65.63	10500	2.5	**-**					
	11	310	137.05	7000	0.95	**M1-6**					
	11	290	128.10*	7160	1.00	**M1-6**					
	13	255	110.73	7440	1.15	**M1-6**	**S**	**57**	**DAS 90S4**	33	ASEPTIC^{plus}
	15	220	94.08*	7670	1.35	**M1-6**	**SF**	**57**	**DAS 90S4**	37	
	17	200	84.00*	7790	1.45	**M1-6**	**SA**	**57**	**DAS 90S4**	33	
	20	174	71.75*	7930	1.65	**M1-6**	**SAF**	**57**	**DAS 90S4**	36	
	22	164	67.20*	7970	1.75	**M1-6**					
	31	138	47.32	8070	1.80	**-**					
	33	129	44.22*	8100	1.90	**-**					
	38	113	38.23	8160	2.2	**-**	**S**	**57**	**DAS 90S4**	33	ASEPTIC^{plus}
	45	97	32.48*	7830	2.5	**-**	**SF**	**57**	**DAS 90S4**	37	
	50	87	29.00*	7590	2.8	**-**	**SA**	**57**	**DAS 90S4**	33	
	59	75	24.77	7260	3.3	**-**	**SAF**	**57**	**DAS 90S4**	36	
	63	70	23.20*	7120	3.5	**-**					

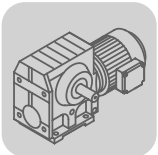

ASEPTIC Helical-Worm Gearmotors
Selection tables S..DAS..

P_m [kW]	n_a [rpm]	M_a [Nm]	i	F_{Ra} 1) [N]	SEW f_B	⚠				m [kg]	ASEPTIC plus
0.55	17	195	84.00*	5210	0.85	M1-6					
	20	169	71.75*	5350	1.00	M1-6					
	22	160	67.20*	5400	1.05	M1-6					
	31	136	47.32	4950	1.15	-					
	33	127	44.22*	4890	1.20	-	S	47	DAS 90S4	30	ASEPTIC plus
	38	111	38.23	4750	1.40	-	SF	47	DAS 90S4	33	
	45	95	32.48*	4590	1.65	-	SA	47	DAS 90S4	31	
	50	86	29.00*	4480	1.80	-	SAF	47	DAS 90S4	32	
	59	74	24.77	4310	2.1	-					
	63	69	23.20*	4250	2.2	-					
	82	56	17.62	3750	1.95	-					
	88	53	16.47*	3700	2.1	-					
	102	46	14.24	3580	2.4	-	S	47	DAS 90S4	30	ASEPTIC plus
	120	39	12.10*	3440	2.8	-	SF	47	DAS 90S4	33	
	134	35	10.80*	3350	3.1	-	SA	47	DAS 90S4	31	
	157	30	9.23*	3220	3.6	-	SAF	47	DAS 90S4	32	
	47	89	30.68	2670	0.85	M1-6					
	50	83	28.76	2650	0.90	M1-6					
	57	74	25.38*	2610	1.00	M1-6					
	64	66	22.50*	2570	1.10	M1-6					
	76	57	19.13*	2510	1.25	M1-6	S	37	DAS 90S4	27	ASEPTIC plus
	108	43	13.39	2180	1.15	-	SF	37	DAS 90S4	28	
	116	40	12.48*	2160	1.20	-	SA	37	DAS 90S4	26	
	133	35	10.91	2110	1.35	-	SAF	37	DAS 90S4	28	
	142	33	10.23	2090	1.40	-					
	161	29	9.02*	2040	1.55	-					
	181	26	8.00*	1990	1.75	-					
	213	22	6.80*	1930	1.95	-					
0.75	1.2	4710	1223	23400	0.90	-					
	1.3	4130	1070	32200	1.00	-					
	1.6	3560	928	34000	1.20	-	S	97 R57	DAS 90L4	185	ASEPTIC plus
	1.7	3140	824	34700	1.35	-	SF	97 R57	DAS 90L4	215	
	2.0	2250	714	35900	1.85	-	SA	97 R57	DAS 90L4	180	
	2.3	2390	626	35800	1.75	-	SAF	97 R57	DAS 90L4	205	
	2.7	2050	538	36100	2.1	-					
	3.0	1850	484	36300	2.3	-					
	1.4	2950	1032	21700	0.85	-					
	1.5	2710	930	27000	0.90	-					
	1.7	2450	831	27600	1.00	-	S	87 R57	DAS 90L4	125	ASEPTIC plus
	2.0	2130	719	28200	1.15	-	SF	87 R57	DAS 90L4	145	
	2.3	1870	624	28700	1.35	-	SA	87 R57	DAS 90L4	120	
	2.6	1690	558	28900	1.50	-	SAF	87 R57	DAS 90L4	140	
	3.3	1350	435	29300	1.80	-					
	4.4	1030	323	29700	2.3	-					
	4.4	1200	327	12300	1.05	-	S	77 R37	DAS 90L4	74	ASEPTIC plus
	5.0	1080	289	13200	1.15	-	SF	77 R37	DAS 90L4	84	
	5.7	940	250	14200	1.30	-	SA	77 R37	DAS 90L4	74	
	6.5	830	219	14800	1.50	-	SAF	77 R37	DAS 90L4	81	
	5.0	1010	288.00*	29700	2.3	-	S	87	DAS 90L4	100	ASEPTIC plus
	5.6	920	258.18	29800	2.5	-	SF	87	DAS 90L4	120	
	6.5	800	222.40*	29800	2.9	-	SA	87	DAS 90L4	98	
	7.1	735	202.96	29900	3.1	-	SAF	87	DAS 90L4	115	
	6.4	765	225.26	15100	1.65	-					
	6.7	730	214.00*	15200	1.75	-					
	7.6	655	189.09	15500	1.95	-	S	77	DAS 90L4	65	ASEPTIC plus
	8.9	565	161.60*	15800	2.2	-	SF	77	DAS 90L4	75	
	9.7	525	148.15	16000	2.4	-	SA	77	DAS 90L4	65	
	11	465	130.00*	16000	2.6	-	SAF	77	DAS 90L4	71	
	12	440	123.20*	16000	2.7	-					
	13	390	107.83	16000	3.0	-					

P_m [kW]	n_a [rpm]	M_a [Nm]	i	F_{Ra} 1) [N]	SEW f_B	⚠				m [kg]	ASEPTIC plus
0.75	**7.5**	605	190.11	7830	0.85	-					
	8.0	575	180.60*	8120	0.90	-					
	9.1	515	158.45	8740	1.00	-					
	11	445	134.40*	9300	1.15	-	**S**	**67**	**DAS 90L4**	45	ASEPTIC plus
	12	405	121.33	9560	1.30	-	**SF**	**67**	**DAS 90L4**	52	
	13	360	106.75*	9820	1.45	-	**SA**	**67**	**DAS 90L4**	46	
	14	340	100.80*	9920	1.50	-	**SAF**	**67**	**DAS 90L4**	51	
	17	295	85.83	10100	1.75	-					
	22	265	65.63	10300	1.80	-					
	23	250	62.35*	10300	1.90	-	**S**	**67**	**DAS 90L4**	45	ASEPTIC plus
	26	225	54.70	10200	2.2	-	**SF**	**67**	**DAS 90L4**	52	
	31	191	46.40*	9740	2.5	-	**SA**	**67**	**DAS 90L4**	46	
							SAF	**67**	**DAS 90L4**	51	
	13	355	110.73	6550	0.85	**M1-6**					
	15	305	94.08*	7040	0.95	**M1-6**					
	17	275	84.00*	7290	1.05	**M1-6**					
	20	240	71.75*	7560	1.20	**M1-6**					
	21	225	67.20*	7640	1.25	**M1-6**					
	30	190	47.32	7850	1.30	-	**S**	**57**	**DAS 90L4**	33	ASEPTIC plus
	32	178	44.22*	7910	1.40	-	**SF**	**57**	**DAS 90L4**	37	
	38	155	38.23	7910	1.60	-	**SA**	**57**	**DAS 90L4**	33	
	44	133	32.48*	7590	1.85	-	**SAF**	**57**	**DAS 90L4**	36	
	49	119	29.00*	7380	2.1	-					
	58	103	24.77	7080	2.4	-					
	62	97	23.20*	6950	2.5	-					
	81	78	17.62	6200	2.2	-					
	87	73	16.47*	6100	2.3	-					
	101	64	14.24	5870	2.7	-					
	30	187	47.32	4510	0.85	**M1-6**					
	32	175	44.22*	4480	0.90	**M1-6**					
	38	153	38.23	4400	1.00	**M1-6**					
	44	131	32.48*	4290	1.20	**M1-6**					
	49	118	29.00*	4210	1.30	**M1-6**	**S**	**47**	**DAS 90L4**	30	ASEPTIC plus
	58	102	24.77	4080	1.55	**M1-6**	**SF**	**47**	**DAS 90L4**	33	
	62	96	23.20*	4030	1.60	**M1-6**	**SA**	**47**	**DAS 90L4**	31	
	81	78	17.62	3510	1.40	-	**SAF**	**47**	**DAS 90L4**	32	
	87	73	16.47*	3470	1.50	-					
	101	63	14.24	3380	1.75	-					
	119	54	12.10*	3280	2.0	-					
	133	48	10.80*	3200	2.3	-					
	156	42	9.23*	3090	2.6	-	**S**	**47**	**DAS 90L4**	30	ASEPTIC plus
	166	39	8.64*	3040	2.8	-	**SF**	**47**	**DAS 90L4**	33	
	197	33	7.28	2920	3.1	-	**SA**	**47**	**DAS 90L4**	31	
							SAF	**47**	**DAS 90L4**	32	
	75	78	19.13*	2260	0.90	**M1-6**					
	115	55	12.48*	1930	0.85	-	**S**	**37**	**DAS 90L4**	27	ASEPTIC plus
	132	48	10.91	1910	1.00	-	**SF**	**37**	**DAS 90L4**	28	
	140	46	10.23	1900	1.05	-	**SA**	**37**	**DAS 90L4**	26	
	159	40	9.02*	1880	1.15	-	**SAF**	**37**	**DAS 90L4**	28	
	179	36	8.00*	1850	1.25	-					
	211	31	6.80*	1810	1.40	-					

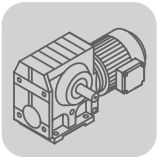

ASEPTIC Helical-Worm Gearmotors

Selection tables S..DAS..

P_m [kW]	n_a [rpm]	M_a [Nm]	i	F_{Ra} 1) [N]	SEW f_B	⚠				m [kg]	ASEPTIC plus
1.1	**1.8**	4620	824	24900	0.90	-					
	2.0	3310	714	34500	1.25	-	**S**	**97 R57**	**DAS 100M4**	190	ASEPTIC plus
	2.3	3520	626	34100	1.20	-	**SF**	**97 R57**	**DAS 100M4**	225	
	2.7	3030	538	34900	1.40	-	**SA**	**97 R57**	**DAS 100M4**	185	
	3.0	2740	484	35300	1.55	-	**SAF**	**97 R57**	**DAS 100M4**	210	
	3.4	2380	420	35800	1.75	-					
	2.3	2760	624	26300	0.90	-					
	2.6	2500	558	27500	1.00	-					
	3.0	2200	485	28100	1.15	-					
	3.3	2000	435	28400	1.25	-	**S**	**87 R57**	**DAS 100M4**	130	ASEPTIC plus
	3.8	1760	378	28800	1.40	-	**SF**	**87 R57**	**DAS 100M4**	155	
	4.5	1530	323	29100	1.55	-	**SA**	**87 R57**	**DAS 100M4**	130	
	5.1	1340	281	29400	1.80	-	**SAF**	**87 R57**	**DAS 100M4**	145	
	5.7	1430	255	29200	1.40	-					
	6.5	1260	222	29400	1.60	-					
	7.0	1180	205	29500	1.70	-					
	6.6	1220	219	12200	1.00	-	**S**	**77 R37**	**DAS 100M4**	81	ASEPTIC plus
							SF	**77 R37**	**DAS 100M4**	91	
							SA	**77 R37**	**DAS 100M4**	80	
							SAF	**77 R37**	**DAS 100M4**	87	

P_m [kW]	n_a [rpm]	M_a [Nm]	i	F_{Ra} 1) [N]	SEW f_B	⚠				m [kg]	ASEPTIC^{plus}
1.1	**5.6**	1340	258.18	29400	1.70	-					
	6.5	1170	222.40*	29500	1.95	-	**S**	**87**	**DAS 100M4**	110	ASEPTIC^{plus}
	7.1	1070	202.96	29600	2.1	-	**SF**	**87**	**DAS 100M4**	130	
	8.0	960	180.00*	29700	2.3	-	**SA**	**87**	**DAS 100M4**	105	
	9.6	820	151.30	29800	2.6	-	**SAF**	**87**	**DAS 100M4**	125	
	7.6	950	189.09	14100	1.35	-					
	8.9	830	161.60*	14800	1.55	-					
	9.8	765	148.15	15100	1.65	-	**S**	**77**	**DAS 100M4**	72	ASEPTIC^{plus}
	11	675	130.00*	15400	1.80	-	**SF**	**77**	**DAS 100M4**	82	
	12	645	123.20*	15600	1.85	-	**SA**	**77**	**DAS 100M4**	72	
	13	570	107.83	15800	2.1	-	**SAF**	**77**	**DAS 100M4**	78	
	15	520	97.14	16000	2.2	-					
	17	460	85.22	16000	2.4	-					
	12	590	121.33	7980	0.90	**M1-6**					
	14	525	106.75*	8630	1.00	**M1-6**					
	14	500	100.80*	8870	1.05	**M1-6**					
	17	430	85.83	9390	1.20	**M1-6**					
	19	395	78.00*	9620	1.30	**M1-6**	**S**	**67**	**DAS 100M4**	53	ASEPTIC^{plus}
	26	325	54.70	9500	1.50	-	**SF**	**67**	**DAS 100M4**	59	
	31	280	46.40*	9180	1.70	-	**SA**	**67**	**DAS 100M4**	54	
	35	255	41.89	8970	1.90	-	**SAF**	**67**	**DAS 100M4**	58	
	39	225	36.85	8710	2.2	-					
	42	210	34.80*	8600	2.3	-					
	49	182	29.63	8270	2.6	-					
	20	350	71.75*	6590	0.85	**M1-6**					
	22	330	67.20*	6810	0.85	**M1-6**					
	26	280	56.61	7240	0.95	**M1-6**					
	38	225	38.23	7370	1.10	**M1-6**					
	44	194	32.48*	7130	1.25	**M1-6**					
	50	174	29.00*	6960	1.40	**M1-6**	**S**	**57**	**DAS 100M4**	40	ASEPTIC^{plus}
	58	150	24.77	6720	1.65	**M1-6**	**SF**	**57**	**DAS 100M4**	44	
	62	141	23.20*	6610	1.75	**M1-6**	**SA**	**57**	**DAS 100M4**	40	
	74	119	19.54	6350	1.80	**M1-6**	**SAF**	**57**	**DAS 100M4**	42	
	102	93	14.24	5570	1.85	-					
	119	79	12.10*	5360	2.1	-					
	134	71	10.80*	5220	2.4	-					
	157	61	9.23*	5010	2.8	-					
	50	172	29.00*	3710	0.90	**M1-6**					
	58	148	24.77	3660	1.05	**M1-6**					
	62	139	23.20*	3630	1.10	**M1-6**					
	74	118	19.54	3550	1.20	**M1-6**	**S**	**47**	**DAS 100M4**	36	
	102	92	14.24	3020	1.20	**M2-6**	**SF**	**47**	**DAS 100M4**	40	ASEPTIC^{plus}
	119	79	12.10*	2970	1.40	**M2**	**SA**	**47**	**DAS 100M4**	37	
	134	71	10.80*	2930	1.55	**M2**	**SAF**	**47**	**DAS 100M4**	39	
	157	61	9.23*	2850	1.80	**M2-6**					
	167	57	8.64*	2820	1.90	**M2-6**					
	199	48	7.28	2730	2.1	**M2-6**					
1.5	**2.0**	4480	714	30800	0.95	-					
	2.3	4760	626	22600	0.90	-					
	2.7	4100	538	32700	1.00	-	**S**	**97 R57**	**DAS 100L4**	200	ASEPTIC^{plus}
	3.0	3710	484	33800	1.15	-	**SF**	**97 R57**	**DAS 100L4**	230	
	3.5	3220	420	34600	1.30	-	**SA**	**97 R57**	**DAS 100L4**	195	
	3.9	2910	376	35100	1.45	-	**SAF**	**97 R57**	**DAS 100L4**	220	
	4.5	2560	327	35600	1.65	-					
	3.0	2980	485	20400	0.85	-					
	3.4	2710	435	27000	0.90	-					
	3.9	2390	378	27700	1.05	-	**S**	**87 R57**	**DAS 100L4**	140	
	4.5	2070	323	28300	1.15	-	**SF**	**87 R57**	**DAS 100L4**	160	ASEPTIC^{plus}
	5.2	1820	281	28700	1.30	-	**SA**	**87 R57**	**DAS 100L4**	135	
	5.7	1940	255	28500	1.00	-	**SAF**	**87 R57**	**DAS 100L4**	155	
	6.6	1700	222	28900	1.15	-					
	7.1	1590	205	29000	1.25	-					
	5.1	2060	286.40*	36100	1.95	-	**S**	**97**	**DAS 100L4**	175	
	5.6	1900	262.22	36300	2.1	-	**SF**	**97**	**DAS 100L4**	205	ASEPTIC^{plus}
	6.3	1690	231.67	36400	2.4	-	**SA**	**97**	**DAS 100L4**	170	
	7.5	1450	196.52	36600	2.8	-	**SAF**	**97**	**DAS 100L4**	195	

P_m [kW]	n_a [rpm]	M_a [Nm]	i	F_{Ra} 1) [N]	SEW f_B	⚠				m [kg]	ASEPTIC^{plus}
1.5	**5.7**	1800	258.18	28800	1.25	**-**					
	6.6	1570	222.40*	29100	1.45	**-**					
	7.2	1440	202.96	29200	1.55	**-**	**S**	**87**	**DAS 100L4**	115	
	8.1	1290	180.00*	29400	1.70	**-**	**SF**	**87**	**DAS 100L4**	140	ASEPTIC^{plus}
	9.7	1100	151.30	29600	1.95	**-**	**SA**	**87**	**DAS 100L4**	115	
	11	1020	139.05	29700	2.1	**-**	**SAF**	**87**	**DAS 100L4**	130	
	12	910	123.48	29800	2.3	**-**					
	13	820	110.40*	29800	2.4	**-**					
	15	745	99.26	29900	2.6	**-**					
	7.8	1280	189.09	11600	1.00	**M1-6**					
	9.1	1110	161.60*	13000	1.15	**M1-6**					
	9.9	1030	148.15	13600	1.20	**M1-6**					
	11	910	130.00*	14300	1.35	**M1-6**	**S**	**77**	**DAS 100L4**	80	
	12	870	123.20*	14600	1.40	**M1-6**	**SF**	**77**	**DAS 100L4**	90	ASEPTIC^{plus}
	14	770	107.83	15100	1.50	**M1-6**	**SA**	**77**	**DAS 100L4**	79	
	15	695	97.14	15400	1.65	**M1-6**	**SAF**	**77**	**DAS 100L4**	86	
	17	620	85.22	15300	1.80	**M1-6**					
	22	490	66.67	14400	2.1	**M1-6**					
	23	530	63.03	13600	2.1	**-**					
	26	425	56.92	13900	2.3	**M1-6**	**S**	**77**	**DAS 100L4**	80	
	27	455	53.87	13100	2.4	**-**	**SF**	**77**	**DAS 100L4**	90	ASEPTIC^{plus}
	30	420	49.38	12900	2.6	**-**	**SA**	**77**	**DAS 100L4**	79	
	34	370	43.33	12500	3.0	**-**	**SAF**	**77**	**DAS 100L4**	86	
	17	580	85.83	8080	0.90	**M1-6**					
	19	530	78.00*	8570	1.00	**M1-6**					
	27	440	54.70	8760	1.10	**M1-6**	**S**	**67**	**DAS 100L4**	60	
	32	375	46.40*	8540	1.30	**M1-6**	**SF**	**67**	**DAS 100L4**	67	ASEPTIC^{plus}
	35	340	41.89	8390	1.40	**M1-6**	**SA**	**67**	**DAS 100L4**	61	
	40	300	36.85	8190	1.60	**M1-6**	**SAF**	**67**	**DAS 100L4**	65	
	42	285	34.80*	8100	1.70	**M1-6**					
	49	245	29.63	7840	1.95	**M1-6**					
	54	225	26.93	7680	2.2	**M1-6**					
	72	180	20.37	6740	1.90	**-**	**S**	**67**	**DAS 100L4**	60	
	85	153	17.28*	6520	2.2	**-**	**SF**	**67**	**DAS 100L4**	67	ASEPTIC^{plus}
	94	139	15.60*	6390	2.5	**-**	**SA**	**67**	**DAS 100L4**	61	
	107	122	13.73*	6210	2.8	**-**	**SAF**	**67**	**DAS 100L4**	65	
	45	260	32.48*	6600	0.95	**M1-6**					
	51	235	29.00*	6480	1.05	**M1-6**					
	59	200	24.77	6300	1.20	**M1-6**					
	63	189	23.20*	6220	1.30	**M1-6**	**S**	**57**	**DAS 100L4**	47	
	75	161	19.54	6010	1.35	**M1-6**	**SF**	**57**	**DAS 100L4**	51	ASEPTIC^{plus}
	103	125	14.24	5210	1.35	**-**	**SA**	**57**	**DAS 100L4**	47	
	121	106	12.10*	5060	1.60	**-**	**SAF**	**57**	**DAS 100L4**	50	
	136	95	10.80*	4940	1.80	**-**					
	159	82	9.23*	4780	2.1	**-**					
	103	124	14.24	2620	0.90	**M1-6**					
	121	106	12.10*	2620	1.05	**M1-6**	**S**	**47**	**DAS 100L4**	44	
	136	95	10.80*	2610	1.15	**M1-6**	**SF**	**47**	**DAS 100L4**	47	ASEPTIC^{plus}
	159	82	9.23*	2590	1.35	**M1-6**	**SA**	**47**	**DAS 100L4**	45	
	170	77	8.64*	2570	1.40	**M1-6**	**SAF**	**47**	**DAS 100L4**	46	
	201	65	7.28	2520	1.60	**M1-6**					

12 Technical Data on ASEPTIC Motors

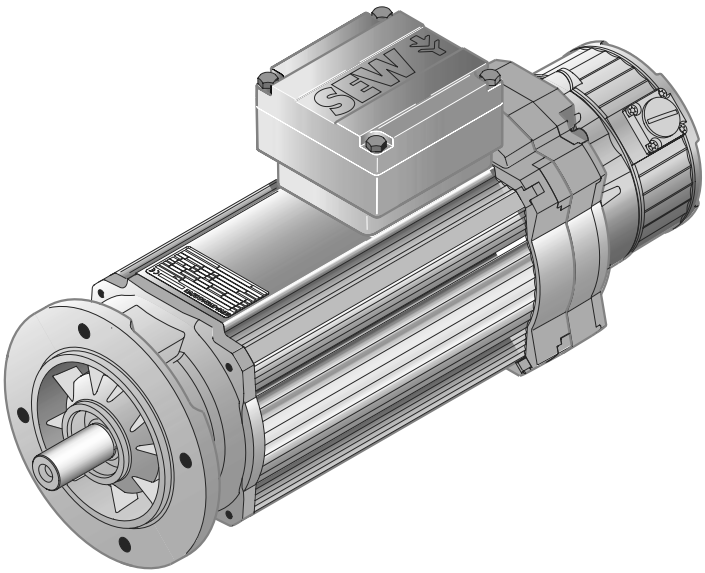

DAS...BR.. / IS

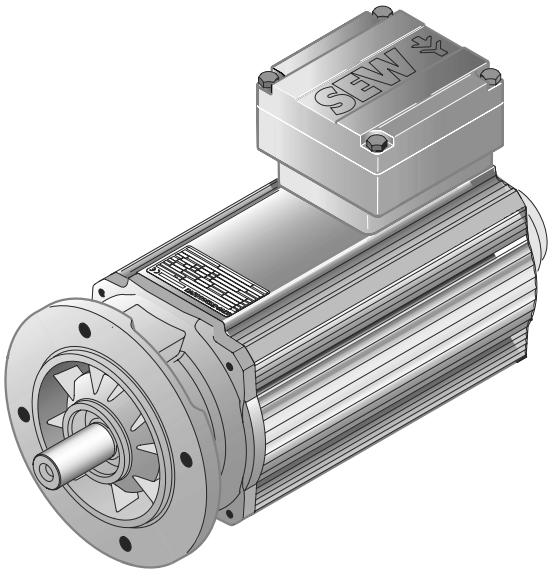

DAS... / IS

52823AXX

12.1 Basic structure

The following illustration is intended to explain the general structure. Its only purpose is to facilitate the assignment of components to the spare parts lists. Discrepancies are possible depending on the motor size and version!

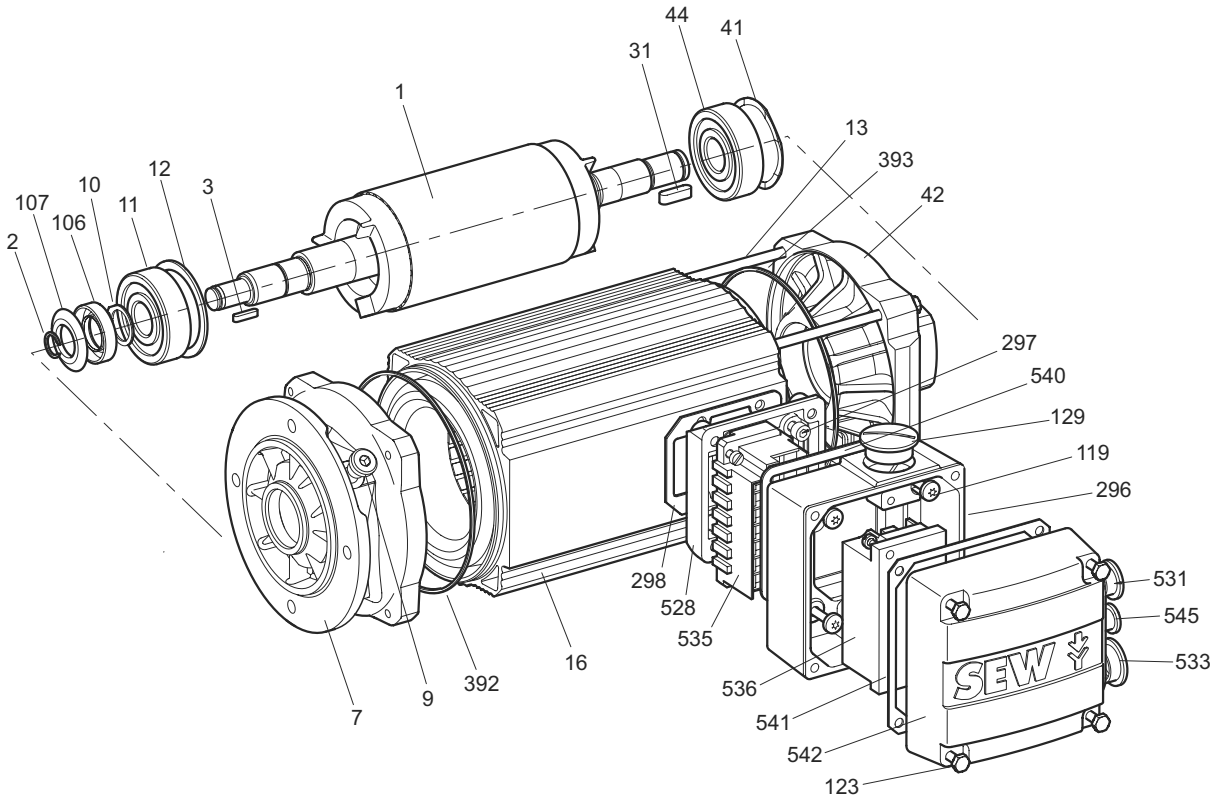

52427AXX

[1]	Rotor	[42]	Non drive-end bearing shield	[528]	Adapter plate
[2]	Circlip	[44]	Grooved ball bearings	[531]	Screw plug
[3]	Key	[106]	Oil seal	[533]	Screw plug
[7]	Flanged end shield	[107]	Oil-flinger ring	[535]	Plug connector
[9]	Screw plug	[119]	Machine screw	[536]	Plug connector
[10]	Circlip	[123]	Hex head bolt	[540]	IS adapter plate gasket
[11]	Grooved ball bearings	[129]	Screw plug	[541]	Cover gasket
[12]	Circlip	[296]	Adapter plate IS	[542]	Terminal box cover
[13]	Hex head bolt	[297]	Machine screw	[545]	Screw plug
[16]	Stator	[298]	Adapter plate gasket		
[31]	Key	[392]	O-ring		
[41]	Equalizing ring	[393]	O-ring		

12.2 Motor data

1500 rpm S1

Motor type	P_N M_N [kW] [Nm]	n_N [rpm]	I_N 380 - 415 V (400 V) [A]	cosφ	I_A/I_N	M_A/M_N M_H/M_N	J_{Mot} 2) [10^{-4} kgm^2]	J_{Mot} 3) [10^{-4} kgm^2]	Z_0 BG[4] BGE[5] [1/h]	M_{Bmax} [Nm]	m[1] 2) [kg]	m[1] 3) [kg]
DAS80K4	0.25 1.68	1420	0.70 (0.69)	0.68	4.5	3.0 2.7	6.6	8.4	2100 6000	7	9.2	11.3
DAS80N4	0.37 2.53	1400	0.98 (0.92)	0.75	4.1	2.5 2.3	8.7	10.5	2600 7000	7	11.4	13.5
DAS90S4	0.55 3.62	1450	1.41 (1.41)	0.70	7.1	4.5 3.3	34	38	1300 3200	20	20.5	25
DAS90L4	0.75 5.0	1435	1.67 (1.61)	0.77	6.2	3.1 2.5	34	38	1500 3800	20	20.5	25
DAS100M4	1.1 7.3	1445	2.95 (2.50)	0.75	7.8	4.3 3.5	65	69	1000 4200	20	27	32.5
DAS100L4	1.5 9.8	1465	3.45 (3.35)	0.76	8.9	3.3 2.9	89	93	950 4000	20	34.5	40

1) Weight varies slightly according to flange size
2) without brake
3) with brake
4) Operation with BG brake control system
5) Operation with BGE brake control system

You can request necessary wiring diagrams for project planning of brakes and motors from SEW-EURODRIVE.

1500 rpm S3 intermittent operation

Motor type	S3 / 60 % [kW]	S3 / 40 % [kW]	S3 / 25 % [kW]
DAS80K4	0.3	0.37	0.55
DAS80N4	0.45	0.55	0.75
DAS90S4	0.75	0.9	1.1
DAS90L4	0.95	1.1	1.5
DAS100M4	1.35	1.7	2.2
DAS100L4	1.85	2.3	3

12.3 Gear unit gaskets and washers

Designation	Material	
	Standard	Option
Radial oil seal	NBR	75FKM585
Closing cap	NBR	-
O-ring	NBR	-
Loctite sealing compound	Loctite 574	-
Gear unit cover gasket	ANT6800	-
Motor flange aluminum gasket	AMF 38	Paper

12.4 Motor gaskets

Designation	Material	
	Standard	Option
Radial oil seal	75FKM585	NBR
O-ring stator fit	NBR	-
O-ring screw plug	NBR	-
Encoder flange gasket	MP15-0570	-
Housing cover gasket	EPDM	-
Adapter plate gasket	EPDM	-
IS bottom part gasket	SBR 1704	-
IS cover gasket	SBR 1704	-

It is essential to check that the gaskets used are compatible with the cleaning agents employed.

12.5 Available motor options

Overview

The following motor options are available:

- BR brakes
- Surface protection OS2, OS3, OS4
- TH instead of TF
- Enclosure IP69k

12.6 Standards and regulations

Conformance to standards

AC motors and AC brake motors from SEW-EURODRIVE conform to the relevant standards and regulations, in particular:

- IEC 60034-1, EN 60034-1

  Electrical rotating machinery, rating and performance
- EN 60529

  IP degrees of protection for housings of electrical equipment
- EN 50262

  Metric threads of cable screw fittings

12.7 Nameplate

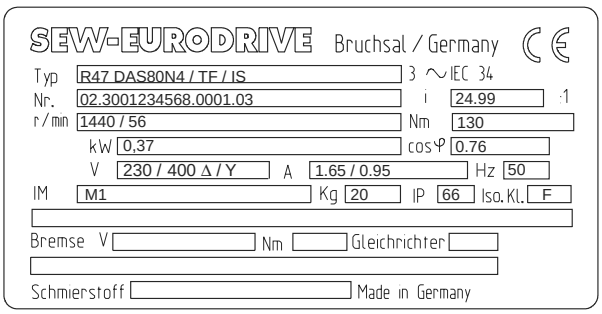

52633AXX

Figure 4: Example nameplate

The specific data of an asynchronous AC motor (AC squirrel-cage motor) are its size, rated power, cyclic duration factor, rated speed, rated current, rated voltage, power factor cosφ, enclosure, thermal classification and efficiency category. These data are indicated on the nameplate of the motor. In accordance with IEC 60034 (EN 60034), the nameplate data apply to a maximum ambient temperature of 40 °C and a maximum altitude of 1000 m above sea level.

12.8 Electrical characteristics

Suitability for use with an inverter

ASEPTIC motors can be operated on inverters, for example SEW-EURODRIVE MOVIDRIVE®, MOVITRAC®, thanks to the high quality of insulation (including phase separator) with which they are equipped as standard.

Frequency

SEW-EURODRIVE ASEPTIC motors are designed for a supply frequency of 50 Hz or 60 Hz on request. As standard, the technical data for aseptic drives refer to a 50 Hz supply frequency.

Motor voltage

ASEPTIC motors are available for rated voltages from 220 to 690 V.

Motor sizes 80 to 100 are normally supplied configured for the 220 V_{AC} ... 240 V_{AC} / 380 V_{AC} ... 415 V_{AC}, 50 Hz voltage range. The scope of delivery for the IS plug connector includes the variable terminal link.

For 50 Hz supply systems

The **standard voltages** are:

Motors	**Motor size 80...100**
Motor voltage	230 V / 400 V Δ/W
For the voltage range Motor voltage	220 V_{AC} ...240 V_{AC} / 380 V_{AC} ...415 V_{AC} Δ/W
Brake voltage	24 V_{DC} / 230 V_{AC} / 400 V_{AC}
For the voltage range Brake voltage	220 V_{AC} ...240 V_{AC} 380 V_{AC} ...415 V_{AC}

Motors and brakes for 230 V_{AC} / 400 V_{AC} and motors for 690 V_{AC} may also be operated on supply systems with a rated voltage of 220 V_{AC} / 380 V_{AC} or 660 V_{AC} respectively. The voltage-dependent data are then slightly different.

50 Hz motor on 60 Hz supply system

The rated data of motors designed for 50 Hz supply systems are slightly different when the motors are operated on 60 Hz supply systems.

Motor voltage at 50 Hz	**Motor connection**	**U [V] at 60 Hz**	**Modified rated data**			
			n_N	**P_N**	**M_N**	**M_A/M_N**
230/400 V_{AC} Δ/W	Δ	230	+20 %	0 %	–17 %	–17 %
230/400 V_{AC} Δ/W	**W**	460	+20 %	+20 %	0 %	0 %
400/690 V_{AC} Δ/W	Δ					

Motors for North America

Motors for the United States are in NEMA design. UL and CSA certification are in preparation. In case of questions please contact SEW-EURODRIVE.

The following voltage assignments (60 Hz) are customary in the USA and Canada:

	Rated voltage of the supply system	**Rated voltage of the motor**
USA	208 V	200 V
	240 V	230 V
	480 V	460 V

12.9 Enclosures

	Enclosure types
Motors	IP66, optionally IP69k
Brake motors	IP65

12.10 Brakes

General information

On request, SEW-EURODRIVE ASEPTIC gearmotors can be supplied with an integrated mechanical brake. The brake is an electromagnetic disc brake with a DC coil that opens electrically and brakes using spring force. The brake is applied in case of a power failure. This means it complies with fundamental safety requirements. You cannot release the brake manually. The brake is activated by a brake control system housed either in the wiring space of the motor or in the control cabinet. Refer to the "Brakes and Accessories" manual for detailed information about SEW-EURODRIVE brakes.

A significant advantage of SEW-EURODRIVE brakes is their very short length. The brake bearing end shield is a part of both the motor and the brake. The integrated construction of the brake motor permits particularly compact and sturdy solutions.

Basic structure

The illustration below shows the basic structure of the brake.

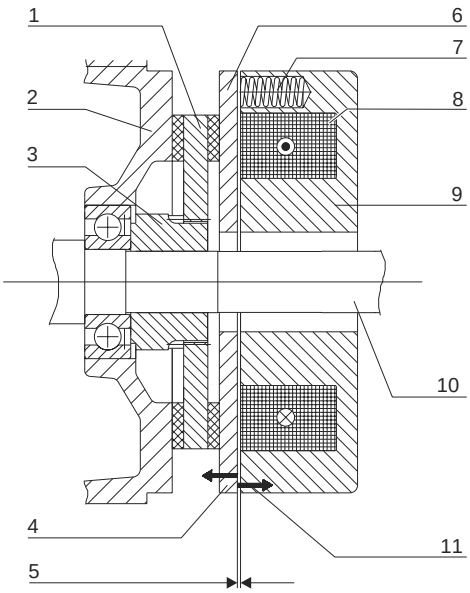

00871BXX

Figure 5: Basic structure of the brake

[1]	Brake disc	[5]	Working air gap	[9]	Brake coil body
[2]	Brake end shield	[6]	Pressure plate	[10]	Motor shaft
[3]	Carrier	[7]	Brake spring	[11]	Electromagnetic force
[4]	Spring force	[8]	Brake coil		

Short response times

A particular feature of the brake is its patented two coil system. This system comprises the accelerator coil BS and the coil section TS. The special SEW-EURODRIVE brake control system ensures that, when the brake is released, the accelerator coil is switched on first with a high current inrush, after which the coil section is switched on. The result is a particularly short response time when releasing the brake. The brake disk moves clear very swiftly and the motor starts up with hardly any brake friction.

This principle of the two coil system also reduces self-induction so that the brake is applied more rapidly. The result is a reduced braking distance. The brake can be switched off in the DC and AC circuit to achieve particularly short response times when applying the brake, for example in hoists.

Current and braking torque

AC isolation:

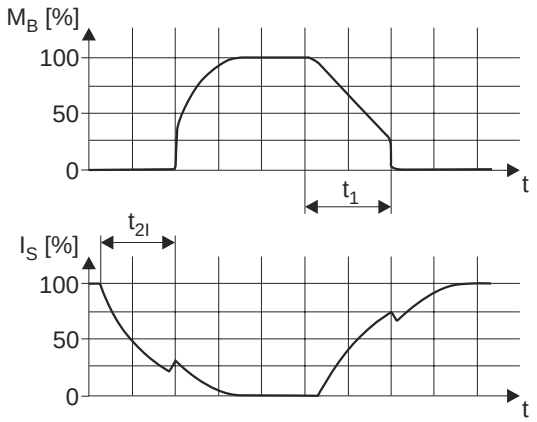

04371AXX

Figure 6: Current and braking torque for cut-off in the AC circuit

DC and AC isolation:

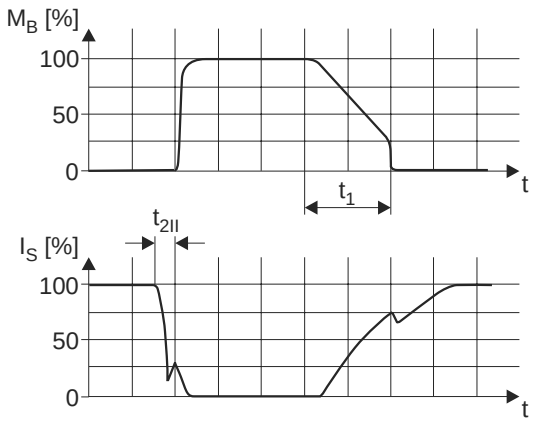

04372AXX

Figure 7: Current and braking torque for DC and AC isolation

M_B= Braking torque

I_S = Coil current

Brake control

Various brake control systems are available for controlling disk brakes with a DC coil, depending on the requirements and the operating conditions. All brake control systems are protected against overvoltage by varistors as standard. Refer to the "Brakes and Accessories" manual for detailed information about SEW-EURODRIVE brakes.

The brake control systems are either installed directly on the motor in the wiring space or in the control cabinet.

Standard design

As standard, AC brake motors DAS...BR are supplied with an installed brake control system BG/BGE for AC connection or a control unit BSG installed in the control cabinet for 24 V_{DC} connection. The motors are then completely ready for connection.

Motor type	AC connection	24 V_{DC} connection
DAS80 /BR **DAS90 /BR** **DAS100 /BR**	BG	Without control unit[1)]
	BGE	BSG[2)]

1) The overvoltage protection must be implemented by the customer, for example using varistors.

2) In control cabinet

Brake control system in wiring space

The supply voltage for brakes with an AC connection is either supplied separately or taken from the supply system of the motor in the wiring space. Only motors with a fixed speed can be supplied from the motor supply voltage. For operation on the inverter, the supply voltage for the brake must be supplied separately.

In addition, it is necessary bear in mind that brake application is delayed by the residual voltage of the motor in case the brake is powered by the motor supply voltage. The brake application time t_{2I} stated in the technical data for cut-off in the AC circuit applies to a separate supply only.

Motor wiring space

The following tables list the technical data of brake control systems for installation in the motor wiring space and the assignments with regard to motor size and connection technology. The different housings have different colors (= color code) to make them easier to distinguish.

Type	Function	Voltage	Holding current I_{Hmax} [A]	Type	Part number	Color code
BG	One-way rectifier	90...500 V_{AC}	1.2	BG 1.2	826 992 0	Black
BGE	One-way rectifier with electronic switching	150...500 V_{AC}	1.5	BGE 1.0	827 599 8	Red
BSR	One-way rectifier + current relay for cut-off in the DC circuit	90...500 V_{AC}	1.2	BG1.2 + SR 11	826 992 0 + 826 761 8	

Control cabinet

The following tables list the technical data of brake control systems for installation in the control cabinet and the assignments with regard to motor size and connection technology. The different housings have different colors (= color code) to make them easier to distinguish.

Type	Function	Voltage	Holding current I_{Hmax} [A]	Type	Part number	Color code
BMS	One-way rectifier like BG	150...500 V_{AC}	1.5	BMS 1.5	825 802 3	Black
		24...150 V_{AC}	3.0	BMS 3	825 803 1	Brown
BME	One-way rectifier with electronic switching like BGE	150...500 V_{AC}	1.5	BME 1.5	825 722 1	Red
		42...150 V_{AC}	3.0	BME 3	825 723 X	Blue
BMH	One-way rectifier with electronic switching and heating function	150...500 V_{AC}	1.5	BMH 1.5	825 818 X	Green
		42...150 V_{AC}	3	BMH 3	825 819 8	Yellow
BMP	One-way rectifier with electronic switching, integrated voltage relay for cut-off in the DC circuit	150...500 V_{AC}	1.5	BMP 1.5	825 685 3	White
		42...150 V_{AC}	3.0	BMP 3	826 566 6	Light blue
BMK	One-way rectifier with electronic switching, 24 V_{DC} control input and cut-off in the DC circuit	150...500 V_{AC}	1.5	BMK 1.5	826 463 5	Aqua
		42...150 V_{AC}	3.0	BMK 3	826 567 4	Bright red
BSG	Electronic switch mode	24 V_{DC}	5.0	BSG	825 459 1	White

12.11 Braking torques BR1, BR2

Motor	Brake Type	Braking torque [Nm]	Work done until maintenance [10^6 J]	Type and no. of springs		Part number	
				Standard	Red	Standard	Red
DAS80	**BR1**	5 7	60	- 2	6 2	186 662 1	183 742 7
DAS90 DAS100	**BR2**	14 20	90	2 3	2 -	186 663 X	184 003 7

12.12 Operating currents

The current values I_H (holding current) specified in the tables are r.m.s. values. Use only r.m.s. instruments for your measurement. The inrush current (accelerator current) I_B only flows for a short time (max. 120 ms) when the brake is released or during voltage dips below 70 % of rated voltage. There will be no increased inrush current when using the BG brake rectifier or with direct DC voltage supply.

Brake BR1, BR2

		BR1	BR2
Motor size		DAS80	DAS90 DAS100
Max. braking torque [Nm]		7	20
Braking power [W]		45	55
Inrush current ratio I_B/I_H		4.0	4.0
Response and application times	t_1 [ms]	20	30
	t_{2I} [ms]	100	120
	t_{2II} [ms]	40	35

Rated voltage V_N		BR1	BR2
V_{AC}	V_{DC}	I_H [A_{AC}]	I_H [A_{AC}]
	24	1.5	1.7
110		0.71	0.9
230		0.31	0.39
400		0.18	0.22
460		0.16	0.21

I_B = Accelerator current – short-term inrush current

I_H = Holding current r.m.s. value in the connecting harness to the SEW brake rectifier

V_N = Rated voltage (rated voltage range)

12.13 Operation on inverter

The extensive product range of SEW-EURODRIVE inverters is available for designing electronically controlled drives.

SEW-EURODRIVE offers the following inverter series:

- **MOVITRAC® MC07:** Compact and inexpensive frequency inverter for the power range 0.37 kW to 45 kW. One and three phase mains connection for 230 V_{AC} and three phase mains connection for 400 V_{AC} to 500 V_{AC}.
- **MOVIDRIVE® MDX60/61B:** High-performance drive inverter for dynamic drives in the power range 0.55 kW to 160 kW. Wide range of applications thanks to extensive expansion options with technology and communication options. Three phase mains connection for 230 V_{AC} and 400 V_{AC} to 500 V_{AC}.

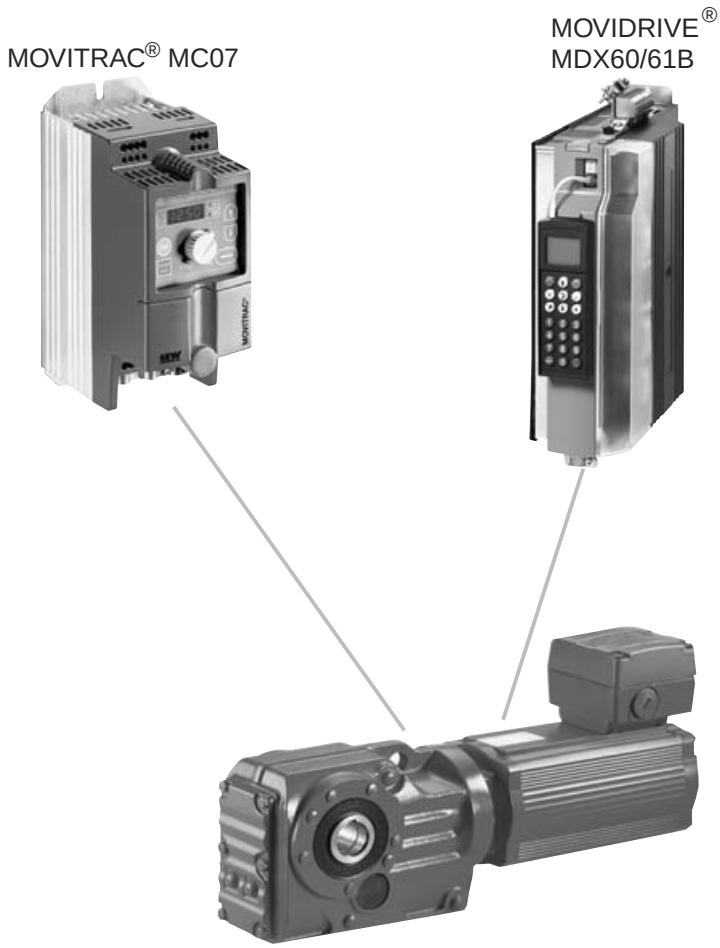

52921AXX

Figure 8: Range of inverters for aseptic motors

13 Dimension Sheets

13.1 Dimension sheet notes

The following dimension sheets show the dimensions of the attached motors. For all other dimensions, refer to the dimension sheets of the Gearmotors catalog, taking into account the extra length LB/LBS (see following pages).

08 230 00 03

DAS80

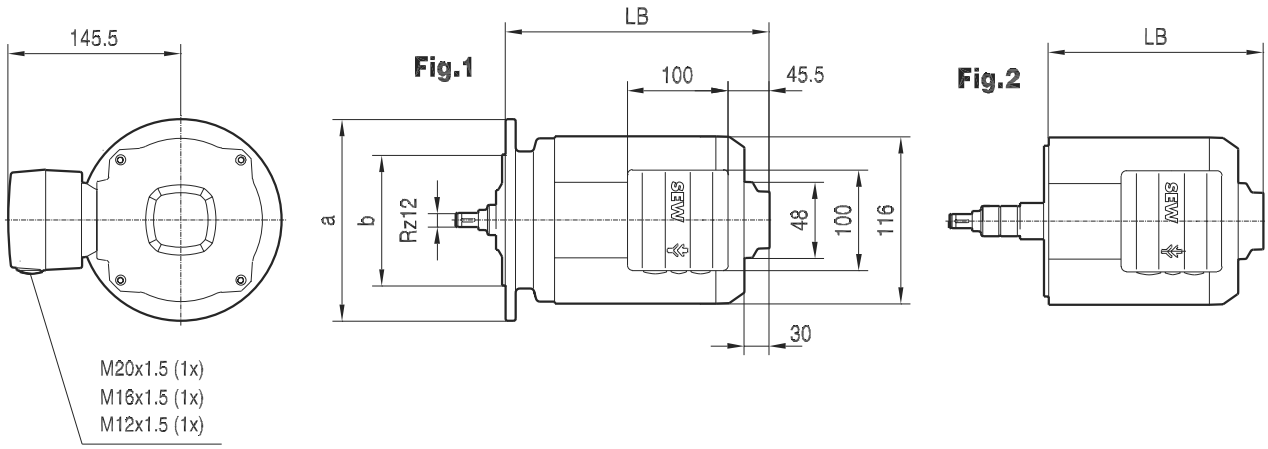

Gear unit				a	b	LB	Fig.
R27/37	F37/47	K37	S37/47/57	120	80	257	1
R47/57/67	F57/67	K47/57/67	S67	160	110	250.5	1
R77	F77	K77	S77	200	130	244.5	1
W30	-	-	-	-	-	215	2

09 073 00 03

DAS80 / BR

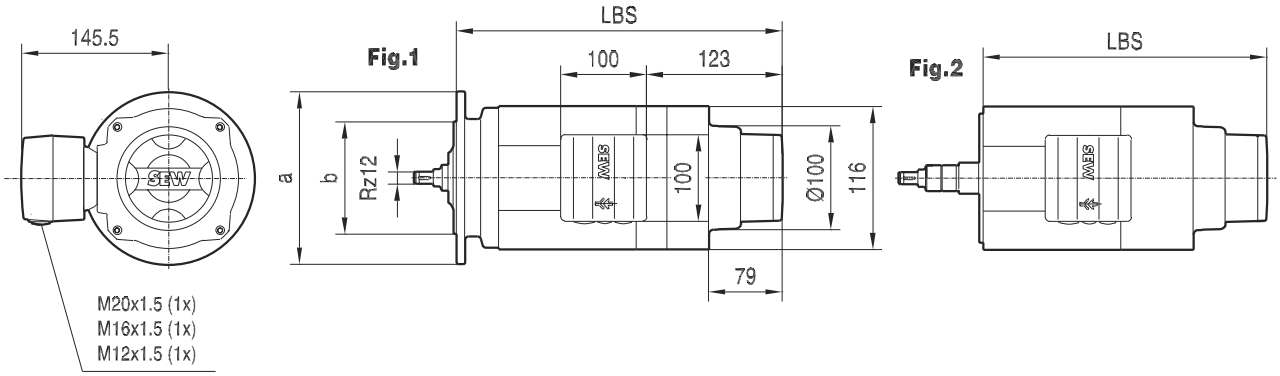

Gear unit				a	b	LBS	Fig.
R27/37	F37/47	K37	S37/47/57	120	80	334.5	1
R47/57/67	F57/67	K47/57/67	S67	160	110	328	1
R77	F77	K77	S77	200	130	322	1
W30	-	-	-	-	-	292.5	2

08 231 00 03

DAS90

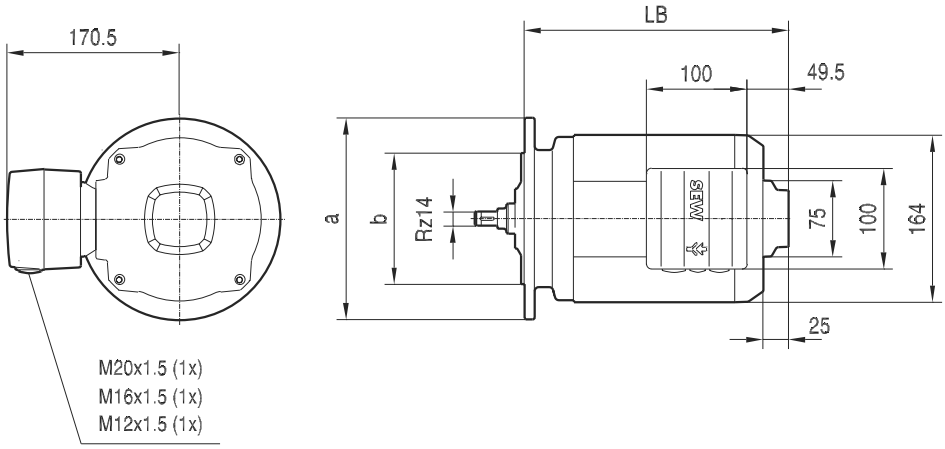

Gear unit				a	b	LB
R27/37	F37/47	K37	S37/47/57	120	80	276.5
R47/57/67	F57/67	K47/57/67	S67	160	110	270
R77	F77	K77	S77	200	130	262
R87	F87	K87	S87	250	180	258
R97	F97	K97	S97	300	230	252

09 074 00 03

DAS90 / BR

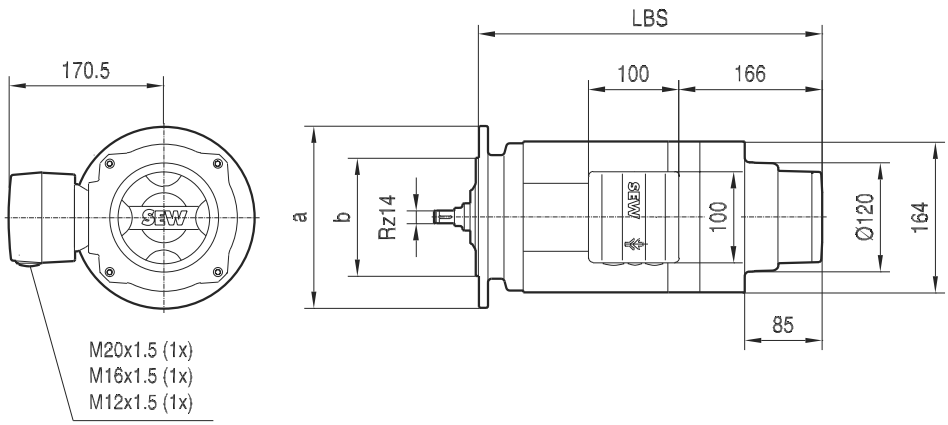

Gear unit				a	b	LBS
R27/37	F37/47	K37	S37/47/57	120	80	393
R47/57/67	F57/67	K47/57/67	S67	160	110	386.5
R77	F77	K77	S77	200	130	378.5
R87	F87	K87	S87	250	180	374.5
R97	F97	K97	S97	300	230	368.5

08 232 00 03

DAS100

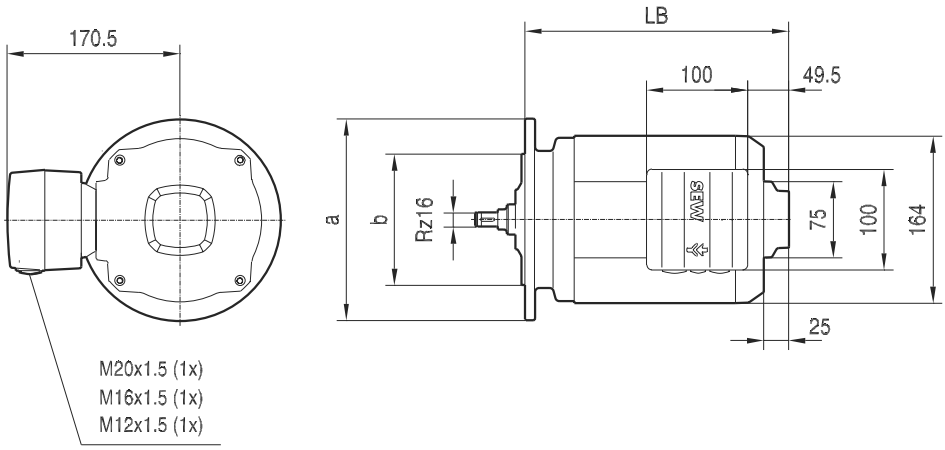

Gear unit				a	b	LB
R27/37	F37/47	K37	S37/47/57	120	80	359
R47/57/67	F57/67	K47/57/67	S67	160	110	350
R77	F77	K77	S77	200	130	342
R87	F87	K87	S87	250	180	338
R97	F97	K97	S97	300	230	332
R107	F107	K107	-	350	250	326

09 075 00 03

DAS100 / BR

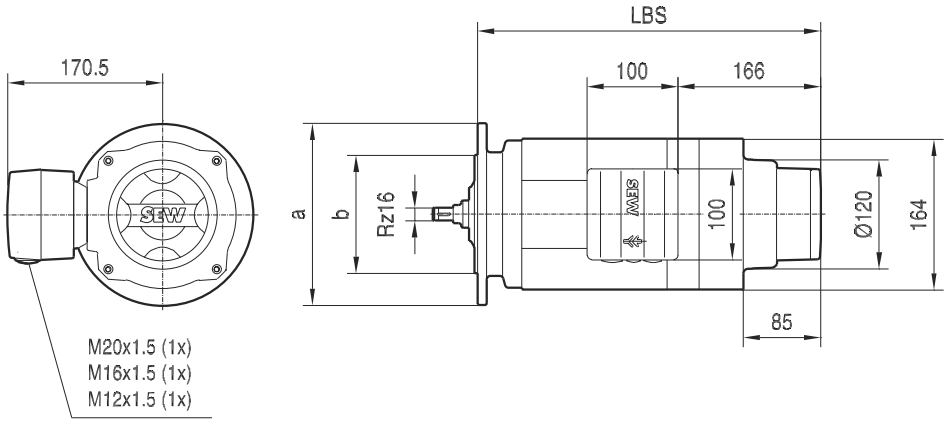

Gear unit				a	b	LBS
R27/37	F37/47	K37	S37/47/57	120	80	475.5
R47/57/67	F57/67	K47/57/67	S67	160	110	466.5
R77	F77	K77	S77	200	130	458.5
R87	F87	K87	S87	250	180	454.5
R97	F97	K97	S97	300	230	448.5
R107	F107	K107	-	350	250	442.5

14 Index

A
Anti-friction bearing grease 25
Application range 6
ASEPTIC gearmotors 8
ASEPTICplus 9

B
Brake control 89
Brakes 81
Braking torque 88
Braking torque BR1, BR2 91

C
Cable entry 24
Checklist 21
Corrosion protection 10

E
Electrical characteristics 86
Enclosure 86

G
Gear unit gaskets and washers 84

I
Inverter operation 92
Inverter suitability 86

L
Lubricant table 26
Lubricants 25

M
Motor data 83
Motor design 82
Motor gaskets 84
Motor options 85
Motor terminal box 24
Motor voltage 86
Mounting position designation 23

N
NOCO® fluid 10

O
OS4 resistance 12
Overview of types 6

P
Product description 6
Product range of SEW 4
Project planning 19

R
Regulations 85

S
Seals 84
Standards 85
Surface protection 10

T
Technical data 93

W
Weights 15

Address Directory

Germany			
Headquarters **Production** **Sales**	**Bruchsal**	SEW-EURODRIVE GmbH & Co KG Ernst-Blickle-Straße 42 D-76646 Bruchsal P.O. Box Postfach 3023 · D-76642 Bruchsal	Tel. +49 7251 75-0 Fax +49 7251 75-1970 http://www.sew-eurodrive.de sew@sew-eurodrive.de
Production	**Graben**	SEW-EURODRIVE GmbH & Co KG Ernst-Blickle-Straße 1 D-76676 Graben-Neudorf P.O. Box Postfach 1220 · D-76671 Graben-Neudorf	Tel. +49 7251 75-0 Fax +49 7251 75-2970
Production	**Östringen**	SEW-EURODRIVE Östringen GmbH Franz-Gurk-Straße 2 D-76684 Östringen P.O. Box Postfach 1174 · D-76677 Östringen	Tel. +49 7253 92540 Fax +49 7253 925490 oestringen@sew-eurodrive.de
Service **Competence Center**	**Central** Gear units / Motors	SEW-EURODRIVE GmbH & Co KG Ernst-Blickle-Straße 1 D-76676 Graben-Neudorf	Tel. +49 7251 75-1710 Fax +49 7251 75-1711 sc-mitte-gm@sew-eurodrive.de
	Central Electronics	SEW-EURODRIVE GmbH & Co KG Ernst-Blickle-Straße 42 D-76646 Bruchsal	Tel. +49 7251 75-1780 Fax +49 7251 75-1769 sc-mitte-e@sew-eurodrive.de
	North	SEW-EURODRIVE GmbH & Co KG Alte Ricklinger Straße 40-42 D-30823 Garbsen (near Hannover)	Tel. +49 5137 8798-30 Fax +49 5137 8798-55 sc-nord@sew-eurodrive.de
	East	SEW-EURODRIVE GmbH & Co KG Dänkritzer Weg 1 D-08393 Meerane (near Zwickau)	Tel. +49 3764 7606-0 Fax +49 3764 7606-30 sc-ost@sew-eurodrive.de
	South	SEW-EURODRIVE GmbH & Co KG Domagkstraße 5 D-85551 Kirchheim (near München)	Tel. +49 89 909552-10 Fax +49 89 909552-50 sc-sued@sew-eurodrive.de
	West	SEW-EURODRIVE GmbH & Co KG Siemensstraße 1 D-40764 Langenfeld (near Düsseldorf)	Tel. +49 2173 8507-30 Fax +49 2173 8507-55 sc-west@sew-eurodrive.de
	Drive Service Hotline / 24 Hour Service		+49 180 5 SEWHELP +49 180 5 7394357
Technical Offices	**Augsburg**	SEW-EURODRIVE GmbH & Co KG August-Wessels-Straße 29 D-86156 Augsburg	Tel. +49 821 22779-10 Fax +49 821 22779-50 tb-augsburg@sew-eurodrive.de
	Berlin	SEW-EURODRIVE GmbH & Co KG Lilienthalstraße 3a D-15732 Waltersdorf	Tel. +49 33762 2266-30 Fax +49 33762 2266-36 tb-berlin@sew-eurodrive.de
	Bodensee	SEW-EURODRIVE GmbH & Co KG Burgbergring 91 D-88662 Überlingen	Tel. +49 7551 9226-30 Fax +49 7551 9226-56 tb-bodensee@sew-eurodrive.de
	Bremen	SEW-EURODRIVE GmbH & Co KG Kohlhökerstr.48 D-28203 Bremen	Tel. +49 421 33918-0 Fax +49 421 33918-22 tb-bremen@sew-eurodrive.de
	Dortmund	SEW-EURODRIVE GmbH & Co KG Hildastraße 10 D-44145 Dortmund	Tel. +49 231 912050-10 Fax +49 231 912050-20 tb-dortmund@sew-eurodrive.de
	Dresden	SEW-EURODRIVE GmbH & Co KG Hauptstraße 32 D-01445 Radebeul	Tel. +49 351 26338-0 Fax +49 351 26338-38 tb-dresden@sew-eurodrive.de
	Erfurt	SEW-EURODRIVE GmbH & Co KG Blumenstraße 70 D-99092 Erfurt	Tel. +49 361 21709-70 Fax +49 361 21709-79 tb-erfurt@sew-eurodrive.de
	Güstrow	SEW-EURODRIVE GmbH & Co KG Thünenweg 19 D-18273 Güstrow P.O. Box Postfach 1216 · D-18262 Güstrow	Tel. +49 3843 8557-80 Fax +49 3843 8557-88 tb-guestrow@sew-eurodrive.de

Germany			
	Hamburg	SEW-EURODRIVE GmbH & Co KG Wohldorfer Straße 5 D-22081 Hamburg P.O. Box Postfach 7610 07 · D-22060 Hamburg	Tel. +49 40 298109-60 Fax +49 40 298109-70 tb-hamburg@sew-eurodrive.de
	Hannover/Garbsen	SEW-EURODRIVE GmbH & Co KG Alte Ricklinger Str.40-42 D-30823 Garbsen P.O. Box Postfach 1104 53 · D-30804 Garbsen	Tel. +49 5137 8798-10 Fax +49 5137 8798-50 tb-hannover@sew-eurodrive.de
	Heilbronn	SEW-EURODRIVE GmbH & Co KG Zeppelinstraße 7 D-74357 Bönnigheim P.O. Box Postfach 68 · D-74355 Bönnigheim	Tel. +49 7143 8738-0 Fax +49 7143 8738-25 tb-heilbronn@sew-eurodrive.de
	Herford	SEW-EURODRIVE GmbH & Co KG Radewiger Straße 21 D-32052 Herford P.O. Box Postfach 4108 · D-32025 Herford	Tel. +49 5221 9141-0 Fax +49 5221 9141-20 tb-herford@sew-eurodrive.de
	Karlsruhe	SEW-EURODRIVE GmbH & Co KG Ettlinger Weg 2 D-76467 Bietigheim P.O. Box Postfach 43 · D-76463 Bietigheim	Tel. +49 7245 9190-10 Fax +49 7245 9190-20 tb-karlsruhe@sew-eurodrive.de
	Kassel	SEW-EURODRIVE GmbH & Co KG Waldauer Weg 80 D-34253 Lohfelden	Tel. +49 561 95144-80 Fax +49 561 95144-90 tb-kassel@sew-eurodrive.de
	Koblenz	SEW-EURODRIVE GmbH & Co KG Bahnstraße 17a D-56743 Mendig	Tel. +49 2652 9713-30 Fax +49 2652 9713-40 tb-koblenz@sew-eurodrive.de
	Lahr	SEW-EURODRIVE GmbH & Co KG Europastraße 3 D-77933 Lahr / Schwarzwald	Tel. +49 7821 90999-60 Fax +49 7821 90999-79 tb-lahr@sew-eurodrive.de
	Langenfeld	SEW-EURODRIVE GmbH & Co KG Siemensstraße 1 D-40764 Langenfeld	Tel. +49 2173 8507-10 Fax +49 2173 8507-50 tb-langenfeld@sew-eurodrive.de
	Magdeburg	SEW-EURODRIVE GmbH & Co KG Burgstraße 7 D-39326 Wolmirstedt	Tel. +49 39201 7004-1 Fax +49 39201 7004-9 tb-magdeburg@sew-eurodrive.de
	Mannheim	SEW-EURODRIVE GmbH & Co KG Radeberger Straße 2 D-68309 Mannheim	Tel. +49 621 71683-10 Fax +49 621 71683-22 tb-mannheim@sew-eurodrive.de
	München	SEW-EURODRIVE GmbH & Co KG Domagkstraße 5 D-85551 Kirchheim	Tel. +49 89 909551-10 Fax +49 89 909551-50 tb-muenchen@sew-eurodrive.de
	Münster	SEW-EURODRIVE GmbH & Co KG Von-Vincke-Straße 14 D-48143 Münster	Tel. +49 251 41475-11 Fax +49 251 41475-50 tb-muenster@sew-eurodrive.de
	Nürnberg	SEW-EURODRIVE GmbH & Co KG Plattenäckerweg 6 D-90455 Nürnberg	Tel. +49 911 98884-50 Fax +49 911 98884-60 tb-nuernberg@sew-eurodrive.de
	Regensburg	SEW-EURODRIVE GmbH & Co KG Im Gewerbepark A15 D-93059 Regensburg	Tel. +49 941 46668-68 Fax +49 941 46668-66 tb-regensburg@sew-eurodrive.de
	Rhein-Main	SEW-EURODRIVE GmbH & Co KG Niederstedter Weg 5 D-61348 Bad Homburg	Tel. +49 6172 9617-0 Fax +49 6172 9617-50 tb-rheinmain@sew-eurodrive.de
	Stuttgart	SEW-EURODRIVE GmbH & Co KG Friedrich-List-Straße 42 D-70771 Leinfelden-Echterdingen	Tel. +49 711 16072-0 Fax +49 711 16072-72 tb-stuttgart@sew-eurodrive.de
	Ulm	SEW-EURODRIVE GmbH & Co KG Dieselstraße 14 D-89160 Dornstadt	Tel. +49 7348 9885-0 Fax +49 7348 9885-90 tb-ulm@sew-eurodrive.de

Germany			
	Würzburg	SEW-EURODRIVE GmbH & Co KG Nürnbergerstraße 118 D-97076 Würzburg-Lengfeld	Tel. +49 931 27886-60 Fax +49 931 27886-66 tb-wuerzburg@sew-eurodrive.de
	Zwickau / Meerane	SEW-EURODRIVE GmbH & Co KG Dänkritzer Weg1 D-08393 Meerane	Tel. +49 3764 7606-0 Fax +49 3764 7606-20 tb-zwickau@sew-eurodrive.de

France			
Production Sales Service	**Haguenau**	SEW-USOCOME 48-54, route de Soufflenheim B. P. 20185 F-67506 Haguenau Cedex	Tel. +33 3 88 73 67 00 Fax +33 3 88 73 66 00 http://www.usocome.com sew@usocome.com
Assembly Sales Service	**Bordeaux**	SEW-USOCOME Parc d'activités de Magellan 62, avenue de Magellan - B. P. 182 F-33607 Pessac Cedex	Tel. +33 5 57 26 39 00 Fax +33 5 57 26 39 09
	Lyon	SEW-USOCOME Parc d'Affaires Roosevelt Rue Jacques Tati F-69120 Vaulx en Velin	Tel. +33 4 72 15 37 00 Fax +33 4 72 15 37 15
	Paris	SEW-USOCOME Zone industrielle 2, rue Denis Papin F-77390 Verneuil l'Etang	Tel. +33 1 64 42 40 80 Fax +33 1 64 42 40 88
Technical Offices	**Alsace Franche-Comté**	SEW-USOCOME 15, rue de Mambourg F-68240 Sigolsheim	Tel. +33 3 89 78 45 11 Fax +33 3 89 78 45 12
	Alsace Nord	SEW-USOCOME 35, rue Jeanne d'Arc F-67250 Surbourg	Tel. +33 3 88 54 74 44 Fax +33 3 88 80 47 62
	Aquitaine	SEW-USOCOME Parc d'activités de Magellan 62, avenue de Magellan B.P.182 F-33607 Pessac Cedex	Tel. +33 5 57 26 39 00 Fax +33 5 57 26 39 09
	Ardennes Lorraine	SEW-USOCOME 7, rue de Prény F-54000 Nancy	Tel. +33 3 83 96 28 04 Fax +33 3 83 96 28 07
	Bourgogne	SEW-USOCOME 10, rue de la Poste F-71350 Saint Loup Géanges	Tel. +33 3 85 49 92 18 Fax +33 3 85 49 92 19
	Bretagne Ouest	SEW-USOCOME 4, rue des Châtaigniers F-44830 Brains	Tel. +33 2 51 70 54 04 Fax +33 2 51 70 54 05
	Centre Auvergne	SEW-USOCOME 27, avenue du Colombier F-19150 Laguenne	Tel. +33 5 55 20 12 10 Fax +33 5 55 20 12 11
	Centre Pays de Loire	SEW-USOCOME 9, rue des Erables F-37540 Saint Cyr sur Loire	Tel. +33 2 47 41 33 23 Fax +33 2 47 41 34 03
	Champagne	SEW-USOCOME 2, chemin des Suivots F-10120 Saint André les Vergers	Tel. +33 3 25 79 63 24 Fax +33 3 25 79 63 25
	Lyon Nord-Est	SEW-USOCOME Parc d'Affaires Roosevelt Rue Jacques Tati F-69120 Vaulx en Velin	Tel. +33 4 72 15 37 03 Fax +33 4 72 15 37 15
	Lyon Ouest	SEW-USOCOME Parc d'Affaires Roosevelt Rue Jacques Tati F-69120 Vaulx en Velin	Tel. +33 4 72 15 37 04 Fax +33 4 72 15 37 15
	Lyon Sud-Est	SEW-USOCOME 4, Montée de la Garenne F-26750 Génissieux	Tel. +33 4 75 05 65 95 Fax +33 4 75 05 65 96

France			
	Nord	SEW-USOCOME 348, rue du Calvaire F-59213 Bermerain Cidex 102	Tel. +33 3 27 27 07 88 Fax +33 3 27 27 24 41
	Normandie	SEW-USOCOME 5 rue de la Redoute F-14880 Colleville Montgomery	Tel. +33 2 31 37 92 86 Fax +33 2 31 74 68 15
	Paris Est	SEW-USOCOME Résidence Le Bois de Grâce 2, allée des Souches Vertes F-77420 Champs sur Marne	Tel. +33 1 64 68 40 50 Fax +33 1 64 68 45 00
	Paris Ouest	SEW-USOCOME 24b quai de l'Oise F-78570 Andresy	Tel. +33 1 39 27 85 59 Fax +33 1 39 27 93 57
	Paris Picardie	SEW-USOCOME 25 bis, rue Kléber F-92300 Levallois Perret	Tel. +33 1 41 05 92 74 Fax +33 1 41 05 92 75
	Paris Sud	SEW-USOCOME 6. chemin des Bergers Lieu-dit Marchais F-91410 Roinville sous Dourdan	Tel. +33 1 60 81 10 56 Fax +33 1 60 81 10 57
	Provence	SEW-USOCOME Résidence Les Hespérides Bât. B2 67, boulevard des Alpes F-13012 Marseille	Tel. +33 4 91 18 00 11 Fax +33 4 91 18 00 12
	Pyrénées	SEW-USOCOME 271, Lieu-dit Ninaut F-31190 Caujac	Tel. +33 5 61 08 15 85 Fax +33 5 61 08 16 44
	Sud-Atlantique	SEW-USOCOME 12, rue des Pinsons F-44120 Vertou	Tel. +33 2 40 80 32 23 Fax +33 2 40 80 32 13

Algeria			
Sales	**Alger**	Réducom 16, rue des Frères Zaghnoun Bellevue El-Harrach 16200 Alger	Tel. +213 21 8222-84 Fax +213 21 8222-84

Argentina			
Assembly **Sales** **Service**	**Buenos Aires**	SEW EURODRIVE ARGENTINA S.A. Centro Industrial Garin, Lote 35 Ruta Panamericana Km 37,5 1619 Garin	Tel. +54 3327 4572-84 Fax +54 3327 4572-21 sewar@sew-eurodrive.com.ar

Australia			
Assembly **Sales** **Service**	**Melbourne**	SEW-EURODRIVE PTY. LTD. 27 Beverage Drive Tullamarine, Victoria 3043	Tel. +61 3 9933-1000 Fax +61 3 9933-1003 http://www.sew-eurodrive.com.au enquires@sew-eurodrive.com.au
	Sydney	SEW-EURODRIVE PTY. LTD. 9, Sleigh Place, Wetherill Park New South Wales, 2164	Tel. +61 2 9725-9900 Fax +61 2 9725-9905 enquires@sew-eurodrive.com.au
Technical Offices	**Adelaide**	SEW-EURODRIVE PTY. LTD. Unit 1/601 Anzac Highway Glenelg, S.A. 5045	Tel. +61 8 8294-8277 Fax +61 8 8294-2893 enquires@sew-eurodrive.com.au
	Perth	SEW-EURODRIVE PTY. LTD. 105 Robinson Avenue Belmont, W.A. 6104	Tel. +61 8 9478-2688 Fax +61 8 9277-7572 enquires@sew-eurodrive.com.au
	Brisbane	SEW-EURODRIVE PTY.LTD. 1 /34 Collinsvale St Rocklea, Queensland, 4106	Tel. +61 7 3272-7900 Fax +61 7 3272-7901 enquires@sew-eurodrive.com.au

Austria			
Assembly **Sales** **Service**	**Wien**	SEW-EURODRIVE Ges.m.b.H. Richard-Strauss-Strasse 24 A-1230 Wien	Tel. +43 1 617 55 00-0 Fax +43 1 617 55 00-30 http://sew-eurodrive.at sew@sew-eurodrive.at
Technical Offices	**Linz**	SEW-EURODRIVE Ges.m.b.H. Reuchlinstr. 6/3 A-4020 Linz	Tel. +43 732 655 109-0 Fax +43 732 655 109-20 tb-linz@sew-eurodrive.at
	Graz	SEW-EURODRIVE Ges.m.b.H. Grabenstraße 231 A-8045 Graz	Tel. +43 316 685 756-0 Fax +43 316 685 755 tb-graz@sew-eurodrive.at
	Dornbirn	SEW-EURODRIVE Ges.m.b.H. Lustenauerstraße 27/1 A-6850 Dornbirn	Tel. +43 5572 3725 99-0 Fax +43 5572 3725 99-20 tb-dornbirn@sew-eurodrive.at

Bangladesh			
	Dhaka	Triangle Trade International Bldg-5, Road-2, Sec-3, Uttara Model Town Dhaka-1230 Bangladesh	Tel. +880 2 8912246 Fax +880 2 8913344

Belgium			
Assembly **Sales** **Service**	**Brüssel**	SEW Caron-Vector S.A. Avenue Eiffel 5 B-1300 Wavre	Tel. +32 10 231-311 Fax +32 10 231-336 http://www.caron-vector.be info@caron-vector.be
Technical Office	**Vlaanderen**	SEW Caron-Vector S.A. Industrieweg 112-114 B-9032 Gent (Wondelgem)	Tel. +32 92 273-452 Fax +32 92 274-155

Bolivia			
	La Paz	GRUPO LARCOS LTDA. Av. Jose Carrasco Not. 1398 Entre Hugo Estrada Y Av. Busch La Paz	Tel. +591 2 221808 Fax +591 2 220085 larcos@ceibo.entelnet.bo

Brazil			
Production **Sales** **Service**	**Sao Paulo**	SEW-EURODRIVE Brasil Ltda. Avenida Amâncio Gaiolli, 50 Caixa Postal: 201-07111-970 Guarulhos/SP - Cep.: 07251-250	Tel. +55 11 6489-9133 Fax +55 11 6480-3328 http://www.sew.com.br sew@sew.com.br
	Additional addresses for service in Brazil provided on request!		

Bulgaria			
Sales	**Sofia**	BEVER-DRIVE GmbH Bogdanovetz Str.1 BG-1606 Sofia	Tel. +359 2 9532565 Fax +359 2 9549345 bever@fastbg.net

Cameroon			
Sales	**Douala**	Electro-Services Rue Drouot Akwa B.P. 2024 Douala	Tel. +237 4322-99 Fax +237 4277-03

Canada			
Assembly **Sales** **Service**	**Toronto**	SEW-EURODRIVE CO. OF CANADA LTD. 210 Walker Drive Bramalea, Ontario L6T3W1	Tel. +1 905 791-1553 Fax +1 905 791-2999 http://www.sew-eurodrive.ca l.reynolds@sew-eurodrive.ca
	Vancouver	SEW-EURODRIVE CO. OF CANADA LTD. 7188 Honeyman Street Delta. B.C. V4G 1 E2	Tel. +1 604 946-5535 Fax +1 604 946-2513 b.wake@sew-eurodrive.ca
	Montreal	SEW-EURODRIVE CO. OF CANADA LTD. 2555 Rue Leger Street LaSalle, Quebec H8N 2V9	Tel. +1 514 367-1124 Fax +1 514 367-3677 a.peluso@sew-eurodrive.ca

Canada			
	Additional addresses for service in Canada provided on request!		

Chile			
Assembly **Sales** **Service**	**Santiago de Chile**	SEW-EURODRIVE CHILE LTDA. Las Encinas 1295 Parque Industrial Valle Grande LAMPA RCH-Santiago de Chile P.O. Box Casilla 23 Correo Quilicura - Santiago - Chile	Tel. +56 2 75770-00 Fax +56 2 75770-01 ventas@sew-eurodrive.cl

China			
Production **Assembly** **Sales** **Service**	**Tianjin**	SEW-EURODRIVE (Tianjin) Co., Ltd. No. 46, 7th Avenue, TEDA Tianjin 300457	Tel. +86 22 25322612 Fax +86 22 25322611 gm-tianjin@sew-eurodrive.cn http://www.sew.com.cn
Assembly **Sales** **Service**	**Suzhou**	SEW-EURODRIVE (Suzhou) Co., Ltd. 333, Suhong Middle Road Suzhou Industrial Park Jiangsu Province, 215021 P. R. China	Tel. +86 512 62581781 Fax +86 512 62581783 suzhou@sew.com.cn
	Guangzhou	SEW-EURODRIVE (Guangzhou) Co., Ltd. No. 9, JunDa Road East Section of GETDD Guangzhou 510530 P. R. China	Tel. +86 20 82267890 Fax +86 20 82267891 sewguangzhou@sew.com.cn

China			
Technical Offices	**Beijing**	SEW-EURODRIVE (Tianjin) Co., LTD Room 1205/1206, Golden Corner Building, No. 129 Xuanwumen Xidajie, Xicheng District Beijing 100031	Tel. +86 10 66412026 Fax +86 10 66411017 beijing@sew.com.cn
	Chengdu	SEW-Eurodrive (Tianjin) Co. Ltd. Room 715, Sichuan International Building No. 206, Shun Cheng Avenue Chengdu 610015	Tel. +86 28 6521560 Fax +86 28 6521563 chengdu@sew.com.cn
	Fuzhou	SEW-Eurodrive (Tianjin) Co. Ltd. Unit D, 15/F, Oriental Hotel Fujian Fuzhou 350001	Tel. +86 591 7507596 Fax +86 591 7507285 fuzhou@sew.com.cn
	Jinan	SEW-Eurodrive (Tianjin) Co.Ltd. Room 2008-2009, Liang You Fu Lin Hotel No. 5, Luo Yuan Avenue Jinan 250063	Tel. +86 531 6412622 Fax +86 531 6412430 jinan@sew.com.cn
	Kunming	SEW-EURODRIVE (Tianjin) Co., Ltd Room 1401 Dong Yuan Business Building No. 464 Tuodong Road, Kunming Yunnan Province 650011	Tel. +86 871 3113677 Fax +86 871 3154454 kunming@sew.com.cn
	Nanjing	SEW-Eurodrive (Tianjing) Co.Ltd. Room 710, Jianda Plaza No. 223, North Zhongshan Road Nanjing 210009	Tel. +86 25 3346768 Fax +86 25 3346871 nanjing@sew.com.cn
	Shanghai	SEW-EURODRIVE (TIANJIN) CO., Ltd 16/F, E Block, Jinxuan Building No. 238 South Dandong Road Xuhui District Shanghai 200030	Tel. +86 21 64693534 Fax +86 21 64695532 shanghai@sew.com.cn
	Shenyang	SEW-EURODRIVE (Tianjin) Co., Ltd Shenyang OfficeRoom 0605 Koh Brother Building No. 21 Beijing Street Shenhe District Shenyang City, 110013	Tel. +86 24 22521596 Fax +86 24 22521579 shenyang@sew.com.cn
	Wuhan	SEW-Eurodrive (Tianjin) Co.Ltd. Room 911, Tai He Plaza Wusheng Road Wuhan 430033	Tel. +86 27 85712293 Fax +86 27 85712282 wuhan@sew.com.cn
	Xian	SEW-EURODRIVE (TIANJIN) Co., Ltd Rm 611, Fan Mei Building No. 1 Nan Guan Main Street Xian 710068, Shanxi Province	Tel. +86 29 7811327 Fax +86 29 7811327 xian@sew.com.cn

Colombia			
Assembly **Sales** **Service**	**Bogotá**	SEW-EURODRIVE COLOMBIA LTDA. Calle 22 No. 132-60 Bodega 6, Manzana B Santafé de Bogotá	Tel. +57 1 54750-50 Fax +57 1 54750-44 sewcol@sew-eurodrive.com.co

Croatia			
Sales **Service**	**Zagreb**	KOMPEKS d. o. o. PIT Erdödy 4 II HR 10 000 Zagreb	Tel. +385 1 4613-158 Fax +385 1 4613-158 kompeks@net.hr

Czech Republic			
Sales	**Praha**	SEW-EURODRIVE CZ S.R.O. Business Centrum Praha Luná 591 CZ-16000 Praha 6 - Vokovice	Tel. +420 a220121236 Fax +420 220121237 http://www.sew-eurodrive.cz sew@sew-eurodrive.cz

Czech Republic			
Technical Offices	**Brno**	SEW-EURODRIVE CZ S.R.O. Krenova 52 CZ -60200 Brno	Tel. +420 543256151 + 543256163 Fax +420 543256845
	Hradec Kralove	SEW-EURODRIVE CZ S.R.O. Technicka Kancelar - vychodni Cechy Svermova CZ-53374 Horni Jeleni	Tel. +420 466673711 Fax +420 466673634
	Klatovy	SEW-EURODRIVE CZ S.R.O. Technical Office Klatovy Kollarova 528 CZ-33901 Klatovy 3	Tel. +420 376310729 Fax +420 376310725

Denmark			
Assembly **Sales** **Service**	**Kopenhagen**	SEW-EURODRIVEA/S Geminivej 28-30, P.O. Box 100 DK-2670 Greve	Tel. +45 43 9585-00 Fax +45 43 9585-09 http://www.sew-eurodrive.dk sew@sew-eurodrive.dk
Technical Offices	**Aarhus**	SEW-EURODRIVEA/S Birkenhaven 45 DK-8520 Lystrup	Tel. +45 86 2283-44 Fax +45 86 2284-90
	Helsingør	SEW-EURODRIVEA/S Rømøvej 2 DK-3140 Ålsgårde	Tel. +45 49 7557-00 Fax +45 49 7558-00
	Odense	SEW-EURODRIVEA/S Lindelyvei 29, Nr. Søby DK-5792 Arslev	Tel. +45 65 9020-70 Fax +45 65 9023-09

Egypt			
Sales **Service**	**Cairo**	Copam Egypt for Engineering & Agencies 33 EI Hegaz ST, Heliopolis, Cairo	Tel. +20 2 2566-299 + 1 23143088 Fax +20 2 2594-757 copam@datum.com.eg

Estonia			
Sales	**Tallin**	ALAS-KUUL AS Paldiski mnt.125 EE 0006 Tallin	Tel. +372 6593230 Fax +372 6593231 veiko.soots@alas-kuul.ee

Finland			
Assembly **Sales** **Service**	**Lahti**	SEW-EURODRIVE OY Vesimäentie 4 FIN-15860 Hollola 2	Tel. +358 201 589-300 Fax +358 3 780-6211 http://www.sew-eurodrive.fi sew@sew.fi
Technical Offices	**Helsinki**	SEW-EURODRIVE OY Luutnantinaukio 5C LT2 FIN-00410 Helsinki	Tel. +358 201 589-300 Fax + 358 9 5666-311
	Vaasa	SEW-EURODRIVE OY Kauppapuistikko 11 E FIN-65100 Vaasa	Tel. +358 3 589-300 Fax +358 6 3127-470

Gabon			
Sales	**Libreville**	Electro-Services B.P. 1889 Libreville	Tel. +241 7340-11 Fax +241 7340-12

Great Britain			
Assembly **Sales** **Service**	**Normanton**	SEW-EURODRIVE Ltd. Beckbridge Industrial Estate P.O. Box No.1 GB-Normanton, West- Yorkshire WF6 1QR	Tel. +44 1924 893-855 Fax +44 1924 893-702 http://www.sew-eurodrive.co.uk info@sew-eurodrive.co.uk

Great Britain			
Technical Offices	**London**	SEW-EURODRIVE Ltd. 764 Finchely Road, Temple Fortune GB-London N.W.11 7TH	Tel. +44 20 8458-8949 Fax +44 20 8458-7417
	Midlands	SEW-EURODRIVE Ltd. 5 Sugar Brook court, Aston Road, Bromsgrove, Worcs B60 3EX	Tel. +44 1527 877-319 Fax +44 1527 575-245
	Scotland	SEW-EURODRIVE Ltd. Scottish Office No 37 Enterprise House Springkerse Business Park GB-Stirling FK7 7UF Scotland	Tel. +44 17 8647-8730 Fax +44 17 8645-0223

Greece			
Sales **Service**	**Athen**	Christ. Boznos & Son S.A. 12, Mavromichali Street P.O. Box 80136, GR-18545 Piraeus	Tel. +30 2 1042 251-34 Fax +30 2 1042 251-59 http://www.boznos.gr info@boznos.gr
Technical Office	**Thessaloniki**	Christ. Boznos & Son S.A. Maiandrou 15 562 24 Evosmos, Thessaloniki	Tel. +30 2 310 7054-00 Fax +30 2 310 7055-15 info@boznos.gr

Hong Kong			
Assembly **Sales** **Service**	**Hong Kong**	SEW-EURODRIVE LTD. Unit No. 801-806, 8th Floor Hong Leong Industrial Complex No. 4, Wang Kwong Road Kowloon, Hong Kong	Tel. +852 2 7960477 + 79604654 Fax +852 2 7959129 sew@sewhk.com

Hungary			
Sales **Service**	**Budapest**	SEW-EURODRIVE Kft. H-1037 Budapest Kunigunda u. 18	Tel. +36 1 437 06-58 Fax +36 1 437 06-50 office@sew-eurodrive.hu

Iceland			
	Hafnarfirdi	VARMAVERK ehf Dalshrauni 5 IS - 220 Hafnarfirdi	Tel. +354 5 6517-50 Fax +354 5 6519-51 varmaverk@varmaverk.is

India			
Assembly **Sales** **Service**	**Baroda**	SEW-EURODRIVE India Pvt. Ltd. Plot No. 4, Gidc Por Ramangamdi · Baroda - 391 243 Gujarat	Tel. +91 265 2831086 Fax +91 265 2831087 mdoffice@seweurodriveindia.com

India			
Technical Offices	**Bangalore**	SEW-EURODRIVE India Private Limited 308, Prestige Centre Point 7, Edward Road Bangalore	Tel. +91 80 22266565 Fax +91 80 22266569 salesbang@seweurodriveinindia.com
	Calcutta	SEW EURODRIVE INDIA PVT. LTD. Juthika Apartment, Flat No. B1 11/1, Sunny Park Calcutta - 700 019	Tel. +91 33 24615820 Fax +91 33 24615826 sewcal@cal.vsnl.net.in
	Chennai	SEW-EURODRIVE India Private Limited F2, 1st Floor, Sarvamangala Indira New No. 67, Bazullah Road Chennai - 600 017	Tel. +91 44 28144461 Fax +91 44 28144463 saleschen@seweurodriveindia.com
	Hyderabad	SEW-EURODRIVE India Pvt. Limited 408, 4th Floor, Meridian Place Green Park Road Amerpeet Hyderabad	Tel. +91 40 23414698 Fax +91 40 23413884 saleshyd@seweurodriveindia.com
	Mumbai	SEW-EURODRIVE India Private Limited 312 A, 3rd Floor, Acme Plaza Andheri Kurla Road, Andheri (E) Mumbai	Tel. +91 22 28348440 Fax +91 22 28217858 salesmumbai@seweurodriveindia.com
	New Delhi	SEW-EURODRIVE India Private Limited 303 Kirti Deep, 2-Nangal Raya Business Centre New Delhi 110 046	Tel. +91 11 28521566 Fax +91 11 28521577 salesdelhi@seweurodriveindia.com
	Pune	SEW-EURODRIVE India Private Limited 206, Metro House 7 Mangaldas Road Pune 411001, Maharashtra	Tel. +91 20 26111054 Fax +91 20 26132337 salespune@seweurodriveindia.com

Indonesia			
Technical Office	**Jakarta**	SEW-EURODRIVE Pte Ltd. Jakarta Liaison Office, Menara Graha Kencana Jl. Perjuangan No. 88, LT 3 B, Kebun Jeruk, Jakarta 11530	Tel. +62 21 5359066 Fax +62 21 5363686

Ireland			
Sales **Service**	**Dublin**	Alperton Engineering Ltd. 48 Moyle Road Dublin Industrial Estate Glasnevin, Dublin 11	Tel. +353 1 830-6277 Fax +353 1 830-6458

Israel			
Sales	**Tel-Aviv**	Liraz Handasa Ltd. Ahofer Str 34B / 228 58858 Holon	Tel. +972 3 5599511 Fax +972 3 5599512 lirazhandasa@barak-online.net

Italy			
Assembly **Sales** **Service**	**Milano**	SEW-EURODRIVE di R. Blickle & Co.s.a.s. Via Bernini,14 I-20020 Solaro (Milano)	Tel. +39 2 96 9801 Fax +39 2 96 799781 sewit@sew-eurodrive.it

Italy			
Technical Offices	**Bologna**	SEW-EURODRIVE di R. Blickle & Co.s.a.s. Via Emilia,172 I-40064 Ozzano dell'Emilia (Bo)	Tel. +39 51 796-660 Fax +39 51 796-595
	Caserta	SEW-EURODRIVE di R. Blickle & Co.s.a.s. Viale Carlo III-Parco Matilde A I-81020 S. Nicola la Strada (Caserta)	Tel. +39 823 450611 Fax +39 823 421414
	Firenze	RIMA Via Einstein, 14 I-50013 Campi Bisenzio (Firenze)	Tel. +39 55 898 58-21 Fax +39 55 898 58-30
	Roma	Elettromec Via Castel Rosso, 10 I-00144 Roma	Tel. +39 6 592 45-30 Fax +39 6 592 45-30
	Torino	SEW-EURODRIVE di R. Blickle & Co.s.a.s. Filiale Torino c.so Unione Sovietica 612/15 - int. C I-11035 Torino	Tel. +39 11 3473780 Fax +39 11 3473783
	Verona	SEW-EURODRIVE di R. Blickle & Co.s.a.s. Via P. Sgulmero, 27/A I-37132 Verona	Tel. +39 45 97-7722 Fax +39 45 97-6079

Ivory Coast			
Sales	**Abidjan**	SICA Ste industrielle et commerciale pour l'Afrique 165, Bld de Marseille B.P. 2323, Abidjan 08	Tel. +225 2579-44 Fax +225 2584-36

Japan			
Assembly **Sales** **Service**	**Toyoda-cho**	SEW-EURODRIVE JAPAN CO., LTD 250-1, Shimoman-no, Iwata Shizuoka 438-0818	Tel. +81 538 373811 Fax +81 538 373814 sewjapan@sew-eurodrive.co.jp
Technical Offices	**Fukuoka**	SEW-EURODRIVE JAPAN CO., LTD. C-go, 5th-floor, Yakuin-Hiruzu-Bldg. 1-5-11, Yakuin, Chuo-ku Fukuoka, 810-0022	Tel. +81 92 713-6955 Fax +81 92 713-6860 sewkyushu@jasmine.ocn.ne.jp
	Osaka	SEW-EURODRIVE JAPAN CO., LTD. B-Space EIRAI Bldg., 3rd Floor 1-6-9 Kyoumachibori, Nishi-ku, Osaka, 550-0003	Tel. +81 6 6444--8330 Fax +81 6 6444--8338 sewosaka@crocus.ocn.ne.jp
	Tokyo	SEW-EURODRIVE JAPAN CO., LTD. Izumi-Bldg. 5 F 3-2-15 Misaki-cho Chiyoda-ku, Tokyo 101-0061	Tel. +81 3 3239-0469 Fax +81 3 3239-0943 sewtokyo@basil.ocn.ne.jp

Korea			
Assembly **Sales** **Service**	**Ansan-City**	SEW-EURODRIVE KOREA CO., LTD. B 601-4, Banweol Industrial Estate Unit 1048-4, Shingil-Dong Ansan 425-120	Tel. +82 31 492-8051 Fax +82 31 492-8056 master@sew-korea.co.kr
	Busan	SEW-EURODRIVE KOREA Co., Ltd. No. 1720 - 11, Songjeong - dong Gangseo-ku Busan 618-270	Tel. +82 51 832-0204 Fax +82 51 832-0230 master@sew-korea.co.kr

Korea			
Technical Offices	**Daegu**	SEW-EURODRIVE KOREA Co., Ltd. No.1108 Sungan officete l 87-36, Duryu 2-dong, Dalseo-ku Daegu 704-712	Tel. +82 53 650-7111 Fax +82 53 650-7112 sewdaegu@netsgo.com
	DaeJeon	SEW-EURODRIVE KOREA Co., Ltd. No. 2017, Hongin offictel 536-9, Bongmyung-dong, Yusung-ku Daejeon 305-301	Tel. +82 42 828-6461 Fax +82 42 828-6463 sewdaejeon@netsgo.com
	Kwangju	SEW-EURODRIVE KOREA Co., Ltd. 4fl., Shinhyun B/D 96-16 Unam-dong, Buk-ku Kwangju 500-170	Tel. +82 62 511-9172 Fax +82 62 511-9174 sewkwangju@netsgo.com
	Seoul	SEW-EURODRIVE KOREA Co., Ltd. No.1104 Sunkyung officetel 106-4 Kuro 6-dong, Kuro-ku Seoul 152-054	Tel. +82 2 862-8051 Fax +82 2 862-8199 sewseoul@netsgo.com

Latvia			
Sales	**Riga**	SIA Alas-Kuul Katlakalna 11C LV-1073 Riga	Tel. +371 7139386 Fax +371 7139386 info@alas-kuul.ee

Lebanon			
Sales	**Beirut**	Gabriel Acar & Fils sarl B. P. 80484 Bourj Hammoud, Beirut	Tel. +961 1 4947-86 +961 1 4982-72 +961 3 2745-39 Fax +961 1 4949-71 gacar@beirut.com

Lithuania			
Sales	**Alytus**	UAB Irseva Merkines g. 2A LT-62252 Alytus	Tel. +370 315 79204 Fax +370 315 56175 info@irseva.lt www.sew-eurodrive.lt

Luxembourg			
Assembly **Sales** **Service**	**Brüssel**	CARON-VECTOR S.A. Avenue Eiffel 5 B-1300 Wavre	Tel. +32 10 231-311 Fax +32 10 231-336 http://www.caron-vector.be info@caron-vector.be

Malaysia			
Assembly **Sales** **Service**	**Johore**	SEW-EURODRIVE SDN BHD No. 95, Jalan Seroja 39, Taman Johor Jaya 81000 Johor Bahru, Johor West Malaysia	Tel. +60 7 3549409 Fax +60 7 3541404 kchtan@pd.jaring.my
Technical Offices	**Kota Kinabalu**	SEW-EURODRIVE Sdn Bhd (Kota Kinabalu Branch) Lot No. 2,1st Floor, Inanam Baru Phase III, Miles 5.1 /2, Jalan Tuaran, Inanam 89350 Kota Kinabalu Sabah, Malaysia	Tel. +60 88 424792 Fax +60 88 424807
	Kuala Lumpur	SEW-EURODRIVE Sdn. Bhd. No. 2, Jalan Anggerik Mokara 31/46 Kota Kemuning Seksyen 31 40460 Shah Alam Selangor Darul Ehsan	Tel. +60 3 5229633 Fax +60 3 5229622 sewpjy@po.jaring.my
	Kuching	SEW-EURODRIVE Sdn. Bhd. Lot 268, Section 9 KTLD Lorong 9, Jalan Satok 93400 Kuching, Sarawak East Malaysia	Tel. +60 82 232380 Fax +60 82 242380
	Penang	SEW-EURODRIVE Sdn. Bhd. No. 38, Jalan Bawal Kimsar Garden 13700 Prai, Penang	Tel. +60 4 3999349 Fax +60 4 3999348 seweurodrive@po.jaring.my

Mexico			
Assembly **Sales** **Service**	**Queretaro**	SEW-EURODRIVE, Sales and Distribution, S. A. de C. V. Privada Tequisquiapan No. 102 Parque Ind. Queretaro C. P. 76220 Queretaro, Mexico	Tel. +52 442 1030-300 Fax +52 442 1030-301 scmexico@seweurodrive.com.mx

Morocco			
Sales	**Casablanca**	S. R. M. Société de Réalisations Mécaniques 5, rue Emir Abdelkader 05 Casablanca	Tel. +212 2 6186-69 + 6186-70 + 6186-71 Fax +212 2 6215-88 srm@marocnet.net.ma

Netherlands			
Assembly **Sales** **Service**	**Rotterdam**	VECTOR Aandrijftechniek B.V. Industrieweg 175 NL-3044 AS Rotterdam Postbus 10085 NL-3004 AB Rotterdam	Tel. +31 10 4463-700 Fax +31 10 4155-552 http://www.vector.nu info@vector.nu

New Zealand			
Assembly **Sales** **Service**	**Auckland**	SEW-EURODRIVE NEW ZEALAND LTD. P.O. Box 58-428 82 Greenmount drive East Tamaki Auckland	Tel. +64 9 2745627 Fax +64 9 2740165 sales@sew-eurodrive.co.nz
	Christchurch	SEW-EURODRIVE NEW ZEALAND LTD. 10 Settlers Crescent, Ferrymead Christchurch	Tel. +64 3 384-6251 Fax +64 3 384-6455 sales@sew-eurodrive.co.nz
Technical Office	**Palmerston North**	SEW-EURODRIVE NEW ZEALAND LTD. C/-Grant Shearman, RD 5, Aronui Road Palmerston North	Tel. +64 6 355-2165 Fax +64 6 355-2316 sales@sew-eurodrive.co.nz

Norway			
Assembly **Sales** **Service**	**Moss**	SEW-EURODRIVE A/S Solgaard skog 71 N-1599 Moss	Tel. +47 69 241-020 Fax +47 69 241-040 sew@sew-eurodrive.no

Pakistan			
Technical Office	**Karachi**	SEW-EURODRIVE Pte. Ltd. Karachi Liaison Office A/3, 1st Floor, Central Commercial Area Sultan Ahmed Shah Road Block 7/8, K.C.H.S. Union Ltd., Karachi	Tel. +92 21 4529369 Fax +92 21 4547365 seweurodrive@cyber.net.pk

Peru			
Assembly **Sales** **Service**	**Lima**	SEW DEL PERU MOTORES REDUCTORES S.A.C. Los Calderos, 120-124 Urbanizacion Industrial Vulcano, ATE, Lima	Tel. +51 1 3495280 Fax +51 1 3493002 sewperu@sew-eurodrive.com.pe

Philippines			
Technical Office	**Manila**	SEW-EURODRIVE Pte Ltd Manila Liaison Office Suite 110, Ground Floor Comfoods Building Senator Gil Puyat Avenue 1200 Makati City	Tel. +63 2 894275254 Fax +63 2 8942744 sewmla@i-next.net

Poland			
Assembly **Sales** **Service**	**Lodz**	SEW-EURODRIVE Polska Sp.z.o.o. ul. Techniczna 5 PL-92-518 Lodz	Tel. +48 42 67710-90 Fax +48 42 67710-99 http://www.sew-eurodrive.pl sew@sew-eurodrive.pl

Poland			
Technical Office	**Katowice**	SEW-EURODRIVE Polska Sp.z.o.o. ul. Nad Jeziorem 87 PL-43-100 Tychy	Tel. +48 32 2175026 + 32 2175027 Fax +48 32 2277910
	Bydgoszcz	SEW-EURODRIVE Polska Sp.z.o.o. ul. Fordonska 246 PL-85-959 Bydgoszcz	Tel. +48 52 3606590 Fax +48 52 3606591
	Szczecinek	SEW-EURODRIVE Polska Sp.z.o.o. ul. Mickiewicza 2 pok. 36 PL-78-400 Szczecinek	Tel. +48 94 3728820 Fax +48 94 3728821

Portugal			
Assembly **Sales** **Service**	**Coimbra**	SEW-EURODRIVE, LDA. Apartado 15 P-3050-901 Mealhada	Tel. +351 231 20 9670 Fax +351 231 20 3685 http://www.sew-eurodrive.pt infosew@sew-eurodrive.pt
Technical Offices	**Lisboa**	Tertir Edifício Lisboa Gabinete 119 P-2615 Alverca do Ribatejo	Tel. +351 21 958-0198 Fax +351 21 958-0245 esc.lisboa@sew-eurodrive.pt
	Porto	Av. D. Afonso Henriques, 1196 - 1° - sala 102 Edifício ACIA P- 4450-016 Matosinhos	Tel. +351 229 350 383 Fax +351 229 350 384 MobilTel. +351 9 332559110 esc.porto@sew-eurodrive.pt

Romania			
Sales **Service**	**Bucuresti**	Sialco Trading SRL str. Madrid nr.4 011785 Bucuresti	Tel. +40 21 230-1328 Fax +40 21 230-7170 sialco@sialco.ro

Russia			
Sales	**St. Petersburg**	ZAO SEW-EURODRIVE P.O. Box 263 RUS-195220 St. Petersburg	Tel. +7 812 5357142 +812 5350430 Fax +7 812 5352287 http://www.sew-eurodrive.ru sew@sew-eurodrive.ru
Technical Office	**Moskau**	ZAO SEW-EURODRIVE RUS-119180 Moskau	Tel. +7 095 9337090 Fax +7 095 9337094 mso@sew-eurodrive.ru
	Novosibirsk	ZAO SEW-EURODRIVE pr. K Marksa, d.30 RUS-630087 Novosibirsk	Tel. +7 3832 350200 Fax +7 3832 462544 nso@sew-eurodrive.ru

Senegal			
Sales	**Dakar**	SENEMECA Mécanique Générale Km 8, Route de Rufisque B.P. 3251, Dakar	Tel. +221 849 47-70 Fax +221 849 47-71 senemeca@sentoo.sn

Serbia and Montenegro			
Sales	**Beograd**	DIPAR d.o.o. Kajmakcalanska 54 SCG-11000 Beograd	Tel. +381 11 3088677 / +381 11 3088678 Fax +381 11 3809380 dipar@yubc.net

Singapore			
Assembly **Sales** **Service**	**Singapore**	SEW-EURODRIVE PTE. LTD. No 9, Tuas Drive 2 Jurong Industrial Estate Singapore 638644	Tel. +65 68621701 Fax +65 68612827 sewsingapore@sew-eurodrive.com

Slovakia			
Sales	**Sered**	SEW-Eurodrive SK s.r.o. Trnavska 920 SK-926 01 Sered	Tel. +421 31 7891311 Fax +421 31 7891312 sew@sew-eurodrive.sk

Slovenia			
Sales **Service**	**Celje**	Pakman - Pogonska Tehnika d.o.o. Ul. XIV. divizije 14 SLO – 3000 Celje	Tel. +386 3 490 83-20 Fax +386 3 490 83-21 pakman@siol.net

South Africa			
Assembly **Sales** **Service**	**Johannesburg**	SEW-EURODRIVE (PROPRIETARY) LIMITED Eurodrive House Cnr. Adcock Ingram and Aerodrome Roads Aeroton Ext. 2 Johannesburg 2013 P.O.Box 90004 Bertsham 2013	Tel. +27 11 248-7000 Fax +27 11 494-3104 dross@sew.co.za
	Capetown	SEW-EURODRIVE (PROPRIETARY) LIMITED Rainbow Park Cnr. Racecourse & Omuramba Road Montague Gardens Cape Town P.O.Box 36556 Chempet 7442 Cape Town	Tel. +27 21 552-9820 Fax +27 21 552-9830 Telex 576 062 dswanepoel@sew.co.za
	Durban	SEW-EURODRIVE (PROPRIETARY) LIMITED 2 Monaceo Place Pinetown Durban P.O. Box 10433, Ashwood 3605	Tel. +27 31 700-3451 Fax +27 31 700-3847 dtait@sew.co.za
	Nelspruit	SEW-EURODRIVE (PTY) LTD. 7 Christie Crescent Vintonia P.O.Box 1942 Nelspruit 1200	Tel. +27 13 752-8007 Fax +27 13 752-8008 robermeyer@sew.co.za
Technical Offices	**Port Elizabeth**	SEW-EURODRIVE PTY LTD. 5 b Linsay Road Neave Township 6000 Port Elizabeth	Tel. +27 41 453-0303 Fax +27 41 453-0305 dswanepoel@sew.co.za
	Richards Bay	SEW-EURODRIVE PTY LTD. 25 Eagle Industrial Park Alton Richards Bay P.O. Box 458 Richards Bay 3900	Tel. +27 35 797-3805 Fax +27 35 797-3819 dtait@sew.co.za

Spain			
Assembly **Sales** **Service**	**Bilbao**	SEW-EURODRIVE ESPAÑA, S.L. Parque Tecnológico, Edificio, 302 E-48170 Zamudio (Vizcaya)	Tel. +34 9 4431 84-70 Fax +34 9 4431 84-71 sew.spain@sew-eurodrive.es
Technical Offices	**Barcelona**	Delegación Barcelona Avenida Francesc Maciá 40-44 Oficina 3.1 E-08206 Sabadell (Barcelona)	Tel. +34 9 37 162200 Fax +34 9 37 233007
	Lugo	Delegación Noroeste Apartado, 1003 E-27080 Lugo	Tel. +34 6 3940 3348 Fax +34 9 8220 2934
	Madrid	Delegación Madrid Gran Via. 48-2° A-D E-28220 Majadahonda (Madrid)	Tel. +34 9 1634 2250 Fax +34 9 1634 0899

Sri Lanka			
	Colombo 4	SM International (Pte) Ltd 254, Galle Raod Colombo 4, Sri Lanka	Tel. +94 1 2584887 Fax +94 1 2582981

Sweden			
Assembly **Sales** **Service**	**Jönköping**	SEW-EURODRIVE AB Gnejsvägen 6-8 S-55303 Jönköping Box 3100 S-55003 Jönköping	Tel. +46 36 3442-00 Fax +46 36 3442-80 http://www.sew-eurodrive.se info@sew-eurodrive.se

Sweden			
Technical Offices	**Göteborg**	SEW-EURODRIVE AB Gustaf Werners gata 8 S-42131 Västra Frölunda	Tel. +46 31 70968-80 Fax +46 31 70968-93
	Malmö	SEW-EURODRIVE AB Borrgatan 5 S-21124 Malmö	Tel. +46 40 68064-80 Fax +46 40 68064-93
	Stockholm	SEW-EURODRIVE AB Björkholmsvägen 10 S-14125 Huddinge	Tel. +46 8 44986-80 Fax +46 8 44986-93
	Skellefteå	SEW-EURODRIVE AB Trädgårdsgatan 8 S-93131 Skellefteå	Tel. +46 910 7153-80 Fax +46 910 7153-93

Switzerland			
Assembly **Sales** **Service**	**Basel**	Alfred Imhof A.G. Jurastrasse 10 CH-4142 Münchenstein bei Basel	Tel. +41 61 41717-17 Fax +41 61 41717-00 http://www.imhof-sew.ch info@imhof-sew.ch
Technical Offices	**Suisse romande**	André Gerber Es Perreyres 1436 Chamblon	Tel. +41 2 444538-50 Fax +41 2 444548-87
	Bern	Rudolf Bühler Allerheiligenstraße 97d 2540 Grenchen	Tel. +41 3 265223-39 Fax +41 3 265223-31
	Luzern	Beat Lütolf Baumacher 11 6244 Nebikon	Tel. +41 6 275647-80 Fax +41 6 275647-86
	Zürich	René Rothenbühler Nörgelbach 7 8493 Saland	Tel. +41 5 238631-50 Fax +41 5 238632-13

Taiwan (R.O.C.)			
	Nan Tou	Ting Shou Trading Co., Ltd. No. 55 Kung Yeh N. Road Industrial District Nan Tou 540	Tel. +886 49 255353 Fax +886 49 257878
	Taipei	Ting Shou Trading Co., Ltd. 6F-3, No. 267, Sec. 2 Tung Hwa South Road, Taipei	Tel. +886 2 27383535 Fax +886 2 27368268 Telex 27 245 sewtwn@ms63.hinet.net

Thailand			
Assembly **Sales** **Service**	**Chon Buri**	SEW-EURODRIVE (Thailand) Ltd. Bangpakong Industrial Park 2 700/456, Moo.7, Tambol Donhuaroh Muang District Chon Buri 20000	Tel. +66 38 454281 Fax +66 38 454288 sewthailand@sew-eurodrive.co.th
Technical Offices	**Bangkok**	SEW-EURODRIVE PTE LTD Bangkok Liaison Office 6th floor, TPS Building 1023, Phattanakarn Road Klongtan, Phrakanong, Bangkok,10110	Tel. +66 2 7178149 Fax +66 2 7178152 sewthailand@sew-eurodrive.co.th
	Hadyai	SEW-EURODRIVE (Thailand) Ltd. Hadyai Country Home Condominium 59/101 Soi.17/1 Rachas-Utid Road. Hadyai, Songkhla 90110	Tel. +66 74 359441 Fax +66 74 359442 sewhdy@ksc.th.com
	Khonkaen	SEW-EURODRIVE (Thailand) Ltd. 4th Floor, Kaow-U-HA MOTOR Bldg, 359/2, Mitraphab Road. Muang District Khonkaen 40000	Tel. +66 43 225745 Fax +66 43 324871 sewkk@cscoms.com
	Lampang	SEW-EURODRIVE (Thailand) Ltd. 264 Chatchai Road, sob-tuy, Muang, Lampang 52100	Tel. +66 54 310241 Fax +66 54 310242 sewthailand@sew-eurodrive.co.th

Tunisia			
Sales	**Tunis**	T. M.S. Technic Marketing Service 7, rue Ibn El Heithem Z.I. SMMT 2014 Mégrine Erriadh	Tel. +216 1 4340-64 + 1 4320-29 Fax +216 1 4329-76

Turkey			
Assembly **Sales** **Service**	**Istanbul**	SEW-EURODRIVE Hareket Sistemleri Sirketi Bagdat Cad. Koruma Cikmazi No. 3 TR-34846 Maltepe ISTANBUL	Tel. +90 216 4419163 + 216 4419164 + 216 3838014 Fax +90 216 3055867 sew@sew-eurodrive.com.tr
Technical Offices	**Ankara**	SEW-EURODRIVE Hareket Sistemleri Ticaret Ltd. Sirketi Özcelik Is Merkezi, 14. Sok, No. 4/42 TR-06370 Ostim/Ankara	Tel. +90 312 2868014 Fax +90 312 2868015
	Bursa	SEW-EURODRIVE Hareket Sistemleri San. ve Tic. Ltd. Sti. Besevler Küçük Sanayi Parkoop Parçacilar Sitesi 48. Sokak No. 47 TR Nilüfer/Bursa	Tel. +90 224 443 4559 Fax +90 224 443 4558
	Izmir	SEW-EURODRIVE Hareket Sistemleri Ticaret Ltd. Sirketi 1203/11 Sok. No. 4/613 Hasan Atli Is Merkezi TR-35110 Yenisehir-Izmir	Tel. +90 232 4696264 Fax +90 232 4336105

Uruguay			
	Montevideo	SEW-EURODRIVE Argentina S. A. Sucursal Uruguay German Barbato 1526 CP 11200 Montevideo	Tel. +598 2 90181-89 Fax +598 2 90181-88 sewuy@sew-eurodrive.com.uy

USA			
Production **Assembly** **Sales** **Service**	**Greenville**	SEW-EURODRIVE INC. 1295 Old Spartanburg Highway P.O. Box 518 Lyman, S.C. 29365	Tel. +1 864 439-7537 Fax Sales +1 864 439-7830 Fax Manuf. +1 864 439-9948 Fax Ass. +1 864 439-0566 Telex 805 550 http://www.seweurodrive.com cslyman@seweurodrive.com
Assembly **Sales** **Service**	**San Francisco**	SEW-EURODRIVE INC. 30599 San Antonio St. Hayward, California 94544-7101	Tel. +1 510 487-3560 Fax +1 510 487-6381 cshayward@seweurodrive.com
	Philadelphia/PA	SEW-EURODRIVE INC. Pureland Ind. Complex 2107 High Hill Road, P.O. Box 481 Bridgeport, New Jersey 08014	Tel. +1 856 467-2277 Fax +1 856 845-3179 csbridgeport@seweurodrive.com
	Dayton	SEW-EURODRIVE INC. 2001 West Main Street Troy, Ohio 45373	Tel. +1 937 335-0036 Fax +1 937 440-3799 cstroy@seweurodrive.com
	Dallas	SEW-EURODRIVE INC. 3950 Platinum Way Dallas, Texas 75237	Tel. +1 214 330-4824 Fax +1 214 330-4724 csdallas@seweurodrive.com
	Additional addresses for service in the USA provided on request!		

Venezuela			
Assembly **Sales** **Service**	**Valencia**	SEW-EURODRIVE Venezuela S.A. Av. Norte Sur No. 3, Galpon 84-319 Zona Industrial Municipal Norte Valencia, Estado Carabobo	Tel. +58 241 832-9804 Fax +58 241 838-6275 sewventas@cantv.net sewfinanzas@cantv.net

How we're driving the world

With people who think fast and develop the future with you.

With a worldwide service network that is always close at hand.

With drives and controls that automatically improve your productivity.

With comprehensive knowledge in virtually every branch of industry today.

With uncompromising quality that reduces the cost and complexity of daily operations.

SEW-EURODRIVE
Driving the world

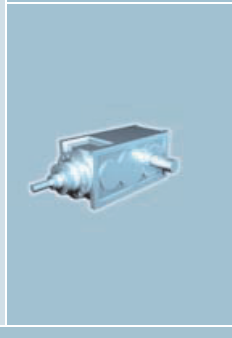

With a global presence that offers responsive and reliable solutions. Anywhere.

With innovative technology that solves tomorrow's problems today.

With online information and software updates, via the Internet, available around the clock.

SEW-EURODRIVE GmbH & Co KG
P.O. Box 3023 · D-76642 Bruchsal / Germany
Phone +49 7251 75-0 · Fax +49 7251 75-1970
sew@sew-eurodrive.com

→ www.sew-eurodrive.com