SEW EURODRIVE







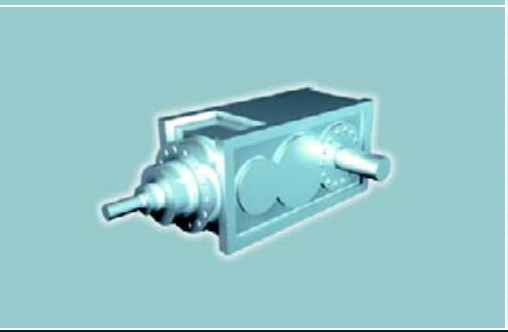

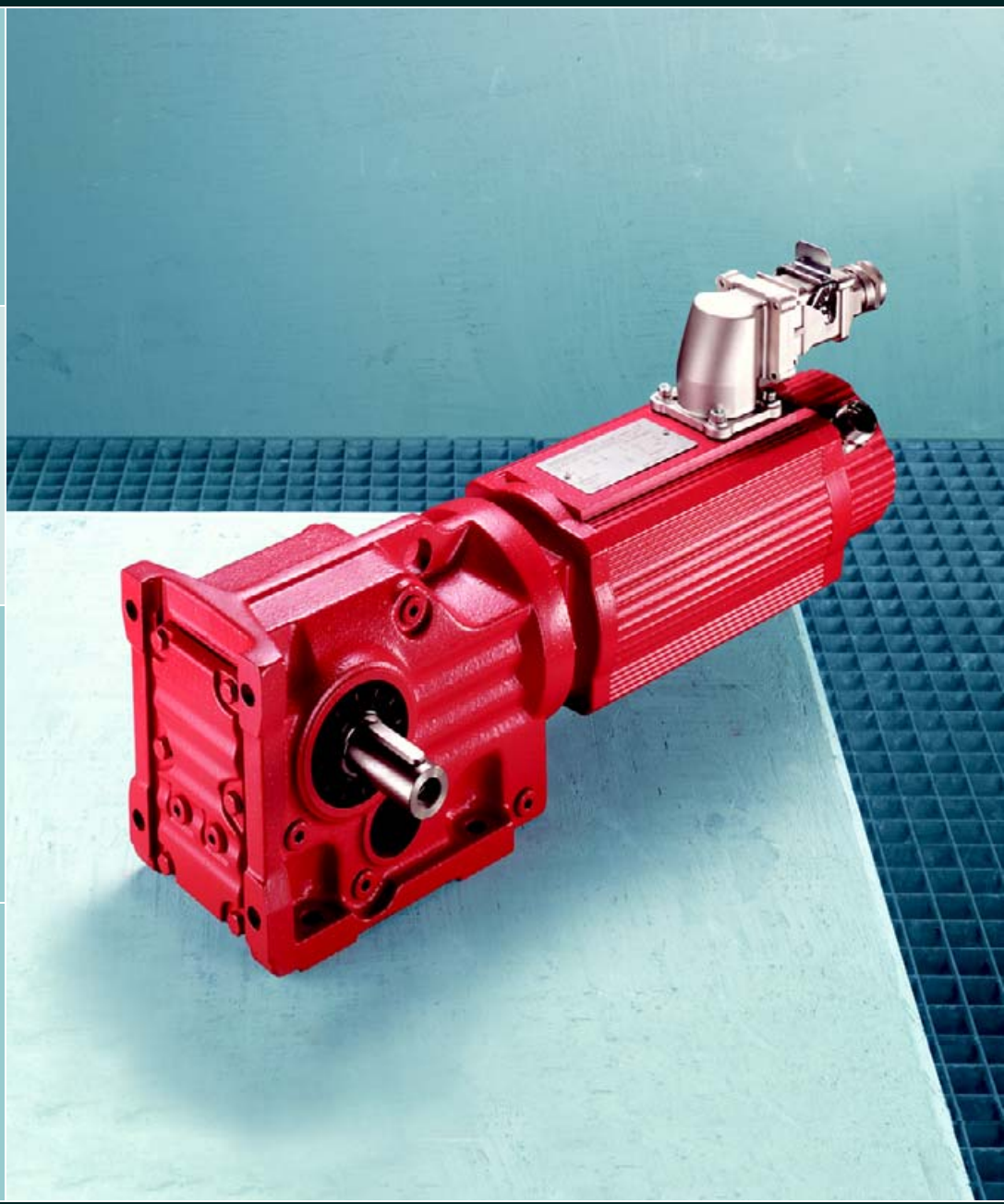

Servo Gearmotors (R, F, K and S Gear Units)

DB130000

Edition 01/2005
11248726 / EN

Catalog















SEW EURODRIVE

1	The SEW-EURODRIVE Group of Companies	7	1
2	Product Description and Overview of Types	9	2
3	Project Planning	26	3
4	Mounting Positions	52	4
5	Design and Operating Notes	81	5
6	Important Notes on Combination Overviews and Dimension Sheets	104	6
7	Helical Gearmotors R..DS/CM	107	7
8	Parallel Shaft Helical Gearmotors F..DS/CM	159	8
9	Helical-Bevel Gearmotors K..DS/CM	217	9
10	Helical-Worm Gearmotors S..DS/CM	268	10
11	Synchronous Servomotors DFS/CFM	293	11
12	Helical Gearmotors R..CT/CV	389	12
13	Parallel Shaft Helical Gearmotors F..CT/CV	455	13
14	Helical-Bevel Gearmotors K..CT/CV	523	14
15	Helical-Worm Gearmotors S..CT/CV	593	15
16	Asynchronous Servomotors CT/CV	619	16
17	Appendix	730	17

Contents

1 The SEW-EURODRIVE Group of Companies 7

2 Product Description and Overview of Types 9

2.1 General information 9
2.2 Gearmotor versions 11
2.3 Unit designations for gear units and options 18
2.4 Unit designations for servomotors and options 20
2.5 Corrosion and surface protection 23
2.6 Extended storage 25

3 Project Planning 26

3.1 Additional documentation 26
3.2 Drive and gear unit selection data 27
3.3 Project planning procedure 29
3.4 Project planning for gear units 30
3.5 Overhung and axial loads 32
3.6 Project planning for servomotors 36
3.7 Project planning example 39

4 Mounting Positions 52

4.1 General information on mounting positions 52
4.2 Important order information 53
4.3 Key to the mounting position sheets 61
4.4 Mounting positions for helical gearmotors 62
4.5 Mounting positions for parallel shaft helical gearmotors 67
4.6 Mounting positions for helical-bevel gearmotors 70
4.7 Mounting positions for helical-worm gearmotors 75

5 Design and Operating Notes 81

5.1 Lubricants 81
5.2 Installation/removal of gear units with hollow shafts and keys 88
5.3 Gear units with hollow shaft 91
5.4 TorqLOC® hollow shaft mounting system for gear units with hollow shaft 92
5.5 Option, shouldered hollow shaft with shrink disc 94
5.6 Flange contours of RF.. and R..F gearmotors 101
5.7 Fastening of gear units 102
5.8 Torque arms 102
5.9 Fixed covers 103

6 Important Information on Selection Tables and Dimension Sheets 104

6.1 Notes on combination overviews 104
6.2 Notes on dimension sheets 105

7 Helical Gearmotors R..DS/CM 107

7.1 Types 107
7.2 Combination overview RX57 DS/CM 108
7.3 Combination overview RX67 DS/CM 110
7.4 Combination overview RX77 CM.. 112
7.5 Combination overview RX87 CM.. 114
7.6 Combination overview RX97 CM.. 115
7.7 Combination overview RX107 CM.. 116
7.8 Combination overview R27 DS/CM.. 117
7.9 Combination overview R37 DS/CM.. 118
7.10 Combination overview R47 DS/CM.. 119
7.11 Combination overview R57 DS/CM.. 120
7.12 Combination overview R67 DS/CM.. 122
7.13 Combination overview R77 CM.. 124
7.14 Combination overview R87 CM.. 126
7.15 Combination overview R97 CM.. 127
7.16 Combination overview R107 CM.. 128
7.17 Dimension sheets] 129

8 Parallel Shaft Helical Gearmotors F..DS/CM.. 159

8.1 Types 159
8.2 Combination overview F27 DS/CM.. 161
8.3 Combination overview F37 DS/CM.. 162
8.4 Combination overview F47 DS/CM.. 163
8.5 Combination overview F57 DS/CM.. 164
8.6 Combination overview F67 DS/CM.. 165
8.7 Combination overview F77 CM.. 167
8.8 Combination overview F87 CM.. 169
8.9 Combination overview F97 CM.. 170
8.10 Combination overview F107 CM.. 171
8.11 Dimension sheets 172

9 Helical-Bevel Gearmotors K..DS/CM.. 217

9.1 Types 217
9.2 Combination overview K37 DS/CM.. 219
9.3 Combination overview K47 DS/CM.. 220
9.4 Combination overview K57 DS/CM.. 221
9.5 Combination overview K67 DS/CM.. 222
9.6 Combination overview K77 CM.. 224
9.7 Combination overview K87 CM.. 226
9.8 Combination overview K97 CM.. 227
9.9 Combination overview K107 CM.. 228
9.10 Dimension sheets 229

10 Helical-Worm Gearmotors S..DS/CM.. 268

10.1 Types 268
10.2 Combination overview S37 DS/CM.. 270
10.3 Combination overview S47 DS/CM.. 271
10.4 Combination overview S57 DS/CM.. 272
10.5 Combination overview S67 DS/CM.. 273
10.6 Dimension sheets 274

11 DFS/CFM Synchronous Servomotors 293

11.1 Unit designation of synchronous servomotors 294
11.2 Standards and regulations 295
11.3 Circuit breaker and protective equipment 296
11.4 Technical data 297
11.5 Motor options 315
11.6 Dimension sheets for synchronous servomotors 335
11.7 Hybrid cables 350
11.8 Cable specification 380
11.9 Crimping tools 384

12 Helical Gearmotors R..CT/CV.. 389

12.1 Types 389
12.2 Combination overviewRX57 CT/CV.. 390
12.3 Combination overviewRX67 CT/CV.. 391
12.4 Combination overviewRX77 CT/CV.. 392
12.5 Combination overviewRX87 CT/CV.. 394
12.6 Combination overviewRX97 CT/CV.. 396
12.7 Combination overviewRX107 CV.. 398
12.8 Combination overviewR17 CT.. 400
12.9 Combination overviewR27 CT.. 401
12.10 Combination overviewR37 CT.. 402
12.11 Combination overviewR47 CT/CV.. 403
12.12 Combination overviewR57 CT/CV.. 404
12.13 Combination overviewR67 CT/CV.. 405
12.14 Combination overviewR77 CT/CV.. 406
12.15 Combination overviewR87 CT/CV.. 408
12.16 Combination overviewR97 CT/CV.. 410
12.17 Combination overviewR107 CV.. 412
12.18 Combination overviewR137 CV.. 414
12.19 Combination overviewR147 CV.. 415
12.20 Combination overviewR167 CV.. 416
12.21 Dimension sheets 417

13 Parallel Shaft Helical Gearmotors 455

13.1 Types 455
13.2 Combination overview F27 CT.. 457
13.3 Combination overview F37 CT.. 458
13.4 Combination overview F47 CT.. 459
13.5 Combination overview F57 CT/CV.. 460
13.6 Combination overview F67 CT/CV.. 461
13.7 Combination overview F77 CT/CV.. 462
13.8 Combination overview F87 CT/CV.. 464
13.9 Combination overview F97 CT/CV.. 466
13.10 Combination overview F107 CV.. 468
13.11 Combination overview F127 CV.. 470
13.12 Combination overview F157 CV.. 471
13.13 Dimension sheets 472

14 Helical-Bevel Gearmotors K..CT/CV 523
14.1 Types 523
14.2 Combination overview K37 CT.. 525
14.3 Combination overview K47 CT/CV.. 526
14.4 Combination overview K57 CT/CV.. 527
14.5 Combination overview K67 CT/CV.. 528
14.6 Combination overview K77 CT/CV.. 530
14.7 Combination overview K87 CT/CV.. 532
14.8 Combination overview K97 CT/CV.. 534
14.9 Combination overview K107 CV.. 536
14.10 Combination overview K127 CV.. 538
14.11 Combination overview K157 CV.. 539
14.12 Combination overview K167 CV.. 540
14.13 Combination overview K187 CV.. 541
14.14 Dimension sheets 542

15 Helical-Worm Gearmotors S..CT/CV.. 593
15.1 Types 593
15.2 Combination overview S37 CT.. 595
15.3 Combination overview S47 CT.. 596
15.4 Combination overview S57 CT.. 597
15.5 Combination overview S67 CT/CV.. 598
15.6 Dimension sheets 599

16 CT/CV Asynchronous Servomotors 619
16.1 Unit designation of asynchronous servomotors 620
16.2 Standards and regulations 621
16.3 Circuit breaker and protective equipment 622
16.4 Thermal characteristics 623
16.5 Mechanical characteristics 623
16.6 Overhung loads 624
16.7 Data tables and combination overviews 627
16.8 Motor options / equipment 659
16.9 Dimension sheets for asynchronous servomotors 685

17 Appendix 730
17.1 Abbreviation key 730
17.2 Index 732

1 The SEW-EURODRIVE Group of Companies

Introduction

SEW-EURODRIVE is a leading company in the global market for electrical drive engineering. Its global presence, extensive product range and broad spectrum of services make SEW-EURODRIVE the ideal partner for the machinery and plant construction industry when it comes to providing drive systems for demanding applications.

SEW-EURODRIVE possesses many years of experience in drive engineering which it puts to good use when developing, producing and selling all its drives with components drawn from mechanical and electrical engineering and electronics.

The company headquarters are located in Bruchsal, Germany. Components for the SEW-EURODRIVE modular drive system are manufactured to the highest quality standards in production plants sited in Germany, France, Finland, the United States, Brazil and China. The individual drive systems are assembled with a consistently high quality standard and very short delivery times from stocked components in our assembly plants located in more than 30 industrialized countries all over the world. SEW-EURODRIVE sales, consulting, customer and spare parts services are available in more than 50 countries around the globe.

The product range

- Gearmotors, gear units and motors.
  - Helical gear units/gearmotors
  - Parallel shaft helical gear units/gearmotors
  - Helical-bevel gear units/gearmotors
  - Helical-worm gear units/gearmotors
  - Spiroplan® right-angle gearmotors
  - Planetary gearmotors
  - Industrial gear units
  - Low backlash gear units/gearmotors
  - Energy efficient motors
  - Brake motors
  - Drives for overhead trolley systems
  - Geared torque motors
  - Pole-changing gearmotors
  - Helical-bevel servo gear units/gearmotors
  - Planetary servo gear units/gearmotors
  - ASEPTIC Gearmotors

- Electronically controlled drives
  - MOVITRAC® frequency inverters
  - MOVIDRIVE® drive inverters
  - MOVIDYN® servo controllers
  - Technology and communication options for the inverters
  - Asynchronous AC motors and AC gearmotors
  - Asynchronous and synchronous servomotors and geared servomotors
  - DC motors, brake motors and gearmotors
  - Asynchronous and synchronous linear motors

- Components for decentralized installation
  - MOVIMOT® gearmotors with integrated frequency inverter
  - MOVI-SWITCH® gearmotors with integrated switching and protection function
  - Field distributors, fieldbus interfaces
- Mechanical variable speed drives
  - VARIBLOC® wide V-belt variable speed gearmotors
  - VARIMOT® friction disc variable speed gearmotors
- Explosion-proof drives to EU directive 94/9/EC for categories 2 and 3
- Services
  - Technical consulting
  - Application software
  - Seminars and training
  - Extensive technical documentation
  - Worldwide customer service

Content of the catalog

This catalog describes the following gear unit types:

- Helical gear units R-..
- Parallel shaft helical gear units F-..
- Helical-bevel gear units K-..
- Helical-worm gear units S-..

in combination with DFS/CFM synchronous servomotors and CT/CV asynchronous servomotors from SEW-EURODRIVE. The catalog contains project planning notes, mounting positions, technical data, selection tables and dimension drawings.

Please refer to separate catalogs for more information about gear units, gearmotors, pole-changing gearmotors, variable speed gearmotors.

Other catalogs

- Low backlash servo gearmotors
- Gearmotors
- Gear units
- MOVIMOT® gearmotors.
- Pole-Changing gearmotors
- Variable speed gearmotors
- Drives for overhead trolley systems
- Explosion-proof drives
- Geared torque motors
- Planetary gearmotors
- Bucket elevator gear units
- Compact gear units
- ASEPTIC Gearmotors

Trademark

HIPERFACE® is a registered trademark of Sick Stegmann GmbH.

2 Product Description and Overview of Types

2.1 General information

Power and torque

The details on power and torque given in the catalog refer to mounting position M1 and similar mounting positions, where the input gear stage does not completely run under oil. In addition, the gearmotors are assumed to be standard versions with standard lubrication and under normal ambient conditions.

Input speeds

The torque data in this catalog are based on the following input speed:

- n_e = 1500 1/min with DFS/CFM synchronous servomotors.
- n_e = 1400 1/min with CT/CV asynchronous servomotors.

Noise levels

The noise levels of all SEW servo gearmotors and servomotors are well within the maximum permitted noise levels laid down by the VDI guideline 2159 for gear units and EN 60034 for motors.

Coating

The servo gear units, synchronous and asynchronous servomotors and servo gearmotors from SEW-EURODRIVE will be coated as follows:

Type	DFS/CFM synchronus servo-motor	CT/CV asynchronous servomotor
Servomotor without gear unit	RAL 9005 black	RAL 7031 blue gray
R / F / K / S servo gearmotor	RAL 7031 blue gray	RAL 7031 blue gray

Special coatings are available on request.

Weights

Please note that all weights shown in the catalog exclude the oil fill for the gearmotors. The weight varies according to gear unit design and gear unit size. The lubricant fill is dependent on the mounting position, and consequently it is impossible to make any generally valid statements. Refer to "Lubricants" in the "Design and Operating Notes" section for recommended lubricant fill quantities depending on the mounting position. The exact weight is given in the order confirmation.

Air admission and accessibility

The gearmotors/brake motors must be mounted on the driven machine in such a way that both axially and radially there is enough space left for unimpeded air admission and for the purposes of maintenance of the brake. Please also refer to the notes on the motor dimension sheets in this regard.

NOCO® fluid for protection against contact corrosion

As standard, all shaft-mounted gearmotors are supplied with NOCO® fluid, a paste that prevents contact corrosion. Use this paste in accordance with the instructions in the gear unit operating instructions. It facilitates service and stripping down jobs.

NOCO® fluid is food grade according to USDA-H1. You can tell that NOCO® fluid is a food grade oil by the USDA-H1 identification label on its packaging.

Brake motors

On request, motors and gearmotors can be supplied with an integrated mechanical brake. The SEW-EURODRIVE brake is an electromagnetic disk brake with a DC coil that releases electrically and brakes using spring force. The design principle means the brake is applied if the power fails. This means it complies with fundamental safety requirements.

The brake can also be released mechanically if equipped with manual brake release. A hand lever that springs back automatically is supplied with the brake. Manual brake release is not available with DFS servomotors. The brake is activated by a brake control system accommodated either in the wiring space of the motor or in the control cabinet.

A significant feature of the brakes is their very short length. The integrated construction of the SEW-EURODRIVE brake motor permits particularly compact and sturdy solutions.

Reduced backlash version

Gear units with reduced backlash in helical, parallel shaft helical and helical-bevel design are available as of gear unit size 37. The circumferential backlash of these gear units is considerably less than that of the standard versions so that positioning tasks can be solved with great precision. The circumferential backlash is specified in angular minutes in the ['] combination overviews. The dimension drawings for the standard versions are applicable.

International markets

SEW-EURODRIVE is a member of the AGMA (American Gear Manufacturers' Association), and as such, all its gear units and geared motors conform to AGMA specifications.

We supply motors for connection conditions according to CSA and NEMA standards on request (registered with UL).

2.2 Gearmotor versions

Helical gearmotors

The following helical gearmotor types can be supplied:

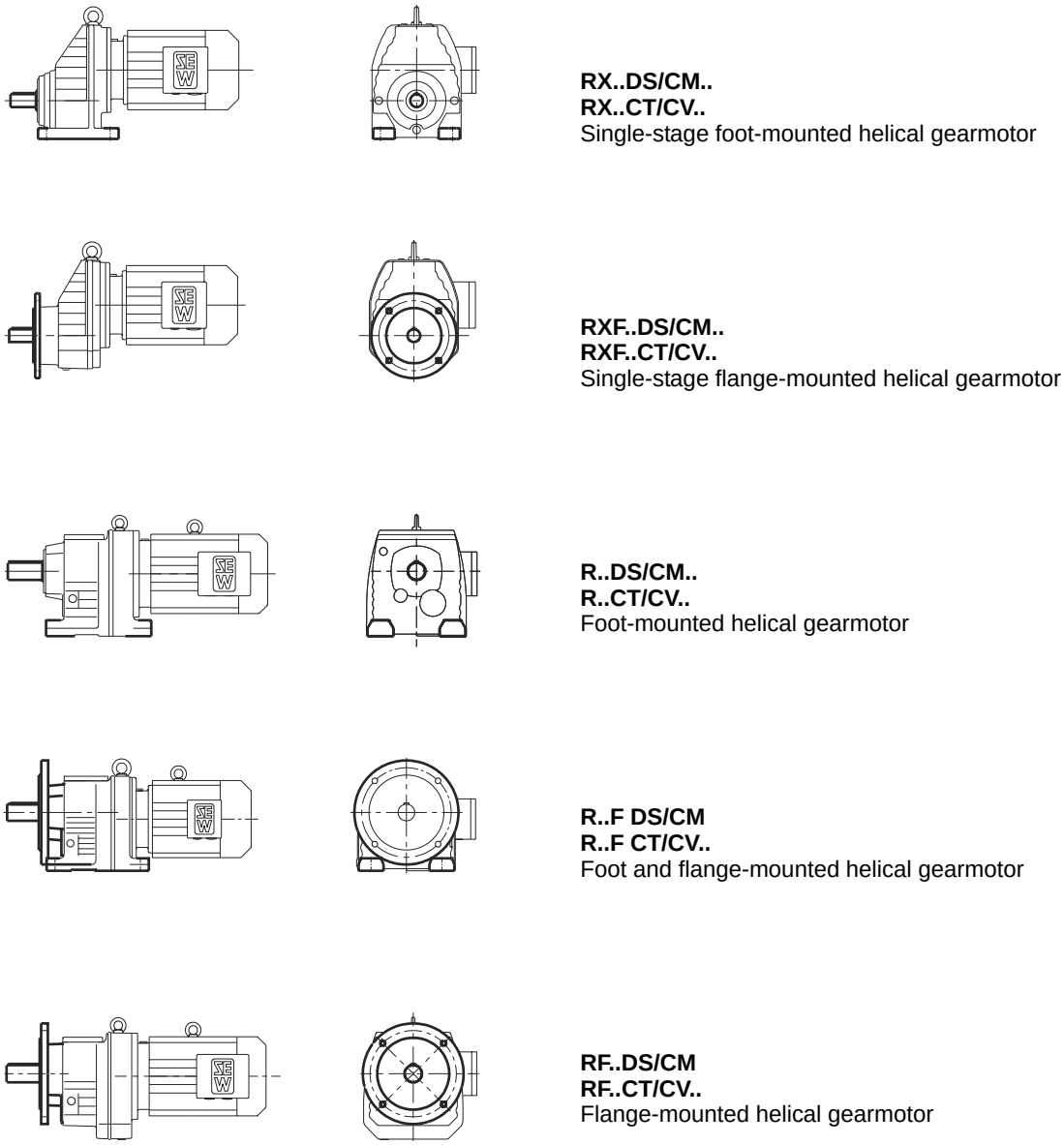

RX..DS/CM..
RX..CT/CV..
Single-stage foot-mounted helical gearmotor

RXF..DS/CM..
RXF..CT/CV..
Single-stage flange-mounted helical gearmotor

R..DS/CM..
R..CT/CV..
Foot-mounted helical gearmotor

R..F DS/CM
R..F CT/CV..
Foot and flange-mounted helical gearmotor

RF..DS/CM
RF..CT/CV..
Flange-mounted helical gearmotor

03163BXX

Parallel shaft helical gearmotors The following parallel shaft helical gearmotor types can be supplied:

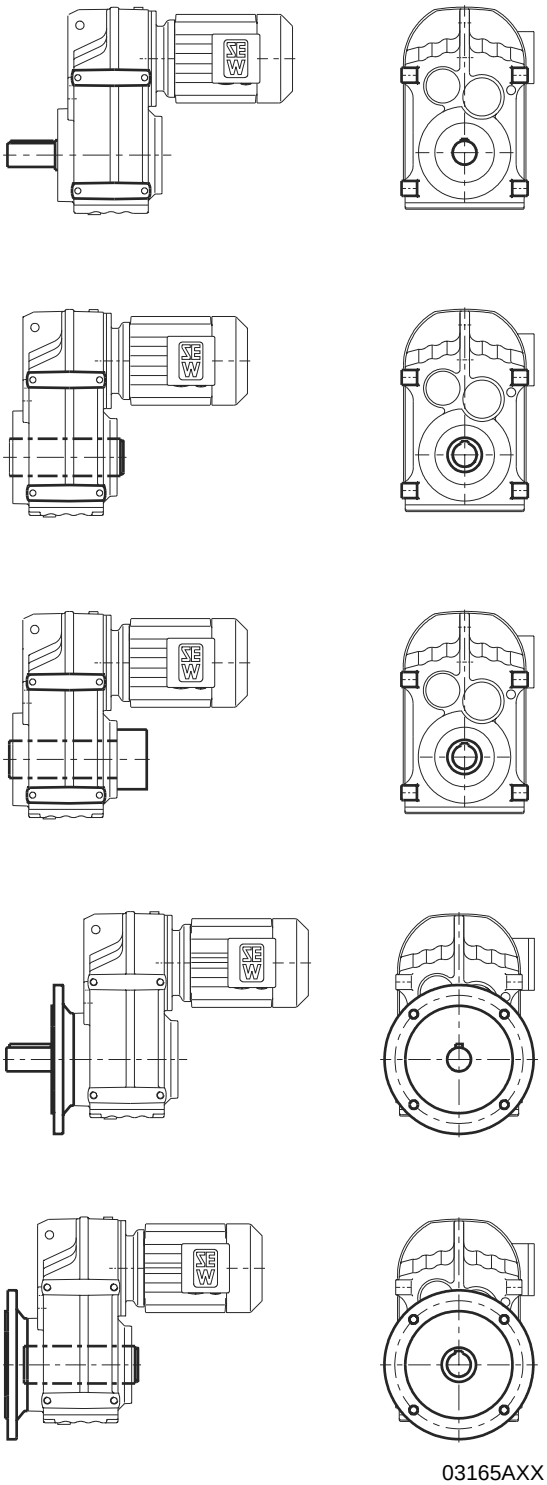

F..DS/CM..
F..CT/CV..
Foot-mounted parallel shaft helical gearmotor

FA..B DS/CM..
FA..B CT/CV..
Foot-mounted parallel shaft helical gearmotor with hollow shaft

FV..B DS/CM..
FV..B CT/CV..
Foot-mounted parallel shaft helical gearmotor with hollow shaft and splined hollow shaft to DIN 5480

FH..B DS/CM..
FH..B CT/CV..
Foot-mounted parallel shaft helical gearmotor with hollow shaft and shrink disc

FF..DS/CM..
FF..CT/CV..
Parallel shaft helical gearmotor in B5 flange-mounted version

FAF..DS/CM..
FAF..CT/CV..
Parallel shaft helical gearmotor in B5 flange-mounted version with hollow shaft

FVF..DS/CM..
FVF..CT/CV..
Parallel shaft helical gearmotor in B5 flange-mounted version with hollow shaft and splined hollow shaft to DIN 5480

03165AXX

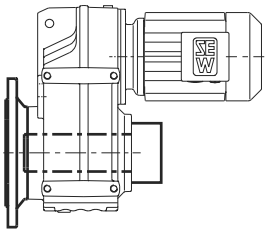

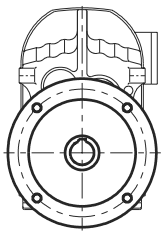

FHF..DS/CM..
FHF..CT/CV..
Parallel shaft helical gearmotor in B5 flange-mounted version with hollow shaft and shrink disc

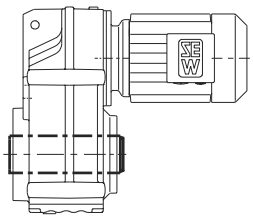

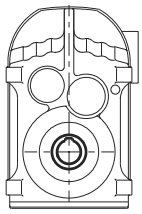

FA..DS/CM..
FA..CT/CV..
Parallel shaft helical gearmotor with hollow shaft

FV..DS/CM..
FV..CT/CV..
Parallel shaft helical gearmotor with hollow shaft and splined hollow shaft to DIN 5480

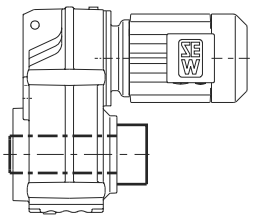

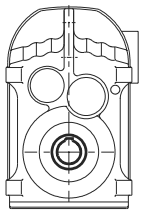

FH..DS/CM..
FH..CT/CV..
Parallel shaft helical gearmotor with hollow shaft and shrink disc

FT..DS/CM..
FT..CT/CV..
Parallel shaft helical gearmotor with hollow shaft and TorqLOC® hollow shaft mounting system

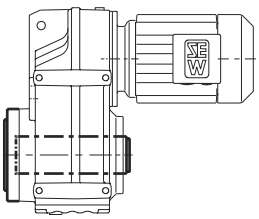

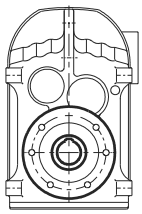

FAZ..DS/CM..
FAZ..CT/CV..
Parallel shaft helical gearmotor in B14 flange-mounted version with hollow shaft

FVZ..DS/CM..
FVZ..CT/CV..
Parallel shaft helical gearmotor in B14 flange-mounted version with hollow shaft and splined hollow shaft to DIN 5480

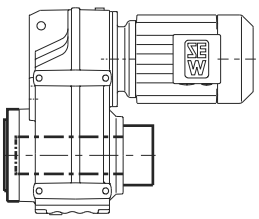

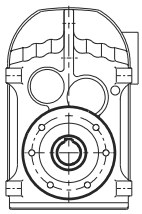

FHZ..DS/CM..
FHZ..CT/CV..
Parallel shaft helical gearmotor in B14 flange-mounted version with hollow shaft and shrink disc

03166AXX

Helical-bevel gearmotors

The following helical-bevel gearmotor types can be supplied:

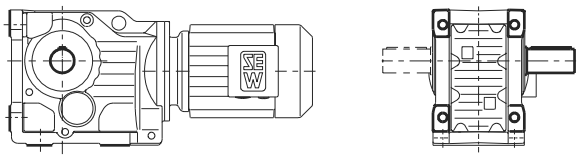

K..DS/CM..
K..CT/CV..
Foot-mounted helical-bevel gearmotor

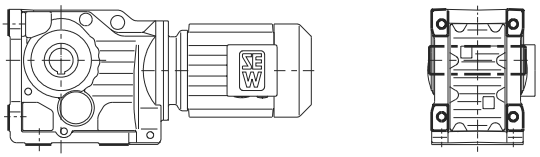

KA..B DS/CM..
KA..B CT/CV..
Foot-mounted helical-bevel gearmotor with hollow shaft

KV..B DS/CM..
KV..B CT/CV..
Foot-mounted helical-bevel gearmotor with hollow shaft and splined hollow shaft to DIN 5480

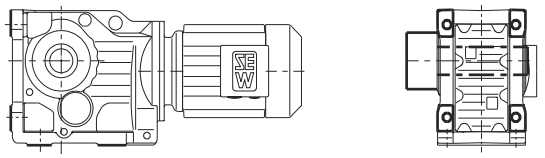

KH..B DS/CM..
KH..B CT/CV..
Foot-mounted helical-bevel gearmotor with hollow shaft and shrink disc

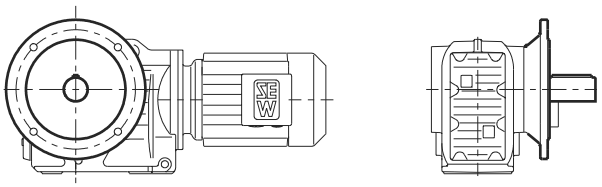

KF..DS/CM..
KF..CT/CV..
Helical-bevel gearmotor in B5 flange-mounted version

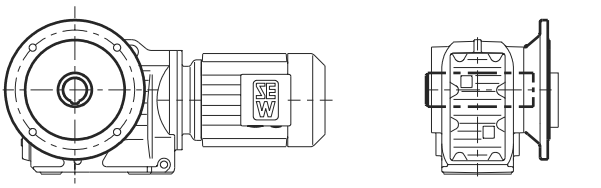

KAF..DS/CM..
KAF..CT/CV..
Helical-bevel gearmotor in B5 flange-mounted version with hollow shaft

KVF..DS/CM
KVF..CT/CV..
Helical-bevel gearmotor in B5 flange-mounted version with hollow shaft and splined hollow shaft to DIN 5480

03173AXX

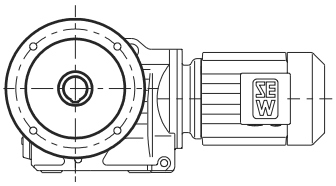

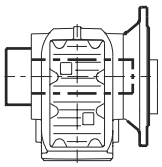

KHF..DS/CM..
KHF..CT/CV..
Helical-bevel gearmotor in B5 flange-mounted version with hollow shaft and shrink disc

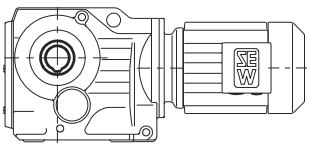

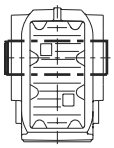

KA..DS/CM..
KA..CT/CV..
Helical-bevel gearmotor with hollow shaft

KV..DS/CM..
KV..CT/CV..
Helical-bevel gearmotor with hollow shaft and splined hollow shaft to DIN 5480

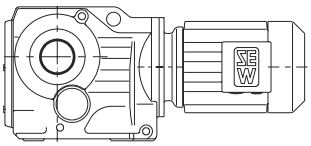

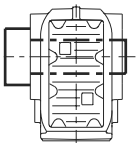

KH..DS/CM..
KH..CT/CV..
Helical-bevel gearmotor with hollow shaft and shrink disc

KT..DS/CM..
KT..CT/CV..
Helical-bevel gearmotor with hollow shaft and TorqLOC® hollow shaft mounting system

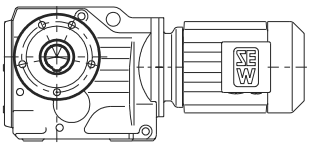

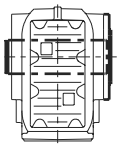

KAZ..DS/CM..
KAZ..CT/CV..
Helical-bevel gearmotor in B14 flange-mounted version with hollow shaft

KVZ..DS/CM..
KVZ..CT/CV..
Helical-bevel gearmotor in B14 flange-mounted version with hollow shaft and splined hollow shaft to DIN 5480

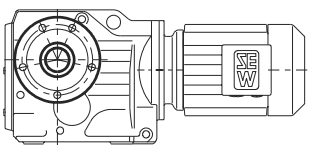

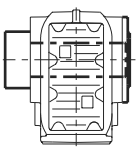

KHZ..DS/CM..
KHZ..CT/CV..
Helical-bevel gearmotor in B14 flange-mounted version with hollow shaft and shrink disc

03174AXX

Helical-worm gearmotors

The following helical-worm gearmotor types can be supplied:

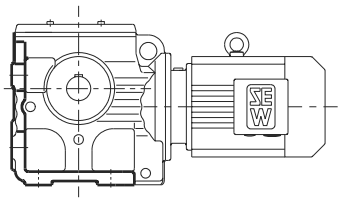
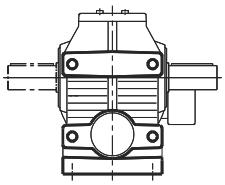

S..DS/CM..
S..CT/CV..
Foot-mounted helical-worm gearmotor

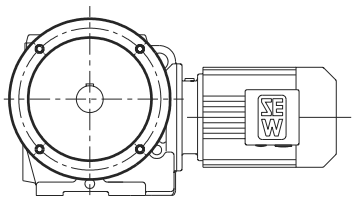
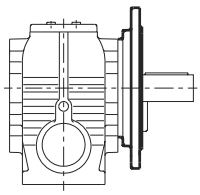

SF..DS/CM..
SF..CT/CV..
Helical-worm gearmotor in B5 flange-mounted version

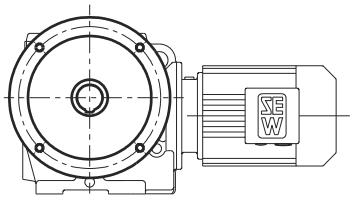
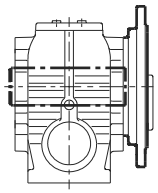

SAF..DS/CM..
SAF..CT/CV..
Helical-worm gearmotor in B5 flange-mounted version with hollow shaft

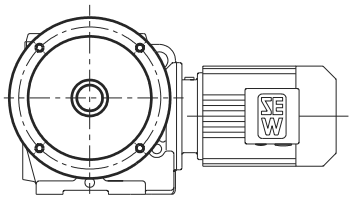
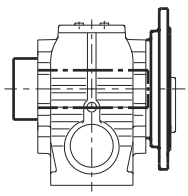

SHF..DS/CM..
SHF..CT/CV..
Helical-worm gearmotor in B5 flange-mounted version with hollow shaft and shrink disc

03180AXX

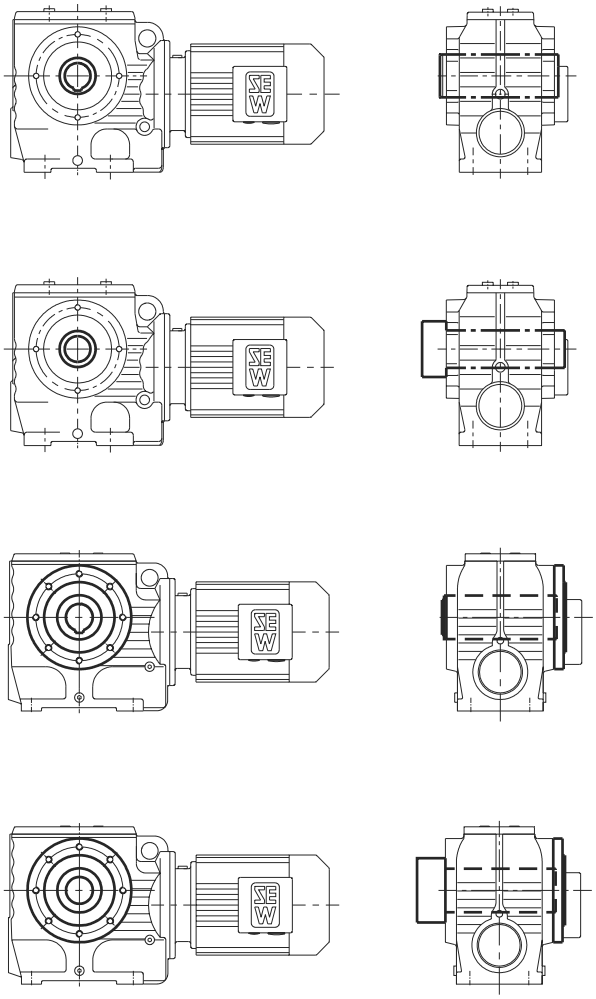

SA..DS/CM..
SA..CT/CV..
Helical-worm gearmotor with hollow shaft

SH..DS/CM..
SH..CT/CV..
Helical-worm gearmotor with hollow shaft and shrink disc

ST..DS/CM..
ST..CT/CV..
Helical-worm gearmotor with hollow shaft and TorqLOC® hollow shaft mounting system

SAZ..DS/CM..
SAZ..CT/CV..
Helical-worm gearmotor in B14 flange-mounted version with hollow shaft

SHZ..DS/CM..
SHZ..CT/CV..
Helical-worm gearmotor in B14 flange-mounted version with hollow shaft and shrink disc

03181AXX

2.3 Unit designations for gear units and options

Helical gear units

RX..	Single-stage foot-mounted
RXF..	Single-stage flange-mounted
R..	Foot-mounted
R..F	Foot and flange-mounted
RF..	Flange-mounted

Parallel shaft helical gear unit

F..	Foot-mounted version
FA..B	Foot-mounted and hollow shaft
FH..B	Foot-mounted and hollow shaft with shrink disc
FV..B	Foot-mounted and splined hollow shaft to DIN 5480
FF..	B5 flange-mounted
FAF..	B5 flange-mounted and hollow shaft
FHF..	B5 flange-mounted and hollow shaft with shrink disc
FVF..	B5 flange-mounted and splined hollow shaft to DIN 5480
FA..	Hollow shaft
FH..	Hollow shaft with shrink disc
FT..	Hollow shaft with TorqLOC® hollow shaft mounting system
FV..	Splined hollow shaft to DIN 5480
FAZ..	B14 flange-mounted and hollow shaft
FHZ..	B14 flange-mounted and hollow shaft with shrink disc
FVZ..	B14 flange-mounted and splined hollow shaft to DIN 5480

Helical-bevel gear units

K..	Foot-mounted version
KA..B	Foot-mounted and hollow shaft
KH..B	Foot-mounted and hollow shaft with shrink disc
KV..B	Foot-mounted and splined hollow shaft to DIN 5480
KF..	B5 flange-mounted
KAF..	B5 flange-mounted and hollow shaft
KHF..	B5 flange-mounted and hollow shaft with shrink disc
KVF..	B5 flange-mounted and splined hollow shaft to DIN 5480
KA..	Hollow shaft
KH..	Hollow shaft with shrink disc
KT..	Hollow shaft with TorqLOC® hollow shaft mounting system
KV..	Splined hollow shaft to DIN 5480
KAZ..	B14 flange-mounted and hollow shaft
KHZ..	B14 flange-mounted and hollow shaft with shrink disc
KVZ..	B14 flange-mounted and splined hollow shaft to DIN 5480

Helical-worm gear unit

S..	Foot-mounted version
SF..	B5 flange-mounted
SAF..	B5 flange-mounted and hollow shaft
SHF..	B5 flange-mounted and hollow shaft with shrink disc
SA..	Hollow shaft
SH..	Hollow shaft with shrink disc
ST..	Hollow shaft with TorqLOC® hollow shaft mounting system
SAZ..	B14 flange-mounted and hollow shaft
SHZ..	B14 flange-mounted and hollow shaft with shrink disc

R, F, K gear unit option

/R	Reduced backlash

K and S gear unit option

/T	with torque arm

F gear unit option

/G	with rubber buffer

2.4 Unit designations for servomotors and options

Synchronous servomotors

DS...	Motor for mounting to size 56 gear units
DFS...	Size 56 in flange-mounted version
CM...	Motor for mounting to gear units of sizes 71 / 90 / 112
CFM...	Sizes 71 / 90 / 112 in flange-mounted version

Standard equiment for synchronous servomotors

/SM.0	Motor plug connector (socket on motor end only)
/SB.0	Plug connector motor + brake (socket on motor end only)
/RH1M	Resolver
/RH1L	Resolver for brake motors
/TF	Thermistor (PTC resistor)
/KTY	Temperature sensor

Synchronous servomotor options

/B	Size 56 disc brake
/BR	Size 71 / 90 / 112 disc brake
../HR	.. with automatic manual brake release sizes 71 / 90 / 112
/SM..	Motor plug connector with code number for size and connection cross section
/SB..	Plug connector for motor + brake with code number for size and connection cross section
/ES1H	Single-turn HIPERFACE® encoder, spread shaft, size 56 / 71 / 90 / 112
/AS1H	Multi-turn HIPERFACE® encoder, spread shaft, size 56 / 71 / 90 / 112
/AV1H	Multi-turn HIPERFACE® encoder, solid shaft, size 56 / 71 / 90 / 112
/AV1Y	Multi-turn SSI encoder, solid shaft, size 56
/VR	Forced cooling fan
/KK	Terminal box
/KK5	Terminal box for radial encoder
/KK6	Terminal box for axial encoder

Asynchronous servomotors

CT...	Foot-mounted / attached motor sizes 71 ... 90
CFT...	Flange mounted sizes 71 ... 90
CV...	Foot-mounted / attached motor sizes 100 ... 200
CFV...	Flange mounted sizes 100 ... 200

Standard equiment for asynchronous servomotors

/TF	Thermistor (PTC resistor)
/ES1S	Encoder with spread shaft, sin/cos signals, sizes 71 ... 100
/ES2S	Encoder with spread shaft, sin/cos signals, sizes 112M ... 132S
/EV1S	Encoder with solid shaft, sin/cos signals, sizes 132M ... 200

Asynchronous servomotor options

/BM(G)	Disk brake
../HF	.. with lockable manual brake release
../HR	.. with automatic manual brake release
/TH	Thermostat (bimetallic switch)
/V	Forced colloing fan, three-phase current, sizes 132M ... 200
/VR	Forced cooling fan, direct current, sizes 71 ... 132S
/VS	Forced cooling fan, single-phase alternating current, sizes 71 ... 132S
/C	Protection canopy for the fan guard
/ES1R	Encoder with spread shaft, TTL (RS-422), sizes 71 ... 100
/ES2R	Encoder with spread shaft, TTL (RS-422), sizes 112 .. 132S
/EV1R	Encoder with solid shaft, TTL (RS-422), sizes 71 ... 200
/EV1S	Encoder with solid shaft, sin/cos signals, sizes 71 ... 132S
/AV1Y	Multi-turn SSI encoder, solid shaft
/AV1A	Multi-turn HIPERFACE® encoder, solid shaft
/EV1A	Mounting device for encoders with solid shaft
/IS	Integrated plug connector
A..7	HAN.. plug connector (Harting)

Example: Order code for helical-bevel servo gearmotors

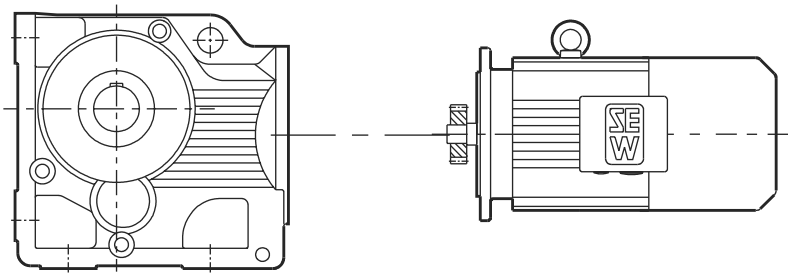

K107 CV112M4/BMG/TF

54765ADE

For example, a helical-bevel servomotor with brake and positive temperature coefficient thermistor has the following unit designation:

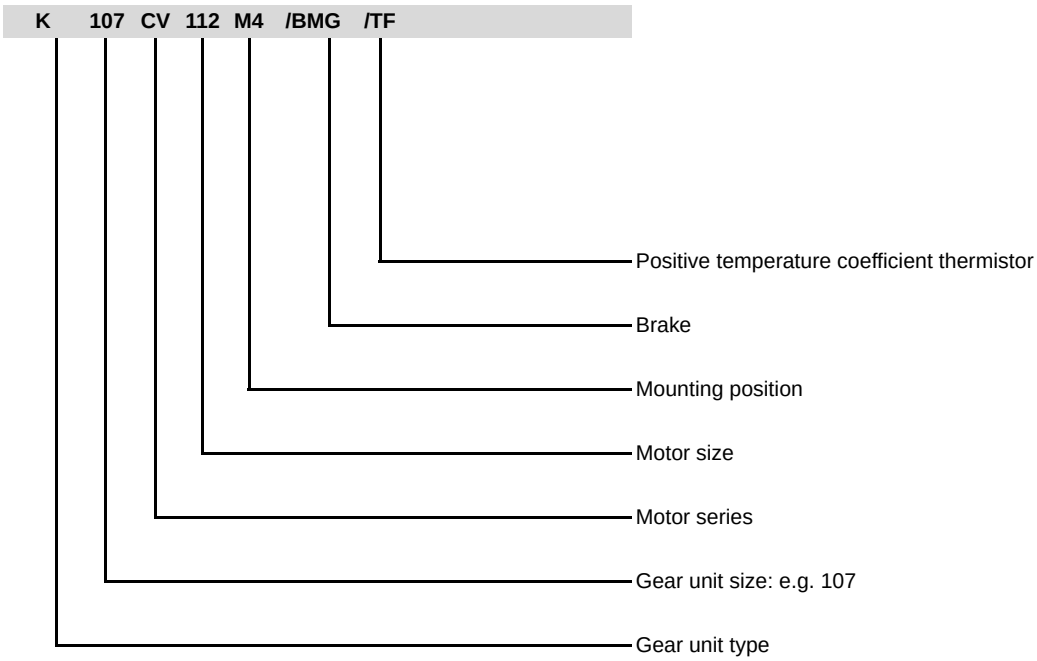

Note!

The nameplate of the K.... helical-bevel servo gearmotor is fixed to the servomotor!

2.5 Corrosion and surface protection

General

SEW-EURODRIVE offers various optional protective measures for operating motors and gear units under special ambient conditions.

The protective measures are made up of two groups:

- Corrosion protection KS for motors
- Surface protection OS for motors and gear units

For motors, optimum protection is offered by a combination of corrosion protection KS and surface protection OS.

In addition, special optional protective measures for the output shafts are also possible.

Corrosion protection KS

Corrosion protection KS for motors comprises the following measures:

- All retaining screws that are removed in operation are made from stainless steel.
- The nameplates are made from stainless steel.
- Various motor components are provided with a top coating.
- The flange contact surfaces and shaft ends are treated with a temporary anti-corrosion agent.
- Additional measures for brake motors.

A sticker labeled "KORROSIONSSCHUTZ" (corrosion protection) indicates special treatment has been applied.

Motors with a forced cooling fan and motors with a spread shaft encoder (ES..) cannot be supplied with corrosion protection KS.

Surface protection OS

Instead of the standard surface protection, motors and gear units are optionally available with exterior surface protection OS1, OS2, OS3 or OS4. The special procedure "Z" can also be performed in addition to OS1, OS2, OS3 and OS4. The special procedure "Z" means that large surface recesses are sprayed with a rubber filling prior to painting.

Surface protection	Coating structure	Required coating thickness (nominal dry film thickness) DIN EN ISO 12944-5 [NDFT]	Suitable for
Standard	1 × dip priming 1 × one-pack topcoat	70 µm	• Normal environmental impact • Relative humidity below 90 % • Surface temperature up to max. 120 °C • Corrosivity category C1[1)]
OS1	1 × dip priming 1 × two-pack base coat 1 × two-pack varnish	150 µm	• Low environmental impact • Relative humidity max. 95 % • Surface temperature up to max. 120 °C • Corrosivity category C2[1)]
OS2	1 × dip priming 2 × two-pack base coat 1 × two-pack varnish	210 µm	• Medium environmental impact • Relative humidity up to 100 % • Surface temperature up to max. 120 °C • Corrosivity category C3[1)]
OS3	1 × dip priming 2 × two-pack base coat 2 × two-pack varnish	270 µm	• High environmental impact • Relative humidity up to 100 % • Surface temperature up to max. 120 °C • Corrosivity category C4[1)]
OS4	1 x dip primer 2 x two-pack base coat 2 x two-pack varnish	320 µm	• Very high environmental impact • Relative humidity up to 100 % • Surface temperature up to 120 °C • Corrosivity category C5-I[1)]

1) according to DIN EN ISO 12 944-2

Special protective measures

Gearmotor output shafts can be treated with special optional protective measures for operation subject to severe environmental pollution or in particularly demanding applications.

Action	Protection principle	Suitable for
Kanisil coating	Surface coating of the contact surface of the oil seal	Severe environmental pollution and in conjunction with FKM oil seal (Viton)
Stainless steel output shaft	Surface protection through high-quality material	Particularly exacting applications in terms of exterior surface protection

NOCO® fluid

For more information on NOCO® fluid, refer to page 10.

2.6 Extended storage

Version

You can also order gear units prepared for "extended storage." In this case, a VCI (volatile corrosion inhibitor) is added to the lubricant in these gear units. Unless specified otherwise, the gear unit will be provided with exterior surface protection OS1. You can order OS2, OS3 or OS4 instead of OS1.

Surface protection	Suitable for	Corrosivity category to DIN EN ISO 12944-2
OS1	Low environmental impact	C2 (low)
OS2	Medium environmental impact	C3 (moderate)
OS3	High environmental impact	C4 (high)
OS4	Severe environmental impact	C5-I (severe)

Oil fill

Note the following points concerning the oil fill:

- **Mineral oil (CLP) and synthetic oil (CLP HC):** Gear units will be supplied with an oil fill according to the mounting position (M1 ... M6) and are ready for operation.
- **Synthetic oil (CLP PG):** In some cases, gear units are supplied with an increased oil level. Before startup, adjust the oil level to match the required mounting position (M1 ... M6). The oil fill quantities for gear units are specified in Sec. 5.1 "Lubricants" (→ from page 84).



The gear units must remain tightly sealed until taken into operation to prevent the VCI corrosion protection agent from evaporating.

Always check the oil level before you take the gear unit into operation!

Storage conditions

Comply with the storage conditions specified in the following table for extended storage:

Climate zone	Packaging[1)]	Storage location	Storage time
Temperate (Europe, USA, Canada, China and Russia, excluding tropical zones)	Packed in containers, with desiccant and moisture indicator sealed in the plastic wrap.	With roof, protected against rain and snow, no shock loads.	Up to three years with regular checks on the packaging and moisture indicator (rel. atmospheric humidity < 50 %).
	Open	With roof, enclosed at constant temperature and atmospheric humidity (5°C < ϑ < 60°C, < 50% relative atmospheric humidity). No sudden temperature fluctuations and controlled ventilation with filter (free from dirt and dust). No aggressive vapors and no shock loads.	Two years or more given regular inspections. Check for cleanliness and mechanical damage as part of the inspection. Check corrosion protection.
Tropical (Asia, Africa, Central and South America, Australia, New Zealand excluding temperate zones)	Packed in containers, with desiccant and moisture indicator sealed in the plastic wrap. Protected against insect damage and mildew by chemical treatment.	With roof, protected against rain, no shock loads.	Up to three years with regular checks on the packaging and moisture indicator (rel. atmospheric humidity < 50 %).
	Open	With roof, enclosed at constant temperature and atmospheric humidity (5°C < ϑ < 60°C, < 50% relative atmospheric humidity). No sudden temperature fluctuations and controlled ventilation with filter (free from dirt and dust). No aggressive vapors and no shock loads. Protection against insect damage.	Two years or more given regular inspections. Check for cleanliness and mechanical damage as part of the inspection. Check corrosion protection.

1) Packaging must be performed by an experienced company using the packaging materials that have been expressly specified for the particular application.

3 Project Planning

3.1 Additional documentation

In addition to the information in this catalog, SEW-EURODRIVE offers extensive documentation covering the entire topic of electrical drive engineering. These are mainly the publications in the "Drive Engineering – Practical Implementation" series as well as the manuals and catalogs for electronically controlled drives. You will find additional links to a wide selection of our documentation in many languages for download on the SEW-EURODRIVE homepage (http://www.sew-eurodrive.com). The list below includes other documents that are of interest in terms of project planning. You can order these publications from SEW-EURODRIVE.

Drive Engineering - Practical Implementation

- Drive Planning
- Controlled AC Drives
- Servo Drives
- EMC in Drive Engineering
- Explosion-Proof Drives to EU Directive 94/9/EC

Electronic documentation

- MOVIDRIVE® MD_60A system manual
- MOVIDRIVE® MDX60/61B system manual
- MOVIDRIVE® compact system manual

Mechanical brakes

- "Brakes and Accessories" manual

3.2 Drive and gear unit selection data

Certain data is essential to specify the components for your drive precisely. These are:

Data for drive dimensioning			Your entry
i	Gear ratio		
φ	Circumferential backlash	[']	
η_G	Efficiency of gear units		
$n_{a\ max}$	Maximum output speed	[min^{-1}]	
n_{am}	Mean output speed of the gear unit	[min^{-1}]	
n_e	Input speed	[min^{-1}]	
n_{em}	Mean input speed	[min^{-1}]	
J_G	Mass moment of inertia of the gear unit	[kgm^2]	
J_{ext}	Mass moment of inertia (external) reduced on motor shaft	[kgm^2]	
J_{Mot}	Mass moment of inertia of the motor	[kgm^2]	
J_{load}	Mass moment of inertia of the load	[kgm^2]	
k	Mass moment of inertia ratio J_{ext} / J_{Mot}		
$M_1...M_n$	Output torque in time period t_1 to t_n	[Nm]	
M_{DYN}	Dynamic limit torque of the servomotor	[Nm]	
$M_{a\ max}$	Maximum output torque	[Nm]	
$M_{e\ max}$	Maximum input torque	[Nm]	
M_{max}	Maximum output torque assumed for the drive in project planning	[Nm]	
$M_{a\ (t)}$	Acceleration and braking torque	[Nm]	
M_{eff}	Effective torque requirement (in relation to the motor)	[Nm]	
P_{Br}	Braking power	[W]	
P_{Br_peak}	Peak braking power	[W]	
P_{Br_tn}	Braking power in section t_n	[W]	
$t_1...t_n$	Time period 1 to n	[min]	
t_z	Cycle time	[s]	
F_{Ax}	Axial load (tension and compression) on the output shaft	[N]	
F_R	Overhung load on the output shaft	[N]	
F_{Ra}	Permitted overhung load on the output shaft. Assumes force application in center of shaft. If not, please specify the exact application point giving the application angle and direction of rotation of the shaft for recalculation.	[N]	
F_{RxL}	Permitted overhung load at point x based on the bearing service life	[N]	
F_{RxW}	Permitted overhung load at point x based on the shaft strength	[N]	
x	Distance between overhung load application point and shaft shoulder	[mm]	
a, b, c, f	Gear unit constants as regards the overhung load conversion		
S.., ..%cdf	Duty type and cyclic duration factor (cdf) or exact load cycle can be entered.	-	
Required positioning accuracy and speed range			
R, F, K, S	Required gear unit type and mounting position	-	
M1 - M6	Mounting position (→ Sec. Mounting Positions)	-	
IP..	Required enclosure	-	
ϑ_{Umg}	Ambient temperature	[°C]	
H	Installation altitude	[m above sea level]	

Determining application data

It is first necessary to have data on the machine to be driven (mass, speed, setting range, etc.) to design the drive correctly.

These data help determine the required power, torque and speed. Refer to the "Drive Engineering - Practical Implementation, Drive Planning" publication or the PRODRIVE® project planning software for assistance.

3.3 Project planning procedure

Example

The following flowchart displays a schematic view of the procedure for planning a project incorporating a positioning drive. The drive consists of a gearmotor that is powered by an inverter.

Necessary information about the machine to be driven
- Technical data and environmental conditions
- Positioning accuracy
- Speed setting range
- Calculation of the travel cycle

↓

Calculation of the relevant application data
- Travel cycle
- Speeds
- Static, dynamic torques
- Regenerative power

↓

Gear unit selection
- Definition of gear unit size, gear unit reduction ratio and gear unit type
- Check the positioning accuracy
- Check for gear unit utilization ($M_{a\ max} \geq M_{a\ (t)}$).
- Check the input speed (churning losses)

↓

Motor selection
- Maximum torque
- In dynamic drives: Effective torque at medium speed
- Maximum speed
- Observe dynamic and thermal torque curves
- Select the correct encoder
- Motor equipment (brake, plug connector, TF selection, etc.)

↓

Selecting the inverter
- Motor/inverter assignment
- Continuous current and peak current in current-controlled inverters

↓

Selecting the braking resistor
- based on the calculated regenerative power, cdf and peak breaking power.

↓

Options
- EMC measures
- Operation/communication
- Additional functions

↓

Make sure that all requirements have been met.

3.4 Project planning for gear units

Features of the gear units

The efficiency of gear units is mainly determined by the gearing and bearing friction. Keep in mind that the starting efficiency of a gear unit is always less than its efficiency at operating speed. This factor is especially pronounced in the case of helical-worm gear units.

R, F, K gear units

The efficiency of helical, parallel shaft and helical-bevel gear units varies with the number of gear stages, between 94 % (3-stage) and 98 % (1-stage).

S gear units

The gearing of helical-worm gear units produces a high proportion of sliding friction. As a result, these gear units may have higher gearing losses than R, F or K gear units and thus be less efficient.

The efficiency depends on the following factors:

- Gear ratio of the helical-worm gear stage
- Input speed
- Gear unit temperature

SEW gear units are designed as helical worm which makes them significantly more efficient than straightforward worm gear units. The efficiency may reach $\eta < 0.5$ if the helical-worm gear stage has a very high gear ratio.

Self-locking

Retrodriving torques on helical-worm gear units produce an efficiency of $\eta' = 2 - 1/\eta$, which is significantly less favorable than the forward efficiency η. The helical-worm gear unit is self-locking if the forward efficiency $\eta \leq 0.5$. Contact SEW-EURODRIVE if you wish to make technical use of the braking effect of self-locking characteristics.

Run-in phase

The tooth flanks of new helical-worm gear units are not yet completely smooth. That fact makes for a greater friction angle and less efficiency than during later operation. This effect becomes more apparent the greater the gear ratio. Subtract the following values from the listed efficiency during the run-in phase:

No. of starts	i range	η-reduction
2 start	ca. 20 ... 75	ca. 6 %
5 start	ca. 6 ... 25	ca. 3 %

The run-in phase usually lasts 24 hours. The helical-worm gear units achieve their listed rated efficiency values when:

- the gear unit has been run in completely,
- the gear unit has reached nominal operating temperature,
- the recommended lubricant has been filled in and
- the gear unit is working within the rated load range.

Churning losses

Churning losses in R, F, K and S gear units are caused by the circulating lubricant. Churning losses depend on the mounting position of the gear unit and the input speed.

If possible, use the basic mounting position M1 for R, F, K and S gear units to reduce churning losses to a minimum.

Mean speeds higher than 1500 min^{-1} or mounting positions other than M1 require for checking churning losses and the thermal rating. Contact SEW-EURODRIVE in such cases.

Maximum speeds

Maximum speeds	
Gear unit sizes	**Max. speed**
up to 77	4500 min^{-1}
87	3900 min^{-1}
97	3100 min^{-1}
107	2700 min^{-1}
127 - 167	2500 min^{-1}
187	2000 min^{-1}

It is essential to contact SEW-EURODRIVE if higher maximum speeds are involved.

Design and operating notes

When input and output elements are mounted on SEW gear units, the **shaft can be used as a stop** for transmission elements (belt pulley, pinion, etc.).

R, F, K gear units can be operated at **ambient temperatures of** between **– 10 °C and + 40 °C**. S gear units can be operated at **ambient temperatures of** between **0 °C and + 40 °C**. Contact SEW-EURODRIVE if ambient temperatures exceed this temperature range!

SEW gear units can be operated up to **altitudes** of **1000 m above sea level**. For operation at altitudes above 1000 m above sea level, contact SEW-EURODRIVE.

3.5 Overhung and axial loads

Determining overhung load

When determining the resulting overhung load, the type of transmission element mounted on the shaft end must be considered. The following transmission element factors f_Z also have to be considered for various transmission elements:

Transmission element	Transmission element factor f_{Z1}	Comments
Gears	1.15	< 17 teeth
Chain sprockets	1.40	< 13 teeth
Chain sprockets	1.25	< 20 teeth
Narrow V-belt pulleys	1.75	Depending on the pre-tensioning force
Flat belt pulleys	2.50	Depending on the pre-tensioning force
Toothed belt pulleys	2.00 - 2.50	Depending on the pre-tensioning force

The overhung load exerted on the motor or gear shaft is calculated as follows:

$$F_R = \frac{M_d \times 2000}{d_0} \times fz$$

F_R = Overhung load in N
M_d = Torque in Nm
d_0 = Mean diameter of the mounted transmission element in mm
f_Z = Transmission element factor

Permitted overhung load

The basis for determining the permitted overhung loads is the computation of the rated bearing service life L_{H10} of the anti-friction bearings (according to ISO 281).

For special operating conditions, the permitted overhung loads can be determined with regard to the modified bearing service life L_{na} on request.

The data refer to gearmotors with the force acting midway on the shaft end. Worst case conditions have been assumed for the force application angle α and the direction of rotation.

- Only 50 % of the F_{Ra} value specified in the selection tables is permitted in mounting position M1 with wall attachment on the front face for K and S gear units.
- With foot-mounted and flange-mounted R gearmotors, a maximum of 50 % of the overhung load F_{Ra} specified in the selection tables is permitted in the case of torque transmission via the flange mounting.

The overhung load is specified for foot-mounted gear units as standard. If the overhung load values of other versions differ from those of the foot-mounted version, these values will appear in a separate column in the selection tables.

Higher permitted overhung loads

Exactly considering the force application angle α and the direction of rotation makes it possible to achieve a higher overhung load. Higher output shaft loads are permitted if heavy duty bearings are installed, especially with R, F and K gear units. Contact SEW-EURODRIVE in such cases.

Definition of force application

Force application is defined according to the following figure:

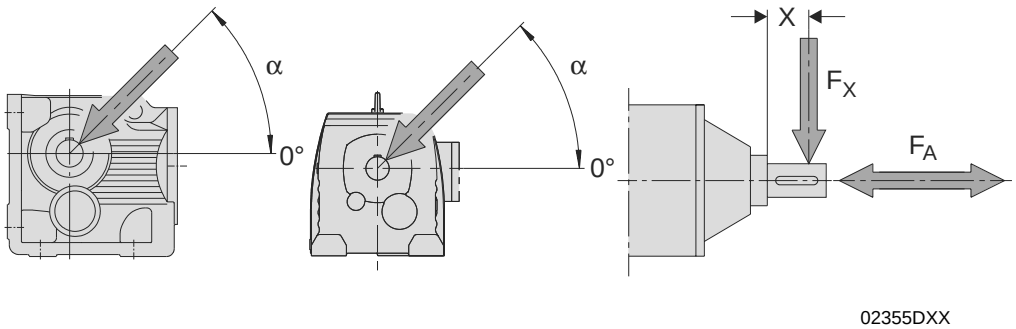

Figure 1: Definition of force application point

F_X = Permitted overhung load at point x [N]

F_A = Permitted axial load [N]

Permitted axial forces

If there is no overhung load, then an axial force F_A (tension or compression) amounting to 50 % of the overhung load given in the selection tables is permitted. This condition applies to the following gearmotors:

- Helical gearmotors except for R..137... to R..167...
- Parallel shaft and helical-bevel gearmotors with solid shaft except for F97...
- Helical-worm gearmotors with solid shaft.

Contact SEW-EURODRIVE for all other types of gear units and in the event of significantly greater axial forces or combinations of overhung load and axial force.

Overhung load conversion for off-center force application

The permitted overhung loads given in the selection tables must be calculated using the following formulae if force is applied at a point other than the center of the shaft end or if it is applied at a specific distance from the shaft end. The smaller of the two values F_{RxL} (according to bearing service life) and F_{RxW} (according to shaft strength) is the permitted value for the overhung load at point x. Note that the gear unit constant c must be different for M_N and M_B.

Overhung load conversion based on bearing service life:

$$F_{RxL} = F_{Ra} \times \frac{a}{b + x}$$

Overhung load conversion based on shaft strength:

$$F_{RxW} = \frac{c}{f + x}$$

x	= Distance between overhung load application point and shaft shoulder [mm]
F_{Ra}	= permitted overhung load [N] (see the rated torque tables)
F_{RxL}	= permitted overhung load [N] at point x based on bearing service life
F_{RxW}	= permitted overhung load [N] at point x based on shaft strength
a, b, c, f	= gear unit constants for overhung load conversion
F_{Rx}	= minimum of F_{RxL} and $F_{RxW[N]}$

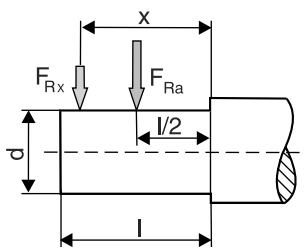

54657AXX

Figure 2: Overhung load F_{Rx} for off-center force application on a solid shaft

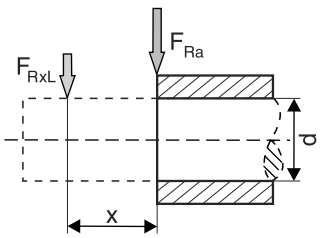

54658AXX

Figure 3: Overhung load F_{RxL} for off-center force application on a hollow shaft

Gear unit constants for overhung load conversion

Gear unit type	Gear unit constants for overhung load conversion					
	a [mm]	b [mm]	c [Nmm]	f [mm]	d [mm]	l [mm]
R17	88.5	68.5	$6.527 \bullet 10^4$	17	20	40
R27	106.5	81.5	$1.56 \bullet 10^5$	11.8	25	50
R37	118	93	$1.24 \bullet 10^5$	0	25	50
R47	137	107	$2.44 \bullet 10^5$	15	30	60
R57	147.5	112.5	$3.77 \bullet 10^5$	18	35	70
R67	168.5	133.5	$2.65 \bullet 10^5$	0	35	70
R77	173.7	133.7	$3.97 \bullet 10^5$	0	40	80
R87	216.7	166.7	$8.47 \bullet 10^5$	0	50	100
R97	255.5	195.5	$1.19 \bullet 10^6$	0	60	120
R107	285.5	215.5	$2.06 \bullet 10^6$	0	70	140
R137	343.5	258.5	$6.14 \bullet 10^6$	30	90	170
R147	402	297	$8.65 \bullet 10^6$	33	110	210
R167	450	345	$1.26 \bullet 10^7$	0	120	210
RX57	43.5	23.5	$1.51 \bullet 10^5$	34.2	20	40
RX67	52.5	27.5	$2.42 \bullet 10^5$	39.7	25	50
RX77	60.5	30.5	$1.95 \bullet 10^5$	0	30	60
RX87	73.5	33.5	$7.69 \bullet 10^5$	48.9	40	80
RX97	86.5	36.5	$1.43 \bullet 10^6$	53.9	50	100
RX107	102.5	42.5	$2.47 \bullet 10^6$	62.3	60	120
F27	109.5	84.5	$1.13 \bullet 10^5$	0	25	50
F37	123.5	98.5	$1.07 \bullet 10^5$	0	25	50
F47	153.5	123.5	$1.78 \bullet 10^5$	0	30	60
F57	170.7	135.7	$5.49 \bullet 10^5$	32	35	70
F67	181.3	141.3	$4.12 \bullet 10^5$	0	40	80
F77	215.8	165.8	$7.87 \bullet 10^5$	0	50	100
F87	263	203	$1.19 \bullet 10^6$	0	60	120
F97	350	280	$2.09 \bullet 10^6$	0	70	140
F107	373.5	288.5	$4.23 \bullet 10^6$	0	90	170
F127	442.5	337.5	$9.45 \bullet 10^6$	0	110	210
F157	512	407	$1.05 \bullet 10^7$	0	120	210
K37	123.5	98.5	$1.41 \bullet 10^5$	0	25	50
K47	153.5	123.5	$1.78 \bullet 10^5$	0	30	60
K57	169.7	134.7	$6.8 \bullet 10^5$	31	35	70
K67	181.3	141.3	$4.12 \bullet 10^5$	0	40	80
K77	215.8	165.8	$7.69 \bullet 10^5$	0	50	100
K87	252	192	$1.64 \bullet 10^6$	0	60	120
K97	319	249	$2.8 \bullet 10^6$	0	70	140
K107	373.5	288.5	$5.53 \bullet 10^6$	0	90	170
K127	443.5	338.5	$8.31 \bullet 10^6$	0	110	210
K157	509	404	$1.18 \bullet 10^7$	0	120	210
K167	621.5	496.5	$1.88 \bullet 10^7$	0	160	250
K187	720.5	560.5	$3.04 \bullet 10^7$	0	190	320
S37	118.5	98.5	$6.0 \bullet 10^4$	0	20	40
S47	130	105	$1.33 \bullet 10^5$	0	25	50
S57	150	120	$2.14 \bullet 10^5$	0	30	60
S67	184	149	$3.04 \bullet 10^5$	0	35	70

Values for types not listed are available on request.

3.6 Project planning for servomotors

Features of synchronous and asynchronous servomotors

Synchronous servomotors

Synchronous servomotors are permanent-field synchronous motors. Features of SEW synchronous servomotors:

- Standstill torque of 1 Nm up to 68 Nm, with forced cooling fan up to 95 Nm
- High dynamics (rated torque / mass moment of inertia of the motor)
- High level of enclosure (IP65)
- Robust encoder system (resolver)
- The optimal encoder system with sine/cosine encoder allows for a very wide setting range up to 1:5000
- Motor can be run at slow speeds with high accuracy with the optimal encoder system
- High speeds up to 6000 min^{-1} can be set without operation in the field weakening range
- High continuous torque at low speeds and at standstill, without forced cooling fan
- High overload capability
- NeFeB magnets, permanent magnets with high magnetic field density

Asynchronous servomotors

Asynchronous servomotors are dynamic AC asynchronous machines with the following features:

- Rated motor torques of 2.5 to 200 Nm
- Applications with very high load moment of inertia are possible
- The encoder system permits a very broad setting range (up to 1:5000)
- Motor can be run at speeds below 1 min^{-1} with high accuracy.

Protection rating according to IEC 34-5 (EN 60034-5)

- Synchronous servomotors are supplied with IP65 enclosure as standard.
- Asynchronous servomotors are supplied with IP54 enclosure as standard. IP55 or IP65 enclosure is also available on request.

IP	1st digit Protection against foreign objects	2nd digit Protection against water
0	No special protection	No special protection
1	Protection against solid objects ∅ 50 mm and larger	Protection against dripping water
2	Protection against solid objects ∅ 12 mm and larger	Protection against dripping water when tilted up to 15°
3	Protection against solid objects ∅ 12 mm and larger	Protection against solid objects ∅ 12 mm and larger
4	Protection against solid objects ∅ 12 mm and larger	Protection against splashing water
5	Protection against dust	Protection against water jets
6	Dust-proof	Protection against powerful water jets
7	-	Protection against temporary immersion in water
8	-	Protection against permanent immersion in water

Applications

Acceleration greater than 5 m/s²

The rotor of the synchronous servomotor is designed to be extremely low-inertia. This motor is the optimum choice in very dynamic applications. For accelerations greater than 5 m/s², the **synchronous servomotor** is usually the technically and economically best solution.

Positioning heavy masses accurately

If the inertia ratio J_{ext} / J_{Mot} is unfavorably high with the low-inertia rotor of the synchronous servomotor (k > 10...15), an asynchronous servomotor with a higher mass moment of inertia J_{Mot} may represent the better solution.

High motor torques

SEW asynchronous servomotors are available if servomotors with rated torques of > 95 Nm are required.

Very slow motor speeds

The asynchronous servomotor is the optimal choice for applications that require extremely low motor speeds < 2.0 min^{-1}. The encoder system used (sinusoidal encoder) permits a very high resolution of the actual speed.

A forced cooling fan is required if speeds of < 500 min^{-1} are delivered over a long time. Load and time also need to be taken into account.

Assignment of gear unit to motor

Permitted combinations of motor and gear unit are indicated by gray fields in the combination overviews.

Finite gear unit reduction ratios i

Gear units with a whole-number or finite gear ratio should be preferred for positioning tasks in one direction of rotation and synchronization to avoid the accummulation of rounding errors. Gear units with a finite gear ratio are marked with an * following the gear ratio i in the combination overviews and are given in notation with two decimal places.

Notes on selecting servomotors

Project planning for a servomotor involves the following tasks for determining the thermal and dynamic load on the motor:

- Calculating the **effective operating point** for checking the thermal load on the motor.
- Calculating the **maximum operating point** for determining the motor/inverter combination.
- Determining the **inertia ratio** J_{ext} / J_{Mot} for checking the stability of the speed control.
  - J_{ext} = Mass moment of inertia, reduced on motor shaft
  - J_{Mot} = Mass moment of inertia of the motor

Procedure

- Determining the maximum speed based on aspects of the inertia ratio k < 10...15.
- Maximum required torque M_{max} at maximum speed n_{max} (maximum operating point).

  M_{max} < M_{dyn_Mot} at **n_{max}**

  M_{dyn_Mot} corresponds to the maximum torque for the specific motor/inverter combination. This operating point must lie below the characteristic curve for the maximum torque of the motor/MOVIDRIVE® combination.
- Effective torque requirement at average speed of the application (effective operating point).

  M_{eff} < M_{N_Mot} at **n_{mean}**

  This operating point must lie below the characteristic curve for continuous torque to ensure thermal stability of the drive.

Speed classes

DFS/CFM synchronous servomotors[1] **[min^{-1}]**			
2000	3000	4500	6000

1) The BR brake for CFM71, CFM90 and CFM112 motors can be operated up to a maximum of 4500 min^{-1}.

CT/CV asynchronous servomotors **[min^{-1}]**			
1200	1700	2100	3000

As all servomotors operate as controlled drives it is necessary to consider the inertia ratio between the load and the motor. This ratio is a decisive factor in determining the quality of closed-loop control. The inertia ratio should not exceed the values listed in the table below. Reduction of the inertia ratio using the motor speed (the selected gear unit reduction ratio) offers hardly any advantage with respect to closed-loop control starting at the value **J_{ext} / J_{Mot} < 8**. Backlash and elasticity negatively influence the possible dynamic response of the driveline and must be kept to a minimum.

As a result, the maximum speed should be selected such that the following criteria are met:

Driveline	**Control characteristics**	**Inertia ratio J_{ext} / J_{Mot}**
Forged gear rack, reduced backlash gear unit	Low backlash and low elasticity drive	J_{ext} / J_{Mot} < 15
Toothed belt, reduced backlash gear unit	Common servo applications	J_{ext} / J_{Mot} < 15
Toothed belt, standard gear unit	Standard applications, couplings with torque buffer (→ elasticity)	J_{ext} / J_{Mot} < 10

3.7 Project planning example

Project planning for a travel drive in S3 operation

Reference data:

Weight of the load:	m_{load} =	150 kg
Weight of the carriage:	$m_{carriage}$ =	100 kg
Traveling velocity:	v_{loaded} =	1 ms^{-1}
Traveling velocity:	$v_{unloaded}$ =	1.5 ms^{-1}
Acceleration:	a_{loaded} =	5 ms^{-2}
Acceleration:	$a_{unloaded}$ =	10 ms^{-2}
Efficiency of the machine:	η_{load} =	0.9
Diameter of the carrying wheel:	D_L =	120 mm
Diameter of the belt pulley:	D_0 =	100 mm
Additional gear:	i =	1
Ambient temperature:		20°C
Transmission element overhung load:	f_z =	2.5 (helical-bevel gear unit)

Travel cycle

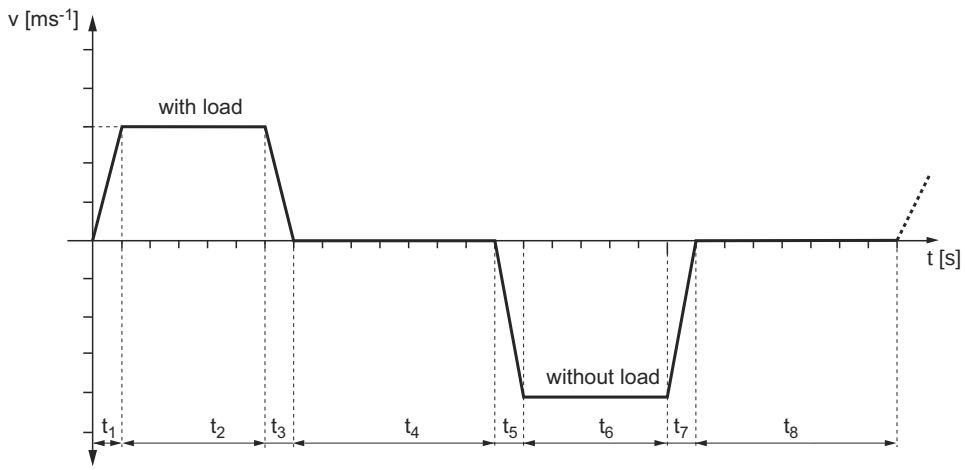

55381axx

Figure 4: Travel cycle

The following time periods result from the travel cycle:

$t_1 = t_3 = 0.2$ s
$t_2 = 2.9$ s
$t_4 = t_8 = 2$ s
$t_5 = t_7 = 0.15$ s
$t_6 = 1{,}917$ s

$v_2 = 1$ ms^{-1}
$v_4 = v_8 = 0$ ms^{-1}
$v_6 = 1.5$ ms^{-1}

$a_1 = -a_3 = 5$ ms^{-2}
$a_2 = a_4 = a_6 = a_8 = 0$ ms^{-2}
$a_5 = -a_7 = 10$ ms^{-2}

Torque diagram

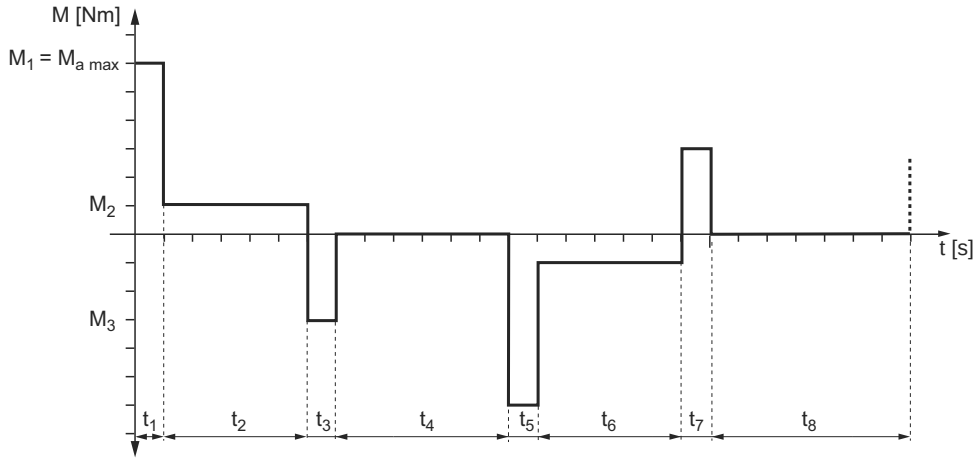

50791axx

Figure 5: Torque diagram

The following time periods result from the torque diagram:

M_1 = 85.5 Nm	M_5 = -67.27 Nm
M_2 = 2.2 Nm	M_6 = -0.87 Nm
M_3 = -65.3 Nm	M_7 = 52.93 Nm
$M_4 = M_8$ = 0 Nm	

Selecting the helical-bevel gear unit

Max. torque M_{max}

The torque diagram shows that the maximum torque M_{max} that can occur is 85.5 Nm. The following condition must be met to select a helical-bevel gear unit from the selection tables:

Selection criterion 1

$\mathbf{M_{max} \leq M_{a\ max}}$

Overhung load F_R

The overhung load is determined by means of M_{max} and the belt pulley diameter D_0.

$$F_R = \frac{M_{max} \times 2000}{D_0} \times f_z = \frac{85.5\ \text{Nm} \times 2000}{0.1\ \text{m}} \times 2.5 = 4275\ \text{N}$$

The application point is on the midpoint of the shaft, i. e. x = l/2.

Selection criterion 2

$\mathbf{F_R \leq F_{RA}}$

Gear unit reduction ratio i

The gear unit reduction ratio is determined by approximation by means of the maximum output speed and an assumed rated motor speed of n_N = 3000 1/min. It has proven to be advantageous to take into account a speed reserve of 10 %.

$$n_{a\ max} = \frac{v_6}{D_L \times \pi} = \frac{1.5\ \text{m/s}}{0.12\ \text{m} \times \pi} = 3.979\ \text{1/s} = 238.74\ \text{1/min}$$

$$i = \frac{n_{N\ Motor} - 10\ \%}{n_{a\ max}} = \frac{2700\ \text{1/min}}{238.74\ \text{1/min}} = 11.31$$

Gear unit selection

The gear unit can now be selected by means of the determined values M_{max}, F_R and the gear unit reduction ratio i determined by approximation:

Gear unit: K57

Gear unit reduction ratio: i = 11.92

Maximum output torque: $M_{a\ max}$ = 415 Nm

Efficiency: η = 0.94

Overhung load: F_{RA} = 4960 N

Moment of inertia: $J_{gear\ unit} = 2.11 \times 10^{-4}$ kgm^2

Check the selection:

$\mathbf{M_{max} \leq M_{a\ max}}$: 85.5 Nm ≤ 415 Nm → **requirement fulfilled.**

$\mathbf{F_R \leq F_{RA}}$: 4275 Nm ≤ 4960 Nm → **requirement fulfilled.**

Above example shows how to determine a gear unit by approximation. For exact gear unit selection, contact SEW-EURODRIVE.

Selecting the motor

The maximum input torque $M_{e\ max}$ can now be determined from the maximum output torque by taking account of the gear unit efficiency.

$$M_{e\ max} = \frac{M_{max}}{i \times \eta_{gear\ unit}} = \frac{85.5\ Nm}{11.92 \times 0.94} = 7.63\ Nm$$

This maximum input torque is used for a preliminary motor selection, which still needs to be checked:

Preliminary motor selection

$\Rightarrow$ CM71S/BR

$n_N = 3000\ min^{-1}$

$M_0 = 5\ Nm$

$I_0 = 3.3\ A$

$J_{Mot} = 6.65 \times 10^{-4}\ kgm^2$

Calculating the input speed

$$n_{a1} = \frac{v_1}{D_L \times \pi} = \frac{1\ m/s}{0.12\ m \times \pi} = 2.6526\ 1/s = 159.156\ 1/min$$

$$n_{e1} = n_{a1} \times i = 159.156\ 1/min \times 11.92 = 1897.13\ 1/min$$

$$n_{a5} = n_{a\ max}$$

$$n_{e5} = n_{a5} \times i = 238.74\ 1/min \times 11.92 = 2845.78\ 1/min$$

Determining the inertia ratio "k"

$$J_{ext} = 91.2 \times m \times \left(\frac{v}{n_{Motor}}\right)^2 + J_{gear\ unit}$$

$$J_{ext} = 91.2 \times 250\ kg \times \left(\frac{1\ m/s}{1897.13\ 1/min}\right)^2 + 2.11 \times 10^{-4}\ kgm^2 = 6.545913 \times 10^{-3}\ kgm^2$$

$$k = \frac{J_{ext}}{J_{Mot}} = \frac{6.545913 \times 10^{-3} kgm^2}{6.65 \times 10^{-4} kgm^2} = 9.84$$

Requirement **k ≤ 10 - 15**

Check the requirement: 9.84 ≤ 10 - 15 → **requirement fulfilled.**

The inertia ratio "k" has a major influence on all control characteristics.

Determining motor torques

In addition to the input torque, the motor must deliver a certain torque to being able to accelerate itself and the gear unit.

$$M_{1\ Mot} = (J_{Mot} + J_{gear\ unit}) \times \frac{n_{e1}}{9.55 \times t}$$

$$M_{1\ Mot} = (6.65 \times 10^{-4} kgm^2 + 2.11 \times 10^{-4} kgm^2) \times \frac{1897.13\ 1/min}{9.55 \times 0.2\ s} = 0.87\ Nm$$

Section t_1 The torque to be delivered by the motor in section 1 is calculated as follows:

$$M_{t1} = M_{e\ max} + M_1 = 7.63\ Nm + 0.87\ Nm = 8.5\ Nm$$

Section t_2 The torque to be delivered by the motor in section 2 is calculated as follows:

$$M_{t2} = \frac{M_2}{i \times \eta_{gear\ unit}} = \frac{2.2\ Nm}{11.92 \times 0.94} = 0.196\ Nm$$

Section t_3

The torque to be delivered by the motor in section 3 is calculated in the same way as in section 1 but with the difference that the efficiency of the motor is advantageous due to the deceleration.

$$M_{t3} = \frac{M_3 \times \eta_{gear\ unit}}{i} + M_1 = \frac{-65.3\ Nm \times 0.94}{11.92} + (-0.87\ Nm) = -6.02\ Nm$$

Section t_4

As the speed in section v_4 is 0 m/s, the motor need not produce any holding torque → M_{t4} = 0 Nm. The brake is applied.

Section t_5

The torques to be delivered by the motor in sections 5 - 8 are calculated in the same way as for sections 1 - 4.

$$M_{5\ Mot} = (J_{Mot} + J_{gear\ unit}) \times \frac{n_{e5}}{9.55 \times t}$$

$$M_{5\ Mot} = (6.65 \times 10^{-4}\ kgm^2 + 2.11 \times 10^{-4}\ kgm^2) \times \frac{-2845{,}78\ 1/min}{9.55 \times 0.15\ s} = -1.74\ Nm$$

Input torque in section 5:

$$M_{e5} = \frac{M_5}{i \times \eta_{gear\ unit}} = \frac{-67.27\ Nm}{11.92 \times 0.94} = -6\ Nm$$

The torque to be delivered by the motor in section 5 is calculated as follows:

$$M_{t5} = M_{e5} + M_{5\ Mot} = -6\ Nm + (-1.74\ Nm) = -7.74\ Nm$$

Section t_6

The torque to be delivered by the motor in section 6 is calculated as follows:

$$M_{t6} = \frac{M_6}{i \times \eta_{gear\ unit}} = \frac{-0.87\ Nm}{11.92 \times 0.94} = -0.076\ Nm$$

Section t_7

The torque to be delivered by the motor in section 7 is calculated as follows:

$$M_{t7} = \frac{M_7 \times \eta_{gear\ unit}}{i} + M_{5\ Mot} = \frac{52.93\ Nm \times 0.94}{11.92} + 1.74\ Nm = 5.914\ Nm$$

Section t_8

As the speed in section v_8 is 0 m/s, the motor need not produce any holding torque → M_{t8} = 0 Nm. The brake is applied.

Determining the effective motor torque

Cycle time

$$t_{cycle} = t_1 + t_2 + ... + t_8$$

$$t_{cycle} = 0.2\ s + 2.9\ s + 0.2\ s + 2\ s + 0.15\ s + 1.917\ s + 0.15\ s + 2\ s = 9.517\ s$$

Effective torque

$$M_{eff} = \sqrt{\frac{1}{t_{cycle}} \times \left(M_{t1}^2 \times t_1 + M_{t2}^2 \times t_2 + ... + M_{t8}^2 \times t_8 \right)}$$

$$M_{eff} = \sqrt{\frac{1}{9.517} \times \left(8.5^2 \times 0.2 + 0.196^2 \times 2.9 + (-6.02)^2 \times 0{,}2 + 0^2 \times 2 + (-7.74)^2 \times 0.15 + (-0.076)^2 \times 1.917 + 5.91^2 \times 0{,}15 + 0^2 \times 2 \right)}$$

$$M_{eff} = 1.946\ Nm$$

Determining the mean input speed

$$\bar{n} = \frac{1}{t_{cycle}} \times \left(n_{t1} \times t_1 + n_{t2} \times t_2 + ... + n_{t8} \times t_8 \right)$$

$$\bar{n} = \frac{1}{9.517} \times \left(\frac{1897.13}{2} \times 0.2 + 1897.13 \times 2.9 + \frac{1897.13}{2} \times 0.2 + 0 \times 2 + \frac{2845.78}{2} \times 0.15 + 2845.78 \times 1.917 + \frac{2845.78}{2} \times 0.15 + 0 \times 2 \right)$$

$$\bar{n} = 1251.88\ 1/min$$

Determining the operating point

The operating point can be entered in the thermal motor characteristic curve based on the effective motor torque and the mean motor speed:

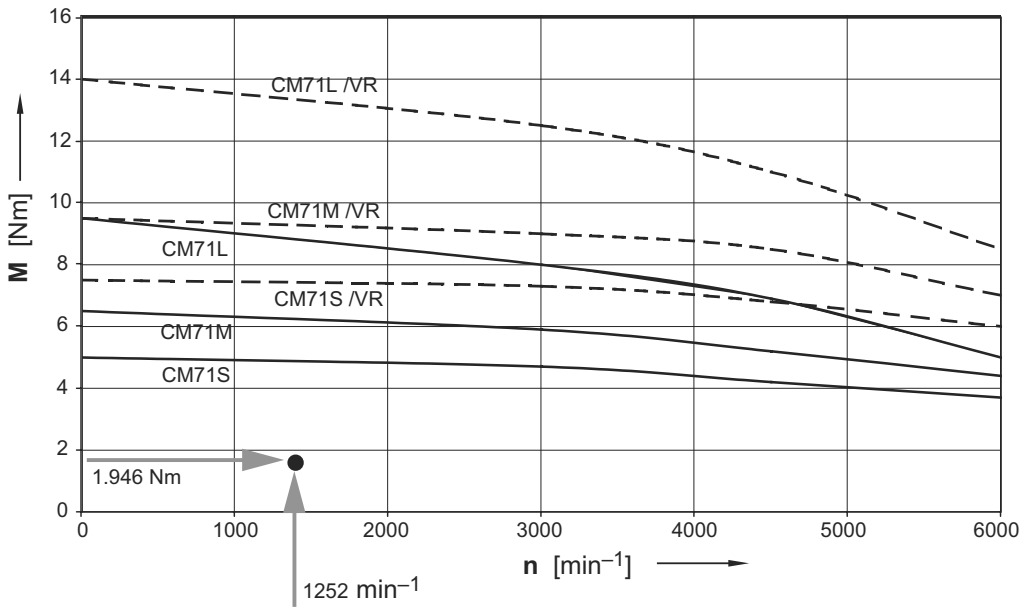

Figure 6: Operating point

The effective torque at mean speed must lie below or maximally on the thermal characteristic curve to protect the motor from thermal overload:

Requirement $M_{eff} \leq M_0$: 1.946 Nm ≤ 5 Nm → **requirement fulfilled.**

Checking the dynamic limit torque

You have to check whether the motor is capable of delivering this dynamic torque by means of the maximum torque and the associated speed.

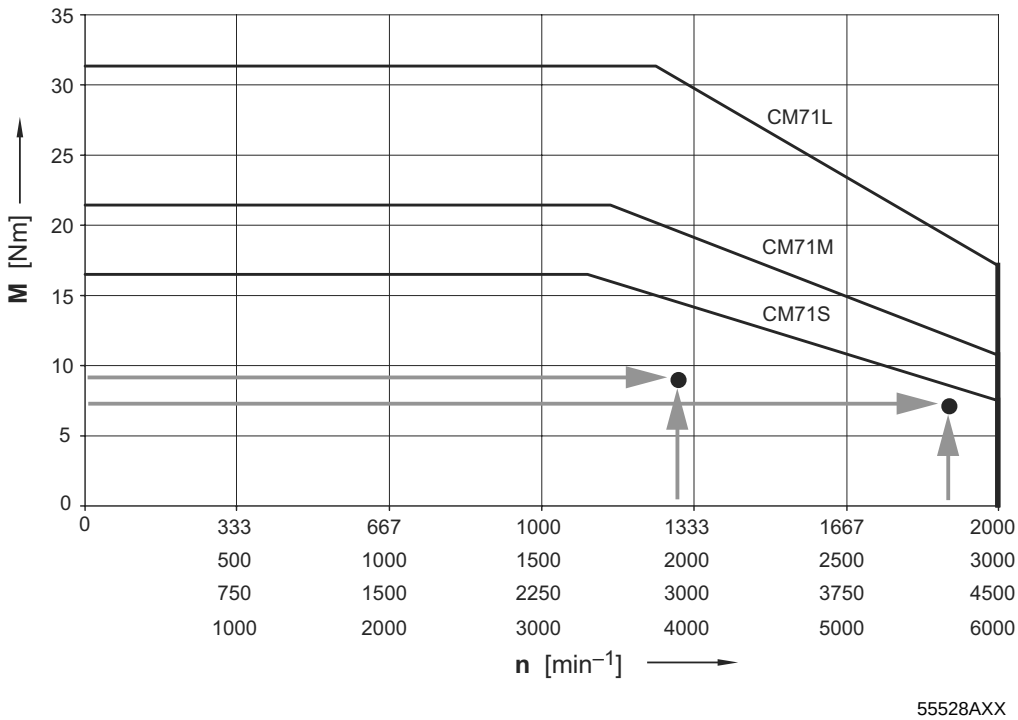

Figure 7: Maximum operating point

For this purpose, the maximum torque and the associated speed as well as the maximum speed and the associated torque are entered in the diagram as maximum operating points.

The maximum operating points must lie below or maximally on the characteristic curve of the thermal limit torque. Note that the characteristic curve declines in the upper speed range.

Requirement $M_{max} \leq$ dynamic limit torque is fulfilled.

Selecting the inverter

Rated speed n_N = 3000 1/min.

Motor		MOVIDRIVE® MDX61B...-5_3 (400/500 V units) in SERVO operating modes (P700)															
		0005	0008	0011	0014	0015	0022	0030	0040	0055	0075	0110	0150	0220	0300	0370	0450
DS56M	M_{max} [Nm] ([lb.in])	2.4 (21.1)	2.8 (24.6)	3.6 (31.7)	3.8 (33.4)	3.5 (30.8)	3.8 (33.4)										
DS56L	M_{max} [Nm] ([lb.in])	3.3 (29.0)	4.0 (35.2)	5.1 (44.9)	6.4 (56.4)	4.9 (43.1)	6.6 (58.1)	7.6 (66.9)									
DS56H	M_{max} [Nm] ([lb.in])	5.7 (50.2)	6.8 (59.9)	8.8 (77.5)	11.2 (98.7)	8.5 (74.9)	11.5 (101)	14.3 (126)	15.2 (133)								
CM71S	M_{max} [Nm] ([lb.in])	6.0 (52.8)	7.2 (63.4)	9.2 (81.0)	11.6 (102)	8.9 (78.4)	11.9 (104)	14.3 (126)	16.5 (145)								
CM71M	M_{max} [Nm] ([lb.in])		7.2 (63.4)	9.3 (81.9)	11.9 (104)	9.0 (79.3)	12.2 (107)	15.1 (133)	19.1 (168)	21.5 (189)							
CM71L	M_{max} [Nm] ([lb.in])			9.5 (83.7)	12.2 (107)	9.2 (81.0)	12.6 (111)	15.9 (140)	21.0 (185)	26.2 (230)	30.8 (271)	31.5 (277)					
CM90S	M_{max} [Nm] ([lb.in])				12.0 (105)	9.0 (79.3)	12.4 (109)	15.7 (138)	21.2 (186)	27.4 (241)	34.0 (299)	40.1 (353)					
CM90M	M_{max} [Nm] ([lb.in])						11.8 (103)	15.0 (132)	20.4 (179)	26.6 (234)	33.7 (296)	47.8 (421)	51.6 (454)				
CM90L	M_{max} [Nm] ([lb.in])								20.7 (182)	27.3 (240)	34.7 (305)	51.1 (450)	65.6 (578)	75.6 (666)			
CM112S	M_{max} [Nm] ([lb.in])								22.2 (195)	29.3 (258)	37.4 (329)	54.8 (482)	69.8 (615)	81.9 (721)			
CM112M	M_{max} [Nm] ([lb.in])									28.2 (248)	36.2 (319)	54.0 (475)	70.7 (623)	95.7 (843)	108.0 (951)		
CM112L	M_{max} [Nm] ([lb.in])										35.8 (345)	53.9 (474)	71.6 (630)	101.0 (890)	126.9 (1118)	147.4 (1298)	156.8 (1381)

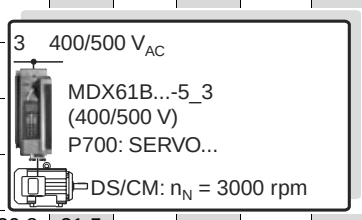

The matching inverter can now be selected from the motor selection tables on the basis of the effective torque and the peak torque.

⇒ MDX61B0011–5A3.

Determining the matching braking resistor

For project planning of the matching braking resistor, the following values must be determined from travel sections during which the motor operates as generator.

- Peak braking power
- Average braking power

Peak braking power

$$P_{Br_peak} = \frac{M_{t7} \times n_{t5}}{9550} = \frac{5.914\ \text{Nm} \times 2845.78\ 1/\text{min}}{9550} = 1.76\ \text{kW}$$

Average braking power in section t_3

$$P_{Br_t3} = \frac{M_{t3} \times \frac{n_{e3}}{2}}{9550} = \frac{6.02\ \text{Nm} \times \frac{1897.13\ 1/\text{min}}{2}}{9550} = 0.6\ \text{kW}$$

Average braking power in section t_7

$$P_{Br_t7} = \frac{M_{t7} \times \frac{n_{e7}}{2}}{9550} = \frac{5.914\ \text{Nm} \times \frac{2845.78\ 1/\text{min}}{2}}{9550} = 0.88\ \text{kW}$$

Effective braking power

$$P_{Br} = \frac{P_{Br_t3} \times t_3 + P_{Br_t7} \times t_2}{t_{cycle}}$$

$P_{Br_t1} = P_{Br_t2} = P_{Br_t4} = P_{Br_t6} = P_{Br_t8} = 0$ kW

$$P_{Br} = \frac{0.6\ \text{kW} \times 0{,}2\ \text{s} + 0.88\ \text{kW} \times 0{,}15\ \text{s}}{9{,}517\ \text{s}} = 0.0265\ \text{kW}$$

Selecting the braking resistor

A preselection of braking resistors that may be connected to the respective inverter is made based on the table "Assignment of braking resistors (see "MOVIDRIVE® MDX60/61B" system manual, Installation section):

MOVIDRIVE® MDX60/61B...-5A3			0005	0008	0011	0014
Size				0		
Braking resistors	**Trip current**	**Part number**				
BW090-P52B[1)]	-	824 563 0				
BW072-003	I_F = 0.6 A_{RMS}	826 058 3				
BW072-005	I_F = 1.0 A_{RMS}	826 060 5				
BW168	I_F = 2.5 A_{RMS}	820 604 X				
BW100-006	I_F = 1.8 A_{RMS}	821 701 7				
Line chokes		**Part numbers**				
ND020-013	ΣI_{mains} = 20 A_{AC}	826 012 5				
Line filter		**Part number**				
NF009-503	V_{max} = 550 V_{AC}	827 412 6				
Output chokes	**Inside diameter**	**Part number**				
HD001	d = 50 mm (1.97 in)	813 325 5	for cable cross sections 1.5 ... 16 mm² (AWG 16 ... 6)			
HD002	d = 23 mm (0.91 in)	813 557 6	for cable cross sections ≤ 1.5 mm² (AWG 16)			
Output filters (only in VFC mode)		**Part number**				
HF008-503		826 029 X		A		
HF015-503		826 030 3		B		A
HF022-503		826 031 1				B

1) Internal, thermal overload protection, no bimetallic relay required.

The resistor is finally determined from this preselection, the calculated peak braking power and the average braking power of the application. For technical data of the braking resistors, refer to the "MOVIDRIVE® MDX60B/61B system manual, section 3 Technical Data."

Braking resistor type		BW090-P52B	BW100-005	BW100-006	BW072-003	BW072-005	BW168	BW268
Part number		824 563 0	826 269 1	821 701 7	826 058 3	826 060 5	820 604 X	820 715 1
Load capacity at	100 % cdf	0.10 kW	0.45 kW	0.6 kW	0.23 kW	0.45 kW	0.8 kW	1.2 kW
	50 % cdf[1)]		0.60 kW	1.1 kW	0.31 kW	0.60 kW	1.4 kW	2.2 kW
	25 % cdf		0.83 kW	1.9 kW	0.42 kW	0.83 kW	2.6 kW	3.8 kW
	12 % cdf		1.11 kW	3.5 kW	0.58 kW	1.11 kW	4.7 kW	6.7 kW
	6 % cdf		2.00 kW	5.7 kW	1.00 kW	2.00 kW	7.6 kW	10 kW[2)]
	3 % cdf 1 % cdf	Note the **regenerative power limit** of the inverter! (= 150 % of the recommended motor power → Technical Data)						
Resistance value	R_{BW}	90 Ω ±35 %	100 Ω ±10 %		72 Ω ±10 %		68 Ω ±10 %	
Trip current (of F16)	I_F	-	0.8 A_{RMS}	1.8 A_{RMS}	0.6 A_{RMS}	1.0 A_{RMS}	2.5 A_{RMS}	3.4 A_{RMS}
Type		PTC	Flat type	Wire resistor on ceramic core	Flat type		Wire resistor on ceramic core	
Terminals		Cables	Cables	Ceramic terminals 2.5 mm^2 (AWG12)	Cables		Ceramic terminals 2.5 mm^2 (AWG12)	
Enclosure		IP20	IP54	IP20 (when mounted)	IP54		IP20 (when mounted)	
Ambient temperature	ϑ_U	–20 ... +45 °C						
Type of cooling		KS = Self-cooling						
for MOVIDRIVE®		0005 ... 0014	0005 ... 0022	0015 ... 0040	0005 ... 0014		0015 ... 0040	

1) cdf = Cyclic duration factor of the braking resistor in relation to a cycle duration $T_D \leq 120$ s.

2) Physical power limit due to the DC link voltage and the resistance value.

6% cdf ≙ 7.2 s ⇒ 7.2 s ≥ 0.2 s.

Requirement

- Peak braking power $P_{Br_peak} \leq$ Braking power resistor 6 % cdf.
- Average braking power $P_{BR} \leq$ Load capacity of the resistor with reference to the cycle time of the application.

Selection of options and accessories

You have to select the option card for MOVIDRIVE® MDX61B with the corresponding encoder interface according to the motor encoder:

- DEH11B for Hiperface® encoder
- DER11B for resolver.

Other option cards might also be required (e.g. fieldbus card) depending on the application. For more information on available option cards and accessories (e. g. keypads, etc.), refer to the "MOVIDRIVE® MDX60B/61B" system manual.

For information on prefabricated motor and encoder cables, refer to the MOVIDRIVE® system manual, and to chapter 11 in this catalog.

4 Mounting Positions

4.1 General information on mounting positions

Mounting position designation

In the case of gear units, SEW-EURODRIVE distinguishes between mounting positions M1 to M6. The following figure shows the position of the gear unit in mounting positions M1 to M6.

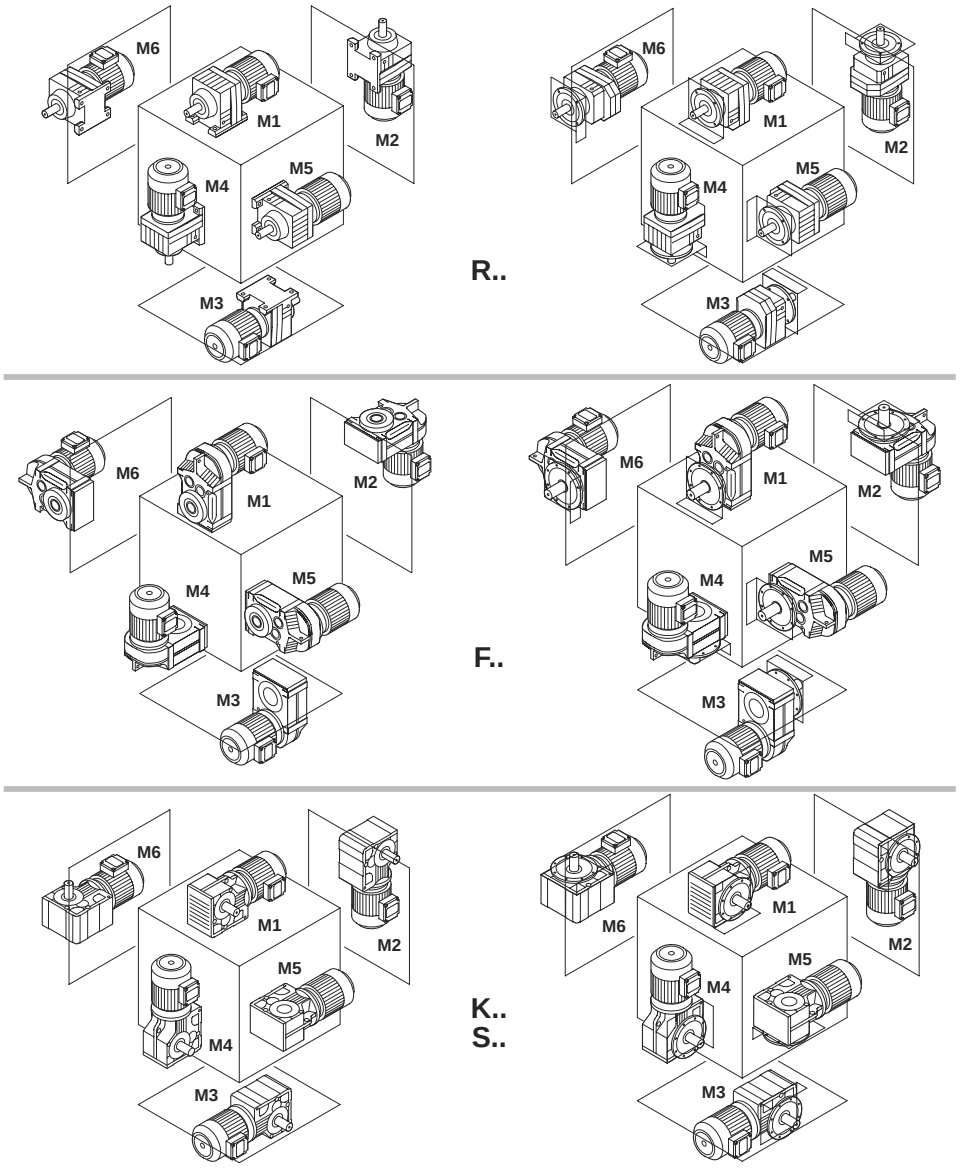

Figure 8: Depiction of mounting positions M1 to M6

4.2 Important order information

The following order information is required for R, F, K and S gearmotors in addition to the mounting position to exactly determine the design of the drive.

- Position of the power plug connector
- Position of the cable entry of the power plug connector
- Position and orientation of the encoder plug connector
- Terminal box position

Plug connector

Position of power plug connector and cable entry in CFM motors

Possible positions of the power plug connector are 0°, 90°, 180° or 270° as viewed onto the non-drive end of the motor (onto the fan end).

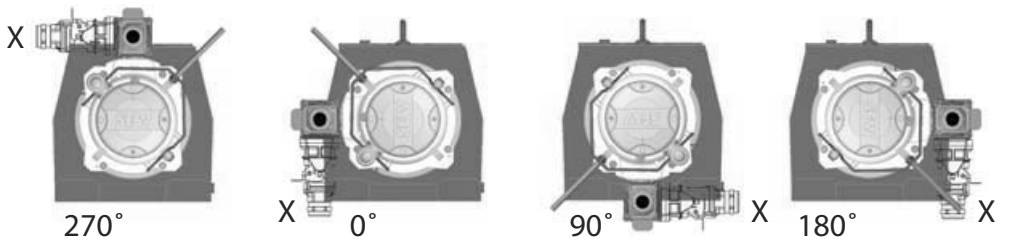

54686AXX

Figure 9: Position "3" of the power plug connector

Position of cable entry for DFS motors

Positions "2" and "X" are possible for DFS56M and DFS56L motors ("X" = standard).

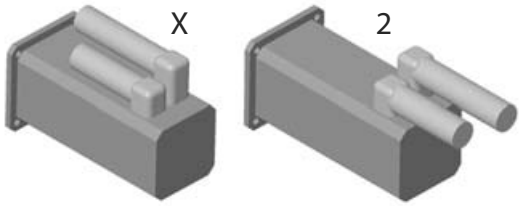

54678AXX

Figure 10: Cable entry position for DFS56M/L

Positions "1", "2", "3" and "X" are possible for DFS56H and DFS brake motors.

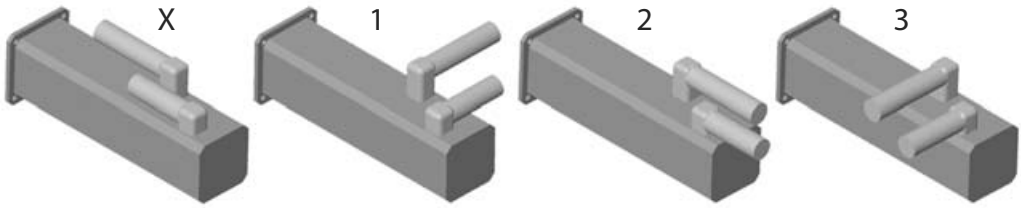

54679AXX

Figure 11: Cable entry position for DFS56H

Standard type

Unless indicated otherwise, you will receive the power plug connector type 270° position with cable entry "2".

Cable entry for DFS motors with plug connector

R F K S	**R27 F27**	**R37 F37 K37 S37**	**R47-R67**	**F57-F67**	**K47-K67**	**F47 S47**	**S57**	**S67**
DFS56M	A	A	-	-	-	A	A	-
DFS56L	A	A	-	-	-	A	A	-
DFS56H	B	B	C	C	C	B	B	C

There may be collisions depending on what the customer has installed on the output end.

A means:

- Cable entry position "2" is possible.
- Cable entry positions "1", "3" possible with brake motor.

B means:

- Cable entry positions "1", "2", "3" are possible.
- Cable entry position "X" only possible at 270°.

C means:

- Cable entry positions "1", "2", "3" are possible.
- Cable entry position "X" is not possible.

Cable entry position with CFM motors

Positions "X", "1", "2" or "3" are possible with CFM motors ("X" = standard).

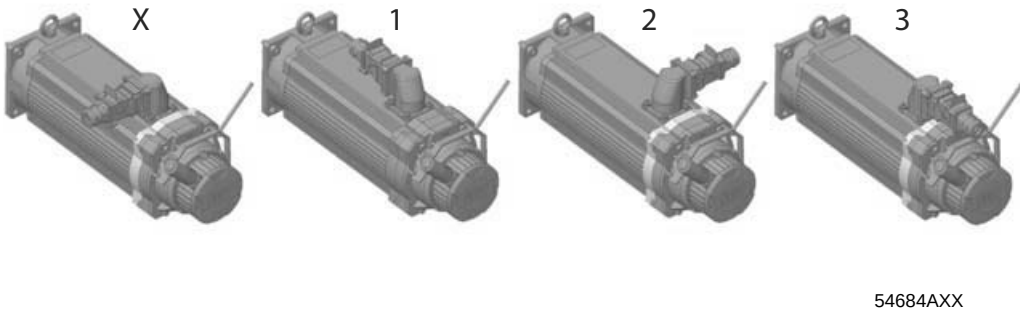

54684AXX

Figure 12: Cable entry position with CFM..S.5, radial signal plug

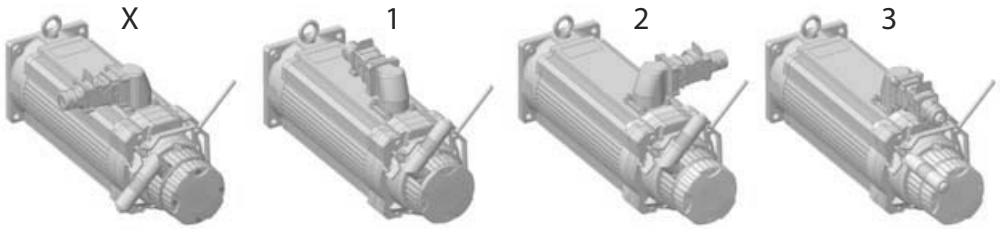

54685AXX

Figure 13: Cable entry position with CFM..S.6, angled signal plug

Standard type

Unless indicated otherwise, you will receive the power plug connector type 270° position with cable entry "3" and radial encoder plug (CFM..S.5).

Important: It is not possible to mount a forced cooling fan to motors with axial encoder plug SM6./SB6.

Cable entry for CFM motors with plug connector

	R27	R37	R47	R57	R67	R77	R87	R97	R107
CFM71S	D	D	G	G	G	G	-	-	-
CFM71M	D	D	G	G	G	G	-	-	-
CFM71L	D	D	D	F	G	G	-	-	-
CFM90S	D	D	D	D	E	F	G	G	-
CFM90M	-	-	D	D	D	F	G	G	-
CFM90L	-	-	D	D	D	D	F	G	-
CFM112S	-	-	D	D	D	D	F	G	G
CFM112M	-	-	-	-	D	D	F	G	G
CFM112L	-	-	-	-	-	D	D	D	G

	F27	F37	F47	F57	F67	F77	F87	F97	F107
CFM71S	E	E	F	F	F	G	-	-	-
CFM71M	E	E	E	F	F	G	-	-	-
CFM71L	E	E	E	F	F	G	-	-	-
CFM90S	E	E	F	E	E	F	G	G	-
CFM90M	-	-	-	E	E	E	G	G	-
CFM90L	-	-	-	E	E	E	G	G	-
CFM112S	-	-	-	E	E	E	F	G	G
CFM112M	-	-	-	-	E	E	F	G	G
CFM112L	-	-	-	-	-	E	E	F	G

	K27	K37	K47	K57	K67	K77	K87	K97	K107
CFM71S	-	E	E	E	F	G	-	-	-
CFM71M	-	E	E	E	F	G	-	-	-
CFM71L	-	D	E	E	E	G	-	-	-
CFM90S	-	D	E	E	E	F	G	G	-
CFM90M	-	-	D	E	E	E	G	G	-
CFM90L	-	-	-	D	D	D	E	G	-
CFM112S	-	-	-	D	D	B	E	G	G
CFM112M	-	-	-	-	D	D	E	G	G
CFM112L	-	-	-	-	-	D	D	E	G

	S37	S47	S57	S67
CFM71S	D	E	G	G
CFM71M	D	E	G	G
CFM71L		D	D	G
CFM90S	-	D	D	E
CFM90M	-	-	-	E
CFM90L	-	-	-	D
CFM112S	-	-	-	D

There may be collisions depending on what the customer has installed on the output end.

D means:

- Cable entry positions "1", "2", "3", "X" are possible.

E means:

- Cable entry positions "2", "3", "X" are possible.
- Cable entry position "1" only possible at 0°, 180°, 270°.

F means:

- Cable entry positions "2", "3", "X" are possible.
- Cable entry position "1" only possible at 270°.

G means:

- Cable entry positions "2", "3", "X" are possible.
- Cable entry position "1" is not possible.

"-" means:

- Gear unit/motor combination not possible.

Position of motor terminal box and cable entry

The position of the motor terminal box has so far been specified indicated with 0°, 90°, 180° or 270° as viewed onto the fan guard = B-end (→ Figure 14). A change in the product standard EN 60034 specifies that the following designations for terminal box positions will have to be used in future:

- As viewed onto the output shaft = A-end
- Designation as R (right), B (bottom), L (left) and T (top)

This new designation applies to foot-mounted motors without a gear unit in mounting position B3 (= M1). The previous designation is retained for gearmotors. Figure 14 shows both designations. Where the mounting position of the motor changes, R, B, L and T are rotated accordingly. In motor mounting position B8 (= M3), T is at the bottom.

The position of the cable entry can be selected as well.

The following positions are possible:

- With DFS/CFM motors, positions "X", "2", "3"
- With CT/CV motors, positions "X" , "1", "2", "3".

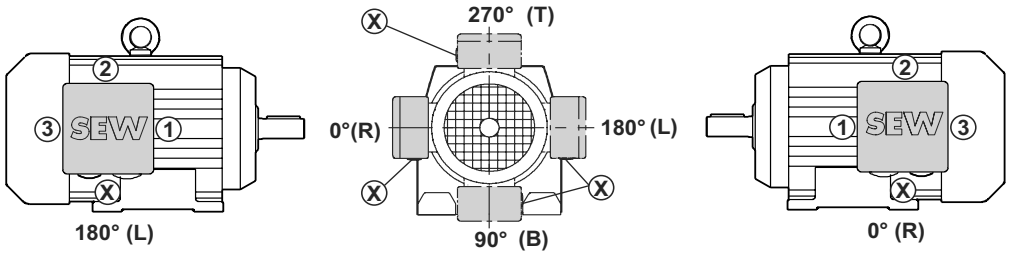

51302AXX

Figure 14: Position of terminal box and cable entry

Unless indicated otherwise, you will receive the terminal box type 0° (R) with cable entry "X". We recommend selecting cable entry "2" with mounting position M3.

- **When the terminal box is in the 90° (B) position**, check to see if the gearmotor has to be supported.
- The following cable entries are possible in the **DT71..BMG** motor with gear unit flange diameters 160 mm and 200 mm:

Terminal box position	0° (R)	90° (B)	180° (L)	270° (T)
Possible cable entries	"X", "3"	"X", "1", "3"	"1", "2"	"X", "1", "3"

Cable entry in motor terminal box KK5 and KK6

The following cable entries are possible in CFM motors in conjunction with terminal box KK5 / KK6:

- Positions "X", "2", "3".

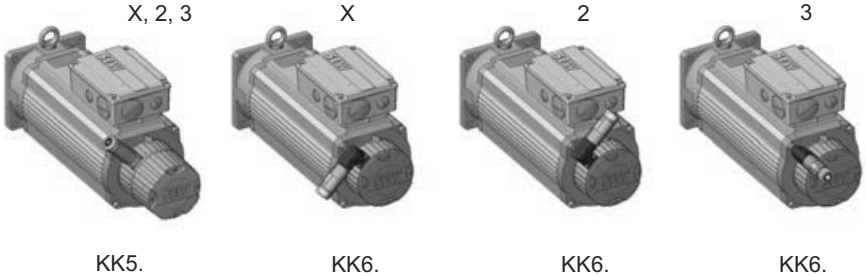

Figure 15: Possible cable entry positions CFM..KK5 and CM..KK6

Direction of rotation of the drive with a backstop

If the drive has a backstop RS, it will be necessary to indicate the direction of rotation for the drive. The following definition applies:

Looking onto the output shaft: Clockwise (CW) = Rotating clockwise
Counterclockwise (CCW)= Rotating counterclockwise

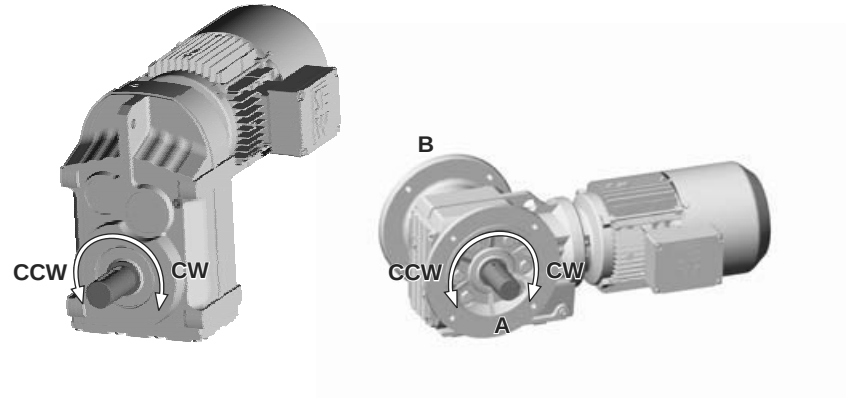

02584BXX

Figure 16: Direction of rotation of output

In right-angle gear units, it is also necessary to indicate if the direction of rotation is given looking onto the A or B end.

Position of output shaft and output flange

In right-angle gear units, it is also necessary to indicate the position of the output shaft and the output flange:

- A or B or AB (→ Figure 17)

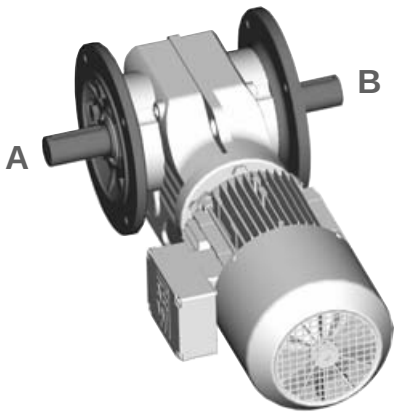

02585BXX

Figure 17: Position of the output shaft and the output flange

Position of the output end in right-angle gear units

In shaft mounted right-angle gear units with a shrink disc, it is also necessary to indicate whether the A or B end is the output end. In Figure 18 , the A end is the output end. The shrink disc is located opposite the output end.

In shaft mounted right-angle gear units, the "output end" is equivalent to the "shaft position" of right-angle gear units with solid shaft.

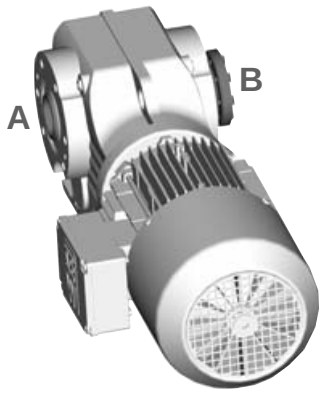

03204AXX

Figure 18: Position of the output end

You will find the permitted mounting surfaces (= hatched area) in the mounting position sheets (page 62 and the following pages).

Example: Only the mounting surface at the bottom is possible with helical-bevel gear units K167/K187 in mounting positions M5 and M6.

Sample orders

Type (examples)	Mounting position	Shaft position	Flange position	Terminal box position	Cable entry position	Direction of rotation of output
SF77CV100L4	M6	AB	AB	90°	"3"	-
KA97CV132M4	M4	B	-	270°	"2"	-
KH107CV160L4	M1	A	-	180°	"3"	-

Change in mounting position

Make sure to read the following information when you operate the gearmotor in a mounting position other than the one indicated in the order:

- Adjust lubricant fill quantity to match the new mounting position
- Adjust position of breather valve
- For helical-bevel gearmotors: Contact the SEW-EURODRIVE customer service prior to changing to mounting position M5 or M6 and when changing from M5 to M6 or vice versa.
- For helical-worm gearmotors: Contact the SEW-EURODRIVE customer service when changing to mounting position M2.

4.3 Key to the mounting position sheets

Symbols used The following table shows the symbols used in the mounting position sheets and their meaning:

Symbol	Description
	Breather valve
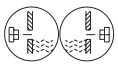	Oil level plug
	Oil drain plug
*	With these mounting positions, observe the churning losses given in the "Churning losses" table in section 3.4, page 31.
	Position of the terminal box is "Standard"



Note the following information regarding display of shafts in the mounting position sheets:

- **For gear units with solid shaft:** The displayed shaft is always on the A end.
- **For shaft mounted gear units:** The shaft with dashed lines represents the customer shaft. The output end (= shaft position) is always shown on the A end.

4.4 Mounting positions for helical gearmotors

RX57-RX107

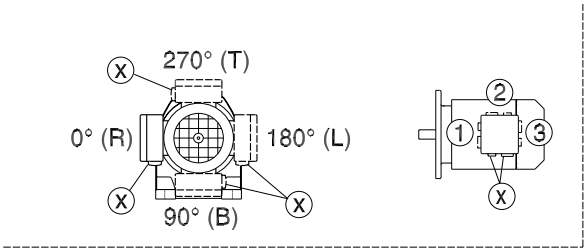

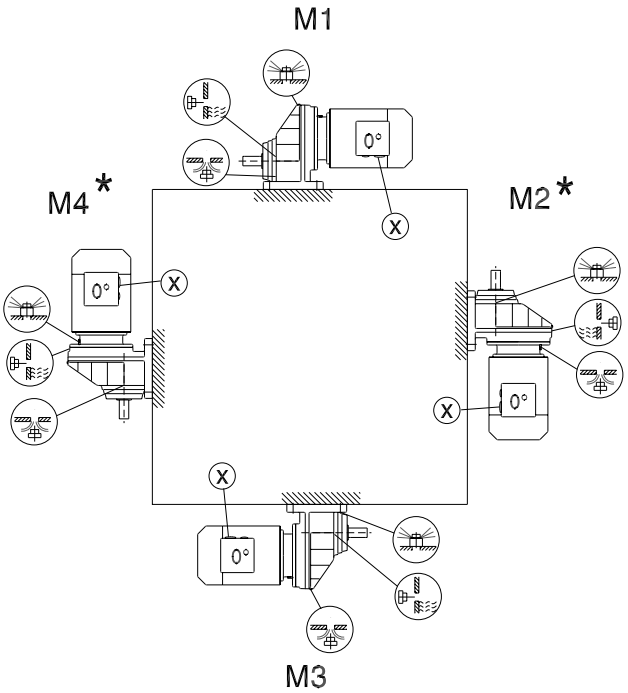

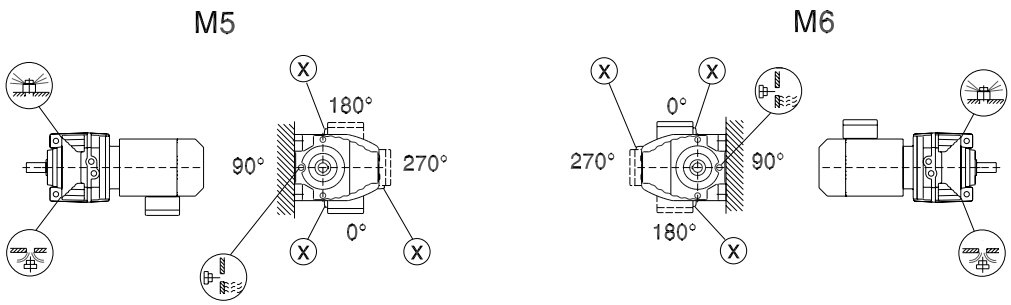

* → page 61

RXF57 - RXF107

04 044 02 00

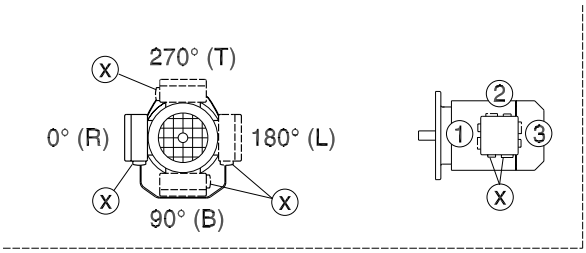

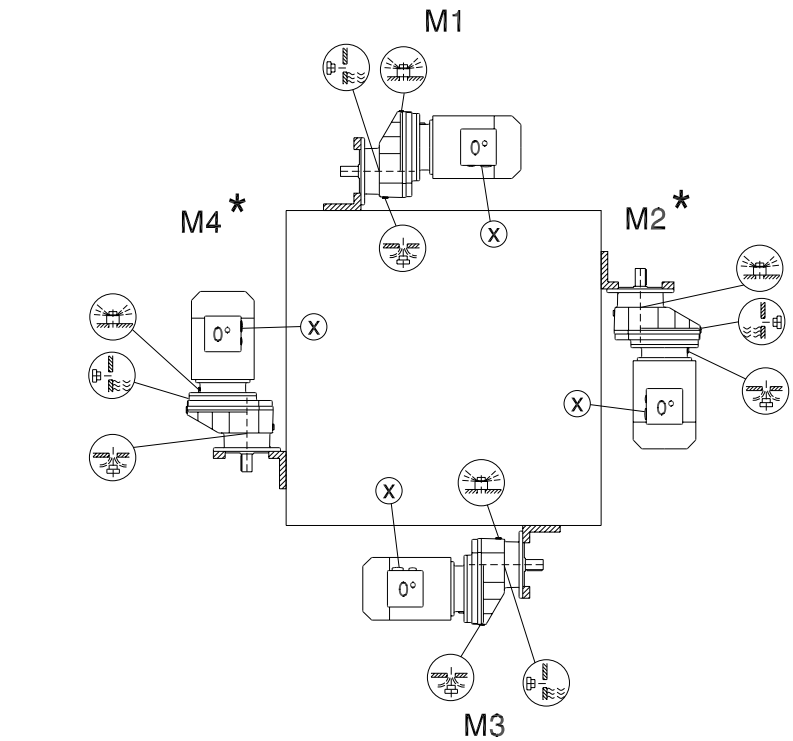

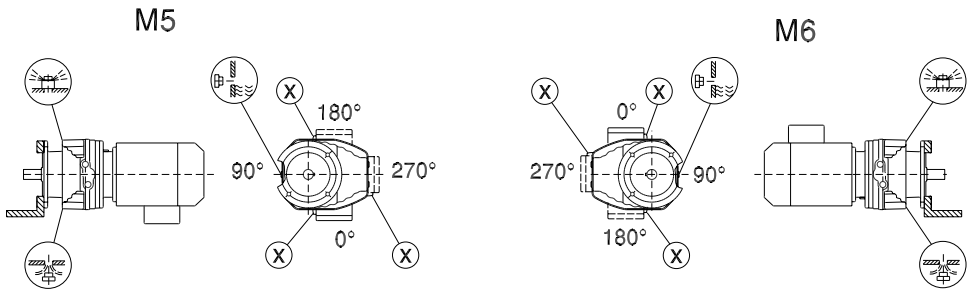

* → page 61

R17-R167

04 040 03 00

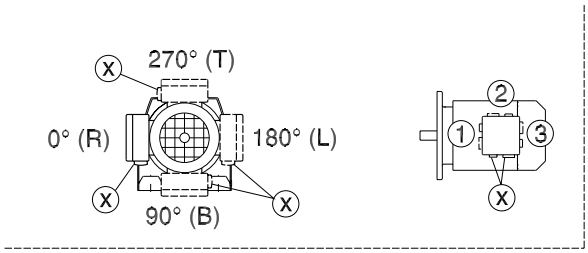

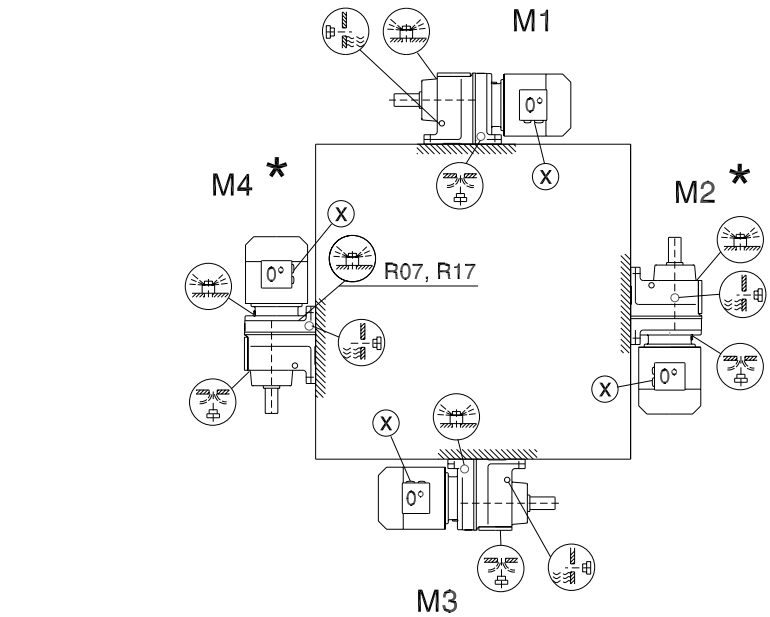

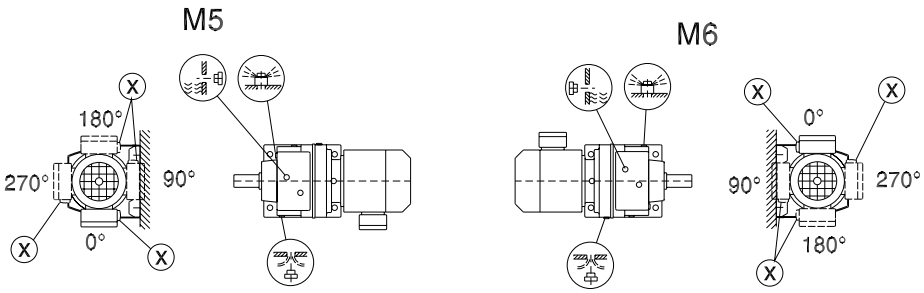

R07		M1, M2 , M3 , M5 , M6
R17, R27		M1, M3 , M5 , M6
R07, R17, R27		
R47, R57		M5

* → page 61

RF17 - RF167

04 041 02 00

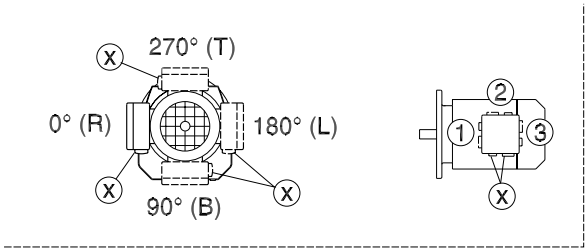

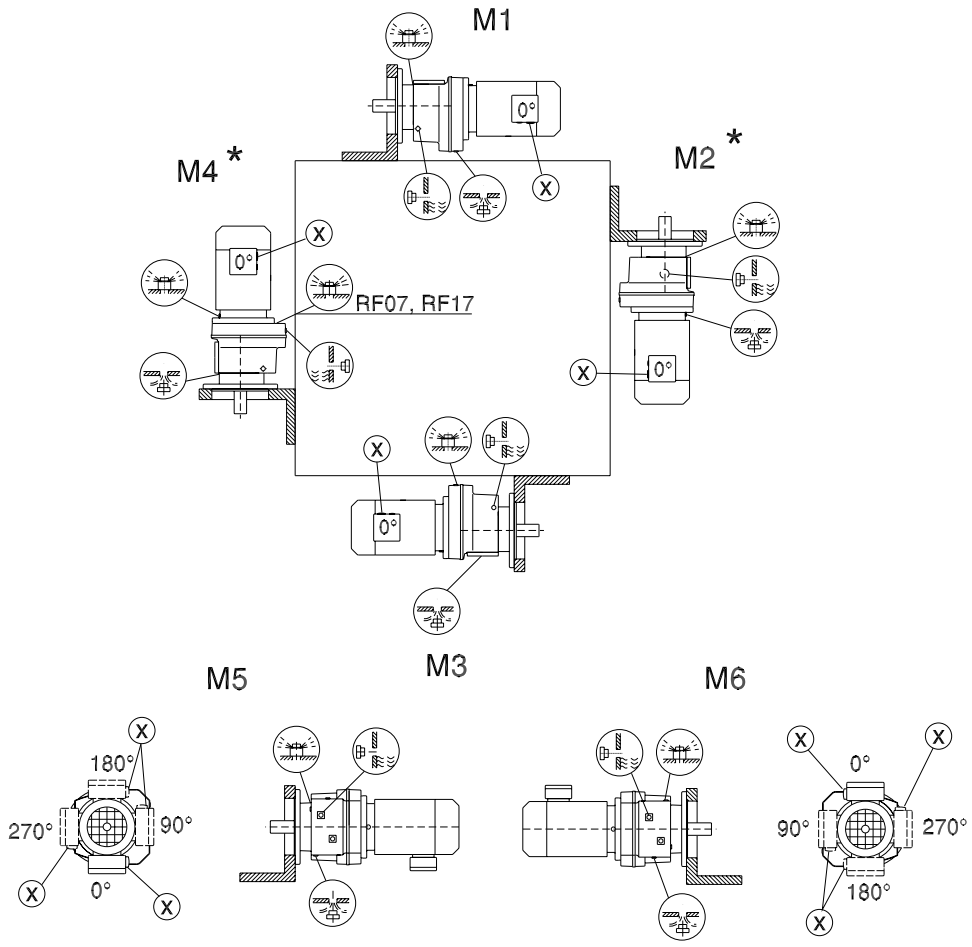

RF07		M1, M2 , M3 , M5 , M6
RF17, RF27		M1, M3 , M5 , M6
RF07, RF17, RF27		
RF47, RF57		M5

* → page 61

R17F - R87F

04 042 03 00

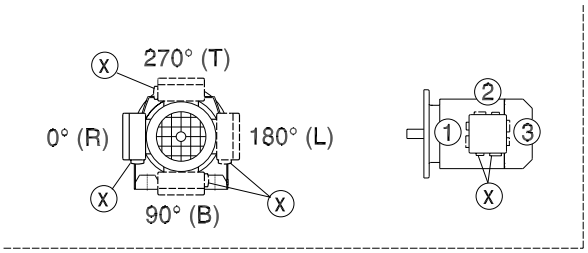

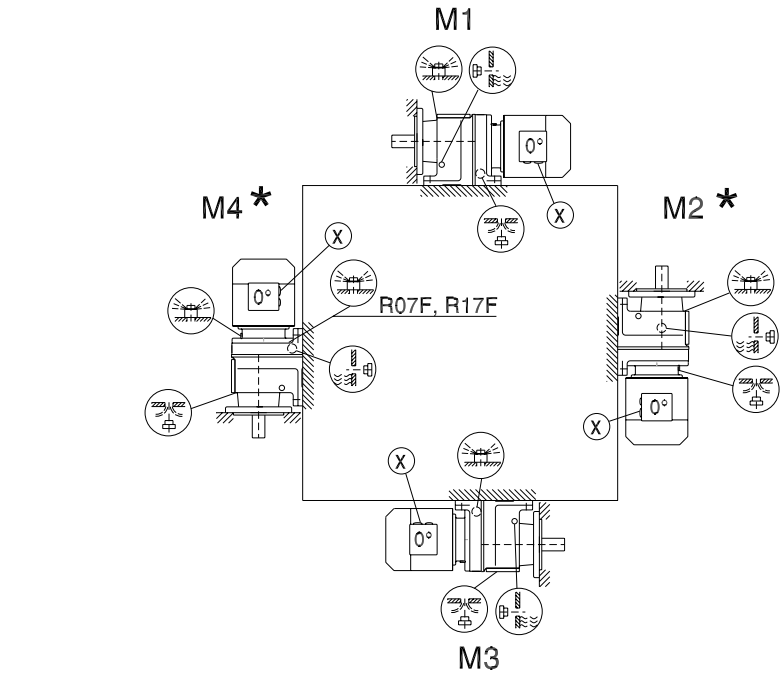

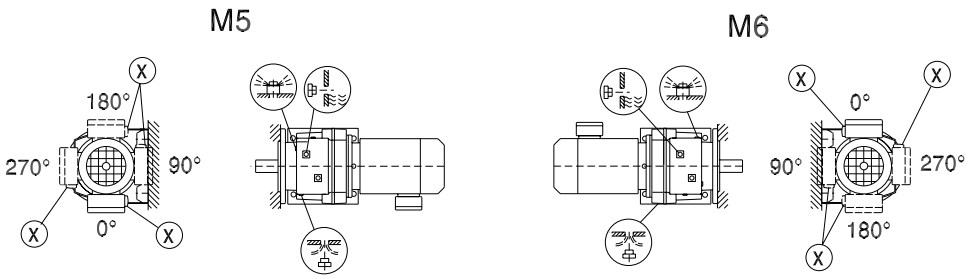

R07F		M1, M2 , M3 , M5 , M6
R17F, R27F		M1, M3 , M5 , M6
R07F, R17F, R27F		
R47F, R57F		M5

* → page 61

Important: See the (i) information in the "Gearmotors" catalog, section "Project Planning for Gear Units/Overhung and axial loads" (page 36).

4.5 Mounting positions for parallel shaft helical gearmotors

F/FA..B/FH27B-157B, FV27B-107B

42 042 03 00

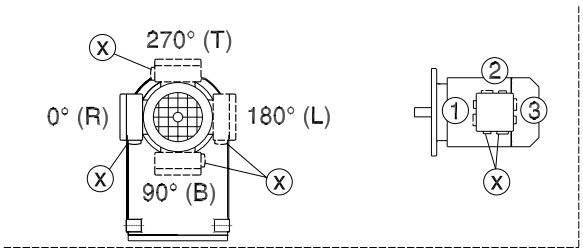

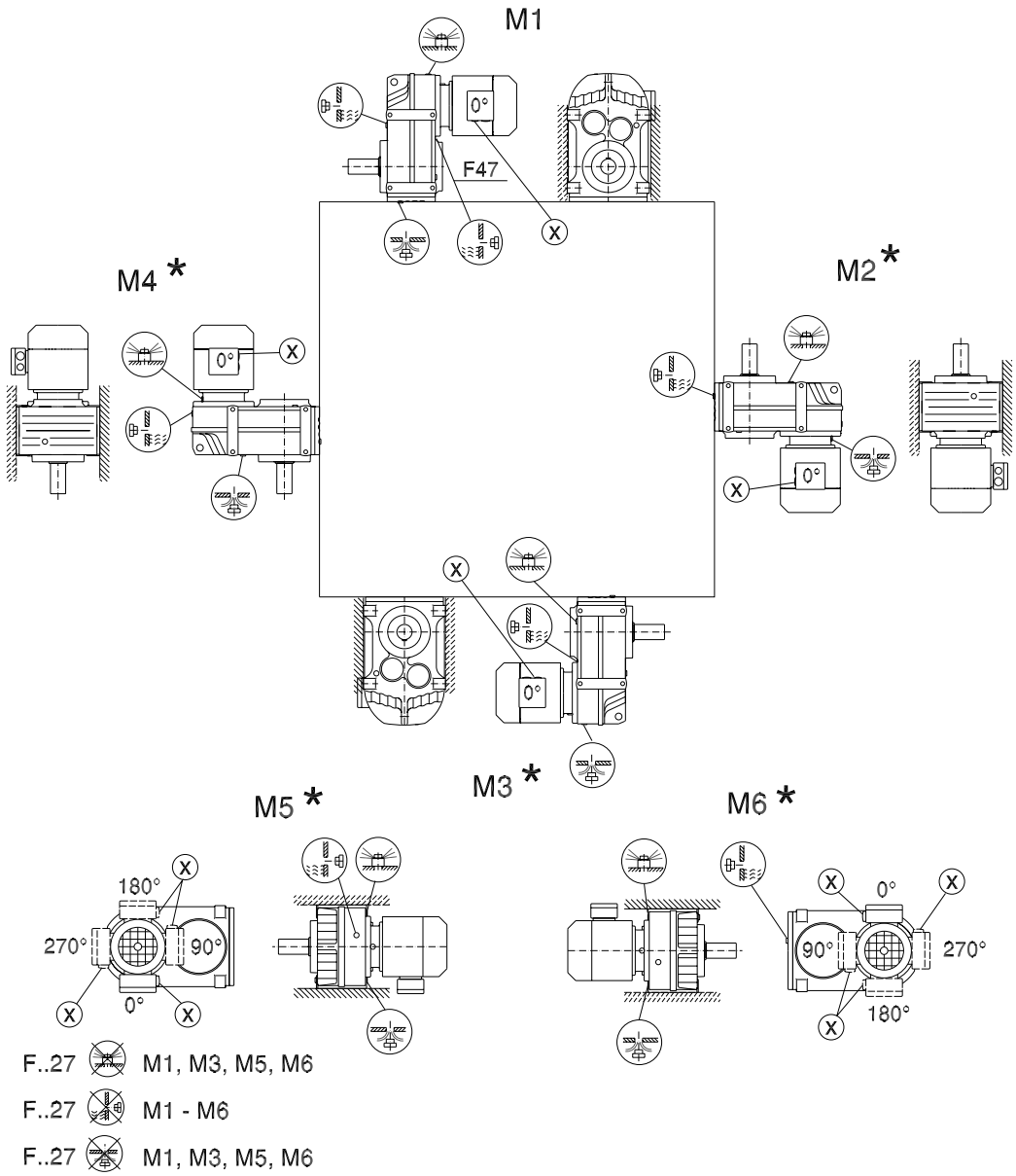

F..27 M1, M3, M5, M6

F..27 M1 - M6

F..27 M1, M3, M5, M6

* → page 61

FF/FAF/FHF/FAZ/FHZ27-157, FVF/FVZ27-107

42 043 03 00

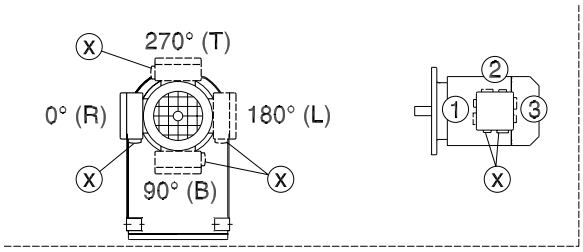

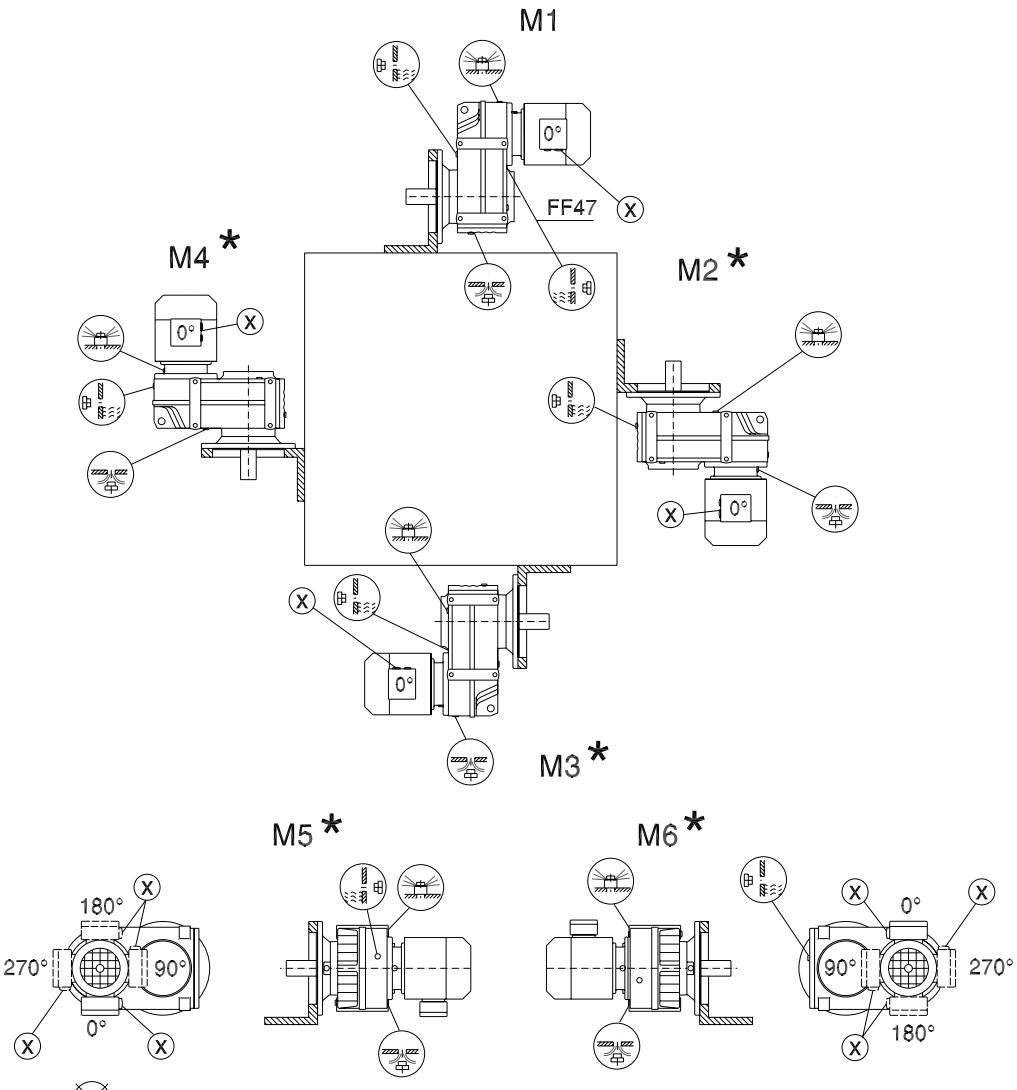

F..27 M1, M3, M5, M6

F..27 M1 - M6

F..27 M1, M3, M5, M6

* → page 61

FA/FH27-157, FV27-107, FT37-97

42 044 03 00

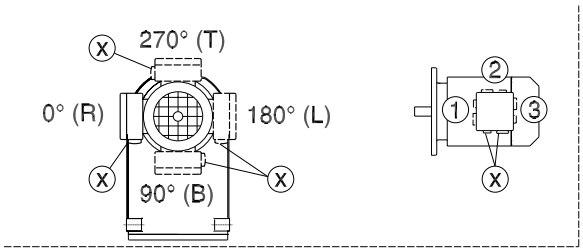

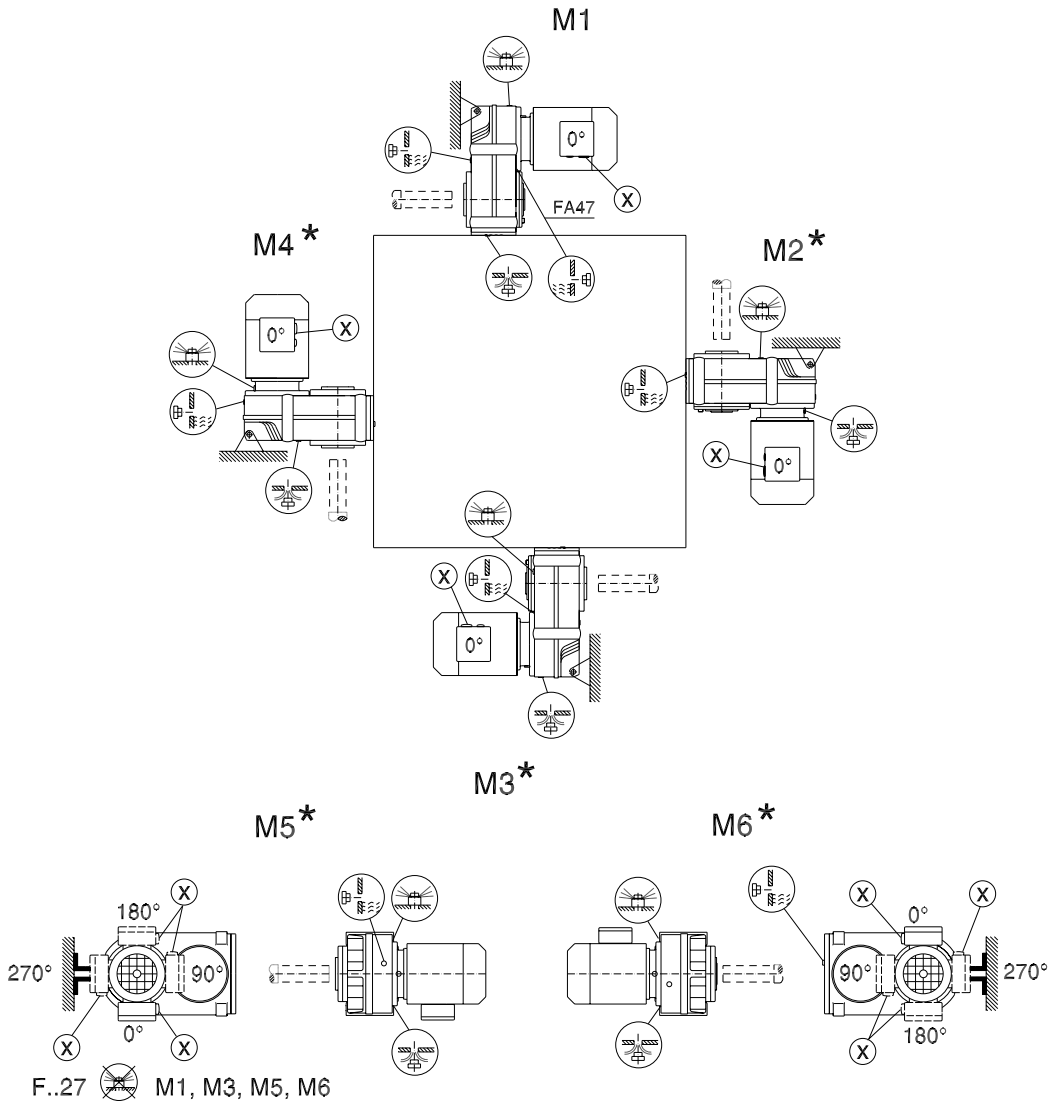

F..27 M1, M3, M5, M6

F..27 M1 - M6

F..27 M1, M3, M5, M6

* → page 61

4.6 Mounting positions for helical-bevel gearmotors

K/KA..B/KH37B-157B, KV37B-107B

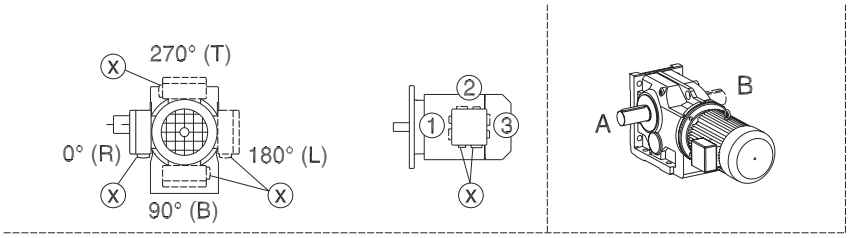

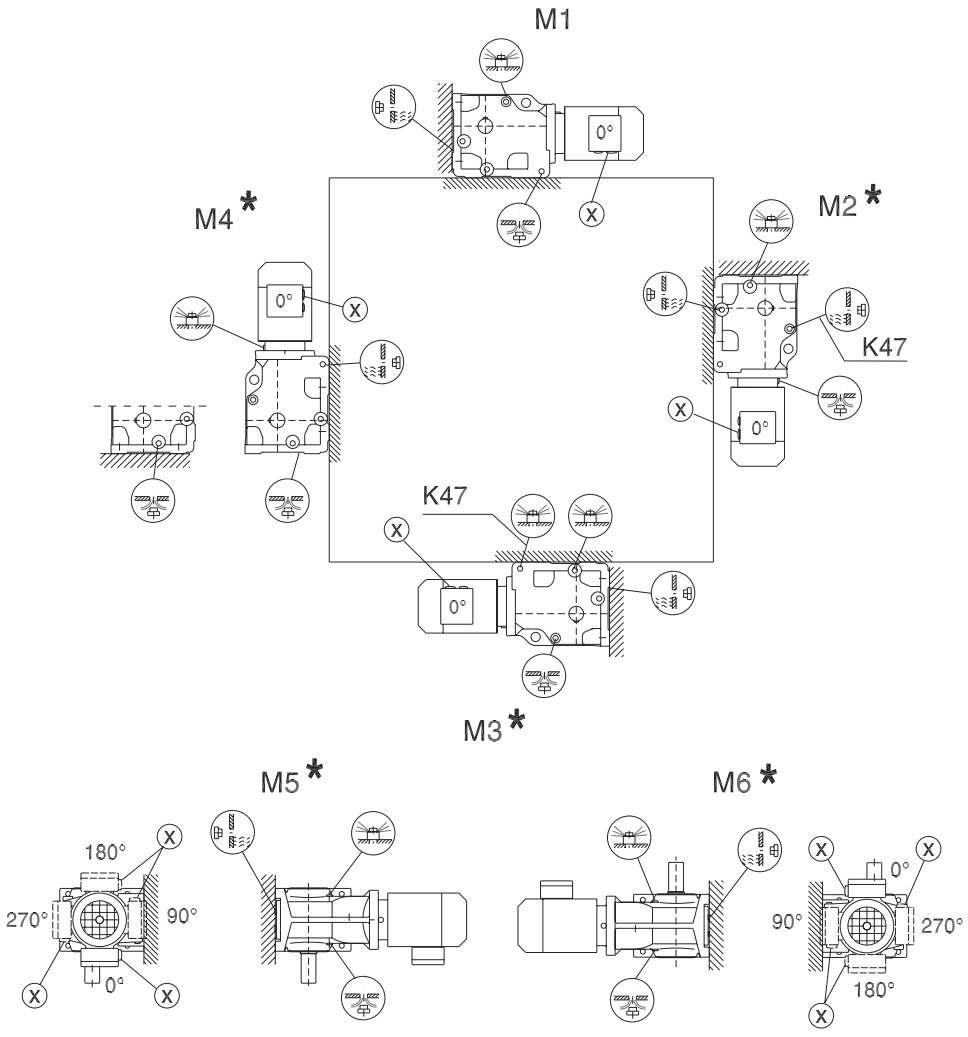

* → page 61

Important: See the (i) information in the "Gearmotors" catalog, section "Project Planning for Gear Units/Overhung and axial loads" (page 36).

K167-187, KH167B-187B

34 026 03 00

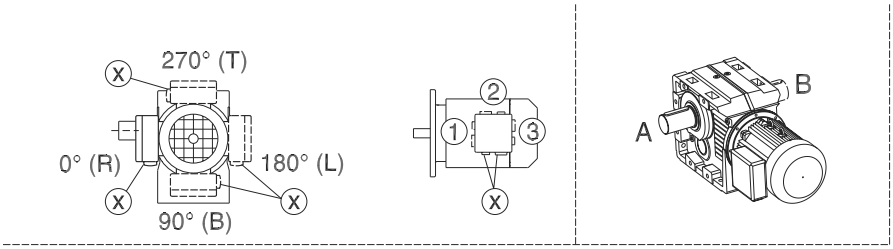

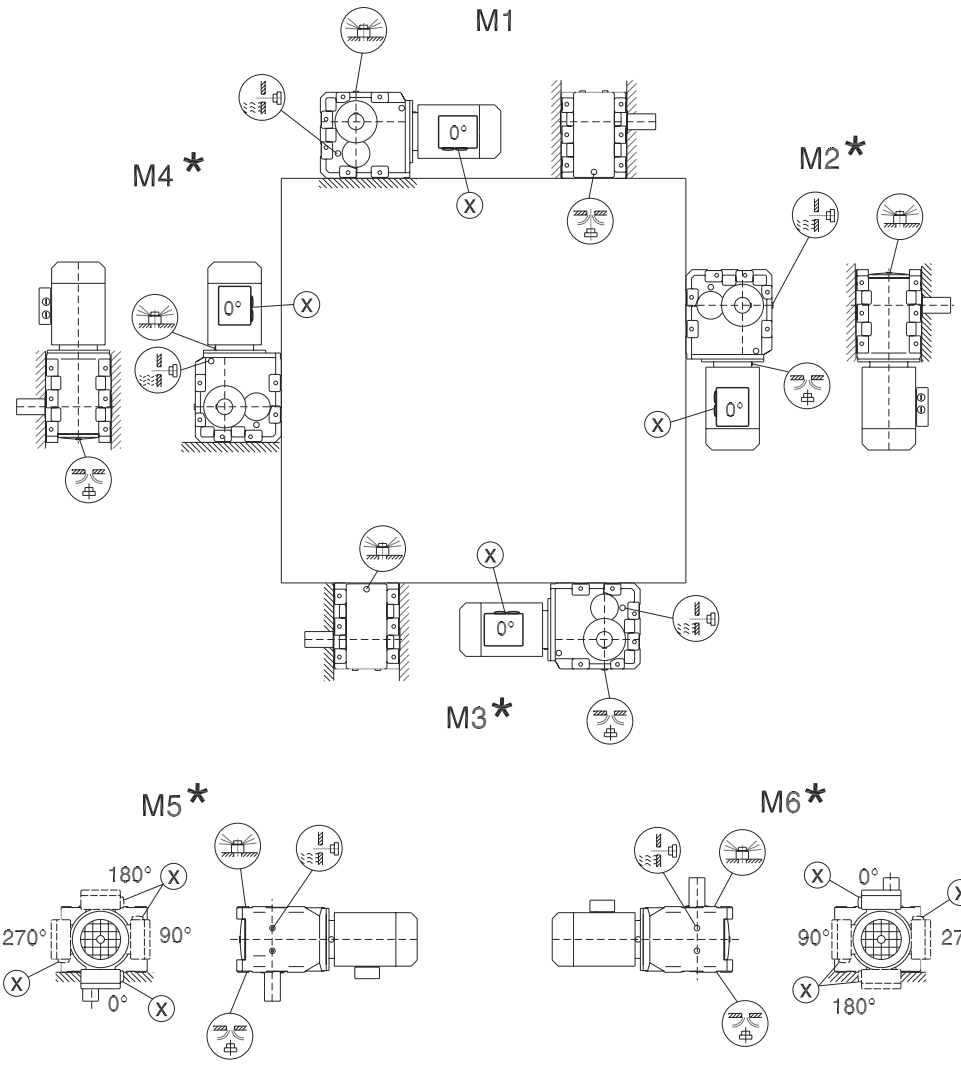

* → page 61

Important: See the (i) information in the "Gearmotors" catalog, section "Project Planning for Gear Units/Overhung and axial loads" (page 36).

KF/KAF/KHF/KAZ/KHZ37-157, KVF/KVZ37-107

34 027 03 00

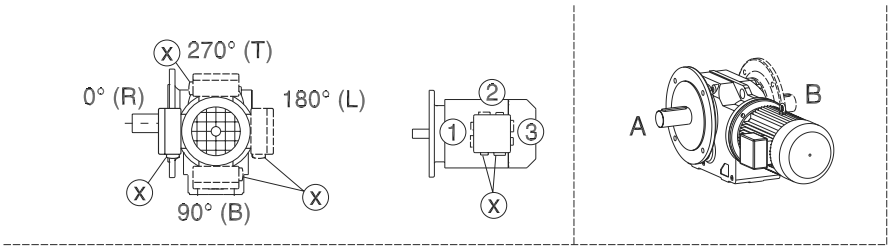

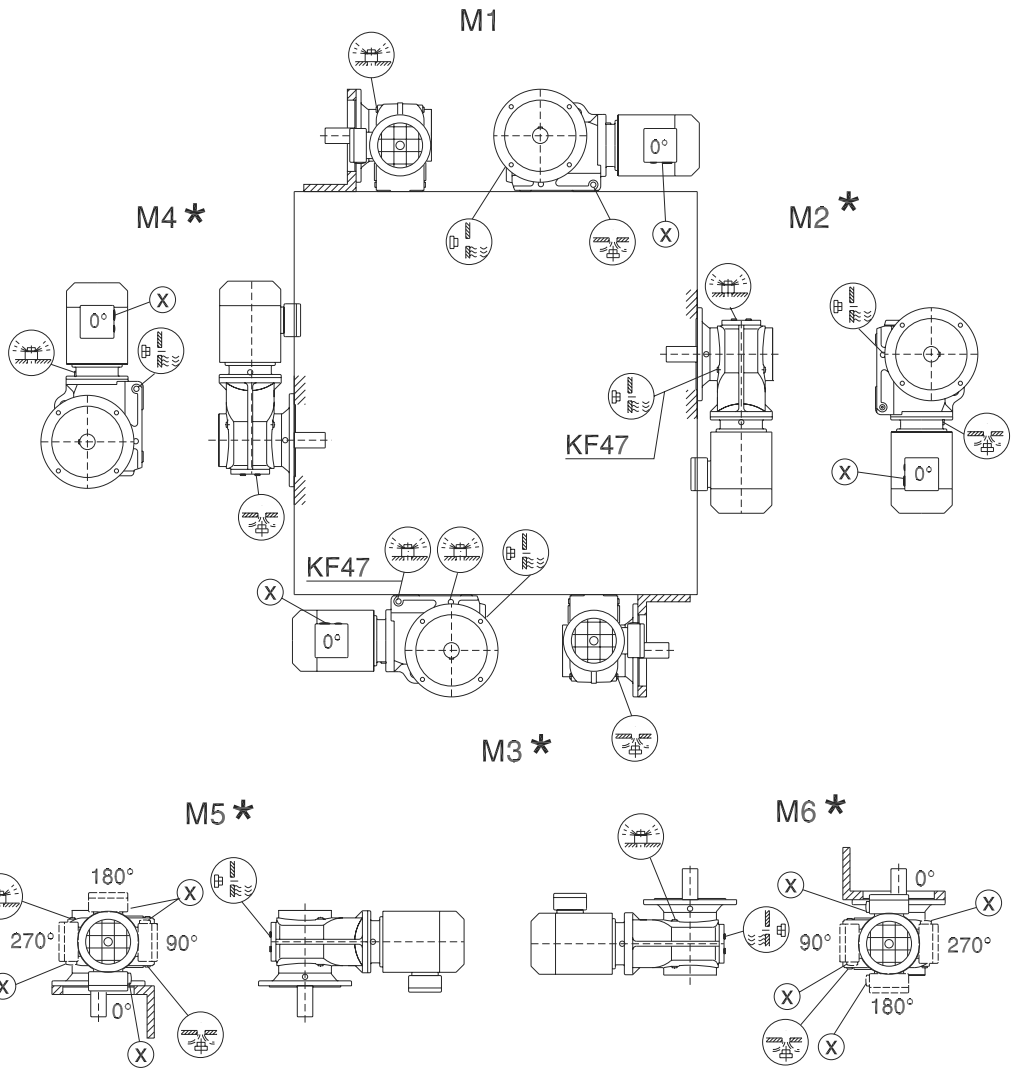

* → page 61

KA/KH37-157, KV37-107, KT37-97

39 025 03 00

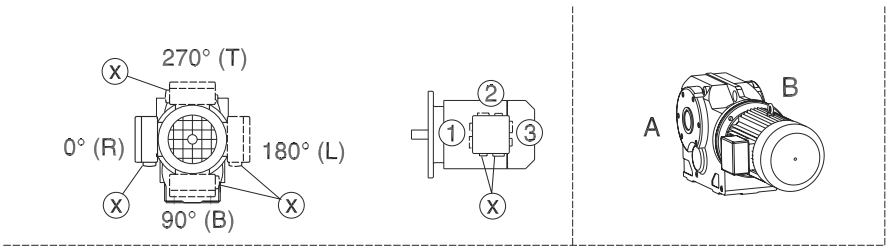

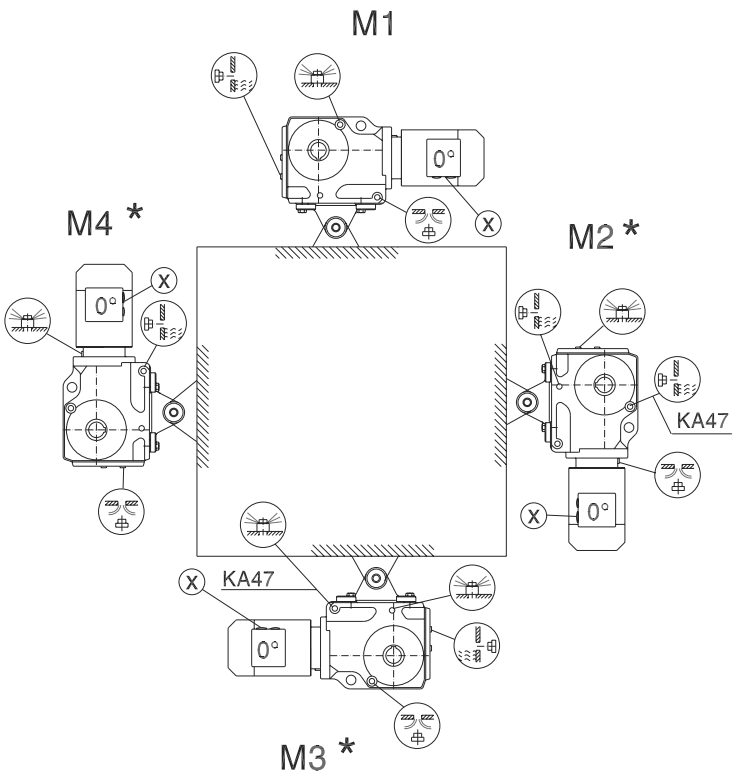

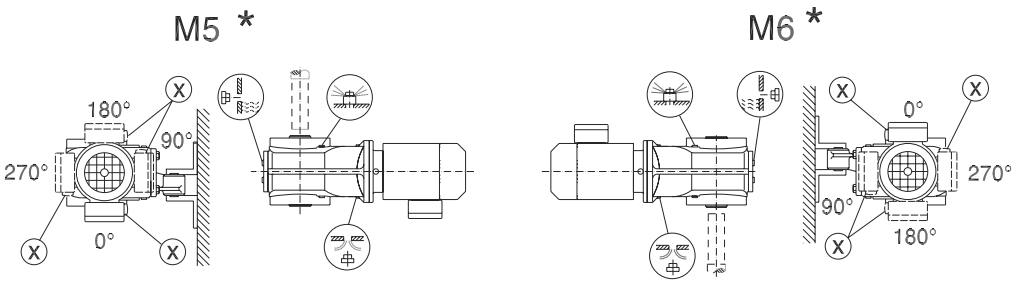

* → page 61

KH167-187

39 026 04 00

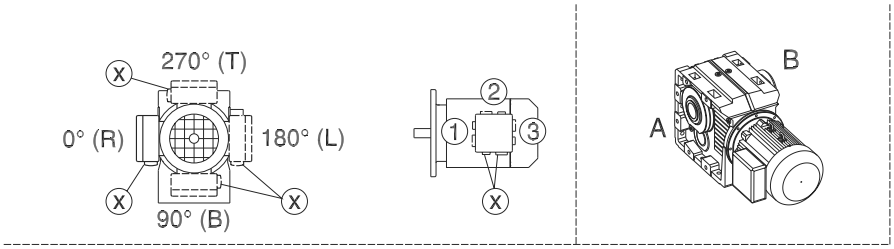

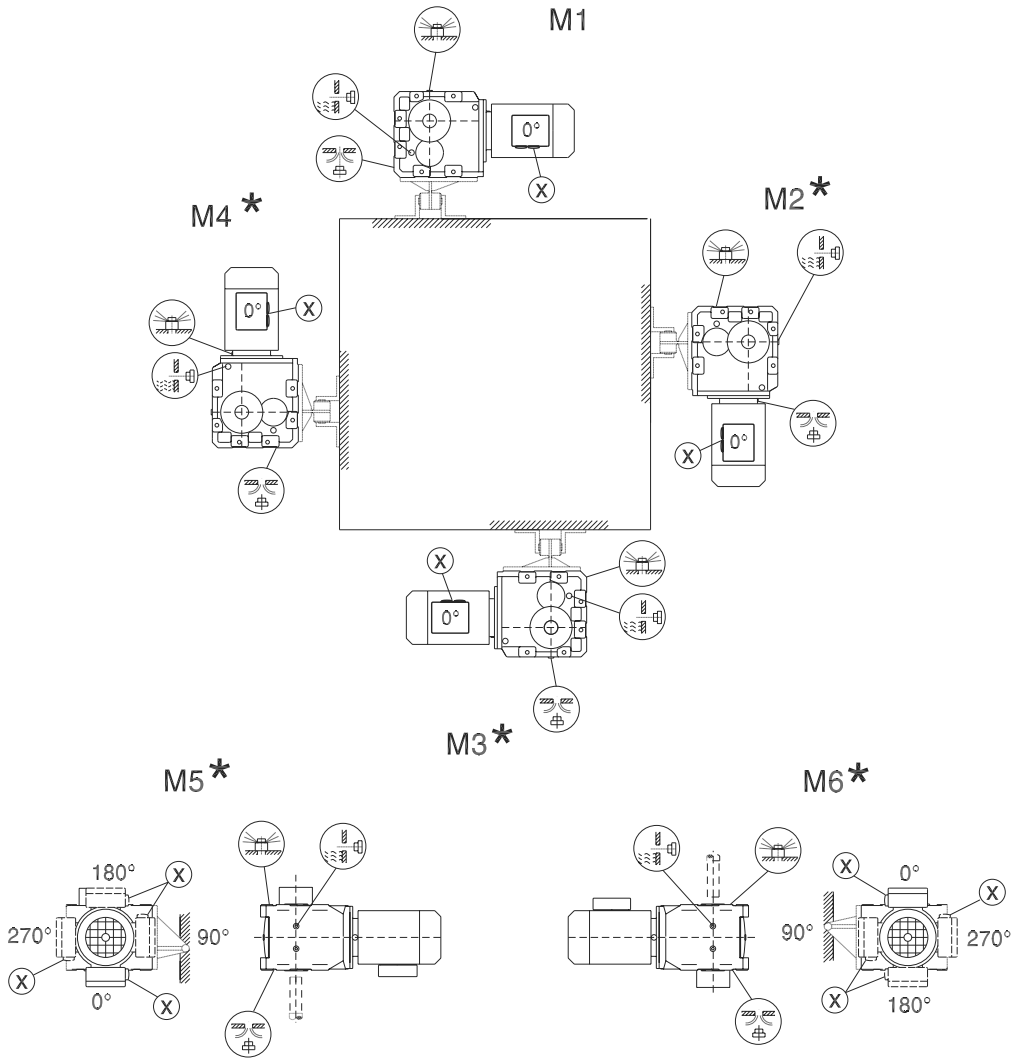

* → page 61

4.7 Mounting positions for helical-worm gearmotors

S37

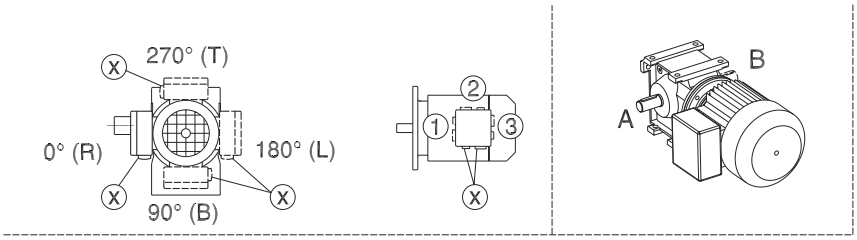

05 025 03 00

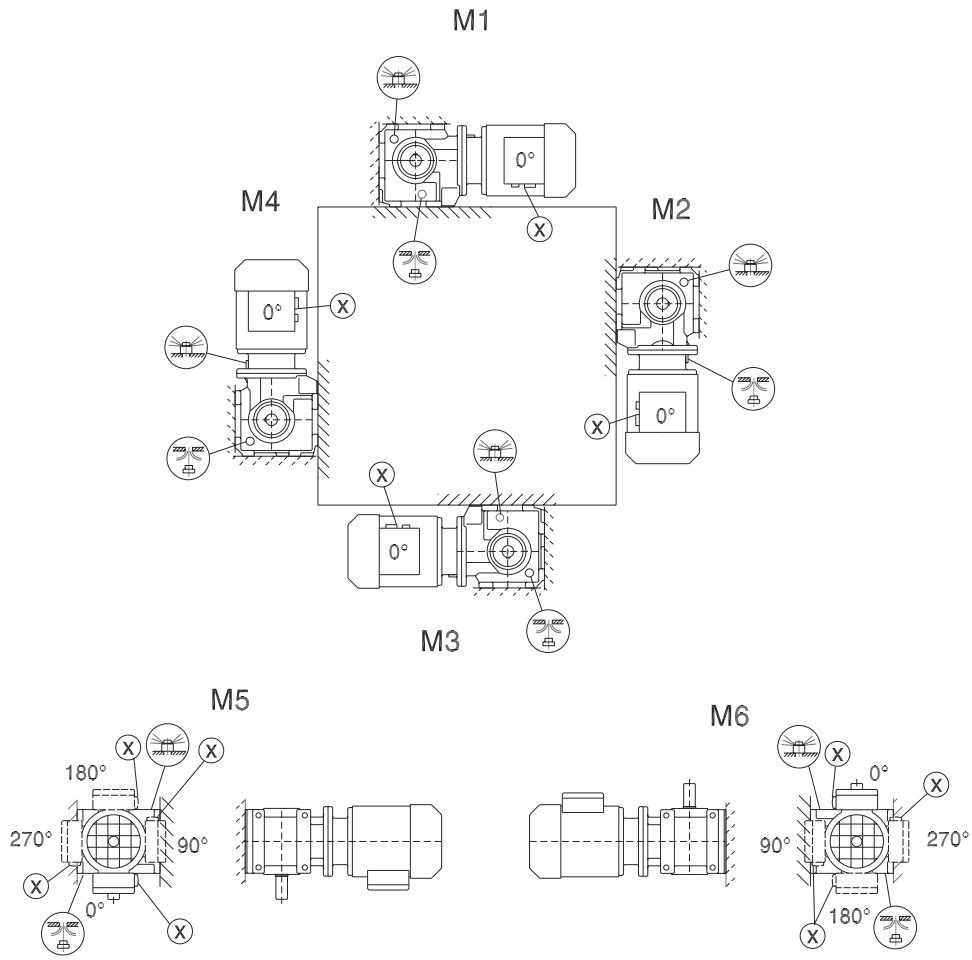

* → page 61

Important: See the (i) information in the "Gearmotors" catalog, section "Project Planning for Gear Units/Overhung and axial loads" (page 36).

S47-S67

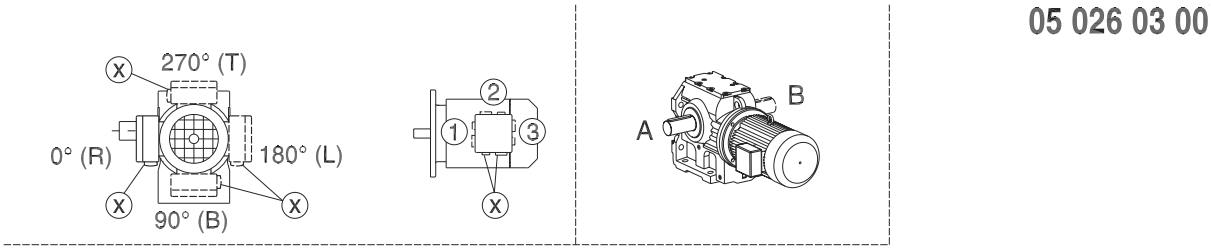

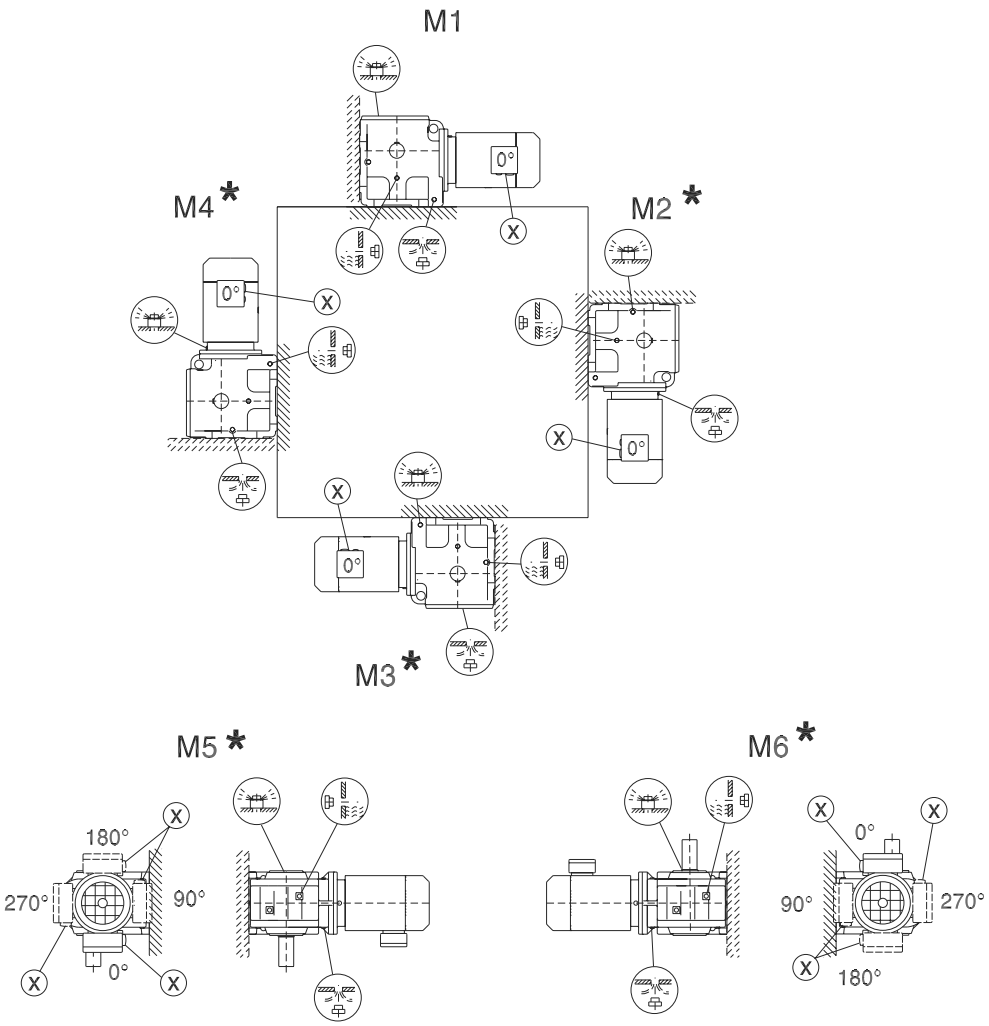

* → page 61

Important: See the ⓘ information in the "Gearmotors" catalog, section "Project Planning for Gear Units/Overhung and axial loads" (page 36).

SF/SAF/SHF37

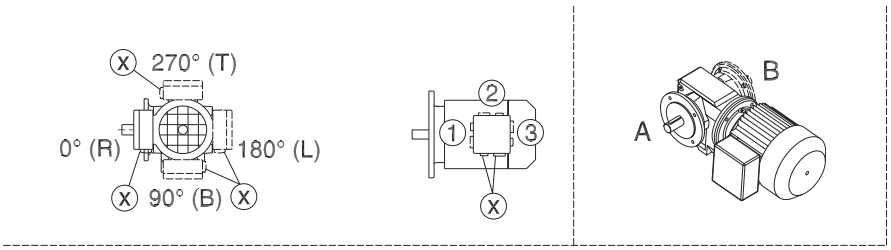

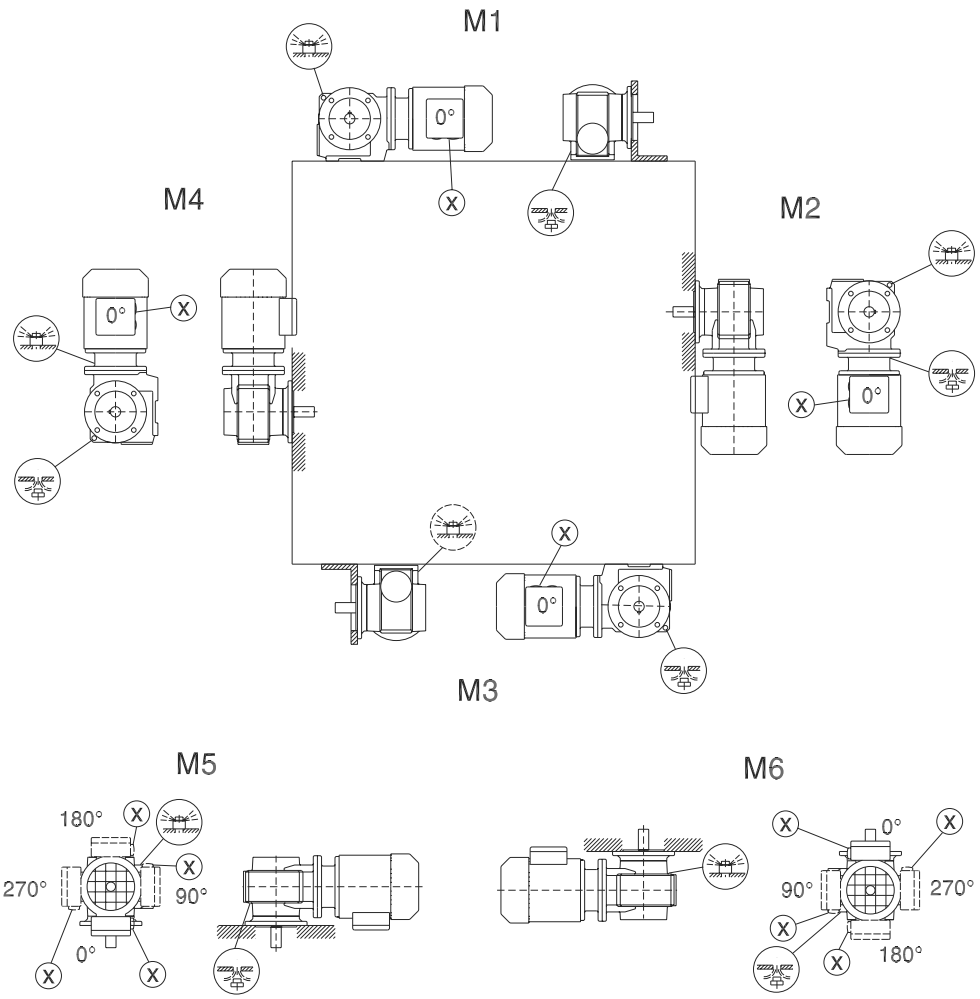

* → page 61

SF/SAF/SHF/SAZ/SHZ47-67

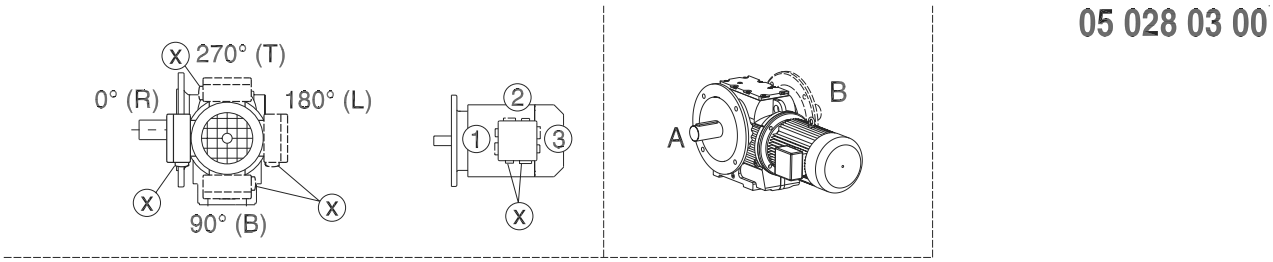

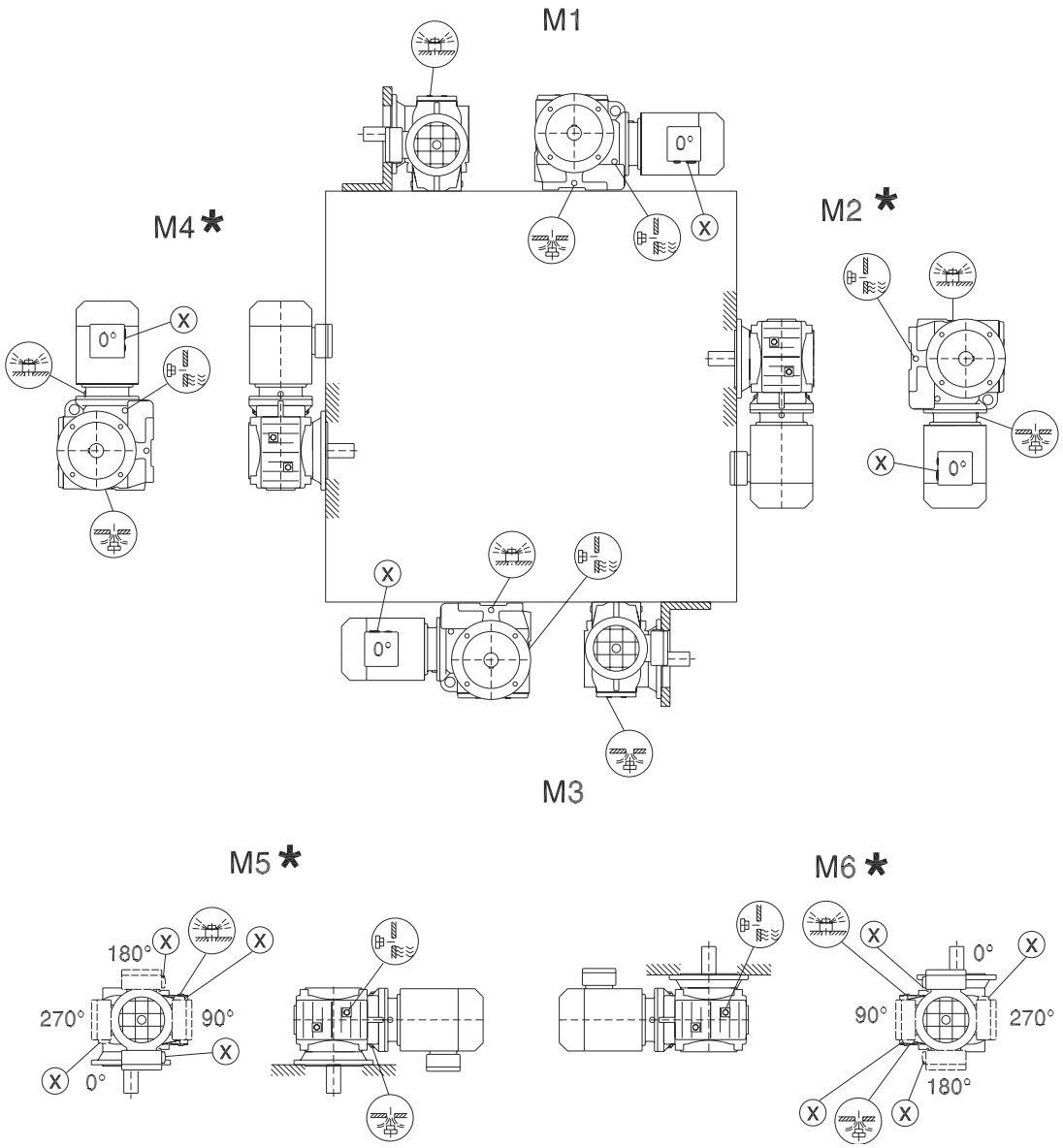

* → page 61

SA/SH/ST37

28 020 03 00

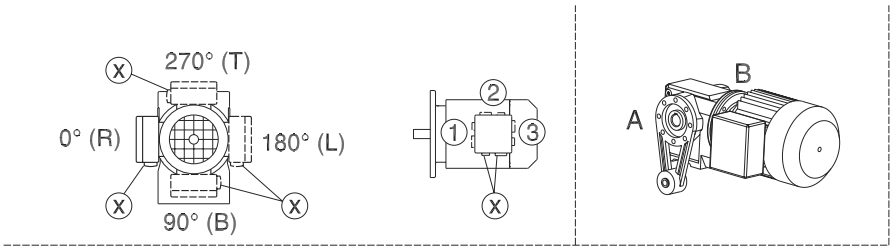

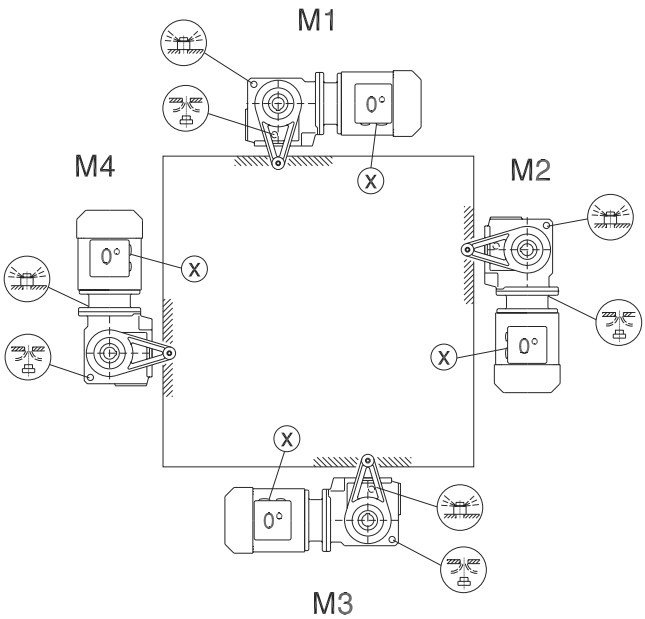

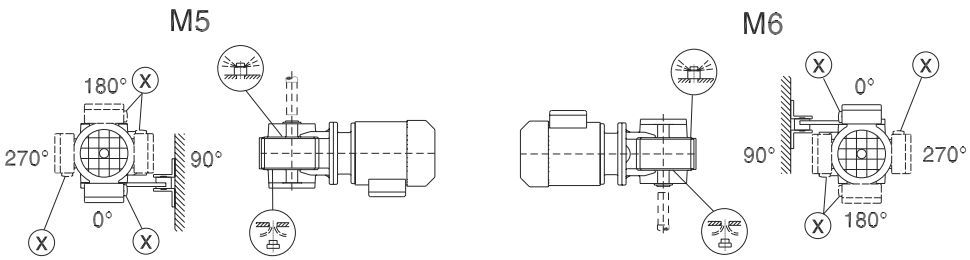

* → page 61

SA/SH/ST47-67

28 021 02 00

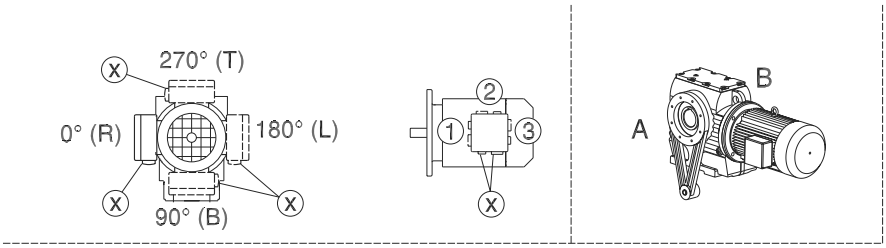

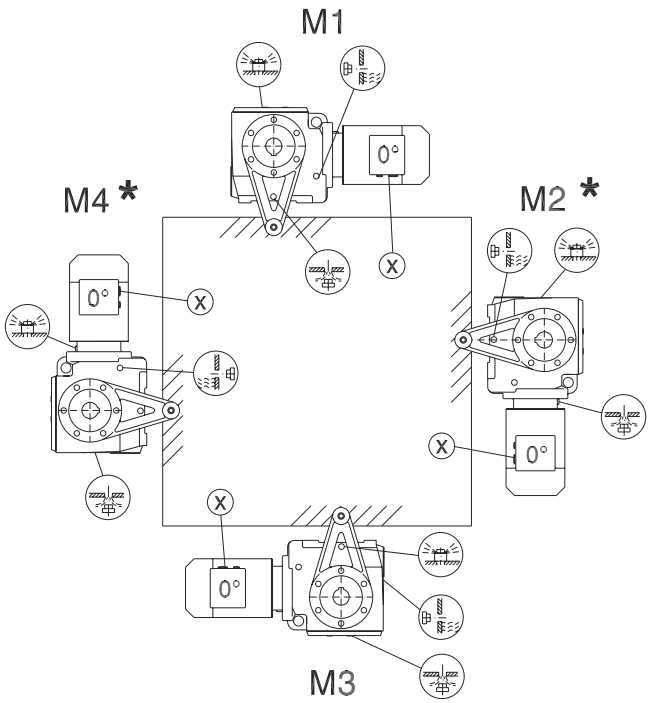

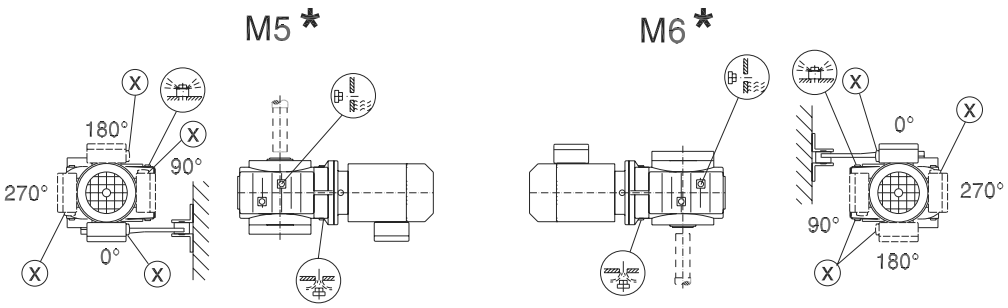

* → page 61

5 Design and Operating Notes

5.1 Lubricants

General

Unless a special arrangement is made, SEW-EURODRIVE supplies the gear units with a lubricant fill adapted for the specific mounting position. The decisive factor is the mounting position (M1 ... M6) specified when ordering the drive.

Note!

SEW-EURODRIVE fills the gear units with the amount of oil specified for the specific mounting positions. If the mounting position is changed, the amount of oil must be adapted as required. Consequently, a **mounting position may only be changed** after consultation with SEW-EURODRIVE, otherwise your right to claim under warranty **no longer applies**.

Lubricant table

The lubricant table on the following page shows the permitted lubricants for SEW-EURODRIVE gear units. Please note the following key to the lubricant table.

Key to the lubricant table

Abbreviations used, meaning of shading and notes:

CLP	= Mineral oil
CLP PG	= Polyglycol (W gear units, conforms to USDA-H1)
CLP HC	= Synthetic hydrocarbons
E	= Ester oil (water pollution danger category WGK 1)
HCE	= Synthetic hydrocarbons + ester oil (USDA - H1 certification)
HLP	= Hydraulic oil
	= Synthetic lubricant (= synthetic anti-friction bearing grease)
	= Mineral lubricant (= mineral-based anti-friction bearing grease)
1)	Helical-worm gear units with PG oil: Please contact SEW-EURODRIVE
2)	Special lubricant for Spiroplan® gear units only
3)	Recommendation: Select SEW $f_B \geq 1.2$
4)	Pay attention to critical starting behavior at low temperatures!
5)	Low-viscosity grease
6)	Ambient temperature
	Lubricant for the food industry (food grade oil)
	Biodegradable oil (lubricant for use in agriculture, forestry and water resources)

Anti-friction bearing greases

The anti-friction bearings in gear units and motors are given a factory-fill with the greases listed below.

	Ambient temperature	Manufacturer	Type
Anti-friction bearing in gear unit	-20°C ... +60°C	Mobil	Mobilux EP 2
	-40°C ... +80°C	Mobil	Mobiltemp SHC 100
Anti-friction bearing in motor	-20°C ... +80°C	Esso	Polyrex EM
	+20°C ... +100°C	Klüber	Barrierta L55/2
	-40°C ... +60°C	Kyodo Yushi	Multemp SRL[1)]
Special greases for anti-friction bearings in gear units:			
	-30°C ... +40°C	Aral	Aral Eural Grease EP 2
	-20°C ... +40°C	Aral	Aral Aralube BAB EP2

1) Recommended for continuous operation at ambient temperatures below 0°C, for example in a cold storage.

The following grease quantities are required:

- For fast-running bearings (gear unit input end): Fill the cavities between the rolling elements one third full with grease.
- For slow-running bearings (in gear units and at gear unit output end): Fill the cavities between the rolling elements two thirds full with grease.

Motor bearings are closed and lubricated for life.

Lubricant table

01 805 792-1

	6) °C -50 0 +50 +100	DIN (ISO)	ISO,NLGI	Mobil®	Shell		ARAL	BP	Tribol	TEXACO	Optimol	FUCHS
R...	Standard -10 +40	CLP(CC)	VG 220	Mobilgear 630	Shell Omala 220	Klüberoil GEM 1-220	Aral Degol BG 220	BP Energol GR-XP 220	Tribol 1100/220	Meropa 220	Optigear BM 220	Renolin CLP 220
	-25 +80	CLP PG	VG 220	Mobil Glygolyle 30	Shell Tivela WB	Klübersynth GH 6-220	Aral Degol GS 220	BP Enersyn SG-XP 220	Tribol 800/220	Synlube CLP 220	Optiflex A 220	
K...(HK...)	4) -40 +80	CLP HC	VG 220	Mobil SHC 630	Shell Omala 220 HD	Klübersynth EG 4-220	Aral Degol PAS 220		Tribol 1510/220	Pinnacle EP 220	Optigear Synthetic A 220	Renolin Unisyn CLP 220
	4) -40 +40		VG 150	Mobil SHC 629		Klübersynth EG 4-150				Pinnacle EP 150		
	-20 +25	CLP (CC)	VG 150 VG 100	Mobilgear 627	Shell Omala 100	Klüberoil GEM 1-150	Aral Degol BG 100	BP Energol GR-XP 100	Tribol 1100/100	Meropa 150	Optigear BM 100	Renolin CLP 150
	-30 +10	HLP (HM)	VG 68-46 VG 32	Mobil D.T.E. 13M	Shell Tellus T 32	Klüberoil GEM 1-68	Aral Degol BG 46		Tribol 1100/68	Rando EP Ashless 46	Optigear 32	Renolin B 46 HVI
F...	4) -40 +10	CLP HC	VG 32	Mobil SHC 624		Klüber-Summit HySyn FG-32				Cetus PAO 46		
	4) -40 -20	HLP (HM)	VG 22 VG 15	Mobil D.T.E. 11M	Shell Tellus T 15	Isoflex MT 30 ROT		BP Energol HLP-HM 10		Rando HDZ 15		
S...(HS...)	Standard 0 +40	CLP (CC)	VG 680	Mobilgear 636	Shell Omala 680	Klüberoil GEM 1-680	Aral Degol BG 680	BP Energol GR-XP 680	Tribol 1100/680	Meropa 680	Optigear BM 680	Renolin CLP 680
	-20 +60	CLP PG	VG 680 1)	Mobil Glygoyle HE 680		Klübersynth GH 6-680		BP Enersyn SG-XP 680	Tribol 800/680	Synlube CLP 680		
	4) -30 +80	CLP HC	VG 460	Mobil SHC 634	Shell Omala 460 HD	Klübersynth EG 4-460				Pinnacle EP 460		
	4) -40 +10		VG 150	Mobil SHC 629		Klübersynth EG 4-150				Pinnacle EP 150		
	-20 +10	CLP (CC)	VG 150 VG 100	Mobilgear 627	Shell Omala 100	Klüberoil GEM 1-150	Aral Degol BG 100	BP Energol GR-XP 100	Tribol 1100/100	Meropa 100	Optigear BM 100	Renolin CLP 150
	-25 +20	CLP PG	VG 220 1)	Mobil Glygoyle 30		Klübersynth GH 6-220			Tribol 800/220	Synlube CLP 220	Optiflex A 220	
	4) -40 0	CLP HC	VG 32	Mobil SHC 624		Klüber-Summit HySyn FG-32				Cetus PAO 46		
R...,K...(HK...), F...,S...(HS...)	4) -30 +40	HCE	VG 460		Shell Cassida Fluid GL 460	Klüberoil 4UH1-460	Aral Eural Gear 460				Optileb GT 460	
	-20 +40	E	VG 460			Klüberbio CA2-460	Aral Degol BAB 460				Optisynt BS 460	
R32 R302	-25 +60	DIN 51 818 5)	00	Glygoyle Grease 00	Shell Tivela GL 00	Klübersynth GE 46-1200				Multifak 6833 EP 00		
	Standard -15 +40		000 - 0	Mobilux EP 004	Shell Alvania GL 00		Aralub MFL 00	BP Energrease LS-EP 00		Multifak EP 000	Longtime PD 00	Renolin SF 7 - 041

Lubricant fill quantities

The specified fill quantities are **recommended values**. The precise values vary depending on the number of stages and gear ratio. When filling, it is essential to check the **oil level plug since it indicates the precise oil capacity**.

The following tables show guide values for lubricant fill quantities in relation to the mounting position M1 ... M6.

Helical (R) gear units

RX..

Gear unit	Fill quantity in liters					
	M1	M2	M3	M4	M5	M6
RX57	0.60	0.80	1.30	1.30	0.90	0.90
RX67	0.80	0.80	1.70	1.90	1.10	1.10
RX77	1.10	1.50	2.60	2.70	1.60	1.60
RX87	1.70	2.50	4.80	4.80	2.90	2.90
RX97	2.10	3.40	7.4	7.0	4.80	4.80
RX107	3.90	5.6	11.6	11.9	7.7	7.7

RXF..

Gear unit	Fill quantity in liters					
	M1	M2	M3	M4	M5	M6
RXF57	0.50	0.80	1.10	1.10	0.70	0.70
RXF67	0.70	0.80	1.50	1.40	1.00	1.00
RXF77	0.90	1.30	2.40	2.00	1.60	1.60
RXF87	1.60	1.95	4.90	3.95	2.90	2.90
RXF97	2.10	3.70	7.1	6.3	4.80	4.80
RXF107	3.10	5.7	11.2	9.3	7.2	7.2

R.., R..F

Gear unit	Fill quantity in liters					
	M1[1)]	M2[1)]	M3	M4	M5	M6
R17	0.25	0.55	0.35	0.55	0.35	0.35
R27	0.25/0.40	0.70	0.50	0.70	0.50	0.50
R37	0.30/0.95	0.85	0.95	1.05	0.75	0.95
R47	0.70/1.50	1.60	1.50	1.65	1.50	1.50
R57	0.80/1.70	1.90	1.70	2.10	1.70	1.70
R67	1.10/2.30	2.60/3.50	2.80	3.20	1.80	2.00
R77	1.20/3.00	3.80/4.10	3.60	4.10	2.50	3.40
R87	2.30/6.0	6.7/8.2	7.2	7.7	6.3	6.5
R97	4.60/9.8	11.7/14.0	11.7	13.4	11.3	11.7
R107	6.0/13.7	16.3	16.9	19.2	13.2	15.9
R137	10.0/25.0	28.0	29.5	31.5	25.0	25.0
R147	15.4/40.0	46.5	48.0	52.0	39.5	41.0
R167	27.0/70.0	82.0	78.0	88.0	66.0	69.0

1) The larger gear unit of multi-stage gear units must be filled with the larger oil volume.

RF..

Gear unit	Fill quantity in liters					
	M1[1)]	M2[1)]	M3	M4	M5	M6
RF07	0.12	0.20	0.20	0.20	0.20	0.20
RF17	0.25	0.55	0.35	0.55	0.35	0.35
RF27	0.25/0.40	0.70	0.50	0.70	0.50	0.50
RF37	0.35/0.95	0.90	0.95	1.05	0.75	0.95
RF47	0.65/1.50	1.60	1.50	1.65	1.50	1.50
RF57	0.80/1.70	1.80	1.70	2.00	1.70	1.70
RF67	1.20/2.50	2.70/3.60	2.70	2.60	1.90	2.10
RF77	1.20/2.60	3.80/4.10	3.30	4.10	2.40	3.00
RF87	2.40/6.0	6.8/7.9	7.1	7.7	6.3	6.4
RF97	5.1/10.2	11.9/14.0	11.2	14.0	11.2	11.8
RF107	6.3/14.9	15.9	17.0	19.2	13.1	15.9
RF137	9.5/25.0	27.0	29.0	32.5	25.0	25.0
RF147	16.4/42.0	47.0	48.0	52.0	42.0	42.0
RF167	26.0/70.0	82.0	78.0	88.0	65.0	71.0

1) The larger gear unit of multi-stage gear units must be filled with the larger oil volume.

Parallel shaft helical (F) gear units

F.., FA..B, FH..B, FV..B

Gear unit	Fill quantity in liters					
	M1	M2	M3	M4	M5	M6
F..27	0.60	0.80	0.65	0.70	0.60	0.60
F..37	0.95	1.25	0.70	1.25	1.00	1.10
F..47	1.50	1.80	1.10	1.90	1.50	1.70
F..57	2.60	3.50	2.10	3.50	2.80	2.90
F..67	2.70	3.80	1.90	3.80	2.90	3.20
F..77	5.9	7.3	4.30	8.0	6.0	6.3
F..87	10.8	13.0	7.7	13.8	10.8	11.0
F..97	18.5	22.5	12.6	25.2	18.5	20.0
F..107	24.5	32.0	19.5	37.5	27.0	27.0
F..127	40.5	54.5	34.0	61.0	46.3	47.0
F..157	69.0	104.0	63.0	105.0	86.0	78.0

FF..

Gear unit	Fill quantity in liters					
	M1	M2	M3	M4	M5	M6
FF27	0.60	0.80	0.65	0.70	0.60	0.60
FF37	1.00	1.25	0.70	1.30	1.00	1.10
FF47	1.60	1.85	1.10	1.90	1.50	1.70
FF57	2.80	3.50	2.10	3.70	2.90	3.00
FF67	2.70	3.80	1.90	3.80	2.90	3.20
FF77	5.9	7.3	4.30	8.1	6.0	6.3
FF87	10.8	13.2	7.8	14.1	11.0	11.2
FF97	19.0	22.5	12.6	25.6	18.9	20.5
FF107	25.5	32.0	19.5	38.5	27.5	28.0
FF127	41.5	55.5	34.0	63.0	46.3	49.0
FF157	72.0	105.0	64.0	106.0	87.0	79.0

FA.., FH.., FV.., FAF.., FAZ.., FHF.., FHZ.., FVF.., FVZ.., FT..

Gear unit	Fill quantity in liters					
	M1	M2	M3	M4	M5	M6
F..27	0.60	0.80	0.65	0.70	0.60	0.60
F..37	0.95	1.25	0.70	1.25	1.00	1.10
F..47	1.50	1.80	1.10	1.90	1.50	1.70
F..57	2.70	3.50	2.10	3.40	2.90	3.00
F..67	2.70	3.80	1.90	3.80	2.90	3.20
F..77	5.9	7.3	4.30	8.0	6.0	6.3
F..87	10.8	13.0	7.7	13.8	10.8	11.0
F..97	18.5	22.5	12.6	25.2	18.5	20.0
F..107	24.5	32.0	19.5	37.5	27.0	27.0
F..127	39.0	54.5	34.0	61.0	45.0	46.5
F..157	68.0	103.0	62.0	104.0	85.0	77.0

Helical-bevel (K) gear units

K.., KA..B, KH..B, KV..B

Gear unit	Fill quantity in liters					
	M1	M2	M3	M4	M5	M6
K..37	0.50	1.00	1.00	1.25	0.95	0.95
K..47	0.80	1.30	1.50	2.00	1.60	1.60
K..57	1.20	2.30	2.50	2.80	2.60	2.40
K..67	1.10	2.40	2.60	3.45	2.60	2.60
K..77	2.20	4.10	4.40	5.8	4.20	4.40
K..87	3.70	8.0	8.7	10.9	8.0	8.0
K..97	7.0	14.0	15.7	20.0	15.7	15.5
K..107	10.0	21.0	25.5	33.5	24.0	24.0
K..127	21.0	41.5	44.0	54.0	40.0	41.0
K..157	31.0	62.0	65.0	90.0	58.0	62.0
K..167	33.0	95.0	105.0	123.0	85.0	84.0
K..187	53.0	152.0	167.0	200	143.0	143.0

KF..

Gear unit	Fill quantity in liters					
	M1	M2	M3	M4	M5	M6
KF37	0.50	1.10	1.10	1.50	1.00	1.00
KF47	0.80	1.30	1.70	2.20	1.60	1.60
KF57	1.30	2.30	2.70	3.15	2.90	2.70
KF67	1.10	2.40	2.80	3.70	2.70	2.70
KF77	2.10	4.10	4.40	5.9	4.50	4.50
KF87	3.70	8.2	9.0	11.9	8.4	8.4
KF97	7.0	14.7	17.3	21.5	15.7	16.5
KF107	10.0	21.8	25.8	35.1	25.2	25.2
KF127	21.0	41.5	46.0	55.0	41.0	41.0
KF157	31.0	66.0	69.0	92.0	62.0	62.0

KA.., KH.., KV.., KAF.., KHF.., KVF.., KAZ.., KHZ.., KVZ.., KT..

Gear unit	Fill quantity in liters					
	M1	M2	M3	M4	M5	M6
K..37	0.50	1.00	1.00	1.40	1.00	1.00
K..47	0.80	1.30	1.60	2.15	1.60	1.60
K..57	1.30	2.30	2.70	3.15	2.90	2.70
K..67	1.10	2.40	2.70	3.70	2.60	2.60
K..77	2.10	4.10	4.60	5.9	4.40	4.40
K..87	3.70	8.2	8.8	11.1	8.0	8.0
K..97	7.0	14.7	15.7	20.0	15.7	15.7
K..107	10.0	20.5	24.0	32.4	24.0	24.0
K..127	21.0	41.5	43.0	52.0	40.0	40.0
K..157	31.0	66.0	67.0	87.0	62.0	62.0
K..167	33.0	95.0	105.0	123.0	85.0	84.0
K..187	53.0	152.0	167.0	200	143.0	143.0

Helical-worm (S) gear units

S..

Gear unit	Fill quantity in liters					
	M1	M2	M3[1)]	M4	M5	M6
S..37	0.25	0.40	0.50	0.55	0.40	0.40
S..47	0.35	0.80	0.70/0.90	1.00	0.80	0.80
S..57	0.50	1.20	1.00/1.20	1.45	1.30	1.30
S..67	1.00	2.00	2.20/3.10	3.10	2.60	2.60

1) The larger gear unit of multi-stage gear units must be filled with the larger oil volume.

SF..

Gear unit	Fill quantity in liters					
	M1	M2	M3[1)]	M4	M5	M6
SF37	0.25	0.40	0.50	0.55	0.40	0.40
SF47	0.40	0.90	0.90/1.05	1.05	1.00	1.00
SF57	0.50	1.20	1.00/1.50	1.55	1.40	1.40
SF67	1.00	2.20	2.30/3.00	3.20	2.70	2.70

1) The larger gear unit of multi-stage gear units must be filled with the larger oil volume.

SA.., SH.., SAF.., SHZ.., SAZ.., SHF.., ST..

Gear unit	Fill quantity in liters					
	M1	M2	M3[1)]	M4	M5	M6
S..37	0.25	0.40	0.50	0.50	0.40	0.40
S..47	0.40	0.80	0.70/0.90	1.00	0.80	0.80
S..57	0.50	1.10	1.00/1.50	1.50	1.20	1.20
S..67	1.00	2.00	1.80/2.60	2.90	2.50	2.50

1) The larger gear unit of multi-stage gear units must be filled with the larger oil volume.

5.2 Installation/removal of gear units with hollow shafts and keys



- Always use the supplied NOCO® fluid for installation. The fluid prevents contact corrosion and facilitates subsequent removal.
- The key dimension X is defined by the customer, however X must be > DK.

Installation

SEW-EURODRIVE recommends two variants for installation of gear units with hollow shaft and key onto the input shaft of the driven machine (= customer shaft):

1. Use the supplied fastening parts for installation.
2. Use the optional installation/removal kit for installation.

1. Supplied fastening parts

The following fastening parts are supplied as standard:

- Retaining screw with washer (2)
- Circlip (3)

Customer shaft

- Installation length of customer shaft with contact shoulder (A) must be L8 - 1 mm.
- Installation length of customer shaft without contact shoulder (B) must equal L8.

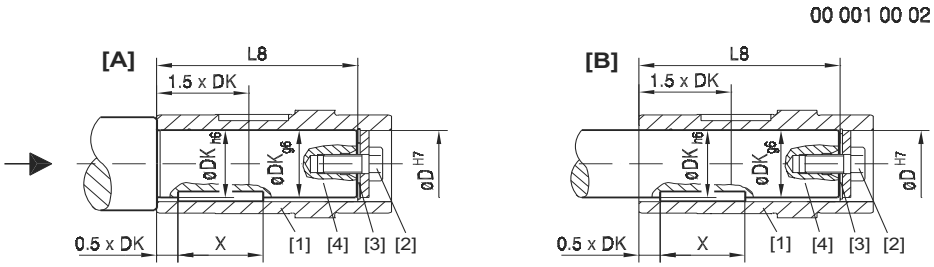

Figure 19: Customer shaft with contact shoulder (A) and without contact shoulder (B)

(1) Hollow shaft
(2) Retaining screw with washer
(3) Circlip
(4) Customer shaft

Dimensions and tightening torque

The retaining screw (2) must be tightened to the tightening torque MS given in the following table.

Gear unit type	D^{H7} [mm]	DK [mm]	L8 [mm]	MS [Nm]
SA..37	20	20	104	8
FA..27, SA..47	25	25	88, 105	20
FA..37, KA..37, SA..47 **SA..57**	30	30	105 132	20
FA..47, KA..47, SA..57	35	35	132	20
FA..57, KA..57 **FA..67, KA..67** **SA..67**	40	40	142 156 144	40
SA..67	45	45	144	40
FA..77, KA..77, SA..77	50	50	183	40
FA..87, KA..87 **SA..77, SA..87**	60	60	210 180, 220	80
FA..97, KA..97 **SA..87, SA..97**	70	70	270 220, 260	80
FA..107, KA..107, SA..97	90	90	313, 313, 255	200
FA..127, KA..127	100	100	373	200
FA..157, KA..157	120	120	460	200

2. Installation / removal kit

You can also use the optional installation/removal kit for installation. You order the kit for the specific gear unit type(s) by quoting the part numbers in the table below. The scope of delivery includes:

- Spacer tube for installation without contact shoulder (5)
- Retaining screw for installation (2)
- Forcing washer for removal (7)
- Locked nut for removal (8)

The short retaining screw supplied as standard is not used.

Customer shaft

- The installation length of the customer shaft must be LK2. **Do not use the spacer** if the customer shaft **has a contact shoulder (A)**.
- The installation length of the customer shaft must be LK2. **Use the spacer** if the customer shaft **has no contact shoulder (B)**.

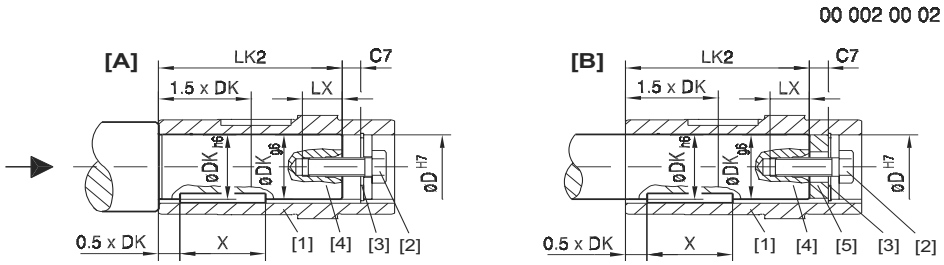

Figure 20: Customer shaft with contact shoulder (A) and without contact shoulder (B)

(1) Hollow shaft
(2) Retaining screw with washer
(3) Circlip
(4) Customer shaft
(5) Spacer

Dimensions, tightening torques and part numbers

The retaining screw (2) must be tightened to the tightening torque MS given in the following table.

Type	D^{H7} [mm]	DK [mm]	LK2 [mm]	LX^{+2} [mm]	C7 [mm]	MS [Nm]	Part number of installation/removal kit
SA..37	20	20	92	16	12	8	643 683 8
FA..27, SA..47	25	25	72, 89	22	16	20	643 684 6
FA..37, KA..37 **SA..47, SA..57**	30	30	89 89, 116	22	16	20	643 685 4
FA..47, KA..47, SA..57	35	35	114	28	18	20	643 686 2
FA..57, KA..57 **FA..67, KA..67, SA..67**	40	40	124 138, 138, 126	36	18	40	643 687 0
SA..67	45	45	126	36	18	40	643 688 9
FA..77, KA..77, SA..77	50	50	165	36	18	40	643 689 7
FA..87, KA..87 **SA..77, SA..87**	60	60	188 158, 198	42	22	80	643 690 0
FA..97, KA..97 **SA..87, SA..97**	70	70	248 198, 238	42	22	80	643 691 9
FA..107, KA..107 **SA..97**	90	90	287 229	50	26	200	643 692 7
FA..127, KA..127	100	100	347	50	26	200	643 693 5
FA..157, KA..157	120	120	434	50	26	200	643 694 3

Removal

Applies only if installation/removal kit was previously used for installation (→ Figure 20).

Proceed as follows for removal:

1. Loosen the retaining screw (6).
2. Remove the circlip (3) and, if used, the spacer tube (5).
3. According to Figure 21 place the forcing washer (7) and the locked nut (8) between the customer shaft (4) and circlip (3).
4. Re-install the circlip (3).
5. Re-install the retaining screw (6). You can now push the gear unit off the shaft.

00 003 002

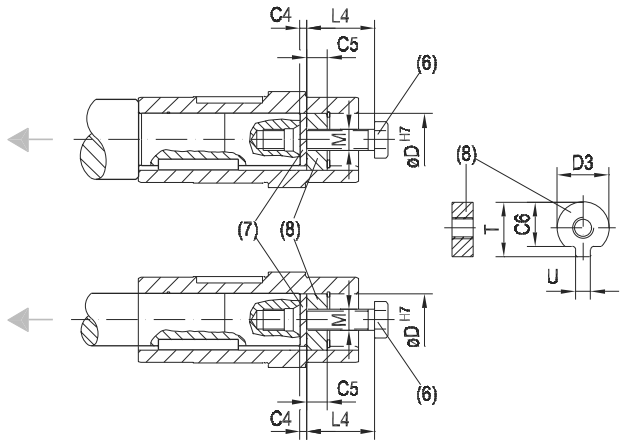

00003002

Figure 21: Removal

(6) Retaining bolt
(7) Forcing washer
(8) Locked nut for removal

Type	D^{H7} [mm]	M	C4 [mm]	C5 [mm]	C6 [mm]	$U^{-0.5}$ [mm]	$T^{-0.5}$ [mm]	$D3^{-0.5}$ [mm]	L4 [mm]	Part number of installation/removal kit
SA37..	20	M6	5	6	15.5	5.5	22.5	19.7	2.5	643 683 8
FA27.., SA..47	25	M10	5	10	20	7.5	28	24.7	35	643 684 6
FA..37, KA..37, SA..47, SA..57	30	M10	5	10	25	7.5	33	29.7	35	643 685 4
FA..47, KA..47, SA..57	35	M12	5	12	29	9.5	38	34.7	45	643 686 2
FA..57, KA..57, FA..67, KA..67, SA..67	40	M16	5	12	34	11.5	41.9	39.7	50	643 687 0
SA..67	45	M16	5	12	38.5	13.5	48.5	44.7	50	643 688 9
FA..77, KA..77, SA..77	50	M16	5	12	43.5	13.5	53.5	49.7	50	643 689 7
FA..87, KA..87, SA..77, SA..87	60	M20	5	16	56	17.5	64	59.7	60	643 690 0
FA..97, KA..97, SA..87, SA..97	70	M20	5	16	65.5	19.5	74.5	69.7	60	643 691 9
FA..107, KA..107, SA..97	90	M24	5	20	80	24.5	95	89.7	70	643 692 7
FA..127, KA..127	100	M24	5	20	89	27.5	106	99.7	70	643 693 5
FA..157, KA..157	120	M24	5	20	107	31	127	119.7	70	643 694 3

5.3 Gear units with hollow shaft

Chamfers on hollow shafts

The following illustration shows the chamfers on parallel shaft helical, helical-bevel and helical-worm gear units with hollow shaft (A) and hollow shaft with shrink disc (H):

00 004 002

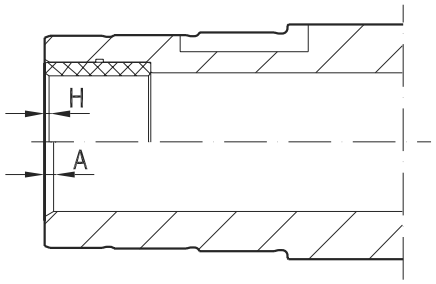

Figure 22: Chamfers on hollow shafts

Gear unit	Version	
	Hollow shaft (A)	Hollow shaft with shrink disc (H)
F..27	2 × 30°	0.5 × 45°
F../K../S..37	2 × 30°	0.5 × 45°
F../K../S..47	2 × 30°	0.5 × 45°
S..57	2 × 30°	0.5 × 45°
F../K..57	2 × 30°	3 × 2°
F../K../S..67	2 × 30°	3 × 2°
F../K..77	2 × 30°	3 × 2°
F../K..87	3 × 30°	3 × 2°
F../K..97	3 × 30°	3 × 2°
F../K..107	3 × 30°	3 × 2°
F../K..127	5 × 30°	1.5 × 30°
F../K..157	5 × 30°	1.5 × 30°
KH167	-	1.5 × 30°
KH187	-	1.5 × 30°

Special motor/gear unit combinations

Please note for parallel shaft helical gearmotors with hollow shaft (FA..B, FV..B, FH..B, FAF, FVF, FHF, FA, FV, FH, FT, FAZ, FVZ, FHZ):

- If you are using a customer shaft pushed through on the motor end, there may be a collision when a "small gear unit" is used in combination with a "large motor".
- Check the motor dimension AC to decide whether there will be a collision with a pushed-through customer shaft.

5.4 TorqLOC® hollow shaft mounting system for gear units with hollow shaft

Description of TorqLOC®

The TorqLOC® hollow shaft mounting system is used for achieving a non-positive connection between customer shaft and the hollow shaft in the gear unit. As a result, the TorqLOC® hollow shaft mounting system is an alternative to the hollow shaft with shrink disc, the hollow shaft with key and the splined hollow shaft that have been used so far.

The TorqLOC® hollow shaft mounting system consists of the following components:

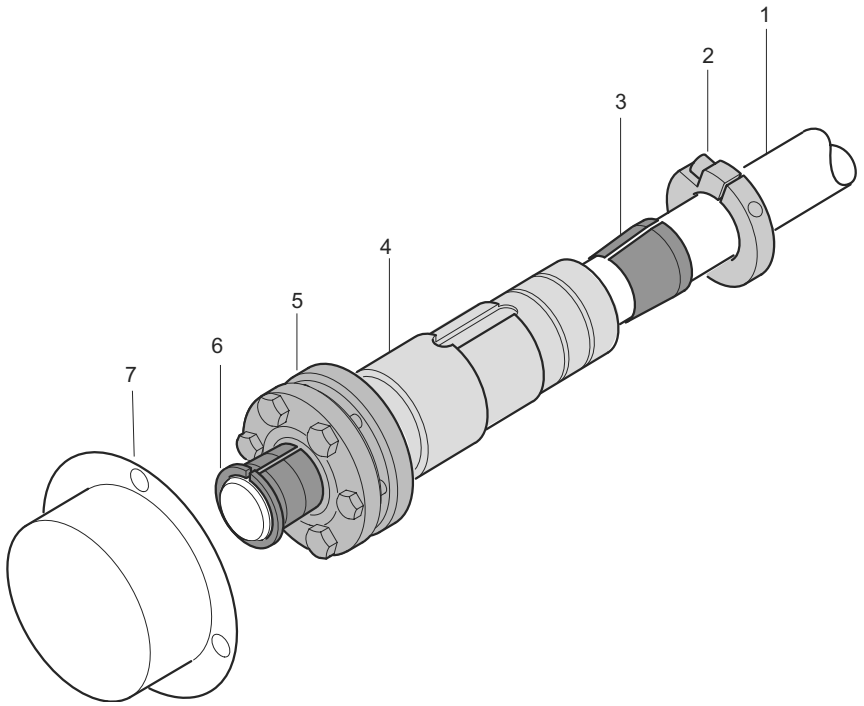

51939AXX

Figure 23: Components of the TorqLOC® hollow shaft mounting system

1. Customer shaft
2. Clamping ring
3. Conical bronze bushing
4. Hollow shaft in gear unit
5. Shrink disc
6. Conical steel bushing
7. Fixed cover

Advantages of TorqLOC®

The TorqLOC® hollow shaft mounting system is characterized by the following advantages:

- Cost saving because the customer shaft can be made from drawn material up to quality h11.
- Cost saving because different customer shaft diameters can be covered by one hollow shaft diameter and different bushings.
- Simple installation since there is no need to accommodate any shaft connections.
- Removal is easy even after many hours of operation because the formation of contact corrosion has been reduced and the conical connections can easily be released.

Technical data

The TorqLOC® hollow shaft mounting system is approved for input torques of 92 Nm to 4300 Nm.

The following gear units are available with TorqLOC® hollow shaft mounting system:

- Parallel shaft helical gear units in gear unit sizes 37 to 97 (FT37 ... FT97)
- Helical-bevel gear units in gear unit sizes 37 to 67 (KT37 ... KT97)
- Helical-worm gear units in gear unit sizes 37 to 97 (ST37 ... ST97)

Available options

The following options are available for gear units with TorqLOC® hollow shaft mounting system:

- Helical-bevel and helical-worm gear units KT.., ST.. : The "torque arm" (../T) option is available.
- Parallel shaft helical gear units FT.. : The "rubber buffer" (../G) option is available.

5.5 Option, shouldered hollow shaft with shrink disc

As an option, gear units with hollow shaft and shrink disc (parallel shaft helical gear units FH/FHF/FHZ37-157, helical-bevel gear units KH/KHF/KHZ37-157 and helical-worm gear units SH/SHF47-97) can be supplied with a larger bore diameter D'.

As standard, D' = D.

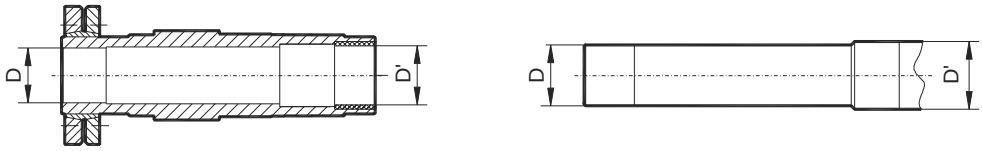

Figure 24: Optional bore diameter D'

Gear unit	Bore diameter D / optionally D' [mm]
FH/FHF/FHZ37, KH/KHF/KHZ37, SH/SHF/SHZ47	30 / 32
FH/FHF/FHZ47, KH/KHF/KHZ47, SH/SHF/SHZ57	35 / 36
FH/FHF/FHZ57, KH/KHF/KHZ57	40 / 42
FH/FHF/FHZ67, KH/KHF/KHZ67, SH/SHF/SHZ67	40 / 42
FH/FHF/FHZ77, KH/KHF/KHZ77	50 / 52
FH/FHF/FHZ87, KH/KHF/KHZ87	65 / 66
FH/FHF/FHZ97, KH/KHF/KHZ97	75 / 76
FH/FHF/FHZ107, KH/KHF/KHZ107	95 / 96
FH/FHF/FHZ127, KH/KHF/KHZ127	105 / 106
FH/FHF/FHZ157, KH/KHF/KHZ157	125 / 126

Diameter D / D' must be specified when ordering gear units with a shouldered hollow shaft (optional bore diameter D').

Sample order FH37 CM71L with hollow shaft 30/32 mm.

Parallel shaft helical gear unit with shouldered hollow shaft

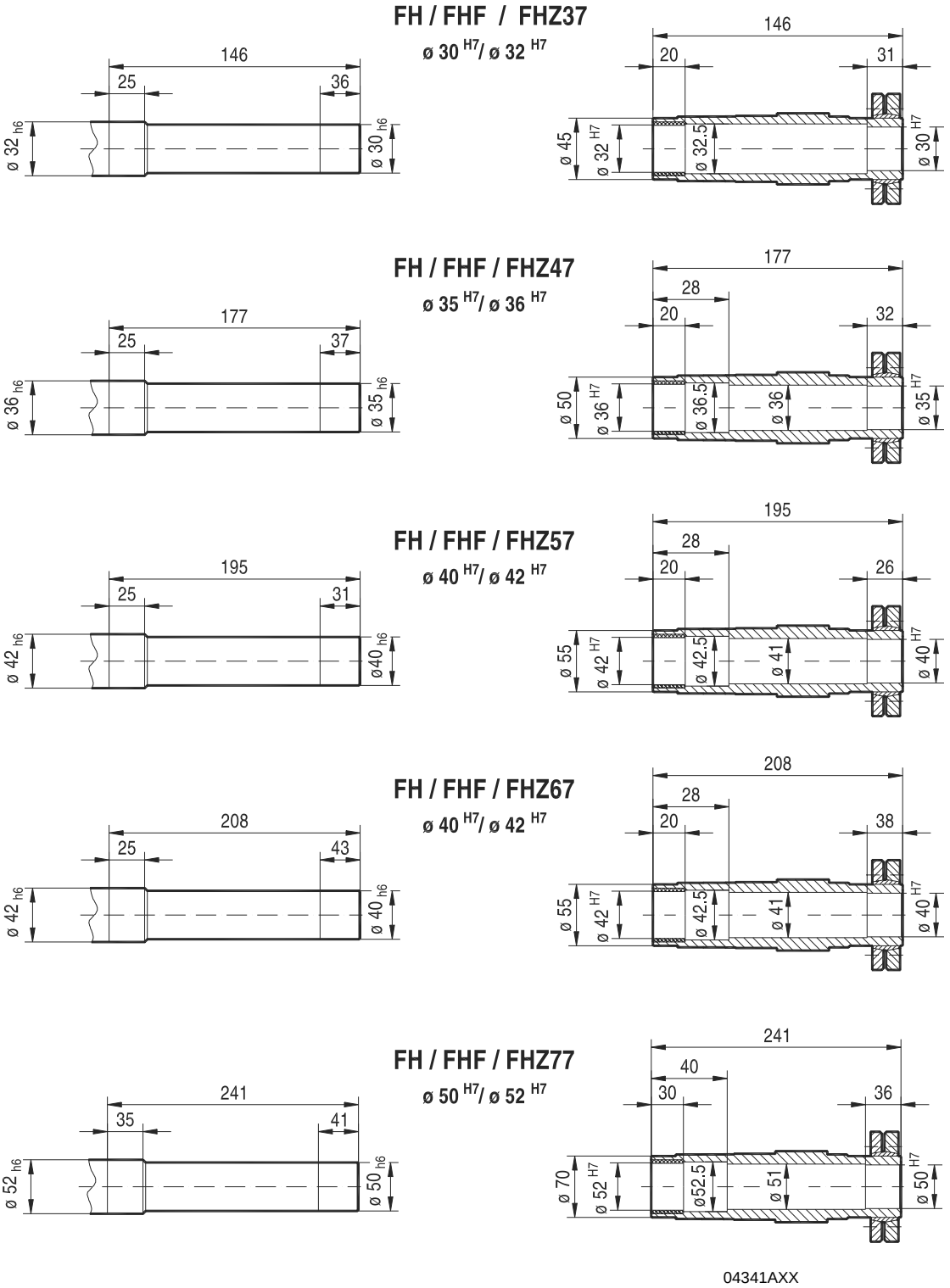

Figure 25: Shouldered hollow shaft FH/FHF/FHZ37...77

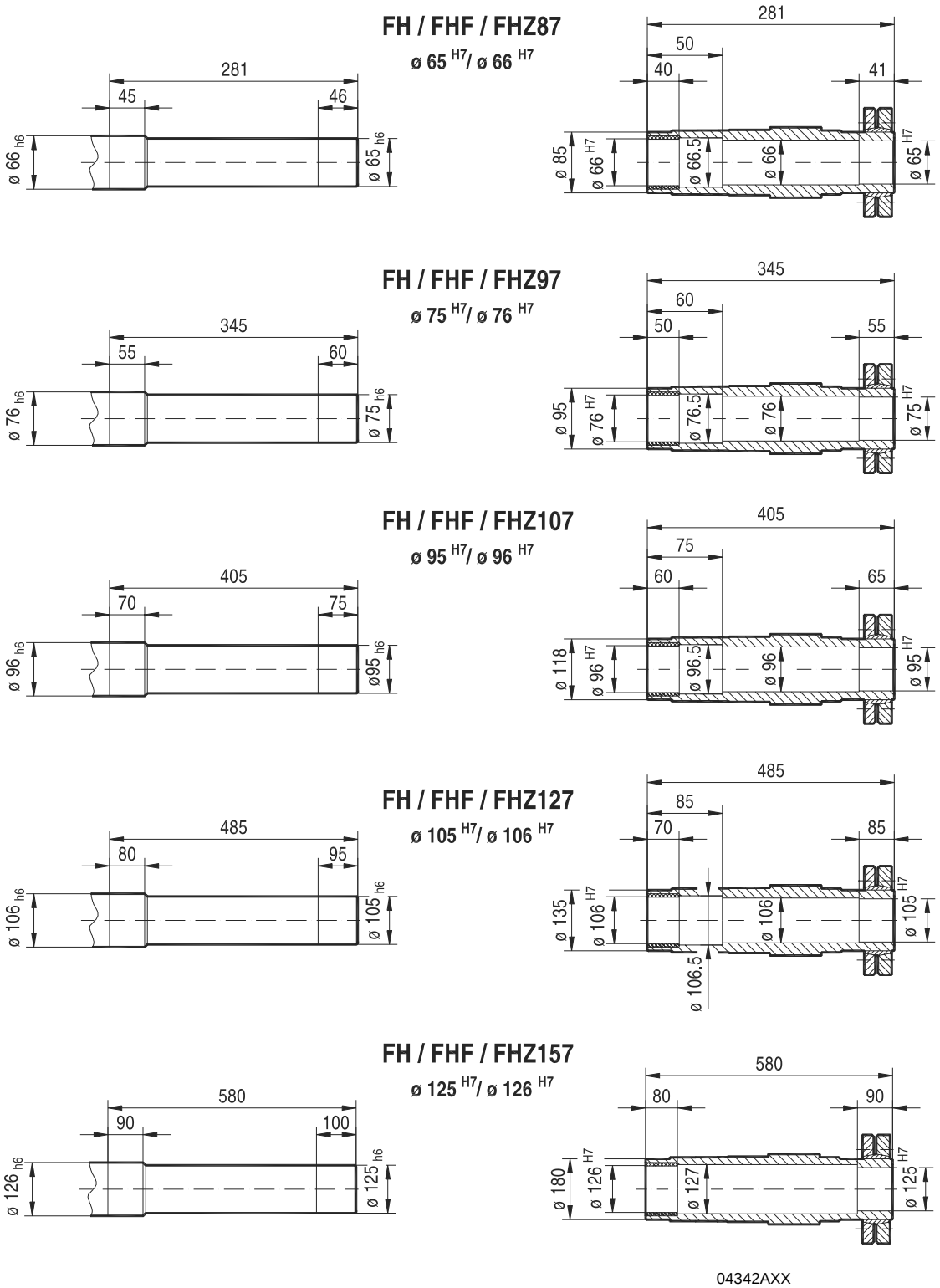

Figure 26: Shouldered hollow shaft FH/FHF/FHZ87...157

Helical-bevel gear unit with shouldered hollow shaft

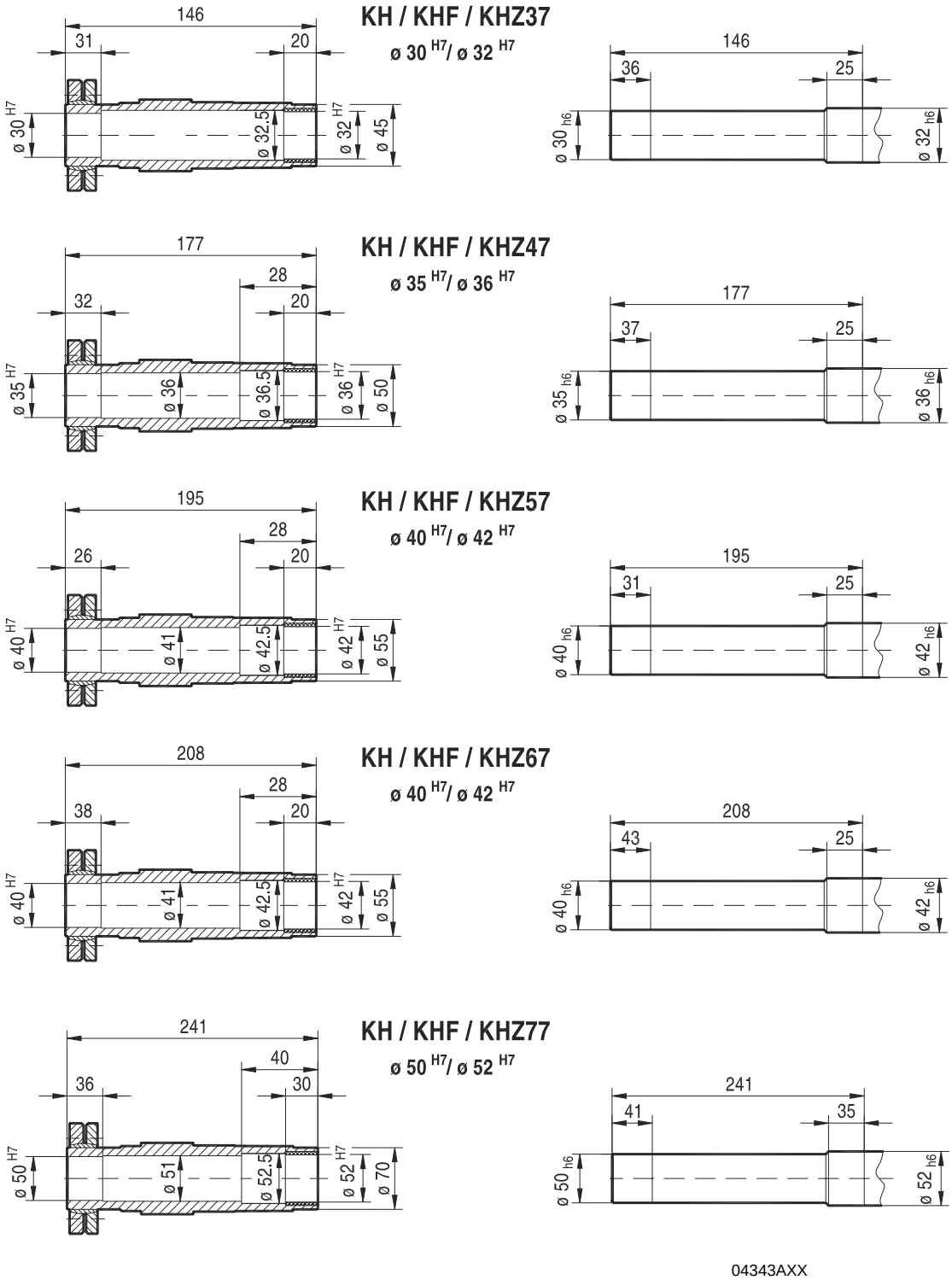

Figure 27: Shouldered hollow shaft KH/KHF/KHZ37...77

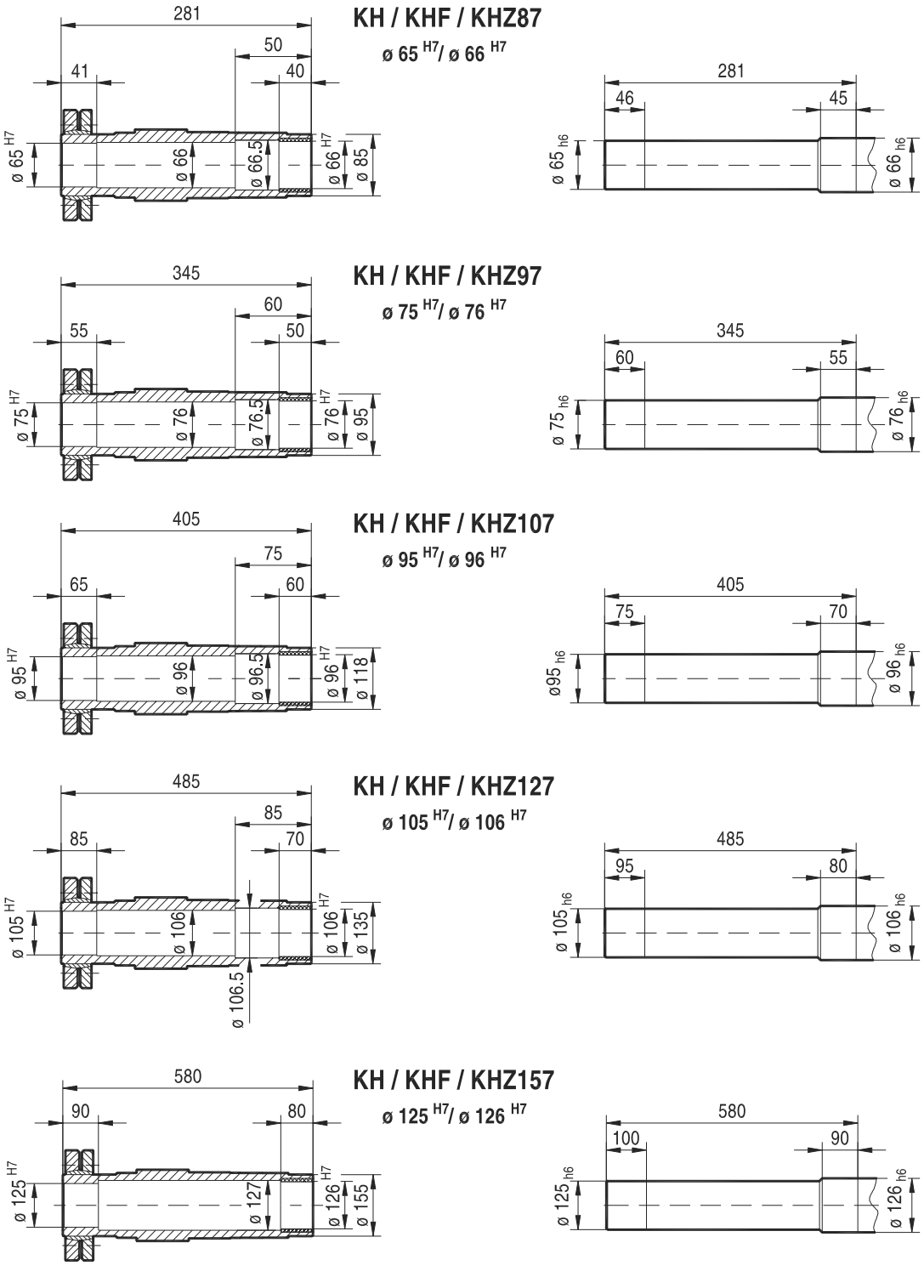

Figure 28: Shouldered hollow shaft KH/KHF/KHZ87...157

Helical-worm gear unit with shouldered hollow shaft

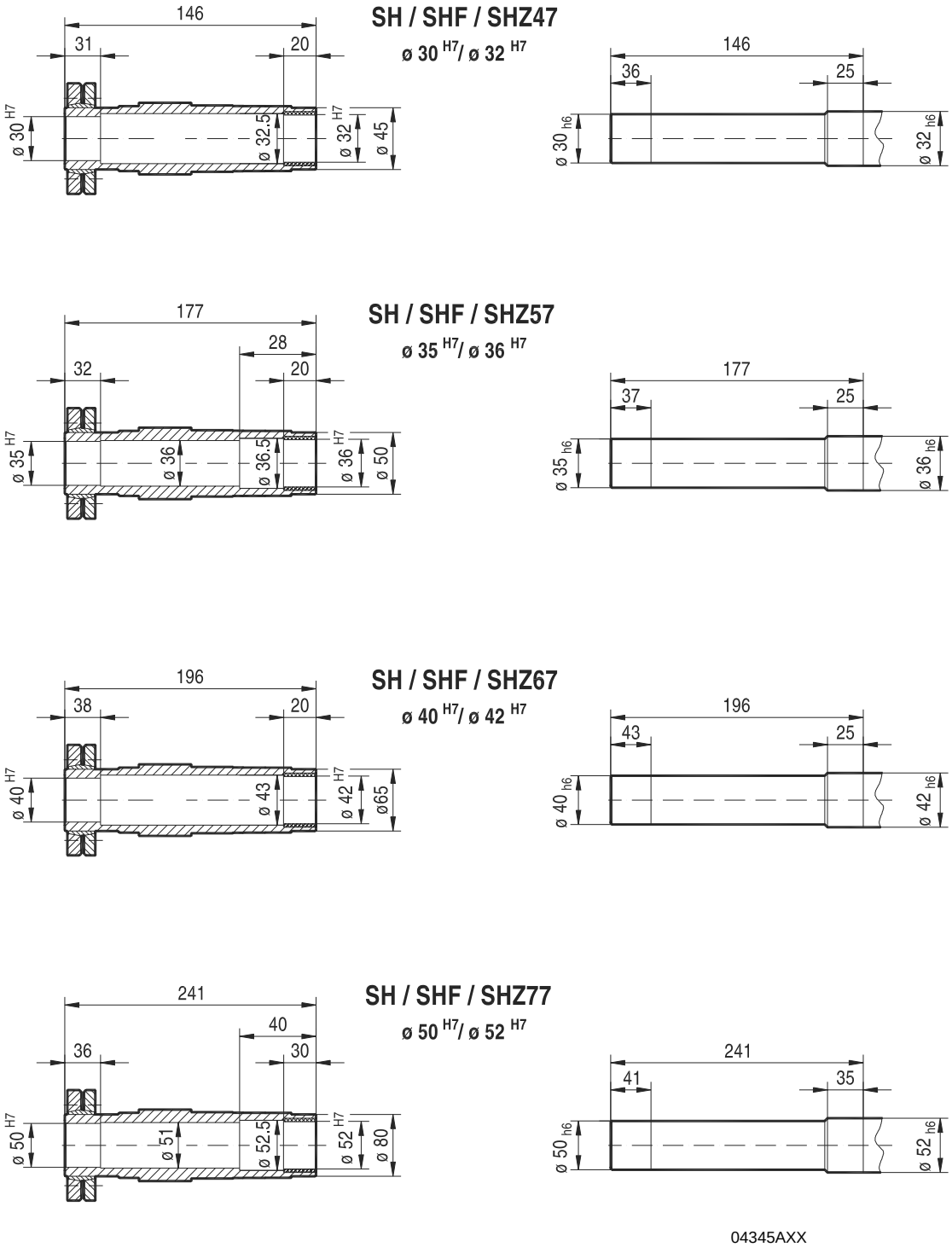

Figure 29: Shouldered hollow shaft SH/SHF/SHZ47...77

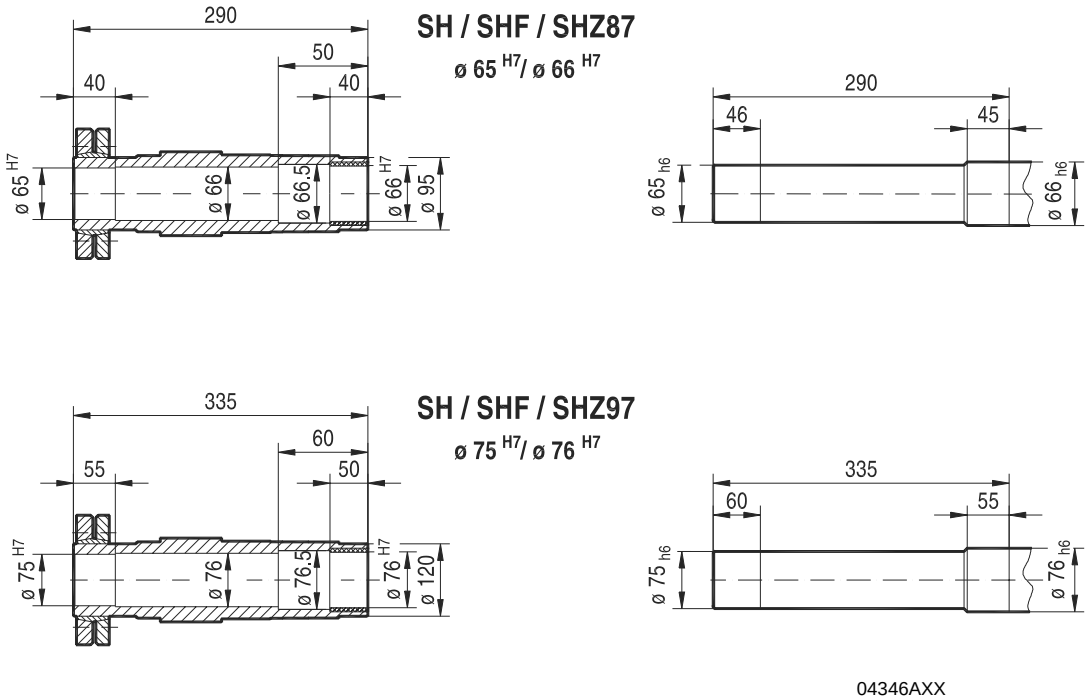

Figure 30: Shouldered hollow shaft SH/SHF/SHZ87...97

5.6 Flange contours of RF.. and R..F gearmotors

04355AXX

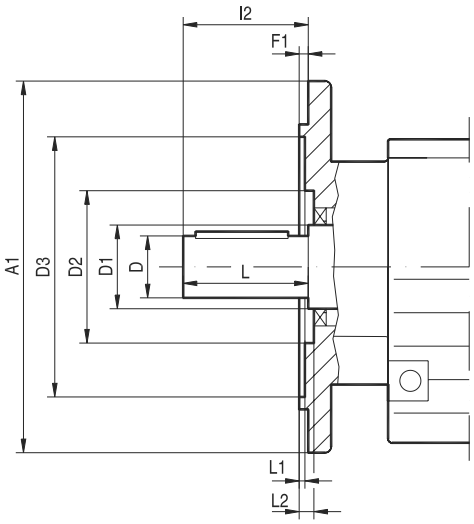

Check dimensions L1 and L2 for selection and installation of output elements.

Type	A1	D	D1	D2		D3	F1	I2	L	L1		L2
				RF	R..F					RF	R..F	
RF17, R17F	120	20	25	46	46	65	3	40	40	1	1	5
	140				-	78	3			1	-	5
	160[1)]				-	95	3.5			1	-	6
RF27, R27F	120	25	30	54	54	66	3	50	50	1	1	6
	140				-	79	3			3	-	7
	160				-	92	3.5			3	-	7
RF37, R37F	120	25	35	60	63	70	3	50	50	5	4	7
	160				-	96	3.5			1	-	7.5
	200[1)]				-	119	3.5			1	-	7.5
RF47, R47F	140	30	35	72	64	82	3	60	60	4	1	6
	160				-	96	3.5			0.5	-	6.5
	200				-	116	3.5			0.5	-	6.5
RF57, R57F	160	35	40	76	75	96	3.5	70	70	4	2.5	5
	200				-	116	3.5			0	-	5
	250[1)]				-	160	4			0.5	-	5.5
RF67, R67F	200	35	50	90	90	118	3.5	70	70	2	4	7
	250				-	160	4			1	-	7.5
RF77, R77F	250	40	52	112	100	160	4	80	80	0.5	2.5	7
	300[1)]				-	210	4			0.5	-	7
RF87, R87F	300	50	62	123	122	210	4	100	100	0	1.5	8
	350				-	226	5			1	-	9
RF97	350	60	72	136		236	5	120	120	0		9
	450					320						
RF107	350	70	82	157		232	5	140	140	0		11
	450			186		316						
RF137	450	90	108	180		316	5	170	170	0		10
	550					416						
RF147	450	110	125	210		316	5	210	210	0		10
	550					416						
RF167	550	120	145	290		416	5	210	210	1		10
	660					517	6			2		11

1) Important: Flange projects under the foot surface in the case of R..F

5.7 Fastening of gear units

Use bolts of quality 8.8 to fasten gear units and gearmotors.

Exception

In case of the following flange-mounted helical gearmotors (RF..) and foot/flange-mounted helical gearmotors (R..F), use bolts of **quality 10.9** to fasten the customer flange to transmit the rated torques:

- RF37, R37F with flange ∅ 120 mm
- RF47, R47F with flange ∅ 140 mm
- RF57, R57F with flange ∅ 160 mm

5.8 Torque arms

Available torque arms

Gear unit	Size					
	27	37	47	57	67	77
KA, KH, KV, KT	-	643 425 8	643 428 2	643 431 2	643 431 2	643 434 7
SA, SH, ST	-	126 994 1	644 237 4	644 240 4	644 243 9	644 246 3
FA, FH, FV, FT Rubber buffers (2 pcs.)	013 348 5	013 348 5	013 348 5	013 348 5	013 348 5	013 349 3

Gear unit	Size				
	87	97	107	127	157
KA, KH, KV, KT	643 437 1	643 440 1	643 443 6	643 294 8	-
SA, SH, ST	644 249 8	644 252 8	-	-	-
FA, FH, FV, FT Rubber buffers (2 pcs.)	013 349 3	013 350 7	013 350 7	013 351 5	013 347 7

Torque arms for KH167.., KH187..

As standard, torque arms are not available for gear unit sizes KH167.. and KH187... Please contact SEW-EURODRIVE for design proposals if you require torque arms for these gear units.

5.9 Fixed covers

As standard, parallel shaft helical gear units, helical-bevel gear units and helical-worm gear units with hollow shafts and shrink disks from size 37 up to and including size 97 have a cover that turns with the unit. If for safety reasons fixed covers are required for these gear units, you can order them for the respective gear unit types by quoting the part numbers in the following tables. As standard, parallel shaft helical gear units and helical-bevel gear units with hollow shafts and shrink discs of size 107 and parallel shaft helical gear units of size 27 come equipped with a fixed cover.

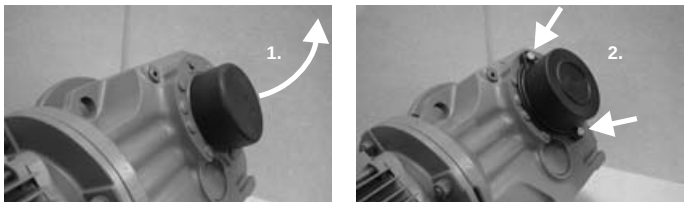

03190AXX

Figure 31: Replacing a rotating cover with a fixed cover

1. Pull off the rotating cover.
2. Install and fasten fixed cover.

Part numbers and dimensions

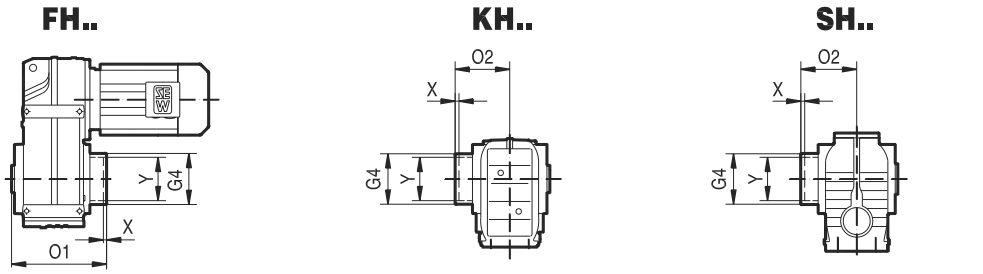

04356AXX

Parallel shaft helical gearmotors	FH..37	FH..47	FH..57	FH..67	FH..77	FH..87	FH..97
Part number	643 513 0	643 514 9	643 515 7	643 515 7	643 516 5	643 517 3	643 518 1
Max. size of CT/CV motor that can be mounted	CT80..	CT80..	CT80..	CV132S	CV160M	CV180..	CV180..
Max. DS/CM motor size that can be mounted	CM71L	CM71L	CM90L	CM112M	CM112L	CM112H	CM112H
G4	78	88	100	100	121	164	185
O1	157	188.5	207.5	221.5	255	295	363.5
X	2	4.5	7.5	6	6	4	6.5
Y	75	83	83	93	114	159	174

Helical-bevel gearmotors[1)]	KH..37	KH..47	KH..57	KH..67	KH..77	KH..87	KH..97
Part number	643 513 0	643 514 9	643 515 7	643 515 7	643 516 5	643 517 3	643 518 1
G4	78	88	100	100	121	164	185
O2	95	111.5	122.5	129	147	172	210.5
X	0	1.5	5.5	3	1	2	4.5
Y	75	83	83	93	114	159	174

1) Not possible in foot-mounted helical-bevel gear units with hollow shafts and shrink discs (KH..B).

Helical-worm gearmotors	SH..37	SH..47	SH..57	SH..67	SH..77	SH..87	SH..97
Part number	643 512 2	643 513 0	643 514 9	643 515 7	643 516 5	643 517 3	643 518 1
G4	59	78	88	100	121	164	185
O2	88	95	111.5	123	147	176	204.5
X	1	0	1.5	3	1	0	0.5
Y	53	75	83	93	114	159	174

6 Important Information on Selection Tables and Dimension Sheets

6.1 Notes on combination overviews

For working with the combination overviews, refer to the information on the fold out page at the end of the catalog.

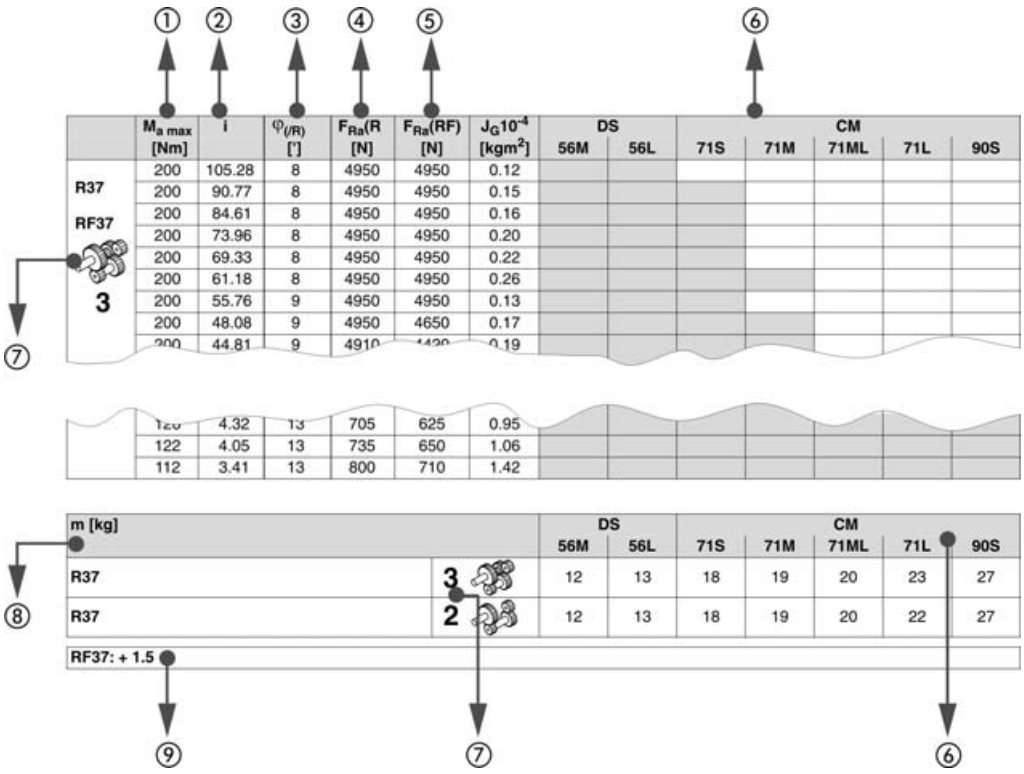

05466DXX

Figure 32: Combination table

	Possible motor / gear unit combination		
*	Finite i		
1	Maximum output torque (input speed: - 1500 1/min in R, F, K, S gear units.	7	3 3 stage 2 2 stage
2	Gear ratio	8	Weights without oil fill
3	Backlash in angular minutes of the reduced backlash gear unit	9	Additional weights for other types
4	Permitted overhung load (foot-mounted gear units)		
5	Permitted overhung load(flange-mounted gear units)		
6	Motor size		

6.2 Notes on dimension sheets

Scope of delivery



= Standard parts supplied by SEW-EURODRIVE.



= Standard parts not supplied by SEW-EURODRIVE.

Tolerances

Shaft heights

The following tolerances apply to the dimensions given:

h	≤ 250 mm	→ -0.5 mm
h	> 250 mm	→ -1 mm

Foot-mounted gear units: Check the mounted motor because it may project below the mounting surface.

Shaft ends

Diameter tolerance:

∅	≤ 50 mm	→ ISO k6
∅	> 50 mm	→ ISO m6

Center bores according to DIN 332, shape DR:

∅	= 7...10 mm	→ M3
∅	> 10...13 mm	→ M4
∅	> 13...16 mm	→ M5
∅	> 16...21 mm	→ M6
∅	> 21...24 mm	→ M8
∅	> 24...30 mm	→ M10
∅	> 30...38 mm	→ M12
∅	> 38...50 mm	→ M16
∅	> 50...85 mm	→ M20
∅	> 85...130 mm	→ M24
∅	> 130 mm	→ M30

Keys: according to DIN 6885 (domed type).

Hollow shafts

Diameter tolerance:

∅	→ ISO H7 measured with plug gauge

Multiple-spline shafts

Dm	= Measuring roller diameter
Me	= Check size

Flanges

Centering shoulder tolerance:

∅	≤ 230 mm (flange sizes A120...A300)	→ ISO j6
∅	> 230 mm (flange sizes A350...A660)	→ ISO h6

Up to three different flange dimensions are available for each size of helical gear unit, AC (brake) motor and explosion-proof AC (brake) motor. The possible flanges per size are indicated in the relevant dimension sheets.

Lifting eyebolts, suspension eye lugs

The following units are supplied without special transport fixtures:

- Helical gear units R07...R27
- CT/CV motors up to size 100
- DS motors

All other gear units and motors are equipped with cast-on suspension eye lugs, screw-on suspension eye lugs or screw-on lifting eyebolts.

Gear unit/motor type	Screw-on,		cast-on suspension eye lugs
	lifting eyebolts	suspension eye lugs	
R..37-R..57	-	•	-
R..67-R..167	•	-	-
RX57-RX67	-	•	-
RX77-RX107	•	-	-
F..27-F..157	-	-	•
K..37-K..157	-	-	•
K..167-K..187	•	-	-
S..37-S..47	-	•	-
S..57-S..97	-	-	•
≥ **CV112**	•	-	-
CFM71 .. 112	-	•	-

Breather valves

The gear unit dimension drawings are always shown with screw plugs. The corresponding screw plug is replaced by an activated breather valve at the factory depending on the ordered mounting position M1...M6. This means the contour dimensions may be slightly different.

Shrink disc connection

Hollow shaft gear unit with shrink disc connection: If required, request a detailed data sheet on the shrink disc, data sheet no. 33 753 .. 95.

Splined hollow shaft

FV.. hollow shaft gear units in sizes 27 ... 107 and KV.. in sizes 37 ... 107 are delivered with a splined hollow shaft according to DIN 5480.

Rubber buffer for FA/FH/FV/FT

f = Spring travel at $M_{a\ max}$.

Motor dimensions

Brake motors

For brake motors,

- the dimensions ADS apply instead of AD,
- and the dimensions LBS instead of LB.

Motor options

The motor dimensions may differ as a result of motor options. Refer to the dimension sheets of the motor options.

Special designs

The dimensions of the terminal box on special designs such as KS, CSA, VIK, low voltage or voltage changeover may deviate from the standard dimensions.

EN 50347

European standard EN 50347 became effective in August 2001. This standard adopts the dimension designations for three-phase AC motors of sizes 56 to 315M and flange sizes 65 to 740 from the IEC 72-1 standard.

The new dimension designations given in EN 50347 / IEC 72-1 are used for the dimensions in question in the dimension tables of the dimensions sheets.

7 R..DS/CM..

7.1 R, RF, R..F, RX, RXF..DS/CM

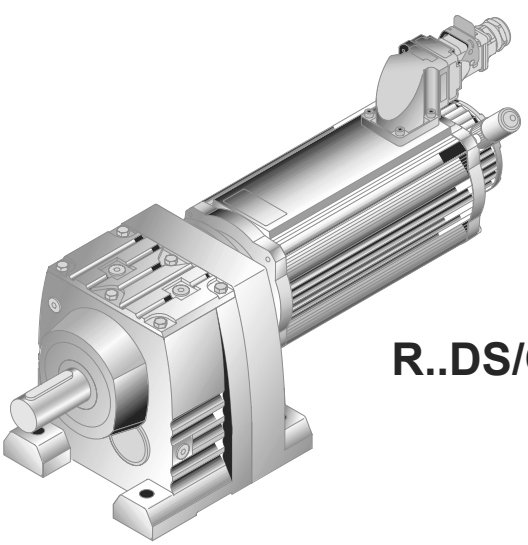

R..DS/CM..

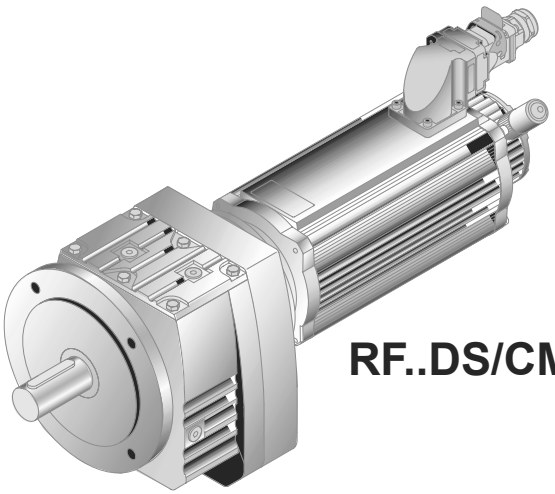

RF..DS/CM..

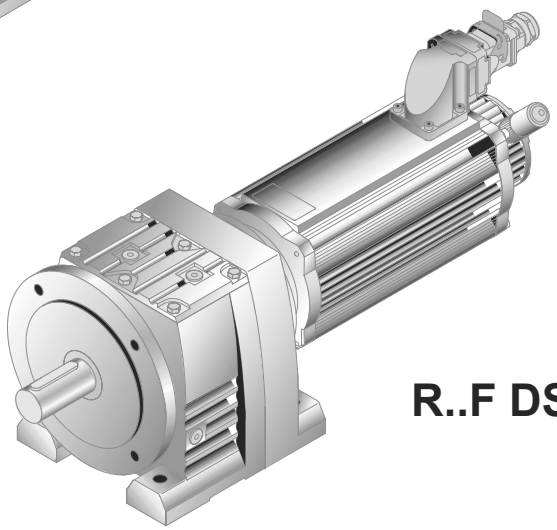

R..F DS/CM..

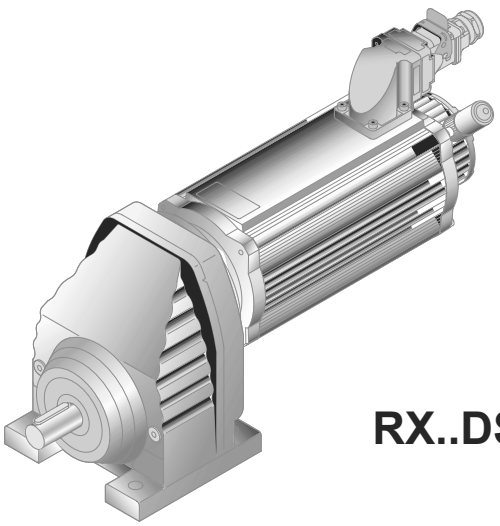

RX..DS/CM..

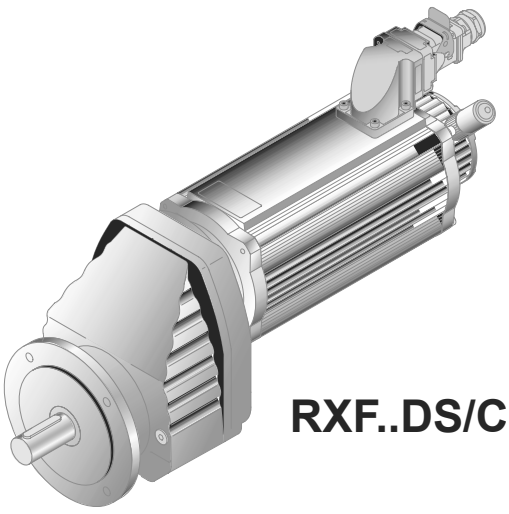

RXF..DS/CM..

52490AXX

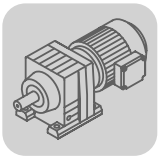

7.2 RX57 DS/CM.. [Nm]

	$M_{a\ max}$ [Nm]	i	φ (/R) [']	F_{Ra}(RX) [N]	$J_G 10^{-4}$ [kgm^2]	DS	CM				
						56H	71S	71M	71L	90S	90M
RX57	68	4.35	-	2570	0.26						
	69	3.79	-	2420	0.32						
RXF57	69	3.55*	-	2350	0.35						
	65	3.14	-	2260	0.42						
	67	2.91	-	2040	0.44						
	69	2.64*	-	1680	0.55						
	69	2.37	-	1380	0.64						
	69	2.04	-	950	0.85						
	69	1.92*	-	770	0.94						
	69	1.65	-	320	1.22						
	68	1.48	-	4	1.44						
	63	1.30	-	28	1.90						

m [kg]	DS	CM				
	56H	71S	71M	71L	90S	90M
RX57	13	18	19	23	27	29

RXF57: + 1.9 kg

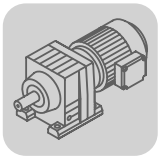

RX57 DS/CM..

	$M_{a\ max}$ [Nm]	i	$\varphi_{(/R)}$ [']	$F_{Ra}(RX)$ [N]	$J_G 10^{-4}$ [kgm^2]	CM		
						90L	112S	112M
RX57 RXF57	68	4.35	-	2570	0.26			
	69	3.79	-	2420	0.32			
	69	3.55*	-	2350	0.35			
	65	3.14	-	2260	0.42			
	67	2.91	-	2040	0.44			
	69	2.64*	-	1680	0.55			
	69	2.37	-	1380	0.64			
	69	2.04	-	950	0.85			
	69	1.92*	-	770	0.94			
	69	1.65	-	320	1.22			
	68	1.48	-	4	1.44			
	63	1.30	-	28	1.90			

m [kg]	CM		
	90L	112S	112M
RX57	34	36	40

RXF57: + 1.9 kg

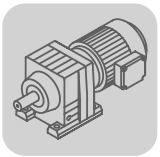

7.3 RX67 DS/CM.. [Nm]

	$M_{a\ max}$ [Nm]	i	φ (/R) [']	F_{Ra}(RX) [N]	$J_G 10^{-4}$ [kgm^2]	DS	CM				
						56H	71S	71M	71L	90S	90M
RX67	75	5.18	-	3490	0.34						
	82	4.53	-	3260	0.42						
RXF67	80	4.30*	-	3210	0.47						
	87	3.77	-	3010	0.69						
	100	3.20*	-	2720	0.88						
	106	2.89	-	2560	1.02						
	118	2.54	-	1830	1.32						
	123	2.40*	-	1360	1.44						
	134	2.04	-	66	1.78						
	126	1.86	-	69	2.07						
	114	1.61	-	97	2.59						
	104	1.40*	-	64	3.22						

m [kg]	DS	CM				
	56H	71S	71M	71L	90S	90M
RX67	16	21	22	25	30	32

RXF67: + 4.0 kg

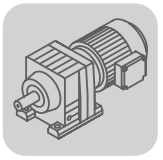

RX67 DS/CM..

	$M_{a\ max}$ [Nm]	i	$\varphi_{(/R)}$ [']	F_{Ra}(RX) [N]	$J_G 10^{-4}$ [kgm^2]	CM		
						90L	112S	112M
RX67	75	5.18	-	3490	0.34			
	82	4.53	-	3260	0.42			
RXF67	80	4.30*	-	3210	0.47			
	87	3.77	-	3010	0.69			
	100	3.20*	-	2720	0.88			
	106	2.89	-	2560	1.02			
	118	2.54	-	1830	1.32			
	123	2.40*	-	1360	1.44			
	134	2.04	-	66	1.78			
	126	1.86	-	69	2.07			
	114	1.61	-	97	2.59			
	104	1.40*	-	64	3.22			

m [kg]	CM		
	90L	112S	112M
RX67	37	38	43

RXF67: + 4.0 kg

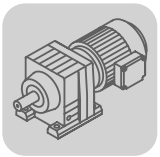

7.4 RX77 CM.. [Nm]

	$M_{a\ max}$ [Nm]	i	$\varphi_{(/R)}$ [']	F_{Ra}(RX) [N]	$J_G 10^{-4}$ [kgm^2]	CM					
						71S	71M	71L	90S	90M	90L
RX77 RXF77	110	5.63	-	5170	0.81						
	103	5.35*	-	5110	0.90						
	123	4.73	-	4780	1.26						
	143	4.04*	-	4380	1.60						
	153	3.70	-	4180	1.86						
	182	3.25*	-	2980	2.31						
	193	3.08*	-	2340	2.50						
	215	2.70	-	900	3.05						
	215	2.43	-	305	3.36						
	200	2.13	-	245	4.11						
	187	1.88*	-	150	4.98						
	173	1.67	-	139	5.99						
	155	1.42	-	145	7.64						

m [kg]	CM					
	71S	71M	71L	90S	90M	90L
RX77	30	31	35	39	42	47

RXF77: + 2.3 kg

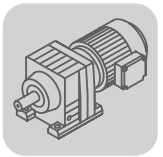

RX77 CM..

	$M_{a\ max}$ [Nm]	i	$\varphi_{(/R)}$ [']	$F_{Ra}(RX)$ [N]	$J_G 10^{-4}$ [kgm^2]	CM 112S	CM 112M	CM 112L
RX77	110	5.63	-	5170	0.81			
	103	5.35*	-	5110	0.90			
RXF77	123	4.73	-	4780	1.26			
	143	4.04*	-	4380	1.60			
	153	3.70	-	4180	1.86			
	182	3.25*	-	2980	2.31			
	193	3.08*	-	2340	2.50			
	215	2.70	-	900	3.05			
	215	2.43	-	305	3.36			
	200	2.13	-	245	4.11			
	187	1.88*	-	150	4.98			
	173	1.67	-	139	5.99			
	155	1.42	-	145	7.64			

m [kg]	CM 112S	CM 112M	CM 112L
RX77	48	52	67

RXF77: + 2.3 kg

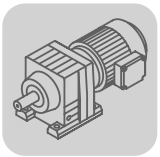

7.5 RX87 CM.. [Nm]

	$M_{a\ max}$ [Nm]	i	φ (/R) [']	F_{Ra}(RX) [N]	$J_G 10^{-4}$ [kgm^2]	CM						
						90S	90M	90L	112S	112M	112L	112H
RX87	192	6.45	-	6680	2.72							
	225	5.56*	-	6150	3.42							
RXF87	250	5.07	-	5810	3.93							
	290	4.50*	-	5350	4.82							
	305	3.78	-	4880	6.20							
	405	3.48	-	2420	6.87							
	405	3.09	-	1650	8.14							
	405	2.76*	-	910	9.41							
	405	2.48	-	192	10.93							
	385	2.15	-	0	13.17							
	355	1.93	-	0	15.35							
	315	1.60*	-	0	19.25							
	290	1.39	-	0	24.69							

m [kg]	CM						
	90S	90M	90L	112S	112M	112L	112H
RX87	57	59	64	64	68	83	90

RXF87: + 5.0 kg

7.6 RX97 CM.. [Nm]

	$M_{a\ max}$ [Nm]	i	$\varphi_{(/R)}$ [']	F_{Ra}(RX) [N]	$J_G 10^{-4}$ [kgm^2]	CM						
						90S	90M	90L	112S	112M	112L	112H
RX97	225	8.23	-	9320	3.97							
	260	7.16*	-	8720	5.07							
RXF97	300	6.56	-	8280	5.83							
	420	5.79	-	7420	9.17							
	395	4.91	-	7020	11.79							
	595	4.52	-	5850	13.00							
	595	4.04	-	4970	15.30							
	595	3.64*	-	4140	17.63							
	595	3.30	-	3350	20.24							
	595	2.92	-	2450	23.99							
	595	2.64	-	1630	27.50							
	595	2.24*	-	162	33.32							
	570	1.96	-	0	40.89							
	505	1.64	-	0	50.70							
	455	1.42	-	0	61.22							

m [kg]	CM						
	90S	90M	90L	112S	112M	112L	112H
RX97	81	83	88	88	92	105	115

RXF97: + 8.6 kg

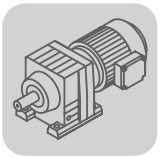

7.7 RX107 CM.. [Nm]

	$M_{a\ max}$ [Nm]	i	φ (/R) [']	F_{Ra}(RX) [N]	$J_G 10^{-4}$ [kgm^2]	CM			
						112S	112M	112L	112H
RX107	460	6.63*	-	9430	11.61				
	455	5.61	-	8830	14.85				
RXF107	695	5.19	-	7610	16.52				
	695	4.65	-	7220	19.47				
	830	4.20*	-	5950	25.01				
	830	3.81	-	5090	28.68				
	830	3.38	-	4050	33.87				
	830	3.07	-	3180	38.69				
	830	2.64*	-	1760	47.03				
	830	2.30	-	515	56.79				
	765	1.95	-	192	70.37				
	705	1.71	-	131	84.32				
	645	1.44	-	0	111.45				

m [kg]	CM			
	112S	112M	112L	112H
RX107	125	125	140	145

RXF107: + 17 kg

7.8 R27 DS/CM.. [Nm]

	$M_{a\ max}$ [Nm]	i	φ (/R) [']	F_{Ra}(R) [N]	F_{Ra}(RF) [N]	$J_G 10^{-4}$ [kgm^2]	DS 56M	DS 56L	DS 56H	CM 71S	CM 71M	CM 71L	CM 90S
R27 RF27  3	130	135.09	-	4230	3640	0.08							
	130	123.91	-	4230	3640	0.09							
	130	105.49	-	4230	3640	0.12							
	130	90.96	-	4230	3640	0.15							
	130	84.78	-	4230	3640	0.16							
	130	74.11	-	4170	3640	0.20							
	130	69.47	-	4070	3640	0.22							
	130	61.30	-	3880	3640	0.26							
	130	55.87	-	3740	3540	0.13							
	130	48.17	-	3530	3340	0.16							
	130	44.90	-	3430	3250	0.18							
	130	39.25	-	3260	3080	0.22							
	130	36.79	-	3170	3000	0.25							
	130	32.47	-	3020	2860	0.31							
	130	28.78	-	2870	2720	0.37							
	130	24.47	-	2690	2540	0.49							
R27 RF27  2	130	28.37	-	2860	2700	0.12							
	130	26.09	-	2760	2610	0.14							
	130	22.32	-	2590	2450	0.18							
	130	19.35	-	2440	2310	0.22							
	130	18.08	-	2370	2240	0.24							
	130	15.63	-	2230	2070	0.29							
	130	13.28*	-	2040	1800	0.39							
	129	11.86	-	1860	1640	0.47							
	122	10.13	-	1780	1570	0.61							
	122	9.41	-	790	695	0.21							
	116	8.16	-	765	675	0.26							
	112	7.63*	-	795	700	0.29							
	106	6.59	-	780	690	0.36							
	99	5.60*	-	785	695	0.48							
	95	5.00*	-	770	675	0.58							
	87	4.27	-	830	735	0.76							
	85	4.00*	-	820	725	0.85							
	79	3.37	-	820	720	1.12							

m [kg]		DS 56M	DS 56L	DS 56H	CM 71S	CM 71M	CM 71L	CM 90S
R27	3 	6.1	7.1	7.8	12	13	-	-
	2 	5.8	6.8	7.5	12	13	17	21

RF27: -- kg

7.9 R37 DS/CM.. [Nm]

	$M_{a\ max}$ [Nm]	i	$\varphi_{(/R)}$ [']	$F_{Ra}(R)$ [N]	$F_{Ra}(RF)$ [N]	$J_G 10^{-4}$ [kgm^2]	DS 56M	DS 56L	DS 56H	CM 71S	CM 71M	CM 71L	CM 90S
R37 **RF37**  **3**	200	134.82	8	4950	4950	0.08							
	200	123.66	8	4950	4950	0.09							
	200	105.28	8	4950	4950	0.12							
	200	90.77	8	4950	4950	0.15							
	200	84.61	8	4950	4950	0.16							
	200	73.96	8	4950	4950	0.20							
	200	69.33	8	4950	4950	0.22							
	200	61.18	8	4950	4950	0.26							
	200	55.76	9	4950	4950	0.13							
	200	48.08	9	4950	4650	0.17							
	200	44.81	9	4910	4420	0.19							
	200	39.17	9	4520	4010	0.23							
	200	36.72	9	4300	3820	0.25							
	200	32.40	9	3900	3460	0.31							
	200	28.73	9	3520	3120	0.39							
	200	24.42	9	3040	2690	0.53							
R37 **RF37**  **2**	200	28.32	7	3480	3080	0.13							
	185	26.03	7	3650	3240	0.15							
	200	22.27	7	2780	2460	0.19							
	200	19.31	7	2380	2110	0.23							
	200	18.05	8	2200	1960	0.26							
	200	15.60	8	1830	1620	0.31							
	190	13.25	8	1720	1520	0.43							
	183	11.83	8	1650	1470	0.51							
	170	10.11	8	1670	1480	0.66							
	167	9.47	8	1620	1430	0.74							
	156	7.97	8	1580	1400	0.96							
	144	6.67	12	870	770	0.43							
	142	5.67	12	640	565	0.59							
	135	5.06	13	670	595	0.72							
	126	4.32	13	705	625	0.95							
	122	4.05	13	735	650	1.06							
	112	3.41	14	800	710	1.42							

m [kg]		DS 56M	DS 56L	DS 56H	CM 71S	CM 71M	CM 71L	CM 90S
R37	**3** 	12	13	14	18	19	23	-
	2 	12	13	13	18	19	22	27

RF37: + 1.5 kg

7.10 R47 DS/CM.. [Nm]

	$M_{a\ max}$ [Nm]	i	φ (/R) [']	F_{Ra}(R) [N]	$J_G 10^{-4}$ [kgm^2]	DS 56H	CM 71S	CM 71M	CM 71L	CM 90S	CM 90M	CM 90L	CM 112S
R47 RF47  3	300	93.68	7	5420	0.43								
	300	84.90	7	5420	0.52								
	300	76.23	7	5420	0.60								
	300	68.54	8	5420	0.33								
	300	64.21	8	5420	0.37								
	300	56.73	8	5360	0.44								
	300	52.69	8	5210	0.47								
	300	47.75	8	5000	0.56								
	300	42.87	8	4790	0.67								
	300	36.93	8	4500	0.85								
	300	34.73	8	4390	0.93								
	300	29.88	8	4120	1.17								
	300	26.70	8	3930	1.36								
	300	23.59	8	3730	1.74								
R47 RF47  2	300	26.74	7	3930	0.29								
	300	23.28	7	3710	0.36								
	300	21.81	7	3600	0.39								
	295	19.27	7	3290	0.48								
	290	17.89	7	3150	0.51								
	275	16.22	7	3190	0.63								
	265	14.56	7	3090	0.74								
	250	12.54	7	2990	0.95								
	245	11.79	7	2930	1.05								
	230	10.15	7	2800	1.34								
	220	9.07	8	2700	1.58								
	205	8.01	8	2620	2.03								
	163	7.76*	10	2640	0.77								
	159	6.96	10	2540	0.93								
	156	6.00	10	2400	1.19								
	155	5.64*	10	2340	1.32								
	150	4.85	10	2210	1.71								
	146	4.34	11	2130	2.04								
	144	3.83	11	2020	2.63								

m [kg]		DS 56H	CM 71S	CM 71M	CM 71L	CM 90S	CM 90M	CM 90L	CM 112S
R47	3 	18	22	23	27	31	-	-	-
	2 	17	22	23	26	31	33	38	39

RF47: -- kg

7.11 R57 DS/CM.. [Nm]

	$M_{a\ max}$ [Nm]	i	φ (/R) [']	F_{Ra}(R) [N]	$J_G 10^{-4}$ [kgm^2]	DS	CM				
						56H	71S	71M	71L	90S	90M
R57	450	128.77	7	7110	0.32						
	450	120.63	7	7110	0.35						
RF57	450	106.58	7	7110	0.42						
	450	98.99	7	7110	0.45						
RM57	450	89.71	7	7110	0.54						
	450	80.55	7	7110	0.62						
	450	69.23	7	6970	0.35						
	450	64.85	8	6780	0.38						
3	450	57.29	8	6440	0.46						
	450	53.22	8	6250	0.49						
	450	48.23	8	5990	0.60						
	450	43.30	8	5730	0.70						
	450	37.30*	8	5370	0.89						
	450	35.07	8	5230	0.97						
	450	30.18	8	4890	1.28						
	450	26.97	8	4650	1.50						
R57	450	26.31	6	4600	0.45						
	450	24.99*	6	4500	0.51						
RF57	450	21.93	7	4240	0.73						
	450	18.60*	7	3920	0.94						
RM57	450	16.79	7	3740	1.10						
	435	14.77*	7	3570	1.42						
	430	13.95*	7	3450	1.55						
	405	11.88	7	3320	1.93						
2	390	10.79	7	3220	2.25						
	370	9.35	7	3080	2.83						
	375	9.06	9	1780	1.28						
	355	7.97	9	1800	1.65						
	350	7.53	9	1730	1.81						
	335	6.41	9	1560	2.29						
	320	5.82	10	1620	2.68						
	305	5.05	10	1540	3.41						
	280	4.39	10	1720	4.30						

m [kg]		DS	CM				
		56H	71S	71M	71L	90S	90M
R57	**3** 	23	27	29	32	36	39
	2 	22	26	28	31	35	38

RF57: + 3.4 kg / RM57: + 15 kg

R57 DS/CM..

	$M_{a\ max}$ [Nm]	i	φ (/R) [']	F_{Ra}(R) [N]	$J_G 10^{-4}$ [kgm^2]	CM 90L	CM 112S	CM 112M
R57	450	128.77	7	7110	0.32			
	450	120.63	7	7110	0.35			
RF57	450	106.58	7	7110	0.42			
	450	98.99	7	7110	0.45			
RM57	450	89.71	7	7110	0.54			
	450	80.55	7	7110	0.62			
	450	69.23	7	6970	0.35			
	450	64.85	8	6780	0.38			
	450	57.29	8	6440	0.46			
3	450	53.22	8	6250	0.49			
	450	48.23	8	5990	0.60			
	450	43.30	8	5730	0.70			
	450	37.30*	8	5370	0.89			
	450	35.07	8	5230	0.97			
	450	30.18	8	4890	1.28			
	450	26.97	8	4650	1.50			
	450	26.31	6	4600	0.45			
R57	450	24.99*	6	4500	0.51			
	450	21.93	7	4240	0.73			
RF57	450	18.60*	7	3920	0.94			
	450	16.79	7	3740	1.10			
RM57	435	14.77*	7	3570	1.42			
	430	13.95*	7	3450	1.55			
	405	11.88	7	3320	1.93			
	390	10.79	7	3220	2.25			
2	370	9.35	7	3080	2.83			
	375	9.06	9	1780	1.28			
	355	7.97	9	1800	1.65			
	350	7.53	9	1730	1.81			
	335	6.41	9	1560	2.29			
	320	5.82	10	1620	2.68			
	305	5.05	10	1540	3.41			
	280	4.39	10	1720	4.30			

m [kg]		CM 90L	CM 112S	CM 112M
R57	**3** 	-	-	-
	2 	43	44	49

RF57: + 3.4 kg / RM57: + 15 kg

7.12 R67 DS/CM.. [Nm]

	$M_{a\ max}$ [Nm]	i	φ (/R) [']	F_{Ra}(R) [N]	$J_G 10^{-4}$ [kgm^2]	DS 56H	CM 71S	CM 71M	CM 71L	CM 90S	CM 90M
R67	600	158.14	6	7560	0.26						
	600	137.67	6	7560	0.32						
RF67	600	128.97	6	7560	0.36						
	600	113.94	6	7560	0.42						
RM67	600	105.83	6	7560	0.45						
	600	95.91	6	7560	0.54						
	600	86.11	6	7560	0.63						
	600	74.17	7	7560	0.81						
3	600	69.75	7	7560	0.88						
	600	61.26	7	7560	0.47						
	600	56.89	7	7560	0.50						
	600	51.56	7	7560	0.61						
	600	46.29	7	7560	0.72						
	580	39.88*	7	7790	0.93						
	570	37.50	7	7900	1.03						
	540	32.27	7	8210	1.31						
	520	28.83	7	8400	1.54						
R67	540	28.13	6	8210	0.50						
	540	26.72	6	8210	0.56						
RF67	560	23.44	6	8010	0.80						
	600	19.89	6	7350	1.04						
RM67	590	17.95	6	6900	1.21						
	560	15.79	6	6720	1.57						
	550	14.91	6	6580	1.72						
	520	12.70	6	6260	2.16						
2	500	11.54	7	6140	2.53						
	470	10.00	7	5980	3.20						
	440	8.70*	7	5800	4.03						
	380	7.79	8	5510	2.14						
	370	7.36*	8	5470	2.36						
	330	6.27	9	5440	3.04						
	310	5.70	9	5300	3.60						
	290	4.93	9	5070	4.63						
	270	4.29	10	4860	5.92						

m [kg]		DS 56H	CM 71S	CM 71M	CM 71L	CM 90S	CM 90M
R67	**3** 	30	34	35	39	43	46
	2 	29	33	34	38	42	45

RF67: + 3.2 kg / RM67: + 19 kg

R67 DS/CM..

	$M_{a\ max}$ [Nm]	i	φ (/R) [']	F_{Ra}(R) [N]	$J_G 10^{-4}$ [kgm^2]	CM 90L	CM 112S	CM 112M
R67	600	158.14	6	7560	0.26			
	600	137.67	6	7560	0.32			
RF67	600	128.97	6	7560	0.36			
	600	113.94	6	7560	0.42			
RM67	600	105.83	6	7560	0.45			
	600	95.91	6	7560	0.54			
	600	86.11	6	7560	0.63			
	600	74.17	7	7560	0.81			
	600	69.75	7	7560	0.88			
3	600	61.26	7	7560	0.47			
	600	56.89	7	7560	0.50			
	600	51.56	7	7560	0.61			
	600	46.29	7	7560	0.72			
	580	39.88*	7	7790	0.93			
	570	37.50	7	7900	1.03			
	540	32.27	7	8210	1.31			
	520	28.83	7	8400	1.54			
R67	540	28.13	6	8210	0.50			
	540	26.72	6	8210	0.56			
RF67	560	23.44	6	8010	0.80			
	600	19.89	6	7350	1.04			
RM67	590	17.95	6	6900	1.21			
	560	15.79	6	6720	1.57			
	550	14.91	6	6580	1.72			
	520	12.70	6	6260	2.16			
	500	11.54	7	6140	2.53			
2	470	10.00	7	5980	3.20			
	440	8.70*	7	5800	4.03			
	380	7.79	8	5510	2.14			
	370	7.36*	8	5470	2.36			
	330	6.27	9	5440	3.04			
	310	5.70	9	5300	3.60			
	290	4.93	9	5070	4.63			
	270	4.29	10	4860	5.92			

m [kg]		CM 90L	CM 112S	CM 112M
R67	**3** 	51	-	-
	2 	50	51	55

RF67: + 3.2 kg / RM67: + 19 kg

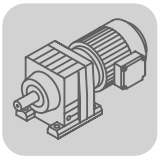

7.13 R77 CM.. [Nm]

	$M_{a\ max}$ [Nm]	i	φ (/R) [']	F_{Ra}(R) [N]	$J_G 10^{-4}$ [kgm^2]	CM 71S	71M	71L	90S	90M	90L
	820	145.67	6	9920	0.42						
R77	820	138.39	6	9920	0.46						
	820	121.42	6	9920	0.68						
RF77	820	102.99	6	9920	0.86						
	820	92.97	6	9920	0.99						
RM77	820	81.80	6	9920	1.24						
	820	77.24	7	9920	1.34						
	820	65.77	7	9920	1.61						
	820	57.68	7	9920	0.97						
3	820	52.07	7	9920	1.14						
	820	45.81	7	9920	1.43						
	820	43.26	7	9920	1.56						
	820	36.83	7	9920	1.92						
	820	33.47	7	9920	2.21						
	820	29.00	7	9920	2.95						
	780	25.23	7	9550	3.70						
	820	23.37	6	8380	1.70						
R77	820	21.43	6	7770	1.99						
	780	18.80	6	7520	2.48						
RF77	780	17.82*	6	7170	2.69						
	740	15.60	6	6960	3.28						
RM77	720	14.05	6	6640	3.66						
	690	12.33	6	6340	4.49						
	660	10.88	7	6110	5.47						
	630	9.64	7	5930	6.61						
2	630	8.59	7	3760	3.72						
	610	7.74	8	3600	4.19						
	580	6.79	8	3520	5.18						
	540	5.99*	8	3670	6.35						
	510	5.31*	8	3690	7.74						

m [kg]		CM 71S	71M	71L	90S	90M	90L
R77	**3** 	40	41	45	49	52	57
	2 	39	40	43	48	50	55

RF77: + 5.7 kg / RM77: + 31 kg

R77 CM..

	$M_{a\ max}$ [Nm]	i	φ (/R) [']	$F_{Ra}(R)$ [N]	$J_G 10^{-4}$ [kgm^2]	CM 112S	CM 112M	CM 112L
R77	820	145.67	6	9920	0.42			
	820	138.39	6	9920	0.46			
RF77	820	121.42	6	9920	0.68			
	820	102.99	6	9920	0.86			
RM77	820	92.97	6	9920	0.99			
	820	81.80	6	9920	1.24			
	820	77.24	7	9920	1.34			
	820	65.77	7	9920	1.61			
	820	57.68	7	9920	0.97			
3	820	52.07	7	9920	1.14			
	820	45.81	7	9920	1.43			
	820	43.26	7	9920	1.56			
	820	36.83	7	9920	1.92			
	820	33.47	7	9920	2.21			
	820	29.00	7	9920	2.95			
	780	25.23	7	9550	3.70			
	820	23.37	6	8380	1.70			
R77	820	21.43	6	7770	1.99			
	780	18.80	6	7520	2.48			
RF77	780	17.82*	6	7170	2.69			
	740	15.60	6	6960	3.28			
RM77	720	14.05	6	6640	3.66			
	690	12.33	6	6340	4.49			
	660	10.88	7	6110	5.47			
	630	9.64	7	5930	6.61			
2	630	8.59	7	3760	3.72			
	610	7.74	8	3600	4.19			
	580	6.79	8	3520	5.18			
	540	5.99*	8	3670	6.35			
	510	5.31*	8	3690	7.74			

m [kg]		CM 112S	CM 112M	CM 112L
R77	**3** 	58	62	-
	2 	56	61	76

RF77: + 5.7 kg / RM77: + 31 kg

7.14 R87 CM.. [Nm]

	$M_{a\ max}$ [Nm]	i	φ (/R) [']	$F_{Ra}(R)$ [N]	$J_G 10^{-4}$ [kgm^2]	CM 90S	90M	90L	112S	112M	112L	112H
R87	1550	155.34	6	16900	1.60							
	1550	142.41	6	16900	1.86							
RF87	1550	124.97	6	16900	2.27							
	1550	118.43*	6	16900	2.44							
RM87	1550	103.65	6	16900	2.97							
	1550	93.38	6	16900	3.30							
	1550	81.92	6	16900	3.95							
	1550	72.57	6	16600	2.18							
3	1550	63.68*	6	15000	2.69							
	1550	60.35*	6	14300	2.91							
	1550	52.82	6	12700	3.64							
	1550	47.58	7	16900	4.14							
	1550	41.74	7	16900	5.07							
	1550	36.84*	7	16400	6.20							
	1550	32.66*	7	15600	7.55							
	1500	27.88	7	14700	9.77							
R87	1500	34.40*	5	8770	3.59							
	1550	31.40	5	7140	4.13							
RF87	1550	27.84*	6	14600	5.08							
	1550	23.40	6	13500	6.57							
RM87	1500	21.51	6	13200	7.30							
	1440	19.10	6	12700	8.69							
	1390	17.08*	6	12200	10.10							
	1340	15.35	6	11800	11.78							
2	1280	13.33	6	11200	14.29							
	1230	11.93	6	10800	16.75							
	1180	9.90*	6	10100	21.28							
	1210	9.14*	6	10200	11.30							
	1160	8.22	7	9900	13.27							
	1070	7.13	7	9510	16.27							
	1020	6.39	7	9190	19.22							
	910	5.30*	7	8730	24.86							

m [kg]		CM 90S	90M	90L	112S	112M	112L	112H
R87	**3** 	76	79	84	84	88	105	110
	2 	75	77	82	82	86	100	110

RF87: + 7.1 kg / RM87: + 37 kg

7.15 R97 CM.. [Nm]

	$M_{a\ max}$ [Nm]	i	φ (/R) [']	F_{Ra}(R) [N]	$J_G 10^{-4}$ [kgm^2]	CM 90S	90M	90L	112S	112M	112L	112H
R97	3000	216.28	6	19800	2.79							
	3000	186.30	6	19800	3.51							
RF97	3000	170.02	6	19800	4.03							
	3000	150.78	6	19800	4.91							
RM97	3000	126.75	6	19800	6.29							
	3000	116.48	6	19800	6.99							
	3000	103.44	6	19800	8.42							
	3000	92.48	6	19800	9.84							
3	3000	83.15	6	19400	11.38							
	3000	72.17	6	16800	13.84							
	3000	65.21	6	19800	7.11							
	3000	59.92	6	19800	7.95							
	3000	53.21	6	19800	9.51							
	3000	47.58	6	19800	11.12							
	3000	42.78	6	19200	13.05							
	3000	37.13	6	18000	15.97							
	2890	33.25	6	17400	18.85							
	2670	27.58	6	16400	24.33							
R97	2560	32.05	5	9630	9.75							
	2560	27.19	5	7500	12.59							
RF97	2830	25.03	5	15400	13.95							
	2720	22.37	5	14800	16.49							
RM97	2610	20.14	5	14400	19.09							
	2500	18.24	6	14000	22.03							
	2400	16.17	6	13400	26.27							
	2300	14.62	6	13000	30.28							
	2190	12.39	6	12300	37.20							
2	2090	10.83	6	11700	45.97							
	2030	9.29	6	11800	28.47							
	2030	8.39	6	11300	32.97							
	2000	7.12	6	10600	40.95							
	1890	6.21	6	10100	50.88							
	1780	5.20	6	9560	64.99							
	1630	4.50*	6	9220	80.28							

m [kg]		CM 90S	90M	90L	112S	112M	112L	112H
R97	3 	120	120	125	125	130	145	150
	2 	115	115	120	120	125	140	150

RF97: + 17 kg / RM97: + 68 kg

7.16 R107 CM.. [Nm]

	$M_{a\ max}$ [Nm]	i	φ (/R) [']	F_{Ra}(R) [N]	$J_G 10^{-4}$ [kgm^2]	CM 112S	CM 112M	CM 112L	CM 112H
R107	4300	203.16	7	29500	9.16				
	4300	172.34	7	29500	11.82				
RF107	4300	158.68	7	29500	13.09				
	4300	141.83	7	29500	15.36				
RM107	4300	127.68	7	29500	17.78				
	4300	115.63	7	29500	20.44				
	4300	102.53	7	29500	24.51				
	4300	92.70	7	29500	28.03				
3	4300	78.57	7	29500	33.91				
	4300	72.88	7	29500	16.75				
	4300	65.60*	7	28400	19.41				
	4300	59.41	7	27200	22.42				
	4300	52.68	7	25900	27.05				
	4300	47.63	7	24800	31.17				
	4300	40.37*	7	23100	38.33				
	4300	35.26	7	21700	47.07				
	4300	29.49	7	20100	59.54				
R107	4300	30.77	7	20500	17.91				
	4300	27.58	7	19500	21.20				
RF107	4300	24.90*	7	18600	27.13				
	4300	22.62	7	17800	31.25				
RM107	4300	20.07	7	16800	37.13				
	4300	18.21	7	16000	42.66				
	4300	15.65	7	14900	52.39				
	4300	13.66	7	13900	63.83				
	4300	11.59	7	12800	80.16				
2	4300	10.13	7	11900	97.14				
	4300	8.56	7	10900	129.37				
	2970	7.86	9	13400	69.70				
	2970	6.66	9	12400	88.32				
	2970	5.82	9	11700	107.82				
	2900	4.92	9	10900	144.32				

m [kg]		CM 112S	CM 112M	CM 112L	CM 112H
R107	**3** 	185	190	205	205
	2 	180	180	195	200

RF107: + 6.0 kg / RM107: + 94 kg

7.17 R..DS/CM..[mm]

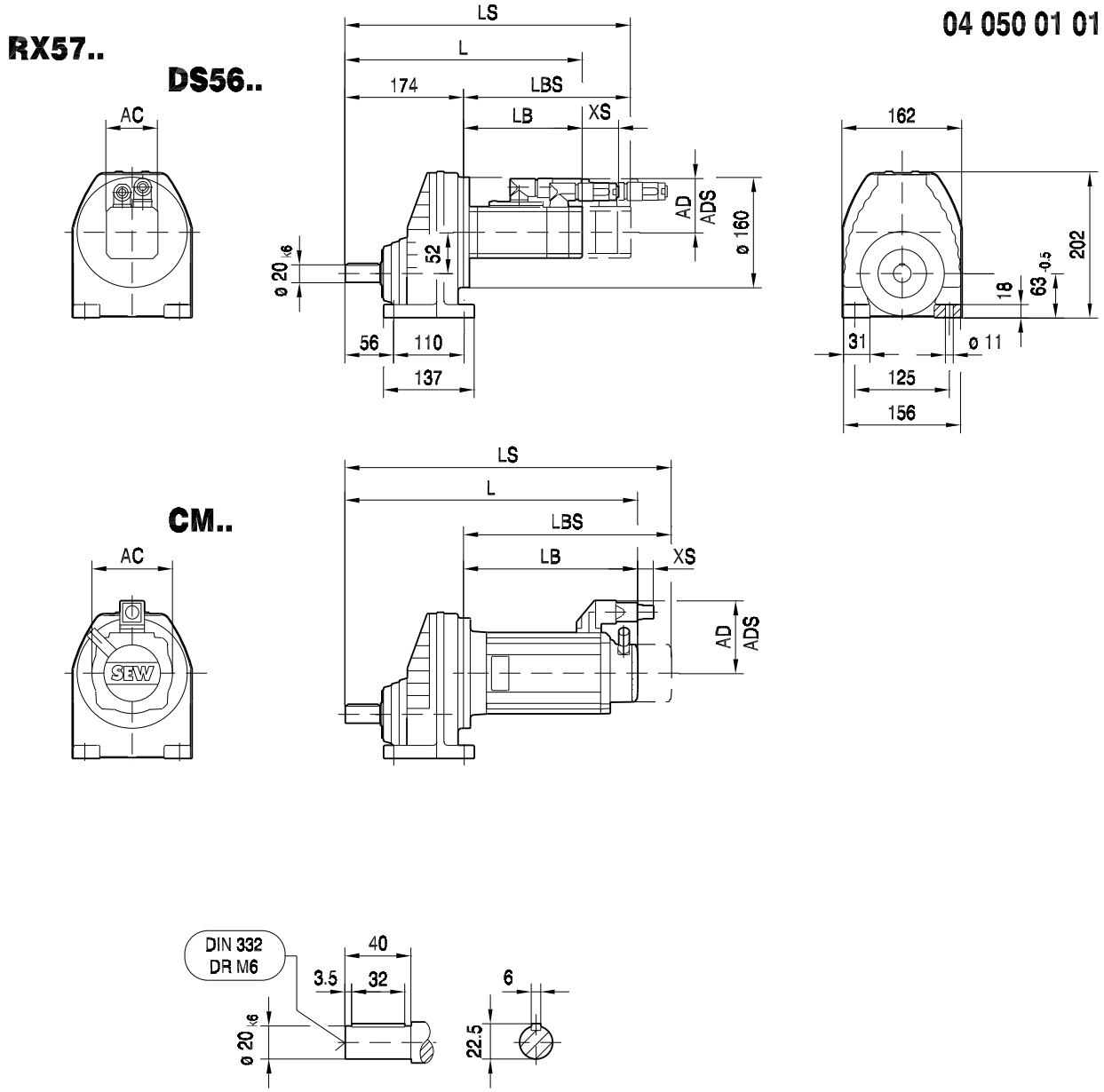

(→ 105)	DS56H	CM71S	CM71M	CM71L	CM90S	CM90M	CM90L	CM112S	CM112M		
AC	73	117	117	117	142	142	142	186	186		
AD	77	122	122	122	140	140	140	162	162		
ADS	77	122	122	122	140	140	140	162	162		
L	440	406	426	466	458	485	543	498	522		
LS	440	488	508	548	554	581	639	588	612		
LB	266	232	252	292	284	311	369	324	348		
LBS	266	314	334	374	380	407	465	414	438		
XS	51	45	45	45	50	50	50	36	36		

04 051 01 01

RXF57..

DS56..

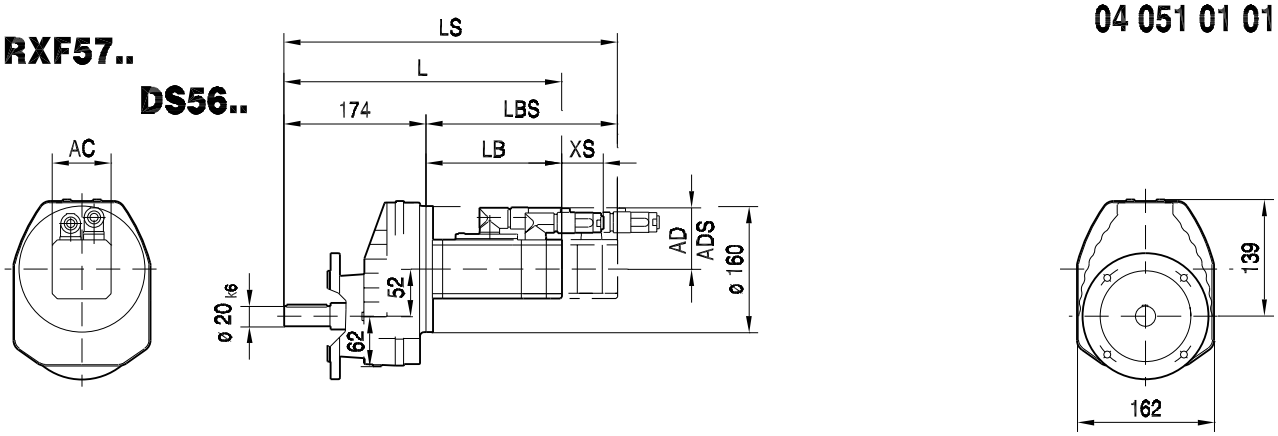

CM..

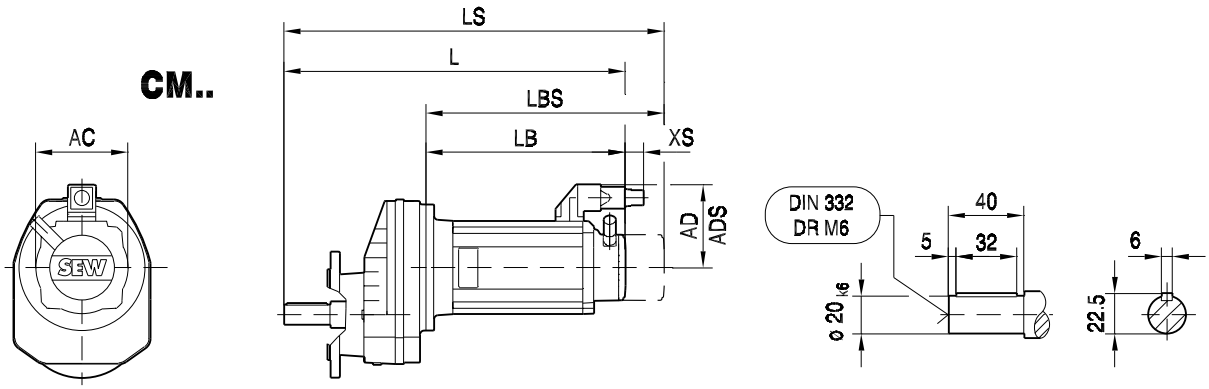

ø 140

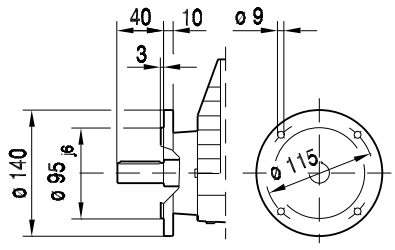

ø 160

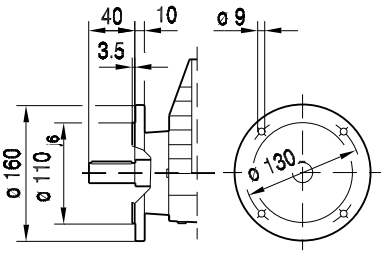

ø 200

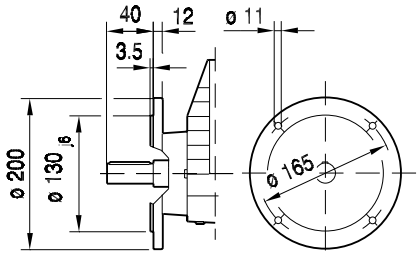

(→ 105)	DS56H	CM71S	CM71M	CM71L	CM90S	CM90M	CM90L	CM112S	CM112M		
AC	73	117	117	117	142	142	142	186	186		
AD	77	122	122	122	140	140	140	162	162		
ADS	77	122	122	122	140	140	140	162	162		
L	440	406	426	466	458	485	543	498	522		
LS	440	488	508	548	554	581	639	588	612		
LB	266	232	252	292	284	311	369	324	348		
LBS	266	314	334	374	380	407	465	414	438		
XS	51	45	45	45	50	50	50	36	36		

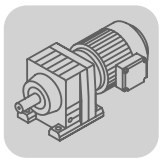

RX67..

DS56..

04 052 01 01

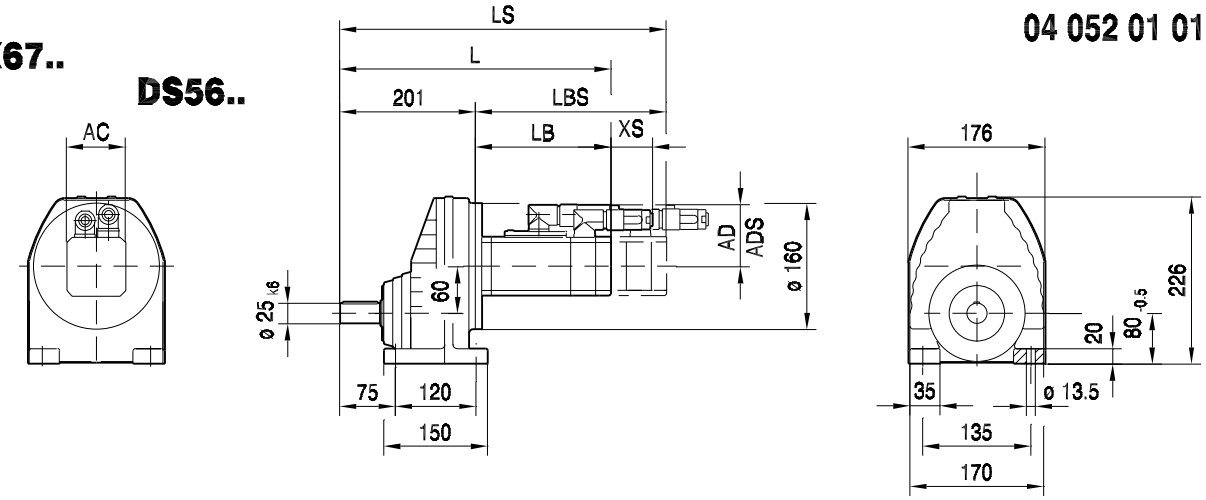

CM..

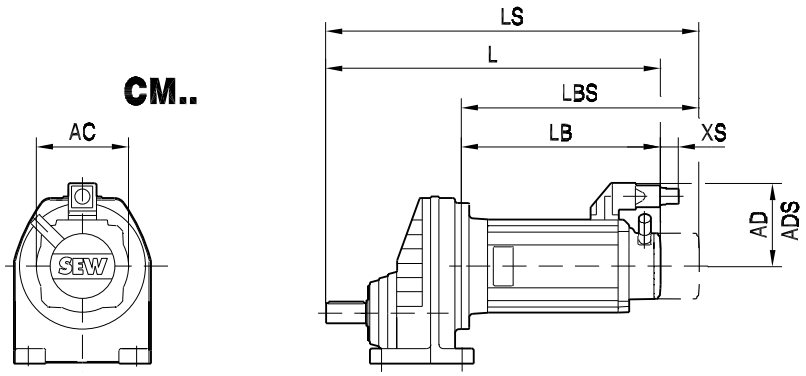

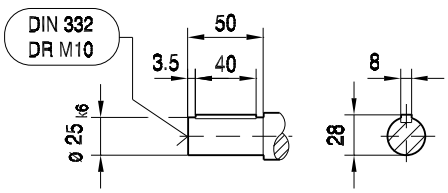

(→ 105)	DS56H	CM71S	CM71M	CM71L	CM90S	CM90M	CM90L	CM112S	CM112M		
AC	73	117	117	117	142	142	142	186	186		
AD	77	122	122	122	140	140	140	162	162		
ADS	77	122	122	122	140	140	140	162	162		
L	467	433	453	493	485	512	570	525	549		
LS	467	515	535	575	581	608	666	615	639		
LB	266	232	252	292	284	311	369	324	348		
LBS	266	314	334	374	380	407	465	414	438		
XS	51	45	45	45	50	50	50	36	36		

04 053 01 01

RXF67..

DS56..

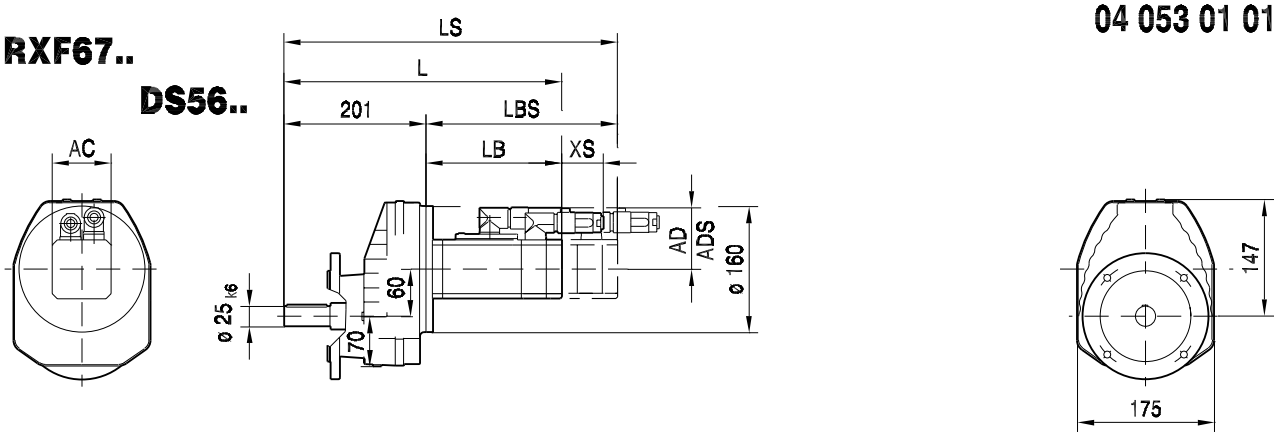

CM..

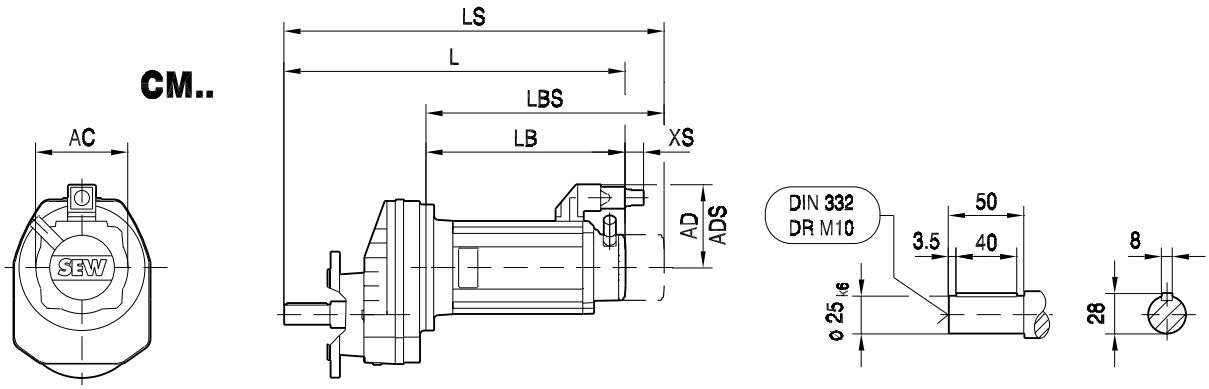

ø 160

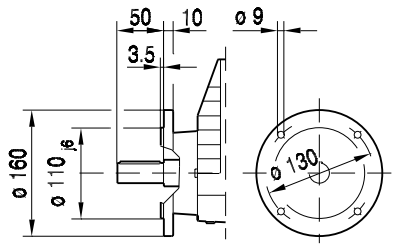

ø 200

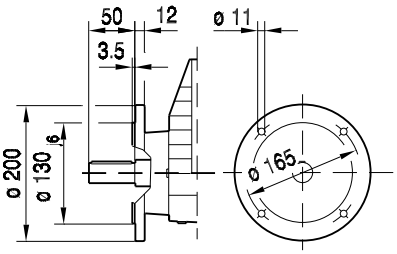

ø 250

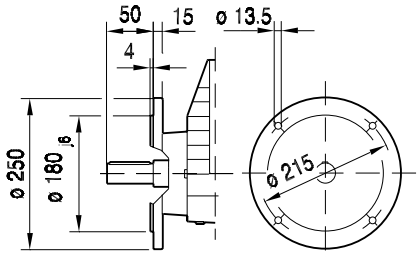

(→ 105)	DS56H	CM71S	CM71M	CM71L	CM90S	CM90M	CM90L	CM112S	CM112M		
AC	73	117	117	117	142	142	142	186	186		
AD	77	122	122	122	140	140	140	162	162		
ADS	77	122	122	122	140	140	140	162	162		
L	467	433	453	493	485	512	570	525	549		
LS	467	515	535	575	581	608	666	615	639		
LB	266	232	252	292	284	311	369	324	348		
LBS	266	314	334	374	380	407	465	414	438		
XS	51	45	45	45	50	50	50	36	36		

04 054 01 01

RX77..

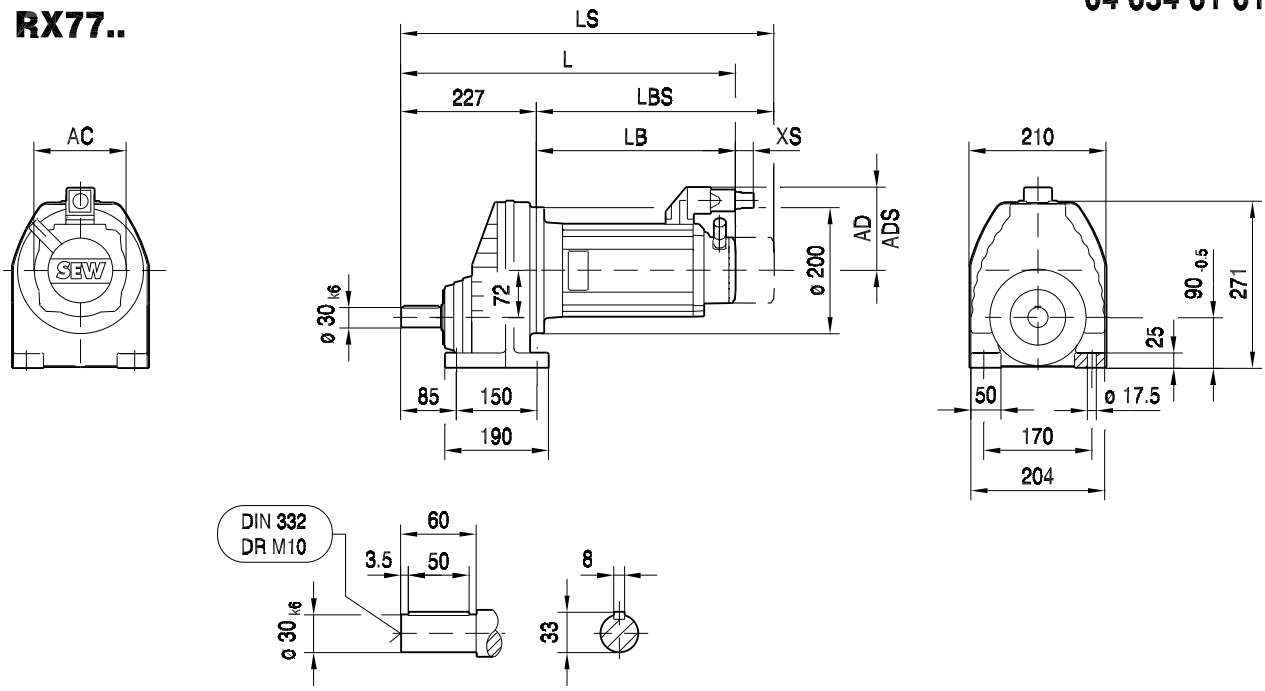

(→ 105)	CM71S	CM71M	CM71L	CM90S	CM90M	CM90L	CM112S	CM112M	CM112L		
AC	117	117	117	142	142	142	186	186	186		
AD	122	122	122	140	140	140	162	162	162		
ADS	122	122	122	140	140	140	162	162	162		
L	453	473	512	503	530	584	539	566	628		
LS	535	555	594	599	626	680	629	656	718		
LB	226	246	285	276	303	357	312	339	401		
LBS	308	328	367	372	399	453	402	429	491		
XS	45	45	45	50	50	50	36	36	36		

RXF77..

04 055 01 01

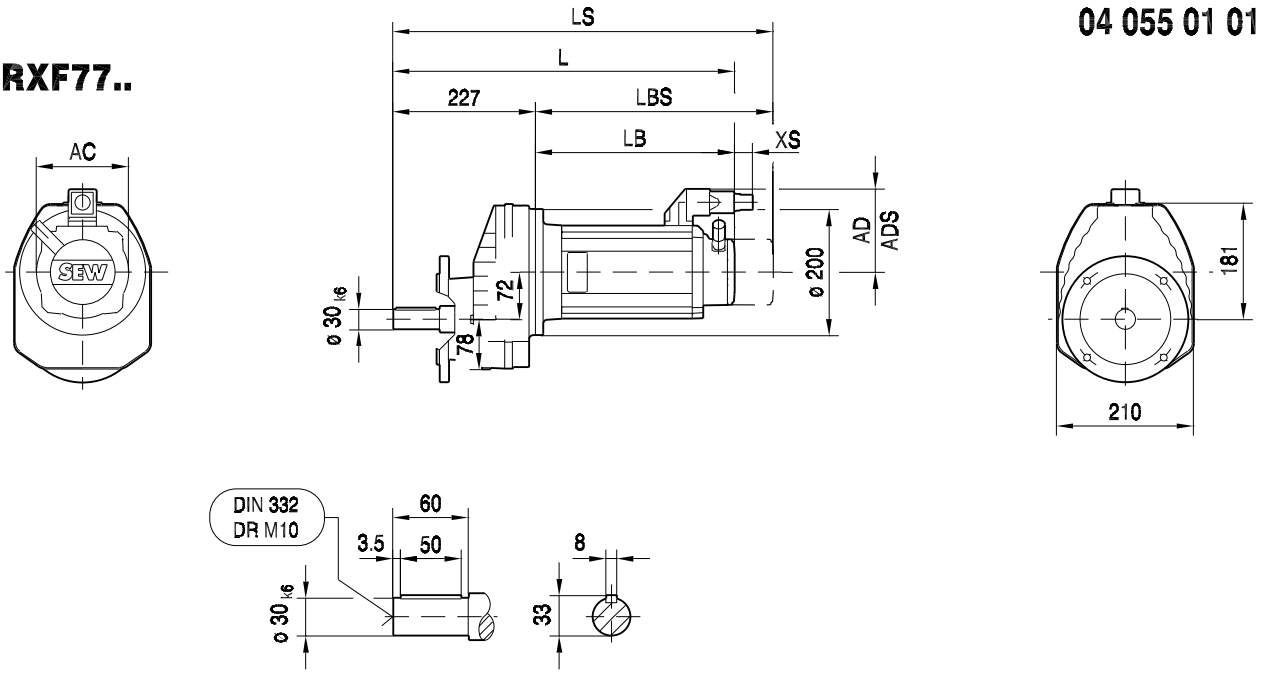

ø 200

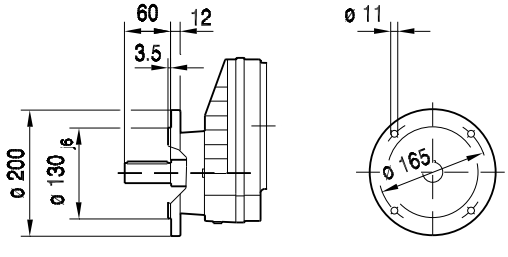

ø 250

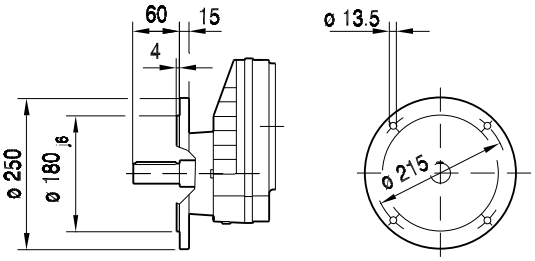

(→ 📖 105)	CM71S	CM71M	CM71L	CM90S	CM90M	CM90L	CM112S	CM112M	CM112L		
AC	117	117	117	142	142	142	186	186	186		
AD	122	122	122	140	140	140	162	162	162		
ADS	122	122	122	140	140	140	162	162	162		
L	453	473	512	503	530	584	539	566	628		
LS	535	555	594	599	626	680	629	656	718		
LB	226	246	285	276	303	357	312	339	401		
LBS	308	328	367	372	399	453	402	429	491		
XS	45	45	45	50	50	50	36	36	36		

RX87..

04 056 01 01

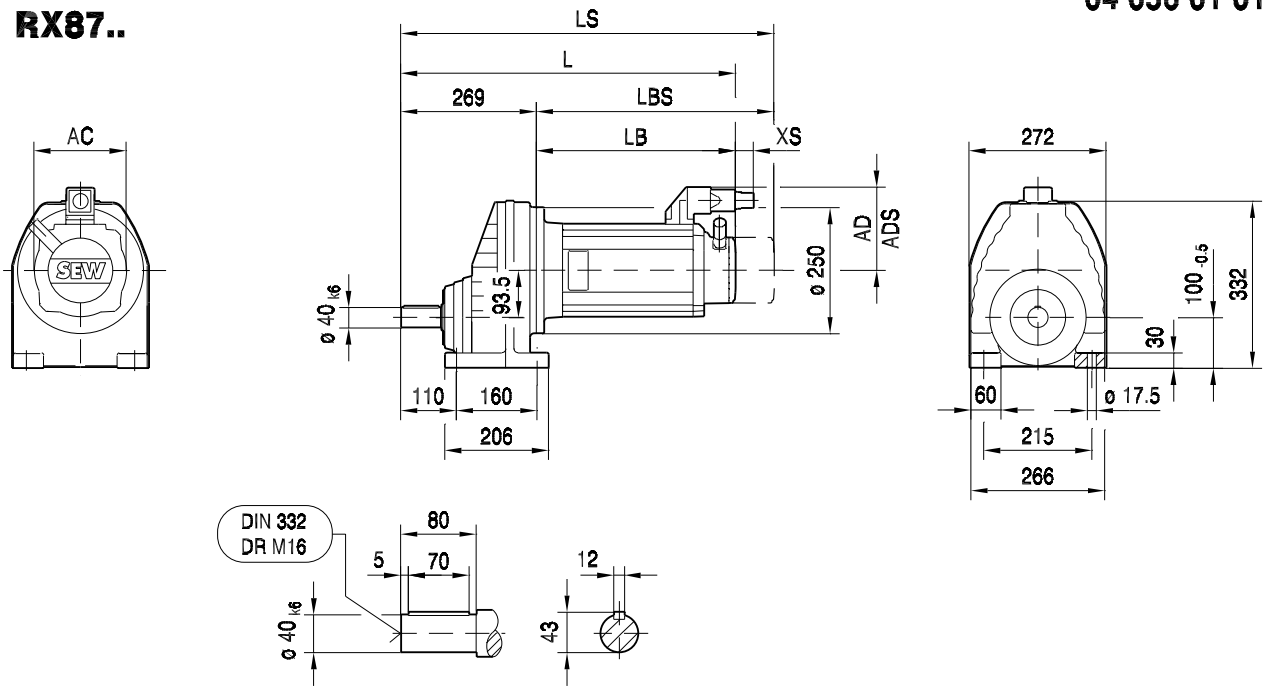

(→ 105)	CM90S	CM90M	CM90L	CM112S	CM112M	CM112L	CM112H				
AC	142	142	142	186	186	186	186				
AD	140	140	140	162	162	162	162				
ADS	140	140	140	162	162	162	162				
L	541	568	622	576	603	665	795				
LS	637	664	718	666	693	755	860				
LB	272	299	353	307	334	396	526				
LBS	368	395	449	397	424	486	591				
XS	50	50	50	36	36	36	36				

RXF87..

04 057 01 01

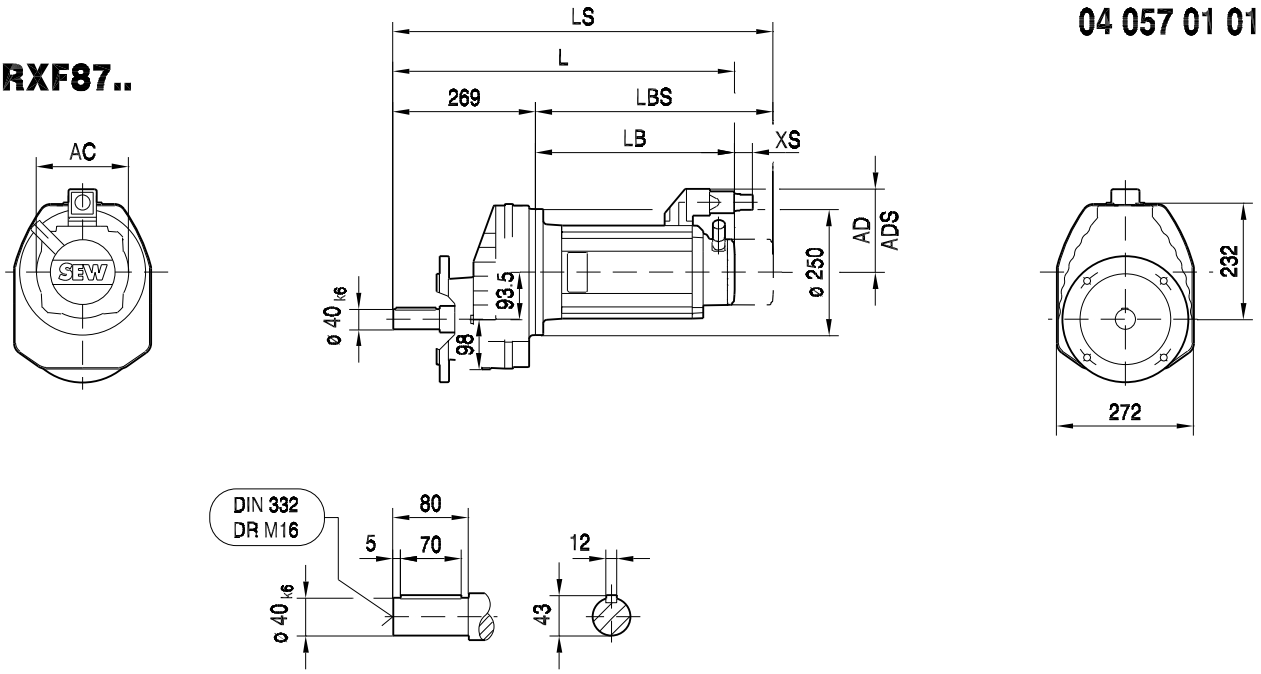

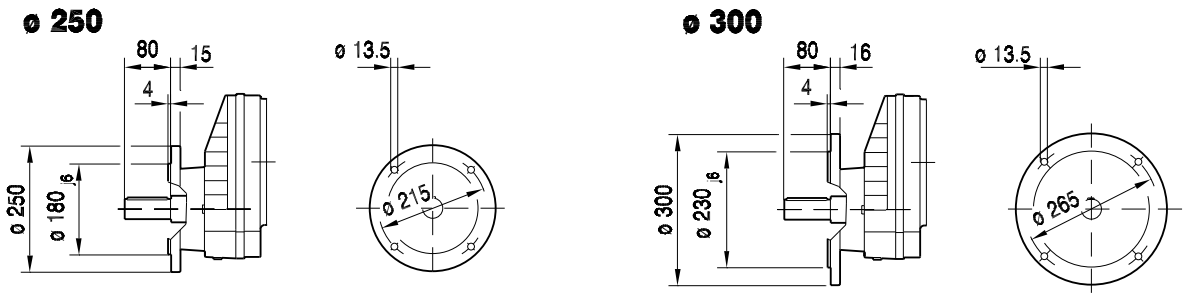

(→ 105)	CM90S	CM90M	CM90L	CM112S	CM112M	CM112L	CM112H				
AC	142	142	142	186	186	186	186				
AD	140	140	140	162	162	162	162				
ADS	140	140	140	162	162	162	162				
L	541	568	622	576	603	665	795				
LS	637	664	718	666	693	755	860				
LB	272	299	353	307	334	396	526				
LBS	368	395	449	397	424	486	591				
XS	50	50	50	36	36	36	36				

RX97..

04 058 01 01

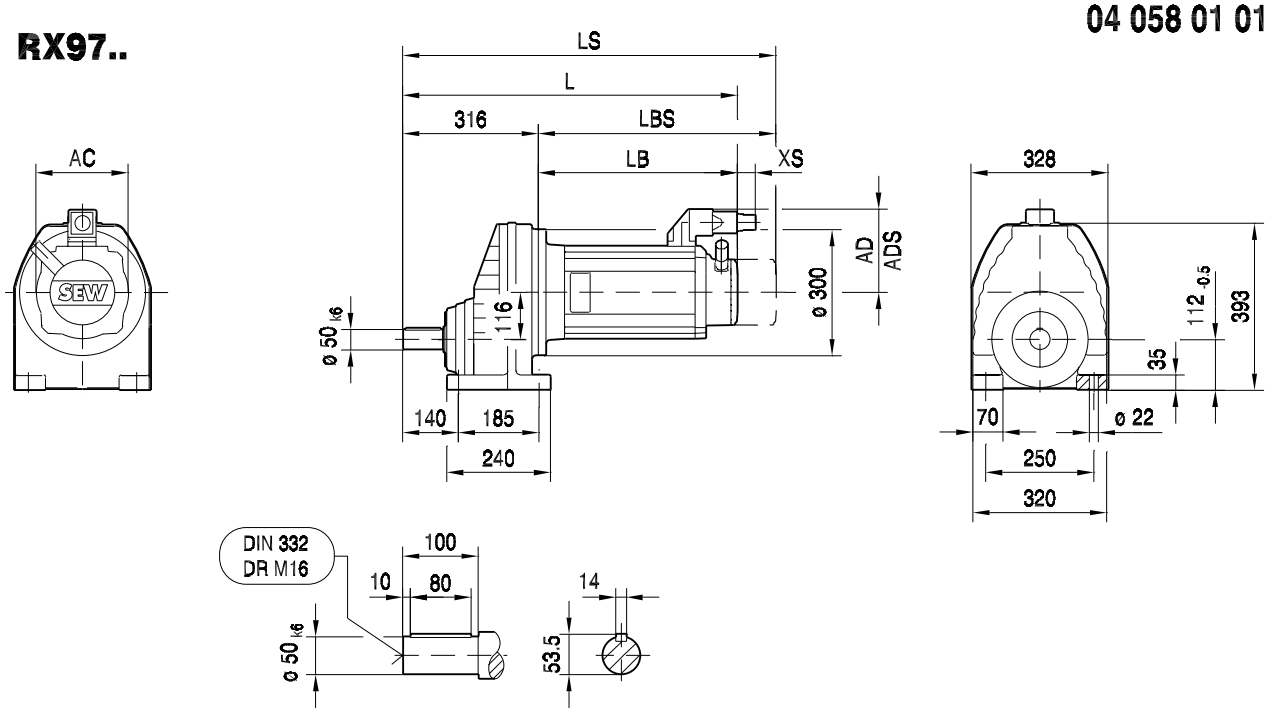

(→ 105)	CM90S	CM90M	CM90L	CM112S	CM112M	CM112L	CM112H				
AC	142	142	142	186	186	186	186				
AD	140	140	140	162	162	162	162				
ADS	140	140	140	162	162	162	162				
L	582	609	663	618	645	707	837				
LS	678	705	759	708	735	797	902				
LB	266	293	347	302	329	391	521				
LBS	362	389	443	392	419	481	586				
XS	50	50	50	36	36	36	36				

RXF97..

04 059 01 01

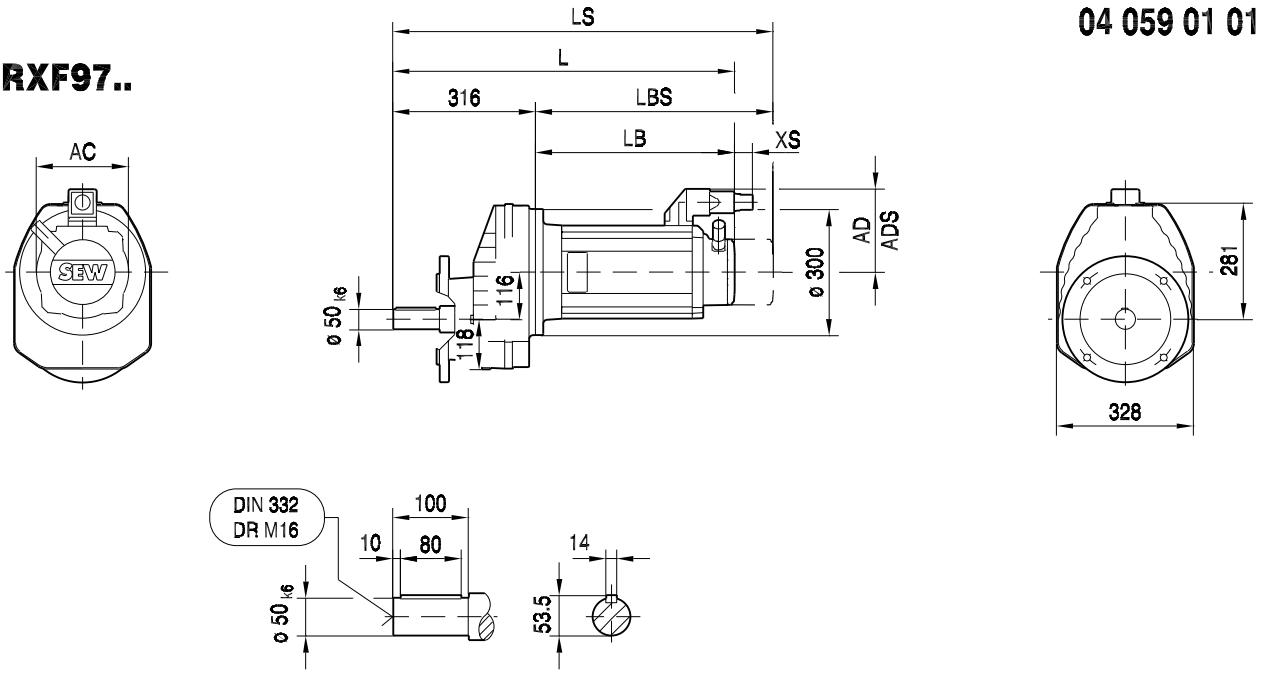

ø 300

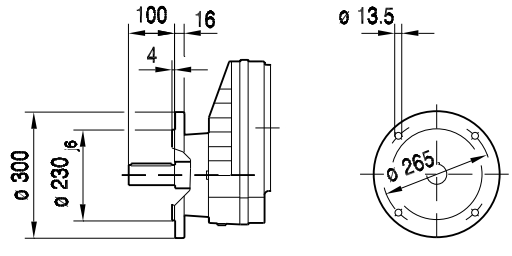

ø 350

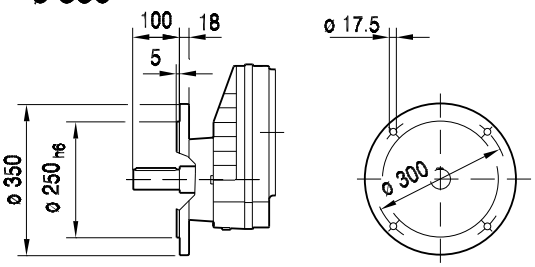

(→ 📖 105)	CM90S	CM90M	CM90L	CM112S	CM112M	CM112L	CM112H				
AC	142	142	142	186	186	186	186				
AD	140	140	140	162	162	162	162				
ADS	140	140	140	162	162	162	162				
L	582	609	663	618	645	707	837				
LS	678	705	759	708	735	797	902				
LB	266	293	347	302	329	391	521				
LBS	362	389	443	392	419	481	586				
XS	50	50	50	36	36	36	36				

04 060 01 01

RX107..

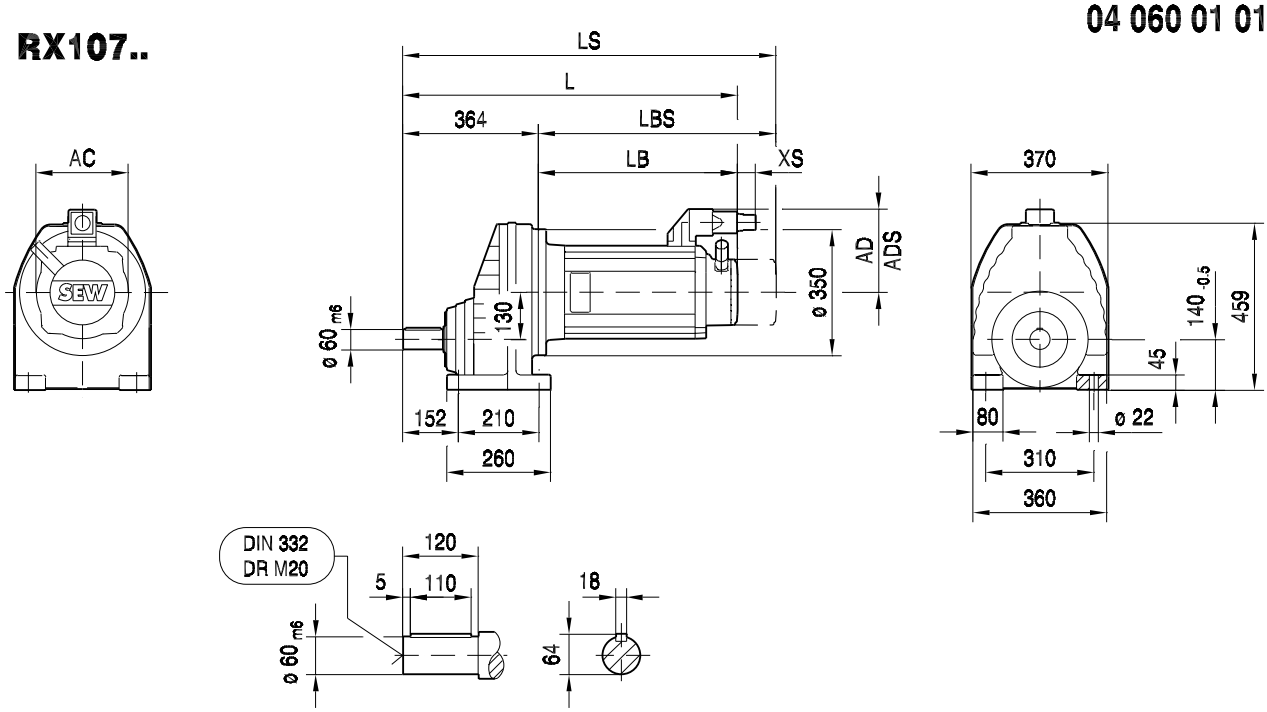

(→ 105)	CM112S	CM112M	CM112L	CM112H							
AC	186	186	186	186							
AD	162	162	162	162							
ADS	162	162	162	162							
L	660	687	749	879							
LS	750	777	839	944							
LB	296	323	385	515							
LBS	386	413	475	580							
XS	36	36	36	36							

RXF107..

04 061 01 01

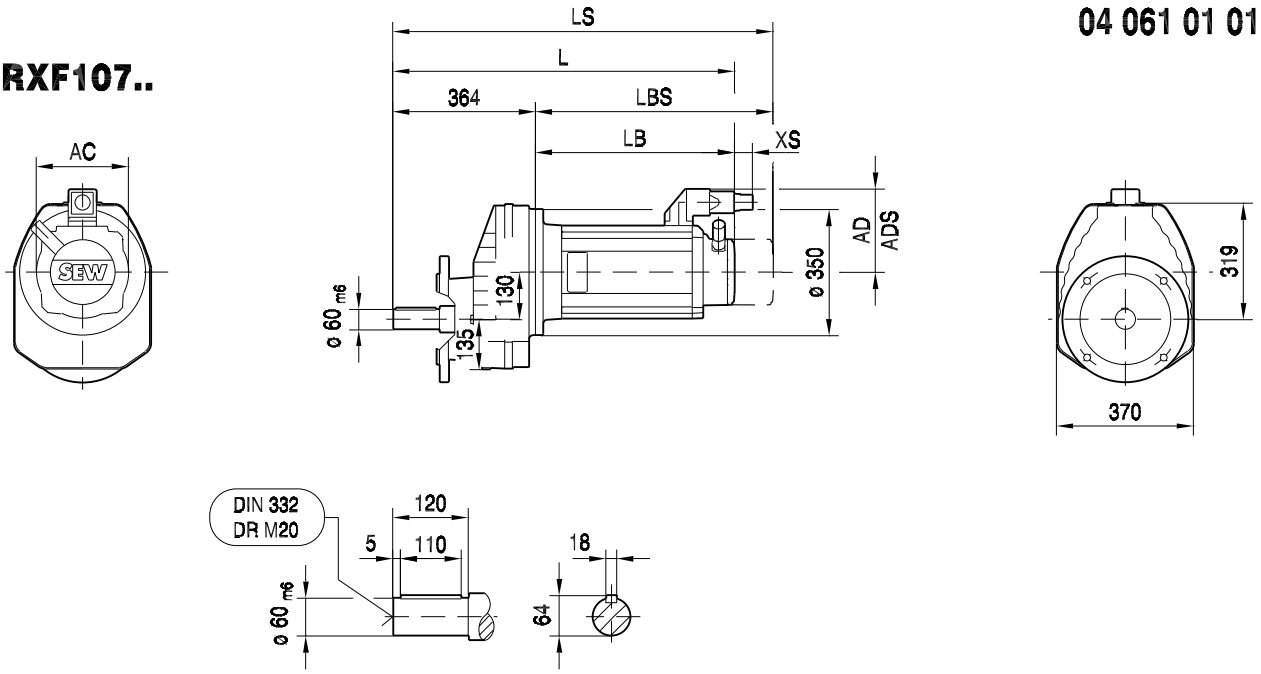

ø 350

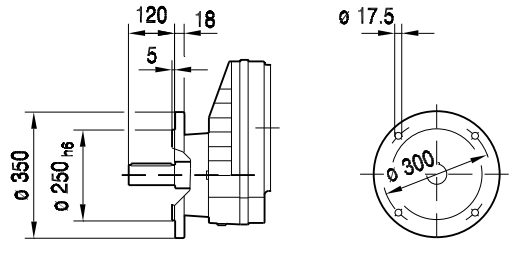

ø 450

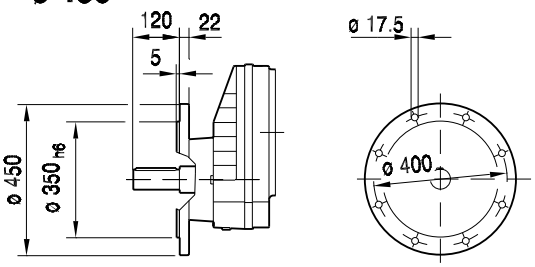

(→ 105)	CM112S	CM112M	CM112L	CM112H							
AC	186	186	186	186							
AD	162	162	162	162							
ADS	162	162	162	162							
L	660	687	749	879							
LS	750	777	839	944							
LB	296	323	385	515							
LBS	386	413	475	580							
XS	36	36	36	36							

R27..
DS56..

04 062 01 01

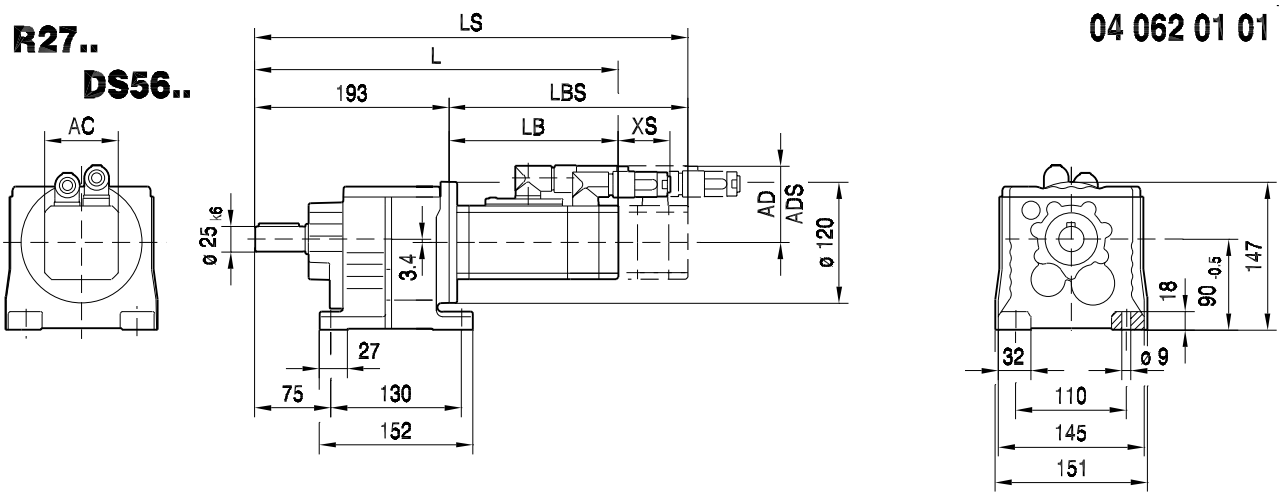

CM..

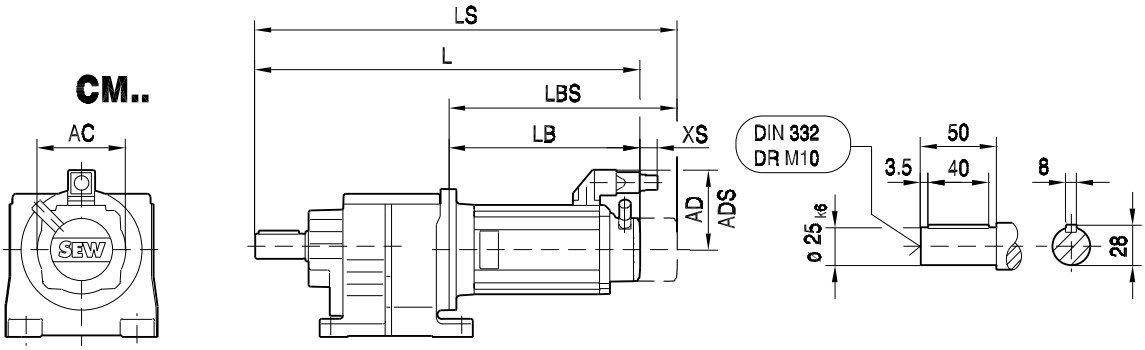

R27F..

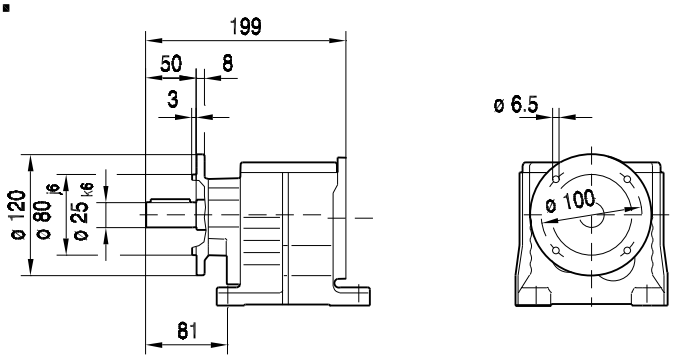

(→ 105)	DS56M	DS56L	DS56H	CM71S	CM71M	CM71L	CM90S				
AC	73	73	73	117	117	117	142				
AD	71	71	77	122	122	122	140				
ADS	77	77	77	122	122	122	140				
L	330	362	465	431	451	494	486				
LS	360	392	465	513	533	576	582				
LB	137	169	272	238	258	301	293				
LBS	167	199	272	320	340	383	389				
XS	70	70	51	45	45	45	50				

04 063 01 01

RF27..

DS56..

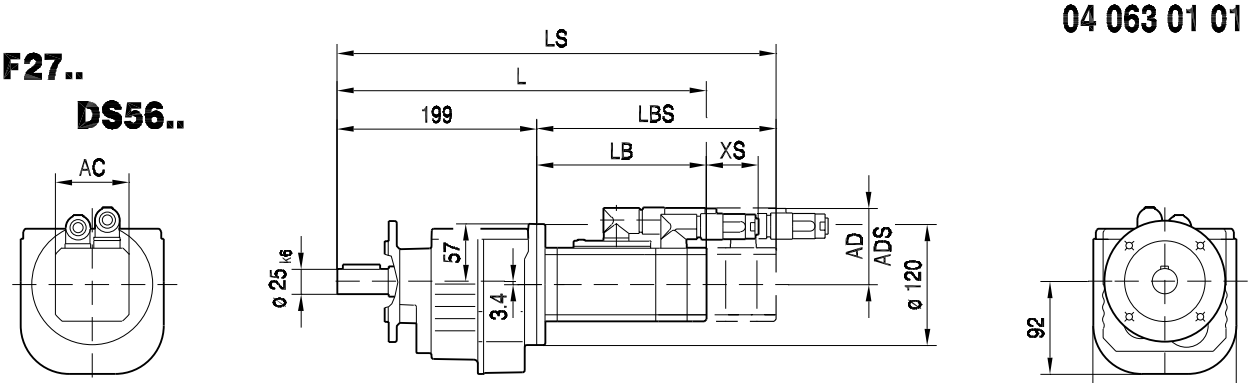

CM..

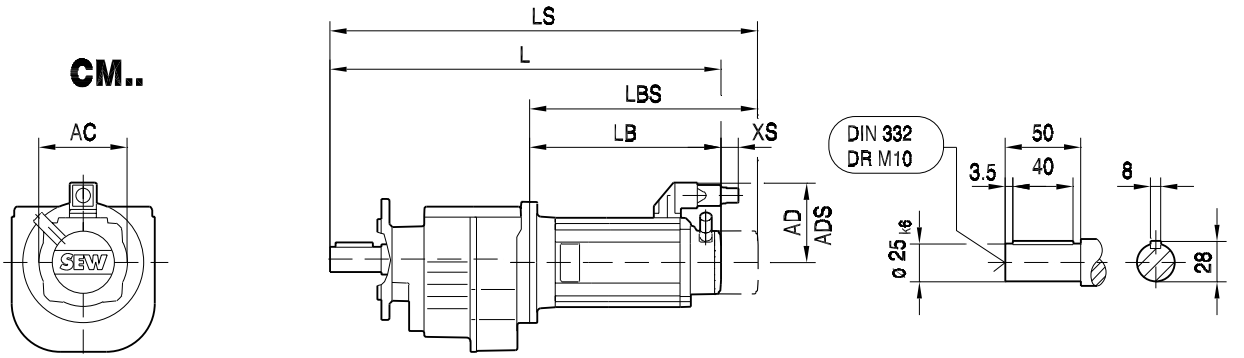

ø 120

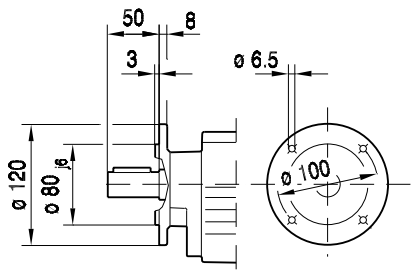

ø 140

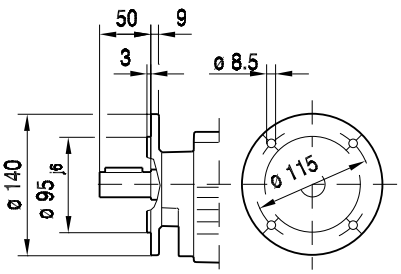

ø 160

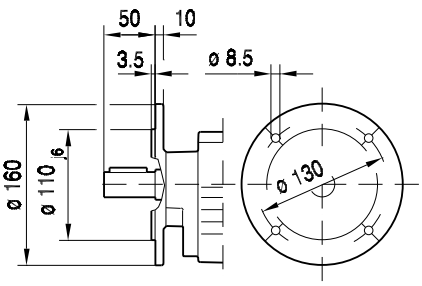

(→ 105)	DS56M	DS56L	DS56H	CM71S	CM71M	CM71L	CM90S				
AC	73	73	73	117	117	117	142				
AD	71	71	77	122	122	122	140				
ADS	77	77	77	122	122	122	140				
L	336	368	471	437	457	500	492				
LS	366	398	471	519	539	582	588				
LB	137	169	272	238	258	301	293				
LBS	167	199	272	320	340	383	389				
XS	70	70	51	45	45	45	50				

04 064 01 01

R37.. DS56..

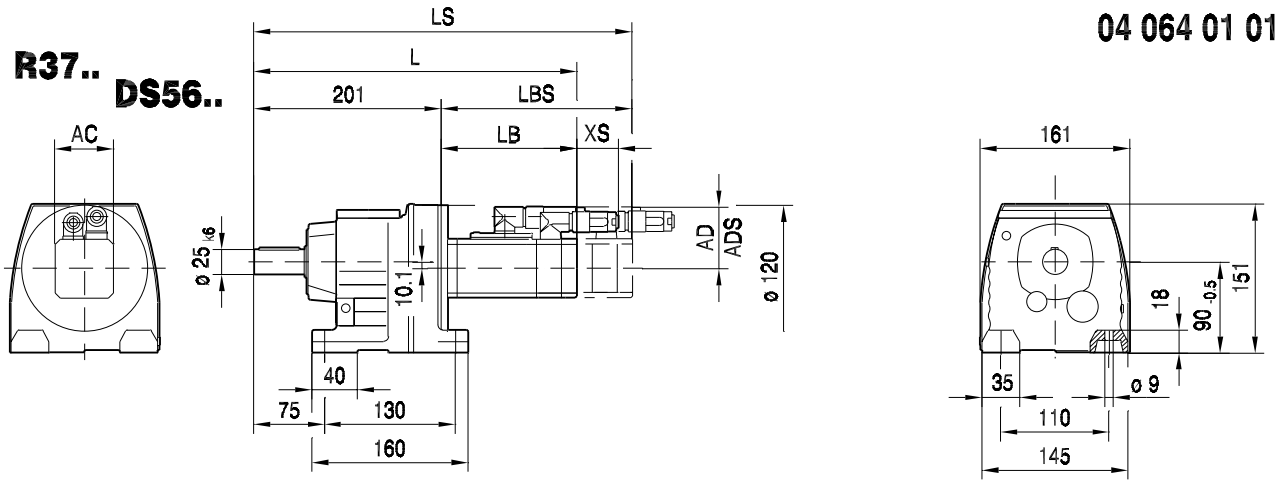

CM..

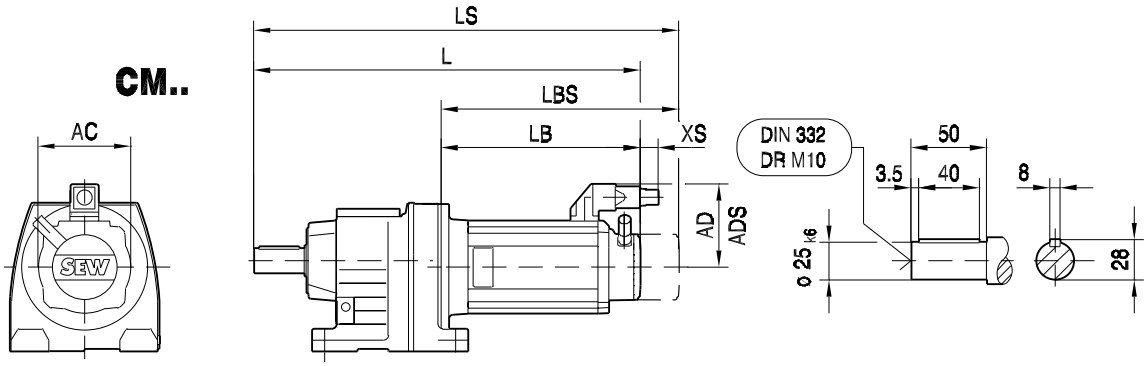

R37F..

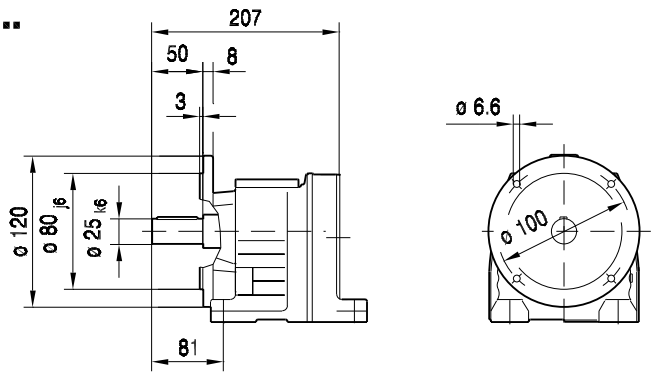

(→ 105)	DS56M	DS56L	DS56H	CM71S	CM71M	CM71L	CM90S				
AC	73	73	73	117	117	117	142				
AD	71	71	77	122	122	122	140				
ADS	77	77	77	122	122	122	140				
L	338	370	473	439	459	502	494				
LS	368	400	473	521	541	584	590				
LB	137	169	272	238	258	301	293				
LBS	167	199	272	320	340	383	389				
XS	70	70	51	45	45	45	50				

04 065 01 01

RF37.. **DS56..**

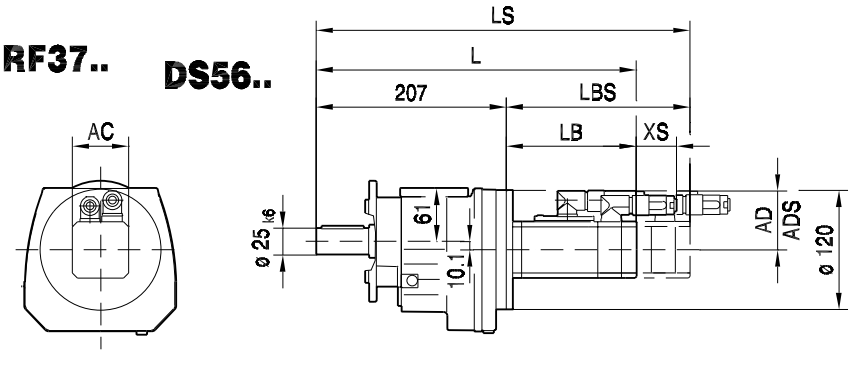

CM..

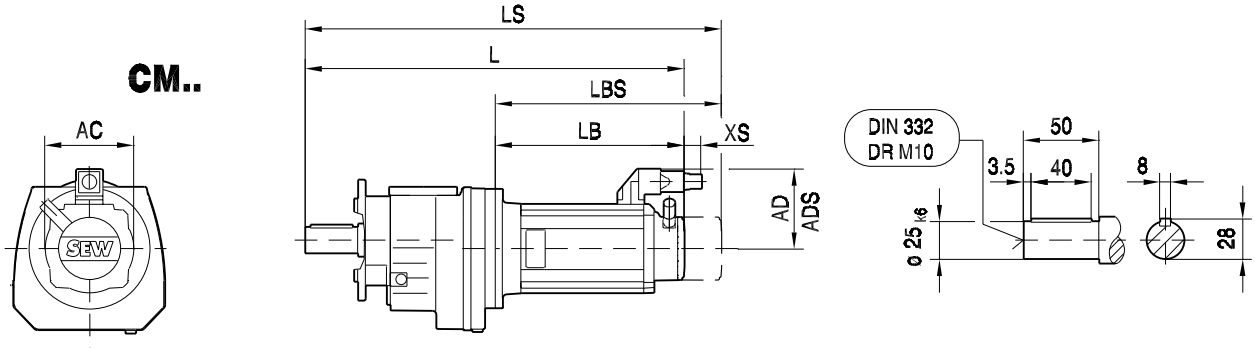

ø 120

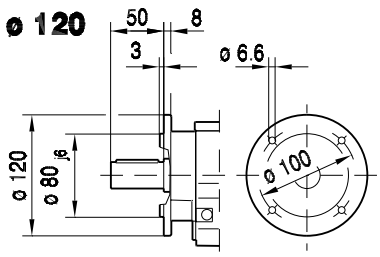

ø 160

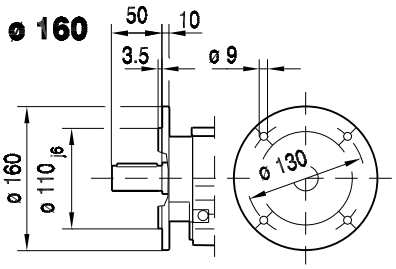

ø 200

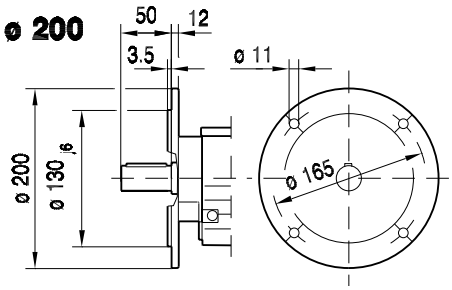

(→ 105)	DS56M	DS56L	DS56H	CM71S	CM71M	CM71L	CM90S				
AC	73	73	73	117	117	117	142				
AD	71	71	77	122	122	122	140				
ADS	77	77	77	122	122	122	140				
L	344	376	479	445	465	508	500				
LS	374	406	479	527	547	590	596				
LB	137	169	272	238	258	301	293				
LBS	167	199	272	320	340	383	389				
XS	70	70	51	45	45	45	50				

04 066 01 01

R47.. DS56..

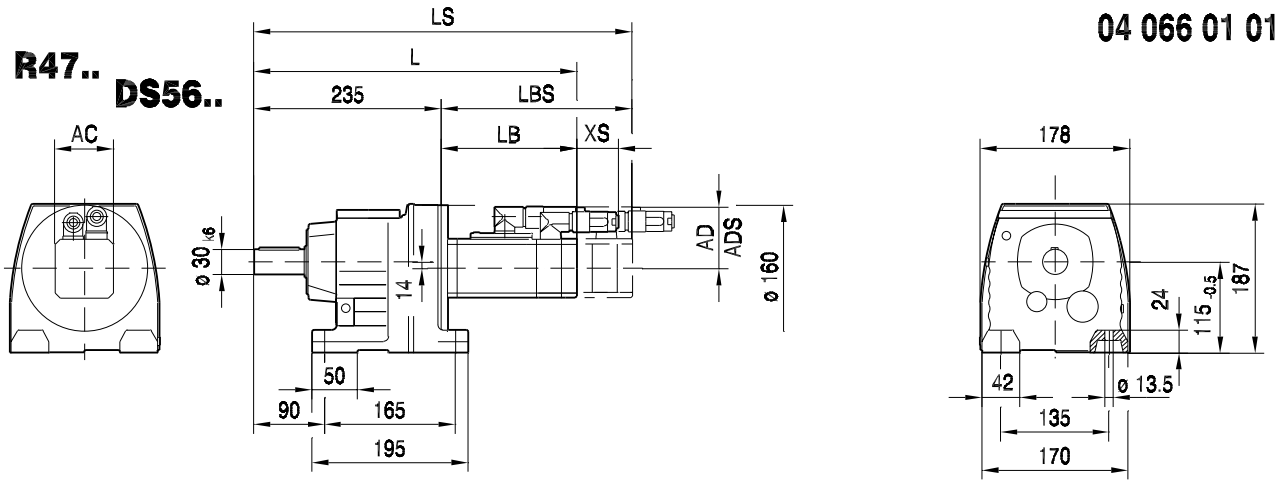

CM..

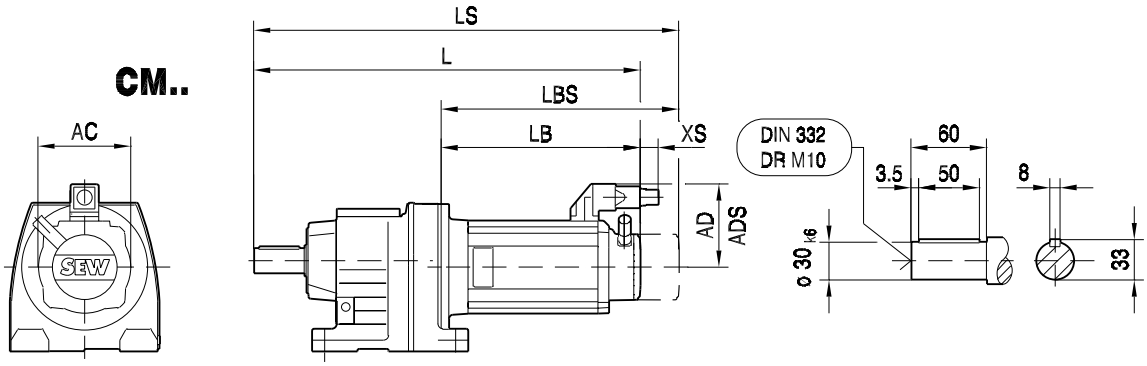

R47F..

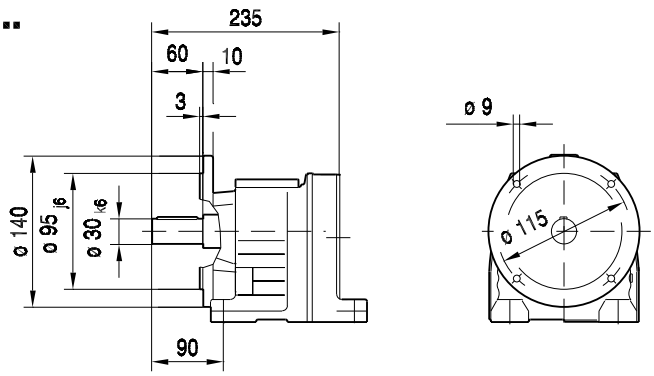

(→ 105)	DS56H	CM71S	CM71M	CM71L	CM90S	CM90M	CM90L	CM112S			
AC	73	117	117	117	142	142	142	186			
AD	77	122	122	122	140	140	140	162			
ADS	77	122	122	122	140	140	140	162			
L	501	467	487	527	519	546	604	559			
LS	501	549	569	609	615	642	700	649			
LB	266	232	252	292	284	311	369	324			
LBS	266	314	334	374	380	407	465	414			
XS	51	45	45	45	50	50	50	36			

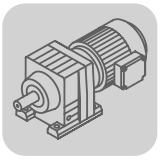

R..DS/CM..
R..DS/CM..[mm]

04 067 01 01

RF47.. **DS56..**

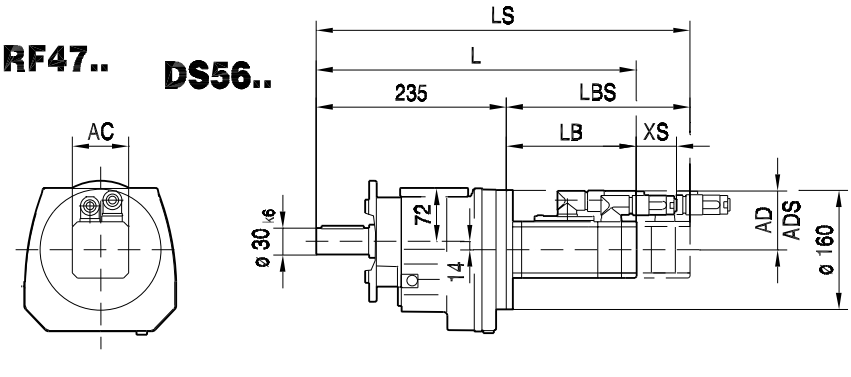

CM..

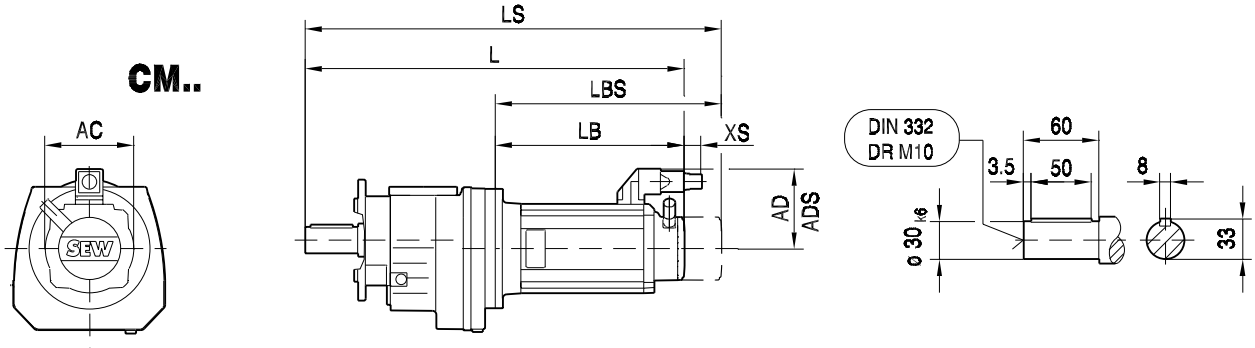

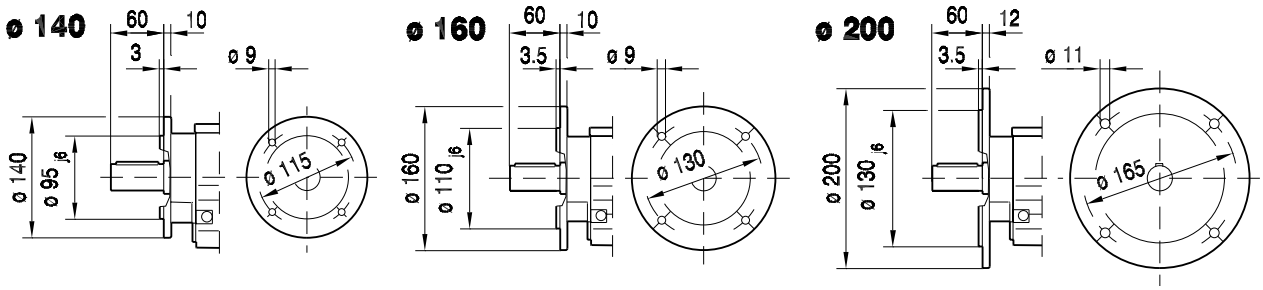

(→ 105)	DS56H	CM71S	CM71M	CM71L	CM90S	CM90M	CM90L	CM112S			
AC	73	117	117	117	142	142	142	186			
AD	77	122	122	122	140	140	140	162			
ADS	77	122	122	122	140	140	140	162			
L	501	467	487	527	519	546	604	559			
LS	501	549	569	609	615	642	700	649			
LB	266	232	252	292	284	311	369	324			
LBS	266	314	334	374	380	407	465	414			
XS	51	45	45	45	50	50	50	36			

04 068 01 01

R57.. DS56..

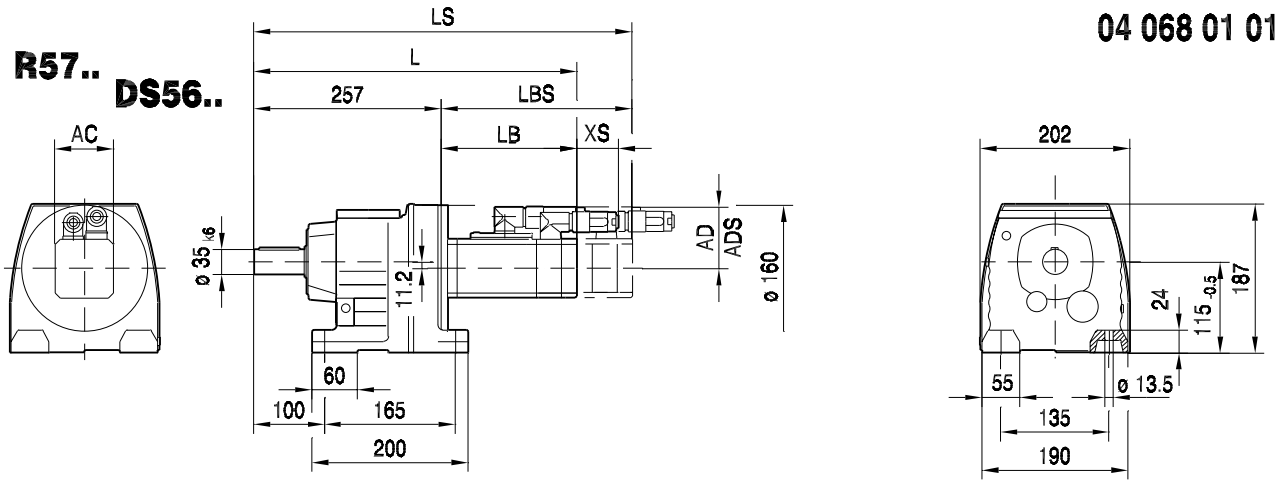

CM..

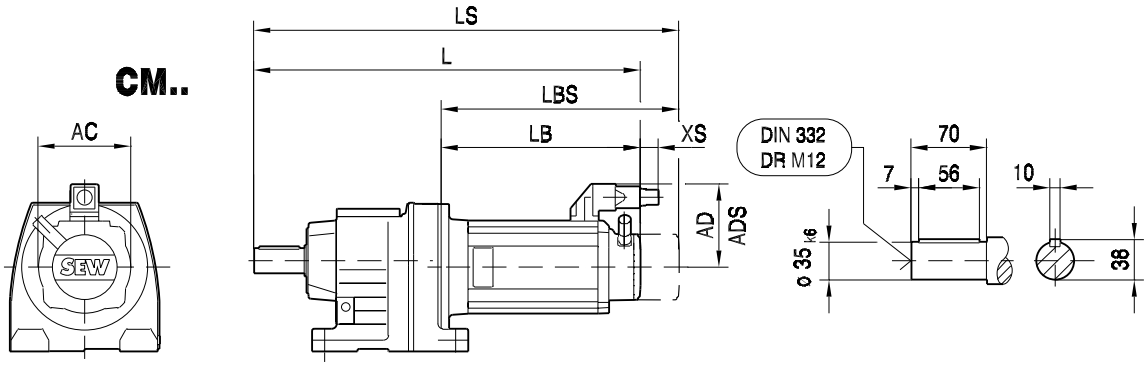

R57F..

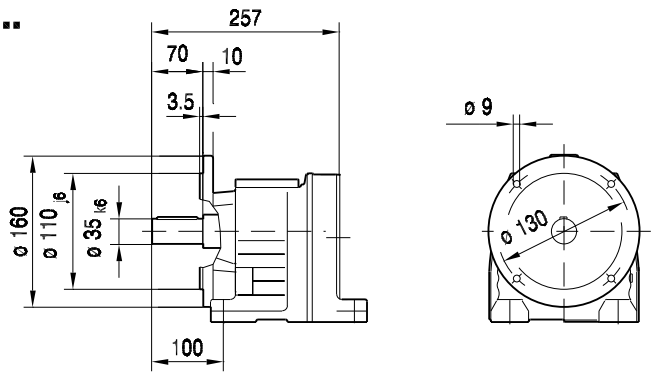

(→ 105)	DS56H	CM71S	CM71M	CM71L	CM90S	CM90M	CM90L	CM112S	CM112M		
AC	73	117	117	117	142	142	142	186	186		
AD	77	122	122	122	140	140	140	162	162		
ADS	77	122	122	122	140	140	140	162	162		
L	523	489	509	549	541	568	626	581	605		
LS	523	571	591	631	637	664	722	671	695		
LB	266	232	252	292	284	311	369	324	348		
LBS	266	314	334	374	380	407	465	414	438		
XS	51	45	45	45	50	50	50	36	36		

04 069 01 01

RF57.. **DS56..**

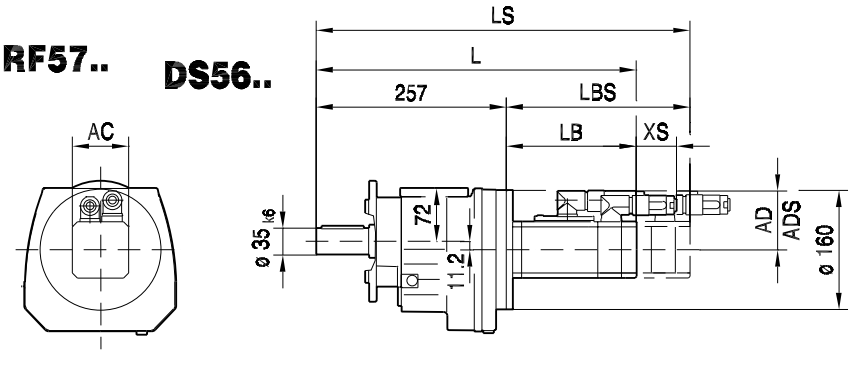

CM..

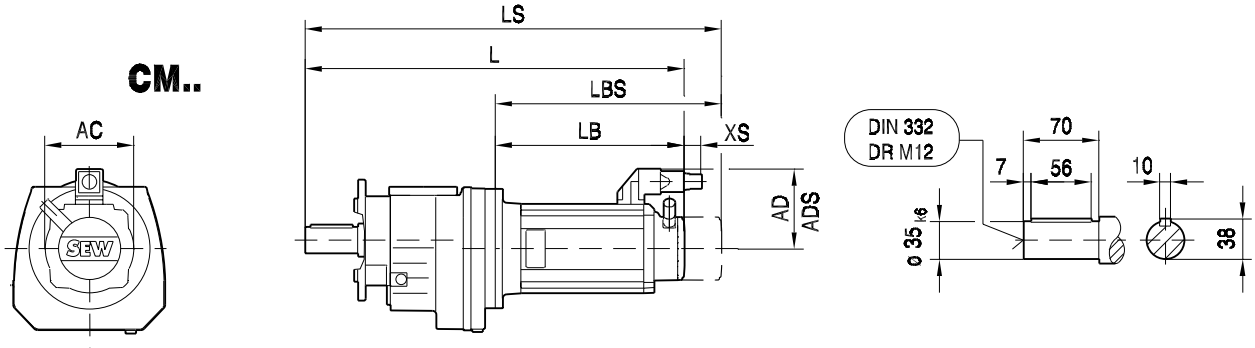

ø 160

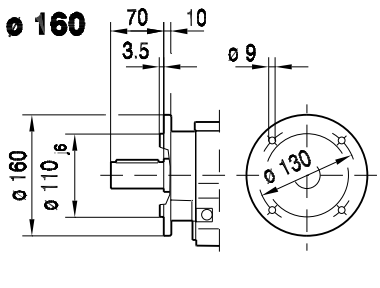

ø 200

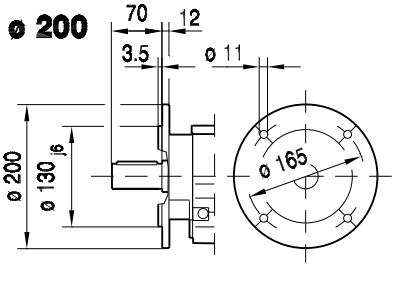

ø 250

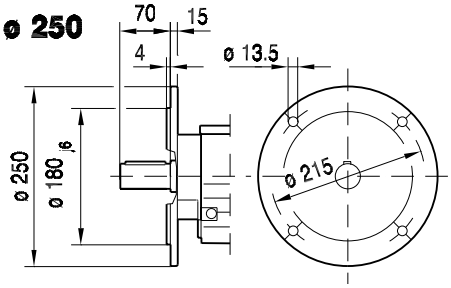

(→ 105)	DS56H	CM71S	CM71M	CM71L	CM90S	CM90M	CM90L	CM112S	CM112M		
AC	73	117	117	117	142	142	142	186	186		
AD	77	122	122	122	140	140	140	162	162		
ADS	77	122	122	122	140	140	140	162	162		
L	523	489	509	549	541	568	626	581	605		
LS	523	571	591	631	637	664	722	671	695		
LB	266	232	252	292	284	311	369	324	348		
LBS	266	314	334	374	380	407	465	414	438		
XS	51	45	45	45	50	50	50	36	36		

04 070 01 01

R67.. DS56..

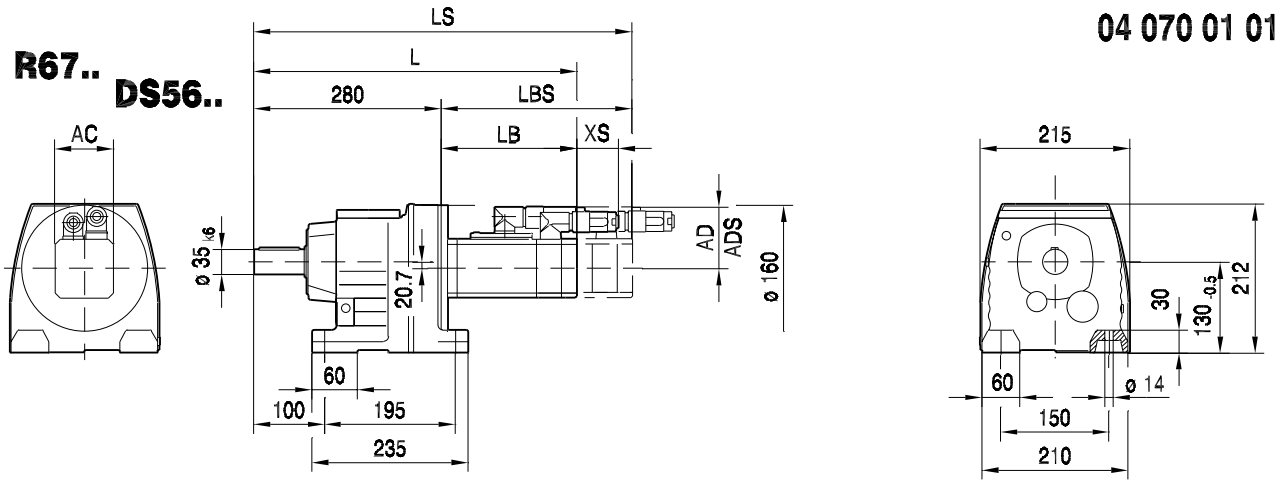

CM..

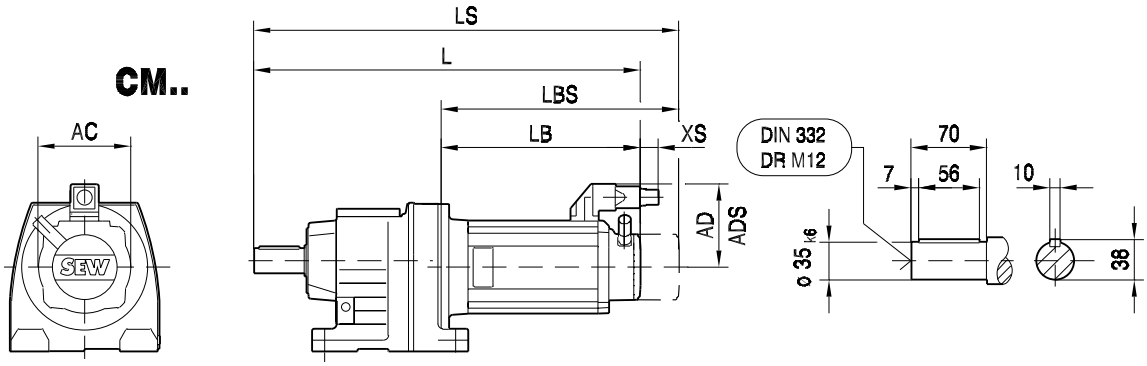

R67F..

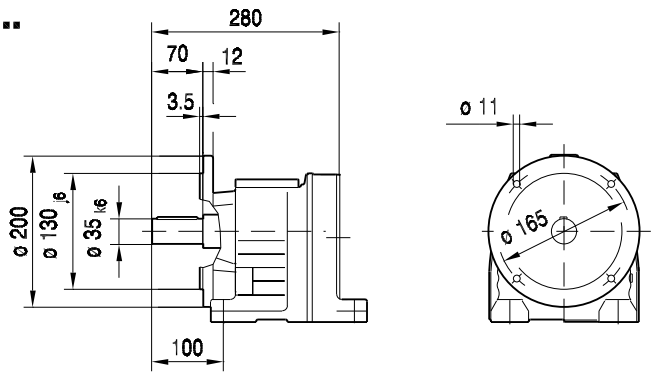

(→ 105)	DS56H	CM71S	CM71M	CM71L	CM90S	CM90M	CM90L	CM112S	CM112M		
AC	73	117	117	117	142	142	142	186	186		
AD	77	122	122	122	140	140	140	162	162		
ADS	77	122	122	122	140	140	140	162	162		
L	546	512	532	572	564	591	649	604	628		
LS	546	594	614	654	660	687	745	694	718		
LB	266	232	252	292	284	311	369	324	348		
LBS	266	314	334	374	380	407	465	414	438		
XS	51	45	45	45	50	50	50	36	36		

04 071 01 01

RF67.. **DS56..**

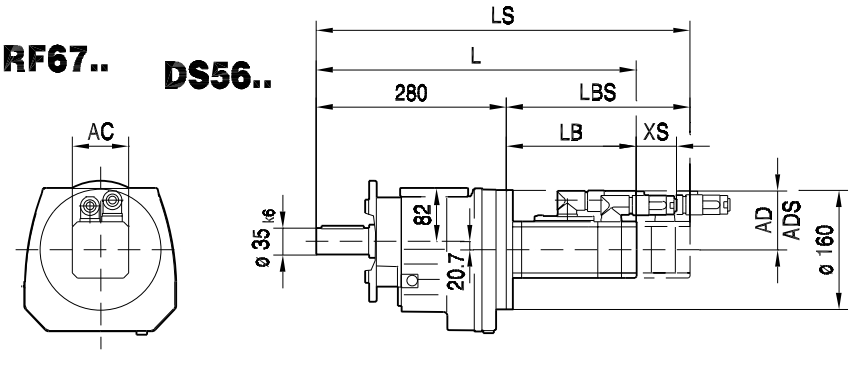

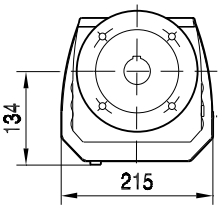

CM..

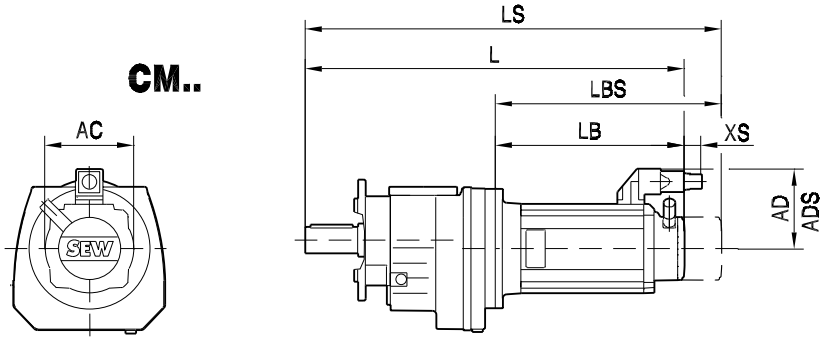

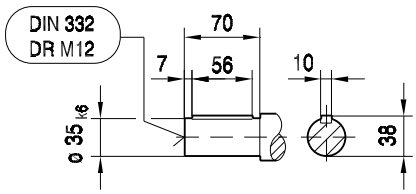

ø 200

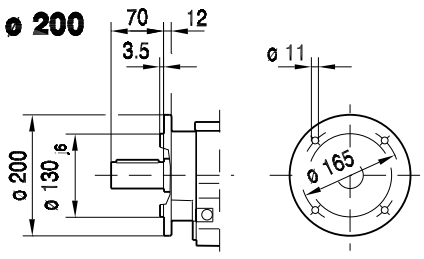

ø 250

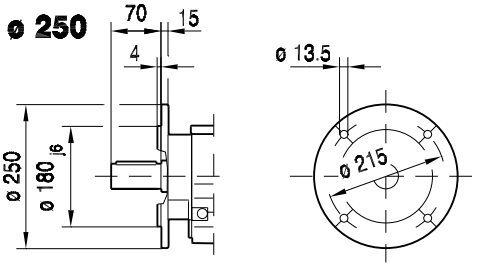

(→ 105)	DS56H	CM71S	CM71M	CM71L	CM90S	CM90M	CM90L	CM112S	CM112M		
AC	73	117	117	117	142	142	142	186	186		
AD	77	122	122	122	140	140	140	162	162		
ADS	77	122	122	122	140	140	140	162	162		
L	546	512	532	572	564	591	649	604	628		
LS	546	594	614	654	660	687	745	694	718		
LB	266	232	252	292	284	311	369	324	348		
LBS	266	314	334	374	380	407	465	414	438		
XS	51	45	45	45	50	50	50	36	36		

04 072 01 01

R77..

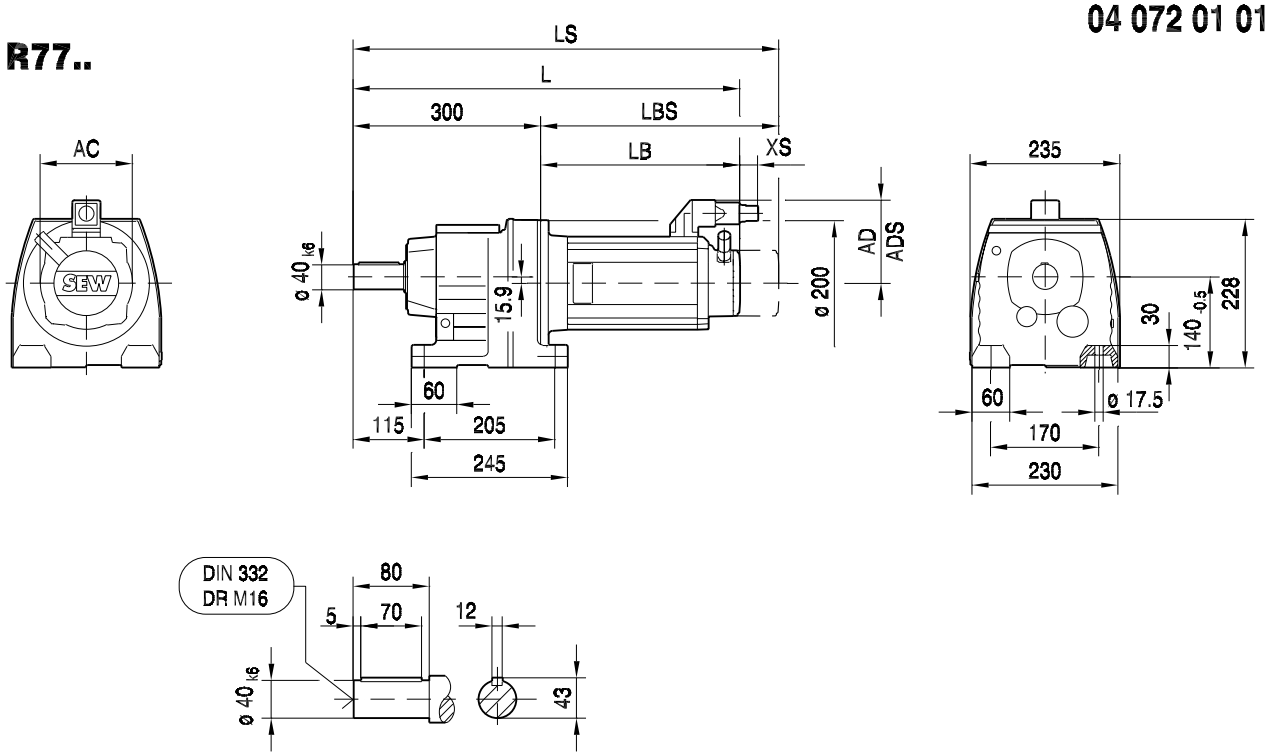

R77F..

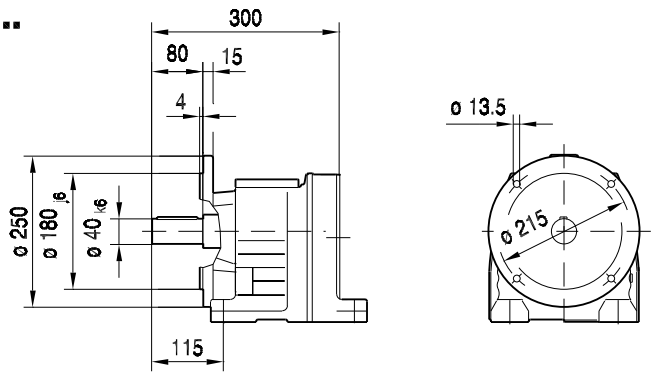

(→ 📖 105)	CM71S	CM71M	CM71L	CM90S	CM90M	CM90L	CM112S	CM112M	CM112L		
AC	117	117	117	142	142	142	186	186	186		
AD	122	122	122	140	140	140	162	162	162		
ADS	122	122	122	140	140	140	162	162	162		
L	526	546	585	576	603	657	612	639	701		
LS	608	628	667	672	699	753	702	729	791		
LB	226	246	285	276	303	357	312	339	401		
LBS	308	328	367	372	399	453	402	429	491		
XS	45	45	45	50	50	50	36	36	36		

04 073 01 01

RF77..

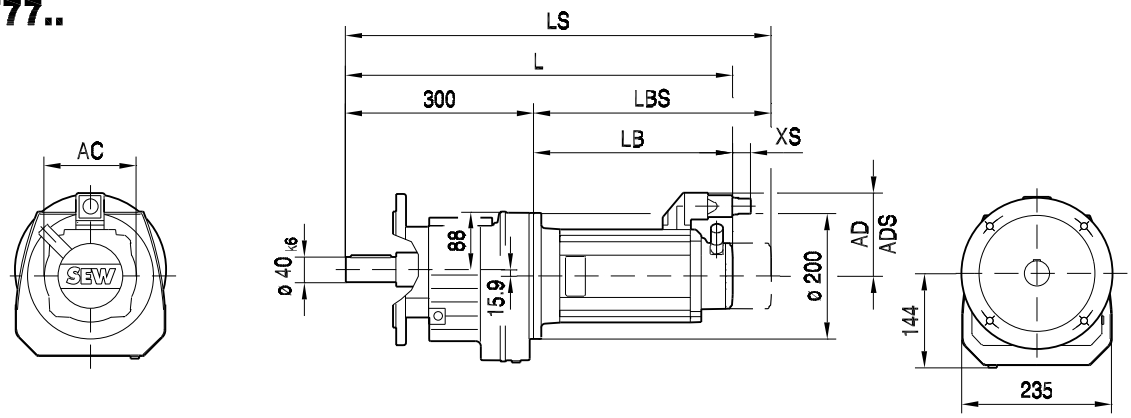

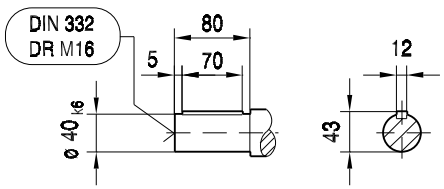

ø 250

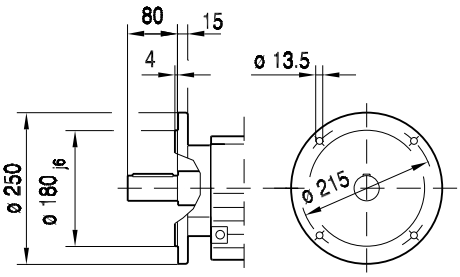

ø 300

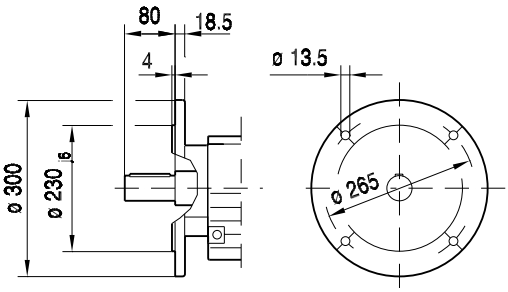

(→ 📖 105)	CM71S	CM71M	CM71L	CM90S	CM90M	CM90L	CM112S	CM112M	CM112L		
AC	117	117	117	142	142	142	186	186	186		
AD	122	122	122	140	140	140	162	162	162		
ADS	122	122	122	140	140	140	162	162	162		
L	526	546	585	576	603	657	612	639	701		
LS	608	628	667	672	699	753	702	729	791		
LB	226	246	285	276	303	357	312	339	401		
LBS	308	328	367	372	399	453	402	429	491		
XS	45	45	45	50	50	50	36	36	36		

04 074 01 01

R87..

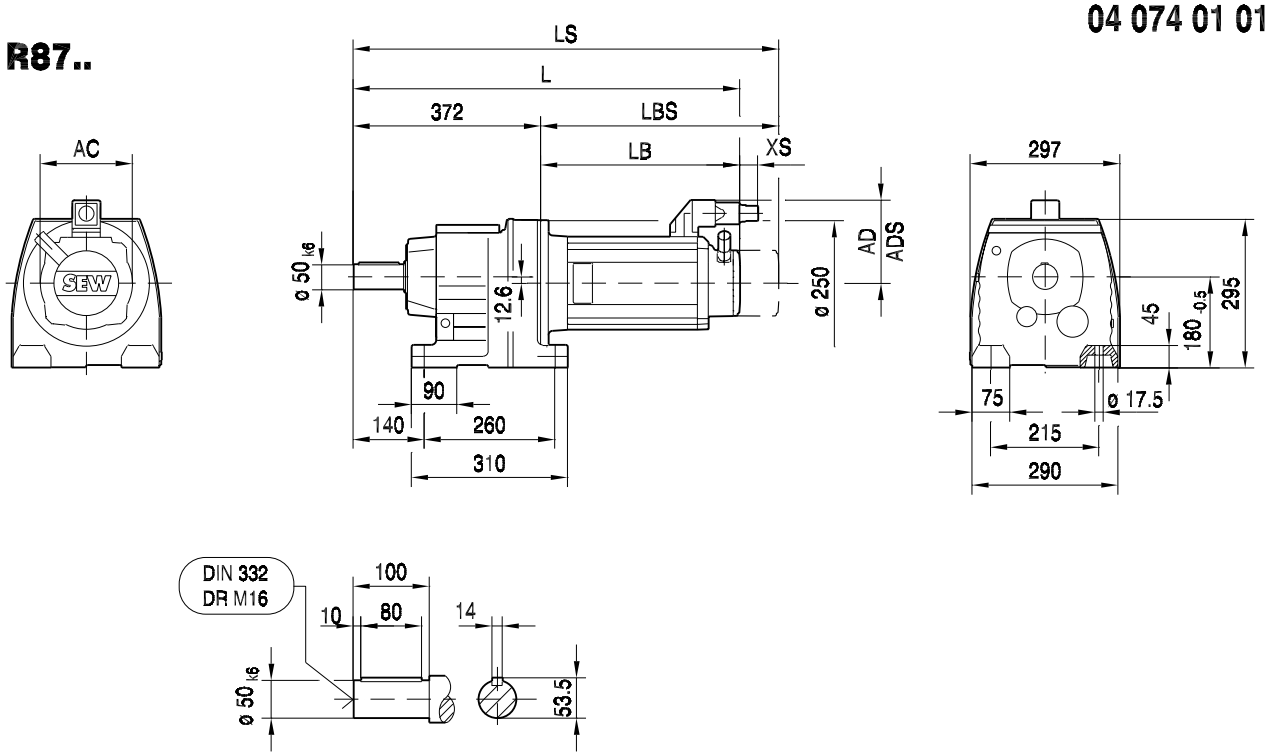

R87F..

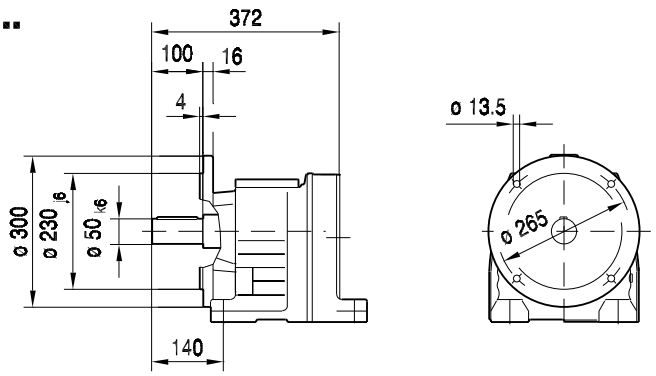

(→ 105)	CM90S	CM90M	CM90L	CM112S	CM112M	CM112L	CM112H				
AC	142	142	142	186	186	186	186				
AD	140	140	140	162	162	162	162				
ADS	140	140	140	162	162	162	162				
L	644	671	725	679	706	768	898				
LS	740	767	821	769	796	858	963				
LB	272	299	353	307	334	396	526				
LBS	368	395	449	397	424	486	591				
XS	50	50	50	36	36	36	36				

04 075 01 01

RF87..

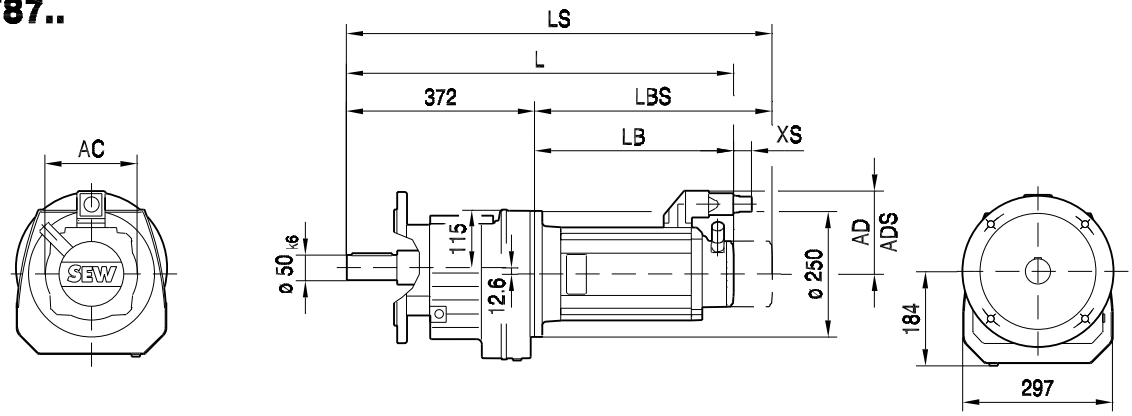

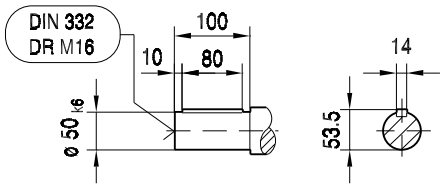

ø 300

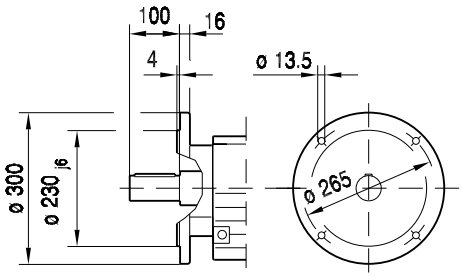

ø 350

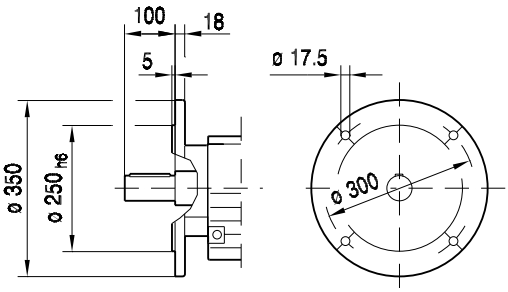

(→ 📖 105)	CM90S	CM90M	CM90L	CM112S	CM112M	CM112L	CM112H				
AC	142	142	142	186	186	186	186				
AD	140	140	140	162	162	162	162				
ADS	140	140	140	162	162	162	162				
L	644	671	725	679	706	768	898				
LS	740	767	821	769	796	858	963				
LB	272	299	353	307	334	396	526				
LBS	368	395	449	397	424	486	591				
XS	50	50	50	36	36	36	36				

04 076 01 01

R97..

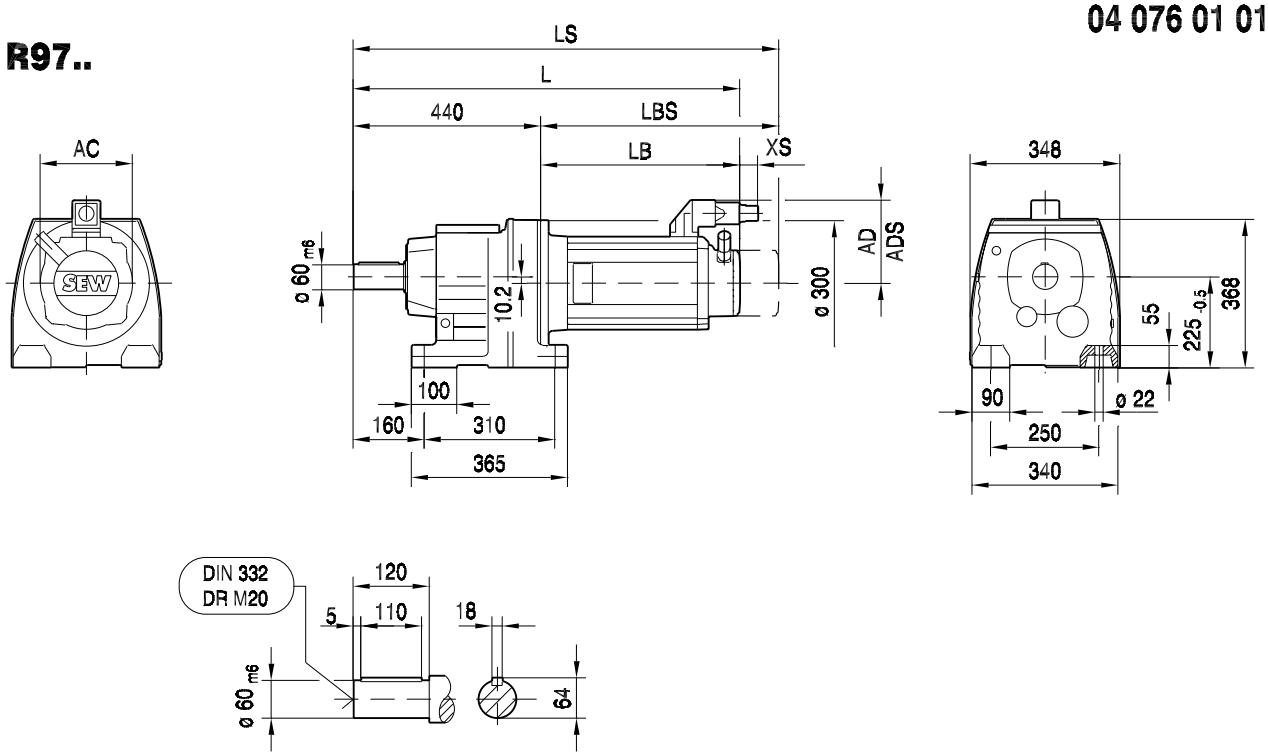

7

(→ 105)	CM90S	CM90M	CM90L	CM112S	CM112M	CM112L	CM112H				
AC	142	142	142	186	186	186	186				
AD	140	140	140	162	162	162	162				
ADS	140	140	140	162	162	162	162				
L	706	733	787	742	769	831	961				
LS	802	829	883	832	859	921	1026				
LB	266	293	347	302	329	391	521				
LBS	362	389	443	392	419	481	586				
XS	50	50	50	36	36	36	36				

04 077 01 01

RF97..

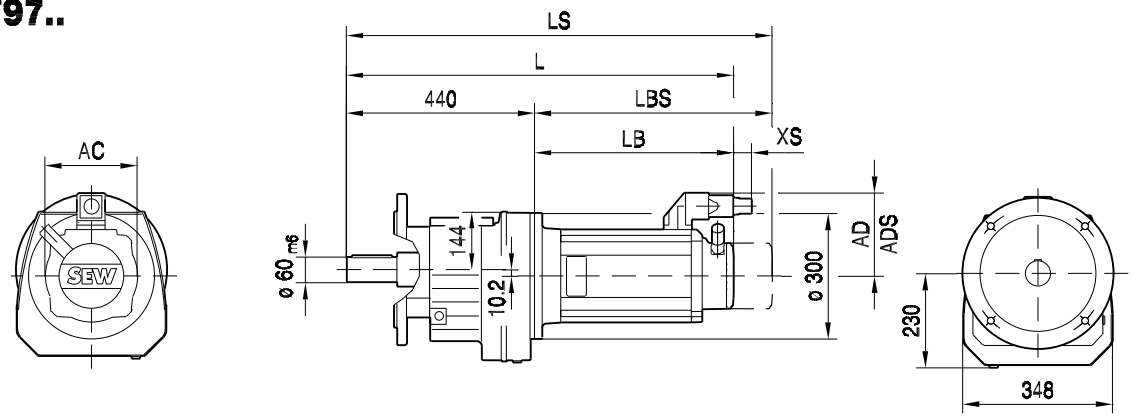

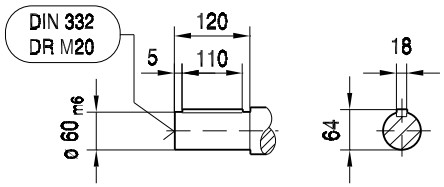

ø 350

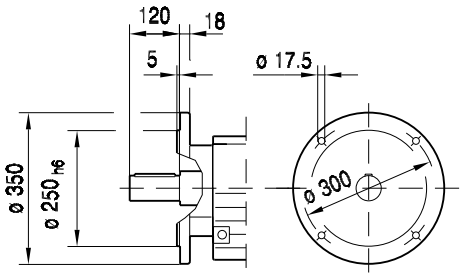

ø 450

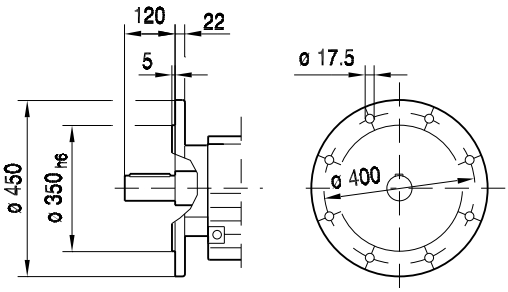

(→ 105)	CM90S	CM90M	CM90L	CM112S	CM112M	CM112L	CM112H				
AC	142	142	142	186	186	186	186				
AD	140	140	140	162	162	162	162				
ADS	140	140	140	162	162	162	162				
L	706	733	787	742	769	831	961				
LS	802	829	883	832	859	921	1026				
LB	266	293	347	302	329	391	521				
LBS	362	389	443	392	419	481	586				
XS	50	50	50	36	36	36	36				

04 078 01 01

R107..

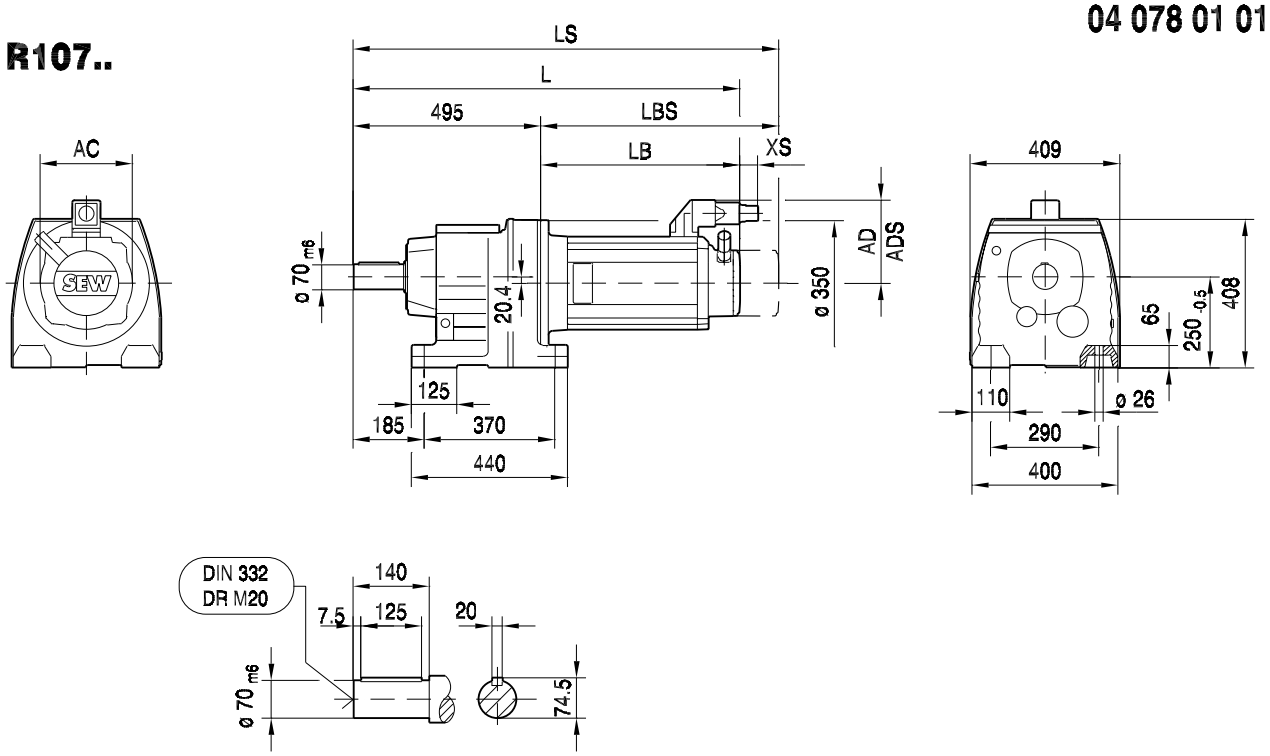

(→ 105)	CM112S	CM112M	CM112L	CM112H							
AC	186	186	186	186							
AD	162	162	162	162							
ADS	162	162	162	162							
L	791	818	880	1010							
LS	881	908	970	1075							
LB	296	323	385	515							
LBS	386	413	475	580							
XS	36	36	36	36							

04 079 01 01

RF107..

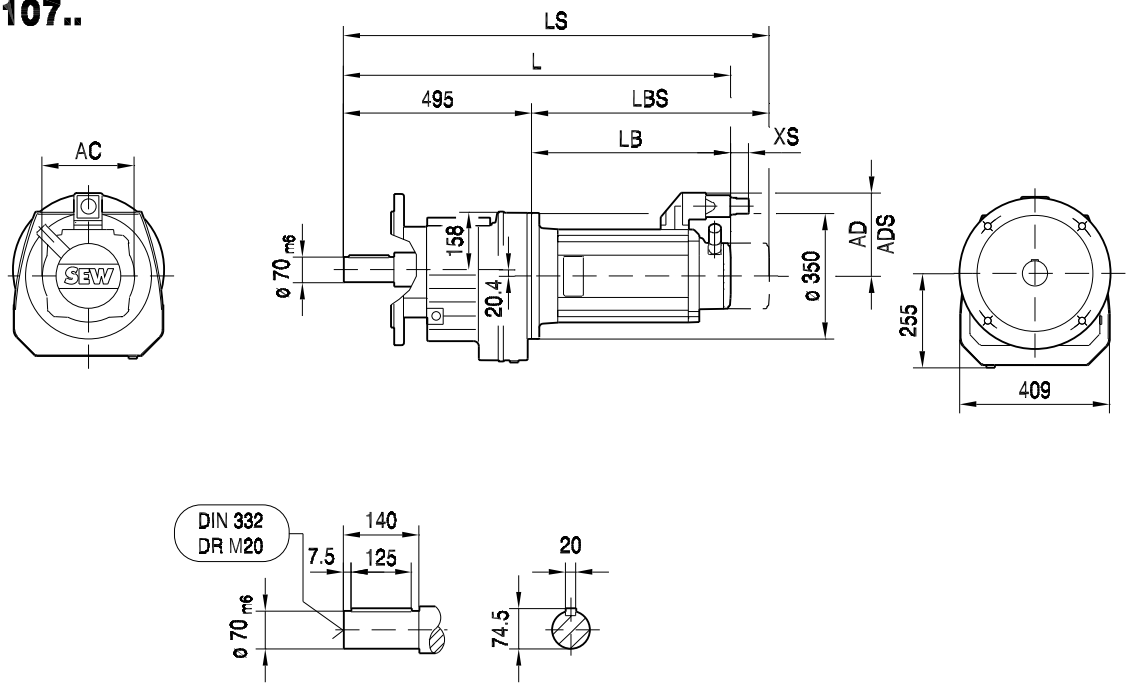

ø 350

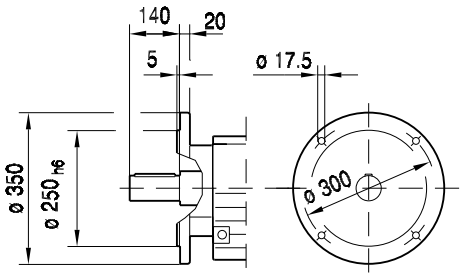

ø 450

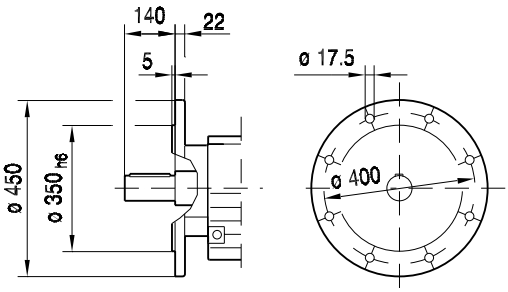

(→ 105)	CM112S	CM112M	CM112L	CM112H							
AC	186	186	186	186							
AD	162	162	162	162							
ADS	162	162	162	162							
L	791	818	880	1010							
LS	881	908	970	1075							
LB	296	323	385	515							
LBS	386	413	475	580							
XS	36	36	36	36							

8 F..DS/CM..

8.1 F, FA, FV, FH, FF, FAF, FVF, FHF, FA..B, FV..B, FH..B, FAZ, FVZ, FAF, FVF.. DS/CM

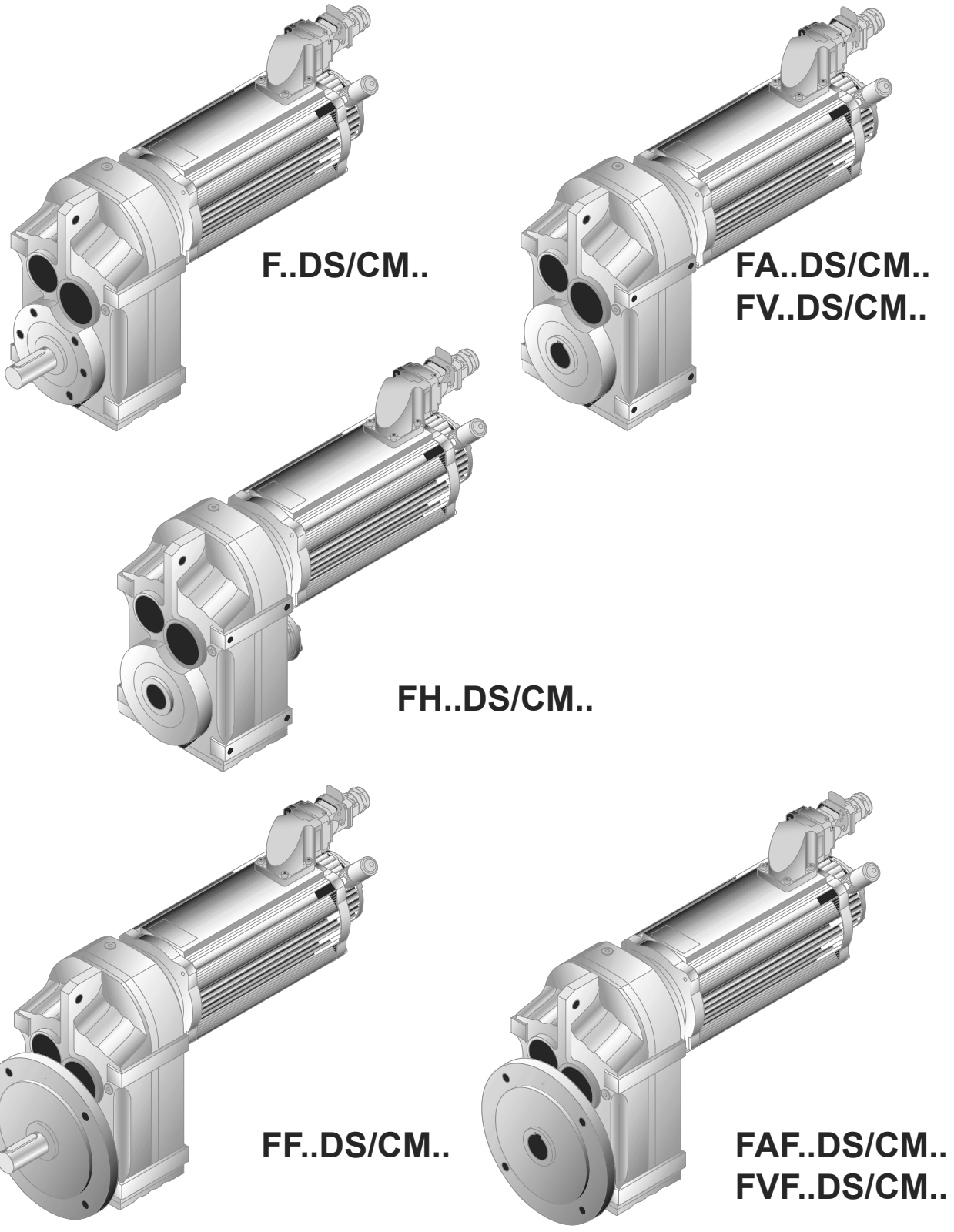

52497AXX

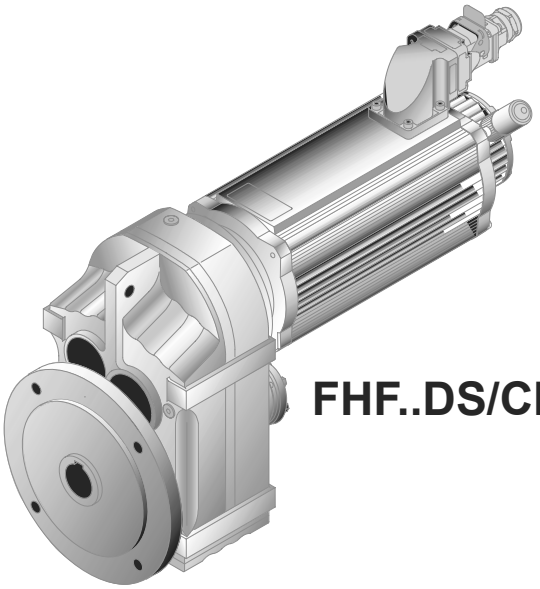

FHF..DS/CM..

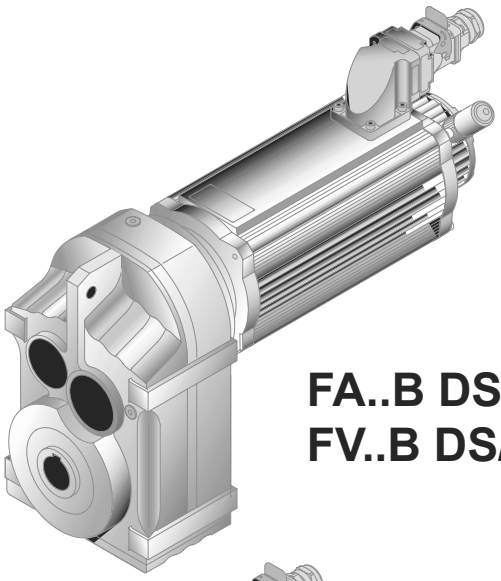

FA..B DS/CM..
FV..B DS/CM..

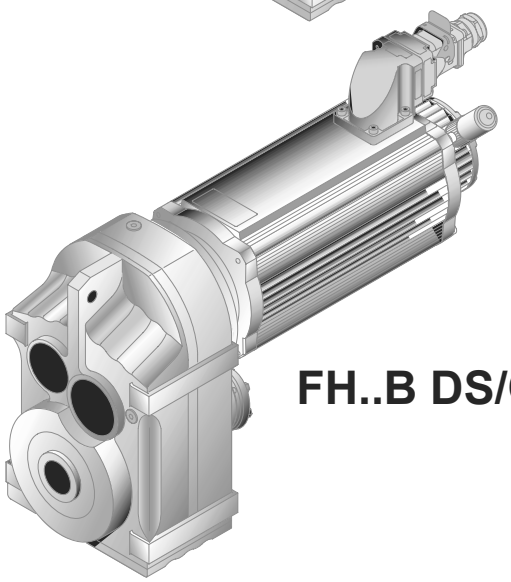

FH..B DS/CM..

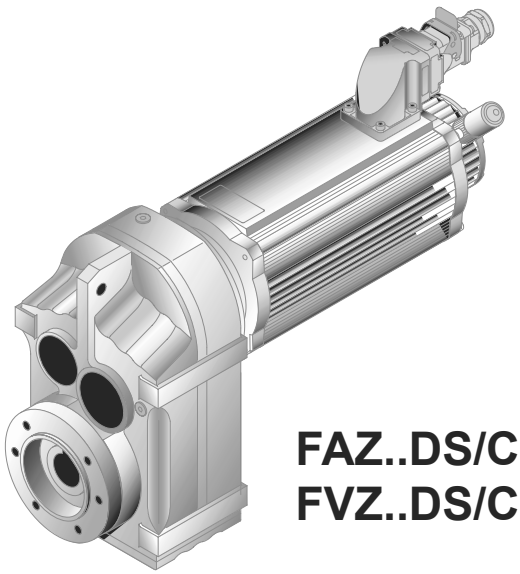

FAZ..DS/CM..
FVZ..DS/CM..

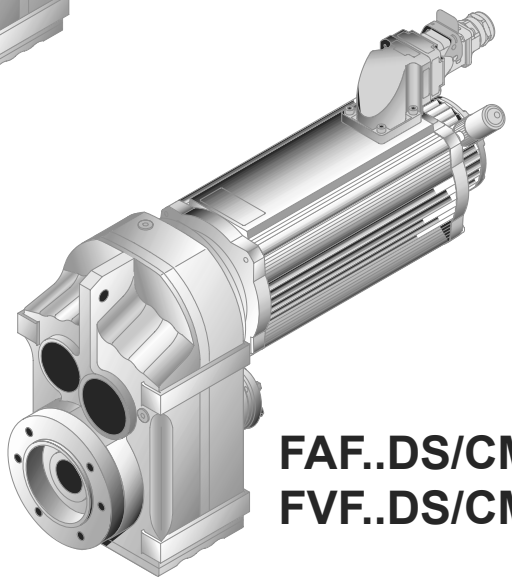

FAF..DS/CM..
FVF..DS/CM..

52495AXX

8.2 F27 DS/CM.. [Nm]

	$M_{a\ max}$ [Nm]	i	φ (/R) [']	F_{Ra}(F) [N]	F_{Ra}(FA) [N]	$J_G 10^{-4}$ [kgm^2]	DS 56M	DS 56L	DS 56H	CM 71S	CM 71M	CM 71L	CM 90S
	130	140.74	-	4500	4500	0.08							
FA27	130	129.09	-	4500	4500	0.09							
	130	109.90	-	4500	4500	0.12							
FAF27	130	94.76	-	4500	4500	0.15							
	130	88.32	-	4500	4500	0.16							
F27	130	77.21	-	4500	4500	0.20							
	130	72.37	-	4500	4500	0.22							
FF27	130	63.86	-	4280	4500	0.26							
	130	56.62	-	4060	4500	0.31							
	130	50.19	-	3860	4500	0.17							
3	130	46.78	-	3740	4500	0.18							
	130	40.89	-	3530	4500	0.23							
	130	38.33	-	3430	4500	0.26							
	130	33.83	-	3240	4250	0.31							
	130	29.56	-	3050	4000	0.13							
FA27	130	27.18	-	2930	3840	0.15							
	130	23.25	-	2720	3570	0.19							
FAF27	130	20.15	-	2540	3340	0.23							
	130	18.84	-	2460	3230	0.26							
F27	130	16.28	-	2290	3000	0.32							
	130	13.84	-	2110	2760	0.43							
FF27	130	12.35	-	1990	2610	0.51							
	130	10.55	-	1830	2400	0.67							
	130	9.88	-	1760	2310	0.74							
2	130	9.40	-	1590	2080	0.33							
	123	8.13	-	1520	2000	0.42							
	114	6.91	-	1470	1920	0.56							
	109	6.17	-	1420	1860	0.68							
	100	5.27	-	1380	1810	0.90							
	96	4.93	-	1370	1790	1.01							
	87	4.16	-	1330	1740	1.35							

m [kg]		DS 56M	DS 56L	DS 56H	CM 71S	CM 71M	CM 71L	CM 90S
FA27	**3** 	7.7	8.7	9.4	-	-	-	-
	2 	7.5	8.5	9.2	13	15	18	23

FAF27: + 0.70 kg / F27: + 0.50 kg / FF27: + 1.3 kg

8.3 F37 DS/CM.. [Nm]

	$M_{a\ max}$ [Nm]	i	φ (/R) [']	F_{Ra}(F) [N]	F_{Ra}(FA) [N]	$J_G 10^{-4}$ [kgm^2]	DS 56M	DS 56L	DS 56H	CM 71S	CM 71M	CM 71L	CM 90S
	200	128.51	7	4290	7000	0.08							
FA37	200	117.88	7	4290	7000	0.10							
	200	100.36	7	4290	7000	0.12							
FAF37	200	86.53	7	4290	7000	0.15							
	200	80.65	7	4290	7000	0.17							
F37	200	70.50	7	4290	7000	0.21							
	200	66.09	7	4290	7000	0.23							
FF37	200	58.32	7	4290	6860	0.27							
	200	54.54	8	4290	6660	0.15							
	200	51.70	7	4290	6510	0.34							
3	200	47.02	8	4290	6240	0.19							
	200	43.83	8	4290	6050	0.21							
	200	38.31	8	4290	5690	0.26							
	200	35.91	8	4290	5530	0.29							
	200	31.69	8	4160	5220	0.35							
	200	28.09	8	3930	4930	0.45							
	200	23.88	8	3640	4560	0.60							
	200	23.63	6	3620	4540	0.29							
FA37	200	20.57	6	3380	4240	0.36							
	200	19.27	6	3270	4100	0.40							
FAF37	200	17.03	6	3070	3850	0.48							
	200	15.81	6	2960	3710	0.52							
F37	200	14.33	7	2810	3520	0.63							
	200	12.87	7	2650	3330	0.74							
FF37	190	11.08	7	2530	3170	0.94							
	185	10.42	7	2490	3120	1.03							
	175	8.97	7	2370	2970	1.31							
2	170	8.01	7	2270	2850	1.54							
	145	7.44	10	2260	2840	0.83							
	140	6.74	10	2190	2750	1.01							
	135	6.05	10	2120	2650	1.22							
	125	5.21	10	2040	2560	1.58							
	120	4.90	11	2030	2540	1.76							
	110	4.22	11	1960	2460	2.29							
	105	3.77	12	1900	2380	2.77							

m [kg]		DS 56M	DS 56L	DS 56H	CM 71S	CM 71M	CM 71L	CM 90S
FA37	**3** 	14	15	16	20	21	25	-
	2 	14	15	15	20	21	24	29

FAF37: + 1.5 kg / F37: -- kg / FF37: + 2.3 kg

8.4 F47 DS/CM.. [Nm]

	$M_{a\ max}$ [Nm]	i	φ (/R) [']	F_{Ra}(F) [N]	F_{Ra}(FA) [N]	$J_G 10^{-4}$ [kgm^2]	DS 56M	DS 56L	DS 56H	CM 71S	CM 71M	CM 71L	CM 90S
FA47	400	190.76	6	5920	10000	0.13							
	400	175.38	6	5920	10000	0.14							
FAF47	400	150.06	6	5920	9340	0.18							
	400	130.07	6	5920	8750	0.23							
F47	400	121.57	6	5920	8480	0.25							
	400	105.09	6	5920	7920	0.30							
FF47	400	89.29	6	5920	7320	0.40							
	400	79.72	6	5920	6920	0.48							
	400	68.09	6	5920	6400	0.61							
	400	65.36	7	5920	6260	0.29							
3	400	56.49	7	5920	5810	0.36							
	400	48.00*	7	5920	5320	0.48							
	400	42.86	7	5920	5000	0.58							
	400	36.61	7	5920	4570	0.76							
	400	34.29	7	5920	4400	0.85							
	400	28.88	7	5590	3960	1.13							
	400	30.86	6	5780	4130	0.46							
FA47	400	29.32	6	5640	4000	0.52							
	400	25.72	6	5280	3680	0.75							
FAF47	400	21.82	6	4850	3310	0.96							
	400	19.70	6	4600	3080	1.11							
F47	400	17.33	6	4290	2810	1.39							
	400	16.36	6	4160	2690	1.52							
FF47	400	13.93	6	3800	2380	1.85							
	400	12.66	6	3590	2200	2.12							
	400	10.97	6	3300	1930	2.62							
	330	8.96	8	3120	1860	1.64							
2	380	7.88	8	2510	1170	2.08							
	380	7.44*	8	2400	1080	2.29							
	350	6.34	8	2360	1120	2.92							
	340	5.76	9	2270	1080	3.43							
	320	4.99	9	2200	1070	4.37							

m [kg]		DS 56M	DS 56L	DS 56H	CM 71S	CM 71M	CM 71L	CM 90S
FA47	3 	19	20	20	25	26	29	34
	2 	18	19	20	24	25	29	33

FAF47: + 2.7 kg / F47: + 0.80 kg / FF47: + 3.9 kg



8.5 F57 DS/CM.. [Nm]

	$M_{a\ max}$ [Nm]	i	φ (/R) [']	F_{Ra}(F) [N]	F_{Ra}(FF) [N]	F_{Ra}(FA) [N]	$J_G 10^{-4}$ [kgm^2]	DS 56H	CM 71S	CM 71M	CM 71L	CM 90S	CM 90M	CM 90L	CM 112S
	600	157.09	6	9200	7900	11500	0.19								
FA57	600	136.16	6	9200	7900	11500	0.23								
	600	127.27	6	9200	7900	11200	0.26								
FAF57	600	110.01	6	9200	7900	10400	0.31								
	600	93.47	6	9200	7900	9620	0.42								
F57	600	83.46	6	9200	7900	9100	0.51								
	600	72.98	6	9200	7900	8500	0.28								
FF57	600	68.22	6	9200	7900	8210	0.31								
	600	58.97	7	9200	7900	7600	0.38								
	600	50.10	7	9200	7900	6960	0.52								
3	600	44.73	7	8870	7900	6530	0.64								
	600	38.21	7	8230	7900	5960	0.84								
	600	35.79	7	7980	7900	5740	0.94								
	590	30.15	7	7400	7600	5240	1.26								
	500	34.24	6	8410	8500	6350	0.43								
FA57	545	29.94	6	7640	7820	5560	0.53								
	535	28.45	6	7520	7690	5470	0.59								
FAF57	575	24.96	6	6820	7030	4760	0.84								
	600	21.17	6	6130	6360	4080	1.09								
F57	600	19.11	6	5800	6040	3790	1.29								
	600	16.81	6	5410	5660	3440	1.62								
FF57	600	15.88	6	5240	5490	3290	1.78								
	600	13.52	6	4780	5040	2880	2.21								
	600	12.29	6	4520	4790	2640	2.57								
2	600	10.64	6	4140	4420	2310	3.24								
	420	9.31	8	4590	4780	3010	2.02								
	420	8.19	8	4290	4480	2740	2.61								
	420	7.73	8	4150	4350	2620	2.89								
	420	6.58	8	3790	3990	2300	3.78								
	420	5.98	9	3580	3790	2110	4.49								
	415	5.18	9	3320	3530	1890	5.81								

m [kg]		DS 56H	CM 71S	CM 71M	CM 71L	CM 90S	CM 90M	CM 90L	CM 112S
FA57	**3** 	28	32	34	37	41	44	49	-
	2 	27	32	33	37	41	43	48	50

FAF57: + 5.5 kg / F57: -- kg / FF57: + 6.7 kg

8.6 F67 DS/CM.. [Nm]

	$M_{a\ max}$ [Nm]	i	φ (/R) [']	F_{Ra}(F) [N]	F_{Ra}(FA) [N]	$J_G 10^{-4}$ [kgm^2]	DS 56H	CM 71S	71M	71L	90S	90M
	820	195.39	6	10300	13000	0.34						
FA67	820	170.85	6	10300	12300	0.42						
	820	162.31	6	10300	12000	0.47						
FAF67	820	142.40	6	10300	11300	0.68						
	820	120.79	6	10300	10400	0.85						
F67	820	109.04	6	10300	9870	0.98						
	820	95.94	6	10300	9230	1.24						
FF67	820	90.59	6	10300	8950	1.35						
	820	79.76	6	10300	8360	0.76						
	820	67.65	6	10300	7630	0.97						
3	820	61.07	6	10300	7190	1.13						
	820	53.73	6	10300	6670	1.42						
	820	50.74	6	10300	6440	1.57						
	820	43.20	6	10300	5820	1.93						
	780	39.26	6	10700	5730	2.23						
	740	34.01	6	11000	5490	2.77						
	820	36.30	5	10300	5190	0.98						
FA67	820	32.08	5	10300	4770	1.36						
	820	27.41	5	10300	4250	1.73						
FAF67	820	25.13	5	10300	3970	2.02						
	820	22.05	5	10300	3580	2.52						
F67	820	20.90*	5	10300	3420	2.73						
	820	18.29	6	10300	3040	3.35						
FF67	820	16.48	6	10300	2750	3.77						
	820	14.46	6	10300	2400	4.60						
	820	12.76	6	10300	2080	5.56						
2	820	11.31	6	10300	1790	6.69						
	820	9.66	6	10300	1420	8.53						
	530	9.08	8	11100	2460	3.98						
	570	8.60	8	10600	2030	4.36						
	610	7.53	8	9850	1430	5.47						
	620	6.78	9	9390	1140	6.34						
	610	5.95	9	8940	960	7.99						
	590	5.25	9	8600	880	9.96						
	560	4.66	9	8350	900	12.32						
	500	3.97	10	8160	1100	16.32						

m [kg]		DS 56H	CM 71S	71M	71L	90S	90M
FA67	**3** 	32	36	37	41	45	48
	2 	31	35	36	40	44	47

FAF67: + 6.3 kg / F67: + 2.8 kg / FF67: + 8.9 kg



F..DS/CM..
F67 DS/CM.. [Nm]

F67 DS/CM..

	$M_{a\ max}$ [Nm]	i	φ (/R) [']	$F_{Ra}(F)$ [N]	$F_{Ra}(FA)$ [N]	$J_G 10^{-4}$ [kgm^2]	CM 90L	CM 112S	CM 112M
	820	195.39	6	10300	13000	0.34			
FA67	820	170.85	6	10300	12300	0.42			
	820	162.31	6	10300	12000	0.47			
FAF67	820	142.40	6	10300	11300	0.68			
	820	120.79	6	10300	10400	0.85			
F67	820	109.04	6	10300	9870	0.98			
	820	95.94	6	10300	9230	1.24			
FF67	820	90.59	6	10300	8950	1.35			
	820	79.76	6	10300	8360	0.76			
	820	67.65	6	10300	7630	0.97			
3	820	61.07	6	10300	7190	1.13			
	820	53.73	6	10300	6670	1.42			
	820	50.74	6	10300	6440	1.57			
	820	43.20	6	10300	5820	1.93			
	780	39.26	6	10700	5730	2.23			
	740	34.01	6	11000	5490	2.77			
	820	36.30	5	10300	5190	0.98			
FA67	820	32.08	5	10300	4770	1.36			
	820	27.41	5	10300	4250	1.73			
FAF67	820	25.13	5	10300	3970	2.02			
	820	22.05	5	10300	3580	2.52			
F67	820	20.90*	5	10300	3420	2.73			
	820	18.29	6	10300	3040	3.35			
FF67	820	16.48	6	10300	2750	3.77			
	820	14.46	6	10300	2400	4.60			
	820	12.76	6	10300	2080	5.56			
	820	11.31	6	10300	1790	6.69			
2	820	9.66	6	10300	1420	8.53			
	530	9.08	8	11100	2460	3.98			
	570	8.60	8	10600	2030	4.36			
	610	7.53	8	9850	1430	5.47			
	620	6.78	9	9390	1140	6.34			
	610	5.95	9	8940	960	7.99			
	590	5.25	9	8600	880	9.96			
	560	4.66	9	8350	900	12.32			
	500	3.97	10	8160	1100	16.32			

m [kg]		CM 90L	CM 112S	CM 112M
FA67	**3** 	53	54	-
	2 	52	53	57

FAF67: + 6.3 kg / F67: + 2.8 kg / FF67: + 8.9 kg

8.7 F77 CM.. [Nm]

	$M_{a\ max}$ [Nm]	i	$\varphi_{(/R)}$ [']	$F_{Ra}(F)$ [N]	$F_{Ra}(FA)$ [N]	$J_G 10^{-4}$ [kgm^2]	CM 71S	71M	71L	90S	90M	90L
FA77	1500	198.31	5	15700	17500	0.82						
	1500	188.40	5	15700	17100	0.91						
FAF77	1500	166.47	5	15700	16100	1.28						
	1500	142.27	5	15700	14900	1.61						
F77	1500	130.42	5	15700	14200	1.87						
	1500	114.45	5	15700	13300	2.28						
FF77	1500	108.46*	5	15700	12900	2.46						
	1500	94.93	5	15700	12000	3.00						
	1500	85.52	6	15700	11400	3.33						
	1500	75.02	6	15700	10500	3.99						
3	1500	72.50	6	15700	10300	1.91						
	1500	66.46	6	15700	9810	2.23						
	1500	58.32	6	15700	9060	2.76						
	1500	55.27	6	15700	8760	3.04						
	1500	48.37	6	15700	8040	3.75						
	1500	43.58	6	15700	7500	4.27						
	1500	38.23	6	15700	6850	5.24						
	1500	33.74	6	15700	6250	6.42						
	1500	29.91	6	15700	5700	7.83						
	1450	25.54	6	16100	5260	10.15						
FA77	1110	36.58	5	17900	8660	3.04						
	1380	31.51	5	16500	6560	3.84						
FAF77	1430	28.75	5	16200	5880	4.43						
	1500	25.50*	5	15700	5000	5.46						
F77	1500	21.43	5	15700	4280	7.11						
	1500	19.70	5	15700	3940	7.94						
FF77	1500	17.49	5	15700	3490	9.50						
	1500	15.64*	5	15700	3080	11.24						
	1500	14.06	5	15400	2700	13.16						
	1500	12.20	5	14500	2210	16.08						
2	1500	10.93	6	13800	1850	18.96						
	1080	9.30	7	13400	2090	11.62						
	1080	8.26	7	12700	1740	14.17						
	1080	7.39	7	12200	1420	16.95						
	1080	6.64	8	11600	1120	20.25						
	1080	5.76	8	10900	745	25.54						
	1080	5.16	8	10400	465	30.78						
	1010	4.28	8	9890	465	41.67						

m [kg]		CM 71S	71M	71L	90S	90M	90L
FA77	3 	59	60	64	68	71	76
	2 	57	59	62	67	69	74

FAF77: + 6.6 kg / F77: + 3.8 kg / FF77: + 14 kg



F..DS/CM..
F77 CM.. [Nm]

F77 CM..

	$M_{a\ max}$ [Nm]	i	φ (/R) [']	F_{Ra}(F) [N]	F_{Ra}(FA) [N]	$J_G 10^{-4}$ [kgm^2]	CM 112S	CM 112M	CM 112L
	1500	198.31	5	15700	17500	0.82			
FA77	1500	188.40	5	15700	17100	0.91			
	1500	166.47	5	15700	16100	1.28			
FAF77	1500	142.27	5	15700	14900	1.61			
	1500	130.42	5	15700	14200	1.87			
F77	1500	114.45	5	15700	13300	2.28			
	1500	108.46*	5	15700	12900	2.46			
FF77	1500	94.93	5	15700	12000	3.00			
	1500	85.52	6	15700	11400	3.33			
	1500	75.02	6	15700	10500	3.99			
3	1500	72.50	6	15700	10300	1.91			
	1500	66.46	6	15700	9810	2.23			
	1500	58.32	6	15700	9060	2.76			
	1500	55.27	6	15700	8760	3.04			
	1500	48.37	6	15700	8040	3.75			
	1500	43.58	6	15700	7500	4.27			
	1500	38.23	6	15700	6850	5.24			
	1500	33.74	6	15700	6250	6.42			
	1500	29.91	6	15700	5700	7.83			
	1450	25.54	6	16100	5260	10.15			
	1110	36.58	5	17900	8660	3.04			
FA77	1380	31.51	5	16500	6560	3.84			
	1430	28.75	5	16200	5880	4.43			
FAF77	1500	25.50*	5	15700	5000	5.46			
	1500	21.43	5	15700	4280	7.11			
F77	1500	19.70	5	15700	3940	7.94			
	1500	17.49	5	15700	3490	9.50			
FF77	1500	15.64*	5	15700	3080	11.24			
	1500	14.06	5	15400	2700	13.16			
	1500	12.20	5	14500	2210	16.08			
	1500	10.93	6	13800	1850	18.96			
2	1080	9.30	7	13400	2090	11.62			
	1080	8.26	7	12700	1740	14.17			
	1080	7.39	7	12200	1420	16.95			
	1080	6.64	8	11600	1120	20.25			
	1080	5.76	8	10900	745	25.54			
	1080	5.16	8	10400	465	30.78			
	1010	4.28	8	9890	465	41.67			

m [kg]		CM 112S	CM 112M	CM 112L
FA77	**3** 	77	81	96
	2 	75	80	94

FAF77: + 6.6 kg / F77: + 3.8 kg / FF77: + 14 kg

8.8 F87 CM.. [Nm]

	$M_{a\ max}$ [Nm]	i	$\varphi_{(/R)}$ [']	$F_{Ra}(F)$ [N]	$F_{Ra}(FA)$ [N]	$J_G 10^{-4}$ [kgm^2]	CM 90S	90M	90L	112S	112M	112L	112H
FA87	3000	228.93	7	19800	26400	2.79							
	3000	197.20	7	19800	24400	3.51							
FAF87	3000	179.97	7	19800	23200	4.04							
	3000	159.61	7	19800	21700	4.93							
F87	3000	134.16	7	19800	19600	6.31							
	3000	123.29	7	19800	18600	7.02							
FF87	3000	109.49	7	19800	17300	8.26							
	3000	97.89	7	19800	16200	9.88							
	3000	88.01	7	19800	15100	11.44							
	3000	76.39	7	19800	13700	13.91							
3	3000	68.40	7	18800	12600	16.25							
	3000	56.75	7	17000	11000	20.50							
	2940	50.36	7	16100	10300	11.41							
	2820	45.28	8	15600	9990	13.26							
	2720	39.30	8	14800	9380	16.26							
	2610	35.19	8	14300	9100	19.20							
	2510	29.20	8	13200	8260	24.84							
	2610	33.92	7	14000	8830	10.13							
FA87	2450	28.78	7	13300	8460	13.12							
	3000	26.50	7	10600	5140	14.58							
FAF87	3000	23.68	7	9780	4400	17.27							
F87	3000	21.32*	7	9050	3730	20.06							
	3000	19.31	7	8380	3120	23.20							
FF87	3000	17.12	7	7590	2410	28.05							
	3000	15.48	7	6960	1830	32.40							
	3000	13.12*	7	5960	920	40.03							
	3000	11.46	7	5190	220	49.30							
2	2880	9.58	7	4680	0	62.73							
	1530	8.29	7	8540	5230	35.82							
	1530	7.35	7	7950	4690	43.82							
	1530	6.65	7	7470	4260	51.74							
	1530	5.63	7	6720	3570	67.08							
	1530	4.92	7	6130	3040	85.13							
	1460	4.12	7	5700	2760	113.95							

m [kg]		CM 90S	90M	90L	112S	112M	112L	112H
FA87	3 	110	110	115	115	120	135	140
	2 	105	110	115	110	115	130	140

FAF87: + 13 kg / F87: + 5.7 kg / FF87: + 21 kg

8.9 F97 CM.. [Nm]

	$M_{a\ max}$ [Nm]	i	φ (/R) [']	F_{Ra}(F) [N]	F_{Ra}(FA) [N]	$J_G 10^{-4}$ [kgm^2]	CM 90S	90M	90L	112S	112M	112L	112H
	4300	276.77	6	29900	40000	5.10							
FA97	4300	253.41	6	29900	40000	5.86							
	4300	223.88	6	29900	40000	9.18							
FAF97	4300	189.92	6	29900	40000	11.76							
	4300	174.87	6	29900	40000	12.99							
F97	4300	156.30	6	29900	40000	15.39							
	4300	140.71	6	29900	40000	17.82							
FF97	4300	127.42	6	29900	40000	20.41							
	4300	112.99	6	29900	38700	24.57							
	4300	102.16	6	29900	36800	28.11							
	4300	97.58	6	29900	36000	12.85							
3	4300	89.85	6	29900	34500	14.27							
	4300	86.59	6	29900	33900	34.02							
	4300	80.31	6	29900	32600	16.88							
	4300	75.63	6	29900	31600	41.67							
	4300	72.29	6	29400	30900	19.69							
	4300	65.47	6	28000	29300	22.61							
	4300	58.06	6	26300	27400	27.30							
	4300	52.49	6	24900	25900	31.48							
	4300	44.49	6	22800	23600	38.76							
	4300	38.86	6	21100	21800	47.92							
	4300	32.50	6	19000	19500	60.34							
	3070	43.28	6	26700	28300	12.91							
FA97	3070	36.64	6	24700	26100	16.66							
	4300	33.91	6	19500	20000	18.64							
FAF97	4300	30.39	6	18300	18600	22.11							
	4300	27.44*	6	17100	17400	28.25							
F97	4300	24.92	6	16100	16300	32.61							
	4300	22.11	6	14900	15000	38.85							
FF97	4300	20.07	6	13900	13900	44.75							
	4300	17.25*	6	12500	12400	55.22							
	4300	15.06	6	11300	11000	67.43							
	4300	12.77	6	9880	9470	85.31							
2	4100	11.16	6	9490	9100	103.89							
	2360	9.06	9	12800	13300	61.49							
	2360	8.22	9	12100	12500	72.23							
	2360	7.07	9	11100	11400	92.15							
	2250	6.17	9	10600	10900	116.37							
	2150	5.23	9	9960	10200	153.18							
	2050	4.57	9	9540	9780	192.73							
	1800	3.87	9	9570	9900	266.11							

m [kg]		CM 90S	90M	90L	112S	112M	112L	112H
FA97	**3** 	175	175	180	180	185	200	205
	2 	165	170	175	175	180	195	200

FAF97: + 22 kg / F97: + 7.5 kg / FF97: + 40 kg

8.10 F107 CM.. [Nm]

	$M_{a\ max}$ [Nm]	i	φ (/R) [']	F_{Ra}(F) [N]	F_{Ra}(FA) [N]	F_{Ra}(FAF) [N]	$J_G 10^{-4}$ [kgm^2]	CM 112S	112M	112L	112H
FA107	7680	254.40*	5	49800	56700	65000	11.54				
	7680	215.37	5	49800	52200	65000	14.75				
FAF107	7680	199.31	5	49800	50100	65000	16.41				
	7680	178.64	5	49800	47400	65000	19.33				
F107	7680	161.28*	5	49800	44900	65000	24.96				
	7680	146.49	5	49800	42600	65000	28.60				
FF107	7680	129.97	5	49800	39900	65000	34.01				
	7680	117.94	5	49800	37800	65000	38.66				
	7680	101.38*	5	49800	34600	65000	46.88				
	7680	92.47*	6	49800	32700	65000	26.67				
3	7680	88.49	5	49800	31800	65000	56.40				
	7680	83.99	6	49800	30800	65000	30.70				
	7680	74.52	6	49800	28600	65000	36.71				
	7680	67.62	6	49600	26800	65000	42.08				
	7680	58.12*	6	46400	24100	65000	51.22				
	7680	50.73	6	43800	21900	65000	62.19				
	7680	43.03	6	40700	19300	65000	77.27				
	7680	37.61	6	38300	17200	65000	94.35				
	7680	31.80	6	35400	14800	65000	125.47				
	7400	33.79*	5	37200	16700	65000	43.00				
FA107	7840	27.57	5	32600	12300	65000	66.34				
	7840	25.14	5	31200	11100	62600	75.96				
FAF107	7840	21.76*	5	29000	9280	58800	92.16				
	7840	19.20*	5	27100	7780	55700	111.68				
F107	7840	16.58	5	25100	6090	52200	138.20				
	7680	14.67	5	23700	5300	49900	164.04				
FF107	7000	12.33	5	23400	5870	48300	208.89				
	6500	9.96	5	22100	5540	45500	280.05				
	4910	9.69	7	24600	9010	48600	153.69				
	4800	8.37	7	23200	8100	46100	194.52				
2	4600	7.40	7	22500	7800	44500	236.03				
	4600	6.22	7	20200	6350	41400	310.82				
	4600	5.03	7	15500	3580	37800	439.29				

m [kg]		CM 112S	112M	112L	112H
FA107	3 	255	260	275	280
	2 	245	250	265	270

FAF107: + 21 kg / F107: + 17 kg / FF107: + 44 kg

8.11 F..DS/CM..[mm]

42 120 01 01

F27..

DS56..

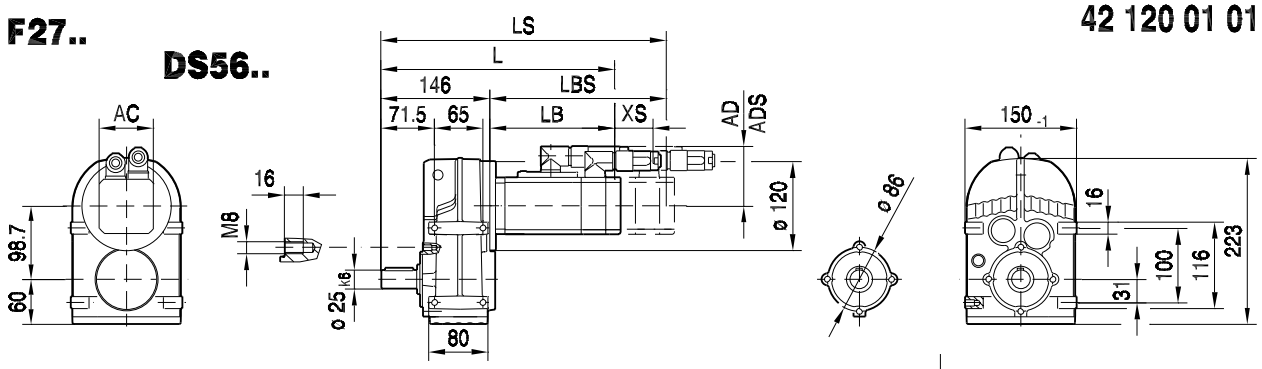

CM..

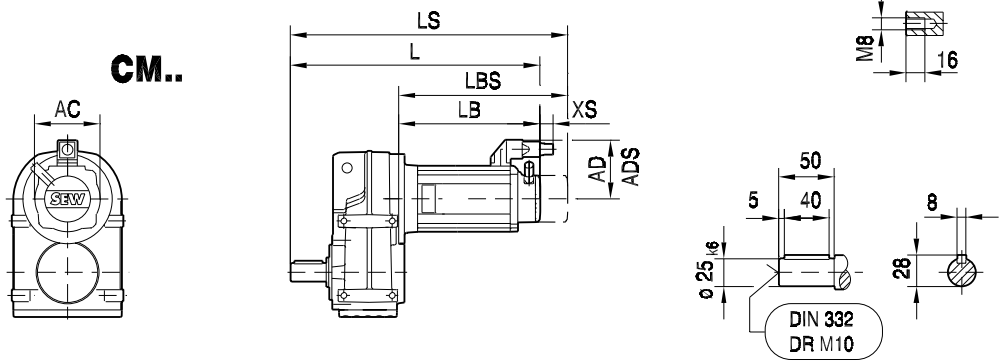

FA27B..

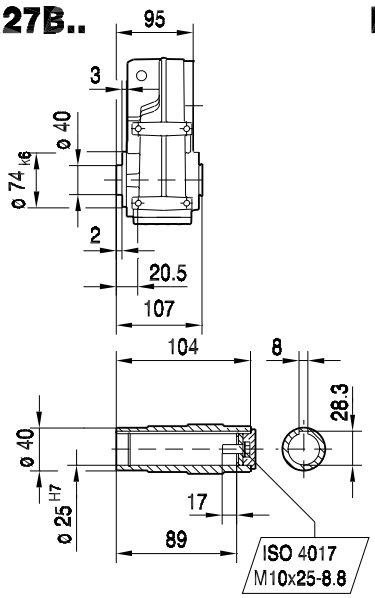

FH27B..

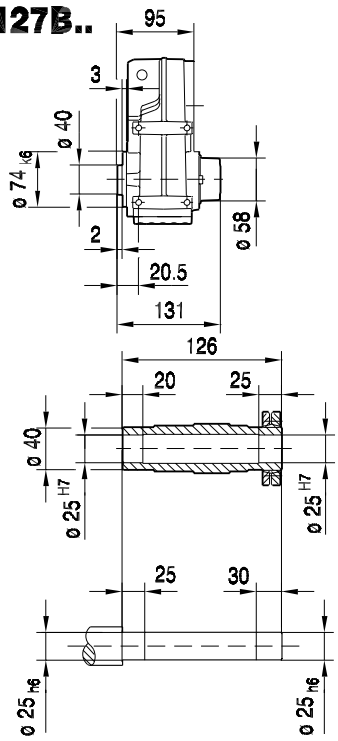

FV27B..

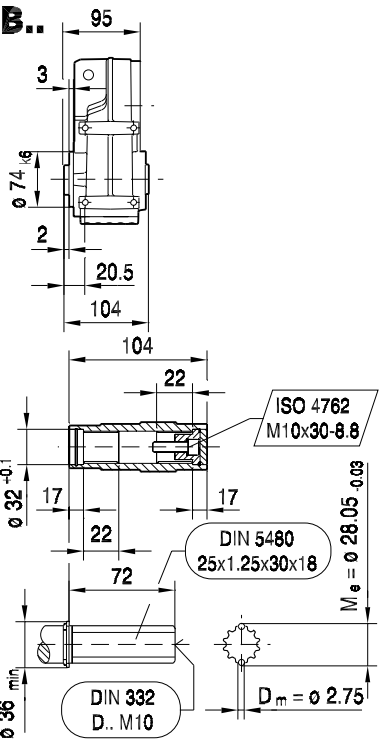

(→ 105)	DS56M	DS56L	DS56H	CM71S	CM71M	CM71L	CM90S				
AC	73	73	73	117	117	117	142				
AD	71	71	77	122	122	122	140				
ADS	77	77	77	122	122	122	140				
L	283	315	418	384	404	447	439				
LS	313	345	418	466	486	529	535				
LB	137	169	272	238	258	301	293				
LBS	167	199	272	320	340	383	389				
XS	70	70	51	45	45	45	50				

42 121 01 01

FF27..

DS56..

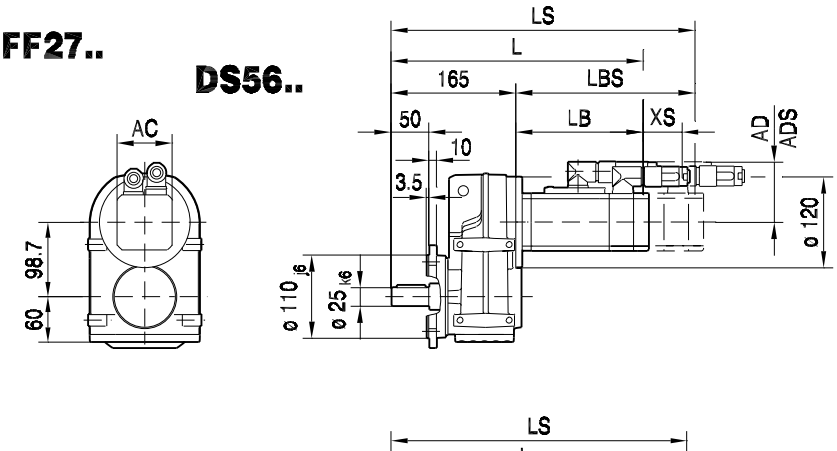

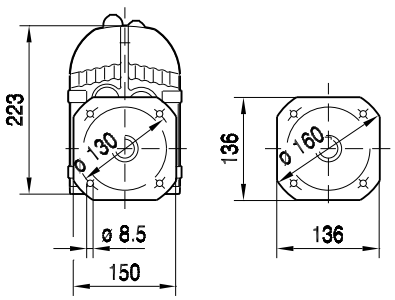

CM..

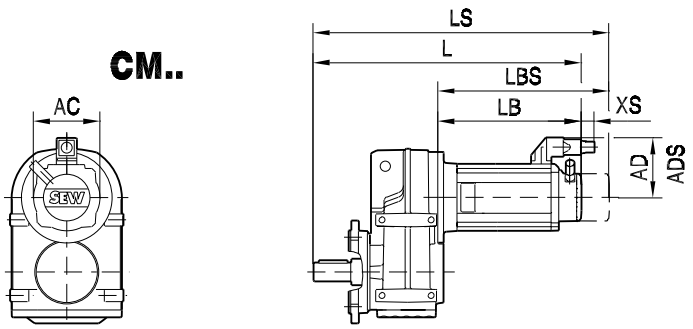

FAF27..

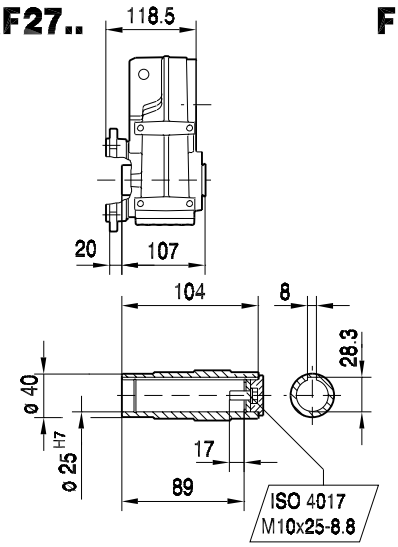

FHF27..

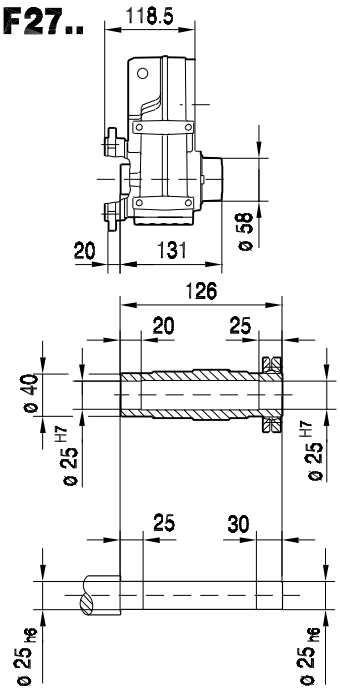

FVF27..

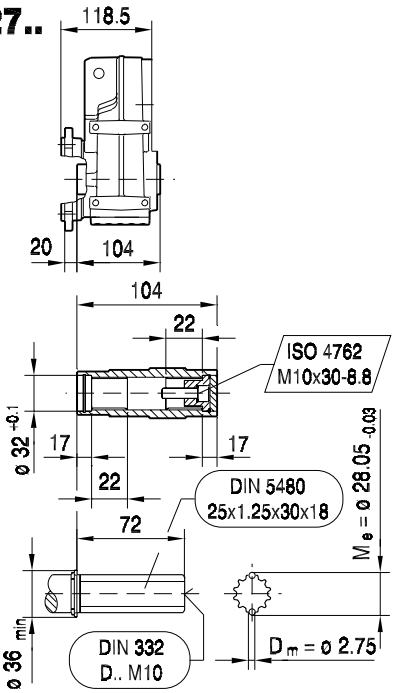

(→ 105)	DS56M	DS56L	DS56H	CM71S	CM71M	CM71L	CM90S				
AC	73	73	73	117	117	117	142				
AD	71	71	77	122	122	122	140				
ADS	77	77	77	122	122	122	140				
L	302	334	437	403	423	466	458				
LS	332	364	437	485	505	548	554				
LB	137	169	272	238	258	301	293				
LBS	167	199	272	320	340	383	389				
XS	70	70	51	45	45	45	50				

42 122 01 01

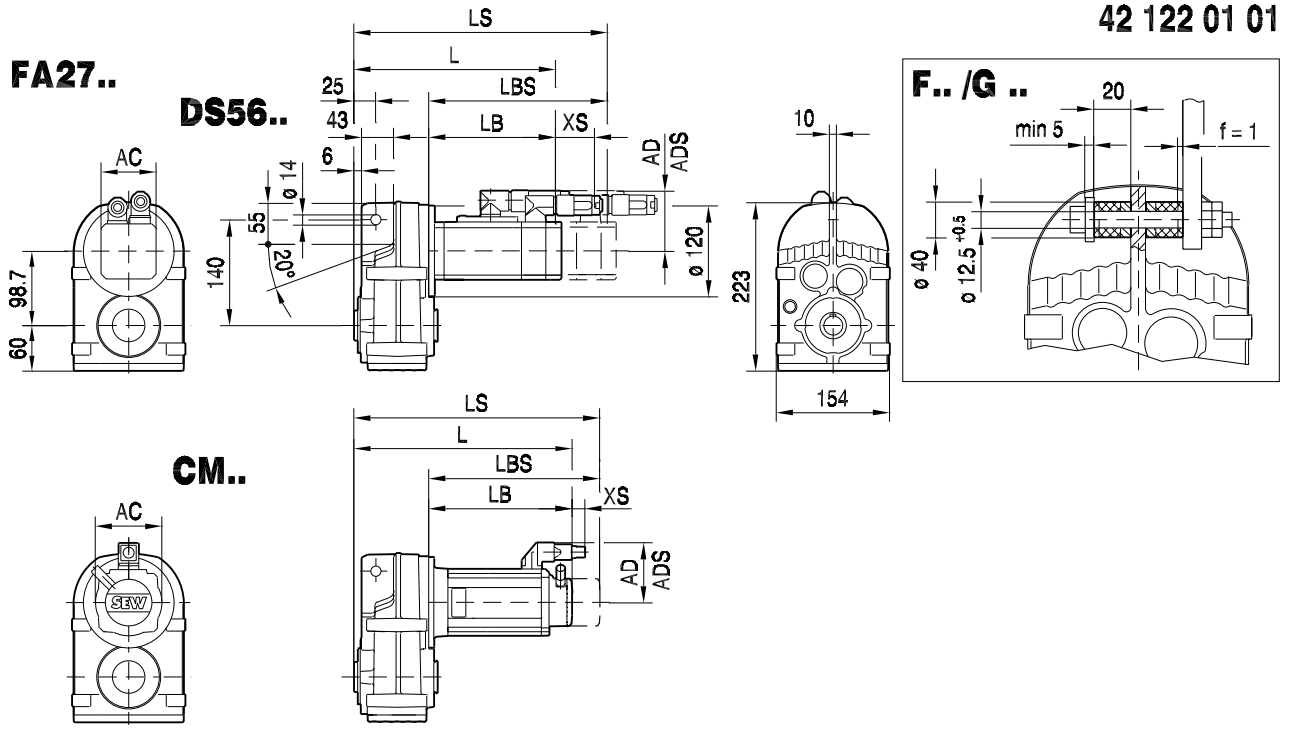

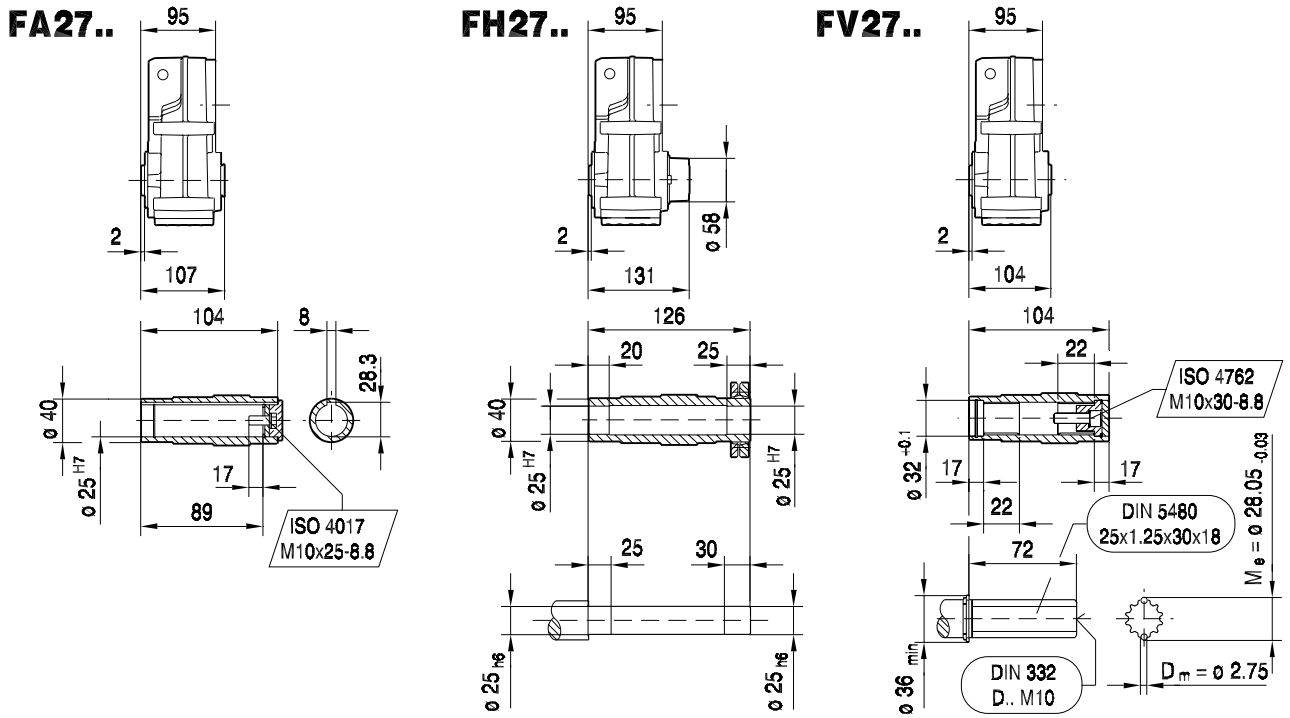

(→ 105)	DS56M	DS56L	DS56H	CM71S	CM71M	CM71L	CM90S				
AC	73	73	73	117	117	117	142				
AD	71	71	77	122	122	122	140				
ADS	77	77	77	122	122	122	140				
L	232	264	367	333	353	396	388				
LS	262	294	367	415	435	478	484				
LB	137	169	272	238	258	301	293				
LBS	167	199	272	320	340	383	389				
XS	70	70	51	45	45	45	50				

42 038 00 04

FAZ27..
DS56..

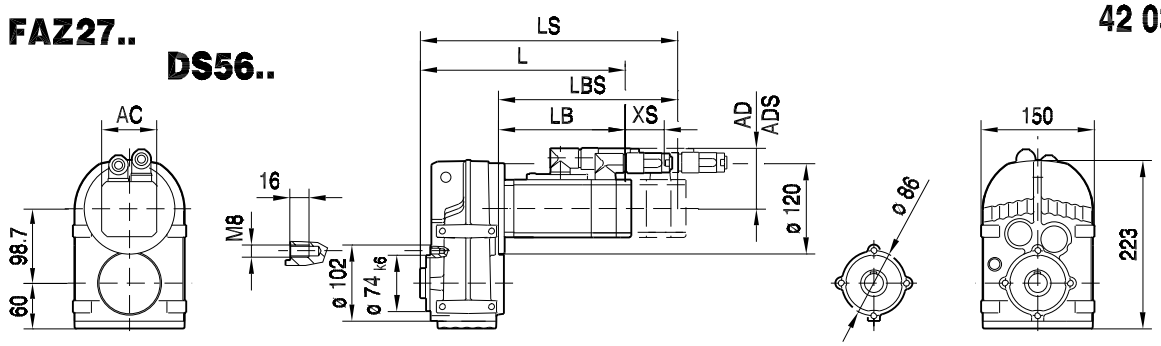

CM..

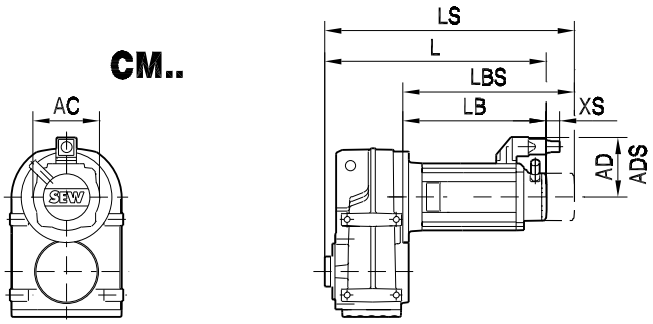

FAZ27..

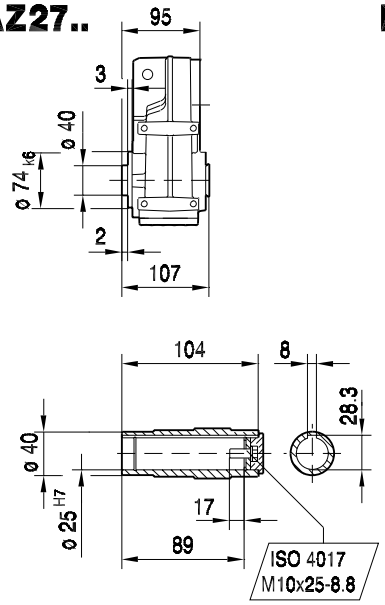

FHZ27..

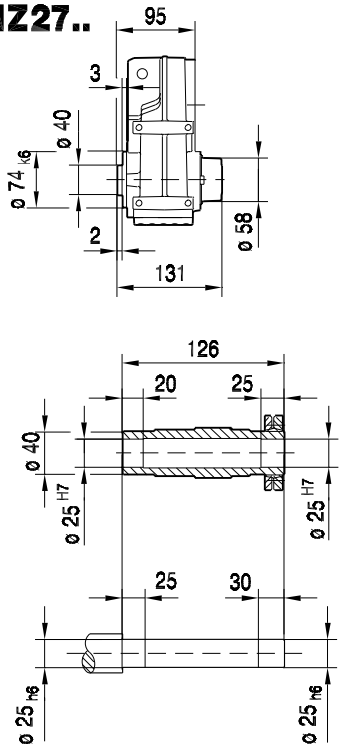

FVZ27..

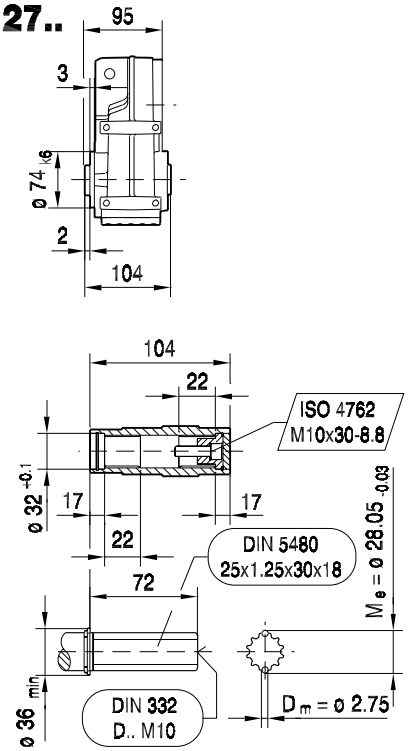

(→ 105)	DS56M	DS56L	DS56H	CM71S	CM71M	CM71L	CM90S				
AC	73	73	73	117	117	117	142				
AD	71	71	77	122	122	122	140				
ADS	77	77	77	122	122	122	140				
L	232	264	367	333	353	396	388				
LS	262	294	367	415	435	478	484				
LB	137	169	272	238	258	301	293				
LBS	167	199	272	320	340	383	389				
XS	70	70	51	45	45	45	50				

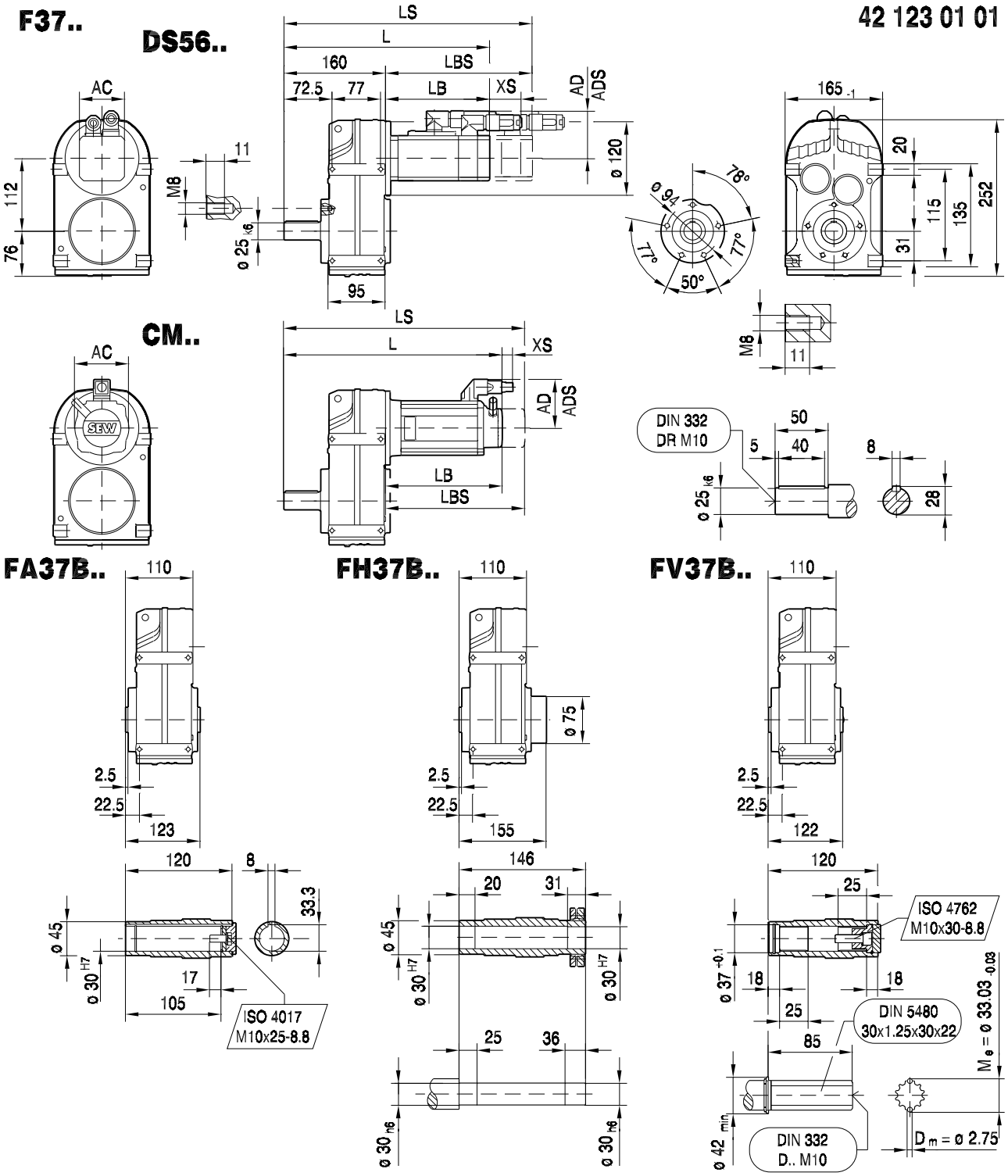

(→ 105)	DS56M	DS56L	DS56H	CM71S	CM71M	CM71L	CM90S				
AC	73	73	73	117	117	117	142				
AD	71	71	77	122	122	122	140				
ADS	77	77	77	122	122	122	140				
L	297	329	432	398	418	461	453				
LS	327	359	432	480	500	543	549				
LB	137	169	272	238	258	301	293				
LBS	167	199	272	320	340	383	389				
XS	70	70	51	45	45	45	50				

42 124 01 01

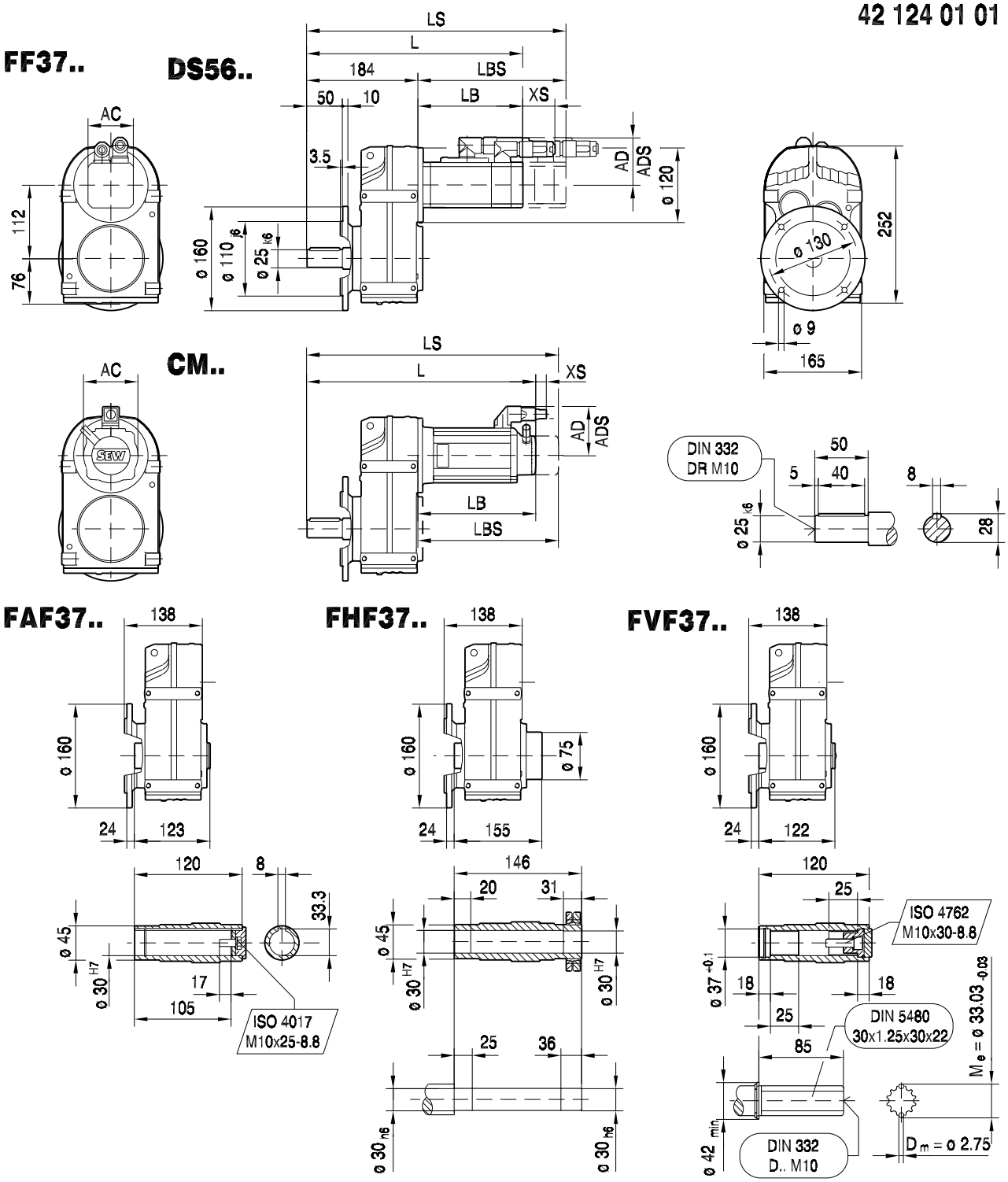

(→ 105)	DS56M	DS56L	DS56H	CM71S	CM71M	CM71L	CM90S				
AC	73	73	73	117	117	117	142				
AD	71	71	77	122	122	122	140				
ADS	77	77	77	122	122	122	140				
L	321	353	456	422	442	485	477				
LS	351	383	456	504	524	567	573				
LB	137	169	272	238	258	301	293				
LBS	167	199	272	320	340	383	389				
XS	70	70	51	45	45	45	50				

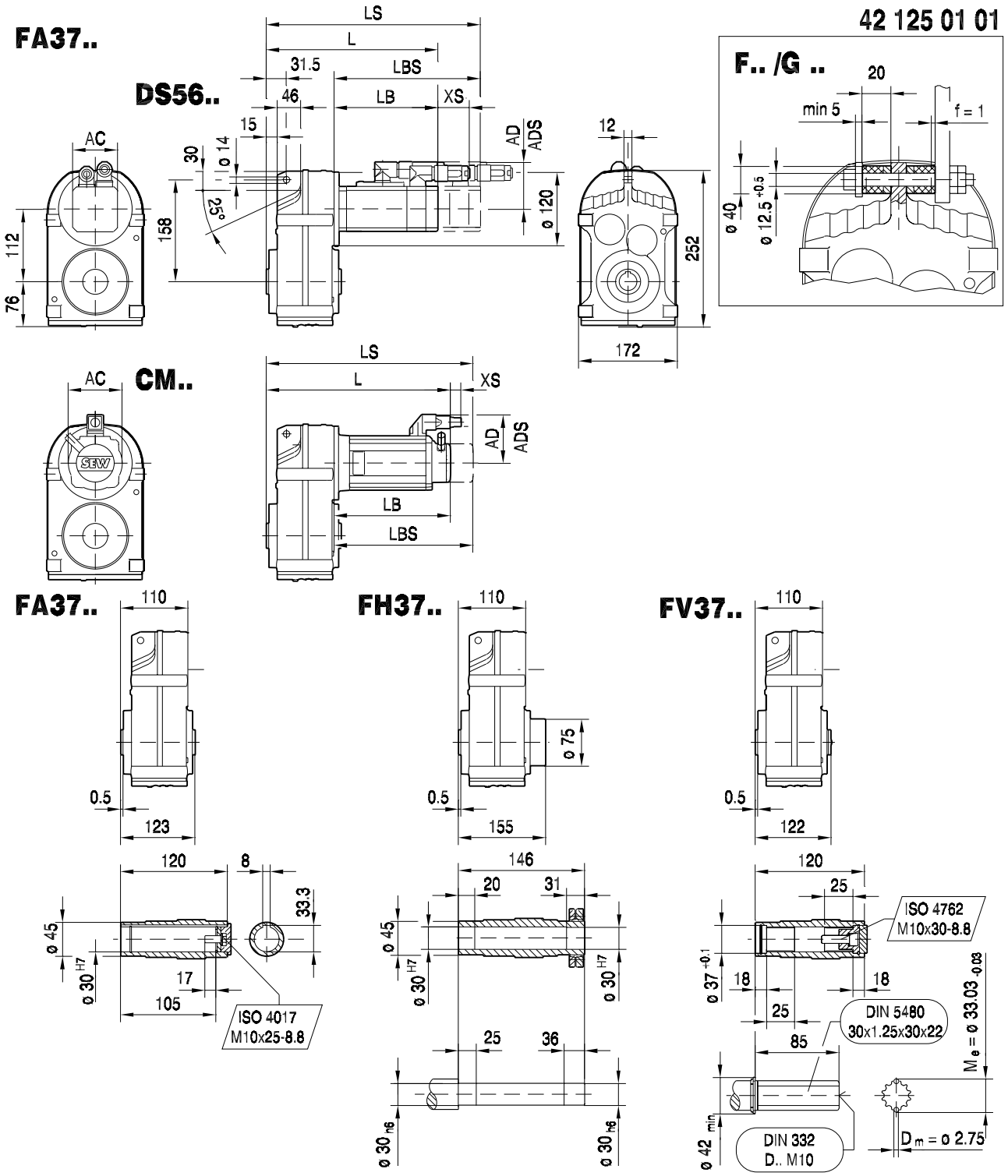

(→ 105)	DS56M	DS56L	DS56H	CM71S	CM71M	CM71L	CM90S				
AC	73	73	73	117	117	117	142				
AD	71	71	77	122	122	122	140				
ADS	77	77	77	122	122	122	140				
L	247	279	382	348	368	411	403				
LS	277	309	382	430	450	493	499				
LB	137	169	272	238	258	301	293				
LBS	167	199	272	320	340	383	389				
XS	70	70	51	45	45	45	50				

FAZ37.. DS56..

42 039 00 04

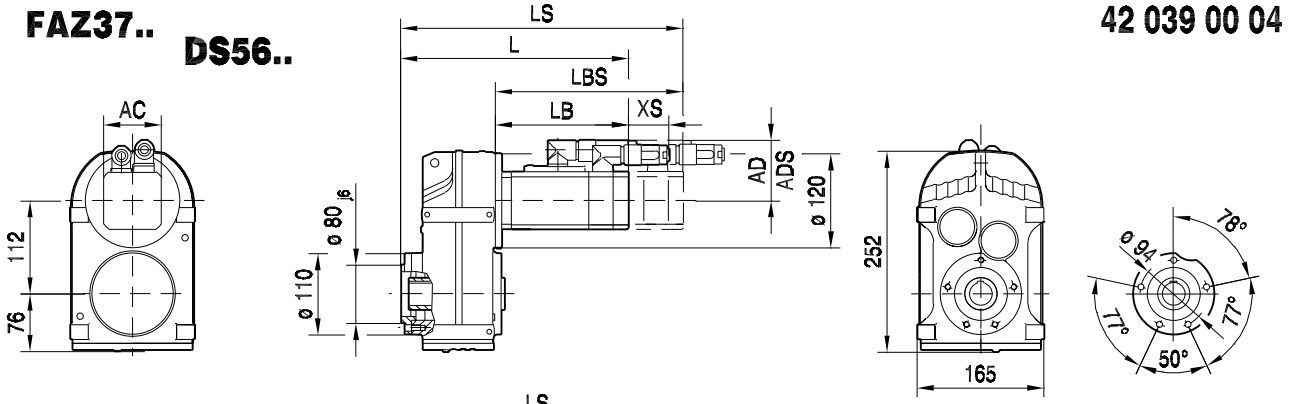

CM..

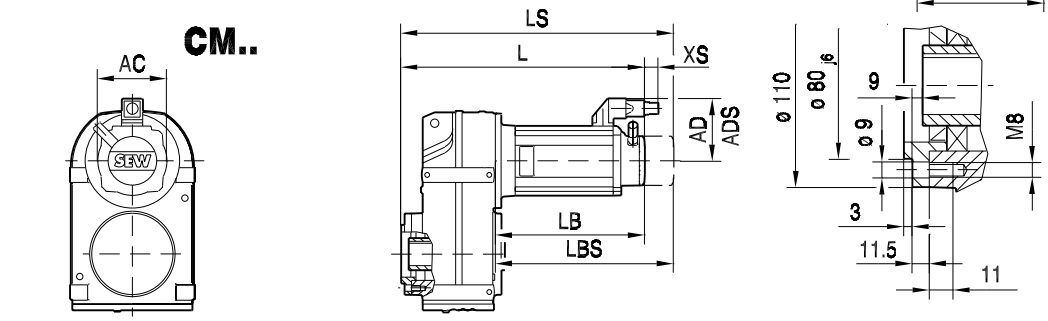

FAZ37..

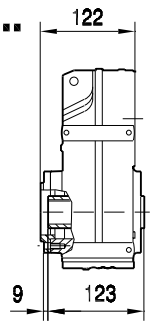

FHZ37..

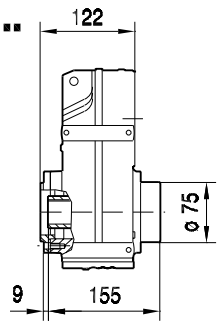

FVZ37..

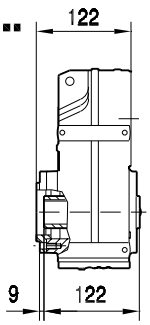

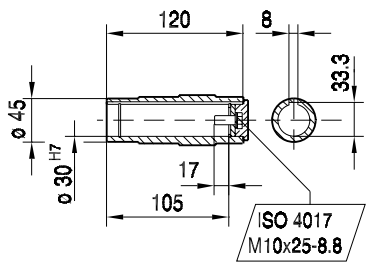

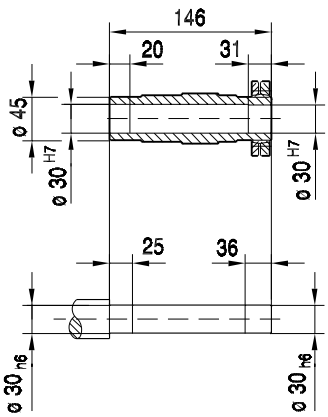

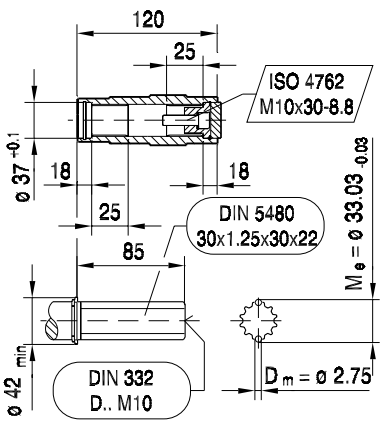

(→ 105)	DS56M	DS56L	DS56H	CM71S	CM71M	CM71L	CM90S				
AC	73	73	73	117	117	117	142				
AD	71	71	77	122	122	122	140				
ADS	77	77	77	122	122	122	140				
L	259	291	394	360	380	423	415				
LS	289	321	394	442	462	505	511				
LB	137	169	272	238	258	301	293				
LBS	167	199	272	320	340	383	389				
XS	70	70	51	45	45	45	50				

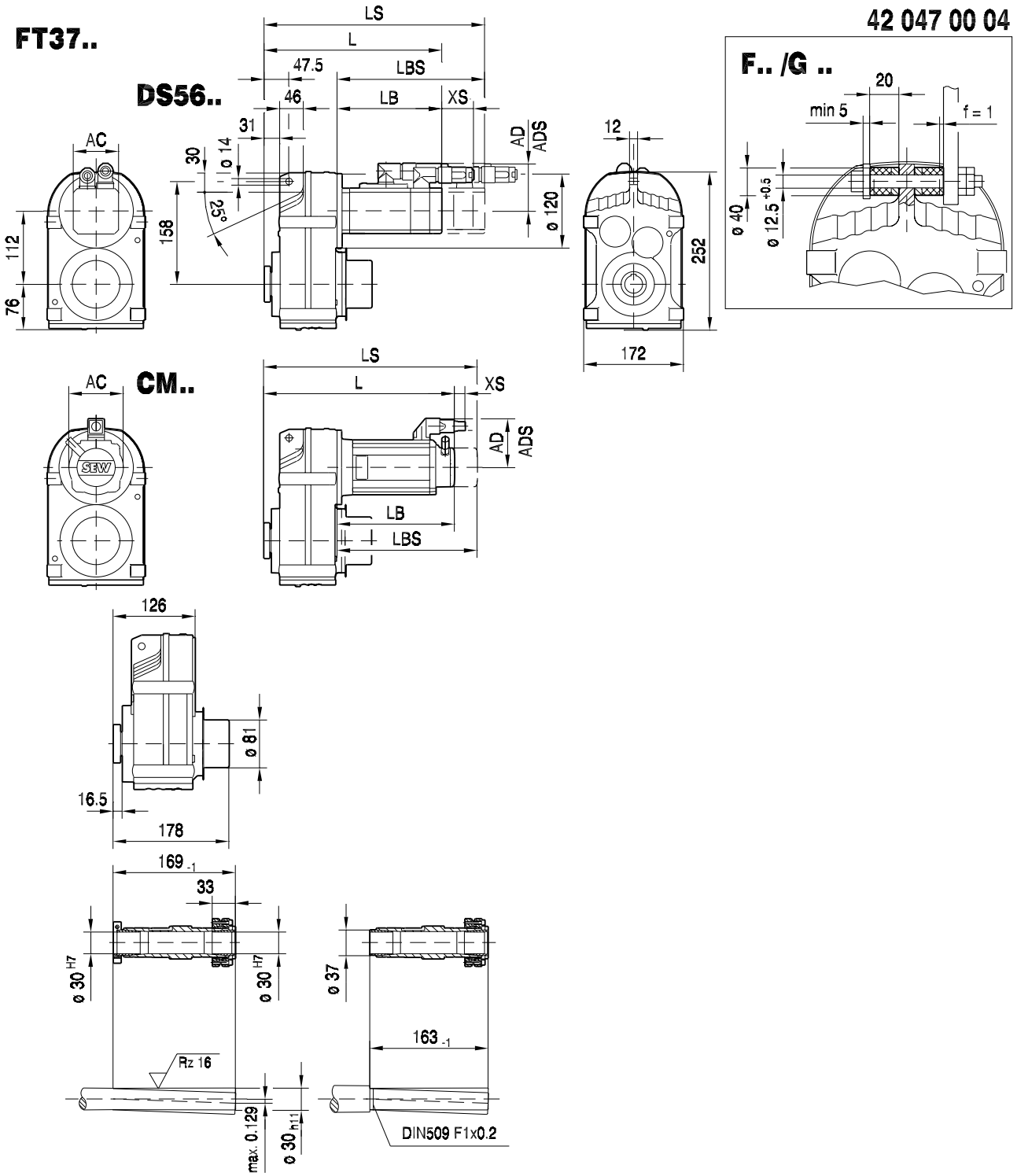

(→ 105)	DS56M	DS56L	DS56H	CM71S	CM71M	CM71L					
AC	73	73	73	117	117	117					
AD	71	71	77	122	122	122					
ADS	77	77	77	122	122	122					
L	263	295	398	364	384	427					
LS	293	325	398	446	466	509					
LB	137	169	272	238	258	301					
LBS	167	199	272	320	340	383					
XS	70	70	51	45	45	45					

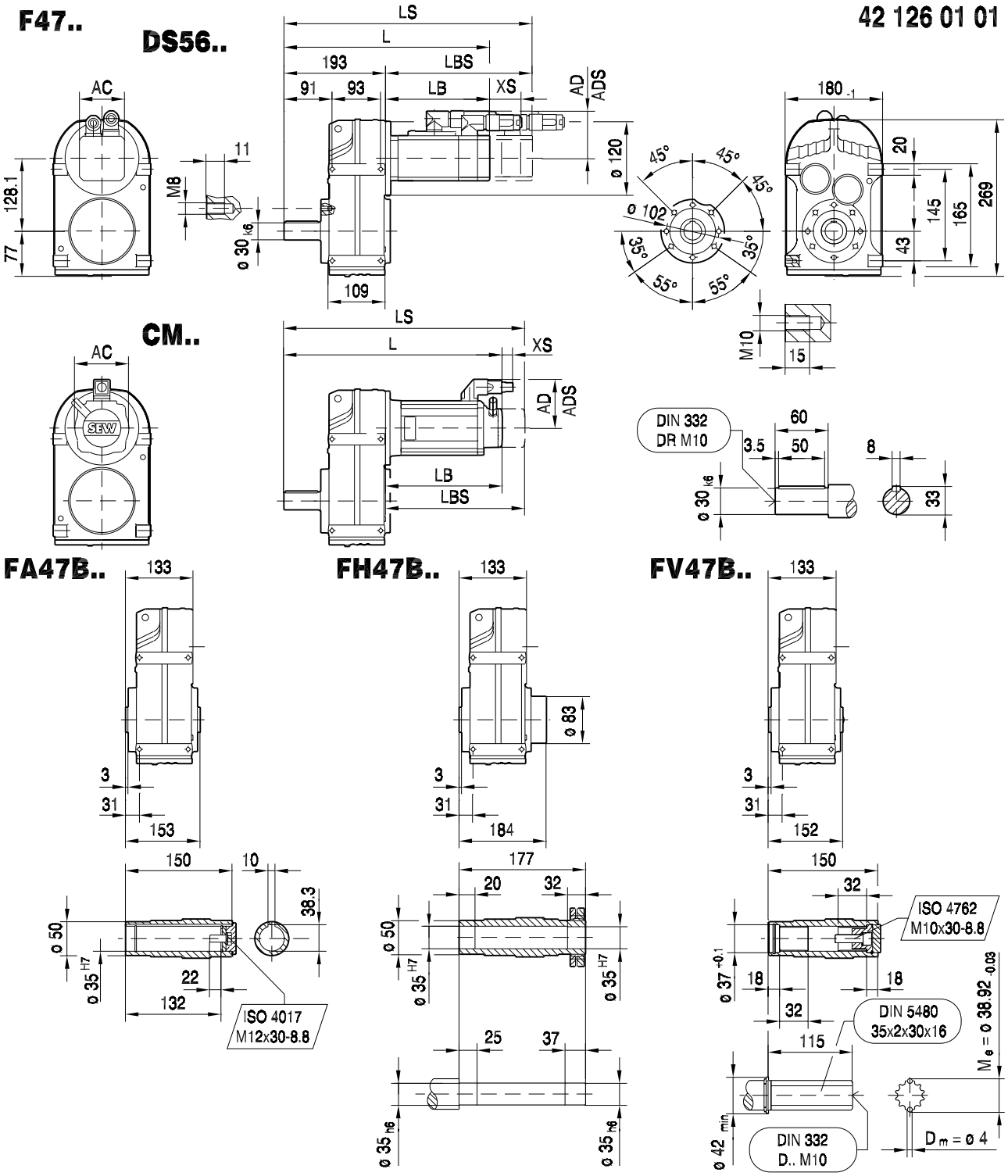

(→ 105)	DS56M	DS56L	DS56H	CM71S	CM71M	CM71L	CM90S				
AC	73	73	73	117	117	117	142				
AD	71	71	77	122	122	122	140				
ADS	77	77	77	122	122	122	140				
L	330	362	465	431	451	494	486				
LS	360	392	465	513	533	576	582				
LB	137	169	272	238	258	301	293				
LBS	167	199	272	320	340	383	389				
XS	70	70	51	45	45	45	50				

42 127 01 01

FF47.. **DS56..**

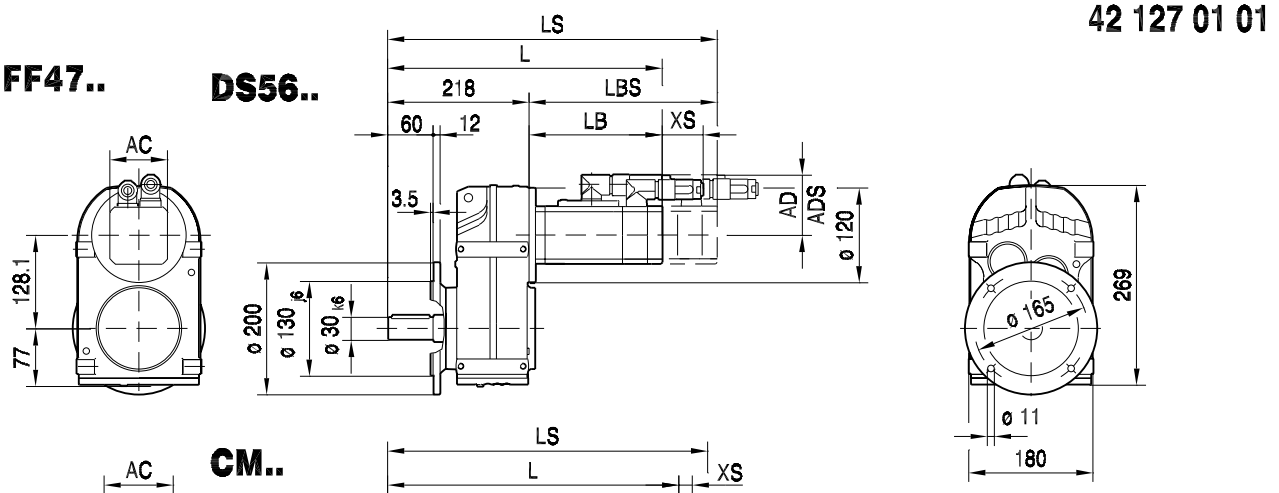

CM..

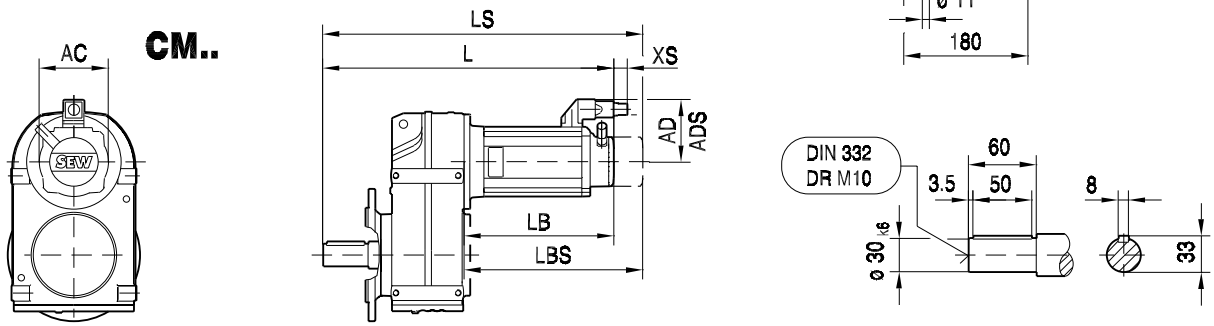

FAF47.. **FHF47..** **FVF47..**

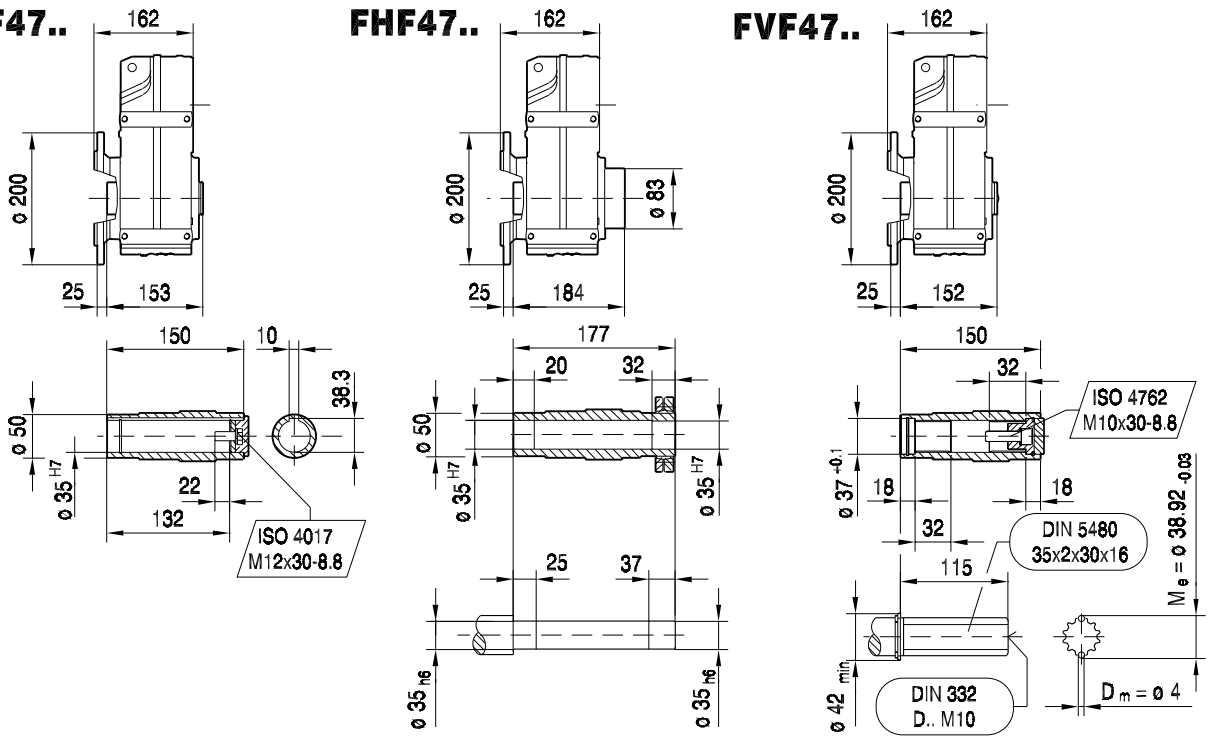

(→ 105)	DS56M	DS56L	DS56H	CM71S	CM71M	CM71L	CM90S				
AC	73	73	73	117	117	117	142				
AD	71	71	77	122	122	122	140				
ADS	77	77	77	122	122	122	140				
L	355	387	490	456	476	519	511				
LS	385	417	490	538	558	601	607				
LB	137	169	272	238	258	301	293				
LBS	167	199	272	320	340	383	389				
XS	70	70	51	45	45	45	50				

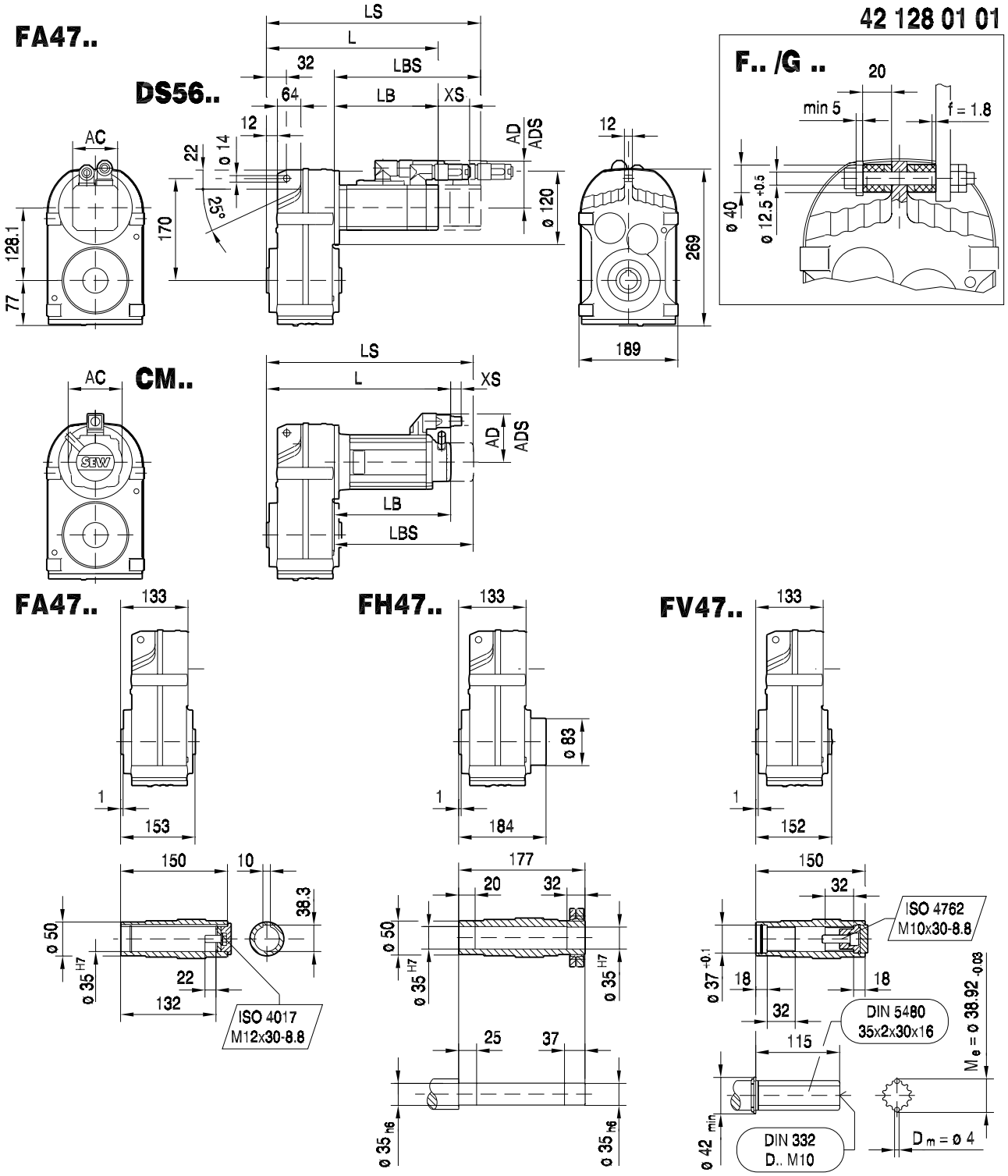

(→ 105)	DS56M	DS56L	DS56H	CM71S	CM71M	CM71L	CM90S				
AC	73	73	73	117	117	117	142				
AD	71	71	77	122	122	122	140				
ADS	77	77	77	122	122	122	140				
L	270	302	405	371	391	434	426				
LS	300	332	405	453	473	516	522				
LB	137	169	272	238	258	301	293				
LBS	167	199	272	320	340	383	389				
XS	70	70	51	45	45	45	50				

FAZ47.. **DS56..**

42 040 00 04

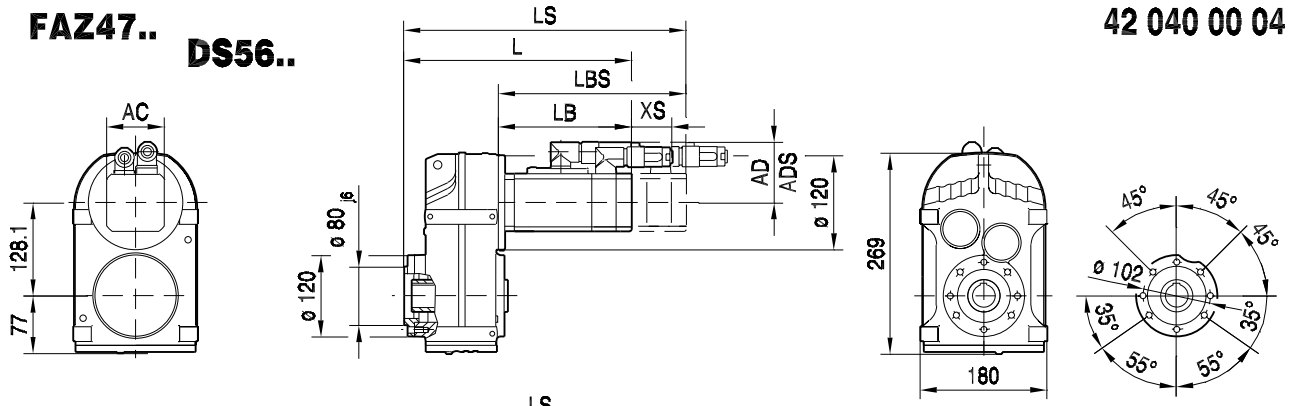

CM..

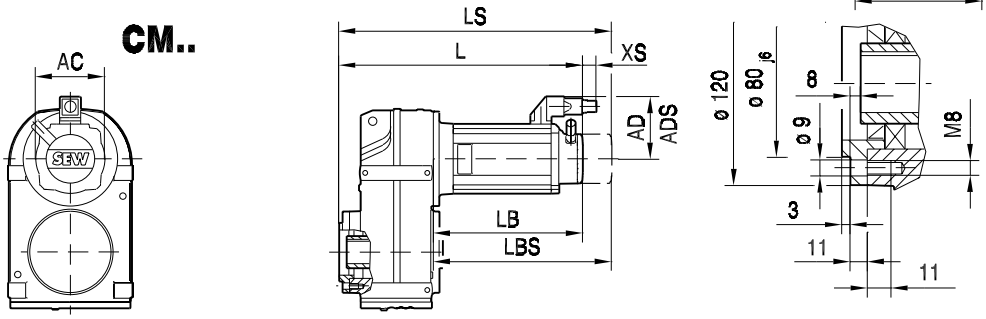

FAZ47..

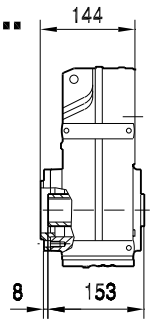

FHZ47..

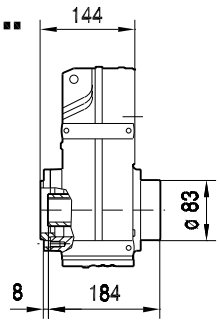

FVZ47..

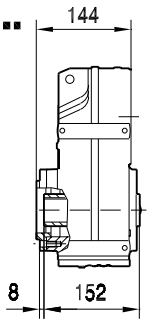

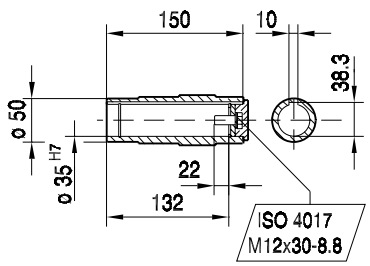

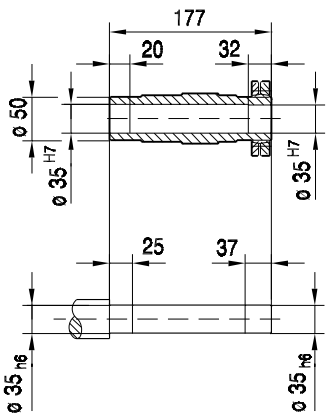

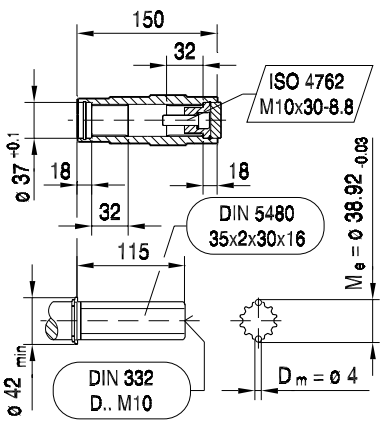

(→ 105)	DS56M	DS56L	DS56H	CM71S	CM71M	CM71L	CM90S				
AC	73	73	73	117	117	117	142				
AD	71	71	77	122	122	122	140				
ADS	77	77	77	122	122	122	140				
L	281	313	416	382	402	445	437				
LS	311	343	416	464	484	527	533				
LB	137	169	272	238	258	301	293				
LBS	167	199	272	320	340	383	389				
XS	70	70	51	45	45	45	50				

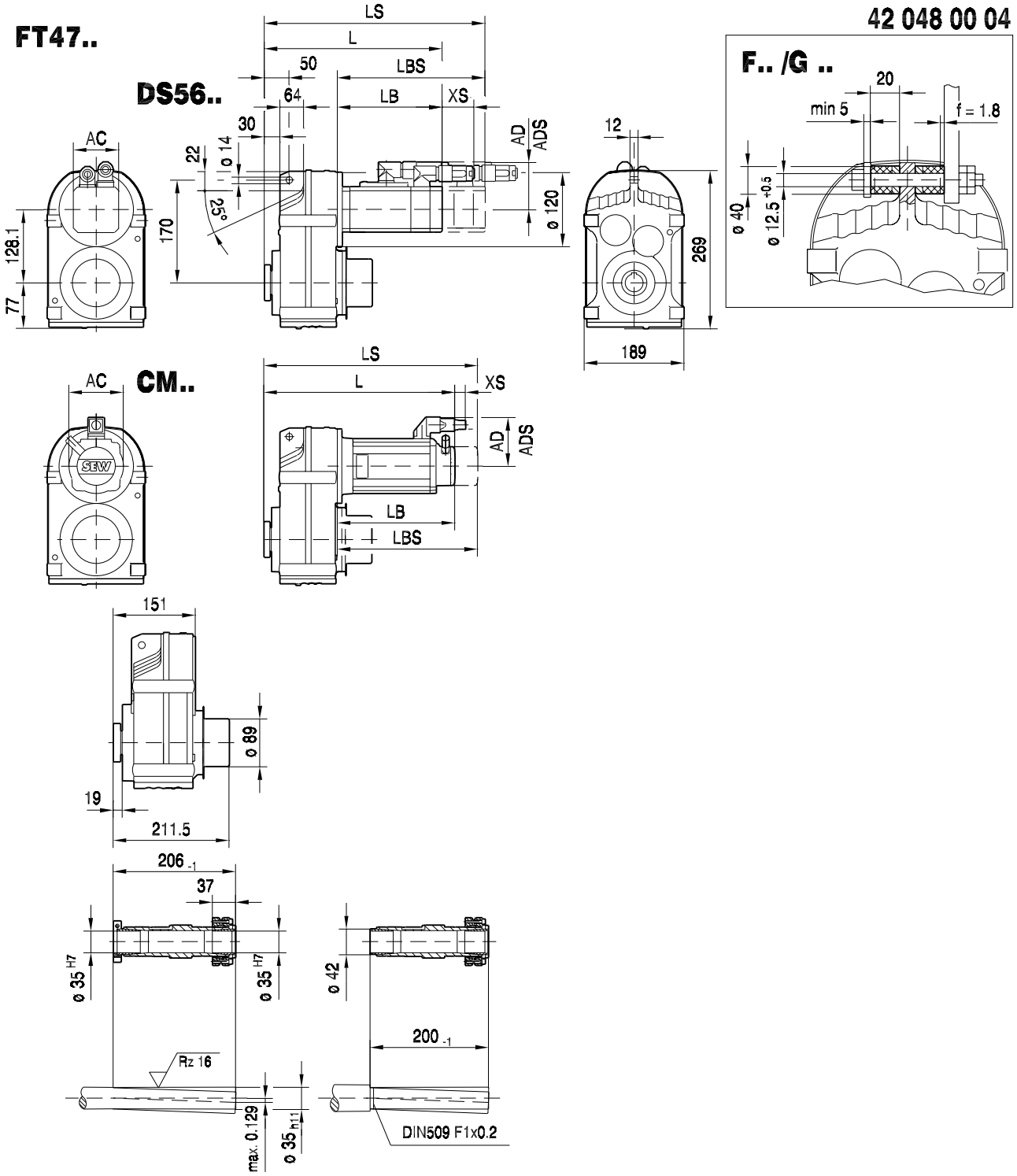

(→ 105)	DS56M	DS56L	DS56H	CM71S	CM71M	CM71L					
AC	73	73	73	117	117	117					
AD	71	71	77	122	122	122					
ADS	77	77	77	122	122	122					
L	288	320	423	389	409	452					
LS	318	350	423	471	491	534					
LB	137	169	272	238	258	301					
LBS	167	199	272	320	340	383					
XS	70	70	51	45	45	45					

42 129 01 01

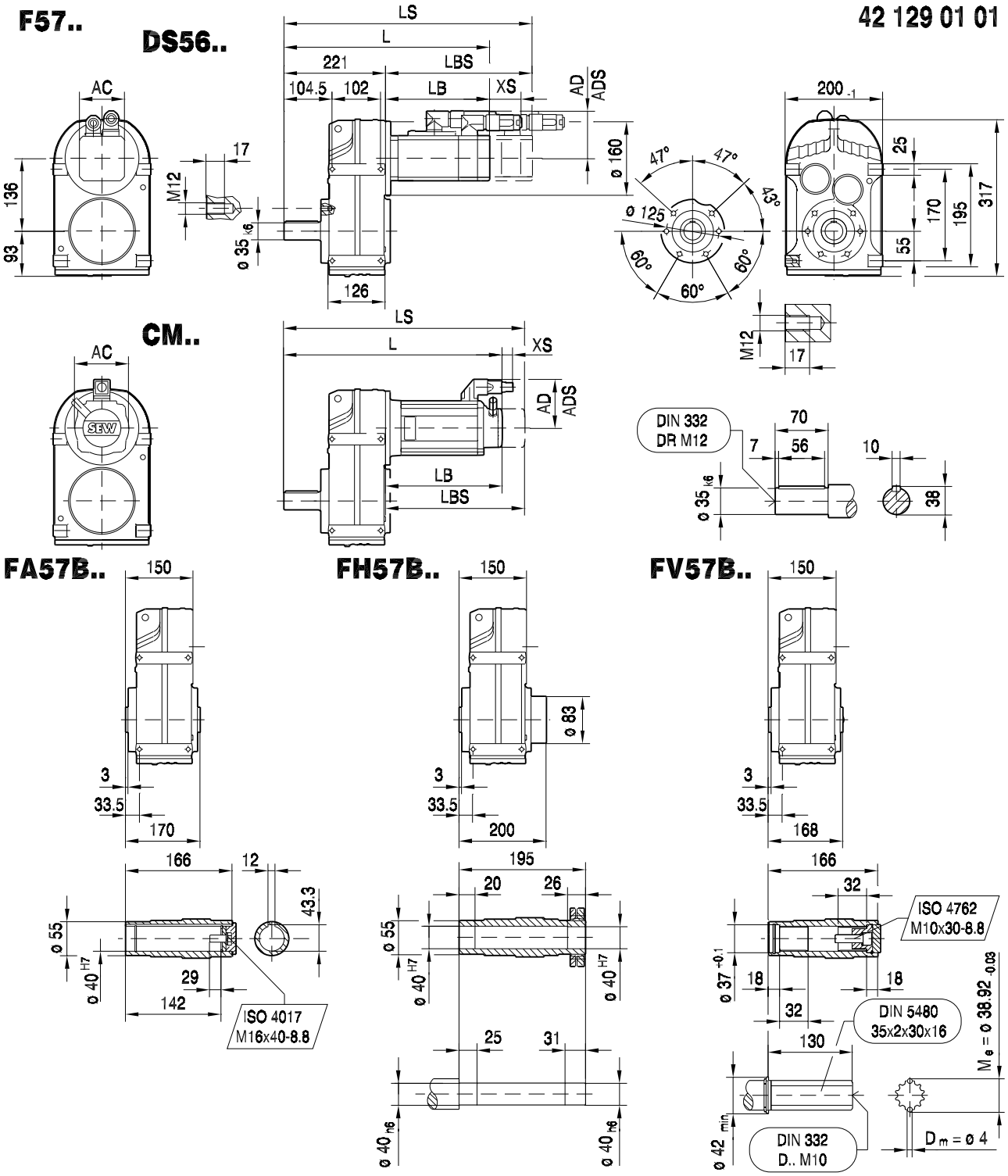

(→ 105)	DS56H	CM71S	CM71M	CM71L	CM90S	CM90M	CM90L	CM112S			
AC	73	117	117	117	142	142	142	186			
AD	77	122	122	122	140	140	140	162			
ADS	77	122	122	122	140	140	140	162			
L	487	453	473	513	505	532	590	545			
LS	487	535	555	595	601	628	686	635			
LB	266	232	252	292	284	311	369	324			
LBS	266	314	334	374	380	407	465	414			
XS	51	45	45	45	50	50	50	36			

42 130 01 01

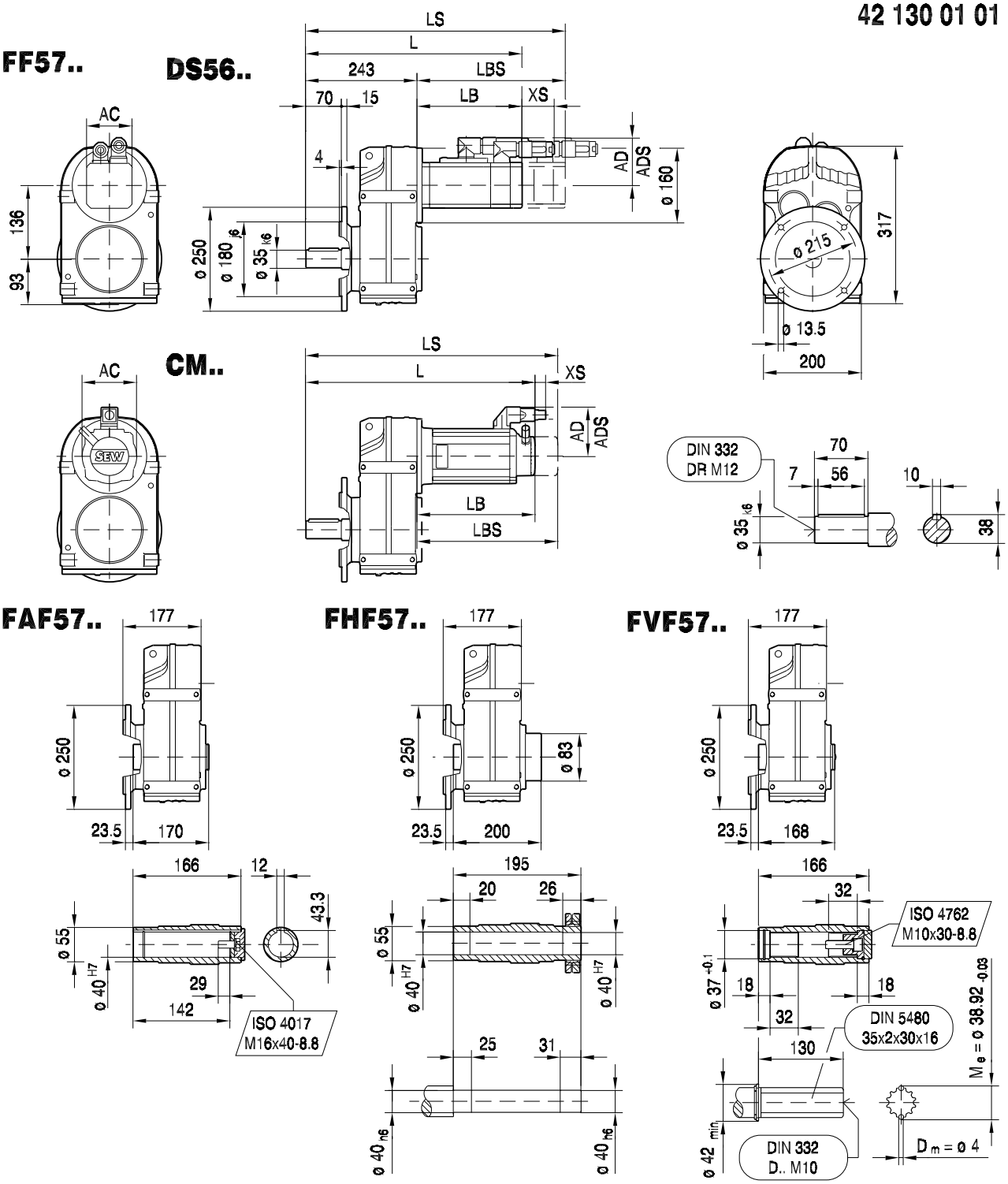

(→ 105)	DS56H	CM71S	CM71M	CM71L	CM90S	CM90M	CM90L	CM112S			
AC	73	117	117	117	142	142	142	186			
AD	77	122	122	122	140	140	140	162			
ADS	77	122	122	122	140	140	140	162			
L	509	475	495	535	527	554	612	567			
LS	509	557	577	617	623	650	708	657			
LB	266	232	252	292	284	311	369	324			
LBS	266	314	334	374	380	407	465	414			
XS	51	45	45	45	50	50	50	36			

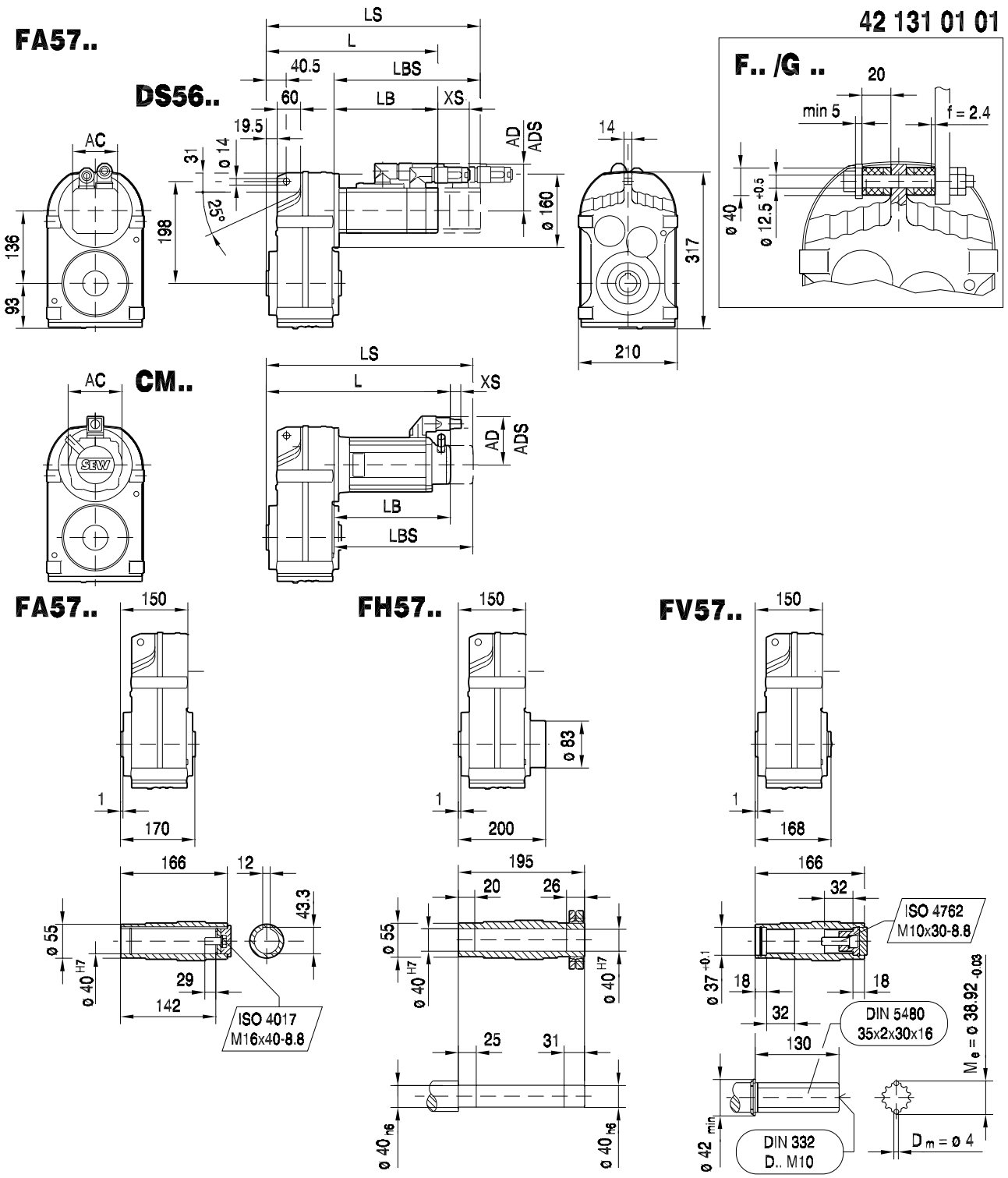

(→ 105)	DS56H	CM71S	CM71M	CM71L	CM90S	CM90M	CM90L	CM112S			
AC	73	117	117	117	142	142	142	186			
AD	77	122	122	122	140	140	140	162			
ADS	77	122	122	122	140	140	140	162			
L	416	382	402	442	434	461	519	474			
LS	416	464	484	524	530	557	615	564			
LB	266	232	252	292	284	311	369	324			
LBS	266	314	334	374	380	407	465	414			
XS	51	45	45	45	50	50	50	36			

FAZ57.. DS56..

42 041 00 04

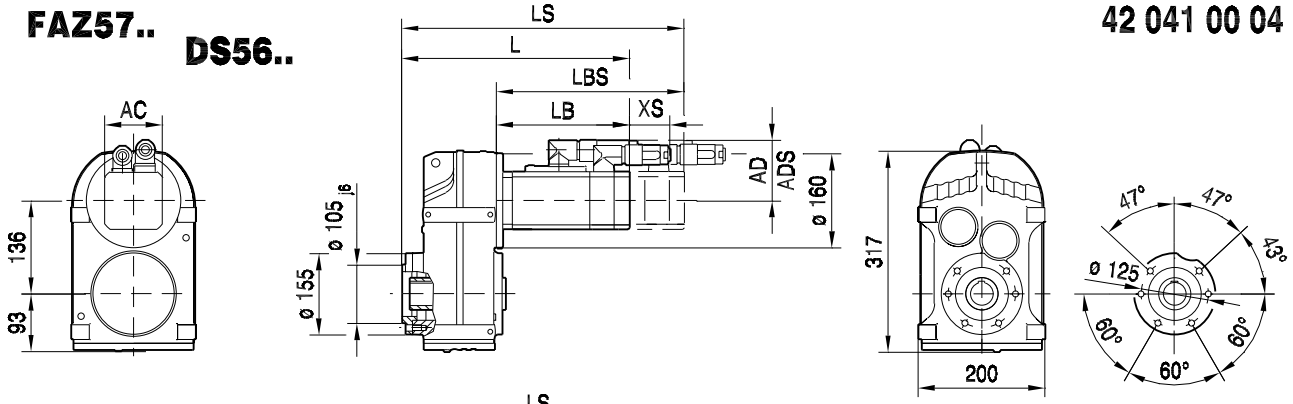

CM..

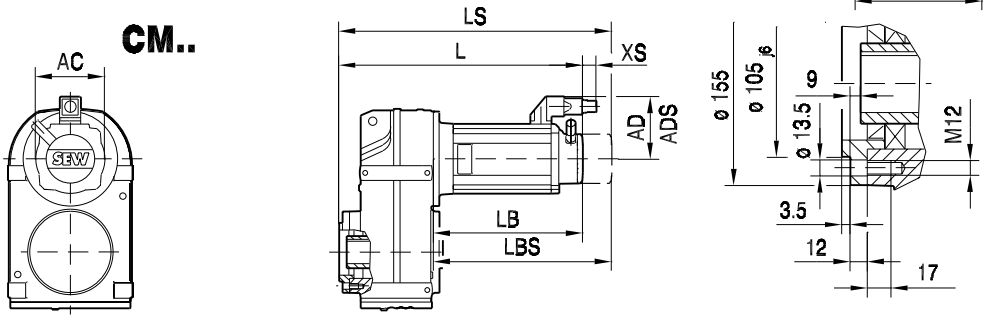

FAZ57..

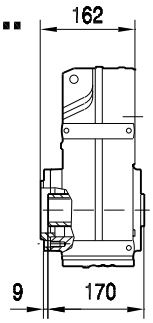

FHZ57..

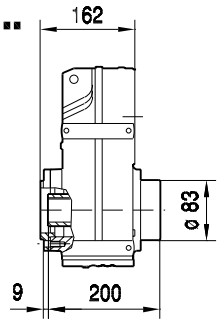

FVZ57..

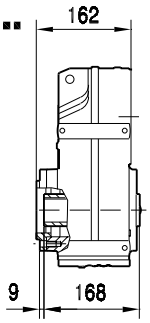

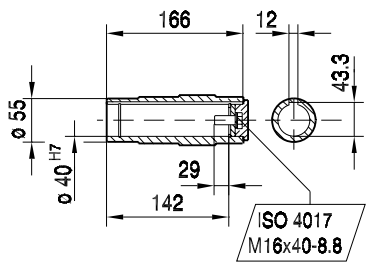

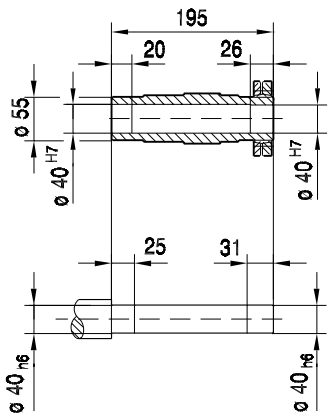

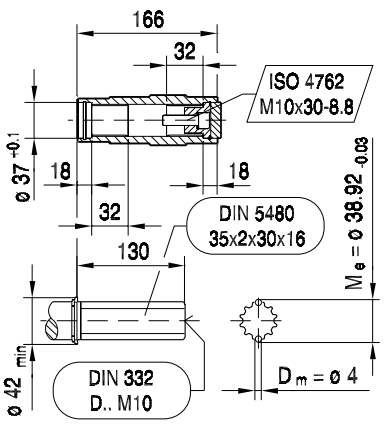

(→ 105)	DS56H	CM71S	CM71M	CM71L	CM90S	CM90M	CM90L	CM112S			
AC	73	117	117	117	142	142	142	186			
AD	77	122	122	122	140	140	140	162			
ADS	77	122	122	122	140	140	140	162			
L	428	394	414	454	446	473	531	486			
LS	428	476	496	536	542	569	627	576			
LB	266	232	252	292	284	311	369	324			
LBS	266	314	334	374	380	407	465	414			
XS	51	45	45	45	50	50	50	36			

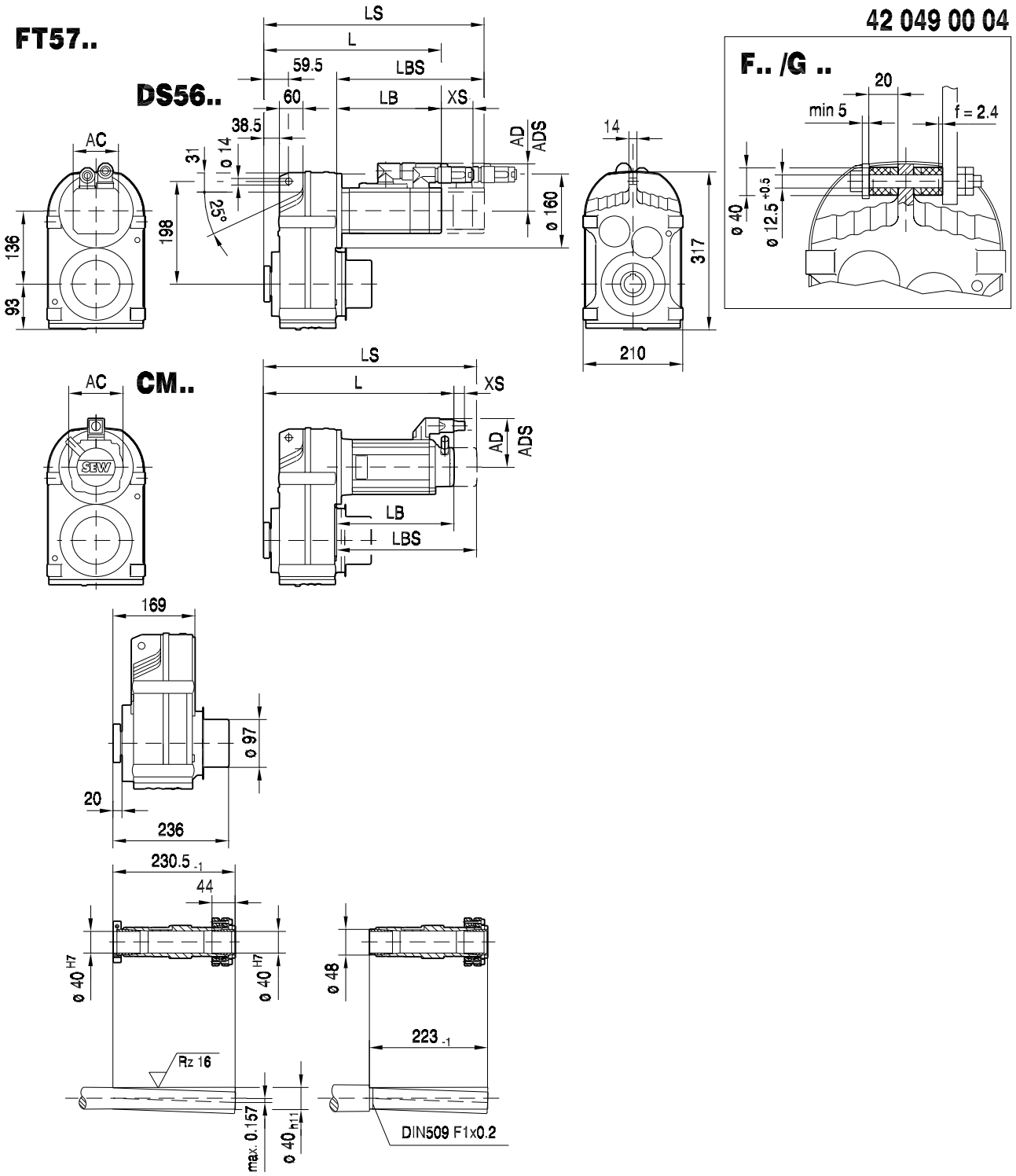

(→ 105)	DS56H	CM71S	CM71M	CM71L	CM90S	CM90M	CM90L				
AC	73	117	117	117	142	142	142				
AD	77	122	122	122	140	140	140				
ADS	77	122	122	122	140	140	140				
L	435	401	421	461	453	480	538				
LS	435	483	503	543	549	576	634				
LB	266	232	252	292	284	311	369				
LBS	266	314	334	374	380	407	465				
XS	51	45	45	45	50	50	50				

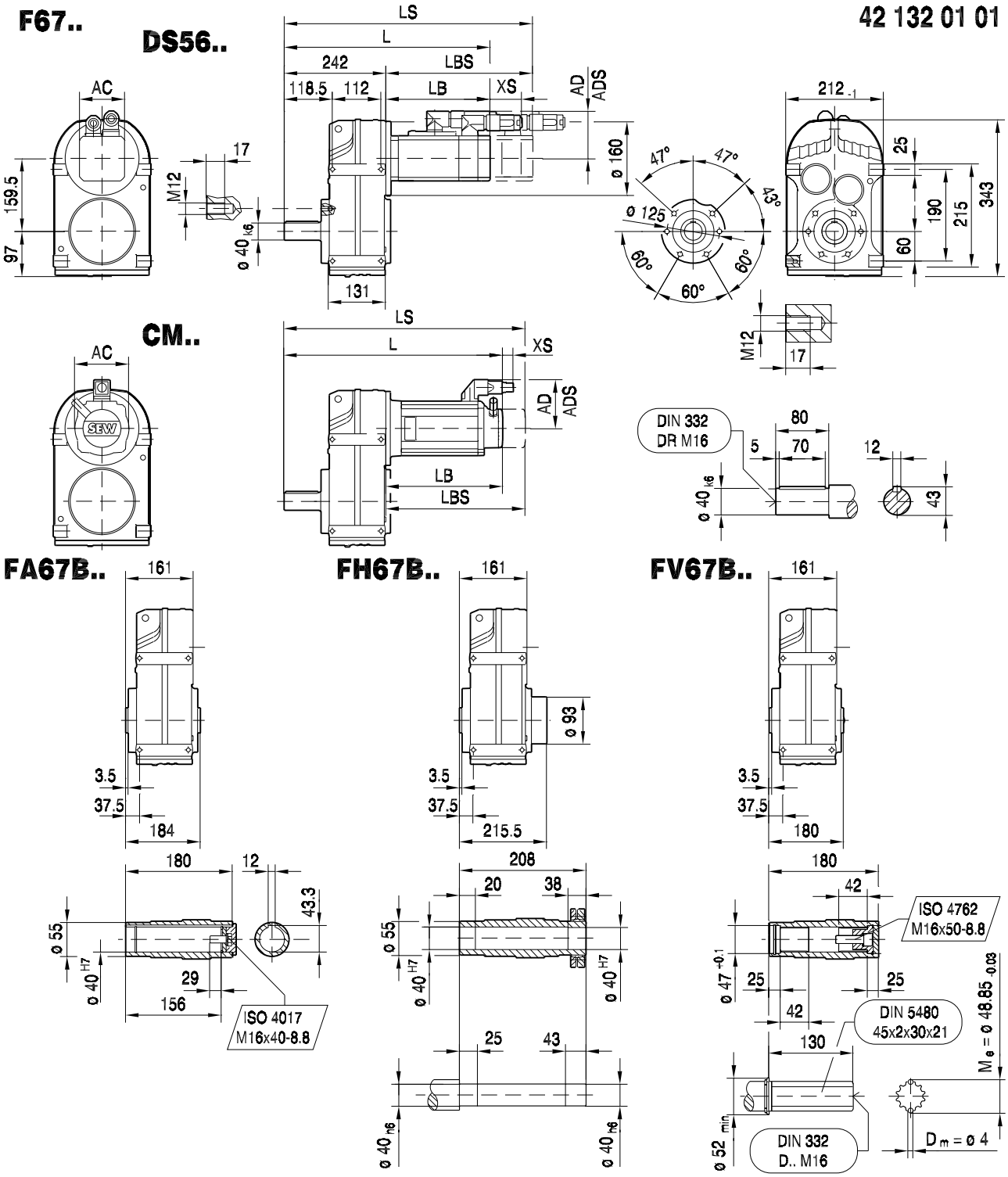

(→ 105)	DS56H	CM71S	CM71M	CM71L	CM90S	CM90M	CM90L	CM112S	CM112M		
AC	73	117	117	117	142	142	142	186	186		
AD	77	122	122	122	140	140	140	162	162		
ADS	77	122	122	122	140	140	140	162	162		
L	508	474	494	534	526	553	611	566	590		
LS	508	556	576	616	622	649	707	656	680		
LB	266	232	252	292	284	311	369	324	348		
LBS	266	314	334	374	380	407	465	414	438		
XS	51	45	45	45	50	50	50	36	36		

42 133 01 01

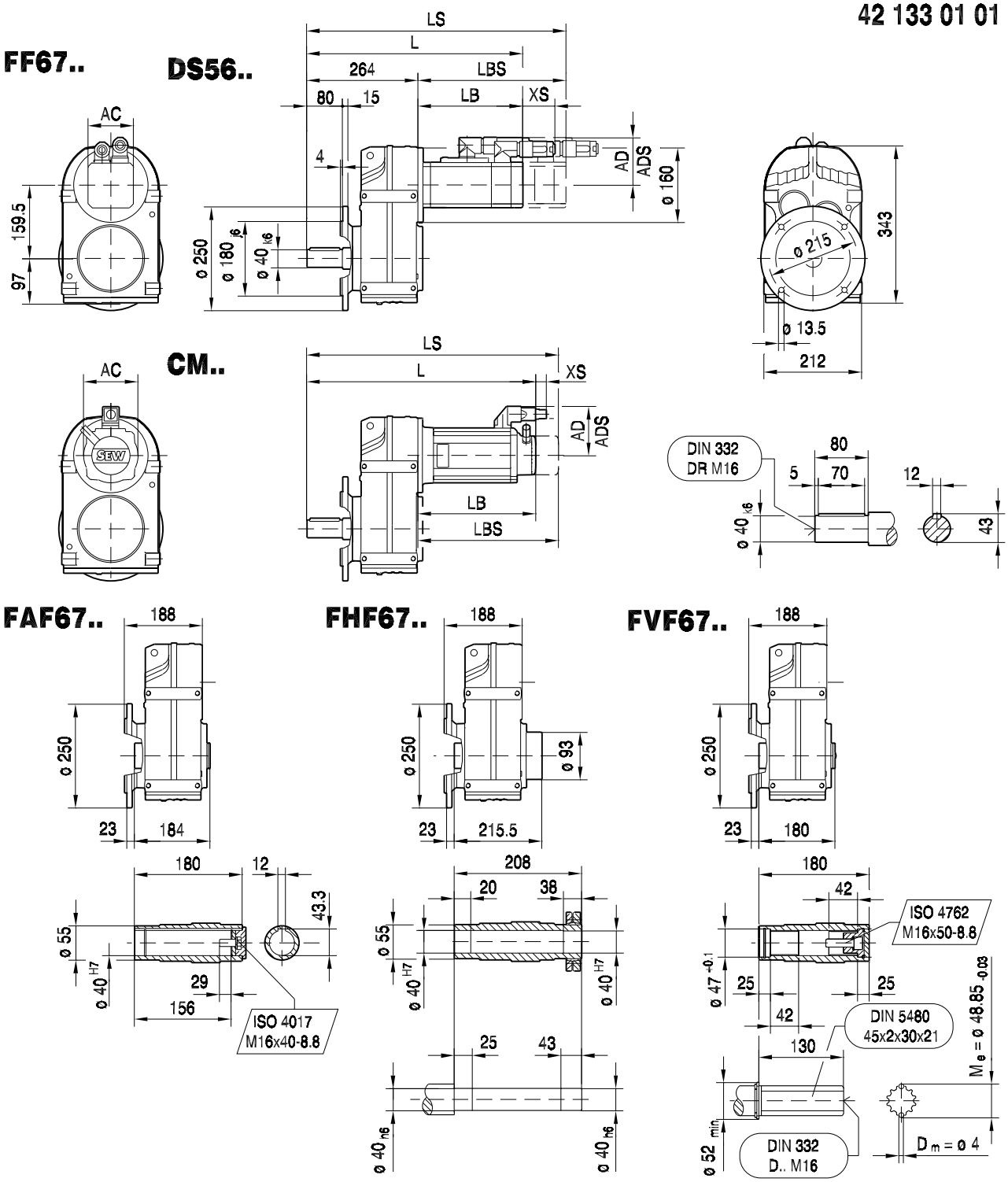

(→ 105)	DS56H	CM71S	CM71M	CM71L	CM90S	CM90M	CM90L	CM112S	CM112M		
AC	73	117	117	117	142	142	142	186	186		
AD	77	122	122	122	140	140	140	162	162		
ADS	77	122	122	122	140	140	140	162	162		
L	530	496	516	556	548	575	633	588	612		
LS	530	578	598	638	644	671	729	678	702		
LB	266	232	252	292	284	311	369	324	348		
LBS	266	314	334	374	380	407	465	414	438		
XS	51	45	45	45	50	50	50	36	36		

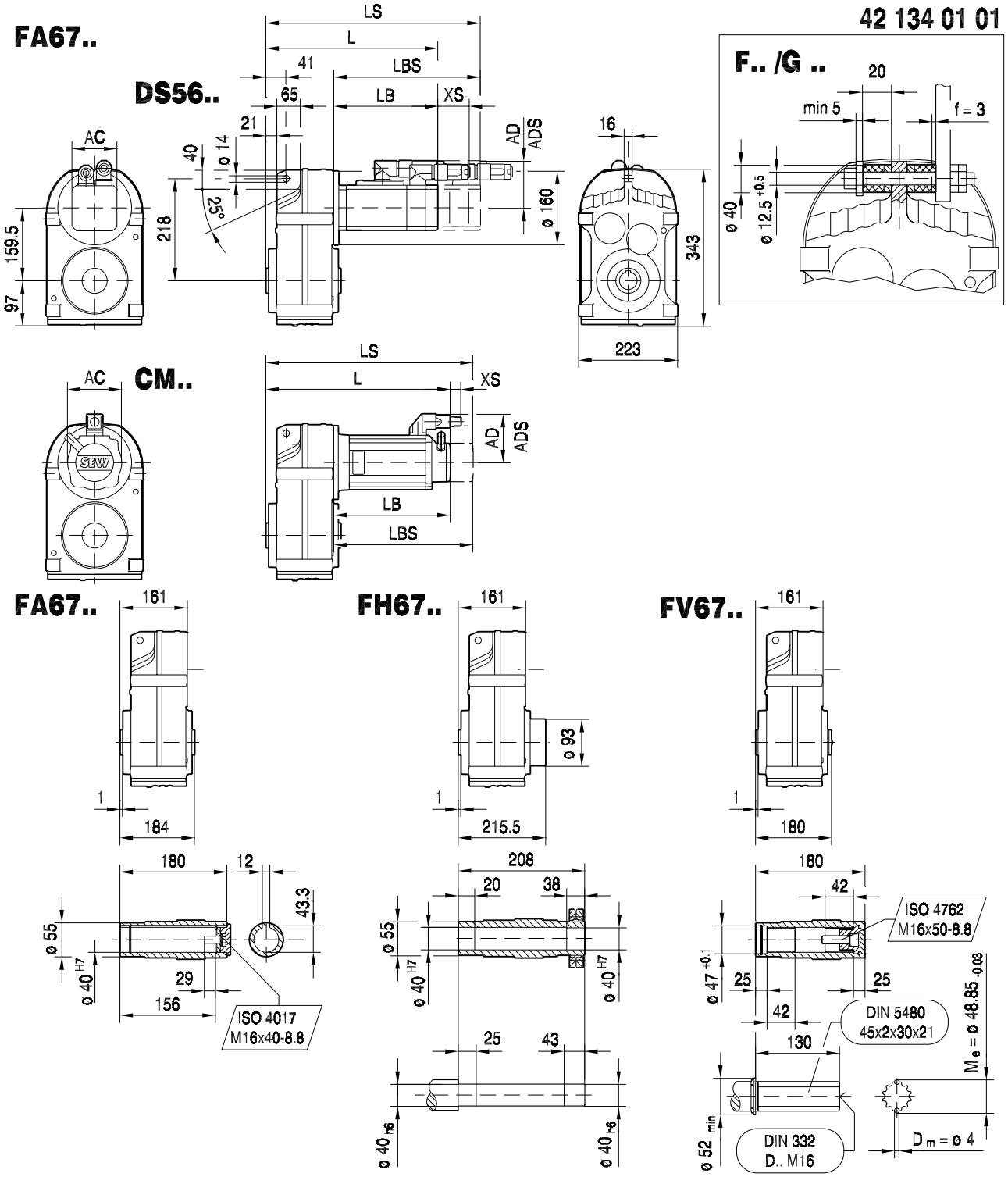

(→ 105)	DS56H	CM71S	CM71M	CM71L	CM90S	CM90M	CM90L	CM112S	CM112M		
AC	73	117	117	117	142	142	142	186	186		
AD	77	122	122	122	140	140	140	162	162		
ADS	77	122	122	122	140	140	140	162	162		
L	427	393	413	453	445	472	530	485	509		
LS	427	475	495	535	541	568	626	575	599		
LB	266	232	252	292	284	311	369	324	348		
LBS	266	314	334	374	380	407	465	414	438		
XS	51	45	45	45	50	50	50	36	36		

FAZ67.. **DS56..**

42 042 00 04

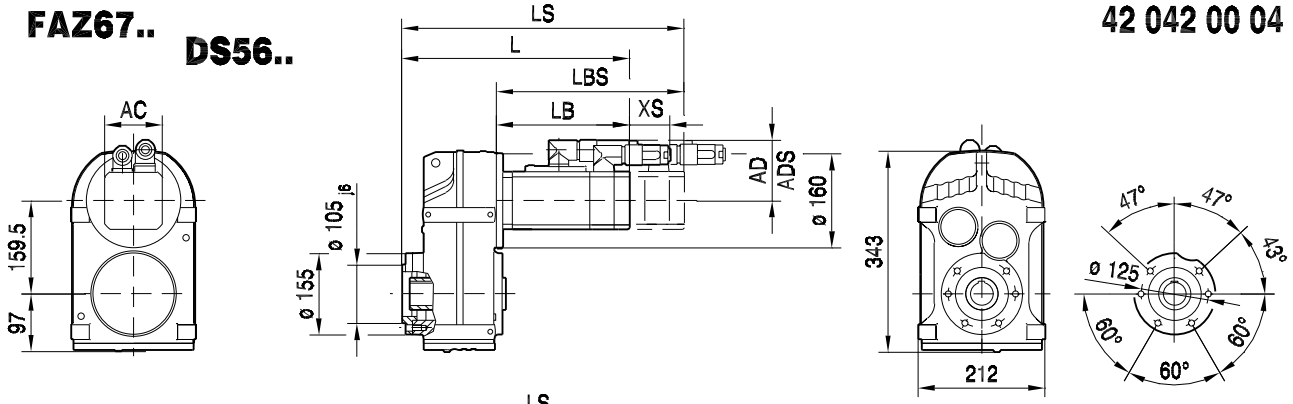

CM..

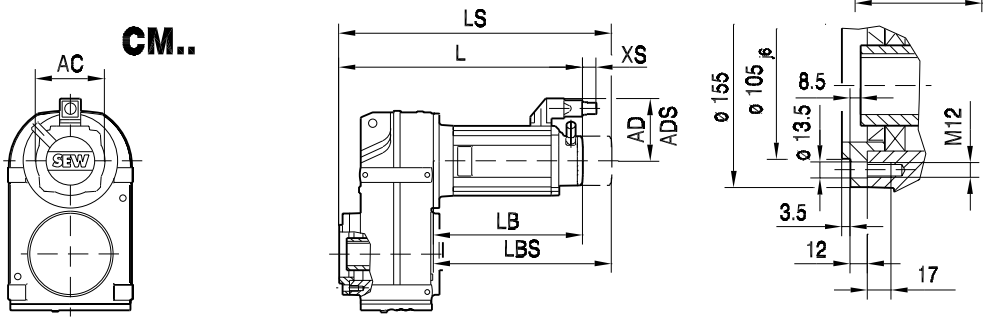

FAZ67..

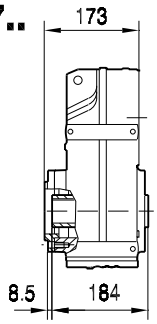

FHZ67..

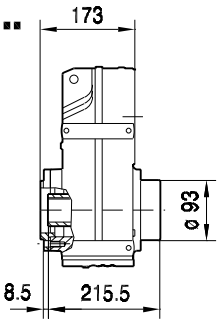

FVZ67..

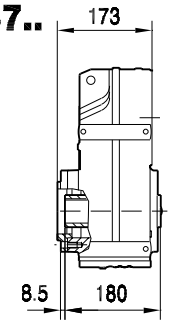

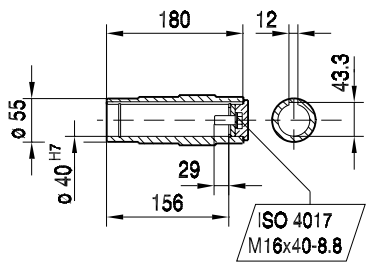

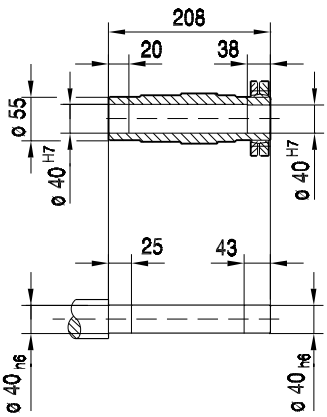

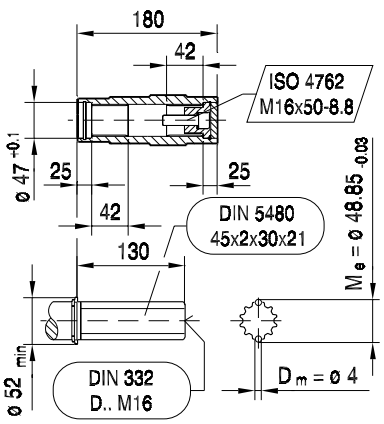

(→ 105)	DS56H	CM71S	CM71M	CM71L	CM90S	CM90M	CM90L	CM112S	CM112M		
AC	73	117	117	117	142	142	142	186	186		
AD	77	122	122	122	140	140	140	162	162		
ADS	77	122	122	122	140	140	140	162	162		
L	439	405	425	465	457	484	542	497	521		
LS	439	487	507	547	553	580	638	587	611		
LB	266	232	252	292	284	311	369	324	348		
LBS	266	314	334	374	380	407	465	414	438		
XS	51	45	45	45	50	50	50	36	36		

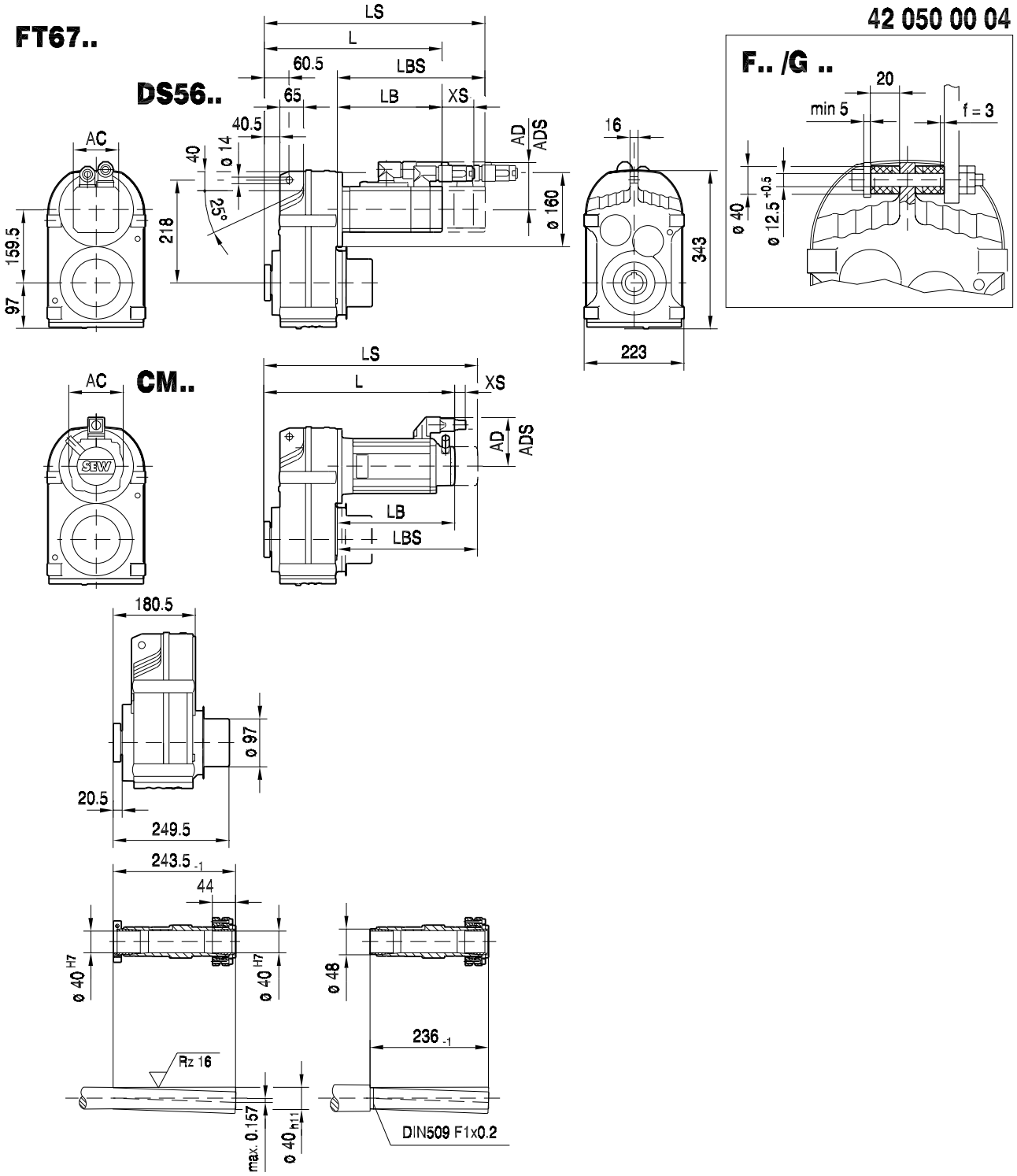

(→ 105)	DS56H	CM71S	CM71M	CM71L	CM90S	CM90M	CM90L	CM112S	CM112M		
AC	73	117	117	117	142	142	142	186	186		
AD	77	122	122	122	140	140	140	162	162		
ADS	77	122	122	122	140	140	140	162	162		
L	446	412	432	472	465	492	550	505	529		
LS	446	494	514	554	560	587	645	595	619		
LB	266	232	252	292	284	311	369	324	348		
LBS	266	314	334	374	380	407	465	414	438		
XS	51	45	45	45	50	50	50	36	36		

F77..

42 135 01 01

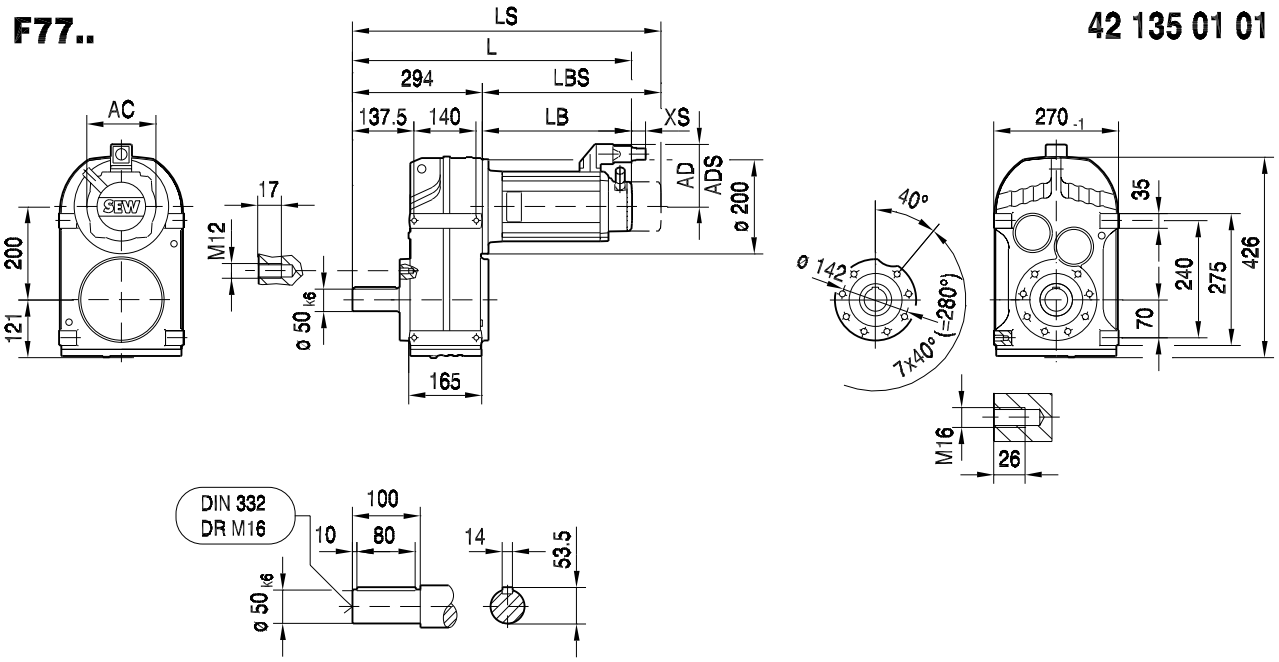

FA77B..

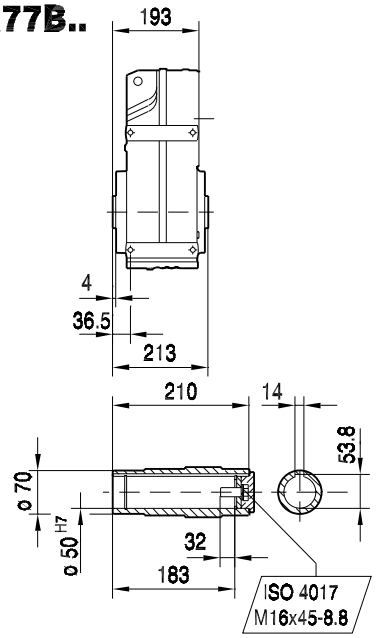

FH77B..

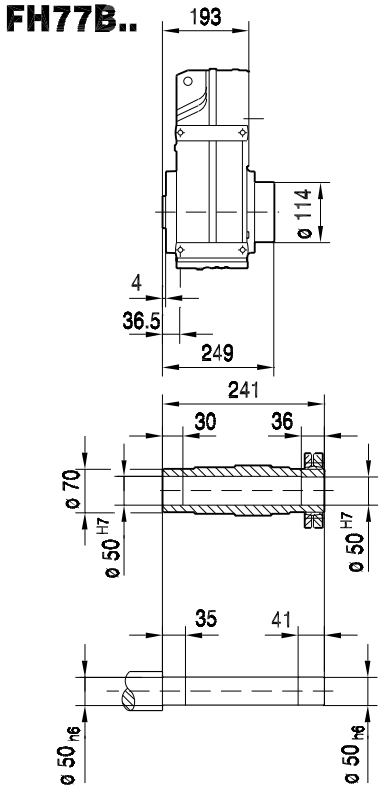

FV77B..

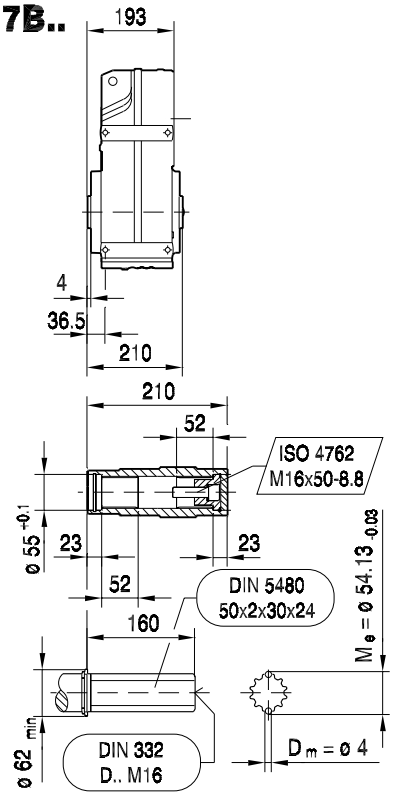

(→ 105)	CM71S	CM71M	CM71L	CM90S	CM90M	CM90L	CM112S	CM112M	CM112L		
AC	117	117	117	142	142	142	186	186	186		
AD	122	122	122	140	140	140	162	162	162		
ADS	122	122	122	140	140	140	162	162	162		
L	520	540	579	570	597	651	606	633	695		
LS	602	622	661	666	693	747	696	723	785		
LB	226	246	285	276	303	357	312	339	401		
LBS	308	328	367	372	399	453	402	429	491		
XS	45	45	45	50	50	50	36	36	36		

FF77..

42 136 01 01

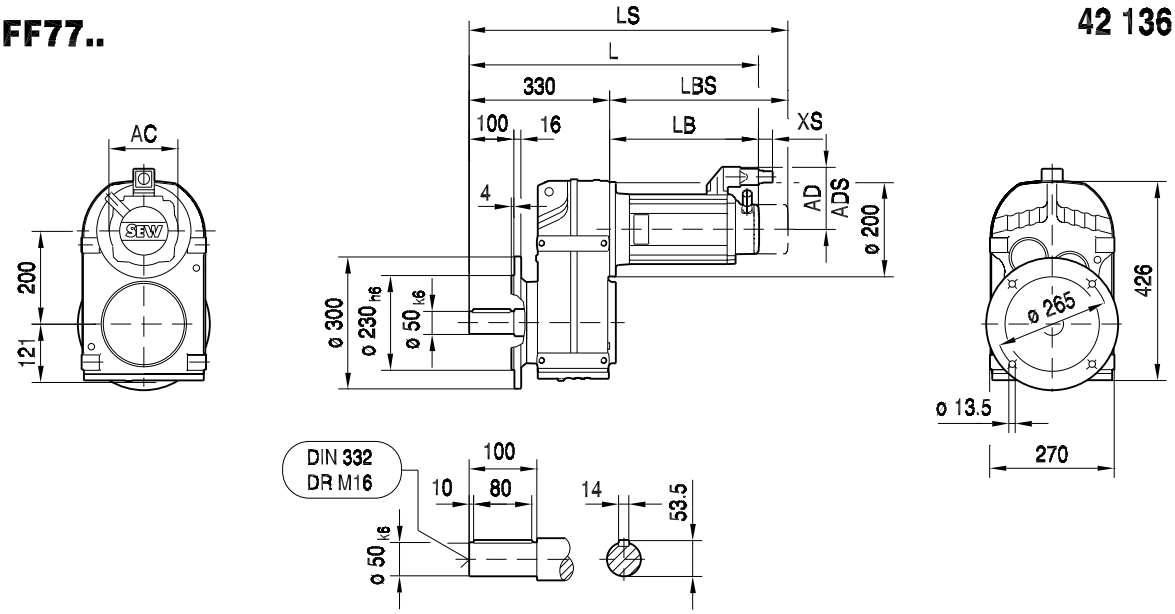

FAF77..

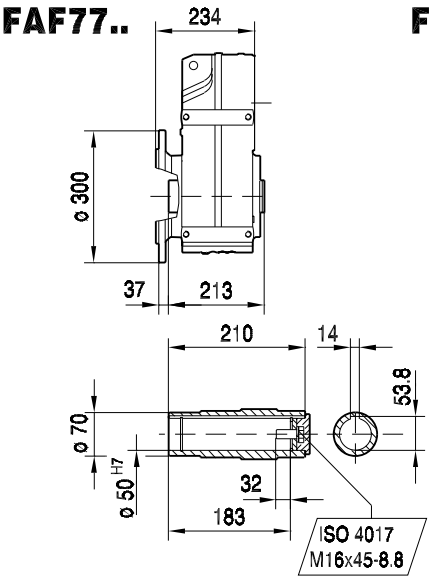

FHF77..

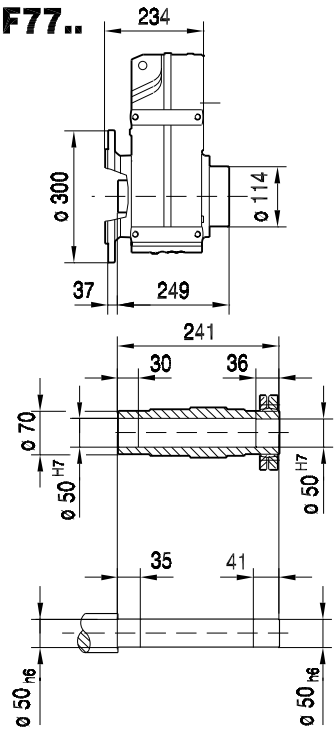

FVF77..

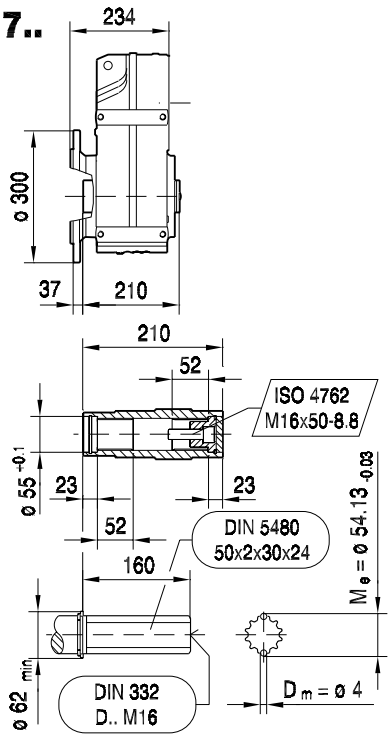

(→ 105)	CM71S	CM71M	CM71L	CM90S	CM90M	CM90L	CM112S	CM112M	CM112L		
AC	117	117	117	142	142	142	186	186	186		
AD	122	122	122	140	140	140	162	162	162		
ADS	122	122	122	140	140	140	162	162	162		
L	556	576	615	606	633	687	642	669	731		
LS	638	658	697	702	729	783	732	759	821		
LB	226	246	285	276	303	357	312	339	401		
LBS	308	328	367	372	399	453	402	429	491		
XS	45	45	45	50	50	50	36	36	36		

FA77..

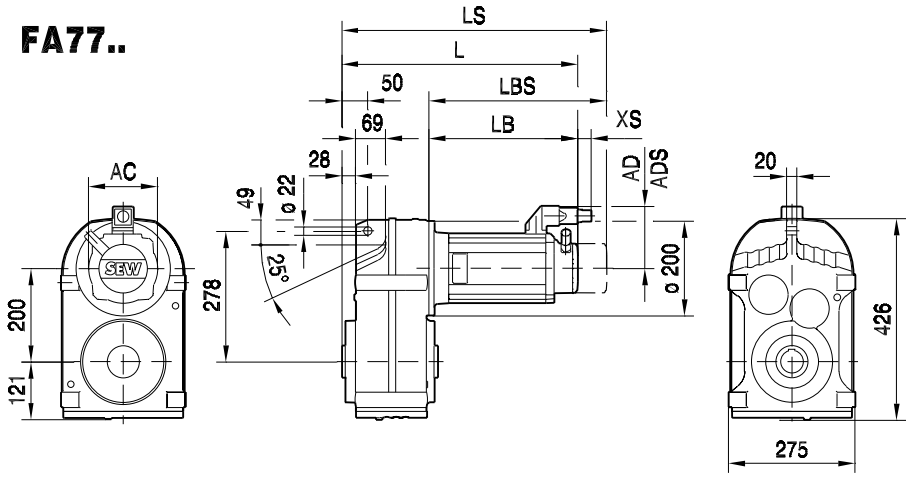

42 137 01 01

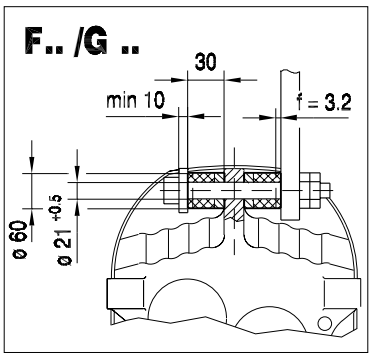

FA77..

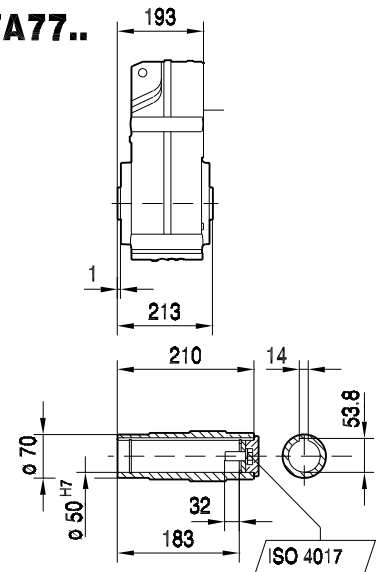

FH77..

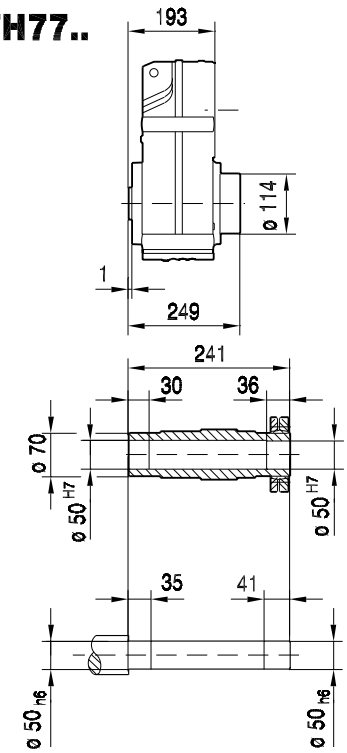

FV77..

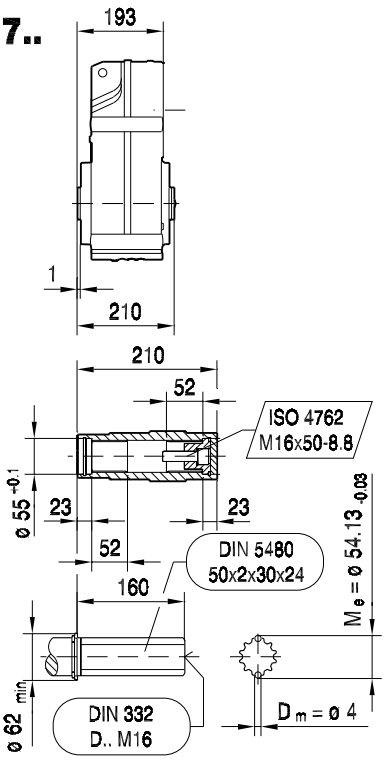

(→ 105)	CM71S	CM71M	CM71L	CM90S	CM90M	CM90L	CM112S	CM112M	CM112L		
AC	117	117	117	142	142	142	186	186	186		
AD	122	122	122	140	140	140	162	162	162		
ADS	122	122	122	140	140	140	162	162	162		
L	419	439	478	469	496	550	505	532	594		
LS	501	521	560	565	592	646	595	622	684		
LB	226	246	285	276	303	357	312	339	401		
LBS	308	328	367	372	399	453	402	429	491		
XS	45	45	45	50	50	50	36	36	36		

FAZ77..

42 043 00 04

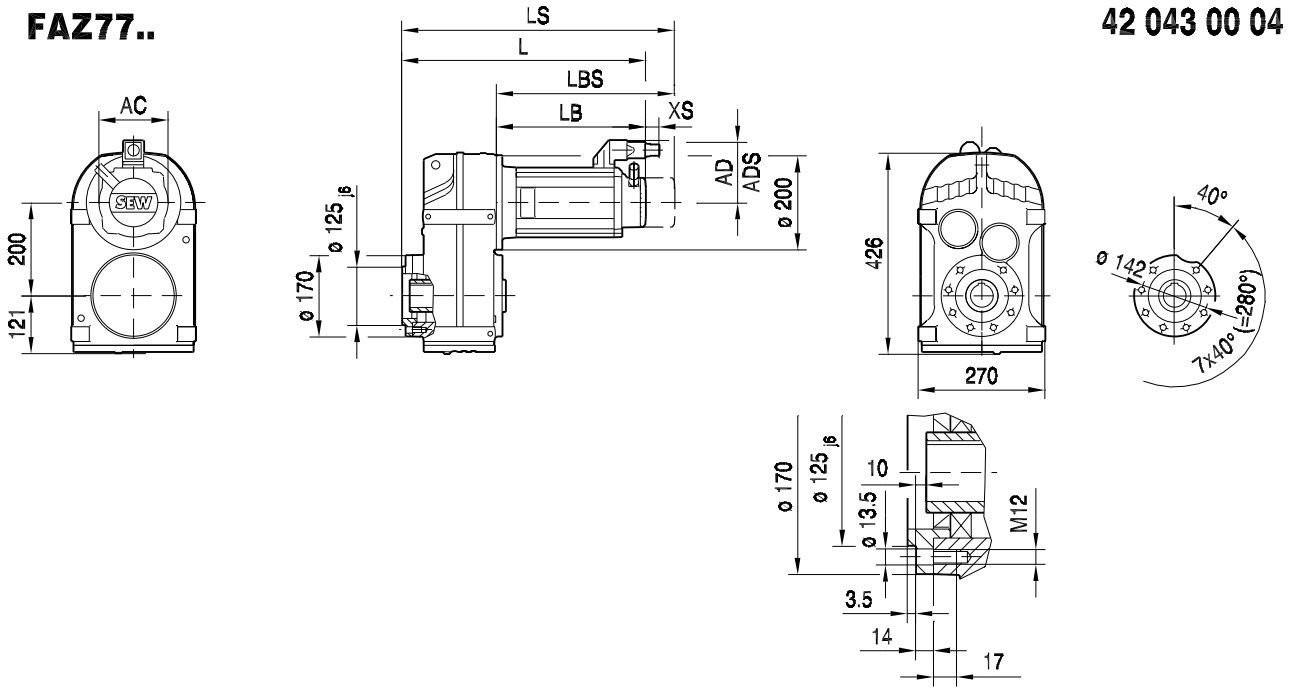

FAZ77..

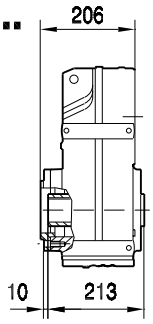

FHZ77..

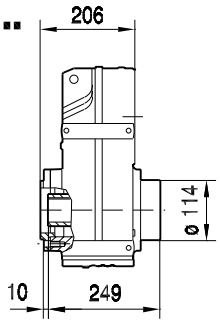

FVZ77..

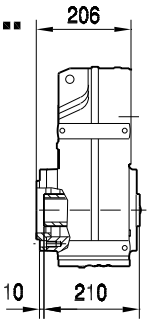

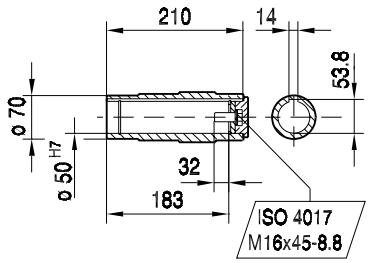

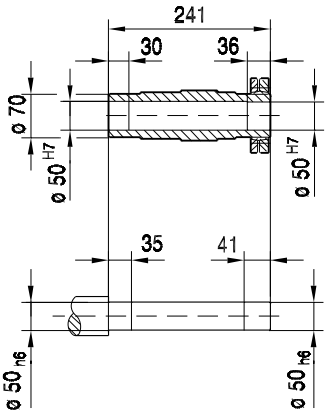

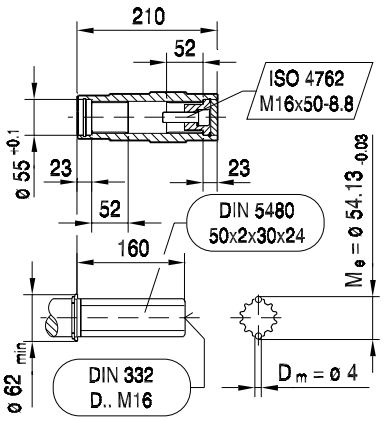

(→ 105)	CM71S	CM71M	CM71L	CM90S	CM90M	CM90L	CM112S	CM112M	CM112L		
AC	117	117	117	142	142	142	186	186	186		
AD	122	122	122	140	140	140	162	162	162		
ADS	122	122	122	140	140	140	162	162	162		
L	432	452	491	482	509	563	518	545	607		
LS	514	534	573	578	605	659	608	635	697		
LB	226	246	285	276	303	357	312	339	401		
LBS	308	328	367	372	399	453	402	429	491		
XS	45	45	45	50	50	50	36	36	36		

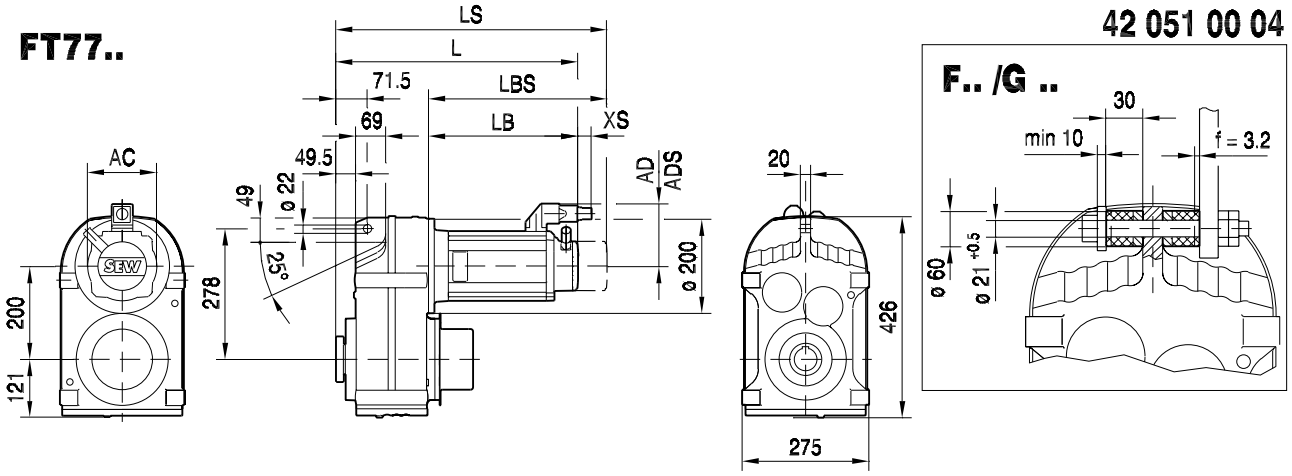

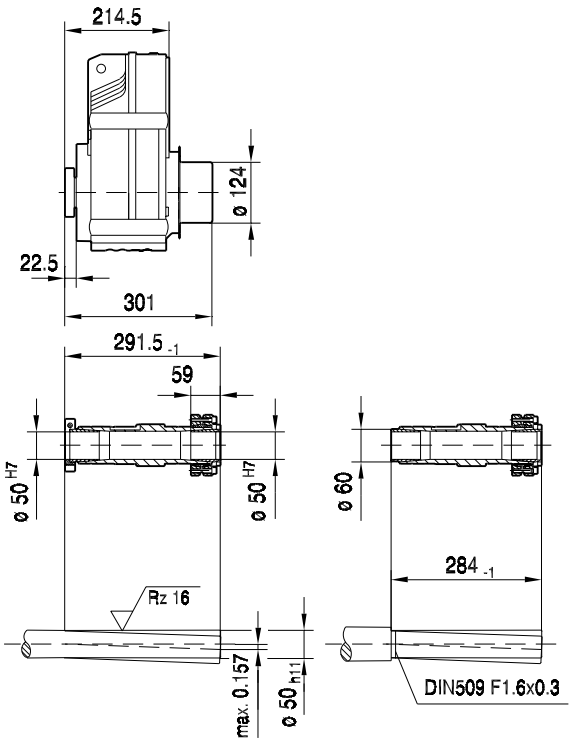

(→ 105)	CM71S	CM71M	CM71L	CM90S	CM90M	CM90L	CM112S	CM112M	CM112L		
AC	117	117	117	142	142	142	186	186	186		
AD	122	122	122	140	140	140	162	162	162		
ADS	122	122	122	140	140	140	162	162	162		
L	440	460	499	491	518	572	527	554	616		
LS	522	542	581	586	613	667	617	644	706		
LB	226	246	285	276	303	357	312	339	401		
LBS	308	328	367	372	399	453	402	429	491		
XS	45	45	45	50	50	50	36	36	36		

F87..

42 138 01 01

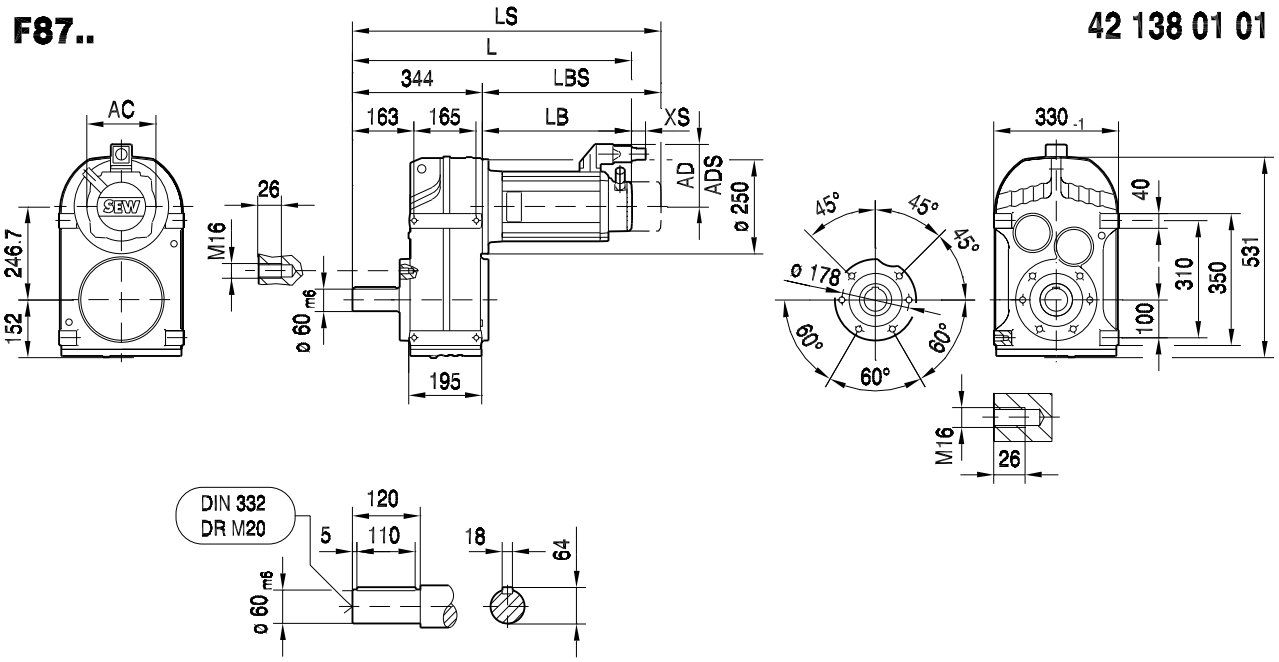

FA87B..

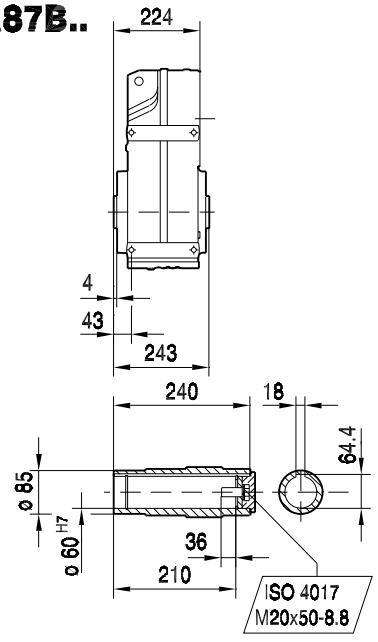

FH87B..

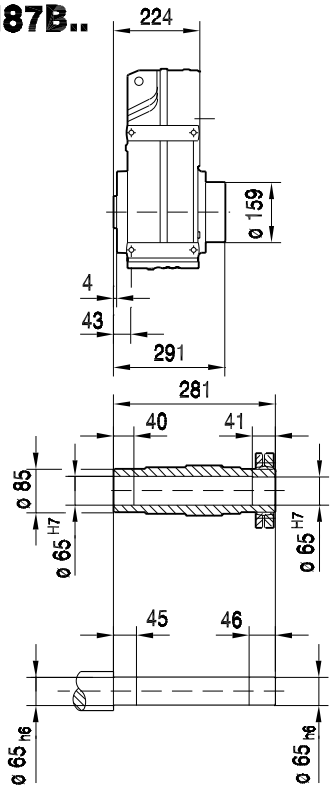

FV87B..

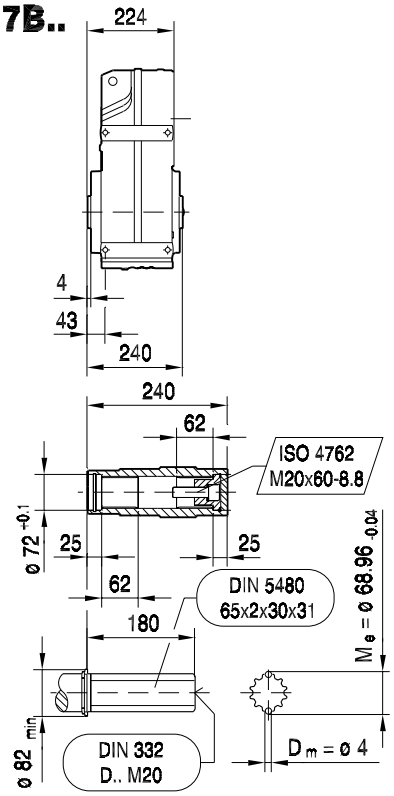

(→ 105)	CM90S	CM90M	CM90L	CM112S	CM112M	CM112L	CM112H				
AC	142	142	142	186	186	186	186				
AD	140	140	140	162	162	162	162				
ADS	140	140	140	162	162	162	162				
L	616	643	697	651	678	740	870				
LS	712	739	793	741	768	830	935				
LB	272	299	353	307	334	396	526				
LBS	368	395	449	397	424	486	591				
XS	50	50	50	36	36	36	36				

FF87..

42 139 01 01

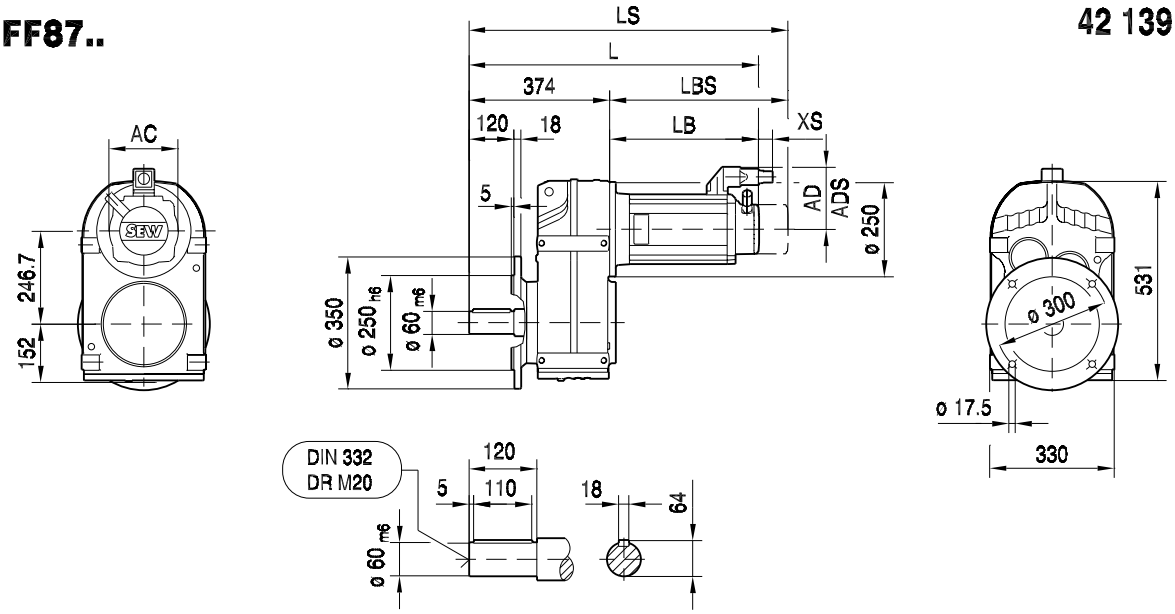

FAF87..

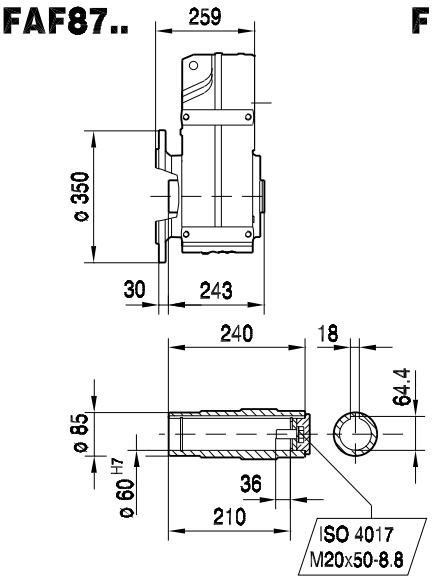

FHF87..

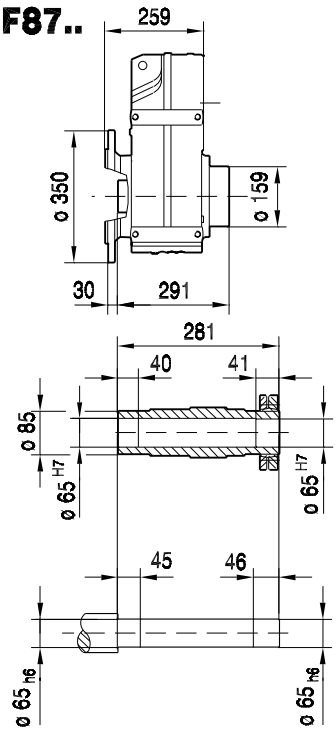

FVF87..

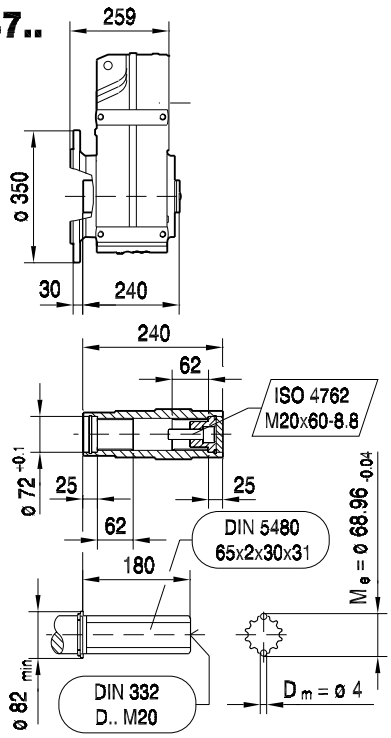

(→ 105)	CM90S	CM90M	CM90L	CM112S	CM112M	CM112L	CM112H				
AC	142	142	142	186	186	186	186				
AD	140	140	140	162	162	162	162				
ADS	140	140	140	162	162	162	162				
L	646	673	727	681	708	770	900				
LS	742	769	823	771	798	860	965				
LB	272	299	353	307	334	396	526				
LBS	368	395	449	397	424	486	591				
XS	50	50	50	36	36	36	36				

FA87..

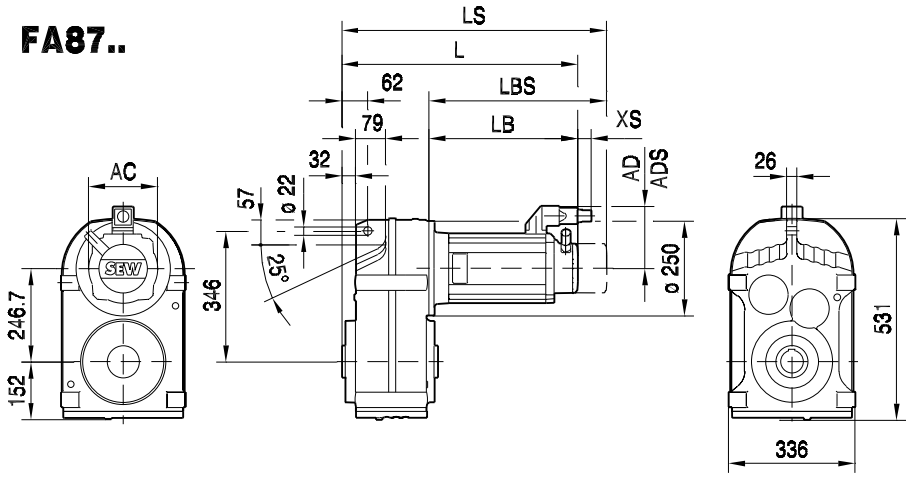

42 140 01 01

F.. /G ..

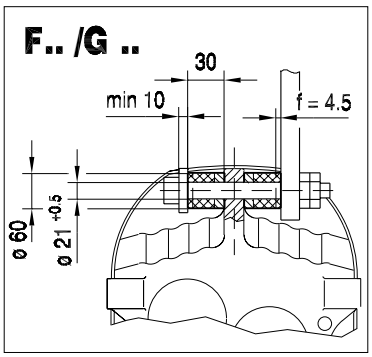

FA87..

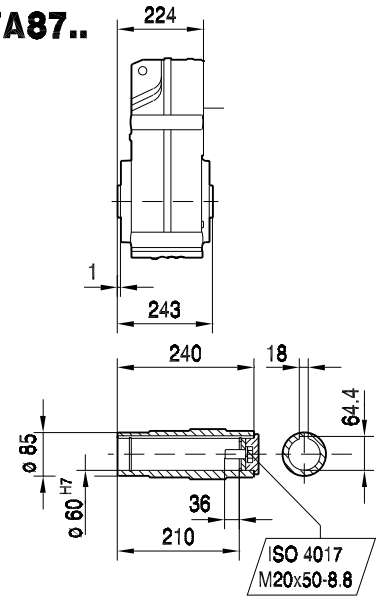

FH87..

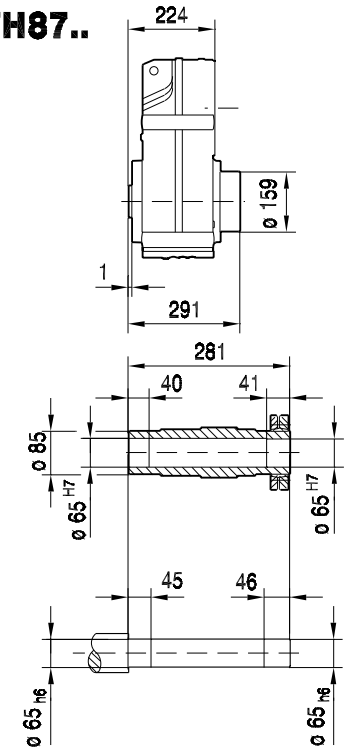

FV87..

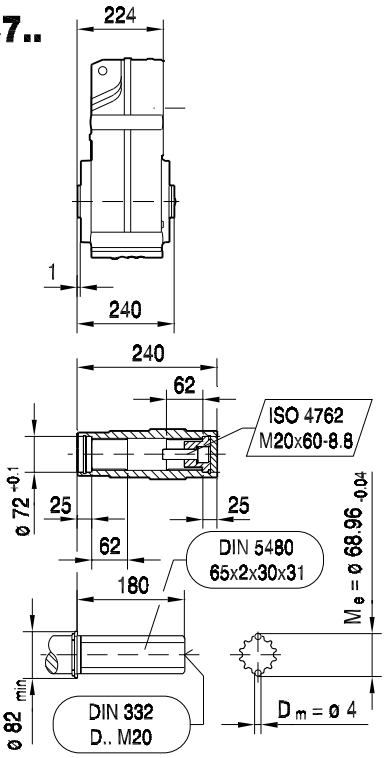

(→ 105)	CM90S	CM90M	CM90L	CM112S	CM112M	CM112L	CM112H				
AC	142	142	142	186	186	186	186				
AD	140	140	140	162	162	162	162				
ADS	140	140	140	162	162	162	162				
L	496	523	577	531	558	620	750				
LS	592	619	673	621	648	710	815				
LB	272	299	353	307	334	396	526				
LBS	368	395	449	397	424	486	591				
XS	50	50	50	36	36	36	36				

FAZ87..

42 044 00 04

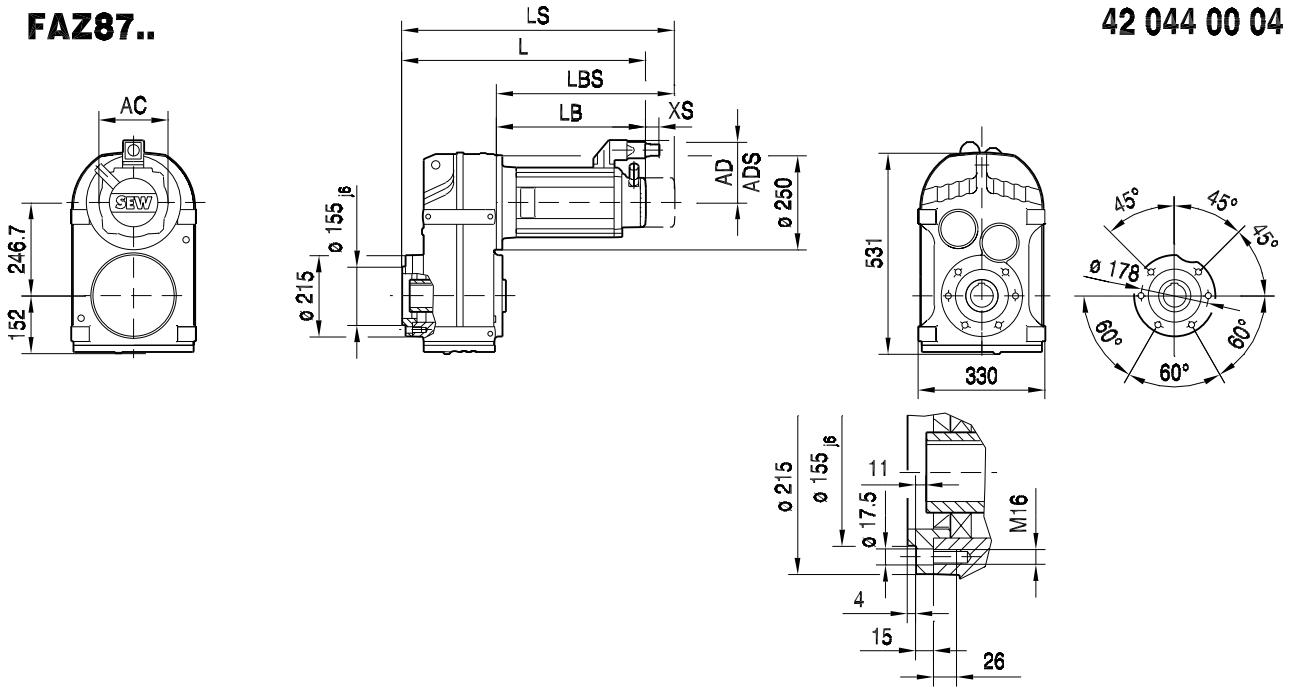

FAZ87..

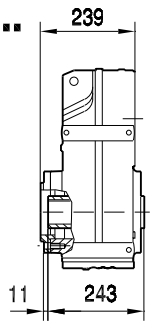

FHZ87..

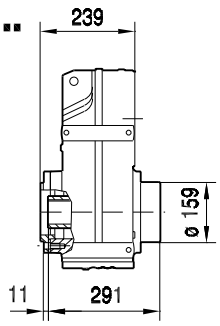

FVZ87..

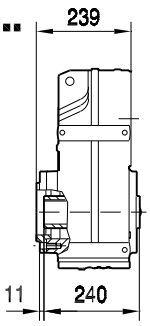

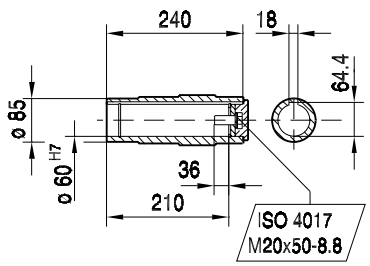

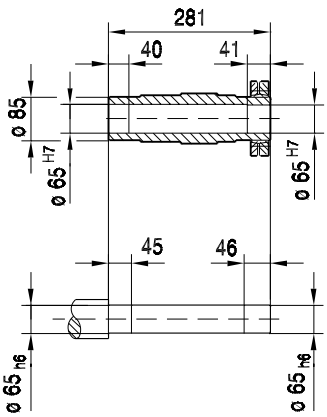

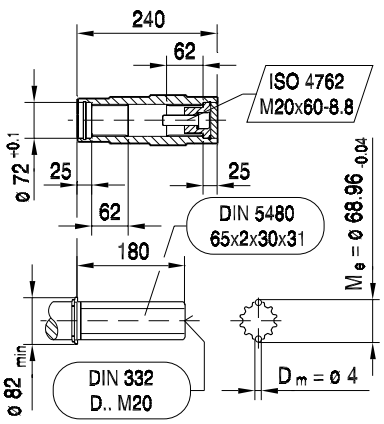

(→ 105)	CM90S	CM90M	CM90L	CM112S	CM112M	CM112L	CM112H				
AC	142	142	142	186	186	186	186				
AD	140	140	140	162	162	162	162				
ADS	140	140	140	162	162	162	162				
L	511	538	592	546	573	635	765				
LS	607	634	688	636	663	725	830				
LB	272	299	353	307	334	396	526				
LBS	368	395	449	397	424	486	591				
XS	50	50	50	36	36	36	36				

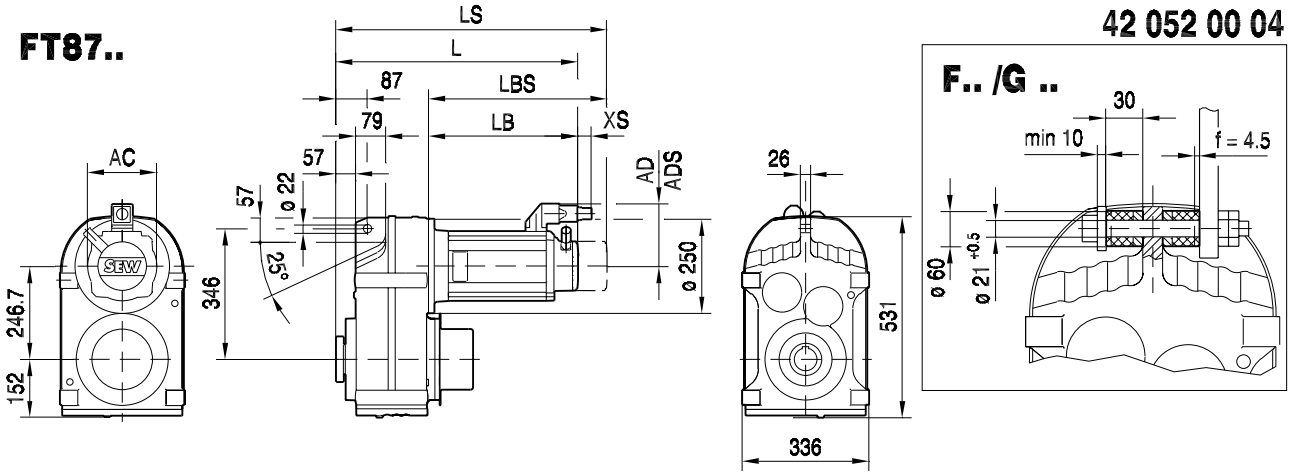

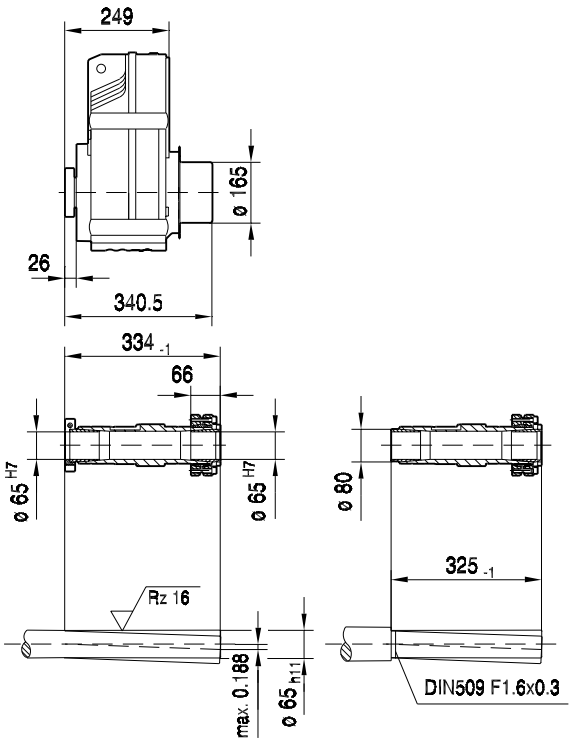

(→ 105)	CM90S	CM90M	CM90L	CM112S	CM112M	CM112L	CM112H				
AC	142	142	142	186	186	186	186				
AD	140	140	140	162	162	162	162				
ADS	140	140	140	162	162	162	162				
L	521	548	602	556	583	645	775				
LS	617	644	698	646	673	735	840				
LB	272	299	353	307	334	396	526				
LBS	368	395	449	397	424	486	591				
XS	50	50	50	36	36	36	36				

F97..

42 141 01 01

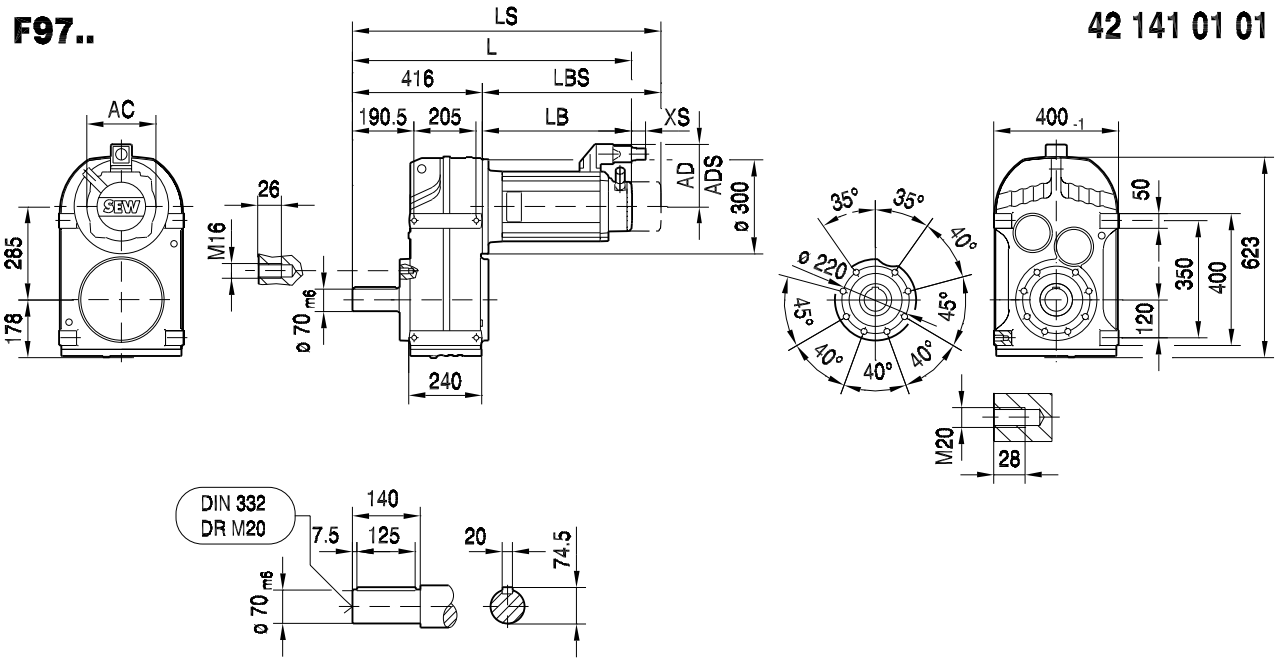

FA97B..

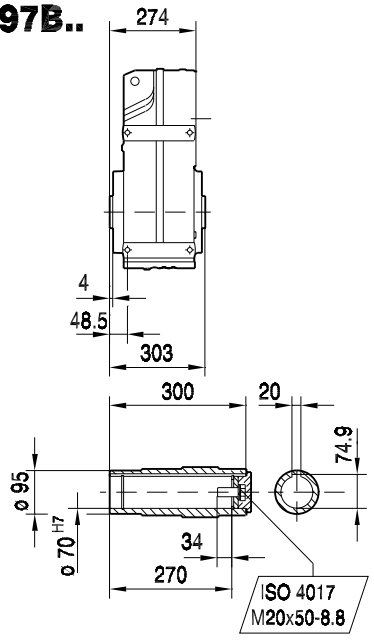

FH97B..

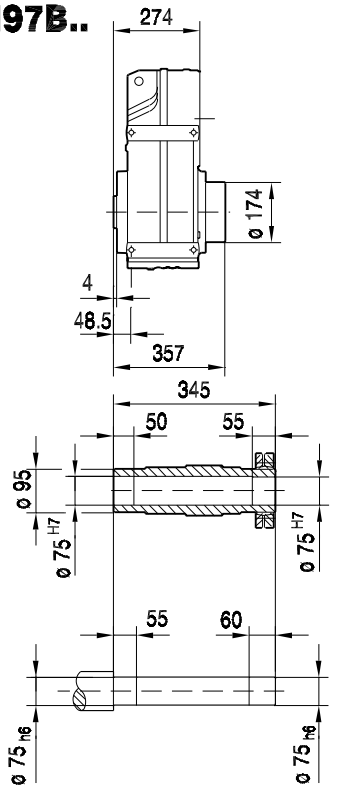

FV97B..

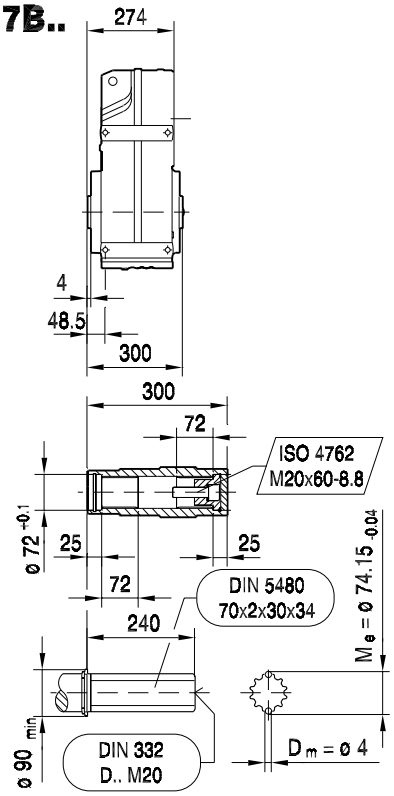

(→ 105)	CM90S	CM90M	CM90L	CM112S	CM112M	CM112L	CM112H				
AC	142	142	142	186	186	186	186				
AD	140	140	140	162	162	162	162				
ADS	140	140	140	162	162	162	162				
L	682	709	763	718	745	807	937				
LS	778	805	859	808	835	897	1002				
LB	266	293	347	302	329	391	521				
LBS	362	389	443	392	419	481	586				
XS	50	50	50	36	36	36	36				

FF97..

42 142 01 01

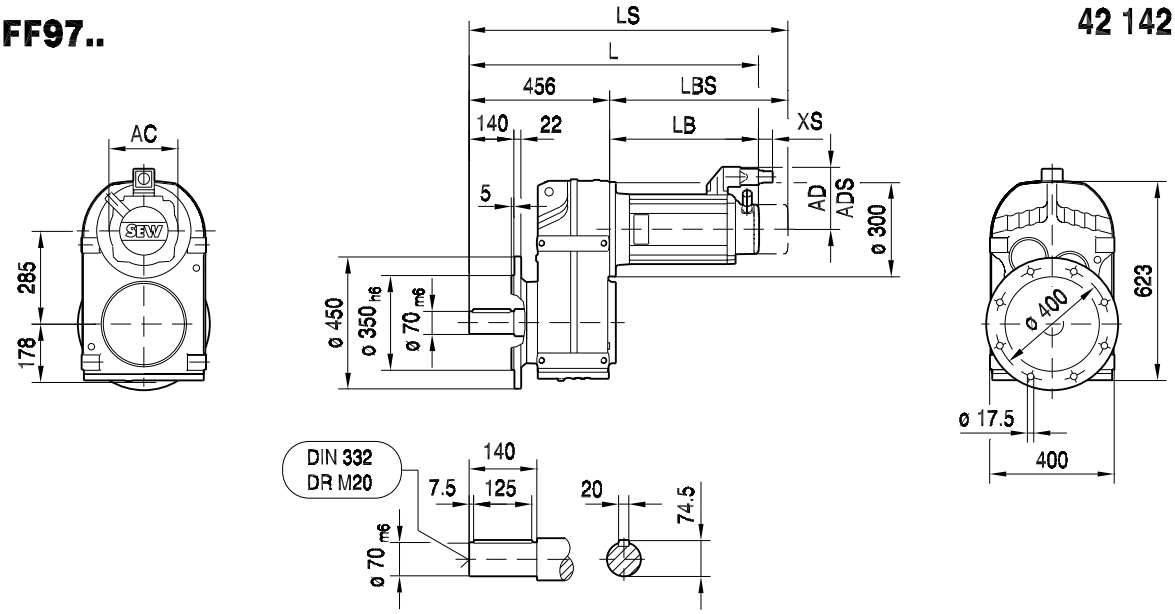

8

FAF97..

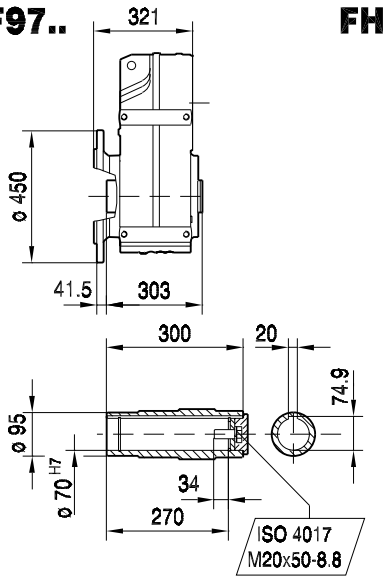

FHF97..

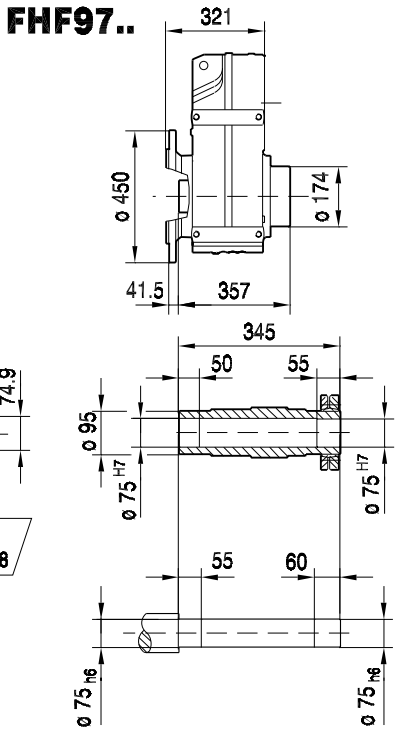

FVF97..

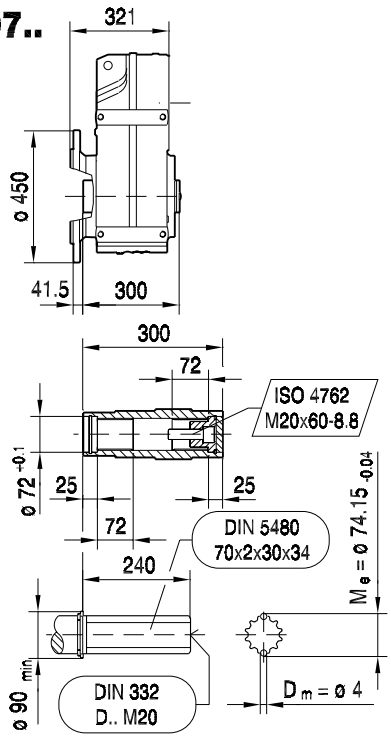

(→ 105)	CM90S	CM90M	CM90L	CM112S	CM112M	CM112L	CM112H				
AC	142	142	142	186	186	186	186				
AD	140	140	140	162	162	162	162				
ADS	140	140	140	162	162	162	162				
L	722	749	803	758	785	847	977				
LS	818	845	899	848	875	937	1042				
LB	266	293	347	302	329	391	521				
LBS	362	389	443	392	419	481	586				
XS	50	50	50	36	36	36	36				

FA97..

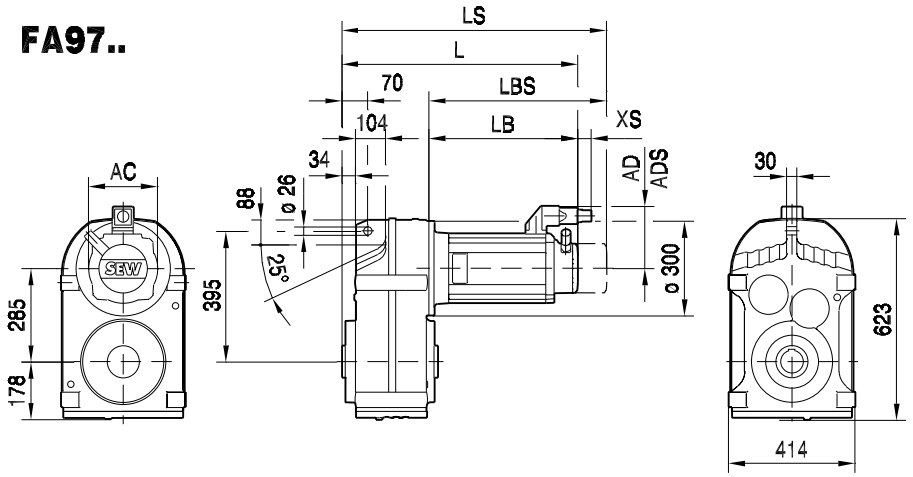

42 143 01 01

F.. /G ..

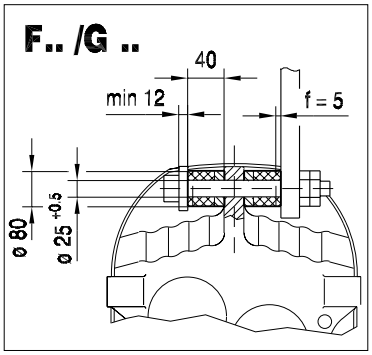

FA97..

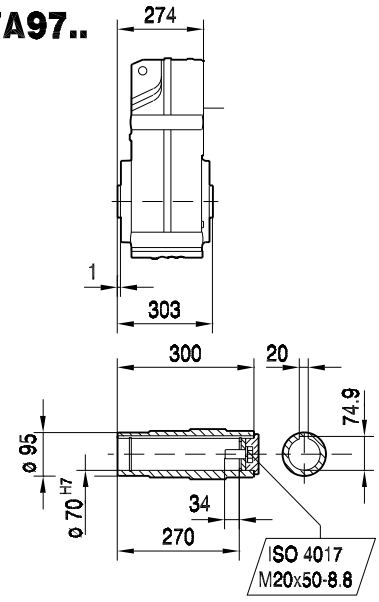

FH97..

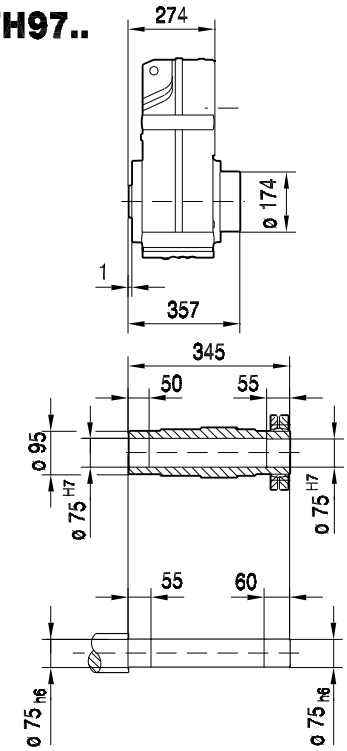

FV97..

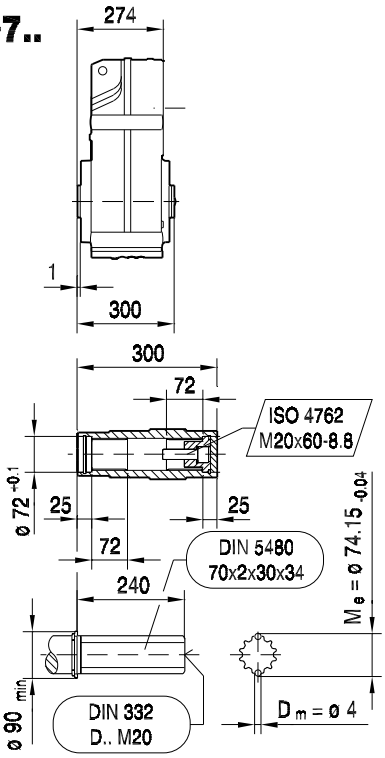

(→ 105)	CM90S	CM90M	CM90L	CM112S	CM112M	CM112L	CM112H				
AC	142	142	142	186	186	186	186				
AD	140	140	140	162	162	162	162				
ADS	140	140	140	162	162	162	162				
L	540	567	621	576	603	665	795				
LS	636	663	717	666	693	755	860				
LB	266	293	347	302	329	391	521				
LBS	362	389	443	392	419	481	586				
XS	50	50	50	36	36	36	36				

FAZ97..

42 045 00 04

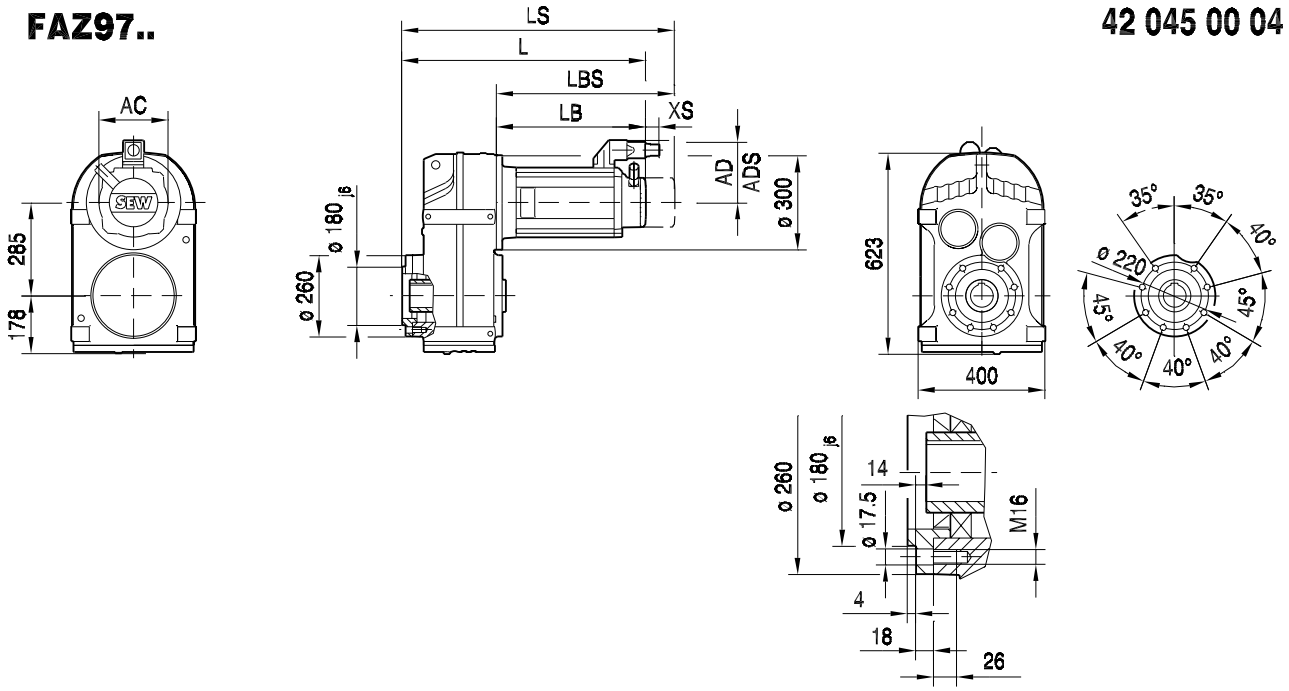

FAZ97..

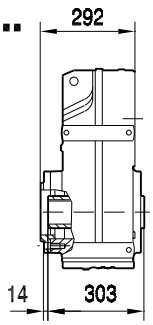

FHZ97..

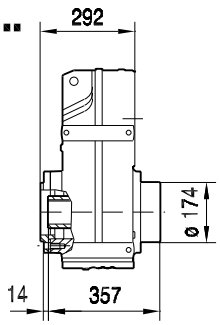

FVZ97..

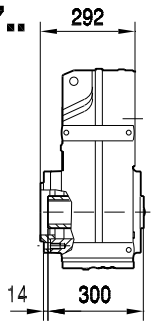

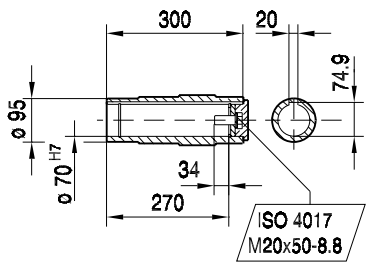

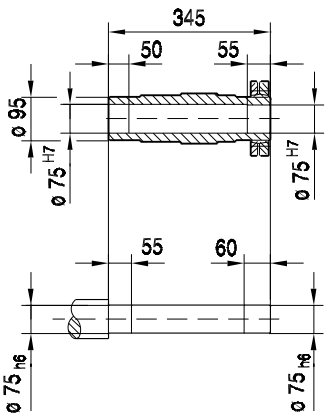

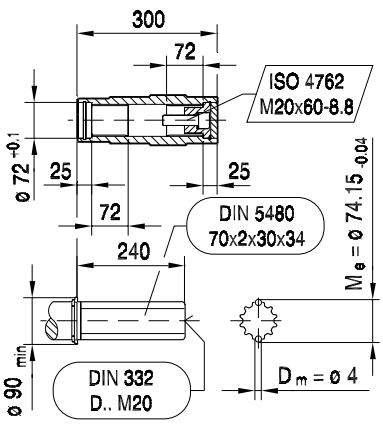

(→ 105)	CM90S	CM90M	CM90L	CM112S	CM112M	CM112L	CM112H				
AC	142	142	142	186	186	186	186				
AD	140	140	140	162	162	162	162				
ADS	140	140	140	162	162	162	162				
L	558	585	639	594	621	683	813				
LS	654	681	735	684	711	773	878				
LB	266	293	347	302	329	391	521				
LBS	362	389	443	392	419	481	586				
XS	50	50	50	36	36	36	36				

FT97..

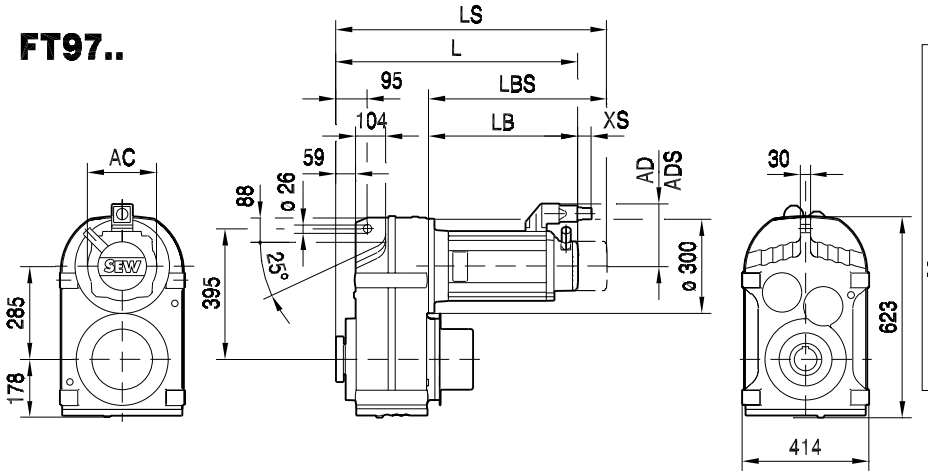

42 053 00 04

F.. /G ..

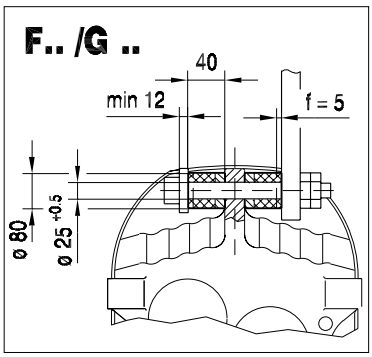

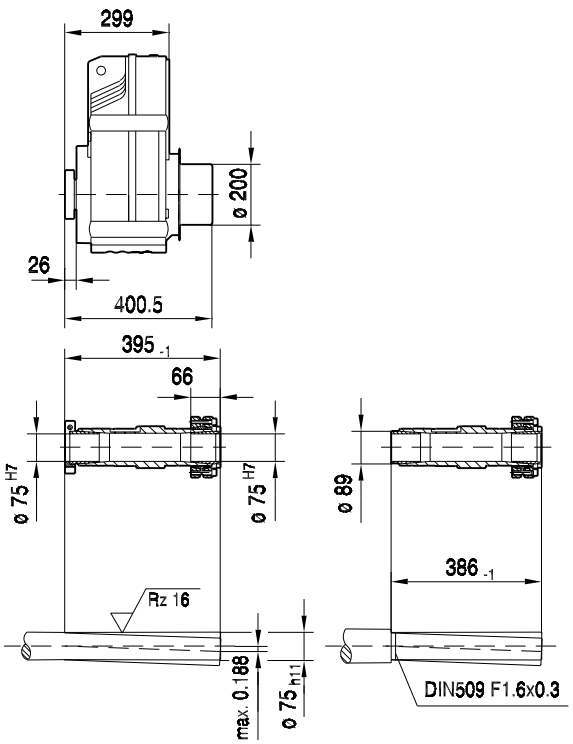

(→ 105)	CM90S	CM90M	CM90L	CM112S	CM112M	CM112L	CM112H				
AC	142	142	142	186	186	186	186				
AD	140	140	140	162	162	162	162				
ADS	140	140	140	162	162	162	162				
L	565	592	646	601	628	690	820				
LS	661	688	742	691	718	780	885				
LB	266	293	347	302	329	391	521				
LBS	362	389	443	392	419	481	586				
XS	50	50	50	36	36	36	36				

F107..

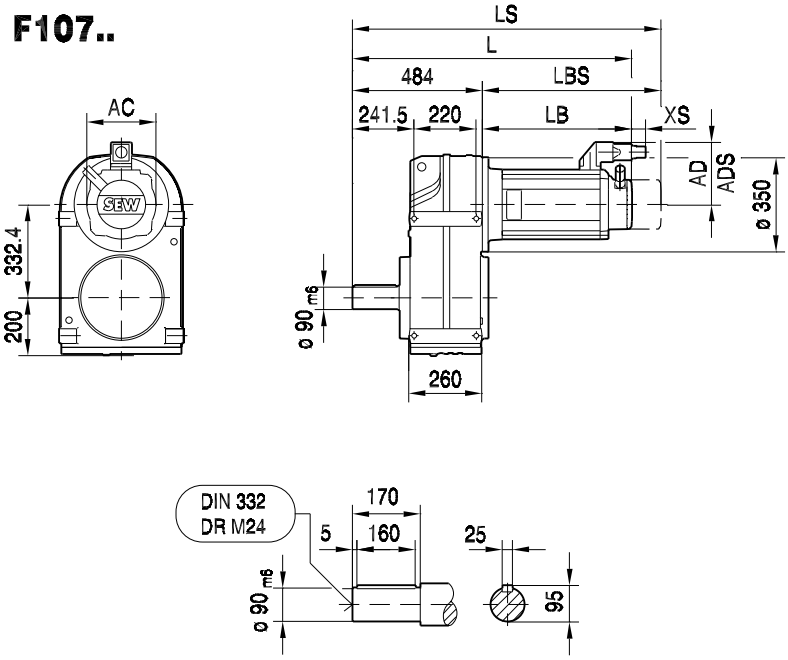

42 144 01 01

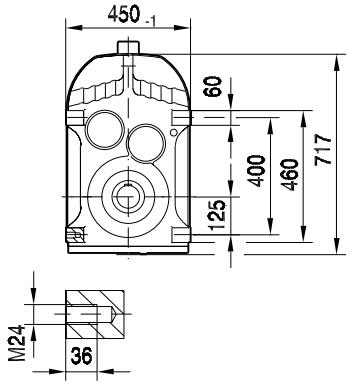

FA107B..

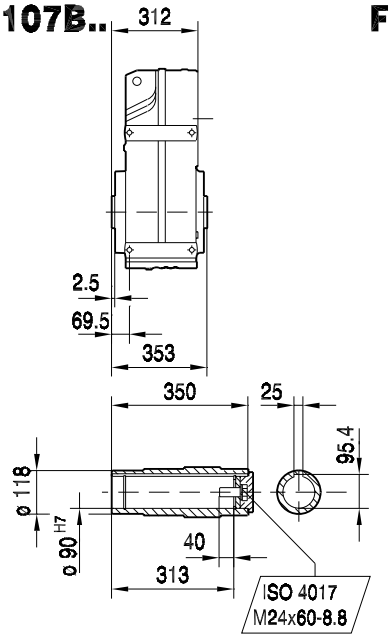

FH107B..

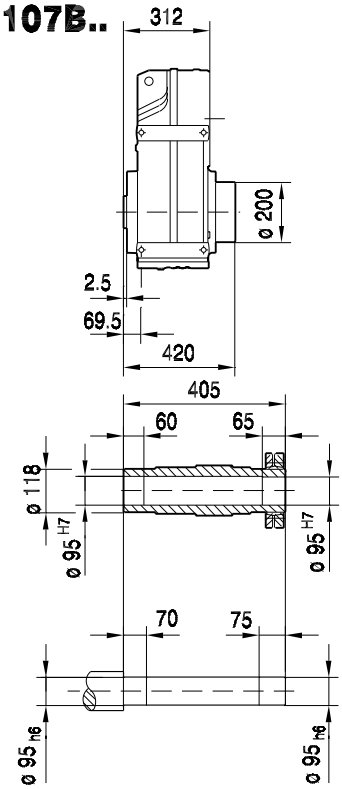

FV107B..

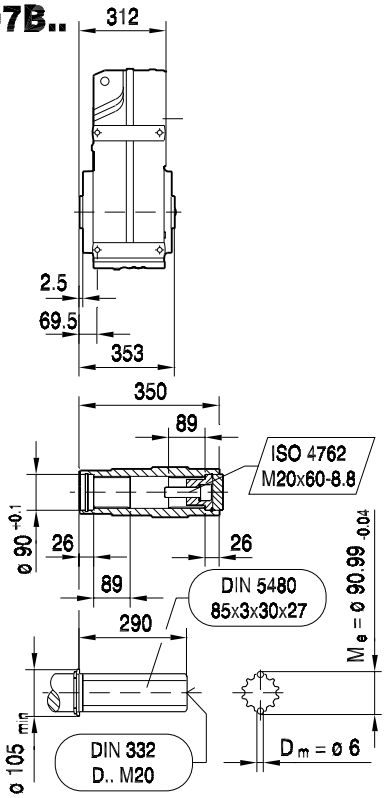

(→ 105)	CM112S	CM112M	CM112L	CM112H							
AC	186	186	186	186							
AD	162	162	162	162							
ADS	162	162	162	162							
L	780	807	869	999							
LS	870	897	959	1064							
LB	296	323	385	515							
LBS	386	413	475	580							
XS	36	36	36	36							

FF107..

42 145 01 01

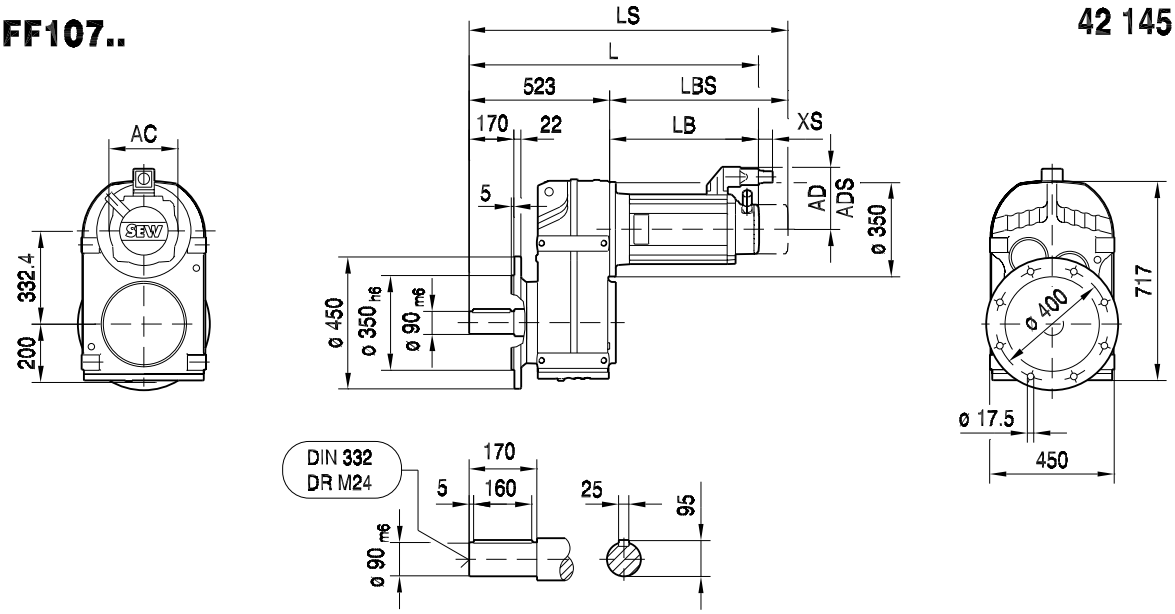

FAF107..

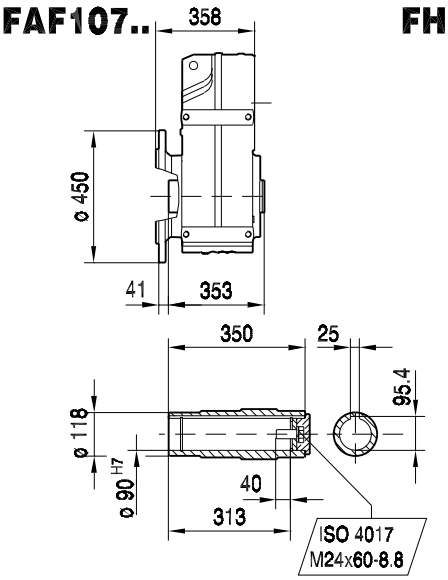

FHF107..

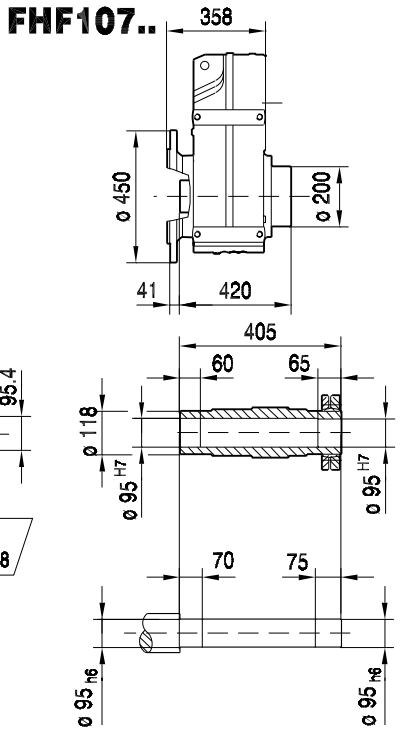

FVF107..

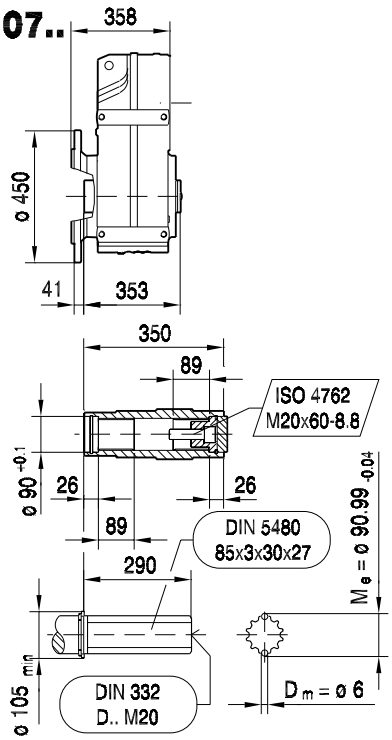

(→ 105)	CM112S	CM112M	CM112L	CM112H							
AC	186	186	186	186							
AD	162	162	162	162							
ADS	162	162	162	162							
L	819	846	908	1038							
LS	909	936	998	1103							
LB	296	323	385	515							
LBS	386	413	475	580							
XS	36	36	36	36							

FA107..

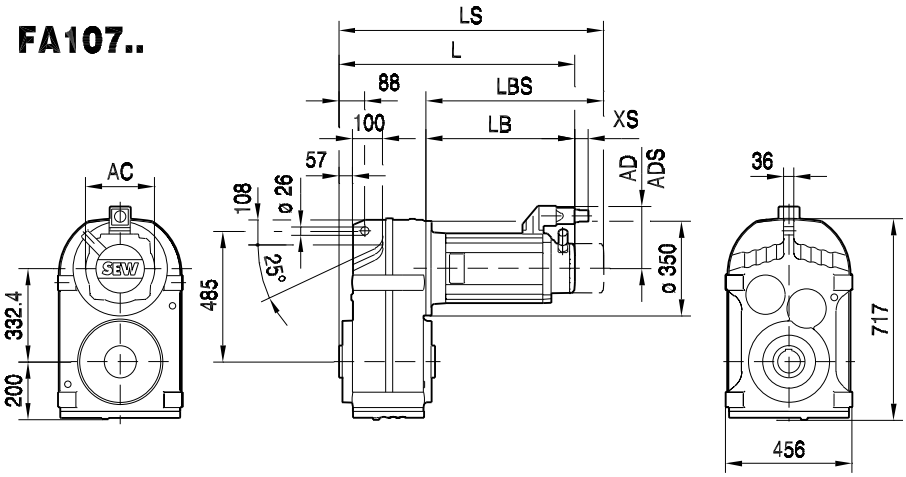

42 146 01 01

F.. /G ..

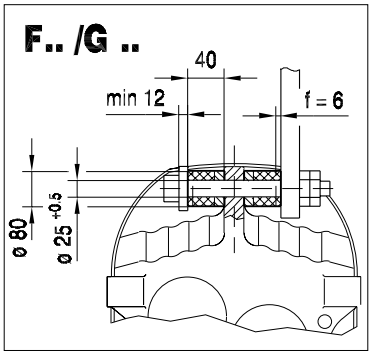

FA107..

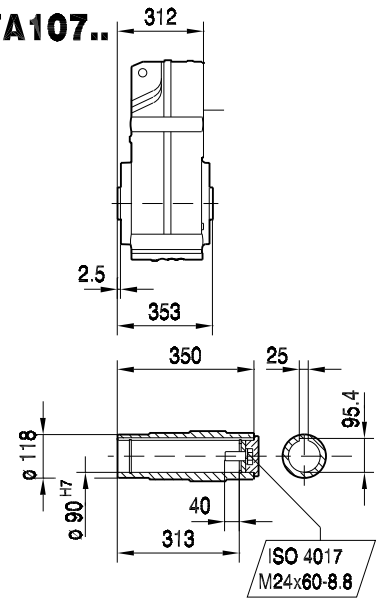

FH107..

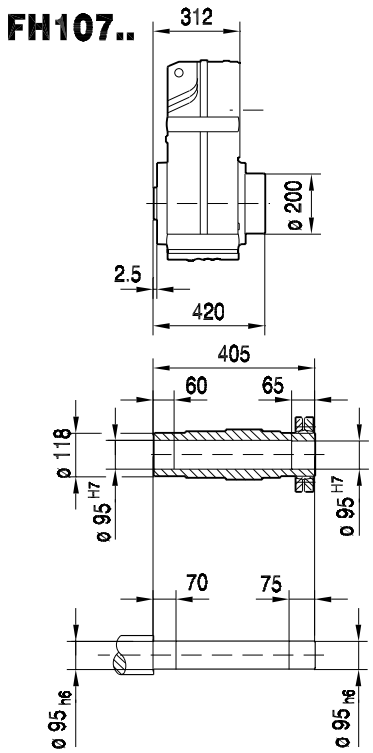

FV107..

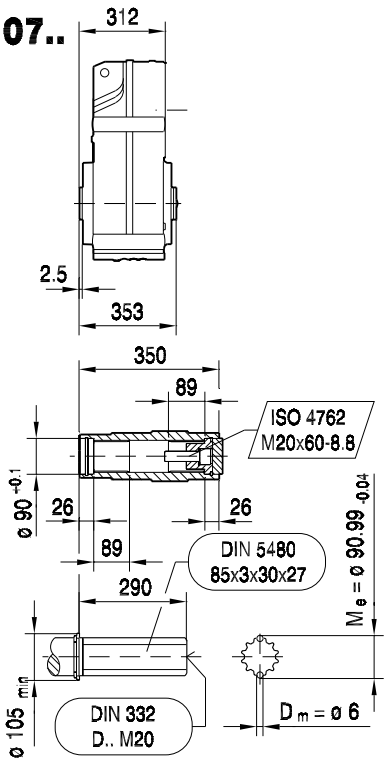

(→ 105)	CM112S	CM112M	CM112L	CM112H							
AC	186	186	186	186							
AD	162	162	162	162							
ADS	162	162	162	162							
L	608	635	697	827							
LS	698	725	787	892							
LB	296	323	385	515							
LBS	386	413	475	580							
XS	36	36	36	36							

FAZ107..

42 046 00 04

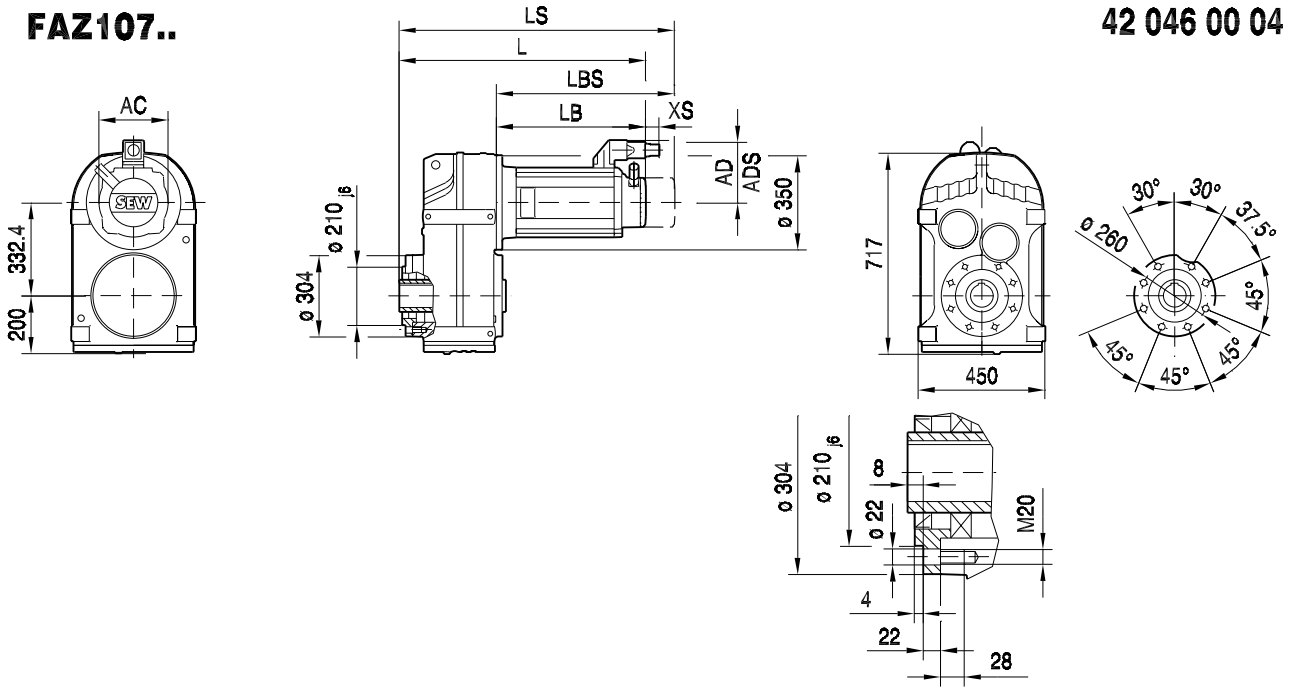

FAZ107..

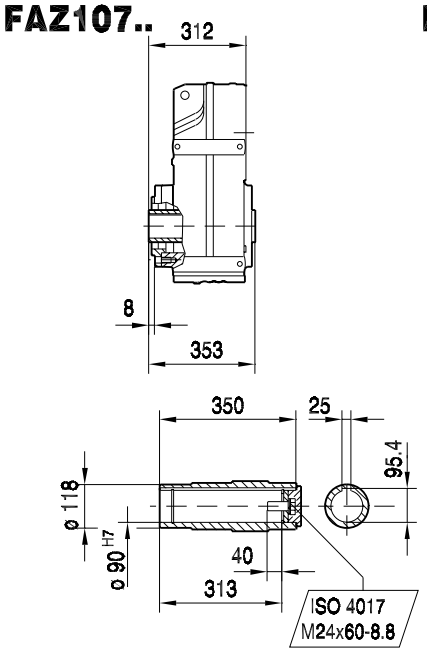

FHZ107..

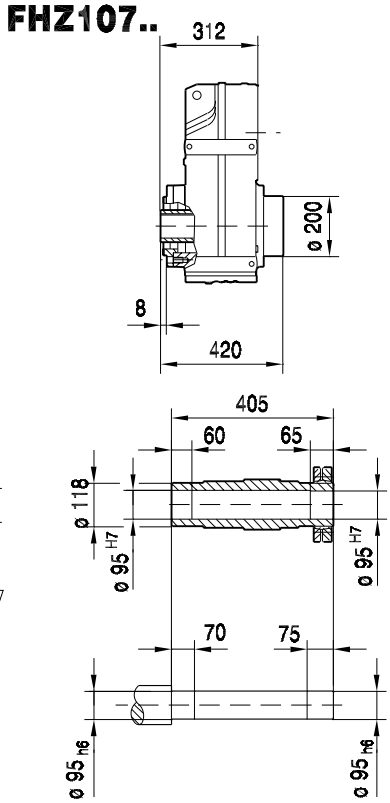

FVZ107..

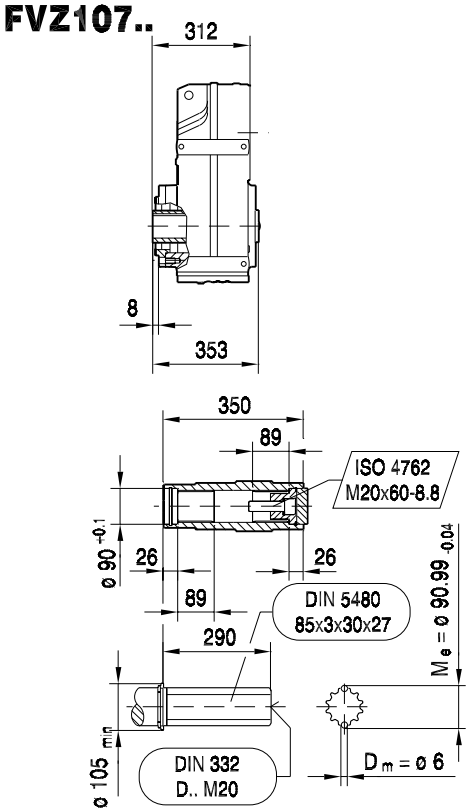

(→ 105)	CM112S	CM112M	CM112L	CM112H							
AC	186	186	186	186							
AD	162	162	162	162							
ADS	162	162	162	162f							
L	608	635	697	827							
LS	698	725	787	892							
LB	296	323	385	515							
LBS	386	413	475	580							
XS	36	36	36	36							

9 K..DS/CM..

9.1 K, KA, KV, KH, KF, KAF, KAV, KHF, KA../T, KV../T, KH../T, KAZ, KVZ, KHZ..DS/CM

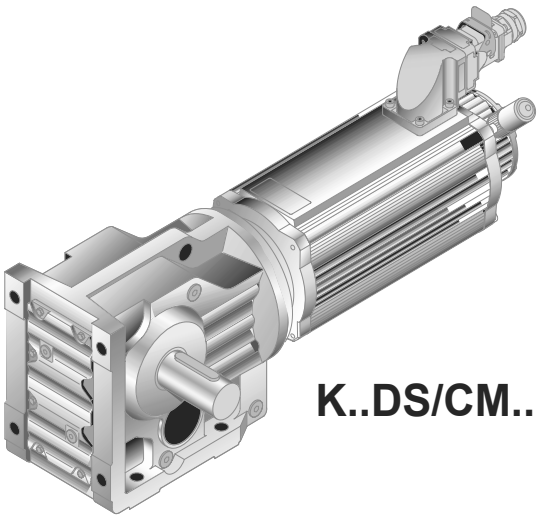

K..DS/CM..

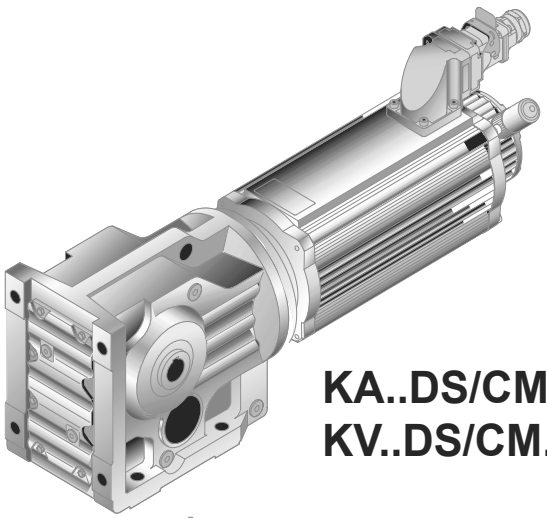

KA..DS/CM..
KV..DS/CM..

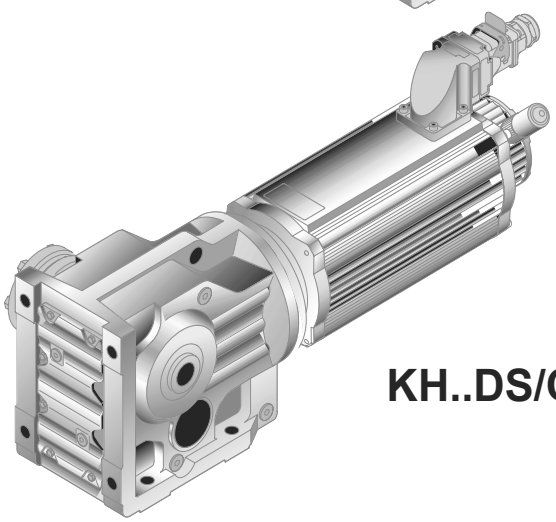

KH..DS/CM..

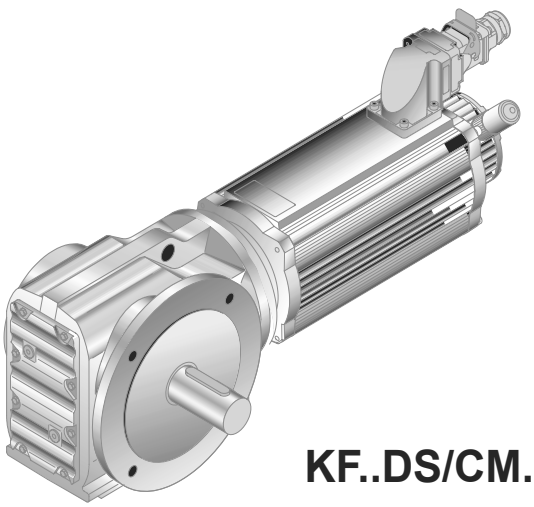

KF..DS/CM..

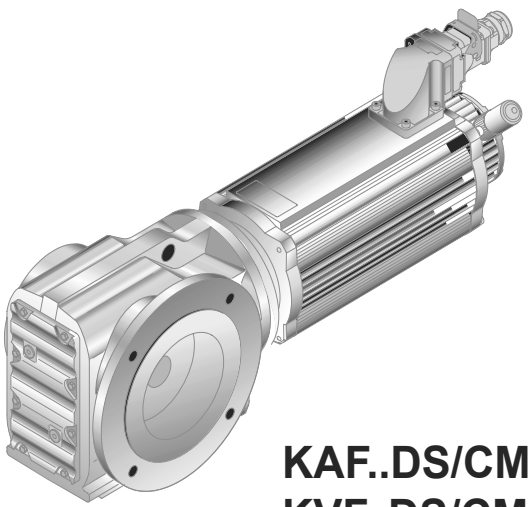

KAF..DS/CM..
KVF..DS/CM..

52501AXX

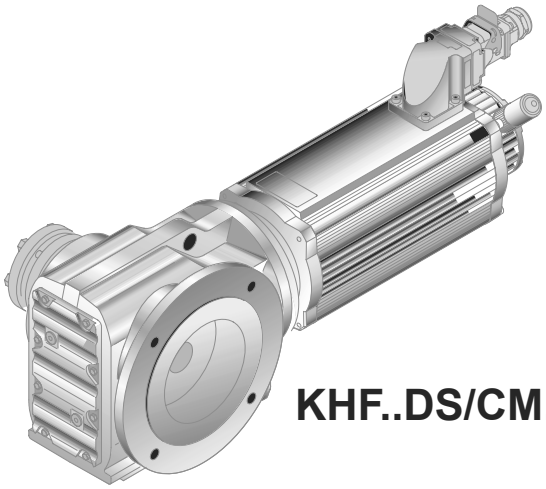

KHF..DS/CM..

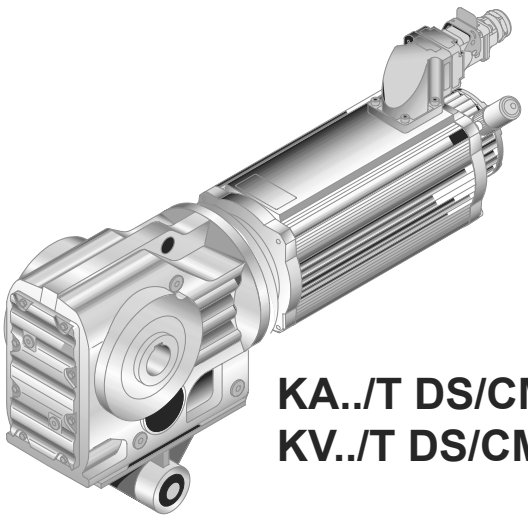

KA../T DS/CM..
KV../T DS/CM..

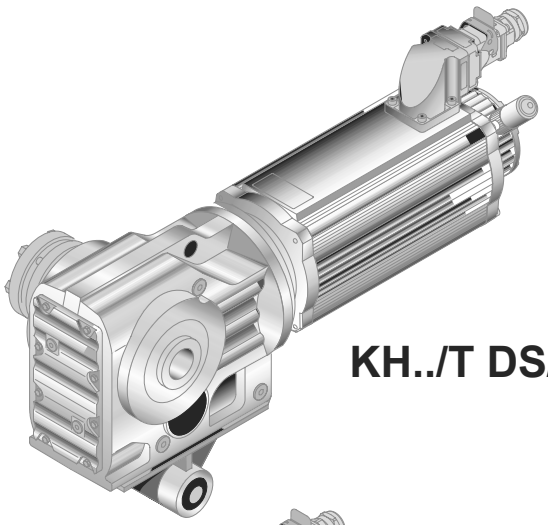

KH../T DS/CM..

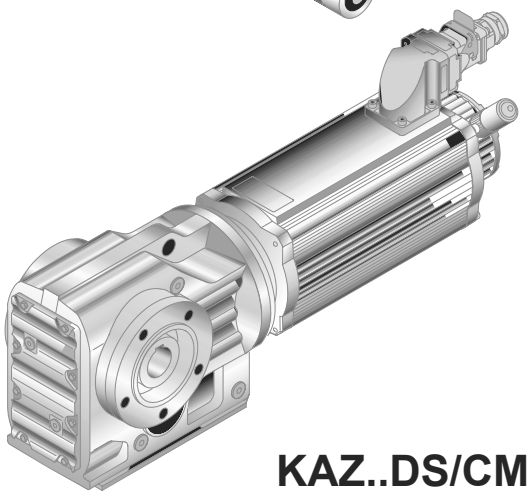

KAZ..DS/CM..
KVZ..DS/CM..

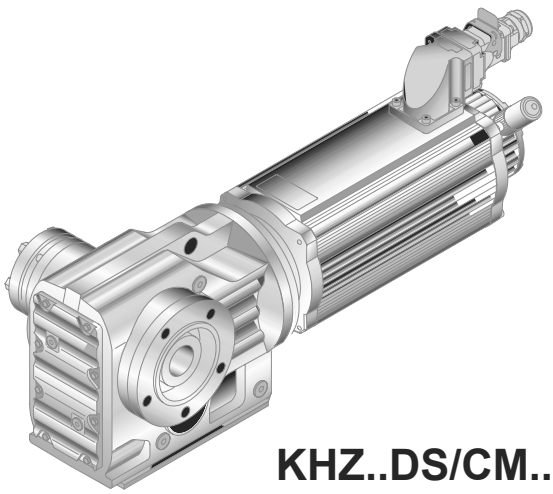

KHZ..DS/CM..

52502AXX

9.2 K37 DS/CM.. [Nm]

	$M_{a\ max}$ [Nm]	i	φ (/R) [']	F_{Ra}(K) [N]	F_{Ra}(KA) [N]	$J_G 10^{-4}$ [kgm^2]	DS			CM			
							56M	56L	56H	71S	71M	71L	90S
K37	200	106.38	7	5640	7000	0.12							
	200	97.81	7	5640	7000	0.13							
KF37	200	83.69	7	5640	7000	0.17							
	200	72.54	7	5360	7000	0.21							
KA37	200	67.80	7	5200	7000	0.23							
	200	58.60	7	4860	6660	0.27							
KAF37	200	49.79	7	4510	6180	0.36							
	200	44.46	7	4280	5870	0.42							
	200	37.97	7	3960	5450	0.54							
	200	35.57	7	3840	5290	0.60							
	200	29.96	7	3520	4870	0.76							
	200	28.83	8	3460	4770	0.26							
	200	24.99	8	3210	4450	0.33							
	195	23.36	8	3140	4350	0.37							
	185	20.19	8	3000	4160	0.46							
	180	17.15	8	2800	3880	0.62							
	175	15.31	9	2680	3720	0.76							
	165	13.08	9	2550	3540	1.01							
	160	12.14	12	2510	3470	0.40							
	160	10.49	12	2320	3220	0.51							
	160	8.91	12	2120	2960	0.70							
	155	7.96	13	2030	2840	0.85							
	150	6.80	13	1900	2660	1.13							
	145	6.37	13	1880	2620	1.27							
	140	5.36	13	1740	2440	1.71							
	125	3.98	13	1600	2230	2.55							

m [kg]	DS			CM			
	56M	56L	56H	71S	71M	71L	90S
K37	14	15	15	20	21	25	29

KF37: + 2.3 kg / KA37: -- kg / KAF37: + 1.5 kg

9.3 K47 DS/CM.. [Nm]

	$M_{a\ max}$ [Nm]	i	φ (/R) [']	F_{Ra}(K) [N]	F_{Ra}(KA) [N]	$J_G 10^{-4}$ [kgm^2]	DS	CM				
							56H	71S	71M	71L	90S	90M
K47	400	104.37	6	5920	7500	0.26						
	400	90.86	6	5920	6990	0.32						
KF47	400	85.12*	6	5920	6760	0.35						
	400	75.20*	6	5920	6330	0.42						
KA47	400	69.84	6	5920	6090	0.45						
	400	63.30*	7	5920	5770	0.54						
KAF47	400	56.83	7	5920	5430	0.64						
	400	48.95*	7	5920	4980	0.80						
	400	46.03*	7	5920	4810	0.88						
	400	39.61	7	5920	4390	1.10						
	400	35.39	7	5860	4080	1.28						
	400	31.30	7	5500	3770	0.50						
	400	29.32	8	5320	3610	0.55						
	400	25.91	8	4980	3310	0.68						
	400	24.06	8	4790	3130	0.75						
	400	21.81	8	4530	2910	0.91						
	400	19.58	8	4270	2680	1.09						
	380	16.86	8	4060	2550	1.40						
	380	15.86	8	3920	2430	1.56						
	360	13.65	8	3740	2320	2.02						
	350	12.19	8	3580	2210	2.43						
	280	11.77	10	3910	2650	1.03						
	280	10.56	11	3700	2450	1.23						
	280	9.10	11	3410	2200	1.60						
	270	8.56	11	3370	2200	1.78						
	250	7.36	11	3260	2160	2.33						
	240	6.58	12	3150	2090	2.81						
	230	5.81	12	3020	2010	3.60						
	205	4.64	12	2870	1940	4.44						

m [kg]	DS	CM				
	56H	71S	71M	71L	90S	90M
K47	22	27	28	31	36	38

KF47: + 3.2 kg / KA47: - 0.85 kg / KAF47: + 2.0 kg

9.4 K57 DS/CM.. [Nm]

	$M_{a\ max}$ [Nm]	i	φ (/R) [']	F_{Ra}(K) [N]	F_{Ra}(KA) [N]	$J_G 10^{-4}$ [kgm^2]	DS	CM						
							56H	71S	71M	71L	90S	90M	90L	112S
K57	600	123.85	6	7630	10500	0.33								
	600	108.29	6	7630	9820	0.41								
KF57	600	102.88*	6	7630	9570	0.46								
	600	90.26*	6	7630	8940	0.67								
KA57	600	76.56*	6	7630	8190	0.85								
	600	69.12	6	7630	7740	0.98								
KAF57	600	60.81*	6	7630	7210	1.22								
	600	57.42*	6	7630	6970	1.32								
	600	48.89	6	7630	6340	1.58								
	600	44.43	6	7630	5990	1.86								
	600	38.49	6	7630	5470	2.28								
	600	35.70	7	7630	5210	0.95								
	600	30.28	7	7050	4660	1.24								
	600	27.34	7	6680	4330	1.47								
	600	24.05	7	6240	3930	1.86								
	600	22.71	7	6050	3760	2.04								
	575	19.34	7	5690	3510	2.58								
	555	17.57	7	5520	3420	3.02								
	535	15.22	7	5230	3210	3.83								
	510	13.25	7	5000	3070	4.83								
	415	11.92	9	4960	3310	2.11								
	415	11.26	9	4810	3170	2.32								
	405	9.59	10	4470	2900	2.96								
	390	8.71	10	4350	2830	3.48								
	365	7.55	10	4200	2760	4.44								
	345	6.57	10	4030	2670	5.63								
	300	4.69	11	3670	2460	9.04								

m [kg]	DS	CM						
	56H	71S	71M	71L	90S	90M	90L	112S
K57	28	32	34	37	41	44	49	50

KF57: + 4.7 kg / KA57: - 2.1 kg / KAF57: + 3.6 kg

9.5 K67 DS/CM.. [Nm]

	$M_{a\ max}$ [Nm]	i	φ (/R) [']	F_{Ra}(K) [N]	F_{Ra}(KA) [N]	$J_G 10^{-4}$ [kgm^2]	DS	CM				
							56H	71S	71M	71L	90S	90M
K67	820	123.54	6	10300	9400	0.34						
	820	108.03	6	10300	8710	0.42						
KF67	820	102.62	6	10300	8450	0.47						
	820	90.04	6	10300	7810	0.68						
KA67	820	76.37	6	10300	7050	0.87						
	820	68.95	6	10300	6600	1.00						
KAF67	820	60.66	6	10300	6050	1.25						
	820	57.28	6	10300	5810	1.36						
	820	48.77	6	10300	5170	1.67						
	820	44.32	6	10300	4810	1.92						
	800	38.39	6	10500	4440	2.36						
	820	35.62	7	10300	4010	1.01						
	820	30.22	7	10300	3450	1.33						
	820	27.28	7	10300	3120	1.58						
	800	24.00	7	10500	2880	2.04						
	780	22.66	7	10700	2860	2.25						
	760	19.30	7	10800	2550	2.89						
	740	17.54	7	11000	2440	3.41						
	700	15.19	8	11300	2360	4.38						
	670	13.22	8	11500	2240	5.58						
	530	12.48	9	12000	2540	2.48						
	500	10.63	9	11500	2430	3.21						
	480	9.66	9	11200	2390	3.80						
	440	8.37	9	10800	2440	4.90						
	420	7.28	9	10400	2330	6.28						
	350	5.20	10	9620	2320	11.28						

m [kg]	DS	CM				
	56H	71S	71M	71L	90S	90M
K67	34	38	39	43	47	50

KF67: + 5.6 kg / KA67: - 2.7 kg / KAF67: + 3.0 kg

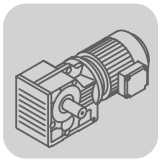

K67 DS/CM..

	$M_{a\ max}$ [Nm]	i	φ (/R) [']	F_{Ra}(K) [N]	F_{Ra}(KA) [N]	$J_G 10^{-4}$ [kgm^2]	CM 90L	CM 112S	CM 112M
K67	820	123.54	6	10300	9400	0.34			
	820	108.03	6	10300	8710	0.42			
KF67	820	102.62	6	10300	8450	0.47			
	820	90.04	6	10300	7810	0.68			
KA67	820	76.37	6	10300	7050	0.87			
	820	68.95	6	10300	6600	1.00			
KAF67	820	60.66	6	10300	6050	1.25			
	820	57.28	6	10300	5810	1.36			
	820	48.77	6	10300	5170	1.67			
	820	44.32	6	10300	4810	1.92			
	800	38.39	6	10500	4440	2.36			
	820	35.62	7	10300	4010	1.01			
	820	30.22	7	10300	3450	1.33			
	820	27.28	7	10300	3120	1.58			
	800	24.00	7	10500	2880	2.04			
	780	22.66	7	10700	2860	2.25			
	760	19.30	7	10800	2550	2.89			
	740	17.54	7	11000	2440	3.41			
	700	15.19	8	11300	2360	4.38			
	670	13.22	8	11500	2240	5.58			
	530	12.48	9	12000	2540	2.48			
	500	10.63	9	11500	2430	3.21			
	480	9.66	9	11200	2390	3.80			
	440	8.37	9	10800	2440	4.90			
	420	7.28	9	10400	2330	6.28			
	350	5.20	10	9620	2320	11.28			

m [kg]	CM 90L	CM 112S	CM 112M
K67	55	56	60

KF67: + 5.6 kg / KA67: - 2.7 kg / KAF67: + 3.0 kg

9.6 K77 CM.. [Nm]

	$M_{a\ max}$ [Nm]	i	$\varphi_{(/R)}$ [']	$F_{Ra}(K)$ [N]	$F_{Ra}(KA)$ [N]	$J_G 10^{-4}$ [kgm^2]	CM					
							71S	71M	71L	90S	90M	90L
K77	1550	135.28	5	15400	12200	0.81						
	1550	128.52	5	15400	11800	0.90						
KF77	1550	113.56	5	15400	10900	1.26						
	1550	97.05	5	15400	9850	1.59						
KA77	1550	88.97	5	15400	9280	1.86						
	1550	78.07	5	15400	8460	2.27						
KAF77	1550	73.99	5	15400	8130	2.45						
	1550	64.75	5	15400	7340	2.95						
	1550	58.34	6	15400	6740	3.27						
	1550	51.18	6	15400	6020	4.11						
	1550	45.16	6	15400	5360	4.93						
	1550	40.04	6	15400	4750	5.96						
	1500	38.39	6	15700	4870	2.46						
	1550	35.20	6	15400	4130	2.89						
	1550	30.89	6	15400	3520	3.65						
	1550	29.27	6	15400	3280	3.99						
	1550	25.62	6	15400	2700	4.99						
	1550	23.08	6	15400	2260	5.75						
	1500	20.25	6	15700	2060	7.22						
	1450	17.87	6	15600	1900	8.97						
	1400	15.84	6	15100	1780	11.07						
	1340	13.52	7	14400	1610	14.60						
	1000	12.36	8	14700	2590	6.52						
	990	10.84	8	14000	2240	8.21						
	940	9.56	8	13600	2220	10.24						
	890	8.48	8	13200	2230	12.68						
	820	7.24	8	12700	2290	16.81						

m [kg]	CM					
	71S	**71M**	**71L**	**90S**	**90M**	**90L**
K77	63	64	68	72	75	80

KF77: + 8.2 kg / KA77: - 7.5 kg / KAF77: -- kg

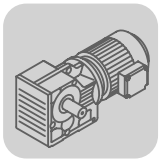

K77 CM..

	$M_{a\ max}$ [Nm]	i	φ (/R) [']	F_{Ra}(K) [N]	F_{Ra}(KA) [N]	$J_G 10^{-4}$ [kgm^2]	CM 112S	CM 112M	CM 112L
K77	1550	135.28	5	15400	12200	0.81			
	1550	128.52	5	15400	11800	0.90			
KF77	1550	113.56	5	15400	10900	1.26			
	1550	97.05	5	15400	9850	1.59			
KA77	1550	88.97	5	15400	9280	1.86			
	1550	78.07	5	15400	8460	2.27			
KAF77	1550	73.99	5	15400	8130	2.45			
	1550	64.75	5	15400	7340	2.95			
	1550	58.34	6	15400	6740	3.27			
	1550	51.18	6	15400	6020	4.11			
	1550	45.16	6	15400	5360	4.93			
	1550	40.04	6	15400	4750	5.96			
	1500	38.39	6	15700	4870	2.46			
	1550	35.20	6	15400	4130	2.89			
	1550	30.89	6	15400	3520	3.65			
	1550	29.27	6	15400	3280	3.99			
	1550	25.62	6	15400	2700	4.99			
	1550	23.08	6	15400	2260	5.75			
	1500	20.25	6	15700	2060	7.22			
	1450	17.87	6	15600	1900	8.97			
	1400	15.84	6	15100	1780	11.07			
	1340	13.52	7	14400	1610	14.60			
	1000	12.36	8	14700	2590	6.52			
	990	10.84	8	14000	2240	8.21			
	940	9.56	8	13600	2220	10.24			
	890	8.48	8	13200	2230	12.68			
	820	7.24	8	12700	2290	16.81			

m [kg]	CM 112S	CM 112M	CM 112L
K77	80	85	100

KF77: + 8.2 kg / KA77: - 7.5 kg / KAF77: -- kg

9.7 K87 CM.. [Nm]

	$M_{a\ max}$ [Nm]	i	$\varphi_{(/R)}$ [']	$F_{Ra}(K)$ [N]	$F_{Ra}(KA)$ [N]	$J_G 10^{-4}$ [kgm^2]	CM						
							90S	90M	90L	112S	112M	112L	112H
K87	2700	147.32*	5	27300	20800	2.77							
	2700	126.91*	5	27300	19100	3.49							
KF87	2700	115.82	5	27300	18000	4.00							
	2700	102.71*	5	27300	16800	4.92							
KA87	2700	86.34	5	27300	15000	6.34							
	2700	79.34	5	27300	14100	7.08							
KAF87	2700	70.46	5	26600	13000	8.36							
	2700	63.00*	5	25400	12000	9.80							
	2700	56.64	5	24300	11000	11.38							
	2700	49.16	5	22800	9850	13.72							
	2600	44.02	6	22100	9500	15.89							
	2500	36.52*	6	20700	8610	20.03							
	2700	31.39	6	18600	6400	9.63							
	2600	27.88	6	17900	6130	11.65							
	2500	24.92	6	17400	5930	13.80							
	2300	22.41	6	17300	6350	16.36							
	2300	19.45	6	16200	5470	20.37							
	2200	17.42	6	15800	5360	24.33							
	1800	16.00	6	15500	5410	12.40							
	2100	14.45	6	14900	4860	32.29							
	2000	12.56	6	14300	4660	41.94							
	1500	11.17	7	14500	5420	21.91							
	1500	10.00	7	13800	4880	26.25							
	1400	8.29	7	13100	4640	35.09							
	1300	7.21	7	12800	4670	45.64							

m [kg]	CM						
	90S	90M	90L	112S	112M	112L	112H
K87	110	110	115	115	120	135	140

KF87: + 9.2 kg / KA87: - 12 kg / KAF87: + 1.1 kg

9.8 K97 CM.. [Nm]

	$M_{a\ max}$ [Nm]	i	$\varphi_{(/R)}$ [']	$F_{Ra}(K)$ [N]	$F_{Ra}(KA)$ [N]	$J_G 10^{-4}$ [kgm^2]	CM						
							90S	90M	90L	112S	112M	112L	112H
K97	4300	176.05*	7	40000	40000	4.05							
	4300	153.21*	7	40000	40000	5.17							
KF97	4300	140.28	7	40000	40000	5.94							
	4300	123.93*	7	40000	38100	9.32							
KA97	4300	105.13	7	40000	35000	11.99							
	4300	96.80	7	39500	33500	13.25							
KAF97	4300	86.52	7	37700	31500	15.60							
	4300	77.89*	7	36000	29700	18.12							
	4300	70.54	7	34500	28100	20.69							
	4300	62.55	7	32800	26200	24.86							
	4300	56.55	7	31400	24700	28.49							
	4300	47.93*	7	29100	22300	34.60							
	4300	41.87	7	27400	20400	42.47							
	4300	38.30	7	26300	19200	18.26							
	4300	34.23	7	24900	17800	21.88							
	4300	30.82	7	23700	16500	25.74							
	4300	27.91	8	22500	15300	30.14							
	4300	24.75	8	21200	13900	36.58							
	4300	22.37	8	20100	12700	42.90							
	4300	18.96	8	18400	11000	54.76							
	4300	16.56	8	17100	9600	68.99							
	4300	13.85	8	15400	7870	90.87							
	3890	11.99	8	15600	8480	114.82							
	2870	10.41	10	15800	9690	71.09							
	2660	8.71	10	15200	9370	93.87							
	2400	7.54	10	15200	9680	120.34							

m [kg]	CM						
	90S	90M	90L	112S	112M	112L	112H
K97	170	170	175	175	180	195	200

KF97: + 20 kg / KA97: - 18 kg / KAF97: + 6.7 kg

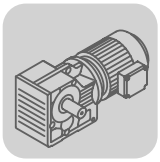

9.9 K107 CM.. [Nm]

	$M_{a\ max}$ [Nm]	i	φ (/R) [']	F_{Ra}(K) [N]	F_{Ra}(KA) [N]	F_{Ra}(KAF) [N]	$J_G 10^{-4}$ [kgm^2]	CM 112S	CM 112M	CM 112L	CM 112H
K107	8000	143.47*	6	64200	38000	65000	11.80				
	8000	121.46	6	59900	34200	65000	15.11				
KF107	8000	112.41*	6	58000	32600	65000	16.82				
	8000	100.75	6	55400	30300	65000	19.85				
KA107	8000	90.96*	6	53000	28200	65000	25.48				
	8000	82.61	6	50800	26300	65000	29.25				
KAF107	8000	73.30	6	48200	24100	65000	34.87				
	8000	66.52*	6	46200	22300	65000	39.85				
	8000	57.17*	6	43100	19700	65000	48.20				
	7840	49.90	6	40900	18100	65000	58.21				
	7360	42.33*	6	39200	17300	65000	71.75				
	7200	37.00*	6	37300	15900	65000	85.61				
	7200	32.69	6	35100	14100	65000	44.53				
	6800	31.28*	6	35600	15100	65000	112.30				
	7200	29.00	6	32600	12500	65000	54.00				
	7200	26.32	6	30600	11200	63400	63.14				
	7200	22.62	6	27500	9270	59500	80.11				
	7200	19.74	6	24600	7610	56000	100.22				
	7050	16.75	7	22200	6290	52600	130.73				
	6890	14.64	7	20500	5090	50100	163.34				
	4300	13.43	9	28300	11800	54900	82.46				
	4300	11.73	9	26600	10400	52000	103.65				
	4190	9.94	9	25000	9340	49100	135.51				
	4070	8.69	9	23900	8640	46900	169.59				
	3600	7.35	9	23600	9300	45800	230.71				

m [kg]	CM 112S	CM 112M	CM 112L	CM 112H
K107	290	295	310	315

KF107: + 12 kg / KA107: - 27 kg / KAF107: - 3.2 kg

9.10 K..DS/CM..[mm]

34 030 01 01

K37..

DS56..

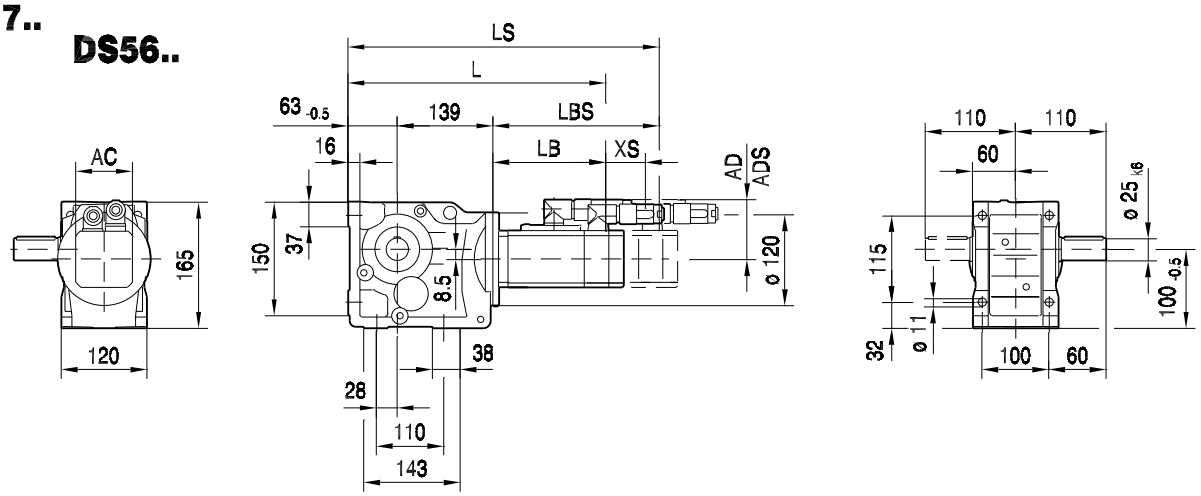

CM ..

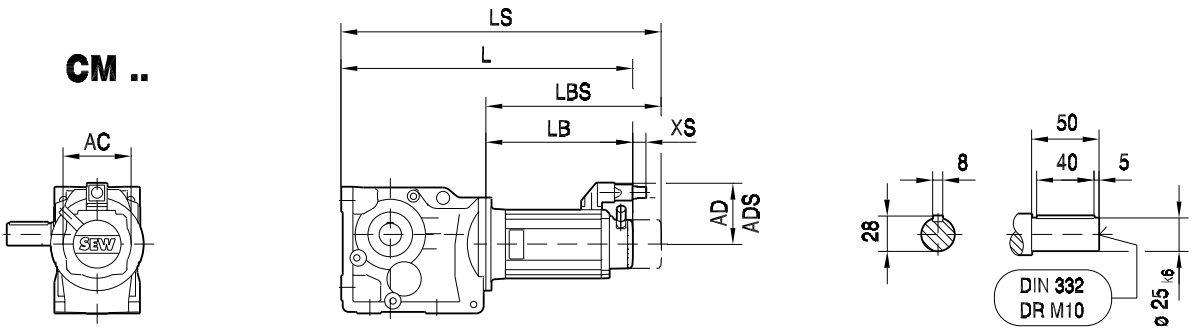

(→ 105)	DS56M	DS56L	DS56H	CM71S	CM71M	CM71L	CM90S				
AC	73	73	73	117	117	117	142				
AD	71	71	77	122	122	122	140				
ADS	77	77	77	122	122	122	140				
L	339	371	474	440	460	503	495				
LS	369	401	474	522	542	585	591				
LB	137	169	272	238	258	301	293				
LBS	167	199	272	320	340	383	389				
XS	70	70	51	45	45	45	50				

KF37..
DS56..

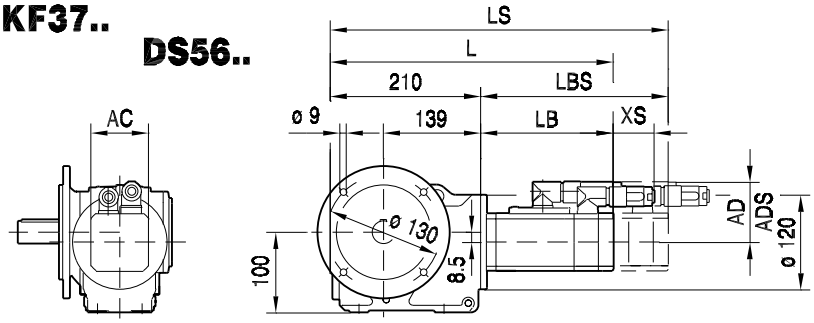

34 031 01 01

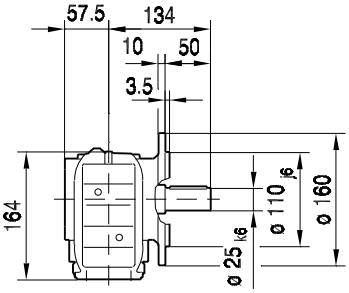

CM..

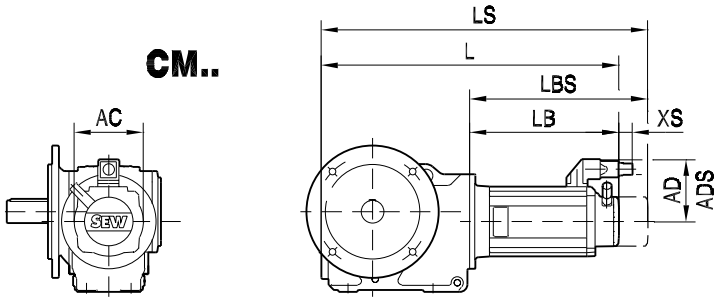

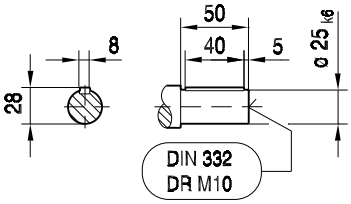

KAF37..

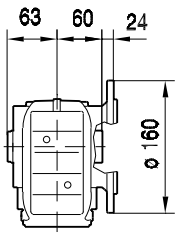

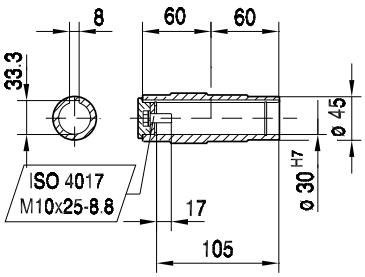

KHF37..

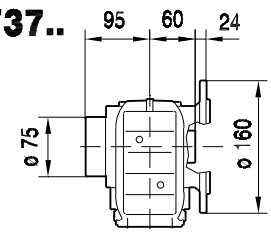

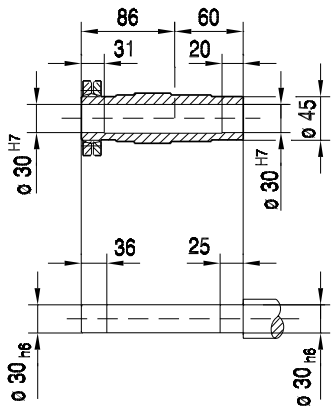

KVF37..

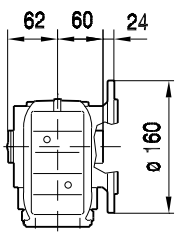

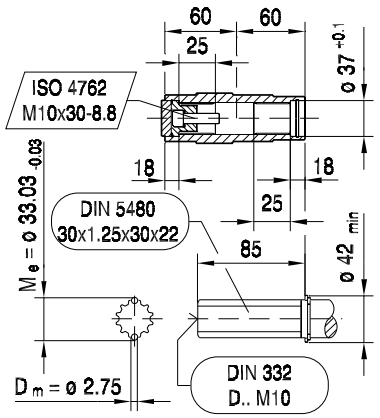

(→ 105)	DS56M	DS56L	DS56H	CM71S	CM71M	CM71L	CM90S				
AC	73	73	73	117	117	117	142				
AD	71	71	77	122	122	122	140				
ADS	77	77	77	122	122	122	140				
L	347	379	482	448	468	511	503				
LS	377	409	482	530	550	593	599				
LB	137	169	272	238	258	301	293				
LBS	167	199	272	320	340	383	389				
XS	70	70	51	45	45	45	50				

KA37..
DS56..

39 020 01 01

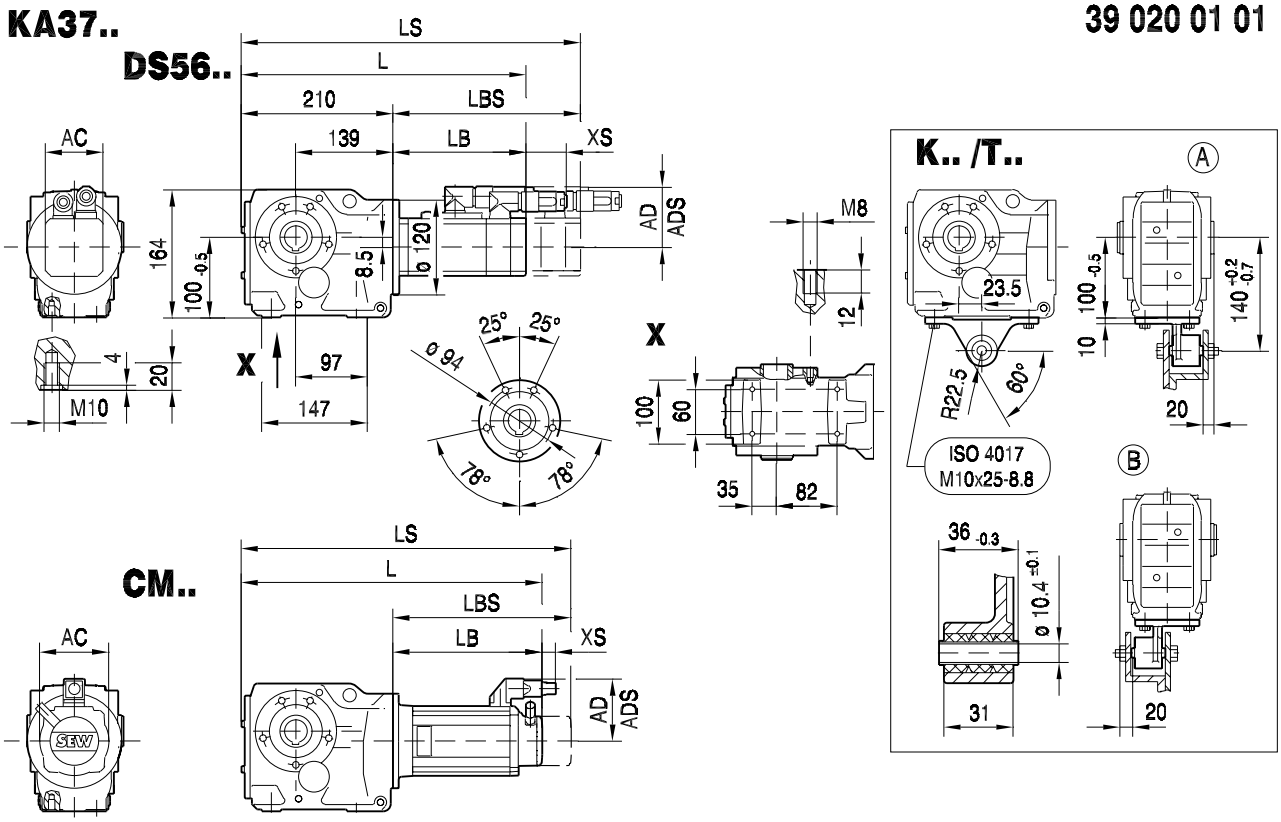

CM..

KA37..

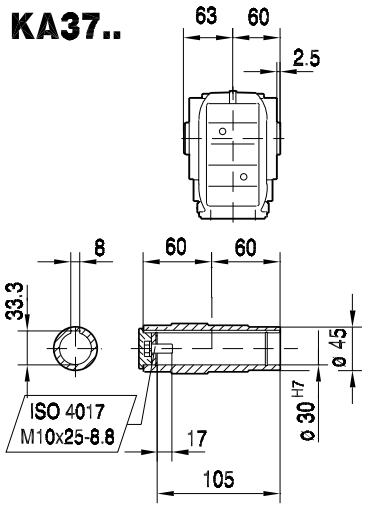

KH37..

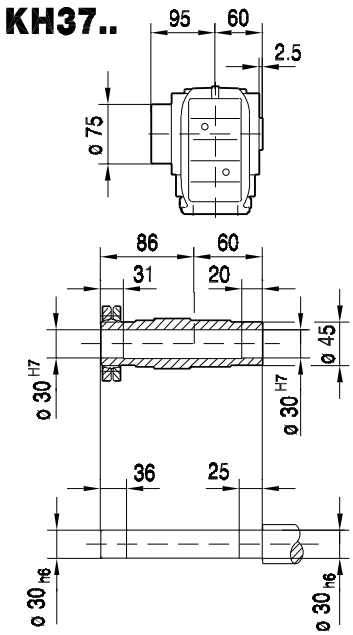

KV37..

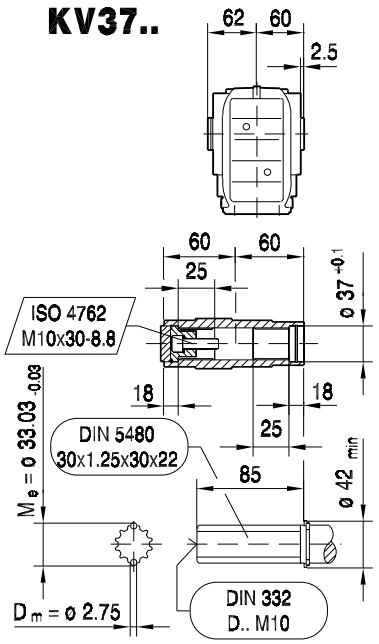

(→ 105)	DS56M	DS56L	DS56H	CM71S	CM71M	CM71L	CM90S				
AC	73	73	73	117	117	117	142				
AD	71	71	77	122	122	122	140				
ADS	77	77	77	122	122	122	140				
L	347	379	482	448	468	511	503				
LS	377	409	482	530	550	593	599				
LB	137	169	272	238	258	301	293				
LBS	167	199	272	320	340	383	389				
XS	70	70	51	45	45	45	50				

39 033 00 04

KAZ37..
DS56..

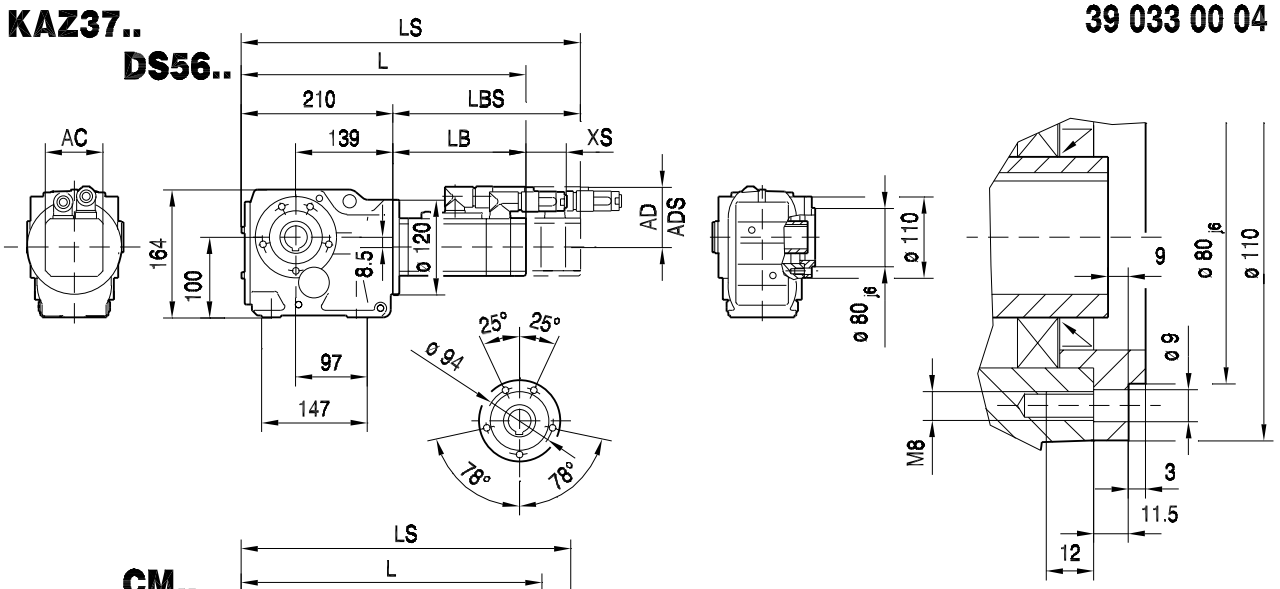

CM..

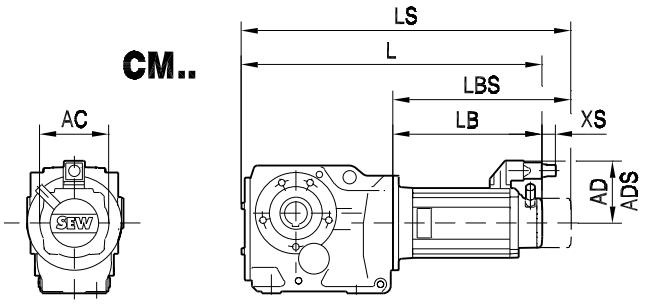

KAZ37..

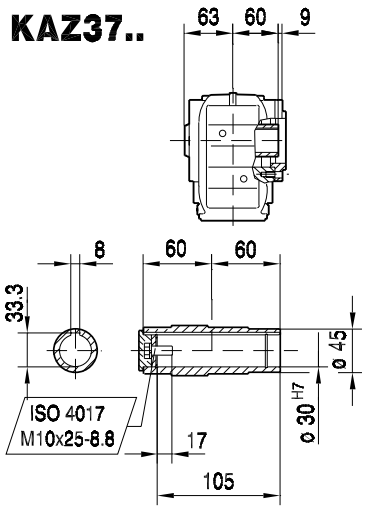

KHZ37..

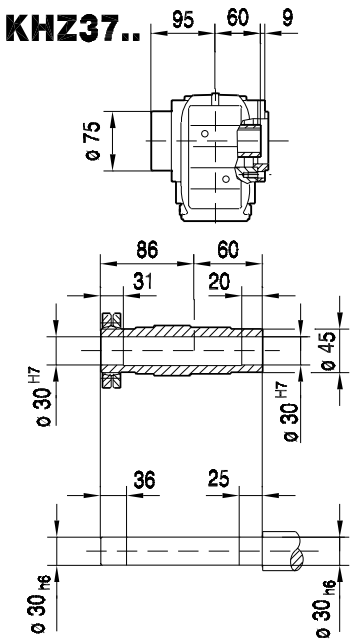

KVZ37..

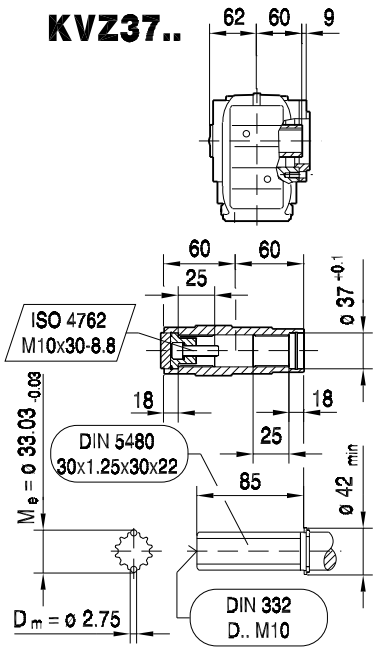

(→ 105)	DS56M	DS56L	DS56H	CM71S	CM71M	CM71L	CM90S				
AC	73	73	73	117	117	117	142				
AD	71	71	77	122	122	122	140				
ADS	77	77	77	122	122	122	140				
L	347	379	482	448	468	511	503				
LS	377	409	482	530	550	593	599				
LB	137	169	272	238	258	301	293				
LBS	167	199	272	320	340	383	389				
XS	70	70	51	45	45	45	50				

KT37..

DS56..

39 041 00 04

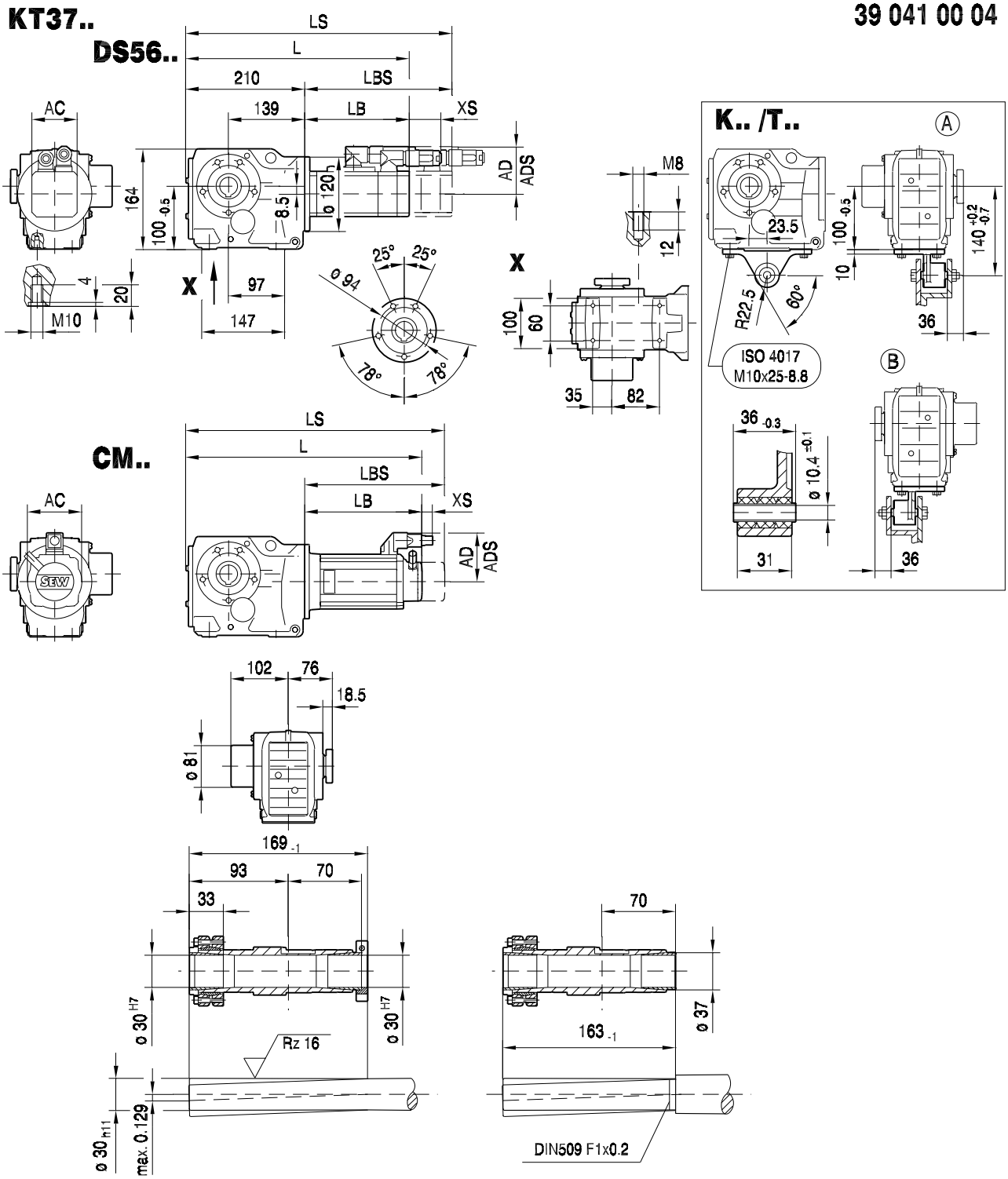

(→ 105)	DS56M	DS56L	DS56H	CM71S	CM71M	CM71L	CM90S				
AC	73	73	73	117	117	117	142				
AD	71	71	77	122	122	122	140				
ADS	77	77	77	122	122	122	140				
L	347	379	482	448	468	511	503				
LS	377	409	482	530	550	593	599				
LB	137	169	272	238	258	301	293				
LBS	167	199	272	320	340	383	389				
XS	70	70	51	45	45	45	50				

34 032 01 01

K47..

DS56..

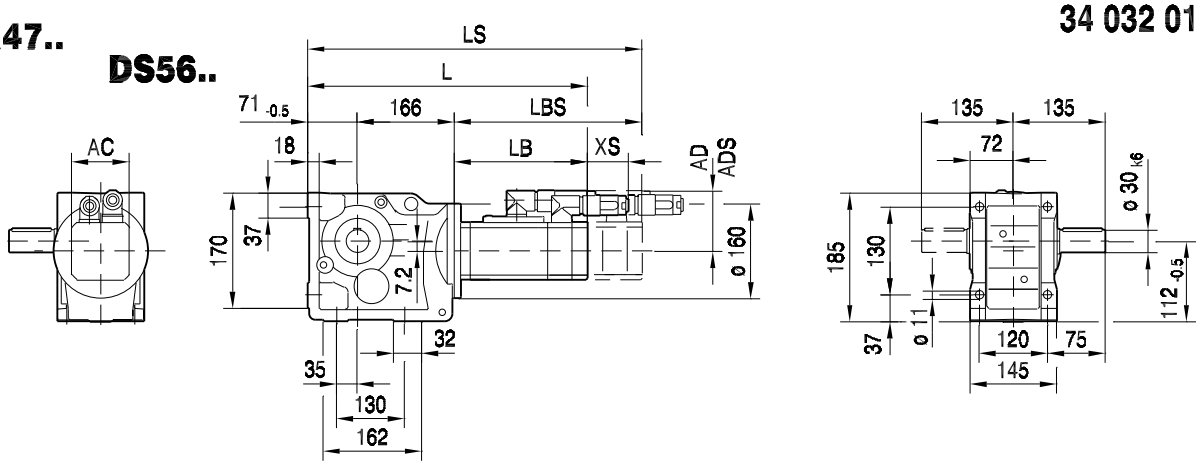

CM..

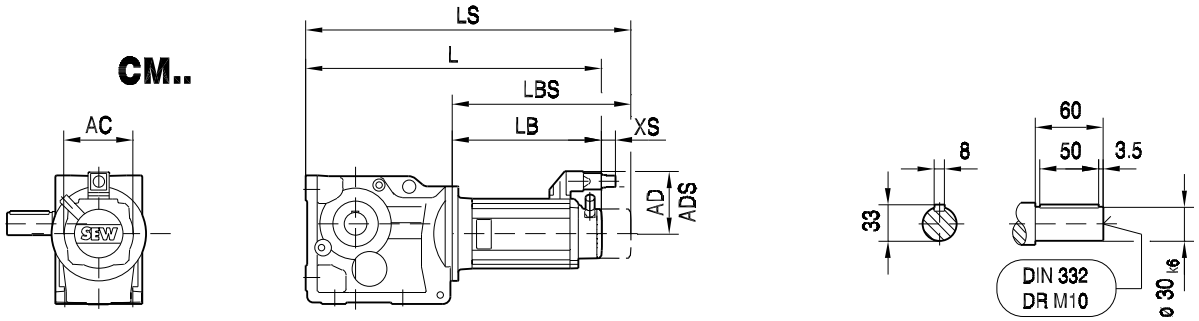

KA47B..

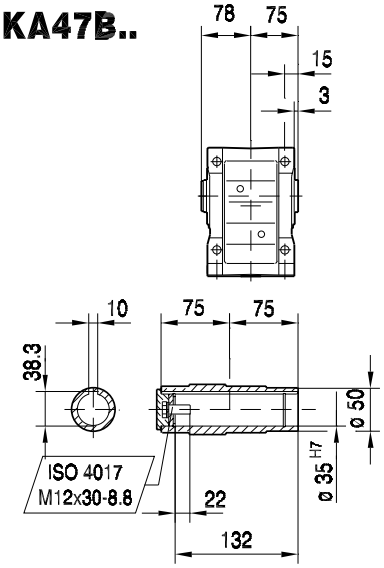

KH47B..

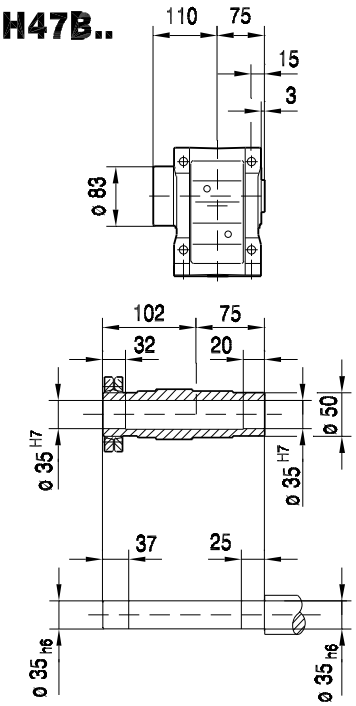

KV47B..

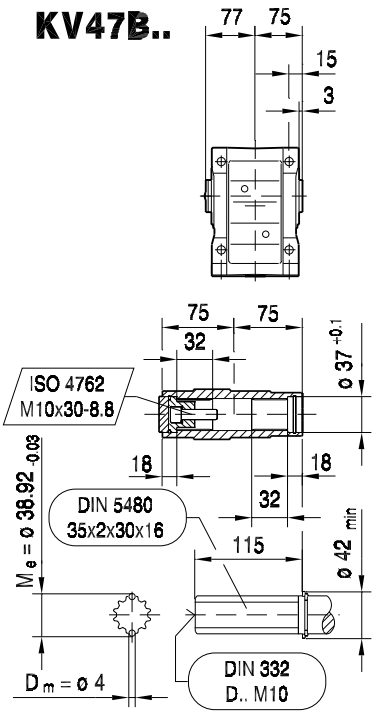

(→ 105)	DS56H	CM71S	CM71M	CM71L	CM90S	CM90M					
AC	73	117	117	117	142	142					
AD	77	122	122	122	140	140					
ADS	77	122	122	122	140	140					
L	503	469	489	529	521	548					
LS	503	551	571	611	617	644					
LB	266	232	252	292	284	311					
LBS	266	314	334	374	380	407					
XS	51	45	45	45	50	50					

KF47..
DS56..

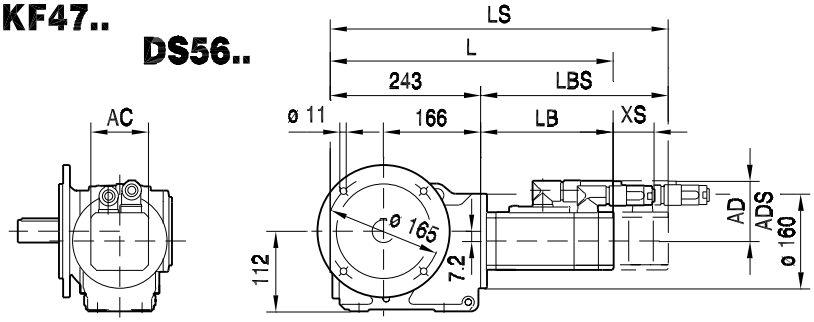

34 033 01 01

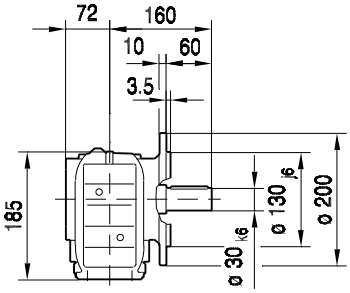

CM..

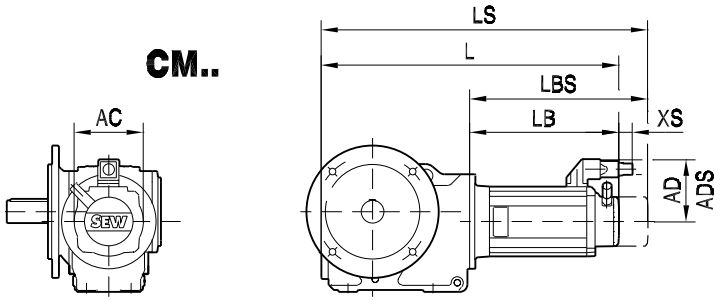

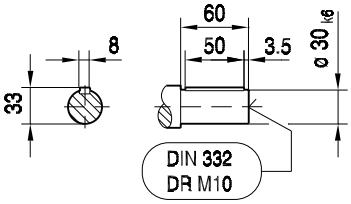

9

KAF47..

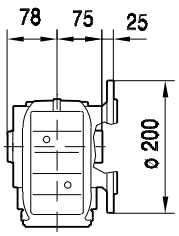

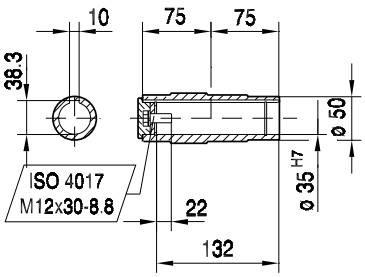

KHF47..

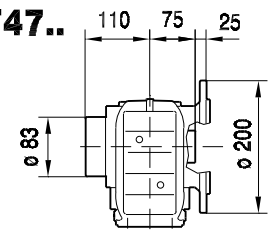

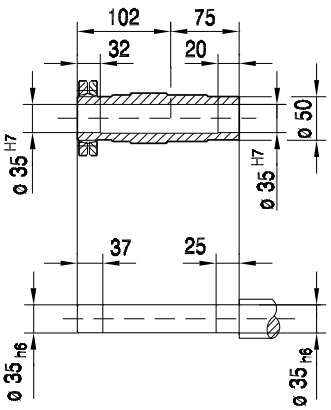

KVF47..

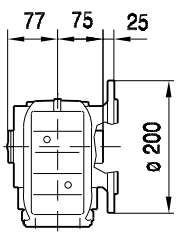

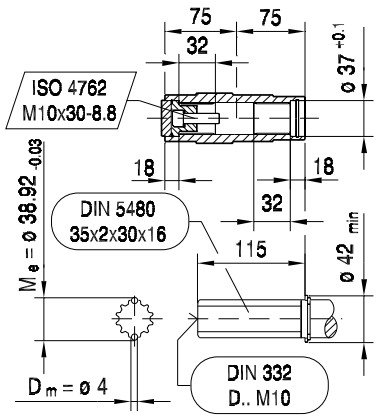

(→ 105)	DS56H	CM71S	CM71M	CM71L	CM90S	CM90M					
AC	73	117	117	117	142	142					
AD	77	122	122	122	140	140					
ADS	77	122	122	122	140	140					
L	509	475	495	535	527	554					
LS	509	557	577	617	623	650					
LB	266	232	252	292	284	311					
LBS	266	314	334	374	380	407					
XS	51	45	45	45	50	50					

KA47..

DS56..

39 021 01 01

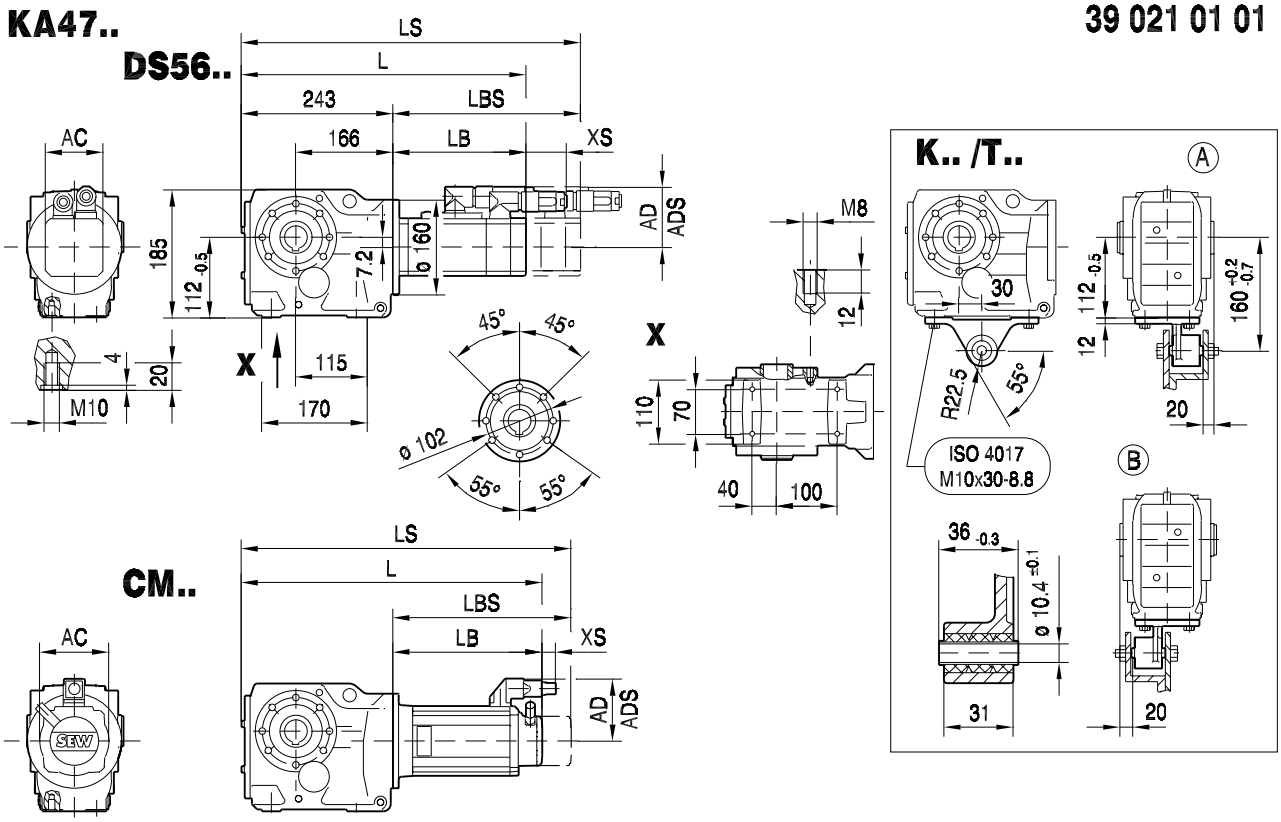

CM..

KA47..

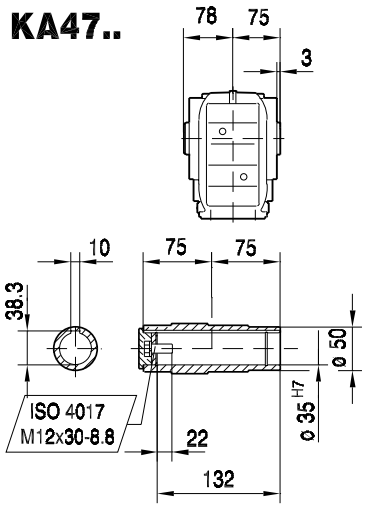

KH47..

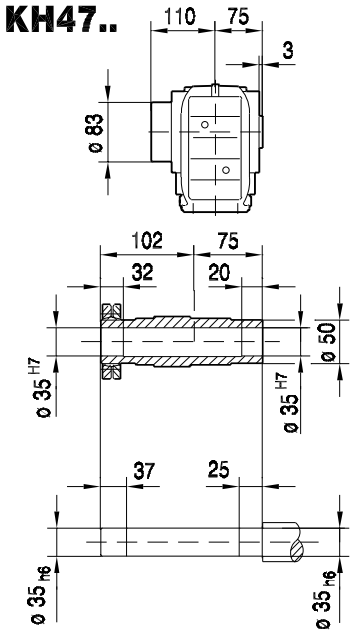

KV47..

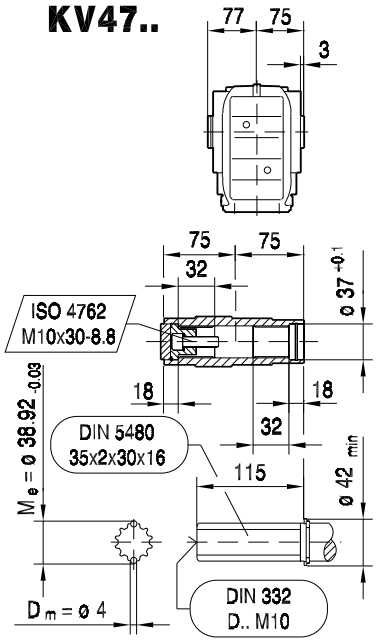

(→ 105)	DS56H	CM71S	CM71M	CM71L	CM90S	CM90M					
AC	73	117	117	117	142	142					
AD	77	122	122	122	140	140					
ADS	77	122	122	122	140	140					
L	509	475	495	535	527	554					
LS	509	557	577	617	623	650					
LB	266	232	252	292	284	311					
LBS	266	314	334	374	380	407					
XS	51	45	45	45	50	50					

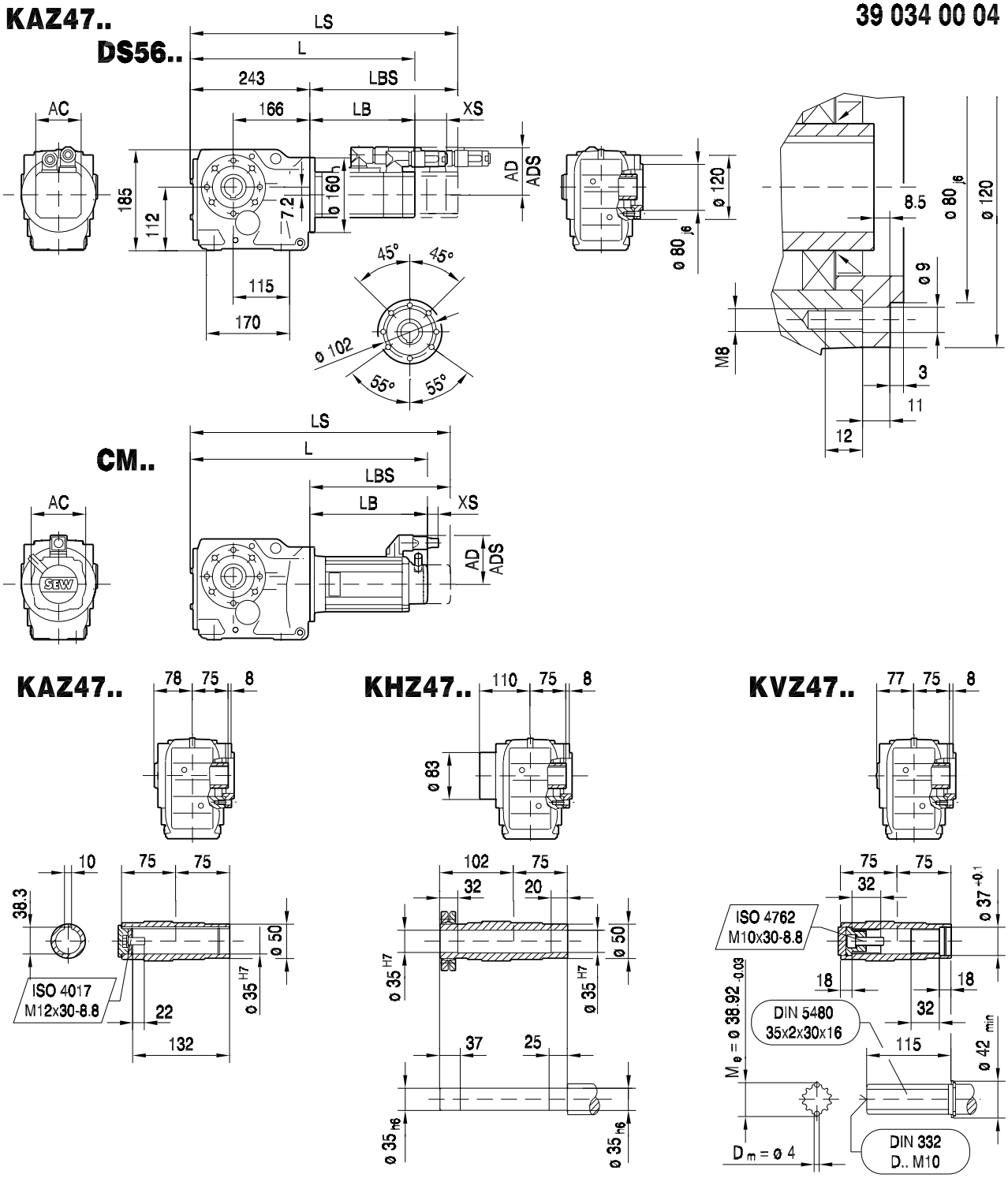

(→ 105)	DS56H	CM71S	CM71M	CM71L	CM90S	CM90M					
AC	73	117	117	117	142	142					
AD	77	122	122	122	140	140					
ADS	77	122	122	122	140	140					
L	509	475	495	535	527	554					
LS	509	557	577	617	623	650					
LB	266	232	252	292	284	311					
LBS	266	314	334	374	380	407					
XS	51	45	45	45	50	50					

KT47..

DS56..

39 042 00 04

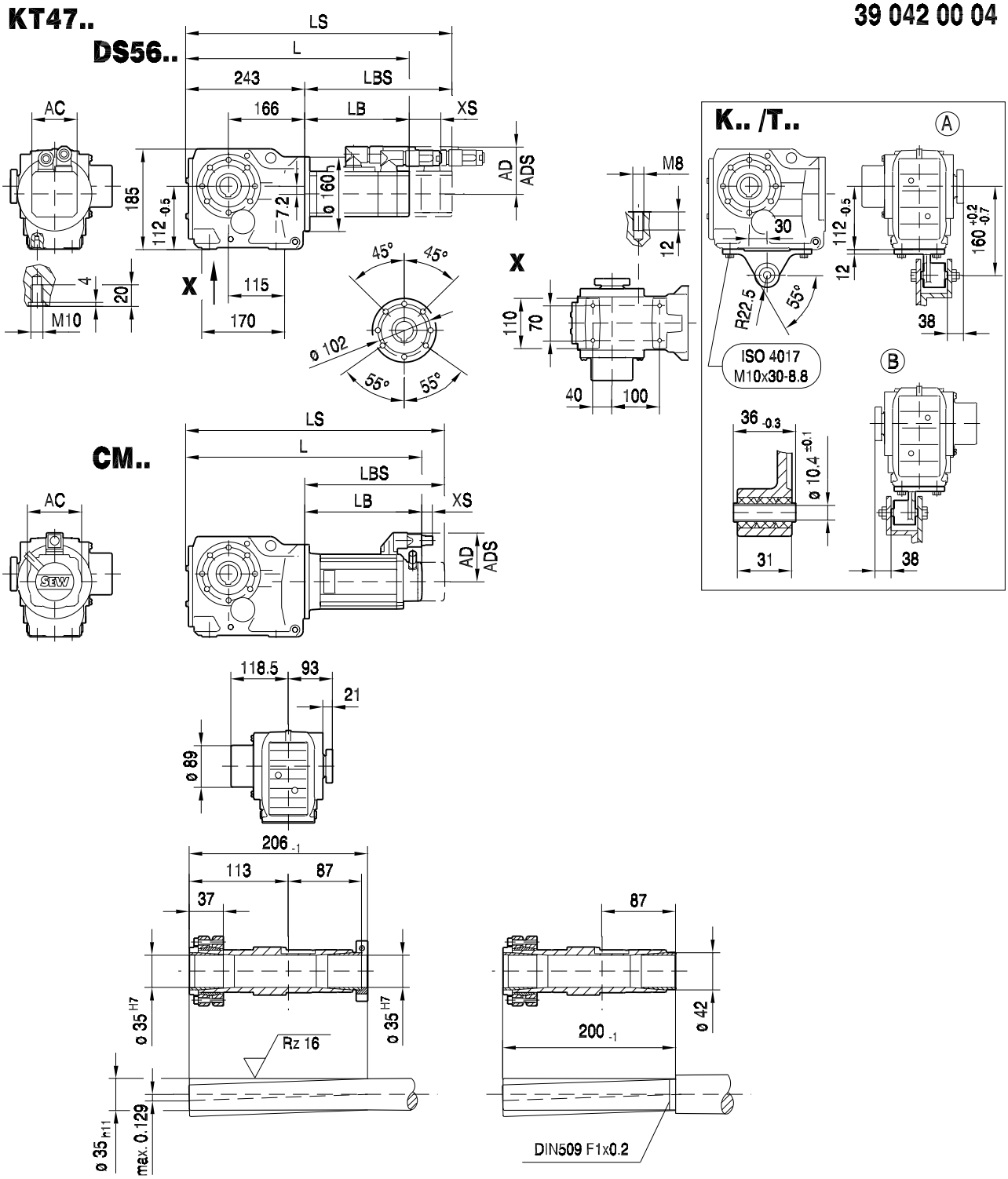

(→ 105)	DS56H	CM71S	CM71M	CM71L	CM90S	CM90M					
AC	73	117	117	117	142	142					
AD	77	122	122	122	140	140					
ADS	77	122	122	122	140	140					
L	509	475	495	535	527	554					
LS	509	557	577	617	623	650					
LB	266	232	252	292	284	311					
LBS	266	314	334	374	380	407					
XS	51	45	45	45	50	50					

34 034 01 01

K57..

DS56..

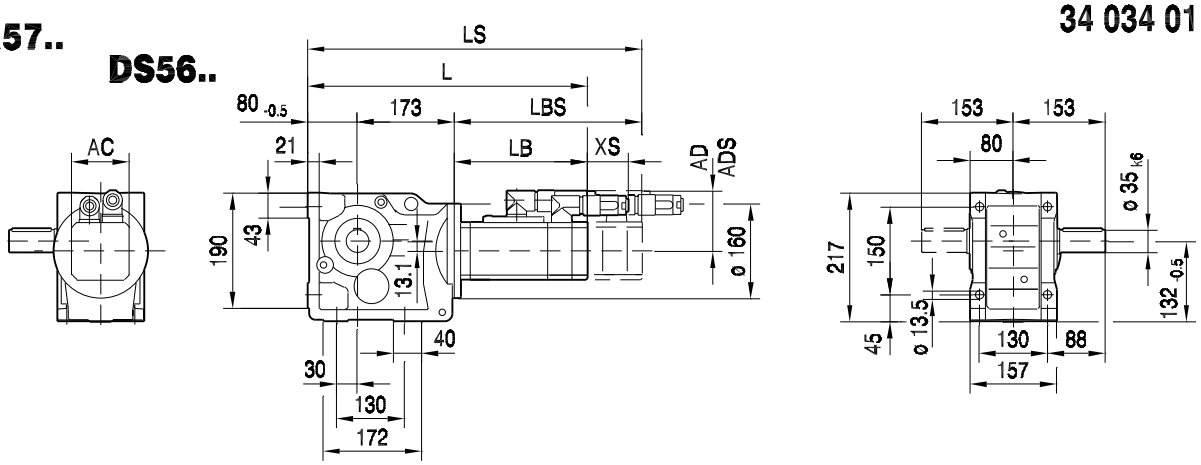

CM..

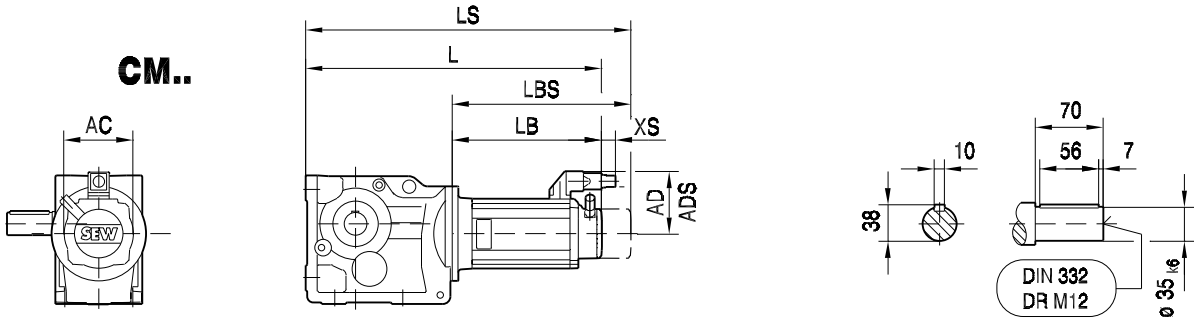

KA57B..

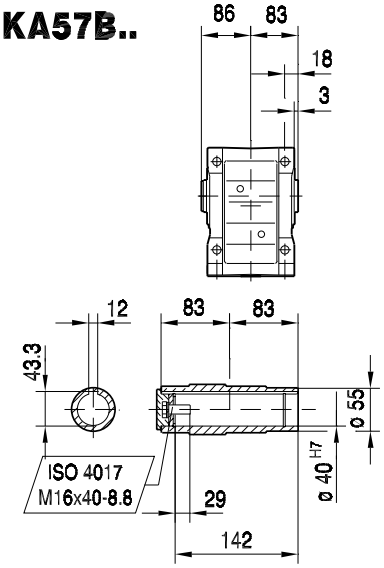

KH57B..

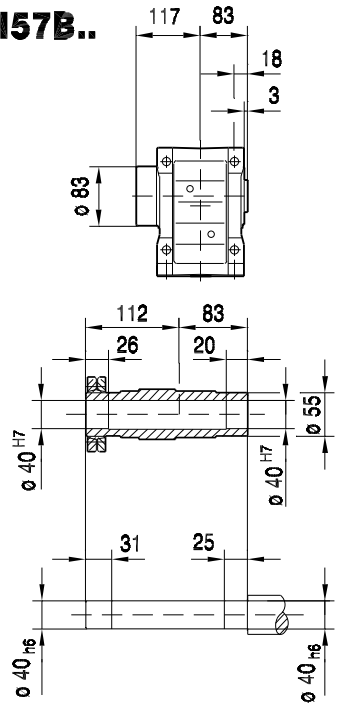

KV57B..

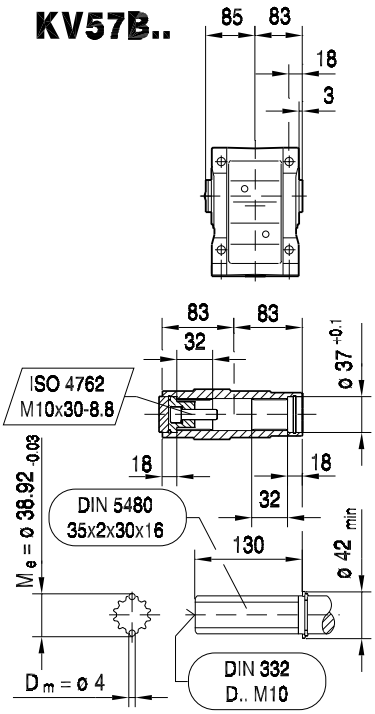

(→ 105)	DS56H	CM71S	CM71M	CM71L	CM90S	CM90M	CM90L	CM112S			
AC	73	117	117	117	142	142	142	186			
AD	77	122	122	122	140	140	140	162			
ADS	77	122	122	122	140	140	140	162			
L	519	485	505	545	537	564	622	577			
LS	519	567	587	627	633	660	718	667			
LB	266	232	252	292	284	311	369	324			
LBS	266	314	334	374	380	407	465	414			
XS	51	45	45	45	50	50	50	36			

KF57..
DS56..

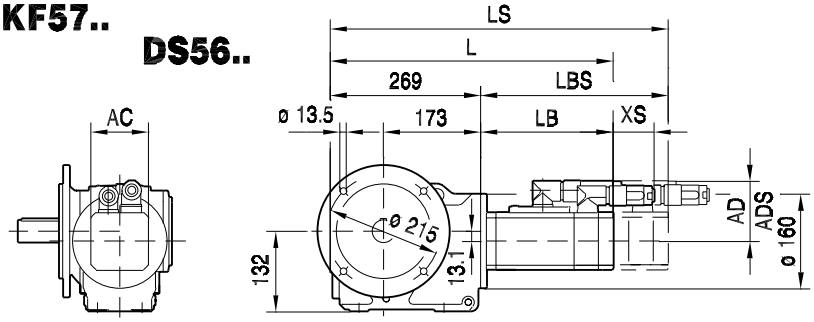

34 035 01 01

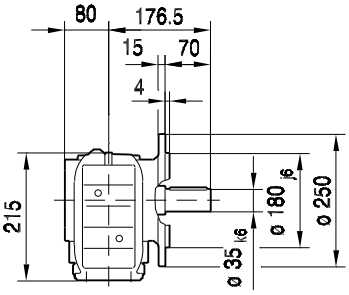

CM..

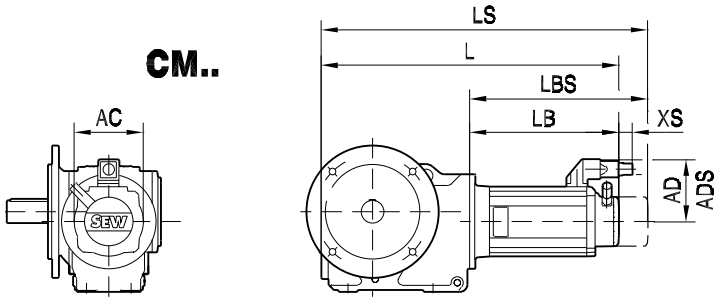

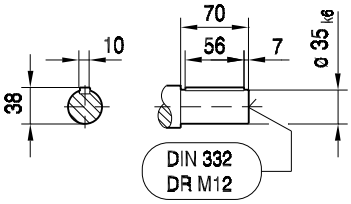

KAF57..

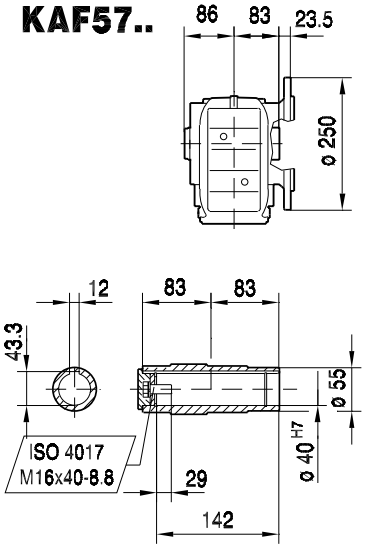

KHF57..

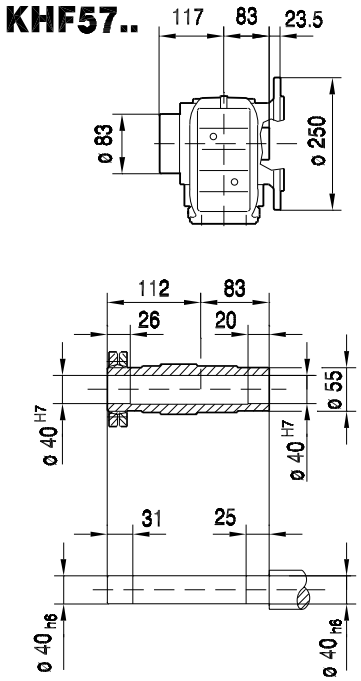

KVF57..

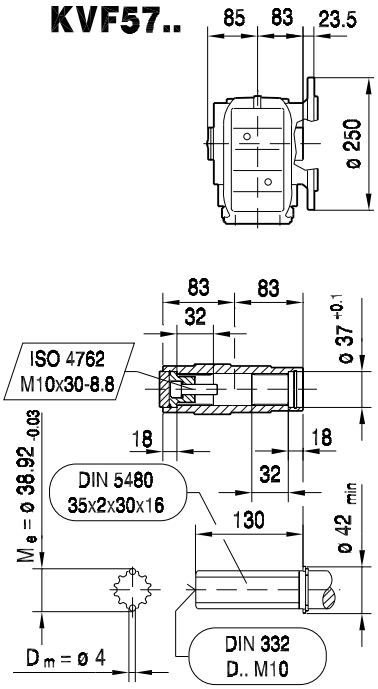

(→ 105)	DS56H	CM71S	CM71M	CM71L	CM90S	CM90M	CM90L	CM112S			
AC	73	117	117	117	142	142	142	186			
AD	77	122	122	122	140	140	140	162			
ADS	77	122	122	122	140	140	140	162			
L	535	501	521	561	553	580	638	593			
LS	535	583	603	643	649	676	734	683			
LB	266	232	252	292	284	311	369	324			
LBS	266	314	334	374	380	407	465	414			
XS	51	45	45	45	50	50	50	36			

39 022 01 01

KA57..
DS56..

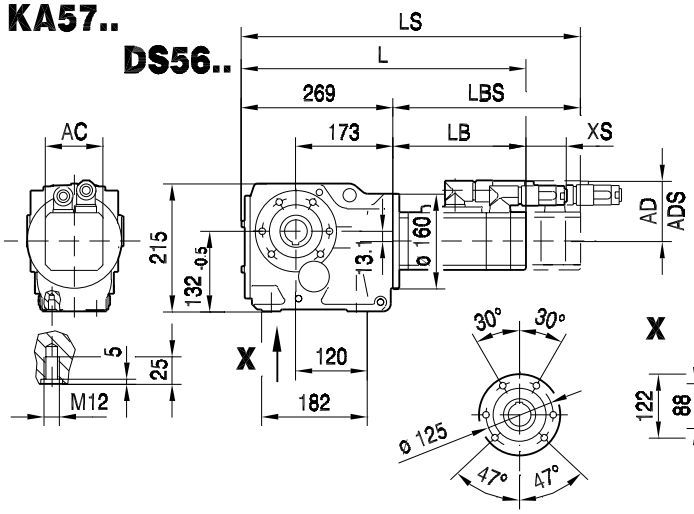

K.. /T..

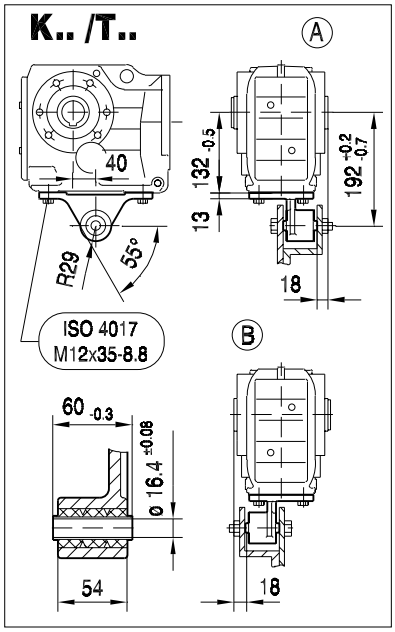

CM..

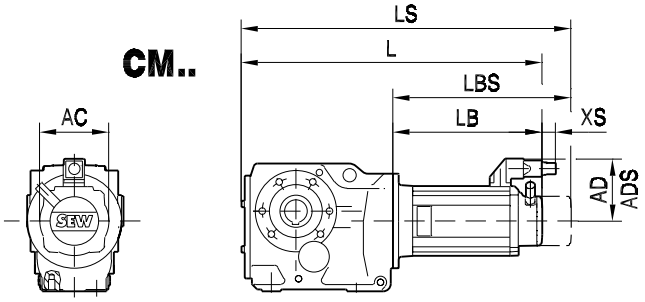

KA57..

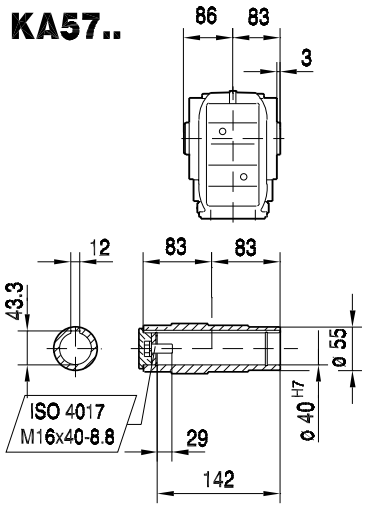

KH57..

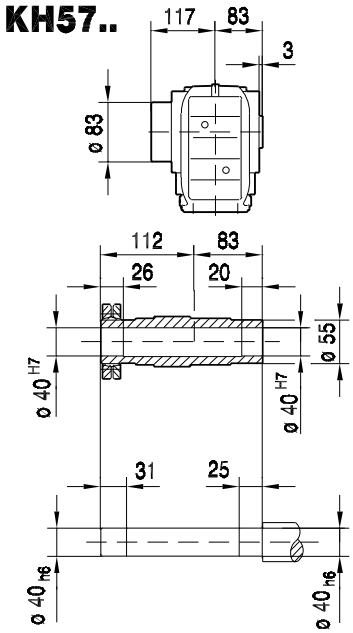

KV57..

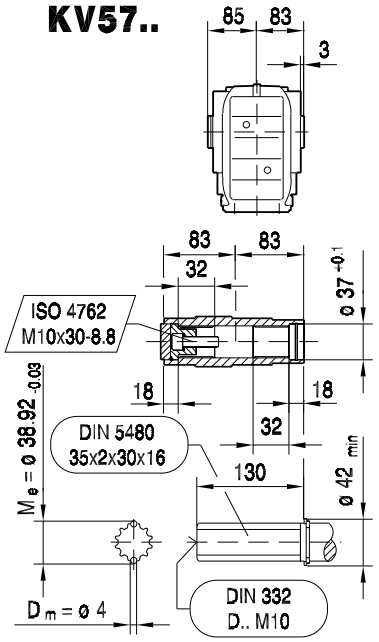

(→ 105)	DS56H	CM71S	CM71M	CM71L	CM90S	CM90M	CM90L	CM112S			
AC	73	117	117	117	142	142	142	186			
AD	77	122	122	122	140	140	140	162			
ADS	77	122	122	122	140	140	140	162			
L	535	501	521	561	553	580	638	593			
LS	535	583	603	643	649	676	734	683			
LB	266	232	252	292	284	311	369	324			
LBS	266	314	334	374	380	407	465	414			
XS	51	45	45	45	50	50	50	36			

39 035 00 04

KAZ57..
DS56..

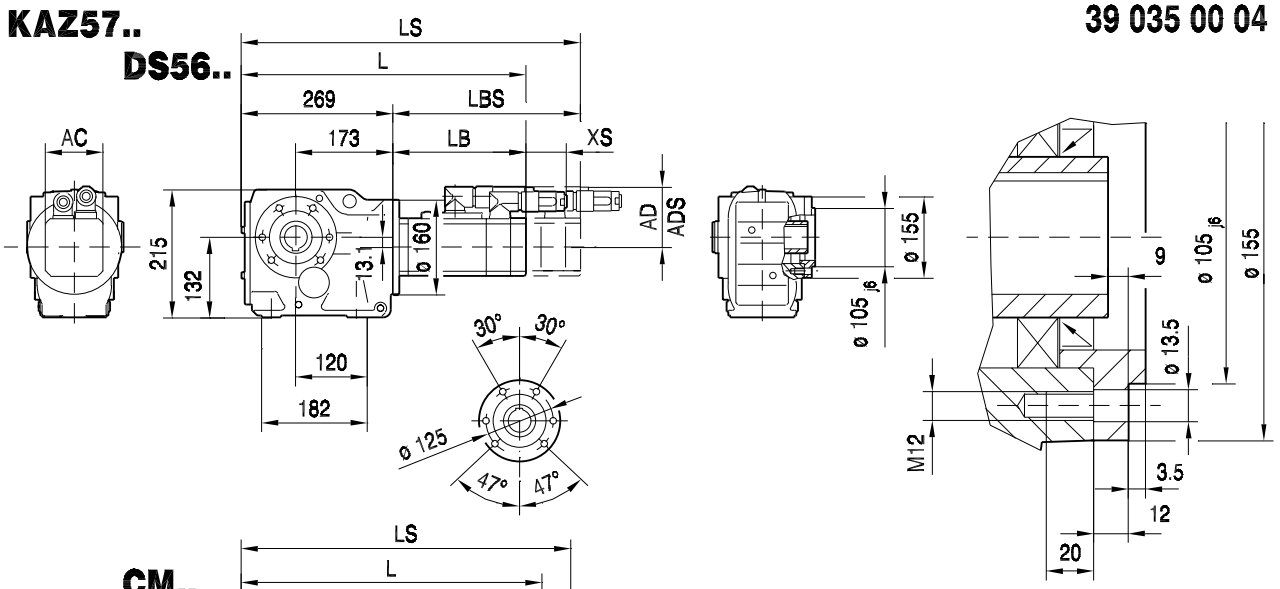

CM..

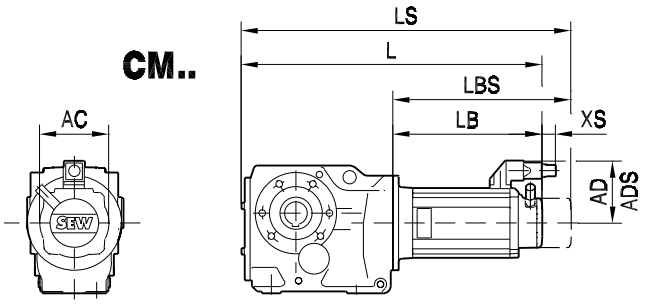

KAZ57..

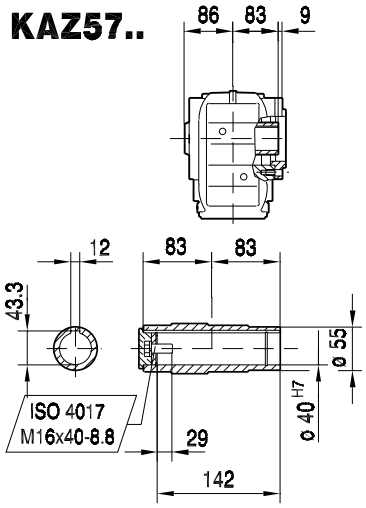

KHZ57..

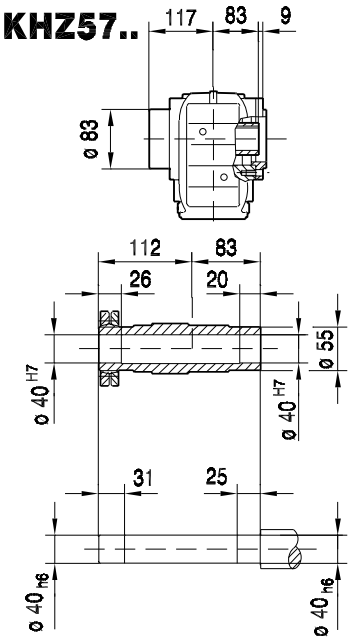

KVZ57..

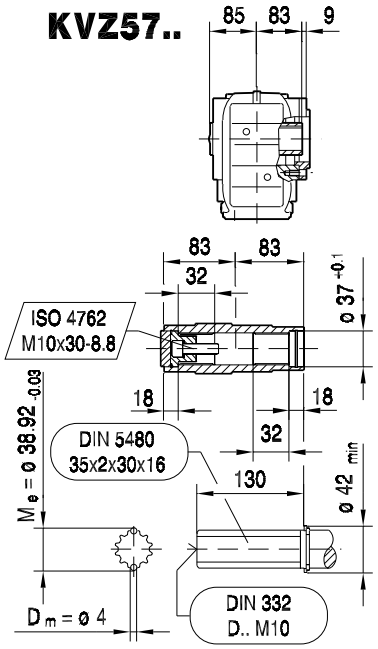

(→ 105)	DS56H	CM71S	CM71M	CM71L	CM90S	CM90M	CM90L	CM112S			
AC	73	117	117	117	142	142	142	186			
AD	77	122	122	122	140	140	140	162			
ADS	77	122	122	122	140	140	140	162			
L	535	501	521	561	553	580	638	593			
LS	535	583	603	643	649	676	734	683			
LB	266	232	252	292	284	311	369	324			
LBS	266	314	334	374	380	407	465	414			
XS	51	45	45	45	50	50	50	36			

KT57..

DS56..

39 043 00 04

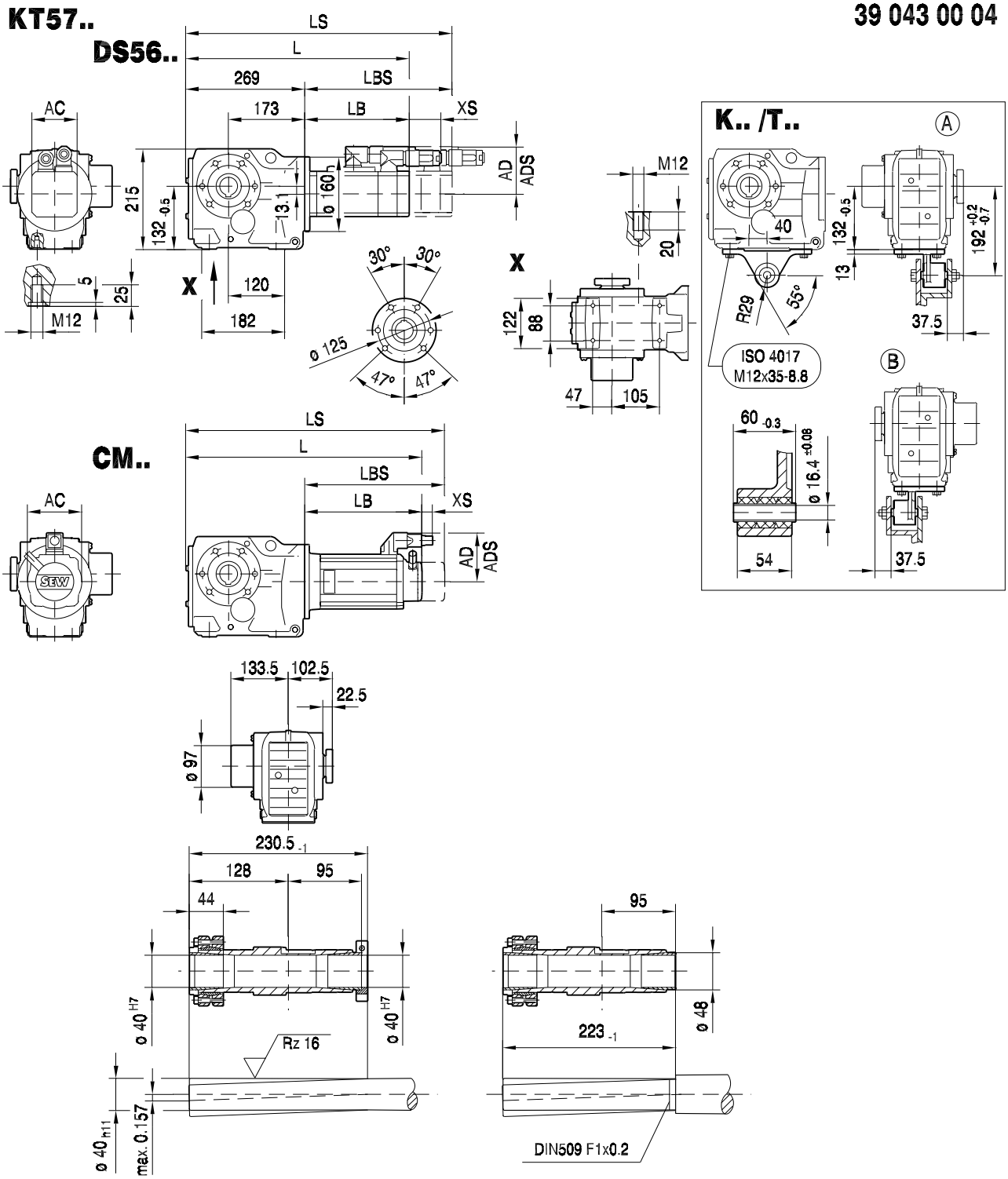

(→ 105)	DS56H	CM71S	CM71M	CM71L	CM90S	CM90M	CM90L	CM112S			
AC	73	117	117	117	142	142	142	186			
AD	77	122	122	122	140	140	140	162			
ADS	77	122	122	122	140	140	140	162			
L	535	501	521	561	553	580	638	593			
LS	535	583	603	643	649	676	734	683			
LB	266	232	252	292	284	311	369	324			
LBS	266	314	334	374	380	407	465	414			
XS	51	45	45	45	50	50	50	36			

34 036 01 01

K67..

DS56..

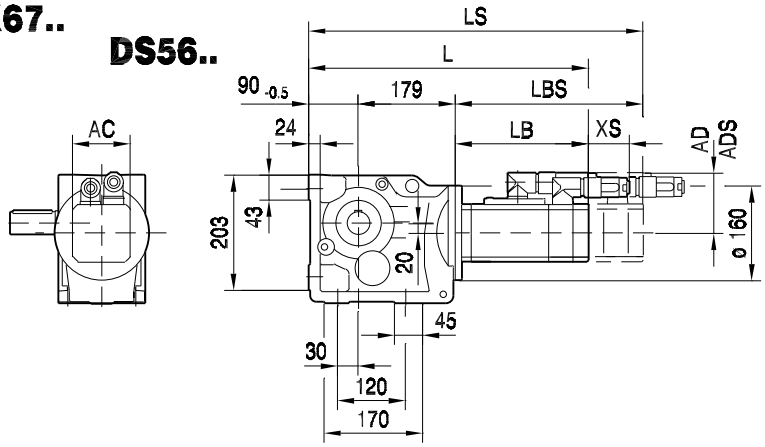

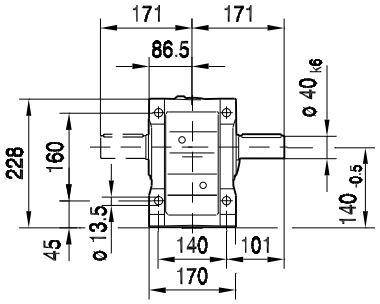

CM..

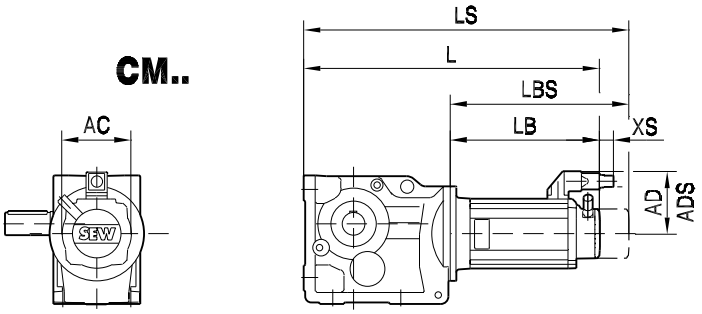

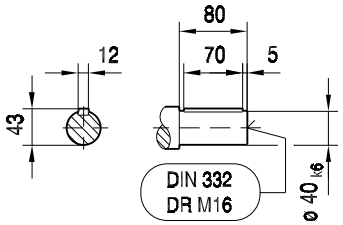

KA67B..

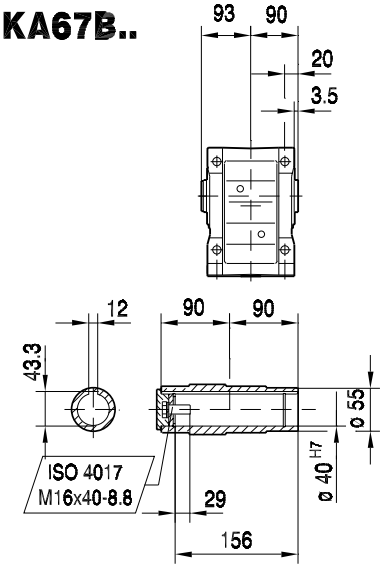

KH67B..

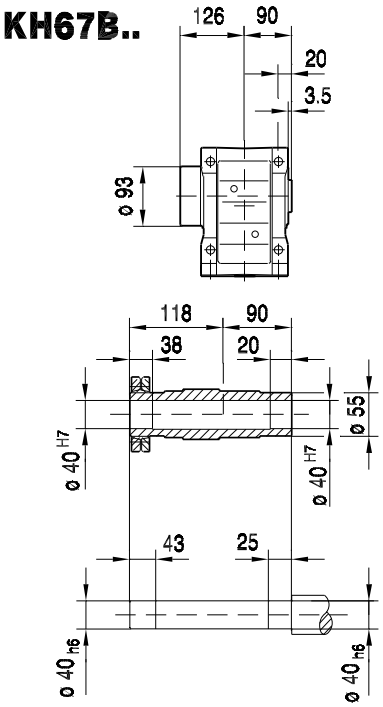

KV67B..

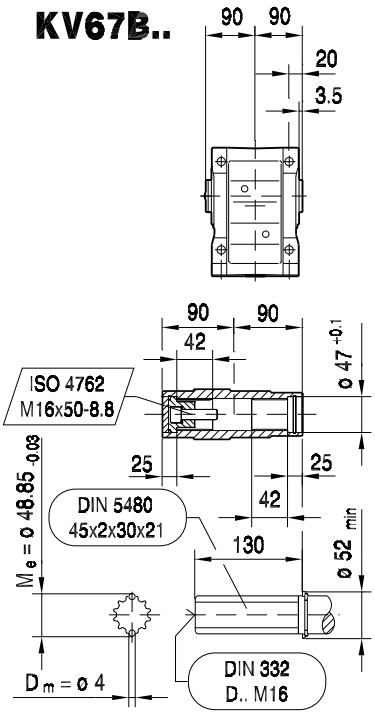

(→ 105)	DS56H	CM71S	CM71M	CM71L	CM90S	CM90M	CM90L	CM112S	CM112M		
AC	73	117	117	117	142	142	142	186	186		
AD	77	122	122	122	140	140	140	162	162		
ADS	77	122	122	122	140	140	140	162	162		
L	535	501	521	561	553	580	638	593	617		
LS	535	583	603	643	649	676	734	683	707		
LB	266	232	252	292	284	311	369	324	348		
LBS	266	314	334	374	380	407	465	414	438		
XS	51	45	45	45	50	50	50	36	36		

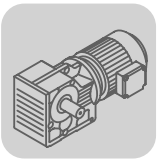

KF67..
DS56..

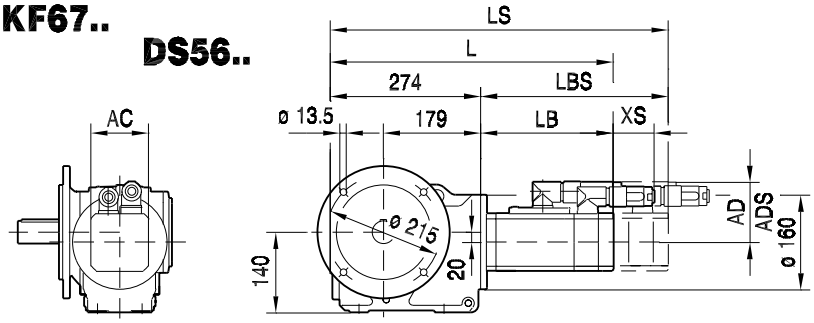

34 037 01 01

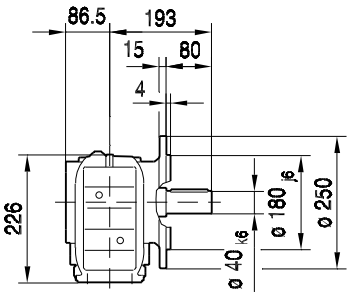

CM..

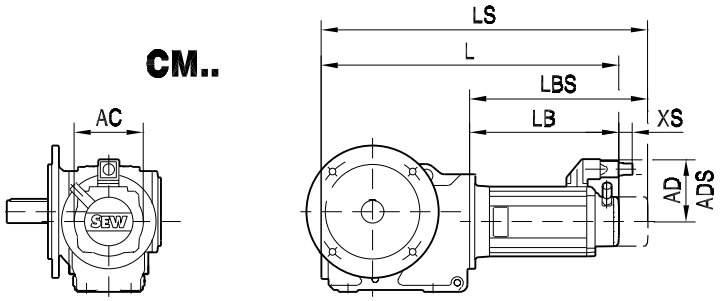

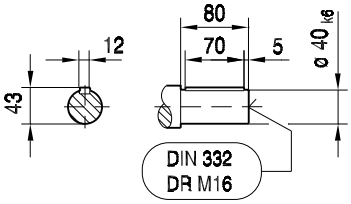

9

KAF67..

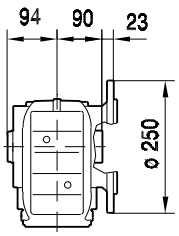

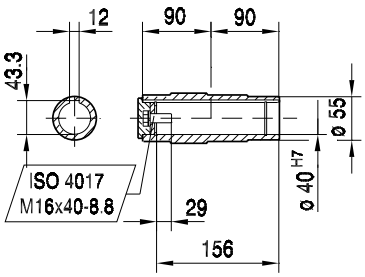

KHF67..

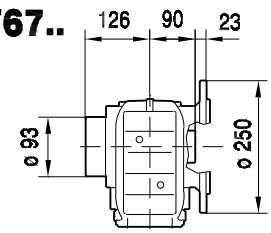

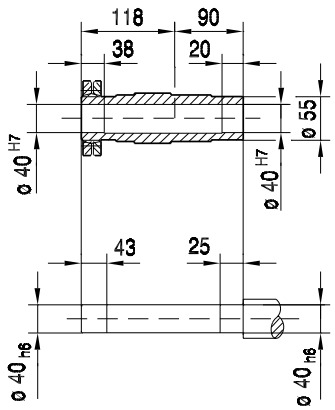

KVF67..

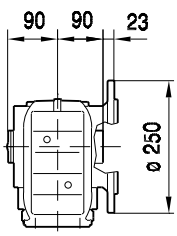

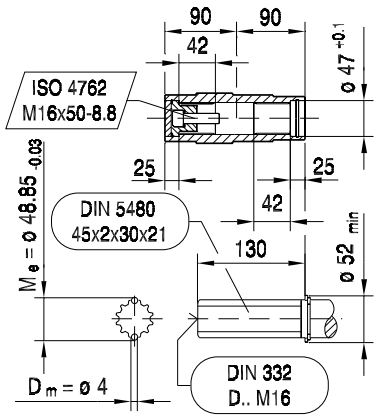

(→ 105)	DS56H	CM71S	CM71M	CM71L	CM90S	CM90M	CM90L	CM112S	CM112M		
AC	73	117	117	117	142	142	142	186	186		
AD	77	122	122	122	140	140	140	162	162		
ADS	77	122	122	122	140	140	140	162	162		
L	540	506	526	566	558	585	643	598	622		
LS	540	588	608	648	654	681	739	688	712		
LB	266	232	252	292	284	311	369	324	348		
LBS	266	314	334	374	380	407	465	414	438		
XS	51	45	45	45	50	50	50	36	36		

39 023 01 01

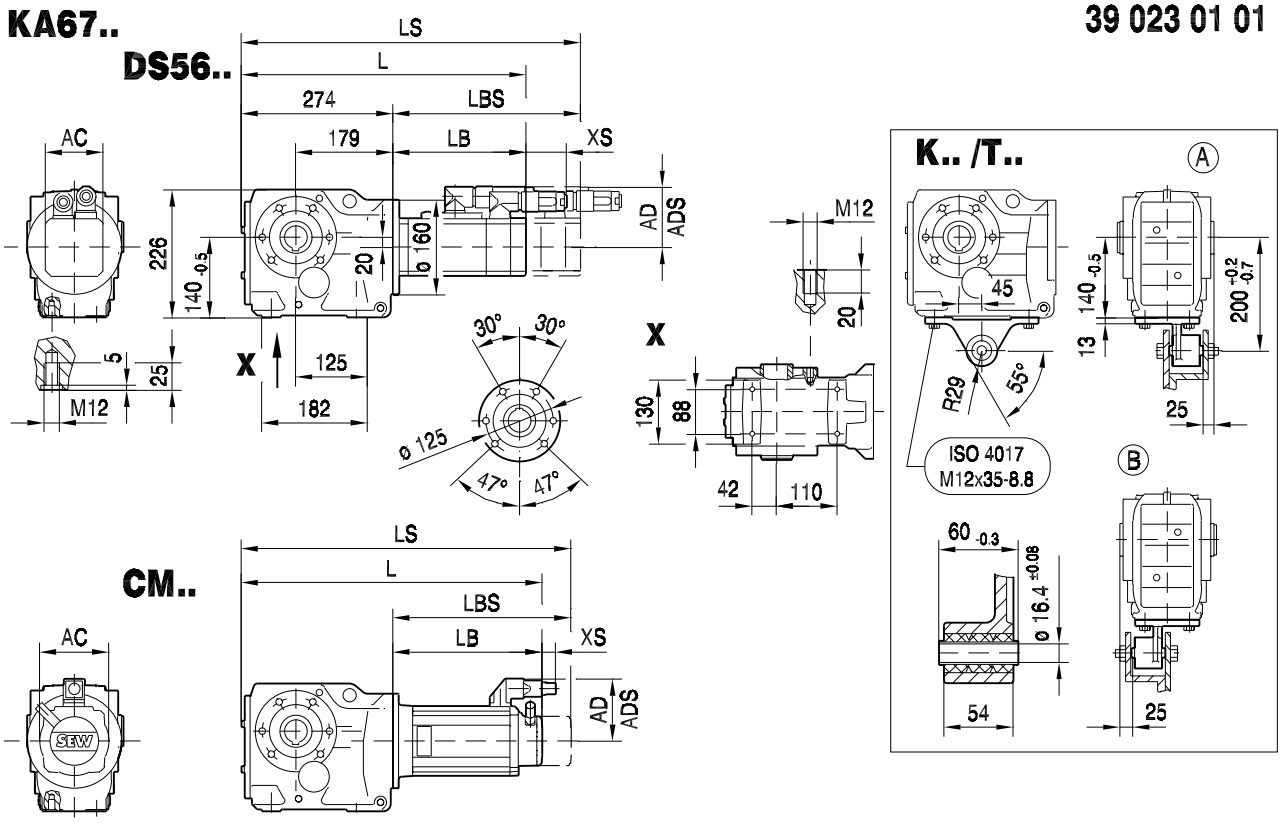

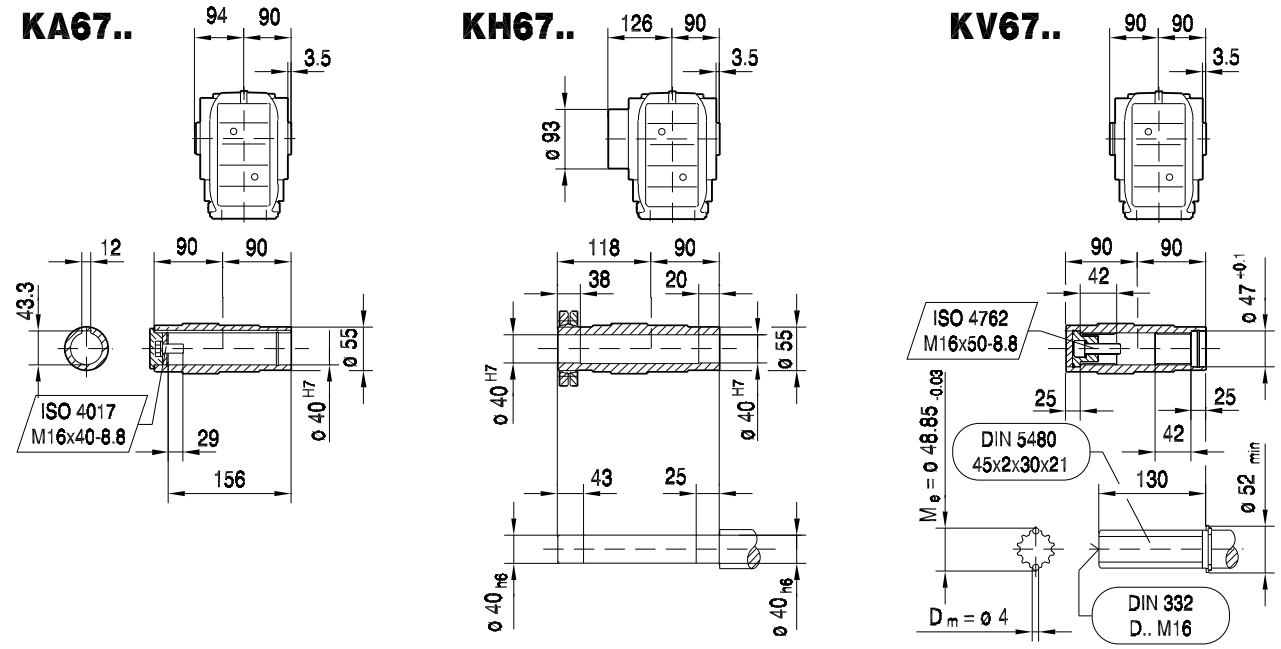

(→ 105)	DS56H	CM71S	CM71M	CM71L	CM90S	CM90M	CM90L	CM112S	CM112M		
AC	73	117	117	117	142	142	142	186	186		
AD	77	122	122	122	140	140	140	162	162		
ADS	77	122	122	122	140	140	140	162	162		
L	540	506	526	566	558	585	643	598	622		
LS	540	588	608	648	654	681	739	688	712		
LB	266	232	252	292	284	311	369	324	348		
LBS	266	314	334	374	380	407	465	414	438		
XS	51	45	45	45	50	50	50	36	36		

KAZ67..
DS56..

39 036 00 04

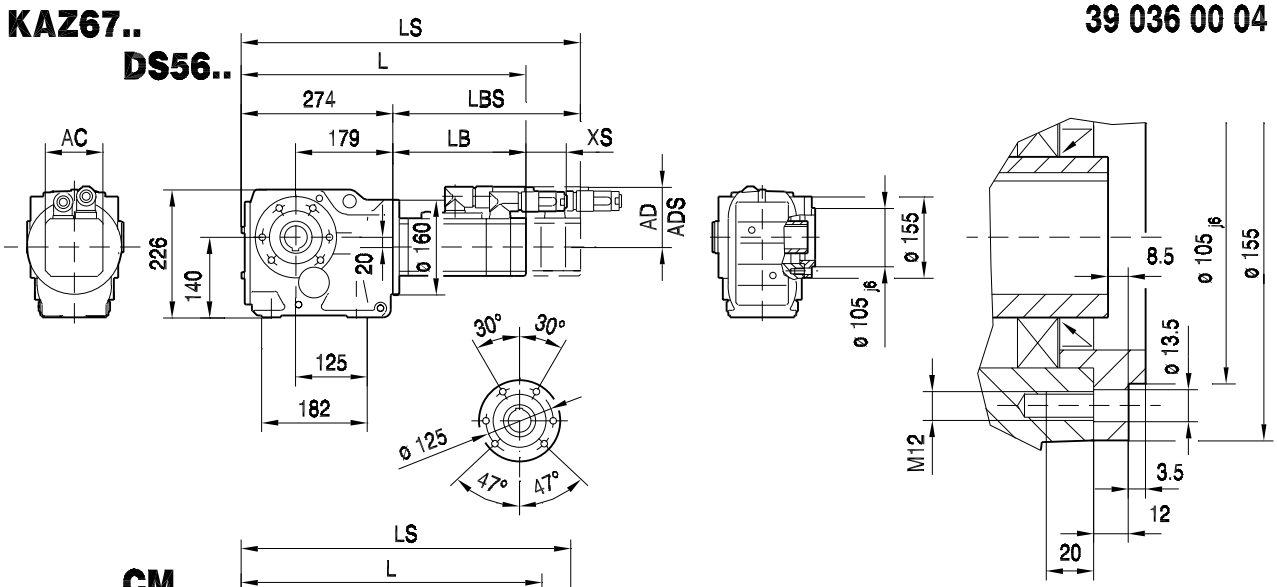

CM..

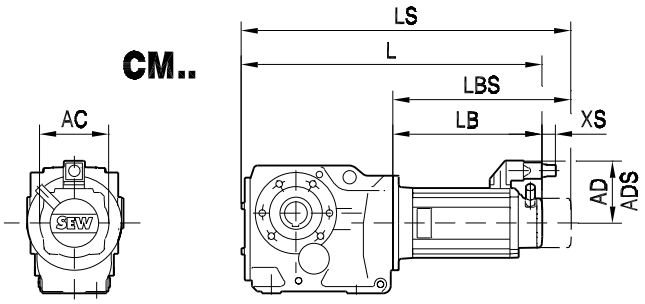

KAZ67..

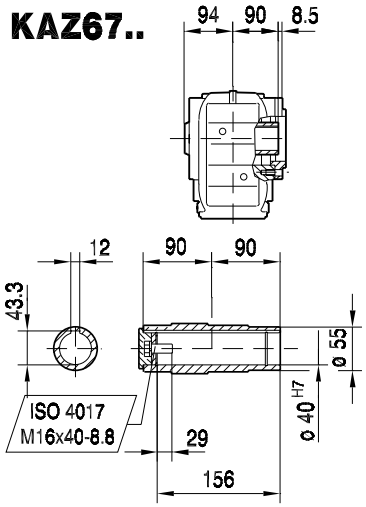

KHZ67..

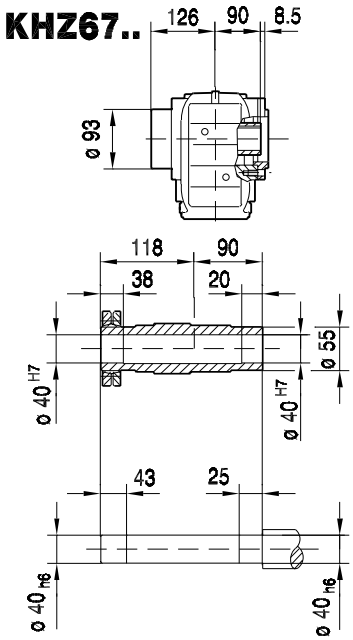

KVZ67..

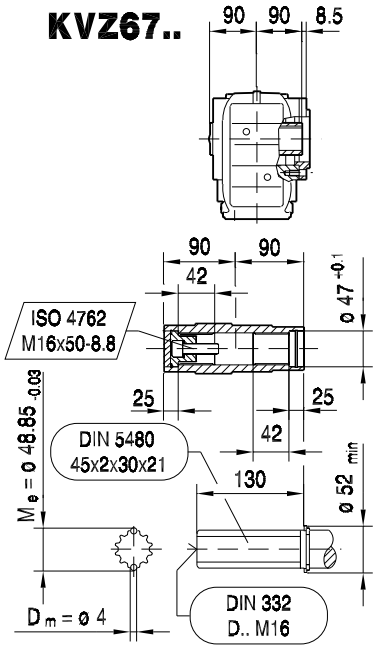

(→ 105)	DS56H	CM71S	CM71M	CM71L	CM90S	CM90M	CM90L	CM112S	CM112M		
AC	73	117	117	117	142	142	142	186	186		
AD	77	122	122	122	140	140	140	162	162		
ADS	77	122	122	122	140	140	140	162	162		
L	540	506	526	566	558	585	643	598	622		
LS	540	588	608	648	654	681	739	688	712		
LB	266	232	252	292	284	311	369	324	348		
LBS	266	314	334	374	380	407	465	414	438		
XS	51	45	45	45	50	50	50	36	36		

KT67..

DS56..

39 044 00 04

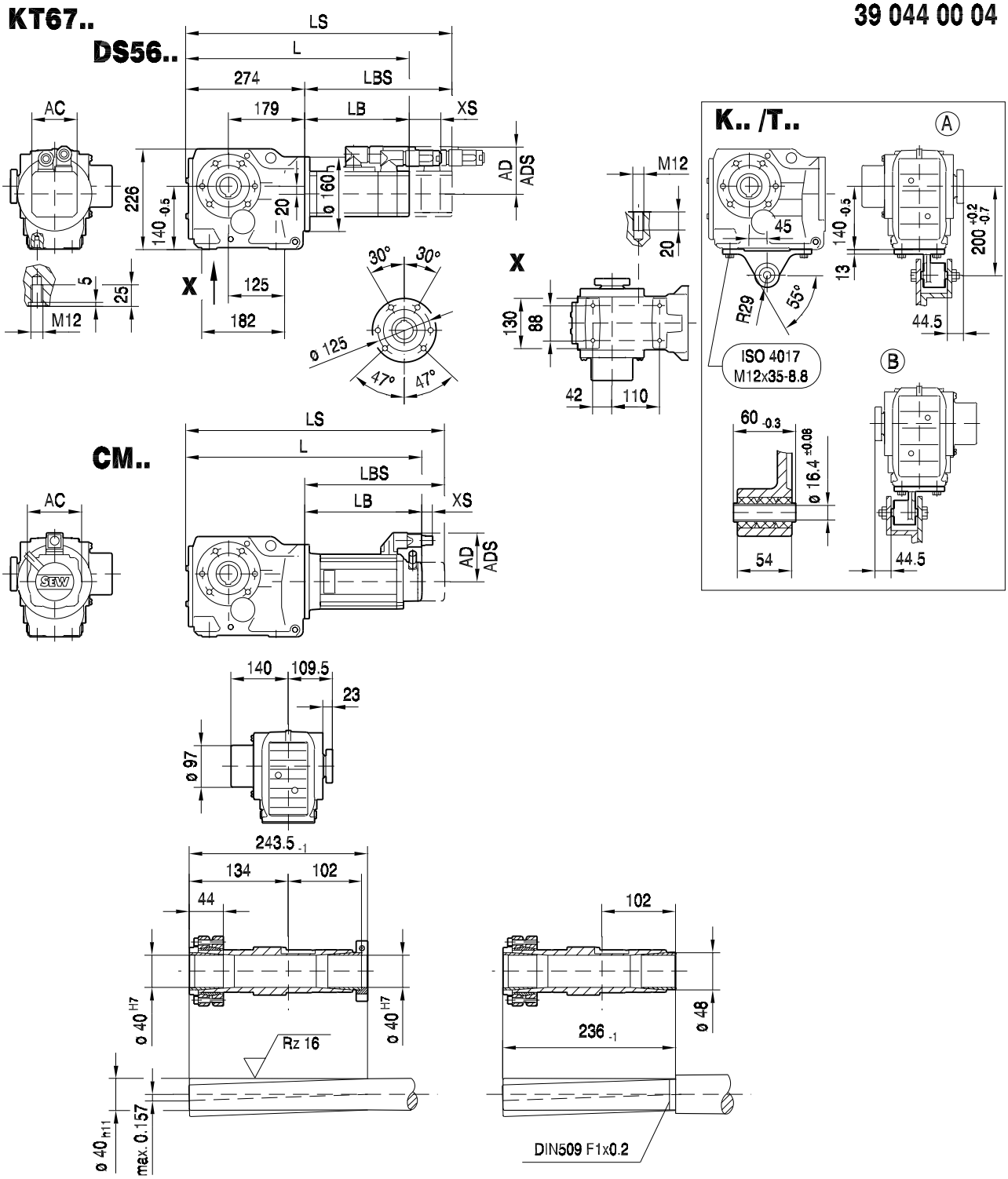

(→ 105)	DS56H	CM71S	CM71M	CM71L	CM90S	CM90M	CM90L	CM112S	CM112M		
AC	73	117	117	117	142	142	142	186	186		
AD	77	122	122	122	140	140	140	162	162		
ADS	77	122	122	122	140	140	140	162	162		
L	540	506	526	566	558	585	643	598	622		
LS	540	588	608	648	654	681	739	688	712		
LB	266	232	252	292	284	311	369	324	348		
LBS	266	314	334	374	380	407	465	414	438		
XS	51	45	45	45	50	50	50	36	36		

K77..

34 038 01 01

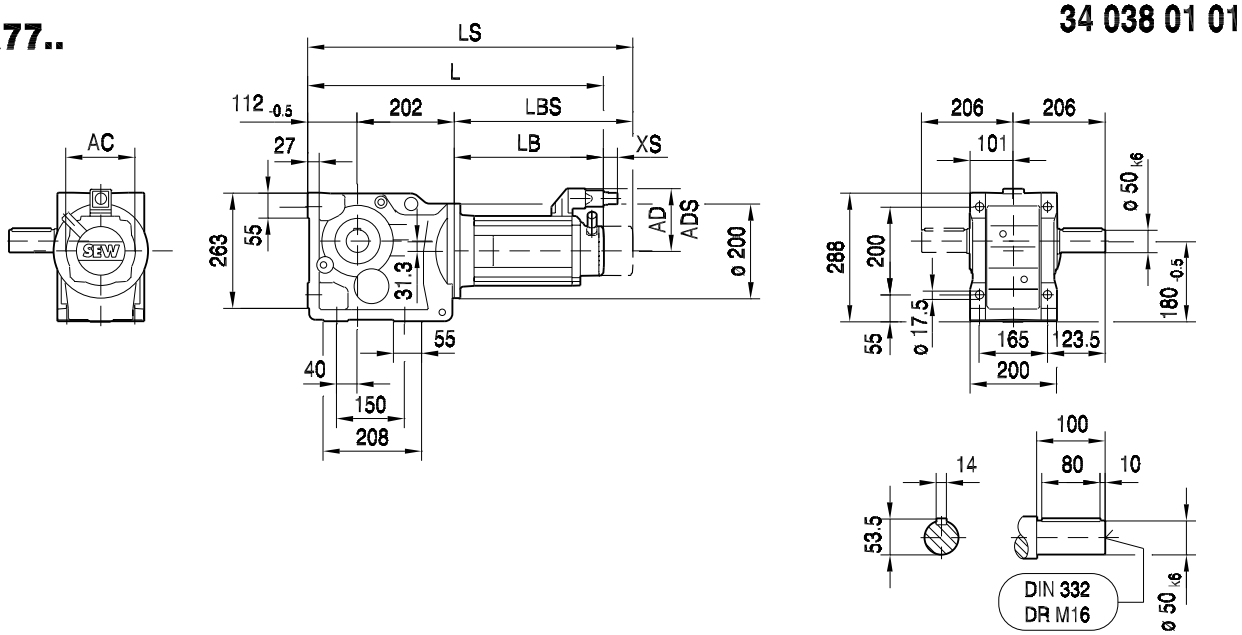

9

KA77B..

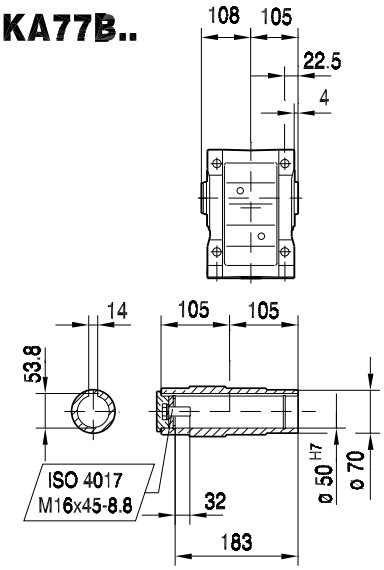

KH77B..

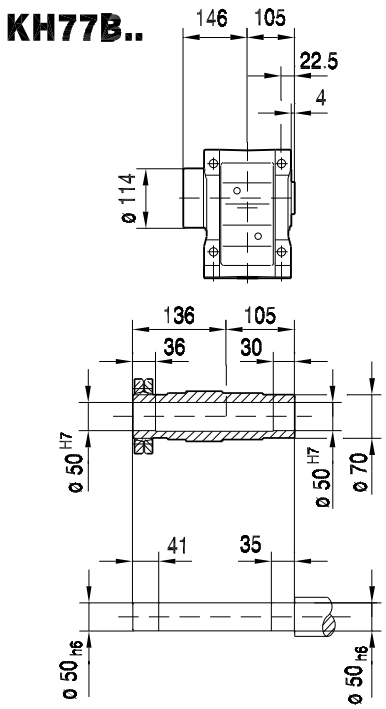

KV77B..

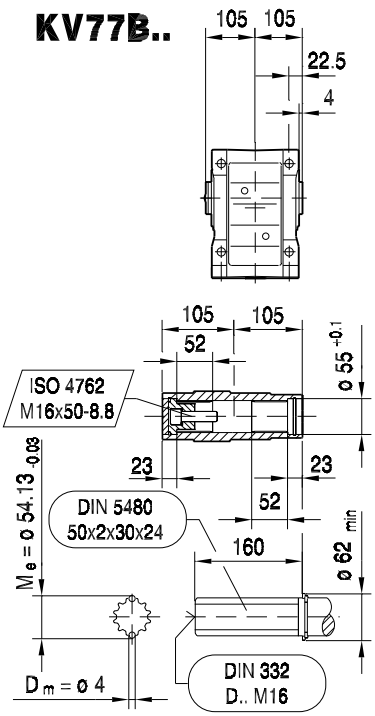

(→ 105)	CM71S	CM71M	CM71L	CM90S	CM90M	CM90L	CM112S	CM112M	CM112L		
AC	117	117	117	142	142	142	186	186	186		
AD	122	122	122	140	140	140	162	162	162		
ADS	122	122	122	140	140	140	162	162	162		
L	540	560	599	590	617	671	626	653	715		
LS	622	642	681	686	713	767	716	743	805		
LB	226	246	285	276	303	357	312	339	401		
LBS	308	328	367	372	399	453	402	429	491		
XS	45	45	45	50	50	50	36	36	36		

KF77..

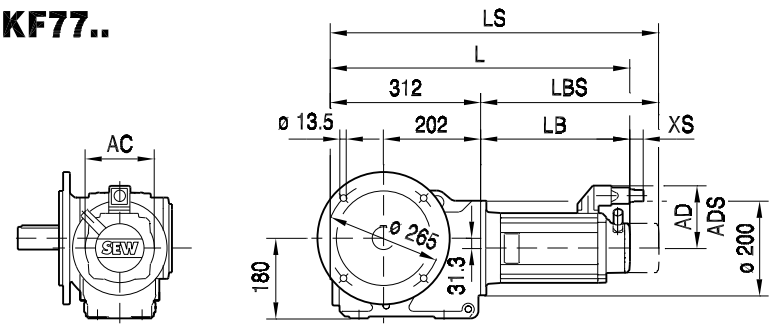

34 039 01 01

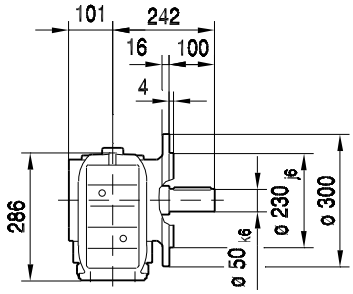

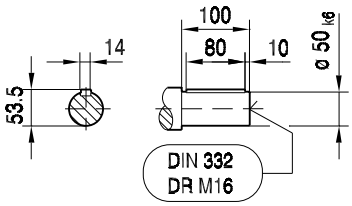

KAF77..

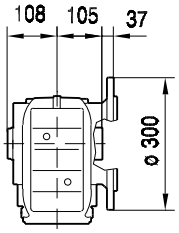

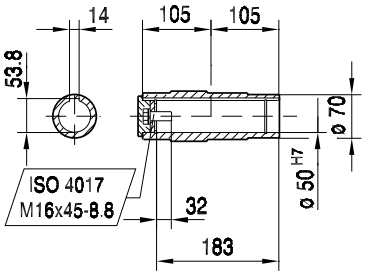

KHF77..

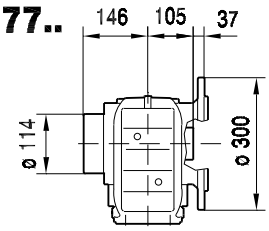

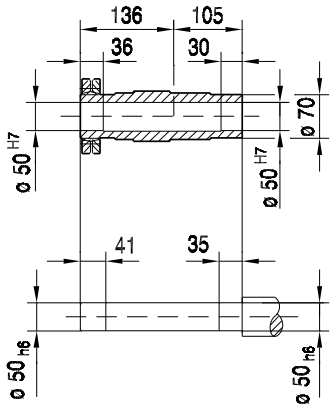

KVF77..

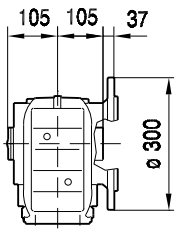

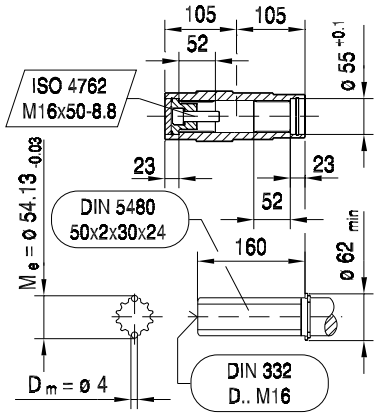

(→ 105)	CM71S	CM71M	CM71L	CM90S	CM90M	CM90L	CM112S	CM112M	CM112L		
AC	117	117	117	142	142	142	186	186	186		
AD	122	122	122	140	140	140	162	162	162		
ADS	122	122	122	140	140	140	162	162	162		
L	538	558	597	588	615	669	624	651	713		
LS	620	640	679	684	711	765	714	741	803		
LB	226	246	285	276	303	357	312	339	401		
LBS	308	328	367	372	399	453	402	429	491		
XS	45	45	45	50	50	50	36	36	36		

KA77..

39 024 01 01

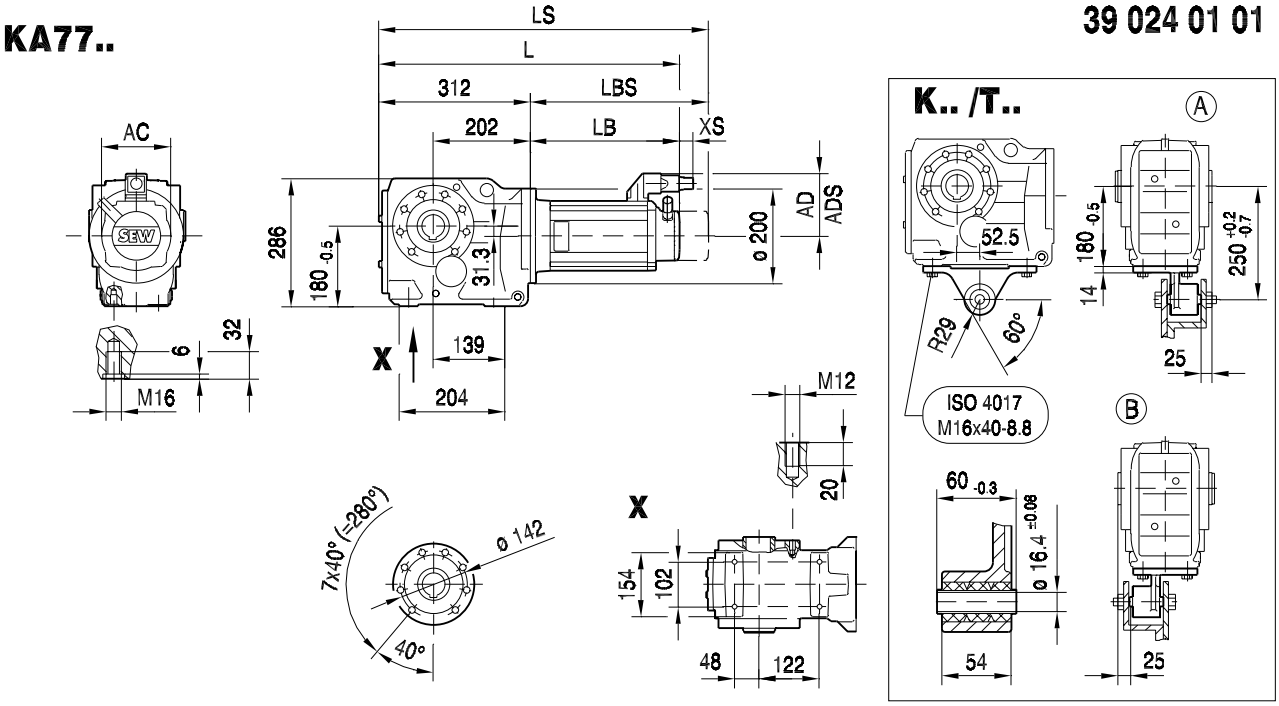

KA77..

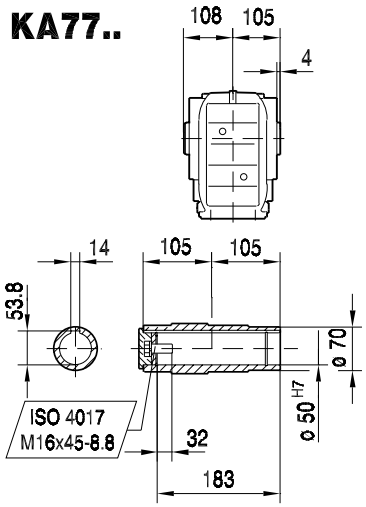

KH77..

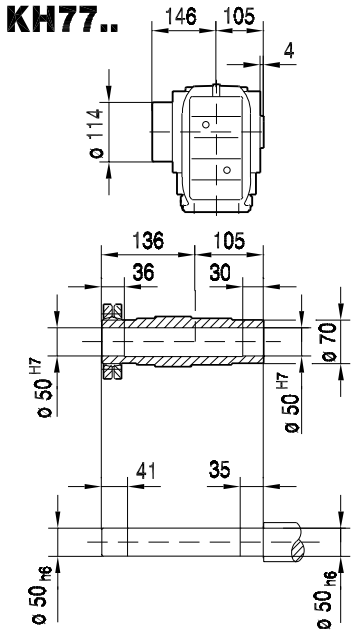

KV77..

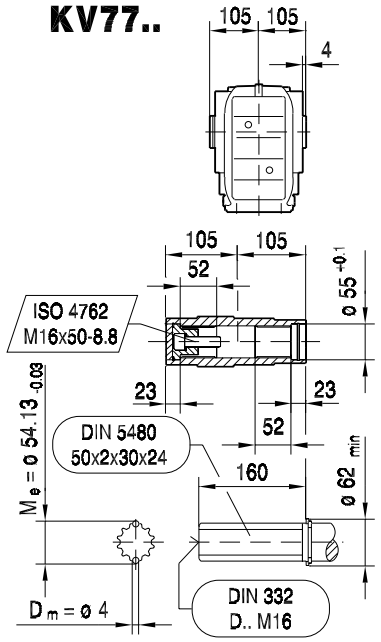

(→ 105)	CM71S	CM71M	CM71L	CM90S	CM90M	CM90L	CM112S	CM112M	CM112L		
AC	117	117	117	142	142	142	186	186	186		
AD	122	122	122	140	140	140	162	162	162		
ADS	122	122	122	140	140	140	162	162	162		
L	538	558	597	588	615	669	624	651	713		
LS	620	640	679	684	711	765	714	741	803		
LB	226	246	285	276	303	357	312	339	401		
LBS	308	328	367	372	399	453	402	429	491		
XS	45	45	45	50	50	50	36	36	36		

KAZ77..

39 037 00 04

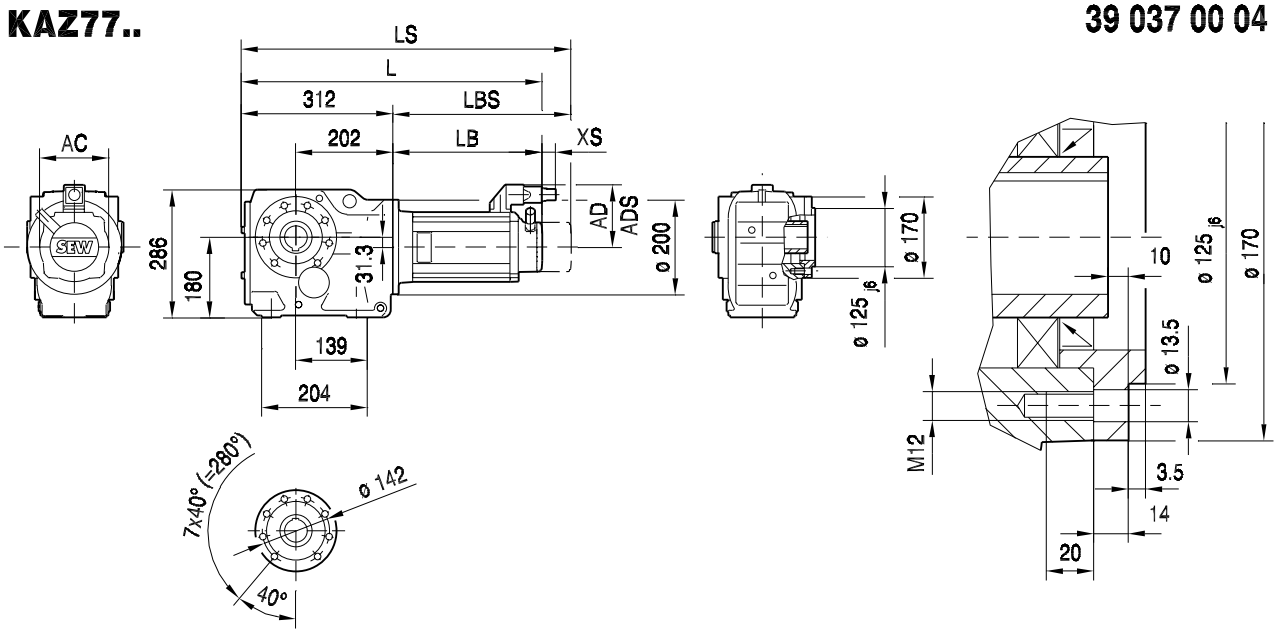

KAZ77..

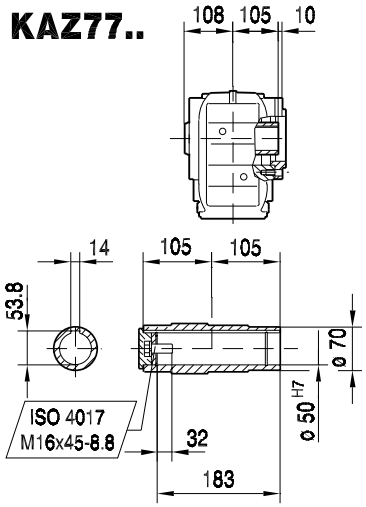

KHZ77..

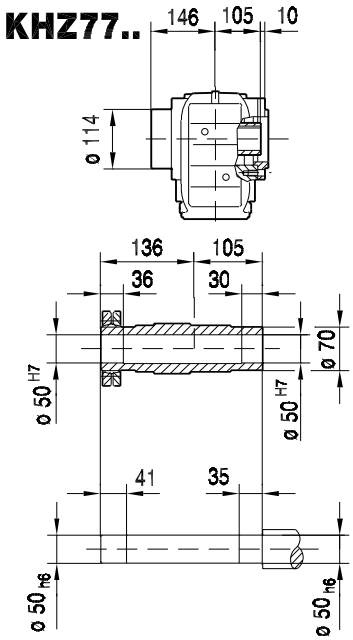

KVZ77..

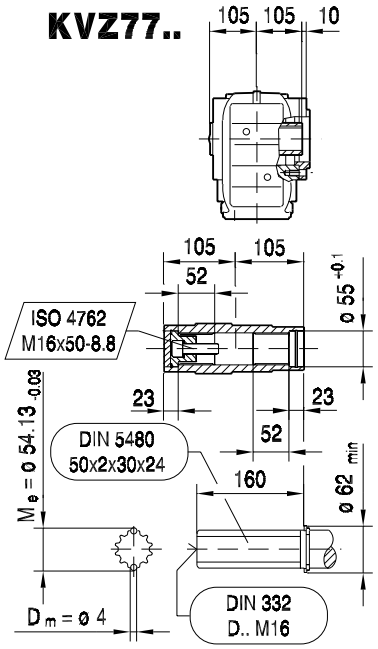

(→ 105)	CM71S	CM71M	CM71L	CM90S	CM90M	CM90L	CM112S	CM112M	CM112L		
AC	117	117	117	142	142	142	186	186	186		
AD	122	122	122	140	140	140	162	162	162		
ADS	122	122	122	140	140	140	162	162	162		
L	538	558	597	588	615	669	624	651	713		
LS	620	640	679	684	711	765	714	741	803		
LB	226	246	285	276	303	357	312	339	401		
LBS	308	328	367	372	399	453	402	429	491		
XS	45	45	45	50	50	50	36	36	36		

KT77..

39 045 00 04

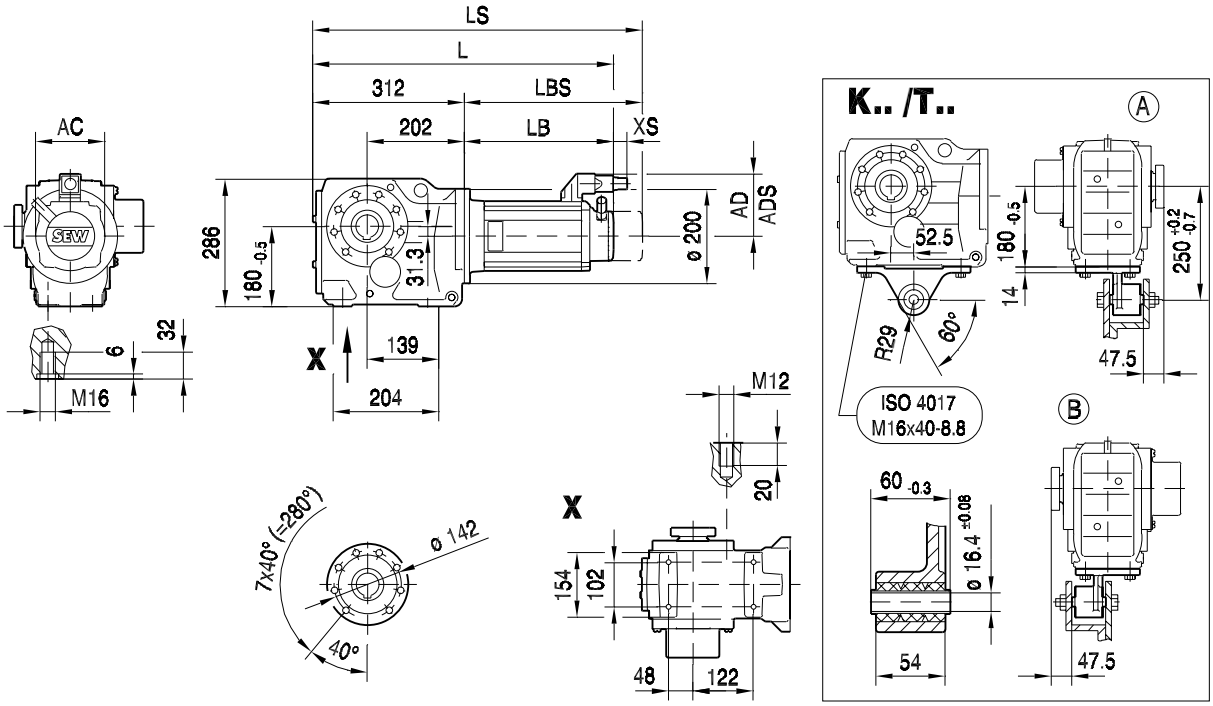

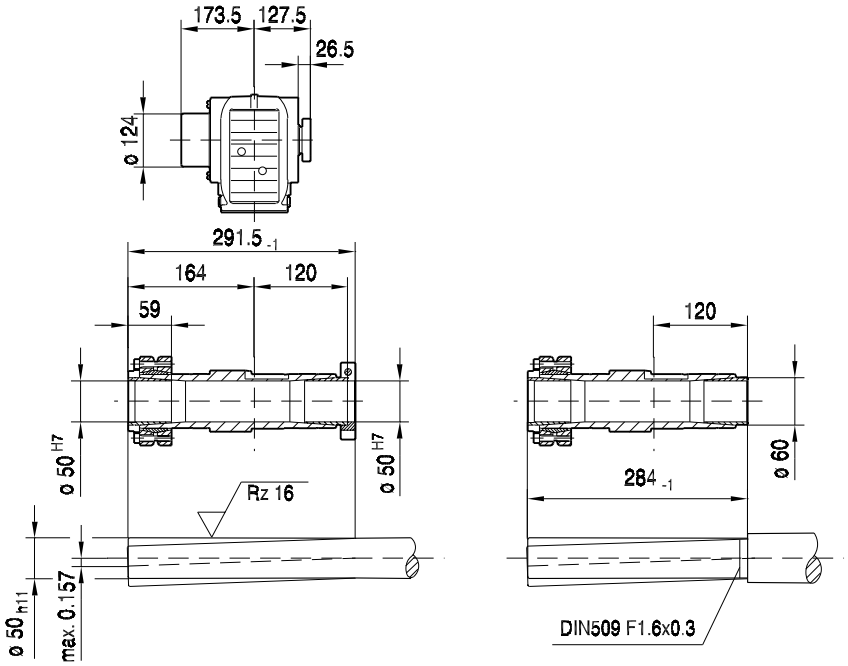

(→ 105)	CM71S	CM71M	CM71L	CM90S	CM90M	CM90L	CM112S	CM112M	CM112L		
AC	117	117	117	142	142	142	186	186	186		
AD	122	122	122	140	140	140	162	162	162		
ADS	122	122	122	140	140	140	162	162	162		
L	538	558	597	588	615	669	624	651	713		
LS	620	640	679	684	711	765	714	741	803		
LB	226	246	285	276	303	357	312	339	401		
LBS	308	328	367	372	399	453	402	429	491		
XS	45	45	45	50	50	50	36	36	36		

K87..

34 040 01 01

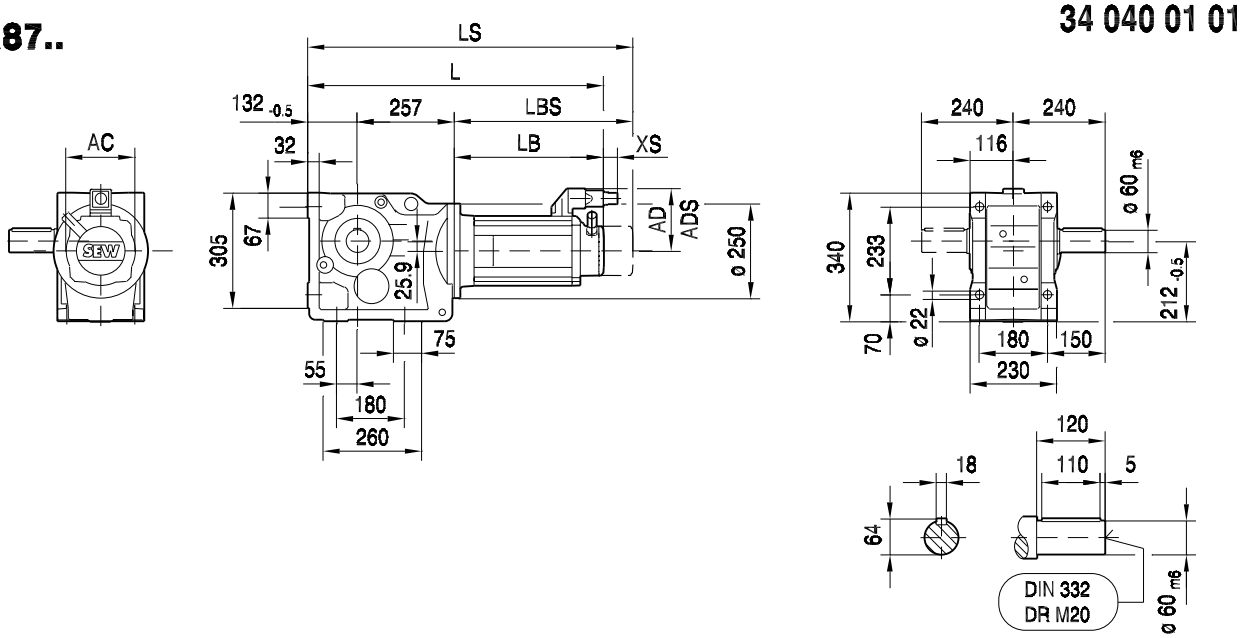

KA87B..

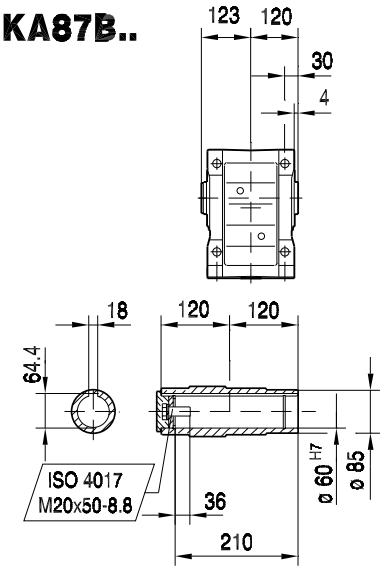

KH87B..

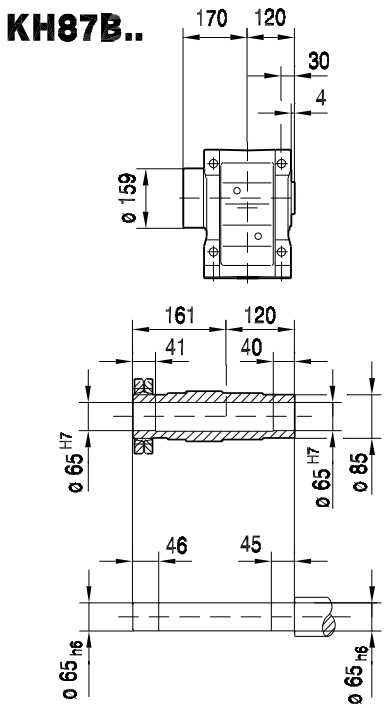

KV87B..

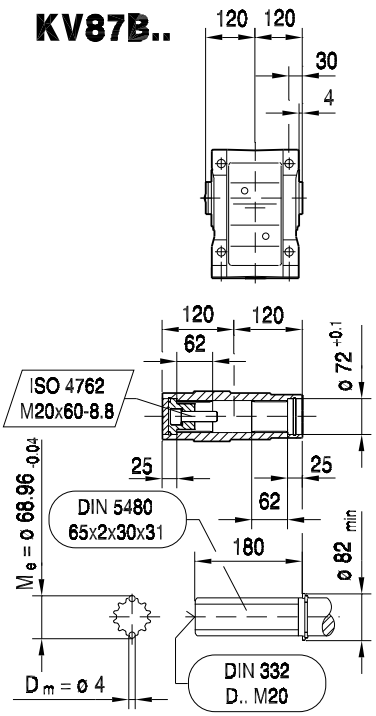

(→ 105)	CM90S	CM90M	CM90L	CM112S	CM112M	CM112L	CM112H				
AC	142	142	142	186	186	186	186				
AD	140	140	140	162	162	162	162				
ADS	140	140	140	162	162	162	162				
L	661	688	742	696	723	785	915				
LS	757	784	838	786	813	875	980				
LB	272	299	353	307	334	396	526				
LBS	368	395	449	397	424	486	591				
XS	50	50	50	36	36	36	36				

KF87..

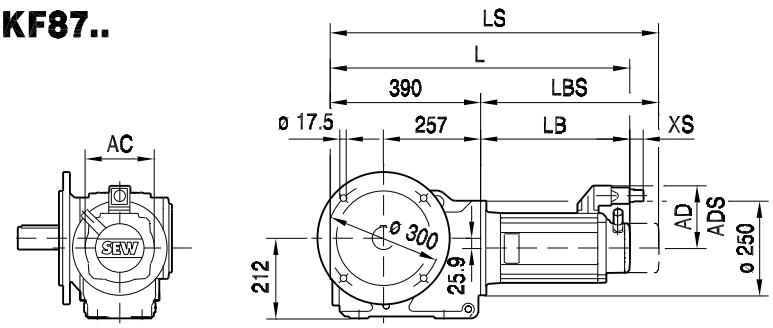

34 041 01 01

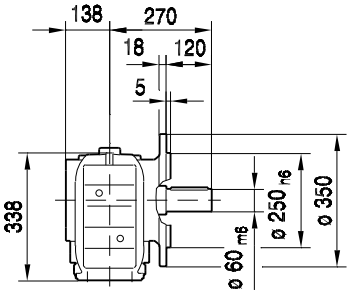

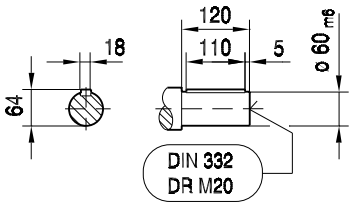

9

KAF87..

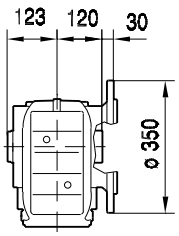

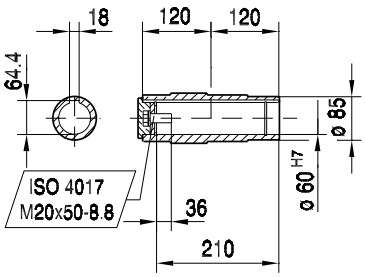

KHF87..

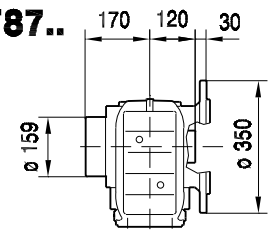

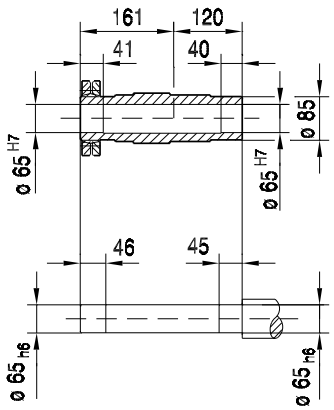

KVF87..

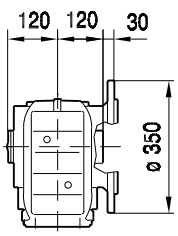

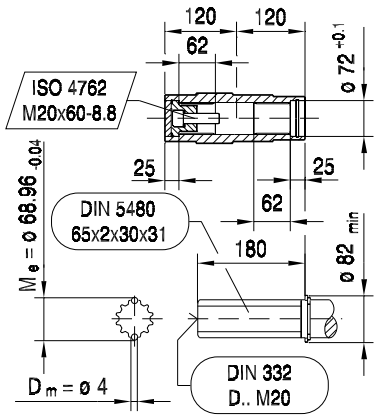

(→ 105)	CM90S	CM90M	CM90L	CM112S	CM112M	CM112L	CM112H				
AC	142	142	142	186	186	186	186				
AD	140	140	140	162	162	162	162				
ADS	140	140	140	162	162	162	162				
L	662	689	743	697	724	786	916				
LS	758	785	839	787	814	876	981				
LB	272	299	353	307	334	396	526				
LBS	368	395	449	397	424	486	591				
XS	50	50	50	36	36	36	36				

KA87..

39 025 01 01

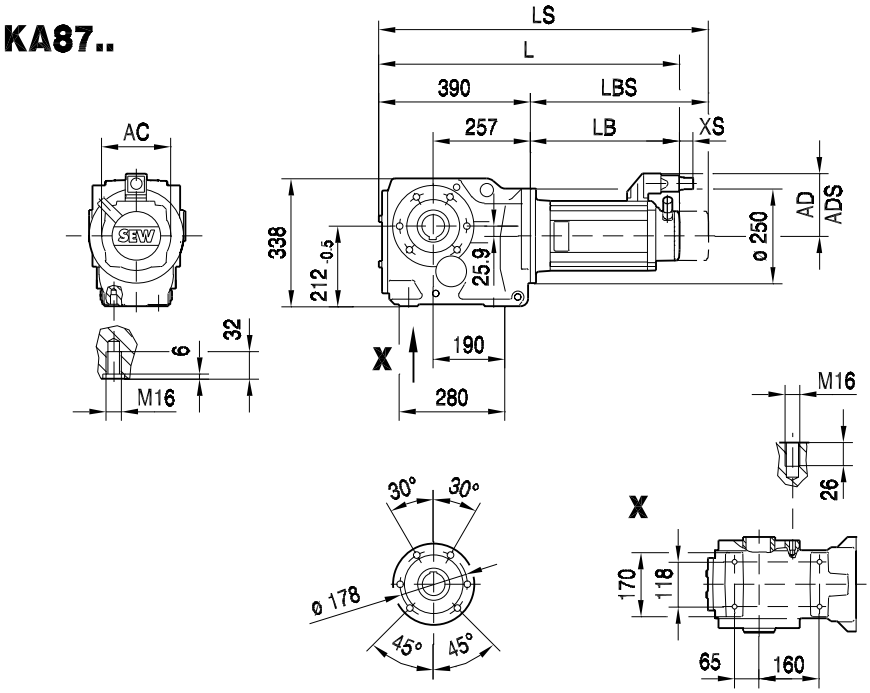

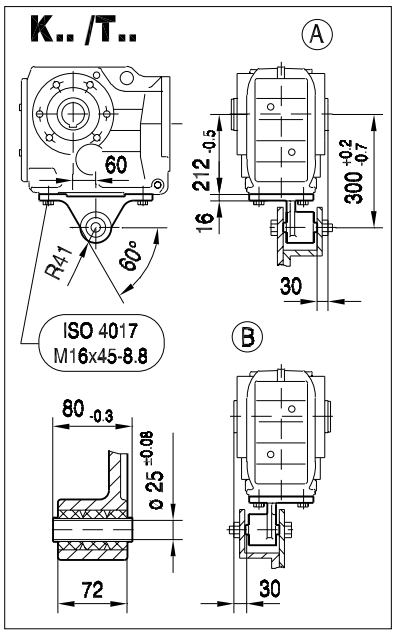

KA87..

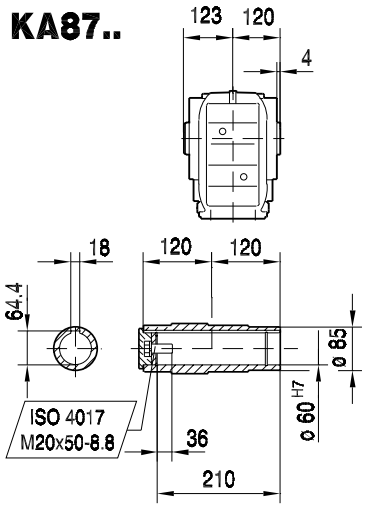

KH87..

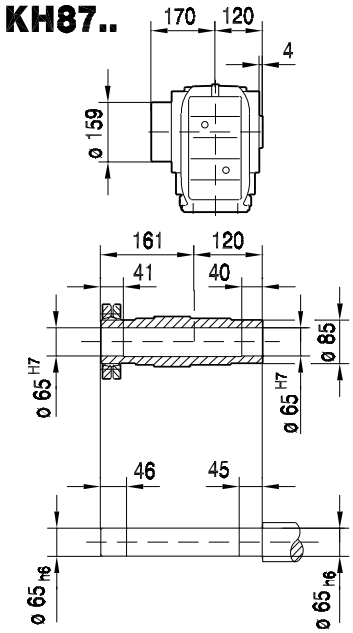

KV87..

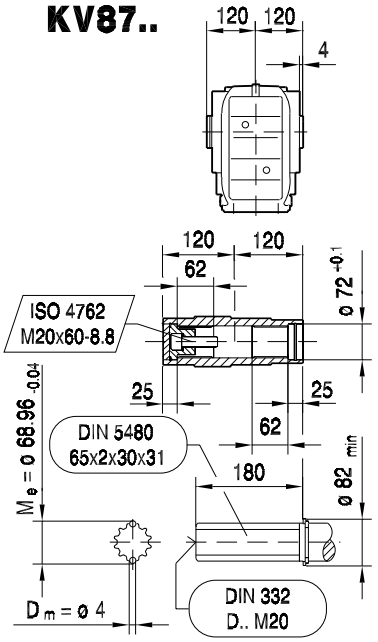

(→ 105)	CM90S	CM90M	CM90L	CM112S	CM112M	CM112L	CM112H				
AC	142	142	142	186	186	186	186				
AD	140	140	140	162	162	162	162				
ADS	140	140	140	162	162	162	162				
L	662	689	743	697	724	786	916				
LS	758	785	839	787	814	876	981				
LB	272	299	353	307	334	396	526				
LBS	368	395	449	397	424	486	591				
XS	50	50	50	36	36	36	36				

KAZ87..

39 038 00 04

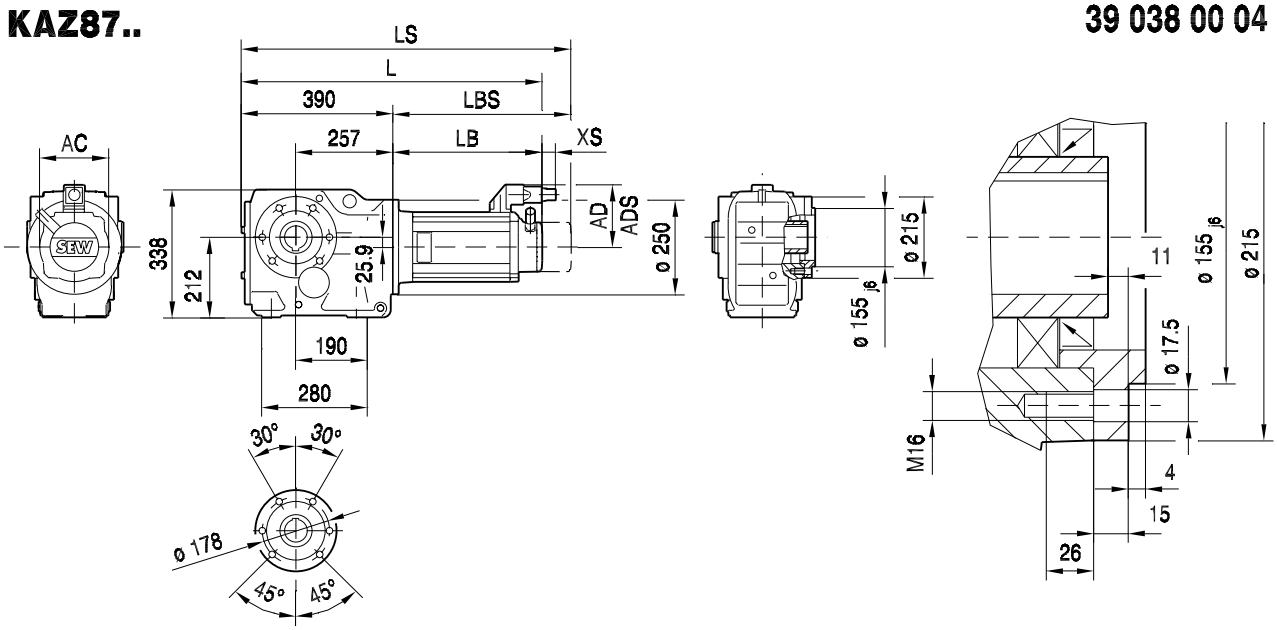

9

KAZ87..

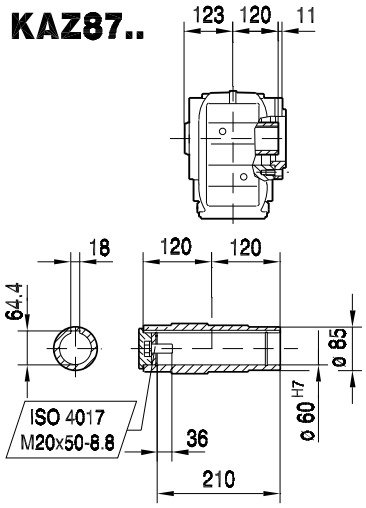

KHZ87..

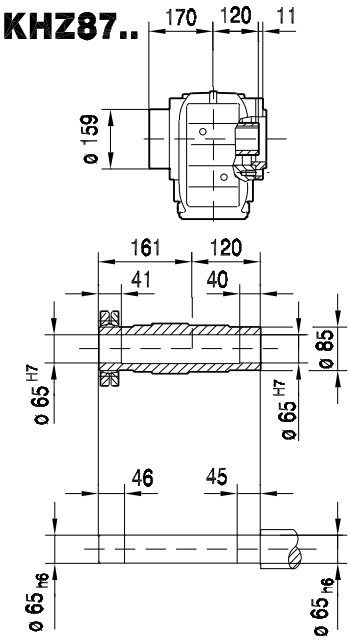

KVZ87..

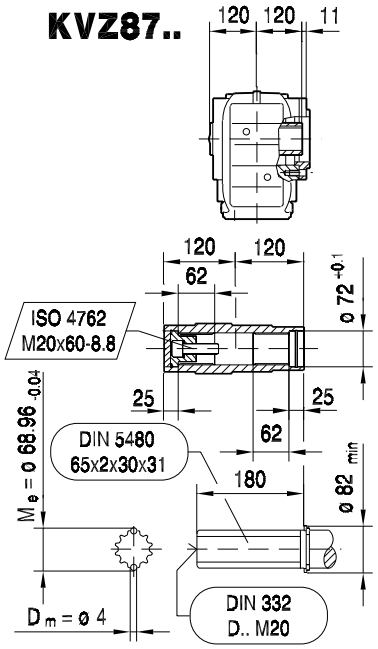

(→ 105)	CM90S	CM90M	CM90L	CM112S	CM112M	CM112L	CM112H				
AC	142	142	142	186	186	186	186				
AD	140	140	140	162	162	162	162				
ADS	140	140	140	162	162	162	162				
L	662	689	743	697	724	786	916				
LS	758	785	839	787	814	876	981				
LB	272	299	353	307	334	396	526				
LBS	368	395	449	397	424	486	591				
XS	50	50	50	36	36	36	36				

KT87..

39 046 00 04

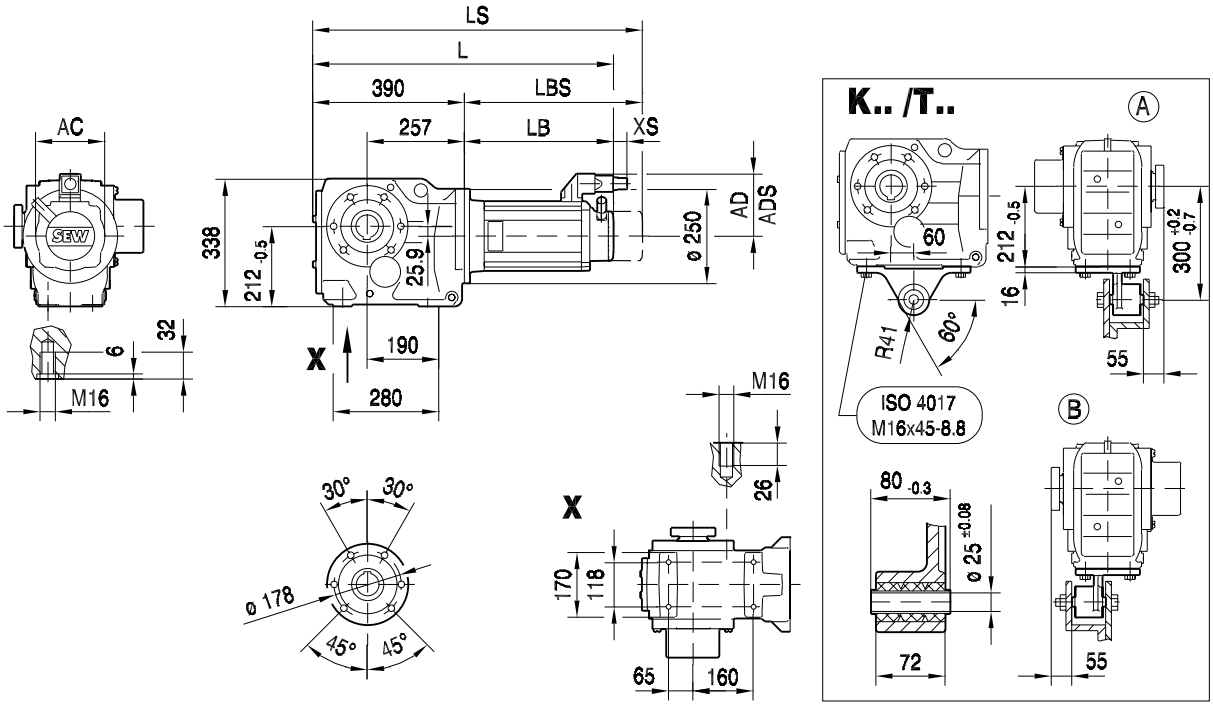

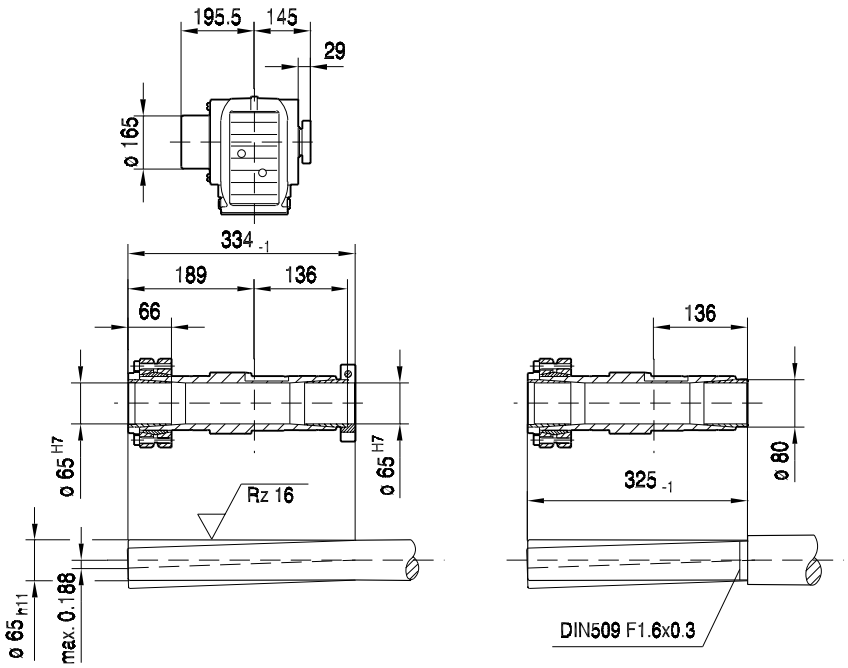

(→ 105)	CM90S	CM90M	CM90L	CM112S	CM112M	CM112L	CM112H				
AC	142	142	142	186	186	186	186				
AD	140	140	140	162	162	162	162				
ADS	140	140	140	162	162	162	162				
L	662	689	743	697	724	786	916				
LS	758	785	839	787	814	876	981				
LB	272	299	353	307	334	396	526				
LBS	368	395	449	397	424	486	591				
XS	50	50	50	36	36	36	36				

K97..

34 042 01 01

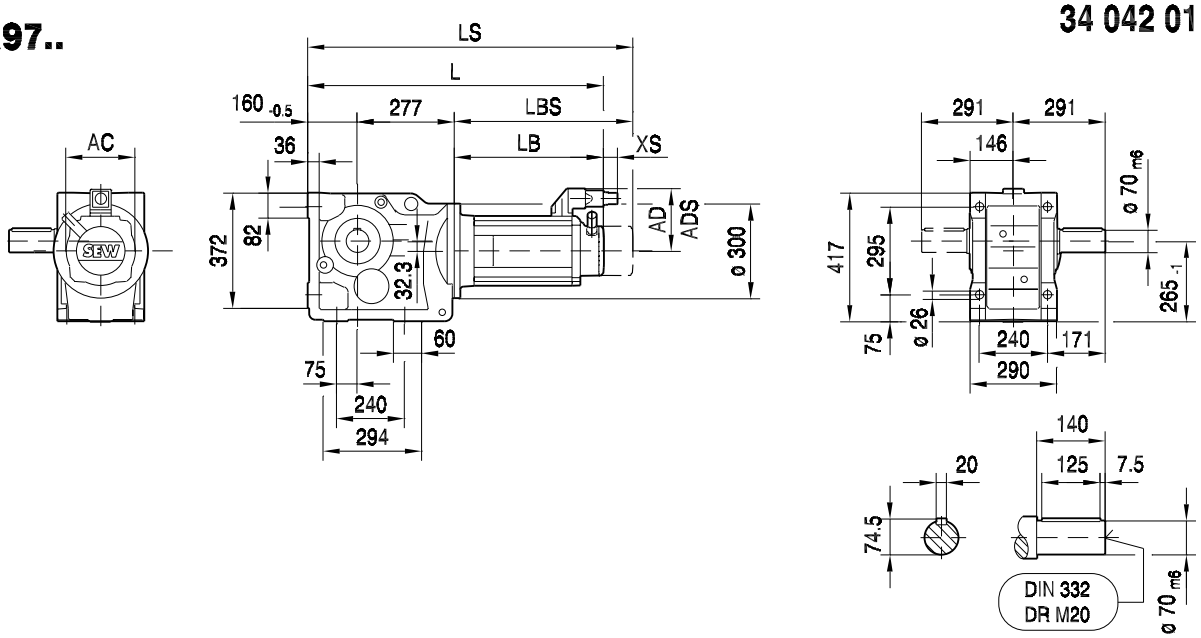

9

KA97B..

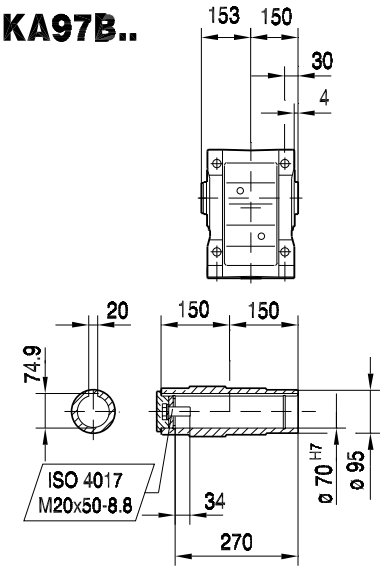

KH97B..

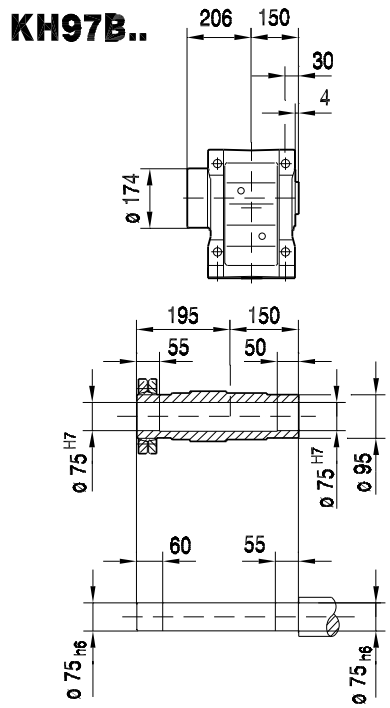

KV97B..

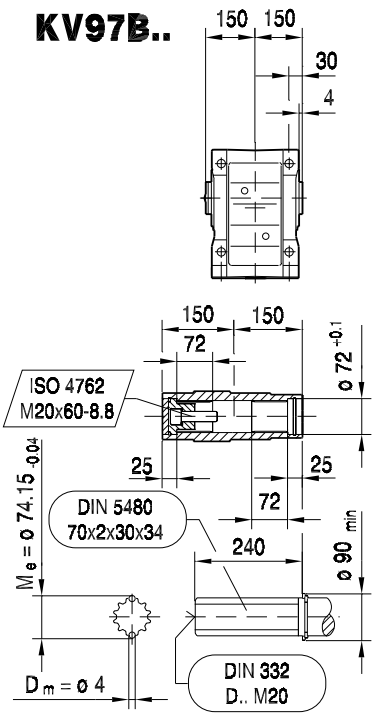

(→ 105)	CM90S	CM90M	CM90L	CM112S	CM112M	CM112L	CM112H				
AC	142	142	142	186	186	186	186				
AD	140	140	140	162	162	162	162				
ADS	140	140	140	162	162	162	162				
L	703	730	784	739	766	828	958				
LS	799	826	880	829	856	918	1023				
LB	266	293	347	302	329	391	521				
LBS	362	389	443	392	419	481	586				
XS	50	50	50	36	36	36	36				

KF97..

34 043 01 01

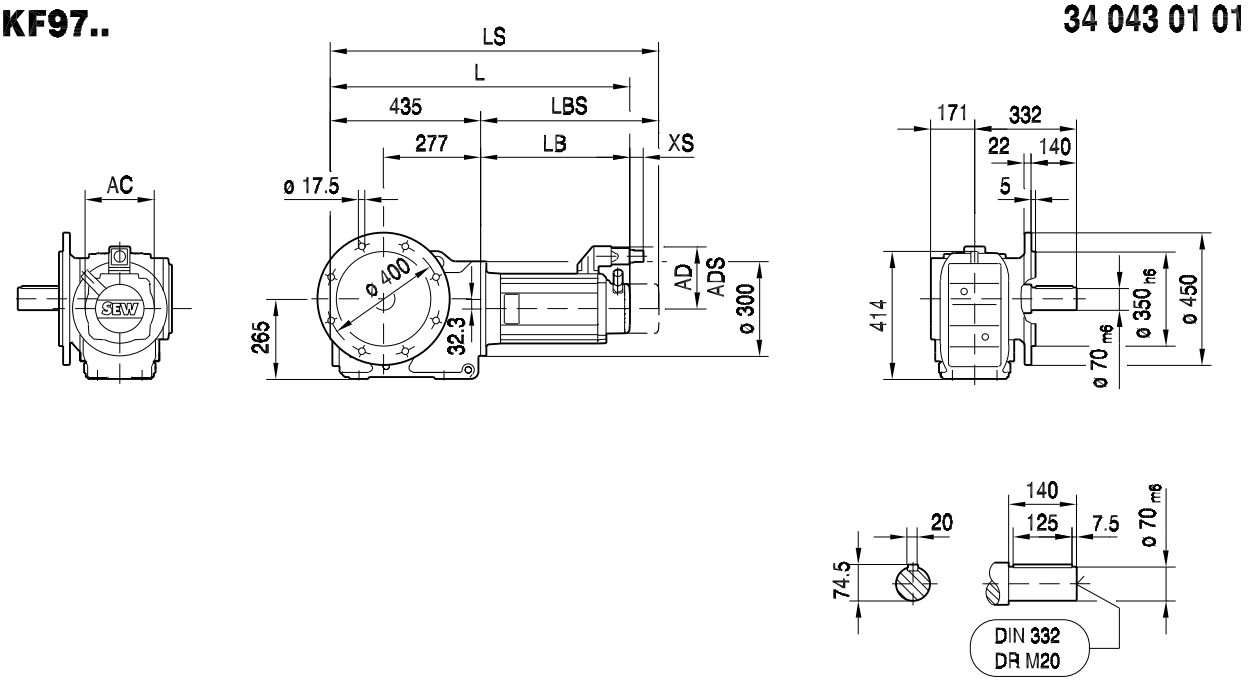

KAF97..

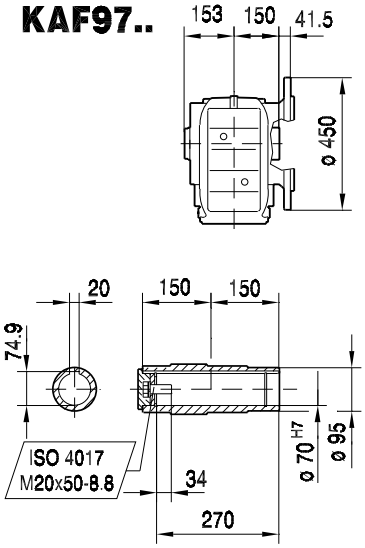

KHF97..

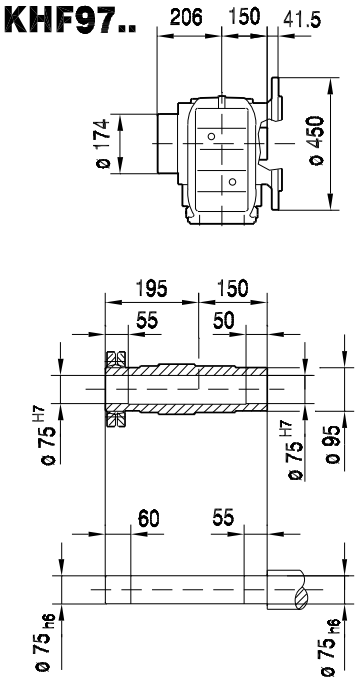

KVF97..

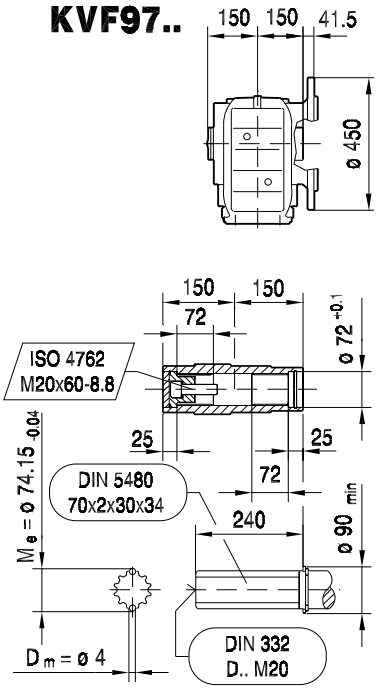

(→ 105)	CM90S	CM90M	CM90L	CM112S	CM112M	CM112L	CM112H				
AC	142	142	142	186	186	186	186				
AD	140	140	140	162	162	162	162				
ADS	140	140	140	162	162	162	162				
L	701	728	782	737	764	826	956				
LS	797	824	878	827	854	916	1021				
LB	266	293	347	302	329	391	521				
LBS	362	389	443	392	419	481	586				
XS	50	50	50	36	36	36	36				

KA97..

39 026 01 01

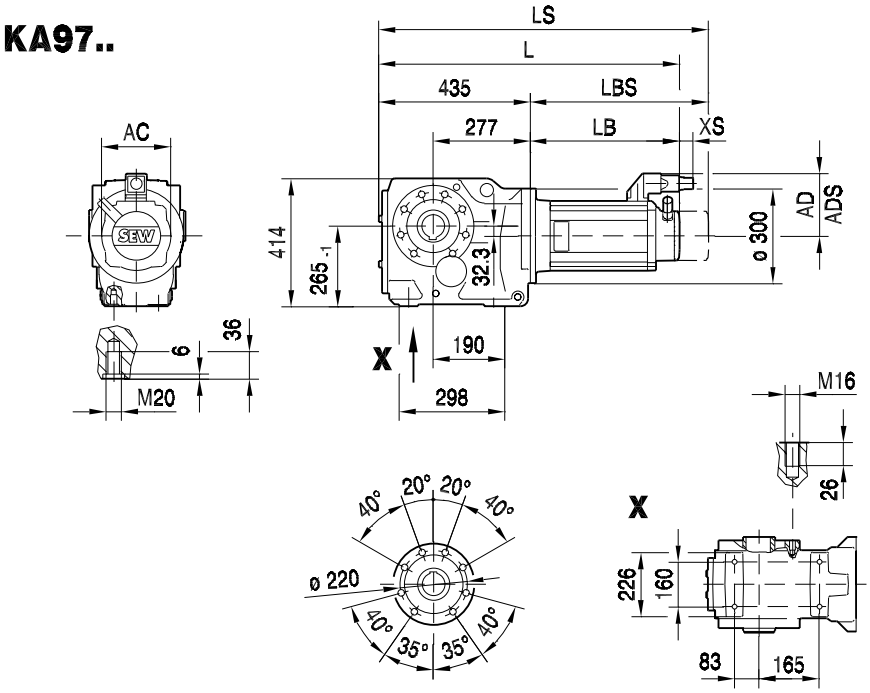

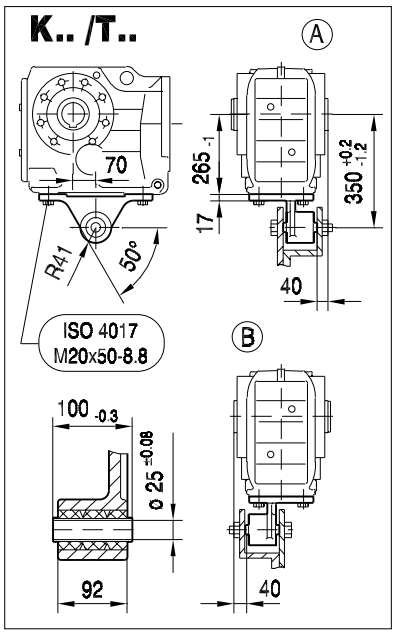

9

KA97..

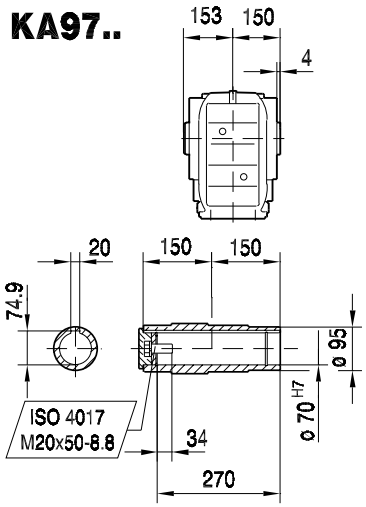

KH97..

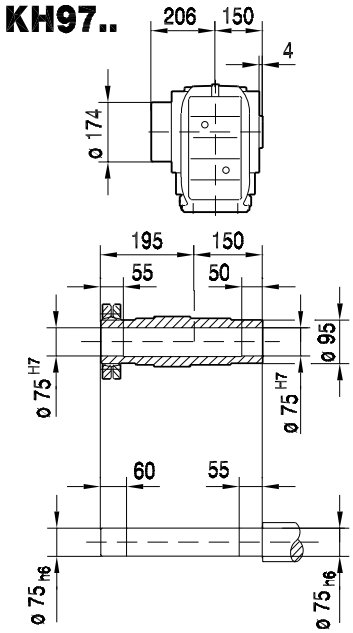

KV97..

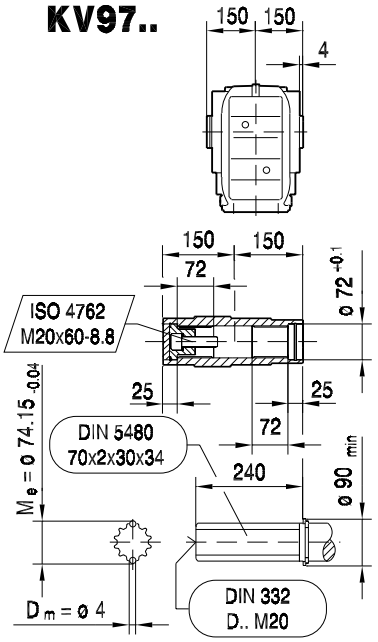

(→ 105)	CM90S	CM90M	CM90L	CM112S	CM112M	CM112L	CM112H				
AC	142	142	142	186	186	186	186				
AD	140	140	140	162	162	162	162				
ADS	140	140	140	162	162	162	162				
L	701	728	782	737	764	826	956				
LS	797	824	878	827	854	916	1021				
LB	266	293	347	302	329	391	521				
LBS	362	389	443	392	419	481	586				
XS	50	50	50	36	36	36	36				

KAZ97..

39 039 00 04

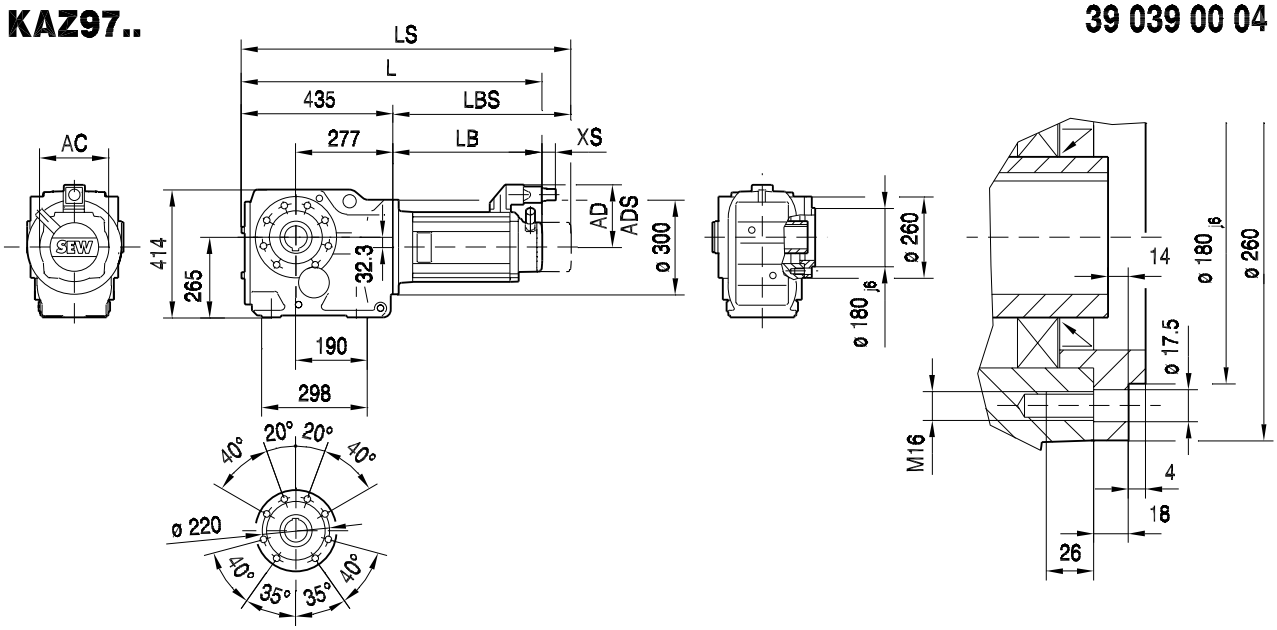

KAZ97..

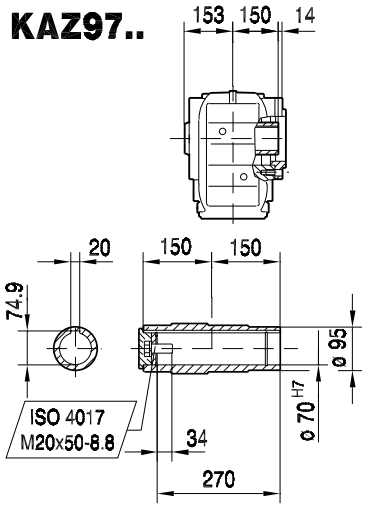

KHZ97..

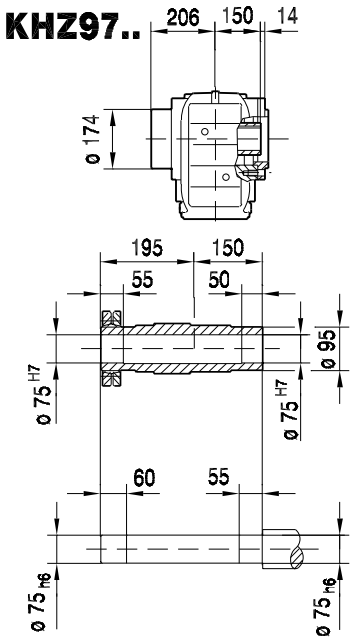

KVZ97..

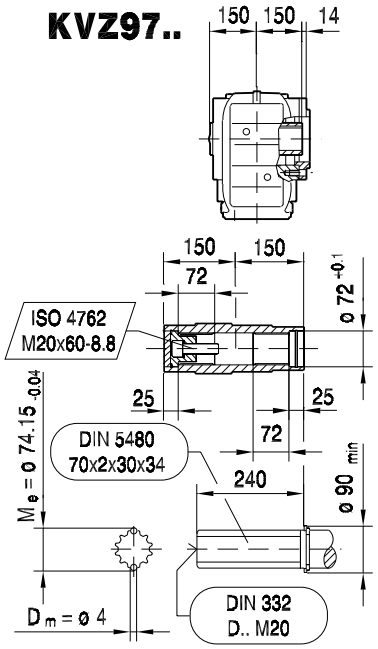

(→ 105)	CM90S	CM90M	CM90L	CM112S	CM112M	CM112L	CM112H				
AC	142	142	142	186	186	186	186				
AD	140	140	140	162	162	162	162				
ADS	140	140	140	162	162	162	162				
L	701	728	782	737	764	826	956				
LS	797	824	878	827	854	916	1021				
LB	266	293	347	302	329	391	521				
LBS	362	389	443	392	419	481	586				
XS	50	50	50	36	36	36	36				

KT97..

39 047 00 04

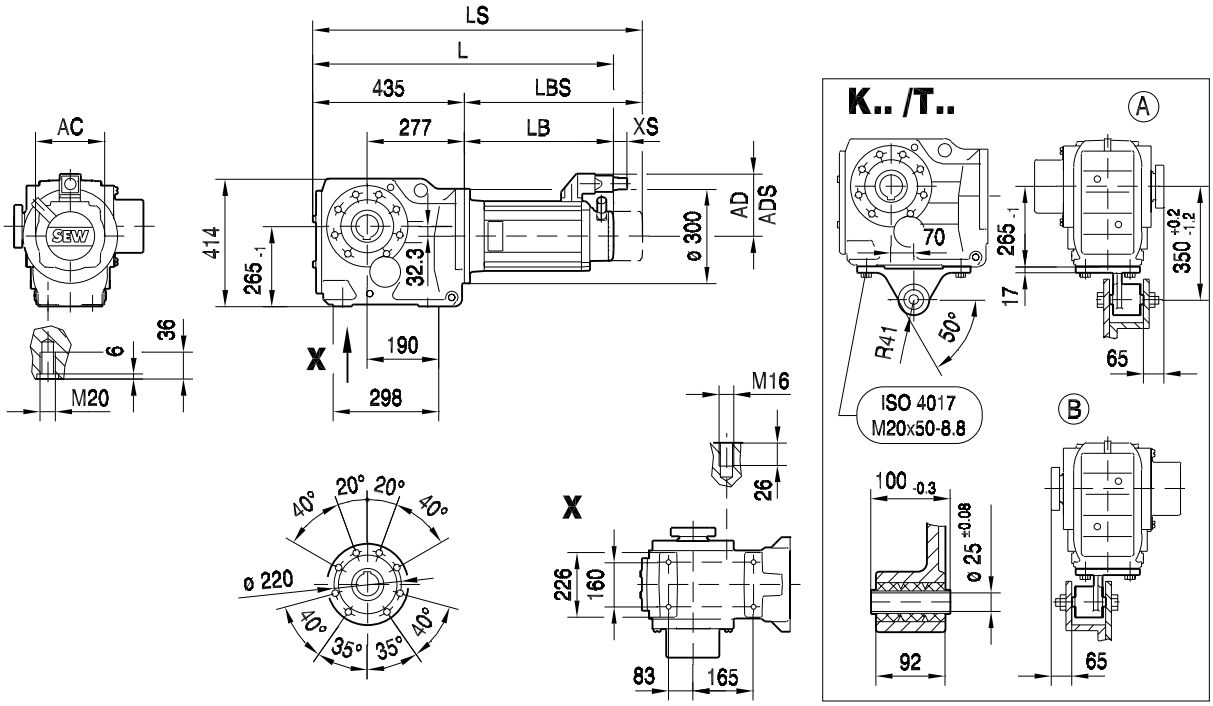

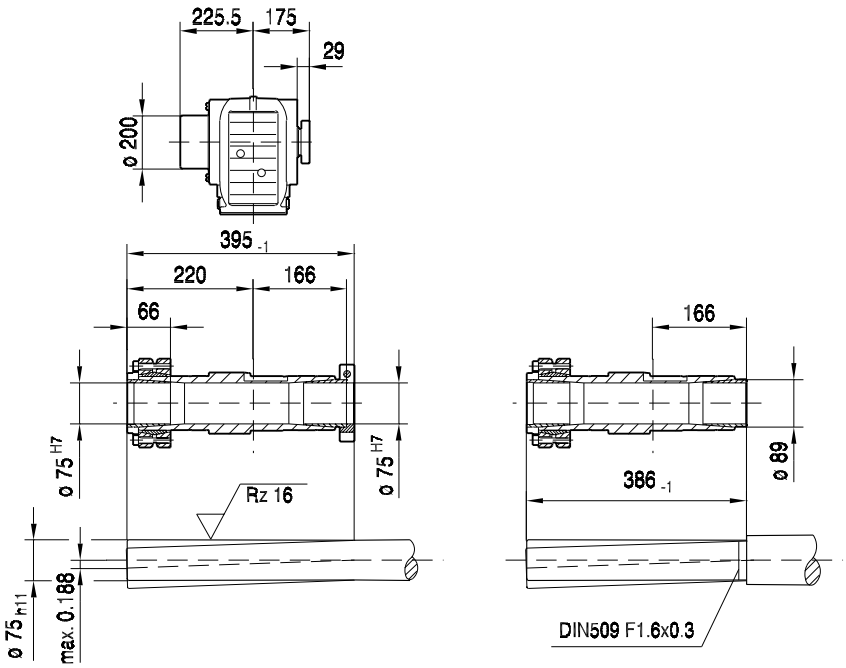

(→ 105)	CM90S	CM90M	CM90L	CM112S	CM112M	CM112L	CM112H				
AC	142	142	142	186	186	186	186				
AD	140	140	140	162	162	162	162				
ADS	140	140	140	162	162	162	162				
L	701	728	782	737	764	826	956				
LS	797	824	878	827	854	916	1021				
LB	266	293	347	302	329	391	521				
LBS	362	389	443	392	419	481	586				
XS	50	50	50	36	36	36	36				

K107..

34 044 01 01

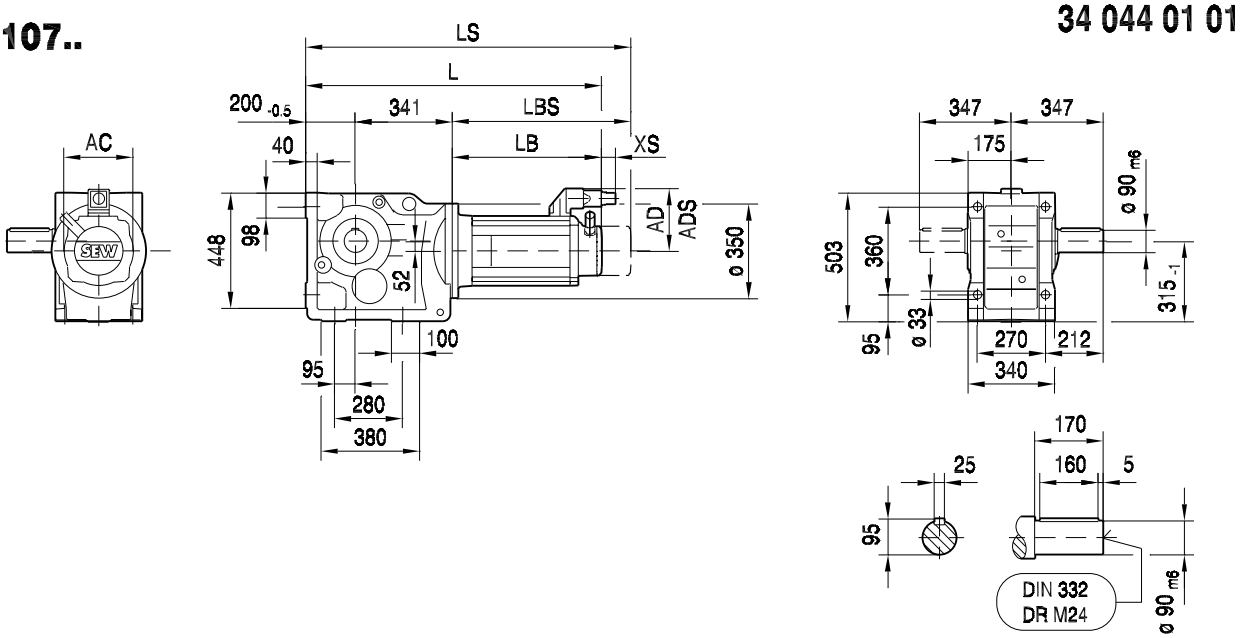

KA107B..

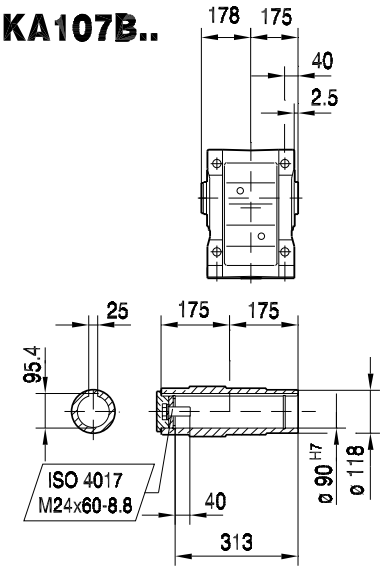

KH107B..

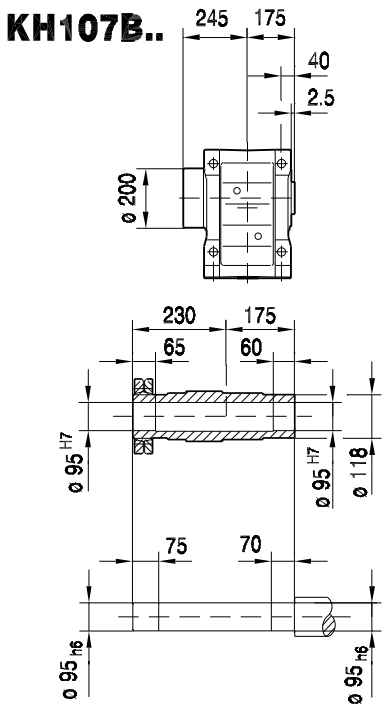

KV107B..

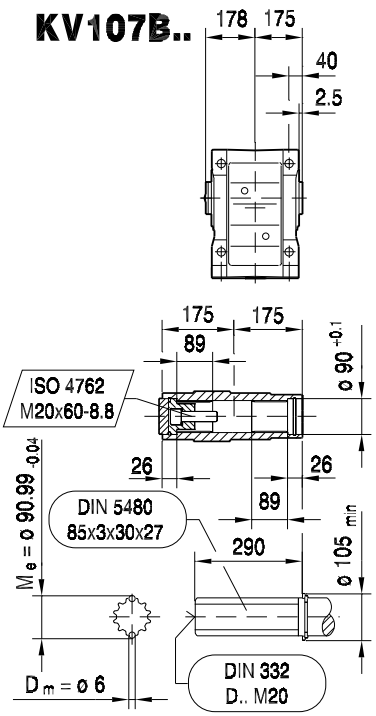

(→ 105)	CM112S	CM112M	CM112L	CM112H							
AC	186	186	186	186							
AD	162	162	162	162							
ADS	162	162	162	162							
L	837	864	926	1056							
LS	927	954	1016	1121							
LB	296	323	385	515							
LBS	386	413	475	580							
XS	36	36	36	36							

KF107..

34 045 01 01

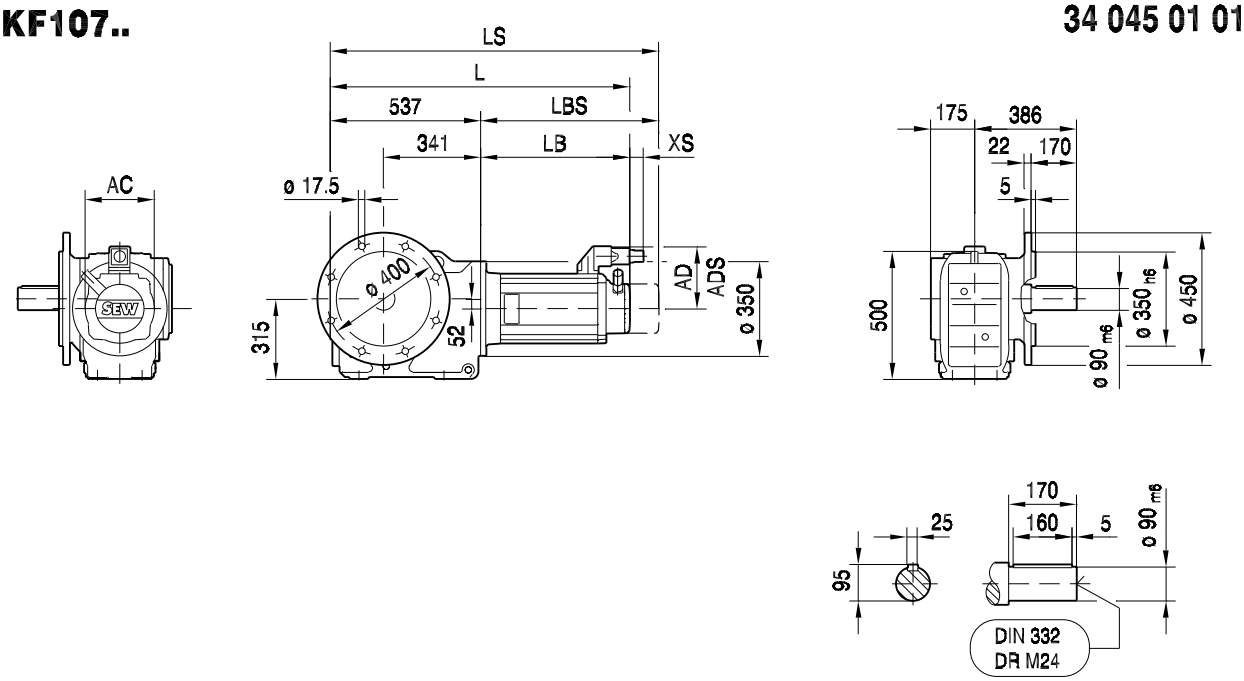

9

KAF107..

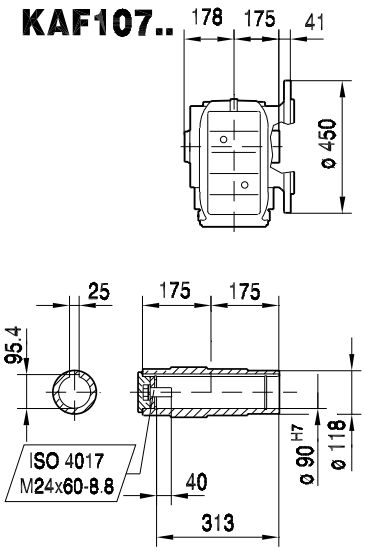

KHF107..

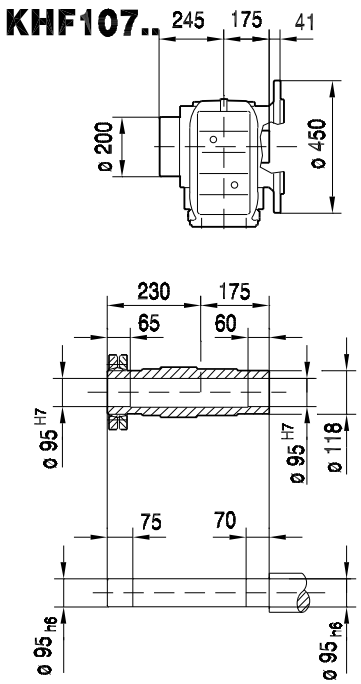

KVF107..

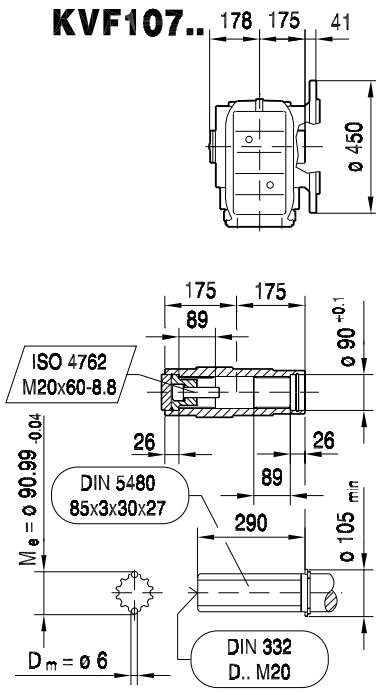

(→ 105)	CM112S	CM112M	CM112L	CM112H							
AC	186	186	186	186							
AD	162	162	162	162							
ADS	162	162	162	162							
L	833	860	922	1052							
LS	923	950	1012	1117							
LB	296	323	385	515							
LBS	386	413	475	580							
XS	36	36	36	36							

KA107..

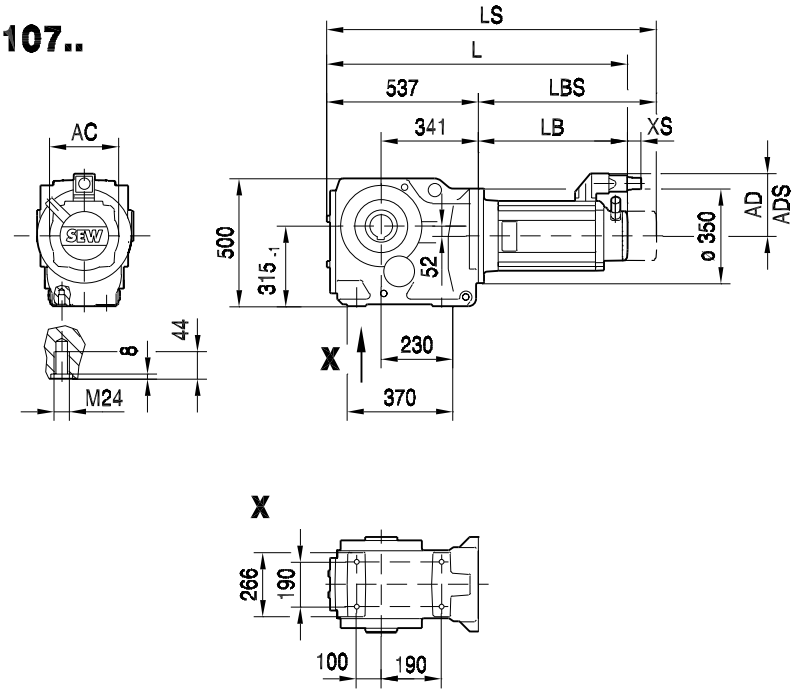

39 027 01 01

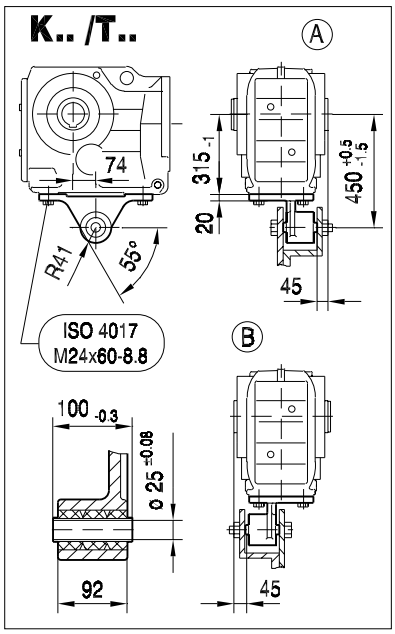

KA107..

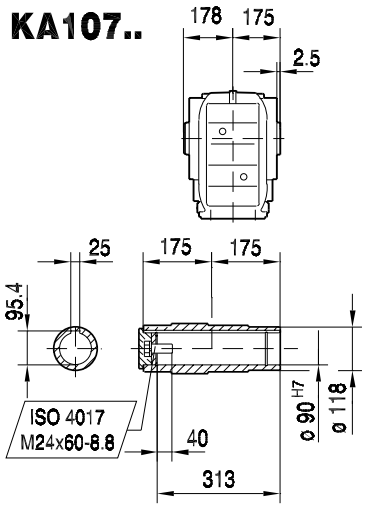

KH107..

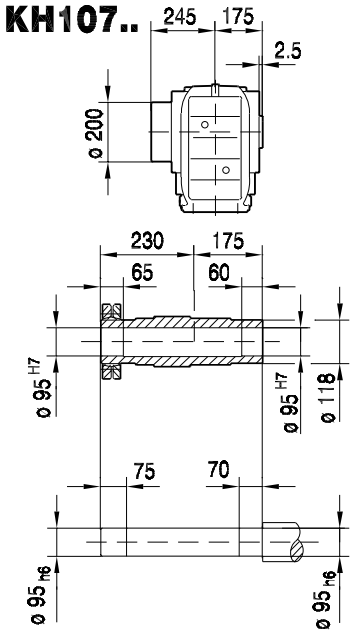

KV107..

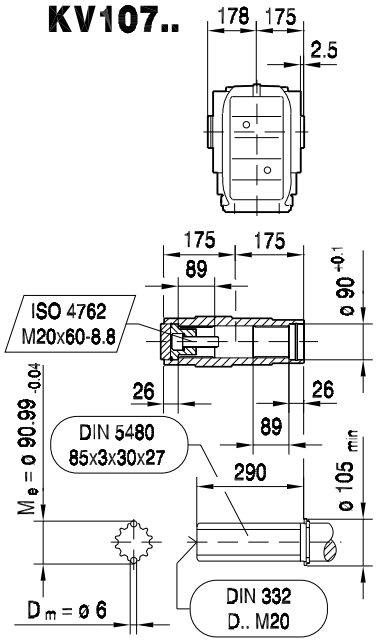

(→ 105)	CM112S	CM112M	CM112L	CM112H							
AC	186	186	186	186							
AD	162	162	162	162							
ADS	162	162	162	162							
L	833	860	922	1052							
LS	923	950	1012	1117							
LB	296	323	385	515							
LBS	386	413	475	580							
XS	36	36	36	36							

KAZ107..

39 040 00 04

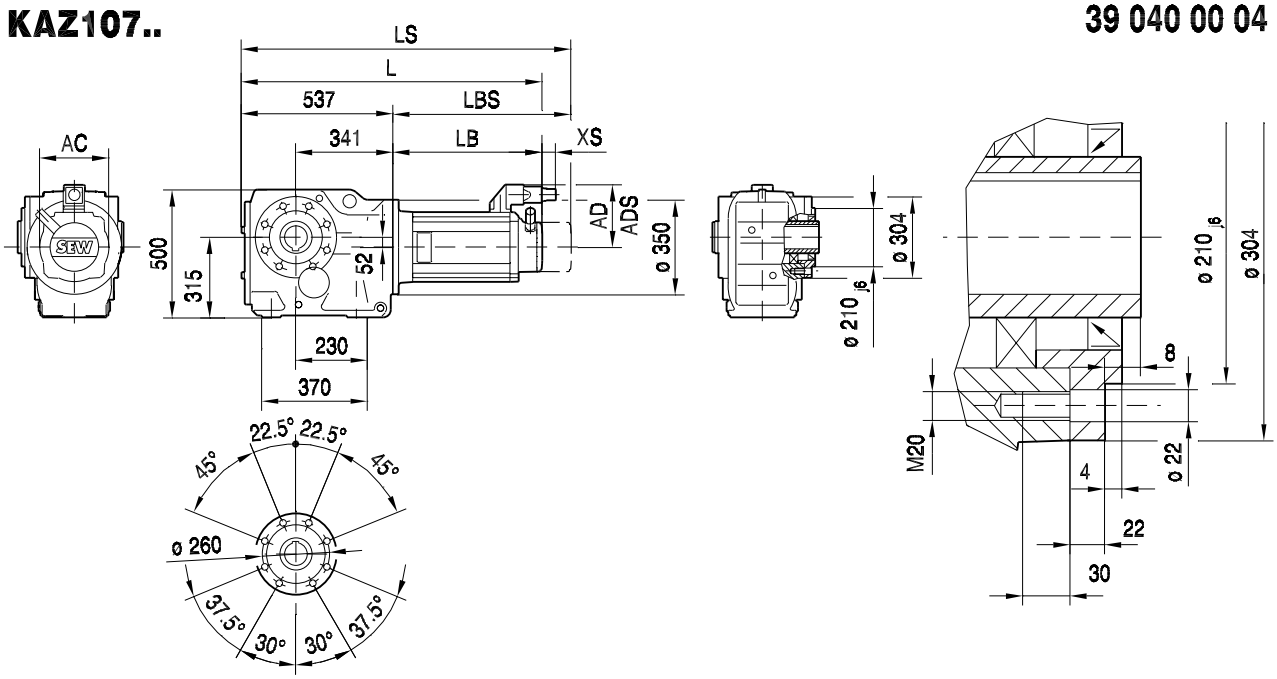

9

KAZ107..

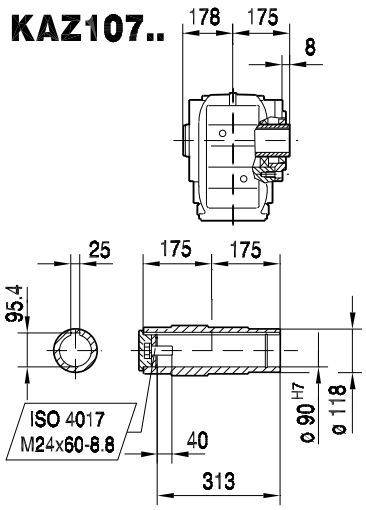

KHZ107..

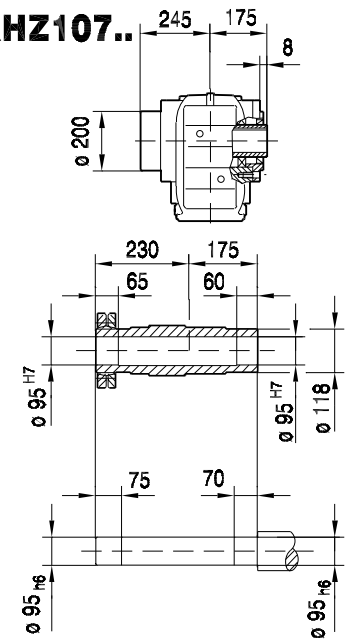

KVZ107..

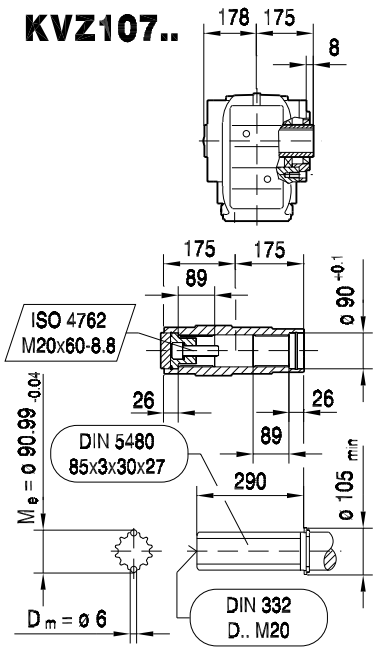

(→ 105)	CM112S	CM112M	CM112L	CM112H							
AC	186	186	186	186							
AD	162	162	162	162							
ADS	162	162	162	162							
L	833	860	922	1052							
LS	923	950	1012	1117							
LB	296	323	385	515							
LBS	386	413	475	580							
XS	36	36	36	36							

10 S..DS/CM..

10.1 S, SF, SAF, SHF, SA../T, SH, SAZ, SHZ..DS/CM

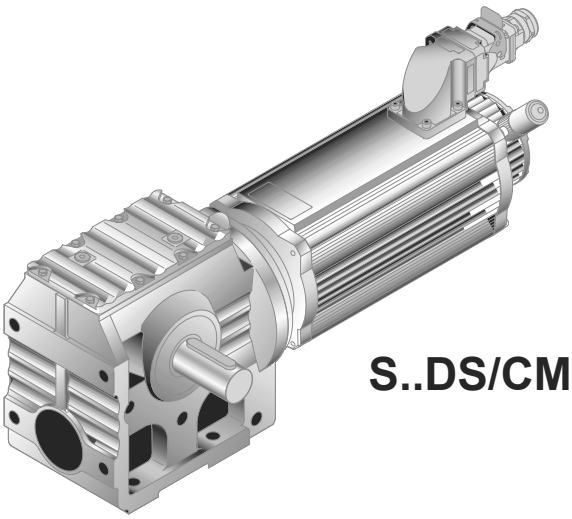

S..DS/CM..

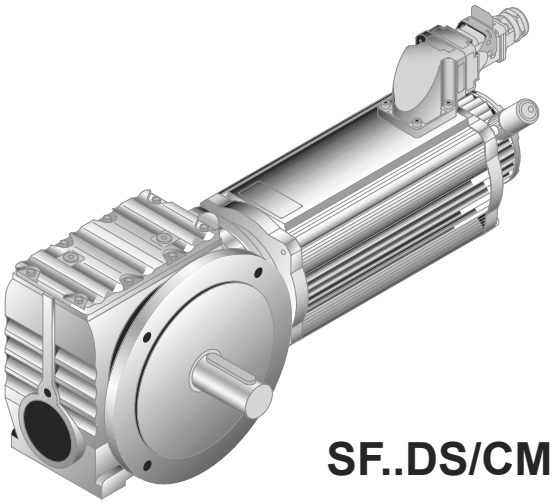

SF..DS/CM..

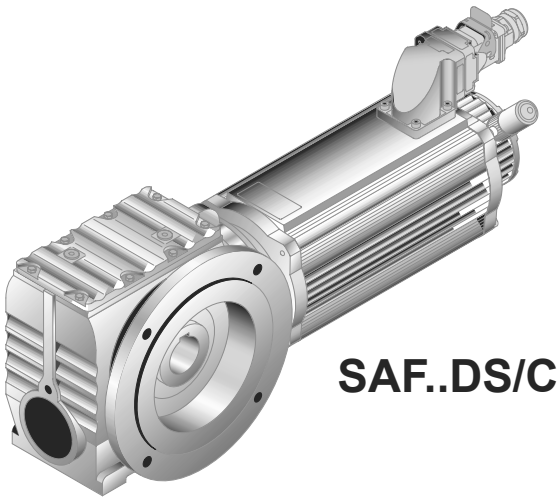

SAF..DS/CM..

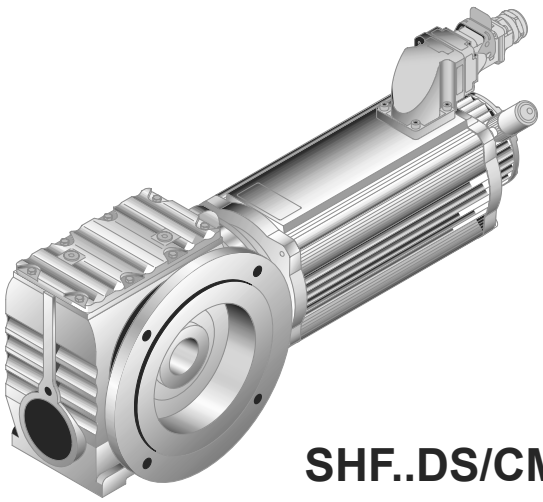

SHF..DS/CM..

52503AXX

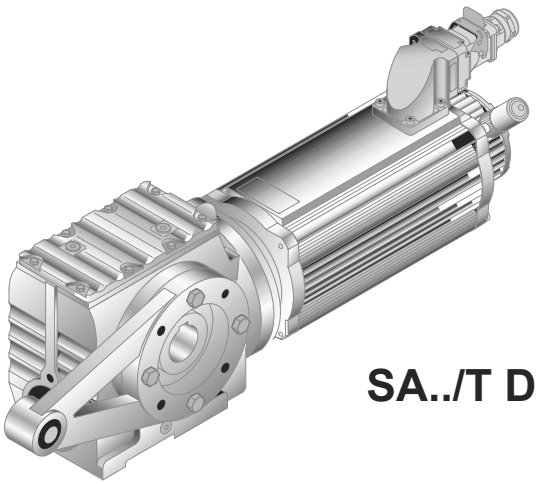

SA../T DS/CM..

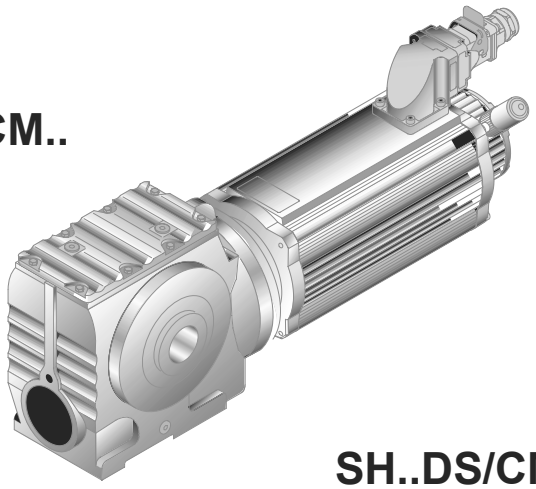

SH..DS/CM..

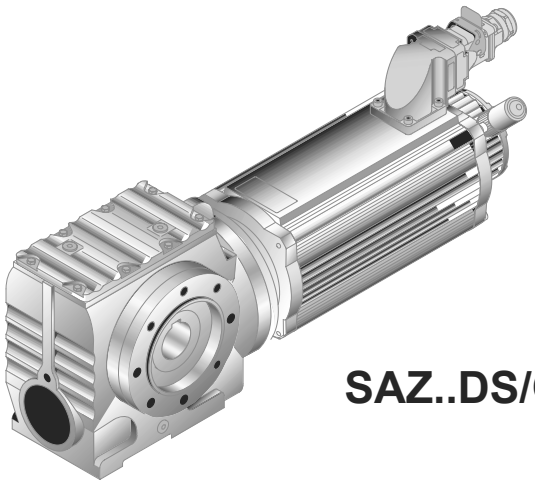

SAZ..DS/CM..

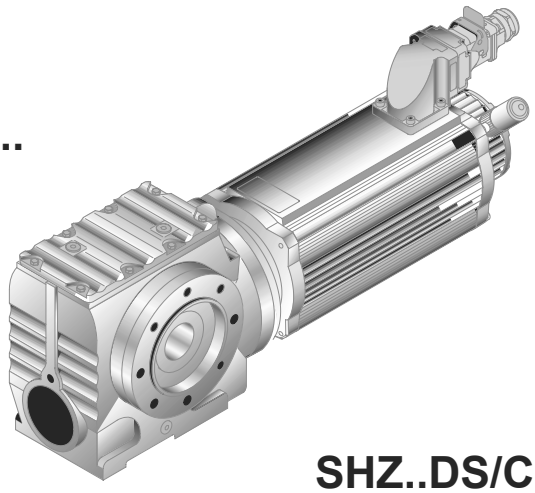

SHZ..DS/CM..

52504AXX

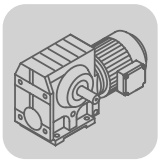

10.2 S37 DS/CM.. [Nm]

	$M_{a\ max}$ [Nm]	i	η	F_{Ra}(S) [N]	F_{Ra}(SA) [N]	$J_G 10^{-4}$ [kgm^2]	DS			CM	
							56M	56L	56H	71S	71M
S37	81	55.93	77	3000	4000	0.08					
	81	51.30*	77	3000	4000	0.09					
SF37	81	43.68	78	3000	4000	0.12					
	79	37.66	79	3000	4000	0.15					
SA37	78	35.10*	79	2920	4000	0.16					
	76	30.68	80	2780	3980	0.20					
SAF37	75	28.76	80	2710	3890	0.22					
	74	25.38*	81	2580	3700	0.27					
	73	22.50*	81	2450	3530	0.32					
	52	19.89	87	2390	3440	0.09					
	71	19.13*	82	2300	3320	0.43					
	52	18.24*	87	2300	3310	0.10					
	50	15.53	88	2170	3130	0.13					
	49	13.39	88	2050	2950	0.16					
	48	12.48*	89	2000	2880	0.18					
	48	10.91	89	1880	2720	0.22					
	47	10.23	89	1840	2660	0.24					
	46	9.02*	90	1750	2530	0.30					
	45	8.00*	90	1670	2420	0.36					
	43	6.80*	90	1580	2290	0.47					

m [kg]	DS			CM	
	56M	56L	56H	71S	71M
S37	8.3	9.3	10	14	16

SF37: + 1.3 kg / SA37: -- kg / SAF37: + 1.3 kg

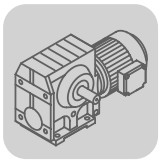

10.3 S47 DS/CM.. [Nm]

	$M_{a\ max}$ [Nm]	i	η	F_{Ra}(S) [N]	F_{Ra}(SA) [N]	$J_G 10^{-4}$ [kgm^2]	DS			CM			
							56M	56L	56H	71S	71M	71L	90S
S47	155	69.39	77	5370	7000	0.13							
	155	63.80*	78	5340	7000	0.15							
SF47	155	54.59	79	5010	6890	0.18							
	155	47.32	79	4710	6490	0.23							
SA47	155	44.22*	80	4570	6310	0.25							
	155	38.23	80	4290	5930	0.31							
SAF47	155	32.48*	81	4000	5520	0.41							
	155	29.00*	82	3800	5250	0.49							
	155	24.77	82	3530	4900	0.65							
	152	23.20*	83	3460	4790	0.72							
	110	20.33	88	3270	4510	0.20							
	144	19.54	83	3260	4520	0.94							
	110	17.62	89	3050	4230	0.26							
	110	16.47*	89	2960	4100	0.28							
	110	14.24	89	2760	3820	0.35							
	109	12.10*	90	2560	3550	0.47							
	109	10.80*	90	2420	3360	0.57							
	109	9.23*	90	2230	3100	0.74							
	109	8.64*	91	2150	3000	0.83							
	103	7.28	91	2010	2820	1.10							

m [kg]	DS			CM			
	56M	56L	56H	71S	71M	71L	90S
S47	11	12	13	17	19	22	26

SF47: + 3.6 kg / SA47: + 1.1 kg / SAF47: + 2.8 kg

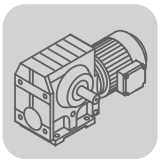

10.4 S57 DS/CM.. [Nm]

	$M_{a\ max}$ [Nm]	i	η	F_{Ra}(S) [N]	F_{Ra}(SA) [N]	$J_G 10^{-4}$ [kgm^2]	DS			CM			
							56M	56L	56H	71S	71M	71L	90S
S57	245	69.39	79	7520	7550	0.15							
	245	63.80*	79	7520	7280	0.18							
SF57	245	54.59	80	7520	6800	0.23							
	245	47.32	81	7520	6380	0.28							
SA57	245	44.22*	81	7520	6180	0.32							
	245	38.23	82	7110	5790	0.39							
SAF57	245	32.48*	82	6650	5360	0.54							
	245	29.00*	83	6330	5080	0.65							
	245	24.77	83	5920	4710	0.85							
	245	23.20*	84	5750	4560	0.95							
	168	20.33	88	5530	4410	0.28							
	215	19.54	84	5560	4460	1.27							
	168	17.62	89	5190	4110	0.36							
	168	16.47*	89	5040	3980	0.40							
	169	14.24	90	4720	3670	0.51							
	169	12.10*	90	4380	3140	0.70							
	169	10.80*	90	4160	2790	0.85							
	169	9.23*	91	3860	2320	1.14							
	166	8.64*	91	3770	2240	1.29							
	146	7.28	91	3680	2430	1.74							

m [kg]	DS			CM			
	56M	56L	56H	71S	71M	71L	90S
S57	15	16	17	21	22	26	30

SF57: + 3.8 kg / SA57: -- kg / SAF57: + 2.6 kg

10.5 S67 DS/CM.. [Nm]

	$M_{a\ max}$ [Nm]	i	η	F_{Ra}(S) [N]	F_{Ra}(SA) [N]	$J_G 10^{-4}$ [kgm^2]	DS	CM						
							56H	71S	71M	71L	90S	90M	90L	112S
S67	480	75.06	80	9020	10400	0.43								
	480	65.63	81	9020	9780	0.53								
SF67	480	62.35*	81	8910	9550	0.59								
	480	54.70	82	8410	8990	0.84								
SA67	480	46.40*	83	7810	8330	1.09								
	480	41.89	83	7450	7930	1.29								
SAF67	480	36.85	84	7020	7450	1.63								
	480	34.80*	84	6830	7240	1.78								
	480	29.63	84	6320	6680	2.22								
	480	26.93	85	6030	6360	2.58								
	340	24.44	90	5840	6050	0.63								
	480	23.33	85	5620	5900	3.24								
	340	23.22*	90	5690	5890	0.71								
	340	20.37	90	5340	5480	0.99								
	425	20.30*	86	5570	5890	4.05								
	340	17.28*	91	4910	4650	1.30								
	340	15.60*	91	4650	4150	1.54								
	340	13.73*	91	4270	3560	1.99								
	340	12.96*	91	4030	3300	2.20								
	340	11.03	92	3390	2590	2.82								
	340	10.03	92	3030	2190	3.33								
	335	8.69	92	2610	1750	4.27								
	295	7.56*	92	2980	2270	5.44								

m [kg]	DS	CM						
	56H	71S	71M	71L	90S	90M	90L	112S
S67	28	32	34	37	41	44	49	50

SF67: + 6.5 kg / SA67: + 1.0 kg / SAF67: + 5.5 kg

10.6 S..DS/CM..[mm]

05 036 01 01

S37..

DS56..

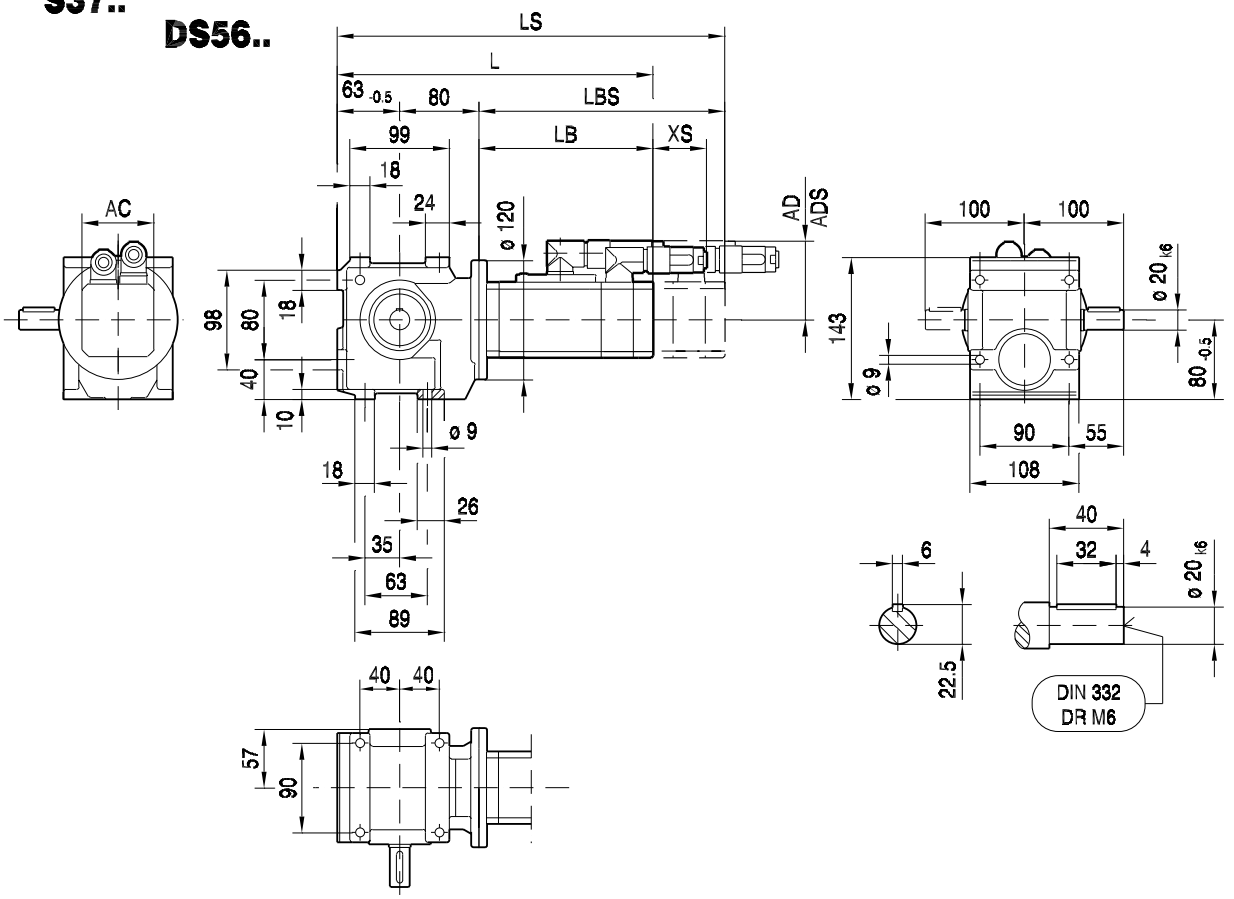

CM..

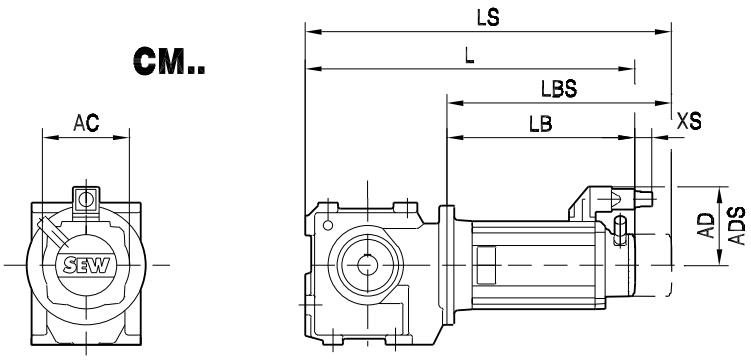

(→ 105)	DS56M	DS56L	DS56H	CM71S	CM71M						
AC	73	73	73	117	117						
AD	71	71	77	122	122						
ADS	77	77	77	122	122						
L	280	312	415	381	401						
LS	310	342	415	463	483						
LB	137	169	272	238	258						
LBS	167	199	272	320	340						
XS	70	70	51	45	45						

SF37..

DS56..

05 037 01 01

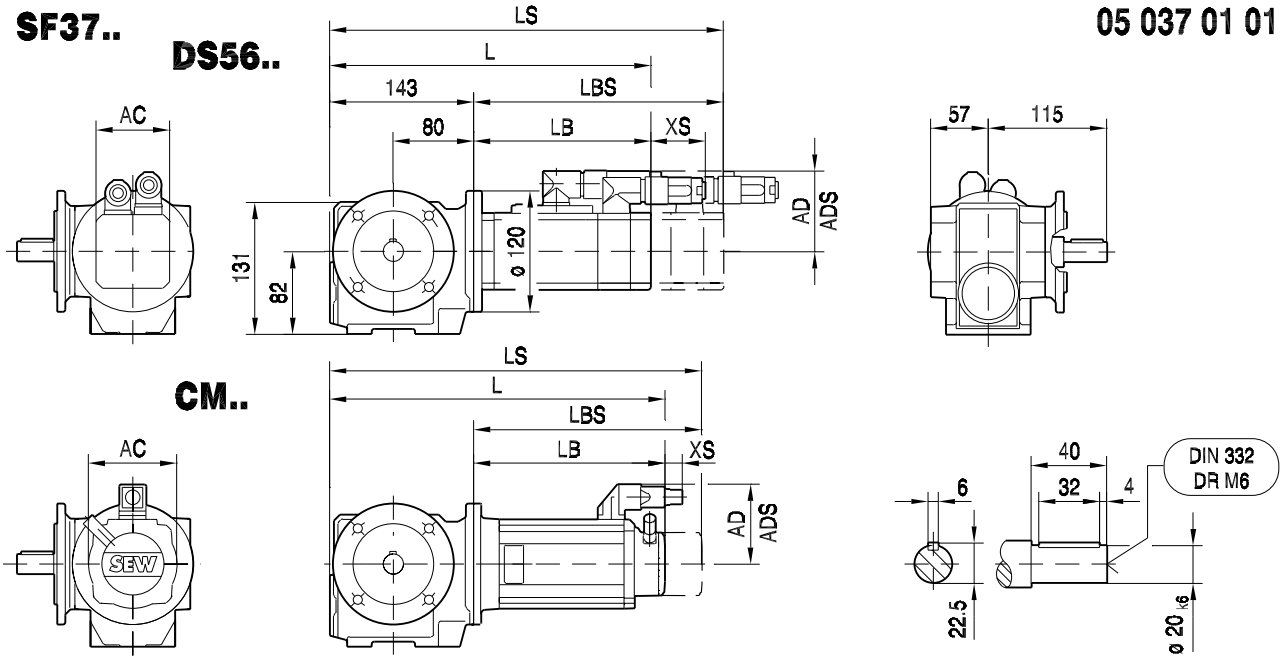

ø 120

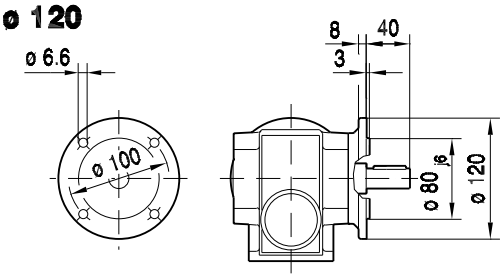

ø 160

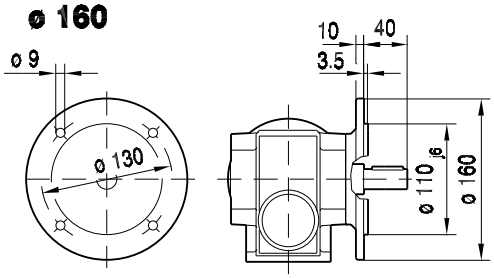

SAF37..

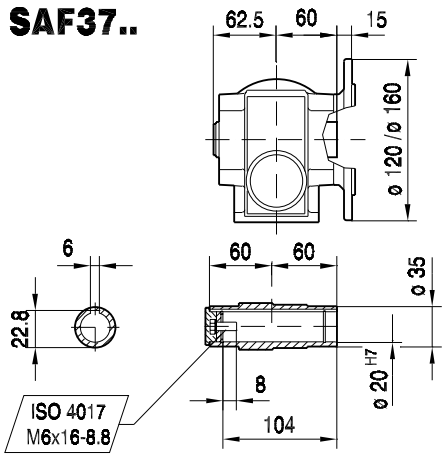

SHF37..

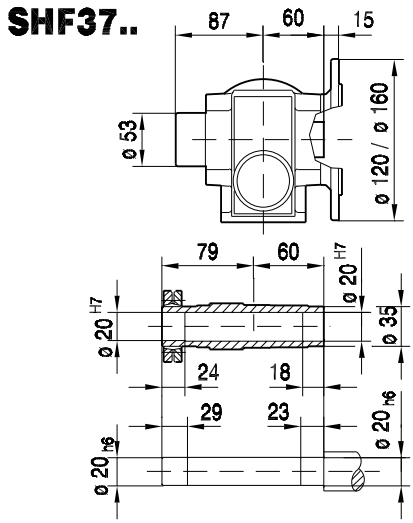

(→ 105)	DS56M	DS56L	DS56H	CM71S	CM71M						
AC	73	73	73	117	117						
AD	71	71	77	122	122						
ADS	77	77	77	122	122						
L	280	312	415	381	401						
LS	310	342	415	463	483						
LB	137	169	272	238	258						
LBS	167	199	272	320	340						
XS	70	70	51	45	45						

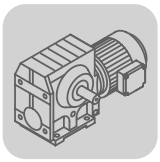

S..DS/CM..

S..DS/CM..[mm]

28 010 01 01

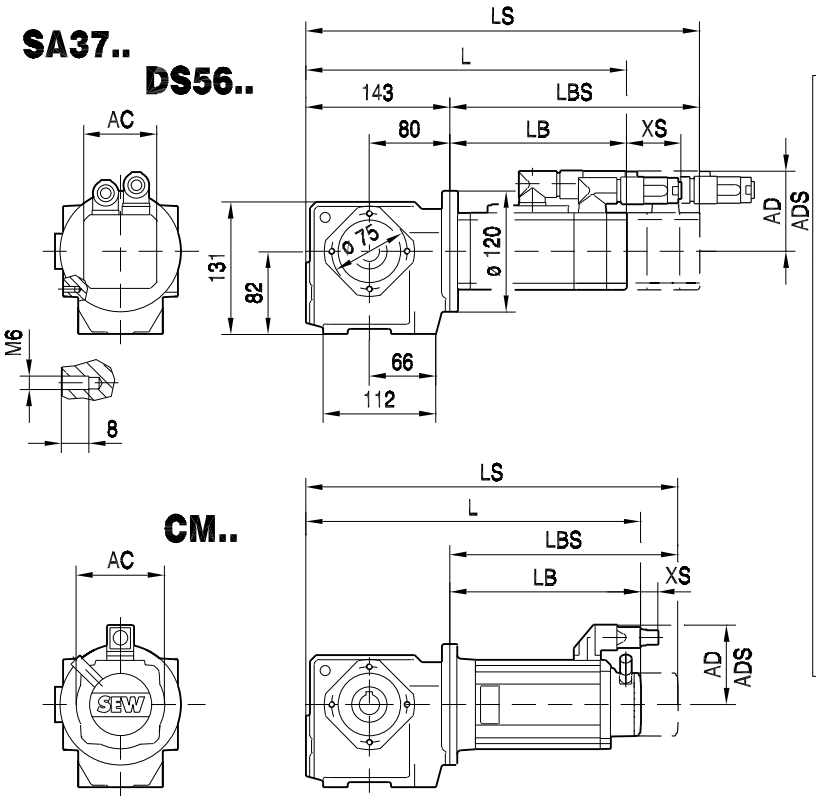

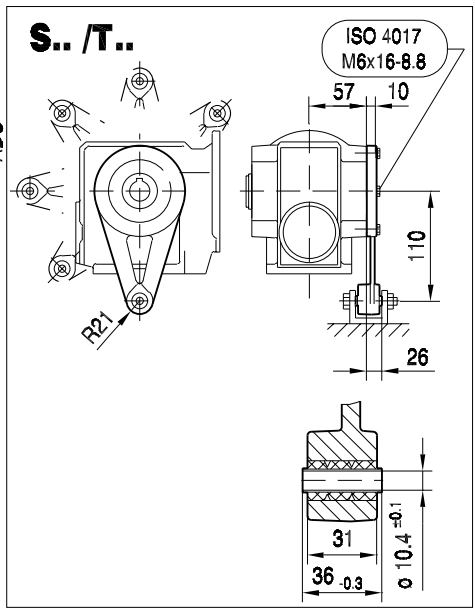

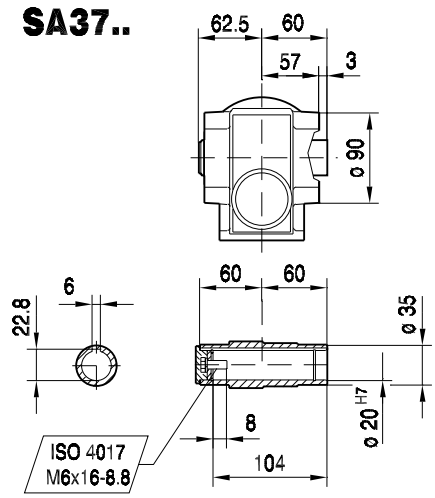

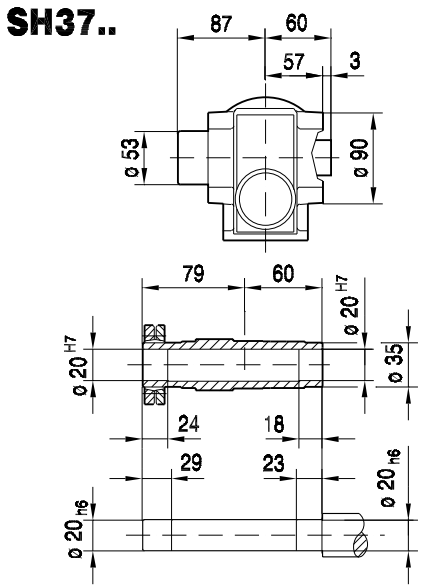

(→ 105)	DS56M	DS56L	DS56H	CM71S	CM71M						
AC	73	73	73	117	117						
AD	71	71	77	122	122						
ADS	77	77	77	122	122						
L	280	312	415	381	401						
LS	310	342	415	463	483						
LB	137	169	272	238	258						
LBS	167	199	272	320	340						
XS	70	70	51	45	45						

28 019 00 04

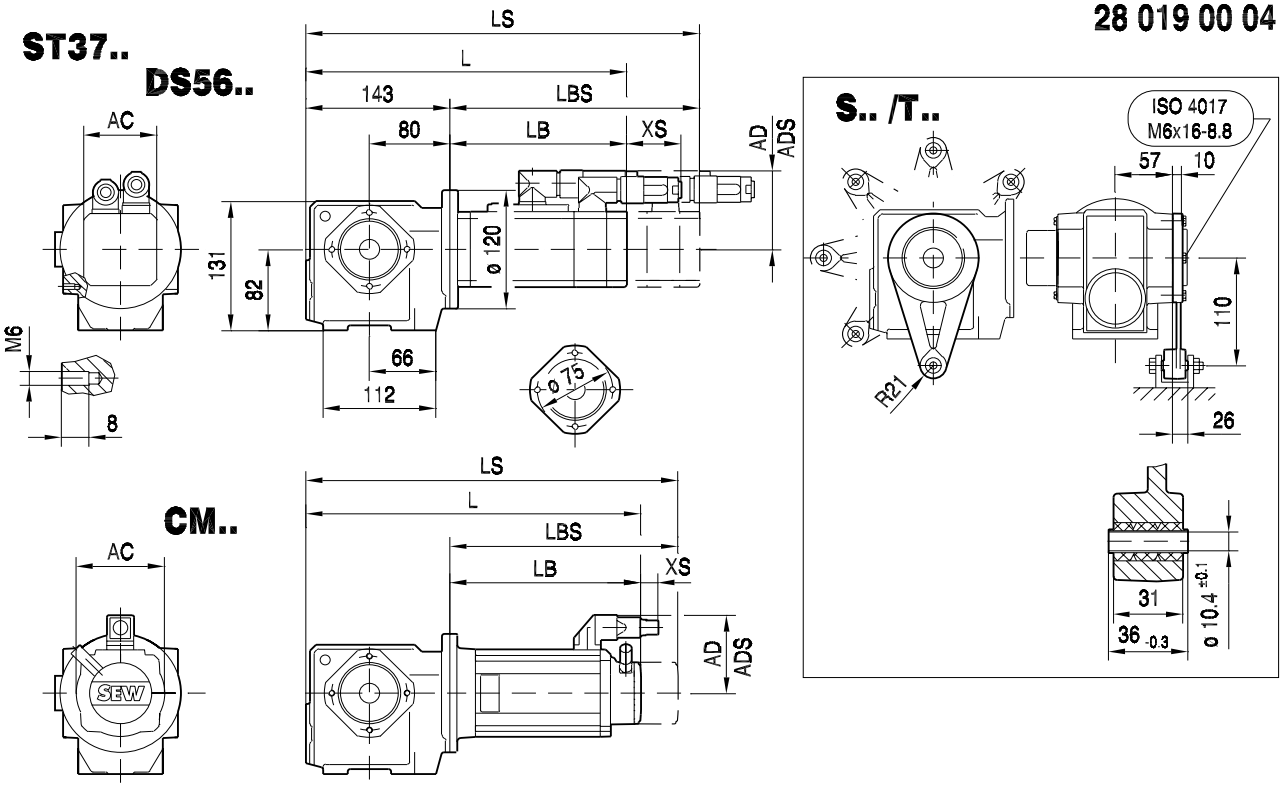

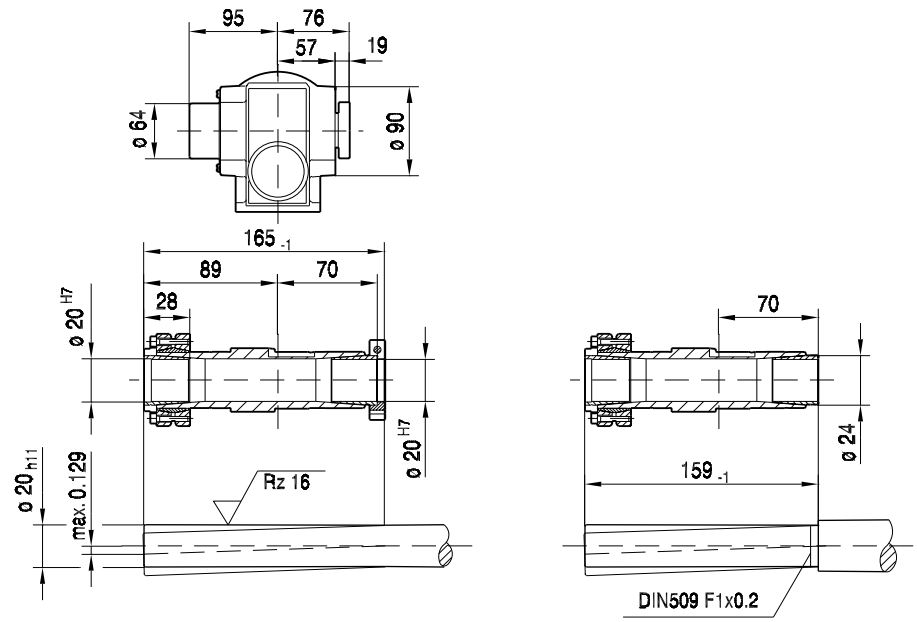

(→ 105)	DS56M	DS56L	DS56H	CM71S	CM71M						
AC	73	73	73	117	117						
AD	71	71	77	122	122						
ADS	77	77	77	122	122						
L	280	312	415	381	401						
LS	310	342	415	463	483						
LB	137	169	272	238	258						
LBS	167	199	272	320	340						
XS	70	70	51	45	45						

S47..

05 038 01 01

DS56..

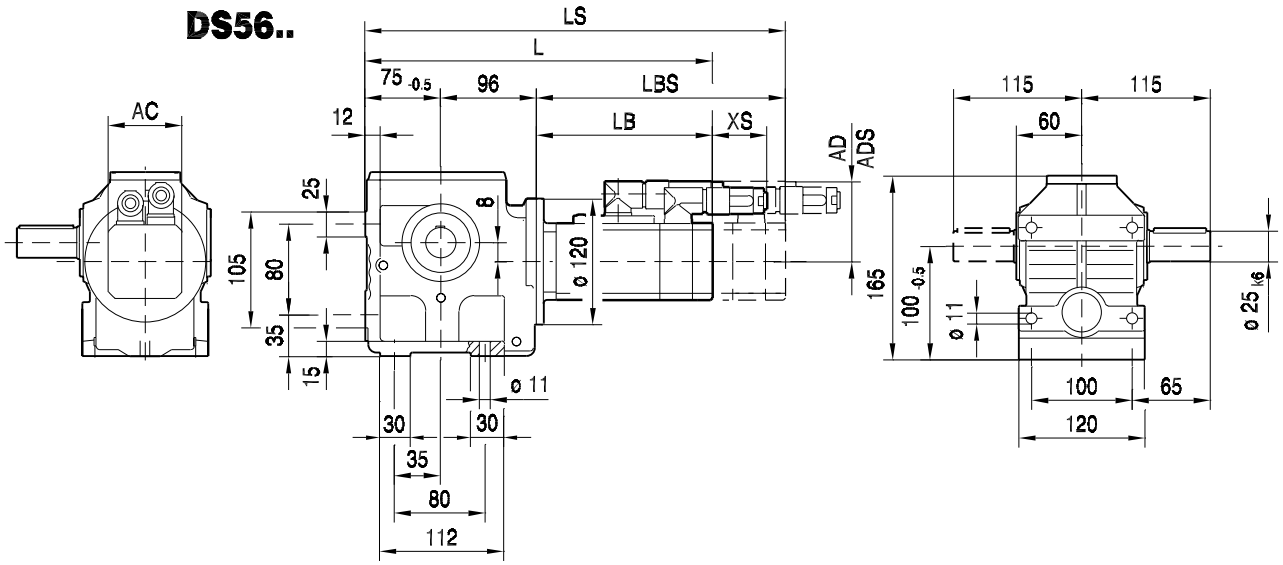

CM..

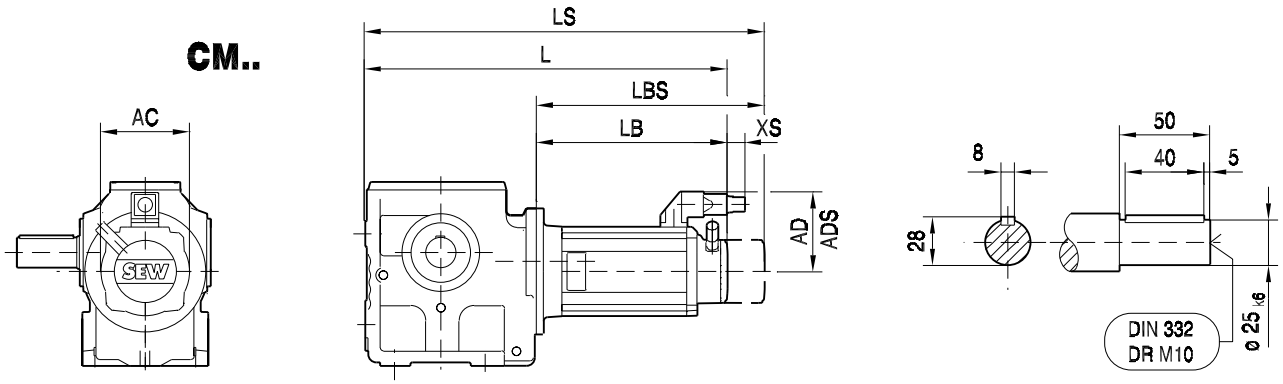

(→ 105)	DS56M	DS56L	DS56H	CM71S	CM71M	CM71L	CM90S				
AC	73	73	73	117	117	117	142				
AD	71	71	77	122	122	122	140				
ADS	77	77	77	122	122	122	140				
L	308	340	443	409	429	472	464				
LS	338	370	443	491	511	554	560				
LB	137	169	272	238	258	301	293				
LBS	167	199	272	320	340	383	389				
XS	70	70	51	45	45	45	50				

05 039 01 01

SF47..
DS56..

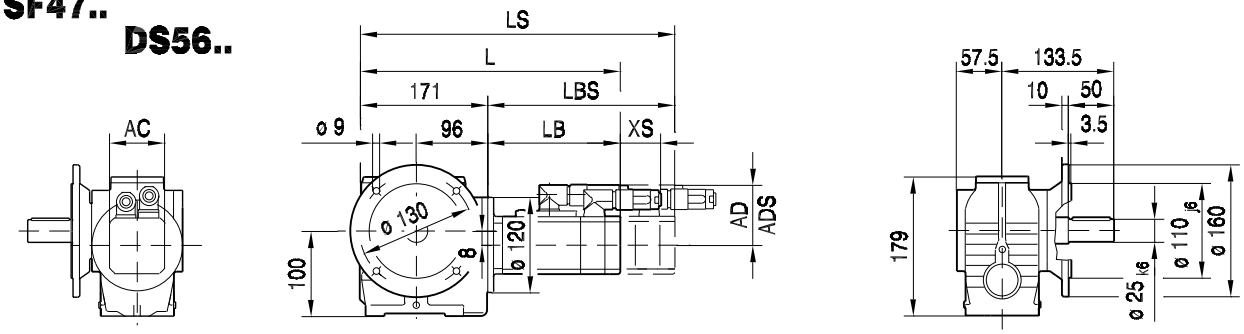

CM..

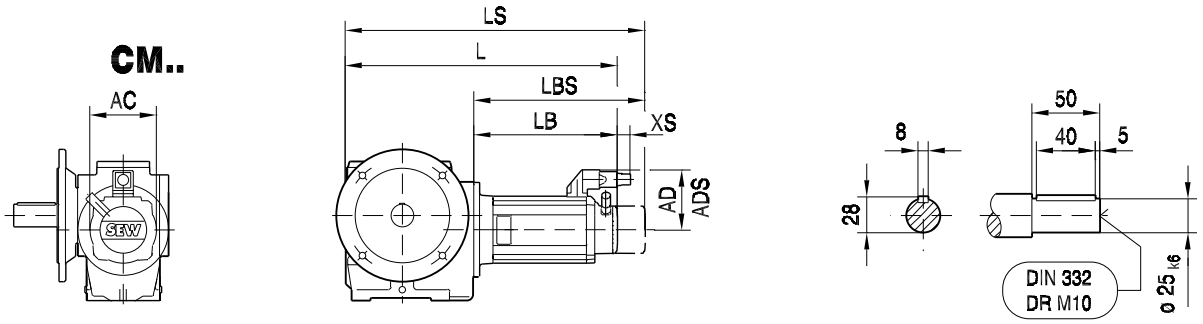

10

SAF47..

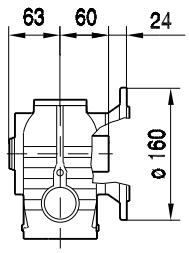

ø 30 H7

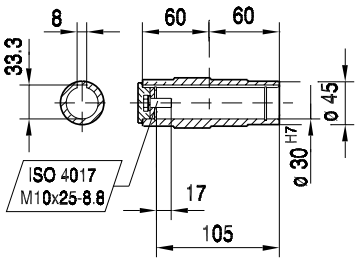

ø 25 H7

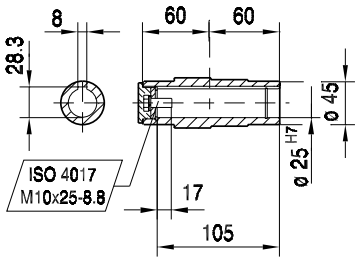

SHF47..

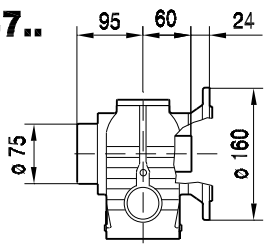

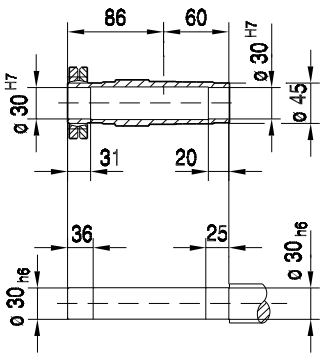

(→ 105)	DS56M	DS56L	DS56H	CM71S	CM71M	CM71L	CM90S				
AC	73	73	73	117	117	117	142				
AD	71	71	77	122	122	122	140				
ADS	77	77	77	122	122	122	140				
L	308	340	443	409	429	472	464				
LS	338	370	443	491	511	554	560				
LB	137	169	272	238	258	301	293				
LBS	167	199	272	320	340	383	389				
XS	70	70	51	45	45	45	50				

28 011 01 01

SA47.. **DS56..**

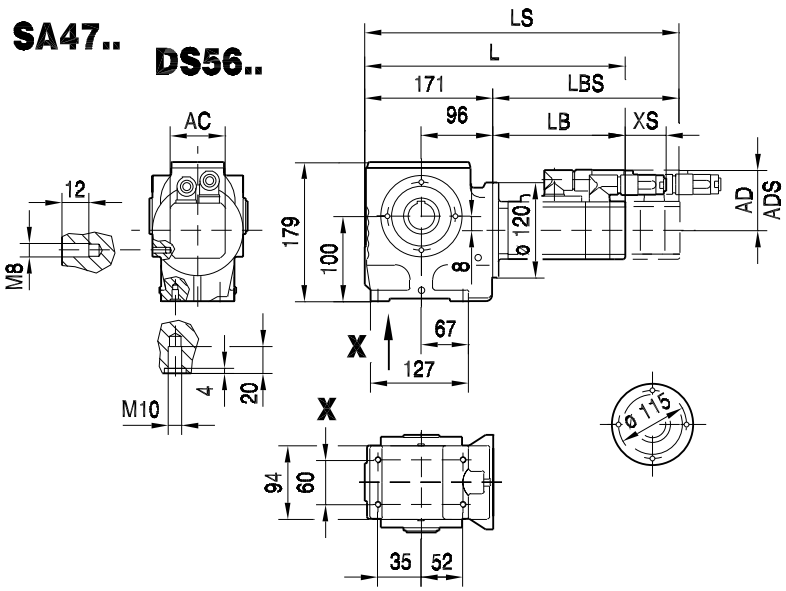

S.. /T..

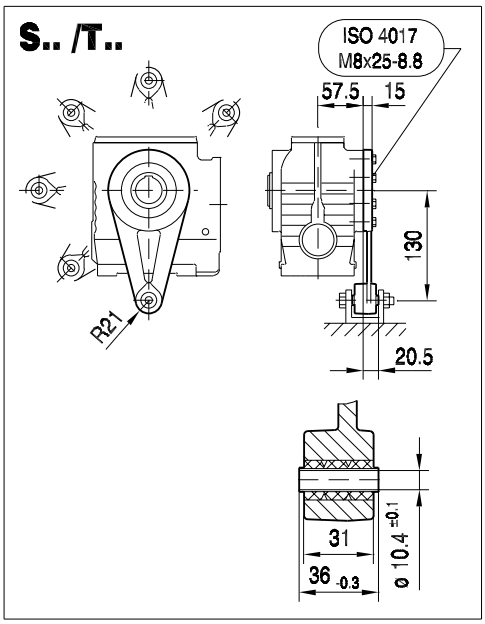

CM..

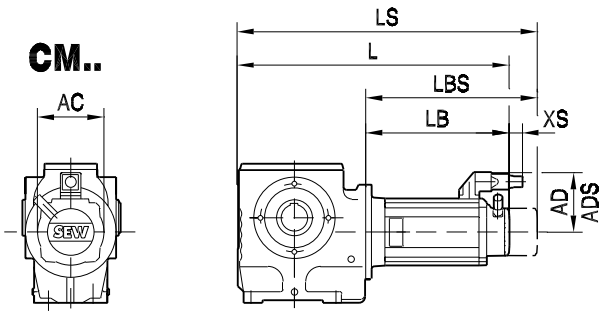

SA47..

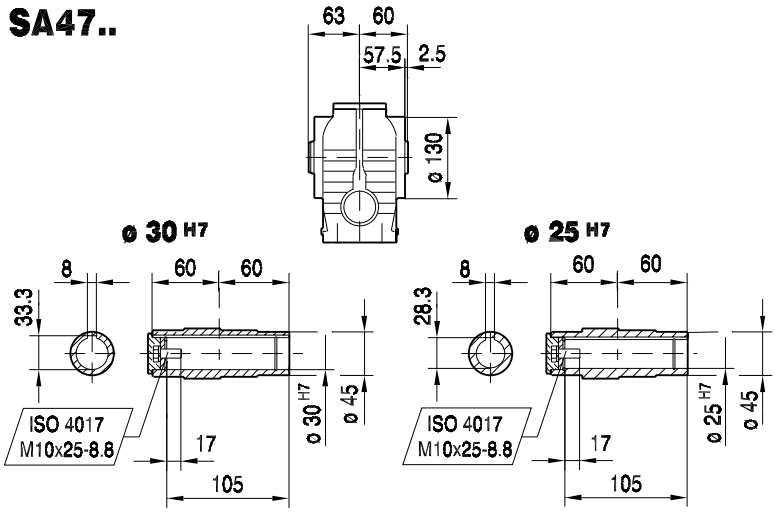

SH47..

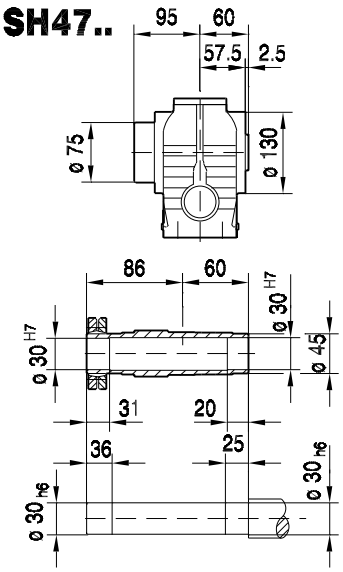

(→ 105)	DS56M	DS56L	DS56H	CM71S	CM71M	CM71L	CM90S				
AC	73	73	73	117	117	117	142				
AD	71	71	77	122	122	122	140				
ADS	77	77	77	122	122	122	140				
L	308	340	443	409	429	472	464				
LS	338	370	443	491	511	554	560				
LB	137	169	272	238	258	301	293				
LBS	167	199	272	320	340	383	389				
XS	70	70	51	45	45	45	50				

SAZ47.. DS56..

28 016 00 04

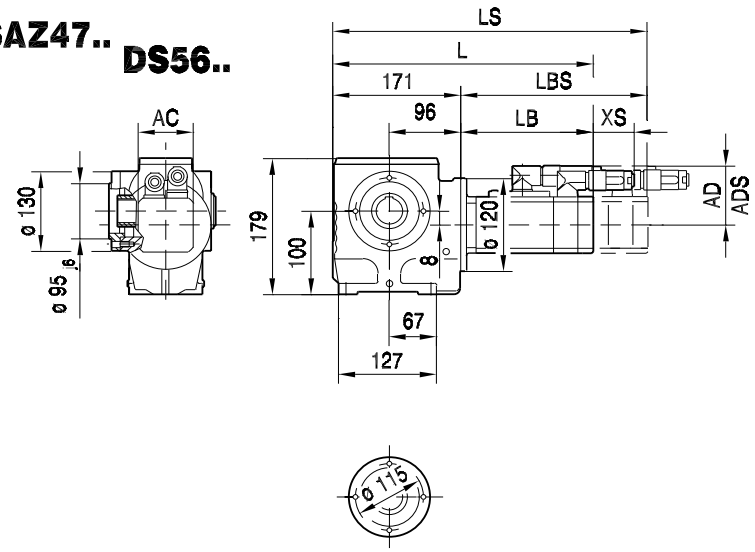

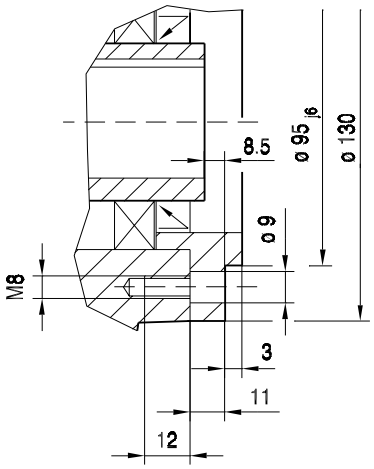

CM..

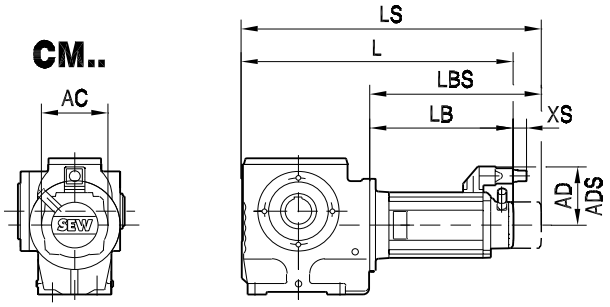

SAZ47..

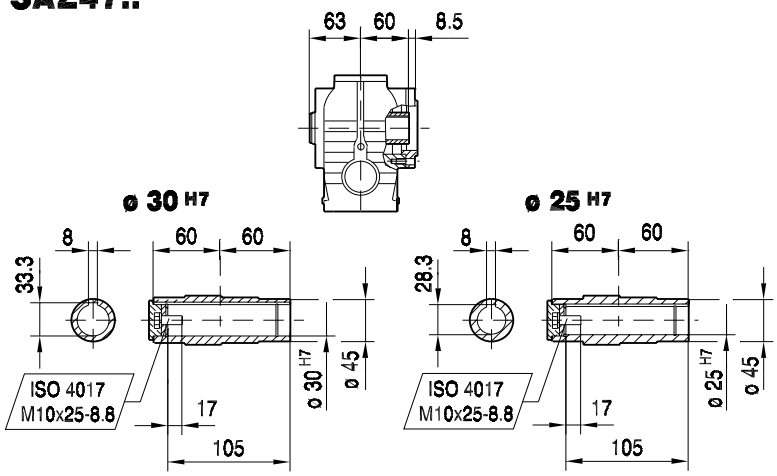

SHZ47..

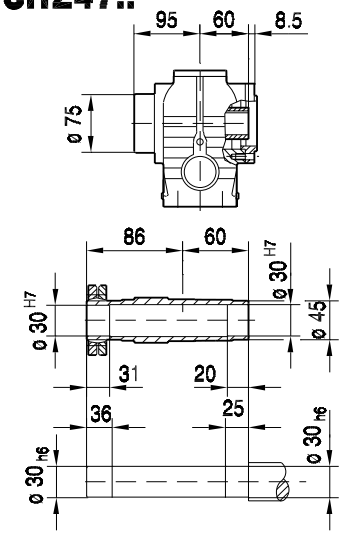

(→ 105)	DS56M	DS56L	DS56H	CM71S	CM71M	CM71L	CM90S				
AC	73	73	73	117	117	117	142				
AD	71	71	77	122	122	122	140				
ADS	77	77	77	122	122	122	140				
L	308	340	443	409	429	472	464				
LS	338	370	443	491	511	554	560				
LB	137	169	272	238	258	301	293				
LBS	167	199	272	320	340	383	389				
XS	70	70	51	45	45	45	50				

28 020 00 04

ST47..

DS56..

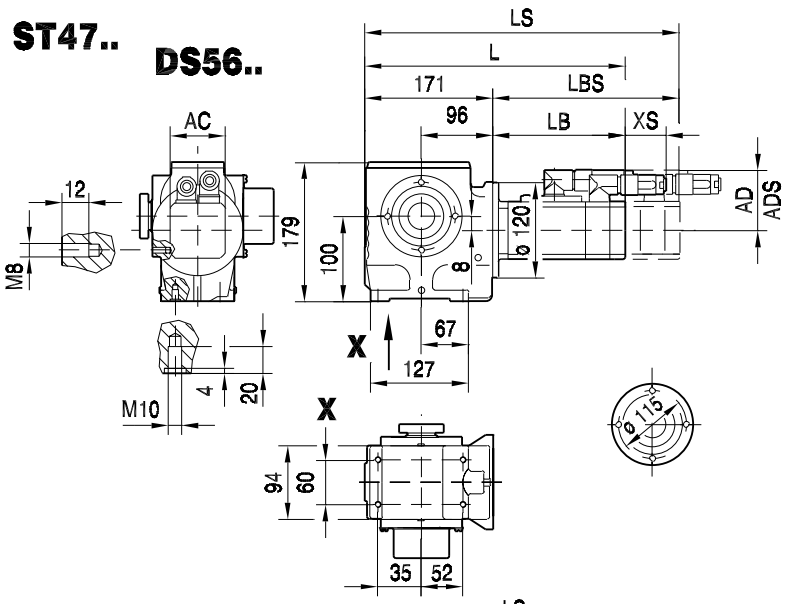

S.. /T..

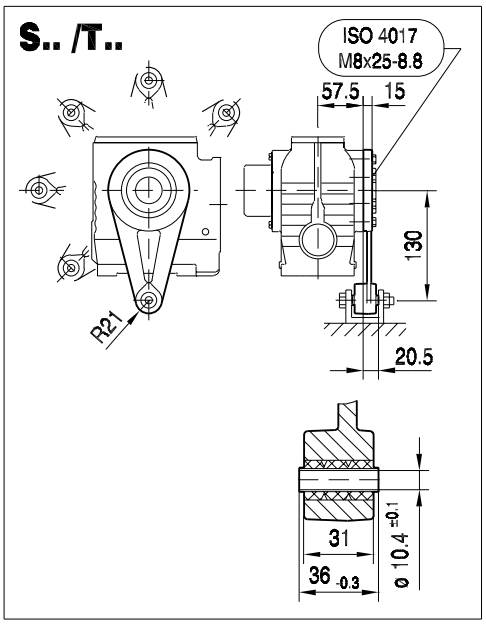

CM..

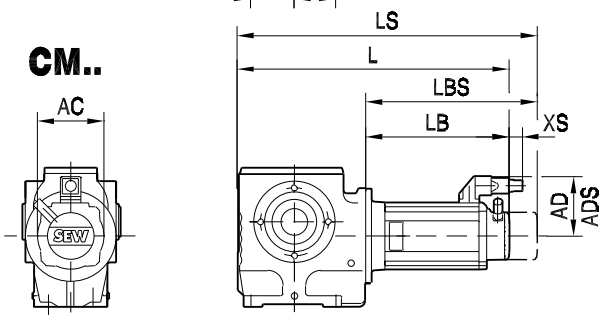

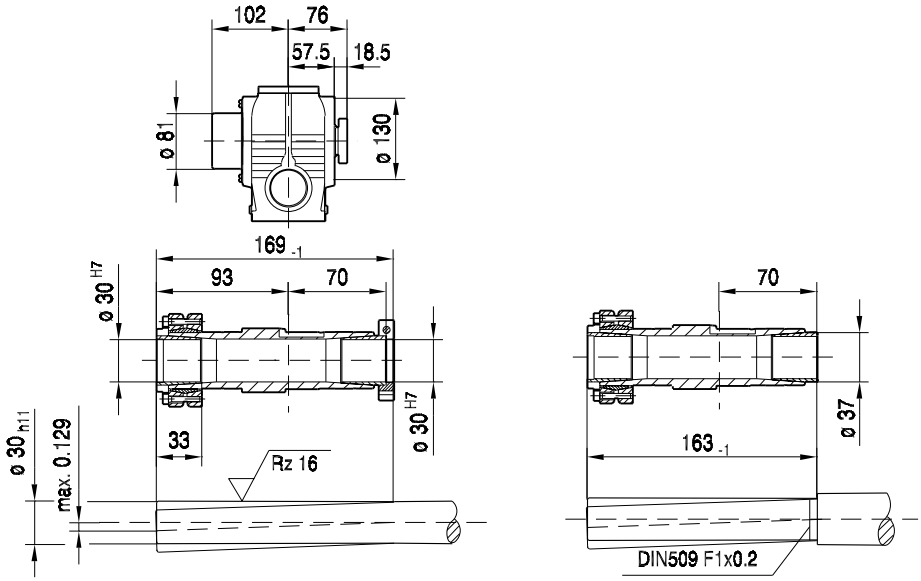

(→ 105)	DS56M	DS56L	DS56H	CM71S	CM71M	CM71L	CM90S				
AC	73	73	73	117	117	117	142				
AD	71	71	77	122	122	122	140				
ADS	77	77	77	122	122	122	140				
L	308	340	443	409	429	472	464				
LS	338	370	443	491	511	554	560				
LB	137	169	272	238	258	301	293				
LBS	167	199	272	320	340	383	389				
XS	70	70	51	45	45	45	50				

S57..

05 040 01 01

DS56..

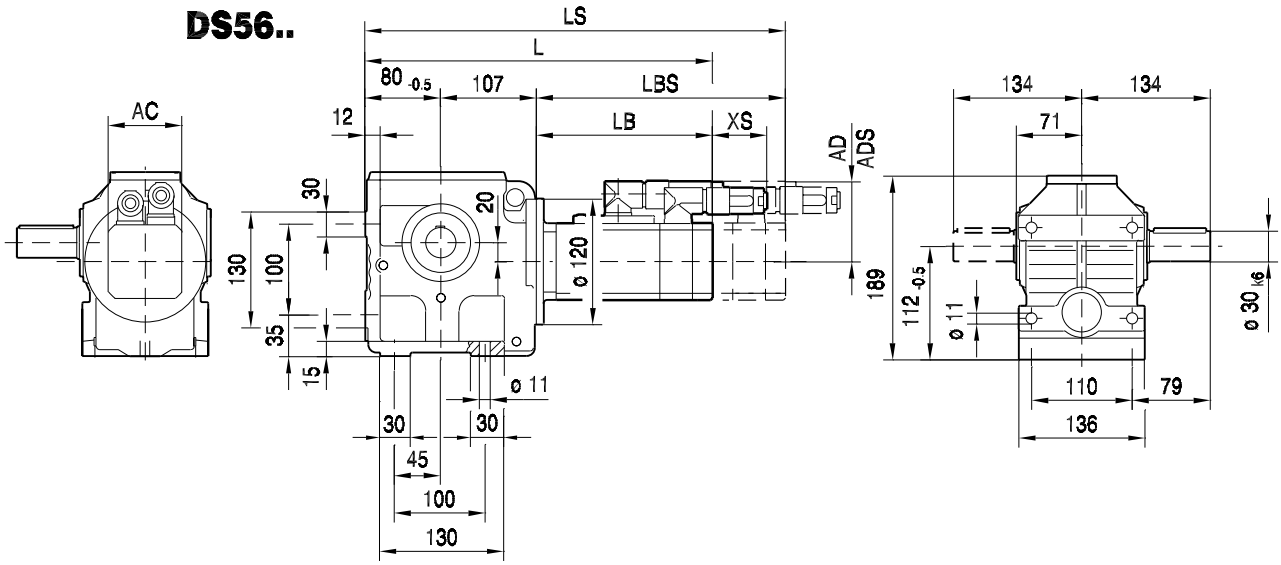

10

CM..

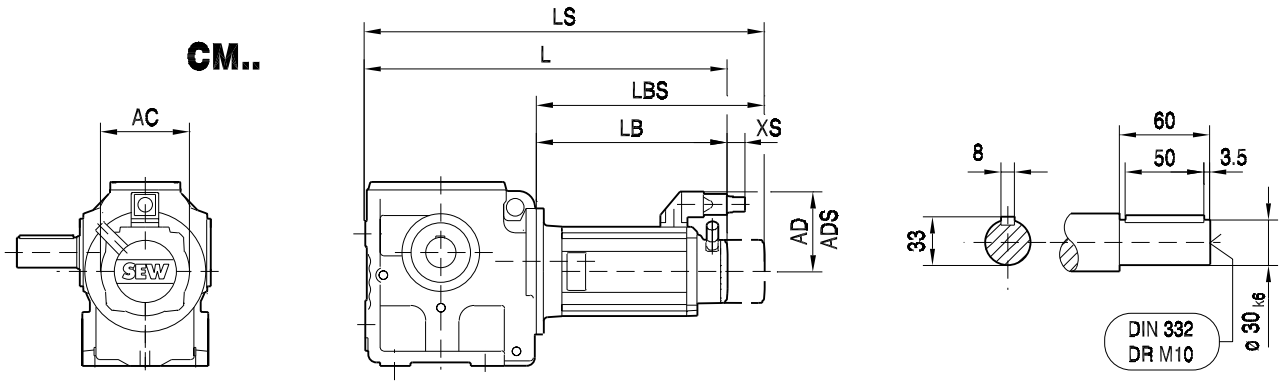

(→ 📖 105)	DS56M	DS56L	DS56H	CM71S	CM71M	CM71L	CM90S				
AC	73	73	73	117	117	117	142				
AD	71	71	77	122	122	122	140				
ADS	77	77	77	122	122	122	140				
L	324	356	459	425	445	488	480				
LS	354	386	459	507	527	570	576				
LB	137	169	272	238	258	301	293				
LBS	167	199	272	320	340	383	389				
XS	70	70	51	45	45	45	50				

05 041 01 01

SF57..
DS56..

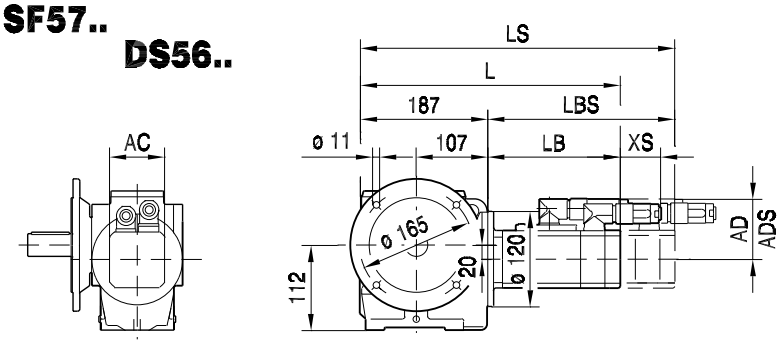

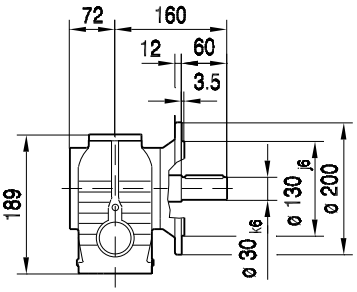

CM..

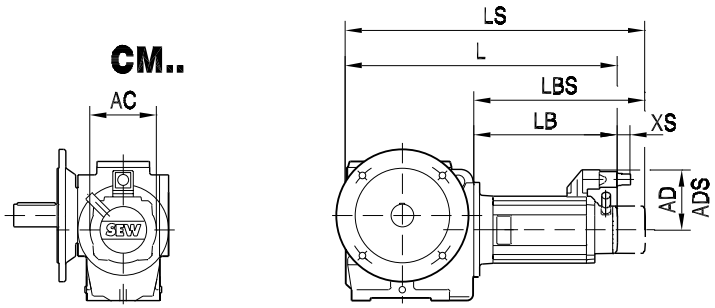

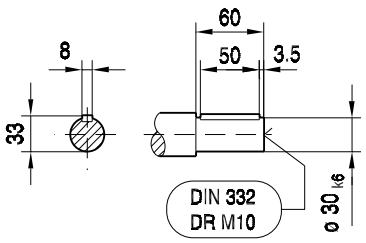

SAF57..

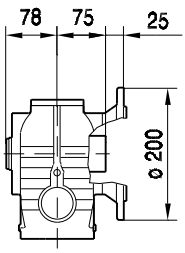

ø 35 H7

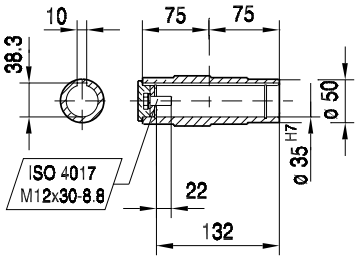

ø 30 H7

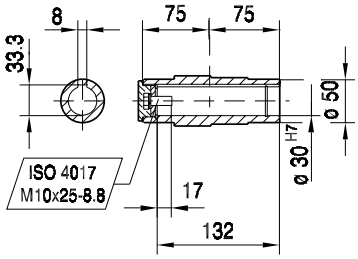

SHF57..

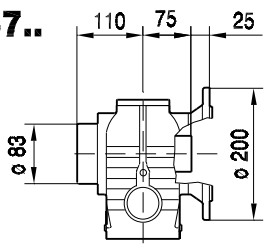

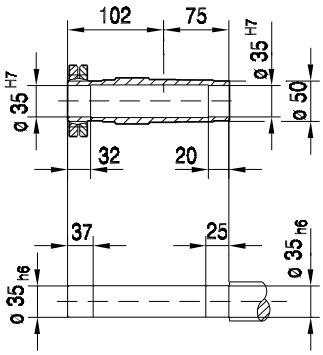

(→ 105)	DS56M	DS56L	DS56H	CM71S	CM71M	CM71L	CM90S				
AC	73	73	73	117	117	117	142				
AD	71	71	77	122	122	122	140				
ADS	77	77	77	122	122	122	140				
L	324	356	459	425	445	488	480				
LS	354	386	459	507	527	570	576				
LB	137	169	272	238	258	301	293				
LBS	167	199	272	320	340	383	389				
XS	70	70	51	45	45	45	50				

28 012 01 01

SA57.. **DS56..**

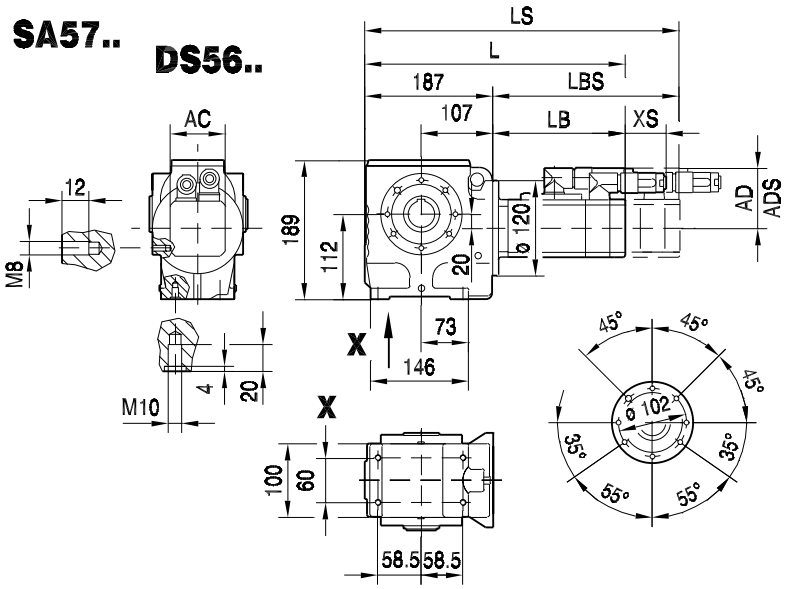

S.. /T..

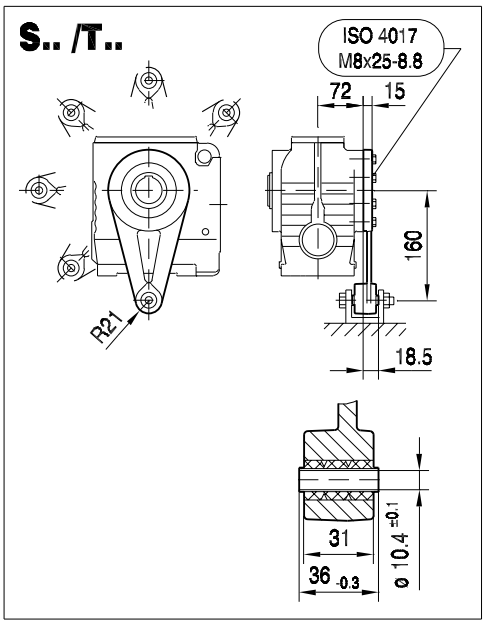

CM..

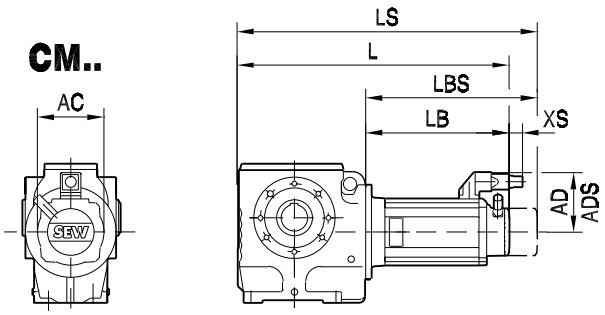

SA57..

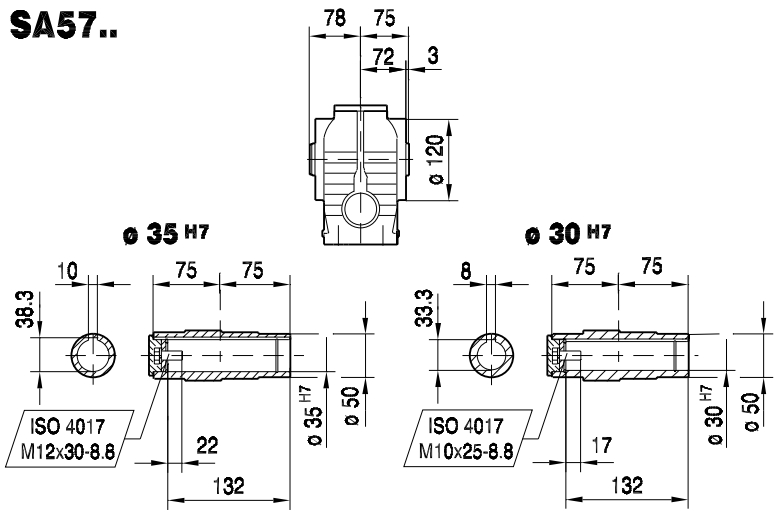

SH57..

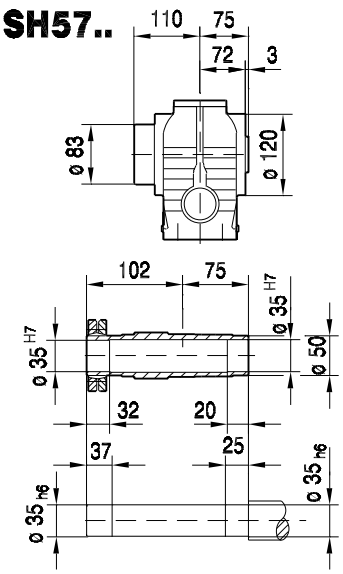

(→ 105)	DS56M	DS56L	DS56H	CM71S	CM71M	CM71L	CM90S				
AC	73	73	73	117	117	117	142				
AD	71	71	77	122	122	122	140				
ADS	77	77	77	122	122	122	140				
L	324	356	459	425	445	488	480				
LS	354	386	459	507	527	570	576				
LB	137	169	272	238	258	301	293				
LBS	167	199	272	320	340	383	389				
XS	70	70	51	45	45	45	50				

28 017 00 04

SAZ57.. DS56..

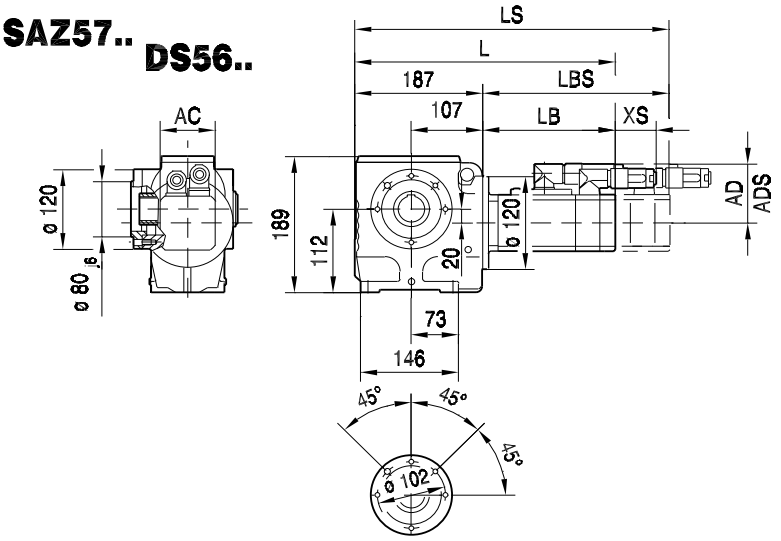

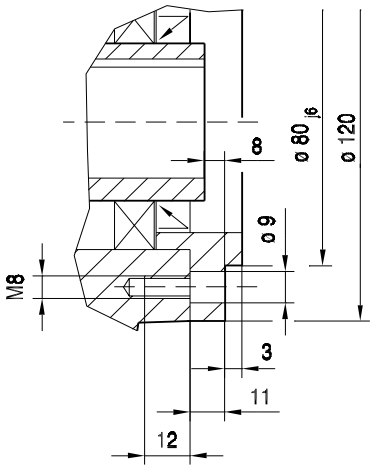

CM..

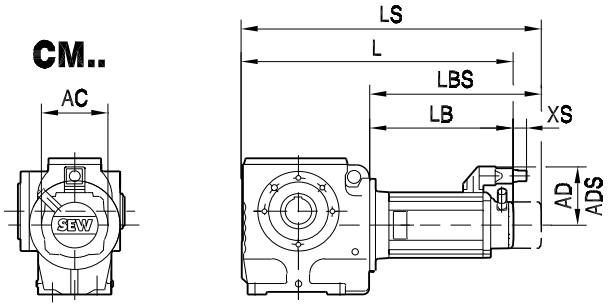

SAZ57..

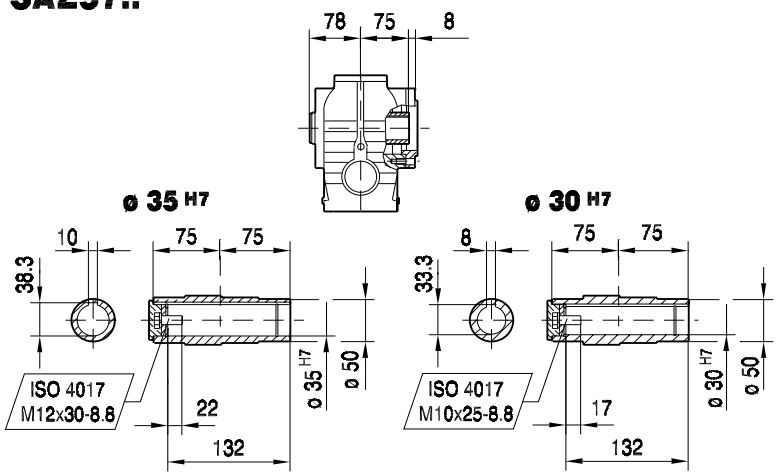

SHZ57..

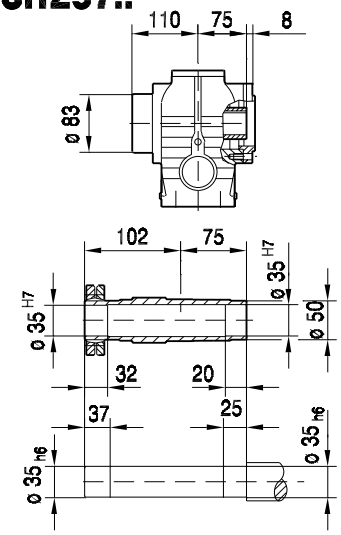

(→ 105)	DS56M	DS56L	DS56H	CM71S	CM71M	CM71L	CM90S				
AC	73	73	73	117	117	117	142				
AD	71	71	77	122	122	122	140				
ADS	77	77	77	122	122	122	140				
L	324	356	459	425	445	488	480				
LS	354	386	459	507	527	570	576				
LB	137	169	272	238	258	301	293				
LBS	167	199	272	320	340	383	389				
XS	70	70	51	45	45	45	50				

28 021 00 04

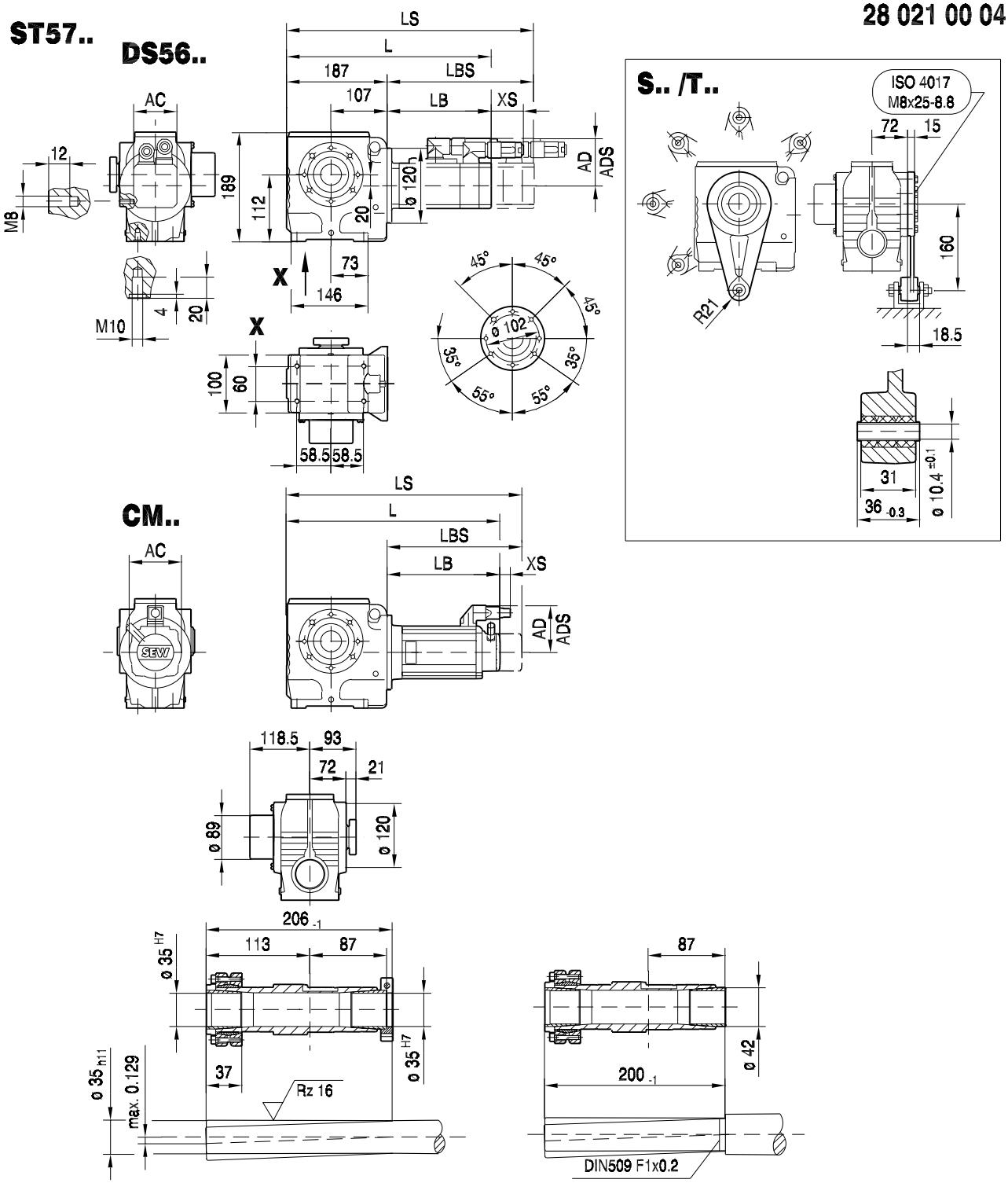

(→ 105)	DS56M	DS56L	DS56H	CM71S	CM71M	CM71L	CM90S				
AC	73	73	73	117	117	117	142				
AD	71	71	77	122	122	122	140				
ADS	77	77	77	122	122	122	140				
L	324	356	459	425	445	488	480				
LS	354	386	459	507	527	570	576				
LB	137	169	272	238	258	301	293				
LBS	167	199	272	320	340	383	389				
XS	70	70	51	45	45	45	50				

S67..

05 042 01 01

DS56..

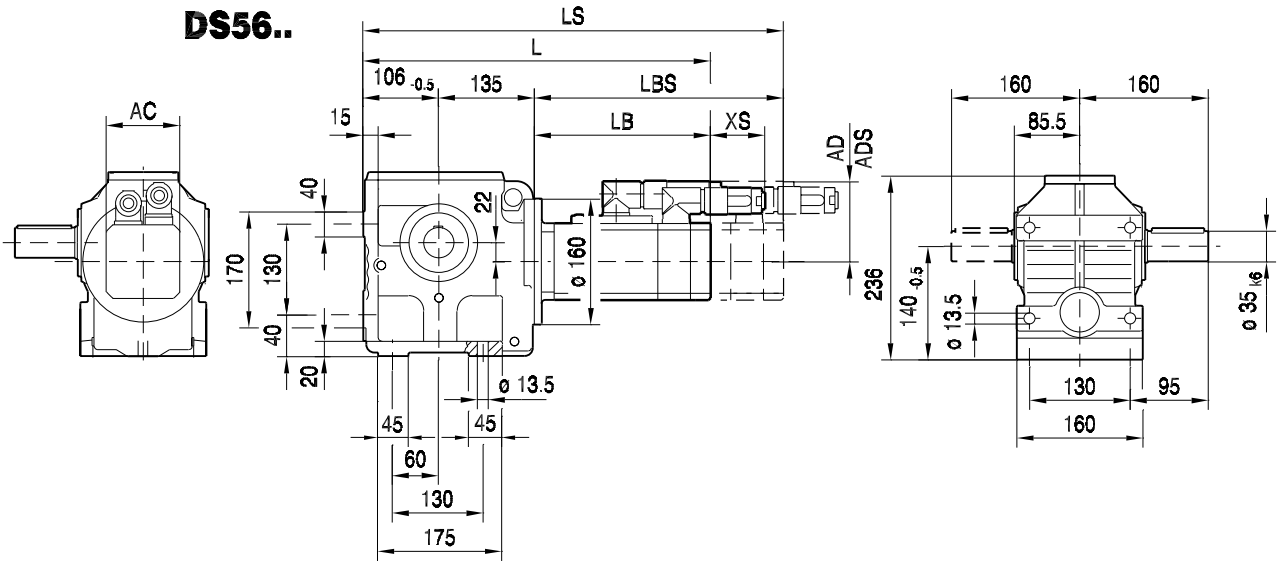

CM..

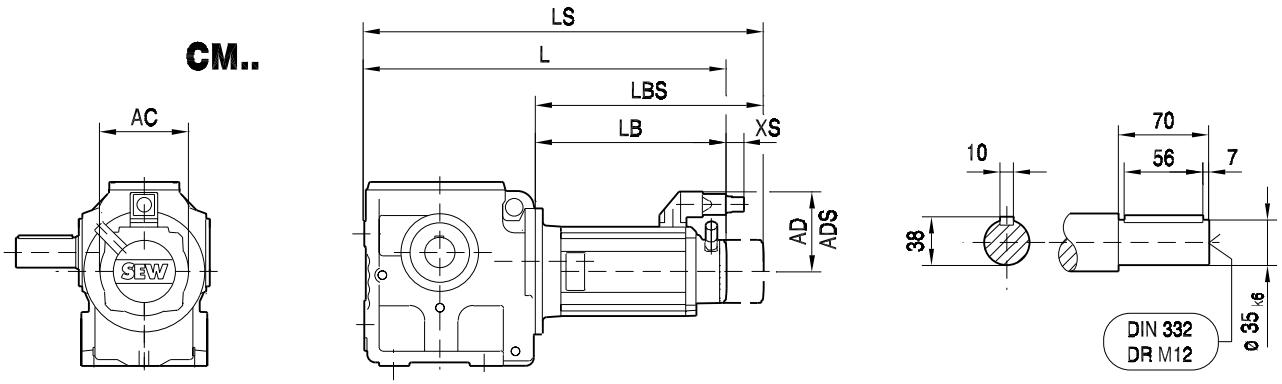

(→ 105)	DS56H	CM71S	CM71M	CM71L	CM90S	CM90M	CM90L	CM112S			
AC	73	117	117	117	142	142	142	186			
AD	77	122	122	122	140	140	140	162			
ADS	77	122	122	122	140	140	140	162			
L	507	473	493	533	525	552	610	565			
LS	507	555	575	615	621	648	706	655			
LB	266	232	252	292	284	311	369	324			
LBS	266	314	334	374	380	407	465	414			
XS	51	45	45	45	50	50	50	36			

05 043 01 01

SF67..
DS56..

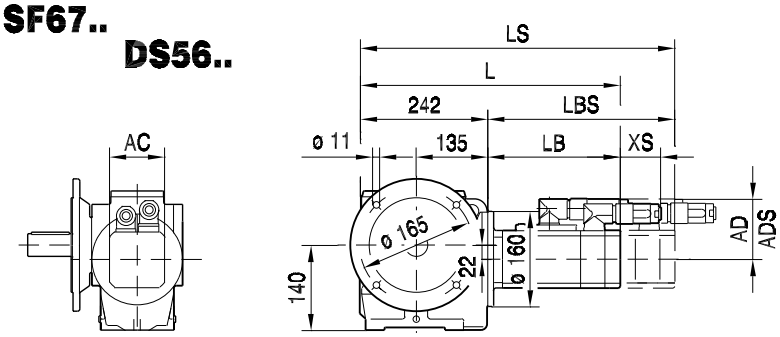

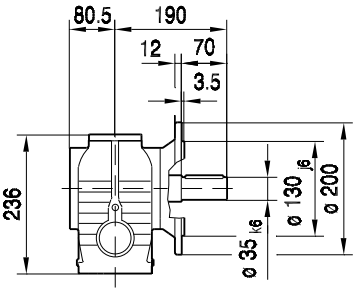

CM..

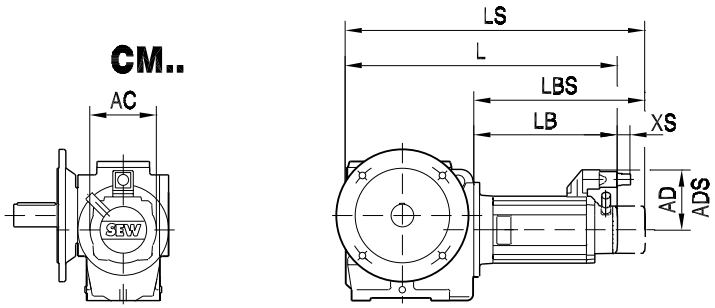

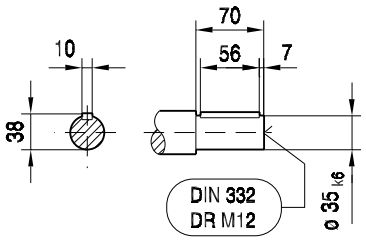

SAF67..

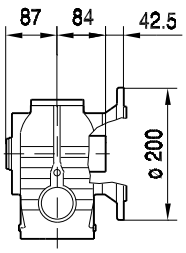

ø 45 H7

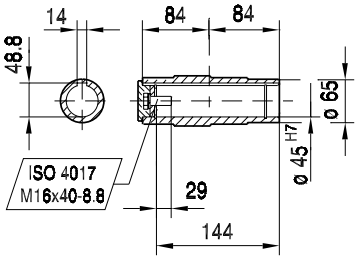

ø 40 H7

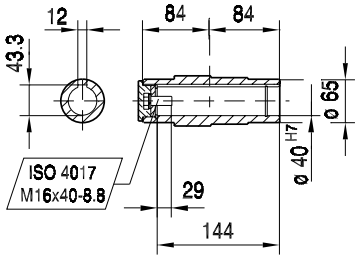

SHF67..

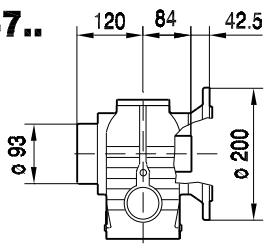

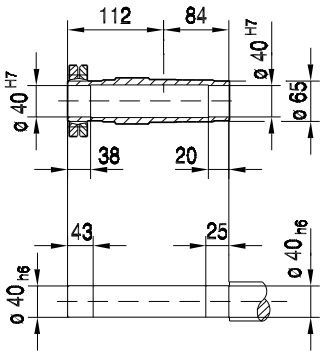

(→ 105)	DS56H	CM71S	CM71M	CM71L	CM90S	CM90M	CM90L	CM112S			
AC	73	117	117	117	142	142	142	186			
AD	77	122	122	122	140	140	140	162			
ADS	77	122	122	122	140	140	140	162			
L	508	474	494	534	526	553	611	566			
LS	508	556	576	616	622	649	707	656			
LB	266	232	252	292	284	311	369	324			
LBS	266	314	334	374	380	407	465	414			
XS	51	45	45	45	50	50	50	36			

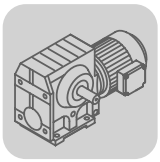

S..DS/CM..

S..DS/CM..[mm]

28 013 01 01

SA67..

DS56..

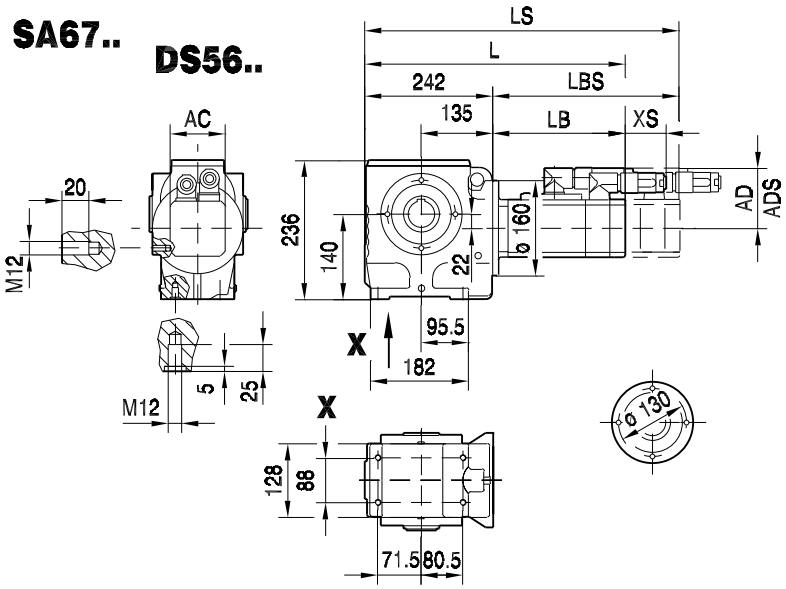

S.. /T..

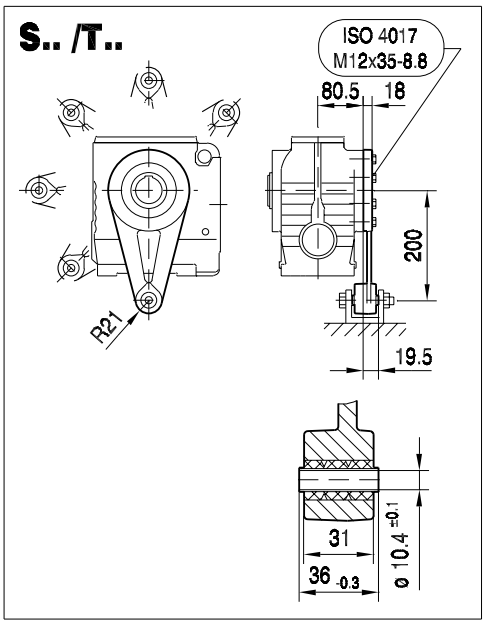

CM..

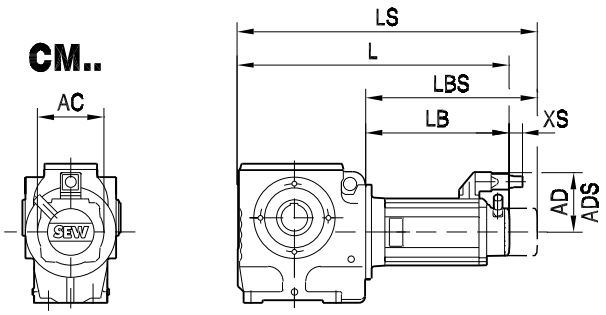

SA67..

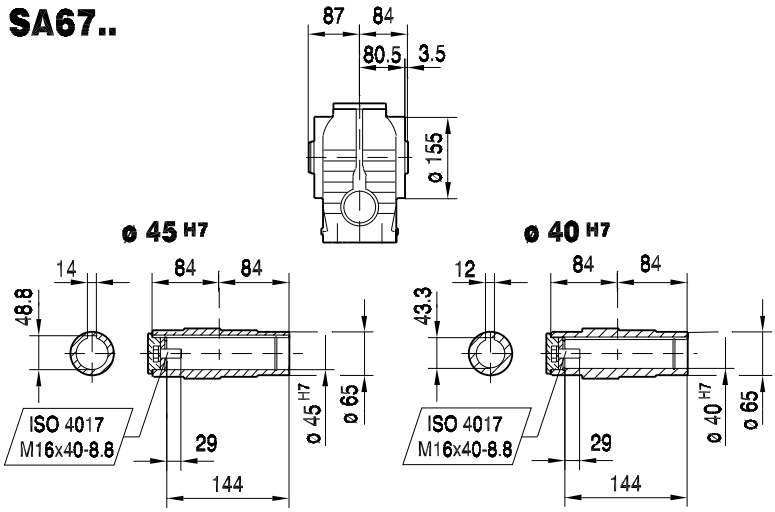

SH67..

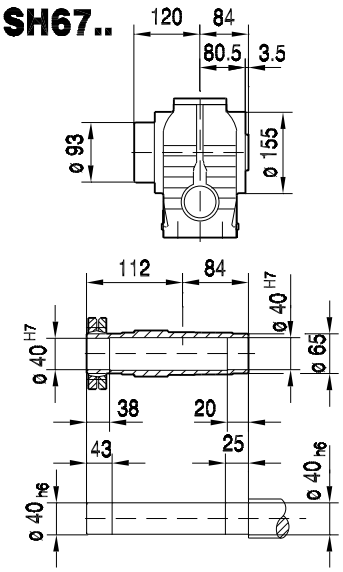

(→ 105)	DS56H	CM71S	CM71M	CM71L	CM90S	CM90M	CM90L	CM112S			
AC	73	117	117	117	142	142	142	186			
AD	77	122	122	122	140	140	140	162			
ADS	77	122	122	122	140	140	140	162			
L	508	474	494	534	526	553	611	566			
LS	508	556	576	616	622	649	707	656			
LB	266	232	252	292	284	311	369	324			
LBS	266	314	334	374	380	407	465	414			
XS	51	45	45	45	50	50	50	36			

28 018 00 04

SAZ67.. DS56..

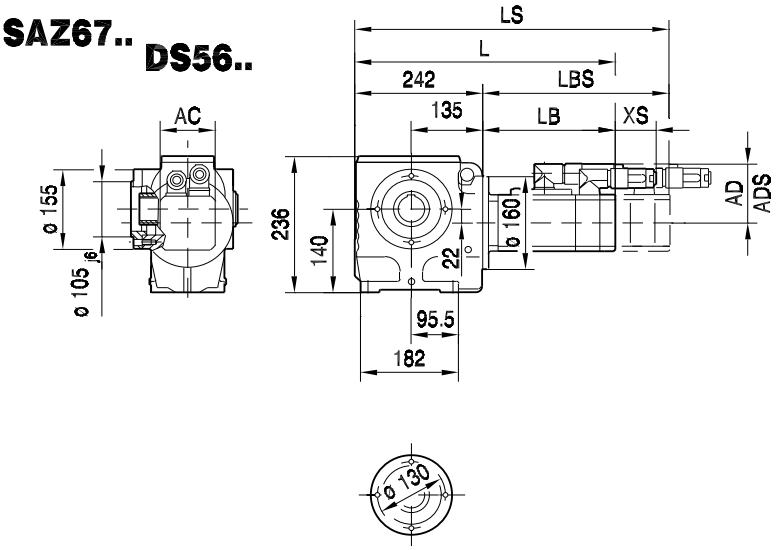

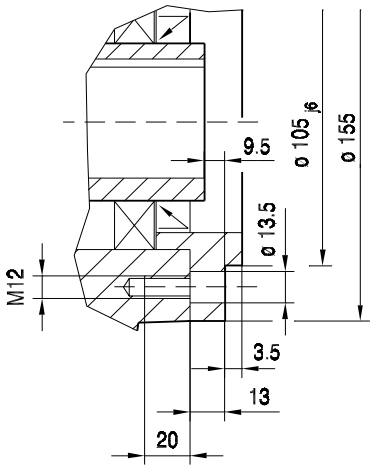

CM..

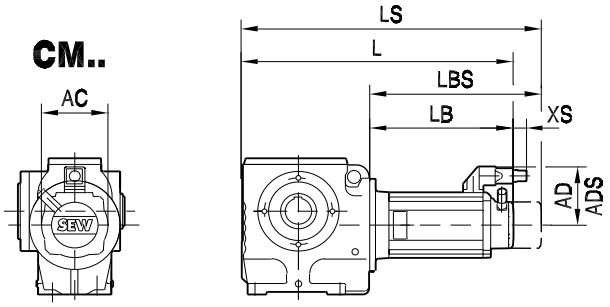

SAZ67..

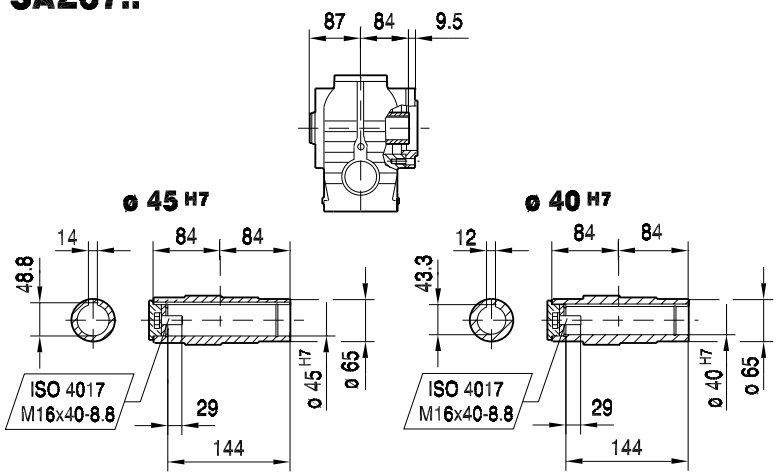

SHZ67..

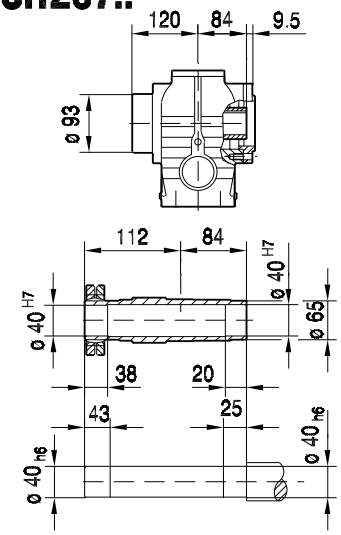

(→ 105)	DS56H	CM71S	CM71M	CM71L	CM90S	CM90M	CM90L	CM112S			
AC	73	117	117	117	142	142	142	186			
AD	77	122	122	122	140	140	140	162			
ADS	77	122	122	122	140	140	140	162			
L	508	474	494	534	526	553	611	566			
LS	508	556	576	616	622	649	707	656			
LB	266	232	252	292	284	311	369	324			
LBS	266	314	334	374	380	407	465	414			
XS	51	45	45	45	50	50	50	36			

28 022 00 04

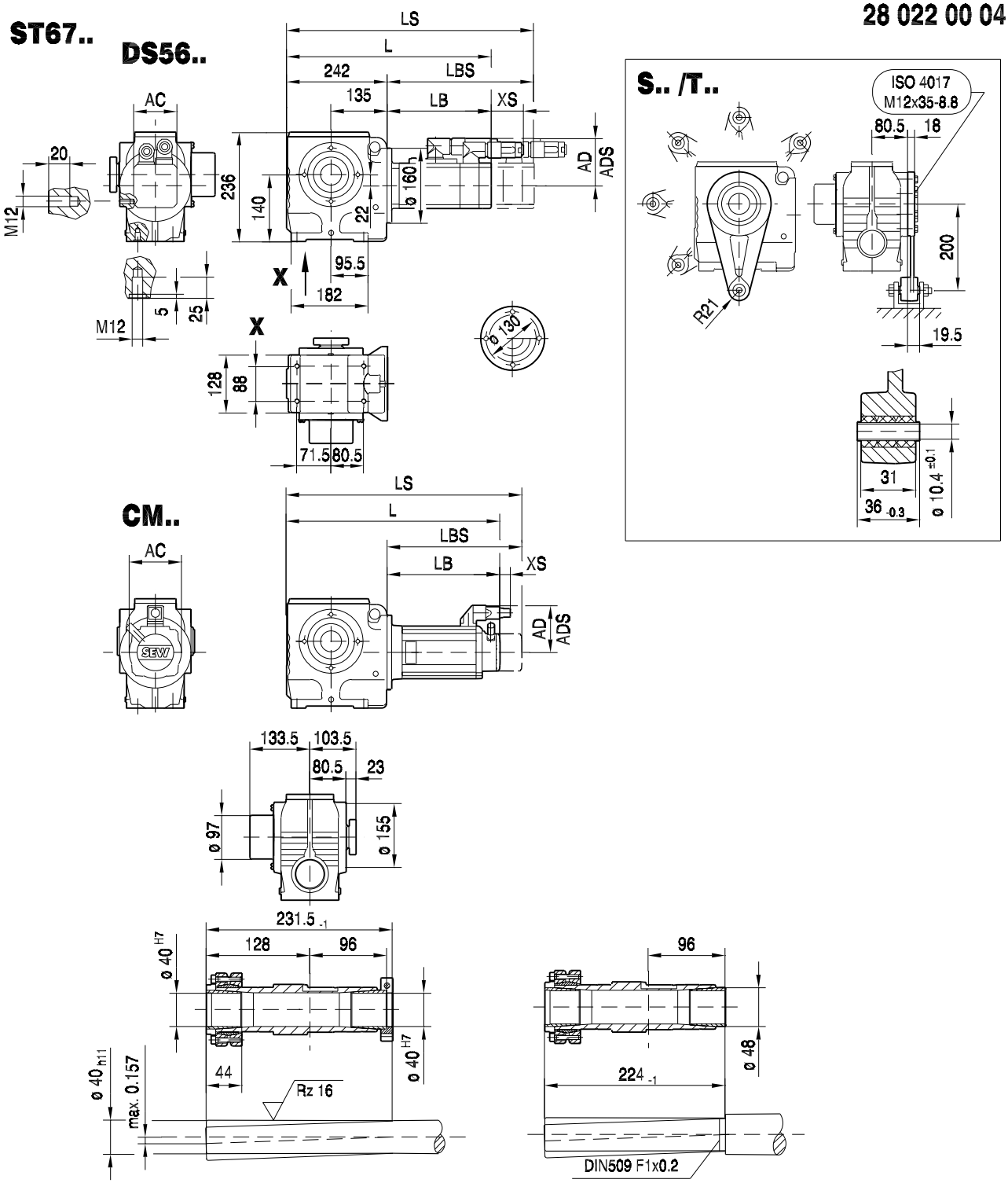

(→ 105)	DS56H	CM71S	CM71M	CM71L	CM90S	CM90M	CM90L	CM112S			
AC	73	117	117	117	142	142	142	186			
AD	77	122	122	122	140	140	140	162			
ADS	77	122	122	122	140	140	140	162			
L	508	474	494	534	526	553	611	566			
LS	508	556	576	616	622	649	707	656			
LB	266	232	252	292	284	311	369	324			
LBS	266	314	334	374	380	407	465	414			
XS	51	45	45	45	50	50	50	36			

11 DFS/CFM Synchronous Servomotors

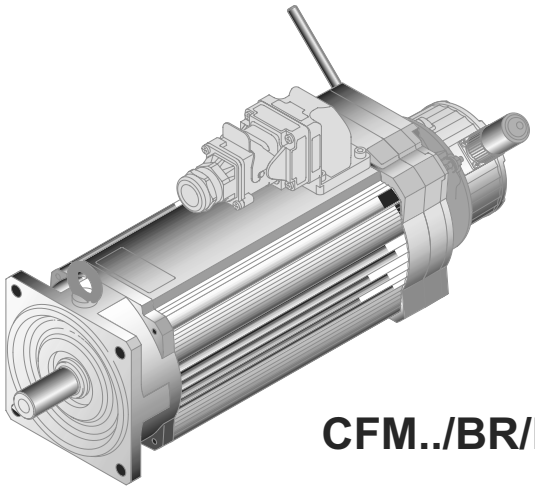

CFM../BR/HR/RH1L/SB5.

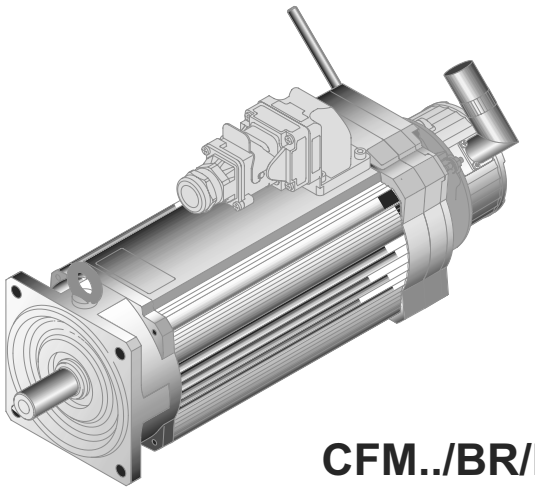

CFM../BR/HR/RH1L/SB6.

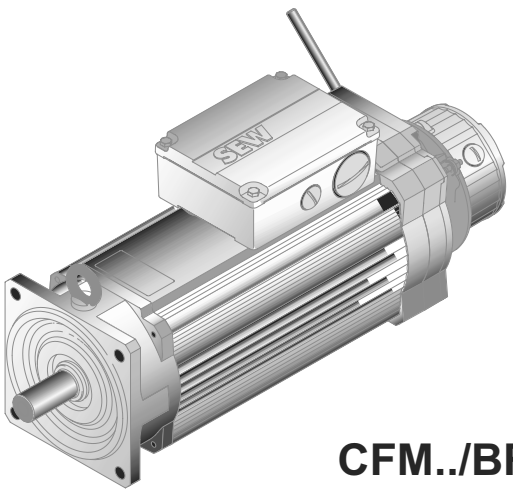

CFM../BR/HR/RH1L/KK

52506AXX

11.1 Unit designation of synchronous servomotors

Examples

DFS 56L /B /TF /RH1M /SM11

- /SM11 — Plug connector (motor option)
- /RH1M — Resolver as standard equipment
- /TF — TF thermistor as standard equipment
- /B — Brake (motor option)
- 56L — Size 56L
- DFS — Flange-mounted motor DFS series

CFM 112S /BR /TF /AS1H /SB50

- /SB50 — Plug connector as standard equipment
- /AS1H — Hiperface® multi-turn encoder (motor option)
- /TF — TF thermistor as standard equipment
- /BR — Brake (motor option)
- 112S — Size 112S
- CFM — Flange-mounted motor CFM series

11.2 Standards and regulations

Conformance to standards

The synchronous servomotors from SEW-EURODRIVE conform to the relevant standards and regulations, in particular to:

- IEC 34-1, EN 60034-1

  Rotating electrical machinery, rating and performance.
- EN 60529

  Degrees of protection provided by housings (IP code).
- EN 50 262

  Metric threads of cable glands.
- DIN 42925

  Terminal box cable entries for three-phase AC motors.
- DIN 44082 / DIN 44081

  Thermistors; PTC, technical terms and tests.

Rated data

The specific data of an synchronous servomotor are:

- Size
- Torque at standstill
- Rated speed
- Rated current
- Enclosure
- Thermal class

These data are indicated on the nameplate of the motor. In accordance with IEC34 (EN 60034), the nameplate data apply to a maximum ambient temperature of 40 °C and a maximum altitude of 1000 m above sea level.

Motor nameplate

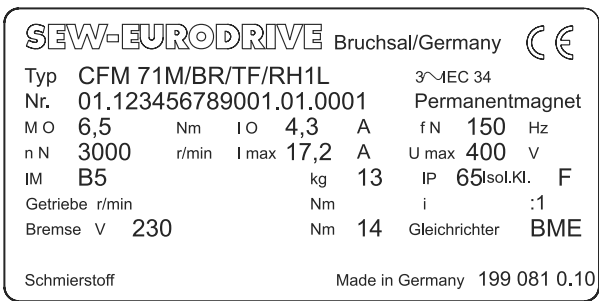

05103ADE

11.3 Circuit breaker and protective equipment

Protective measures

Permanent-field synchronous servomotors must be protected against overloads and short circuits.

Install the motors with sufficient space for air to cool them.

The surface temperature may be in excess of 100 °C during operation. The brake housing can heat up to 90° C with released brake and deenergized motor. Provide preventive measures against inadvertent contact.

The motors are available with temperature detection (TF or KTY) to protect the motor winding against overheating.

The standard equipment for these motors is **temperature sensor TF**.

TF temperature sensors meet DIN 44081 and DIN 44082. Motors of size DS56/CM71 ... 112 are also available with **temperature sensor KTY**.

The TF signal can be evaluated directly in the inverter when using a MOVIDRIVE® drive inverter.

Temperature sensors will respond at the maximum permitted winding temperature. Integrate the contacts of the temperature monitoring device into the monitoring circuit.

EMC measures

The designated use of SEW-EURODRIVE synchronous servomotors is as components for installation in machinery and systems. The designer of the machine or system is responsible for complying with the EMC Directive 89/336/EEC. Refer to the SEW publication "Drive Engineering - Practical Implementation, Drive Planning" for detailed information about this topic.

Brake motors

Install the brake cables of brake motors separately from the other power cables, maintaining a distance of at least 200 mm. Joint installation is only permitted if either the brake cable or the power cable is shielded.

Encoder connection

Please observe the following instructions when connecting an encoder:

- Use a shielded cable with twisted pair conductors only.
- Connect the shield to the PE potential on both ends over a large surface area.
- Route signal cables separately from power cables or brake cables (min. distance 200 mm).

Thermal motor protection

Install the connecting lead of TF / KTY separately from other power cables, maintaining a distance of at least 200 mm. Joint installation is only permitted if either the TF / KTY cable or the power cable is shielded.

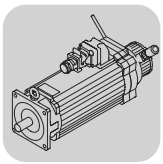

11.4 Technical data

Mechanical / electrical characteristics

Version	DS56		CM71-112	
	Standard	**Optional**	**Standard**	**Optional**
Enclosure	IP65	–	IP65	–
Thermal class	F, but only class B classification is used	–	F	–
Motor protection	TF	KTY	TF	KTY
Connection	Plug connector	Terminal box	Plug connector	Terminal box
Shaft end	without key	with key, domed type A RZ Others on request	without key	with key, domed type A RZ Others on request
Ambient temperature	-20 °C to +40 °C	-40 °C to + 60 °C	-20 °C to +40 °C	-40 °C to + 60 °C
Mounting position	270 °	Random	270 °	Random
Standards	CE VDE	CSA NEMA UL	CE VDE	CSA NEMA UL
Noise levels /EN 60034)	below maximum value	–	below maximum value	–
Feedback	2-pole resolver	6-pole resolver 2-pole resolver [1)] Encoder	2-pole resolver	6-pole resolver 2-pole resolver [1)] Encoder
Brake	–	B	–	BR
Cooling	self-cooling	–	self-cooling	Forced cooling fan VR
2nd shaft end	–	–	–	with key
Vibration severity grade	"N" to EN/IEC 60034....			
Cogging	≤ 5 % M_0		≤ 3% M_0	

[1)] phase optimized

For other options, please contact our technical offices.

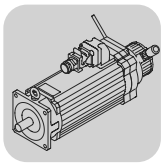

Structure of the data tables and combination overviews for synchronous servomotors

n_N	Motor	M_0	I_0	M_{DYN}	I_{max}	M_{0VR}	I_{0VR}	J_{mot}	J_{bmot}	M_{B1}	M_{B2}	W_{max1}	W_{max2}
[min^{-1}]		[Nm]	[A]	[Nm]	[A]	[Nm]	[A]	[10^{-4} kgm^2]		[Nm]		[kJ]	
2000	**CFM71S**	5	2.2	16,5	8.8	7.3	3.2	4.89	6.65	10	5	18	22
	CFM71M	6.5	3	21,5	12	9.4	4.2	6.27	8.03	14	7	15	20
	CFM71L	9.5	4.2	31,4	16.8	13.8	6.1	9.02	10.8	14	10	15	18

n_N	Speed class
M_0	Torque at standstill
I_0	Standstill current
M_{DYN}	Dynamic limit torque of the servomotor
I_{max}	Maximum permitted motor current
M_{0VR}	Standstill torque with forced cooling fan
I_{0VR}	Standstill current with forced cooling fan
J_{mot}	Mass moment of inertia of the motor
J_{bmot}	Mass moment of inertia of the brake motor
M_{B1}	Standard braking torque
M_{B2}	Reduced braking torque
W_{max1}	Maximum possible braking work with standard braking torque during a maintenance interval.
W_{max2}	Maximum possible braking work with reduced braking torque during a maintenance interval.

n_N	Motor	L_1	R_1	U_{p0}	m_{mot}	m_{bmot}
[min^{-1}]		[mH]	[mΩ]	[V/1000 min^{-1}]	[kg]	
2000	**CFM71S**	52	7090	151	9.5	11.8
	CFM71M	36	4440	148	10.8	13.0
	CFM71L	24	2500	152	13.0	15.3

L_1	Inductance of the winding
R_1	Ohmic resistance of the winding
U_{p0}	Internal voltage at 1000 min^{-1}
m_{mot}	Weight of the motor
m_{bmot}	Weight of the brake motor

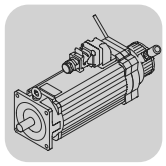

Synchronous servomotors with 400 V system voltage

n_N	Motor	M_0	I_0	M_{DYN}	I_{max}	M_{0VR}	I_{0VR}	J_{mot}	J_{bmot}	M_{B1}	M_{B2}	W_{max1}	W_{max2}
[min^{-1}]		[Nm]	[A]	[Nm]	[A]	[Nm]	[A]	[10^{-4} kgm^2]		[Nm]		[kJ]	
2000	**CFM71S**	5	2.2	16.5	8.8	7.3	3.2	4.89	6.65	10	5	18	22
	CFM71M	6.5	3	21.5	12	9.4	4.2	6.27	8.03	14	7	15	20
	CFM71L	9.5	4.2	31.4	16.8	13.8	6.1	9.02	10.8	14	10	15	18
	CFM90S	11	4.9	39.6	19.6	16	7.1	17.4	21.2	28	14	17	24
	CFM90M	14.5	6.9	52.2	28	21	10	22.3	26.1	40	20	10.5	19.5
	CFM90L	21	9.9	75.6	40	30.5	14.4	32.1	35.9	40	28	10.5	17
	CFM112S	23.5	10	82.3	40	34	14.5	68.4	84	55	28	32	48
	CFM112M	31	13.5	108.5	54	45	19.6	88.2	104	90	40	18	44
	CFM112L	45	20	157.5	80	65	29	128	143	90	55	18	32
	CFM112H	68	30.5	238.0	122	95	42.5	190	209	90	55	18	32
3000	**DFS56M**	1	1.65	3.8	6.6	–	–	0.48	0.83	2.5	–	–	–
	DFS56L	2	2.4	7.6	9.6	–	–	0.83	1.18	2.5	–	–	–
	DFS56H	4	2.8	15.2	11.2	–	–	1.53	1.88	5	–	–	–
	CFM71S	5	3.3	16.5	13.2	7.3	4.8	4.89	6.65	10	5	14	20
	CFM71M	6.5	4.3	21.5	17.2	9.4	6.2	6.27	8.03	14	7	11	18
	CFM71L	9.5	6.2	31.4	25	13.8	9	9.02	10.8	14	10	11	14
	CFM90S	11	7.3	39.6	29	16	10.6	17.4	21.2	28	14	10	20
	CFM90M	14.5	10.1	52.2	40	21	14.6	22.3	26.1	40	20	4.5	15
	CFM90L	21	14.4	75.6	58	30.5	21	32.1	35.9	40	28	4.5	10
	CFM112S	23.5	15	82.3	60	34	22	68.4	84	55	28	18	36
	CFM112M	31	20.5	108.5	82	45	30	88.2	104	90	40	7	32
	CFM112L	45	30	157.5	120	65	44	128	143	90	55	7	18
	CFM112H	68	43	238.0	172	95	60	190	209	90	55	7	18
4500	**DFS56M**	1	1.65	3.8	6.6	–	–	0.48	0.83	2.5	–	–	–
	DFS56L	2	2.4	7.6	9.6	–	–	0.83	1.18	2.5	–	–	–
	DFS56H	4	4	15.2	16	–	–	1.53	1.88	5	–	–	–
	CFM71S	5	4.9	16.5	19.6	7.3	7.2	4.89	6.65	10	5	10	16
	CFM71M	6.5	6.6	21.5	26	9.4	9.6	6.27	8.03	14	7	6	14
	CFM71L	9.5	9.6	31.4	38	13.8	14	9.02	10.8	14	10	6	10
	CFM90S	11	11.1	39.6	44	16	16.2	17.4	21.2	28	14	5	15
	CFM90M	14.5	14.7	52.2	59	21	21.5	22.3	26.1	40	20	3	9
	CFM90L	21	21.6	75.6	86	30.5	31.5	32.1	35.9	40	28	3	5
	CFM112S	23.5	22.5	82.3	90	34	32.5	68.4	84	55	25	11	22
	CFM112M	31	30	108.5	120	45	44	88.2	104	90	40	4	18
	CFM112L	45	46	157.5	184	65	67	128	143	90	55	4	11
	CFM112H	68	66	238.0	264	95	92	190	209	90	55	4	11
6000	**DFS56M**	1	1.65	3.8	6.6	–	–	0.48	0.83	2.5	-	-	-
	DFS56L	2	2.75	7.6	11	–	–	0.83	1.18	2.5	-	-	-
	DFS56H	4	5.3	15.2	21	–	–	1.53	1.88	5	-	-	-
	CFM71S	5	6.5	16.5	26	7.3	9.5	4.89	6.65	-	-	-	-
	CFM71M	6.5	8.6	21.5	34	9.4	12.5	6.27	8.03	-	-	-	-
	CFM71L	9.5	12.5	31.4	50	13.8	18.2	9.02	10.8	-	-	-	-
	CFM90S	11	14.5	39.6	58	16	21	17.4	21.2	-	-	-	-
	CFM90M	14.5	19.8	52.2	79	21	29	22.3	26.1	-	-	-	-
	CFM90L	21	29.5	75.6	118	30.5	43	32.1	35.9	-	-	-	-

Synchronous servomotors with 400 V system voltage

n_N	Motor	L_1	R_1	U_{p0}	m_{mot}	m_{bmot}
[min^{-1}]		[mH]	[mΩ]	[V/1000 min^{-1}]	[kg]	
2000	**CFM71S**	52	7090	151	9.5	11.8
	CFM71M	36	4440	148	10.8	13.0
	CFM71L	24	2500	152	13.0	15.3
	CFM90S	18	1910	147	15.7	19.6
	CFM90M	12.1	1180	141	17.8	21.6
	CFM90L	8.4	692	146	21.9	26.5
	CFM112S	10	731	155	26.2	31.8
	CFM112M	7.5	453	153	30.5	36.0
	CFM112L	4.6	240	151	39.3	44.9
	CFM112H	2.6	115	147	54.2	59.8
3000	**DFS56M**	9.7	5700	40	2.8	2.9
	DFS56L	8.8	3700	56	3.5	3.6
	DFS56H	12.7	4500	97	4.8	5.3
	CFM71S	23	3150	101	9.5	11.8
	CFM71M	16	2000	100	10.8	13.0
	CFM71L	11	1120	102	13.0	15.3
	CFM90S	8.1	838	98	15.7	19.6
	CFM90M	5.7	533	96	17.8	21.6
	CFM90L	3.9	324	99	21.9	26.5
	CFM112S	4.6	325	103	26.2	31.8
	CFM112M	3.1	193	99	30.5	36.0
	CFM112L	2	103	101	39.3	44.9
	CFM112H	1.3	57	104	54.2	59.8
4500	**DFS56M**	9.7	5700	40	2.8	2.9
	DFS56L	8.8	3700	56	3.5	3.6
	DFS56H	6.2	2200	67.5	4.8	5.3
	CFM71S	10	1380	66	9.5	11.8
	CFM71M	6.9	828	64	10.8	13.0
	CFM71L	4.9	446	65	13.0	15.3
	CFM90S	3.45	358	64	15.7	19.6
	CFM90M	2.65	249	65	17.8	21.6
	CFM90L	1.73	148	66	21.9	26.5
	CFM112S	2	149	69	26.2	31.8
	CFM112M	1.5	92	68	30.5	36.0
	CFM112L	0.85	44	66	39.3	44.9
	CFM112H	0.54	24	67	54.2	59.8
6000	**DFS56M**	9.70	5700	40	2.8	2.9
	DFS56L	6.80	2800	49	3.5	3.6
	DFS56H	3.50	1200	50.5	4.8	5.3
	CFM71S	5.75	780	50	9.5	-
	CFM71M	3.93	493	49	10.8	-
	CFM71L	2.68	277	50	13.0	-
	CFM90S	2.03	212	49	15.7	-
	CFM90M	1.48	136	48	17.8	-
	CFM90L	0.93	77	48	21.9	-

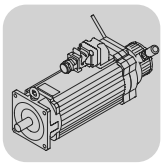

Combination overview of synchronous servomotors / servo controllers for 400 V system voltage, peak torque in Nm

Assignment to MOVIDRIVE® 0005 - 0075

n_N [min^{-1}]	Motor	Mmax [Nm]	MOVIDRIVE®									
			0005	0008	0011	0014	0015	0022	0030	0040	**0055**	0075
			2.0 [A]	2.4 [A]	3.1 [A]	4.0 [A]	4.0 [A]	5.5 [A]	7.0 [A]	9.5 [A]	12.5 [A]	16 [A]
2000	**CFM71S**	M_{max}	8.9	10.5	13.1	15.6	12.7	15.9	16.5			
	CFM71M		8.6	10.3	13.1	16.2	12.7	16.7	19.8	21.5		
	CFM71L			10.8	13.9	17.7	13.5	18.2	22.5	28.4	31.4	
	CFM90S				13.9	17.8	13.4	18.4	23.2	30.6	38.2	39.4
	CFM90M					16.8	12.6	17.3	21.9	29.5	38.0	46.9
	CFM90L							17.5	22.2	30.1	39.3	49.6
	CFM112S							19.3	24.6	33.4	43.6	54.8
	CFM112M								23.9	32.6	42.9	54.7
	CFM112L										42.0	53.9
	CFM112H											53.2
3000	**DFS56M**	M_{max}	2.4	2.8	3.6	3.8	3.5	3.8				
	DFS56L		3.3	4.0	5.1	6.4	4.9	6.6	7.6			
	DFS56H		5.7	6.8	8.8	11.2	8.5	11.5	14.3	15.0		
	CFM71S		6.0	7.2	9.2	11.6	8.9	11.9	14.3	16.5		
	CFM71M			7.2	9.3	11.9	9.0	12.2	15.1	19.1	21.5	
	CFM71L				9.5	12.2	9.2	12.6	15.9	21.0	26.2	30.8
	CFM90S					12.0	9.0	12.4	15.7	21.2	27.4	34.0
	CFM90M							11.8	15.0	20.4	26.6	33.7
	CFM90L									20.7	27.3	34.7
	CFM112S									22.2	29.3	37.4
	CFM112M										28.2	36.2
	CFM112L											35.8
	CFM112H											
4500	**DFS56M**	M_{max}	2.4	2.8	3.6	3.8	3.5	3.8				
	DFS56L		3.3	4.0	5.1	6.4	4.9	6.6	7.6			
	DFS56H		4.0	4.8	6.2	7.9	6.0	8.2	10.3	13.7	15.2	
	CFM71S				6.3	8.1	6.1	8.3	10.4	13.4	16.1	16.5
	CFM71M					7.9	5.9	8.1	10.2	13.6	17.1	20.3
	CFM71L							8.2	10.4	14.0	18.1	22.5
	CFM90S								10.4	14.1	18.4	23.4
	CFM90M									14.0	18.4	23.5
	CFM90L										18.2	23.3
	CFM112S										19.5	25.0
	CFM112M											24.6
	CFM112L											
	CFM112H											
6000	**DFS56M**	M_{max}	2.4	2.8	3.6	3.8	3.5	3.8				
	DFS56L		2.9	3.5	4.5	5.7	4.3	5.8	7.3	7.6		
	DFS56H				4.7	6.0	4.5	6.2	7.9	10.5	13.6	15.1
	CFM71S					6.1	4.6	6.3	8.0	10.6	13.3	15.8
	CFM71M							6.2	7.9	10.6	13.7	16.8
	CFM71L								8.0	10.8	14.1	17.9
	CFM90S									10.8	14.2	18.1
	CFM90M										13.7	17.5
	CFM90L											17.1

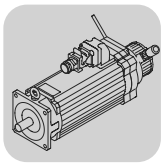

Combination overview of synchronous servomotors / servo controllers for 400 V system voltage, peak torque in Nm

Assignment to MOVIDRIVE® 0110 - 1100

n_N [min^{-1}]	Motor	Mmax [Nm]	MOVIDRIVE®									
			0110	0150	0220	0300	0370	0450	0550	0750	0900	1100
			24 [A]	32 [A]	46 [A]	60 [A]	73 [A]	89 [A]	105 [A]	130 [A]	170 [A]	200 [A]
2000	**CFM71S**	M_{max}										
	CFM71M											
	CFM71L											
	CFM90S											
	CFM90M		52.5									
	CFM90L		70.3	75.8								
	CFM112S		76.2	81.9								
	CFM112M		79.3	99.6	108.0							
	CFM112L		80.3	104.9	141.5	156.8						
	CFM112H		80.1	106.5	150.3	189.2	220.1	237.0				
3000	**DFS56M**	M_{max}										
	DFS56L											
	DFS56H											
	CFM71S											
	CFM71M											
	CFM71L		31.5									
	CFM90S		39.2									
	CFM90M		47.8	51.6								
	CFM90L		51.1	65.6	75.6							
	CFM112S		54.8	69.8	81.9							
	CFM112M		54.0	70.7	95.7	108.0						
	CFM112L		53.9	71.6	101.0	126.9	147.4	156.8				
	CFM112H		56.6	75.7	108.6	139.9	167.0	197.1	223.2	237.0		
4500	**DFS56M**	M_{max}										
	DFS56L											
	DFS56H											
	CFM71S											
	CFM71M		21.3									
	CFM71L		30.3	31.2								
	CFM90S		33.6	39.2								
	CFM90M		34.6	44.5	52.1							
	CFM90L		34.7	45.8	63.4	75.0						
	CFM112S		37.4	49.2	67.5	81.9						
	CFM112M		37.1	49.4	69.6	87.4	101.5	108.0				
	CFM112L		35.0	46.8	67.2	86.9	104.1	123.5	140.7	156.8		
	CFM112H				70.9	92.5	112.1	135.5	157.7	189.4	231.6	237.0
6000	**DFS56M**	M_{max}										
	DFS56L											
	DFS56H											
	CFM71S		16.5									
	CFM71M		21.3									
	CFM71L		25.2	30.7	31.4							
	CFM90S		26.6	34.2	39.4							
	CFM90M		26.1	34.3	46.9	51.9						
	CFM90L		25.6	33.9	48.0	60.9	71.3	75.2				

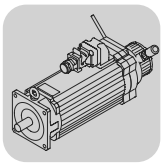

Synchronous servomotors with 230 V system voltage

n_N	Motor	M_0	I_0	M_{DYN}	I_{max}	M_{0VR}	I_{0VR}	J_{mot}	J_{bmot}	M_{B1}	M_{B2}	W_{max1}	W_{max2}
[min^{-1}]		[Nm]	[A]	[Nm]	[A]	[Nm]	[A]	[10^{-4} kgm^2]		[Nm]		[kJ]	
2000	**CFM71S**	5	3.95	16.5	15.8	7.3	5.7	4.89	6.65	10	5	18	22
	CFM71M	6.5	5.3	21.5	21	9.4	7.7	6.27	8.03	14	7	15	20
	CFM71L	9.5	7.4	31.4	29.5	13.8	10.7	9.02	10.8	14	10	15	18
	CFM90S	11	8.7	39.6	35	16	12.6	17.4	21.2	28	14	17	24
	CFM90M	14.5	12.1	52.2	48.5	21	17.5	22.3	26.1	40	20	10.5	19.5
	CFM90L	21	17.1	75.6	68	30.5	25	32.1	35.9	40	28	10.5	17
	CFM112S	23.5	18	82.3	72	34	26	68.4	84	55	28	32	48
	CFM112M	31	24.5	108.5	98	45	35.5	88.2	104	90	40	18	44
	CFM112L	45	35.5	157.5	142	65	51	128	143	90	55	18	32
	CFM112H	68	52	238	208	95	73	190	209	90	55	7	18
3000	**DFS56M**	1	1.65	3.8	6.6	–	–	0.48	0.83	2.5	–	–	–
	DFS56L	2	2.4	7.6	9.6	–	–	0.83	1.18	2.5	–	–	–
	CFM71S	5	5.9	16.5	23.5	7.3	8.6	4.89	6.65	10	5	14	20
	CFM71M	6.5	7.6	21.5	30.5	9.4	11	6.27	8.03	14	7	11	18
	CFM71L	9.5	11.1	31.4	44.5	13.8	16.1	9.02	10.8	14	10	11	14
	CFM90S	11	12.7	39.6	51	16	18.4	17.4	21.2	28	14	10	20
	CFM90M	14.5	17.4	52.2	70	21	25	22.3	26.1	40	20	4.5	15
	CFM90L	21	25.5	75.6	102	30.5	37	32.1	35.9	40	28	4.5	10
	CFM112S	23.5	27	82.3	108	34	39	68.4	84	55	28	18	36
	CFM112M	31	35	108.5	140	45	51	88.2	104	90	40	7	32
	CFM112L	45	48	157.5	192	65	70	128	143	90	55	7	18
	CFM112H	68	73	238	292	95	102	190	209	90	55	7	18
4500	**CFM71S**	5	8.5	16.5	34	7.3	12.3	4.89	6.65	10	5	10	16
	CFM71M	6.5	11.3	21.5	45	9.4	16.4	6.27	8.03	14	7	6	14
	CFM71L	9.5	17.1	31.4	68	13.8	25	9.02	10.8	14	10	6	10
	CFM90S	11	18.9	39.6	76	16	27.5	17.4	21.2	28	14	5	15
	CFM90M	14.5	26	52.2	104	21	37.5	22.3	26.1	40	20	3	9
	CFM90L	21	39	75.6	156	30.5	57	32.1	35.9	40	28	3	5
	CFM112S	23.5	38.5	82.3	154	34	56	68.4	84	55	25	11	22
	CFM112M	31	54	108.5	216	45	78	88.2	104	90	40	4	18
6000	**CFM71S**	5	11.6	16.5	46.5	7.3	16.8	4.89	6.65	-	-	-	-
	CFM71M	6.5	14.1	21.5	56	9.4	20.5	6.27	8.03	-	-	-	-
	CFM71L	9.5	21.5	31.4	86	13.8	31	9.02	10.8	-	-	-	-
	CFM90S	11	23.5	39.6	94	16	34	17.4	21.2	-	-	-	-
	CFM90M	14.5	37	52.2	148	21	54	22.3	26.1	-	-	-	-
	CFM90L	21	51	75.6	204	30.5	74	32.1	35.9	-	-	-	-

Other DFS / 230 V motor variants on request.

Synchronous servomotors with 230 V system voltage

n_N	Motor	L_1	R_1	U_{p0}	m_{mot}	m_{bmot}
[min^{-1}]		[mH]	[mΩ]	[V/1000 min^{-1}]	[kg]	
2000	**CFM71S**	16.3	2188	85	9.5	11.8
	CFM71M	11.4	1394	83	10.8	13.0
	CFM71L	7.7	802	86	13.0	15.3
	CFM90S	5.7	593	83	15.7	19.6
	CFM90M	3.95	382	81	17.8	21.6
	CFM90L	2.80	236	85	21.9	26.5
	CFM112S	3.10	225	86	26.2	31.8
	CFM112M	2.25	127	84	30.5	36.0
	CFM112L	1.46	76	85	39.3	44.9
	CFM112H	0.88	38	86	54.2	59.8
3000	**DFS56M**	9.7	5700	40	2.8	2.9
	DFS56L	8.8	3700	56	3.5	3.6
	CFM71S	7.2	973	57	9.5	11.8
	CFM71M	5.2	642	57	10.8	13.0
	CFM71L	3.45	347	57	13.0	15.3
	CFM90S	2.7	271	57	15.7	19.6
	CFM90M	1.91	182	56	17.8	21.6
	CFM90L	1.24	105	56	21.9	26.5
	CFM112S	1.42	100	57	26.2	31.8
	CFM112M	1.08	67	58	30.5	36.0
	CFM112L	0.78	35	63	39.3	44.9
	CFM112H	0.45	20	61	54.2	59.8
4500	**CFM71S**	3.30	449	38	9.5	11.8
	CFM71M	2.35	278	37.5	10.8	13.0
	CFM71L	1.55	149	36.5	13.0	15.3
	CFM90S	1.19	124	37.5	15.7	19.6
	CFM90M	0.84	81	36.5	17.8	21.6
	CFM90L	0.53	48	36.5	21.9	26.5
	CFM112S	0.68	50	40.5	26.2	31.8
	CFM112M	0.465	28	38	30.5	36.0
6000	**CFM71S**	1.80	243	28	9.5	-
	CFM71M	1.47	175	30	10.8	-
	CFM71L	0.91	89	29	13.0	-
	CFM90S	0.77	78	30	15.7	-
	CFM90M	0.42	42	25.5	17.8	-
	CFM90L	0.31	26	28	21.9	-

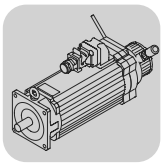

Combination overview of synchronous servomotors / servo controllers for 230 V system voltage, peak torque in Nm

Assignment to MOVIDRIVE® 0015 - 0300

n_N [min^{-1}]	Motor	Mmax [Nm]	MOVIDRIVE®								
			0015	**0022**	**0037**	**0055**	**0075**	**0110**	**0150**	**0220**	0300
			7.3 [A]	8.6 [A]	14.5 [A]	22 [A]	29 [A]	42 [A]	54 [A]	80 [A]	95 [A]
2000	**CFM71S**	M_{max}	12.9	14.6	16.5						
	CFM71M		13.1	15.1	21.4						
	CFM71L		14.0	16.3	25.6	31.3					
	CFM90S		13.8	16.2	26.8	38.0	39.6				
	CFM90M		13.1	15.4	25.8	38.2	48.1	52.0			
	CFM90L			15.8	26.6	40.0	51.9	70.9	74.9		
	CFM112S				28.3	42.7	55.1	74.7	81.9		
	CFM112M				27.4	41.6	54.6	76.8	94.4	108.0	
	CFM112L					41.7	55.0	79.2	100.2	139.3	156.8
	CFM112H						56.6	82.2	105.5	153	177.9
3000	**DFS56M**	M_{max}	3.8								
	DFS56L		7.6								
	CFM71S		9.1	10.6	15.8	16.5					
	CFM71M		9.3	10.9	17.2	21.5					
	CFM71L		9.4	11.0	18.2	25.8	31.0	31.4			
	CFM90S		9.5	11.2	18.7	27.7	35.1	39.5			
	CFM90M				18.1	27.2	35.3	48.4	52.2		
	CFM90L				17.9	27.1	35.5	50.5	63.1	75.2	
	CFM112S				18.8	28.7	37.7	53.4	66.3	81.9	
	CFM112M					29.1	38.4	55.3	69.9	97.0	108.0
	CFM112L						40.6	58.9	75.4	108.8	125.9
	CFM112H							58.4	75.3	111.1	131.1
4500	**CFM71S**	M_{max}	6.4	7.5	12.1	16.3	16.5				
	CFM71M		6.3	7.4	12.2	17.4	21.0	21.4			
	CFM71L			7.2	12.1	17.9	22.8	29.9	31.3		
	CFM90S				12.6	19.0	24.8	34.4	39.6		
	CFM90M				12.1	18.3	24.1	34.3	42.8	52.0	
	CFM90L					17.7	23.4	33.7	42.9	61.4	70.5
	CFM112S					20.0	26.5	38.2	48.6	68.3	77.7
	CFM112M						24.8	36.1	46.3	67.4	78.5
6000	**CFM71S**	M_{max}	4.7	5.6	9.2	13.2	15.9	16.6			
	CFM71M		5.0	5.9	9.9	14.6	18.2	21.4			
	CFM71L				9.6	14.5	18.7	25.6	30.3	31.4	
	CFM90S				10.2	15.4	20.1	28.5	35.3	39.4	
	CFM90M					12.9	17.0	24.5	31.2	44.3	50.6
	CFM90L						17.9	25.9	33.1	48.3	56.5

Torques for 400 V / 230 V system voltage

DS56 Dynamic limit torques

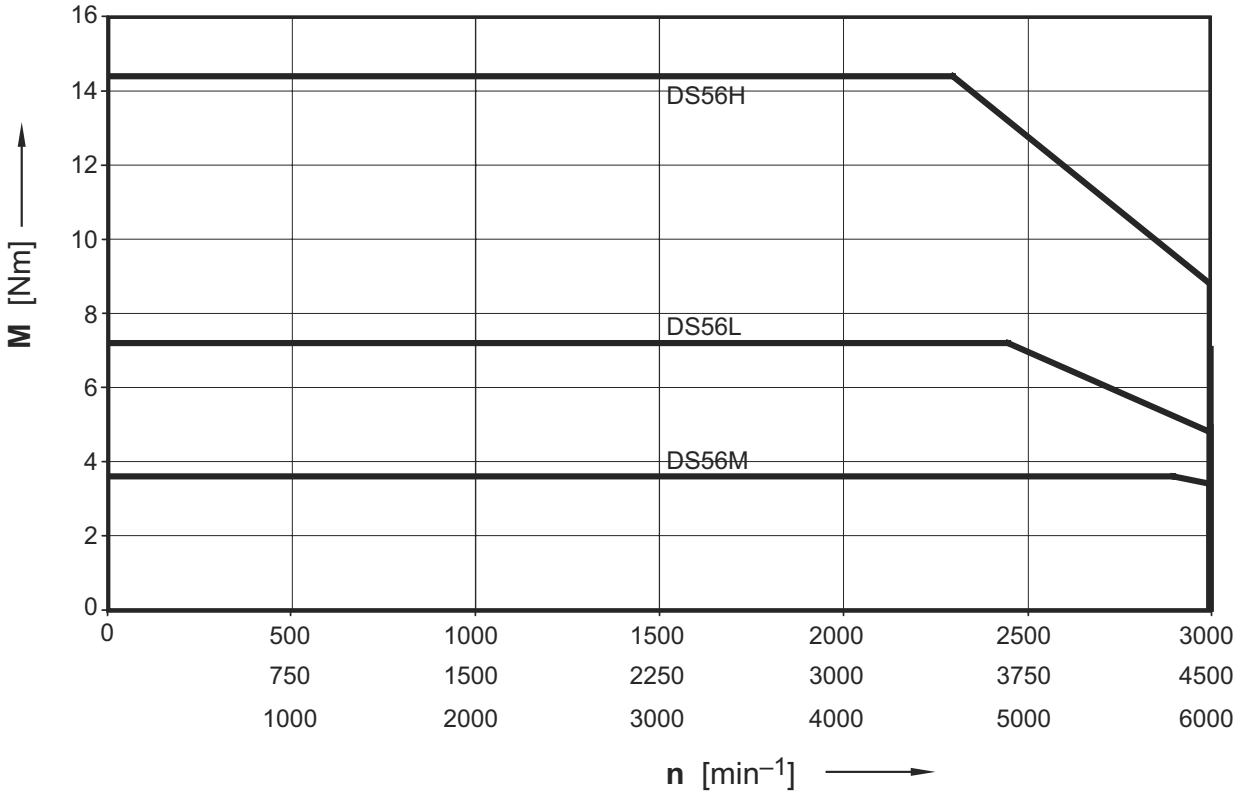

50698BXX

Thermal limit torques

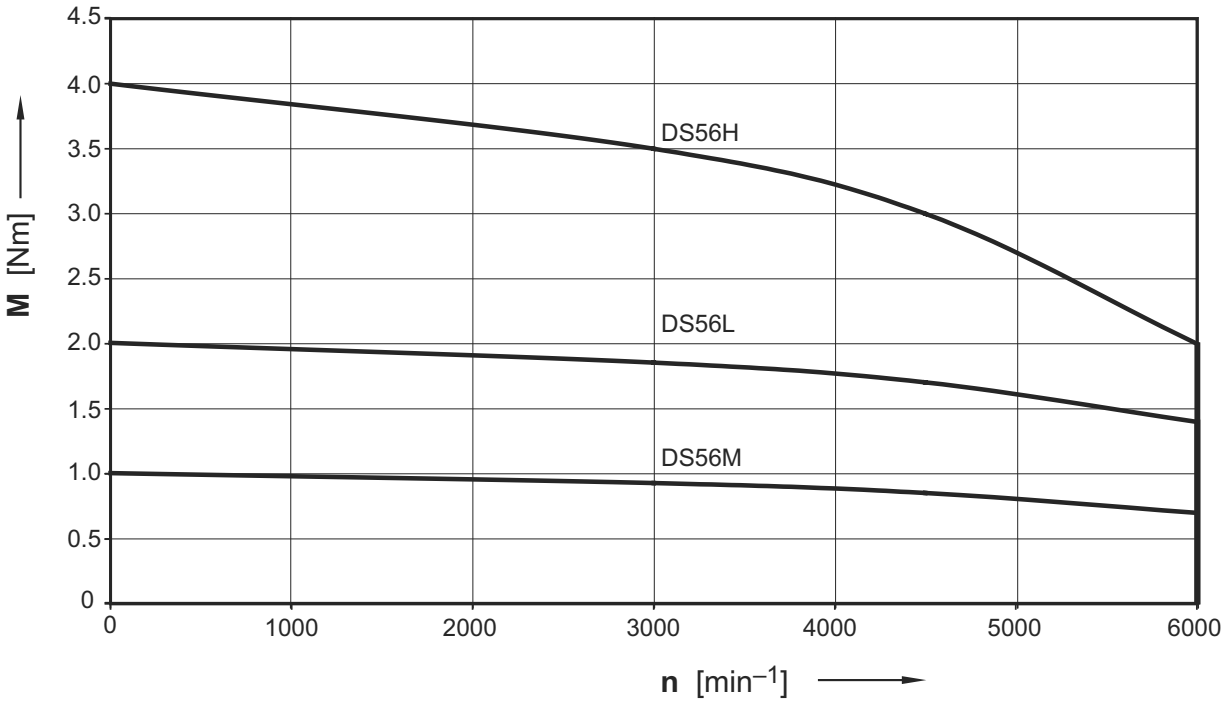

50696AXX

CM71

Dynamic limit torques

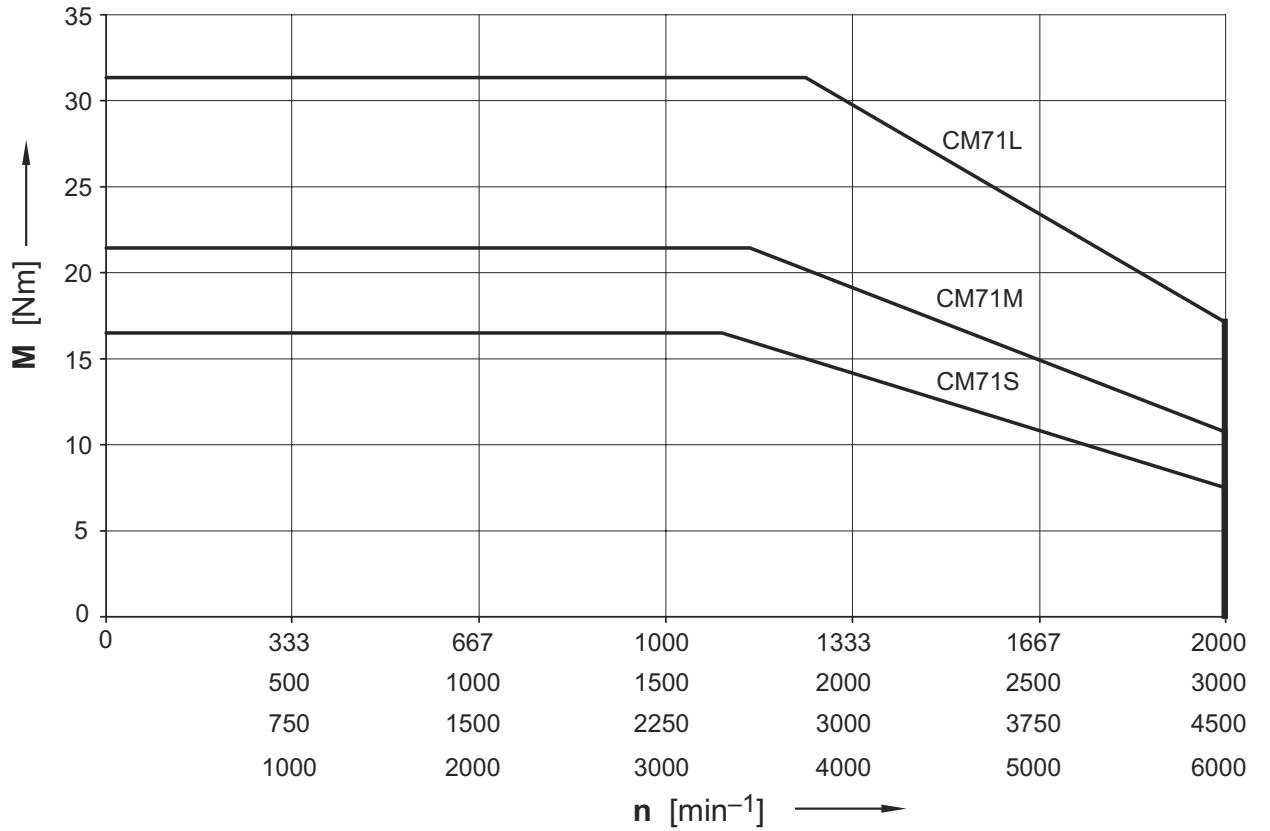

50439AXX

Thermal limit torques

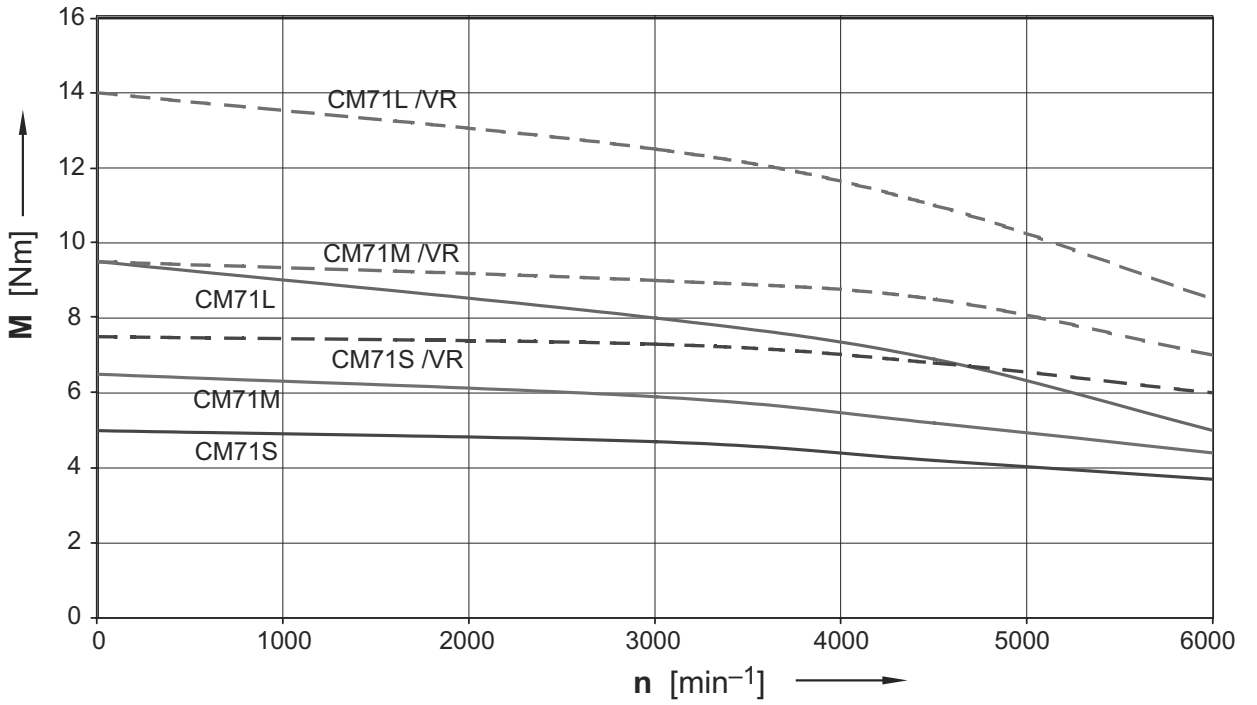

50438BXX

CM90

Dynamic limit torques

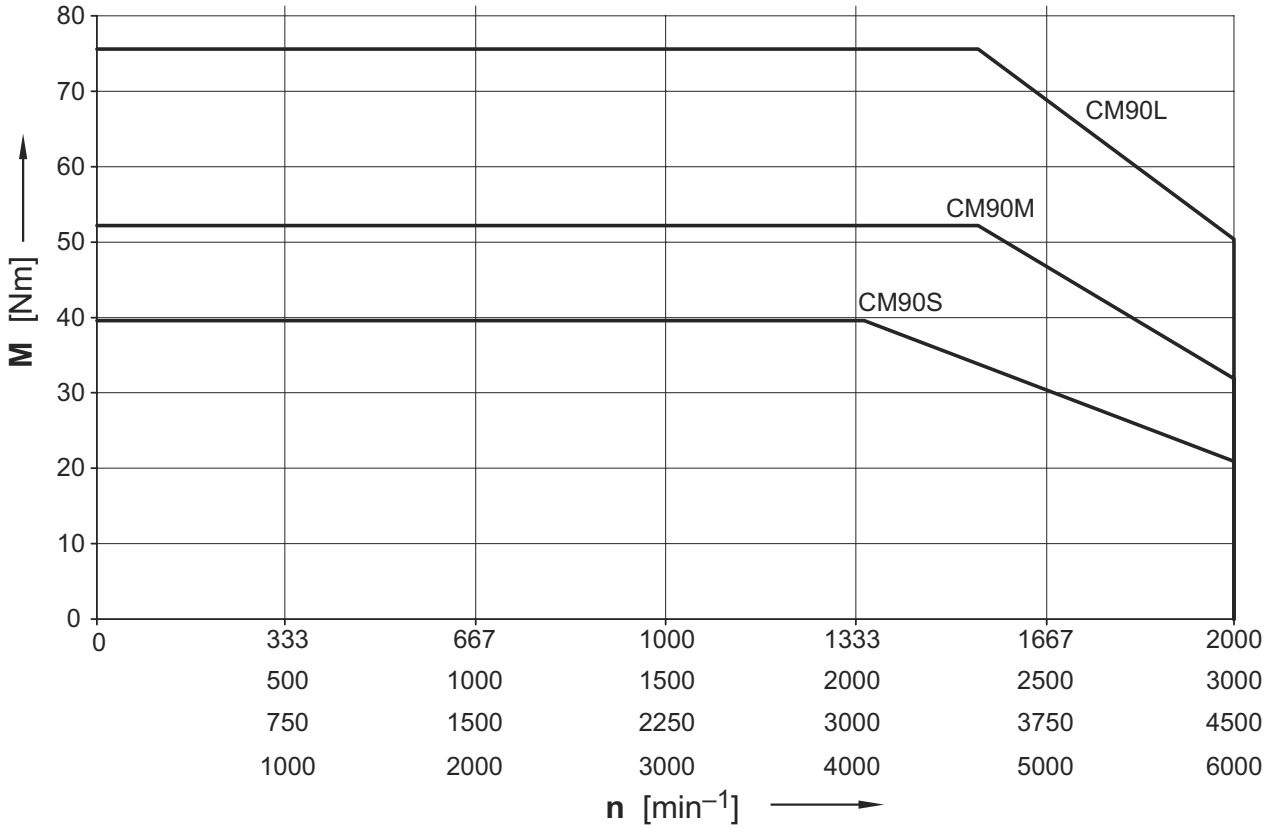

50441BXX

Thermal limit torques

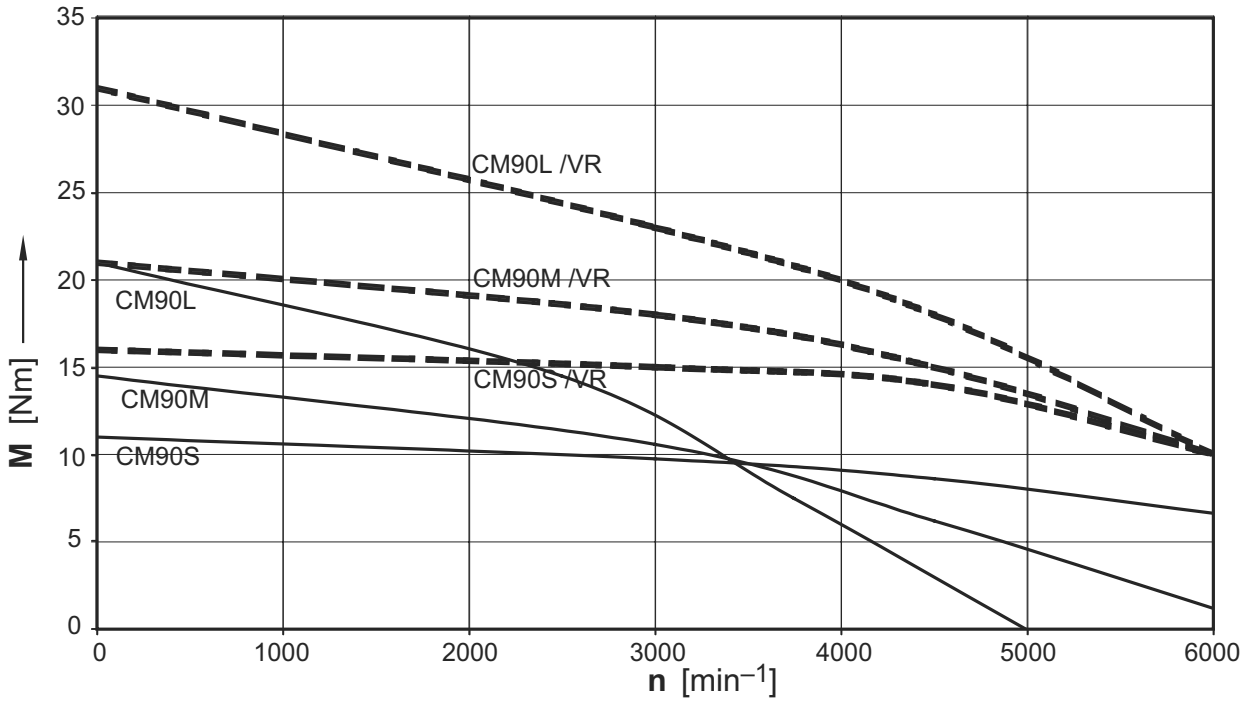

50440AXX

CM112 Dynamic limit torques

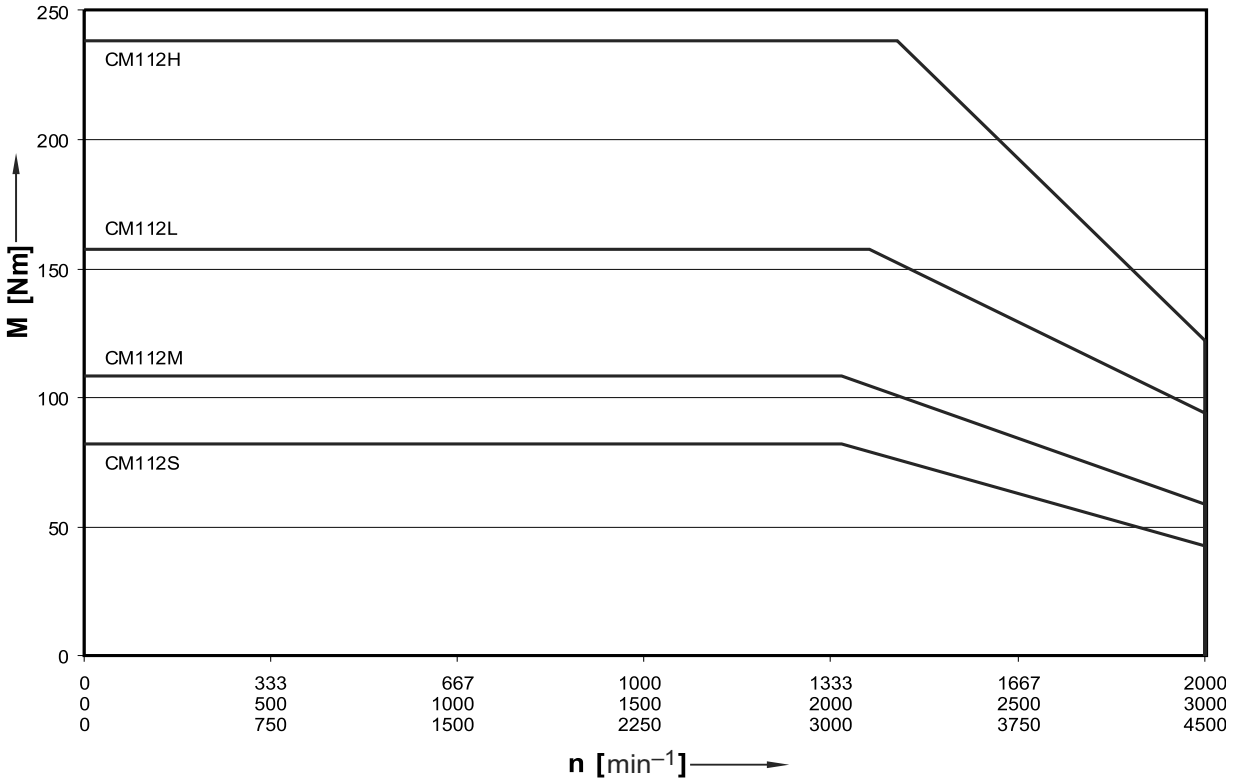

06159AXX

Thermal limit torques for CM112S-L

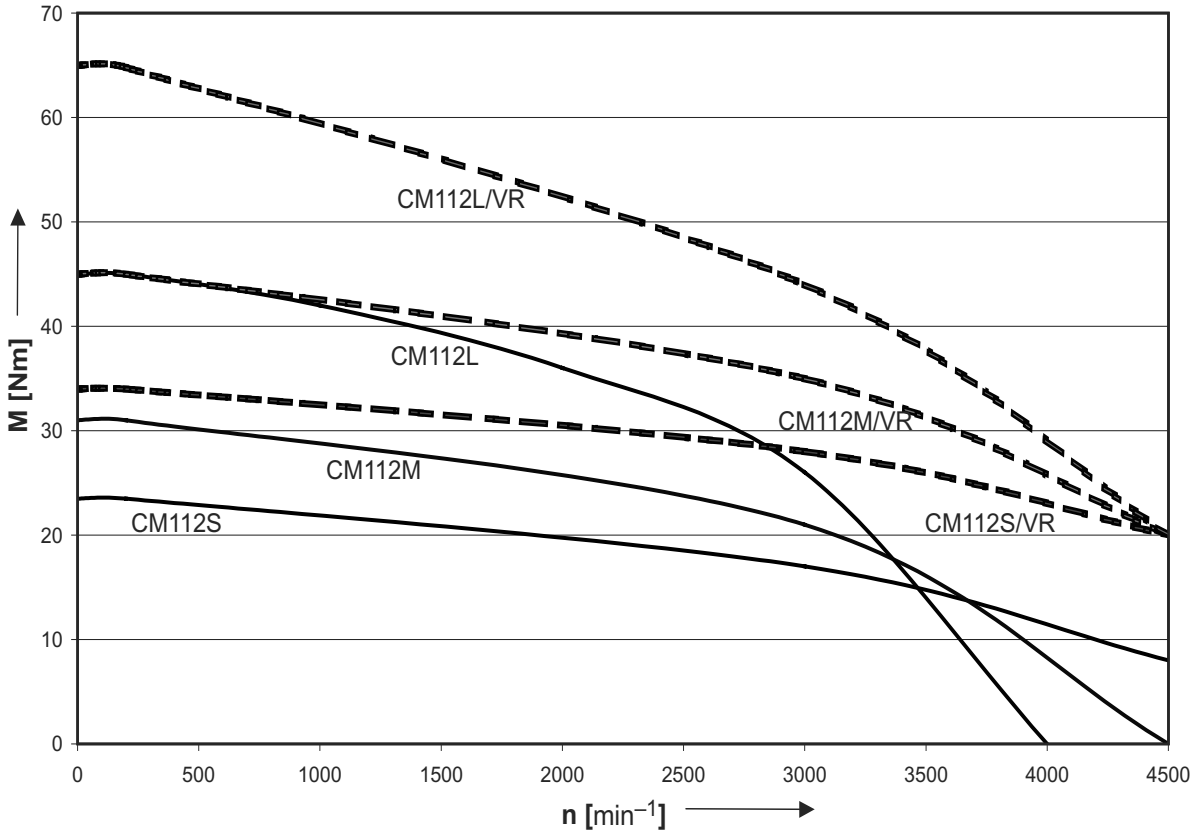

54822AXX

Thermal limit torques for CM112H

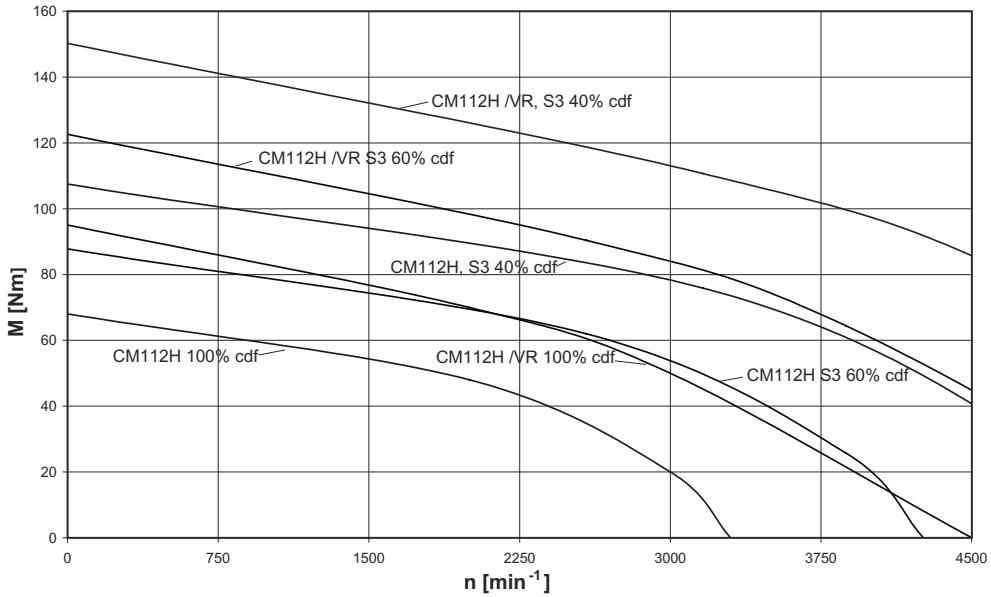

54960AEN

Helical-bevel servo gearmotors and planetary servo gearmotors can be operated at **ambient temperatures of** between **– 10 °C and + 40 °C**. It is essential that you contact SEW-EURODRIVE if ambient temperatures exceed this temperature range.

Helical-bevel servo gearmotors and planetary servo gearmotors can be operated up to **altitudes** of **1000 m above sea level**. For operation at altitudes above 1000 m above sea level, contact SEW-EURODRIVE.

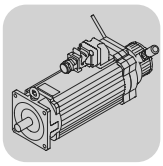

Derating for increased ambient temperature

The following applies to determining a first approximation of a random thermal limit curve: The thermal limit curve for higher ambient temperatures must be reduced in all points (limit torque with reference to speed) by ΔM_{TH}:

$$\Delta M_{TH} = M_{TH} \times \left(1 - \sqrt{\frac{145 - T_U}{105}} \right)$$

$$M_{TH_re} = M_{TH} - \Delta M_{TH}$$

Example CM 112 H:

T_U = 60° C

M_{TH} = 48 Nm

n = 2000 min^{-1}

$$\Delta M_{TH} = 48 \times \left(1 - \sqrt{\frac{145 - 60}{105}} \right) [Nm]$$

ΔM_{TH} = 9.14 Nm

M_{TH_re} = 48 - 9.14 [Nm] = 38.86 [Nm]

54877AEN

ΔM_{TH}	Thermal limit torque [Nm] difference
M_{TH}	Thermal limit torque [Nm]
T_U	Ambient temperature [°C]
M_{TH_re}	Reduced thermal limit torque [Nm]

Overhung and axial loads

Refer to section 3.6 "Overhung and axial loads" for general information about overhung loads.

Determining overhung load

The permitted overhung loads F_R at point x (distance from the shaft shoulder to the application point) are determined using the diagrams below. The diagrams are based on a nominal bearing service life of L_{10h}=12 500 h.

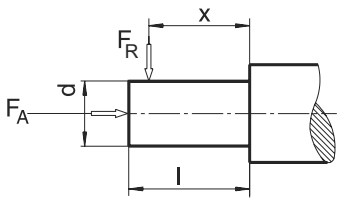

05590AXX

Figure 33: Determining the overhung load F_R

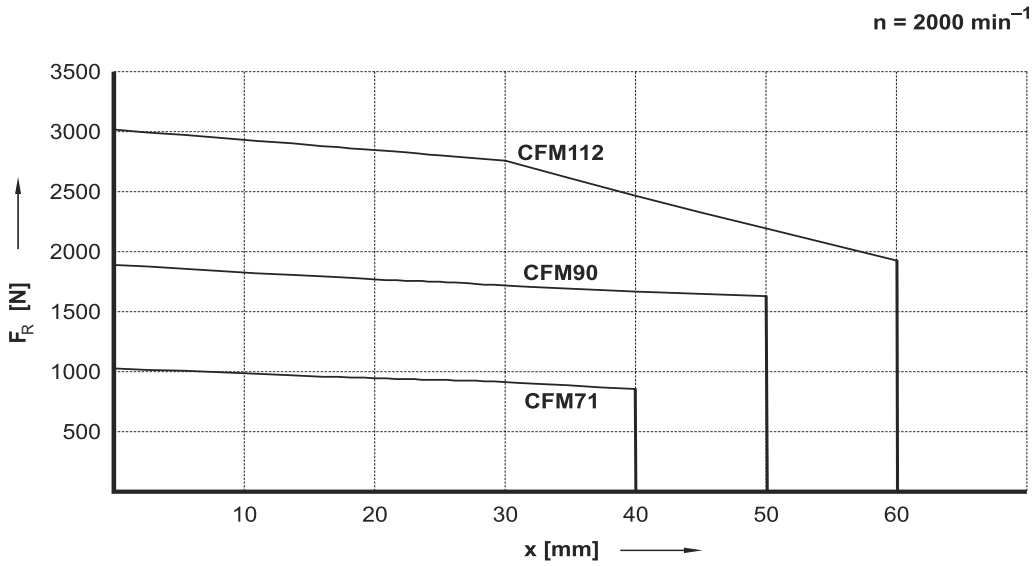

05506AXX

Figure 34: Permitted overhung load F_R at n = 2000 min $^{-1}$

Permitted axial load F_A at 2000 min $^{-1}$:

CFM71:	300 N
CFM90:	550 N
CFM112:	900 N

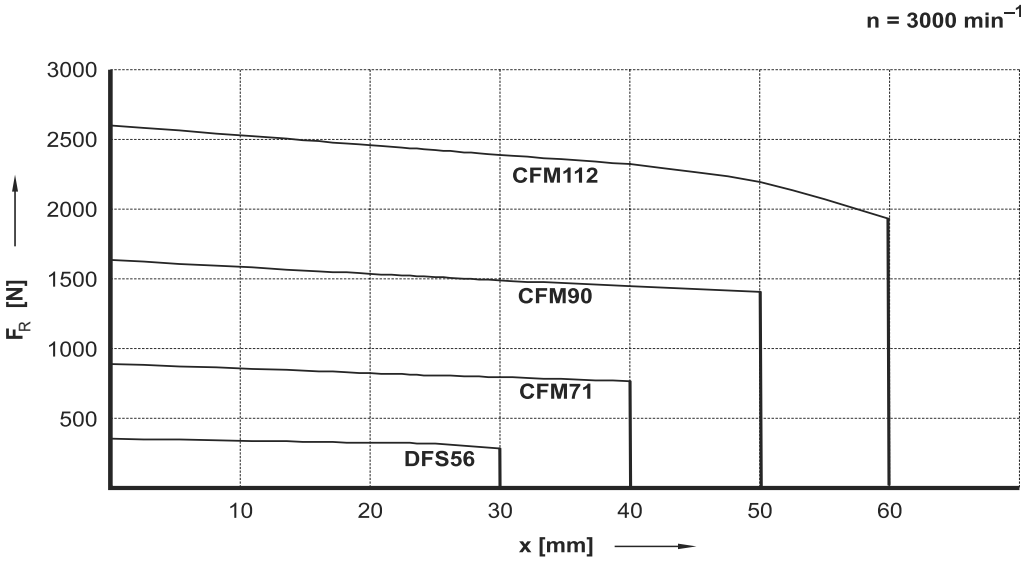

Figure 35: Permitted overhung load F_R at n = 3000 min $^{-1}$

Permitted axial load F_A at 3000 min $^{-1}$:

DFS56:	130 N
CFM71:	250 N
CFM90:	500 N
CFM112:	800 N

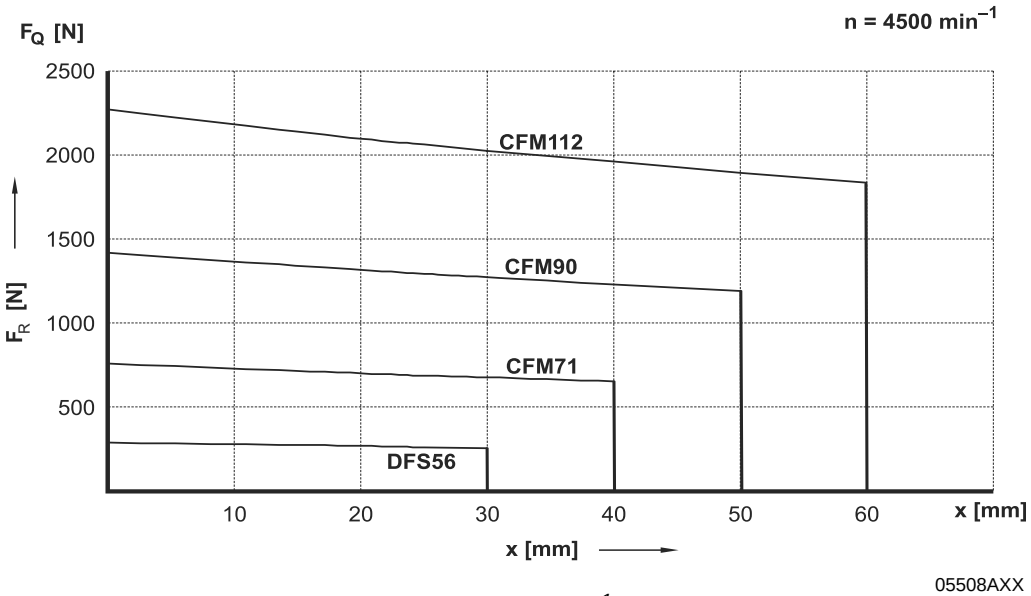

Figure 36: Permitted overhung load F_R at n = 4500 min $^{-1}$

Permitted axial load F_A at 4500 min $^{-1}$:

DFS56:	100 N
CFM71:	200 N
CFM90:	400 N
CFM112:	600 N

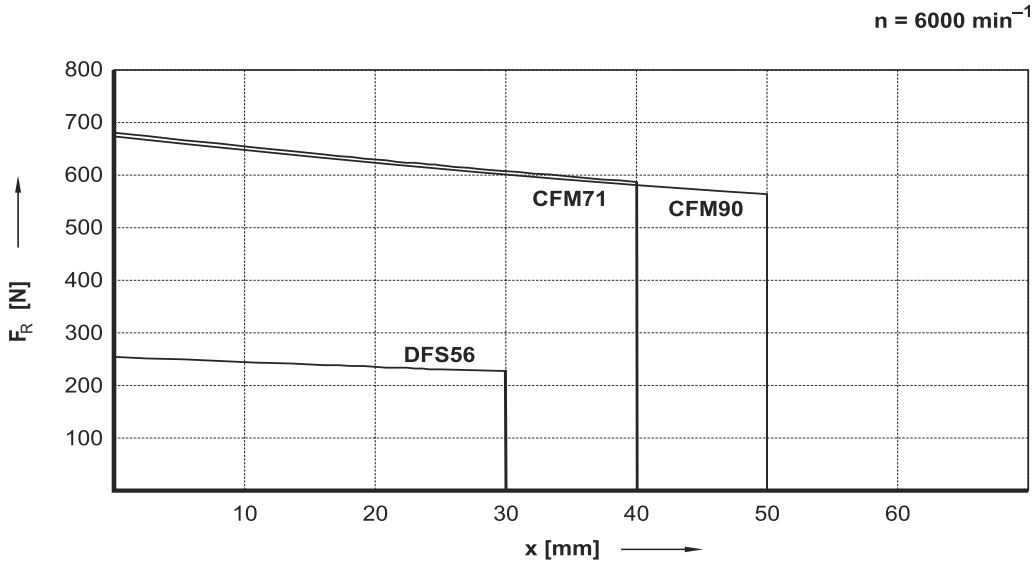

Figure 37: Permitted overhung load F_R at n = 6000 min $^{-1}$

Permitted axial load F_A at 6000 min $^{-1}$:

DFS56:	80 N
CFM71:	160 N
CFM90:	300 N

Motor bearings used

Motor type	Drive-end bearing	Non drive-end bearing
DFS56M + L	6202-2Z-J	6201-2Z-J
DFS56H	6003-2Z-J	6201-2Z-J
CFM71	6205-2Z-J	6303-2Z-J
CFM90	6207-2Z-J	6305-2Z-J
CFM112	6308-2Z-J	6207-2Z-J

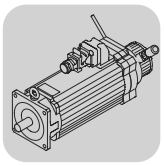

11.5 Motor options

The following motor options are available for DFS56 and CFM71 - 112 motors:

1. SM / SB plug connector
2. Terminal box KK / KK5 / KK6
3. B / BR brake
4. RH1M / RH1L resolver
5. ES1H / AS1H absolute HIPERFACE® encoder.
6. AV1Y, AV1H, EV1H absolute encoder
7. VR forced cooling fan

Other motor options are available on request.

1. SM / SB plug connector

The power cable / power + brake cable for DFS motors is each connected to the motor axially at a right angle with a round connector (Intercontec).

CFM motors are connected via a rectangular plug connector (C148U, by Amphenol). This connector system offers the following advantages:

- One connector size for all connection cross sections from 1.5 mm^2 to 10 mm^2.
- Metallic housing to ensure EMC
- Assembly without requiring special tools
- Control contacts in addition to the motor power contacts in one connector housing
- Separate insulation elements for power and control contacts
- UL certified

The other control contacts are assigned by SEW-EURODRIVE for connecting the BR brake. Socket contacts for core cross sections from 1 mm^2 or 1.5 mm^2 are used for this purpose.

Type designation

A four-digit type designation is assigned to the power plug connector and the encoder plug connector. The second position indicates whether only the motor power is connected, or the motor power combined with the brake. The fourth digit represents a code for the core cross section to be connected or indicates that the motor was delivered without mating connector.

DFS56

1s pos.:	**S**	Connection via plug connector
2nd pos.:	**M**	Motor
	B	Brake motor
3rd pos.:	**1**	Connector size
4th pos.:	**0**	Delivery without mating plug

M in the second position means: 1: 4 x 1.5 mm^2 (without brake)
B in the second position means: 1: 4 x 1.5 mm^2 + 2 x 1 mm^2 (with brake)

Example

S M 1 1

- 1: with mating connector, 4 x 1.5 mm^2
- 1: Indicates the connector size
- M: Motor
- S: Plug connector

In the basic version, SEW-EURODRIVE delivers DFS motors with the flange socket on the motor end and without mating connector. The encoder cable entry is axial.

CFM

1st pos.:	**S**	Connection via plug connector
2nd pos.:	**M**	Motor
	B	Brake motor
3rd pos.:	**5**	Connector housing size and type of encoder cable entry (radial)
	6	Connector housing size and type of encoder cable entry (axial)
4th pos.:	**0**	Delivered without mating plug

M in 2nd pos. means
- 1: 4 x 1.5 mm^2
- 2: 4 x 2.5 mm^2
- 4: 4 x 4 mm^2
- 6: 4 x 6 mm^2
- 9: 4 x 10 mm^2

B in 2nd pos. means
- 1: 4 x 1.5 mm^2 + 3 x 1 mm^2
- 2: 4 x 2.5 mm^2+ 3 x 1 mm^2
- 4: 4 x 4 mm^2+ 3 x 1 mm^2
- 6: 4 x 6 mm^2+ 3 x 1.5 mm^2
- 9: 4 x 10 mm^2+ 3 x 1.5 mm^2

Example

S B 5 9

- 9: 4 x 10 mm^2 motor core cross section and 3 x 1.5 mm^2 brake core cross section
- 5: Indicates the connector housing size and radial encoder cable entry
- B: Motor and brake
- S: Plug connector

In the basic version, SEW-EURODRIVE delivers CFM motors with the flange socket on the motor end and without SM50 / SB50 mating connector. The encoder cable entry is radial.

2. Connection with terminal box KK

Motor type	Power connection			Encoder / resolver / thermal motor protection	
	Connection	Maximum connection cross section	Cable entry	Connection	Cable entry
DFS56..	Cage tension spring	4 x 2.5 mm^2	M20 x 1.5	Screw terminal in terminal box	M16 x 1.5
CFM71..	3 x M5	4 x 6 mm^2	M25 x 1.5	Spring cage terminal in the encoder housing	M16 x 1.5
CFM90../112S	3 x M6	4 x 10 mm^2	M32 x 1.5		M16 x 1.5
CFM112M / H	3 x M8	4 x 25 mm^2	M50 x 1.5		M16 x 1.5

EMC compliant cabling

Make sure that

- the line type corresponds to the applicable regulations (rated currents are indicated on the nameplate),
- the signal lines consist of twisted pair wires and are collectively shielded (resolver lead as example: one pair each for reference, sine and cosine signals),
- **the brake cables are routed separately from power cables, or that power cables and, if necessary, also brake cables are shielded to protect the brake against electro-magnetic interference.**

DFS56 motor power connection

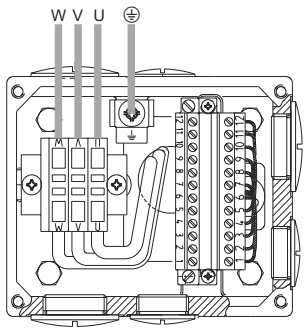

54739AXX

Figure 38: DFS56 connection

U	U phase
V	V phase
W	W phase
⏚	Protective earth

The power cables of the motor are connected to the terminal block using cage tension springs.

The direction of rotation cannot be changed by changing the phases.

Connection of resolver / encoder and thermal motor protection / brake for DFS56

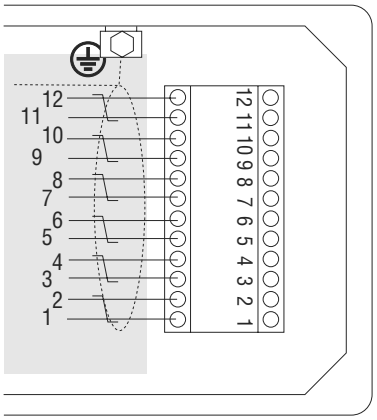

54636Axx

Figure 39: Signal lines of resolver / encoder and thermal motor protection/brake

Resolver			Encoder		
1	ref +	Reference	1	cos +	Cosine
2	ref -		2	ref cos	Reference
3	cos +	Cosine	3	sin +	Sine
4	cos -		4	ref sin	Reference
5	sin +	Sine	5	D -	
6	sin -		6	D +	
7	-	-	7	GND	
8	-	-	8	Us	
9	TF/KTY +	Motor protection	9	TF/KTY +	Motor protection
10	TF/KTY -		10	TF/KTY -	
11	- / 6	Brake	11	- / 6	Brake
12	+ /5		12	+ /5	

Motor power connection to CFM

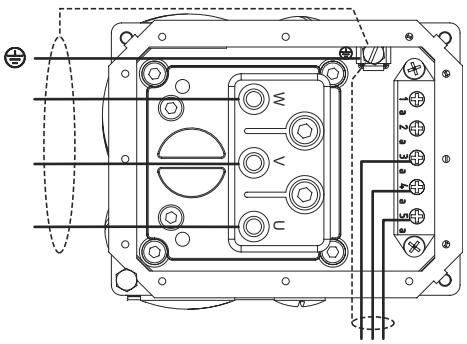

54642AXX

Figure 40: CFM motor connection

Contact	Core identification	Connection
U	Black with white lettering U, V, W	U
V		V
W		W
PE	Green / yellow	PE

Contact of the auxiliary terminal strip	Core identification	Connection of BME, BMH, BMK, BMP brake rectifiers	Connection of BSG brake control unit
3a	Black with white lettering 1, 2, 3	14	1
4a		13	3
5a		15	5

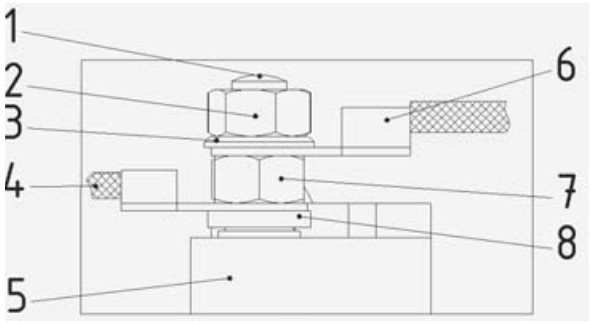

54670AXX

Figure 41: Power connection in the terminal box

1	Terminal stud	5	Terminal block
2	Top nut	6	Customer's cable
3	Washer	7	Bottom nut
4	Motor cable	8	Lock washer

For designing the terminal box, positions 6, 7 and 4 are regarded as current-carrying.

Resolver connection to CFM

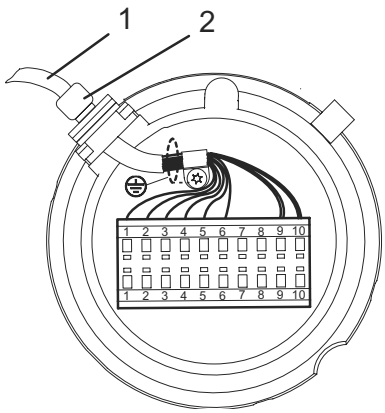

54644AXX

Figure 42: Connection of an RH1M resolver

1	Feedback cable
2	Cable gland

Encoder in delivery state

The housing is closed with an M16 × 1.5 screw plug. Positions 1 and 2 are not included in the scope of delivery.

Contact	RH1M / RH1L connection	AS1H / ES1H connection
1	R1 (reference +)	cos +
2	R2 (reference -)	ref cos
3	S1 (cosine +)	sin +
4	S3 (cosine -)	ref sin
5	S2 (sine +)	D -
6	S4 (sine -)	D +
7		GND
8		Us
9[1)]	TF (KTY+)	TF (KTY+)
10[1)]	TF (KTY-)	TF (KTY-)

1) Double assignment to increase cross section

2. Connection with terminal box variant KK5 / KK6

The expanded terminal box variant KK5 / KK6 in CM motors comprises the terminal box for power and the plug connector for signal evaluation.

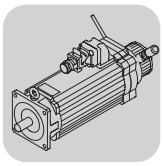

3. Brakes

DFS

The mechanical brake is not used as service brake but as emergency brake or holding brake for general machine standstill (**DFS56: holding brake only**). The brake is designed as mounted brake.

Observe the notes in the relevant operating instructions for servo controllers concerning the switching sequence of motor enable and brake control during standard operation.

Motor size DFS 56

The standard voltage supply of the brake is DC 24 V. The brake operates with a constant braking torque of 2.5 Nm (DFS56M and DFS56L) and 5 Nm (DFS56H). The brake cannot be retrofitted and operates without brake rectifier or brake control unit. The overvoltage protection must be implemented by the customer, for example using varistors.

Speed classes

Brake B of the DFS56 motor can be used in all speed classes.

CFM

The optional BR disc brake from SEW-EURODRIVE is integrated in the motor. It operates as DC operated fail safe brake, which means the brake is released electrically. The brake is applied automatically when the voltage is switched off or there is a power outage.

Note

In view of the high current loading and the DC voltage to be switched at inductive load, contactors in utilization category AC 3 (EN 60947-4-1) must always be used for controlling the brake rectifiers or BSG brake control unit.

Motor size CFM 71, 90, 112

As standard, the brakes are available for AC 110 V, AC 230 V, AC 400 V, AC 460 V and DC 24 V supply voltages. If no supply voltage is indicated for the brake, the brake will be delivered with a supply voltage of AC 400 V.

Speed classes

The BR brake for CFM71, CFM90 and CFM112 motors can be operated **up to a maximum of 4500 min^{-1}**.

Standard type

As standard, CFM /BR synchronous servomotors with BME brake control are supplied for AC connection or control unit BSG for DC 24 V connection. The motors are completely ready for connection.

Brake control (only sizes 71, 90, 112)

Only SEW brake control systems are used for controlling the brake. All brake control systems are protected against overvoltage by varistors as standard.

Refer to the "Brakes and Accessories" manual for detailed information about SEW-EURODRIVE brakes.

The brakes are available with DC and AC voltage connection.

- AC voltage connection:
  - **BME**, equipped with DIN rail profile
- DC voltage connection:
  - **BSG**

Two types of electrical cut-off are available:

- Normal application times: Cut-off in the AC circuit.
- Particularly short application times: Cut-off in the AC and DC circuits.

The brake control systems are mounted in the control cabinet. They are not included in the scope of delivery.

The following options are available:

- AC supply, cut-off in the AC and DC circuits without additional switch contact, particularly short application times: **BMP**.
- AC supply, brake heating function when switched off: **BMH**.
- The **BMK / BMV** control system energizes the brake coil if the supply system and a DC 24 V signal (e.g. from the PLC) are present simultaneously. The brake is applied if one condition is not being met. BMK allows for shortest response and application times.

Control cabinet

The following table lists SEW brake control systems for installation in the control cabinet. The different housings have different colors (= color code) to make them easier to distinguish.

Brake control	Function	Voltage	Holding current I_{Hmax} (A)	Type	Part number	Color code
BME	One-way rectifier with electronic switching	AC 150..500 V	1.5	BME 1.5	825 722 1	Red
		AC 42...150 V	3.0	BME 3	825 723 X	Blue
BMH	One-way rectifier with electronic switching and heating function	AC 150..500 V	1.5	BMH 1.5	825 818 X	Green
		AC 42...150 V	3	BMH 3	825 819 8	Yellow
BMP	One-way rectifier with electronic switching, integrated voltage relay for cut-off in the DC circuit	AC 150..500 V	1.5	BMP 1.5	825 685 3	White
		AC 42...150 V	3.0	BMP 3	826 566 6	Light blue
BMK	One-way rectifier with electronic switching, DC 24 V control input and cut-off in the DC circuit	AC 150..500 V	1.5	BMK 1.5	826 463 5	Water blue
		AC 42...150 V	3.0	BMK 3	826 567 4	Bright red
BSG	Control unit for DC 24 V connection with electronic switching	DC 24 V	5.0	BSG	825 459 1	White
BMV	Electronic switching, DC 24 V control input and cut-off in the DC circuit	DC 24 V	5.0	BMVS	1 300 006 3	White

Short response times

A particular feature of the SEW brake is its patented two coil system. This system consists of accelerator coil and coil section. The special SEW brake control system ensures that the accelerator coil is switched on with a high current inrush when the brake is released, after which the coil section is switched on. The result is a particularly short response time when releasing the brake. The brake disk moves clear very swiftly and the motor starts up with hardly any brake friction.

This principle of the two coil system also reduces self-induction so that the brake is applied more rapidly. The result is a reduced braking distance. The SEW brake can be cut off in the DC and AC circuits to achieve particularly short response times when applying the brake, for example for hoists.

Basic structure of sizes 71, 90, 112

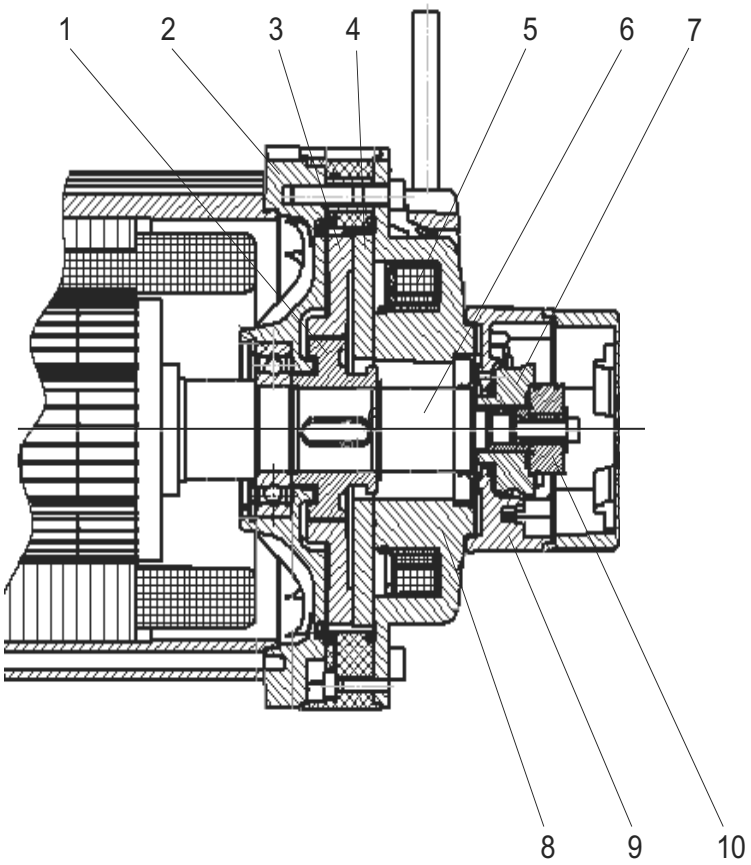

54677AXX

Figure 43: Basic structure of the brake with RH1L resolver

1	Carrier	6	Motor shaft
2	Brake end shield	7	Spacer
3	Brake disc	8	Brake coil body
4	Pressure plate	9	Encoder housing
5	Brake coil	10	RH1L resolver

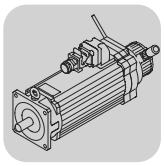

Technical data

The following table lists the technical data of SEW brakes. The type and number of brake springs determines the level of the braking torque. Unless specified otherwise in the order, the maximum braking torque MB1 is installed as standard. Other brake spring combinations can result in reduced braking torque values M_{B2}.

Motor type	M_{B1} [Nm]	M_{B2} [Nm]	W [10^6 J]	t_1 [10^{-3}s]	t_2II [10^{-3}s]	t_2I [10^{-3}s]
DFS56M /B	2.5	–	–	7	–	5
DFS56L /B	2.5	–	–	7	–	5
DFS56H /B	5	–	–	8	–	5
CFM71S /BR1	10	5	60	20	40	100
CFM71M /BR1	14	7	60	25	30	90
CFM71L /BR1	14	10	60	30	20	80
CFM90S /BR2	28	14	90	30	35	120
CFM90M /BR2	40	20	90	35	25	90
CFM90L /BR2	40	28	90	40	25	90
CFM112S /BR8	55	28	180	35	50	140
CFM112M /BR8	90	40	180	40	40	120
CFM112L /BR8	90	55	180	45	35	100
CFM112H /BR8	90	55	180	45	85	100

M_{B1} Maximum braking torque

M_{B2} Reduced braking torque

W Braking work until service

t_1 Response time

t_2II Brake application time for cut-off in the DC and AC circuits

t_2I Brake application time for cut-off in the AC circuit (with DFS56 cut-off in the DC circuit)

The response and application times are recommended values in relation to the maximum braking torque.

Current and braking torque

Cut-off in the AC circuit

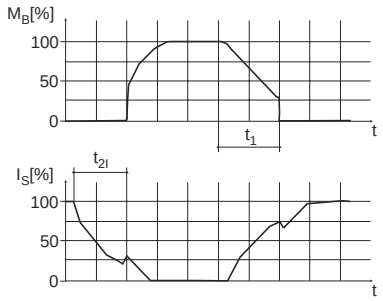

54615AXX

Figure 44: Current and braking torque for cut-off in the AC circuit

Cut-off in the DC and AC circuits

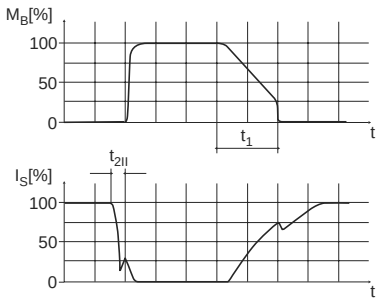

54616AXX

Figure 45: Current and braking torque for cut-off in the DC and AC circuits

M_B = Braking torque

I_S = Coil current

Operating currents

The following tables list the operating currents of the brakes at different voltages. The following values are specified:

- Inrush current ratio I_B/I_H; I_B = accelerator current, I_H = holding current
- Holding current I_H
- Rated voltage U_N

The accelerator current I_B (= inrush current) only flows for a short time (ca. 120 ms) when the brake is released or during voltage dips below 70 % of rated voltage.

The values for the holding currents I_H are r.m.s. values (arithmetic mean value at DC 24 V). Use suitable measuring instruments for current measurement.

Brake		**B**		**BR1**	**BR2**	**BR8**
For motor		DFS56M/L	DFS56H	CFM71	CFM90	CFM112
M_{Bmax} [Nm]		2.5	5	20	40	90
P_B [W]		12	13.4	45	55	75
Inrush current ratio I_B/I_H		–	–	4.0	4.0	6.3
Rated voltage U_N (...) Voltage tolerances **[V_{AC}]**	**[V_{DC}]**	**I [A_{DC}]**	**I [A_{DC}]**	**I_H [A_{AC}]**	**I_H [A_{AC}]**	**I_H [A_{AC}]**
	24 (24-25)	0.5	0.56	1.5	1.7	2.6
110 (99-121)		–	–	0.71	0.9	1.2
230 (218-243)		–	–	0.31	0.39	0.53
400 (380-431)		–	–	0.18	0.22	0.29
460 (432-484)		–	–	0.16	0.21	0.26

Cross section of the brake cable

Select the cross section of the brake cables according to the currents in your application. Bear in mind the inrush current of the brake when selecting the cross section. The voltage drop resulting from the inrush current must not cause the voltage to fall below 90 % of the supply voltage.

Note

Wire cross sections of max. 2.5 mm^2 can be connected to the terminals of the brake control systems. Intermediate terminals must be used in case of larger cross sections. Keep the distance between the intermediate terminal and the brake control system as short as possible.

Observe the voltage drop that occurs along the cable in particular with the DC 24 V brake coil when dimensioning the cross sections for the brake cable. The accelerator current is decisive for the calculation.

The permitted tolerance for the rated voltage outside the range limit is ± **5%** (BR1, BR2, BR8).

The permitted tolerance for the B brake on a DS56 motor is ± **10%**.

Manual brake release

A manual brake release kit according to the brake size can be ordered for retrofitting the manual brake release.

Part number	**Contents**
BR1 manual brake release kit 0 196 602 2	1 releasing lever, 1 hand lever, 2 hex nuts
BR2 manual brake release kit 0 196 603 0	
BR8 manual brake release kit 0 196 604 9	

Brake connection

BME brake rectifier

Cut-off in the AC circuit / normal application of the brake.

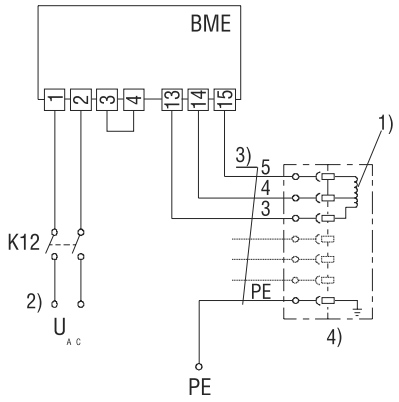

Cut-off in the DC and AC circuits / rapid application of the brake.

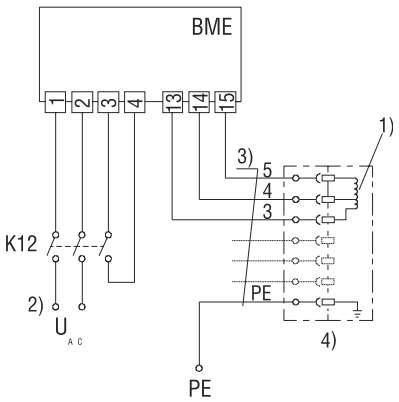

BMP brake rectifier

Cut-off in the DC and AC circuits / rapid application of the brake / integrated voltage relay.

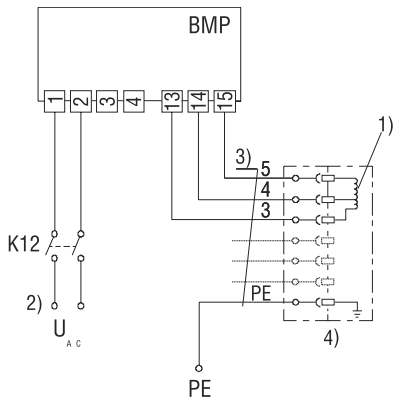

BMH brake rectifier Cut-off in the AC circuit / normal application of the brake.

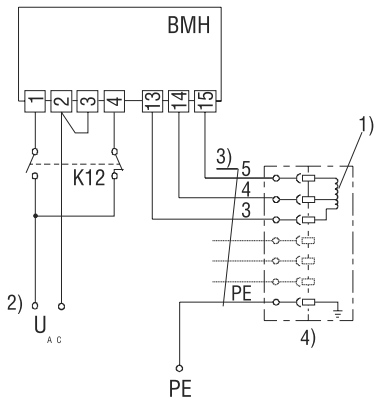

Cut-off in the DC and AC circuits / rapid application of the brake.

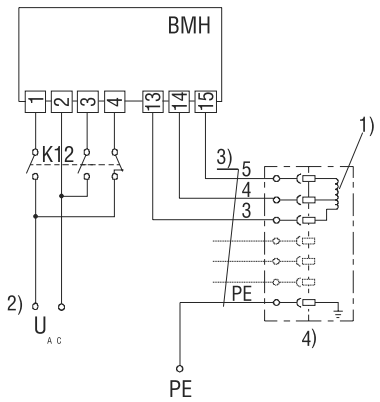

BMK brake rectifier Cut-off in the DC and AC circuits / rapid application of the brake / integrated voltage relay / integrated DC 24 V control input.

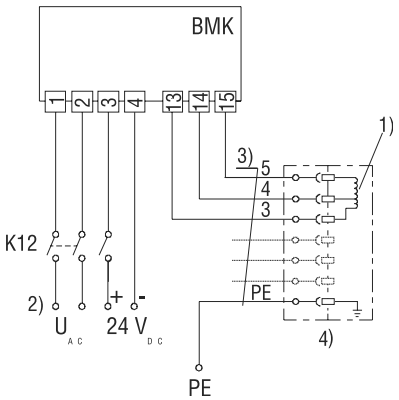

BMV brake control Cut-off in the DC and AC circuits / rapid application of the brake / integrated DC 24 V control input.

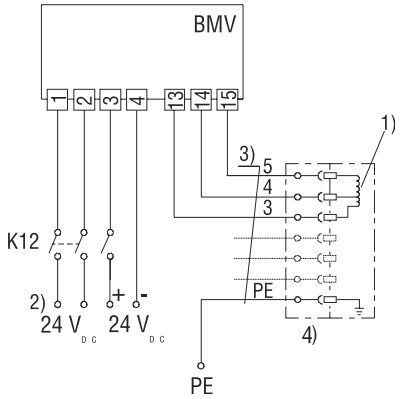

BSG control unit For DC voltage supply with DC 24 V.

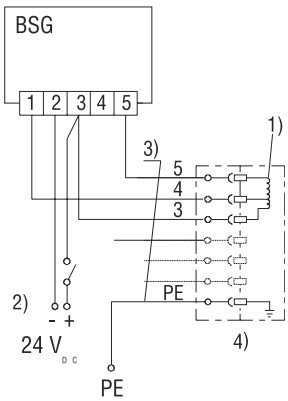

1) Brake coil

2) To release the brake, apply voltage as indicated on the nameplate, **switch contacts according to utilization category AC3 to EN 60947-4.1. BMH:** To release and heat the brake at zero speed, apply the voltage as indicated on the nameplate. K12 not activated: Heating mode Contact rating of terminals 1 and 4 at BMH: AC11, terminal 3: AC3 according to EN 60 947-4-1

3) Brake cable

4) BME / BMV angular connector 185 871 8, BSG terminal screws

Dimensions BME, BMP, BMH, BMK, BMV

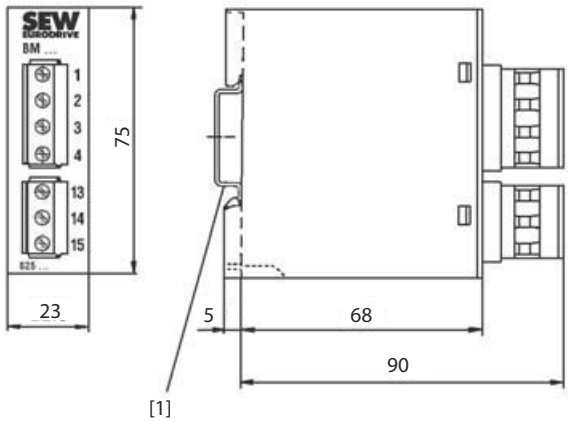

[1] DIN rail mounting EN 50022-35 x 7.5

Dimensions BSG

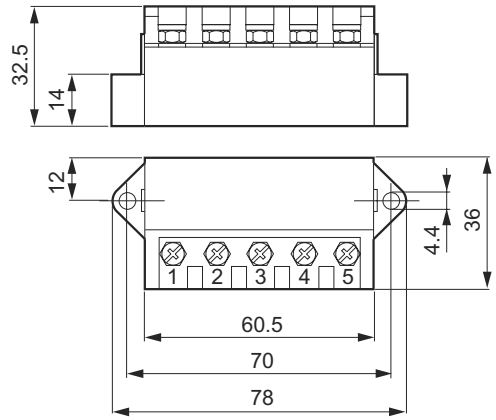

54243AXX

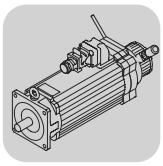

4. Resolvers

Resolvers for motor sizes DFS56, CFM71...112

Part number for RH1M / RH1L	0199 031 4
No. of poles	2
Primary	Rotor
Input voltage	7 V
Input frequency	7 kHz
Gear ratio ± 10%	0.5
Phase shift ±5°	+13°
Input impedance ± 15%	130 +j 120 Ω
Output impedance ± 15%	200 +j 270 Ω
Input resistance ± 10%	82 Ω
Output resistance ± 10%	68 Ω
Max. electrical fault	± 6'
Temperature range	-55°C to +150 °C

SEW servo gearmotors are supplied with 2-pole resolvers as standard. Further information on other resolvers is available on request.

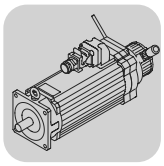

5. AS1H / ES1H Hiperface encoder

SEW-EURODRIVE offers Hiperface encoders as alternative for resolvers.

Type		ES1H 0199 443 3	AS1H 0199 442 5
Supply voltage	U_B	7 ... 8 ... 12 V_{DC} polarity reversal protected	
Max. current consumption	I_{in}	140 mA	
Maximum operating frequency	f_{Grenz}	200 kHz	
Pulses (sine cycles) per revolution	A, B	1024	
Output amplitude per track		1 V_{SS} sin/cos	
Single-turn resolution		32768 increments/revolution (15 bit)	
Multi-turn resolution		–	4096 revolutions (12-bit)
Transmission protocol		Hiperface	
Serial data output		Driver according to EIA RS-485	
Vibration (55...2000 Hz)		≤ 200 m/s^2 (DIN IEC 68-2-6)	
Maximum speed	n_{max}	6000 min^{-1}	
Connection		12-pin round connector plug (Intercontec)	

6. AV1Y, AV1H, EV1H absolute encoders

Type		AV1Y 0198 889 1	AV1H 0187 189 7	EV1H 0187 287 7
Supply voltage	U_B	DC 10...15...24...30 V polarity reversal protected	DC 7...12 V polarity reversal protected	
Max. current consumption	I_{in}	250 mA	80 mA	
Max. operating frequency	f_{Grenz}	≥ 100 kHz	200 kHz	
Pulses (sine cycles) per revolution	A, B	512	1024	
Output amplitude per track		1 V_{SS} sin/cos		
Scanning code		Gray code	-	
Single-turn resolution		4096 increments/revolution	32768 increments/revolution	
Multi-turn resolution		4096 revolutions (12 bit)		-
Data transmission absolute values		synchronous, serial (SSI)	Hiperface	
Serial data output		Driver according to EIA RS-485		
Serial clock input		Opto-coupler, recommended driver to EIA RS-485	-	
Cycle frequency		permitted range: 90...300... 1100 kHz. (max. 100 m cable length with 300 kHz)	-	
Switching gap time		12...35 µs	-	
Vibration (55...2000 Hz)		≤ 100 m/s^2 (DIN 150 68-2-6)	200 m/s^2 (DIN 150 68-2-6)	
Max. speed	n_{max}	6000 min^{-1}		
Weight	m	0.30 kg	0.55 kg	
Operating temperature	ϑ_B	-15°C...+60°C (EN 60721-3-3, class 3K3)	-20°C...+85°C (EN 60721-3-3, class 3K3)	
Enclosure		IP65 (EN 60529)		
Connection		1 m (3.3 ft) cable with 17-pin round connector, suitable for female connector SPUC 17B FRAN	1 m (3.3 ft) cable with 12-pin round connector (Intercontec)	

7. VR forced cooling fan

CFM synchronous servomotors can be equipped with a forced cooling fan if required. The VR forced cooling fan is available for DC 24 V and AC 100 V ... 240 V.

Forced cooling fan type	VR		
For motor size	CFM71	CFM90	CFM112
Supply voltage DC [V]	24 ± 10 %		
Current consumption [DC A]	0.46		0.75
Power consumption [W]	11		18
Air discharge rate [m^3/h]	118	118	275
Ambient temperature [°C]	-20 ... + 60		
Enclosure	IP54 / IP55		
Electrical connection	Plug connector		
Max. cable cross section [mm^2]	3 × 1		
Connection cable, max. Ø	7 mm		

UWU51A switched-mode power supply

The AC voltage type includes a VR forced cooling fan and the UWU51A switched-mode power supply.

Input: AC 100 ... 240 V – 6 % / + 10 %, 50/60 Hz.

Output: DC 24 V – 1 % / + 2 %, 1.3 A.

Connection: Terminal screws 0.2 ... 2.5 mm^2, separable.

Enclosure: IP20; installation on support rail EN 50022 in the control cabinet.

Part number: 187 441 1.

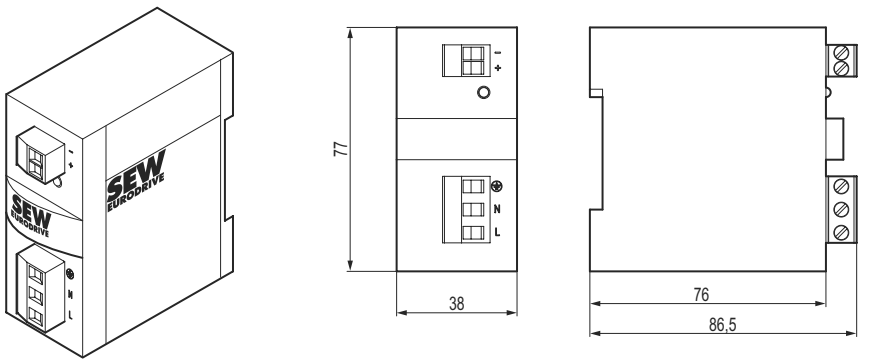

Figure 46: UWU51A switched-mode power supply

Forced cooling fan, cpl.

Forced cooling fan for motor type	Part number
24 V, CFM71	0 187 380 6
24 V, CFM71BR	0 187 381 4
24 V, CFM90	0 187 382 2
24 V, CFM90BR	0 187 479 9
24 V, CFM112	0 187 384 9
24 V, CFM112BR	0 187 383 0
24 V, CFM71BR KK	0 187 622 8
24 V, CFM90BR KK	0 187 624 4

Retrofitting forced cooling fan

An accessory bag must be ordered for retrofitting a forced cooling fan.

Accessory bag for motor type	Part number
CFM71	0 187 945 6
CFM90	0 199 322 4
CFM112	0 199 323 2
CFM71 - 112BR	0 199 324 0

Refer to the operating instructions of the motor for details on retrofitting a forced cooling fan.

11.6 Dimension sheets for synchronous servomotors

Synchronous servo (brake) motors DFS56.. (/B) with plug connector

08 016 03 98

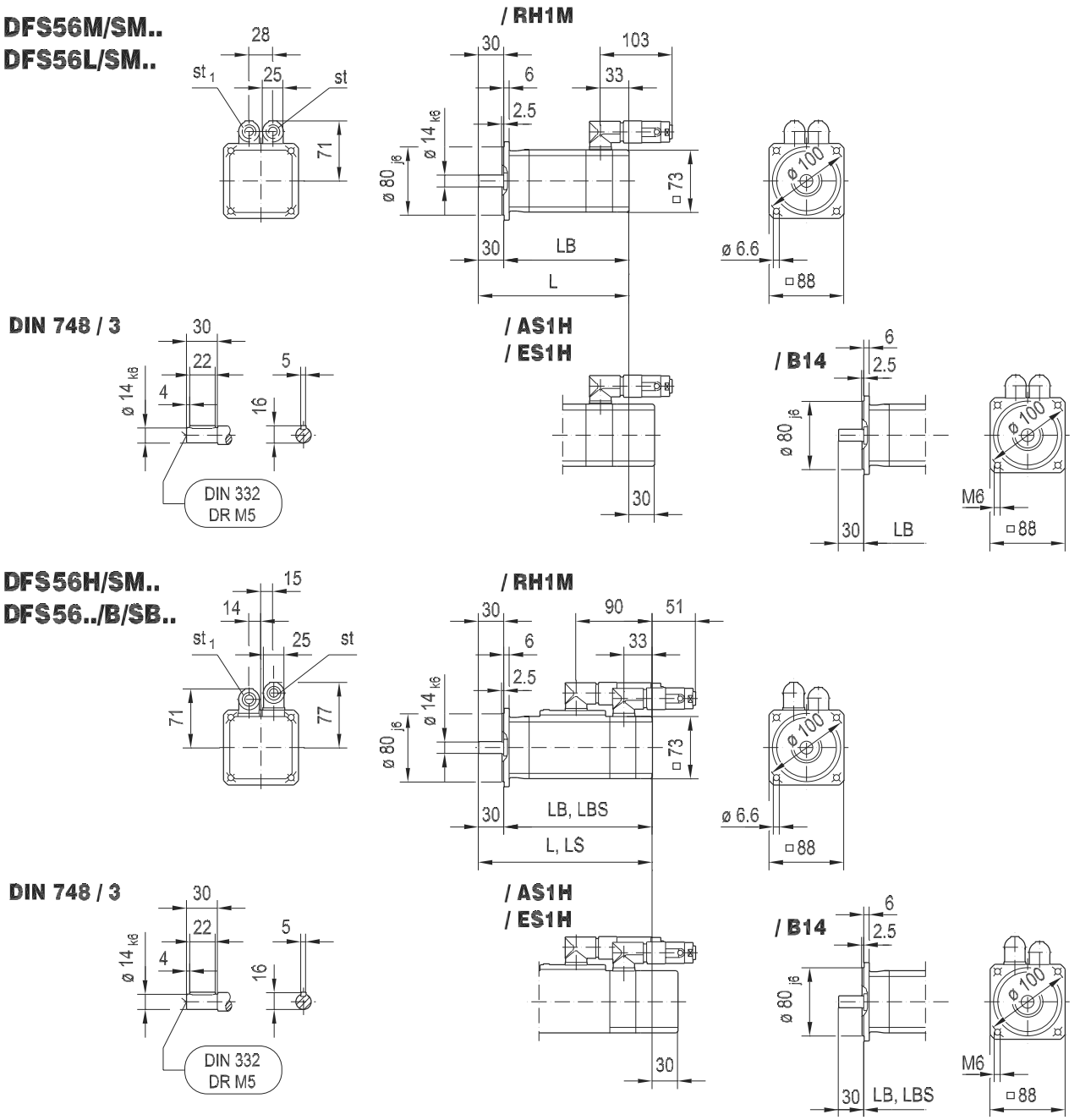

(→ 📖 105)	DFS56M/SM..	DFS56M/B/SB..	DFS56L/SM..	DFS56L/B/SB..	DFS56H/SM..	DFS56H/B/SB..
L, LS	174	204	206	236	309	309
LB, LBS	144	174	176	206	279	279
st[1)]	9-14	9-14	9-14	9-14	9-14	9-14
st_1[2)]	5,5-14	5,5-14	5,5-14	5,5-14	5,5-14	5,5-14

1) Round connecter, power

2) Round connector, signal

Synchronous servo (brake) motors DFS56.. (/B) with terminal box

08 005 00 04

DFS56.. /KK
DFS56.. /B /KK

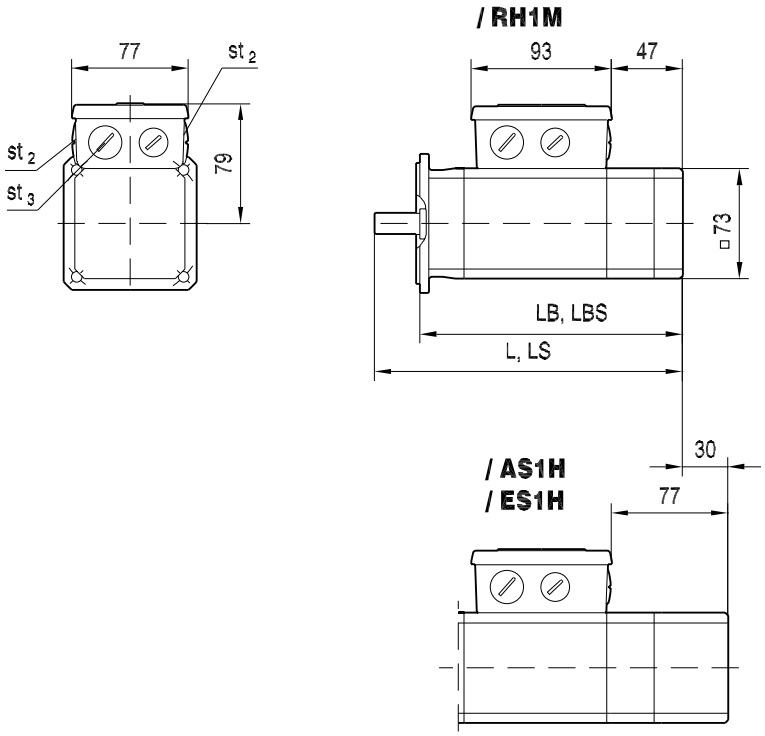

(→ 📖 105)	DFS56M/KK	DFS56M/B/KK	DFS56L/KK	DFS56L/B/KK	DFS56H/KK	DFS56H/B/KK
L, LS	204	204	236	236	309	309
LB, LBS	174	174	206	206	279	279
st_2	1xM20x1.5 1xM16x1.5	1xM20x1.5 1xM16x1.5	1xM20x1.5 1xM16x1.5	1xM20x1.5 1xM16x1.5	1xM20x1.5 1xM16x1.5	1xM20x1.5 1xM16x1.5
st_3	1xM20x1.5 1xM16x1.5	1xM20x1.5 1xM16x1.5	1xM20x1.5 1xM16x1.5	1xM20x1.5 1xM16x1.5	1xM20x1.5 1xM16x1.5	1xM20x1.5 1xM16x1.5

Synchronous servo (brake) motors DFS56..(IB) with encoder

08 119 02 99

DFS56..

/ AV1Y

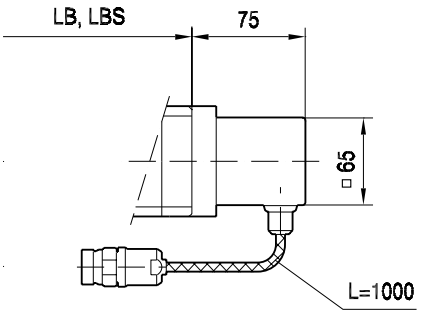

/ AV1H
/ EV1H

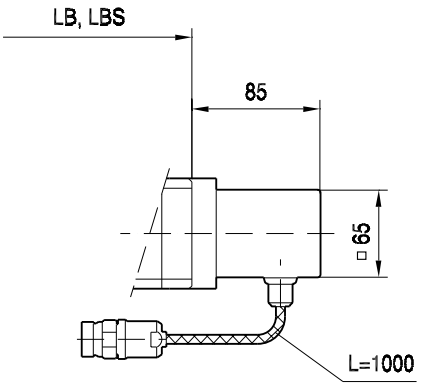

Synchronous servomotors CFM71.. with plug connector and absolute encoder/resolver

08 172 02 01

CFM71S/SM..
CFM71M/SM..
CFM71L/SM..

/ RH1M

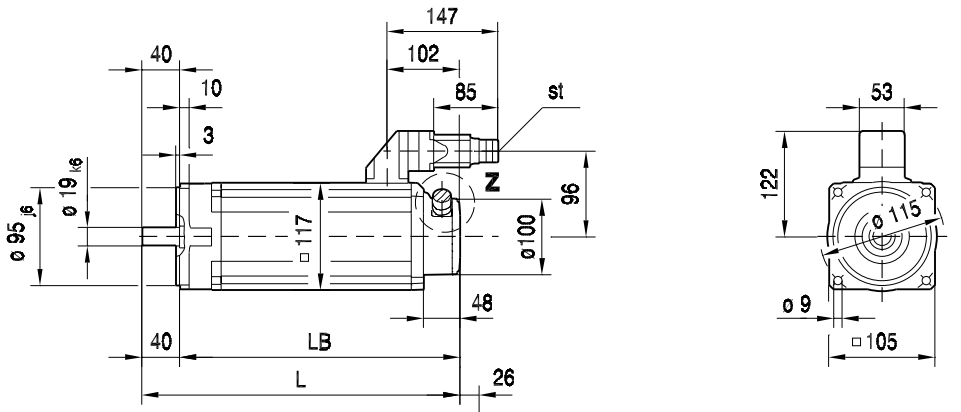

DIN 748 / 3

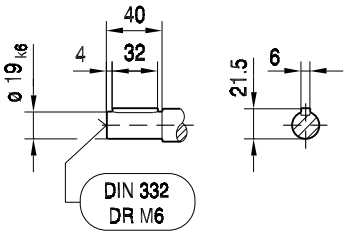

/ AS1H
/ ES1H

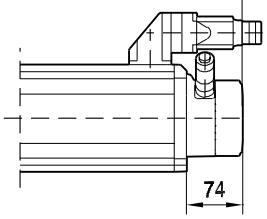

/ B14

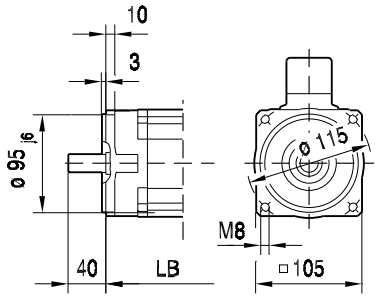

/ SM5.

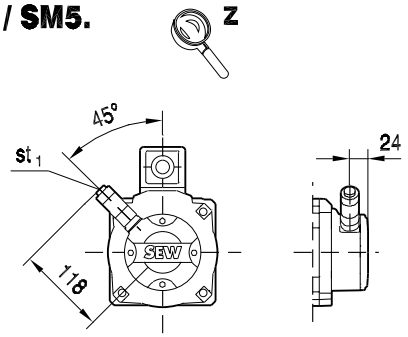

/ SM6.

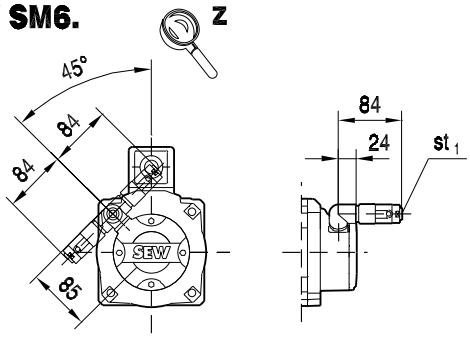

(→ 📖 105)	CFM71S/SM..	CFM71M/SM..	CFM71L/SM..
L	289	309	349
LB	249	269	309
st[1)]	8 ...14	14 ...17	14 ...17
st_1[1)]	5.5 ... 10.5	5.5 ... 10.5	5.5 ... 10.5

1) Diameter of cable to be connected

Synchronous servo brake motors CFM71/BR.. with plug connector and absolute encoder/resolver

09 033 02 01

CFM71S/BR/SB..
CFM71M/BR/SB..
CFM71L/BR/SB..

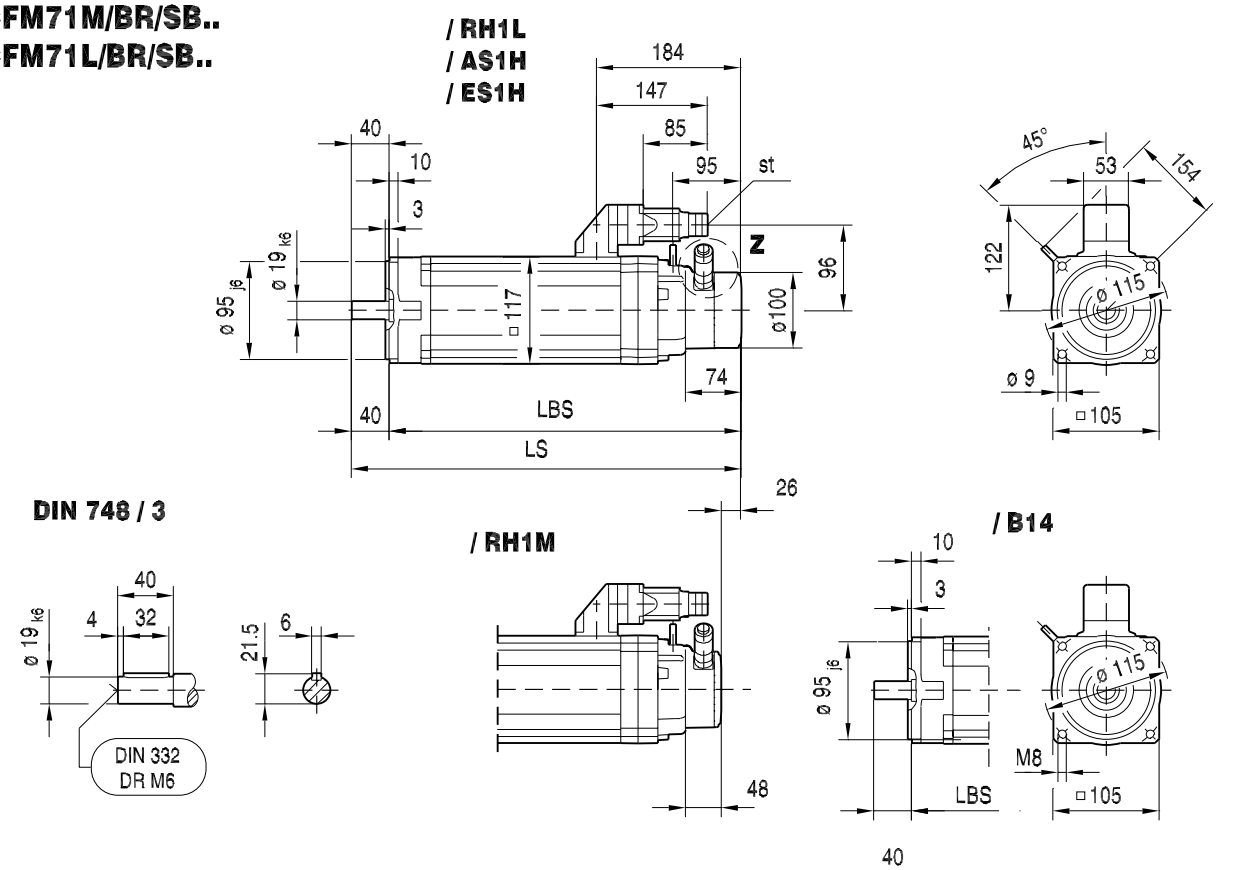

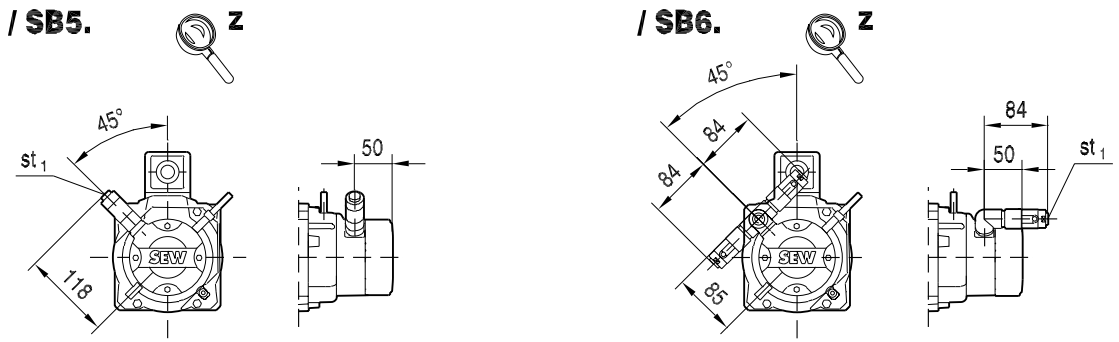

(→ 📖 105)	CFM71S/BR/SB..	CFM71M/BR/SB..	CFM71L/BR/SB..
LS	371	391	431
LBS	331	351	391
st[1)]	8 ...14	14 ...17	14 ...17
st_1[1)]	5.5 ... 10.5	5.5 ... 10.5	5.5 ... 10.5

1) Diameter of cable to be connected

Synchronous servomotors CFM90.. with plug connector and absolute encoder/resolver

08 173 02 01

CFM90S/SM..
CFM90M/SM..
CFM90L/SM..

/ RH1M

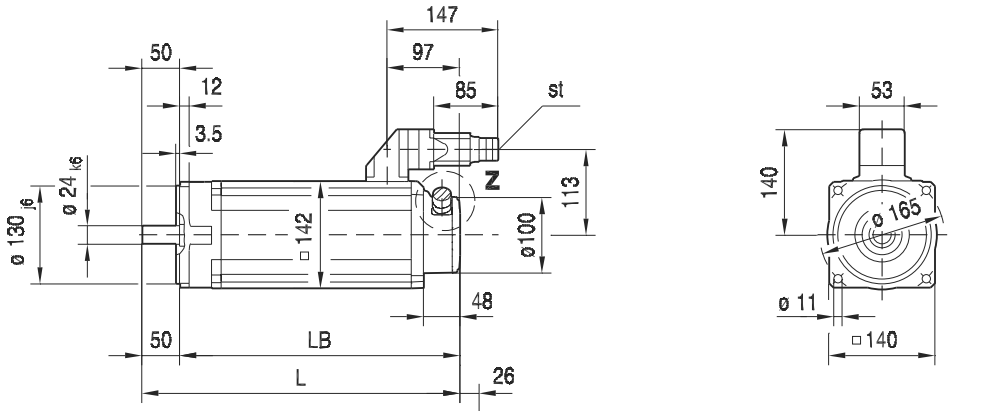

DIN 748 / 3

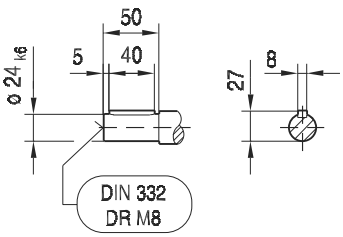

/ AS1H
/ ES1H

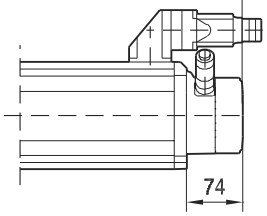

/ B14

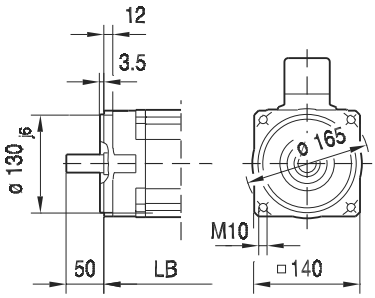

/ SM5.

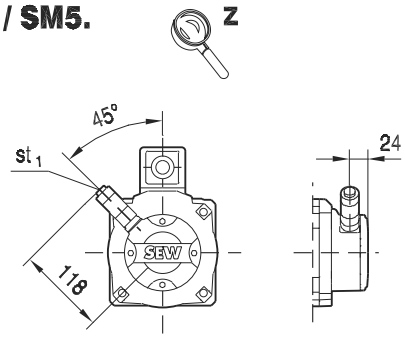

/ SM6.

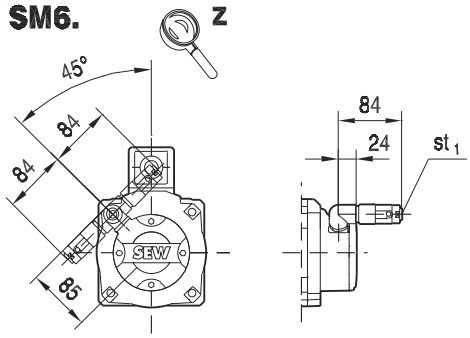

(→ 📖 105)	CFM90S/SM..	CFM90M/SM..	CFM90L/SM..
L	341	368	422
LB	291	318	372
st[1)]	8 ...14	14 ...17	14 ... 17
st_1	5.5 ... 10.5	5.5 ... 10.5	5.5 ... 10.5

1) Diameter of cable to be connected

Synchronous servo brake motors CFM90/BR.. with plug connector and absolute encoder/resolver

09 034 02 01

CFM90S/BR/SB..
CFM90M/BR/SB..
CFM90L/BR/SB..

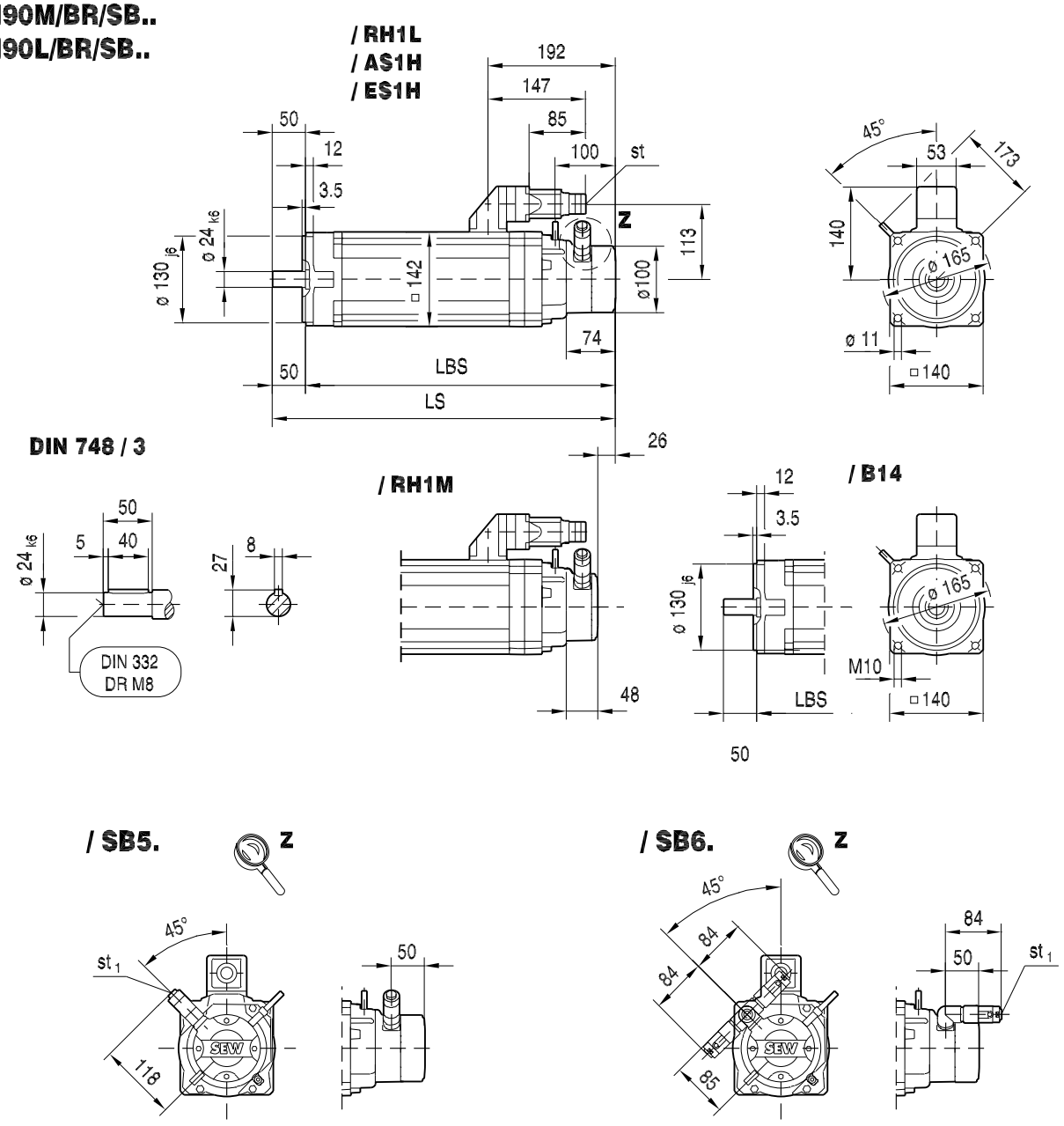

(→ 📖 105)	CFM90S/BR/SB..	CFM90M/BR/SB..	CFM90L/BR/SB..
LS	436	463	517
LBS	386	413	467
st[1)]	8 ...14	14 ...17	14 ... 17
st_1[1)]	5.5 ... 10.5	5.5 ... 10.5	5.5 ... 10.5

1) Diameter of cable to be connected

Synchronous servomotors CFM112.. with plug connector and absolute encoder/resolver

08 174 02 01

CFM112S/SM..
CFM112M/SM..
CFM112L/SM..

/ RH1M

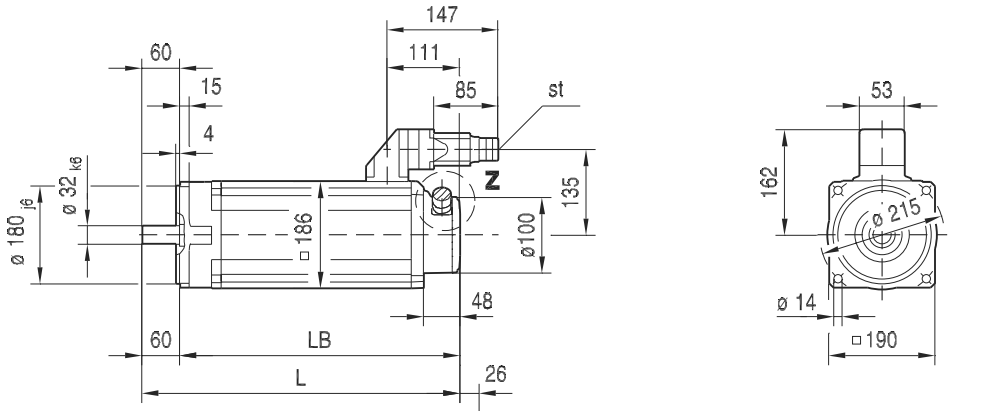

DIN 748 / 3

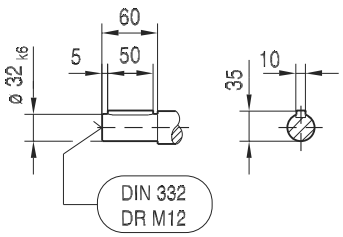

/ AS1H
/ ES1H

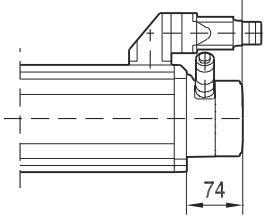

/ B14

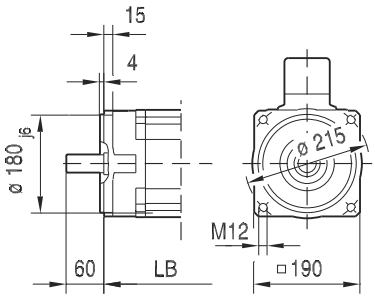

/ SM5.

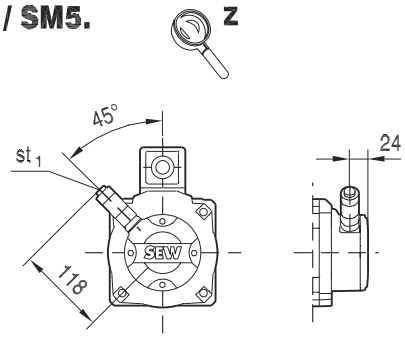

/ SM6.

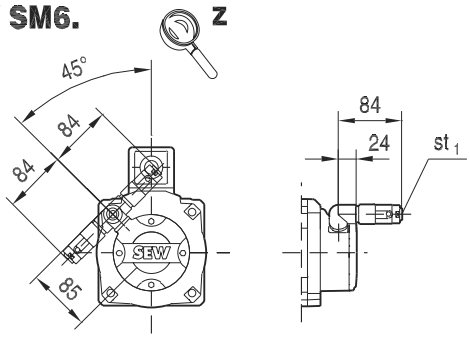

(→ 📖 105)	CFM112S/SM..	CFM112M/SM..	CFM112L/SM..
L	379	406	460
LB	319	346	400
st[1)]	14 ...17	17 ... 23	17 ...23
st_1[1)]	5.5 ... 10.5	5.5 ... 10.5	5.5 ... 10.5

1) Diameter of cable to be connected

Synchronous servo brake motors CFM112/BR.. with plug connector and absolute encoder/resolver

09 035 02 01

CFM112S/BR/SB..
CFM112M/BR/SB..
CFM112L/BR/SB..

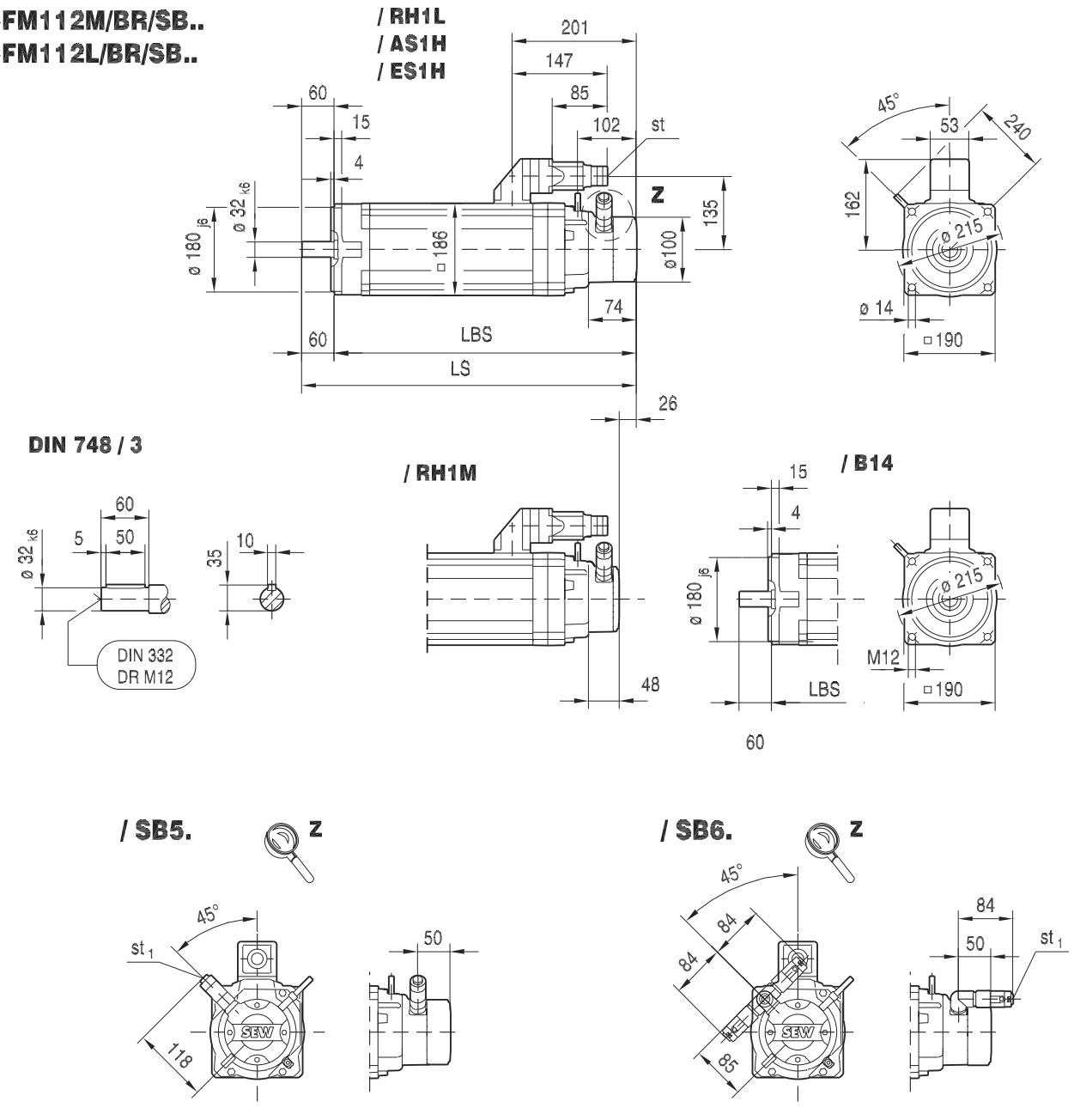

(→ 📖 105)	CFM112S/BR/SB..	CFM112M/BR/SB..	CFM112L/BR/SB..
LS	469	496	550
LBS	409	436	490
st[1)]	14 ...17	17 ... 23	17 ...23
st_1[1)]	5.5 ... 10.5	5.5 ... 10.5	5.5 ... 10.5

1) Diameter of cable to be connected

Synchronous servo brake motors CFM.. with terminal box and absolute encoder/resolver/brake

08 178 01 01

CFM../KK..

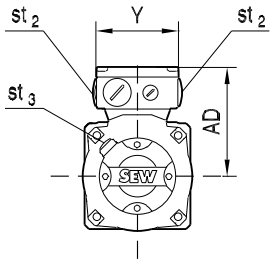

/ RH1M
/ AS1H
/ ES1H

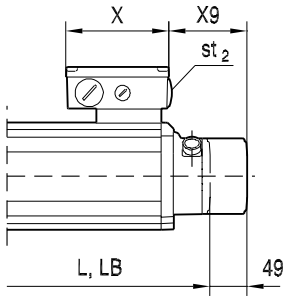

/ KK5.

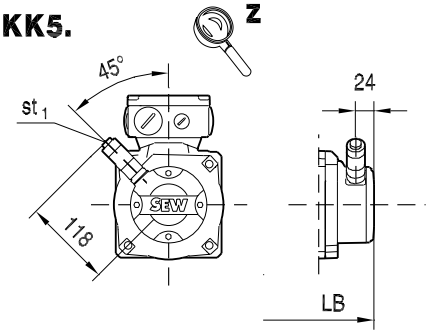

/ KK6.

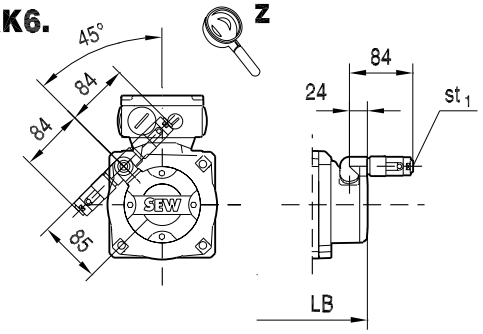

CFM../BR/KK..

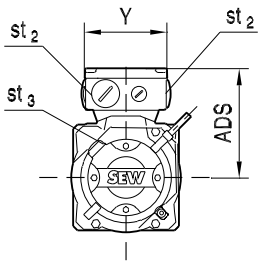

/ RH1L
/ RH1M
/ AS1H
/ ES1H

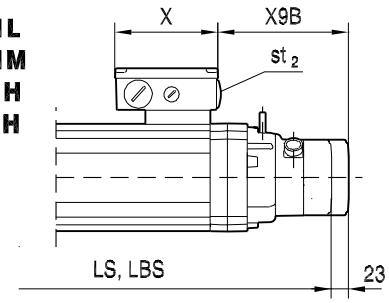

/ KK5.

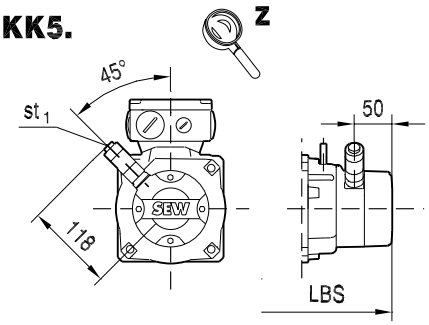

/ KK6.

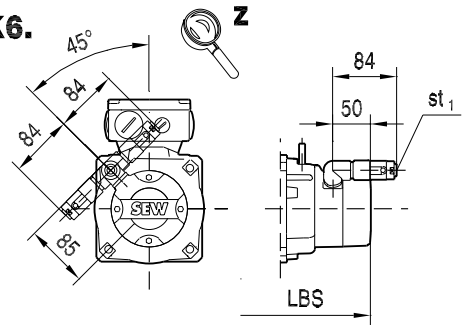

(→ 📖 105)	CFM71S..	CFM71M..	CFM71L..	CFM90S..	CFM90M..	CFM90L..	CFM112S..	CFM112M..	CFM112L..
AD, ADS	125	125	125	139	139	139	161	190	190
st_2	1xM25x1.5 1xM16x1.5	1xM25x1.5 1xM16x1.5	1xM25x1.5 1xM16x1.5	1xM32x1.5 1xM16x1.5	1xM32x1.5 1xM16x1.5	1xM32x1.5 1xM16x1.5	1xM32x1.5 1xM16x1.5	1xM50x1.5 1xM16x1.5	1xM50x1.5 1xM16x1.5
st_3	1xM16x1.5	1xM16x1.5	1xM16x1.5	1xM16x1.5	1xM16x1.5	1xM16x1.5	1xM16x1.5	1xM16x1.5	1xM16x1.5
X	127	127	127	139	139	139	139	182	182
X9	114	114	114	107	107	107	121	114	114
X9B	170	170	170	176	176	176	185	178	178
Y	97	97	97	109	109	109	109	152	152

Synchronous servomotors CFM112H.. with terminal box and absolute encoder/resolver

08 220 01 02

CFM112H

/ RH1M
/ AS1H
/ ES1H

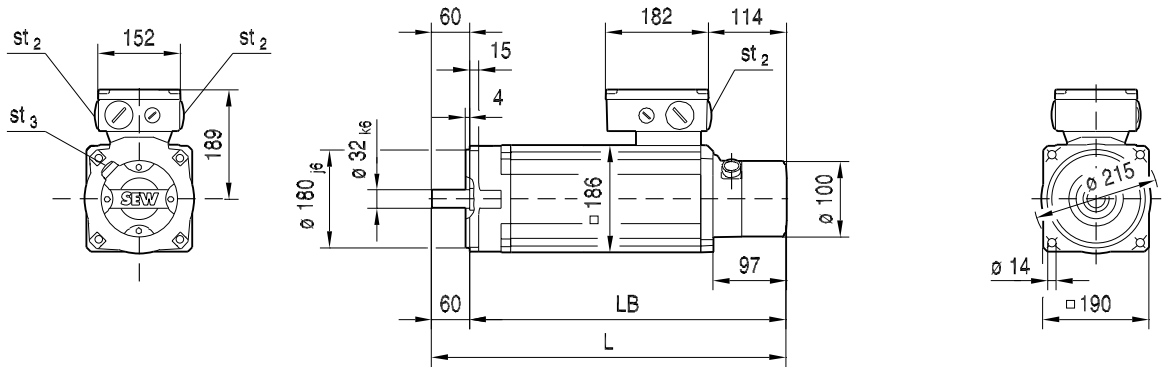

DIN 748 / 3

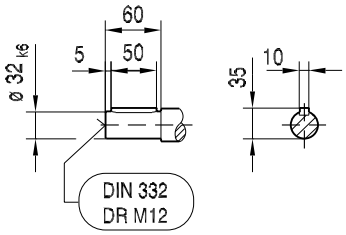

/ B14

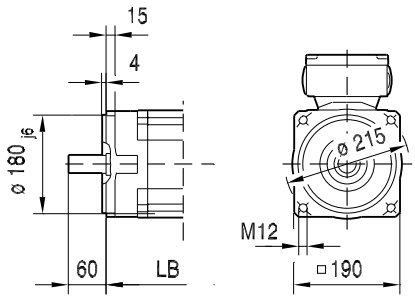

/ KK5.

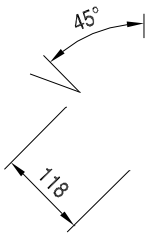

(→ 105)	CFM112H/KK..		
L	590		
LB	530		
st_2	1xM50x1.5 1xM16x1.5		
st_3	1xM16x1.5		

Synchronous servo brake motors CFM112H/BR.. with terminal box and absolute encoder/resolver

09 069 01 02

CFM112H/BR

/ RH1M
/ RH1L
/ AS1H
/ ES1H

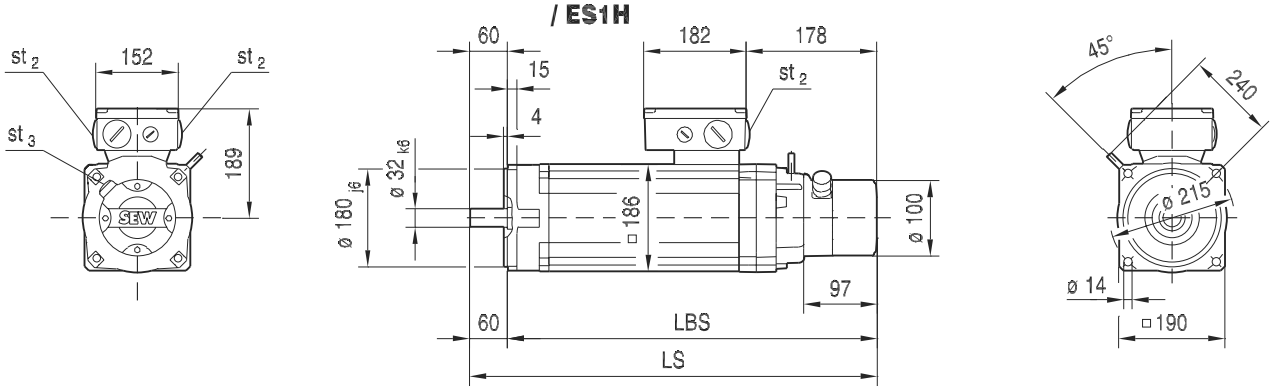

DIN 748 / 3

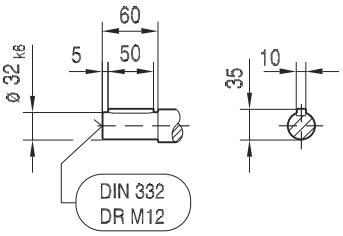

/ B14

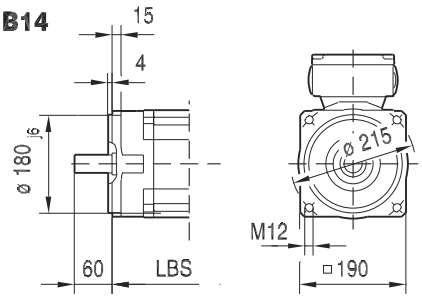

/ KK5.

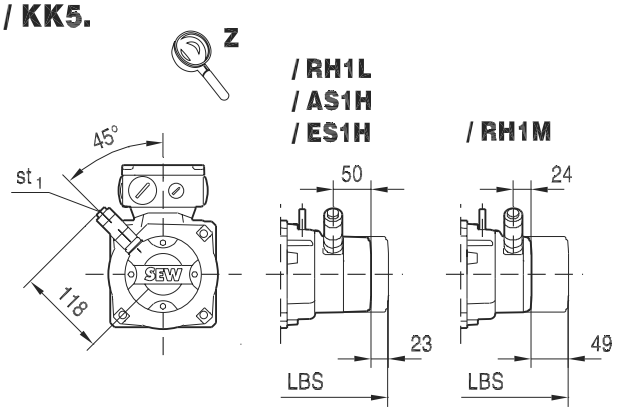

/ KK6.

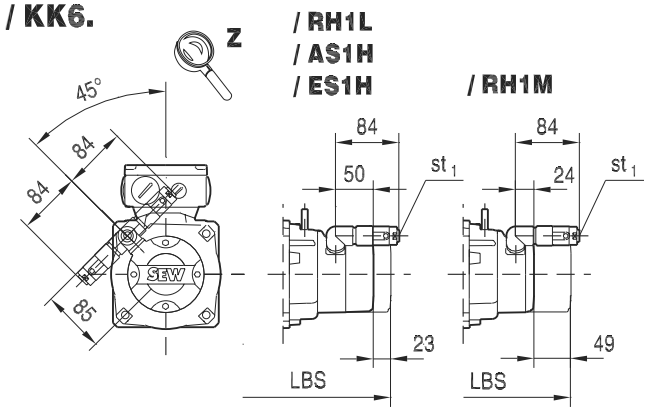

(→ 📖 105)	CFM112H/BR/KK..		
LS	655		
LBS	595		
st_2	1xM50x1.5 1xM16x1.5		
st_3	1xM16x1.5		

Synchronous servo (brake) motors CFM..(IBR) with forced cooling fan

08 177 01 01

CFM71.. /VR

CFM71.. /BR /VR

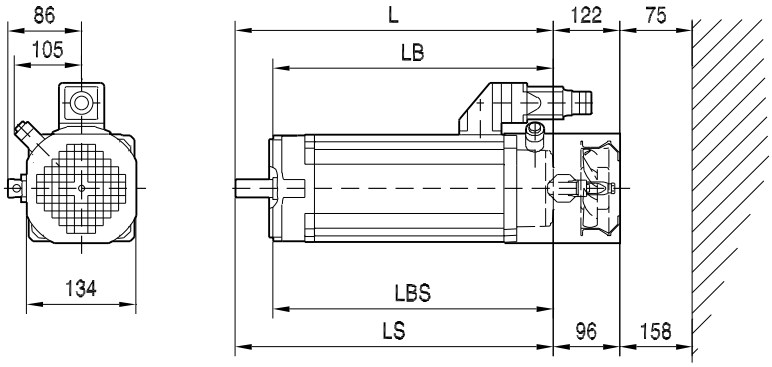

CFM90.. /VR

CFM90.. /BR /VR

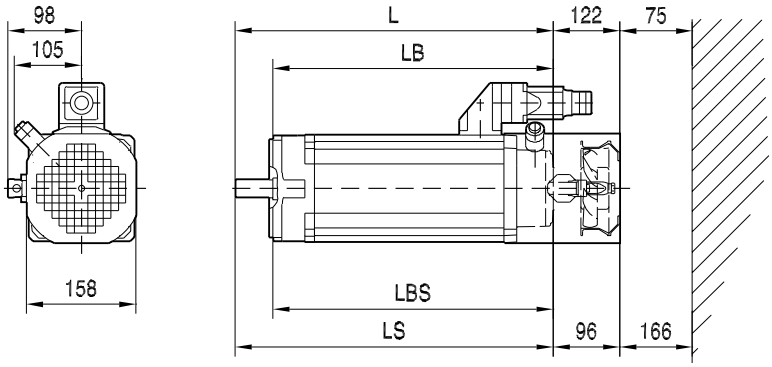

CFM112.. /VR

CFM112.. /BR /VR

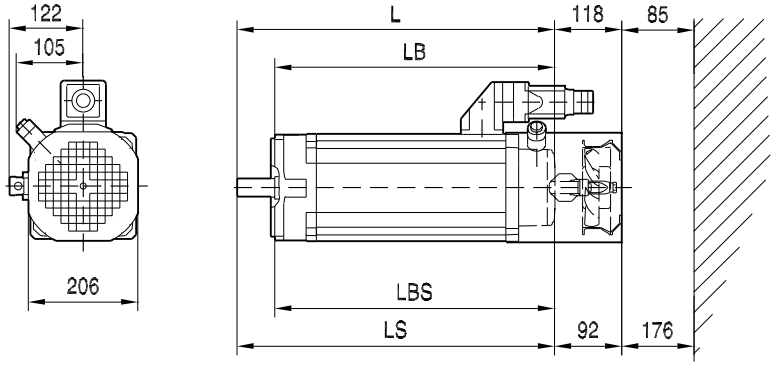

CFM112H.. /VR

CFM112H.. /BR /VR

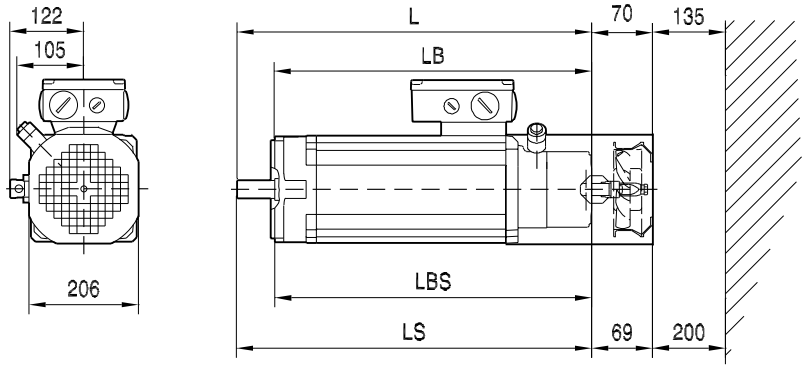

Synchronous servo (brake) motors CFM.. (/B.) with resolver/encoder

CFM...

08 241 00 04

/ AV1Y

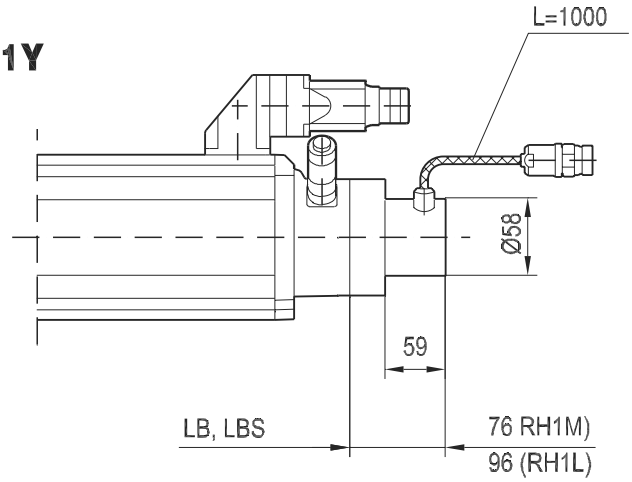

/ AV1A
/ EV1A

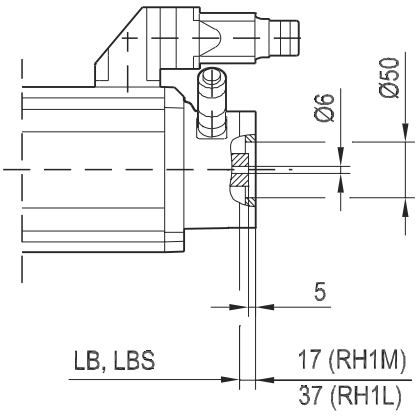

/ XV2A

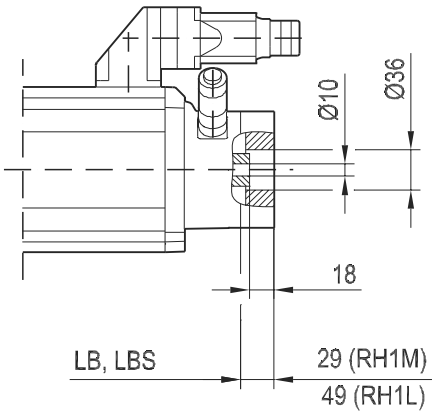

Synchronous servo (brake) motors CFM.. with 2nd shaft end and RH1M resolver

CFM...

08 243 00 04

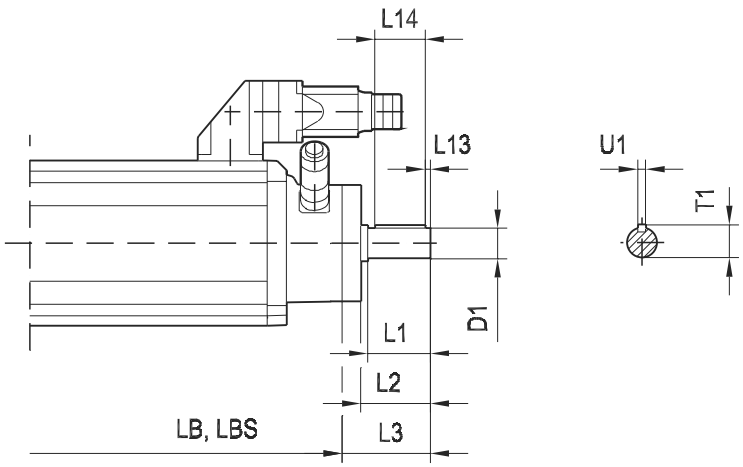

(→ 📖 105)	CFM71..	CFM90..	CFM112..
D1	14	19	28
L1	30	40	60
L2	35	46	67
L3	50	61	85
L13	4	4	5
L14	22	32	50
U1	5	6	8
T1	16	21.5	31

11.7 Hybrid cables

Prefabricated cables

SEW-EURODRIVE offers pre-fabricated hybrid cables with plugs for straightforward and reliable motor connection. Cable and contact are connected using the crimp technique. The following cables are available in 1 m steps:

- Motor power
- Motor power + brake
- Resolver / motor protection
- Absolute encoder / motor protection
- Forced cooling fan.

Cables from Lapp are used for fixed installation, cables from Nexans are used in cable carriers.

For cable specifications, such as bending radius, certification and temperature range, please refer to the cable specification section on page 380 .

The size of the plug connector depends on the current level and the maximum cable length according to the speed (see page 354).

Hybrid cables are divided into:

- Power cables (motor cable, brake motor cable, extension cable)

and into

- feedback cables (resolver cable, encoder cable, extension cable).

Structure of power cables for DFS motors

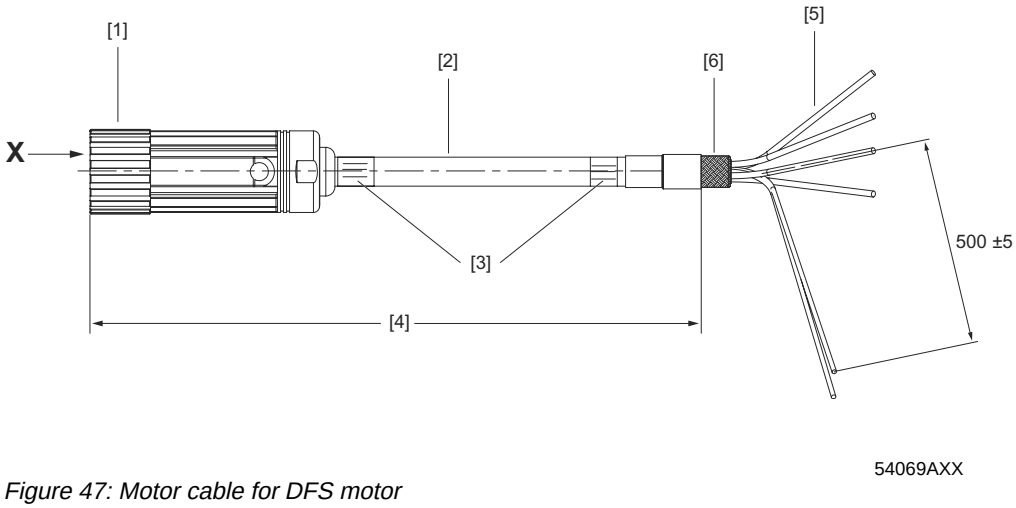

Figure 47: Motor cable for DFS motor

[1] Connector: Intercontec BSTA 078
[2] SEW-EURODRIVE logo printed on cable
[3] Nameplate
[4] Line length ≤ 10 m: +200 mm tolerance
Line length ≥ 10 m: +2 % tolerance
Permitted line length according to the technical documents.
[5] Pre-fabricated cable end for inverter.
Required loose parts are supplied with the cable.
[6] Shielding pulled back ca. 20 mm + 5 mm.

Pre-fabricated cables for motor end

The power cables on the motor end consist of an 8-pin plug connector and socket contacts.

The shield is connected with the connector housing according to EMC aspects. All plug connectors seal the plug on the cable end with a lamellar seal and ensure cable relief according to EN 61884.

Pre-fabricated cables for inverter end

The individual cable strands of the power and brake power cables are exposed and the shield is prepared for being connected in the control cabinet. The cable for the inverter end has yet to be assembled. The required loose parts are supplied with the cable in a separate bag.

Loose parts

The following loose parts are supplied in accordance with the core cross sections for connection to the power terminals on the inverter:

Bag no.	Contents
1	4 x conductor end sleeves 1.5 mm^2 , insulated 4 x M6 U-shaped cable lugs 1.5 mm^2

Structure of power cables for CFM motors

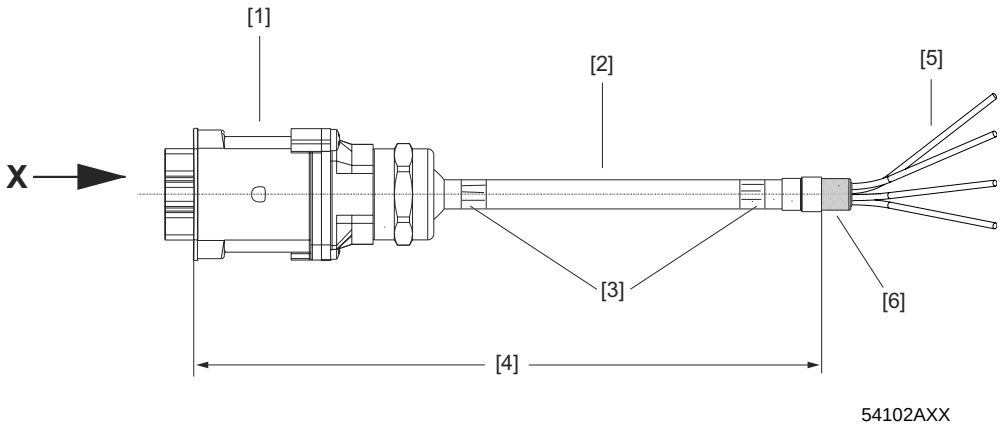

Figure 48: Motor cable for CFM motor

[1] Connector: Amphenol
[2] SEW-EURODRIVE logo printed on cable
[3] Nameplate
[4] Line length ≤ 10 m: +200 mm tolerance
Line length ≥ 10 m: +2 % tolerance
Permitted line length according to the technical documents.
[5] Pre-fabricated cable end for inverter.
Required loose parts are supplied with the cable.
[6] Shielding pulled back ca. 20 mm + 5 mm.

Pre-fabricated cables for motor end

The power cables on the motor end have a 6-pin EMC Amphenol plug connector and socket contacts.

The shield is connected with the connector housing according to EMC aspects. All plug connectors seal the plug on the cable end with a lamellar seal and ensure cable relief according to EN 61884.

Pre-fabricated cables for inverter end

The individual cable strands of the power and brake power cables are exposed and the shield is prepared for being connected in the control cabinet. The cable for the inverter end has yet to be assembled. The required loose parts are supplied with the cable in a separate bag.

Loose parts

The following loose parts are supplied in accordance with the core cross sections for connection to the power terminals on the inverter:

Bag no.	Contents
1	4 x conductor end sleeves 1.5 mm^2 , insulated 4 x M6 U-shaped cable lugs 1.5 mm^2
2	4 x conductor end sleeves 2.5 mm^2 , insulated 4 x M6 U-shaped cable lugs 2.5 mm^2
3	4 x conductor end sleeves 4 mm^2 , insulated 4 x M6 U-shaped cable lugs 4 mm^2 4 x M10 U-shaped cable lugs 4 mm^2
4	4 x M6 U-shaped cable lugs 6 mm^2 4 x M10 U-shaped cable lugs 6 mm^2
5	4 x M6 U-shaped cable lugs 10 mm^2 4 x M10 ring-type cable lugs 10 mm^2

Structure of the feedback cables

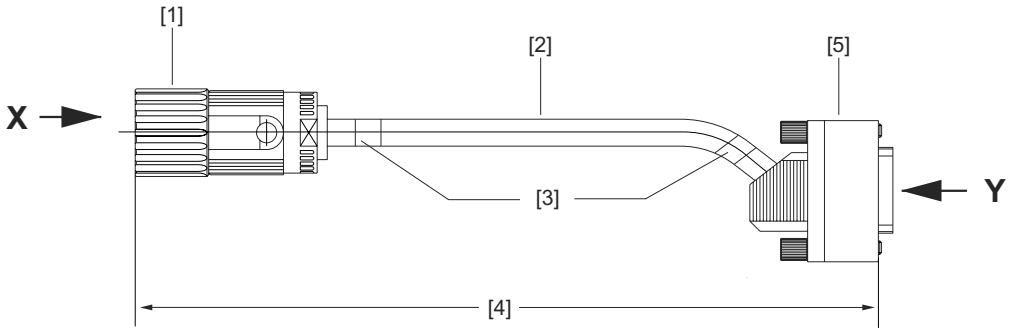

Figure 49: Resolver plug connector

[1] Connector: Intercontec ASTA
[2] Printed on connector: SEW-EURODRIVE
[3] Nameplate
[4] Line length ≤ 10 m: +200 mm tolerance
Line length ≥ 10 m: +2 % tolerance
Permitted line length according to the technical documents.
[5] Sub D plug

Pre-fabricated cables for motor end

A 12-pin EMC signal plug connector from Intercontec with socket contacts is used on the motor end for RH.M / RH.L / AS1H / ES1H. The shield is connected in the connector housing according to EMC aspects. All plug connectors seal the plug on the cable end with a lamellar seal.

A feedback cable is alternatively available for the corresponding terminal box. The individual cable strands are exposed and prepared for connection to the terminal box.

Pre-fabricated cables for inverter end

A commercially available sub-D EMC connector with pin contacts is used on the inverter end. A 9-pin or 15-pin connector matching the inverter is used.

Hybrid cables

The outer cable sheath on the motor and inverter end bears a nameplate with part number and logo of the pre-fabricated cable manufacturer. Interrelation of permitted tolerance and ordered length:

- Line length ≤ 10 m: 200 mm tolerance
- Line length ≥ 10 m: + 2 % tolerance

Refer to the system manual of the inverter for determining the maximum cable length.

Make sure during project planning that an EMC compliant environment is maintained.

Project planning for cable cross section

Cable dimensioning according to EN60402

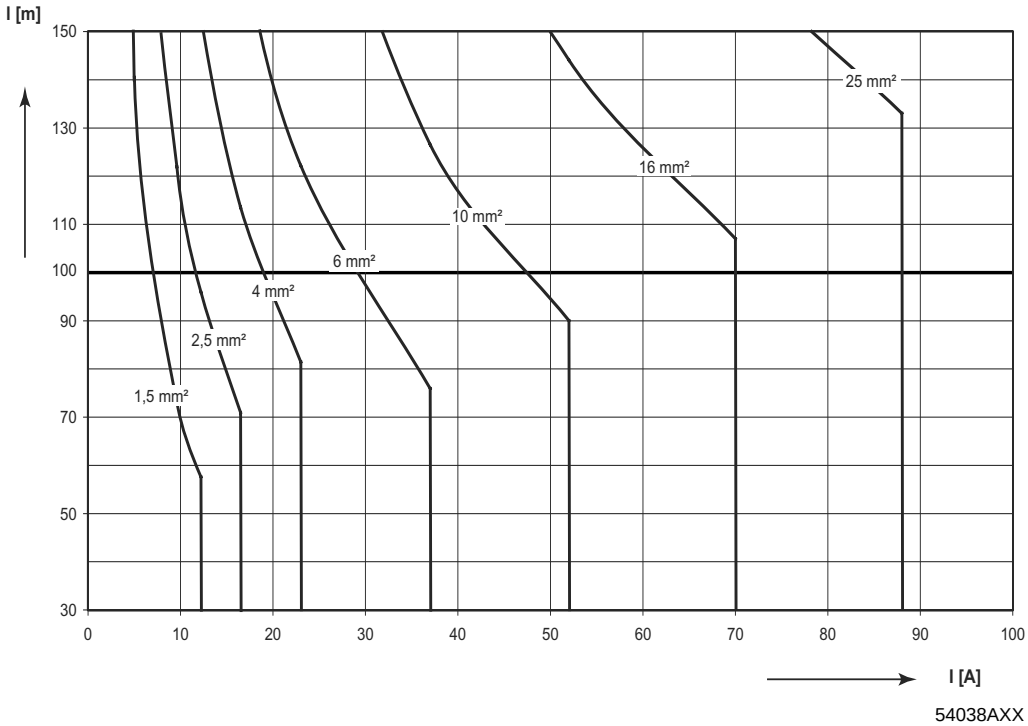

Figure 50: Minimum required cable cross section depending on cable length l [m] and current I]A[

Hybrid cables with cross sections of 1.5 mm^2 to 10 mm^2 can be ordered from SEW-EURODRIVE.

Cable load through current I in [A] according to EN 60204-1 table 5, ambient temperature 40 °C

Cable cross section [mm^2]	Three-core sheathed line in pipe or cable [A]	Three-core sheathed cable on top of each other on wall [A]	Three-core sheathed cable lined up horizontally [A]
1.5	12.2	15.2	16.1
2.5	16.5	21.0	22
4	23	28.0	30
6	29	36.0	37
10	40	50.0	52
16	53	66.0	70
25	67	84.0	88
35	83	104.0	114

These data are merely recommended values and are **no substitute for the detailed project planning** of the cables depending on the concrete application considering the applicable regulations.

Observe the voltage drop that occurs along the cable in particular with the DC 24 V brake coil when dimensioning the cross sections for the brake cable. The accelerator current is decisive for the calculation.

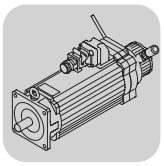

Assignment of servomotor and cable cross section

n_N [min^{-1}]	Motor	M_0 [Nm]	I_0 [A]	SM SB
2000	**CFM71S**	5	2.2	51
	CFM71M	6.5	3	51
	CFM71L	9.5	4.2	51
	CFM90S	11	4.9	51
	CFM90M	14.5	6.9	51
	CFM90L	21	9.9	51
	CFM112S	23.5	10	51
	CFM112M	31	13.5	52
	CFM112L	45	20	54
3000	**DFS56M**	1	1.65	11
	DFS56L	2	2.4	11
	DFS56H	4	2.8	11
	CFM71S	5	3.3	51
	CFM71M	6.5	4.3	51
	CFM71L	9.5	6.2	51
	CFM90S	11	7.3	51
	CFM90M	14.5	10.1	51
	CFM90L	21	14.4	52
	CFM112S	23.5	15	52
	CFM112M	31	20.5	54
	CFM112L	45	30	56
4500	**DFS56M**	1	1.65	11
	DFS56L	2	2.4	11
	DFS56H	4	4	11
	CFM71S	5	4.9	51
	CFM71M	6.5	6.6	51
	CFM71L	9.5	9.6	51
	CFM90S	11	11.1	51
	CFM90M	14.5	14.7	52
	CFM90L	21	21.6	54
	CFM112S	23.5	22.5	54
	CFM112M	31	30	56
	CFM112L	45	46	59
6000	**DFS56M**	1	1.65	11
	DFS56L	2	2.75	11
	DFS56H	4	5.3	11
	CFM71S	5	6.5	51
	CFM71M	6.5	8.6	51
	CFM71L	9.5	12.5	52
	CFM90S	11	14.5	52
	CFM90M	14.5	19.8	54
	CFM90L	21	29.5	56

The assignments of SM / SB plug connectors are not binding. Given the dynamic properties in the system, other cross sections can also be implemented.

Power cable for DFS

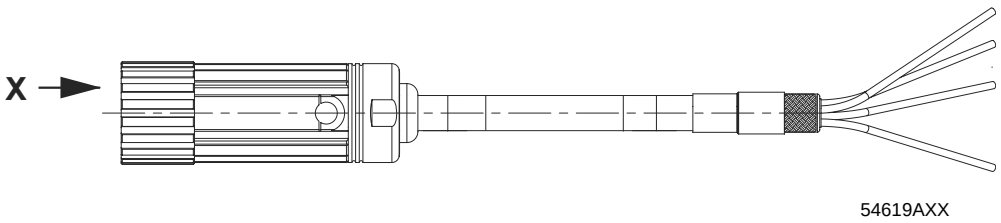

Figure 51: Motor cable for DFS

Pin assignment of the motor cable

Plug connector	Contact	Core identification	Assigned	Extra
BSTA 078 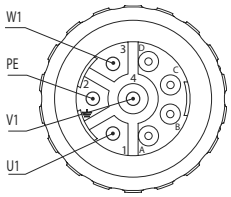 **View X**	1	Black with white lettering U, V, W	U	Bag of loose parts
	4		V	
	3		W	
	2	Green/yellow	PE	

Plug connector type	Number of cores and line cross section	Part number	Installation type
SM 11	**4×1.5 mm² (AWG 16)**	0590 454 4	Fixed installation
SM 11	**4×1.5 mm² (AWG 16)**	0590 477 3	Cable carrier installation

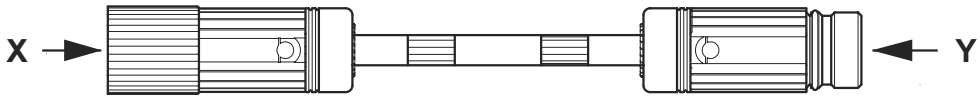

54878AXX

Figure 52: Motor extension cable

Pin assignment of motor extension cable

Plug connector	Contact	Core identification	Assigned	Contact	Plug connector
BSTA 078 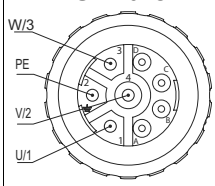 **View X**	1	Black with white lettering U, V, W	U	1	**BKUA 199** 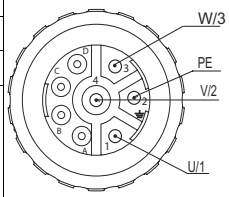 **View Y**
	4		V	4	
	3		W	3	
	2	Green/yellow	PE	2	

Plug connector type	Number of cores and line cross section	Part number	Installation type
SM11	**4×1.5 mm² (AWG 16)**	0590 361 0	Cable carrier installation

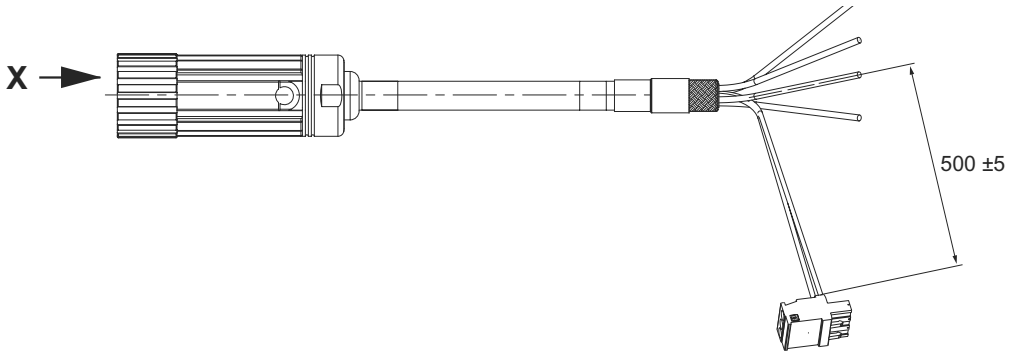

Figure 53: DFS brake motor cable

Pin assignment of brake motor cable

Plug connector	Contact	Core identification	Assigned	Extra
BSTA 078 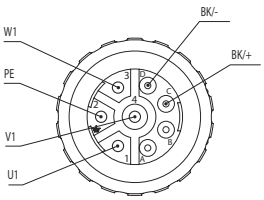 **View X**	1	Black with white lettering U, V, W	U	Bag of loose parts
	4		V	
	3		W	
	2	Green/yellow	PE	
	A	–	Unassigned	
	B	–	Unassigned	
	C	Black with white lettering 1, 2, 3	2	
	D		1	

Plug connector type	Number of cores and line cross section	Part number	Installation type
SB 11	**4×1.5 mm² (AWG 16)** **3×1 mm² (AWG 17)**	1332 485 3	Fixed installation
SB 11	**4×1.5 mm² (AWG 16)** **3×1 mm² (AWG 17)**	1332 486 1	Cable carrier installation

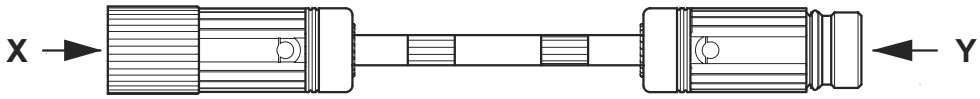

54878AXX

Figure 54: Brake motor extension cable

Pin assignment of brake motor extension cable

Plug connector	Contact	Core identification	Assigned	Contact	Plug connector
BSTA 078 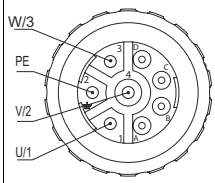 **View X**	1	Black with white lettering U, V, W	U	1	**BKUA 199** 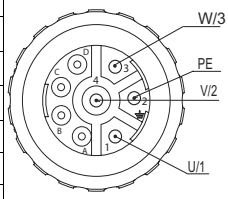 **View Y**
	4		V	4	
	3		W	3	
	2	Green/yellow	PE	2	
	A		Unassigned	A	
	B		Unassigned	B	
	C	Black with white lettering 1, 2, 3	2	C	
	D		1	D	

Plug connector type	Number of cores and line cross section	Part number	Installation type
SB11	**4×1.5 mm² (AWG 16)**	0593 650 0	Cable carrier installation

Power cable for CFM

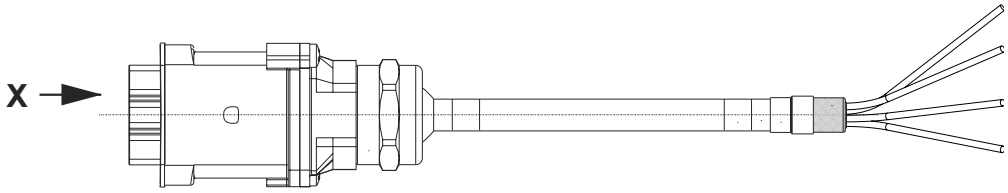

54622AXX

Figure 55: Motor cable for CFM

Pin assignment of the motor cable

Plug connector	Contact	Core identification	Assigned	Contact type	Extra
C148U connector with socket contacts	U1	Black with white lettering U, V, W	U	Cut-off, length ca. 250 mm	Bag of loose parts
	V1		V		
	W1		W		
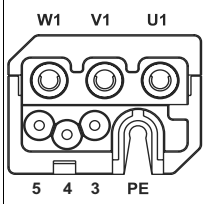 **View X**	PE	Green/yellow	(protective earth)	with Phoenix plug connector GMVSTBW 2.5/3 ST	

Motor cable types

The cables are equipped with a plug for motor connection and conductor end sleeves for inverter connection.

Plug connector type	Number of cores and line cross section	Part number	Installation type
SM 51 / SM 61	**4×1.5 mm² (AWG 16)**	199 179 5	Fixed installation
SM 52 / SM 62	**4×2.5 mm² (AWG 12)**	199 181 7	
SM 54 / SM 64	**4×4 mm² (AWG 10)**	199 183 3	
SM 56 / SM 66	**4×6 mm² (AWG 10)**	199 185 X	
SM 59 / SM 69	**4×10 mm² (AWG 8)**	199 187 6	
SM 51 / SM 61	**4×1.5 mm² (AWG 16)**	199 180 9	Cable carrier installation
SM 52 / SM 62	**4×2.5 mm² (AWG 12)**	199 182 5	
SM 54 / SM 64	**4×4 mm² (AWG 10)**	199 184 1	
SM 56 / SM 66	**4×6 mm² (AWG 10)**	199 186 8	
SM 59 / SM 69	**4×10 mm² (AWG 8)**	199 188 4	

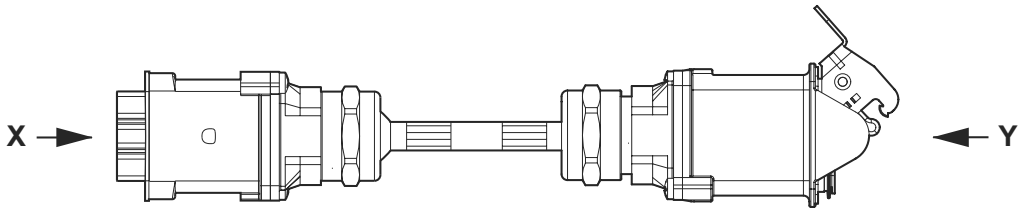

Figure 56: Motor extension cable

Pin assignment of motor extension cable

Plug connector	Contact	Core identification	Contact	Plug connector
C148U adapter with pin contacts	U1	Black with white lettering U, V, W	U1	**C148U connector with socket contacts**
	V1		V1	
	W1		W1	
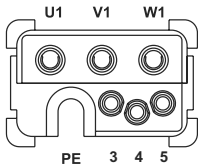	PE	Green/yellow	PE	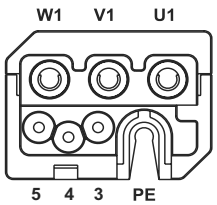
	3	Black with white lettering 1, 2, 3	3	
	4		4	
	5		5	

The motor extension cable has the same pin assignment as all other contacts.

Types of motor extension cables

The cables are equipped with a plug and adapter for extending the CFM motor cable.

Plug connector type	Number of cores and line cross section	Part number	Installation type
SM 51 / SM 61	**4×1.5 mm² (AWG 16)**	199 549 9	Fixed installation
SM 52 / SM 62	**4×2.5 mm² (AWG 12)**	199 551 0	
SM 54 / SM 64	**4×4 mm² (AWG 10)**	199 553 7	
SM 56 / SM 66	**4×6 mm² (AWG 10)**	199 555 3	
SM 59 / SM 69	**4×10 mm² (AWG 8)**	199 557 X	
SM 51 / SM 61	**4×1.5 mm² (AWG 16)**	199 550 2	Cable carrier installation
SM 52 / SM 62	**4×2.5 mm² (AWG 12)**	199 552 9	
SM 54 / SM 64	**4×4 mm² (AWG 10)**	199 554 5	
SM 56 / SM 66	**4×6 mm² (AWG 10)**	199 556 1	
SM 59 / SM 69	**4×10 mm² (AWG 8)**	199 558 8	

Alternative plug connectors

Plug connectors for power supply with socket contacts (complete):

Type	Cross sections	Part no.
SM51 / SM61	4 x 1.5 mm²	199 135 3
SM52 / SM62	4 x 2.5 mm²	199 136 1
SM54 / SM64	4 x 4 mm²	199 137 X
SM56 / SM66	4 x 6 mm²	199 138 8
SM59 / SM69	4 x 10 mm²	199 139 6

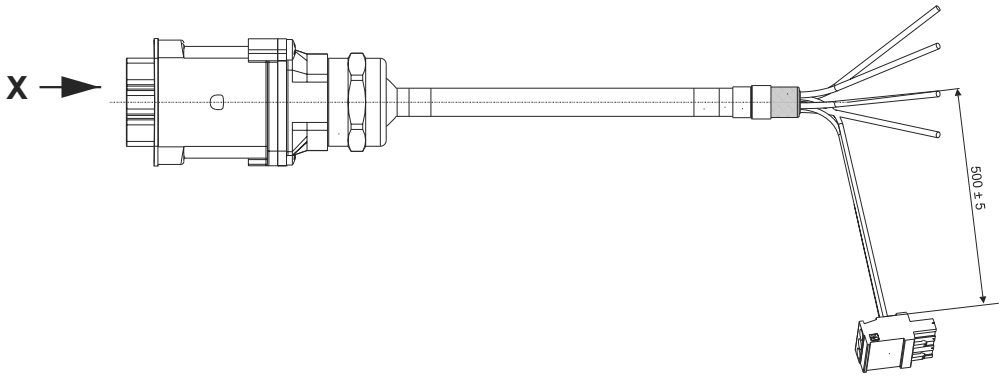

Figure 57: CFM brake motor cable

Pin assignment of brake motor cable

The brake motor cable is fabricated for the BME, BMP, BMH, BMK and BMV brake rectifiers. For the BSG control unit, the customers have to assemble the cable themselves.

Plug connector	Contact	Core identification	Assigned	Contact type	Extra
C148U connector with socket contacts	U1	Black with white lettering U, V, W	U	Cut-off, length ca. 250 mm	Bag of loose parts
	V1		V		
	W1		W		
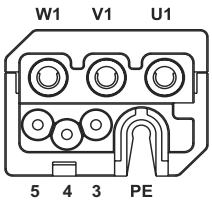 **View X**	PE	Green/yellow	(protective earth)		
	3	Black with white lettering 1, 2, 3	1	with Phoenix plug connector GMVSTBW 2.5/3ST	
	4		2		
	5		3		

Types of brake motor cables

Plug connector type, complete	Number of cores and line cross section	Part number	Installation type
SB 51 / SB 61	**4x1.5 mm^2 (AWG 16) + 3x1.0 mm^2 (AWG 17)**	199 189 2	Fixed installation
SB 52 / SB 62	**4x2.5 mm^2 (AWG 12)+ 3x1.0 mm^2 (AWG 17)**	199 191 4	
SB 54 / SB 64	**4x4 mm^2 (AWG 10)+ 3x1.0 mm^2 (AWG 17)**	199 193 0	
SB 56 / SB 66	**4×6 mm^2 (AWG 10) + 3x1.5 mm^2 (AWG 17)**	199 195 7	
SB 59 / SB 69	**4x10 mm^2 (AWG 10) + 3x1.5 mm^2 (AWG 17)**	199 197 3	

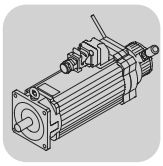

Plug connector type, complete	Number of cores and line cross section	Part number	Installation type
SB 51 / SB 61	**4x1.5 mm^2 (AWG 16) + 3x1.0 mm^2 (AWG 17)**	199 190 6	Cable carrier installation
SB 52 / SB 62	**4x2.5 mm^2 (AWG 12)+ 3x1.0 mm^2 (AWG 17)**	199 192 2	
SB 54 / SB 64	**4x4 mm^2 (AWG 10)+ 3x1.0 mm^2 (AWG 17)**	199 194 9	
SB 56 / SB 66	**4x6 mm^2 (AWG 10)+ 3x1.5 mm^2 (AWG 16)**	199 196 5	
SB 59 / SB 69	**4x10 mm^2 (AWG 10) + 3x1.5 mm^2 (AWG 17)**	199 198 1	

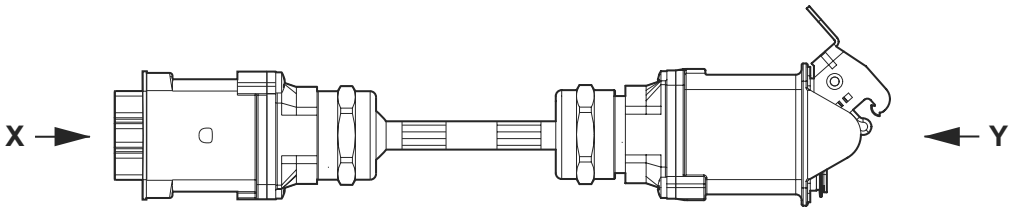

Figure 58: Brake motor extension cable

Pin assignment of brake motor extension cable

Plug connector	Contact	Core identification	Contact	Plug connector
C148U adapter with pin contacts	U1	Black with white lettering U, V, W	U1	**C148U connector with socket contacts**
	V1		V1	
	W1		W1	
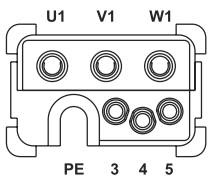	PE	Green/yellow	PE	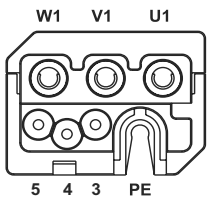
	3	Black with white lettering 1, 2, 3	3	
	4		4	
	5		5	

The brake motor extension cable has the same pin assignment as all other contacts.

Types of brake motor extension cables

Plug connector type, complete	Number of cores and line cross section	Part number	Installation type
SK 51 / SK 61	**4x1.5 mm² (AWG 16) + 3x1.0 mm² (AWG 17)**	199 199 X	Fixed installation
SK 52 / SK 62	**4x2.5 mm² (AWG 12)+ 3x1.0 mm² (AWG 17)**	199 201 5	
SK 54 / SK 64	**4x4 mm² (AWG 10)+ 3x1.0 mm² (AWG 17)**	199 203 1	
SK 56 / SK 66	**4x6 mm² (AWG 10)+ 3x1.5 mm² (AWG 17)**	199 205 8	
SK 59 / SK 69	**4x10 mm² (AWG 10) + 3x1.5 mm² (AWG 17)**	199 207 4	
SK 51 / SK 61	**4x1.5 mm² (AWG 16) + 3x1.0 mm² (AWG 17)**	199 200 7	Cable carrier installation
SK 52 / SK 62	**4x2.5 mm² (AWG 12)+ 3x1.0 mm² (AWG 17)**	199 202 3	
SK 54 / SK 64	**4x4 mm² (AWG 10)+ 3x1.0 mm² (AWG 17)**	199 204 X	
SK 56 / SK 66	**4x6 mm² (AWG 10)+ 3x1.5 mm² (AWG 16)**	199 206 6	
SK 59 / SK 69	**4×10 mm² (AWG 10) + 3x1.5 mm² (AWG 17)**	199 208 2	

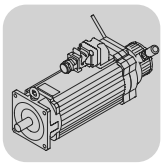

Alternative plug connectors

Plug connectors for power supply with socket contacts (complete).

Type	Cross sections	Part no.
SB51 / SB61	**4x1.5 mm^2 (AWG 16) + 3x1.0 mm^2 (AWG 17)**	199 142 6
SB52 / SB62	**4x2.5 mm^2 (AWG 12)+ 3x1.0 mm^2 (AWG 17)**	199 143 4
SB54 / SB64	**4x4 mm^2 (AWG 10)+ 3x1.0 mm^2 (AWG 17)**	199 144 2
SB56 / SB66	**4x6 mm^2 (AWG 10)+ 3x1.5 mm^2 (AWG 16)**	199 145 0
SB59 / SB69	**4x10 mm^2 (AWG 10) + 3x1.5 mm^2 (AWG 17)**	199 146 9

Feedback cable

Resolver cable plug connector MOVIDRIVE® MDX..B



Figure 59: Resolver cable plug connector MOVIDRIVE® MDX..B

Type	Installation	Part number
DFS/CFM	Fixed installation	199 487 5
DFS/CFM	Cable carrier installation	199 319 4

Pin assignment of resolver cable RH.M / RH.L

Pin assignment of resolver cable RH1M						
Motor connection end					Connection MOVIDRIVE® MDX..B	
Plug connector	Contact no.	Description	Cable core colors	Description	Contact no.	Plug connector
ASTA021FR **198 921 9** 12-pin with socket contacts 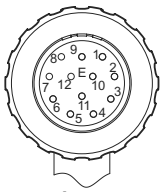 **View X**	1	R1 (reference +)	Pink (PK)	R1 (reference +)	3	**Sub-D 9-pin** 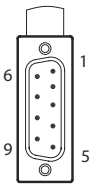 **View Y**
	2	R2 (reference -)	Gray (GY)	R2 (reference -)	8	
	3	S1 (cosine +)	Red (RD)	S1 (cosine +)	2	
	4	S3 (cosine -)	Blue (BU)	S3 (cosine -)	7	
	5	S2 (sine +)	Yellow (YE)	S2 (sine +)	1	
	6	S4 (sine -)	Green (GN)	S4 (sine -)	6	
	7	Unassigned	-	–	–	
	8	Unassigned	-	–	–	
	9	TF/KTY +	Brown (BN)/ violet (VT)	TF (KTY+)	9	
	10	TF / KTY–	White (WH) / black (BK)	TF / KTY–	5	
	11	Unassigned	-	–	–	
	12	Unassigned	-	Unassigned	4	

Resolver cable plug connector MOVIAXIS® MXA

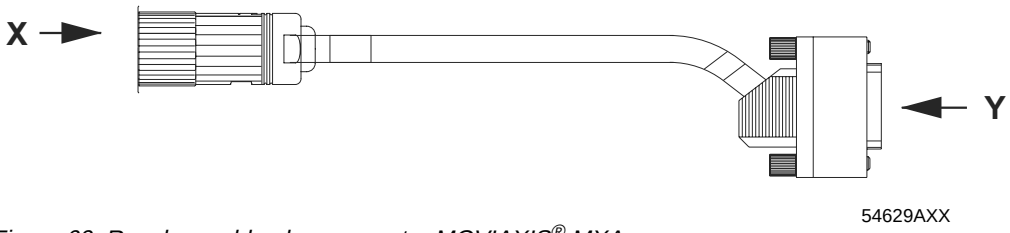

Figure 60: Resolver cable plug connector MOVIAXIS® MXA

Type	Installation	Part number
DFS/CFM	Fixed installation	1332 742 9
DFS/CFM	Cable carrier installation	1332 743 7

Pin assignment of resolver cable RH.M / RH.L

Pin assignment of resolver cable RH1M						
Motor connection end					Connection MOVIAXIS® MXA	
Plug connector	Contact no.	Description	Cable core color	Description	Contact no.	Plug connector
ASTA021FR **198 921 9** 12-pin with socket contacts 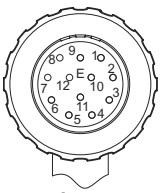 **View X**	1	R1 (reference +)	Pink (PK)	R1 (reference +)	5	**Sub-D 15-pin** 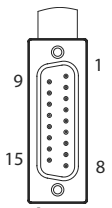 **View Y**
	2	R2 (reference -)	Gray (GY)	R2 (reference -)	13	
	3	S1 (cosine +)	Red (RD)	S1 (cosine +)	2	
	4	S3 (cosine -)	Blue (BU)	S3 (cosine -)	10	
	5	S2 (sine +)	Yellow (YE)	S2 (sine +)	1	
	6	S4 (sine -)	Green (GN)	S4 (sine -)	9	
	7	Unassigned	-	Unassigned	3	
	8	Unassigned	-	Unassigned	4	
	9	TF/KTY +	Brown (BN)/ violet (VT)[1)]	TF/KTY +	14	
	10	TF/KTY -	White (WH) / black (BK)[1)]	TF/KTY -	6	
	11	Unassigned	-	Unassigned	7	
	12	Unassigned	-	Unassigned	8	
		–	–	Unassigned	11	
		–	–	Unassigned	12	
		–	–	Unassigned	15	

1) Double assignment to increase cross section

All connectors are shown with view onto the pins.

Extension cable for resolver RH.M / RH.L

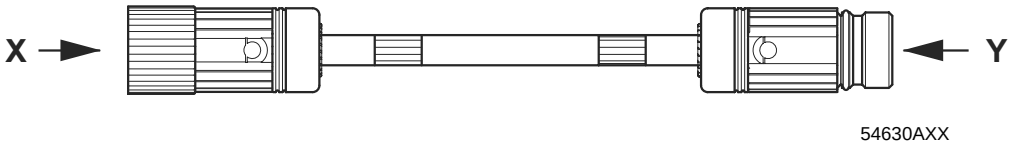

Figure 61: Extension cable for resolver RH.M / RH.L

Type	Installation	Part number
DFS/CFM	Fixed installation	199 542 1
DFS/CFM	Cable carrier installation	199 541 3

Pin assignment of extension cable for resolver RH.M / RH.L

Pin assignment of extension cable for resolver RH.M / RH.L						
Plug connector	**Contact no.**	**Description**	**Cable core colors**	**Description**	**Contact no.**	**Plug connector**
ASTA021FR **198 673 2** 12-pin with socket contacts 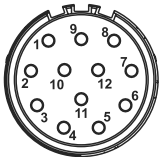 **View X**	1	R1 (reference +)	Pink (PK)	R1 (reference +)	1	**AKUA020MR** **199 647 9** 12-pin with pin contacts 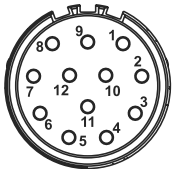 **View Y**
	2	R1 (reference -)	Gray (GY)	R1 (reference -)	2	
	3	S1 (cosine +)	Red (RD)	S1 (cosine +)	3	
	4	S3 (cosine -)	Blue (BU)	S3 (cosine -)	4	
	5	S2 (sine +)	Yellow (YE)	S2 (sine +)	5	
	6	S4 (sine -)	Green (GN)	S4 (sine -)	6	
	7	Unassigned	-	Unassigned	7	
	8	Unassigned	-	Unassigned	8	
	9	TF/KTY +	Brown (BN)/ violet (VT)[1)]	TF/KTY +	9	
	10	TF/KTY -	White (WH) / black (BK)[1)]	TF/KTY -	10	
	11	Unassigned	-	Unassigned	11	
	12	Unassigned	-	Unassigned	12	

1) Double assignment to increase cross section

The extension cable has the same pin assignment as all other contacts.

Alternative plug connectors

Signal plug connector with socket contacts (complete)

Type	Cross sections which can be connected	Part no.
RH.M / RH.L	6 x 2 x 0.06 ... 1 mm^2	198 673 2

Cable from resolver cable to terminal box DFS/CFM for MOVIDRIVE® MDX..B with DC 5 V supply

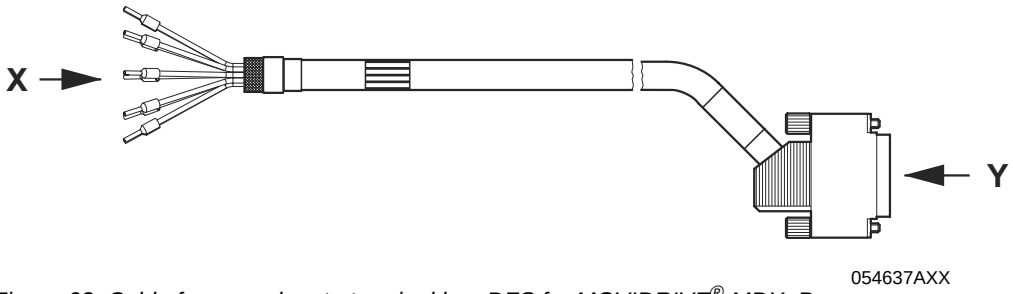

Figure 62: Cable from resolver to terminal box DFS for MOVIDRIVE® MDX..B

Type	Installation	Part number
DFS	Fixed installation	1332 817 4
DFS	Cable carrier installation	1332 844 1
CFM	Fixed installation	199 589 8
CFM	Cable carrier installation	199 590 1

Pin assignment of resolver cable RH.M / RH.L

Cable from RH1M resolver to terminal box for DFS/CFM motors						
Motor connection end					Connection MOVIDRIVE® MDX..B	
Terminal strip	Contact no.	Description	Cable core color	Description	Contact no.	Plug connector
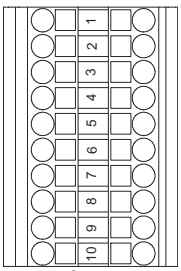 View X	1	R1 (reference +)	Pink (PK)	R1 (reference +)	3	Sub-D 9-pin 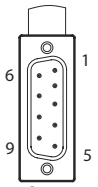 View Y
	2	R2 (reference -)	Gray (GY)	R2 (reference -)	8	
	3	S1 (cosine +)	Red (RD)	S1 (cosine +)	2	
	4	S3 (cosine -)	Blue (BU)	S3 (cosine -)	7	
	5	S2 (sine +)	Yellow (YE)	S2 (sine +)	1	
	6	S4 (sine -)	Green (GN)	S4 (sine -)	6	
	7	Unassigned	-	Unassigned	4	
	8	Unassigned	-	-	-	
	9	TF/KTY +	Brown (BN)/ violet (VT)[1)]	TF/KTY +	9	
	10	TF/KTY -	White (WH) / black (BK)[1)]	TF/KTY -	5	

1) Double assignment to increase cross section

Cable from resolver to terminal box DFS/CFM for MOVIAXIS® MXA

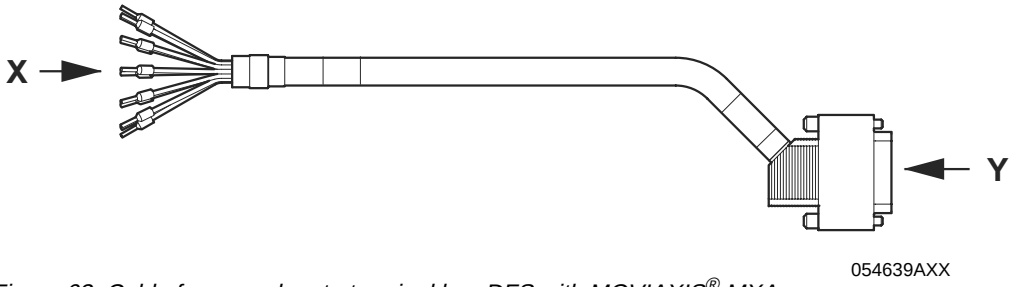

Figure 63: Cable from resolver to terminal box DFS with MOVIAXIS® MXA

Type	Installation	Part number
DFS	Fixed installation	1332 744 5
DFS	Cable carrier installation	1332 745 3
CFM	Fixed installation	1332 762 3
CFM	Cable carrier installation	1332 763 1

Pin assignment of resolver cable RH.M / RH.L

Cable from resolver RH.M/RH.L to terminal box MOVIAXIS® MXA with DS/CM motors						
Motor connection end					Connection MOVIAXIS® MXA	
Terminal strip	Contact no.	Description	Cable core color	Description	Contact no.	Plug connector
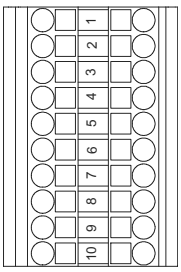 View X	1	R1 (REF +)	Pink (PK)	R1 (reference +)	5	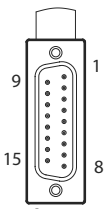 Sub-D 15-pin View Y
	2	R2 (REF -)	Gray (GY)	R2 (reference -)	13	
	3	S1 (COS +)	Red (RD)	S1 (cosine +)	2	
	4	S3 (COS -)	Blue (BU)	S3 (cosine -)	10	
	5	S2 (SIN +)	Yellow (YE)	S2 (sine +)	1	
	6	S4 (SIN -)	Green (GN)	S4 (sine -)	9	
	7	Unassigned	-	Unassigned	3	
	8	Unassigned	-	Unassigned	4	
	9	TF / TH / KTY +	Brown (BN)/ violet (VT)	TF / TH / KTY +	14	
	10	TF / TH / KTY -	White (WH) / black (BK)	TF / TH / KTY -	6	
	11	-	-	Unassigned	7	
	12	-	-	Unassigned	8	
	13	-	-	Unassigned	11	
	14	-	-	Unassigned	12	
	15	-	-	Unassigned	15	

HIPERFACE® encoder cable for plug connector MOVIAXIS® MXA, MOVIDRIVE® MDX..B

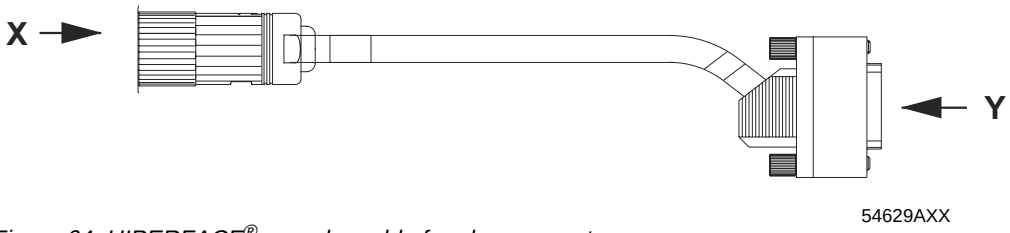

Figure 64: HIPERFACE® encoder cable for plug connector

Type	Installation	Part number
DFS/CFM	Fixed installation	1332 453 5
DFS/CFM	Cable carrier installation	1332 455 1

Cable pin assignment for HIPERFACE® encoder AS1H / ES1H / AV1H

Cable pin assignment for HIPERFACE® encoder AS1H /ES1H /AV1H

Motor connection end					Connection MOVIAXIS® MXA MOVIDRIVE®MDX..B	
Plug connector	Contact no.	Description	Cable core color	Description	Contact no.	Plug connector
ASTA021FR **198 921 9** 12-pin with socket contacts 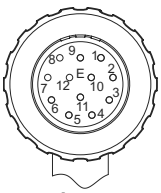 **View X**	1	Unassigned	Unassigned	Unassigned	3	**Sub-D 15-pin** 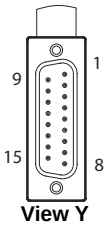 **View Y**
	2	Unassigned	Unassigned	Unassigned	5	
	3	S1 (cosine +)	Red (RD)	S1 (cosine +)	1	
	4	S3 (cosine -)	Blue (BU)	S3 (cosine -)	9	
	5	S2 (sine +)	Yellow (YE)	S2 (sine +)	2	
	6	S4 (sine -)	Green (GN)	S4 (sine -)	10	
	7	DATA-	Violet (VT)	DATA-	12	
	8	DATA+	Black (BK)	DATA+	4	
	9	TF/KTY +	Brown (BN)	TF/KTY +	14	
	10	TF/KTY -	White (WH)	TF/KTY -	6	
	11	GND	Gray/pink (GY/PK)[1)]	GND	8	
	12	U_S	Red/Blue (RD/BU)[1)]	U_S	15	
		–	–	Unassigned	7	
		–	–	Unassigned	11	
		–	–	Unassigned	13	

1) Double assignment to increase cross section

Extension cable for HIPERFACE® encoder AS1H / ES1H / AV1H

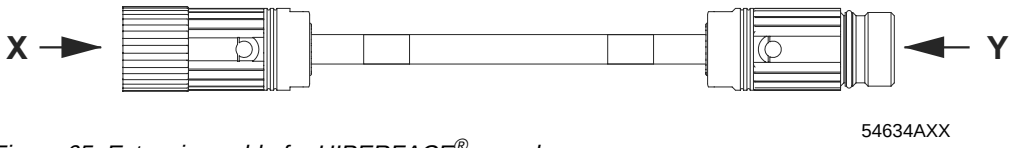

Figure 65: Extension cable for HIPERFACE® encoder

Type	Installation	Part number
DFS/CFM	Fixed installation	199 539 1
DFS/CFM	Cable carrier installation	199 540 5

Pin assignment of extension cable for HIPERFACE® encoder AS1H / ES1H / AV1H

Pin assignment of extension cable for RH.M resolver						
Plug connector	**Contact no.**	**Description**	**Cable core color**	**Description**	**Contact no.**	**Plug connector**
ASTA021FR **198 673 2** 12-pin with socket contacts 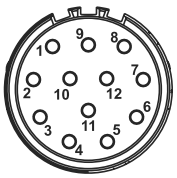 **View X**	1	Unassigned	-	Unassigned	1	**AKUA020MR** **199 647 9** 12-pin with pin contacts 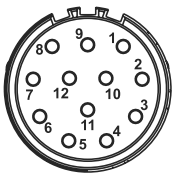 **View Y**
	2	Unassigned	-	Unassigned	2	
	3	S1 (cosine +)	Red (RD)	S1 (cosine +)	3	
	4	S3 (cosine -)	Blue (BU)	S3 (cosine -)	4	
	5	S2 (sine +)	Yellow (YE)	S2 (sine +)	5	
	6	S4 (sine -)	Green (GN)	S4 (sine -)	6	
	7	DATA-	Violet (VT)	DATA-	7	
	8	DATA+	Black (BK)	DATA+	8	
	9	TF/KTY +	Brown (BN)	TF/KTY +	9	
	10	TF/KTY -	White (WH)	TF/KTY -	10	
	11	GND	Gray/pink (GY/PK) / pink (PK)	GND	11	
	12	U_S	Red/blue (RD/BU) / gray (GY)	U_S	12	

The extension cable has the same pin assignment as all other contacts.

Alternative plug connectors

Signal plug connector with socket contacts (complete)

Type	Cross sections which can be connected	Part no.
AS1H ES1H AV1H	6 x 2 x 0.06 ... 1 mm^2	198 673 2

HIPERFACE® encoder cable to terminal box DFS for MOVIAXIS® MXA, MOVIDRIVE® MDX..B

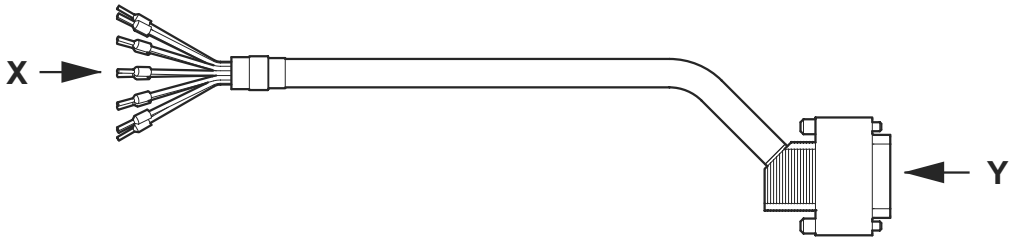

54640AXX

Figure 66: HIPERFACE® encoder cable with terminal box connection on motor end for DFS motors

Type	Installation	Part number
DFS	Fixed installation	1332 765 8
DFS	Cable carrier installation	1332 766 6

Cable pin assignment for HIPERFACE® encoder AS1H / ES1H / AV1H

HIPERFACE® cable to terminal box MOVIAXIS® MXA, MOVIDRIVE® MDX..B with DFS motors

Motor connection end					Connection MOVIAXIS®MXA MOVIDRIVE®MDX..B	
Terminal strip	Contact no.	Description	Cable core color	Description	Contact no.	Plug connector
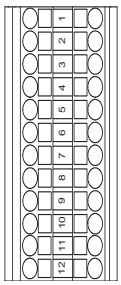 View X	6	Data +	Black (BK)	Data +	4	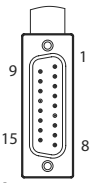 View Y
	5	Data -	Violet (VT)	Data -	12	
	1	S1 (COS +)	Red (RD)	S1 (COS +)	1	
	2	S3 (COS -)	Blue (BU)	S3 (COS -)	9	
	3	S2 (SIN +)	Yellow (YE)	S2 (SIN +)	2	
	4	S4 (SIN -)	Green (GN)	S4 (SIN -)	10	
	7	GND	Gray pink (GYPK) / pink (PK)	GND	8	
	8	Us	Red blue (RDBU)	Us	15	
	9	TF / TH / KTY +	Brown (BN)	TF / TH / KTY +	14	
	10	TF / TH / KTY -	White (WH)	TF / TH / KTY -	6	

HIPERFACE® encoder cable to terminal box CFM for MOVIAXIS® MXA, MOVIDRIVE® MDX..B



54641AXX

Figure 67: HIPERFACE® encoder cable with terminal box connection on motor end for CFM motors

Type	Installation	Part number
CFM	Fixed installation	1332 457 8
CFM	Cable carrier installation	1332 454 3

Pin assignment for HIPERFACE® encoder cable AS1H / ES1H

HIPERFACE® cable to terminal box MOVIAXIS® MXA, MOVIDRIVE® MDX..B with CFM motors						
Motor connection end					Connection MOVIAXIS® MXA MOVIDRIVE® MDX..B	
Terminal strip	Contact no.	Description	Cable core color	Description	Contact no.	Plug connector
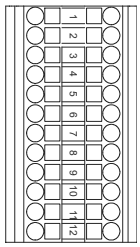 View X	6	Data +	Black (BK)	Data +	4	Sub-D 15-pin 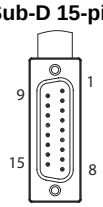 View Y
	5	Data -	Violet (VT)	Data -	12	
	1	S1 (COS +)	Red (RD)	S1 (COS +)	1	
	2	S3 (COS -)	Blue (BU)	S3 (COS -)	9	
	3	S2 (SIN +)	Yellow (YE)	S2 (SIN +)	2	
	4	S4 (SIN -)	Green (GN)	S4 (SIN -)	10	
	7	GND	Gray pink (GYPK) / pink (PK)	GND	8	
	8	Us	Red blue (RDBU)	Us	15	
	9	TF / TH / KTY +	Brown (BN)	TF / TH / KTY +	14	
	10	TF / TH / KTY -	White (WH)	TF / TH / KTY -	6	

Encoder cable AV1Y / DIP11A / B for MOVIDRIVE® MDX..B



Figure 68: Encoder cable AV1Y / DIP11A / B

Type	Installation	Part number
DFS/CFM	Fixed installation	0198 929 4
DFS/CFM	Cable carrier installation	0198 930 8

Pin assignment of encoder cable AV1Y / DIP11A / B

Pin assignment						
Motor connection end					Connection MOVIDRIVE® MDX..B	
Round connector plug	Contact no.	Resolver signal	Cable core color	Resolver signal	Contact no.	Plug connector
SPUC 17H FRON 005 17-pole	1	Unassigned	-	Unassigned	-	Sub-D 9-pin
	2	Unassigned	-	Unassigned	-	
	3	Unassigned	-	Unassigned	-	
	4	Unassigned	-	Unassigned	-	
	5	Unassigned	-	Unassigned	-	
	6	Unassigned	-	Unassigned	-	
	7	UB	White (WH)	UB	9	
	8	T+	Pink (PK)	T+	3	
	9	T-	Gray (GY)	T-	8	
	10	GND	Brown (BN)	GND	5	View Y
	11	Unassigned	-	Unassigned	-	
	12	Unassigned	-	Unassigned	-	
	13	Unassigned	-	Unassigned	-	
	14	D +	Yellow (YE)	D +	1	
	15	Unassigned	-	Unassigned	-	
	16	Unassigned	-	Unassigned	-	
	17	D -	Green (GN)	D -	6	

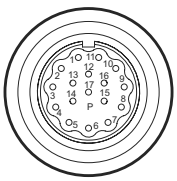

View X

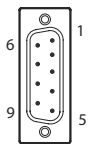

Encoder cable AV1Y for MOVIDRIVE® MDX..B

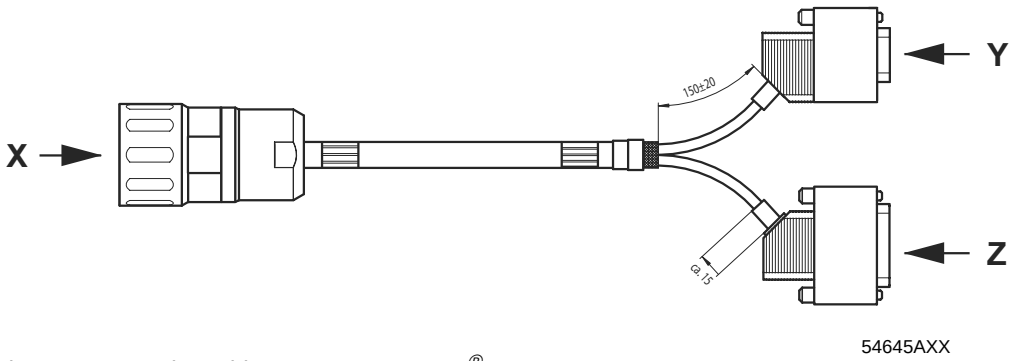

Figure 69: Encoder cable AV1Y MOVIDRIVE® MDX..B

Type	Installation	Part number
DFS/CFM	Fixed installation	1332 813 1
DFS/CFM	Cable carrier installation	1332 812 3

Pin assignment of encoder cable AV1Y MOVIDRIVE® MDX..B

Motor connection end		Pin assignment			Connection MOVIDRIVE® MDX..B	
Round connector plug	Contact no.	Encoder signal	Cable core color	Encoder signal	Contact no.	Plug connector
SPUC 17H FRON 005 17-pole	1	Unassigned	-	Unassigned	-	Sub-D 9-pin
	2	Unassigned	-	Unassigned	-	
	3	Unassigned	-	Unassigned	-	
	4	Unassigned	-	Unassigned	-	
	5	Unassigned	-	Unassigned	-	
	6	Unassigned	-	Unassigned	-	
	7	UB	White (WH)	UB	9	
	8	T+	Pink (PK)	T+	3	
	9	T-	Gray (GY)	T-	8	
	10	GND	Brown (BN)	GND	5	
	11	Unassigned	-	Unassigned	-	Sub-D 15-pin
	14	D +	Black (BK)	D +	1	
	17	D -	Violet (VT)	D -	6	
	12	B	Red (RD)	B	2	
	13	B	Blue (BU)	B	10	
	15	A	Yellow (YE)	A	1	
	16	A	Green (GN)	A	9	

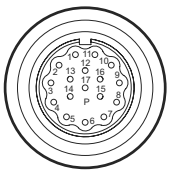

View X

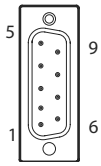

View Y

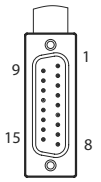

View Z

Extension cable for AV1Y encoder

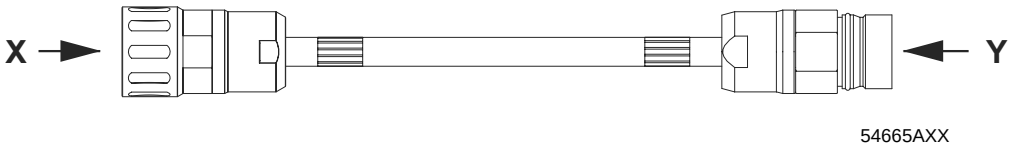

Figure 70: Extension cable for AV1Y encoder

Type	Installation	Part number
DFS/CFM	Cable carrier installation	0593 968 2

Pin assignment of extension cable for AV1Y encoder

Pin assignment						
Plug connector	**Contact no.**	**Resolver signal**	**Cable core colors**	**Resolver signal**	**Contact no.**	**Plug connector**
Round connector SPUC 17H **0198 886 7** 17-pin contact socket 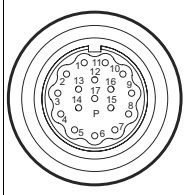 **View X**	1	Unassigned	-	Unassigned	1	**SRUC 17G adapter** **0593 403 6** 17-pin with pin contacts 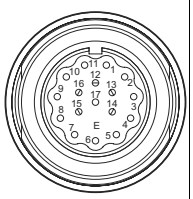 **View Y**
	2	Unassigned	-	Unassigned	2	
	3	Unassigned	-	Unassigned	3	
	4	Unassigned	-	Unassigned	4	
	5	Unassigned	-	Unassigned	5	
	6	Unassigned	-	Unassigned	6	
	7	UB	White (WH)	UB	7	
	8	T+	Pink (PK)	T+	8	
	9	T-	Gray (GY)	T-	9	
	10	GND	Brown (BN)	GND	10	
	11	Unassigned	-	Unassigned	11	
	12	B	Red (RD)	B	12	
	13	B	Blue (BU)	B	13	
	14	D +	Black (BK)	D +	14	
	15	A	Yellow (YE)	A	15	
	16	A	Green (GN)	A	16	
	17	D -	Violet (VT)	D -	17	

The extension cable has the same pin assignment as all other contacts.

Cable for VR forced cooling fan

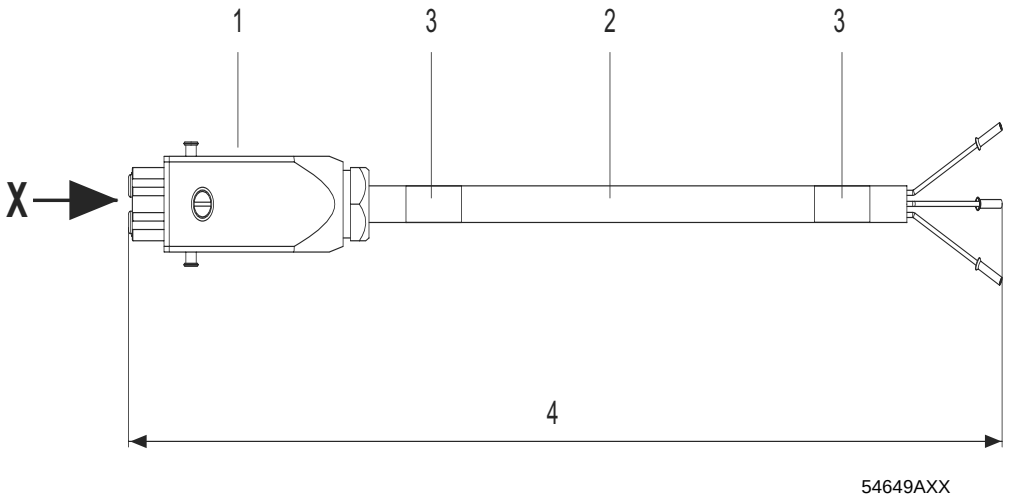

Figure 71: Cable for VR forced cooling fan

[1] Connector: STAK 200
[2] Printed on connector: SEW-EURODRIVE
[3] Nameplate
[4] Line length ≤ 5 m: +200 mm tolerance
Line length ≥ 5 m: +2 % tolerance
Permitted line length according to the technical documents.

Type	Installation	Part number
CFM	Fixed installation	198 634 1
CFM	Cable carrier installation	199 560 X

Pin assignment of cable for VR forced cooling fan

STAK 200 plug connector	Contact	Core identification	Assigned	Contact	Connection type
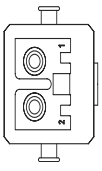 **View X Connector with two socket contacts**	1	First digit	24 V +	Cut-off, length ca. 250 mm	Conductor end sleeves
	2	Second digit	0 V		

Extension cable for VR forced cooling fan

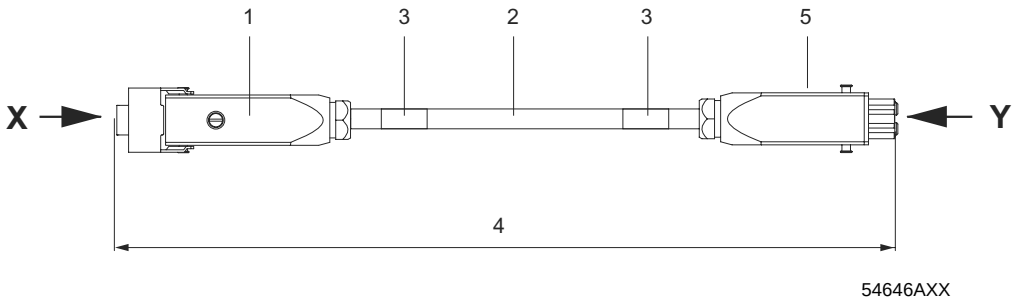

Figure 72: Extension cable for VR forced cooling fan

[1] Connector: STAS 200
[2] Printed on connector: SEW-EURODRIVE
[3] Nameplate
[4] Line length ≤ 5 m: +200 mm tolerance
Line length ≥ 5 m: +2 % tolerance
Permitted line length according to the technical documents.
[5] Socket: STAK 200

Type	Installation	Part number
CFM	Fixed installation	199 561 8
CFM	Cable carrier installation	199 562 6

Pin assignment of extension cable for forced cooling fan

STAS 200 plug connector	Contact	Core identification	Assigned	Contact	Connection type STAK 200
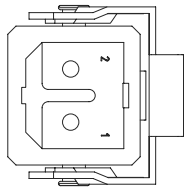 **View X Connector with two pin contacts**	1	First digit	24 V +	1	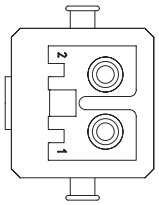 **View Y Connector with two socket contacts**
	2	Second digit	0 V	2	

The extension cable has the same pin assignment as all other contacts.

Alternative plug connector for CFM71, CFM90, CFM112

Signal plug connector with socket contacts (complete)

Type	Cross sections which can be connected	Part no.
VR	3 x 1 mm^2	198 498 5

11.8 Cable specification

Fixed installation of the power cables

Manufacturer		Lapp				
Cable cross sections		**4 x 1.5 mm²**	**4 x 2.5 mm²**	**4 x 4 mm²**	**4 x 6 mm²**	**4 x 10 mm²**
Manufacturer designation		TPE/CY				
Operating voltage Uo/	[V_{AC}]	600/1000				
Temperature range	[°C]	fixed installation -10 to +90				
Max. temperature	[°C]	90	90	90	90	90
Min. bending radius	[mm]	44	48	56	61	84
Diameter D	[mm]	9.3 ± 0.3	10 ± 0.3	12.3 ± 0.3	13.6 ± 0.4	17.0 ± 0.6
Core identification		BK with lettering WH + GN/YE				
Sheath color		Orange, similar to RAL 2003				
Approval(s)		DESINA / VDE / UL				
Capacitance core/shielding	[nF/km]	135	140	150	155	155
Capacitance core/core	[nF/km]	75	85	90	95	95
Halogen free		No				
Silicone-free		Yes				
CFC-free		No				
Inner insulation (core)		TPE				
Outer insulation (sheath)		PVC				
Flame-inhibiting/self-extinguishing		No				
Conductor material		Cu				
Shielding		Tinned Cu				
Weight (cable)	[kg/km]	196	254	371	472	825

Cable carrier installation of power cables

Manufacturer		Nexans				
Cable cross sections		**4 x 1.5 mm²**	**4 x 2.5 mm²**	**4 x 4 mm²**	**4 x 6 mm²**	**4 x 10 mm²**
Manufacturer designation		PSL(LC)C11Y-J 4 x ... mm²		PSL11YC11Y-J 4 x ... mm²		
Operating voltage Uo/	[V_{AC}]	600 / 1000				
Temperature range	[°C]	-20 to +60				
Max. temperature	[°C]	+ 90 (on the conductor)				
Min. bending radius	[mm]	135	170	130	155	180
Diameter D	[mm]	12.4 ± 1.1	15.1 ± 1.6	13.1 ± 0.4	15.3 ± 0.4	17.7 ± 0.5
Max. acceleration	[m/s²]	20 (travel distance: 4 m horizontal, 1.5 m vertical)				
Max. velocity	[m/min]	200 at max. travel distance of 5 m				
Bending cycles		min. 5 mio.				
Core identification		BK with lettering WH + GN/YE				
Sheath color		Orange similar to RAL 2003				
Approval(s)		DESINA / VDE / UL / cULus				
Capacitance core/shielding≤	[nF/km]	95	95	170	170	170
Capacitance core/core≤	[nF/km]	65	65	95	95	95
Halogen free		Yes				
Silicone-free		Yes				
CFC-free		Yes				
Inner insulation (core)		TPO		TPM		
Outer insulation (sheath)		TPU (PUR)				

Table continued on next page

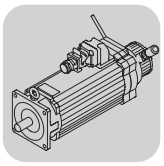

Manufacturer		Nexans				
Cable cross sections		**4 x 1.5 mm²**	**4 x 2.5 mm²**	**4 x 4 mm²**	**4 x 6 mm²**	**4 x 10 mm²**
Flame-inhibiting/self-extinguishing		Yes				
Conductor material		E-Cu blank				
Shielding		Braided tinned Cu shield (optically covered > 85 %)				
Weight (cable)	[kg/km]	190	300	320	420	640

Fixed installation of brake power cables

Manufacturer		Lapp				
Cable cross sections		**4 x 1.5 mm² + 3 x 1 mm²**	**4 x 2.5 mm² + 3 x 1 mm²**	**4 x 4 mm² + 3x 1 mm²**	**4 x 6 mm+ 3x 1.5 mm²**	**4 x 10 mm² + 3x 1.5 mm²**
Manufacturer designation		TPE/CY				
Operating voltage Uo/	[V_{AC}]	600 /1000				
Temperature range	[°C]	Fixed installation: -10 to +90				
Max. temperature	[°C]	90	90	90	90	90
Min. bending radius	[mm]	54	57	64	72	92
Diameter D	[mm]	11.8 ± 0.4	13.4 ± 0.5	15.0 ± 0.5	17.0 ± 0.6	20.0 ± 0.5
Core identification		BK with lettering WH + GN/YE				
Sheath color		Orange similar to RAL 2003				
Approval(s)		DESINA / VDE / UL				
Capacitance core/shielding	[nF/km]	135	145	150	155	155
Capacitance core/core	[nF/km]	75	85	90	95	95
Halogen free		No				
Silicone-free		Yes				
CFC-free		No				
Inner insulation (core)		TPE				
Outer insulation (sheath)		PVC				
Flame-inhibiting/self-extinguishing		No				
Conductor material		Cu				
Shielding		Tinned Cu				
Weight (cable)	[kg/km]	300	370	476	625	1024

Cable carrier installation brake power cables

Manufacturer		Nexans				
Cable cross sections		**4 x 1.5 mm² + 3 x 1 mm²**	**4 x 2.5 mm² + 3 x 1 mm²**	**4 x 4 mm² + 3x 1 mm²**	**4 x 6 mm+ 3x 1.5 mm²**	**4 x 10 mm² + 3x 1.5 mm²**
Manufacturer designation		PSL(LC)C11Y-J 4 x ... mm²		PSL11YC11Y-J 4x... +3A.../C		
Operating voltage Uo/	[V_{AC}]	600 / 1000				
Temperature range	[°C]	-20 to +60				
Max. temperature	[°C]	+ 90 (conductor)				
Min. bending radius	[mm]	165	170	155	175	200
Diameter D	[mm]	15.1 ± 1.6	16.3 ± 0.8	15.3 ± 0.5	17.4 ± 0,5	20.5 ± 0.5
Max. acceleration	[m/s²]	20 (travel distance: 4 m horizontal, 1.5 m vertical)				
Max. velocity	[m/min]	200 at max. travel distance of 5 m				
Bending cycles		min. 5 mio.				
Core identification		BK with lettering WH + GN/YE				
Sheath color		Orange similar to RAL 2003				
Approval(s)		DESINA / VDE / UL / cULus				

Table continued on next page

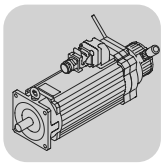

Manufacturer		**Nexans**				
Cable cross sections		**4 x 1.5 mm² + 3 x 1 mm²**	**4 x 2.5 mm² + 3 x 1 mm²**	**4 x 4 mm² + 3x 1 mm²**	**4 x 6 mm+ 3x 1.5 mm²**	**4 x 10 mm² + 3x 1.5 mm²**
Capacitance core/shielding≤	[nF/km]	95	95	170	170	170
Capacitance core/core≤	[nF/km]	65	65	95	95	95
Halogen free		Yes				
Silicone-free		Yes				
CFC-free		Yes				
Inner insulation (cable)		TPO		TPM		
Outer insulation (sheath)		TPU (PUR)				
Flame-inhibiting/self-extinguishing		Yes				
Conductor material		E-Cu blank				
Shielding		Braided tinned Cu shield (optically covered > 85 %)				
Weight (cable)	[kg/km]	280	380	410	540	750

Fixed installation of accessory cables

Accessory designation		**AS1H / ES1H**	**RH.M/RH.L**	**VR**
Manufacturer		**Lapp**		
Cable cross sections		**6 x 2 x 0.25 mm²**	**5 x 2 x 0.25 mm²**	**3 x 1 mm²**
Manufacturer designation		TPE/CY		Ölflex 110 Classic
Operating voltage Uo/	[V_{AC}]	300		300 / 500
Temperature range	[°C]	-10 to +80		- 30 to + 70
Max. temperature	[°C]	+ 80		+ 70
Min. bending radius	[mm]	41.5	37.5	24
Diameter D	[mm]	8.3 ± 0,3	7.5 ± 0,3	6.0 ± 0.3
Core identification		DIN 47 100		VDE 0293
Sheath color		Green, similar to RAL 6018		Silver gray, RAL 7001
Approval(s)		DESINA / VDE / cULus		VDE
Capacitance core/shielding	[nF/km]	110		-
Capacitance core/core	[nF/km]	83		-
Halogen free		No		
Silicone-free		Yes		
CFC-free		No		
Inner insulation (core)		TPE		PVC
Outer insulation (sheath)		PVC		
Flame-inhibiting/self-extinguishing		No		
Conductor material		Cu blank		
Shielding		Braided tinned Cu		-
Weight (cable)	[kg/km]	131	103	65

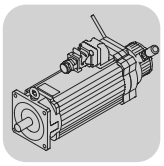

Cable carrier installation of accessory cables

Accessory designation		**AS1H / ES1H**	**RH.M/RH.L**	**VR**
Manufacturer		**Nexans**		
Cable cross sections		**6 x 2 x 0.25 mm²**	**5 x 2 x 0.25 mm²**	**3 x 1 mm²**
Manufacturer designation		SSL11YC11Y ... x 2 x 0.25		PSL 3 x 1.0
Operating voltage Vo/	[V_{AC}]	300		300
Temperature range	[°C]	-20 to +60		- 30 to + 70
Max. temperature	[°C]	+90 (on the conductor)		+ 90 (on the conductor)
Min. bending radius	[mm]	100	95	45
Diameter D	[mm]	9.8 ± 0.2	9,5 ± 0.2	5,7 ± 0.2
Max. acceleration	[m/s^2]	20		10
Max. velocity	[m/min]	200		50
Core identification		WH/BN, GN/YE, GY/PK, BU/RD, BK/VT, GY-PK/RD-BU	WH/BN, GN/YE, GY/PK, BU/RD, BK/VT	2 x WH with digit + 1 x GN/YE
Sheath color		Green similar to RAL 6018		Black RAL 9005
Approval(s)		DESINA / VDE / cULus		VDE / UL
Capacitance core/shielding	[nF/km]	100		-
Capacitance core/core	[nF/km]	55		-
Halogen free		Yes		Yes
Silicone-free		Yes		Yes
CFC-free		Yes		Yes
Inner insulation (core)		PP		TPM
Outer insulation (sheath)		TPE-U		TPE-U
Flame-inhibiting/self-extinguishing		Yes		Yes
Conductor material		E-Cu blank		E-Cu blank
Shielding		Braided tinned Cu		-
Weight	[kg/km]	130	120	50

11.9 Crimping tools

An alternative for purchasing the pre-fabricated cables from SEW-EURODRIVE for motors with plug connectors is to purchase the required plug connectors.

In this case, the customers have to wire the plug connectors themselves. SEW-EURODRIVE offers the matching crimping tools to ensure correct connection of cable core and contact. Please quote the required part number in your order.

Power motor DFS and brake

Tools required for assembly			
Type	**for**	**SEW part number**	**Figure**
Crimping tool		019 243 0	
Positioning tool	Motor contact 2 mm ∅ Core cross section 0.5 ... 2.5 mm^2	019 245 7	
	Brake contact 1mm ∅ Core cross section 0.06 ... 1 mm^2	019 244 9	
Tools required for removal			
Removal tool	Motor contact 2 mm ∅	019 247 3	
	Brake contact 1 mm ∅	019 246 5	
Removal tool[1)]	Insulator	019 248 1	

[1)] The removal tool is **only required for removal on the motor end**.

Tools required for assembly			
Type	**for**	**SEW part number**	**Figure**
Crimping tool for brake contacts / power contacts	Contact 1.6 mm ∅ Contact 3.6 mm ∅	019 070 5	
Crimping jaws for brake contacts / power contacts	Contact 1.6 mm ∅ Core cross section 0.5 ... 1.5 mm^2 Contact 3.6 mm ∅ 1.5 ... 2.5 mm^2 4.0 ... 6.0 mm^2	019 086 1 019 012 8 019 013 6	
Contact receptacle for brake contacts / powercontacts	Contact 1.6 mm ∅ Core cross section 0.5 ... 1.5 mm^2 Contact 3.6 mm ∅ 1.5 ... 2.5 mm^2 4.0 ... 6.0 mm^2	019 087 X 019 014 4 019 015 2	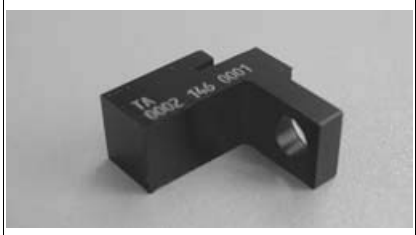
Crimping tool for power contacts	Contact 3.6 mm ∅ Core cross sections 1.5 ... 10 mm^2	019 069 1	
Contact receptacle for power contacts	Contact 3.6 mm ∅ Core cross sections 1.5 ... 10 mm^2	019 071 3	

Tools required for assembly			
Type	**for**	**SEW part number**	**Figure**
Test probe set for power contacts	Contact 3.6 mm ∅ Core cross sections 1.5 ... 10 mm^2	019 085 3	
Tools required for removal			
No special tools are required for removal.			

Resolver encoder system, single and multi-turn Hiperface

Tools required for assembly			
Type	**for**	**SEW part number**	**Figure**
Crimping tool		019 243 0	
Positioning tool	Contact 1 mm ∅ Core cross section 0.06 ... 1 mm^2	019 244 9	
Tools required for removal			
Removal tool	Contact 1 mm ∅ Core cross section 0.06 ... 1 mm^2	019 246 5	
Removal tool[1)]	Insulator	019 248 1	

1) The removal tool is **only required for removal on the motor end**.

SSI multi-turn encoder system

Tools required for assembly			
Type	**for**	**SEW part number**	**Figure**
Crimping tool		019 243 0	
Tools required for removal			
Removal tool	Contact 1 mm ∅ Core cross section 0.24 ... 1 mm^2	019 260 0	

12 R..CT/CV..

12.1 R, RF, R..F, RXF..CT/CV

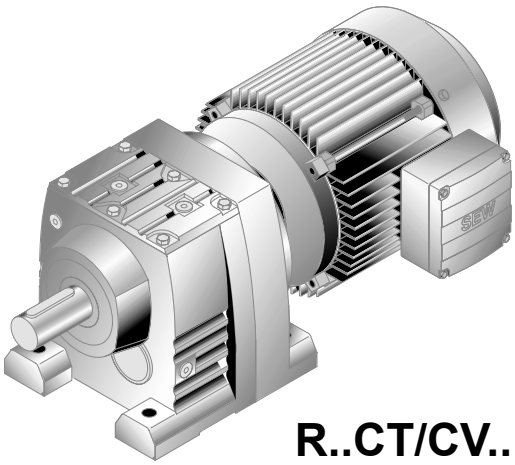

R..CT/CV..

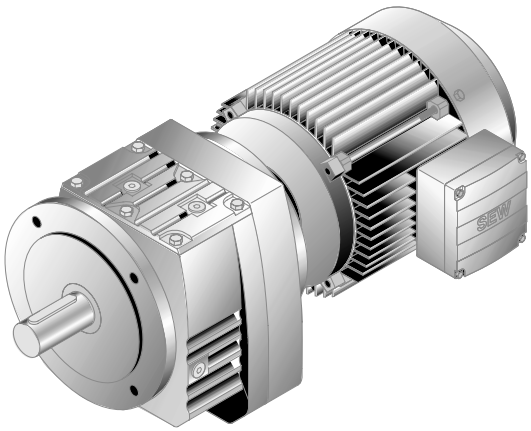

RF..CT/CV..

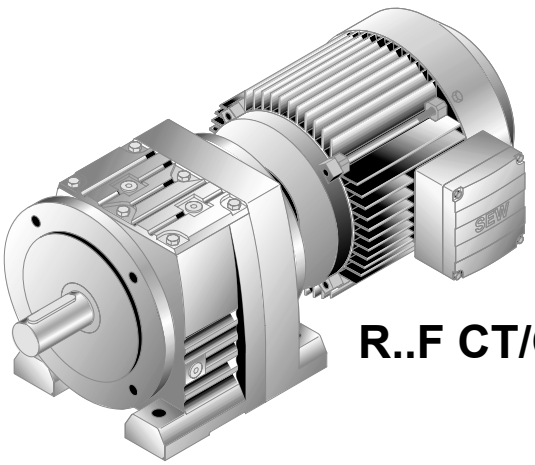

R..F CT/CV..

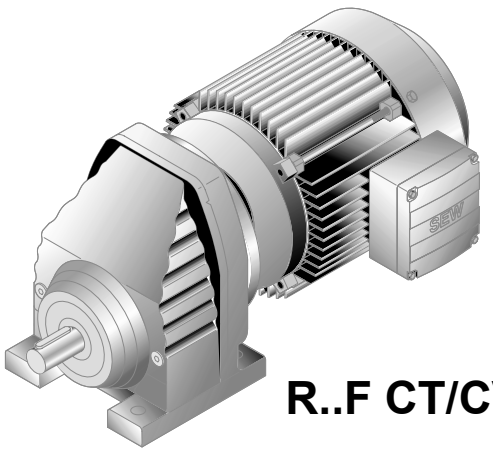

R..F CT/CV..

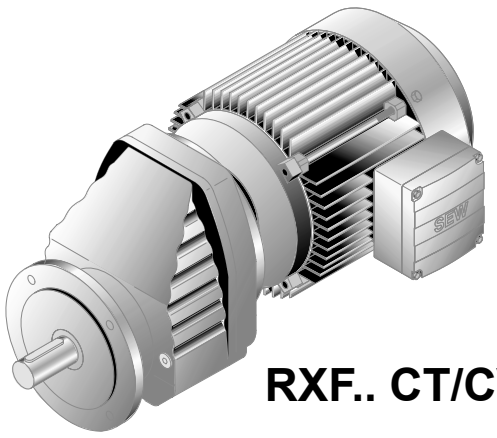

RXF.. CT/CV..

52826AXX

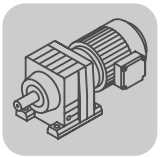

12.2 RX57 CT/CV.. [Nm]

	$M_{a\ max}$ [Nm]	i	φ (/R) [']	F_{Ra}(RX) [N]	$J_G 10^{-4}$ [kgm^2]	CT			CV		
						71D	80N	90L	100M	100L	132S
RX57	68	4.35	-	2640	0.26						
	69	3.79	-	2480	0.32						
RXF57	69	3.55*	-	2420	0.35						
	65	3.14	-	2320	0.42						
	67	2.91	-	2170	0.44						
	69	2.64*	-	1810	0.55						
	69	2.37	-	1500	0.64						
	69	2.04	-	1070	0.85						
	69	1.92*	-	890	0.94						
	69	1.65	-	430	1.22						
	68	1.48	-	112	1.44						
	63	1.30	-	132	1.90						

m [kg]	CT			CV		
	71D	80N	90L	100M	100L	132S
RX57	17	20	26	30	33	49

RXF57: + 1.9 kg

12.3 RX67 CT/CV.. [Nm]

	$M_{a\ max}$ [Nm]	i	φ (/R) [']	F_{Ra}(RX) [N]	$J_G 10^{-4}$ [kgm^2]	CT			CV			
						71D	80N	90L	100M	100L	132S	132M
RX67 RXF67	75	5.18	-	3580	0.34							
	82	4.53	-	3350	0.42							
	80	4.30*	-	3300	0.47							
	87	3.77	-	3090	0.69							
	100	3.20*	-	2800	0.88							
	106	2.89	-	2640	1.02							
	118	2.54	-	2000	1.32							
	123	2.40*	-	1530	1.44							
	134	2.04	-	230	1.78							
	126	1.86	-	225	2.07							
	114	1.61	-	245	2.59							
	104	1.40*	-	205	3.22							

m [kg]	CT			CV			
	71D	80N	90L	100M	100L	132S	132M
RX67	20	23	29	33	36	52	75
RXF67: + 4.0 kg							

12.4 RX77 CT/CV.. [Nm]

	$M_{a\ max}$ [Nm]	i	φ (/R) [']	F_{Ra}(RX) [N]	$J_G 10^{-4}$ [kgm^2]	CT			CV		
						71D	80N	90L	100M	100L	132S
RX77 **RXF77**	103	6.41	-	5600	0.66						
	110	5.63	-	5300	0.81						
	103	5.35*	-	5240	0.90						
	123	4.73	-	4900	1.26						
	143	4.04*	-	4500	1.60						
	153	3.70	-	4290	1.86						
	182	3.25*	-	3200	2.31						
	193	3.08*	-	2560	2.50						
	215	2.70	-	1110	3.05						
	215	2.43	-	510	3.36						
	200	2.13	-	435	4.11						
	187	1.88*	-	335	4.98						
	173	1.67	-	315	5.99						
	155	1.42	-	315	7.64						

m [kg]	CT			CV		
	71D	80N	90L	100M	100L	132S
RX77	28	32	38	41	45	62

RXF77: + 2.3 kg

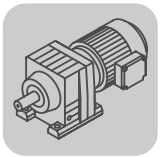

RX77 CT/CV..

	$M_{a\ max}$ [Nm]	i	$\varphi_{(/R)}$ [']	$F_{Ra}(RX)$ [N]	$J_G 10^{-4}$ [kgm^2]	CV		
						132M	132ML	160M
RX77 **RXF77**	103	6.41	-	5600	0.66			
	110	5.63	-	5300	0.81			
	103	5.35*	-	5240	0.90			
	123	4.73	-	4900	1.26			
	143	4.04*	-	4500	1.60			
	153	3.70	-	4290	1.86			
	182	3.25*	-	3200	2.31			
	193	3.08*	-	2560	2.50			
	215	2.70	-	1110	3.05			
	215	2.43	-	510	3.36			
	200	2.13	-	435	4.11			
	187	1.88*	-	335	4.98			
	173	1.67	-	315	5.99			
	155	1.42	-	315	7.64			

m [kg]	CV		
	132M	132ML	160M
RX77	83	92	96

RXF77: + 2.3 kg

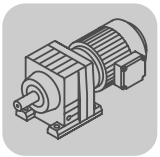

12.5 RX87 CT/CV.. [Nm]

	$M_{a\ max}$ [Nm]	i	φ (/R) [']	F_{Ra}(RX) [N]	$J_G 10^{-4}$ [kgm^2]	CT		CV				
						80N	90L	100M	100L	132S	132M	132ML
RX87 **RXF87**	149	7.63	-	7490	1.60							
	140	7.20*	-	7380	1.76							
	192	6.45	-	6850	2.72							
	225	5.56*	-	6320	3.42							
	250	5.07	-	5980	3.93							
	290	4.50*	-	5500	4.82							
	305	3.78	-	5030	6.20							
	405	3.48	-	2730	6.87							
	405	3.09	-	1950	8.14							
	405	2.76*	-	1200	9.41							
	405	2.48	-	470	10.93							
	385	2.15	-	42	13.17							
	355	1.93	-	185	15.35							
	315	1.60*	-	74	19.25							
	290	1.39	-	74	24.69							

m [kg]	CT		CV				
	80N	90L	100M	100L	132S	132M	132ML
RX87	48	54	59	62	77	99	110

RXF87: + 5.0 kg

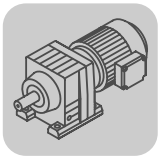

RX87 CT/CV..

	$M_{a\ max}$ [Nm]	i	$\varphi_{(/R)}$ [']	$F_{Ra}(RX)$ [N]	$J_G 10^{-4}$ [kgm^2]	CV			
						160M	160L	180M	180L
RX87 **RXF87**	149	7.63	-	7490	1.60				
	140	7.20*	-	7380	1.76				
	192	6.45	-	6850	2.72				
	225	5.56*	-	6320	3.42				
	250	5.07	-	5980	3.93				
	290	4.50*	-	5500	4.82				
	305	3.78	-	5030	6.20				
	405	3.48	-	2730	6.87				
	405	3.09	-	1950	8.14				
	405	2.76*	-	1200	9.41				
	405	2.48	-	470	10.93				
	385	2.15	-	42	13.17				
	355	1.93	-	185	15.35				
	315	1.60*	-	74	19.25				
	290	1.39	-	74	24.69				

m [kg]	CV			
	160M	160L	180M	180L
RX87	110	150	200	215

RXF87: + 5.0 kg

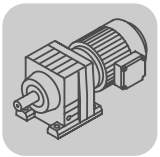

12.6 RX97 CT/CV.. [Nm]

	$M_{a\ max}$ [Nm]	i	φ (/R) [']	F_{Ra}(RX) [N]	$J_G 10^{-4}$ [kgm^2]	CT		CV				
						80N	90L	100M	100L	132S	132M	132ML
RX97 **RXF97**	225	8.23	-	9560	3.97							
	260	7.16*	-	8950	5.07							
	300	6.56	-	8500	5.83							
	420	5.79	-	7630	9.17							
	395	4.91	-	7220	11.79							
	595	4.52	-	6180	13.00							
	595	4.04	-	5380	15.30							
	595	3.64*	-	4530	17.63							
	595	3.30	-	3730	20.24							
	595	2.92	-	2810	23.99							
	595	2.64	-	1980	27.50							
	595	2.24*	-	495	33.32							
	570	1.96	-	19	40.89							
	505	1.64	-	51	50.70							
	455	1.42	-	132	61.22							

m [kg]	CT		CV				
	80N	90L	100M	100L	132S	132M	132ML
RX97	71	78	83	86	105	125	135

RXF97: + 8.6 kg

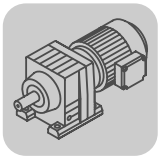

RX97 CT/CV..

	$M_{a\ max}$ [Nm]	i	$\varphi_{(/R)}$ [']	$F_{Ra}(RX)$ [N]	$J_G 10^{-4}$ [kgm^2]	CV			
						160M	160L	180M	180L
RX97	225	8.23	-	9560	3.97				
	260	7.16*	-	8950	5.07				
RXF97	300	6.56	-	8500	5.83				
	420	5.79	-	7630	9.17				
	395	4.91	-	7220	11.79				
	595	4.52	-	6180	13.00				
	595	4.04	-	5380	15.30				
	595	3.64*	-	4530	17.63				
	595	3.30	-	3730	20.24				
	595	2.92	-	2810	23.99				
	595	2.64	-	1980	27.50				
	595	2.24*	-	495	33.32				
	570	1.96	-	19	40.89				
	505	1.64	-	51	50.70				
	455	1.42	-	132	61.22				

m [kg]	CV			
	160M	160L	180M	180L
RX97	135	180	230	240

RXF97: + 8.6 kg

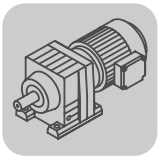

12.7 RX107 CV.. [Nm]

	$M_{a\ max}$ [Nm]	i	φ (/R) [']	F_{Ra}(RX) [N]	$J_G 10^{-4}$ [kgm^2]	CV					
						100M	100L	132S	132M	132ML	160M
RX107	460	6.63*	-	9700	11.61						
	455	5.61	-	9080	14.85						
RXF107	695	5.19	-	7850	16.52						
	695	4.65	-	7450	19.47						
	830	4.20*	-	6420	25.01						
	830	3.81	-	5550	28.68						
	830	3.38	-	4490	33.87						
	830	3.07	-	3600	38.69						
	830	2.64*	-	2170	47.03						
	830	2.30	-	900	56.79						
	765	1.95	-	555	70.37						
	705	1.71	-	480	84.32						
	645	1.44	-	315	111.45						

m [kg]	CV					
	100M	100L	132S	132M	132ML	160M
RX107	115	120	135	155	165	170

RXF107: + 17 kg

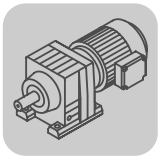

RX107 CV..

	$M_{a\ max}$ [Nm]	i	$\varphi_{(/R)}$ [']	$F_{Ra}(RX)$ [N]	$J_G 10^{-4}$ [kgm^2]	CV 160L	CV 180M	CV 180L	CV 200L
RX107 RXF107	460	6.63*	-	9700	11.61				
	455	5.61	-	9080	14.85				
	695	5.19	-	7850	16.52				
	695	4.65	-	7450	19.47				
	830	4.20*	-	6420	25.01				
	830	3.81	-	5550	28.68				
	830	3.38	-	4490	33.87				
	830	3.07	-	3600	38.69				
	830	2.64*	-	2170	47.03				
	830	2.30	-	900	56.79				
	765	1.95	-	555	70.37				
	705	1.71	-	480	84.32				
	645	1.44	-	315	111.45				

m [kg]	CV 160L	CV 180M	CV 180L	CV 200L
RX107	210	260	275	330

RXF107: + 17 kg

12.8 R17 CT.. [Nm]

	$M_{a\ max}$ [Nm]	i	$\varphi_{(/R)}$ [']	$F_{Ra}(R)$ [N]	$F_{Ra}(RF)$ [N]	$J_G 10^{-4}$ [kgm^2]	CT 71D
R17 RF17  3	85	44.18	-	1770	1560	0.17	
	85	38.61	-	1770	1560	0.20	
	85	36.20	-	1770	1560	0.22	
	85	31.94	-	1770	1560	0.27	
	85	28.32	-	1770	1560	0.32	
	85	24.07	-	1650	1510	0.41	
R17 RF17  2	85	19.71	-	1500	1380	0.12	
	85	16.99	-	1400	1290	0.15	
	85	15.84	-	1350	1240	0.16	
	85	13.84	-	1270	1160	0.20	
	85	12.98	-	1230	1130	0.21	
	81	11.45	-	1180	1080	0.26	
	77	10.15	-	1140	1050	0.30	
	72	8.63	-	1090	1000	0.39	
	56	7.55	-	1040	950	0.16	
	55	7.04	-	1010	930	0.18	
	54	6.15	-	950	880	0.22	
	53	5.76	-	930	860	0.24	
	51	5.09	-	890	820	0.29	
	48	4.51	-	870	795	0.35	
	45	3.83	-	830	755	0.46	

m [kg]		CT 71D
R17	3 	9.2
	2 	8.9

RF17: -- kg

12.9 R27 CT.. [Nm]

	$M_{a\ max}$ [Nm]	i	φ (/R) [']	F_{Ra}(R) [N]	F_{Ra}(RF) [N]	$J_G 10^{-4}$ [kgm^2]	CT 71D	CT 80N	CT 90L
R27 RF27  3	130	69.47	-	4180	3640	0.22			
	130	61.30	-	3980	3640	0.26			
	130	55.87	-	3840	3640	0.13			
	130	48.17	-	3630	3430	0.16			
	130	44.90	-	3530	3340	0.18			
	130	39.25	-	3350	3170	0.22			
	130	36.79	-	3260	3090	0.25			
	130	32.47	-	3100	2940	0.31			
	130	28.78	-	2950	2800	0.37			
	130	24.47	-	2770	2620	0.49			
R27 RF27  2	130	22.32	-	2660	2520	0.18			
	130	19.35	-	2510	2380	0.22			
	130	18.08	-	2440	2310	0.24			
	130	15.63	-	2290	2170	0.29			
	130	13.28*	-	2140	1910	0.39			
	129	11.86	-	1990	1750	0.47			
	122	10.13	-	1890	1670	0.61			
	122	9.41	-	900	795	0.21			
	116	8.16	-	870	770	0.26			
	112	7.63*	-	900	795	0.29			
	106	6.59	-	880	775	0.36			
	99	5.60*	-	880	775	0.48			
	95	5.00*	-	860	760	0.58			
	87	4.27	-	920	810	0.76			
	85	4.00*	-	910	800	0.85			
	79	3.37	-	900	790	1.12			

m [kg]		CT 71D	CT 80N	CT 90L
R27	3 	11	14	-
	2 	11	14	19

RF27: -- kg

12.10 R37 CT.. [Nm]

	$M_{a\ max}$ [Nm]	i	φ (/R) [']	F_{Ra}(R) [N]	F_{Ra}(RF) [N]	$J_G 10^{-4}$ [kgm^2]	CT 71D	CT 80N	CT 90L
R37 **RF37**  **3**	200	105.28	8	4950	4950	0.12			
	200	90.77	8	4950	4950	0.15			
	200	84.61	8	4950	4950	0.16			
	200	73.96	8	4950	4950	0.20			
	200	69.33	8	4950	4950	0.22			
	200	61.18	8	4950	4950	0.26			
	200	55.76	9	4950	4950	0.13			
	200	48.08	9	4950	4870	0.17			
	200	44.81	9	4950	4640	0.19			
	200	39.17	9	4760	4220	0.23			
	200	36.72	9	4540	4020	0.25			
	200	32.40	9	4120	3650	0.31			
	200	28.73	9	3740	3310	0.39			
	200	24.42	9	3240	2870	0.53			
R37 **RF37**  **2**	200	22.27	7	2970	2640	0.19			
	200	19.31	7	2570	2280	0.23			
	200	18.05	8	2390	2120	0.26			
	200	15.60	8	2010	1780	0.31			
	190	13.25	8	1880	1670	0.43			
	183	11.83	8	1810	1610	0.51			
	170	10.11	8	1820	1620	0.66			
	167	9.47	8	1760	1560	0.74			
	156	7.97	8	1720	1520	0.96			
	144	6.67	12	1000	890	0.43			
	142	5.67	12	760	675	0.59			
	135	5.06	13	790	700	0.72			
	126	4.32	13	820	725	0.95			
	122	4.05	13	850	750	1.06			
	112	3.41	14	900	800	1.42			

m [kg]		CT 71D	CT 80N	CT 90L
R37	**3** 	17	20	25
	2 	16	19	25

RF37: + 1.5 kg

12.11 R47 CT/CV.. [Nm]

	$M_{a\ max}$ [Nm]	i	φ (/R) [']	F_{Ra}(R) [N]	$J_G 10^{-4}$ [kgm^2]	CT 71D	CT 80N	CT 90L	CV 100M	CV 100L
R47 RF47  3	300	139.99	7	5420	0.25					
	300	121.87	7	5420	0.31					
	300	114.17	7	5420	0.34					
	300	100.86	7	5420	0.41					
	300	93.68	7	5420	0.43					
	300	84.90	7	5420	0.52					
	300	76.23	7	5420	0.60					
	300	68.54	8	5420	0.33					
	300	64.21	8	5420	0.37					
	300	56.73	8	5420	0.44					
	300	52.69	8	5350	0.47					
	300	47.75	8	5150	0.56					
	300	42.87	8	4930	0.67					
	300	36.93	8	4630	0.85					
	300	34.73	8	4520	0.93					
	300	29.88	8	4240	1.17					
	300	26.70	8	4050	1.36					
	300	23.59	8	3840	1.74					
R47 RF47  2	300	26.74	7	4050	0.29					
	300	23.28	7	3820	0.36					
	300	21.81	7	3710	0.39					
	295	19.27	7	3530	0.48					
	290	17.89	7	3390	0.51					
	275	16.22	7	3350	0.63					
	265	14.56	7	3230	0.74					
	250	12.54	7	3080	0.95					
	245	11.79	7	3020	1.05					
	230	10.15	7	2890	1.34					
	220	9.07	8	2780	1.58					
	205	8.01	8	2690	2.03					
	163	7.76*	10	2720	0.77					
	159	6.96	10	2620	0.93					
	156	6.00	10	2470	1.19					
	155	5.64*	10	2410	1.32					
	150	4.85	10	2280	1.71					
	146	4.34	11	2190	2.04					
	144	3.83	11	2090	2.63					

m [kg]		CT 71D	CT 80N	CT 90L	CV 100M	CV 100L
R47	3 	21	24	30	-	-
	2 	21	24	30	34	37

RF47: -- kg

12.12 R57 CT/CV.. [Nm]

	$M_{a\ max}$ [Nm]	i	φ (/R) [']	F_{Ra}(R) [N]	$J_G 10^{-4}$ [kgm^2]	CT 71D	CT 80N	CT 90L	CV 100M	CV 100L	CV 132S	CV 132M
R57	450	147.92	7	7110	0.26							
	450	128.77	7	7110	0.32							
RF57	450	120.63	7	7110	0.35							
	450	106.58	7	7110	0.42							
RM57	450	98.99	7	7110	0.45							
	450	89.71	7	7110	0.54							
	450	80.55	7	7110	0.62							
	450	69.23	7	7110	0.35							
3	450	64.85	8	6980	0.38							
	450	57.29	8	6630	0.46							
	450	53.22	8	6430	0.49							
	450	48.23	8	6170	0.60							
	450	43.30	8	5900	0.70							
	450	37.30*	8	5530	0.89							
	450	35.07	8	5390	0.97							
	450	30.18	8	5050	1.28							
	450	26.97	8	4800	1.50							
R57	450	26.31	6	4750	0.45							
	450	24.99*	6	4640	0.51							
RF57	450	21.93	7	4370	0.73							
	450	18.60*	7	4050	0.94							
RM57	450	16.79	7	3860	1.10							
	435	14.77*	7	3690	1.42							
	430	13.95*	7	3610	1.55							
	405	11.88	7	3430	1.93							
2	390	10.79	7	3330	2.25							
	370	9.35	7	3180	2.83							
	375	9.06	9	2010	1.28							
	355	7.97	9	2020	1.65							
	350	7.53	9	1950	1.81							
	335	6.41	9	1770	2.29							
	320	5.82	10	1820	2.68							
	305	5.05	10	1730	3.41							
	280	4.39	10	1900	4.30							

m [kg]		CT 71D	CT 80N	CT 90L	CV 100M	CV 100L	CV 132S	CV 132M
R57	**3** 	27	30	36	40	-	-	-
	2 	26	29	35	39	42	58	81

RF57: + 3.4 kg / RM57: + 15 kg

12.13 R67 CT/CV.. [Nm]

	$M_{a\ max}$ [Nm]	i	φ (/R) [']	F_{Ra}(R) [N]	$J_G 10^{-4}$ [kgm^2]	CT 71D	CT 80N	CT 90L	CV 100M	CV 100L	CV 132S	CV 132M
R67	600	158.14	6	7560	0.26							
	600	137.67	6	7560	0.32							
RF67	600	128.97	6	7560	0.36							
	600	113.94	6	7560	0.42							
RM67	600	105.83	6	7560	0.45							
	600	95.91	6	7560	0.54							
	600	86.11	6	7560	0.63							
	600	74.17	7	7560	0.81							
3	600	69.75	7	7560	0.88							
	600	61.26	7	7560	0.47							
	600	56.89	7	7560	0.50							
	600	51.56	7	7560	0.61							
	600	46.29	7	7560	0.72							
	580	39.88*	7	7790	0.93							
	570	37.50	7	7900	1.03							
	540	32.27	7	8210	1.31							
	520	28.83	7	8400	1.54							
R67	540	28.13	6	8210	0.50							
	540	26.72	6	8210	0.56							
RF67	560	23.44	6	8010	0.80							
	600	19.89	6	7560	1.04							
RM67	590	17.95	6	7330	1.21							
	560	15.79	6	7130	1.57							
	550	14.91	6	6980	1.72							
	520	12.70	6	6650	2.16							
	500	11.54	7	6500	2.53							
2	470	10.00	7	6220	3.20							
	440	8.70*	7	5960	4.03							
	380	7.79	8	5830	2.14							
	370	7.36*	8	5790	2.36							
	330	6.27	9	5590	3.04							
	310	5.70	9	5450	3.60							
	290	4.93	9	5210	4.63							
	270	4.29	10	5000	5.92							

m [kg]		CT 71D	CT 80N	CT 90L	CV 100M	CV 100L	CV 132S	CV 132M
R67	**3** 	33	36	42	46	-	-	-
	2 	32	35	41	45	48	64	87

RF67: + 3.2 kg / RM67: + 19 kg

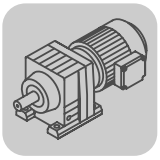

12.14 R77 CT/CV.. [Nm]

	$M_{a\ max}$ [Nm]	i	φ (/R) [']	F_{Ra}(R) [N]	$J_G 10^{-4}$ [kgm^2]	CT 71D	CT 80N	CT 90L	CV 100M	CV 100L	CV 132S
R77	820	166.59	6	9920	0.34						
	820	145.67	6	9920	0.42						
RF77	820	138.39	6	9920	0.46						
	820	121.42	6	9920	0.68						
RM77	820	102.99	6	9920	0.86						
	820	92.97	6	9920	0.99						
	820	81.80	6	9920	1.24						
	820	77.24	7	9920	1.34						
3	820	65.77	7	9920	1.61						
	820	57.68	7	9920	0.97						
	820	52.07	7	9920	1.14						
	820	45.81	7	9920	1.43						
	820	43.26	7	9920	1.56						
	820	36.83	7	9920	1.92						
	820	33.47	7	9920	2.21						
	820	29.00	7	9920	2.95						
	780	25.23	7	10100	3.70						
R77	820	23.37	6	8870	1.70						
	820	21.43	6	8250	1.99						
RF77	780	18.80	6	7980	2.48						
	780	17.82*	6	7620	2.69						
RM77	740	15.60	6	7390	3.28						
	720	14.05	6	7050	3.66						
	690	12.33	6	6740	4.49						
	660	10.88	7	6490	5.47						
2	630	9.64	7	6300	6.61						
	630	8.59	7	4110	3.72						
	610	7.74	8	3940	4.19						
	580	6.79	8	3850	5.18						
	540	5.99*	8	3990	6.35						
	510	5.31*	8	3990	7.74						

m [kg]		CT 71D	CT 80N	CT 90L	CV 100M	CV 100L	CV 132S
R77	**3** 	38	42	48	51	55	72
	2 	37	41	47	50	54	71

RF77: + 5.7 kg / RM77: + 31 kg

R77 CT/CV..

	$M_{a\ max}$ [Nm]	i	φ (/R) [']	F_{Ra}(R) [N]	$J_G 10^{-4}$ [kgm^2]	CV 132M	CV 132ML	CV 160M
R77	820	166.59	6	9920	0.34			
	820	145.67	6	9920	0.42			
RF77	820	138.39	6	9920	0.46			
	820	121.42	6	9920	0.68			
RM77	820	102.99	6	9920	0.86			
	820	92.97	6	9920	0.99			
	820	81.80	6	9920	1.24			
	820	77.24	7	9920	1.34			
3	820	65.77	7	9920	1.61			
	820	57.68	7	9920	0.97			
	820	52.07	7	9920	1.14			
	820	45.81	7	9920	1.43			
	820	43.26	7	9920	1.56			
	820	36.83	7	9920	1.92			
	820	33.47	7	9920	2.21			
	820	29.00	7	9920	2.95			
	780	25.23	7	10100	3.70			
R77	820	23.37	6	8870	1.70			
	820	21.43	6	8250	1.99			
RF77	780	18.80	6	7980	2.48			
	780	17.82*	6	7620	2.69			
RM77	740	15.60	6	7390	3.28			
	720	14.05	6	7050	3.66			
	690	12.33	6	6740	4.49			
	660	10.88	7	6490	5.47			
	630	9.64	7	6300	6.61			
2	630	8.59	7	4110	3.72			
	610	7.74	8	3940	4.19			
	580	6.79	8	3850	5.18			
	540	5.99*	8	3990	6.35			
	510	5.31*	8	3990	7.74			

m [kg]		CV 132M	CV 132ML	CV 160M
R77	**3** 	-	-	-
	2 	92	100	105

RF77: + 5.7 kg / RM77: + 31 kg

12.15 R87 CT/CV.. [Nm]

	$M_{a\ max}$ [Nm]	i	φ (/R) [']	F_{Ra}(R) [N]	$J_G 10^{-4}$ [kgm^2]	CT		CV				
						80N	90L	100M	100L	132S	132M	132ML
R87	1550	216.54	6	16900	0.81							
	1550	205.71	6	16900	0.90							
RF87	1550	181.77	6	16900	1.27							
	1550	155.34	6	16900	1.60							
RM87	1550	142.41	6	16900	1.86							
	1550	124.97	6	16900	2.27							
	1550	118.43*	6	16900	2.44							
	1550	103.65	6	16900	2.97							
3	1550	93.38	6	16900	3.30							
	1550	81.92	6	16900	3.95							
	1550	72.57	6	16900	2.18							
	1550	63.68*	6	15800	2.69							
	1550	60.35*	6	15200	2.91							
	1550	52.82	6	13500	3.64							
	1550	47.58	7	16900	4.14							
	1550	41.74	7	16900	5.07							
	1550	36.84*	7	16800	6.20							
	1550	32.66*	7	16000	7.55							
	1500	27.88	7	15100	9.77							
R87	1500	34.40*	5	9480	3.59							
	1550	31.40	5	7820	4.13							
RF87	1550	27.84*	6	15000	5.08							
	1550	23.40	6	13900	6.57							
RM87	1500	21.51	6	13600	7.30							
	1440	19.10	6	13000	8.69							
	1390	17.08*	6	12600	10.10							
	1340	15.35	6	12100	11.78							
2	1280	13.33	6	11600	14.29							
	1230	11.93	6	11200	16.75							
	1180	9.90*	6	10400	21.28							
	1210	9.14*	6	10500	11.30							
	1160	8.22	7	10200	13.27							
	1070	7.13	7	9780	16.27							
	1020	6.39	7	9450	19.22							
	910	5.30*	7	8980	24.86							

m [kg]		CT		CV				
		80N	90L	100M	100L	132S	132M	132ML
R87	**3** 	68	74	79	82	97	120	130
	2 	67	73	78	81	96	120	125

RF87: + 7.1 kg / RM87: + 37 kg

R87 CT/CV..

	$M_{a\ max}$ [Nm]	i	φ (/R) [']	F_{Ra}(R) [N]	$J_G 10^{-4}$ [kgm^2]	CV 160M	CV 160L	CV 180M	CV 180L
R87 RF87 RM87  3	1550	216.54	6	16900	0.81				
	1550	205.71	6	16900	0.90				
	1550	181.77	6	16900	1.27				
	1550	155.34	6	16900	1.60				
	1550	142.41	6	16900	1.86				
	1550	124.97	6	16900	2.27				
	1550	118.43*	6	16900	2.44				
	1550	103.65	6	16900	2.97				
	1550	93.38	6	16900	3.30				
	1550	81.92	6	16900	3.95				
	1550	72.57	6	16900	2.18				
	1550	63.68*	6	15800	2.69				
	1550	60.35*	6	15200	2.91				
	1550	52.82	6	13500	3.64				
	1550	47.58	7	16900	4.14				
	1550	41.74	7	16900	5.07				
	1550	36.84*	7	16800	6.20				
	1550	32.66*	7	16000	7.55				
	1500	27.88	7	15100	9.77				
R87 RF87 RM87  2	1500	34.40*	5	9480	3.59				
	1550	31.40	5	7820	4.13				
	1550	27.84*	6	15000	5.08				
	1550	23.40	6	13900	6.57				
	1500	21.51	6	13600	7.30				
	1440	19.10	6	13000	8.69				
	1390	17.08*	6	12600	10.10				
	1340	15.35	6	12100	11.78				
	1280	13.33	6	11600	14.29				
	1230	11.93	6	11200	16.75				
	1180	9.90*	6	10400	21.28				
	1210	9.14*	6	10500	11.30				
	1160	8.22	7	10200	13.27				
	1070	7.13	7	9780	16.27				
	1020	6.39	7	9450	19.22				
	910	5.30*	7	8980	24.86				

m [kg]		CV 160M	CV 160L	CV 180M	CV 180L
R87	3 	-	-	-	-
	2 	130	170	220	235

RF87: + 7.1 kg / RM87: + 37 kg

12.16 R97 CT/CV.. [Nm]

	$M_{a\ max}$ [Nm]	i	$\varphi_{(/R)}$ [']	$F_{Ra}(R)$ [N]	$J_G 10^{-4}$ [kgm^2]	CT		CV				
						80N	90L	100M	100L	132S	132M	132ML
R97	3000	255.71	6	19800	1.65							
	3000	241.25	6	19800	1.81							
RF97	3000	216.28	6	19800	2.79							
	3000	186.30	6	19800	3.51							
RM97	3000	170.02	6	19800	4.03							
	3000	150.78	6	19800	4.91							
	3000	126.75	6	19800	6.29							
	3000	116.48	6	19800	6.99							
3	3000	103.44	6	19800	8.42							
	3000	92.48	6	19800	9.84							
	3000	83.15	6	19800	11.38							
	3000	72.17	6	18000	13.84							
	3000	65.21	6	19800	7.11							
	3000	59.92	6	19800	7.95							
	3000	53.21	6	19800	9.51							
	3000	47.58	6	19800	11.12							
	3000	42.78	6	19800	13.05							
	3000	37.13	6	18600	15.97							
	2890	33.25	6	17900	18.85							
	2670	27.58	6	16900	24.33							
R97	2560	32.05	5	10600	9.75							
	2560	27.19	5	8380	12.59							
RF97	2830	25.03	5	15900	13.95							
	2720	22.37	5	15300	16.49							
RM97	2610	20.14	5	14800	19.09							
	2500	18.24	6	14400	22.03							
	2400	16.17	6	13800	26.27							
	2300	14.62	6	13400	30.28							
	2190	12.39	6	12700	37.20							
2	2090	10.83	6	12100	45.97							
	2030	9.29	6	12200	28.47							
	2030	8.39	6	11700	32.97							
	2000	7.12	6	10900	40.95							
	1890	6.21	6	10500	50.88							
	1780	5.20	6	9850	64.99							
	1630	4.50*	6	9500	80.28							

m [kg]		CT		CV				
		80N	90L	100M	100L	132S	132M	132ML
R97	**3** 	110	115	120	125	140	160	170
	2 	105	110	115	120	135	155	165

RF97: + 17 kg / RM97: + 68 kg

R97 CT/CV..

	$M_{a\ max}$ [Nm]	i	φ (/R) [']	$F_{Ra}(R)$ [N]	$J_G 10^{-4}$ [kgm^2]	CV 160M	160L	180M	180L
	3000	255.71	6	19800	1.65				
R97	3000	241.25	6	19800	1.81				
	3000	216.28	6	19800	2.79				
RF97	3000	186.30	6	19800	3.51				
	3000	170.02	6	19800	4.03				
RM97	3000	150.78	6	19800	4.91				
	3000	126.75	6	19800	6.29				
	3000	116.48	6	19800	6.99				
	3000	103.44	6	19800	8.42				
3	3000	92.48	6	19800	9.84				
	3000	83.15	6	19800	11.38				
	3000	72.17	6	18000	13.84				
	3000	65.21	6	19800	7.11				
	3000	59.92	6	19800	7.95				
	3000	53.21	6	19800	9.51				
	3000	47.58	6	19800	11.12				
	3000	42.78	6	19800	13.05				
	3000	37.13	6	18600	15.97				
	2890	33.25	6	17900	18.85				
	2670	27.58	6	16900	24.33				
	2560	32.05	5	10600	9.75				
R97	2560	27.19	5	8380	12.59				
	2830	25.03	5	15900	13.95				
RF97	2720	22.37	5	15300	16.49				
	2610	20.14	5	14800	19.09				
RM97	2500	18.24	6	14400	22.03				
	2400	16.17	6	13800	26.27				
	2300	14.62	6	13400	30.28				
	2190	12.39	6	12700	37.20				
2	2090	10.83	6	12100	45.97				
	2030	9.29	6	12200	28.47				
	2030	8.39	6	11700	32.97				
	2000	7.12	6	10900	40.95				
	1890	6.21	6	10500	50.88				
	1780	5.20	6	9850	64.99				
	1630	4.50*	6	9500	80.28				

m [kg]		CV 160M	160L	180M	180L
R97	**3** 	175	215	265	280
	2 	170	210	260	275

RF97: + 17 kg / RM97: + 68 kg

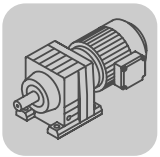

12.17 R107 CV.. [Nm]

	$M_{a\ max}$ [Nm]	i	$\varphi_{(/R)}$ [']	$F_{Ra}(R)$ [N]	$J_G 10^{-4}$ [kgm^2]	CV 100M	100L	132S	132M	132ML	160M
	4300	251.15	7	29500	5.09						
R107	4300	229.95	7	29500	5.85						
	4300	203.16	7	29500	9.16						
RF107	4300	172.34	7	29500	11.82						
	4300	158.68	7	29500	13.09						
RM107	4300	141.83	7	29500	15.36						
	4300	127.68	7	29500	17.78						
	4300	115.63	7	29500	20.44						
	4300	102.53	7	29500	24.51						
3	4300	92.70	7	29500	28.03						
	4300	78.57	7	29500	33.91						
	4300	72.88	7	29500	16.75						
	4300	65.60*	7	29200	19.41						
	4300	59.41	7	28000	22.42						
	4300	52.68	7	26600	27.05						
	4300	47.63	7	25500	31.17						
	4300	40.37*	7	23800	38.33						
	4300	35.26	7	22400	47.07						
	4300	29.49	7	20700	59.54						
	4300	30.77	7	21100	17.91						
R107	4300	27.58	7	20100	21.20						
	4300	24.90*	7	19200	27.13						
RF107	4300	22.62	7	18300	31.25						
	4300	20.07	7	17300	37.13						
RM107	4300	18.21	7	16600	42.66						
	4300	15.65	7	15400	52.39						
	4300	13.66	7	14400	63.83						
	4300	11.59	7	13300	80.16						
2	4300	10.13	7	12400	97.14						
	4300	8.56	7	11300	129.37						
	2970	7.86	9	13800	69.70						
	2970	6.66	9	12800	88.32						
	2970	5.82	9	12100	107.82						
	2900	4.92	9	11300	144.32						

m [kg]		CV 100M	100L	132S	132M	132ML	160M
R107	**3** 	180	180	195	215	225	230
	2 	170	175	190	210	220	225

RF107: + 6.0 kg / RM107: + 94 kg

R107 CV..

	$M_{a\ max}$ [Nm]	i	φ (/R) [']	F_{Ra}(R) [N]	$J_G 10^{-4}$ [kgm^2]	CV 160L	CV 180M	CV 180L	CV 200L
R107	4300	251.15	7	29500	5.09				
	4300	229.95	7	29500	5.85				
RF107	4300	203.16	7	29500	9.16				
	4300	172.34	7	29500	11.82				
RM107	4300	158.68	7	29500	13.09				
	4300	141.83	7	29500	15.36				
	4300	127.68	7	29500	17.78				
	4300	115.63	7	29500	20.44				
	4300	102.53	7	29500	24.51				
3	4300	92.70	7	29500	28.03				
	4300	78.57	7	29500	33.91				
	4300	72.88	7	29500	16.75				
	4300	65.60*	7	29200	19.41				
	4300	59.41	7	28000	22.42				
	4300	52.68	7	26600	27.05				
	4300	47.63	7	25500	31.17				
	4300	40.37*	7	23800	38.33				
	4300	35.26	7	22400	47.07				
	4300	29.49	7	20700	59.54				
R107	4300	30.77	7	21100	17.91				
	4300	27.58	7	20100	21.20				
RF107	4300	24.90*	7	19200	27.13				
	4300	22.62	7	18300	31.25				
RM107	4300	20.07	7	17300	37.13				
	4300	18.21	7	16600	42.66				
	4300	15.65	7	15400	52.39				
	4300	13.66	7	14400	63.83				
	4300	11.59	7	13300	80.16				
2	4300	10.13	7	12400	97.14				
	4300	8.56	7	11300	129.37				
	2970	7.86	9	13800	69.70				
	2970	6.66	9	12800	88.32				
	2970	5.82	9	12100	107.82				
	2900	4.92	9	11300	144.32				

m [kg]		CV 160L	CV 180M	CV 180L	CV 200L
R107	**3** 	270	320	335	-
	2 	265	315	330	385

RF107: + 6.0 kg / RM107: + 94 kg

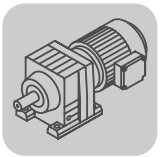

12.18 R137 CV.. [Nm]

	$M_{a\ max}$ [Nm]	i	φ (/R) [']	F_{Ra}(R) [N]	$J_G 10^{-4}$ [kgm^2]	CV 132S	132M	132ML	160M	160L	180M	180L	200L
	8000	174.40*	6	53400	16.39								
R137	8000	156.31	6	53400	19.31								
	8000	141.12*	6	53400	24.94								
RF137	8000	128.18	6	53400	28.45								
	8000	113.72	6	53400	33.86								
RM137	8000	103.20*	6	53400	38.62								
	8000	88.70*	6	53400	46.82								
	8000	80.91*	6	53400	26.60								
	8000	73.49	6	53400	30.61								
3	8000	65.20	6	53400	36.60								
	8000	59.17*	6	53400	41.66								
	8000	50.86*	6	53400	51.04								
	8000	44.39	6	53400	61.95								
	8000	37.65	6	53400	77.70								
	8000	32.91	6	53400	93.92								
	7680	27.83	7	54100	124.86								
	7780	29.57*	6	53900	42.46								
R137	8000	24.12	6	49400	65.52								
	8000	22.00*	6	47100	74.98								
RF137	8000	19.04*	6	43500	90.84								
	8000	16.80*	6	40600	109.98								
RM137	8000	14.51	6	37300	135.93								
	8000	12.83	6	34700	161.14								
	8000	10.79	6	31100	213.20								
	7840	8.71	6	27600	289.45								
2	5110	7.59	8	39000	172.61								
	5110	6.38	8	35900	223.01								
	4600	5.15	8	34500	304.49								

m [kg]		CV 132S	132M	132ML	160M	160L	180M	180L	200L
R137	**3** 	295	305	310	315	355	405	420	475
	2 	285	295	300	305	345	395	410	465

RF137: + 23 kg / RM137: + 135 kg

12.19 R147 CV.. [Nm]

	$M_{a\ max}$ [Nm]	i	$\varphi_{(/R)}$ [']	$F_{Ra}(R)$ [N]	$J_G 10^{-4}$ [kgm^2]	CV 132M	132ML	160M	160L	180M	180L	200L
R147	13000	163.31	5	62700	33.53							
	13000	146.91	5	62700	38.32							
RF147	13000	119.86	5	62700	59.59							
	13000	109.31	5	62700	67.79							
RM147	13000	94.60*	6	62700	81.14							
	13000	83.47	6	62700	97.06							
	13000	72.09	6	62700	117.99							
	13000	66.99	6	62700	65.69							
	13000	61.09	6	62700	75.19							
3	13000	52.87	6	62700	91.12							
	13000	46.65	6	62700	110.34							
	13000	40.29	6	62700	136.41							
	13000	35.64	6	62700	166.30							
	13000	29.95	6	62700	214.07							
	11900	24.19	6	64700	290.79							
R147	12000	20.44	5	64600	139.68							
	10500	18.04	5	67000	168.31							
RF147	13000	15.64	5	62700	210.07							
	12600	13.91	5	63400	250.04							
RM147	13000	11.99	5	60400	334.33							
	13000	9.74	6	54400	454.18							
	13000	8.26	6	49900	591.07							
	8670	7.25	8	58400	358.50							
	8670	5.89	8	53200	490.79							
2	8670	5.00	8	49300	641.97							

m [kg]		CV 132M	132ML	160M	160L	180M	180L	200L
R147	3 	430	440	445	480	530	550	600
	2 	420	430	430	470	520	530	590

RF147: + 8.3 kg / RM147: + 175 kg

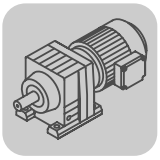

12.20 R167 CV.. [Nm]

	$M_{a\ max}$ [Nm]	i	$\varphi_{(/R)}$ [']	$F_{Ra}(R)$ [N]	$J_G 10^{-4}$ [kgm^2]	CV 160M	CV 160L	CV 180M	CV 180L	CV 200L
R167	18000	186.93*	5	120000	56.67					
	18000	153.07	5	120000	87.15					
RF167	18000	139.98	5	120000	99.31					
	18000	121.81*	5	120000	119.62					
RM167	18000	107.49	5	120000	142.09					
	18000	93.19	5	120000	172.69					
	18000	82.91*	5	120000	201.62					
	18000	73.70*	6	120000	98.48					
3	18000	67.40	6	120000	112.86					
	18000	58.65	6	120000	137.24					
	18000	51.76	6	120000	165.18					
	18000	44.87	6	120000	205.90					
	18000	39.92	6	120000	244.77					
	18000	34.41	6	120000	314.64					
	18000	27.96	6	120000	416.28					
	18000	23.71	6	116500	576.13					
R167	9000	37.74	5	120000	86.11					
	10000	30.71	5	120000	129.87					
RF167	14000	24.57	5	120000	182.72					
	13000	21.85	5	120000	221.58					
RM167	16000	19.03	5	111400	276.43					
	15000	16.98	5	108900	328.68					
	18000	14.48	5	93800	430.53					
	17000	11.99	5	88700	583.13					
2	17000	10.24	5	82500	751.01					

m [kg]		CV 160M	CV 160L	CV 180M	CV 180L	CV 200L
R167	**3** 	700	730	780	800	850
	2 	690	720	780	790	840

RF167: + 6.4 kg / RM167: + 200 kg

12.21 R..CT/CV..[mm]

04 128 01 00

RX57..

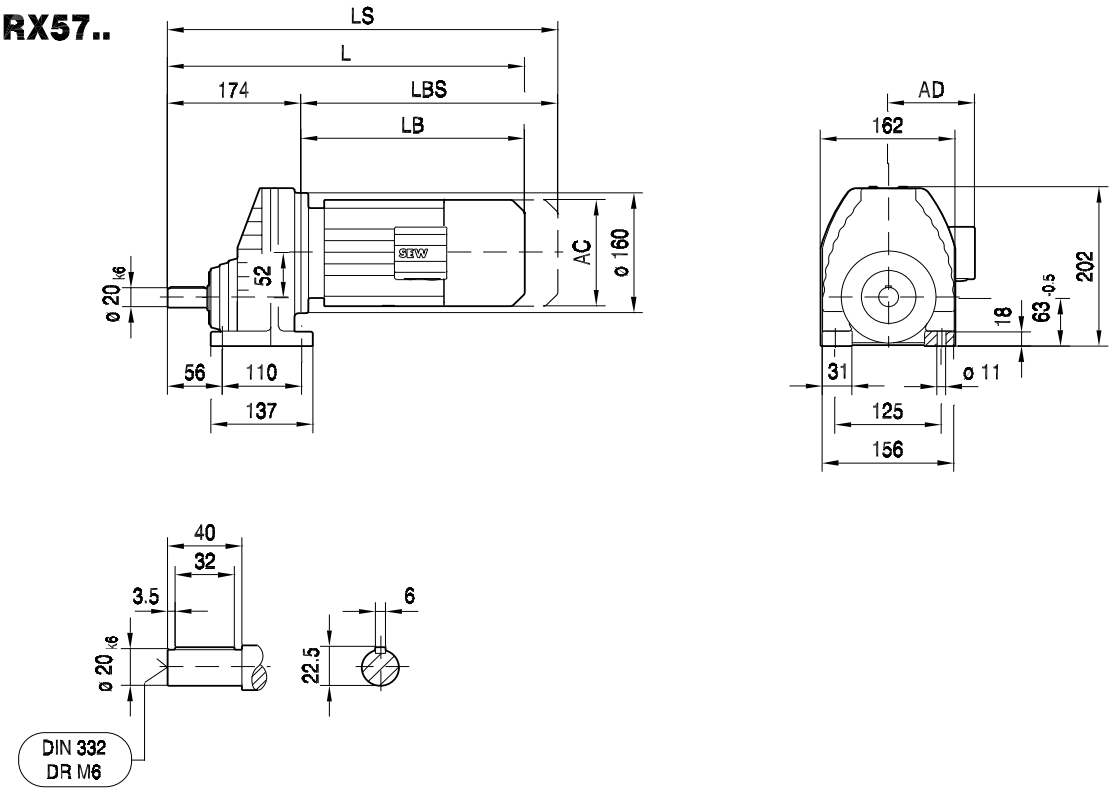

(→ 105)	CT71D	CT80N	CT90L	CV100M	CV100L	CV132S					
AC	145	145	197	197	197	221					
AD	126	126	160	165	165	178					
L	457	507	520	570	600	652					
LS	520	570	605	655	685	732					
LB	283	333	346	396	426	478					
LBS	346	396	431	481	511	558					

04 134 01 00

RXF57..

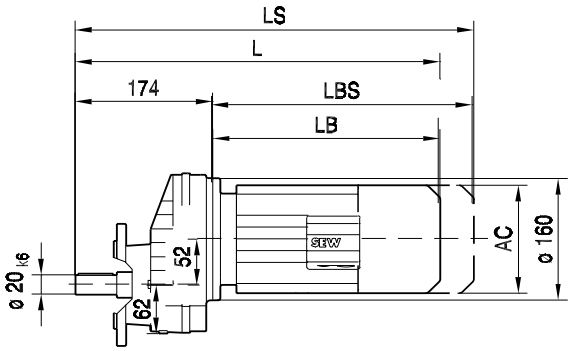

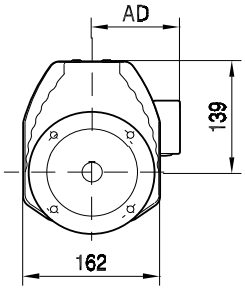

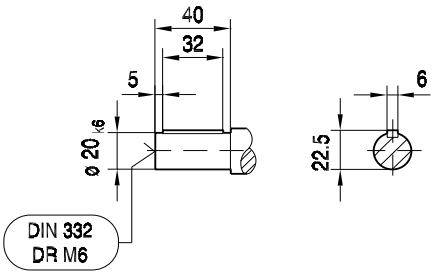

ø 140

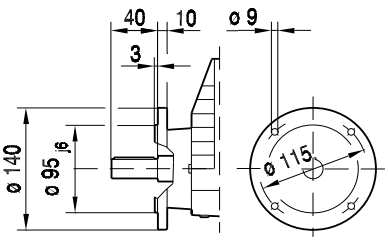

ø 160

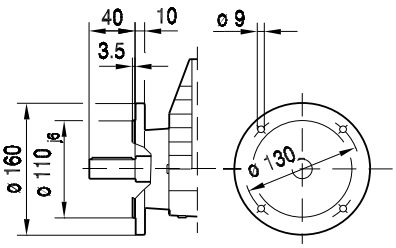

ø 200

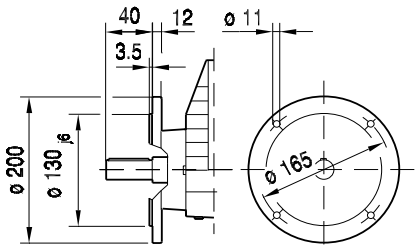

(→ 📖 105)	CT71D	CT80N	CT90L	CV100M	CV100L	CV132S					
AC	145	145	197	197	197	221					
AD	126	126	160	165	165	178					
L	457	507	520	570	600	652					
LS	520	570	605	655	685	732					
LB	283	333	346	396	426	478					
LBS	346	396	431	481	511	558					

04 129 01 00

RX67..

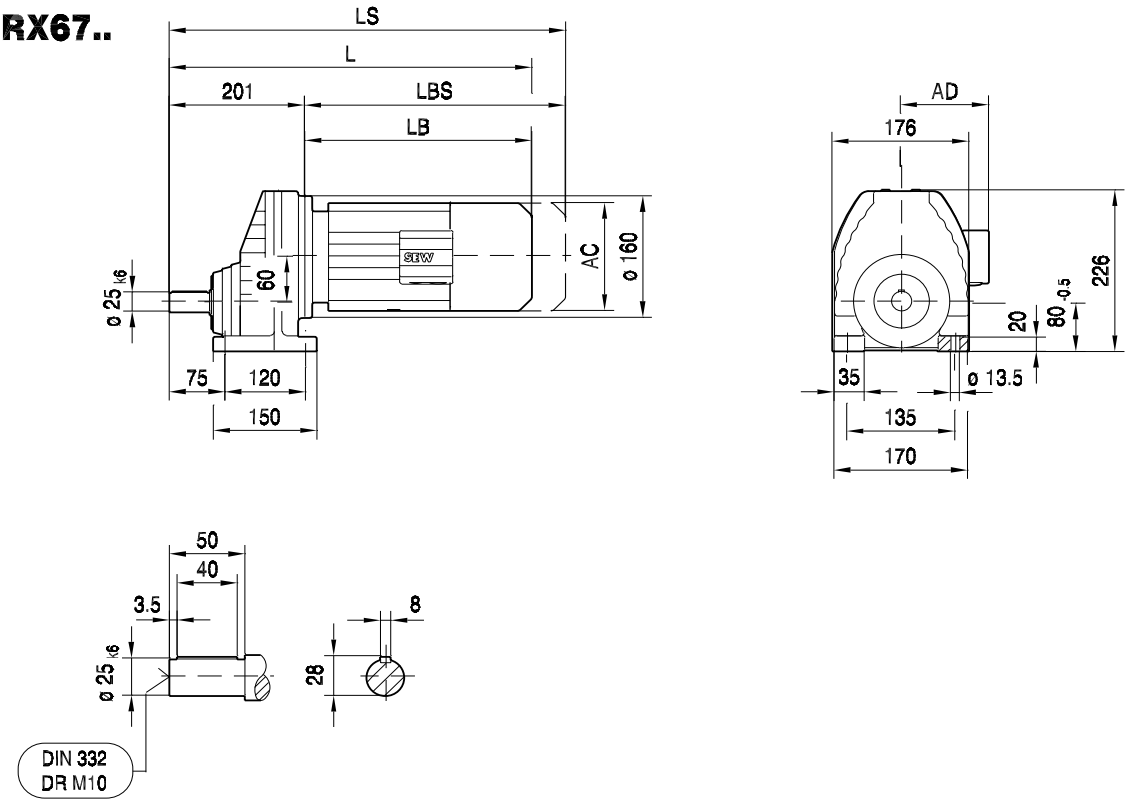

(→ 📖 105)	CT71D	CT80N	CT90L	CV100M	CV100L	CV132S	CV132M				
AC	145	145	197	197	197	221	285				
AD	126	126	160	165	165	178	229				
L	484	534	547	597	627	679	864				
LS	547	597	632	682	712	759	864				
LB	283	333	346	396	426	478	663				
LBS	346	396	431	481	511	558	663				

04 135 01 00

RXF67..

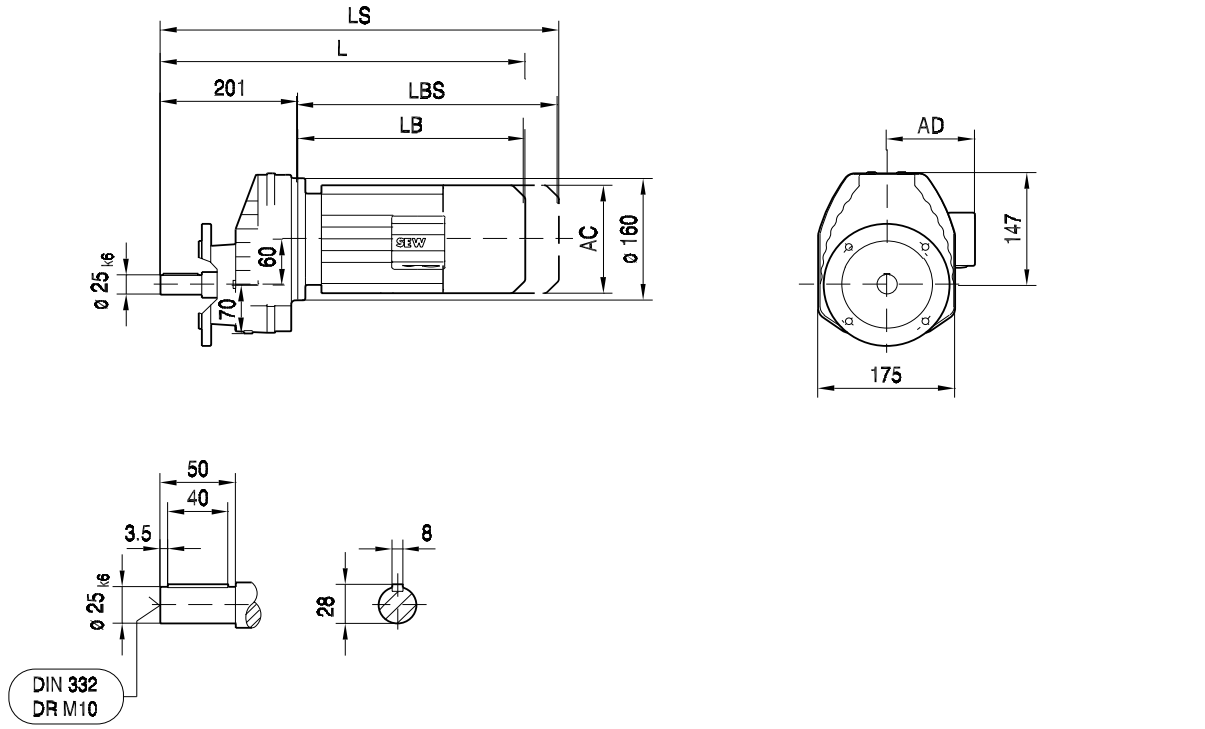

ø 160

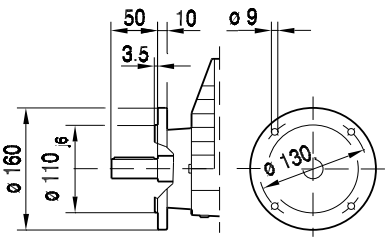

ø 200

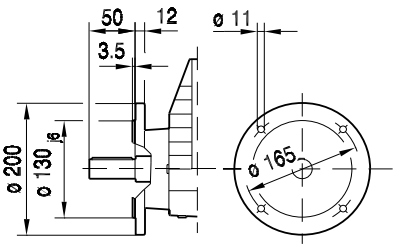

ø 250

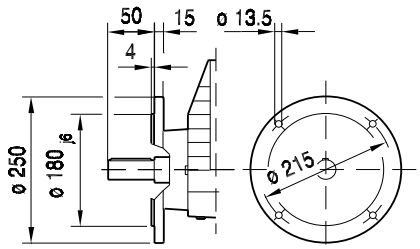

(→ 📖 105)	CT71D	CT80N	CT90L	CV100M	CV100L	CV132S	CV132M				
AC	145	145	197	197	197	221	285				
AD	126	126	160	165	165	178	229				
L	484	534	547	597	627	679	864				
LS	547	597	632	682	712	759	864				
LB	283	333	346	396	426	478	663				
LBS	346	396	431	481	511	558	663				

04 130 01 00

RX77..

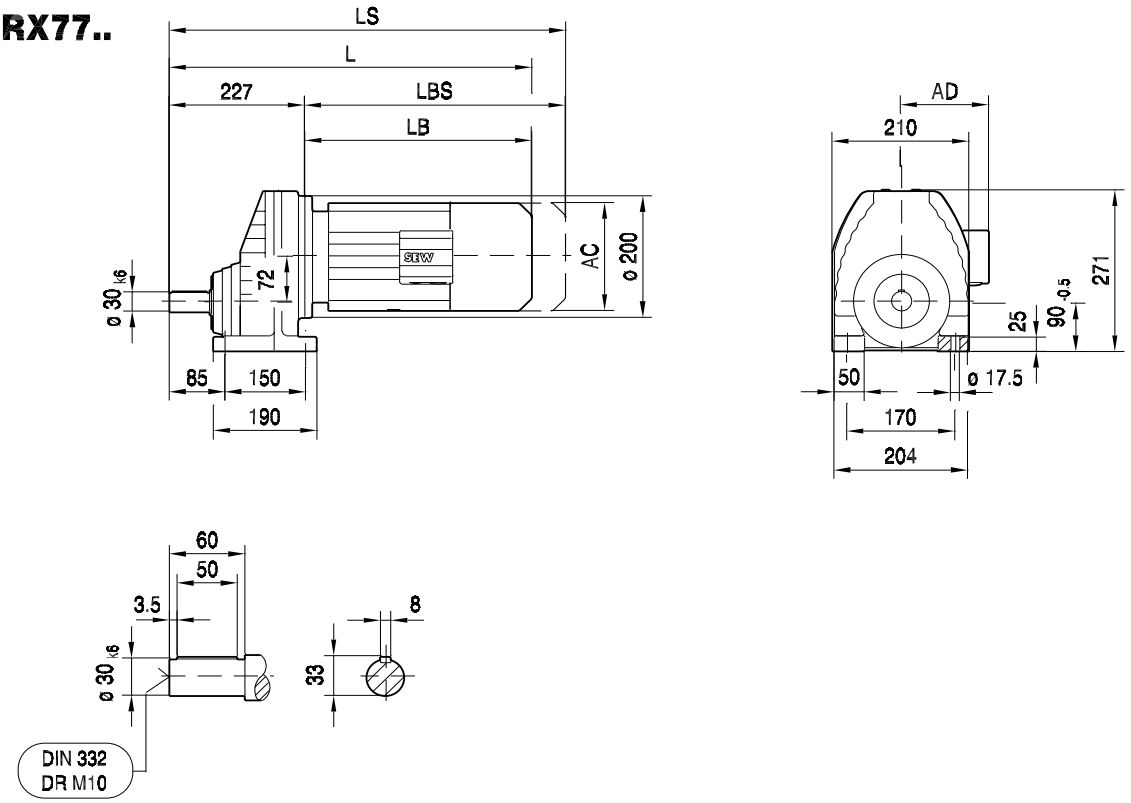

(→ 📖 105)	CT71D	CT80N	CT90L	CV100M	CV100L	CV132S	CV132M	CV132ML	CV160M		
AC	145	145	197	197	197	221	285	285	285		
AD	126	126	160	165	165	178	229	229	229		
L	504	554	565	615	645	693	878	938	938		
LS	567	617	650	700	730	773	878	938	938		
LB	277	327	338	388	418	466	651	711	711		
LBS	340	390	423	473	503	546	651	711	711		

04 136 01 00

RXF77..

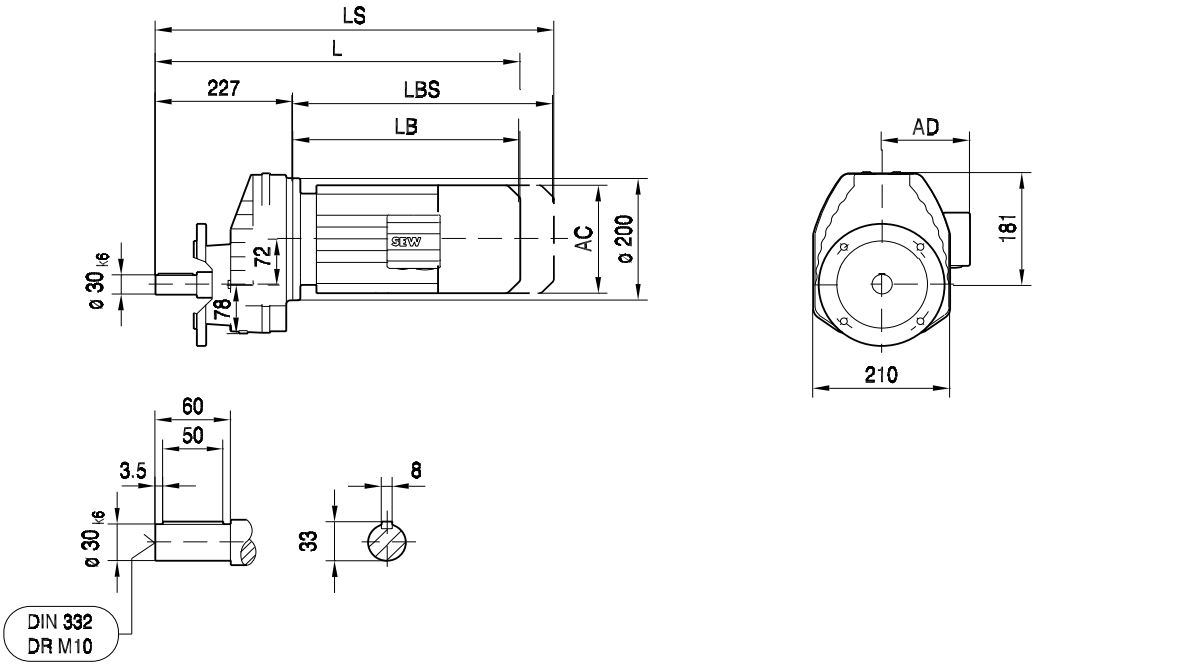

ø 200

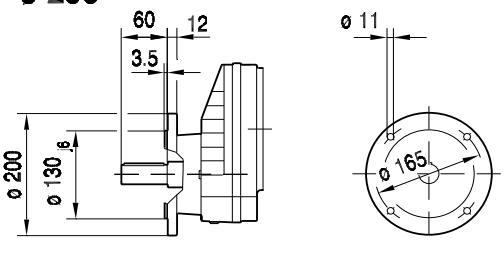

ø 250

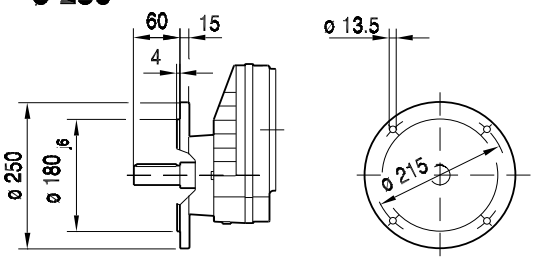

(→ 105)	CT71D	CT80N	CT90L	CV100M	CV100L	CV132S	CV132M	CV132ML	CV160M		
AC	145	145	197	197	197	221	285	285	285		
AD	126	126	160	165	165	178	229	229	229		
L	504	554	565	615	645	693	878	938	938		
LS	567	617	650	700	730	773	878	938	938		
LB	277	327	338	388	418	466	651	711	711		
LBS	340	390	423	473	503	546	651	711	711		

04 131 01 00

RX87..

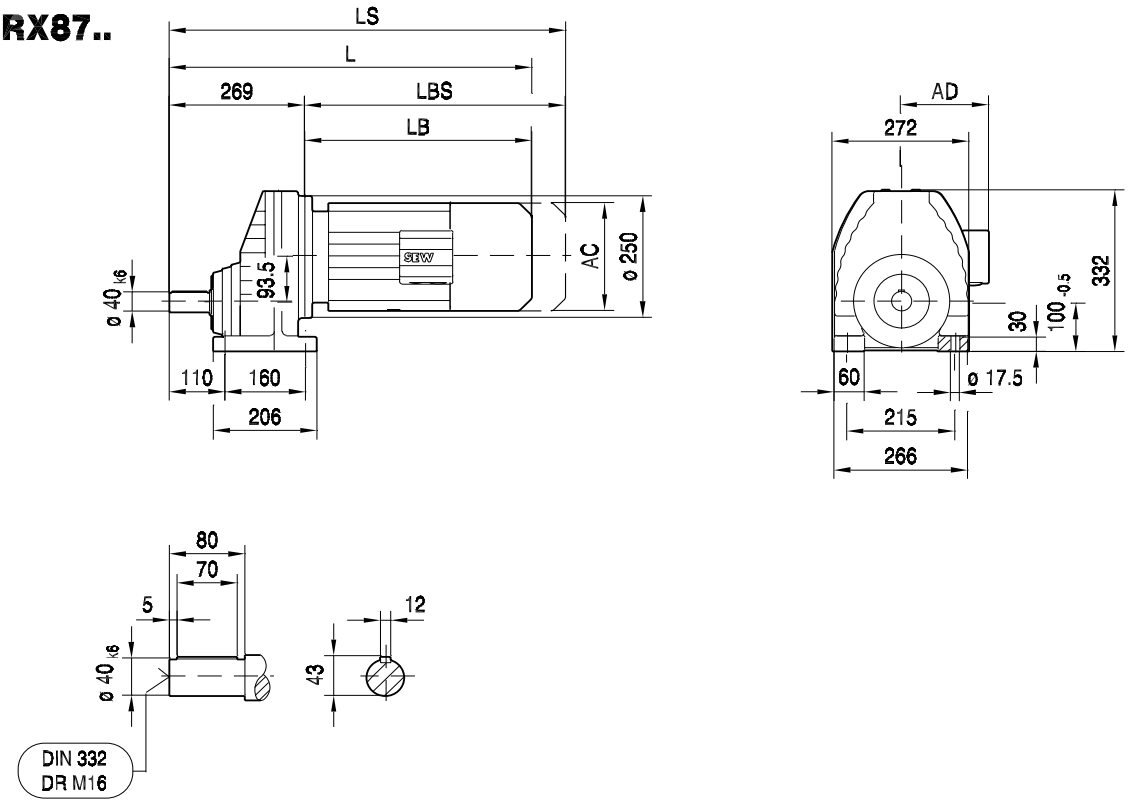

(→ 📖 105)	CT80N	CT90L	CV100M	CV100L	CV132S	CV132M	CV132ML	CV160M	CV160L	CV180..	
AC	145	197	197	197	221	285	285	285	342	342	
AD	126	160	165	165	178	229	229	229	252	252	
L	591	603	653	683	730	915	975	975	1063	1135	
LS	654	688	738	768	810	915	975	975	1063	1135	
LB	322	334	384	414	461	646	706	706	794	866	
LBS	385	419	469	499	541	646	706	706	794	866	

04 137 01 00

RXF87..

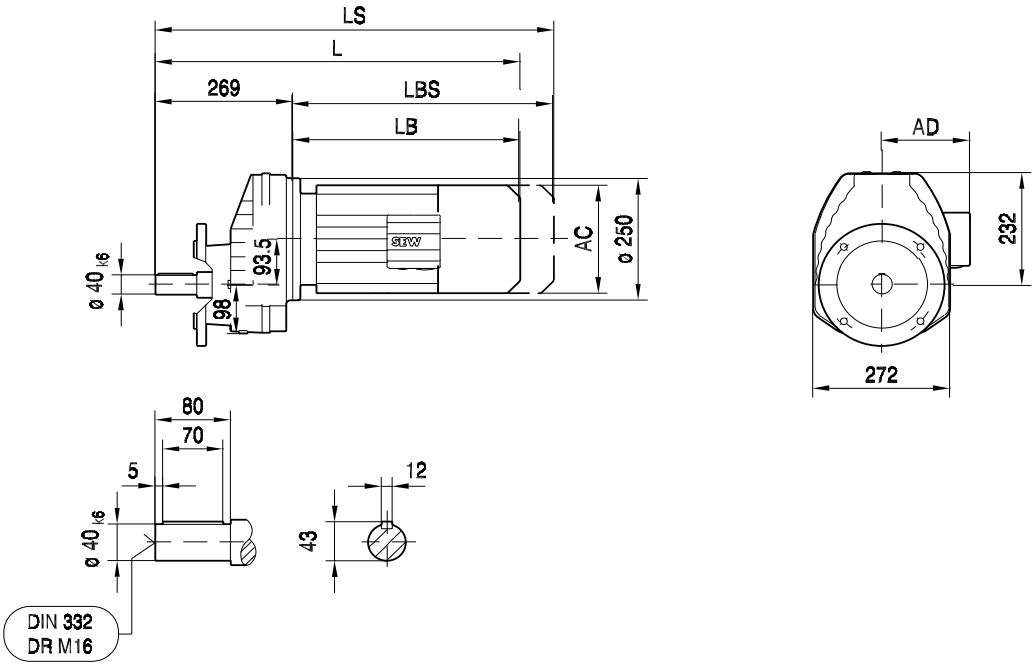

ø 250

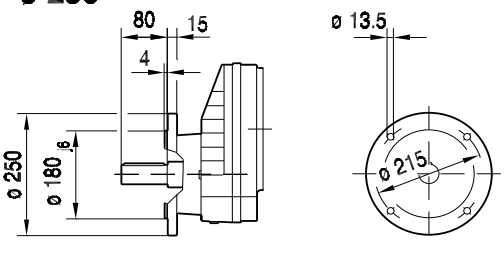

ø 300

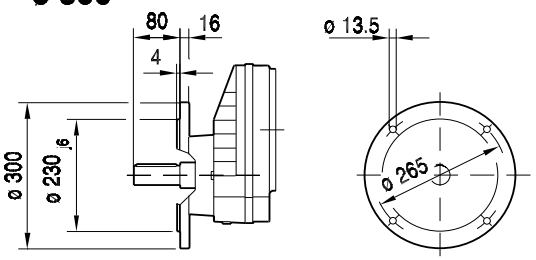

(→ 105)	CT80N	CT90L	CV100M	CV100L	CV132S	CV132M	CV132ML	CV160M	CV160L	CV180..	
AC	145	197	197	197	221	285	285	285	342	342	
AD	126	160	165	165	178	229	229	229	252	252	
L	591	603	653	683	730	915	975	975	1063	1135	
LS	654	688	738	768	810	915	975	975	1063	1135	
LB	322	334	384	414	461	646	706	706	794	866	
LBS	385	419	469	499	541	646	706	706	794	866	

04 132 01 00

RX97..

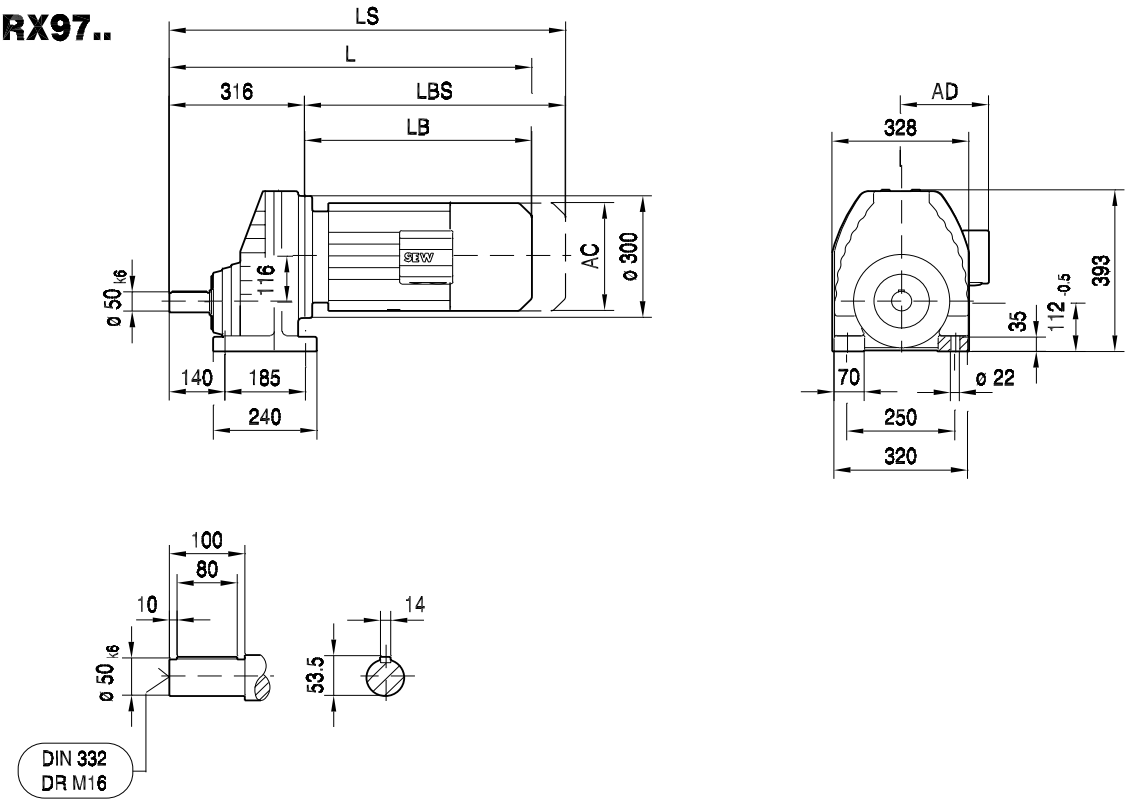

(→ 📖 105)	CT80N	CT90L	CV100M	CV100L	CV132S	CV132M	CV132ML	CV160M	CV160L	CV180..	
AC	145	197	197	197	221	285	285	285	342	342	
AD	126	160	165	165	178	229	229	229	252	252	
L	631	644	694	724	772	957	1017	1017	1105	1177	
LS	694	729	779	809	852	957	1017	1017	1105	1177	
LB	315	328	378	408	456	641	701	701	789	861	
LBS	378	413	463	493	536	641	701	701	789	861	

04 138 01 00

RXF97..

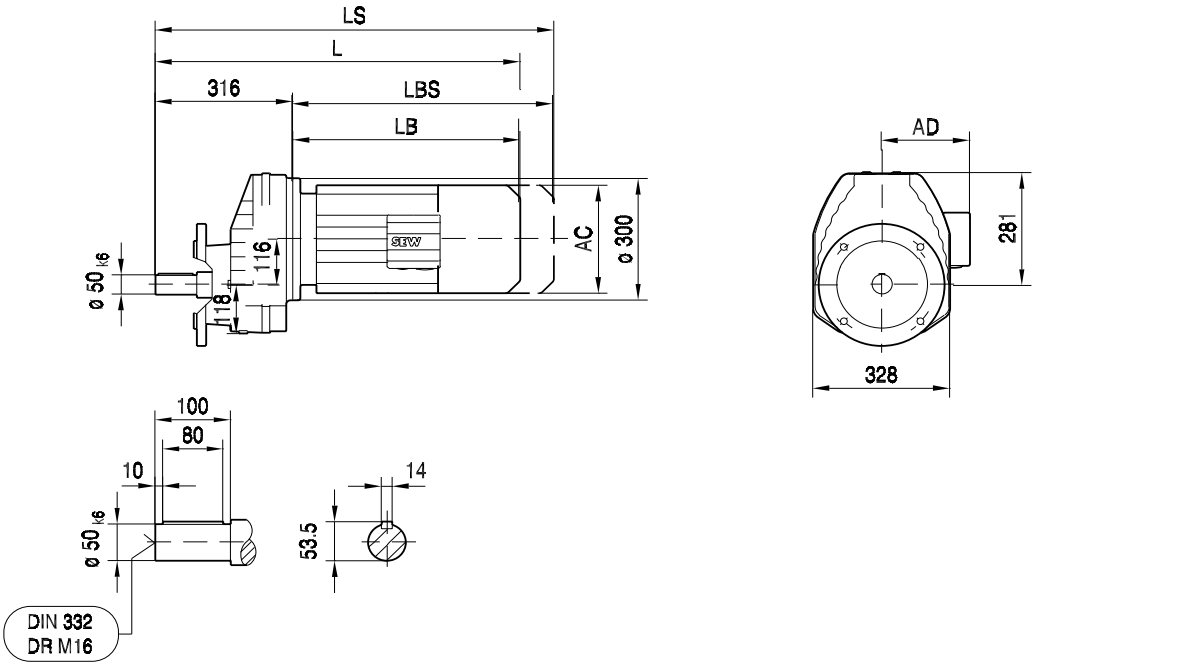

ø 300

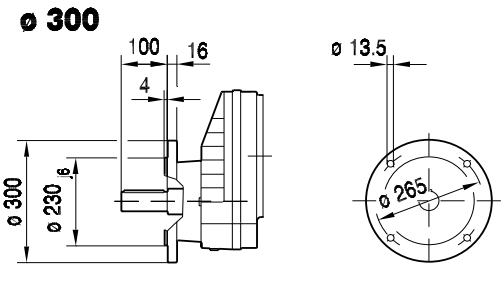

ø 350

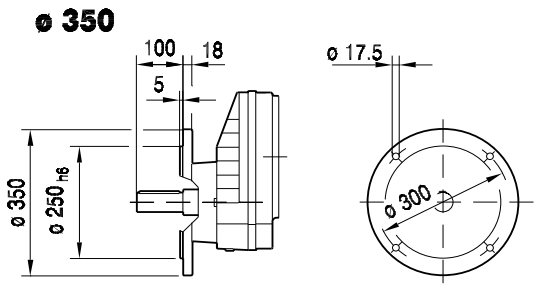

(→ 📖 105)	CT80N	CT90L	CV100M	CV100L	CV132S	CV132M	CV132ML	CV160M	CV160L	CV180..	
AC	145	197	197	197	221	285	285	285	342	342	
AD	126	160	165	165	178	229	229	229	252	252	
L	631	644	694	724	772	957	1017	1017	1105	1177	
LS	694	729	779	809	852	957	1017	1017	1105	1177	
LB	315	328	378	408	456	641	701	701	789	861	
LBS	378	413	463	493	536	641	701	701	789	861	

04 133 01 00

RX107..

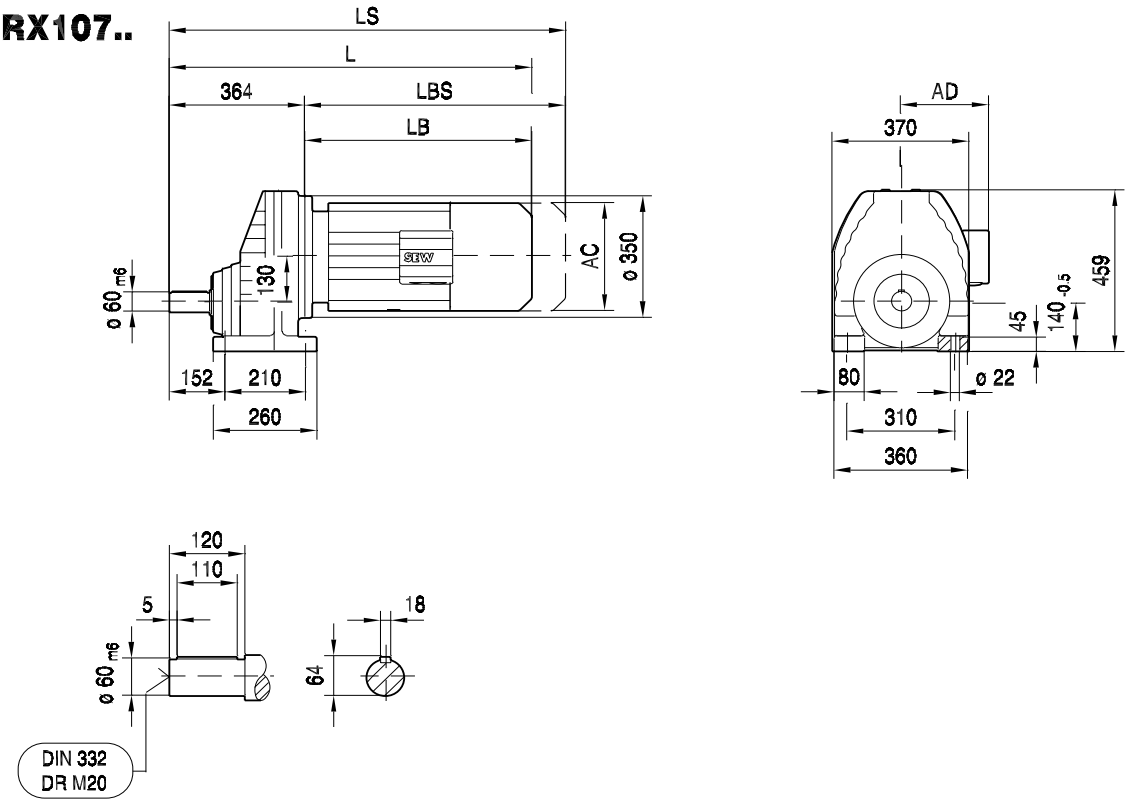

(→ 📖 105)	CV100M	CV100L	CV132S	CV132M	CV132ML	CV160M	CV160L	CV180..	CV200L		
AC	197	197	221	285	285	285	342	342	394		
AD	165	165	178	229	229	229	252	252	285		
L	736	766	814	999	1059	1059	1147	1219	1278		
LS	821	851	894	999	1059	1059	1147	1219	1278		
LB	372	402	450	635	695	695	783	855	914		
LBS	457	487	530	635	695	695	783	855	914		

04 139 01 00

RXF107..

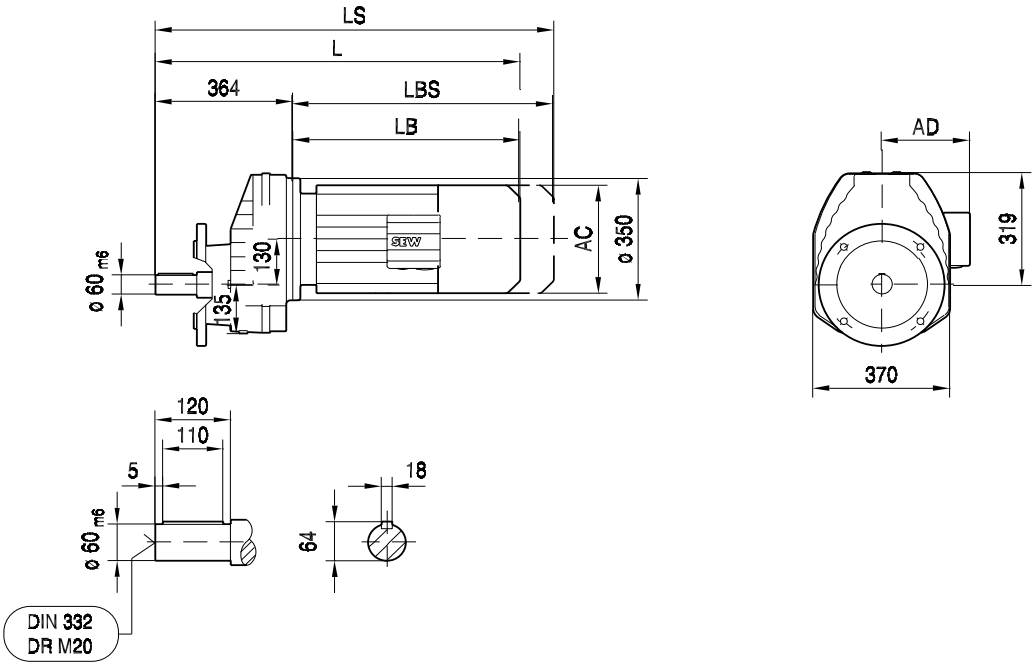

ø 350

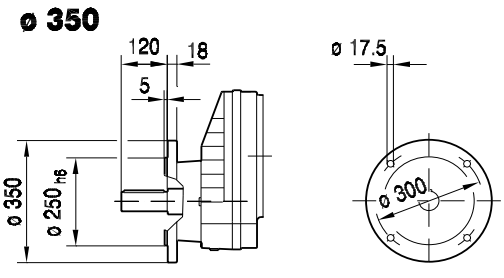

ø 450

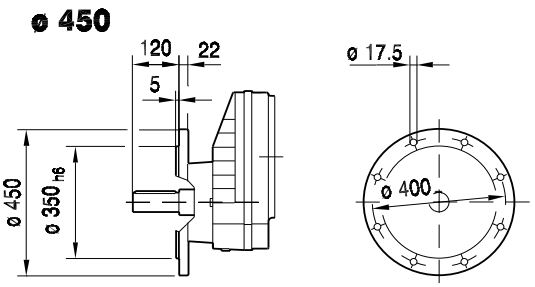

(→ 105)	CV100M	CV100L	CV132S	CV132M	CV132ML	CV160M	CV160L	CV180..	CV200L		
AC	197	197	221	285	285	285	342	342	394		
AD	165	165	178	229	229	229	252	252	285		
L	736	766	814	999	1059	1059	1147	1219	1278		
LS	821	851	894	999	1059	1059	1147	1219	1278		
LB	372	402	450	635	695	695	783	855	914		
LBS	457	487	530	635	695	695	783	855	914		

04 140 01 00

R17..

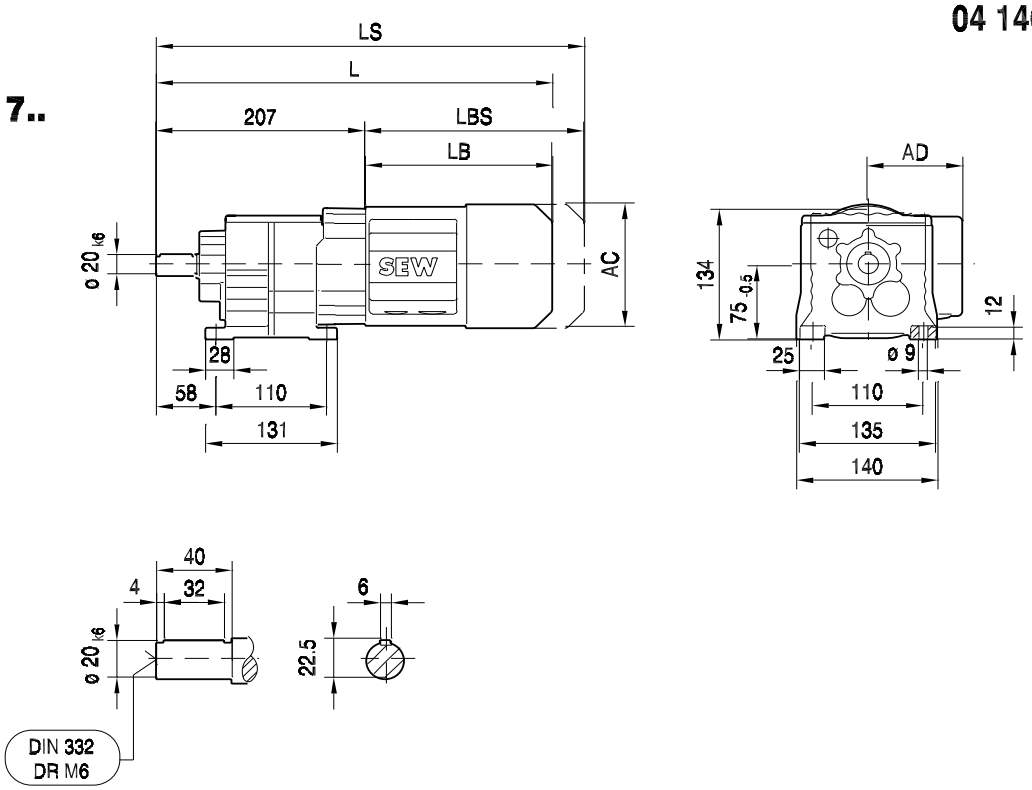

R17F..

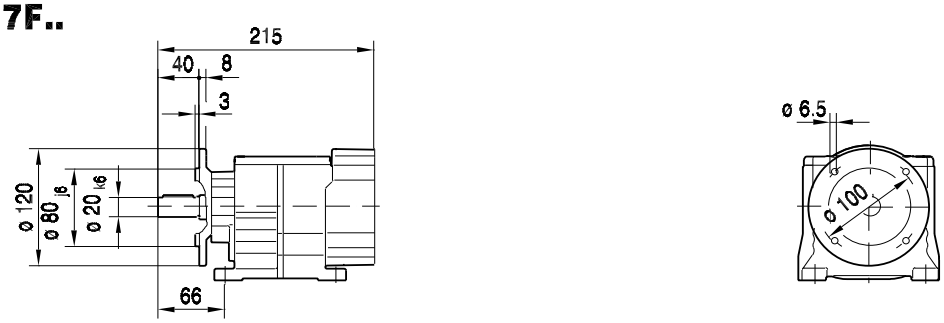

(→ 105)	CT71D										
AC	145										
AD	126										
L	455										
LS	518										
LB	248										
LBS	311										

04 175 01 00

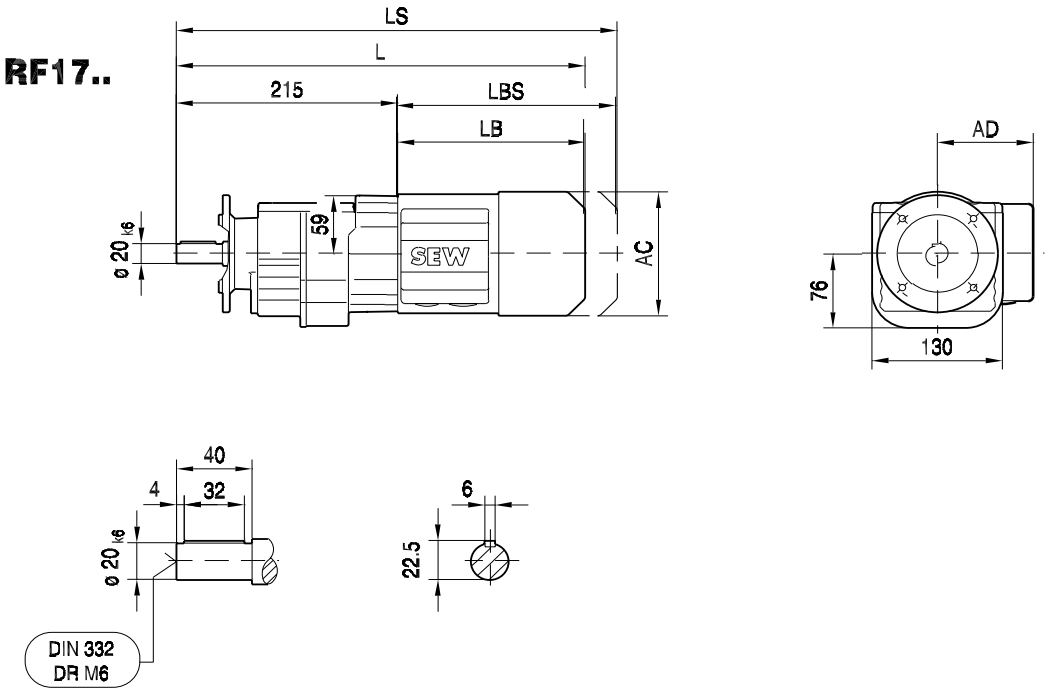

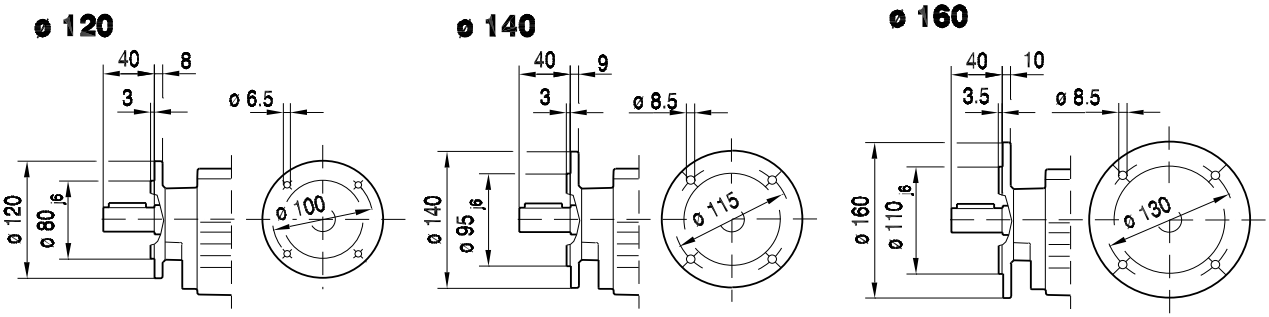

(→ 105)	CT71D										
AC	145										
AD	126										
L	463										
LS	526										
LB	248										
LBS	311										

04 104 01 00

R27..

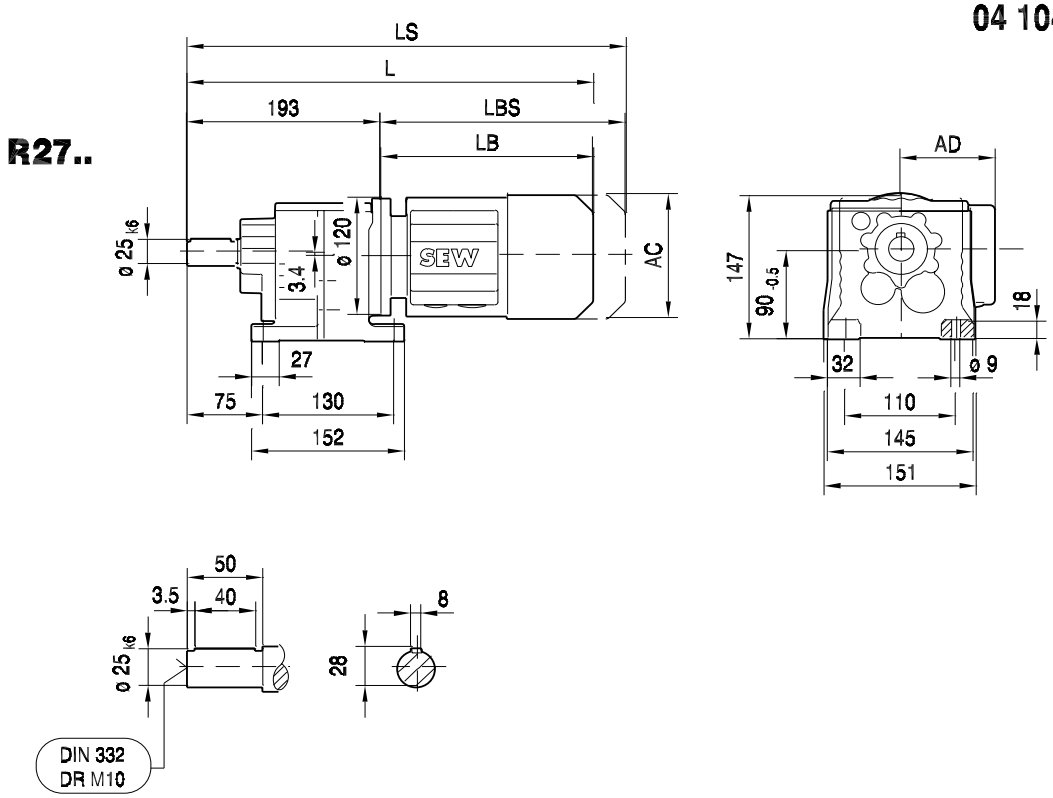

12

R27F..

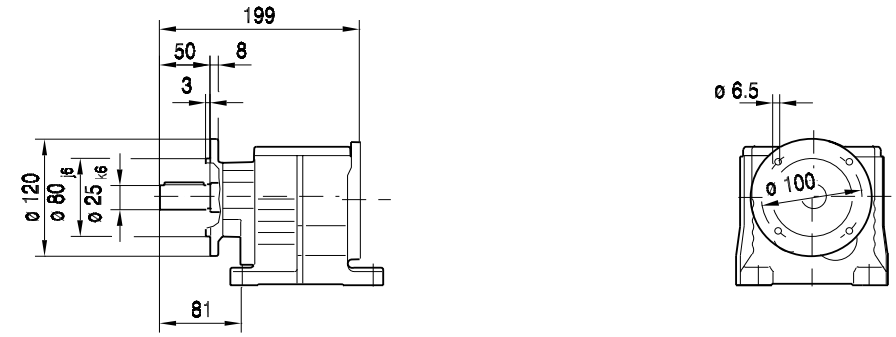

(→ 105)	CT71D	CT80N	CT90L								
AC	145	145	197								
AD	126	126	160								
L	483	533	546								
LS	546	596	631								
LB	290	340	353								
LBS	353	403	438								

04 116 01 00

RF27..

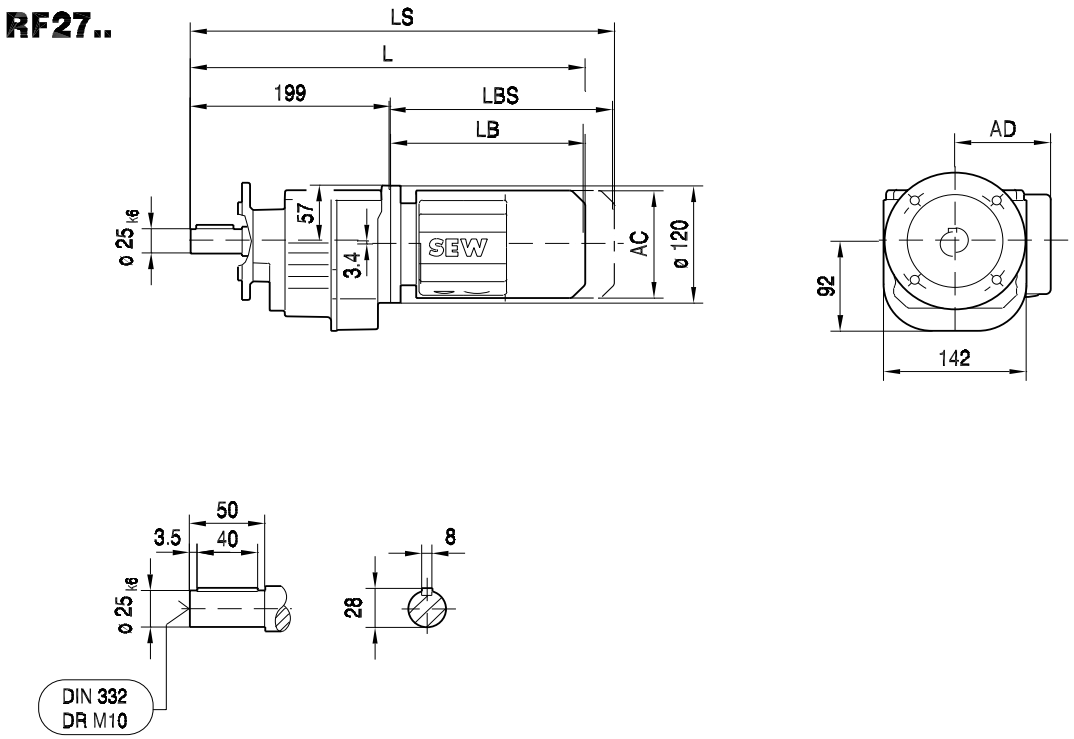

ø 120

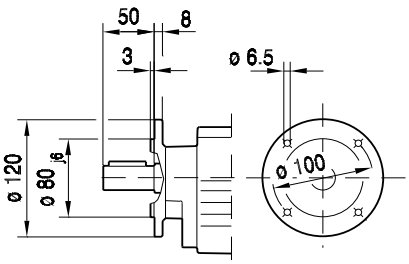

ø 140

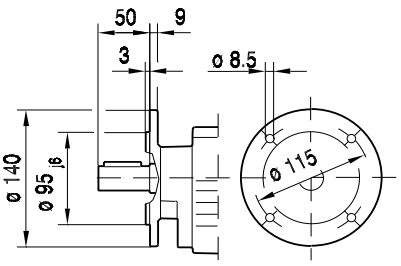

ø 160

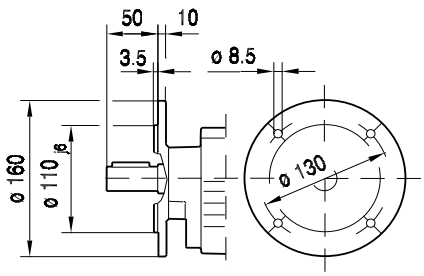

(→ 📖 105)	CT71D	CT80N	CT90L								
AC	145	145	197								
AD	126	126	160								
L	489	539	552								
LS	552	602	637								
LB	290	340	353								
LBS	353	403	438								

04 105 01 00

R37..

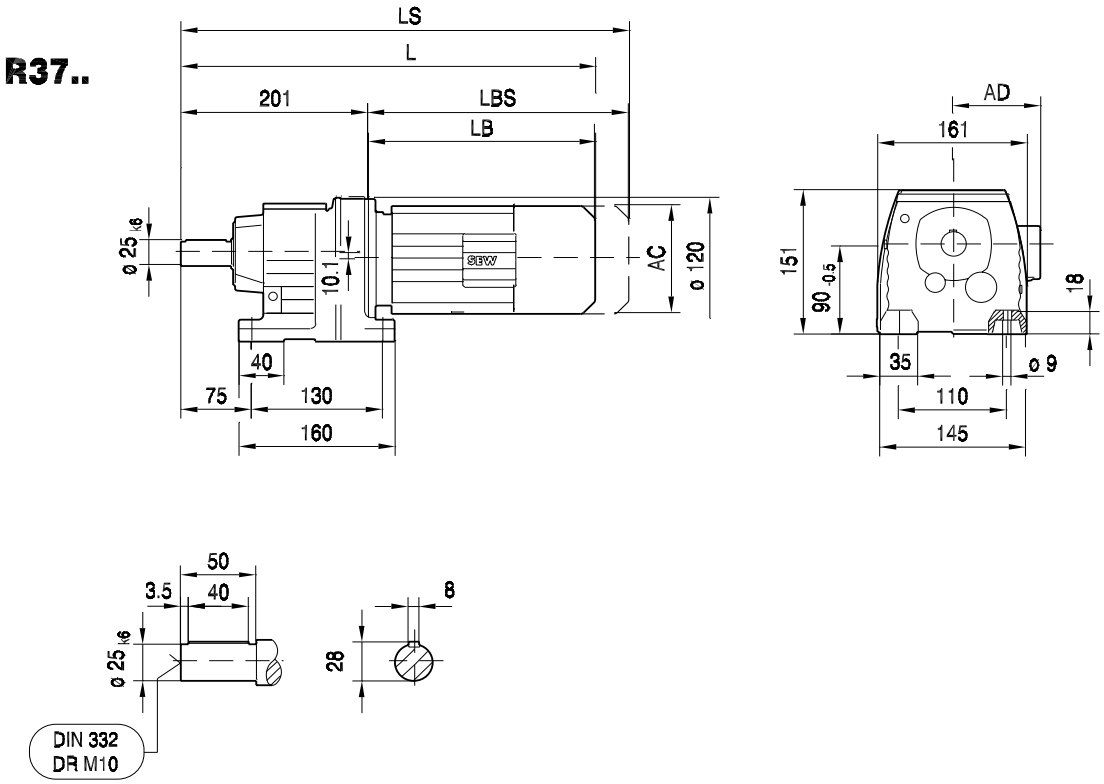

R37F..

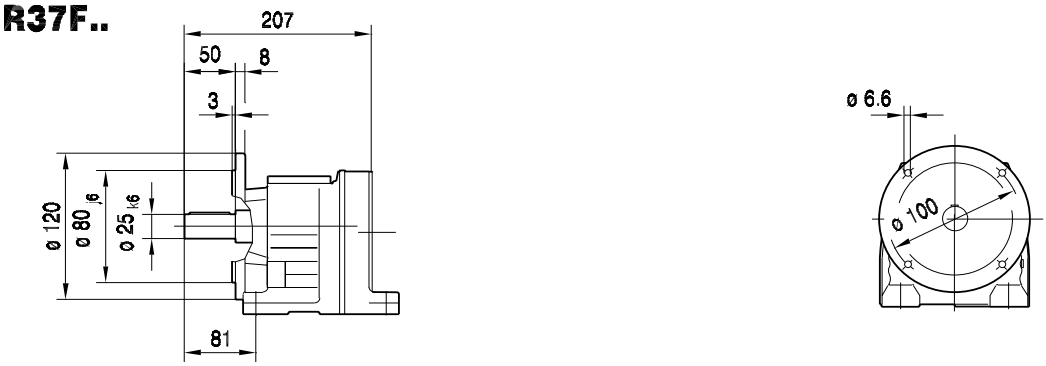

(→ 105)	CT71D	CT80N	CT90L								
AC	145	145	197								
AD	126	126	160								
L	491	541	554								
LS	554	604	639								
LB	290	340	353								
LBS	353	403	438								

RF37..

04 117 01 00

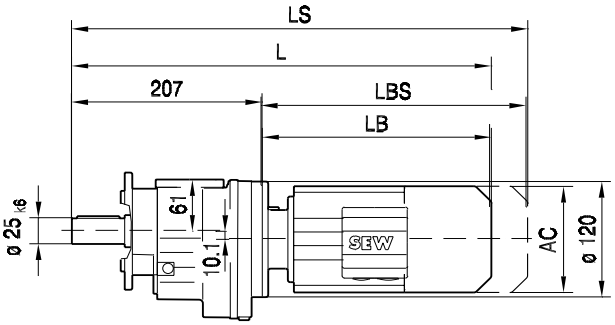

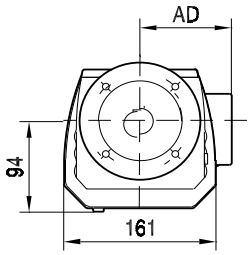

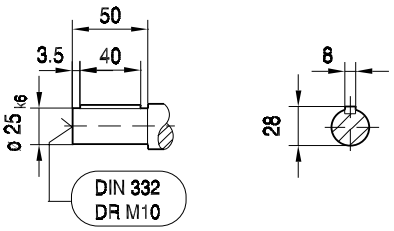

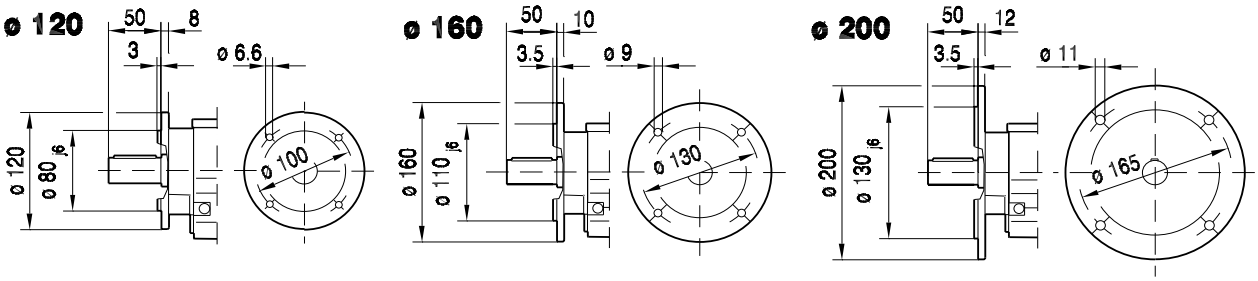

(→ 105)	CT71D	CT80N	CT90L								
AC	145	145	197								
AD	126	126	160								
L	497	547	560								
LS	560	610	645								
LB	290	340	353								
LBS	353	403	438								

04 106 01 00

R47..

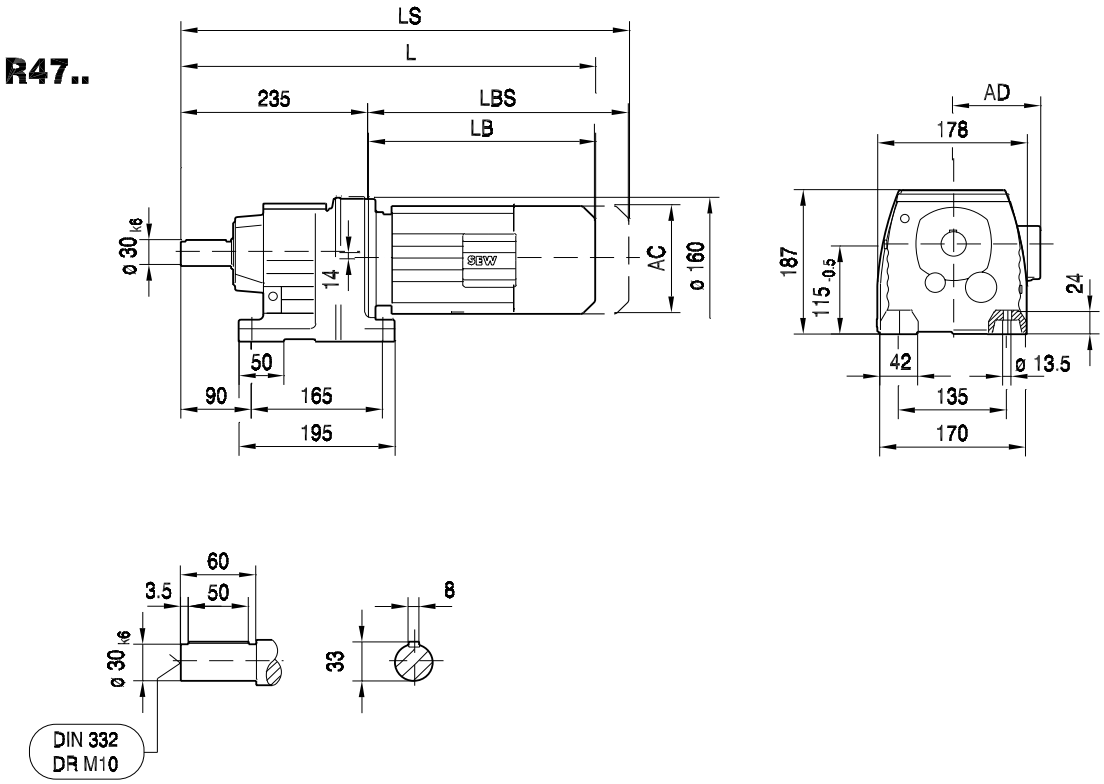

R47F..

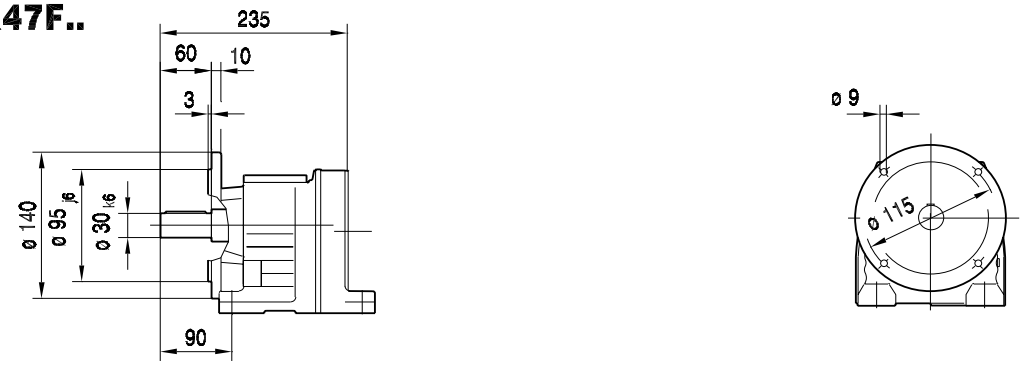

(→ 105)	CT71D	CT80N	CT90L	CV100M	CV100L						
AC	145	145	197	197	197						
AD	126	126	160	165	165						
L	518	568	581	631	661						
LS	581	631	666	716	746						
LB	283	333	346	396	426						
LBS	346	396	431	481	511						

RF47..

04 118 01 00

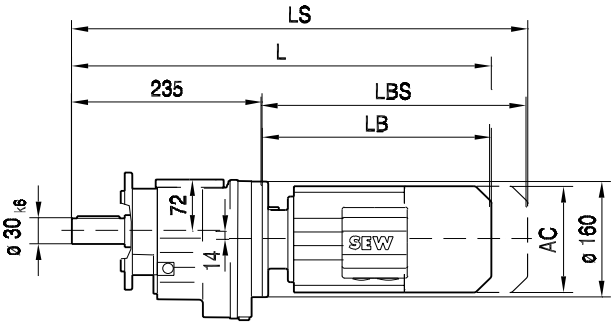

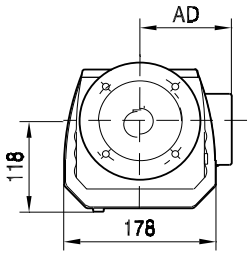

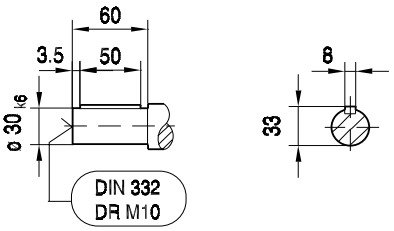

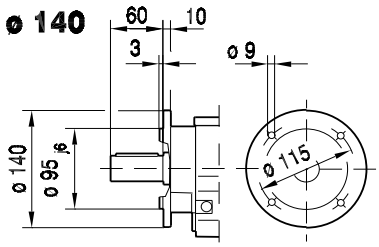

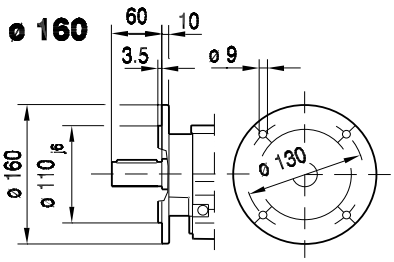

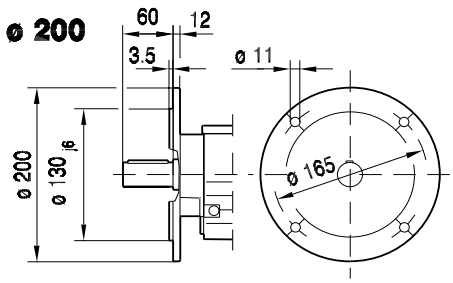

(→ 105)	CT71D	CT80N	CT90L	CV100M	CV100L						
AC	145	145	197	197	197						
AD	126	126	160	165	165						
L	518	568	581	631	661						
LS	581	631	666	716	746						
LB	283	333	346	396	426						
LBS	346	396	431	481	511						

04 107 01 00

R57..

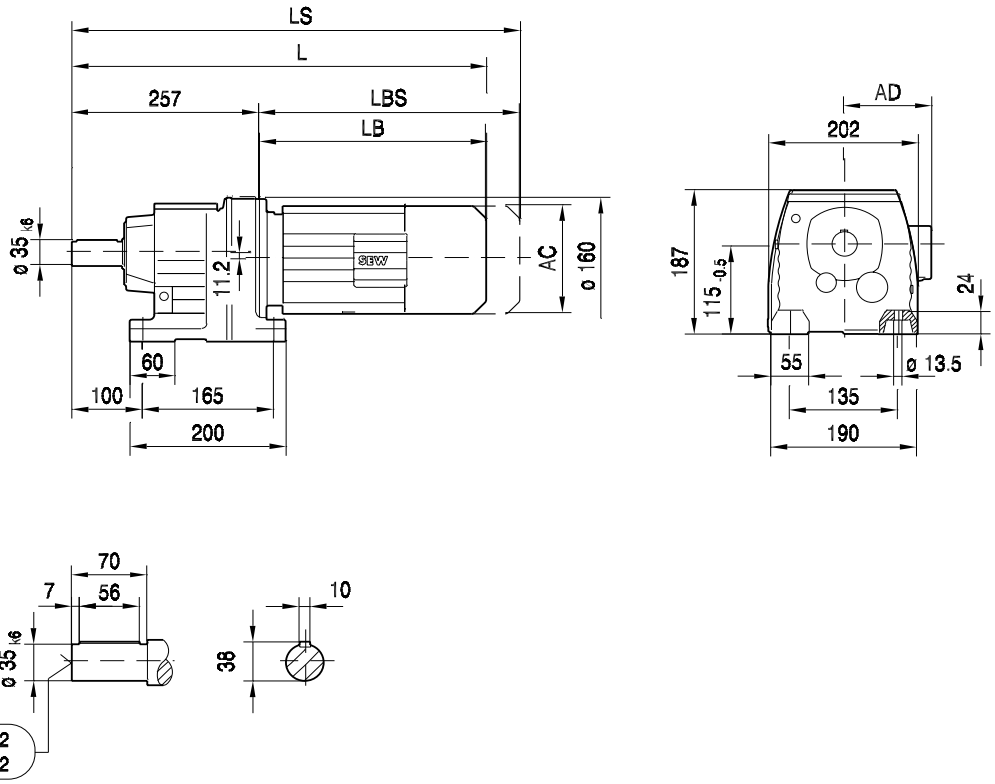

R57F..

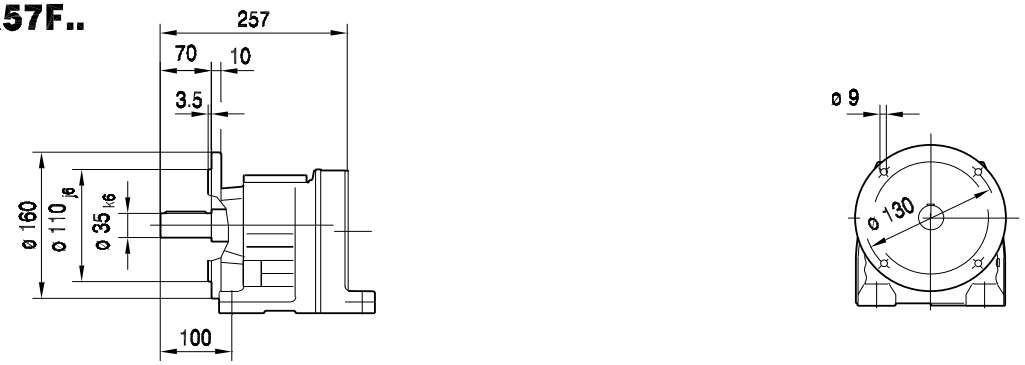

(→ 📖 105)	CT71D	CT80N	CT90L	CV100M	CV100L	CV132S	CV132M				
AC	145	145	197	197	197	221	285				
AD	126	126	160	165	165	178	229				
L	540	590	603	653	683	735	920				
LS	603	653	688	738	768	815	920				
LB	283	333	346	396	426	478	663				
LBS	346	396	431	481	511	558	663				

RF57..

04 119 01 00

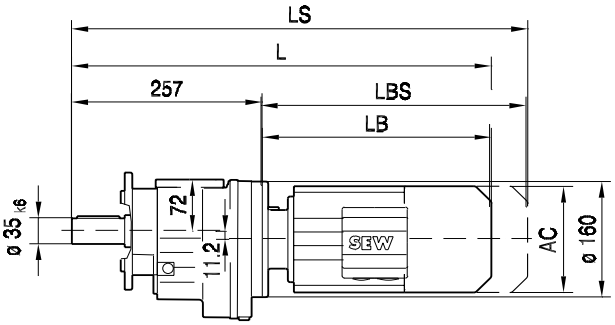

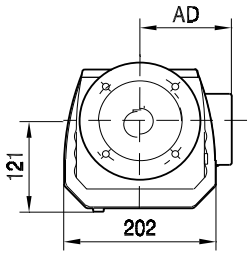

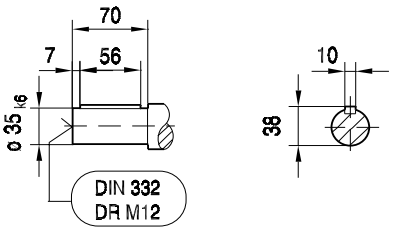

ø 160

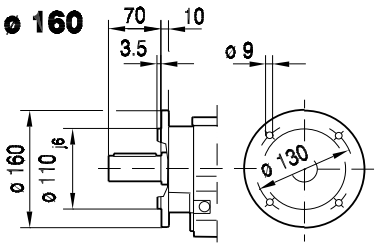

ø 200

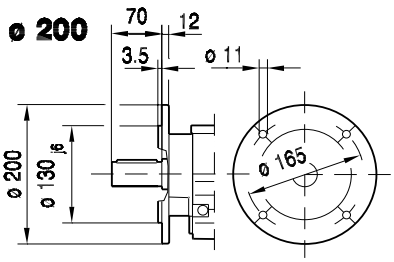

ø 250

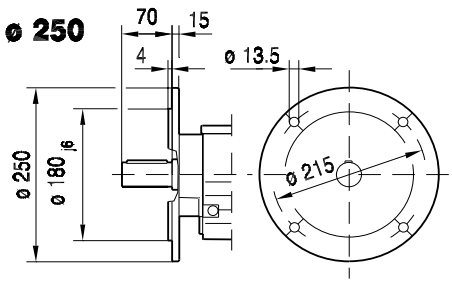

(→ 📖 105)	CT71D	CT80N	CT90L	CV100M	CV100L	CV132S	CV132M				
AC	145	145	197	197	197	221	285				
AD	126	126	160	165	165	178	229				
L	540	590	603	653	683	735	920				
LS	603	653	688	738	768	815	920				
LB	283	333	346	396	426	478	663				
LBS	346	396	431	481	511	558	663				

04 108 01 00

R67..

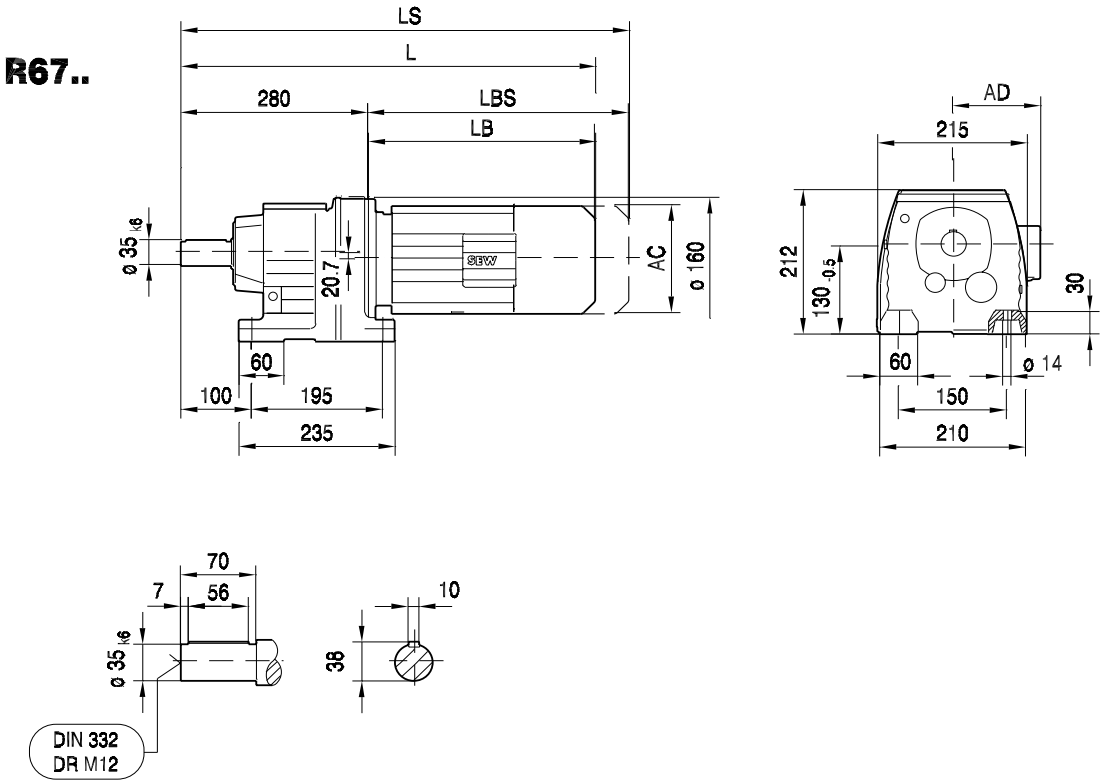

R67F..

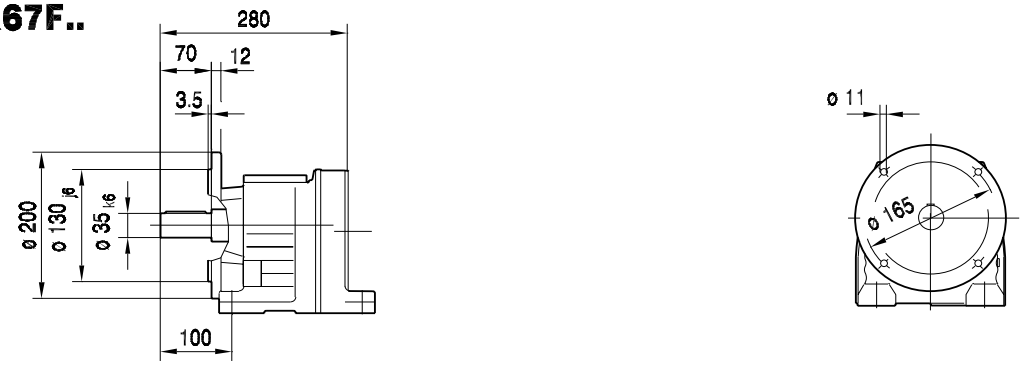

(→ 105)	CT71D	CT80N	CT90L	CV100M	CV100L	CV132S	CV132M				
AC	145	145	197	197	197	221	285				
AD	126	126	160	165	165	178	229				
L	563	613	626	676	706	758	943				
LS	626	676	711	761	791	838	943				
LB	283	333	346	396	426	478	663				
LBS	346	396	431	481	511	558	663				

04 120 01 00

RF67..

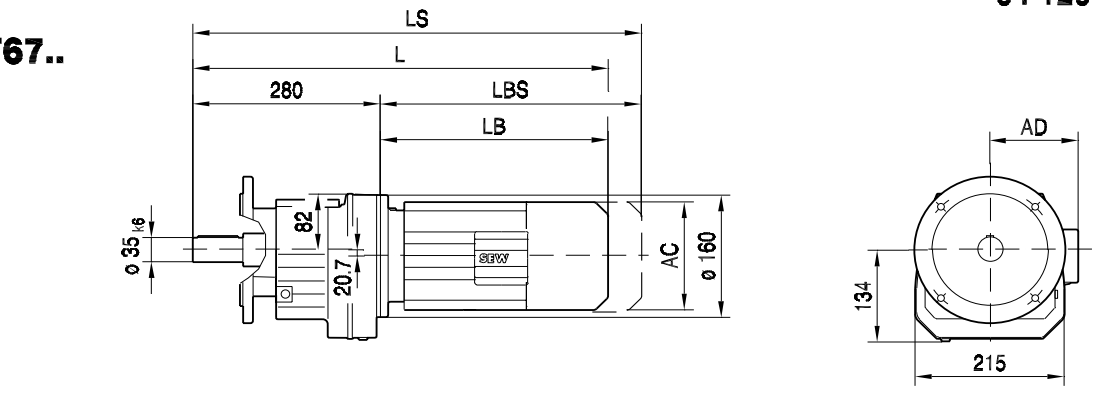

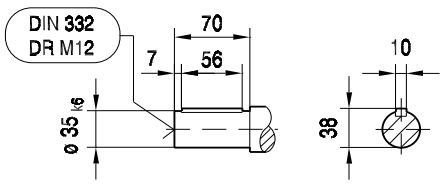

ø 200

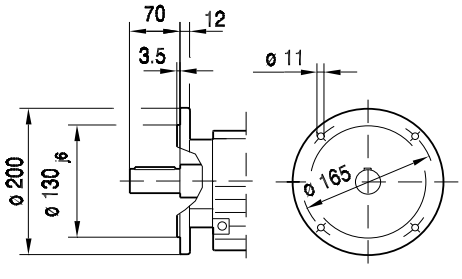

ø 250

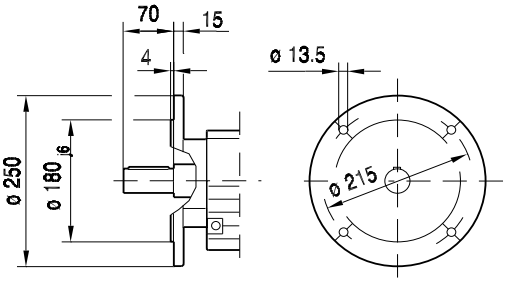

(→ 105)	CT71D	CT80N	CT90L	CV100M	CV100L	CV132S	CV132M				
AC	145	145	197	197	197	221	285				
AD	126	126	160	165	165	178	229				
L	563	613	626	676	706	758	943				
LS	626	676	711	761	791	838	943				
LB	283	333	346	396	426	478	663				
LBS	346	396	431	481	511	558	663				

04 109 01 00

R77..

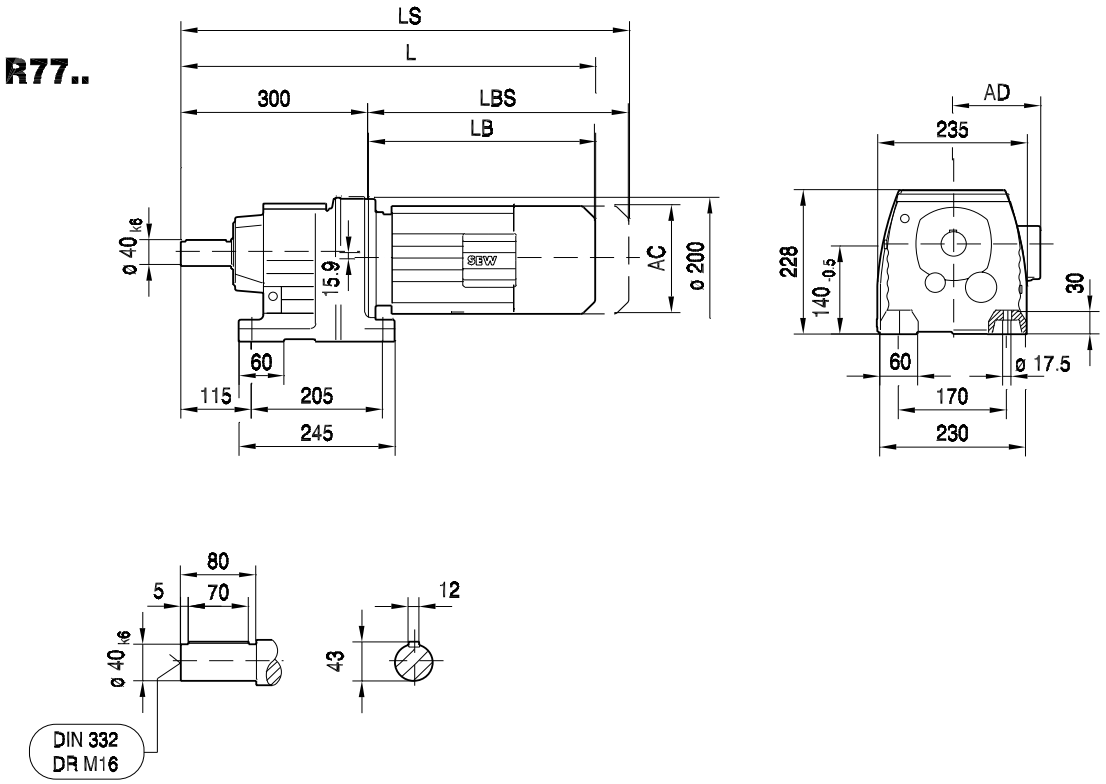

R77F..

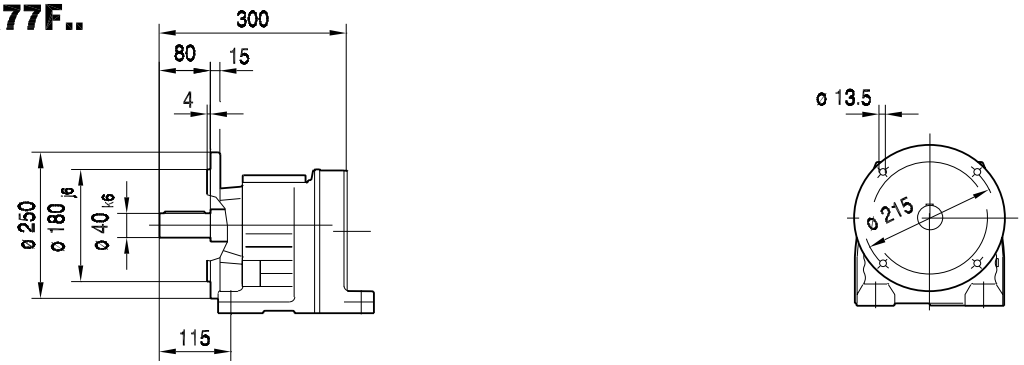

(→ 105)	CT71D	CT80N	CT90L	CV100M	CV100L	CV132S	CV132M	CV132ML	CV160M		
AC	145	145	197	197	197	221	285	285	285		
AD	126	126	160	165	165	178	229	229	229		
L	577	627	638	688	718	766	951	1011	1011		
LS	640	690	723	773	803	846	951	1011	1011		
LB	277	327	338	388	418	466	651	711	711		
LBS	340	390	423	473	503	546	651	711	711		

04 121 01 00

RF77..

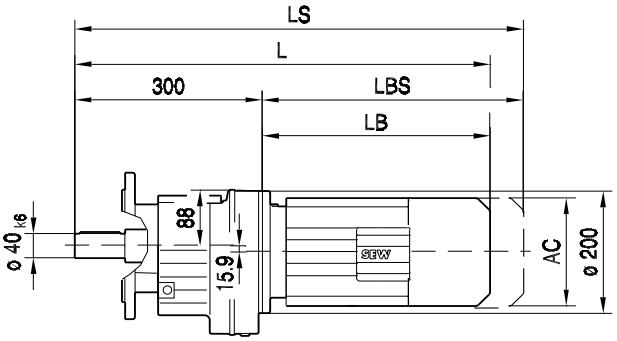

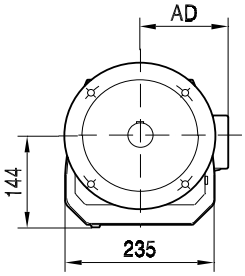

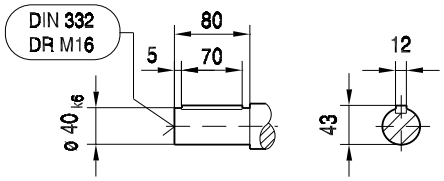

ø 250

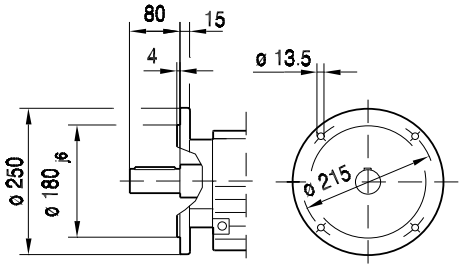

ø 300

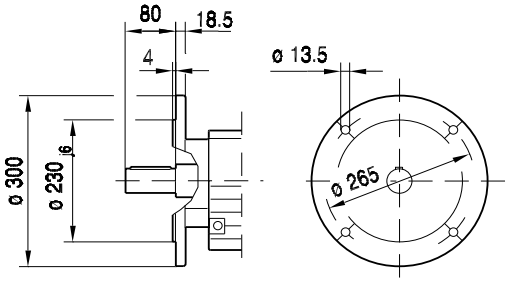

(→ 📖 105)	CT71D	CT80N	CT90L	CV100M	CV100L	CV132S	CV132M	CV132ML	CV160M		
AC	145	145	197	197	197	221	285	285	285		
AD	126	126	160	165	165	178	229	229	229		
L	577	627	638	688	718	766	951	1011	1011		
LS	640	690	723	773	803	846	951	1011	1011		
LB	277	327	338	388	418	466	651	711	711		
LBS	340	390	423	473	503	546	651	711	711		

04 110 01 00

R87..

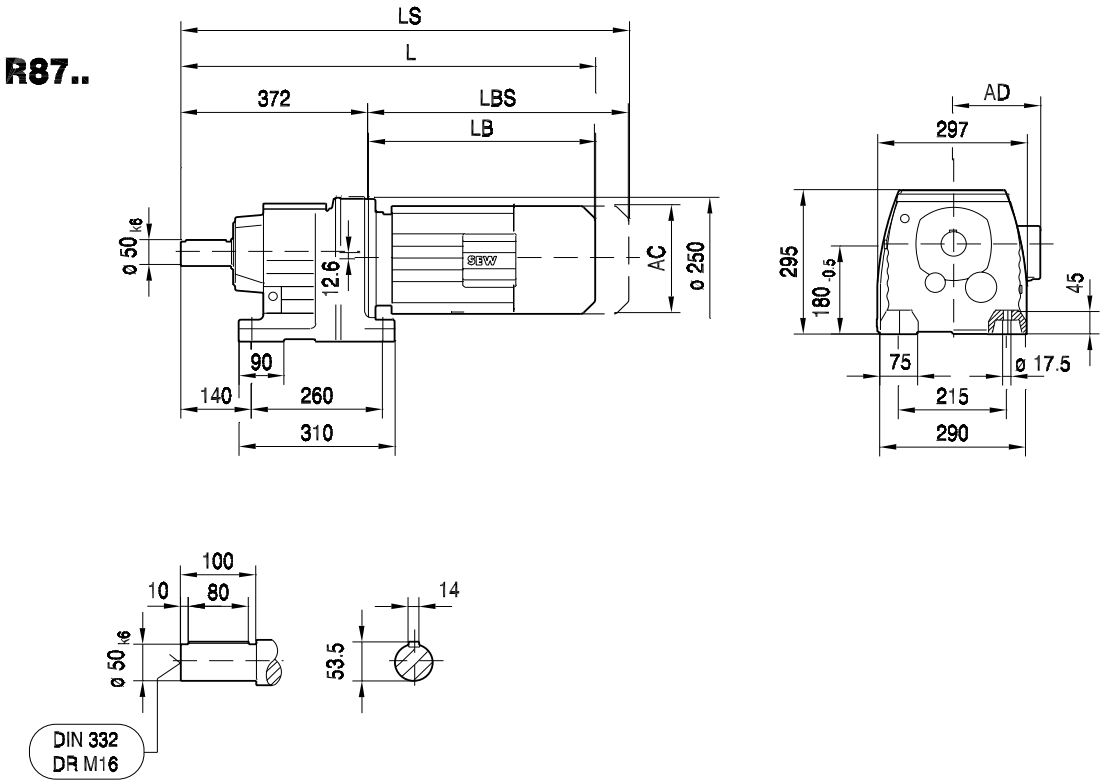

R87F..

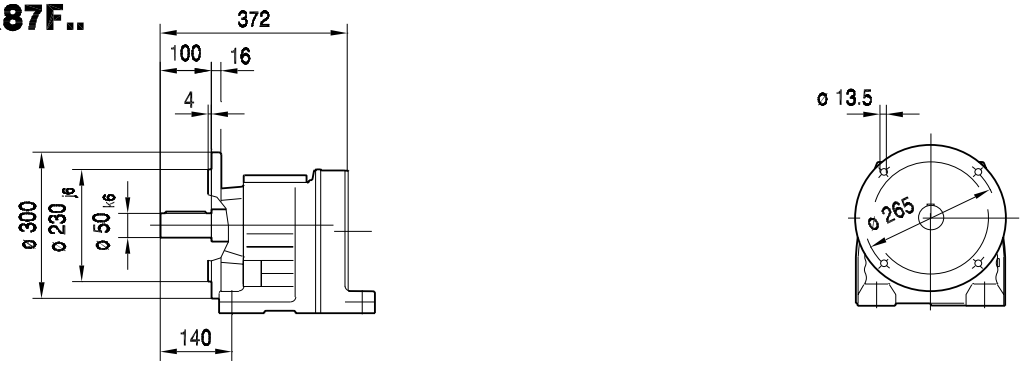

(→ 105)	CT80N	CT90L	CV100M	CV100L	CV132S	CV132M	CV132ML	CV160M	CV160L	CV180..	
AC	145	197	197	197	221	285	285	285	342	342	
AD	126	160	165	165	178	229	229	229	252	252	
L	694	706	756	786	833	1018	1078	1078	1166	1238	
LS	757	791	841	871	913	1018	1078	1078	1166	1238	
LB	322	334	384	414	461	646	706	706	794	866	
LBS	385	419	469	499	541	646	706	706	794	866	

04 122 01 00

RF87..

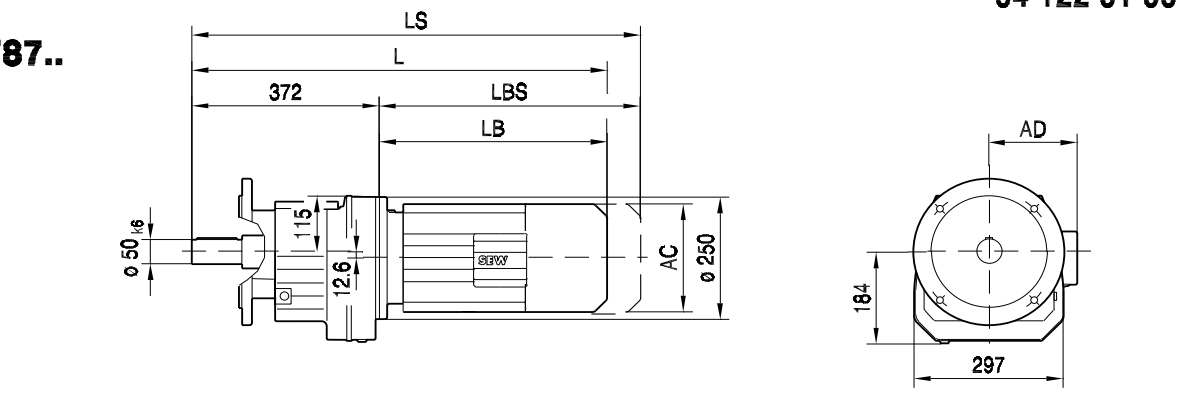

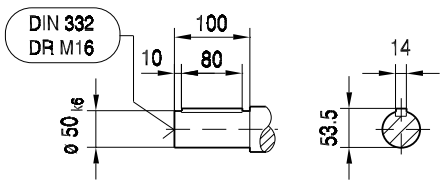

ø 300

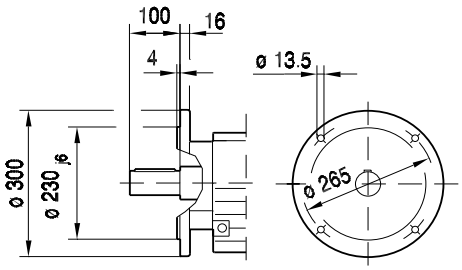

ø 350

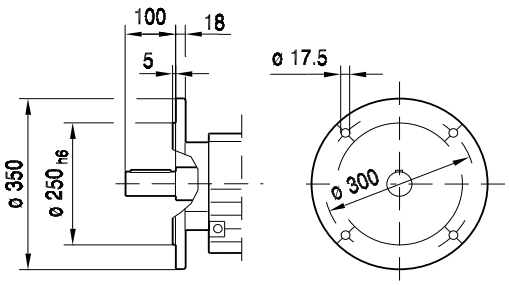

(→ 📖 105)	CT80N	CT90L	CV100M	CV100L	CV132S	CV132M	CV132ML	CV160M	CV160L	CV180..	
AC	145	197	197	197	221	285	285	285	342	342	
AD	126	160	165	165	178	229	229	229	252	252	
L	694	706	756	786	833	1018	1078	1078	1166	1238	
LS	757	791	841	871	913	1018	1078	1078	1166	1238	
LB	322	334	384	414	461	646	706	706	794	866	
LBS	385	419	469	499	541	646	706	706	794	866	

04 111 01 00

R97..

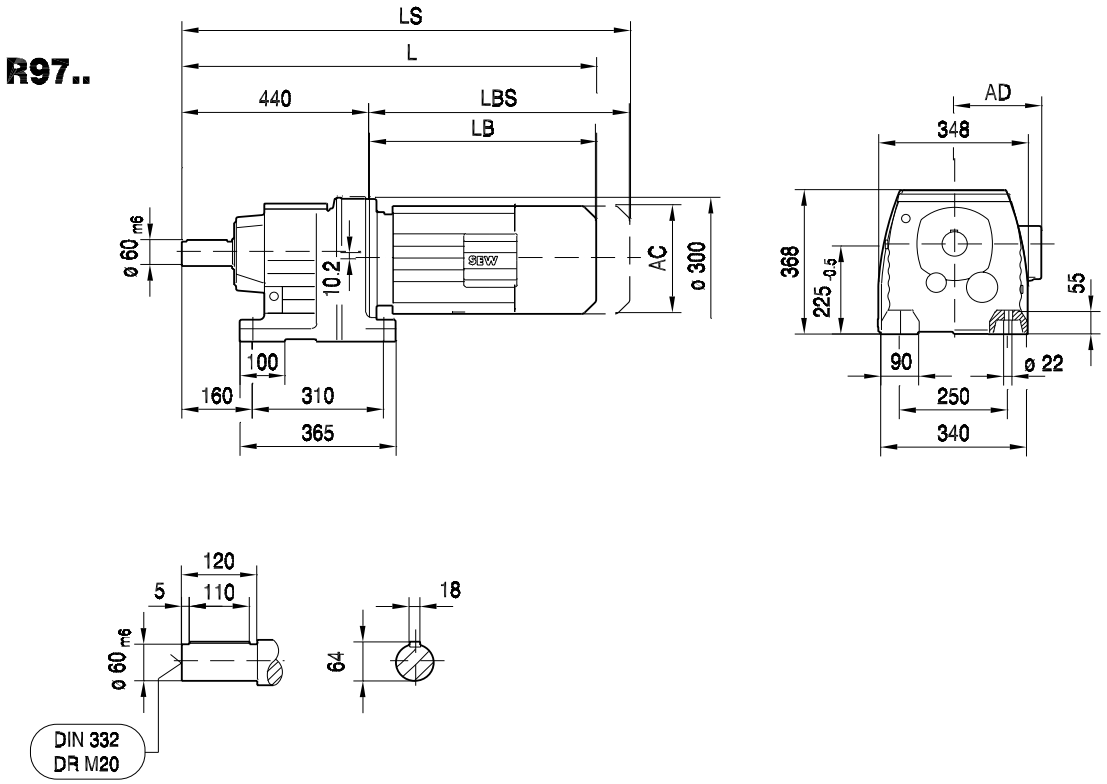

(→ 📖 105)	CT80N	CT90L	CV100M	CV100L	CV132S	CV132M	CV132ML	CV160M	CV160L	CV180..	
AC	145	197	197	197	221	285	285	285	342	342	
AD	126	160	165	165	178	229	229	229	252	252	
L	755	768	818	848	896	1081	1141	1141	1229	1301	
LS	818	853	903	933	976	1081	1141	1141	1229	1301	
LB	315	328	378	408	456	641	701	701	789	861	
LBS	378	413	463	493	536	641	701	701	789	861	

04 123 01 00

RF97..

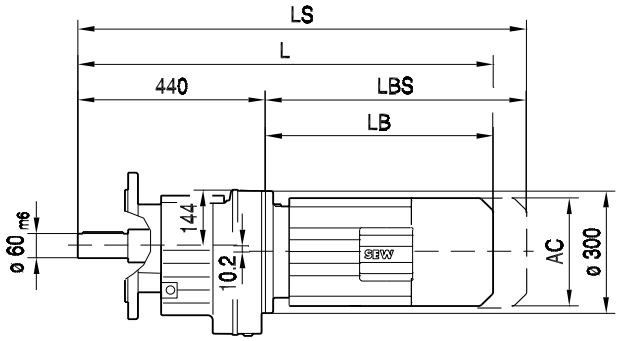

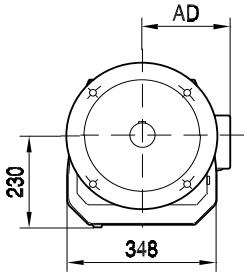

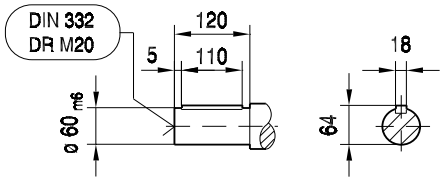

ø 350

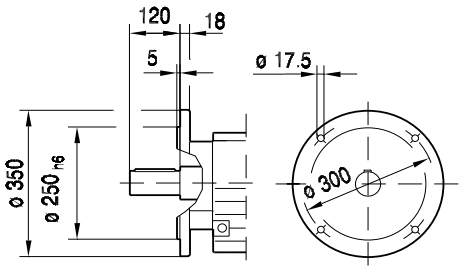

ø 450

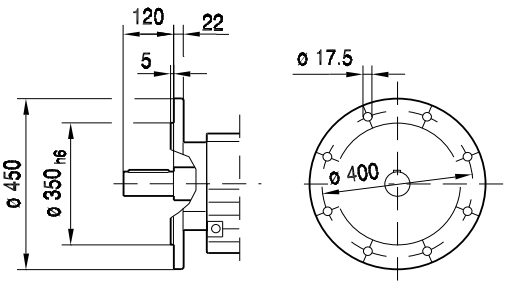

(→ 📖 105)	CT80N	CT90L	CV100M	CV100L	CV132S	CV132M	CV132ML	CV160M	CV160L	CV180..	
AC	145	197	197	197	221	285	285	285	342	342	
AD	126	160	165	165	178	229	229	229	252	252	
L	755	768	818	848	896	1081	1141	1141	1229	1301	
LS	818	853	903	933	976	1081	1141	1141	1229	1301	
LB	315	328	378	408	456	641	701	701	789	861	
LBS	378	413	463	493	536	641	701	701	789	861	

04 112 01 00

R107..

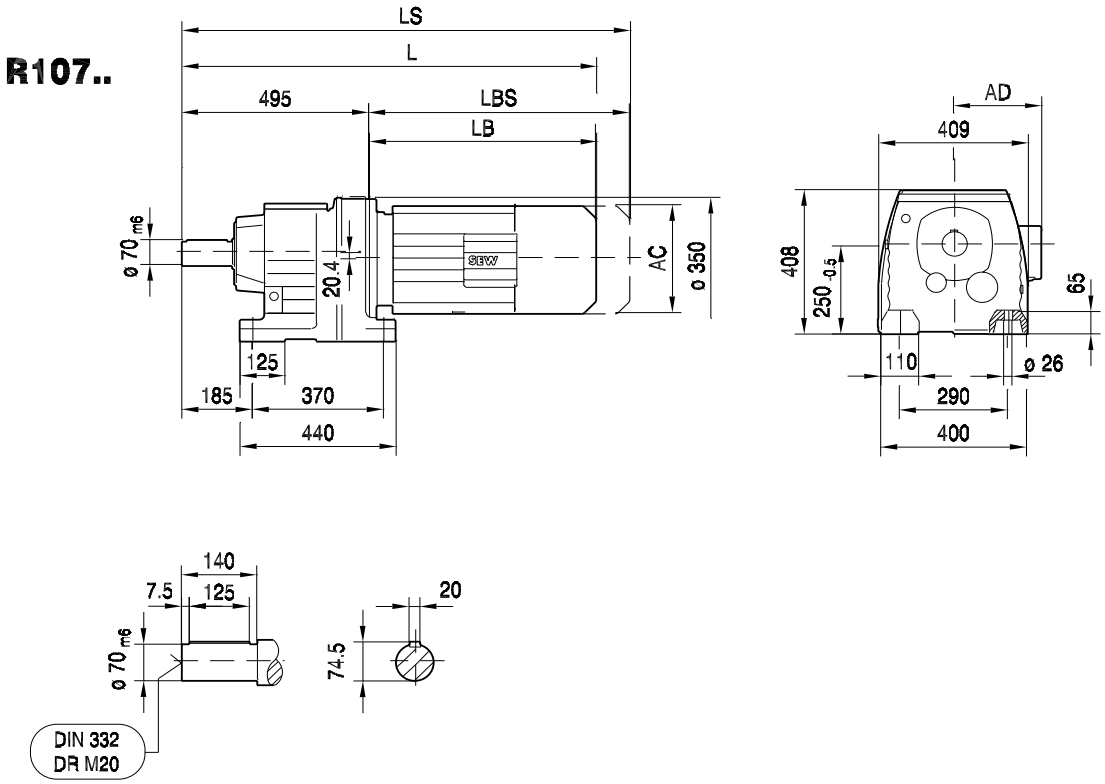

(→ 📖 105)	CV100M	CV100L	CV132S	CV132M	CV132ML	CV160M	CV160L	CV180..	CV200L		
AC	197	197	221	285	285	285	342	342	394		
AD	165	165	178	229	229	229	252	252	285		
L	867	897	945	1130	1190	1190	1278	1350	1409		
LS	952	982	1025	1130	1190	1190	1278	1350	1409		
LB	372	402	450	635	695	695	783	855	914		
LBS	457	487	530	635	695	695	783	855	914		

04 124 01 00

RF107..

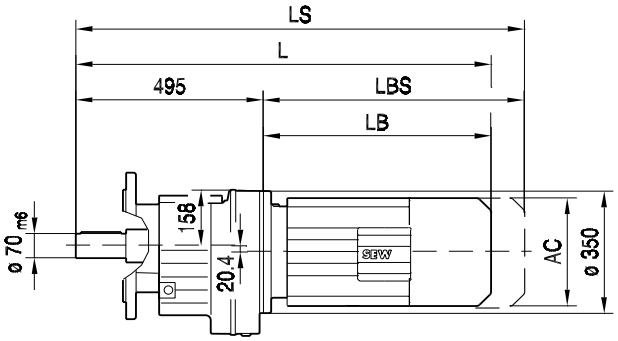

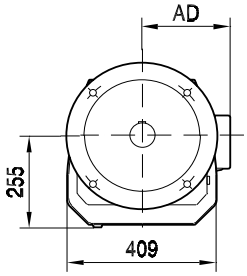

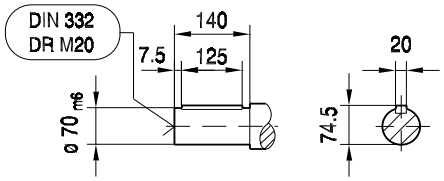

ø 350

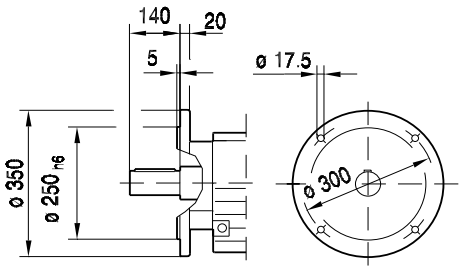

ø 450

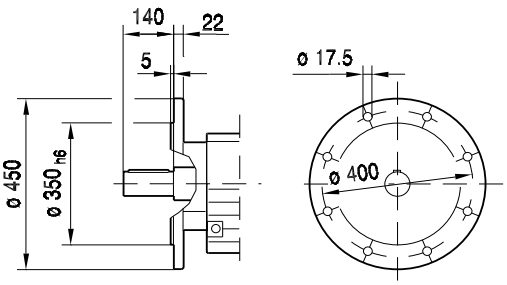

(→ 105)	CV100M	CV100L	CV132S	CV132M	CV132ML	CV160M	CV160L	CV180..	CV200L		
AC	197	197	221	285	285	285	342	342	394		
AD	165	165	178	229	229	229	252	252	285		
L	867	897	945	1130	1190	1190	1278	1350	1409		
LS	952	982	1025	1130	1190	1190	1278	1350	1409		
LB	372	402	450	635	695	695	783	855	914		
LBS	457	487	530	635	695	695	783	855	914		

04 113 01 00

R137..

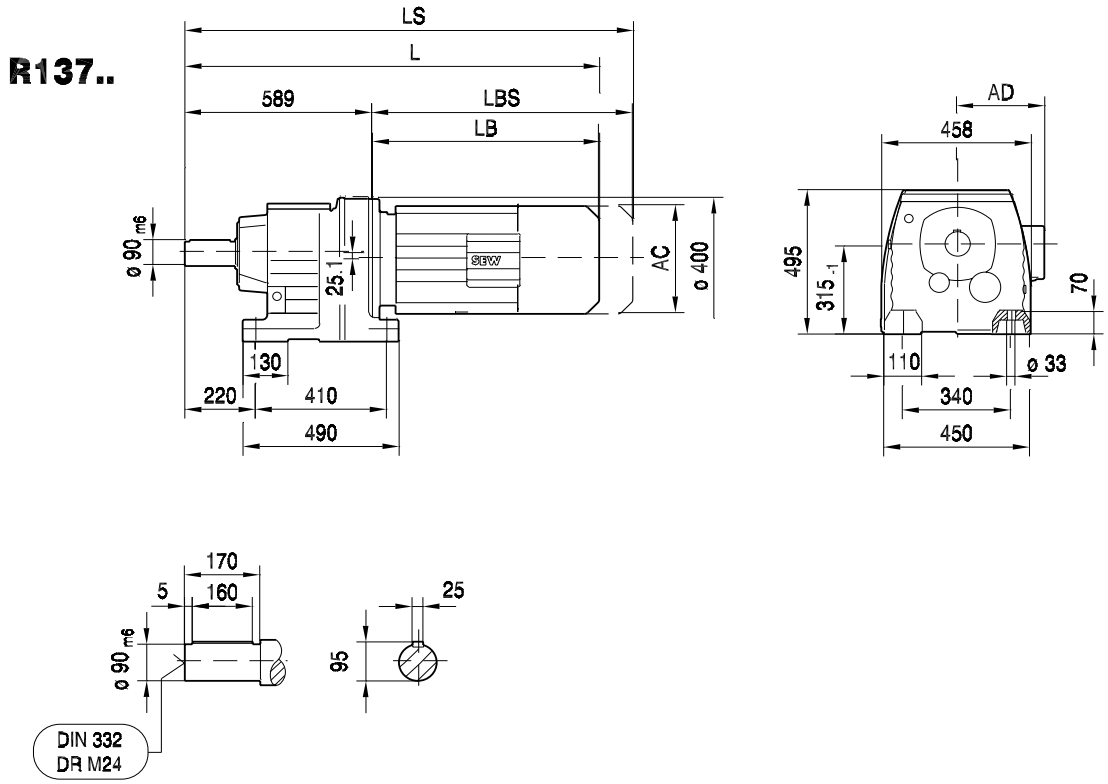

(→ 📖 105)	CV132S	CV132M	CV132ML	CV160M	CV160L	CV180..	CV200L				
AC	221	285	285	285	342	342	394				
AD	178	229	229	229	252	252	285				
L	1032	1217	1277	1277	1365	1437	1496				
LS	1112	1217	1277	1277	1365	1437	1496				
LB	443	628	688	688	776	848	907				
LBS	523	628	688	688	776	848	907				

04 125 01 00

RF137..

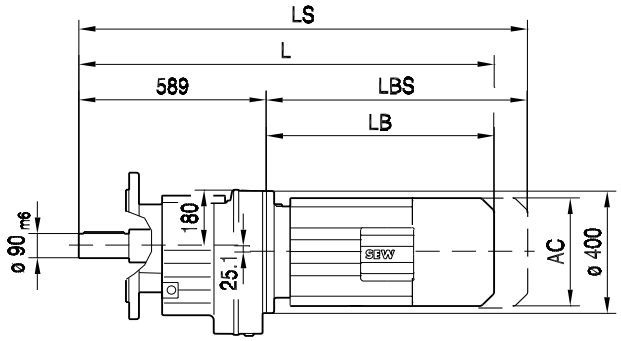

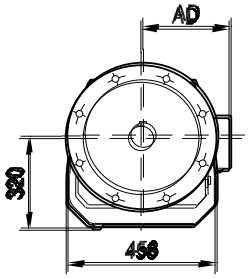

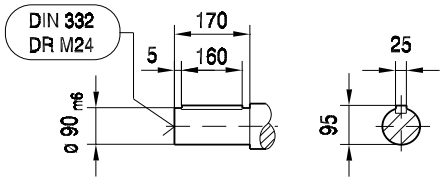

ø 450

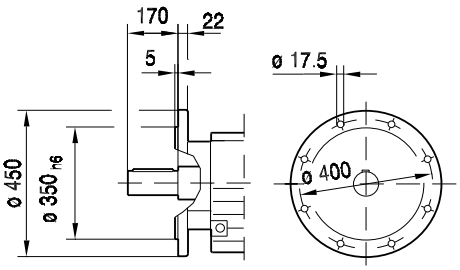

ø 550

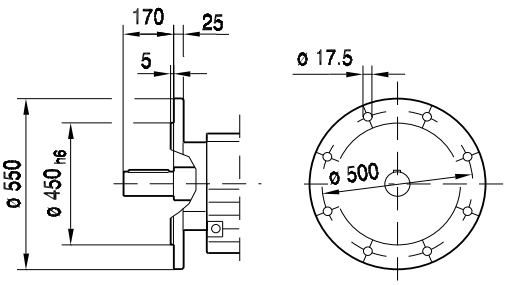

(→ 105)	CV132S	CV132M	CV132ML	CV160M	CV160L	CV180..	CV200L				
AC	221	285	285	285	342	342	394				
AD	178	229	229	229	252	252	285				
L	1032	1217	1277	1277	1365	1437	1496				
LS	1112	1217	1277	1277	1365	1437	1496				
LB	443	628	688	688	776	848	907				
LBS	523	628	688	688	776	848	907				

04 114 01 00

R147..

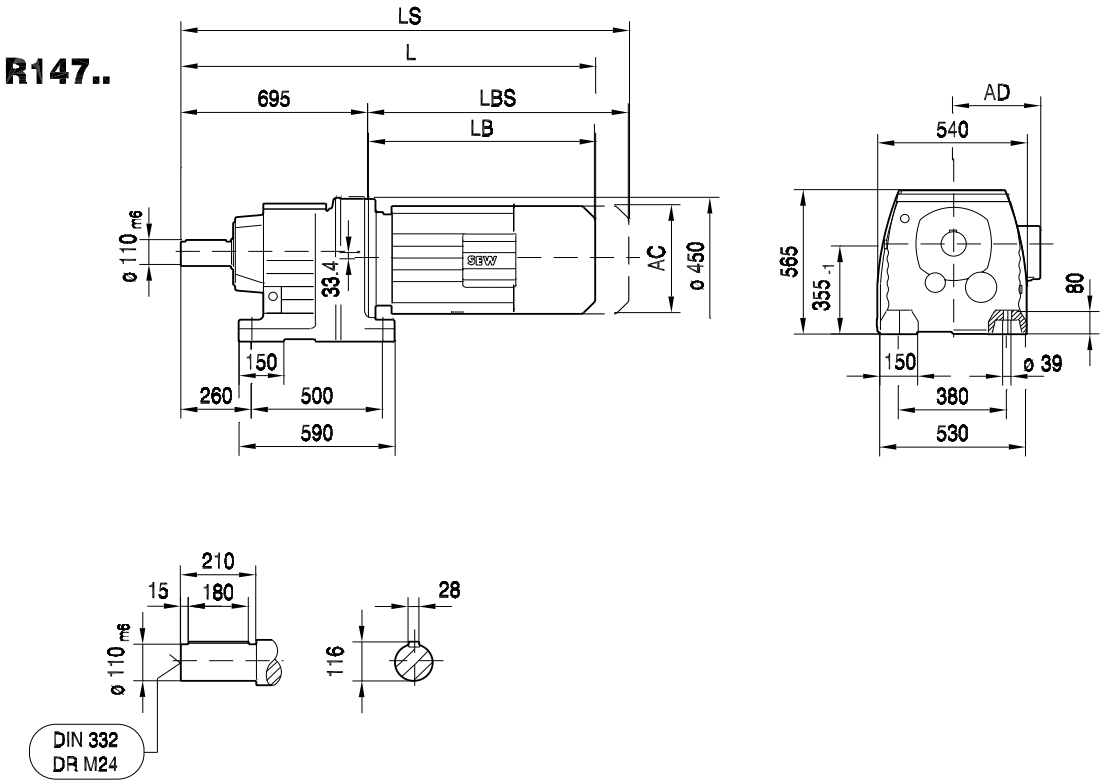

(→ 105)	CV132M	CV132ML	CV160M	CV160L	CV180..	CV200L					
AC	285	285	285	342	342	394					
AD	229	229	229	252	252	285					
L	1315	1375	1375	1463	1535	1594					
LS	1315	1375	1375	1463	1535	1594					
LB	620	680	680	768	840	899					
LBS	620	680	680	768	840	899					

04 126 01 00

RF147..

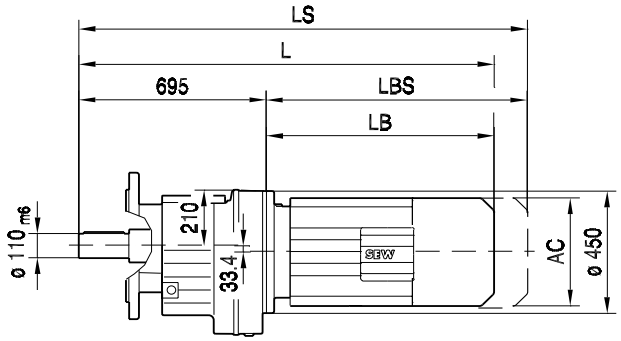

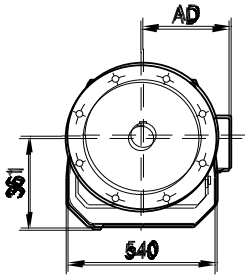

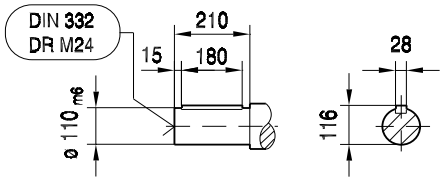

ø 450

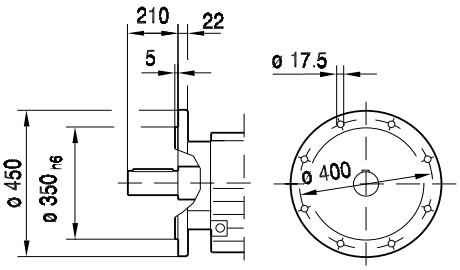

ø 550

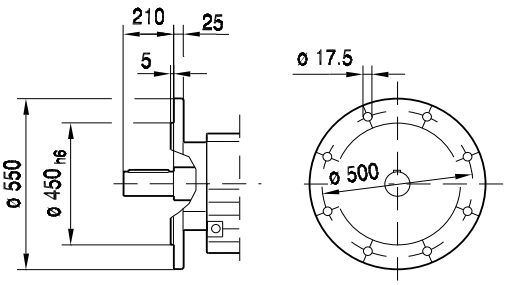

(→ 105)	CV132M	CV132ML	CV160M	CV160L	CV180..	CV200L					
AC	285	285	285	342	342	394					
AD	229	229	229	252	252	285					
L	1315	1375	1375	1463	1535	1594					
LS	1315	1375	1375	1463	1535	1594					
LB	620	680	680	768	840	899					
LBS	620	680	680	768	840	899					

04 115 01 00

R167..

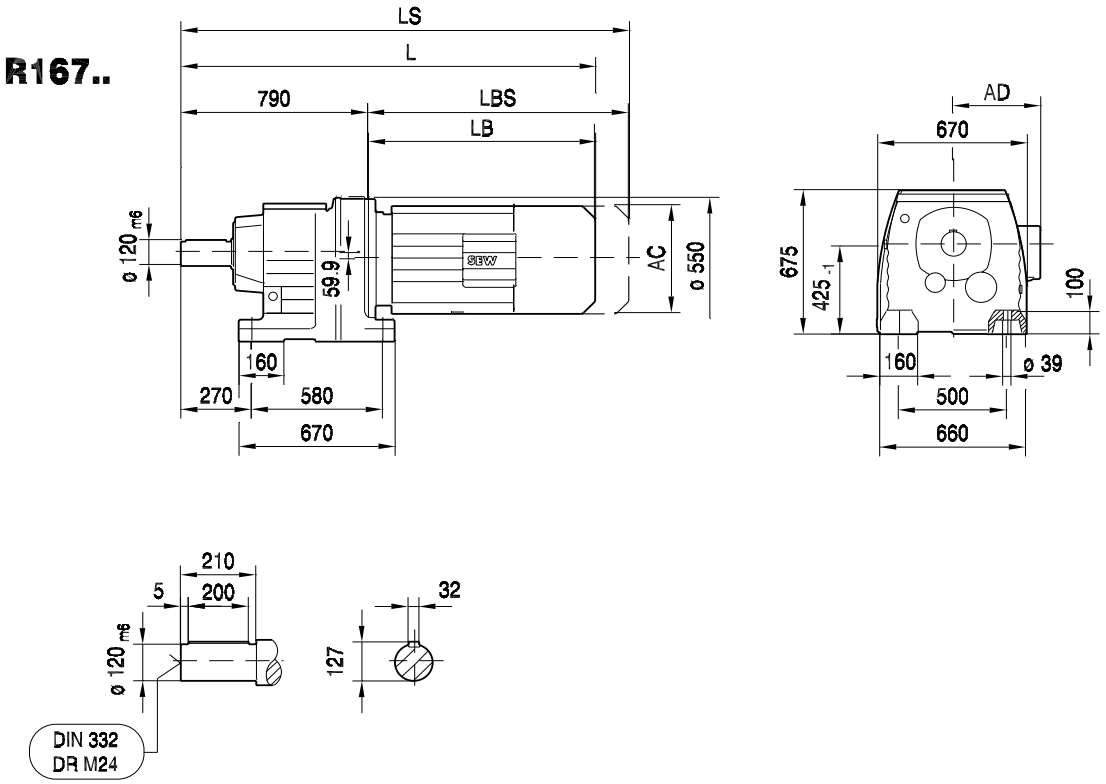

(→ 📖 105)	CV160M	CV160L	CV180..	CV200L							
AC	285	342	342	394							
AD	229	252	252	285							
L	1462	1550	1622	1681							
LS	1462	1550	1622	1681							
LB	672	760	832	891							
LBS	672	760	832	891							

04 127 01 00

RF167..

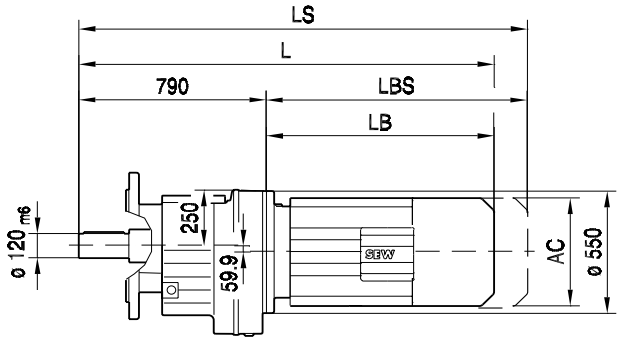

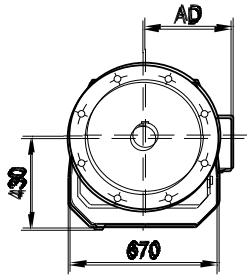

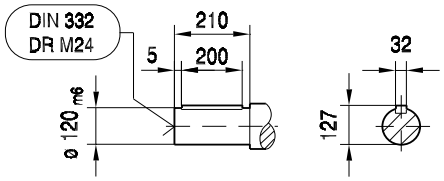

ø 550

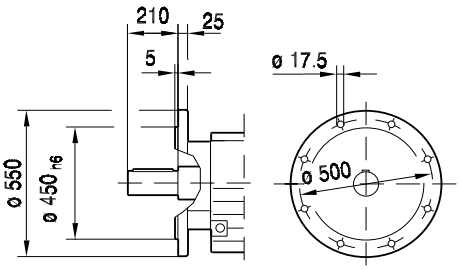

ø 660

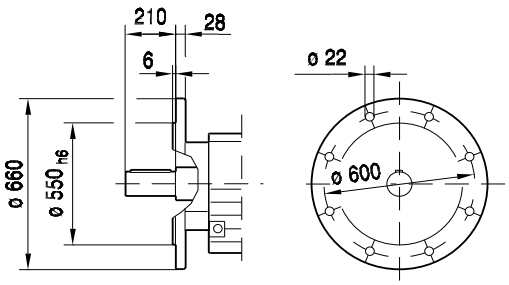

(→ 105)	CV160M	CV160L	CV180..	CV200L							
AC	285	342	342	394							
AD	229	252	252	285							
L	1462	1550	1622	1681							
LS	1462	1550	1622	1681							
LB	672	760	832	891							
LBS	672	760	832	891							

13 F..CT/CV..

13.1 F, FA, FV, FH, FF, FAF, FVF, FHF, FA..B, FV..B,FH..B, FAZ, FVZ, FHZ..CT/CV

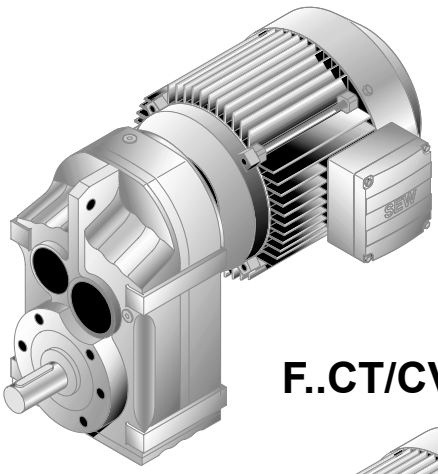

F..CT/CV..

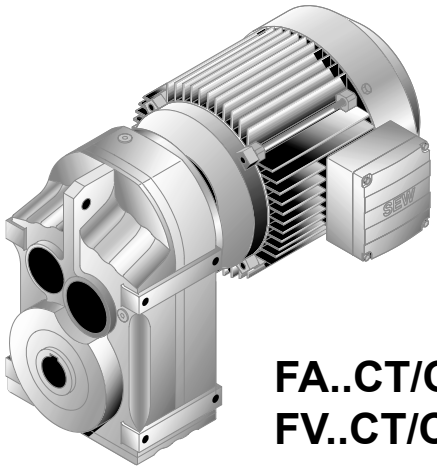

FA..CT/CV..
FV..CT/CV..

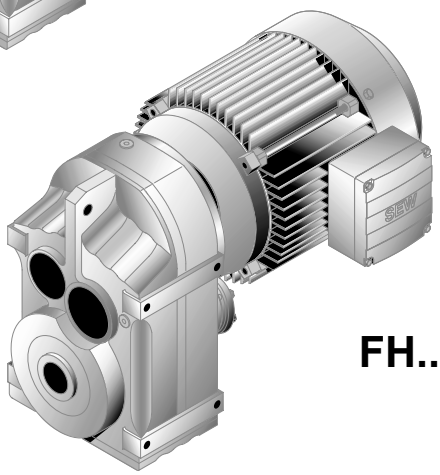

FH..CT/CV..

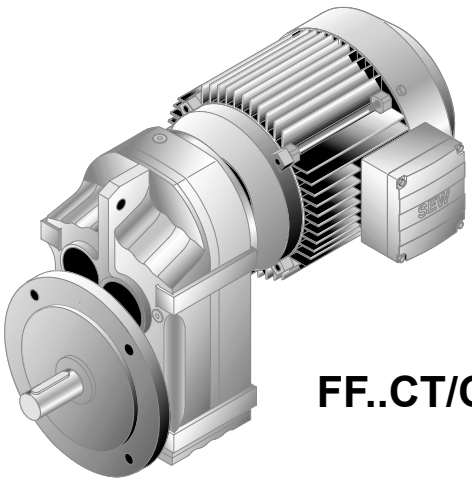

FF..CT/CV..

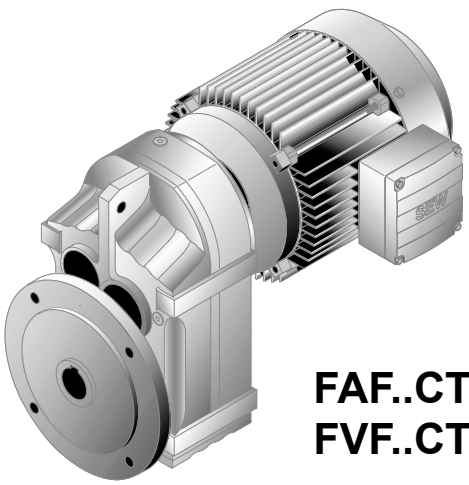

FAF..CT/CV..
FVF..CT/CV..

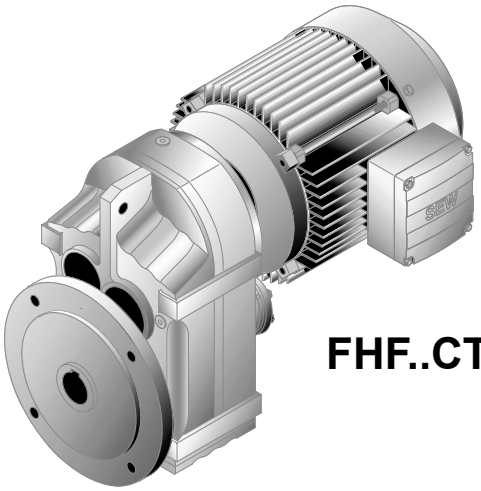

FHF..CT/CV..

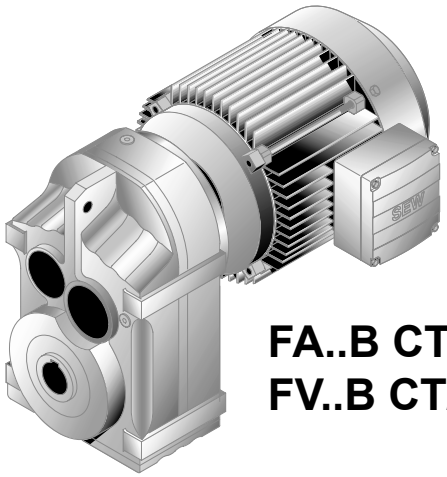

FA..B CT/CV..
FV..B CT/CV..

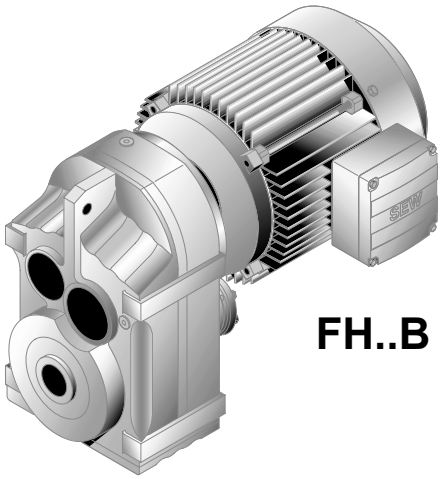

FH..B CT/CV..

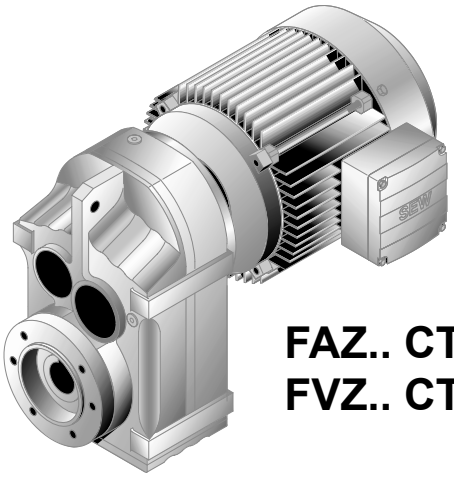

FAZ.. CT/CV..
FVZ.. CT/CV..

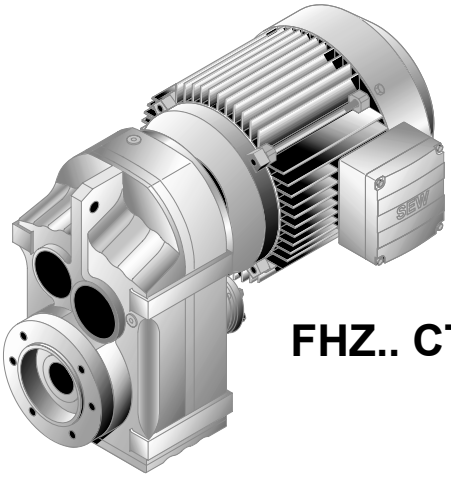

FHZ.. CT/CV..

13.2 F27 CT.. [Nm]

	$M_{a\ max}$ [Nm]	i	φ (/R) [']	$F_{Ra}(F)$ [N]	$F_{Ra}(FA)$ [N]	$J_G 10^{-4}$ [kgm^2]	CT 71D	CT 80N	CT 90L
FA27	130	63.86	-	4400	4500	0.26			
	130	56.62	-	4190	4500	0.31			
FAF27	130	50.19	-	3980	4500	0.17			
	130	46.78	-	3860	4500	0.18			
F27	130	40.89	-	3640	4500	0.23			
	130	38.33	-	3530	4500	0.26			
FF27	130	33.83	-	3340	4380	0.31			
 3									
FA27	130	23.25	-	2820	3690	0.19			
	130	20.15	-	2630	3450	0.23			
FAF27	130	18.84	-	2550	3340	0.26			
	130	16.28	-	2370	3110	0.32			
F27	130	13.84	-	2180	2860	0.43			
	130	12.35	-	2060	2700	0.51			
FF27	130	10.55	-	1900	2490	0.67			
	130	9.88	-	1830	2400	0.74			
	130	9.40	-	1660	2170	0.33			
	123	8.13	-	1590	2080	0.42			
2	114	6.91	-	1530	2000	0.56			
	109	6.17	-	1480	1940	0.68			
	100	5.27	-	1440	1880	0.90			
	96	4.93	-	1420	1870	1.01			
	87	4.16	-	1380	1810	1.35			

m [kg]		CT 71D	CT 80N	CT 90L
FA27	3 	12	-	-
	2 	12	15	21

FAF27: + 0.70 kg / F27: + 0.50 kg / FF27: + 1.3 kg

13.3 F37 CT.. [Nm]

	$M_{a\ max}$ [Nm]	i	$\varphi_{(/R)}$ [']	$F_{Ra}(F)$ [N]	$F_{Ra}(FA)$ [N]	$J_G 10^{-4}$ [kgm^2]	CT 71D	CT 80N	CT 90L
	200	100.36	7	4290	7000	0.12			
FA37	200	86.53	7	4290	7000	0.15			
	200	80.65	7	4290	7000	0.17			
FAF37	200	70.50	7	4290	7000	0.21			
	200	66.09	7	4290	7000	0.23			
F37	200	58.32	7	4290	7000	0.27			
	200	54.54	8	4290	6860	0.15			
FF37	200	51.70	7	4290	6710	0.34			
	200	47.02	8	4290	6430	0.19			
	200	43.83	8	4290	6240	0.21			
	200	38.31	8	4290	5870	0.26			
3	200	35.91	8	4290	5700	0.29			
	200	31.69	8	4290	5390	0.35			
	200	28.09	8	4060	5090	0.45			
	200	23.88	8	3760	4720	0.60			
	200	23.63	6	3740	4690	0.29			
FA37	200	20.57	6	3500	4390	0.36			
	200	19.27	6	3390	4250	0.40			
FAF37	200	17.03	6	3180	3990	0.48			
	200	15.81	6	3070	3850	0.52			
F37	200	14.33	7	2910	3650	0.63			
	200	12.87	7	2750	3450	0.74			
FF37	190	11.08	7	2620	3290	0.94			
	185	10.42	7	2580	3230	1.03			
	175	8.97	7	2460	3090	1.31			
	170	8.01	7	2360	2960	1.54			
2	145	7.44	10	2350	2940	0.83			
	140	6.74	10	2270	2850	1.01			
	135	6.05	10	2190	2750	1.22			
	125	5.21	10	2120	2660	1.58			
	120	4.90	11	2100	2630	1.76			
	110	4.22	11	2030	2550	2.29			
	105	3.77	12	1970	2470	2.77			

m [kg]		CT 71D	CT 80N	CT 90L
FA37	**3** 	19	22	27
	2 	18	21	27

FAF37: + 1.5 kg / F37: -- kg / FF37: + 2.3 kg

13.4 F47 CT.. [Nm]

	$M_{a\ max}$ [Nm]	i	φ (/R) [']	$F_{Ra}(F)$ [N]	$F_{Ra}(FA)$ [N]	$J_G 10^{-4}$ [kgm^2]	CT 71D	CT 80N	CT 90L
FA47	400	150.06	6	5920	9640	0.18			
	400	130.07	6	5920	9040	0.23			
FAF47	400	121.57	6	5920	8760	0.25			
	400	105.09	6	5920	8180	0.30			
F47	400	89.29	6	5920	7570	0.40			
	400	79.72	6	5920	7170	0.48			
FF47	400	68.09	6	5920	6620	0.61			
	400	65.36	7	5920	6490	0.29			
	400	56.49	7	5920	6020	0.36			
	400	48.00*	7	5920	5520	0.48			
3	400	42.86	7	5920	5190	0.58			
	400	36.61	7	5920	4750	0.76			
	400	34.29	7	5920	4580	0.85			
	400	28.88	7	5790	4130	1.13			
FA47	400	30.86	6	5920	4300	0.46			
	400	29.32	6	5830	4170	0.52			
FAF47	400	25.72	6	5470	3850	0.75			
	400	21.82	6	5030	3460	0.96			
F47	400	19.70	6	4770	3230	1.11			
	400	17.33	6	4450	2960	1.39			
FF47	400	16.36	6	4320	2840	1.52			
	400	13.93	6	3950	2510	1.85			
	400	12.66	6	3740	2330	2.12			
	400	10.97	6	3440	2060	2.62			
2	330	8.96	8	3250	1970	1.64			
	380	7.88	8	2630	1280	2.08			
	380	7.44*	8	2530	1190	2.29			
	350	6.34	8	2470	1230	2.92			
	340	5.76	9	2390	1180	3.43			
	320	4.99	9	2310	1160	4.37			

m [kg]		CT 71D	CT 80N	CT 90L
FA47	3 	23	26	32
	2 	23	26	31

FAF47: + 2.7 kg / F47: + 0.80 kg / FF47: + 3.9 kg



13.5 F57 CT/CV.. [Nm]

	$M_{a\ max}$ [Nm]	i	φ (/R) [']	F_{Ra}(F) [N]	F_{Ra}(FF) [N]	F_{Ra}(FA) [N]	$J_G 10^{-4}$ [kgm^2]	CT 71D	CT 80N	CT 90L	CV 100M	CV 100L
	600	157.09	6	9200	7900	11500	0.19					
FA57	600	136.16	6	9200	7900	11500	0.23					
	600	127.27	6	9200	7900	11500	0.26					
FAF57	600	110.01	6	9200	7900	10800	0.31					
	600	93.47	6	9200	7900	9960	0.42					
F57	600	83.46	6	9200	7900	9420	0.51					
	600	72.98	6	9200	7900	8810	0.28					
FF57	600	68.22	6	9200	7900	8510	0.31					
	600	58.97	7	9200	7900	7890	0.38					
	600	50.10	7	9200	7900	7230	0.52					
3	600	44.73	7	9160	7900	6790	0.64					
	600	38.21	7	8510	7900	6210	0.84					
	600	35.79	7	8250	7900	5980	0.94					
	590	30.15	7	7650	7850	5470	1.26					
	500	34.24	6	8670	8500	6590	0.43					
FA57	545	29.94	6	7890	8060	5790	0.53					
	535	28.45	6	7760	7930	5690	0.59					
FAF57	575	24.96	6	7060	7260	4970	0.84					
	600	21.17	6	6350	6580	4280	1.09					
F57	600	19.11	6	6020	6260	3980	1.29					
	600	16.81	6	5620	5870	3630	1.62					
FF57	600	15.88	6	5450	5690	3470	1.78					
	600	13.52	6	4980	5230	3050	2.21					
	600	12.29	6	4710	4970	2810	2.57					
2	600	10.64	6	4320	4590	2470	3.24					
	420	9.31	8	4760	4950	3170	2.02					
	420	8.19	8	4450	4640	2890	2.61					
	420	7.73	8	4310	4510	2760	2.89					
	420	6.58	8	3940	4140	2430	3.78					
	420	5.98	9	3730	3940	2240	4.49					
	415	5.18	9	3460	3670	2020	5.81					

m [kg]		CT 71D	CT 80N	CT 90L	CV 100M	CV 100L
FA57	**3** 	31	34	40	44	-
	2 	31	34	40	44	47

FAF57: + 5.5 kg / F57: -- kg / FF57: + 6.7 kg

13.6 F67 CT/CV.. [Nm]

	$M_{a\ max}$ [Nm]	i	φ (/R) [']	F_{Ra}(F) [N]	F_{Ra}(FA) [N]	$J_G 10^{-4}$ [kgm^2]	CT			CV			
							71D	80N	90L	100M	100L	132S	132M
	820	195.39	6	10300	13000	0.34							
FA67	820	170.85	6	10300	12700	0.42							
	820	162.31	6	10300	12400	0.47							
FAF67	820	142.40	6	10300	11700	0.68							
	820	120.79	6	10300	10800	0.85							
F67	820	109.04	6	10300	10200	0.98							
	820	95.94	6	10300	9570	1.24							
FF67	820	90.59	6	10300	9290	1.35							
	820	79.76	6	10300	8680	0.76							
	820	67.65	6	10300	7930	0.97							
3	820	61.07	6	10300	7480	1.13							
	820	53.73	6	10300	6950	1.42							
	820	50.74	6	10300	6710	1.57							
	820	43.20	6	10300	6080	1.93							
	780	39.26	6	10700	5990	2.23							
	740	34.01	6	11000	5730	2.77							
	820	36.30	5	10300	5440	0.98							
FA67	820	32.08	5	10300	5000	1.36							
	820	27.41	5	10300	4470	1.73							
FAF67	820	25.13	5	10300	4190	2.02							
	820	22.05	5	10300	3780	2.52							
F67	820	20.90*	5	10300	3620	2.73							
	820	18.29	6	10300	3230	3.35							
FF67	820	16.48	6	10300	2940	3.77							
	820	14.46	6	10300	2580	4.60							
	820	12.76	6	10300	2260	5.56							
2	820	11.31	6	10300	1960	6.69							
	820	9.66	6	10300	1580	8.53							
	530	9.08	8	11400	2620	3.98							
	570	8.60	8	10900	2180	4.36							
	610	7.53	8	10100	1570	5.47							
	620	6.78	9	9660	1280	6.34							
	610	5.95	9	9200	1090	7.99							
	590	5.25	9	8850	1010	9.96							
	560	4.66	9	8590	1020	12.32							
	500	3.97	10	8390	1220	16.32							

m [kg]		CT			CV			
		71D	80N	90L	100M	100L	132S	132M
FA67	3 	35	38	44	48	51	-	-
	2 	34	37	43	47	50	66	89

FAF67: + 6.3 kg / F67: + 2.8 kg / FF67: + 8.9 kg



13.7 F77 CT/CV.. [Nm]

	$M_{a\ max}$ [Nm]	i	φ (/R) [']	F_{Ra}(F) [N]	F_{Ra}(FA) [N]	$J_G 10^{-4}$ [kgm^2]	CT 71D	CT 80N	CT 90L	CV 100M	CV 100L	CV 132S
FA77	1500	225.79	5	15700	19300	0.67						
	1500	198.31	5	15700	18100	0.82						
FAF77	1500	188.40	5	15700	17700	0.91						
	1500	166.47	5	15700	16700	1.28						
F77	1500	142.27	5	15700	15400	1.61						
	1500	130.42	5	15700	14800	1.87						
FF77	1500	114.45	5	15700	13800	2.28						
	1500	108.46*	5	15700	13400	2.46						
	1500	94.93	5	15700	12500	3.00						
	1500	85.52	6	15700	11800	3.33						
3	1500	75.02	6	15700	11000	3.99						
	1500	72.50	6	15700	10700	1.91						
	1500	66.46	6	15700	10200	2.23						
	1500	58.32	6	15700	9450	2.76						
	1500	55.27	6	15700	9140	3.04						
	1500	48.37	6	15700	8410	3.75						
	1500	43.58	6	15700	7850	4.27						
	1500	38.23	6	15700	7190	5.24						
	1500	33.74	6	15700	6580	6.42						
	1500	29.91	6	15700	6010	7.83						
	1450	25.54	6	16100	5560	10.15						
FA77	1110	36.58	5	17900	8990	3.04						
	1380	31.51	5	16500	6870	3.84						
FAF77	1430	28.75	5	16200	6190	4.43						
	1500	25.50*	5	15700	5300	5.46						
F77	1500	21.43	5	15700	4560	7.11						
	1500	19.70	5	15700	4220	7.94						
FF77	1500	17.49	5	15700	3750	9.50						
	1500	15.64*	5	15700	3330	11.24						
	1500	14.06	5	15700	2940	13.16						
	1500	12.20	5	14900	2450	16.08						
2	1500	10.93	6	14200	2080	18.96						
	1080	9.30	7	13800	2310	11.62						
	1080	8.26	7	13100	1940	14.17						
	1080	7.39	7	12500	1610	16.95						
	1080	6.64	8	12000	1310	20.25						
	1080	5.76	8	11300	930	25.54						
	1080	5.16	8	10700	640	30.78						
	1010	4.28	8	10200	630	41.67						

m [kg]		CT 71D	CT 80N	CT 90L	CV 100M	CV 100L	CV 132S
FA77	**3** 	57	61	67	70	74	91
	2 	56	60	66	69	73	90

FAF77: + 6.6 kg / F77: + 3.8 kg / FF77: + 14 kg



F77 CT/CV..

	$M_{a\ max}$ [Nm]	i	φ (/R) [']	F_{Ra}(F) [N]	F_{Ra}(FA) [N]	$J_G 10^{-4}$ [kgm^2]	CV 132M	CV 132ML	CV 160M
	1500	225.79	5	15700	19300	0.67			
FA77	1500	198.31	5	15700	18100	0.82			
	1500	188.40	5	15700	17700	0.91			
FAF77	1500	166.47	5	15700	16700	1.28			
	1500	142.27	5	15700	15400	1.61			
F77	1500	130.42	5	15700	14800	1.87			
	1500	114.45	5	15700	13800	2.28			
FF77	1500	108.46*	5	15700	13400	2.46			
	1500	94.93	5	15700	12500	3.00			
	1500	85.52	6	15700	11800	3.33			
3	1500	75.02	6	15700	11000	3.99			
	1500	72.50	6	15700	10700	1.91			
	1500	66.46	6	15700	10200	2.23			
	1500	58.32	6	15700	9450	2.76			
	1500	55.27	6	15700	9140	3.04			
	1500	48.37	6	15700	8410	3.75			
	1500	43.58	6	15700	7850	4.27			
	1500	38.23	6	15700	7190	5.24			
	1500	33.74	6	15700	6580	6.42			
	1500	29.91	6	15700	6010	7.83			
	1450	25.54	6	16100	5560	10.15			
	1110	36.58	5	17900	8990	3.04			
FA77	1380	31.51	5	16500	6870	3.84			
	1430	28.75	5	16200	6190	4.43			
FAF77	1500	25.50*	5	15700	5300	5.46			
	1500	21.43	5	15700	4560	7.11			
F77	1500	19.70	5	15700	4220	7.94			
	1500	17.49	5	15700	3750	9.50			
FF77	1500	15.64*	5	15700	3330	11.24			
	1500	14.06	5	15700	2940	13.16			
	1500	12.20	5	14900	2450	16.08			
2	1500	10.93	6	14200	2080	18.96			
	1080	9.30	7	13800	2310	11.62			
	1080	8.26	7	13100	1940	14.17			
	1080	7.39	7	12500	1610	16.95			
	1080	6.64	8	12000	1310	20.25			
	1080	5.76	8	11300	930	25.54			
	1080	5.16	8	10700	640	30.78			
	1010	4.28	8	10200	630	41.67			

m [kg]		CV 132M	CV 132ML	CV 160M
FA77	**3** 	110	120	-
	2 	110	120	125

FAF77: + 6.6 kg / F77: + 3.8 kg / FF77: + 14 kg

13.8 F87 CT/CV.. [Nm]

	$M_{a\ max}$ [Nm]	i	φ (/R) [']	F_{Ra}(F) [N]	F_{Ra}(FA) [N]	$J_G 10^{-4}$ [kgm^2]	CT		CV				
							80N	90L	100M	100L	132S	132M	132ML
	3000	270.68	7	19800	29800	1.65							
FA87	3000	255.37	7	19800	28900	1.82							
	3000	228.93	7	19800	27300	2.79							
FAF87	3000	197.20	7	19800	25300	3.51							
	3000	179.97	7	19800	24100	4.04							
F87	3000	159.61	7	19800	22500	4.93							
	3000	134.16	7	19800	20400	6.31							
FF87	3000	123.29	7	19800	19400	7.02							
	3000	109.49	7	19800	18100	8.26							
	3000	97.89	7	19800	16900	9.88							
3	3000	88.01	7	19800	15800	11.44							
	3000	76.39	7	19800	14300	13.91							
	3000	68.40	7	19600	13300	16.25							
	3000	56.75	7	17700	11600	20.50							
	2940	50.36	7	16800	10800	11.41							
	2820	45.28	8	16200	10500	13.26							
	2720	39.30	8	15400	9910	16.26							
	2610	35.19	8	14900	9610	19.20							
	2510	29.20	8	13800	8740	24.84							
	2610	33.92	7	14600	9340	10.13							
FA87	2450	28.78	7	13900	8940	13.12							
	3000	26.50	7	11100	5610	14.58							
FAF87	3000	23.68	7	10300	4850	17.27							
	3000	21.32*	7	9530	4160	20.06							
F87	3000	19.31	7	8840	3540	23.20							
	3000	17.12	7	8040	2810	28.05							
FF87	3000	15.48	7	7390	2220	32.40							
	3000	13.12*	7	6370	1300	40.03							
	3000	11.46	7	5580	575	49.30							
2	2880	9.58	7	5050	275	62.73							
	1530	8.29	7	8890	5550	35.82							
	1530	7.35	7	8280	5000	43.82							
	1530	6.65	7	7790	4550	51.74							
	1530	5.63	7	7020	3850	67.08							
	1530	4.92	7	6430	3310	85.13							
	1460	4.12	7	5980	3020	113.95							

m [kg]		CT		CV				
		80N	90L	100M	100L	132S	132M	132ML
FA87	**3** 	100	105	110	115	130	150	160
	2 	97	105	110	110	125	150	155

FAF87: + 13 kg / F87: + 5.7 kg / FF87: + 21 kg



F87 CT/CV..

	$M_{a\ max}$ [Nm]	i	φ (/R) [']	F_{Ra}(F) [N]	F_{Ra}(FA) [N]	$J_G 10^{-4}$ [kgm^2]	CV 160M	160L	180M	180L
	3000	270.68	7	19800	29800	1.65				
FA87	3000	255.37	7	19800	28900	1.82				
	3000	228.93	7	19800	27300	2.79				
FAF87	3000	197.20	7	19800	25300	3.51				
	3000	179.97	7	19800	24100	4.04				
F87	3000	159.61	7	19800	22500	4.93				
	3000	134.16	7	19800	20400	6.31				
FF87	3000	123.29	7	19800	19400	7.02				
	3000	109.49	7	19800	18100	8.26				
	3000	97.89	7	19800	16900	9.88				
3	3000	88.01	7	19800	15800	11.44				
	3000	76.39	7	19800	14300	13.91				
	3000	68.40	7	19600	13300	16.25				
	3000	56.75	7	17700	11600	20.50				
	2940	50.36	7	16800	10800	11.41				
	2820	45.28	8	16200	10500	13.26				
	2720	39.30	8	15400	9910	16.26				
	2610	35.19	8	14900	9610	19.20				
	2510	29.20	8	13800	8740	24.84				
	2610	33.92	7	14600	9340	10.13				
FA87	2450	28.78	7	13900	8940	13.12				
	3000	26.50	7	11100	5610	14.58				
FAF87	3000	23.68	7	10300	4850	17.27				
	3000	21.32*	7	9530	4160	20.06				
F87	3000	19.31	7	8840	3540	23.20				
	3000	17.12	7	8040	2810	28.05				
FF87	3000	15.48	7	7390	2220	32.40				
	3000	13.12*	7	6370	1300	40.03				
	3000	11.46	7	5580	575	49.30				
2	2880	9.58	7	5050	275	62.73				
	1530	8.29	7	8890	5550	35.82				
	1530	7.35	7	8280	5000	43.82				
	1530	6.65	7	7790	4550	51.74				
	1530	5.63	7	7020	3850	67.08				
	1530	4.92	7	6430	3310	85.13				
	1460	4.12	7	5980	3020	113.95				

m [kg]		CV 160M	160L	180M	180L
FA87	**3** 	165	205	255	-
	2 	160	200	250	265

FAF87: + 13 kg / F87: + 5.7 kg / FF87: + 21 kg

13.9 F97 CT/CV.. [Nm]

	$M_{a\ max}$ [Nm]	i	φ (/R) [']	F_{Ra}(F) [N]	F_{Ra}(FA) [N]	$J_G 10^{-4}$ [kgm^2]	CT		CV				
							80N	90L	100M	100L	132S	132M	132ML
	4300	276.77	6	29900	40000	5.10							
FA97	4300	253.41	6	29900	40000	5.86							
	4300	223.88	6	29900	40000	9.18							
FAF97	4300	189.92	6	29900	40000	11.76							
	4300	174.87	6	29900	40000	12.99							
F97	4300	156.30	6	29900	40000	15.39							
	4300	140.71	6	29900	40000	17.82							
FF97	4300	127.42	6	29900	40000	20.41							
	4300	112.99	6	29900	40000	24.57							
	4300	102.16	6	29900	38100	28.11							
3	4300	97.58	6	29900	37200	12.85							
	4300	89.85	6	29900	35700	14.27							
	4300	86.59	6	29900	35100	34.02							
	4300	80.31	6	29900	33800	16.88							
	4300	75.63	6	29900	32800	41.67							
	4300	72.29	6	29900	32000	19.69							
	4300	65.47	6	29000	30400	22.61							
	4300	58.06	6	27200	28500	27.30							
	4300	52.49	6	25800	26900	31.48							
	4300	44.49	6	23600	24500	38.76							
	4300	38.86	6	21900	22700	47.92							
	4300	32.50	6	19800	20300	60.34							
	3070	43.28	6	27600	29300	12.91							
FA97	3070	36.64	6	25500	27000	16.66							
	4300	33.91	6	20300	20900	18.64							
FAF97	4300	30.39	6	19000	19500	22.11							
	4300	27.44*	6	17900	18200	28.25							
F97	4300	24.92	6	16800	17100	32.61							
	4300	22.11	6	15600	15700	38.85							
FF97	4300	20.07	6	14600	14700	44.75							
	4300	17.25*	6	13200	13100	55.22							
	4300	15.06	6	11900	11700	67.43							
2	4300	12.77	6	10500	10100	85.31							
	4100	11.16	6	10000	9710	103.89							
	2360	9.06	9	13400	13900	61.49							
	2360	8.22	9	12600	13100	72.23							
	2360	7.07	9	11500	11900	92.15							
	2250	6.17	9	11100	11400	116.37							
	2150	5.23	9	10400	10700	153.18							
	2050	4.57	9	9950	10200	192.73							
	1800	3.87	9	9970	10300	266.11							

m [kg]		CT		CV				
		80N	90L	100M	100L	132S	132M	132ML
FA97	**3** 	165	170	175	180	195	215	225
	2 	155	165	170	170	190	210	220

FAF97: + 22 kg / F97: + 7.5 kg / FF97: + 40 kg



F97 CT/CV..

	$M_{a\ max}$ [Nm]	i	φ (/R) [']	F_{Ra}(F) [N]	F_{Ra}(FA) [N]	$J_G 10^{-4}$ [kgm^2]	CV 160M	160L	180M	180L	200L
	4300	276.77	6	29900	40000	5.10					
FA97	4300	253.41	6	29900	40000	5.86					
	4300	223.88	6	29900	40000	9.18					
FAF97	4300	189.92	6	29900	40000	11.76					
	4300	174.87	6	29900	40000	12.99					
F97	4300	156.30	6	29900	40000	15.39					
	4300	140.71	6	29900	40000	17.82					
FF97	4300	127.42	6	29900	40000	20.41					
	4300	112.99	6	29900	40000	24.57					
	4300	102.16	6	29900	38100	28.11					
3	4300	97.58	6	29900	37200	12.85					
	4300	89.85	6	29900	35700	14.27					
	4300	86.59	6	29900	35100	34.02					
	4300	80.31	6	29900	33800	16.88					
	4300	75.63	6	29900	32800	41.67					
	4300	72.29	6	29900	32000	19.69					
	4300	65.47	6	29000	30400	22.61					
	4300	58.06	6	27200	28500	27.30					
	4300	52.49	6	25800	26900	31.48					
	4300	44.49	6	23600	24500	38.76					
	4300	38.86	6	21900	22700	47.92					
	4300	32.50	6	19800	20300	60.34					
	3070	43.28	6	27600	29300	12.91					
FA97	3070	36.64	6	25500	27000	16.66					
	4300	33.91	6	20300	20900	18.64					
FAF97	4300	30.39	6	19000	19500	22.11					
	4300	27.44*	6	17900	18200	28.25					
F97	4300	24.92	6	16800	17100	32.61					
	4300	22.11	6	15600	15700	38.85					
FF97	4300	20.07	6	14600	14700	44.75					
	4300	17.25*	6	13200	13100	55.22					
	4300	15.06	6	11900	11700	67.43					
2	4300	12.77	6	10500	10100	85.31					
	4100	11.16	6	10000	9710	103.89					
	2360	9.06	9	13400	13900	61.49					
	2360	8.22	9	12600	13100	72.23					
	2360	7.07	9	11500	11900	92.15					
	2250	6.17	9	11100	11400	116.37					
	2150	5.23	9	10400	10700	153.18					
	2050	4.57	9	9950	10200	192.73					
	1800	3.87	9	9970	10300	266.11					

m [kg]		CV 160M	160L	180M	180L	200L
FA97	**3** 	230	270	320	335	-
	2 	225	265	315	330	380

FAF97: + 22 kg / F97: + 7.5 kg / FF97: + 40 kg



13.10 F107 CV.. [Nm]

	$M_{a\ max}$ [Nm]	i	$\varphi_{(/R)}$ [']	$F_{Ra}(F)$ [N]	$F_{Ra}(FA)$ [N]	$F_{Ra}(FAF)$ [N]	$J_G 10^{-4}$ [kgm^2]	CV 100M	100L	132S	132M	132ML	160M
	7680	254.40*	5	49800	58600	65000	11.54						
FA107	7680	215.37	5	49800	54000	65000	14.75						
	7680	199.31	5	49800	52000	65000	16.41						
FAF107	7680	178.64	5	49800	49100	65000	19.33						
	7680	161.28*	5	49800	46600	65000	24.96						
F107	7680	146.49	5	49800	44200	65000	28.60						
	7680	129.97	5	49800	41500	65000	34.01						
FF107	7680	117.94	5	49800	39300	65000	38.66						
	7680	101.38*	5	49800	36000	65000	46.88						
	7680	92.47*	6	49800	34100	65000	26.67						
3	7680	88.49	5	49800	33200	65000	56.40						
	7680	83.99	6	49800	32200	65000	30.70						
	7680	74.52	6	49800	29900	65000	36.71						
	7680	67.62	6	49800	28000	65000	42.08						
	7680	58.12*	6	47800	25300	65000	51.22						
	7680	50.73	6	45100	23000	65000	62.19						
	7680	43.03	6	42000	20300	65000	77.27						
	7680	37.61	6	39500	18300	65000	94.35						
	7680	31.80	6	36500	15800	65000	125.47						
	7400	33.79*	5	38300	17700	65000	43.00						
FA107	7840	27.57	5	33700	13200	65000	66.34						
	7840	25.14	5	32200	12000	64500	75.96						
FAF107	7840	21.76*	5	30000	10100	60600	92.16						
	7840	19.20*	5	28100	8600	57400	111.68						
F107	7840	16.58	5	26000	6870	53800	138.20						
	7680	14.67	5	24700	6050	51500	164.04						
FF107	7000	12.33	5	24300	6580	49800	208.89						
	6500	9.96	5	22900	6200	47000	280.05						
	4910	9.69	7	25400	9670	50000	153.69						
2	4800	8.37	7	24000	8720	47400	194.52						
	4600	7.40	7	23200	8400	45800	236.03						
	4600	6.22	7	21100	6920	42600	310.82						
	4600	5.03	7	16400	4520	39000	439.29						

m [kg]		CV 100M	100L	132S	132M	132ML	160M
FA107	**3** 	250	255	270	290	300	305
	2 	240	245	260	280	290	295

FAF107: + 21 kg / F107: + 17 kg / FF107: + 44 kg

F107 CV..

	$M_{a\ max}$ [Nm]	i	φ (/R) [']	F_{Ra}(F) [N]	F_{Ra}(FA) [N]	F_{Ra}(FAF) [N]	$J_G 10^{-4}$ [kgm^2]	CV 160L	CV 180M	CV 180L	CV 200L
FA107	7680	254.40*	5	49800	58600	65000	11.54				
	7680	215.37	5	49800	54000	65000	14.75				
FAF107	7680	199.31	5	49800	52000	65000	16.41				
	7680	178.64	5	49800	49100	65000	19.33				
F107	7680	161.28*	5	49800	46600	65000	24.96				
	7680	146.49	5	49800	44200	65000	28.60				
FF107	7680	129.97	5	49800	41500	65000	34.01				
	7680	117.94	5	49800	39300	65000	38.66				
	7680	101.38*	5	49800	36000	65000	46.88				
	7680	92.47*	6	49800	34100	65000	26.67				
3	7680	88.49	5	49800	33200	65000	56.40				
	7680	83.99	6	49800	32200	65000	30.70				
	7680	74.52	6	49800	29900	65000	36.71				
	7680	67.62	6	49800	28000	65000	42.08				
	7680	58.12*	6	47800	25300	65000	51.22				
	7680	50.73	6	45100	23000	65000	62.19				
	7680	43.03	6	42000	20300	65000	77.27				
	7680	37.61	6	39500	18300	65000	94.35				
	7680	31.80	6	36500	15800	65000	125.47				
FA107	7400	33.79*	5	38300	17700	65000	43.00				
	7840	27.57	5	33700	13200	65000	66.34				
FAF107	7840	25.14	5	32200	12000	64500	75.96				
	7840	21.76*	5	30000	10100	60600	92.16				
F107	7840	19.20*	5	28100	8600	57400	111.68				
	7840	16.58	5	26000	6870	53800	138.20				
FF107	7680	14.67	5	24700	6050	51500	164.04				
	7000	12.33	5	24300	6580	49800	208.89				
	6500	9.96	5	22900	6200	47000	280.05				
	4910	9.69	7	25400	9670	50000	153.69				
2	4800	8.37	7	24000	8720	47400	194.52				
	4600	7.40	7	23200	8400	45800	236.03				
	4600	6.22	7	21100	6920	42600	310.82				
	4600	5.03	7	16400	4520	39000	439.29				

m [kg]		CV 160L	CV 180M	CV 180L	CV 200L
FA107	**3** 	345	395	410	465
	2 	335	385	400	455

FAF107: + 21 kg / F107: + 17 kg / FF107: + 44 kg



13.11 F127 CV.. [Nm]

	$M_{a\ max}$ [Nm]	i	φ (/R) [']	F_{Ra}(F) [N]	F_{Ra}(FA) [N]	F_{Ra}(FAF) [N]	$J_G 10^{-4}$ [kgm^2]	CV 132M	132ML	160M	160L	180M	180L	200L
	12000	170.83	5	90000	48500	90000	33.73							
FA127	12000	153.67*	5	90000	45500	90000	38.57							
	12000	125.37	5	90000	40100	90000	59.96							
FAF127	12000	114.34	5	88000	37700	90000	68.24							
	12000	98.95	5	83000	34100	90000	81.74							
F127	12000	87.31*	5	78900	31200	90000	97.83							
	12000	75.41*	5	74300	27900	90000	119.03							
FF127	12000	70.07	5	72100	26300	90000	66.89							
	12000	63.91	5	69400	24300	90000	76.63							
	12000	55.31	5	65300	21400	90000	93.04							
3	12000	48.80	5	61800	18900	90000	112.81							
	12000	42.15	5	57900	16200	90000	139.72							
	12000	37.28	5	54800	14000	90000	165.99							
	12000	31.33	5	50600	11100	86400	211.65							
	12000	25.30	5	45700	7720	78800	284.28							
	8500	26.86	5	55300	19800	90000	108.12							
FA127	8500	24.57	5	53300	18400	88300	124.38							
	12000	21.38	5	42000	4380	73100	152.45							
FAF127	11000	18.87	5	41900	6620	72100	184.72							
	11000	16.36	5	39000	3190	67700	231.90							
F127	11000	14.55	5	36200	475	64200	277.62							
	10000	12.54	5	36400	2670	63000	358.85							
FF127	9500	10.19	5	34000	1090	58900	483.25							
	7000	8.86	6	36400	8410	61400	328.85							
	6000	7.88	6	37000	10600	61800	400.09							
	7000	6.80	7	32200	5670	55000	523.69							
2	6000	5.52	7	31700	7110	53500	732.95							
	6000	4.68	7	29500	5630	50000	970.84							

m [kg]		CV 132M	132ML	160M	160L	180M	180L	200L
FA127	**3** 	435	445	450	485	540	550	610
	2 	425	435	440	475	530	540	600

FAF127: + 37 kg / F127: + 36 kg / FF127: + 81 kg

13.12 F157 CV.. [Nm]

	$M_{a\ max}$ [Nm]	i	$\varphi_{(/R)}$ [']	$F_{Ra}(F)$ [N]	$F_{Ra}(FA)$ [N]	$J_G 10^{-4}$ [kgm^2]	CV 132ML	160M	160L	180M	180L	200L
FA157	18000	217.62*	5	100300	120000	56.76						
	18000	178.20*	5	100300	120000	87.57						
FAF157	18000	162.96	5	100300	120000	99.76						
	18000	141.80*	5	100300	120000	119.83						
F157	18000	125.14	5	100300	120000	142.36						
	18000	108.49	5	100300	120000	172.29						
FF157	18000	96.53*	5	100300	120000	202.07						
	18000	85.80*	5	95700	120000	99.05						
	18000	78.46	5	92300	115700	113.54						
	18000	68.28*	5	87000	109100	138.13						
3	18000	60.25	5	82500	103400	166.33						
	18000	52.24	5	77500	97200	207.44						
	18000	46.48*	5	73600	92400	246.72						
	18000	40.06	5	68900	86400	317.25						
	18000	32.55	5	62500	78500	420.24						
	18000	27.60	5	57800	72600	536.06						
FA157	10000	43.94*	4	87800	109900	88.28						
	11000	35.75*	4	79300	99300	133.15						
FAF157	17000	28.60*	4	60800	76300	187.84						
	15000	25.43	4	61500	77100	228.07						
F157	18000	22.16	4	51800	65100	284.97						
	17000	19.77	4	50900	63900	339.41						
FF157	18000	16.85	5	44900	56400	445.30						
	17000	13.96	5	42500	53400	604.64						
	16000	11.92	5	40900	51400	780.55						
2												

m [kg]		CV 132ML	160M	160L	180M	180L	200L
FA157	3 	700	710	740	790	810	860
	2 	690	700	740	790	800	860

FAF157: + 59 kg / F157: + 21 kg / FF157: + 125 kg

13.13 F..CT/CV.. [mm]

42 151 01 01

F27..

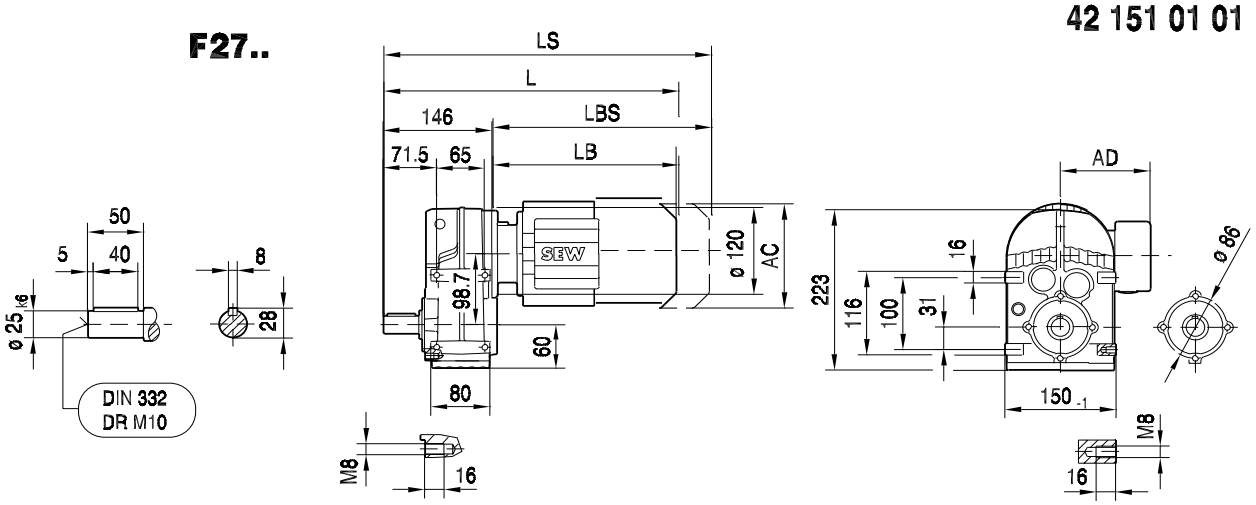

FA27B..

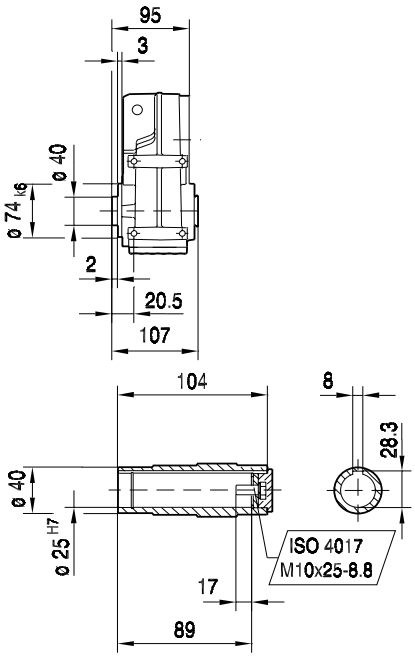

FH27B..
max. CT80..

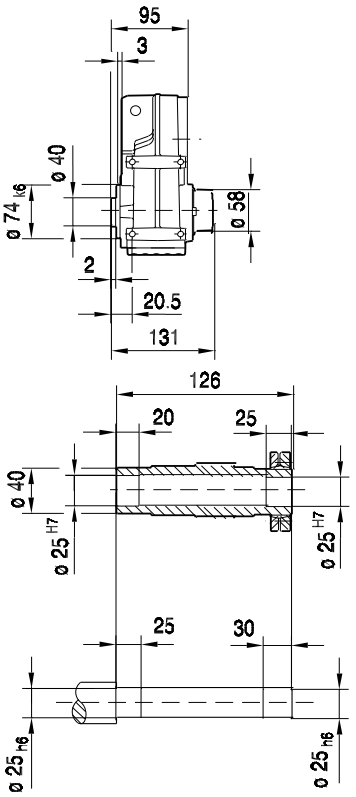

FV27B..

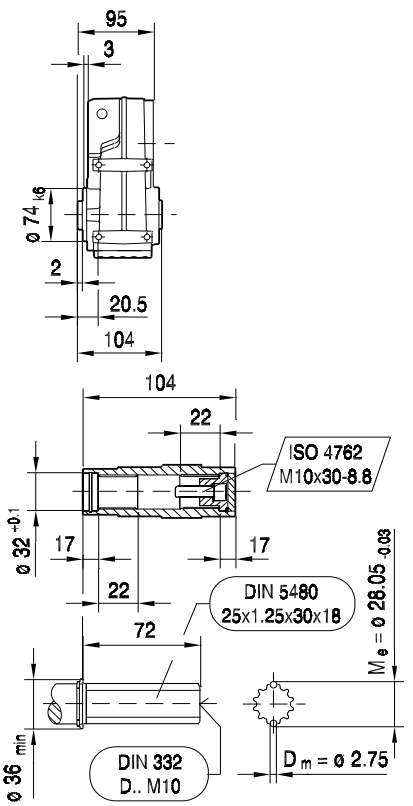

(→ 105)	CT71D	CT80N	CT90L								
AC	145	145	197								
AD	126	126	160								
L	436	486	499								
LS	499	549	584								
LB	290	340	353								
LBS	353	403	438								

42 152 01 01

FF27..

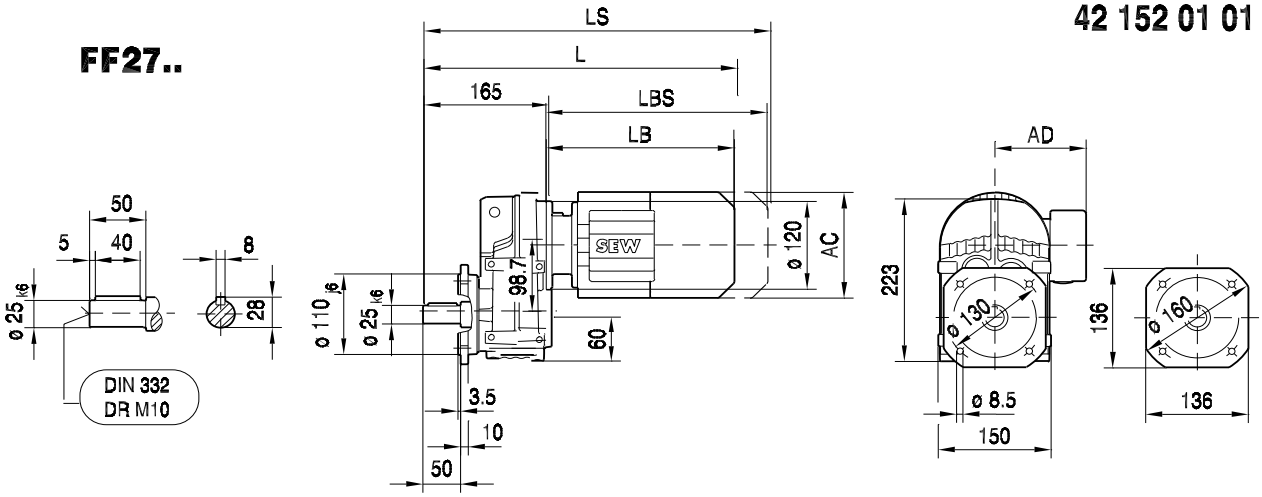

FAF27..

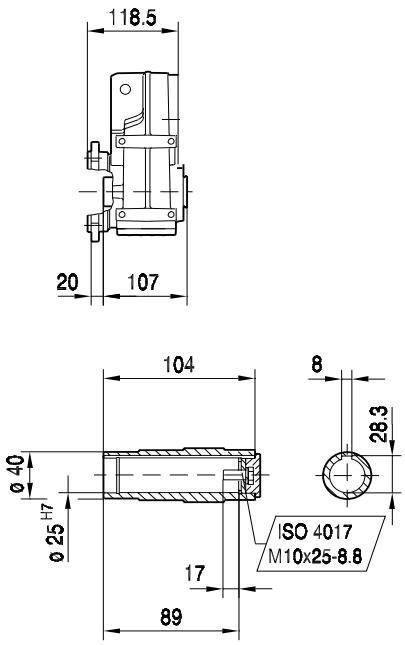

FHF27..

max. CT80..

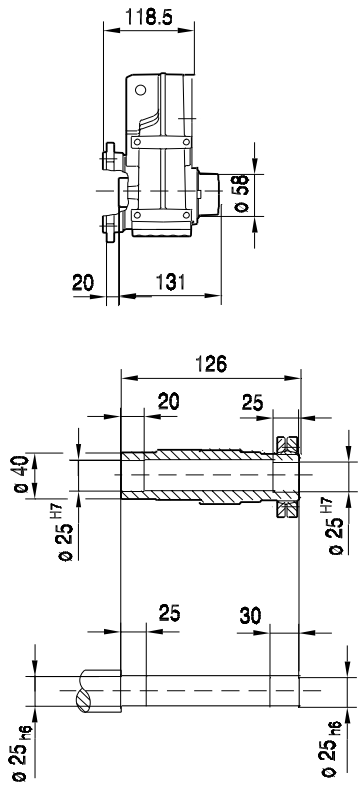

FVF27..

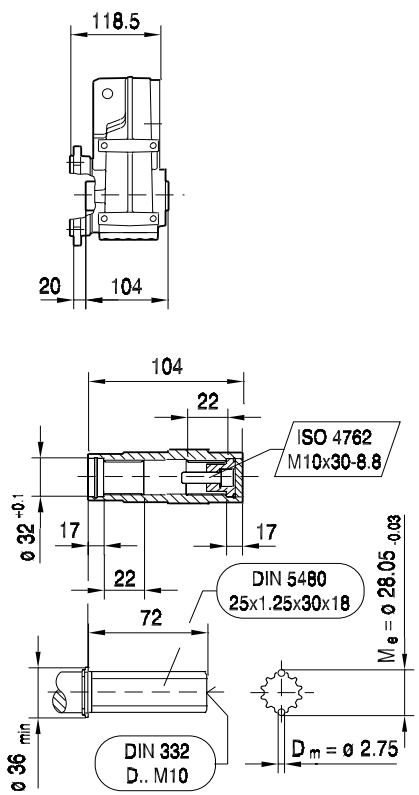

(→ 105)	CT71D	CT80N	CT90L								
AC	145	145	197								
AD	126	126	160								
L	455	505	518								
LS	518	568	603								
LB	290	340	353								
LBS	353	403	438								

FA27..

42 153 01 01

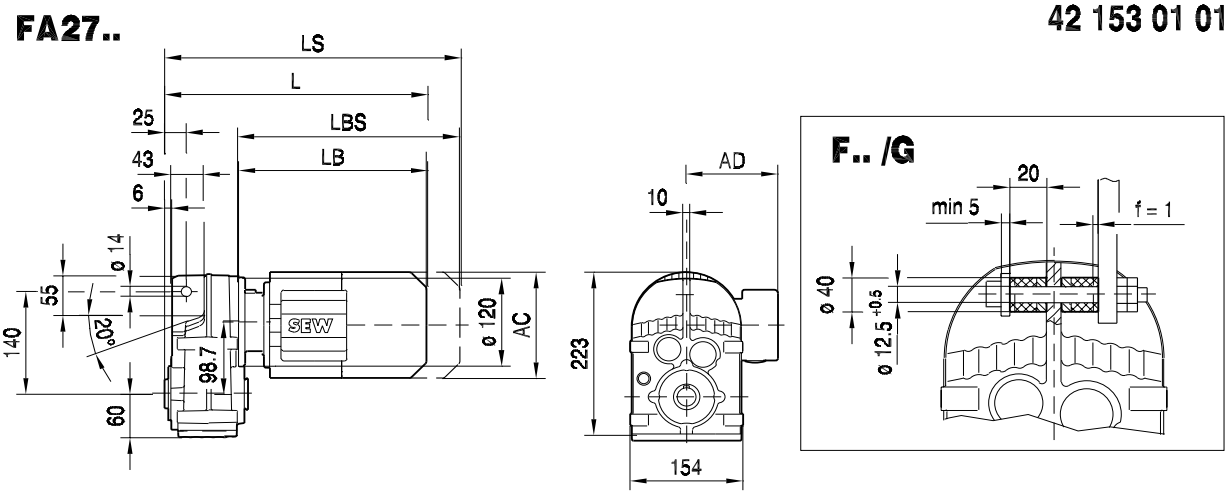

FA27..

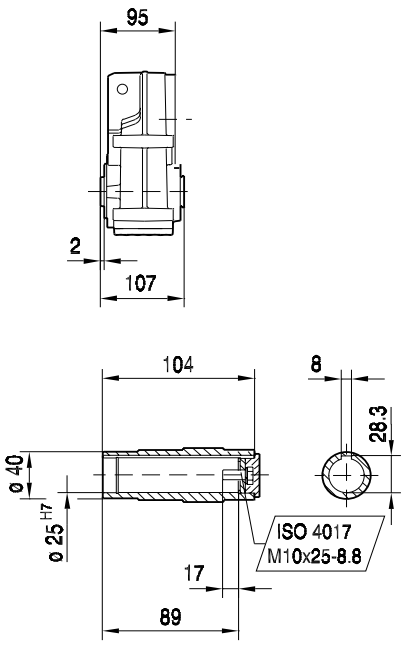

FH27..

max. CT80..

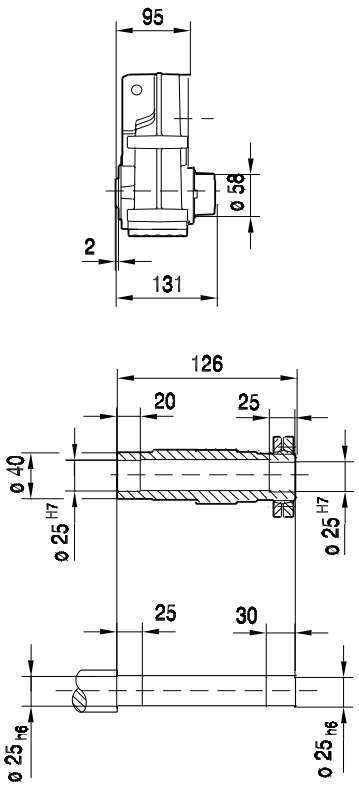

FV27..

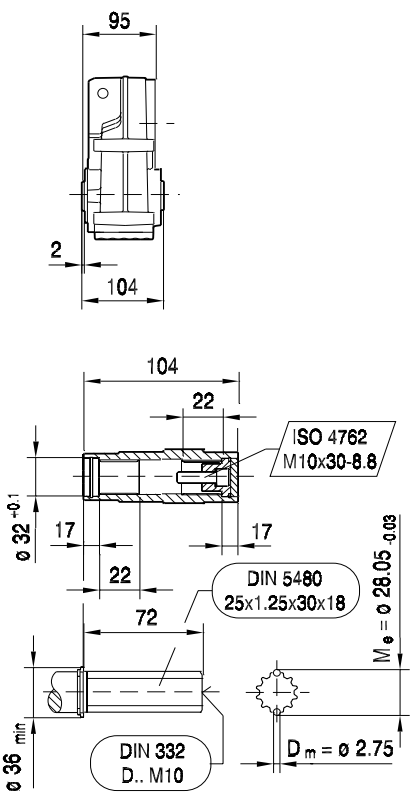

(→ 105)	CT71D	CT80N	CT90L								
AC	145	145	197								
AD	126	126	160								
L	385	435	448								
LS	448	498	533								
LB	290	340	353								
LBS	353	403	438								

FAZ27..

42 020 00 04

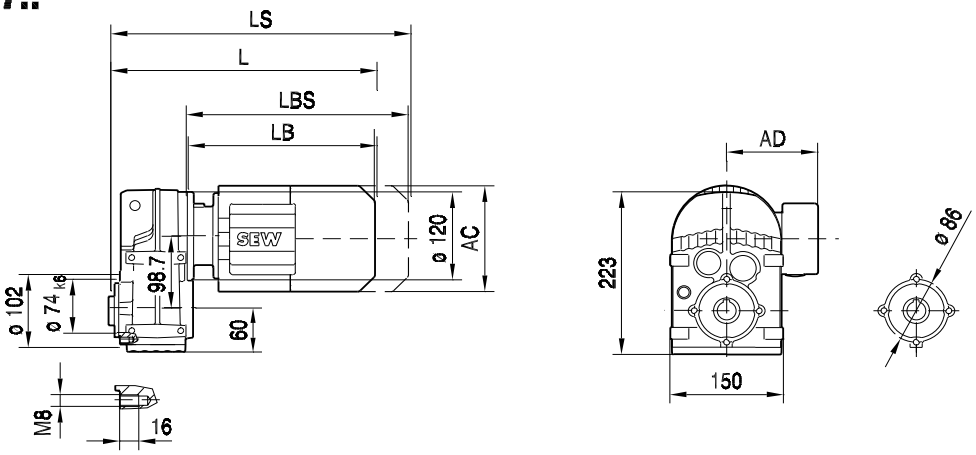

FAZ27..

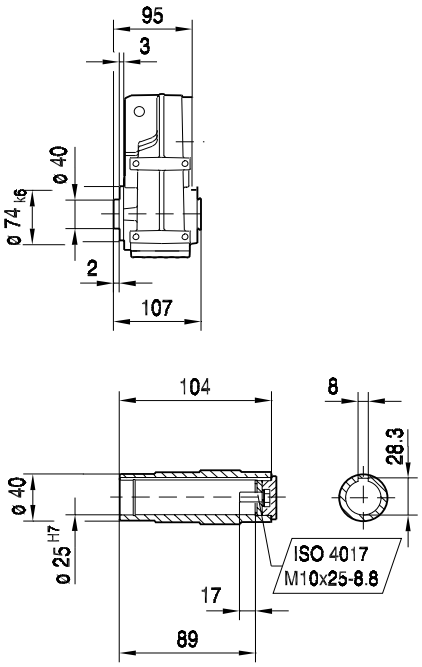

FHZ27..

max. CT80..

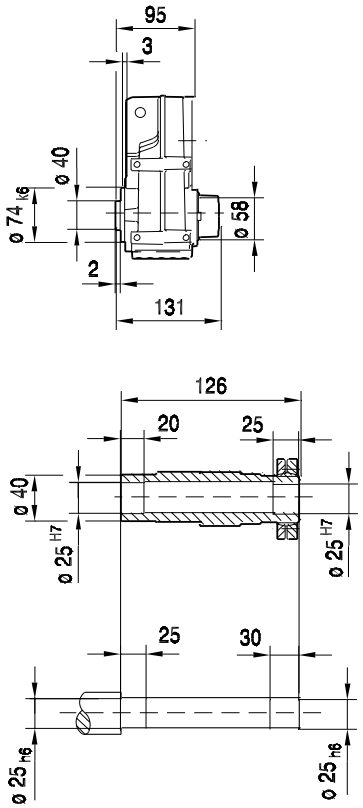

FVZ27..

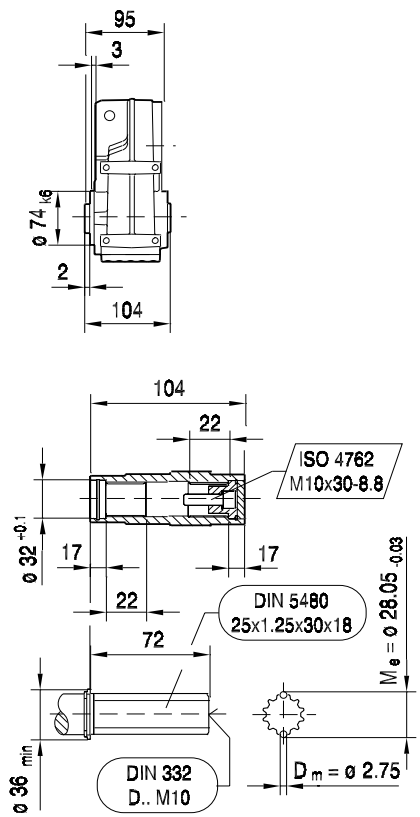

(→ 105)	CT71D	CT80N	CT90L								
AC	145	145	197								
AD	126	126	160								
L	385	435	448								
LS	448	498	533								
LB	290	340	353								
LBS	353	403	438								

42 103 01 00

F37..

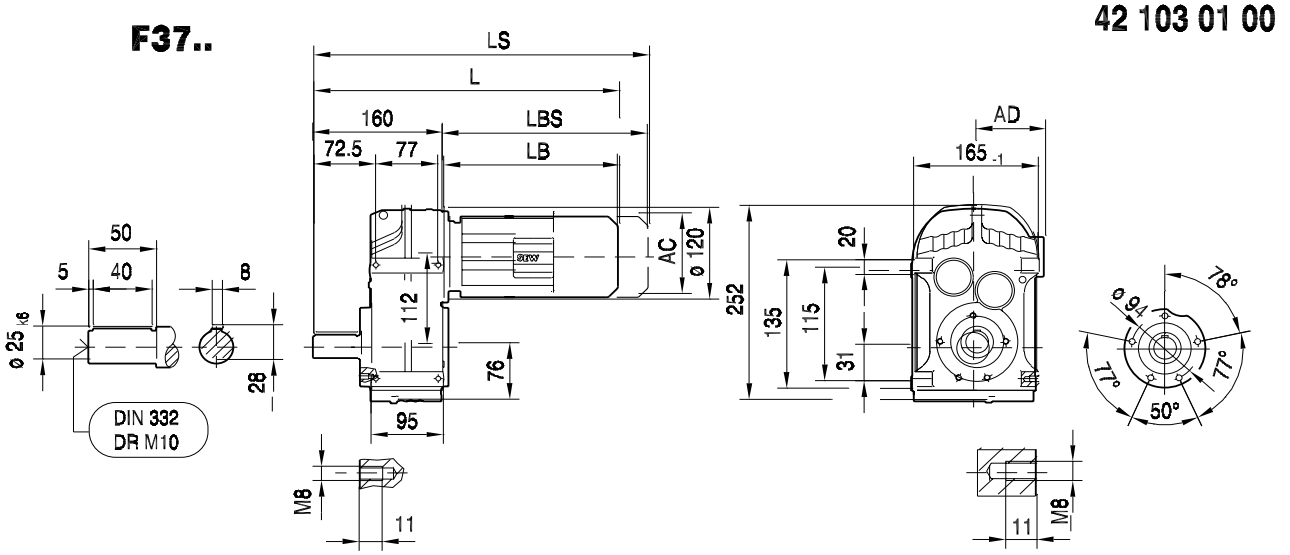

FA37B..

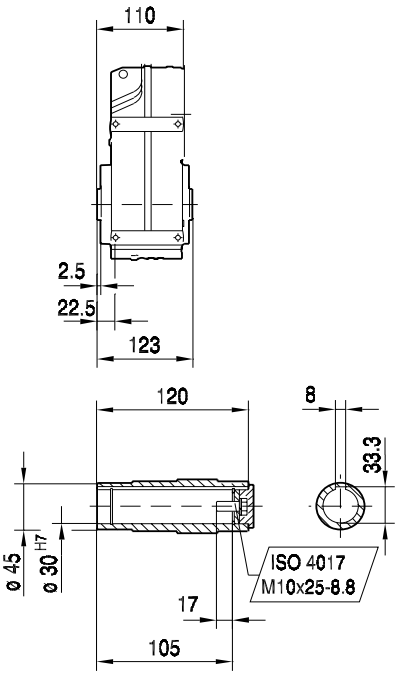

FH37B..

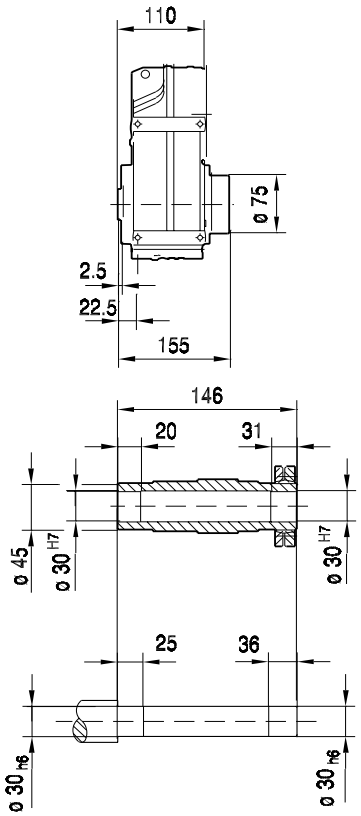

FV37B..

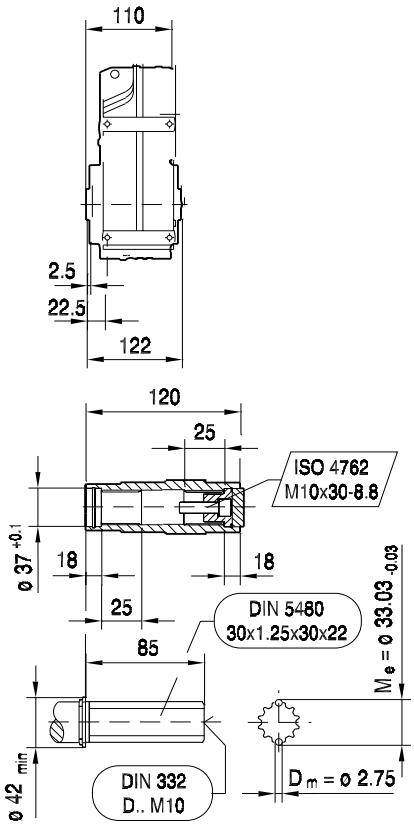

(→ 105)	CT71D	CT80N	CT90L								
AC	145	145	197								
AD	126	126	160								
L	450	500	513								
LS	513	563	598								
LB	290	340	353								
LBS	353	403	438								

FF37..

42 113 01 00

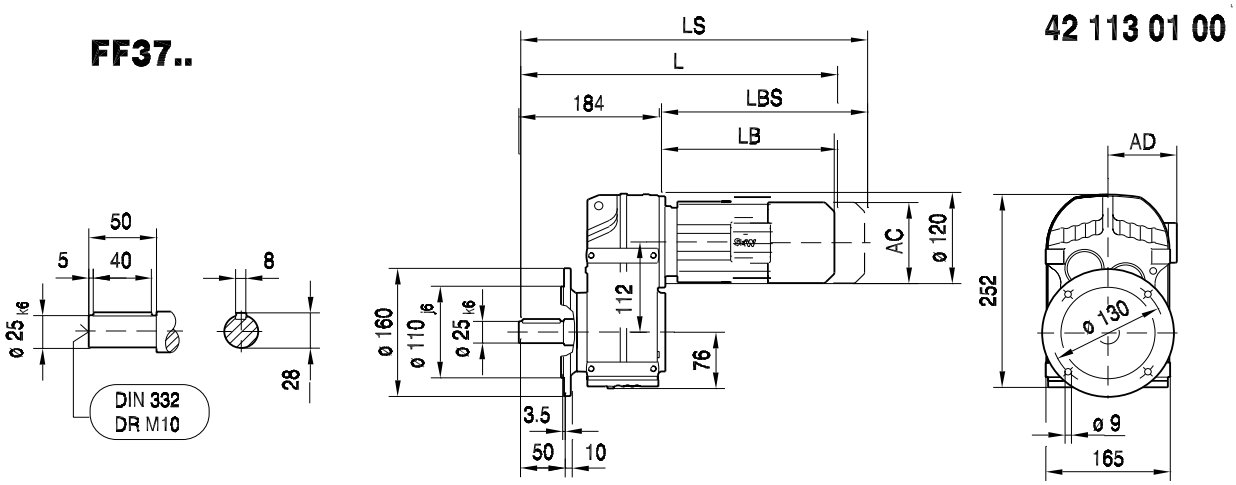

FAF37..

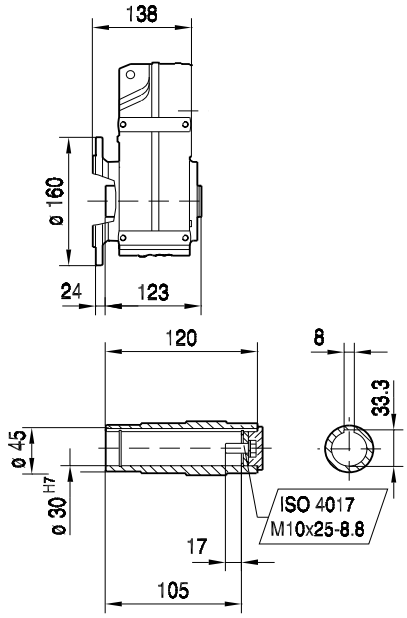

FHF37..

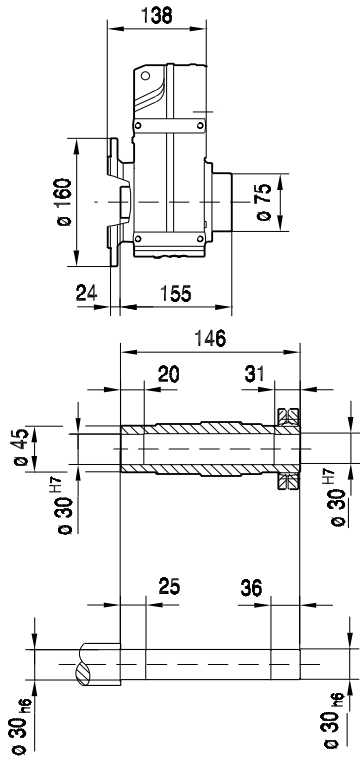

FVF37..

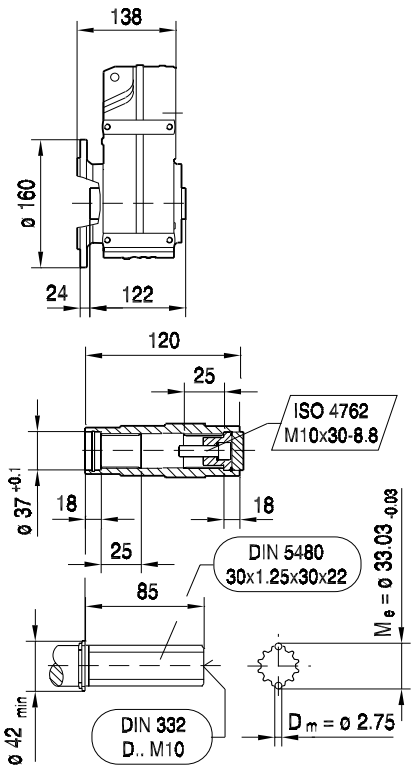

(→ 105)	CT71D	CT80N	CT90L								
AC	145	145	197								
AD	126	126	160								
L	474	524	537								
LS	537	587	622								
LB	290	340	353								
LBS	353	403	438								

FA37..

42 123 01 00

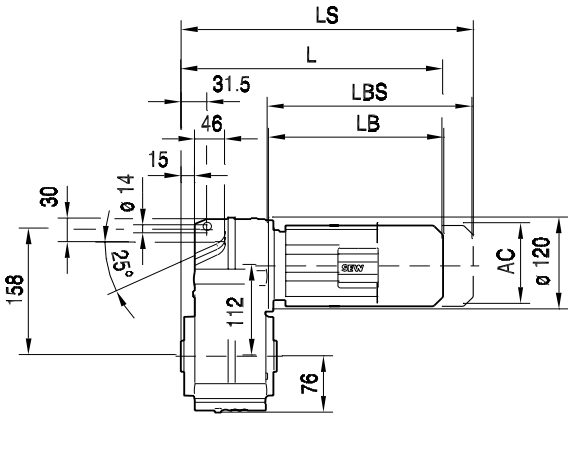

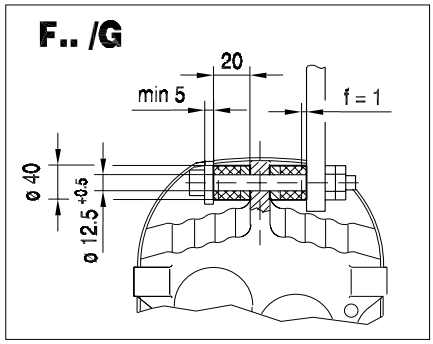

FA37..

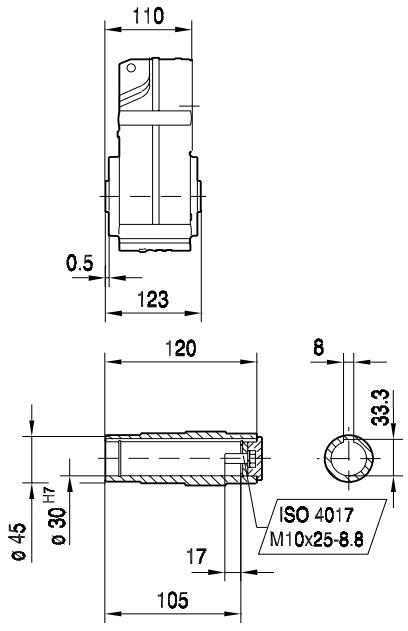

FH37..

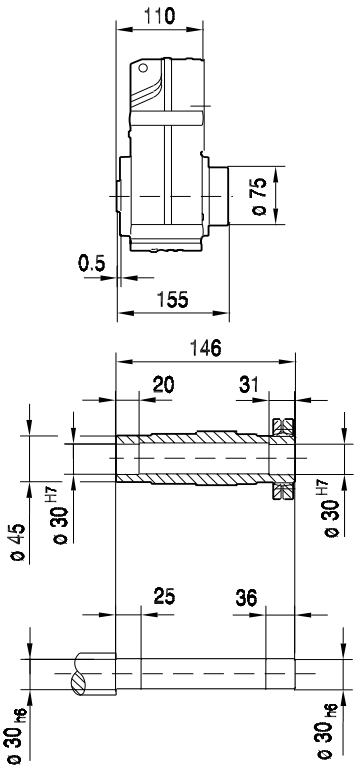

FV37..

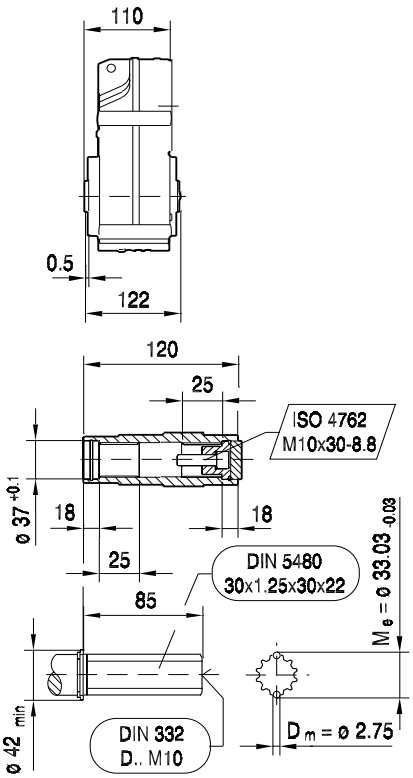

(→ 105)	CT71D	CT80N	CT90L								
AC	145	145	197								
AD	126	126	160								
L	400	450	463								
LS	463	513	548								
LB	290	340	353								
LBS	353	403	438								

42 021 00 04

FAZ37..

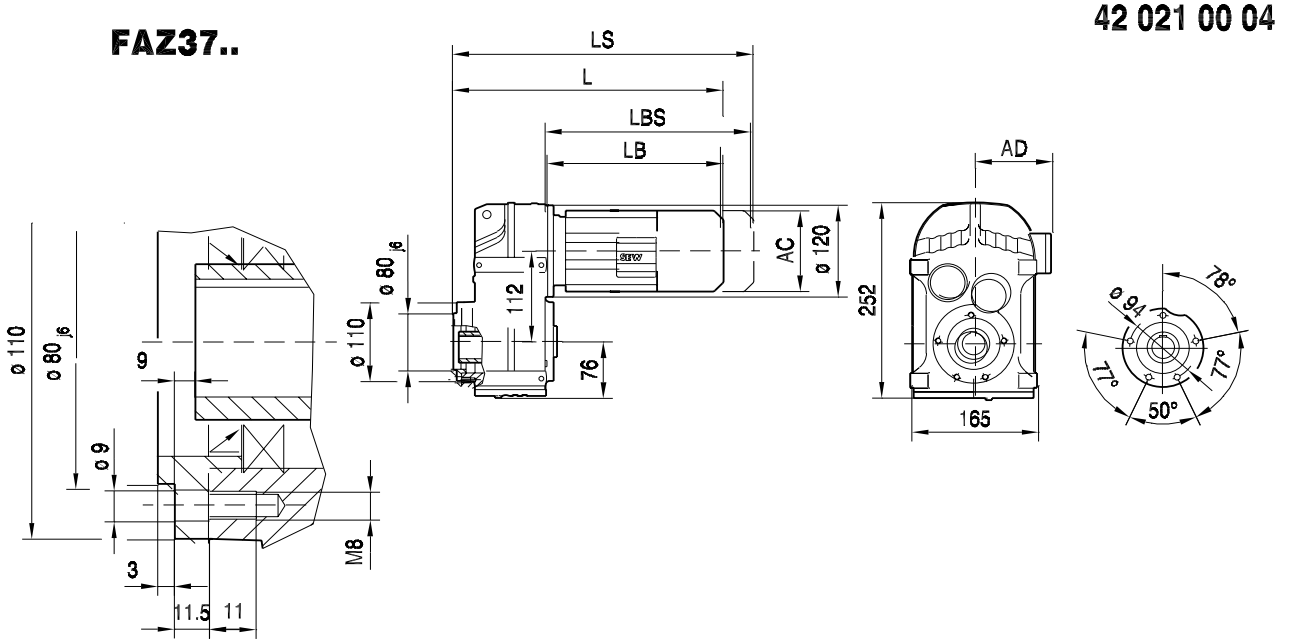

FAZ37..

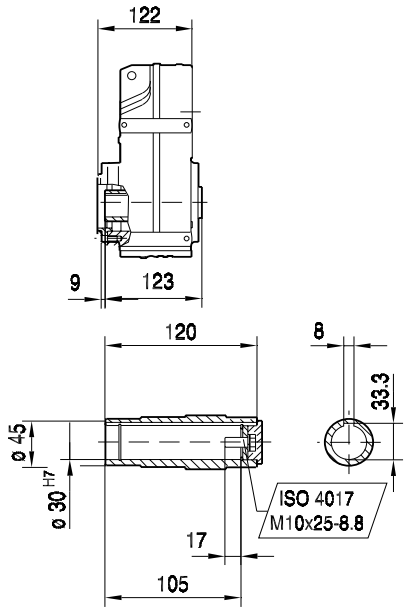

FHZ37..

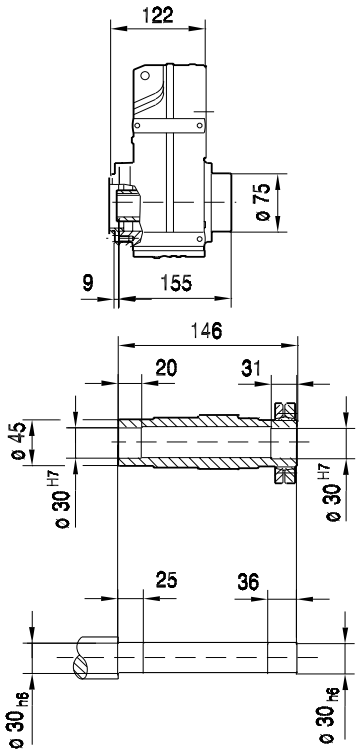

FVZ37..

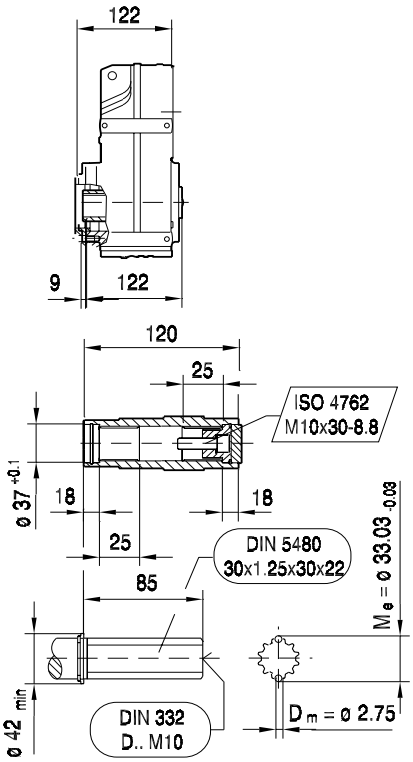

(→ 105)	CT71D	CT80N	CT90L								
AC	145	145	197								
AD	126	126	160								
L	412	462	475								
LS	475	525	560								
LB	290	340	353								
LBS	353	403	438								

FT37..

42 031 00 04

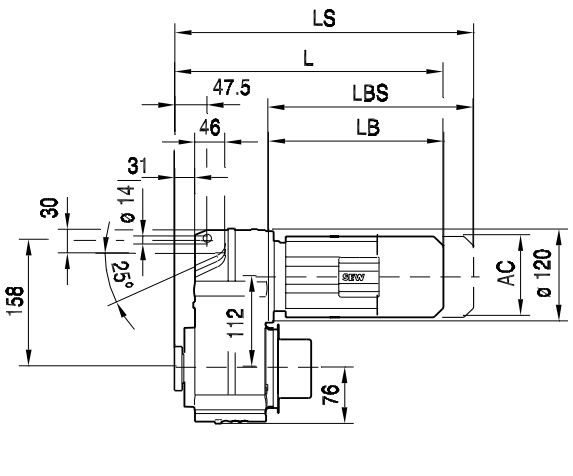

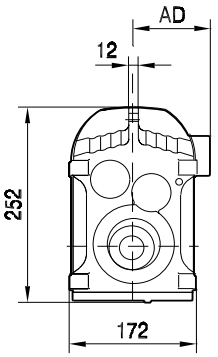

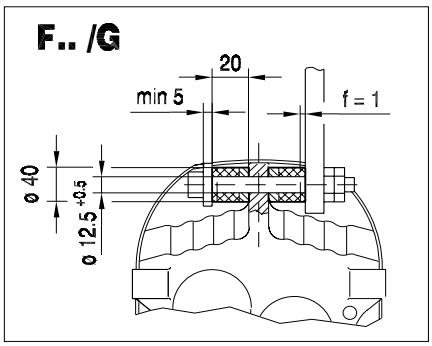

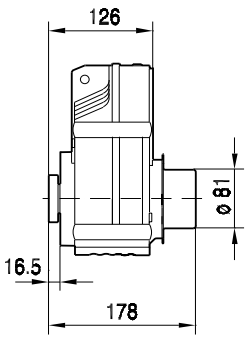

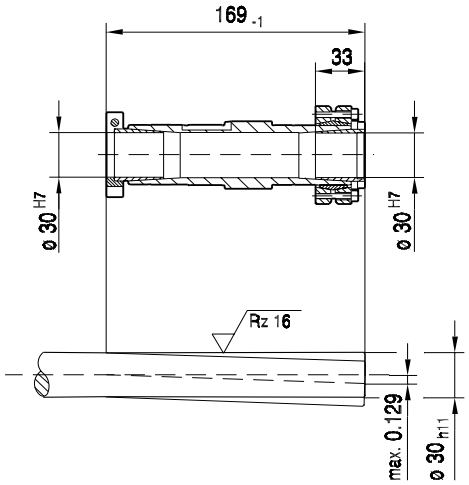

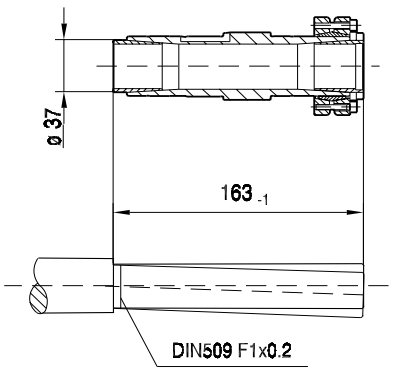

(→ 105)	CT71D	CT80N									
AC	145	145									
AD	126	126									
L	416	466									
LS	479	529									
LB	290	340									
LBS	353	403									

42 104 01 00

F47..

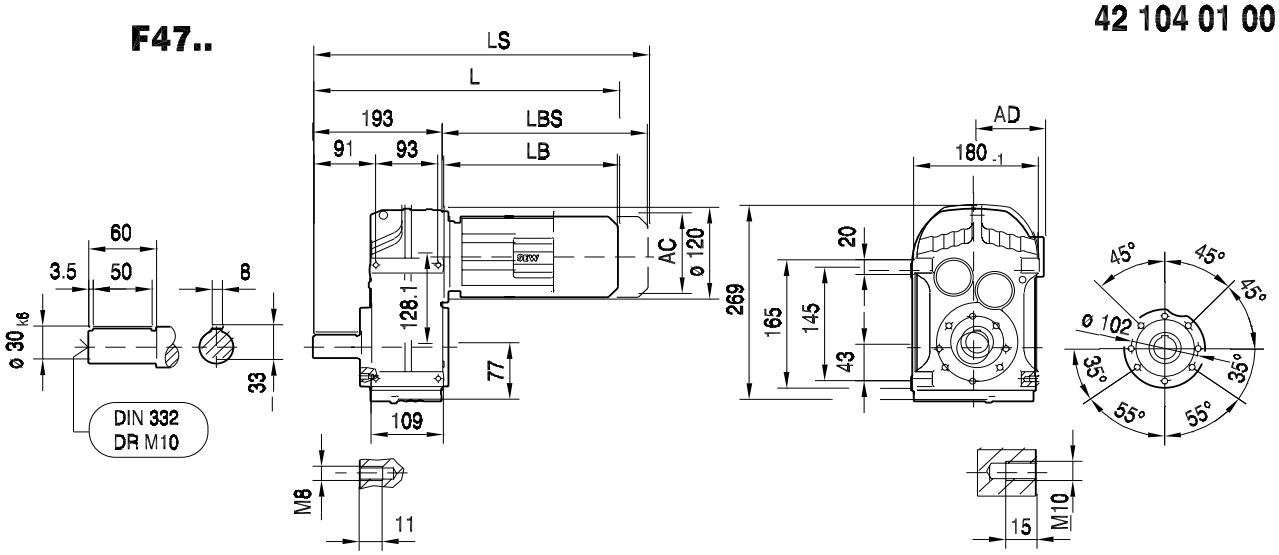

FA47B..

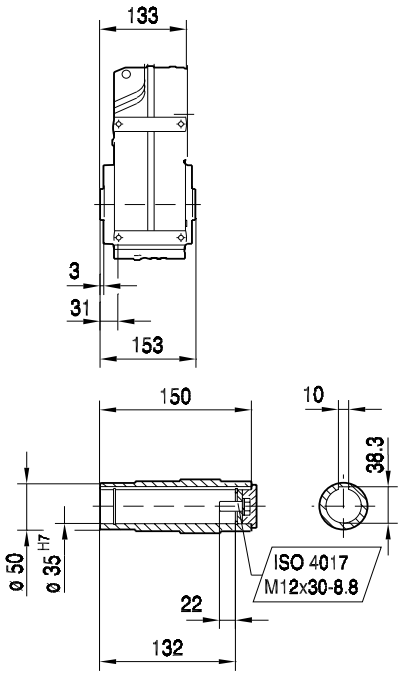

FH47B..

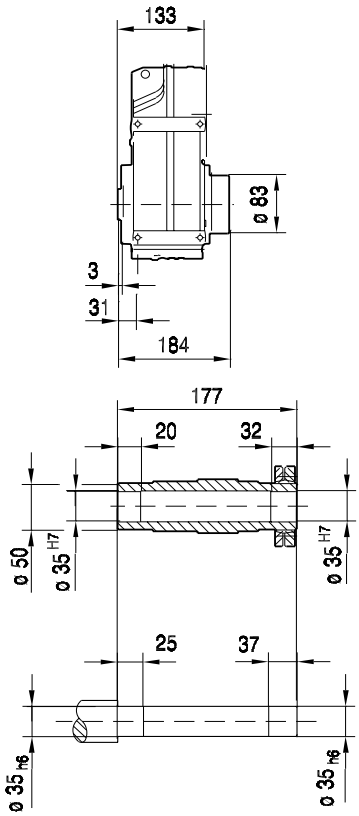

FV47B..

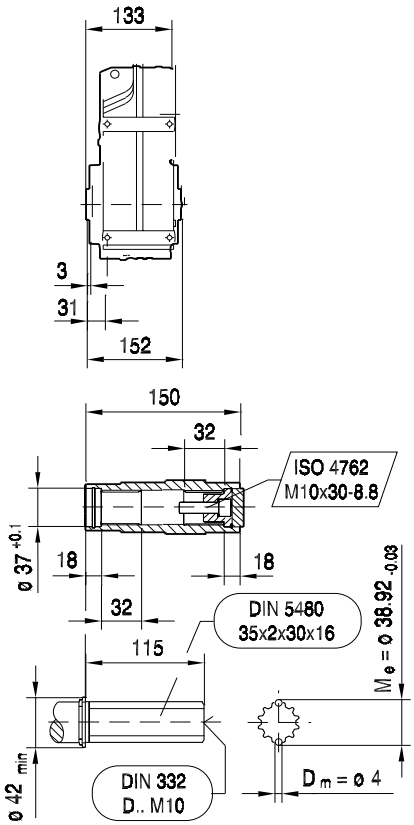

(→ 105)	CT71D	CT80N	CT90L								
AC	145	145	197								
AD	126	126	160								
L	483	533	546								
LS	546	596	631								
LB	290	340	353								
LBS	353	403	438								

FF47..

42 114 01 00

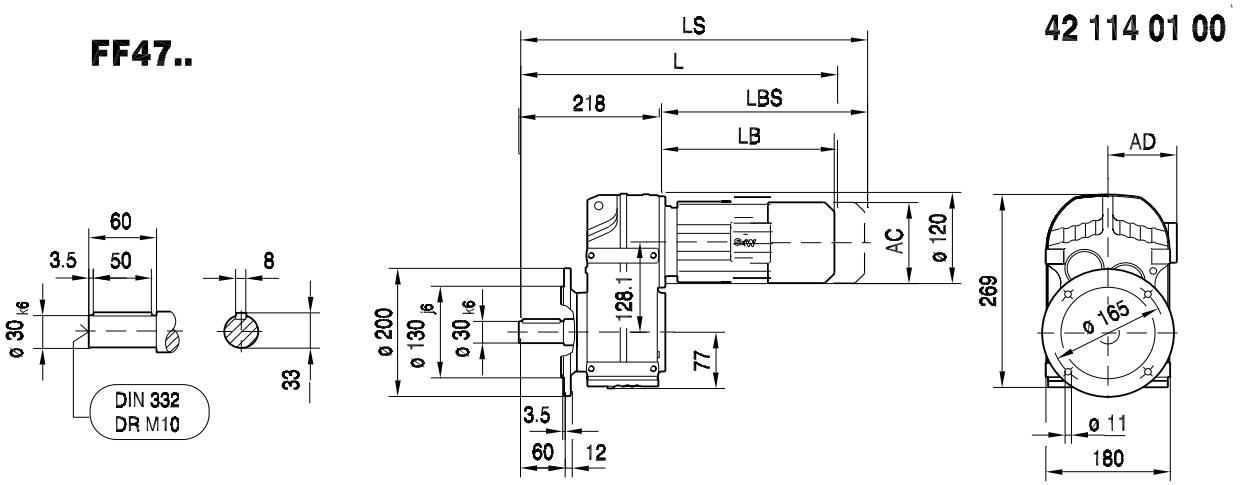

FAF47..

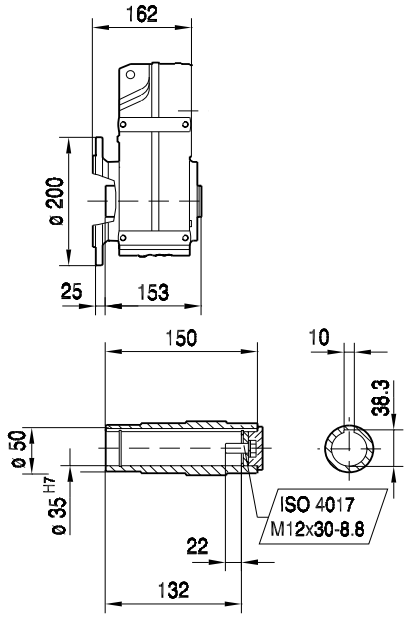

FHF47..

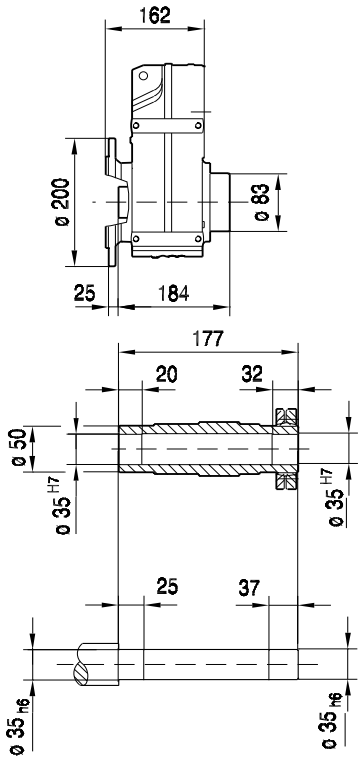

FVF47..

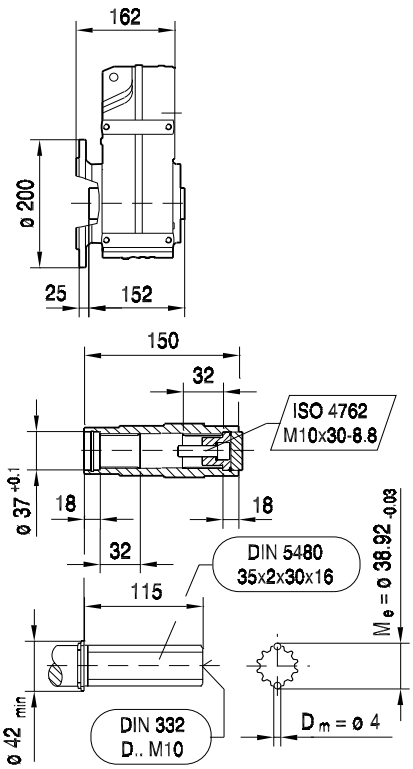

(→ 105)	CT71D	CT80N	CT90L								
AC	145	145	197								
AD	126	126	160								
L	508	558	571								
LS	571	621	656								
LB	290	340	353								
LBS	353	403	438								

FA47..

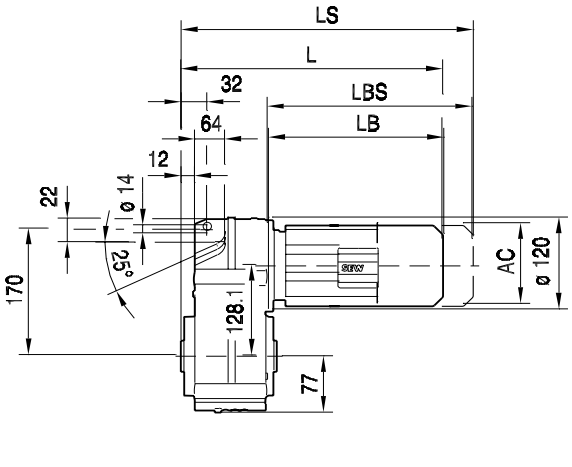

42 124 01 00

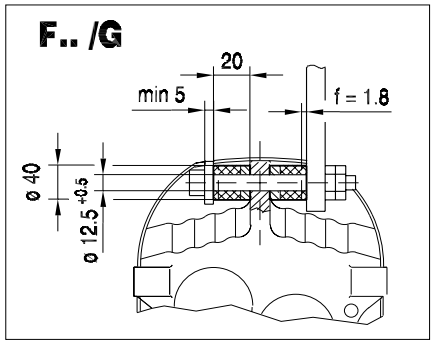

FA47..

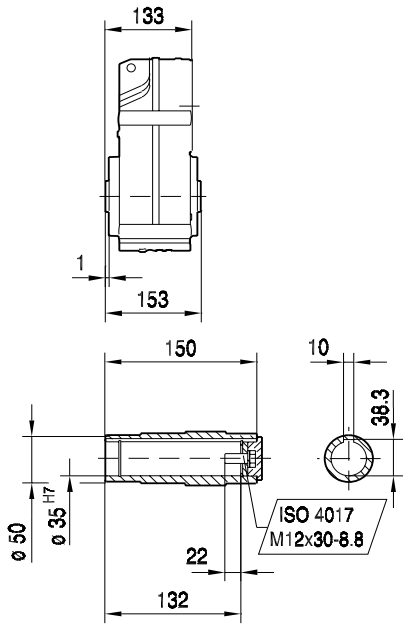

FH47..

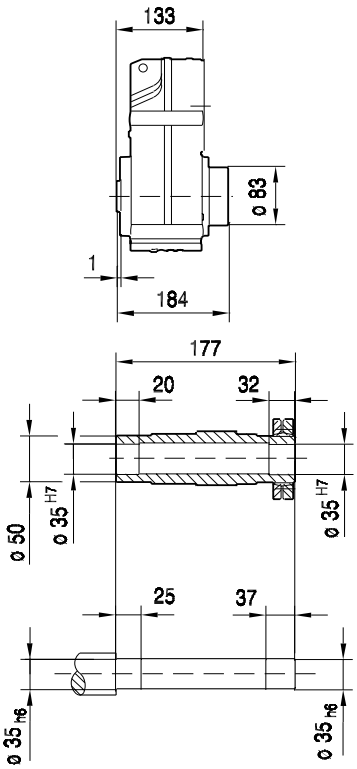

FV47..

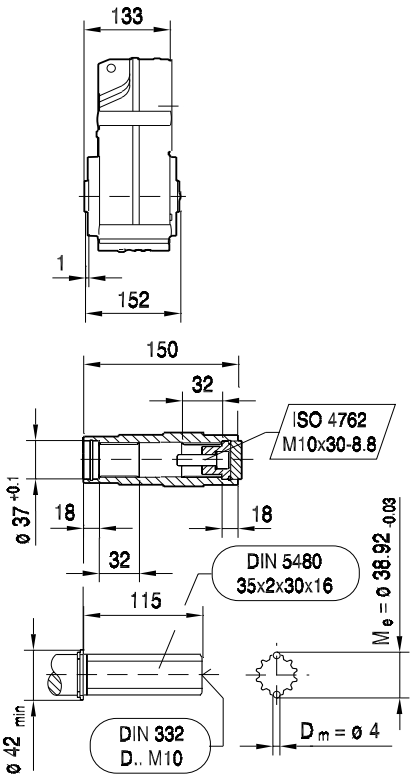

(→ 105)	CT71D	CT80N	CT90L								
AC	145	145	197								
AD	126	126	160								
L	423	473	486								
LS	486	536	571								
LB	290	340	353								
LBS	353	403	438								

42 022 00 04

FAZ47..

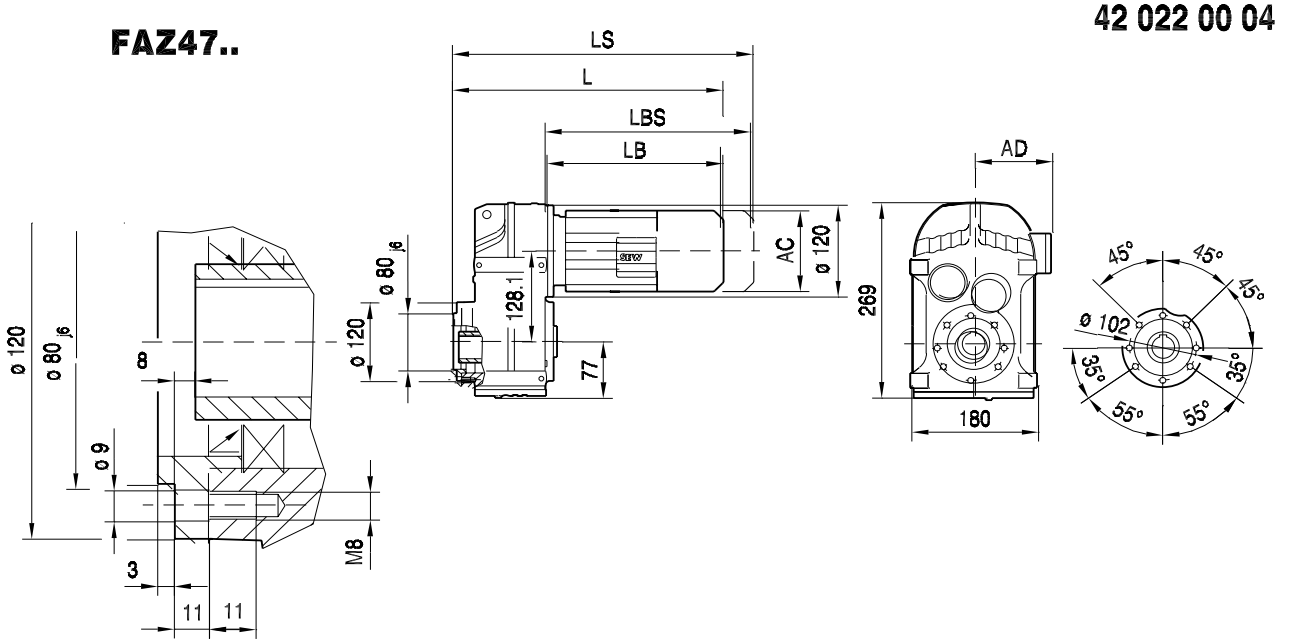

FAZ47..

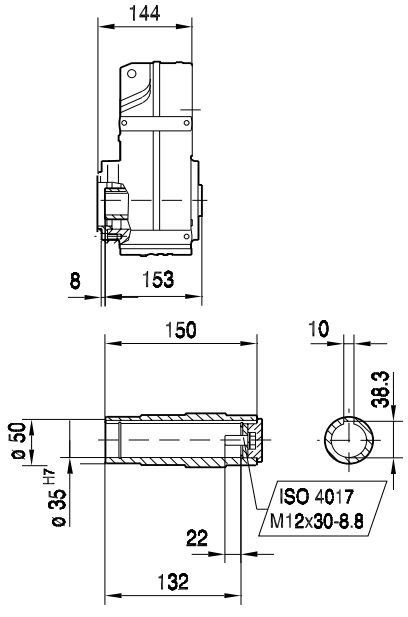

FHZ47..

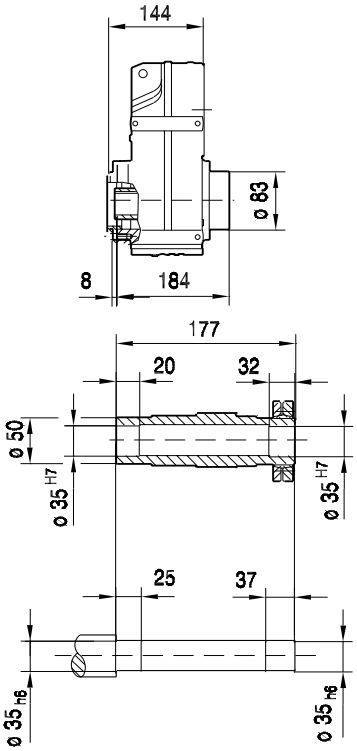

FVZ47..

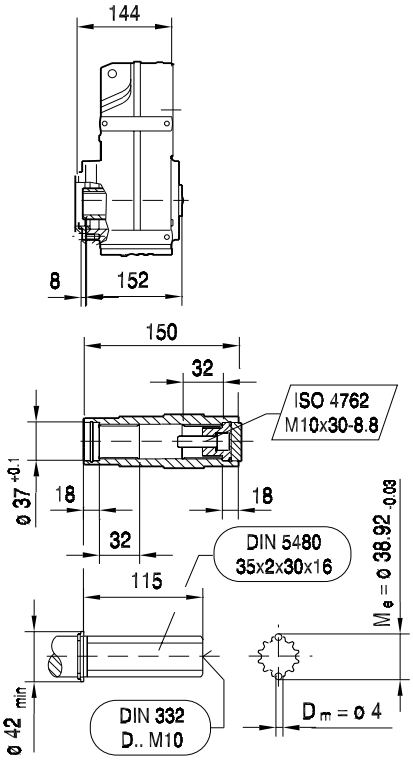

(→ 105)	CT71D	CT80N	CT90L								
AC	145	145	197								
AD	126	126	160								
L	434	484	497								
LS	497	547	582								
LB	290	340	353								
LBS	353	403	438								



FT47..

42 032 00 04

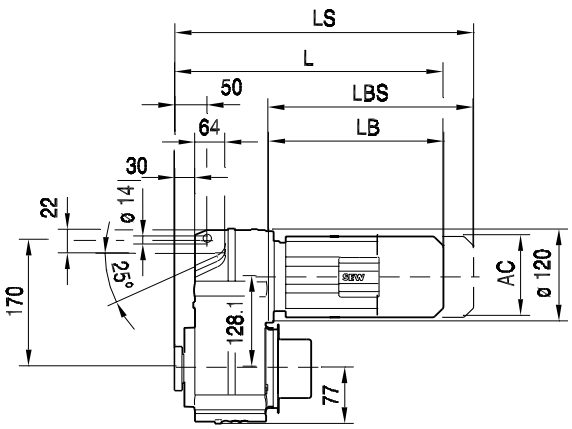

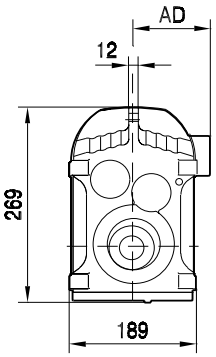

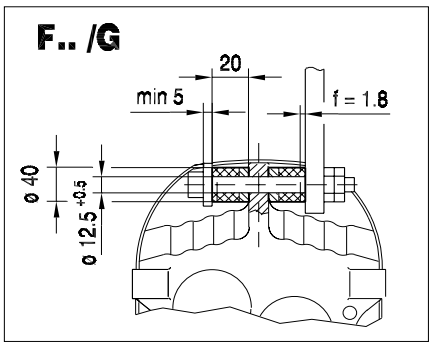

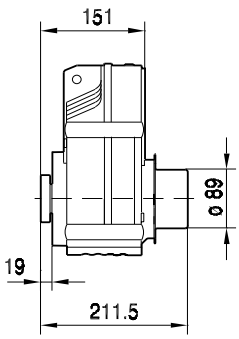

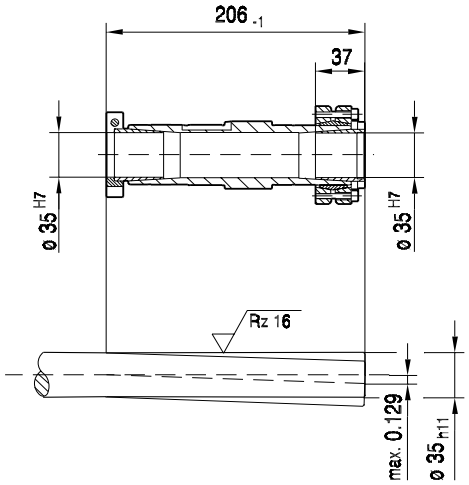

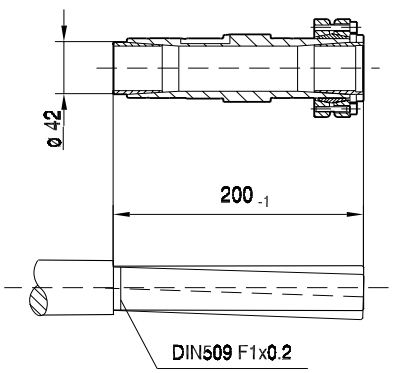

(→ 105)	CT71D	CT80N									
AC	145	145									
AD	126	126									
L	441	491									
LS	504	554									
LB	290	340									
LBS	353	403									

42 105 01 00

F57..

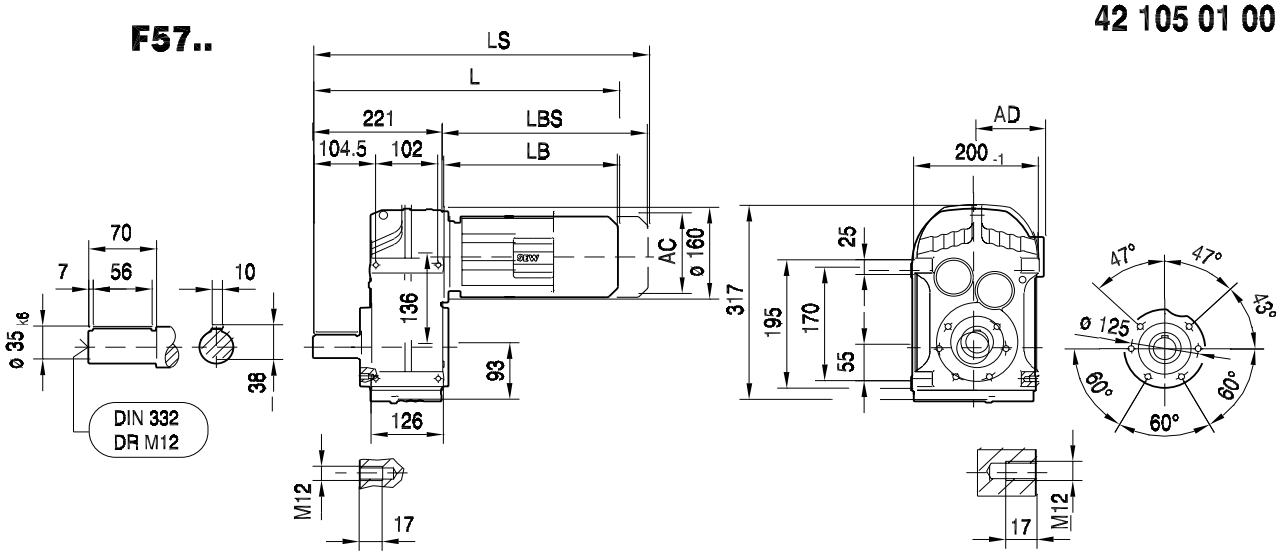

FA57B..

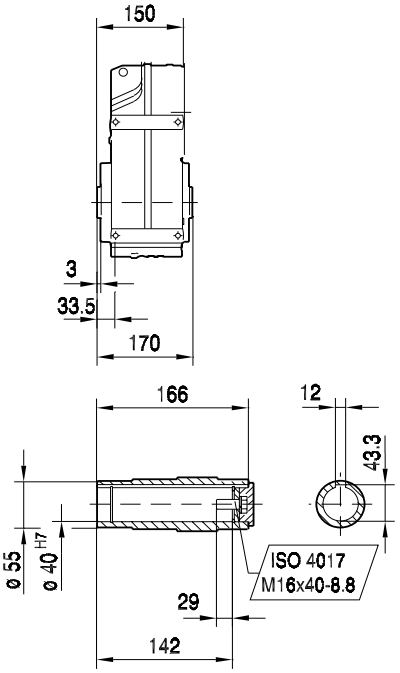

FH57B..

max. CV132S..

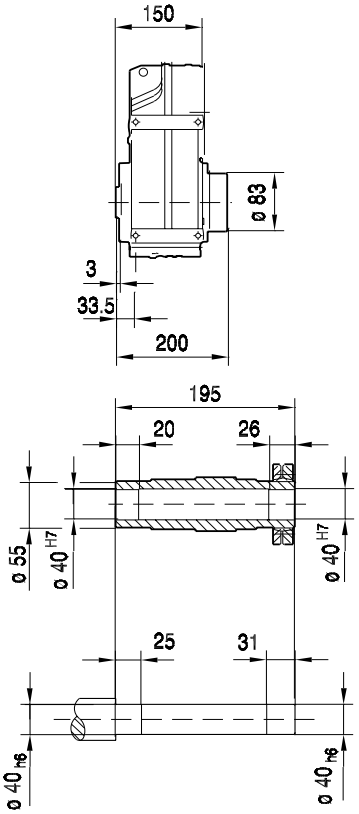

FV57B..

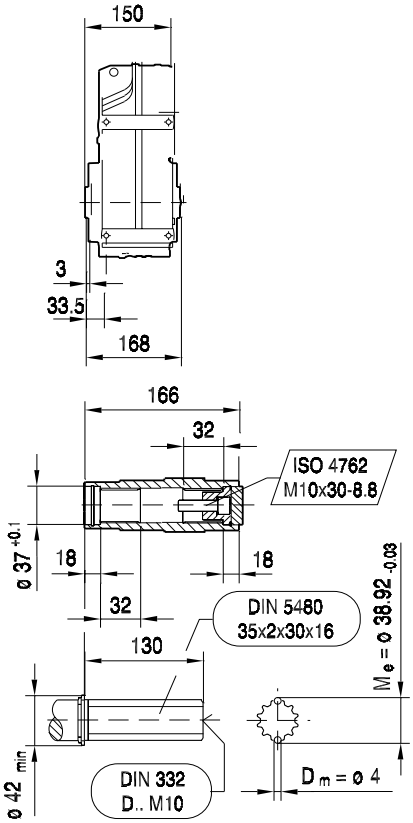

(→ 105)	CT71D	CT80N	CT90L	CV100M	CV100L						
AC	145	145	197	197	197						
AD	126	126	160	165	165						
L	504	554	567	617	647						
LS	567	617	652	702	732						
LB	283	333	346	396	426						
LBS	346	396	431	481	511						

FF57..

42 115 01 00

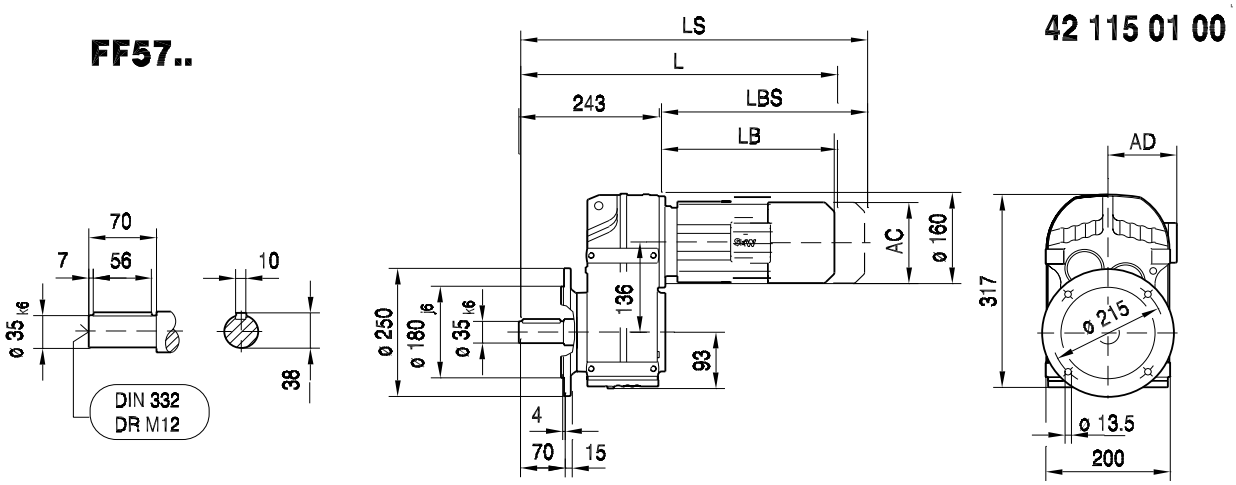

FAF57..

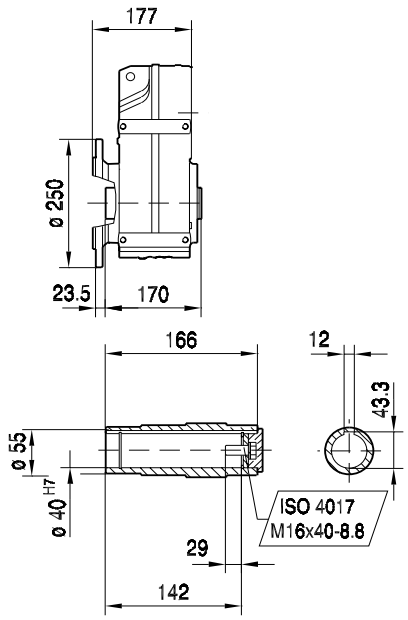

FHF57..
max. CV132S..

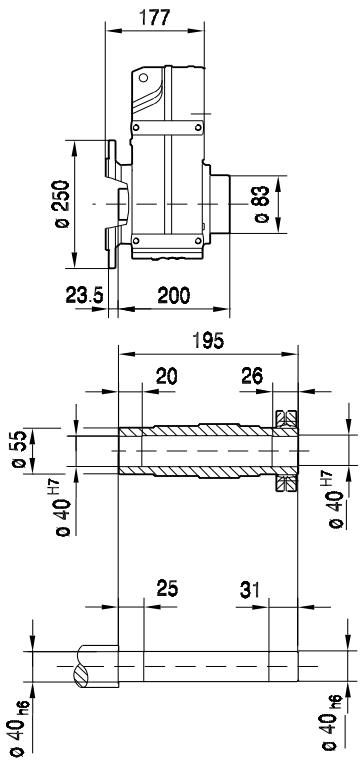

FVF57..

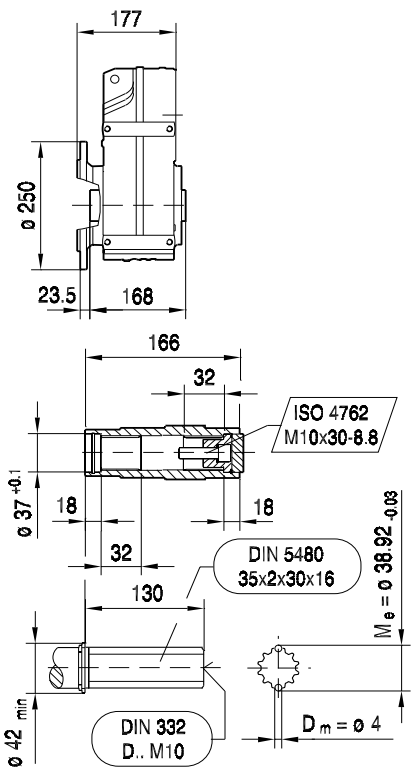

(→ 105)	CT71D	CT80N	CT90L	CV100M	CV100L						
AC	145	145	197	197	197						
AD	126	126	160	165	165						
L	526	576	589	639	669						
LS	589	639	674	724	754						
LB	283	333	346	396	426						
LBS	346	396	431	481	511						

FA57..

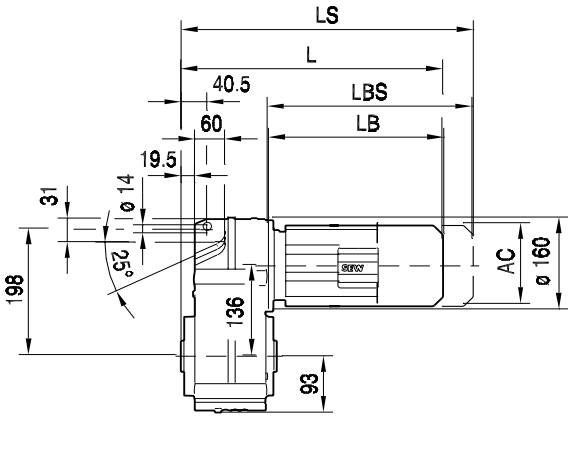

42 125 01 00

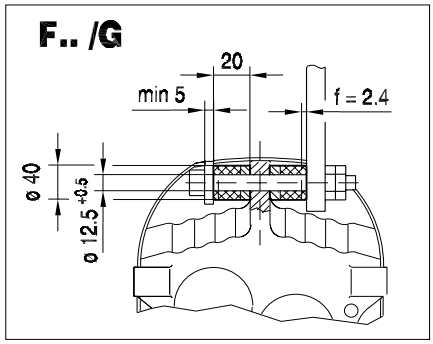

FA57..

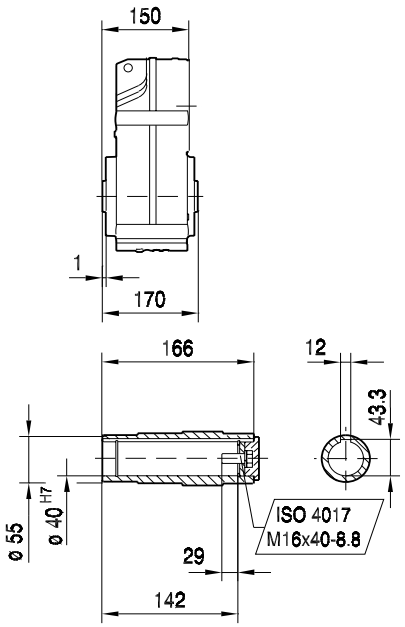

FH57..

max. CV132S..

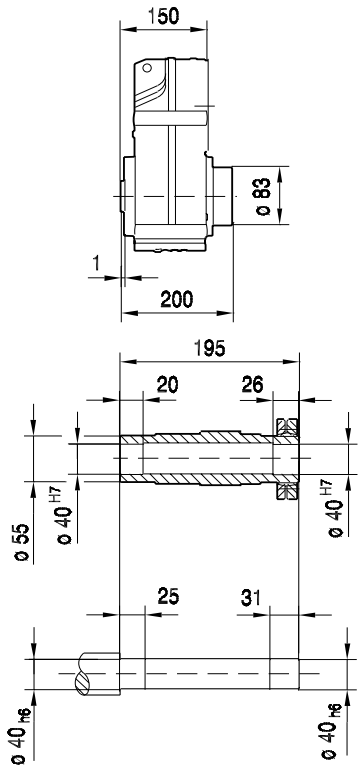

FV57..

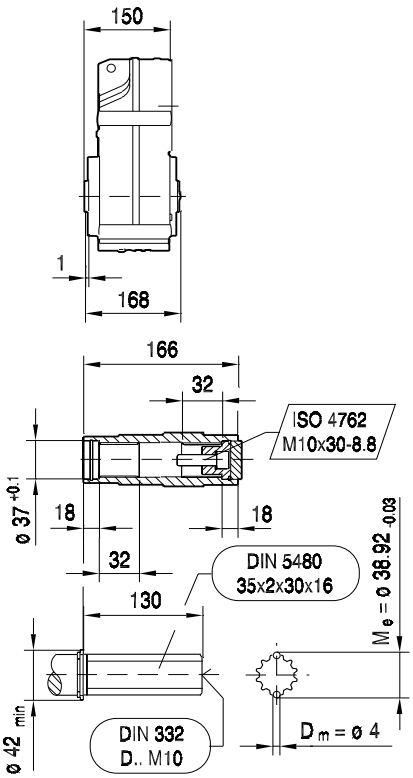

(→ 105)	CT71D	CT80N	CT90L	CV100M	CV100L						
AC	145	145	197	197	197						
AD	126	126	160	165	165						
L	433	483	496	546	576						
LS	496	546	581	631	661						
LB	283	333	346	396	426						
LBS	346	396	431	481	511						

42 023 00 04

FAZ57..

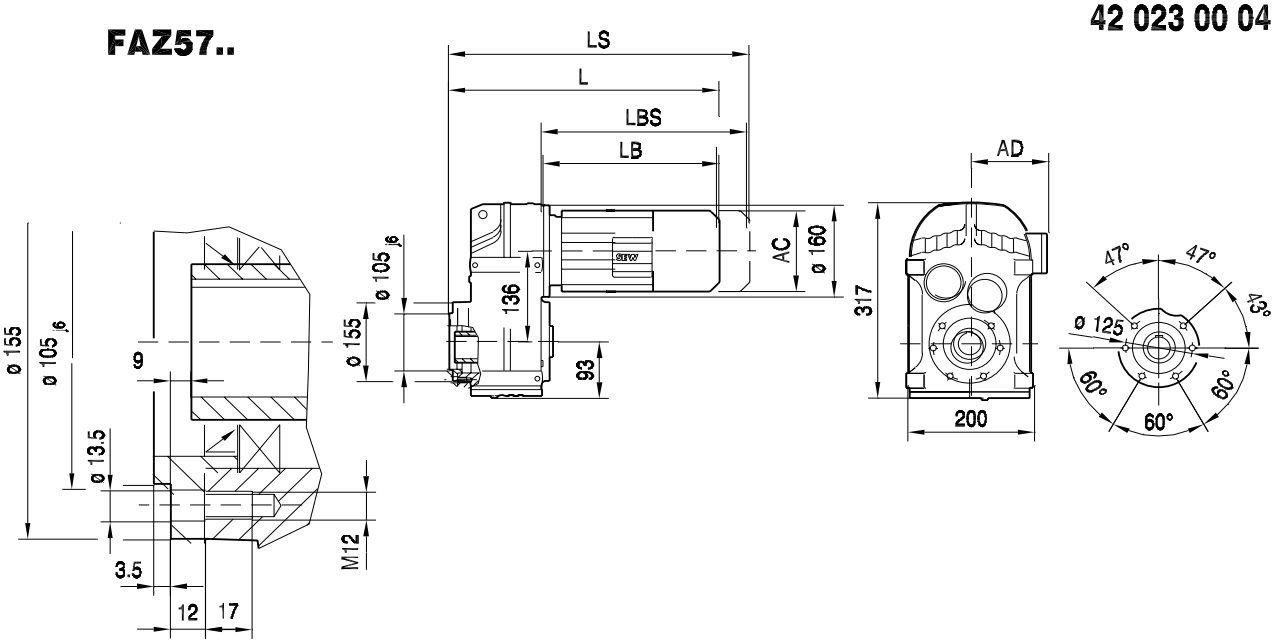

FAZ57..

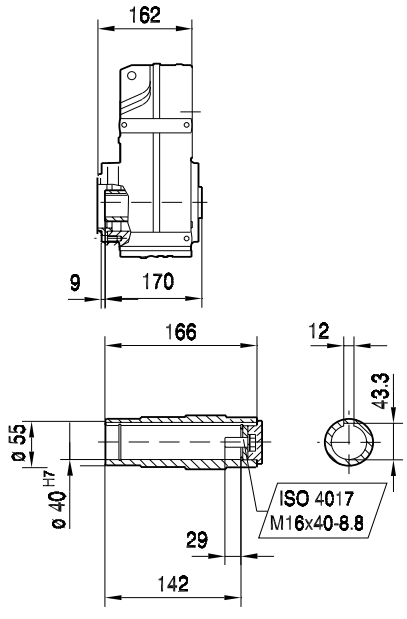

FHZ57..
max. CV132S..

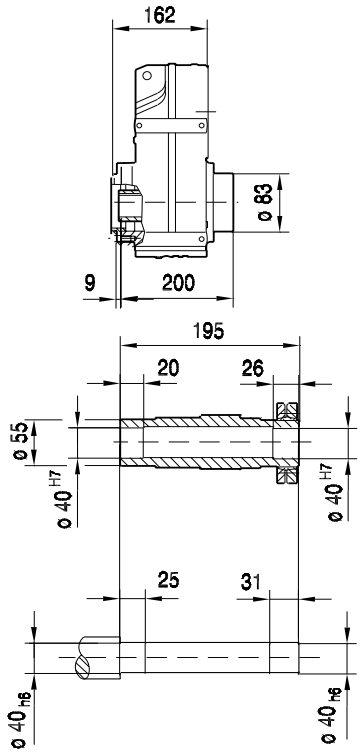

FVZ57..

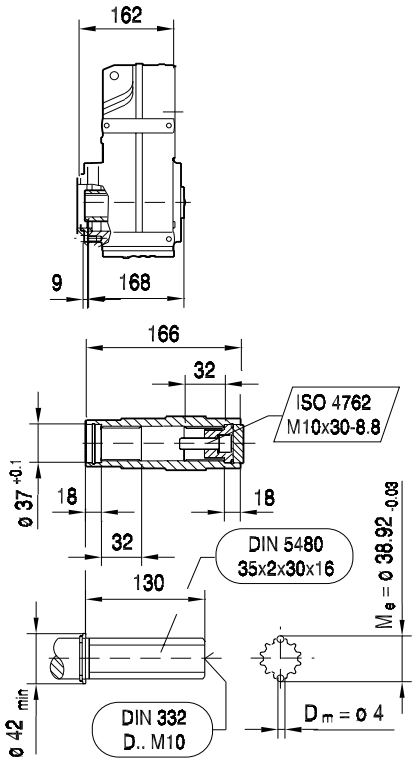

(→ 105)	CT71D	CT80N	CT90L	CV100M	CV100L						
AC	145	145	197	197	197						
AD	126	126	160	165	165						
L	445	495	508	558	588						
LS	508	558	593	643	673						
LB	283	333	346	396	426						
LBS	346	396	431	481	511						

FT57..

42 033 00 04

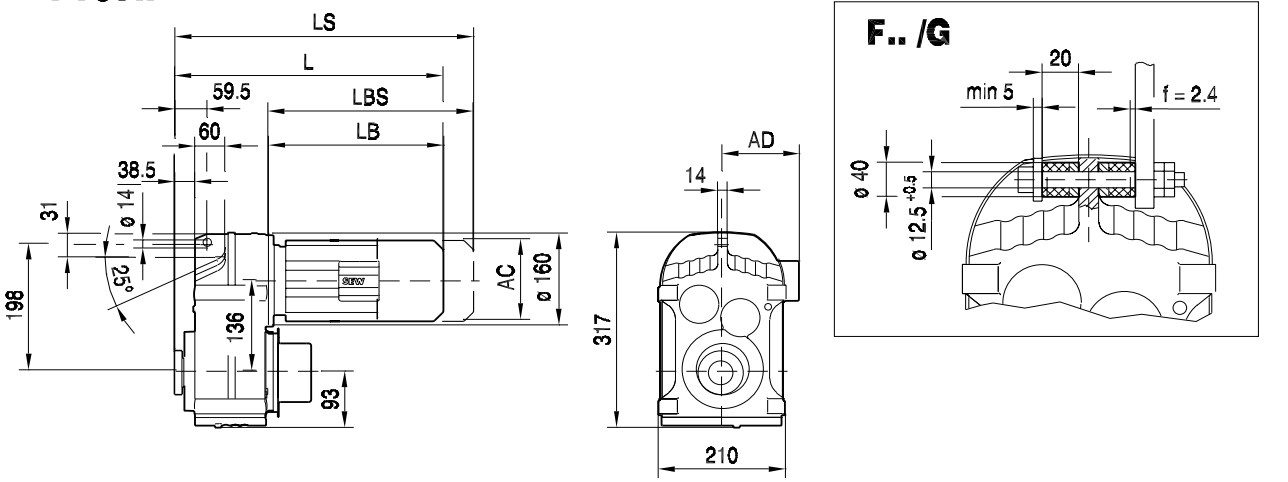

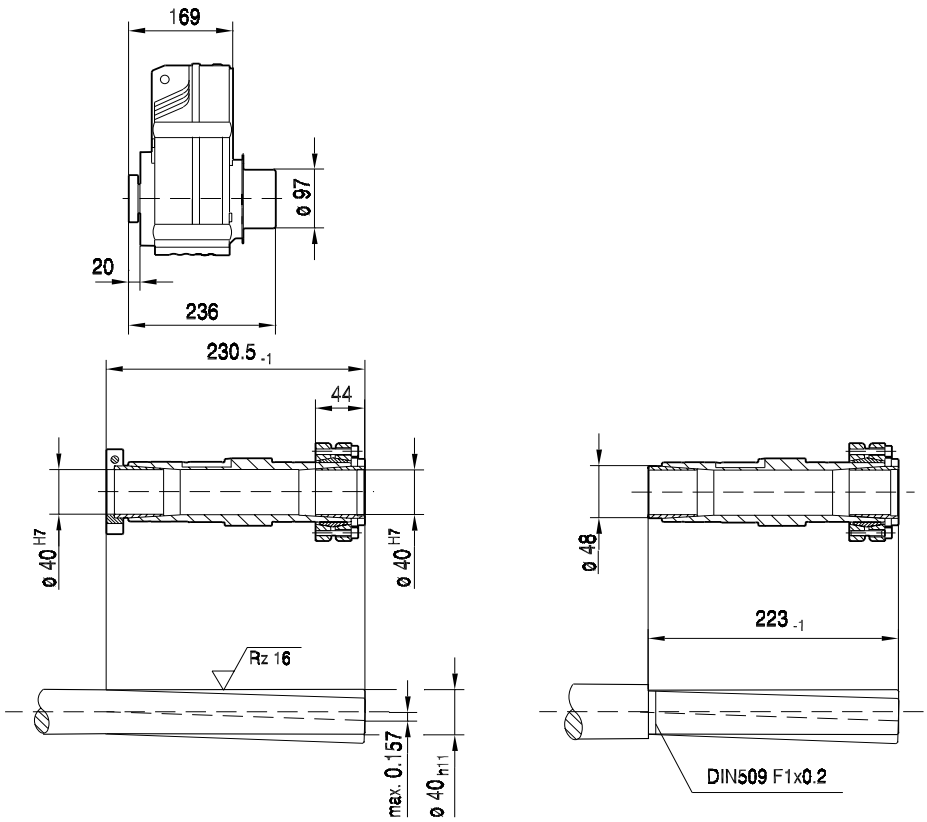

(→ 105)	CT71D	CT80N	CT90L								
AC	145	145	197								
AD	126	126	160								
L	452	502	515								
LS	515	565	600								
LB	283	333	346								
LBS	346	396	431								

42 106 01 00

F67..

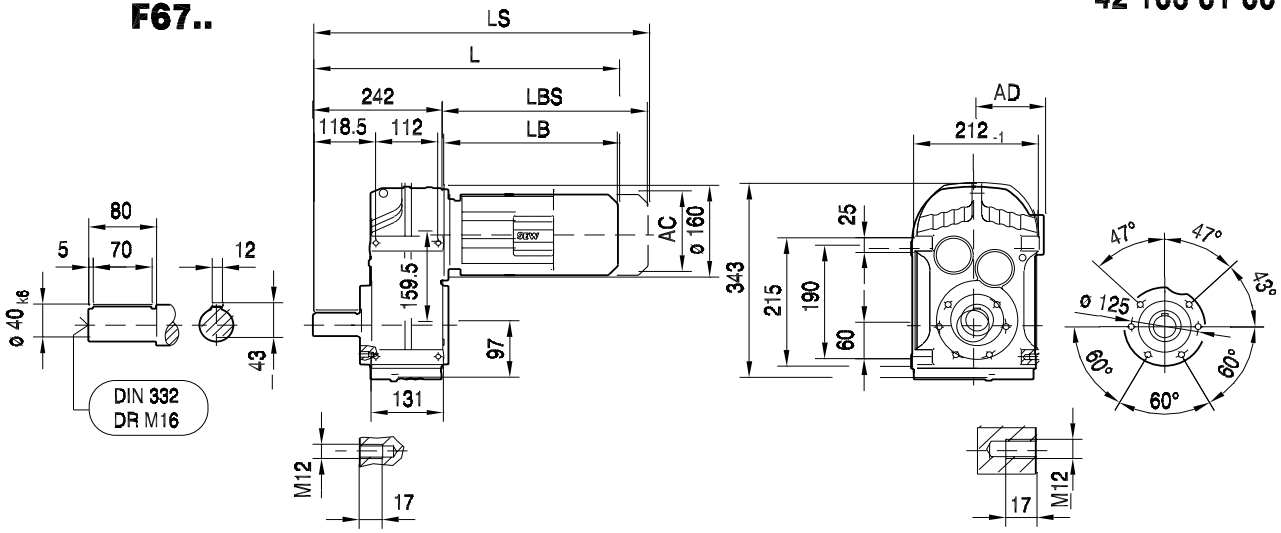

FA67B..

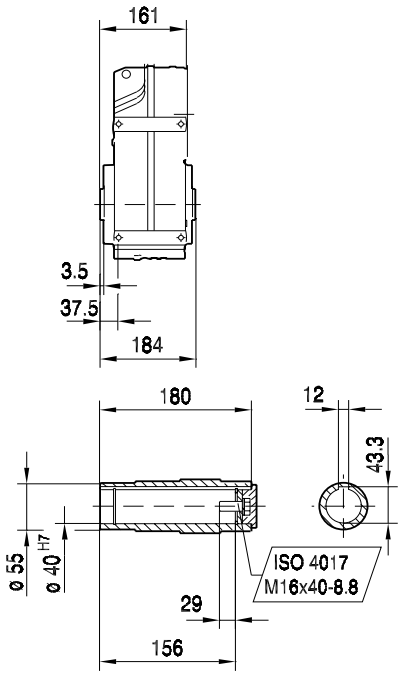

FH67B..
max. CV132S..

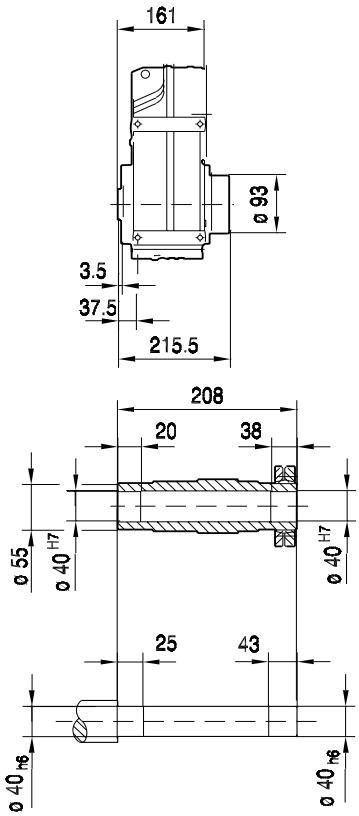

FV67B..

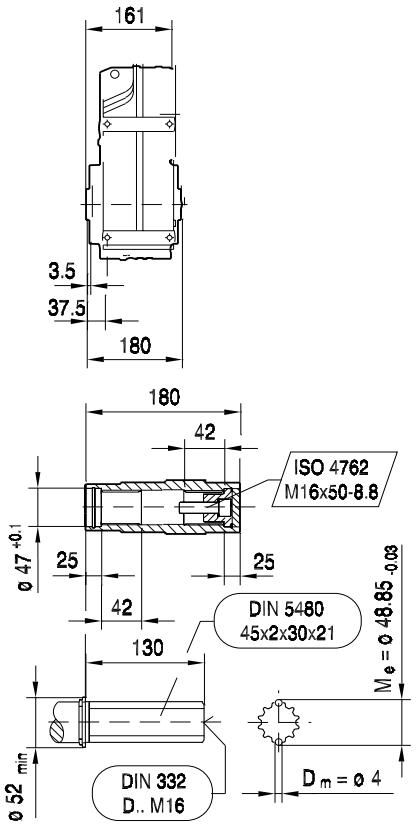

(→ 105)	CT71D	CT80N	CT90L	CV100M	CV100L	CV132S	CV132M				
AC	145	145	197	197	197	221	285				
AD	126	126	160	165	165	178	229				
L	525	575	588	638	668	720	905				
LS	588	638	673	723	753	800	905				
LB	283	333	346	396	426	478	663				
LBS	346	396	431	481	511	558	663				

FF67..

42 116 01 00

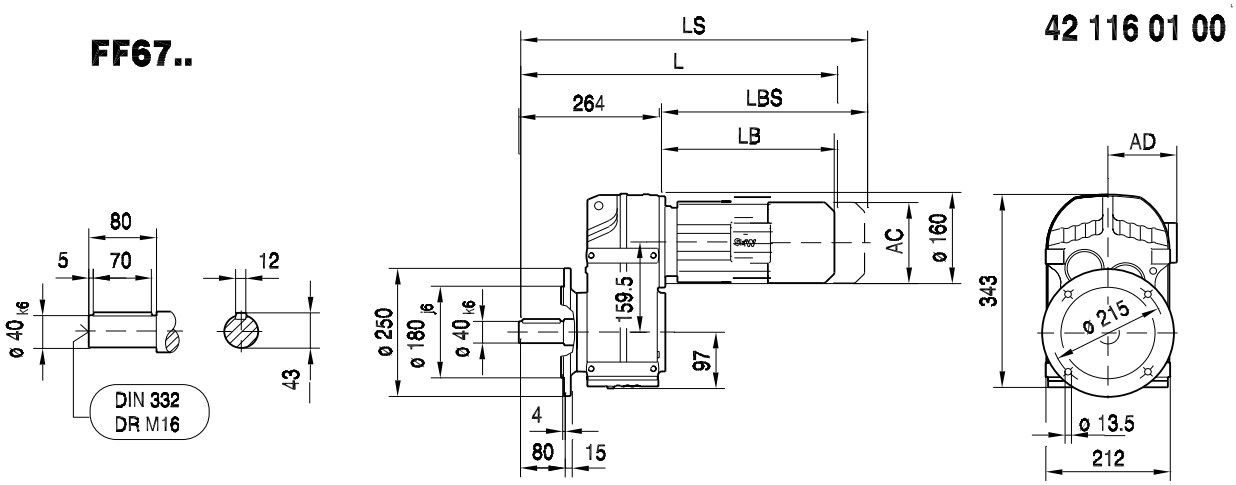

FAF67..

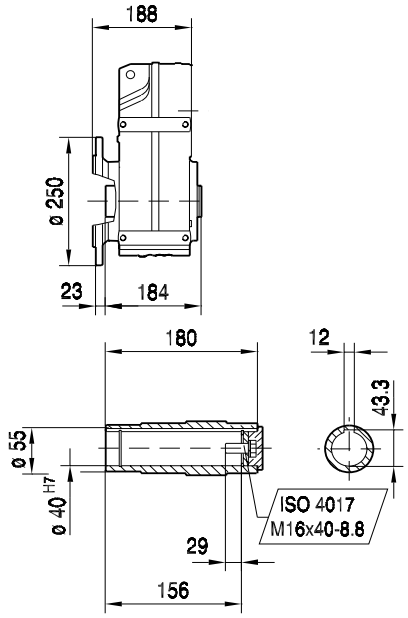

FHF67..
max. CV132S..

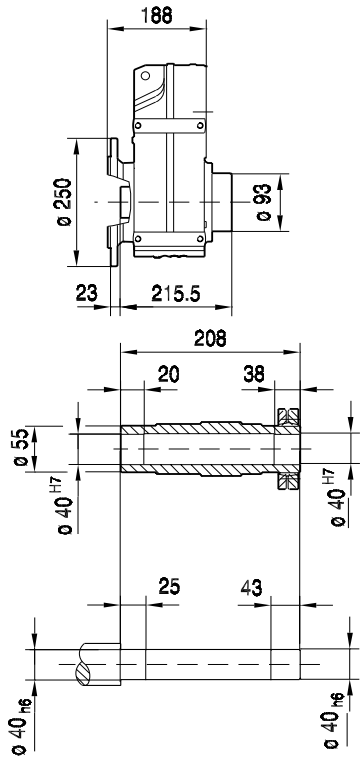

FVF67..

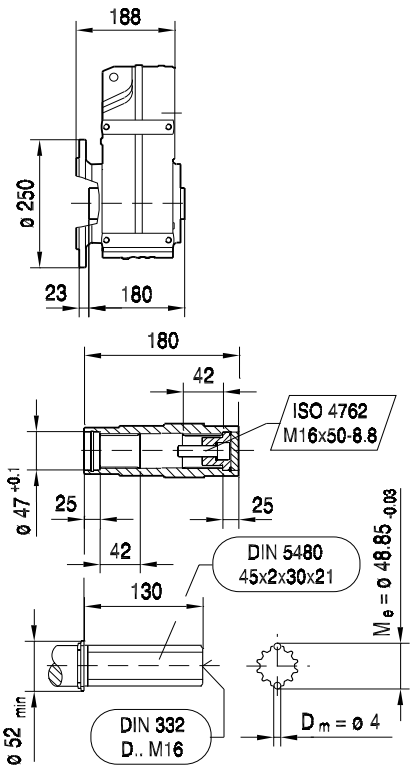

(→ 105)	CT71D	CT80N	CT90L	CV100M	CV100L	CV132S	CV132M				
AC	145	145	197	197	197	221	285				
AD	126	126	160	165	165	178	229				
L	547	597	610	660	690	742	927				
LS	610	660	695	745	775	822	927				
LB	283	333	346	396	426	478	663				
LBS	346	396	431	481	511	558	663				

FA67..

42 126 01 00

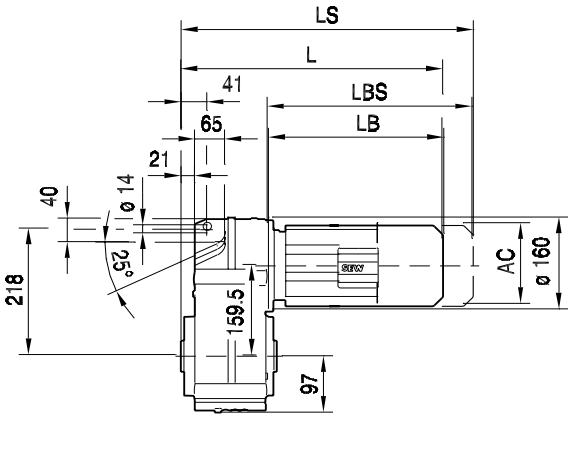

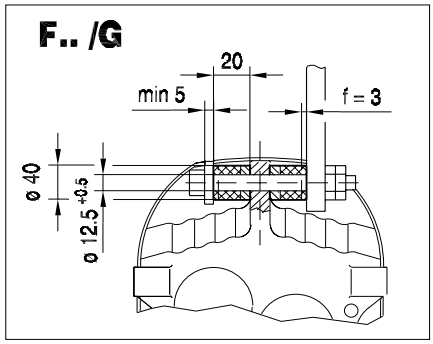

FA67..

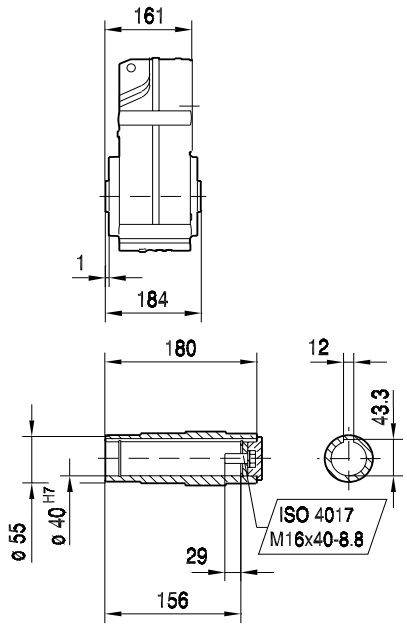

FH67..
max. CV132S..

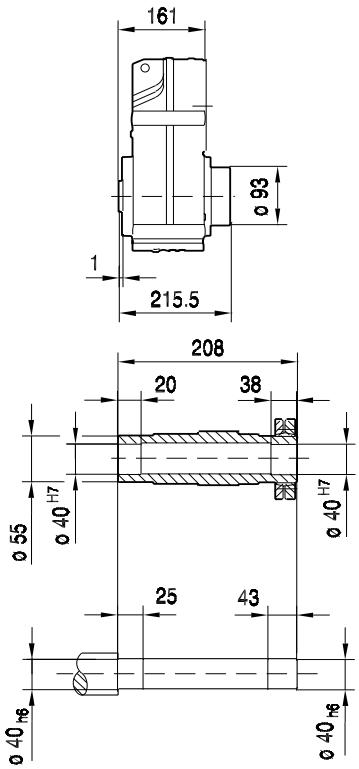

FV67..

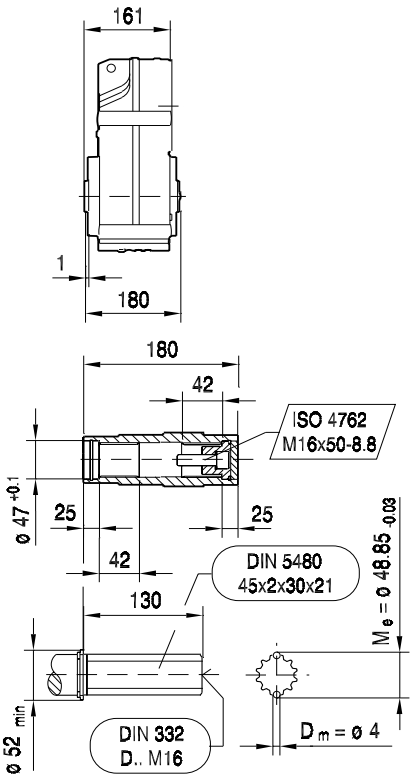

(→ 105)	CT71D	CT80N	CT90L	CV100M	CV100L	CV132S	CV132M				
AC	145	145	197	197	197	221	285				
AD	126	126	160	165	165	178	229				
L	444	494	507	557	587	639	824				
LS	507	557	592	642	672	719	824				
LB	283	333	346	396	426	478	663				
LBS	346	396	431	481	511	558	663				

42 024 00 04

FAZ67..

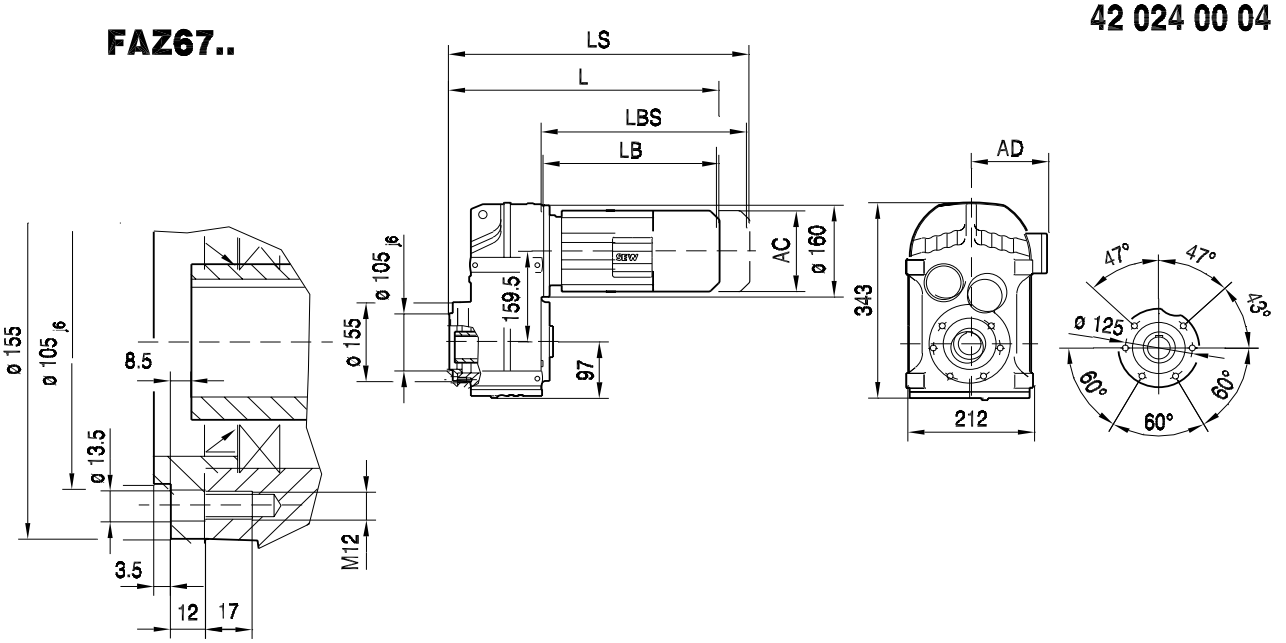

FAZ67..

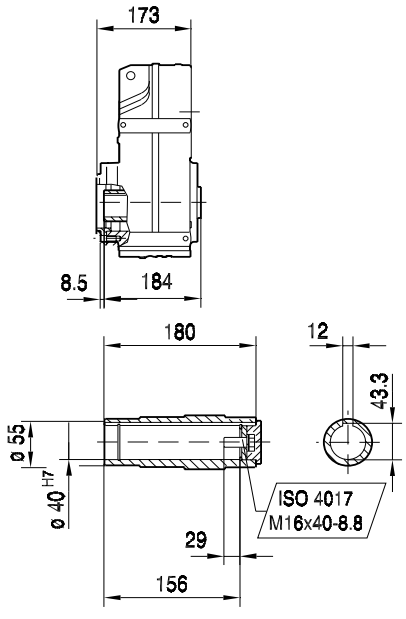

FHZ67..

max. CV132S..

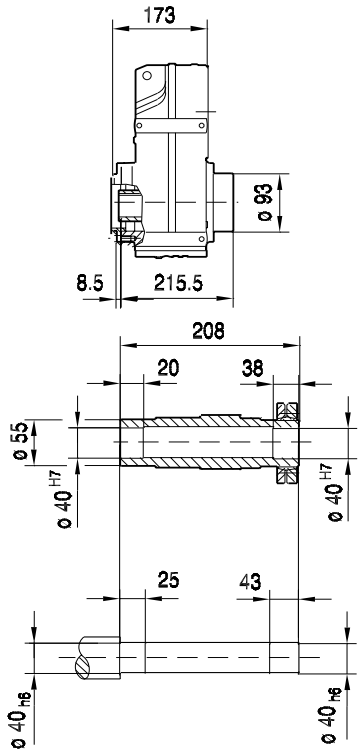

FVZ67..

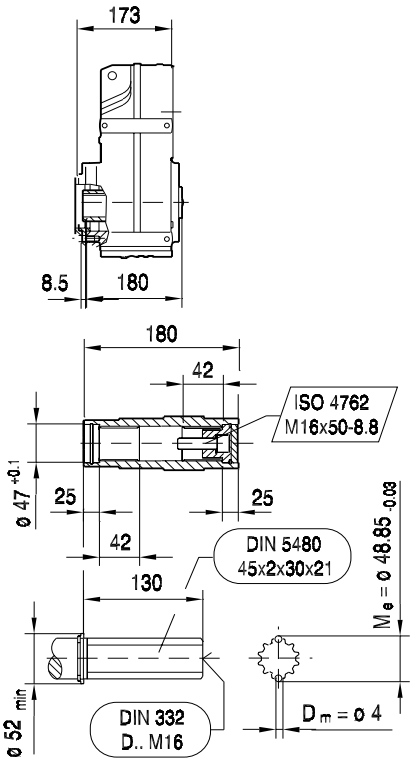

(→ 105)	CT71D	CT80N	CT90L	CV100M	CV100L	CV132S	CV132M				
AC	145	145	197	197	197	221	285				
AD	126	126	160	165	165	178	229				
L	456	506	519	569	599	651	836				
LS	519	569	604	654	684	731	836				
LB	283	333	346	396	426	478	663				
LBS	346	396	431	481	511	558	663				



42 034 00 04

FT67..

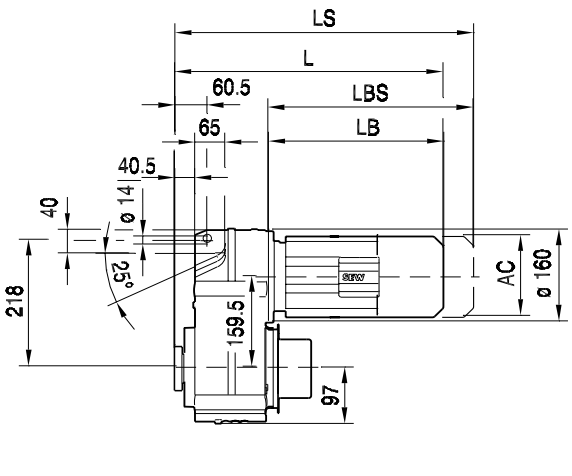

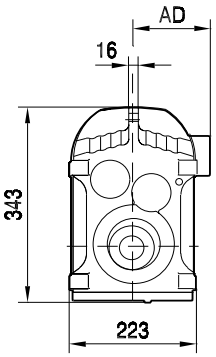

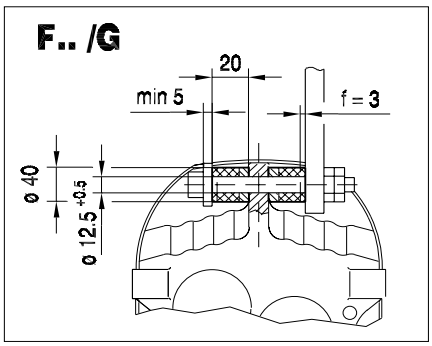

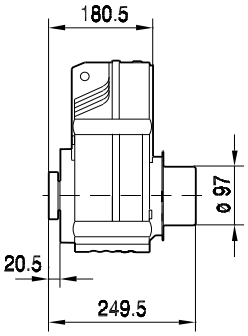

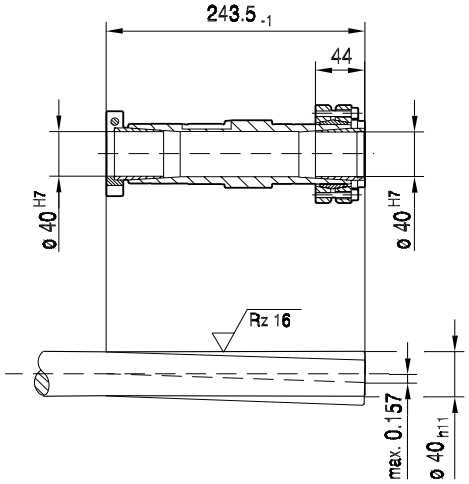

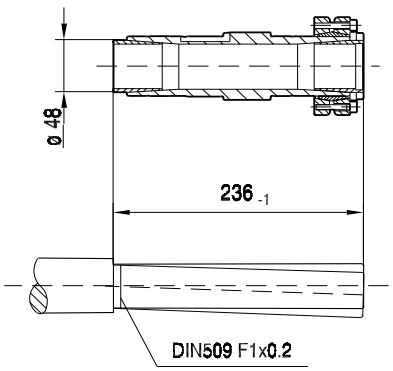

(→ 105)	CT71D	CT80N	CT90L	CV100M	CV100L	CV132S					
AC	145	145	197	197	197	221					
AD	126	126	160	165	165	178					
L	464	514	527	577	607	659					
LS	527	577	612	662	692	739					
LB	283	333	346	396	426	478					
LBS	346	396	431	481	511	558					

42 107 01 00

F77..

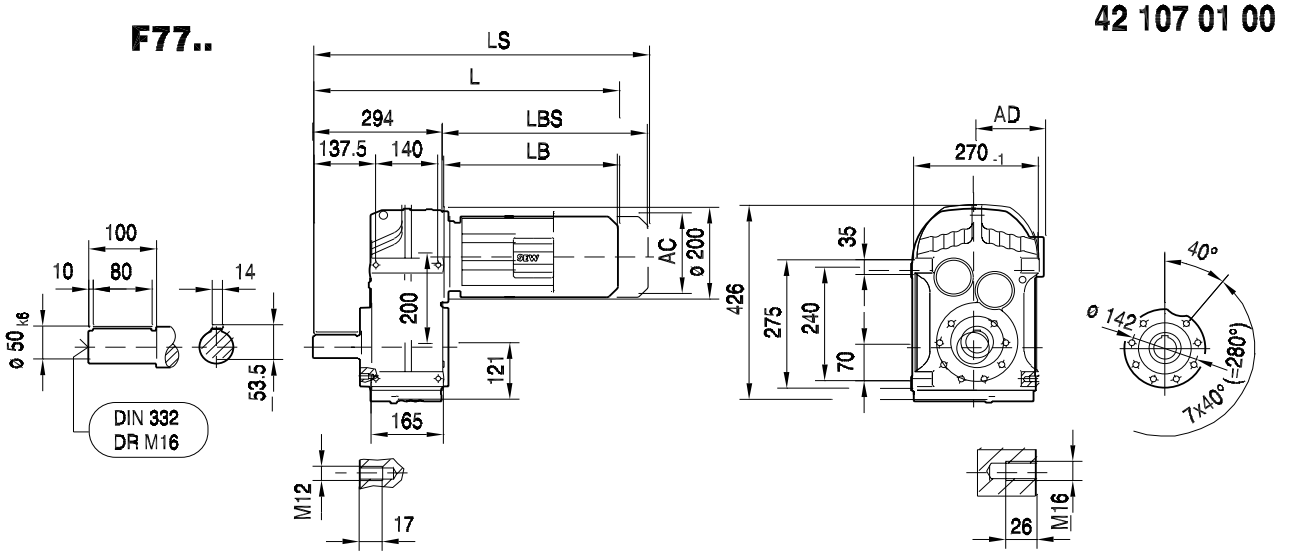

FA77B..

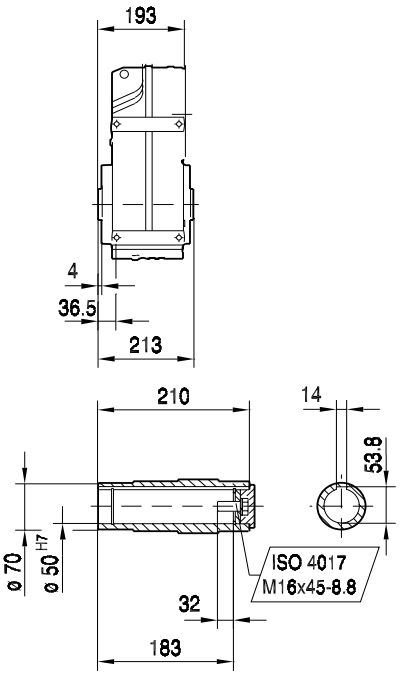

FH77B..

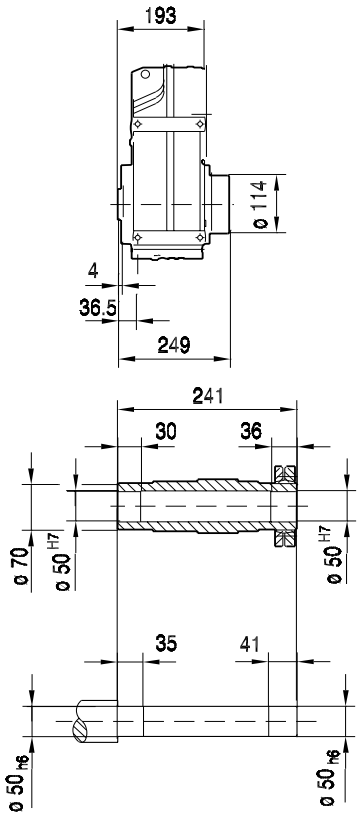

FV77B..

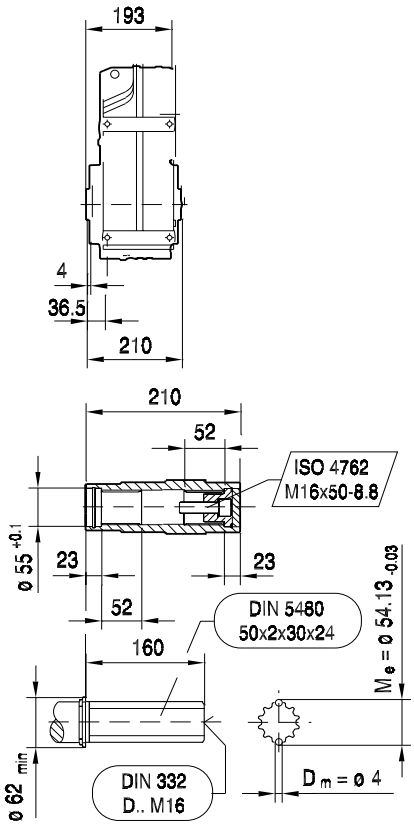

(→ 105)	CT71D	CT80N	CT90L	CV100M	CV100L	CV132S	CV132M	CV132ML	CV160M		
AC	145	145	197	197	197	221	285	285	285		
AD	126	126	160	165	165	178	229	229	229		
L	571	621	632	682	712	760	945	1005	1005		
LS	634	684	717	767	797	840	945	1005	1005		
LB	277	327	338	388	418	466	651	711	711		
LBS	340	390	423	473	503	546	651	711	711		

FF77..

42 117 01 00

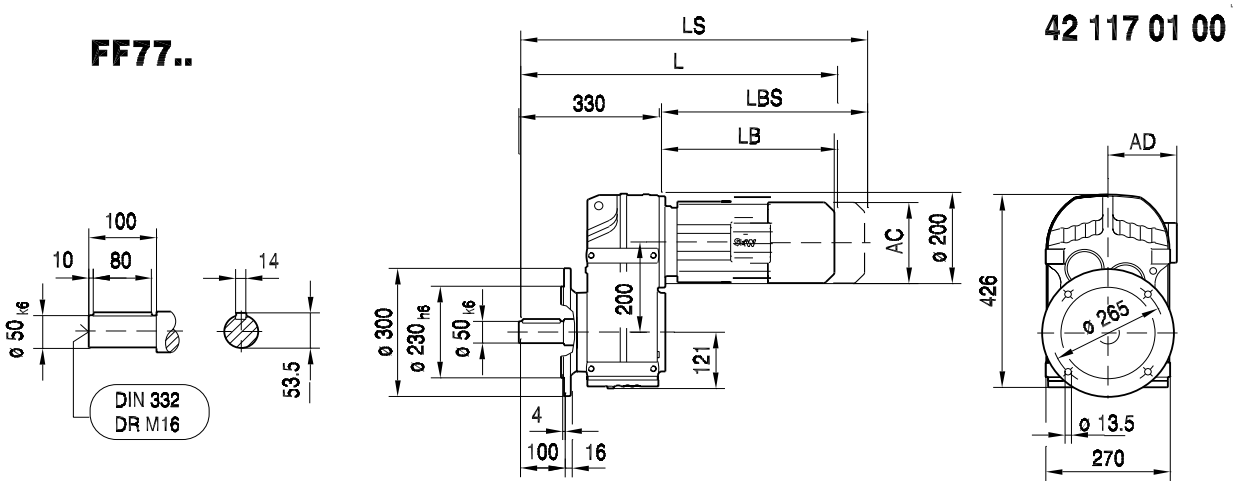

FAF77..

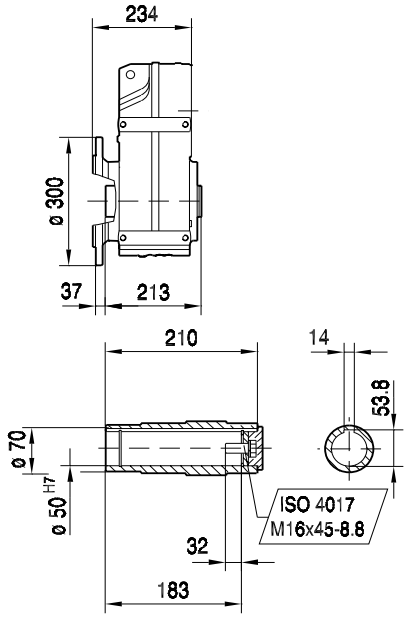

FHF77..

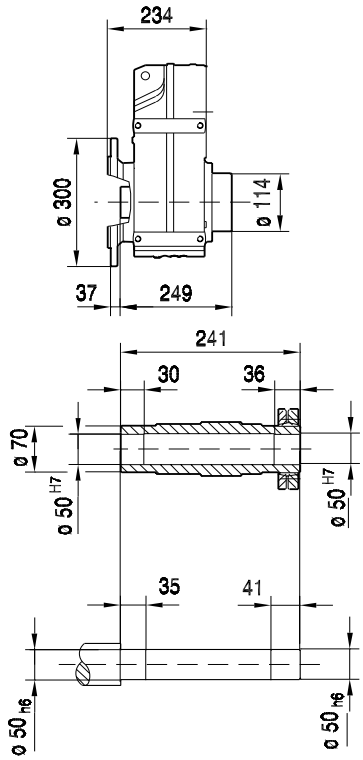

FVF77..

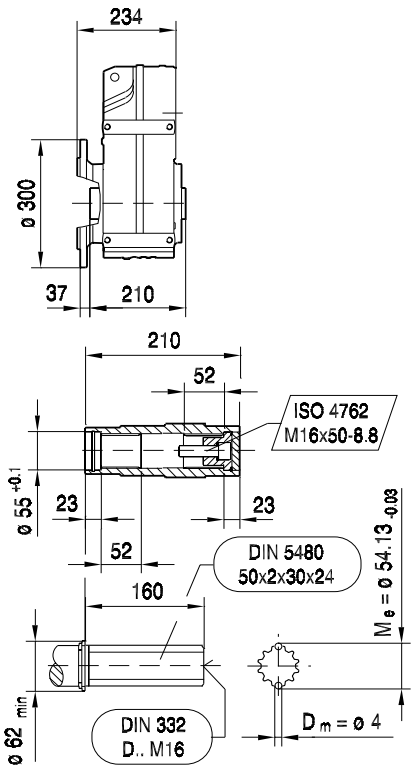

(→ 105)	CT71D	CT80N	CT90L	CV100M	CV100L	CV132S	CV132M	CV132ML	CV160M		
AC	145	145	197	197	197	221	285	285	285		
AD	126	126	160	165	165	178	229	229	229		
L	607	657	668	718	748	796	981	1041	1041		
LS	670	720	753	803	833	876	981	1041	1041		
LB	277	327	338	388	418	466	651	711	711		
LBS	340	390	423	473	503	546	651	711	711		

FA77..

42 127 01 00

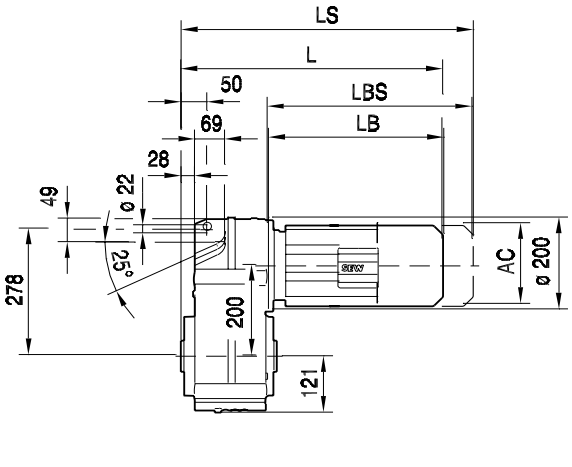

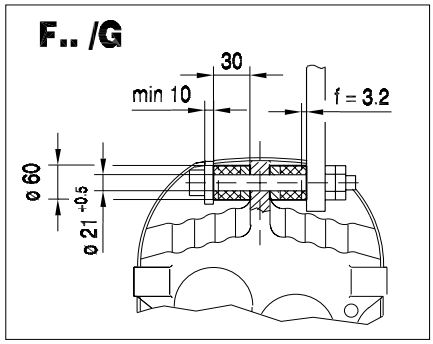

FA77..

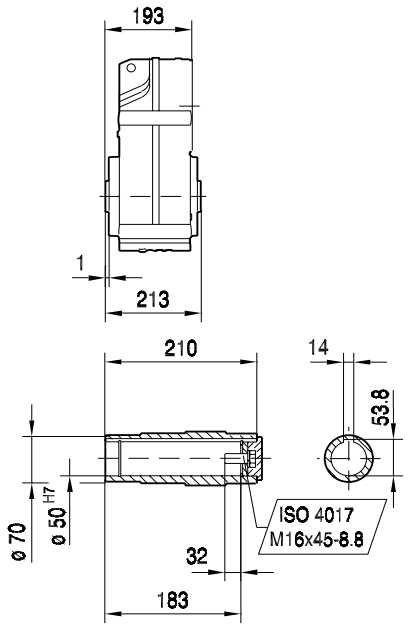

FH77..

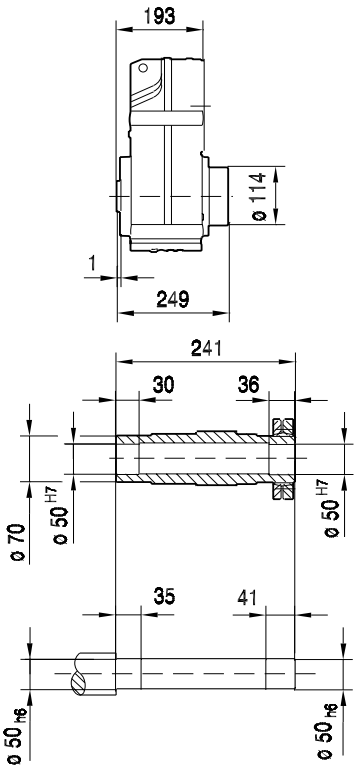

FV77..

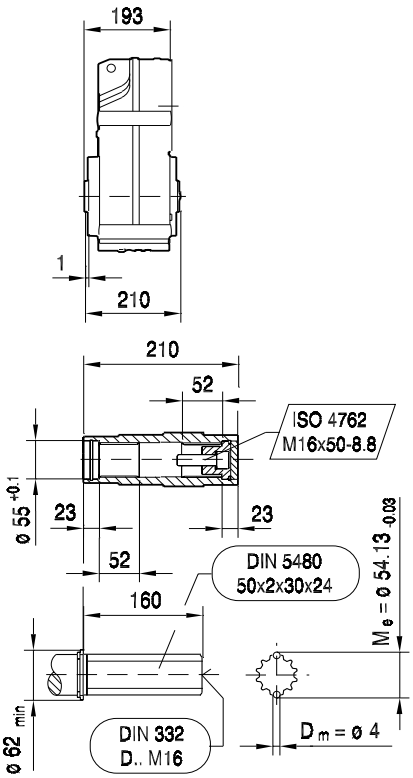

(→ 105)	CT71D	CT80N	CT90L	CV100M	CV100L	CV132S	CV132M	CV132ML	CV160M		
AC	145	145	197	197	197	221	285	285	285		
AD	126	126	160	165	165	178	229	229	229		
L	470	520	531	581	611	659	844	904	904		
LS	533	583	616	666	696	739	844	904	904		
LB	277	327	338	388	418	466	651	711	711		
LBS	340	390	423	473	503	546	651	711	711		

42 025 00 04

FAZ77..

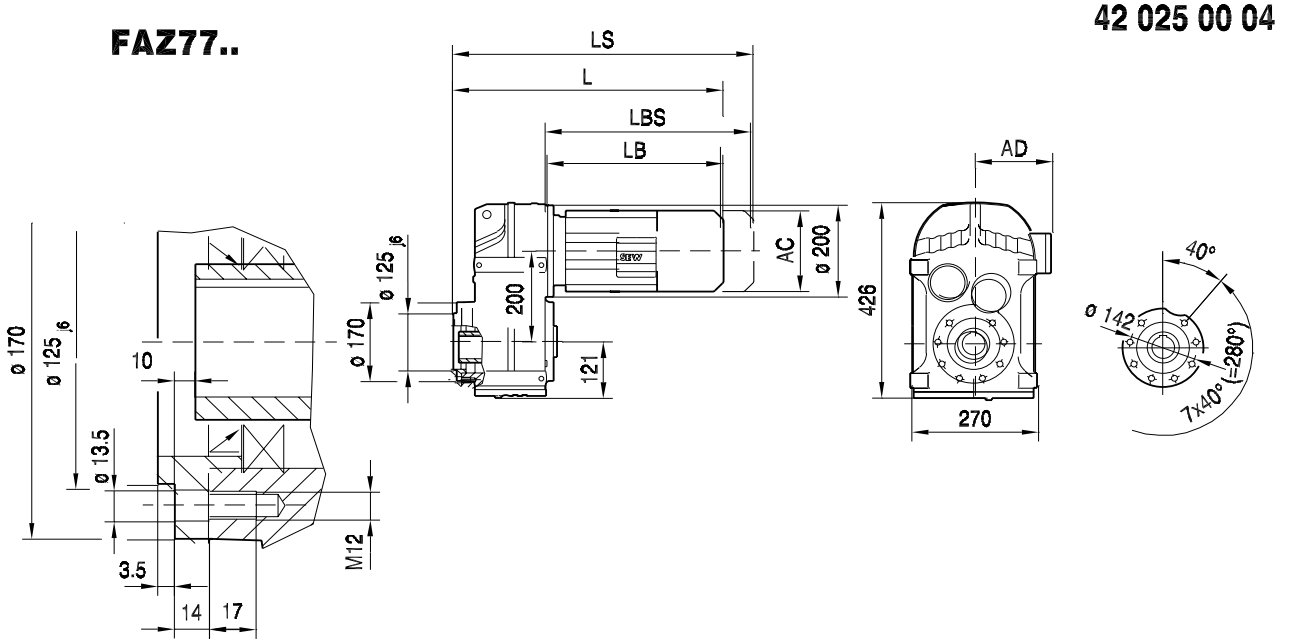

FAZ77..

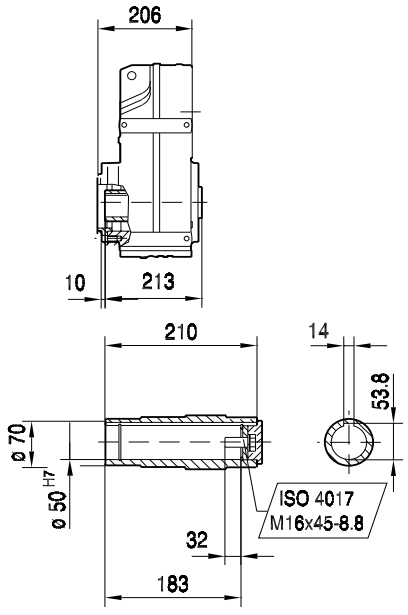

FHZ77..

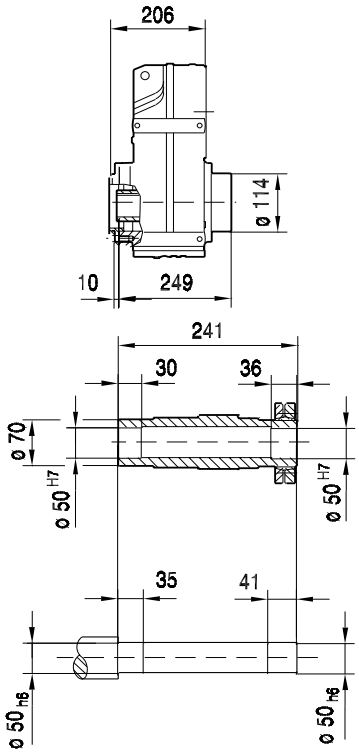

FVZ77..

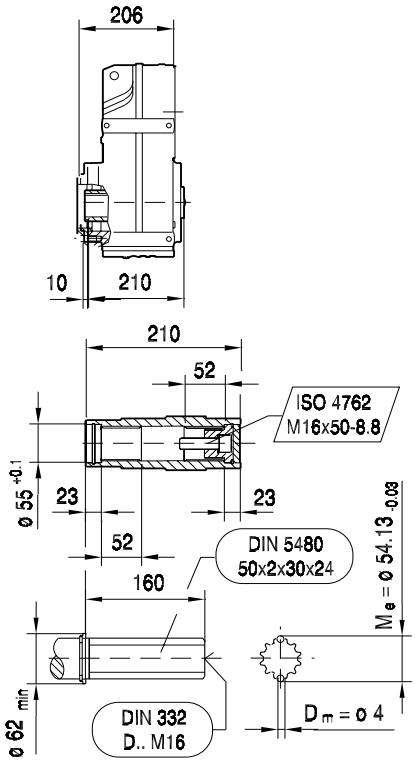

(→ 105)	CT71D	CT80N	CT90L	CV100M	CV100L	CV132S	CV132M	CV132ML	CV160M		
AC	145	145	197	197	197	221	285	285	285		
AD	126	126	160	165	165	178	229	229	229		
L	483	533	544	594	624	672	857	917	917		
LS	546	596	629	679	709	752	857	917	917		
LB	277	327	338	388	418	466	651	711	711		
LBS	340	390	423	473	503	546	651	711	711		

FT77..

42 035 00 04

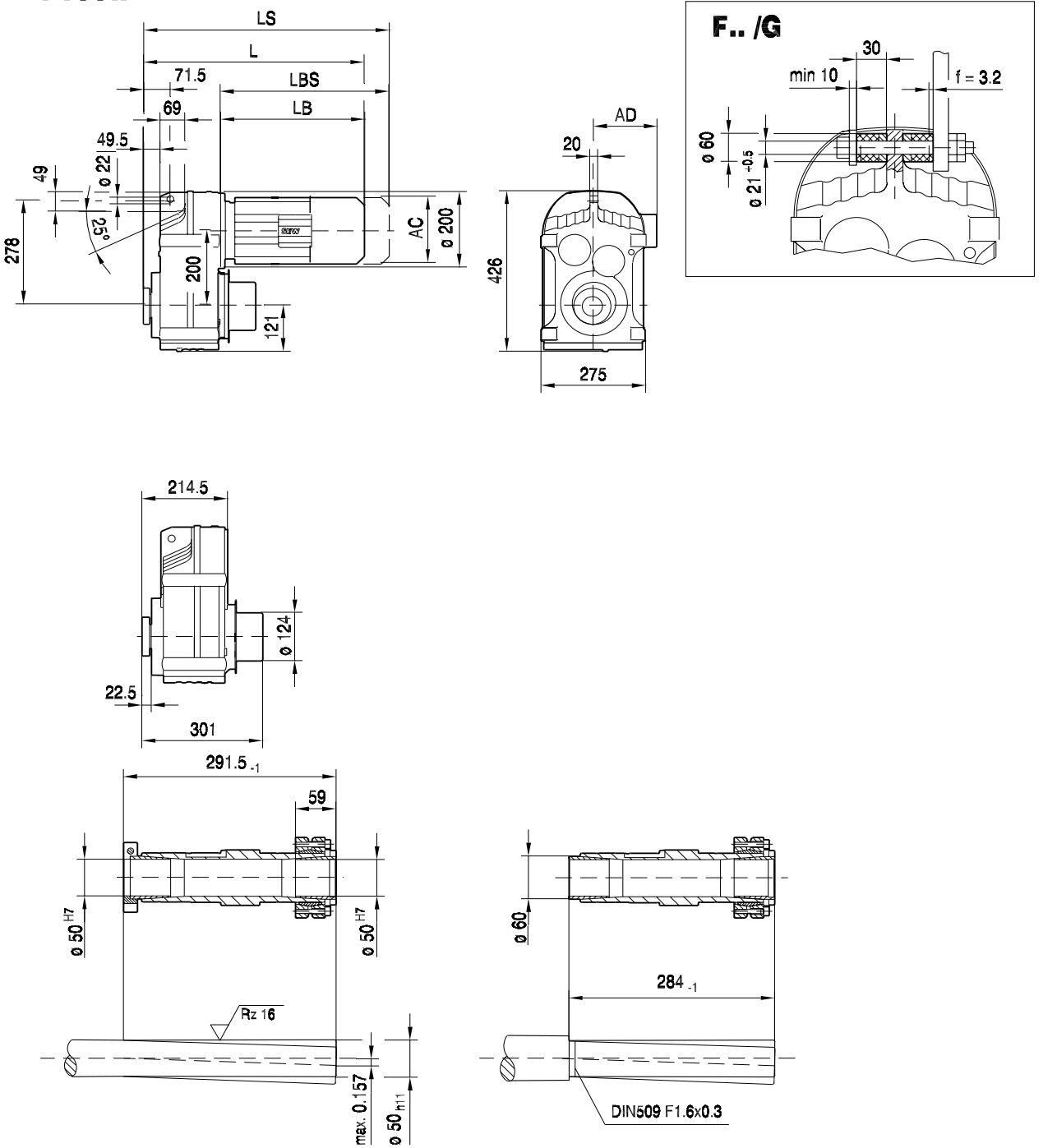

(→ 105)	CT71D	CT80N	CT90L	CV100M	CV100L	CV132S	CV132M	CV132ML	CV160M		
AC	145	145	197	197	197	221	285	285	285		
AD	126	126	160	165	165	178	229	229	229		
L	492	542	553	603	633	681	865	925	925		
LS	555	605	638	688	718	761	865	925	925		
LB	277	327	338	388	418	466	651	711	711		
LBS	340	390	423	473	503	546	651	711	711		

42 108 01 00

F87..

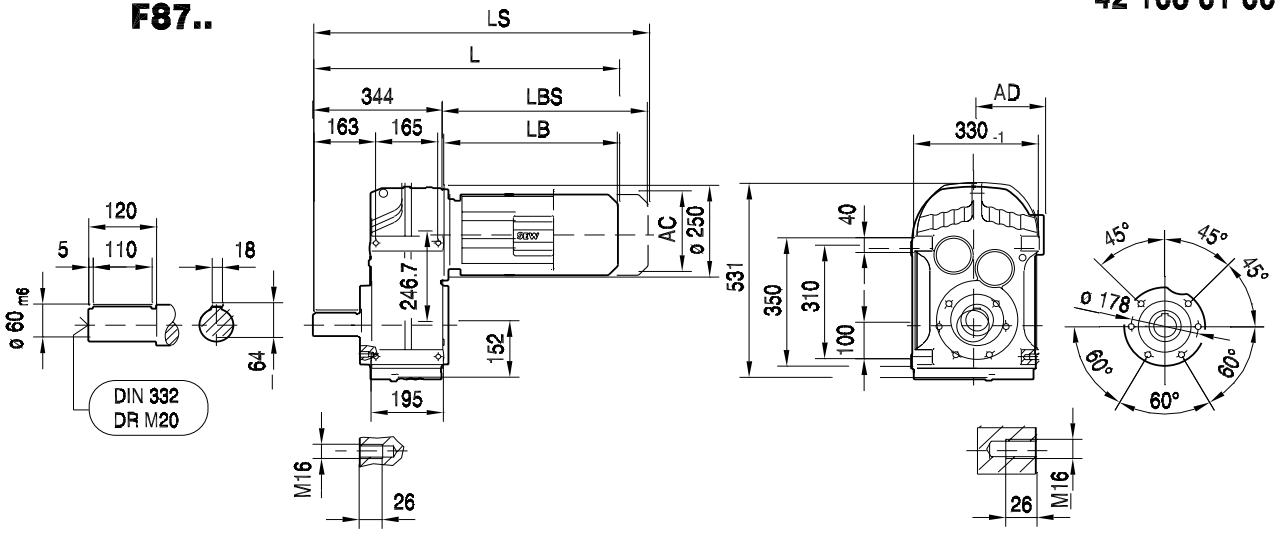

FA87B..

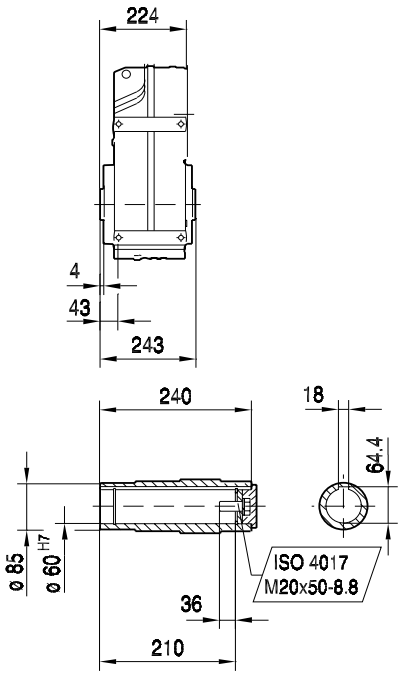

FH87B..

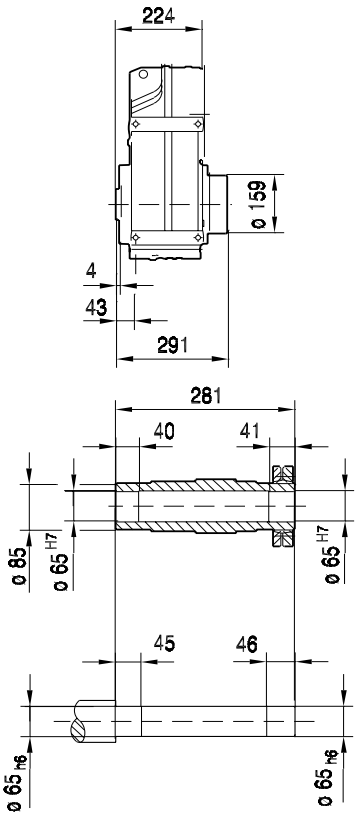

FV87B..

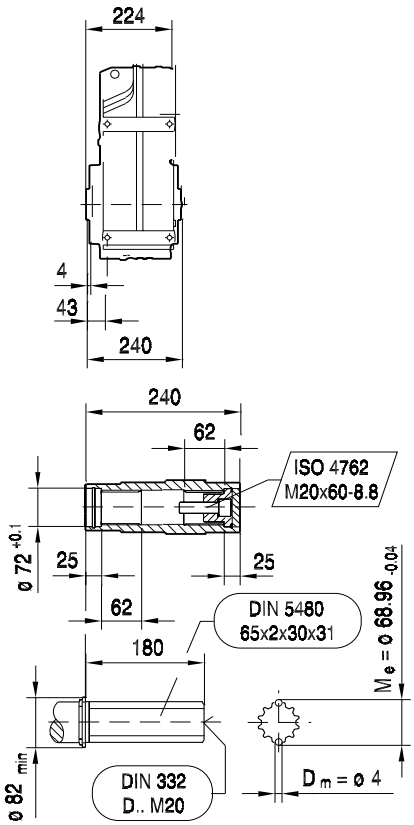

(→ 105)	CT80N	CT90L	CV100M	CV100L	CV132S	CV132M	CV132ML	CV160M	CV160L	CV180..	
AC	145	197	197	197	221	285	285	285	342	342	
AD	126	160	165	165	178	229	229	229	252	252	
L	666	678	728	758	805	990	1050	1050	1138	1210	
LS	729	763	813	843	885	990	1050	1050	1138	1210	
LB	322	334	384	414	461	646	706	706	794	866	
LBS	385	419	469	499	541	646	706	706	794	866	

FF87..

42 118 01 00

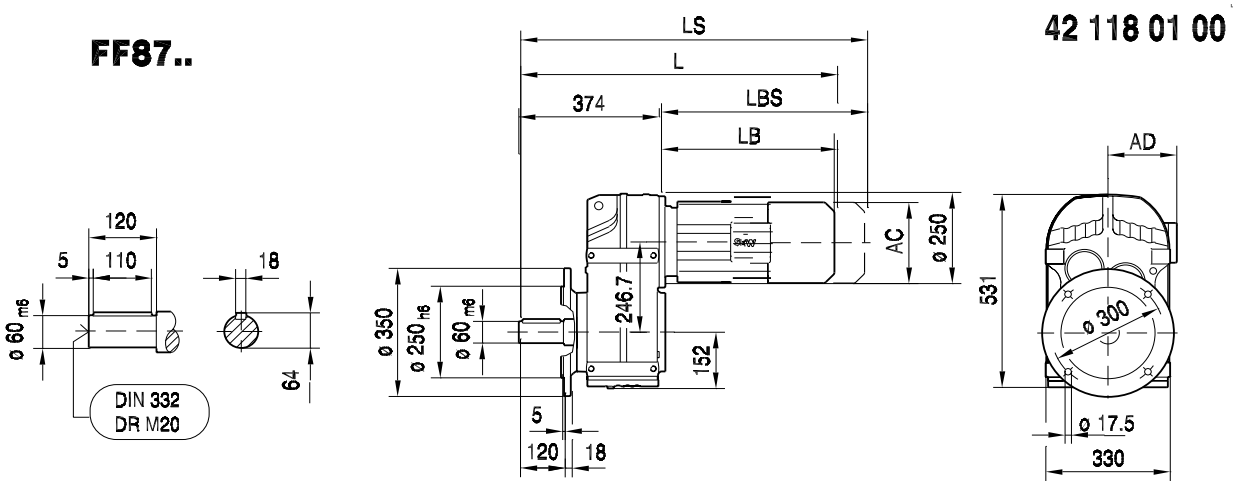

FAF87..

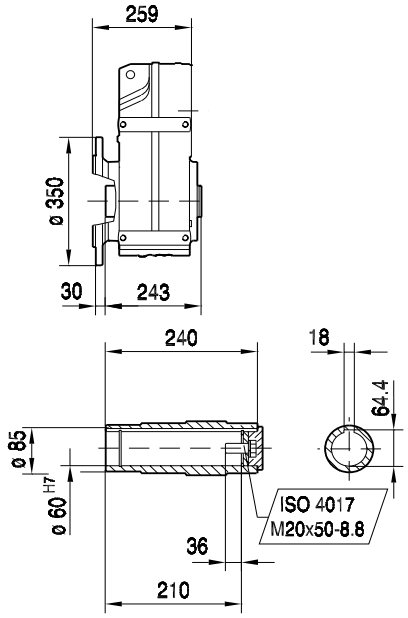

FHF87..

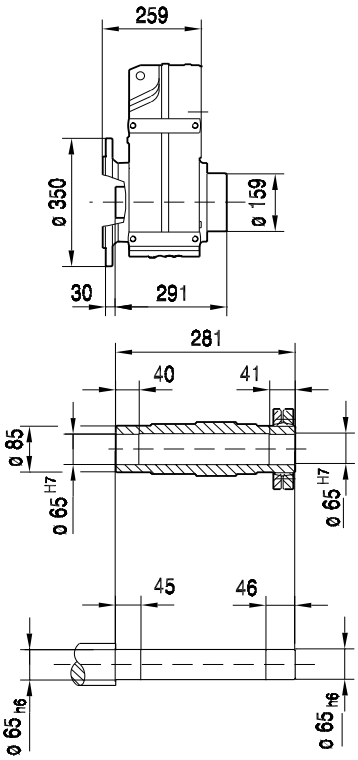

FVF87..

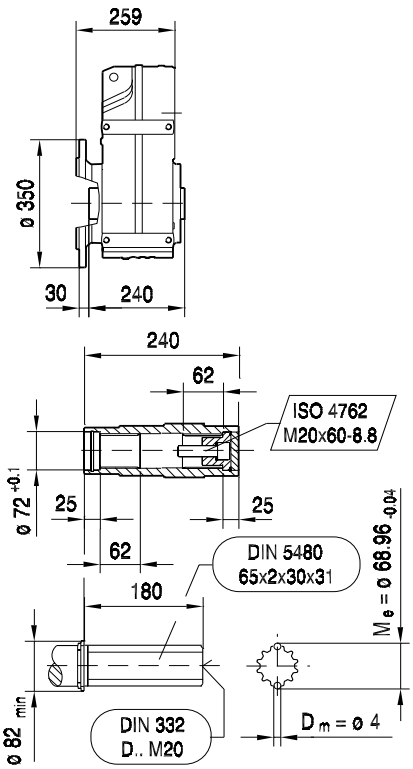

(→ 105)	CT80N	CT90L	CV100M	CV100L	CV132S	CV132M	CV132ML	CV160M	CV160L	CV180..	
AC	145	197	197	197	221	285	285	285	342	342	
AD	126	160	165	165	178	229	229	229	252	252	
L	696	708	758	788	835	1020	1080	1080	1168	1240	
LS	759	793	843	873	915	1020	1080	1080	1168	1240	
LB	322	334	384	414	461	646	706	706	794	866	
LBS	385	419	469	499	541	646	706	706	794	866	

FA87..

42 128 01 00

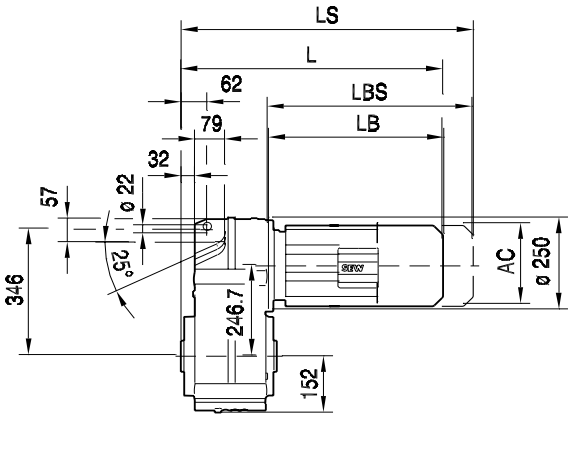

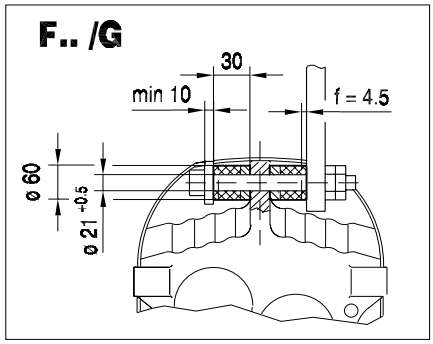

FA87..

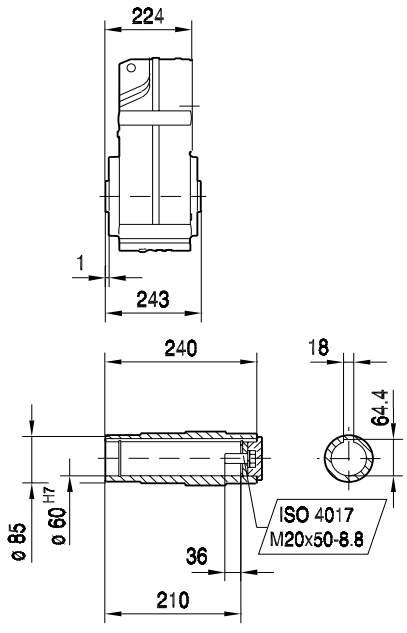

FH87..

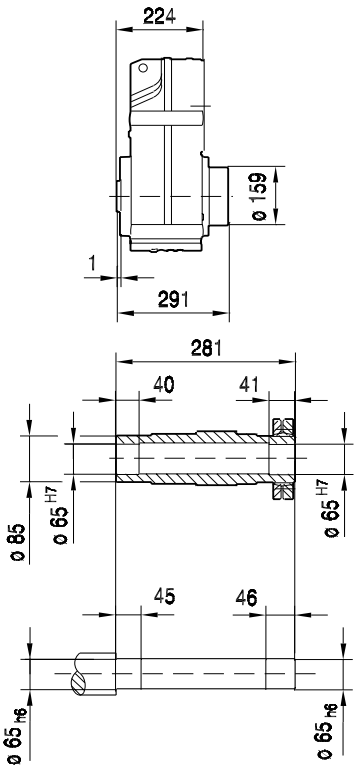

FV87..

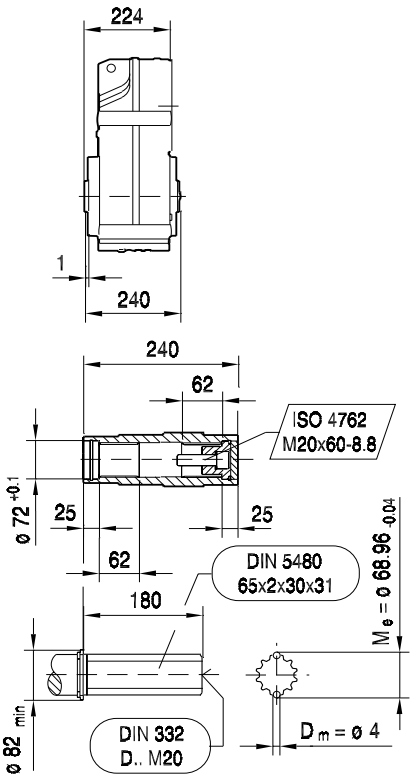

(→ 105)	CT80N	CT90L	CV100M	CV100L	CV132S	CV132M	CV132ML	CV160M	CV160L	CV180..	
AC	145	197	197	197	221	285	285	285	342	342	
AD	126	160	165	165	178	229	229	229	252	252	
L	546	558	608	638	685	870	930	930	1018	1090	
LS	609	643	693	723	765	870	930	930	1018	1090	
LB	322	334	384	414	461	646	706	706	794	866	
LBS	385	419	469	499	541	646	706	706	794	866	

42 026 00 04

FAZ87..

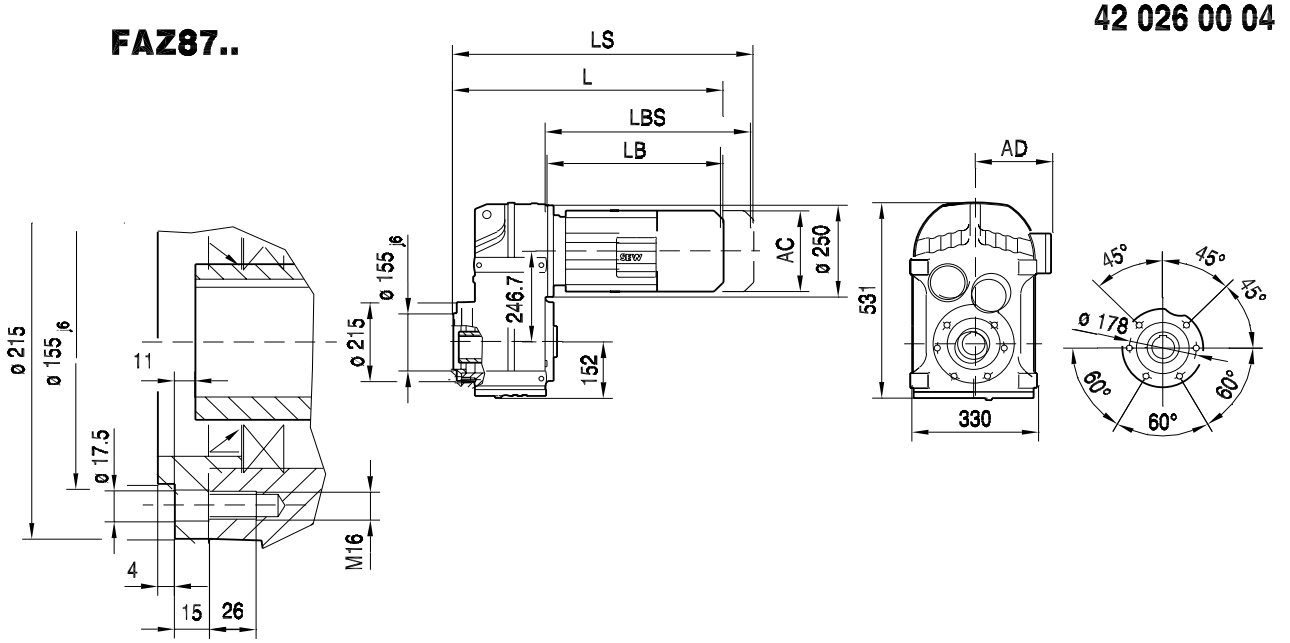

FAZ87..

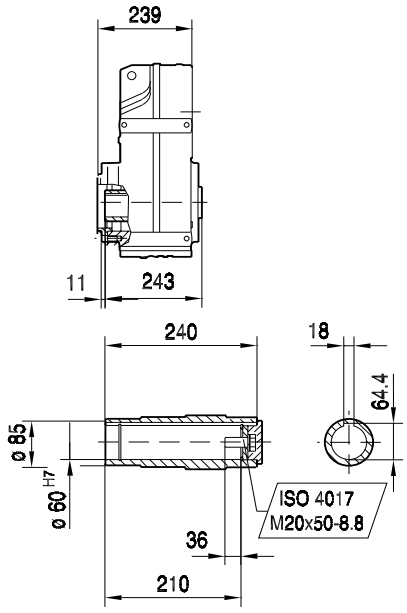

FHZ87..

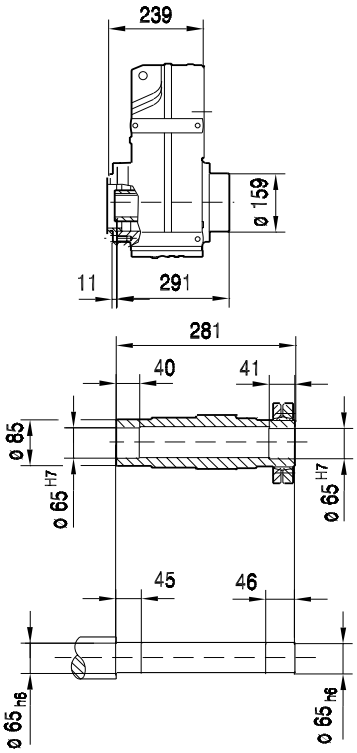

FVZ87..

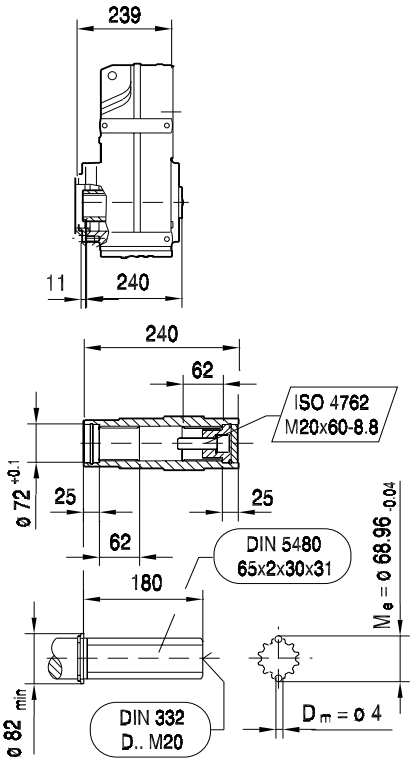

(→ 105)	CT80N	CT90L	CV100M	CV100L	CV132S	CV132M	CV132ML	CV160M	CV160L	CV180..	
AC	145	197	197	197	221	285	285	285	342	342	
AD	126	160	165	165	178	229	229	229	252	252	
L	561	573	623	653	700	885	945	945	1033	1105	
LS	624	658	708	738	780	885	945	945	1033	1105	
LB	322	334	384	414	461	646	706	706	794	866	
LBS	385	419	469	499	541	646	706	706	794	866	

42 036 00 04

FT87..

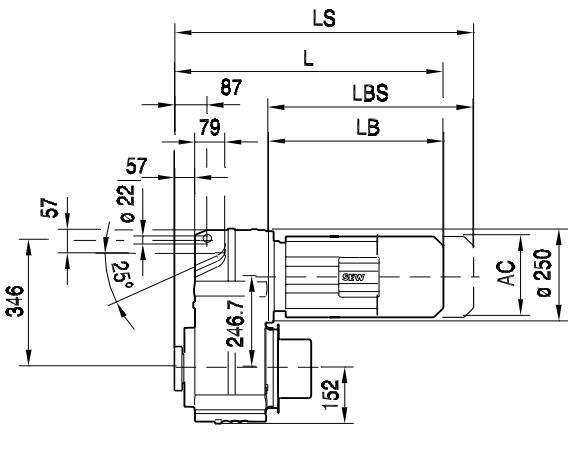

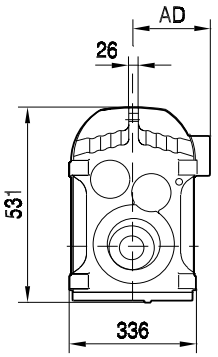

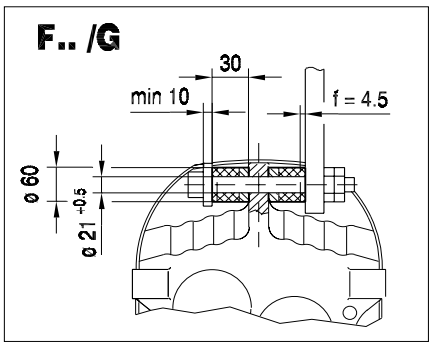

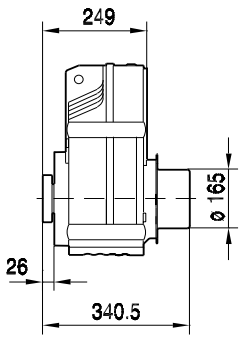

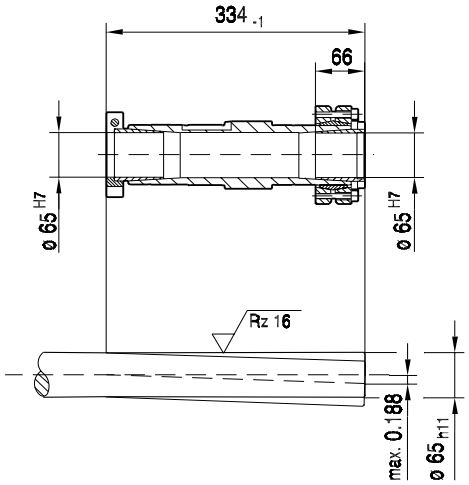

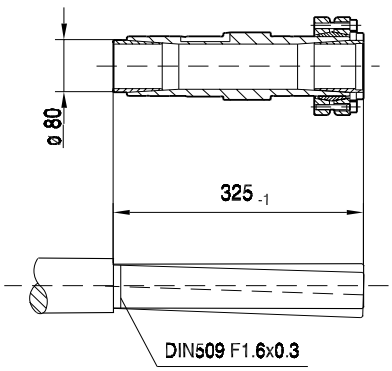

(→ 📖 105)	CT80N	CT90L	CV100M	CV100L	CV132S	CV132M	CV132ML	CV160M	CV160L	CV180..	
AC	145	197	197	197	221	285	285	285	342	342	
AD	126	160	165	165	178	229	229	229	252	252	
L	571	583	633	663	710	895	955	955	1043	1115	
LS	634	668	718	748	790	895	955	955	1043	1115	
LB	322	334	384	414	461	646	706	706	794	866	
LBS	385	419	469	499	541	646	706	706	794	866	

42 109 01 00

F97..

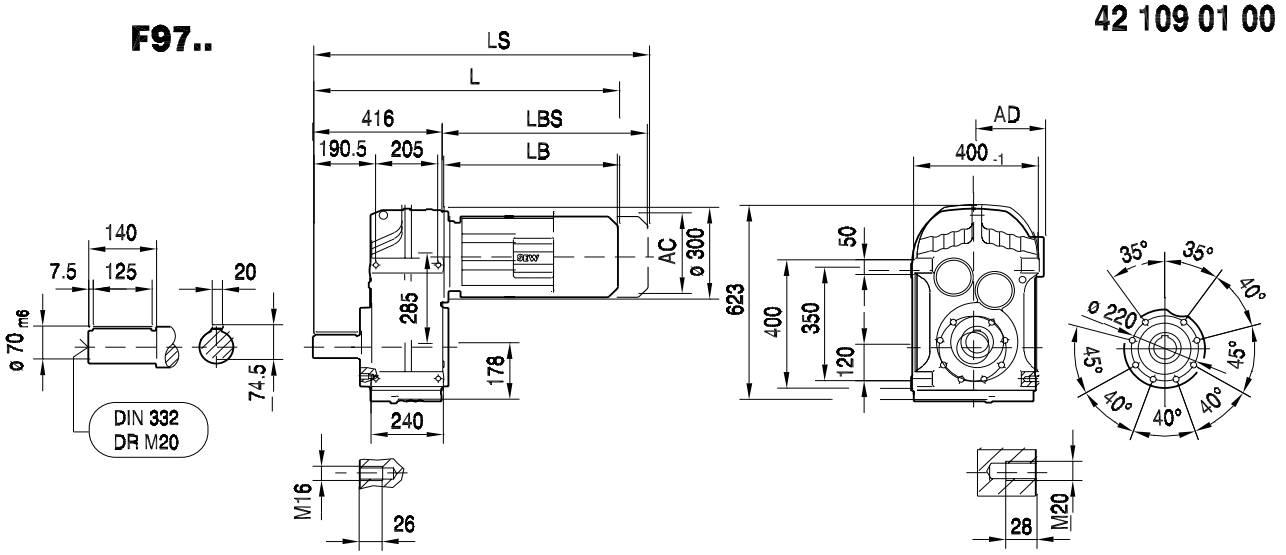

FA97B..

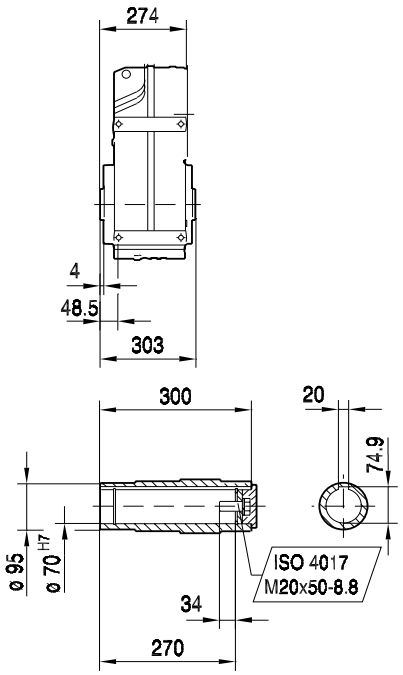

FH97B..

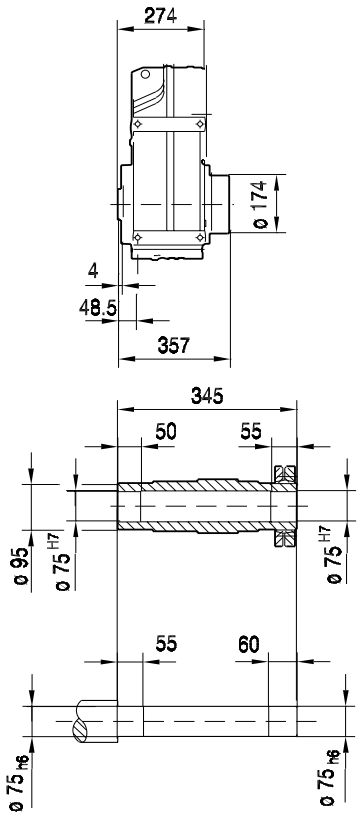

FV97B..

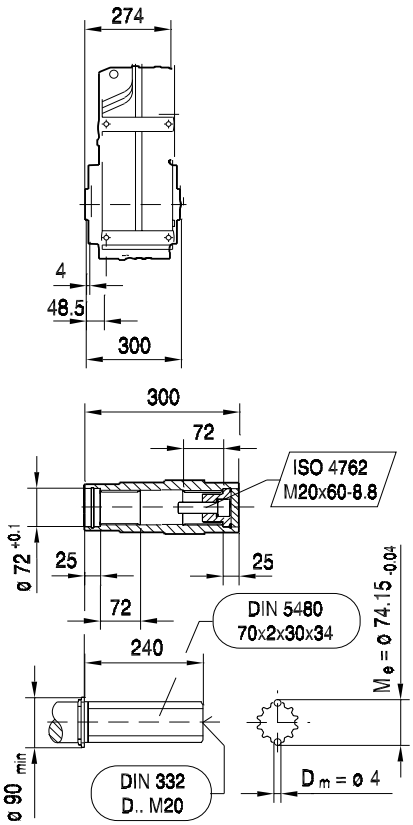

(→ 105)	CT80N	CT90L	CV100M	CV100L	CV132S	CV132M	CV132ML	CV160M	CV160L	CV180..	CV200L
AC	145	197	197	197	221	285	285	285	342	342	394
AD	126	160	165	165	178	229	229	229	252	252	285
L	731	744	794	824	872	1057	1117	1117	1205	1277	1336
LS	794	829	879	909	952	1057	1117	1117	1205	1277	1336
LB	315	328	378	408	456	641	701	701	789	861	920
LBS	378	413	463	493	536	641	701	701	789	861	920

FF97..

42 119 01 00

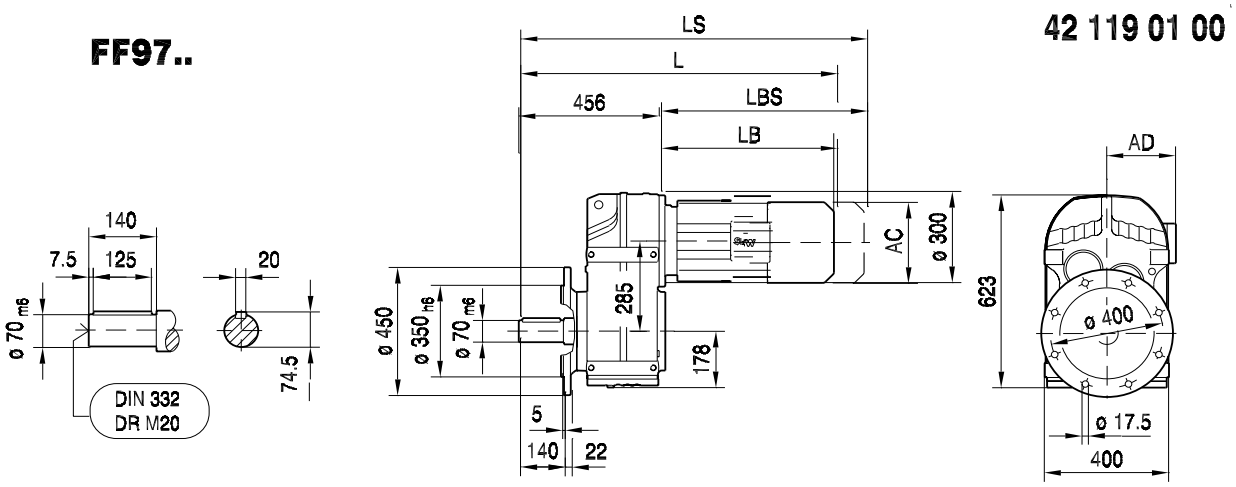

FAF97..

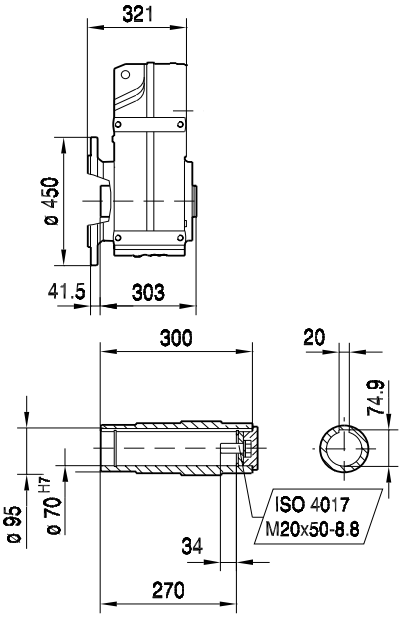

FHF97..

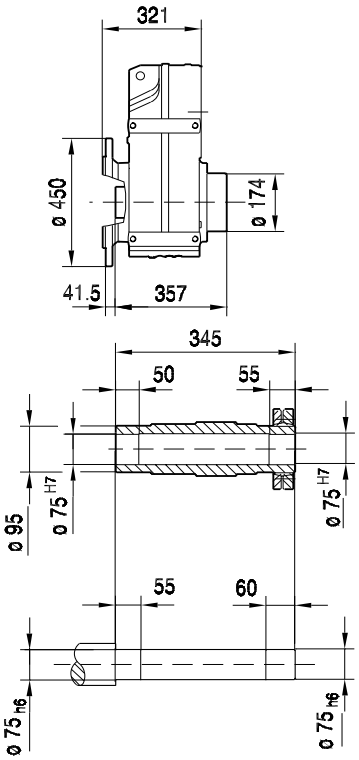

FVF97..

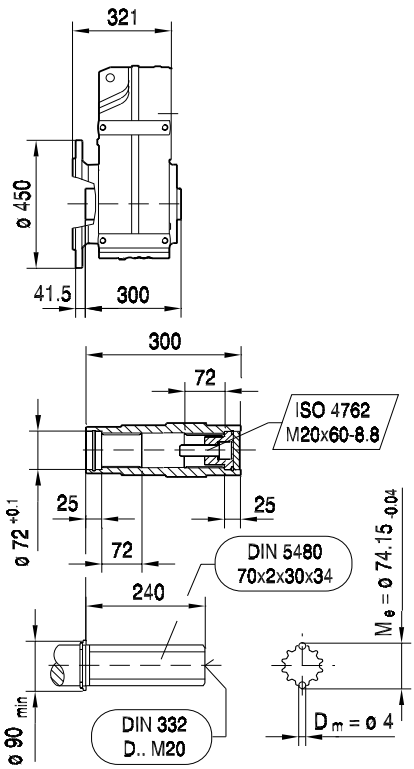

(→ 105)	CT80N	CT90L	CV100M	CV100L	CV132S	CV132M	CV132ML	CV160M	CV160L	CV180..	CV200L
AC	145	197	197	197	221	285	285	285	342	342	394
AD	126	160	165	165	178	229	229	229	252	252	285
L	771	784	834	864	912	1097	1157	1157	1245	1317	1376
LS	834	869	919	949	992	1097	1157	1157	1245	1317	1376
LB	315	328	378	408	456	641	701	701	789	861	920
LBS	378	413	463	493	536	641	701	701	789	861	920

FA97..

42 129 01 00

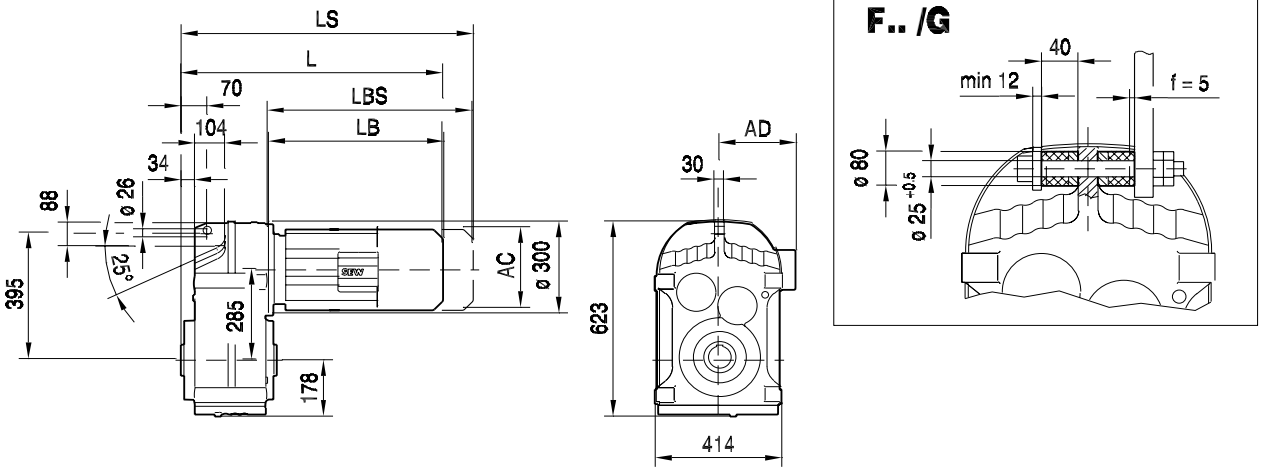

FA97..

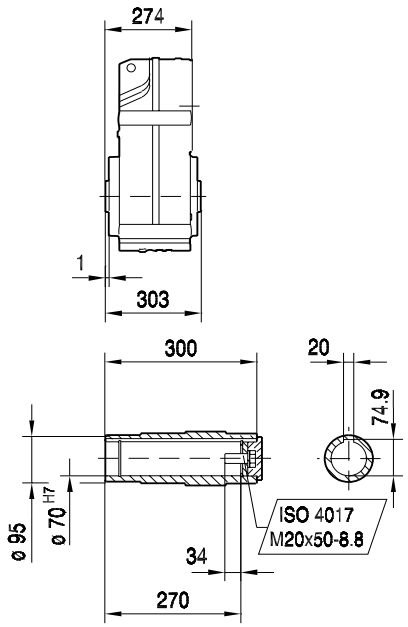

FH97..

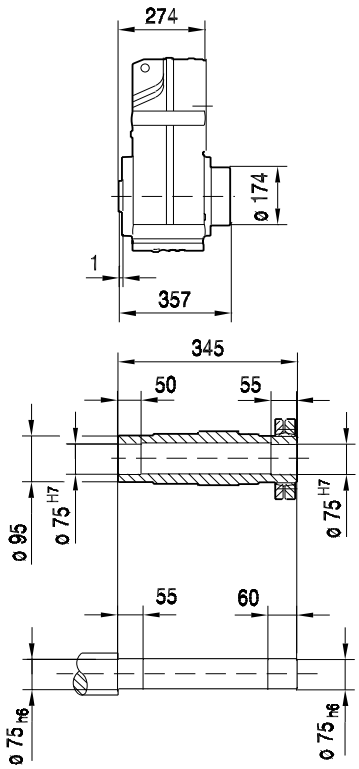

FV97..

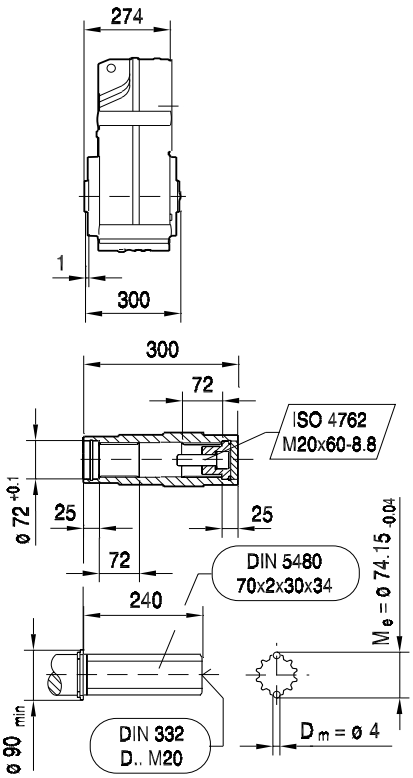

(→ 105)	CT80N	CT90L	CV100M	CV100L	CV132S	CV132M	CV132ML	CV160M	CV160L	CV180..	CV200L
AC	145	197	197	197	221	285	285	285	342	342	394
AD	126	160	165	165	178	229	229	229	252	252	285
L	589	602	652	682	730	915	975	975	1063	1135	1194
LS	652	687	737	767	810	915	975	975	1063	1135	1194
LB	315	328	378	408	456	641	701	701	789	861	920
LBS	378	413	463	493	536	641	701	701	789	861	920

42 027 00 04

FAZ97..

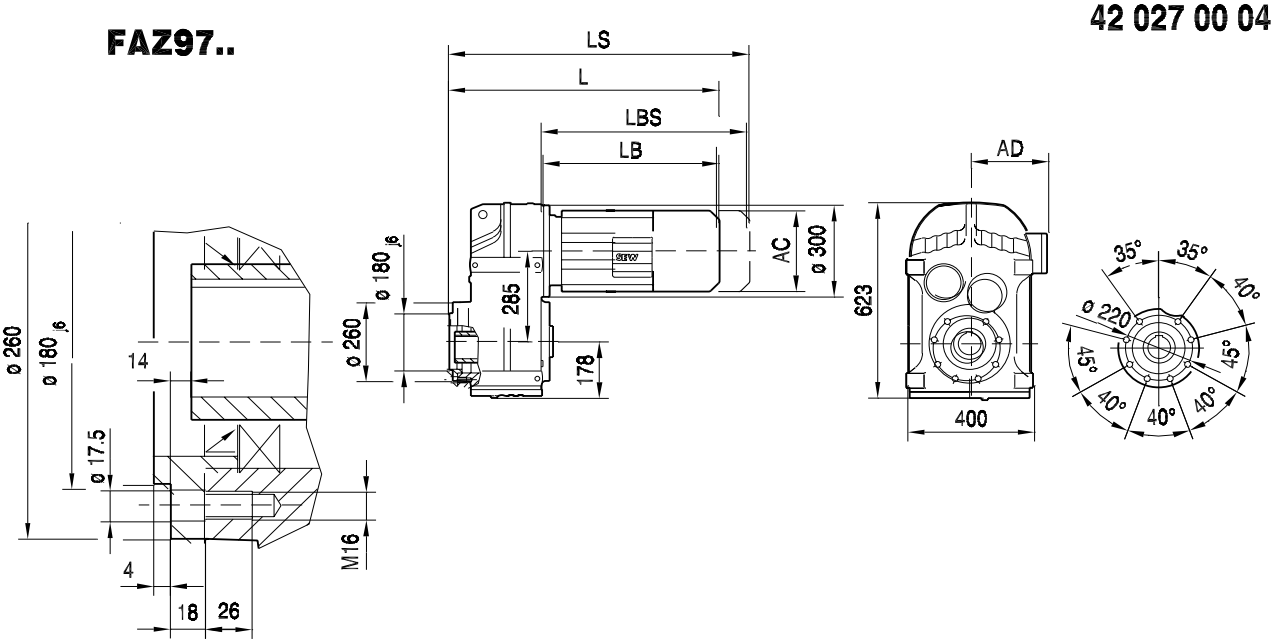

FAZ97..

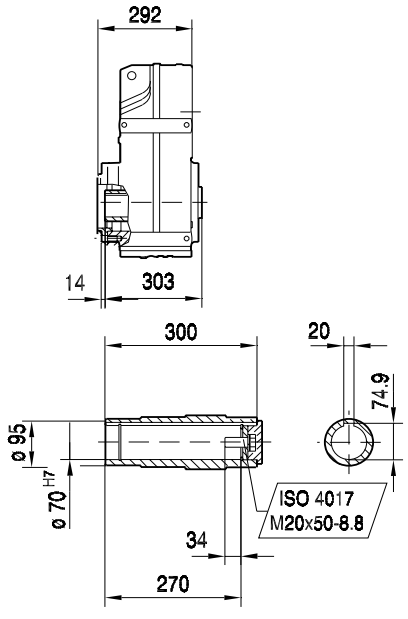

FHZ97..

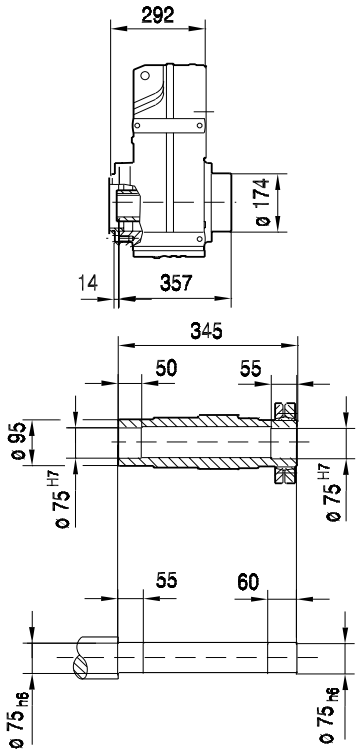

FVZ97..

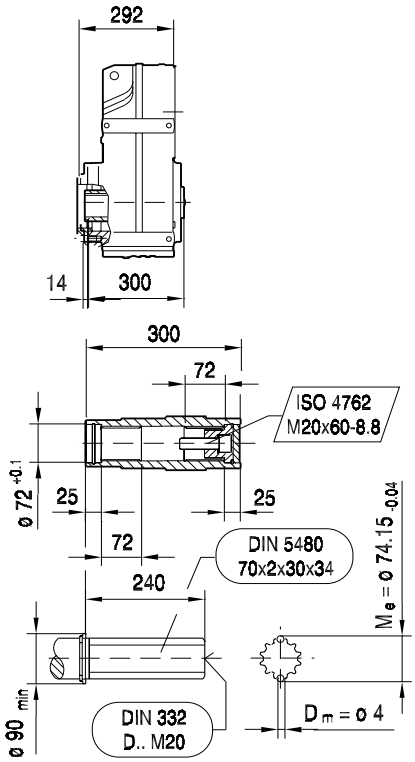

(→ 105)	CT80N	CT90L	CV100M	CV100L	CV132S	CV132M	CV132ML	CV160M	CV160L	CV180..	CV200L
AC	145	197	197	197	221	285	285	285	342	342	394
AD	126	160	165	165	178	229	229	229	252	252	285
L	607	620	670	700	748	933	993	993	1081	1153	1212
LS	670	705	755	785	828	933	993	993	1081	1153	1212
LB	315	328	378	408	456	641	701	701	789	861	920
LBS	378	413	463	493	536	641	701	701	789	861	920

FT97..

42 037 00 04

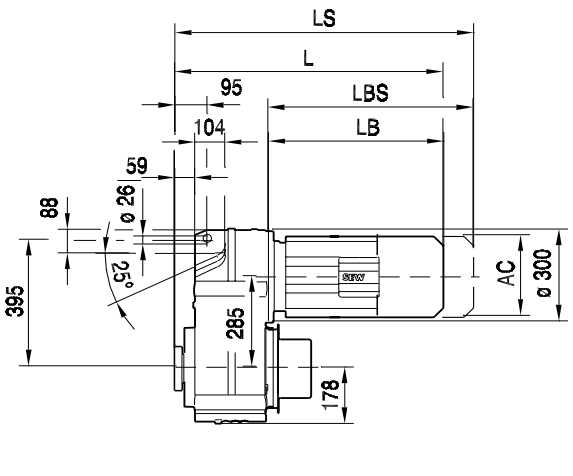

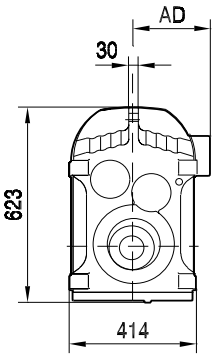

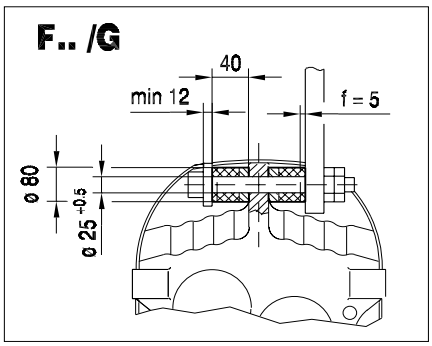

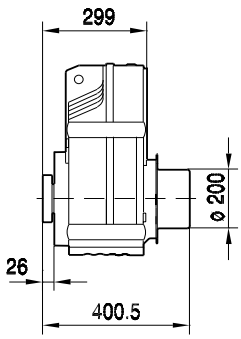

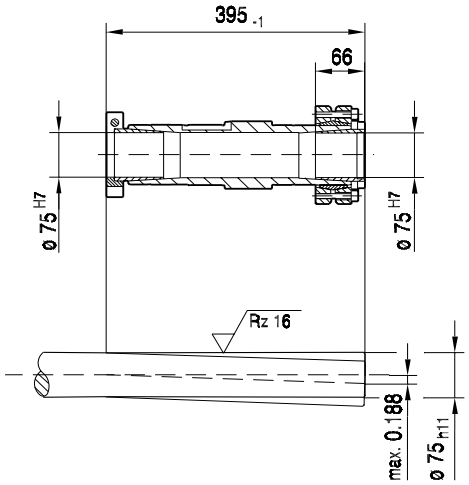

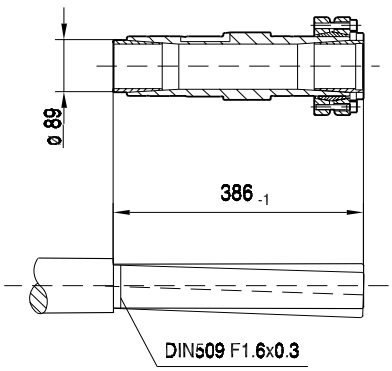

(→ 📖 105)	CT80N	CT90L	CV100M	CV100L	CV132S	CV132M	CV132ML	CV160M	CV160L	CV180..	
AC	145	197	197	197	221	285	285	285	342	342	
AD	126	160	165	165	178	229	229	229	252	252	
L	614	627	677	707	755	940	1000	1000	1088	1160	
LS	677	712	762	792	835	940	1000	1000	1088	1160	
LB	315	328	378	408	456	641	701	701	789	861	
LBS	378	413	463	493	536	641	701	701	789	861	

F107..

42 110 01 00

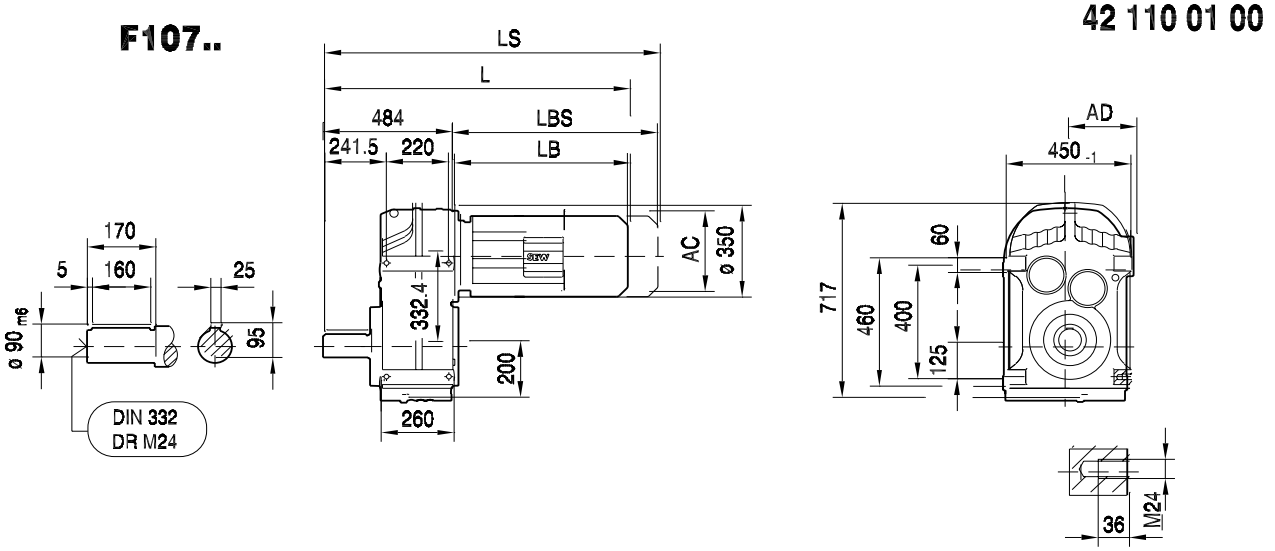

FA107B..

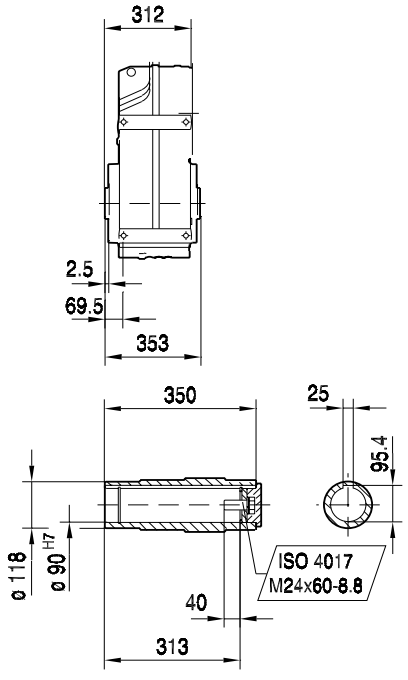

FH107B..

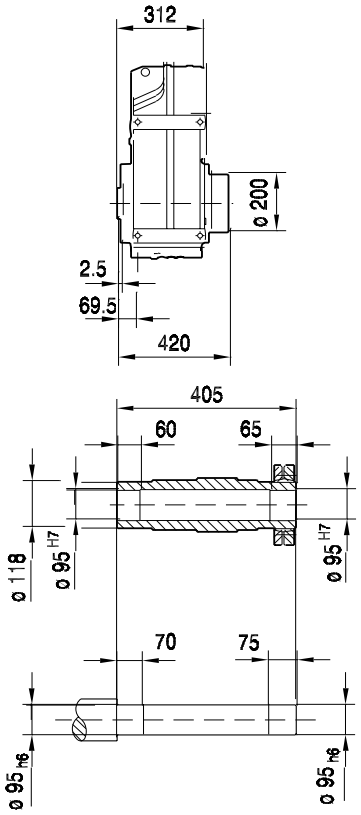

FV107B..

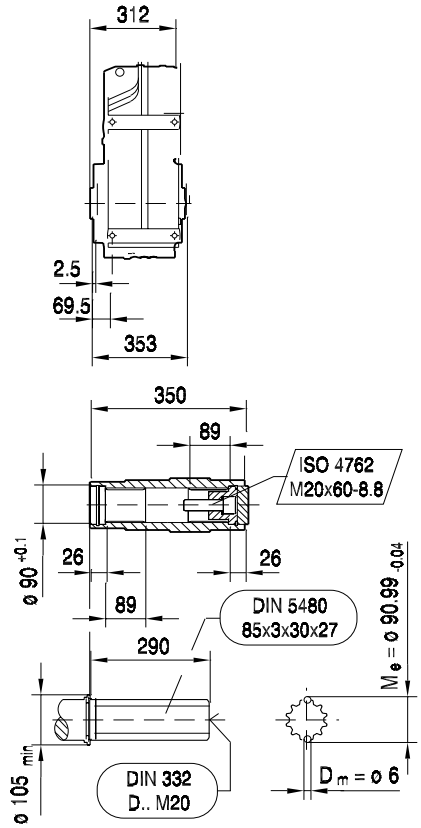

(→ 105)	CV100M	CV100L	CV132S	CV132M	CV132ML	CV160M	CV160L	CV180..	CV200L		
AC	197	197	221	285	285	285	342	342	394		
AD	165	165	178	229	229	229	252	252	285		
L	856	886	934	1119	1179	1179	1267	1339	1398		
LS	941	971	1014	1119	1179	1179	1267	1339	1398		
LB	372	402	450	635	695	695	783	855	914		
LBS	457	487	530	635	695	695	783	855	914		

FF107..

42 120 01 00

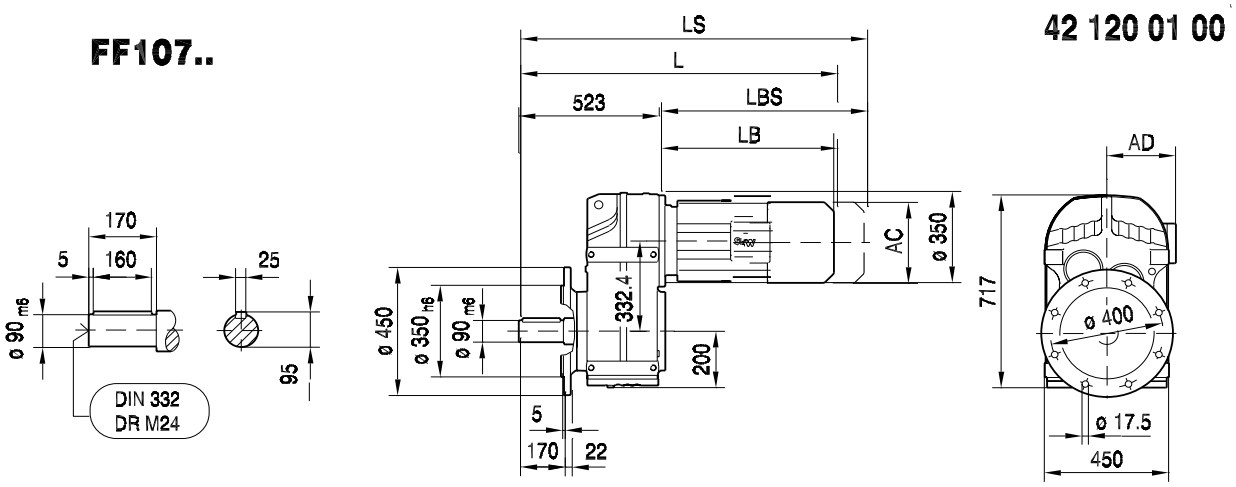

FAF107..

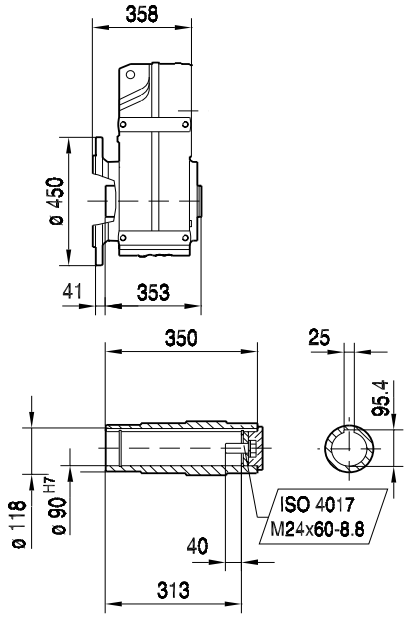

FHF107..

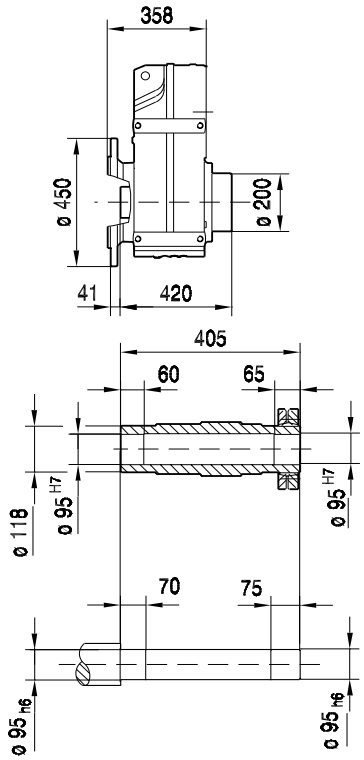

FVF107..

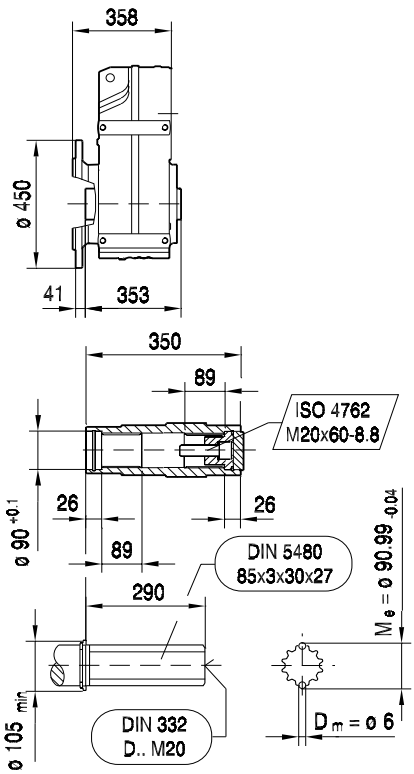

(→ 105)	CV100M	CV100L	CV132S	CV132M	CV132ML	CV160M	CV160L	CV180..	CV200L		
AC	197	197	221	285	285	285	342	342	394		
AD	165	165	178	229	229	229	252	252	285		
L	895	925	973	1158	1218	1218	1306	1378	1437		
LS	980	1010	1053	1158	1218	1218	1306	1378	1437		
LB	372	402	450	635	695	695	783	855	914		
LBS	457	487	530	635	695	695	783	855	914		

FA107..

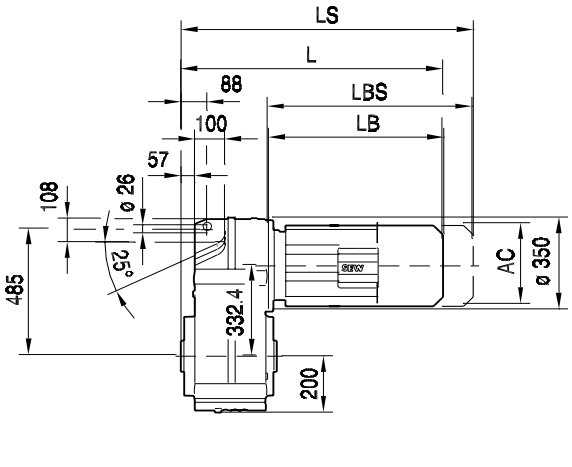

42 130 01 00

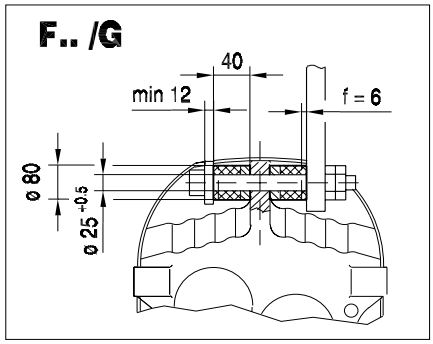

FA107..

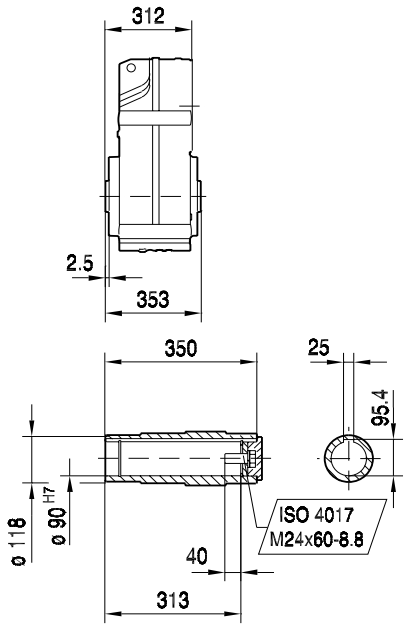

FH107..

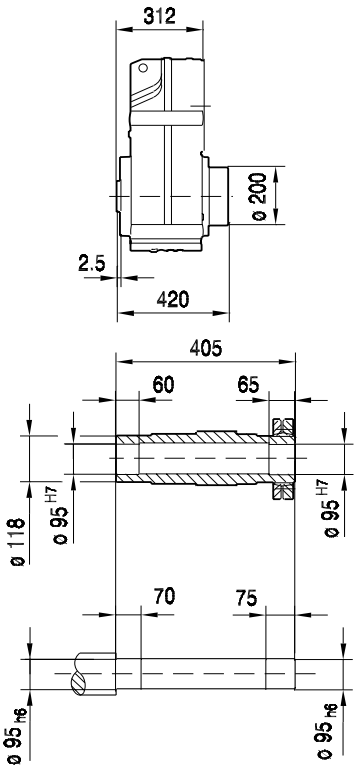

FV107..

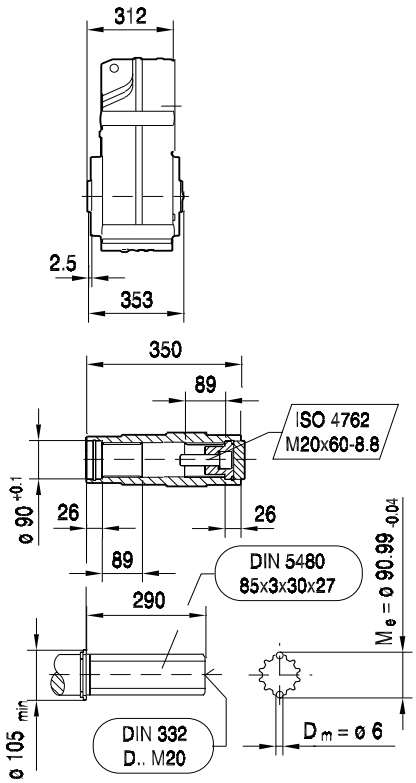

(→ 105)	CV100M	CV100L	CV132S	CV132M	CV132ML	CV160M	CV160L	CV180..	CV200L		
AC	197	197	221	285	285	285	342	342	394		
AD	165	165	178	229	229	229	252	252	285		
L	684	714	762	947	1007	1007	1095	1167	1226		
LS	769	799	842	947	1007	1007	1095	1167	1226		
LB	372	402	450	635	695	695	783	855	914		
LBS	457	487	530	635	695	695	783	855	914		

FAZ107..

42 028 00 04

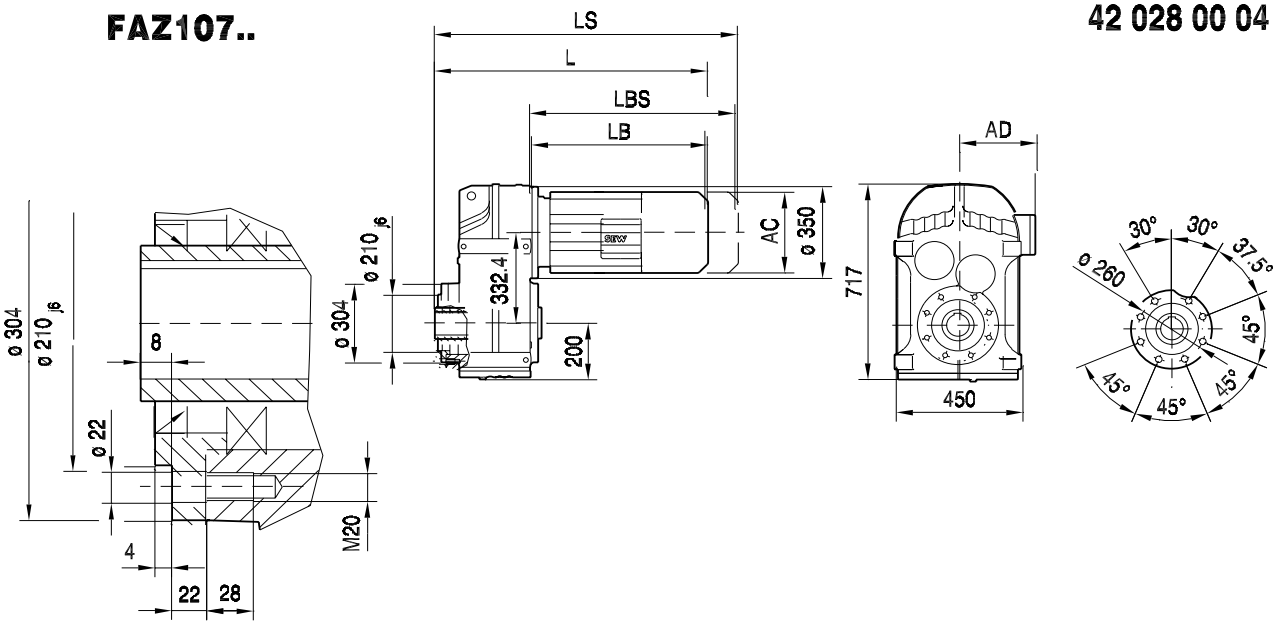

FAZ107..

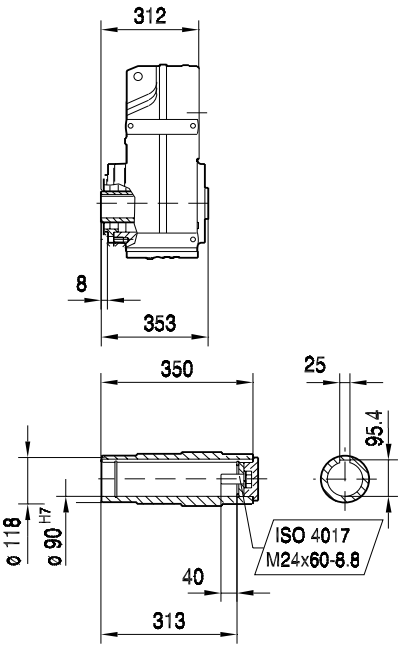

FHZ107..

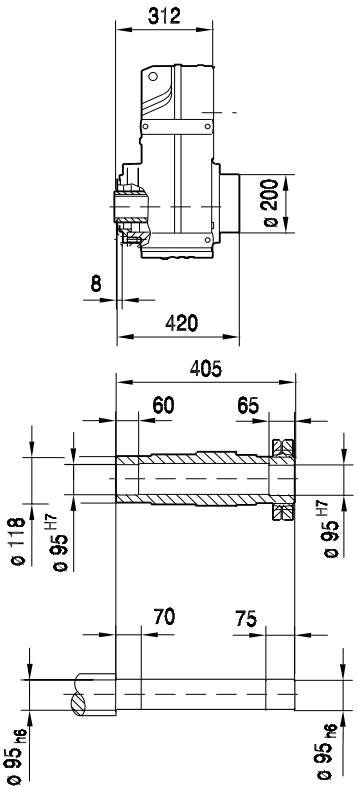

FVZ107..

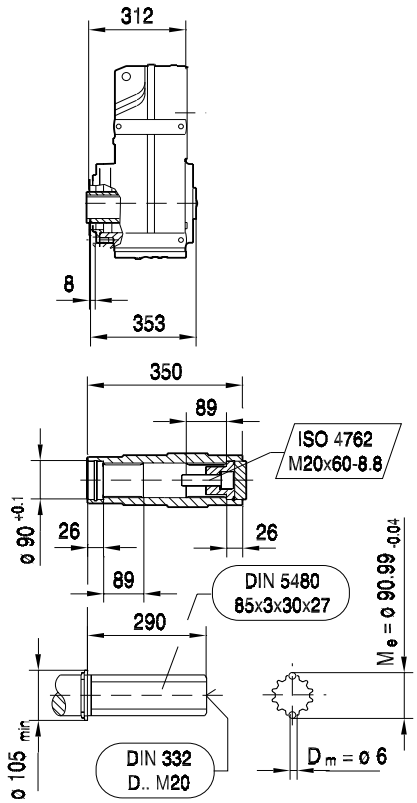

(→ 105)	CV100M	CV100L	CV132S	CV132M	CV132ML	CV160M	CV160L	CV180..	CV200L		
AC	197	197	221	285	285	285	342	342	394		
AD	165	165	178	229	229	229	252	252	285		
L	684	714	762	947	1007	1007	1095	1167	1226		
LS	769	799	842	947	1007	1007	1095	1167	1226		
LB	372	402	450	635	695	695	783	855	914		
LBS	457	487	530	635	695	695	783	855	914		

F127..

42 111 01 00

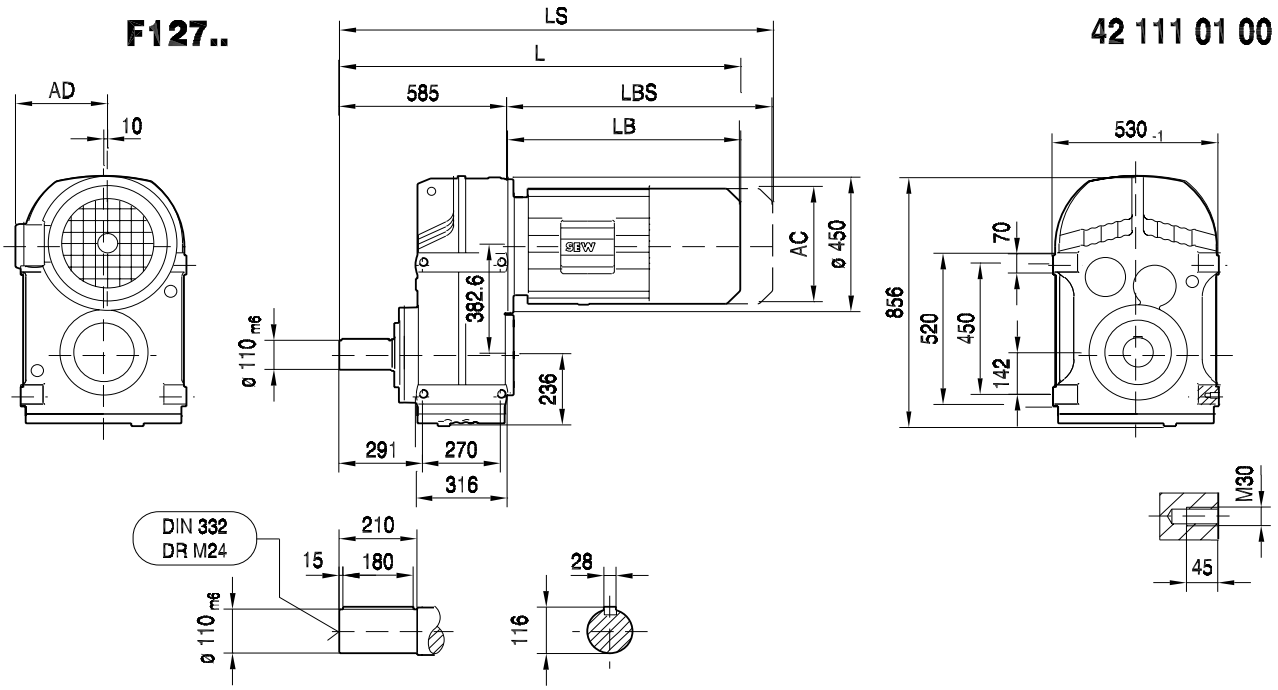

FA127B..

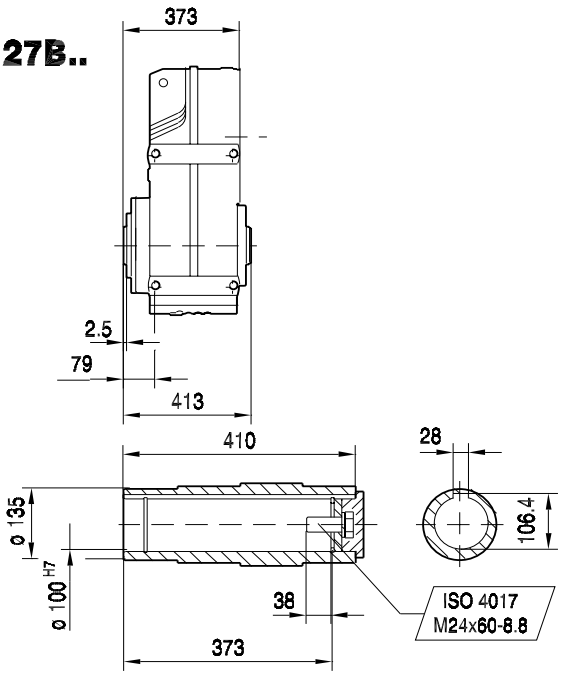

FH127B..

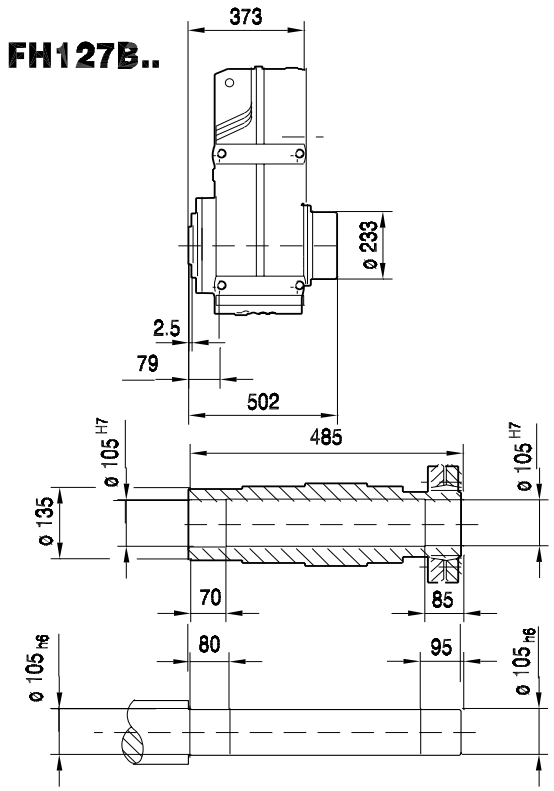

(→ 105)	CV132M	CV132ML	CV160M	CV160L	CV180..	CV200L					
AC	285	285	285	342	342	394					
AD	229	229	229	252	252	285					
L	1205	1265	1265	1353	1425	1484					
LS	1205	1265	1265	1353	1425	1484					
LB	620	680	680	768	840	899					
LBS	620	680	680	768	840	899					

FF127..

42 121 01 00

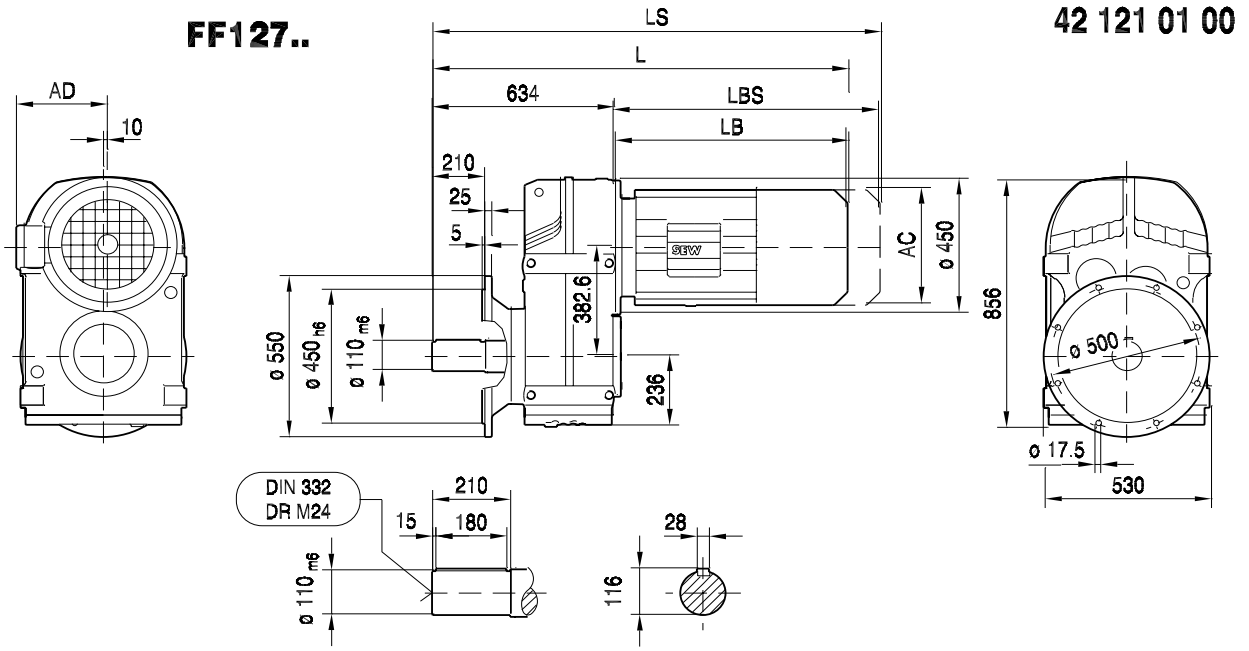

FAF127..

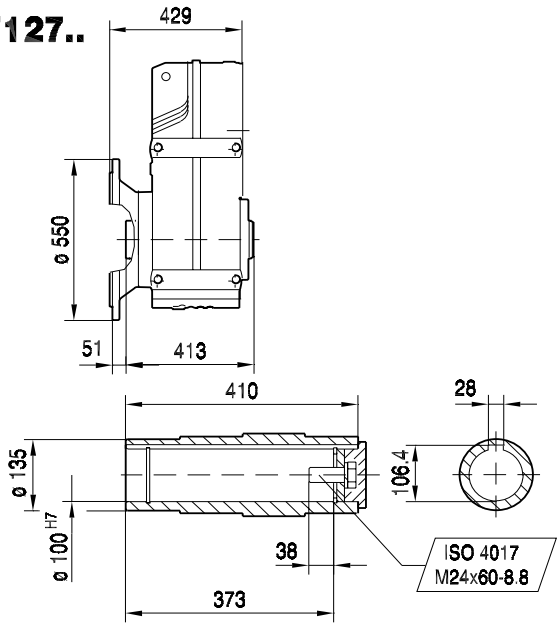

FHF127..

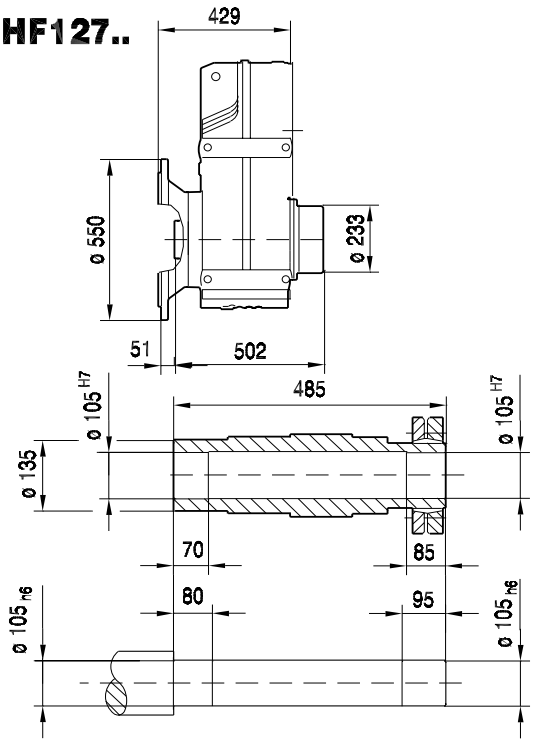

(→ 105)	CV132M	CV132ML	CV160M	CV160L	CV180..	CV200L					
AC	285	285	285	342	342	394					
AD	229	229	229	252	252	285					
L	1254	1314	1314	1402	1474	1533					
LS	1254	1314	1314	1402	1474	1533					
LB	620	680	680	768	840	899					
LBS	620	680	680	768	840	899					

42 131 01 00

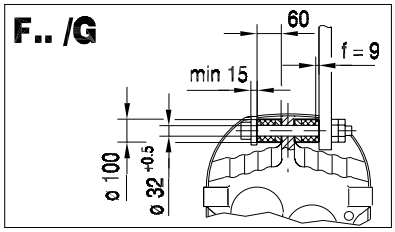

FA127..

FA127..

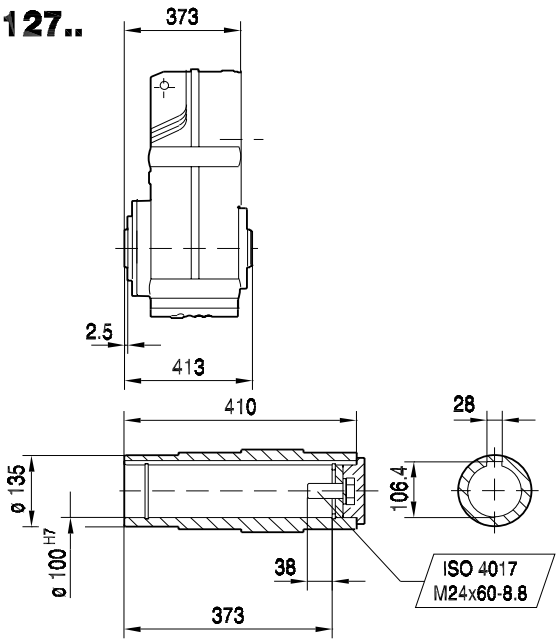

FH127..

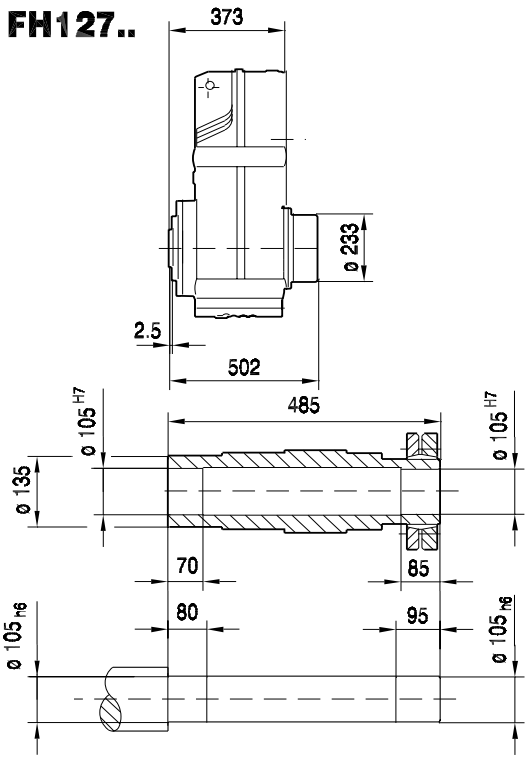

(→ 105)	CV132M	CV132ML	CV160M	CV160L	CV180..	CV200L					
AC	285	285	285	342	342	394					
AD	229	229	229	252	252	285					
L	993	1053	1053	1141	1213	1272					
LS	993	1053	1053	1141	1213	1272					
LB	620	680	680	768	840	899					
LBS	620	680	680	768	840	899					

FAZ127..

42 029 00 04

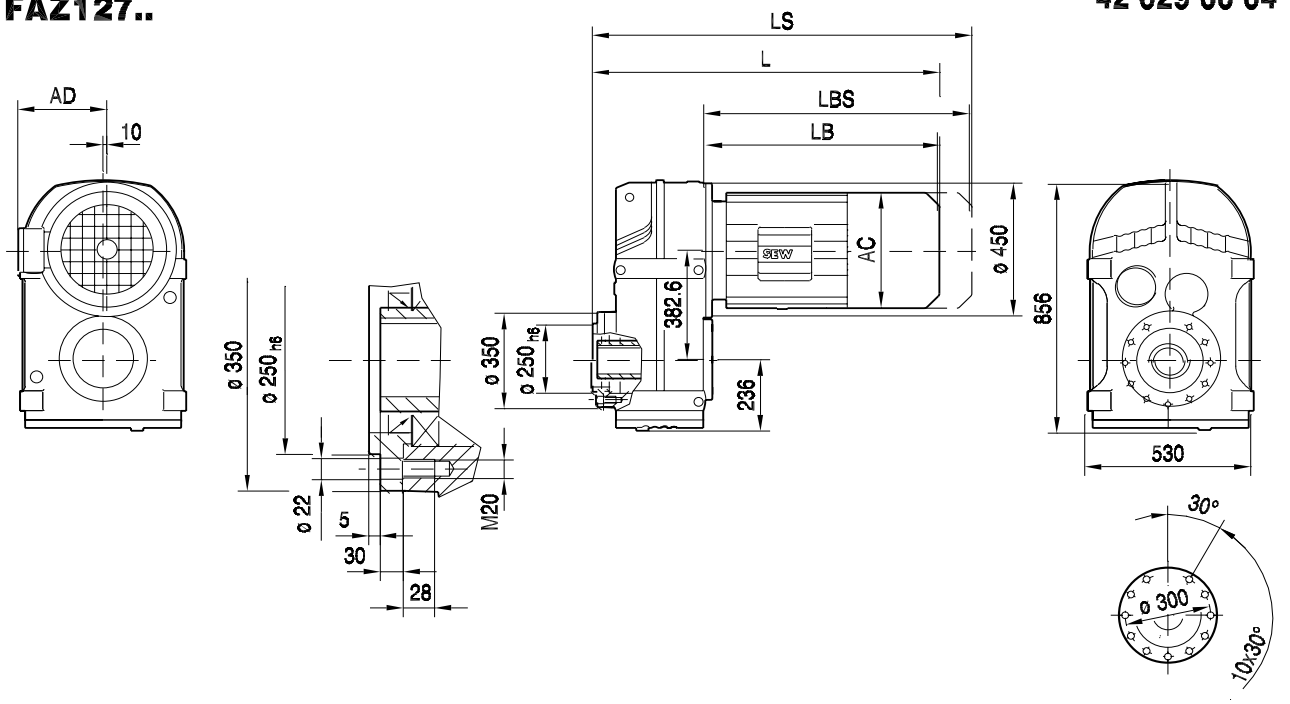

FAZ127..

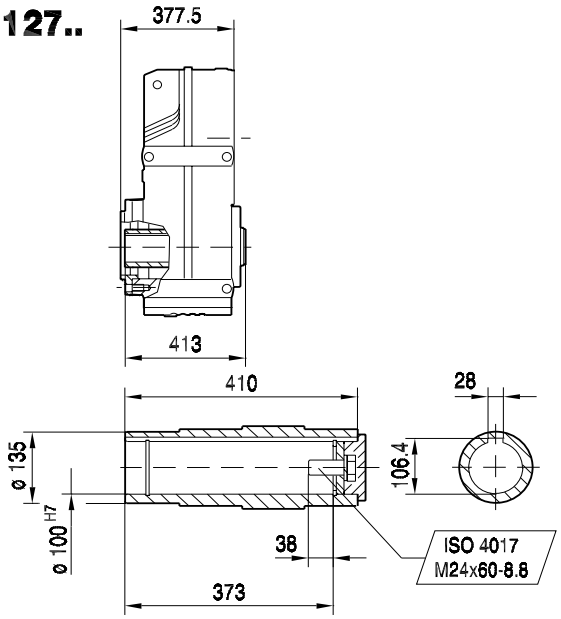

FHZ127..

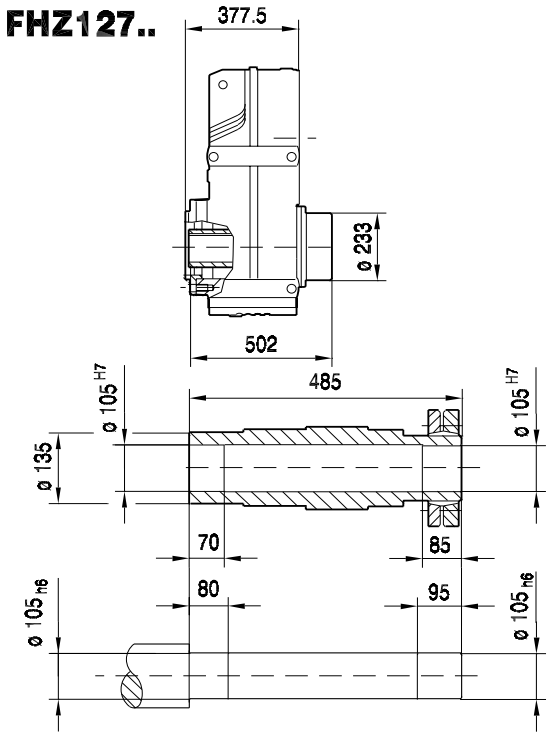

(→ 105)	CV132M	CV132ML	CV160M	CV160L	CV180..	CV200L					
AC	285	285	285	342	342	394					
AD	229	229	229	252	252	285					
L	997	1057	1057	1146	1218	1277					
LS	997	1057	1057	1146	1218	1277					
LB	620	680	680	768	840	899					
LBS	620	680	680	768	840	899					

F157..

42 112 01 00

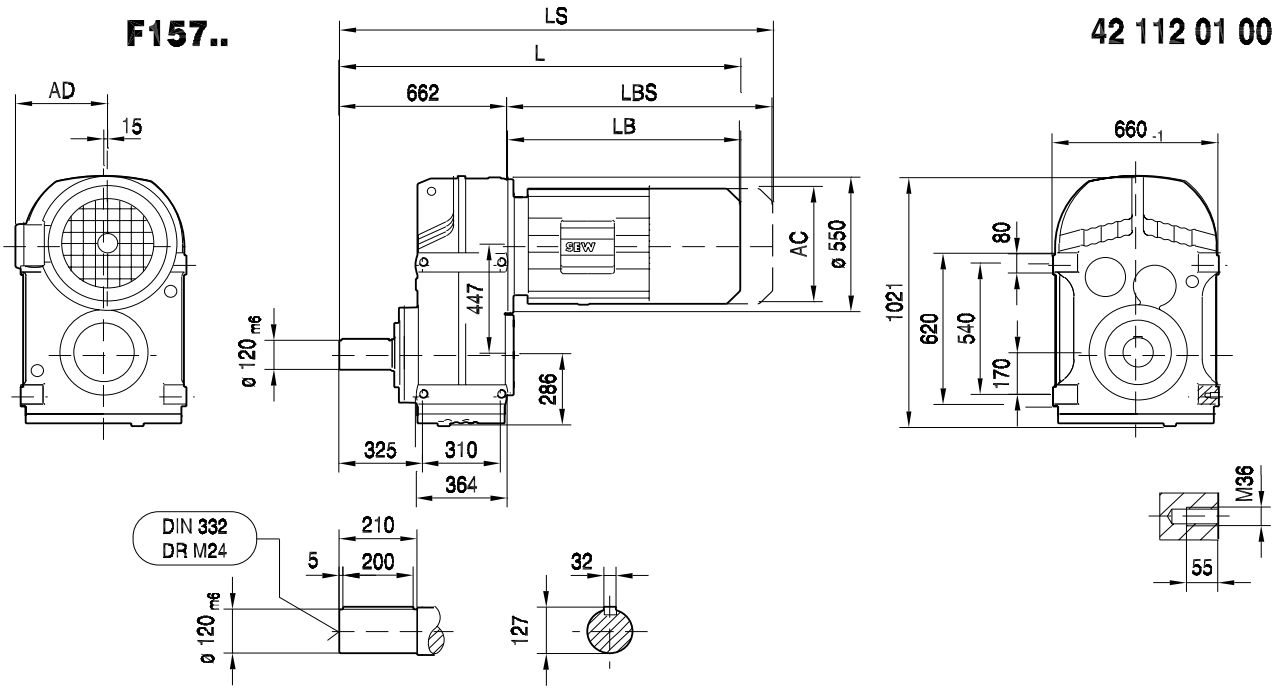

FA157B..

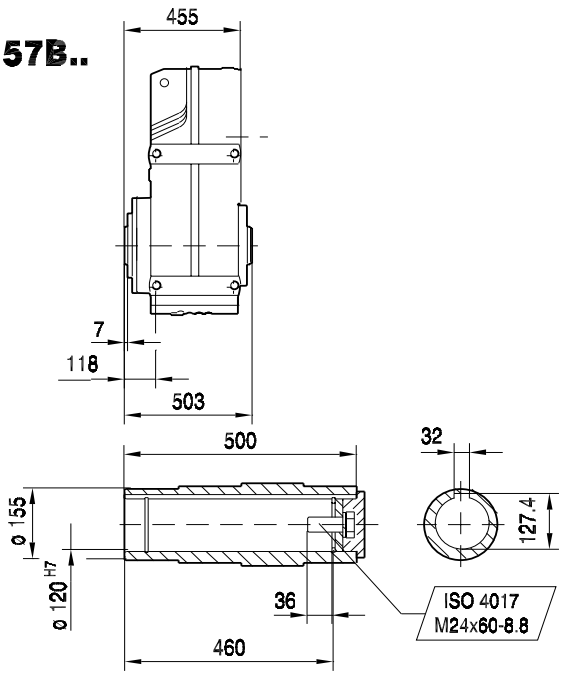

FH157B..

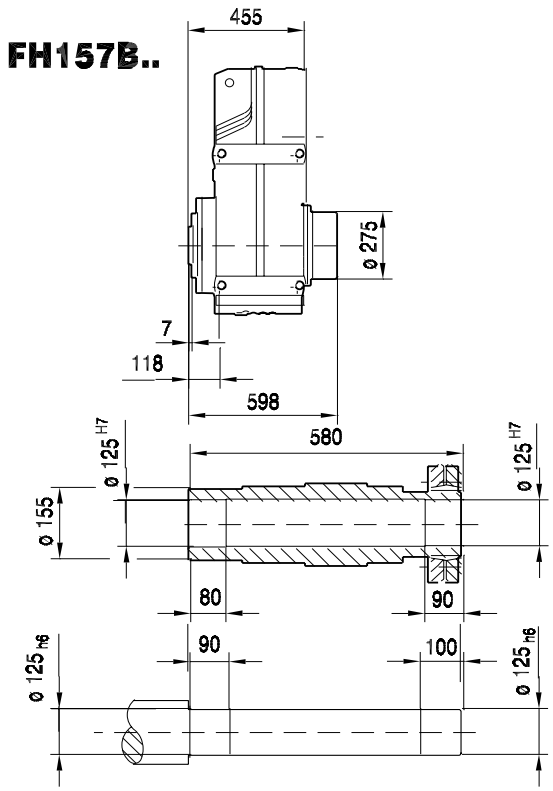

(→ 105)	CV132ML	CV160M	CV160L	CV180..	CV200L						
AC	285	285	342	342	394						
AD	229	229	252	252	285						
L	1334	1334	1422	1494	1553						
LS	1334	1334	1422	1494	1553						
LB	672	672	760	832	891						
LBS	672	672	760	832	891						

FF157..

42 122 01 00

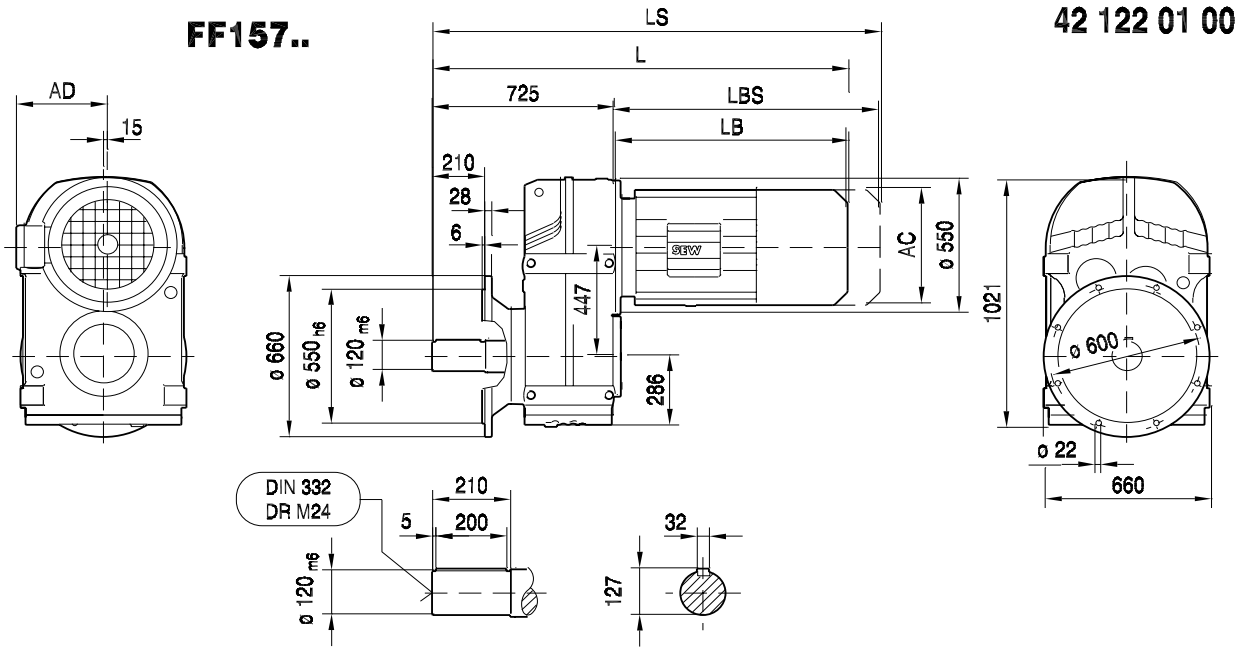

FAF157..

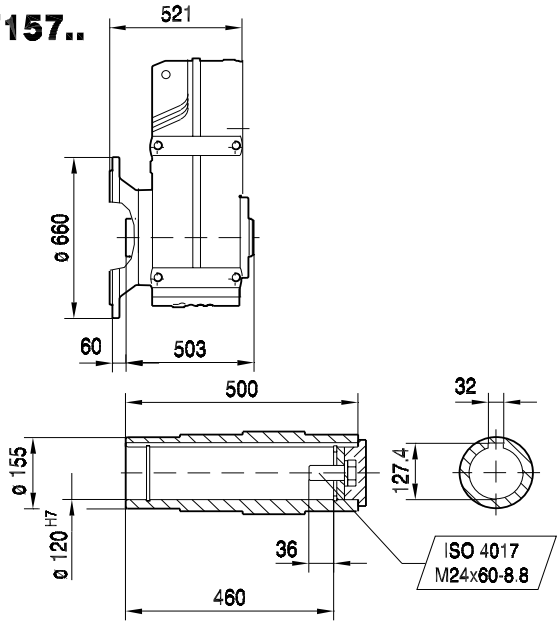

FHF157..

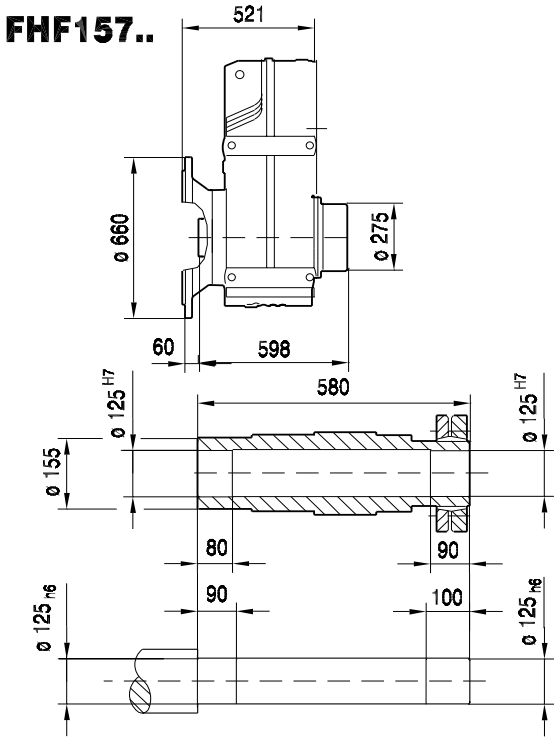

(→ 105)	CV132ML	CV160M	CV160L	CV180..	CV200L						
AC	285	285	342	342	394						
AD	229	229	252	252	285						
L	1397	1397	1485	1557	1616						
LS	1397	1397	1485	1557	1616						
LB	672	672	760	832	891						
LBS	672	672	760	832	891						

42 132 01 00

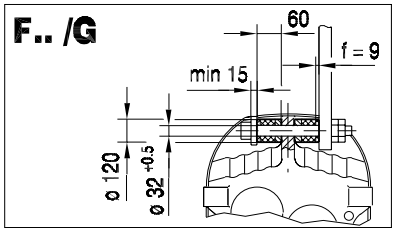

FA157..

FA157..

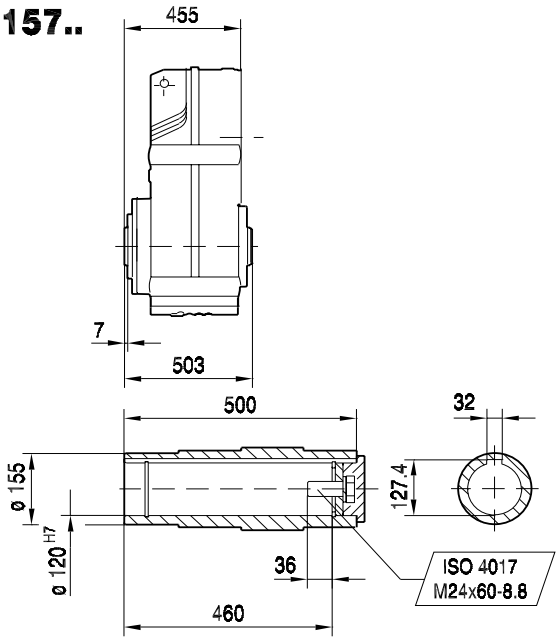

FH157..

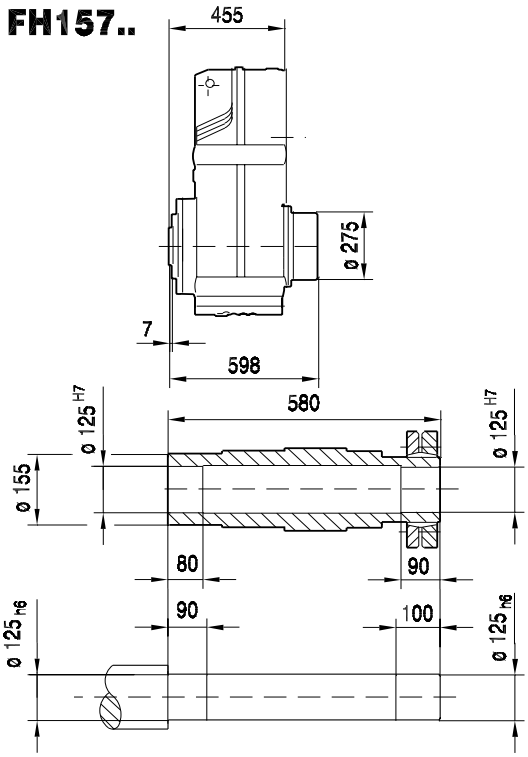

(→ 105)	CV132ML	CV160M	CV160L	CV180..	CV200L						
AC	285	285	342	342	394						
AD	229	229	252	252	285						
L	1127	1127	1215	1287	1346						
LS	1127	1127	1215	1287	1346						
LB	672	672	760	832	891						
LBS	672	672	760	832	891						

FAZ157..

42 030 00 04

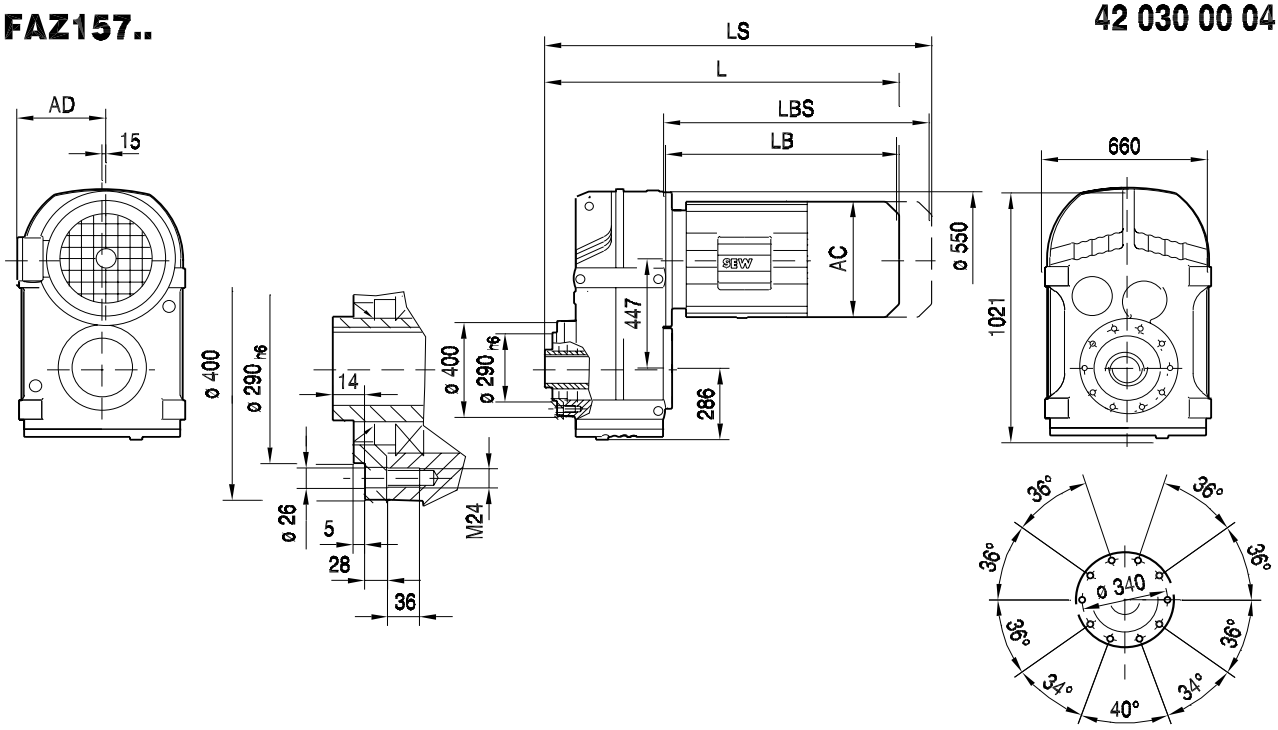

FAZ157..

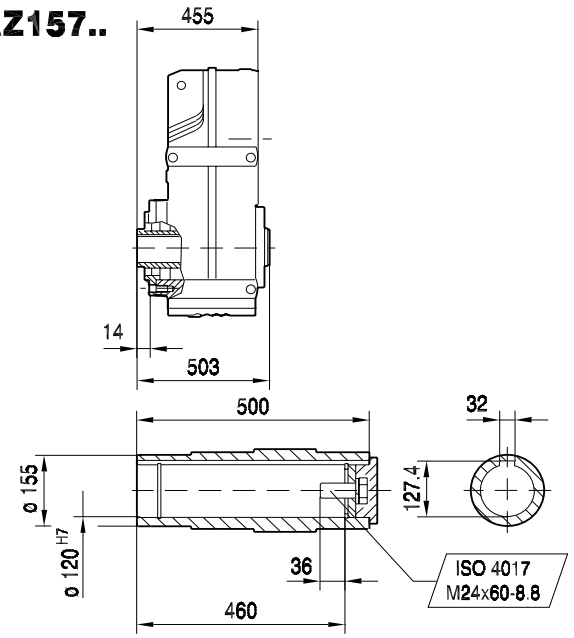

FHZ157..

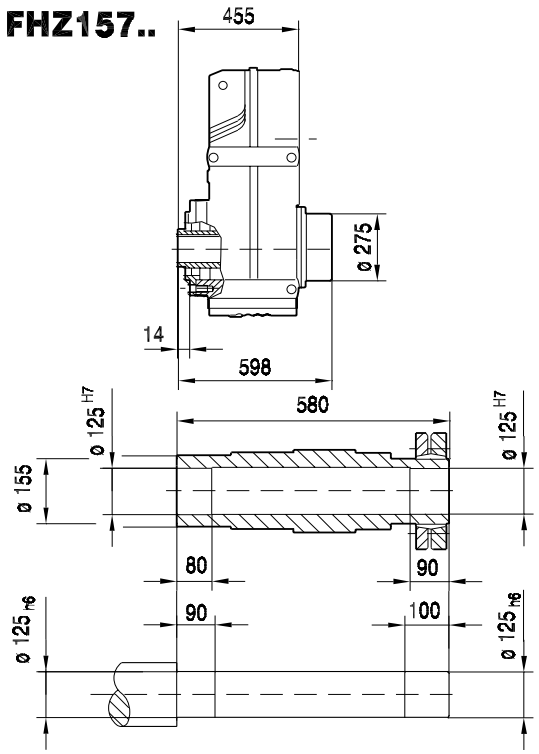

(→ 105)	CV132ML	CV160M	CV160L	CV180..	CV200L						
AC	285	285	342	342	394						
AD	229	229	252	252	285						
L	1127	1127	1215	1287	1346						
LS	1127	1127	1215	1287	1346						
LB	672	672	760	832	891						
LBS	672	672	760	832	891						

14 K..CT/CV..

14.1 K, KA..B, KV..B, KH..B, KF, KAF, KVF, KHF, KA../T, KV../T, KH../T, KAZ, KVZ, KHZ..CT/CV

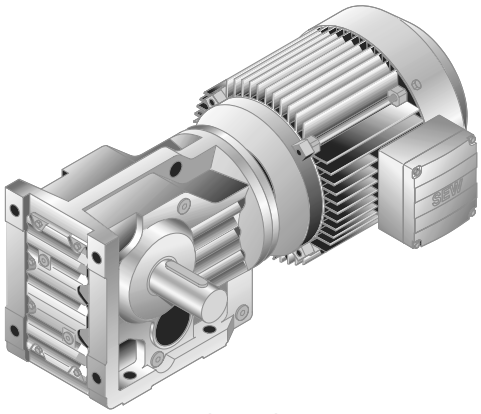

K..CT/CV..

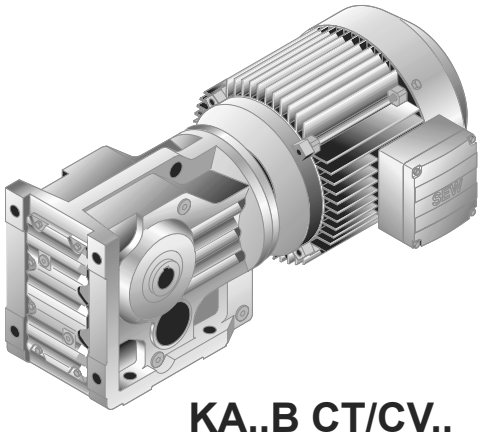

KA..B CT/CV..
KV..B CT/CV..

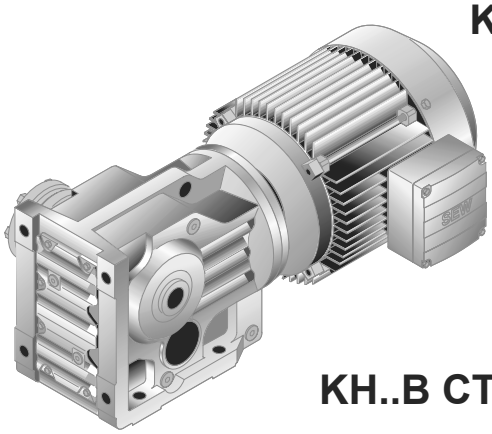

KH..B CT/CV..

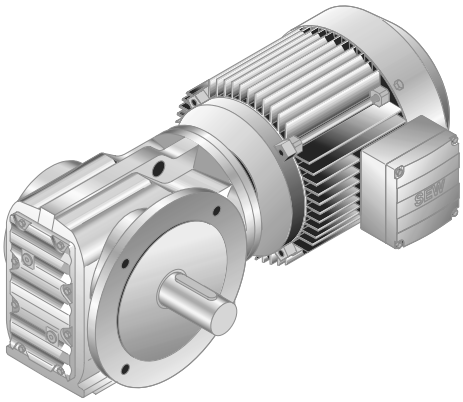

KF..CT/CV..

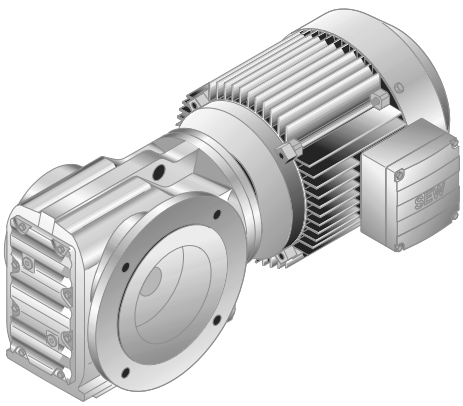

KAF..CT/CV..
KVF..CT/CV..

52831AXX

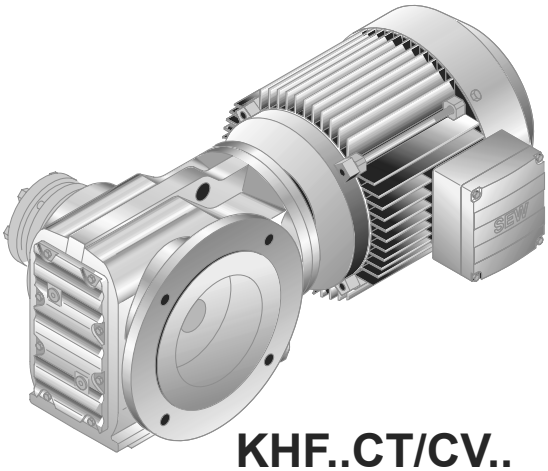

KHF..CT/CV..

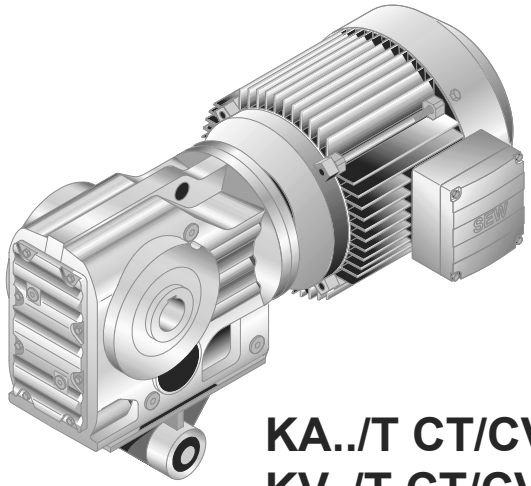

KA../T CT/CV..
KV../T CT/CV..

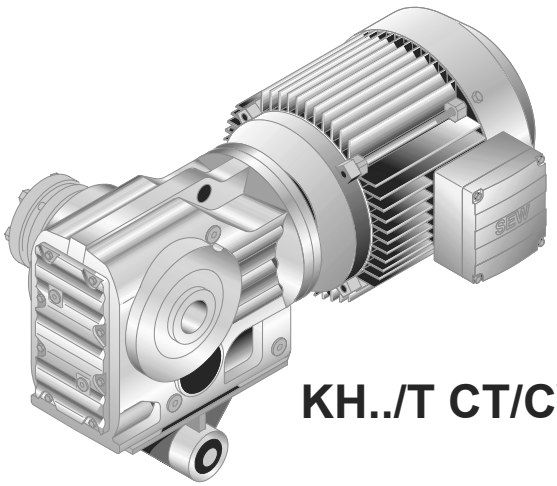

KH../T CT/CV..

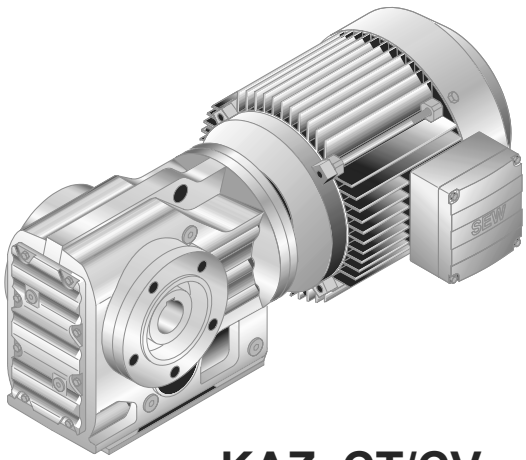

KAZ..CT/CV..
KVZ..CT/CV..

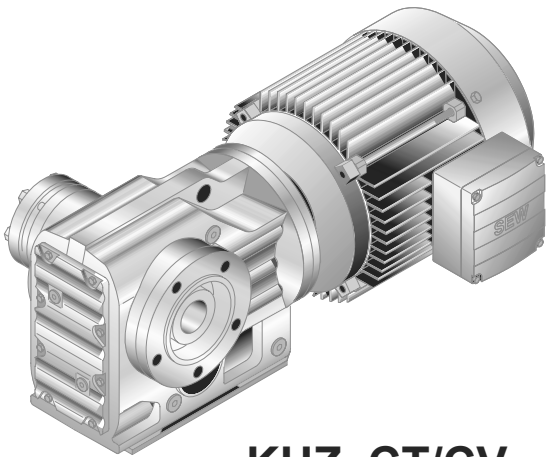

KHZ..CT/CV..

52832AXX

14.2 K37 CT.. [Nm]

	$M_{a\ max}$ [Nm]	i	$\varphi_{(/R)}$ [']	$F_{Ra}(K)$ [N]	$F_{Ra}(KA)$ [N]	$J_G 10^{-4}$ [kgm^2]	CT 71D	CT 80N	CT 90L
K37	200	83.69	7	5640	7000	0.17			
	200	72.54	7	5520	7000	0.21			
KF37	200	67.80	7	5360	7000	0.23			
	200	58.60	7	5020	6860	0.27			
KA37	200	49.79	7	4660	6380	0.36			
	200	44.46	7	4420	6060	0.42			
KAF37	200	37.97	7	4100	5630	0.54			
	200	35.57	7	3970	5460	0.60			
	200	29.96	7	3650	5030	0.76			
	200	28.83	8	3580	4940	0.26			
	200	24.99	8	3330	4600	0.33			
	195	23.36	8	3260	4510	0.37			
	185	20.19	8	3110	4300	0.46			
	180	17.15	8	2900	4020	0.62			
	175	15.31	9	2780	3850	0.76			
	165	13.08	9	2650	3670	1.01			
	160	12.14	12	2600	3600	0.40			
	160	10.49	12	2410	3340	0.51			
	160	8.91	12	2200	3070	0.70			
	155	7.96	13	2110	2940	0.85			
	150	6.80	13	1980	2760	1.13			
	145	6.37	13	1950	2720	1.27			
	140	5.36	13	1810	2530	1.71			
	125	3.98	13	1660	2310	2.55			

m [kg]	CT 71D	CT 80N	CT 90L
K37	18	21	27

KF37: + 2.3 kg / KA37: -- kg / KAF37: + 1.5 kg

14.3 K47 CT/CV.. [Nm]

	$M_{a\ max}$ [Nm]	i	$\varphi_{(/R)}$ [']	$F_{Ra}(K)$ [N]	$F_{Ra}(KA)$ [N]	$J_G 10^{-4}$ [kgm^2]	CT 71D	CT 80N	CT 90L	CV 100M
K47	400	104.37	6	5920	7760	0.26				
	400	90.86	6	5920	7240	0.32				
KF47	400	85.12*	6	5920	7000	0.35				
	400	75.20*	6	5920	6570	0.42				
KA47	400	69.84	6	5920	6320	0.45				
	400	63.30*	7	5920	5990	0.54				
KAF47	400	56.83	7	5920	5650	0.64				
	400	48.95*	7	5920	5190	0.80				
	400	46.03*	7	5920	5010	0.88				
	400	39.61	7	5920	4580	1.10				
	400	35.39	7	5920	4270	1.28				
	400	31.30	7	5700	3940	0.50				
	400	29.32	8	5520	3780	0.55				
	400	25.91	8	5170	3470	0.68				
	400	24.06	8	4970	3300	0.75				
	400	21.81	8	4710	3070	0.91				
	400	19.58	8	4440	2830	1.09				
	380	16.86	8	4230	2690	1.40				
	380	15.86	8	4080	2570	1.56				
	360	13.65	8	3890	2450	2.02				
	350	12.19	8	3720	2330	2.43				
	280	11.77	10	4060	2770	1.03				
	280	10.56	11	3830	2580	1.23				
	280	9.10	11	3540	2310	1.60				
	270	8.56	11	3500	2310	1.78				
	250	7.36	11	3390	2270	2.33				
	240	6.58	12	3270	2190	2.81				
	230	5.81	12	3140	2110	3.60				
	205	4.64	12	2980	2040	4.44				

m [kg]	CT 71D	CT 80N	CT 90L	CV 100M
K47	26	29	35	39

KF47: + 3.2 kg / KA47: - 0.85 kg / KAF47: + 2.0 kg

14.4 K57 CT/CV.. [Nm]

	$M_{a\ max}$ [Nm]	i	$\varphi_{(/R)}$ [']	$F_{Ra}(K)$ [N]	$F_{Ra}(KA)$ [N]	$J_G 10^{-4}$ [kgm^2]	CT			CV	
							71D	80N	90L	100M	100L
K57	600	123.85	6	7630	10900	0.33					
	600	108.29	6	7630	10200	0.41					
KF57	600	102.88*	6	7630	9910	0.46					
	600	90.26*	6	7630	9270	0.67					
KA57	600	76.56*	6	7630	8500	0.85					
	600	69.12	6	7630	8040	0.98					
KAF57	600	60.81*	6	7630	7490	1.22					
	600	57.42*	6	7630	7260	1.32					
	600	48.89	6	7630	6610	1.58					
	600	44.43	6	7630	6240	1.86					
	600	38.49	6	7630	5710	2.28					
	600	35.70	7	7630	5450	0.95					
	600	30.28	7	7310	4880	1.24					
	600	27.34	7	6930	4550	1.47					
	600	24.05	7	6480	4140	1.86					
	600	22.71	7	6280	3970	2.04					
	575	19.34	7	5910	3710	2.58					
	555	17.57	7	5740	3610	3.02					
	535	15.22	7	5430	3390	3.83					
	510	13.25	7	5190	3240	4.83					
	415	11.92	9	5150	3470	2.11					
	415	11.26	9	4990	3340	2.32					
	405	9.59	10	4650	3050	2.96					
	390	8.71	10	4520	2980	3.48					
	365	7.55	10	4360	2900	4.44					
	345	6.57	10	4190	2800	5.63					
	300	4.69	11	3800	2580	9.04					

m [kg]	CT			CV	
	71D	80N	90L	100M	100L
K57	31	34	40	44	47

KF57: + 4.7 kg / KA57: - 2.1 kg / KAF57: + 3.6 kg

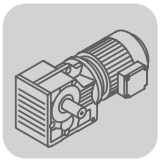

14.5 K67 CT/CV.. [Nm]

	$M_{a\ max}$ [Nm]	i	φ (/R) [']	F_{Ra}(K) [N]	F_{Ra}(KA) [N]	$J_G 10^{-4}$ [kgm^2]	CT			CV			
							71D	80N	90L	100M	100L	132S	132M
K67	820	123.54	6	10300	9770	0.34							
	820	108.03	6	10300	9060	0.42							
KF67	820	102.62	6	10300	8800	0.47							
	820	90.04	6	10300	8140	0.68							
KA67	820	76.37	6	10300	7360	0.87							
	820	68.95	6	10300	6900	1.00							
KAF67	820	60.66	6	10300	6340	1.25							
	820	57.28	6	10300	6100	1.36							
	820	48.77	6	10300	5440	1.67							
	820	44.32	6	10300	5070	1.92							
	800	38.39	6	10500	4690	2.36							
	820	35.62	7	10300	4260	1.01							
	820	30.22	7	10300	3680	1.33							
	820	27.28	7	10300	3340	1.58							
	800	24.00	7	10500	3090	2.04							
	780	22.66	7	10700	3070	2.25							
	760	19.30	7	10800	2750	2.89							
	740	17.54	7	11000	2630	3.41							
	700	15.19	8	11300	2550	4.38							
	670	13.22	8	11500	2420	5.58							
	530	12.48	9	12300	2710	2.48							
	500	10.63	9	11800	2590	3.21							
	480	9.66	9	11500	2550	3.80							
	440	8.37	9	11100	2590	4.90							
	420	7.28	9	10700	2480	6.28							
	350	5.20	10	9870	2450	11.28							

m [kg]	CT			CV			
	71D	80N	90L	100M	100L	132S	132M
K67	37	40	46	50	53	69	92

KF67: + 5.6 kg / KA67: - 2.7 kg / KAF67: + 3.0 kg

14.6 K77 CT/CV.. [Nm]

	$M_{a\ max}$ [Nm]	i	φ (/R) [']	F_{Ra}(K) [N]	F_{Ra}(KA) [N]	$J_G 10^{-4}$ [kgm^2]	CT			CV		
							71D	80N	90L	100M	100L	132S
K77	1550	154.02	5	15400	13700	0.66						
	1550	135.28	5	15400	12700	0.81						
KF77	1550	128.52	5	15400	12300	0.90						
	1550	113.56	5	15400	11400	1.26						
KA77	1550	97.05	5	15400	10300	1.59						
	1550	88.97	5	15400	9730	1.86						
KAF77	1550	78.07	5	15400	8890	2.27						
	1550	73.99	5	15400	8550	2.45						
	1550	64.75	5	15400	7740	2.95						
	1550	58.34	6	15400	7130	3.27						
	1550	51.18	6	15400	6390	4.11						
	1550	45.16	6	15400	5720	4.93						
	1550	40.04	6	15400	5100	5.96						
	1500	38.39	6	15700	5210	2.46						
	1550	35.20	6	15400	4460	2.89						
	1550	30.89	6	15400	3840	3.65						
	1550	29.27	6	15400	3590	3.99						
	1550	25.62	6	15400	2990	4.99						
	1550	23.08	6	15400	2550	5.75						
	1500	20.25	6	15700	2330	7.22						
	1450	17.87	6	16100	2160	8.97						
	1400	15.84	6	15500	2030	11.07						
	1340	13.52	7	14800	1850	14.60						
	1000	12.36	8	15100	2830	6.52						
	990	10.84	8	14400	2460	8.21						
	940	9.56	8	13900	2430	10.24						
	890	8.48	8	13500	2430	12.68						
	820	7.24	8	13100	2490	16.81						

m [kg]	CT			CV		
	71D	80N	90L	100M	100L	132S
K77	61	65	71	74	78	95

KF77: + 8.2 kg / KA77: - 7.5 kg / KAF77: -- kg

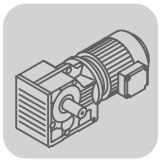

K77 CT/CV..

	$M_{a\ max}$ [Nm]	i	φ (/R) [']	F_{Ra}(K) [N]	F_{Ra}(KA) [N]	$J_G 10^{-4}$ [kgm^2]	CV 132M	CV 132ML	CV 160M
K77	1550	154.02	5	15400	13700	0.66			
	1550	135.28	5	15400	12700	0.81			
KF77	1550	128.52	5	15400	12300	0.90			
	1550	113.56	5	15400	11400	1.26			
KA77	1550	97.05	5	15400	10300	1.59			
	1550	88.97	5	15400	9730	1.86			
KAF77	1550	78.07	5	15400	8890	2.27			
	1550	73.99	5	15400	8550	2.45			
	1550	64.75	5	15400	7740	2.95			
	1550	58.34	6	15400	7130	3.27			
	1550	51.18	6	15400	6390	4.11			
	1550	45.16	6	15400	5720	4.93			
	1550	40.04	6	15400	5100	5.96			
	1500	38.39	6	15700	5210	2.46			
	1550	35.20	6	15400	4460	2.89			
	1550	30.89	6	15400	3840	3.65			
	1550	29.27	6	15400	3590	3.99			
	1550	25.62	6	15400	2990	4.99			
	1550	23.08	6	15400	2550	5.75			
	1500	20.25	6	15700	2330	7.22			
	1450	17.87	6	16100	2160	8.97			
	1400	15.84	6	15500	2030	11.07			
	1340	13.52	7	14800	1850	14.60			
	1000	12.36	8	15100	2830	6.52			
	990	10.84	8	14400	2460	8.21			
	940	9.56	8	13900	2430	10.24			
	890	8.48	8	13500	2430	12.68			
	820	7.24	8	13100	2490	16.81			

m [kg]	CV 132M	CV 132ML	CV 160M
K77	115	125	130

KF77: + 8.2 kg / KA77: - 7.5 kg / KAF77: -- kg

14.7 K87 CT/CV.. [Nm]

	$M_{a\ max}$ [Nm]	i	$\varphi_{(/R)}$ [']	$F_{Ra}(K)$ [N]	$F_{Ra}(KA)$ [N]	$J_G 10^{-4}$ [kgm^2]	CT		CV				
							80N	90L	100M	100L	132S	132M	132ML
K87	2700	174.19	5	27300	23700	1.64							
	2700	164.34*	5	27300	23000	1.80							
KF87	2700	147.32*	5	27300	21600	2.77							
	2700	126.91*	5	27300	19900	3.49							
KA87	2700	115.82	5	27300	18800	4.00							
	2700	102.71*	5	27300	17500	4.92							
KAF87	2700	86.34	5	27300	15700	6.34							
	2700	79.34	5	27300	14800	7.08							
	2700	70.46	5	27300	13700	8.36							
	2700	63.00*	5	26200	12600	9.80							
	2700	56.64	5	25000	11600	11.38							
	2700	49.16	5	23500	10400	13.72							
	2600	44.02	6	22800	10100	15.89							
	2500	36.52*	6	21400	9140	20.03							
	2700	31.39	6	19200	6900	9.63							
	2600	27.88	6	18500	6600	11.65							
	2500	24.92	6	18000	6390	13.80							
	2300	22.41	6	17900	6790	16.36							
	2300	19.45	6	16800	5890	20.37							
	2200	17.42	6	16300	5770	24.33							
	1800	16.00	6	16000	5810	12.40							
	2100	14.45	6	15300	5240	32.29							
	2000	12.56	6	14800	5030	41.94							
	1500	11.17	7	14900	5770	21.91							
	1500	10.00	7	14200	5210	26.25							
	1400	8.29	7	13500	4960	35.09							
	1300	7.21	7	13200	4970	45.64							

m [kg]	CT		CV				
	80N	90L	100M	100L	132S	132M	132ML
K87	100	105	110	115	130	150	160

KF87: + 9.2 kg / KA87: - 12 kg / KAF87: + 1.1 kg

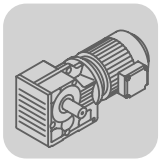

K87 CT/CV..

	$M_{a\ max}$ [Nm]	i	φ (/R) [']	$F_{Ra}(K)$ [N]	$F_{Ra}(KA)$ [N]	$J_G 10^{-4}$ [kgm^2]	CV			
							160M	160L	180M	180L
K87	2700	174.19	5	27300	23700	1.64				
	2700	164.34*	5	27300	23000	1.80				
KF87	2700	147.32*	5	27300	21600	2.77				
	2700	126.91*	5	27300	19900	3.49				
KA87	2700	115.82	5	27300	18800	4.00				
	2700	102.71*	5	27300	17500	4.92				
KAF87	2700	86.34	5	27300	15700	6.34				
	2700	79.34	5	27300	14800	7.08				
	2700	70.46	5	27300	13700	8.36				
	2700	63.00*	5	26200	12600	9.80				
	2700	56.64	5	25000	11600	11.38				
	2700	49.16	5	23500	10400	13.72				
	2600	44.02	6	22800	10100	15.89				
	2500	36.52*	6	21400	9140	20.03				
	2700	31.39	6	19200	6900	9.63				
	2600	27.88	6	18500	6600	11.65				
	2500	24.92	6	18000	6390	13.80				
	2300	22.41	6	17900	6790	16.36				
	2300	19.45	6	16800	5890	20.37				
	2200	17.42	6	16300	5770	24.33				
	1800	16.00	6	16000	5810	12.40				
	2100	14.45	6	15300	5240	32.29				
	2000	12.56	6	14800	5030	41.94				
	1500	11.17	7	14900	5770	21.91				
	1500	10.00	7	14200	5210	26.25				
	1400	8.29	7	13500	4960	35.09				
	1300	7.21	7	13200	4970	45.64				

m [kg]	CV			
	160M	160L	180M	180L
K87	165	205	255	270

KF87: + 9.2 kg / KA87: - 12 kg / KAF87: + 1.1 kg

14.8 K97 CT/CV.. [Nm]

	$M_{a\ max}$ [Nm]	i	φ (/R) [']	F_{Ra}(K) [N]	F_{Ra}(KA) [N]	$J_G 10^{-4}$ [kgm^2]	CT		CV				
							80N	90L	100M	100L	132S	132M	132ML
K97	4300	176.05*	7	40000	40000	4.05							
	4300	153.21*	7	40000	40000	5.17							
KF97	4300	140.28	7	40000	40000	5.94							
	4300	123.93*	7	40000	39500	9.32							
KA97	4300	105.13	7	40000	36300	11.99							
	4300	96.80	7	40000	34700	13.25							
KAF97	4300	86.52	7	38800	32700	15.60							
	4300	77.89*	7	37100	30900	18.12							
	4300	70.54	7	35600	29200	20.69							
	4300	62.55	7	33800	27300	24.86							
	4300	56.55	7	32300	25700	28.49							
	4300	47.93*	7	30000	23300	34.60							
	4300	41.87	7	28300	21300	42.47							
	4300	38.30	7	27100	20100	18.26							
	4300	34.23	7	25700	18600	21.88							
	4300	30.82	7	24500	17300	25.74							
	4300	27.91	8	23300	16100	30.14							
	4300	24.75	8	22000	14700	36.58							
	4300	22.37	8	20900	13500	42.90							
	4300	18.96	8	19100	11700	54.76							
	4300	16.56	8	17800	10300	68.99							
	4300	13.85	8	16100	8530	90.87							
	3890	11.99	8	16200	9100	114.82							
	2870	10.41	10	16400	10300	71.09							
	2660	8.71	10	15800	9930	93.87							
	2400	7.54	10	15700	10200	120.34							

m [kg]	CT		CV				
	80N	90L	100M	100L	132S	132M	132ML
K97	160	165	170	175	190	210	220

KF97: + 20 kg / KA97: - 18 kg / KAF97: + 6.7 kg

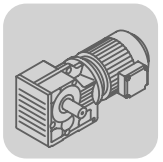

K97 CT/CV..

	$M_{a\ max}$ [Nm]	i	φ (/R) [']	F_{Ra}(K) [N]	F_{Ra}(KA) [N]	$J_G 10^{-4}$ [kgm^2]	CV				
							160M	160L	180M	180L	200L
K97	4300	176.05*	7	40000	40000	4.05					
	4300	153.21*	7	40000	40000	5.17					
KF97	4300	140.28	7	40000	40000	5.94					
	4300	123.93*	7	40000	39500	9.32					
KA97	4300	105.13	7	40000	36300	11.99					
	4300	96.80	7	40000	34700	13.25					
KAF97	4300	86.52	7	38800	32700	15.60					
	4300	77.89*	7	37100	30900	18.12					
	4300	70.54	7	35600	29200	20.69					
	4300	62.55	7	33800	27300	24.86					
	4300	56.55	7	32300	25700	28.49					
	4300	47.93*	7	30000	23300	34.60					
	4300	41.87	7	28300	21300	42.47					
	4300	38.30	7	27100	20100	18.26					
	4300	34.23	7	25700	18600	21.88					
	4300	30.82	7	24500	17300	25.74					
	4300	27.91	8	23300	16100	30.14					
	4300	24.75	8	22000	14700	36.58					
	4300	22.37	8	20900	13500	42.90					
	4300	18.96	8	19100	11700	54.76					
	4300	16.56	8	17800	10300	68.99					
	4300	13.85	8	16100	8530	90.87					
	3890	11.99	8	16200	9100	114.82					
	2870	10.41	10	16400	10300	71.09					
	2660	8.71	10	15800	9930	93.87					
	2400	7.54	10	15700	10200	120.34					

m [kg]	CV				
	160M	160L	180M	180L	200L
K97	225	265	315	330	385

KF97: + 20 kg / KA97: - 18 kg / KAF97: + 6.7 kg

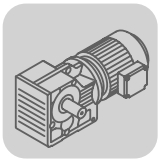

14.9 K107 CV.. [Nm]

	$M_{a\ max}$ [Nm]	i	φ (/R) [']	F_{Ra}(K) [N]	F_{Ra}(KA) [N]	F_{Ra}(KAF) [N]	$J_G 10^{-4}$ [kgm^2]	CV					
								100M	100L	132S	132M	132ML	160M
K107	8000	143.47*	6	65000	39600	65000	11.80						
	8000	121.46	6	61700	35700	65000	15.11						
KF107	8000	112.41*	6	59700	34000	65000	16.82						
	8000	100.75	6	57000	31700	65000	19.85						
KA107	8000	90.96*	6	54600	29600	65000	25.48						
	8000	82.61	6	52400	27700	65000	29.25						
KAF107	8000	73.30	6	49700	25400	65000	34.87						
	8000	66.52*	6	47600	23600	65000	39.85						
	8000	57.17*	6	44400	20900	65000	48.20						
	7840	49.90	6	42200	19200	65000	58.21						
	7360	42.33*	6	40500	18400	65000	71.75						
	7200	37.00*	6	38500	17000	65000	85.61						
	7200	32.69	6	36300	15100	65000	44.53						
	6800	31.28*	6	36700	16100	65000	112.30						
	7200	29.00	6	34000	13400	65000	54.00						
	7200	26.32	6	32000	12100	65000	63.14						
	7200	22.62	6	28900	10100	61200	80.11						
	7200	19.74	6	26100	8440	57700	100.22						
	7050	16.75	7	23600	7080	54200	130.73						
	6890	14.64	7	21900	6180	51700	163.34						
	4300	13.43	9	29200	12600	56500	82.46						
	4300	11.73	9	27500	11100	53500	103.65						
	4190	9.94	9	25800	10000	50500	135.51						
	4070	8.69	9	24600	9270	48300	169.59						
	3600	7.35	9	24400	9900	47100	230.71						

m [kg]	CV					
	100M	100L	132S	132M	132ML	160M
K107	285	290	305	325	335	340

KF107: + 12 kg / KA107: - 27 kg / KAF107: - 3.2 kg

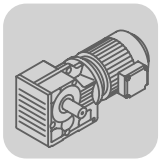

K107 CV..

	$M_{a\ max}$ [Nm]	i	φ (/R) [']	F_{Ra}(K) [N]	F_{Ra}(KA) [N]	F_{Ra}(KAF) [N]	$J_G 10^{-4}$ [kgm^2]	CV 160L	CV 180M	CV 180L	CV 200L
K107	8000	143.47*	6	65000	39600	65000	11.80				
	8000	121.46	6	61700	35700	65000	15.11				
KF107	8000	112.41*	6	59700	34000	65000	16.82				
	8000	100.75	6	57000	31700	65000	19.85				
KA107	8000	90.96*	6	54600	29600	65000	25.48				
	8000	82.61	6	52400	27700	65000	29.25				
KAF107	8000	73.30	6	49700	25400	65000	34.87				
	8000	66.52*	6	47600	23600	65000	39.85				
	8000	57.17*	6	44400	20900	65000	48.20				
	7840	49.90	6	42200	19200	65000	58.21				
	7360	42.33*	6	40500	18400	65000	71.75				
	7200	37.00*	6	38500	17000	65000	85.61				
	7200	32.69	6	36300	15100	65000	44.53				
	6800	31.28*	6	36700	16100	65000	112.30				
	7200	29.00	6	34000	13400	65000	54.00				
	7200	26.32	6	32000	12100	65000	63.14				
	7200	22.62	6	28900	10100	61200	80.11				
	7200	19.74	6	26100	8440	57700	100.22				
	7050	16.75	7	23600	7080	54200	130.73				
	6890	14.64	7	21900	6180	51700	163.34				
	4300	13.43	9	29200	12600	56500	82.46				
	4300	11.73	9	27500	11100	53500	103.65				
	4190	9.94	9	25800	10000	50500	135.51				
	4070	8.69	9	24600	9270	48300	169.59				
	3600	7.35	9	24400	9900	47100	230.71				

m [kg]	CV 160L	CV 180M	CV 180L	CV 200L
K107	380	430	445	500

KF107: + 12 kg / KA107: - 27 kg / KAF107: - 3.2 kg

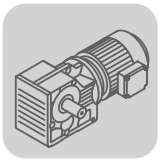

14.10 K127 CV.. [Nm]

	$M_{a\ max}$ [Nm]	i	φ (/R) [']	F_{Ra}(K) [N]	F_{Ra}(KA) [N]	F_{Ra}(KAF) [N]	$J_G 10^{-4}$ [kgm^2]	CV 132M	132ML	160M	160L	180M	180L	200L
K127	13000	136.14	5	79200	36000	90000	29.33							
	13000	122.48	5	79200	33200	90000	34.60							
KF127	13000	110.18	5	79200	30500	90000	39.65							
	13000	89.89	5	75100	25600	90000	61.30							
KA127	13000	81.98	5	72100	23400	90000	69.90							
	13000	70.95*	5	67700	20300	90000	84.34							
KAF127	13000	62.60	5	64000	17600	90000	101.29							
	13000	54.07	5	59900	14700	90000	124.27							
	13000	47.82	5	56500	12300	90000	146.24							
	13000	40.19	5	52000	9090	90000	183.68							
	13000	36.25	6	49400	7280	86300	97.11							
	13000	31.37	6	45900	4840	80900	120.39							
	13000	27.68	6	43000	2830	76300	147.94							
	13000	23.91	6	39800	575	71300	186.82							
	13000	21.15	6	37200	39	67200	226.19							
	13000	17.77	6	33600	39	61600	305.29							
	12100	14.35	6	31800	35	58100	430.62							
	8530	12.79	8	35400	3080	62100	239.59							
	8000	10.74	8	33900	3100	59300	317.83							
	7230	8.68	8	32500	3750	56600	449.84							

m [kg]	CV 132M	132ML	160M	160L	180M	180L	200L
K127	480	490	495	530	580	600	650

KF127: + 42 kg / KA127: - 28 kg / KAF127: + 9.2 kg

14.11 K157 CV.. [Nm]

	$M_{a\ max}$ [Nm]	i	φ (/R) [']	F_{Ra}(K) [N]	F_{Ra}(KA) [N]	$J_G 10^{-4}$ [kgm^2]	CV					
							132ML	160M	160L	180M	180L	200L
K157	18000	122.39	5	106500	120000	59.22						
	18000	100.22	5	98000	120000	90.96						
KF157	18000	91.65	5	94400	117100	103.86						
	18000	79.75	5	88900	110300	125.35						
KA157	18000	70.38	5	84200	104400	149.91						
	18000	61.02	5	79000	97900	182.94						
KAF157	18000	54.29	5	74900	92700	214.58						
	18000	46.79	5	70000	86500	280.11						
	18000	38.02	5	63300	78200	363.99						
	18000	31.30	6	57500	70900	222.15						
	18000	27.62	6	54000	66400	274.21						
	18000	23.95	6	50000	61500	350.96						
	18000	21.31	6	47000	57700	428.03						
	18000	18.37	6	43200	52900	573.90						
	18000	14.92	6	38200	46700	817.07						
	17000	12.65	6	36700	44800	1095.6						

m [kg]	CV					
	132ML	160M	160L	180M	180L	200L
K157	720	730	770	820	830	880

KF157: + 78 kg / KA157: - 37 kg / KAF157: + 22 kg

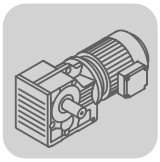

14.12 K167 CV.. [Nm]

	$M_{a\ max}$ [Nm]	i	φ (/R) [']	F_{Ra}(K) [N]	F_{Ra}(KH) [N]	$J_G 10^{-4}$ [kgm^2]	CV					
							132ML	160M	160L	180M	180L	200L
K167	32000	134.99	5	150000	150000	79.92						
	32000	109.83	5	150000	150000	120.53						
KH167	32000	87.86	5	147200	150000	168.12						
	32000	78.14	5	140100	150000	203.13						
	32000	68.07	5	132000	150000	252.12						
	32000	60.74	5	125600	150000	298.15						
	32000	51.77	5	117000	146300	375.92						
	32000	42.89	5	107400	134200	521.97						
	32000	36.61	5	99700	124500	667.06						
	32000	32.25	5	93700	117100	409.06						
	32000	28.77	5	88600	110600	495.30						
	32000	24.52	5	81700	102000	659.88						
	32000	20.32	5	74000	92300	917.23						
	32000	17.34	5	67900	84500	1209.7						

m [kg]	CV					
	132ML	160M	160L	180M	180L	200L
K167	1120	1130	1160	1210	1230	1280

KH167: - 38 kg

14.13 K187 CV.. [Nm]

	$M_{a\ max}$ [Nm]	i	φ (/R) [']	F_{Ra}(K) [N]	F_{Ra}(KH) [N]	$J_G 10^{-4}$ [kgm^2]	CV					
							132ML	160M	160L	180M	180L	200L
K187	50000	179.86	4	189900	190000	193.71						
	50000	165.21	4	189900	190000	221.56						
KH187	50000	144.59	4	189900	190000	267.41						
	50000	129.69	4	188200	190000	354.37						
	50000	112.60	4	177200	190000	427.36						
	50000	102.16	4	169900	190000	506.87						
	50000	88.00	4	159000	190000	625.61						
	50000	73.96	4	147000	189000	823.96						
	50000	64.04	4	137500	176800	1011.2						
	50000	53.36	4	126100	162100	1266.2						
	50000	45.50*	4	116600	149800	1586.0						
	50000	42.51	4	112700	144800	703.34						
	50000	38.57	4	107200	137800	842.11						
	50000	33.23	4	99100	127400	1090.0						
	50000	27.92	4	90200	115800	1463.6						
	47600	24.18	4	86800	111500	1864.5						
	43900	20.15	4	84000	107900	2494.9						
	41400	17.18	4	80800	103800	3276.2						

m [kg]	CV					
	132ML	160M	160L	180M	180L	200L
K187	1700	1710	1740	1790	1810	1860

KH187: - 67 kg

14.14 K..CT/CV.. [mm]

34 006 00 04

K37..

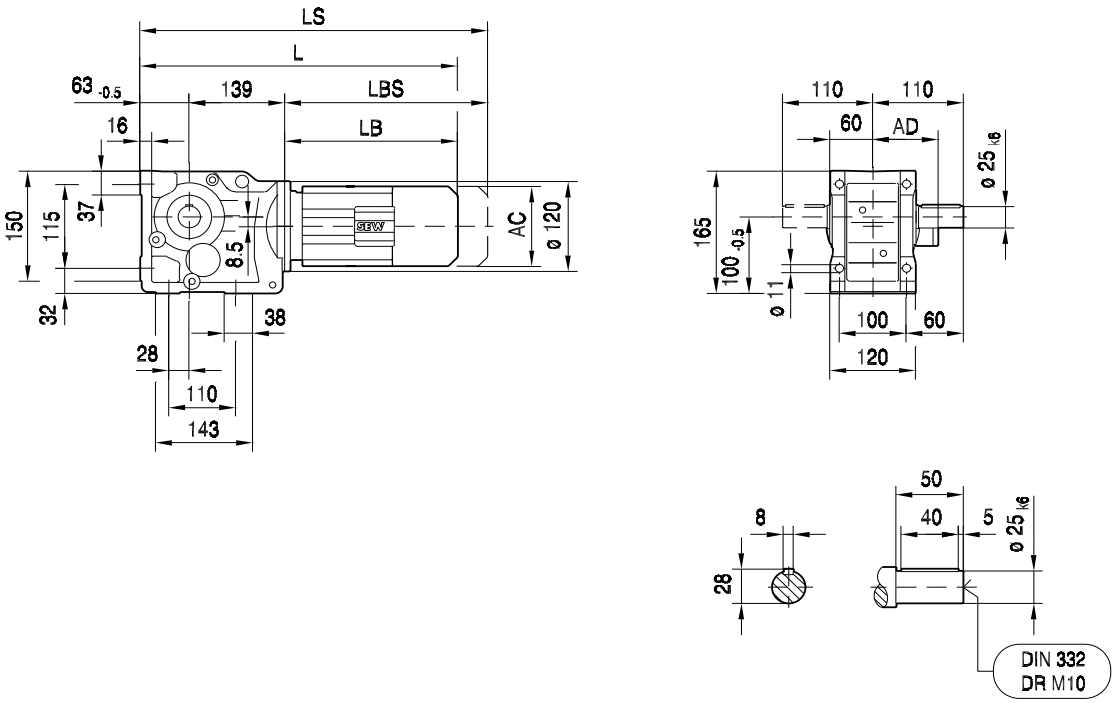

(→ 105)	CT71D	CT80N	CT90L								
AC	145	145	197								
AD	126	126	160								
L	492	542	555								
LS	555	605	640								
LB	290	340	353								
LBS	353	403	438								

34 018 00 04

KF37..

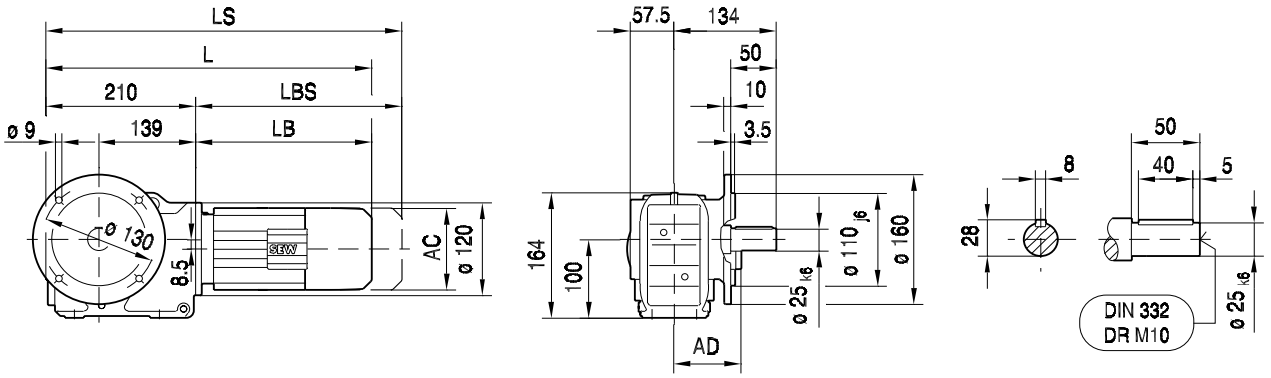

KAF37..

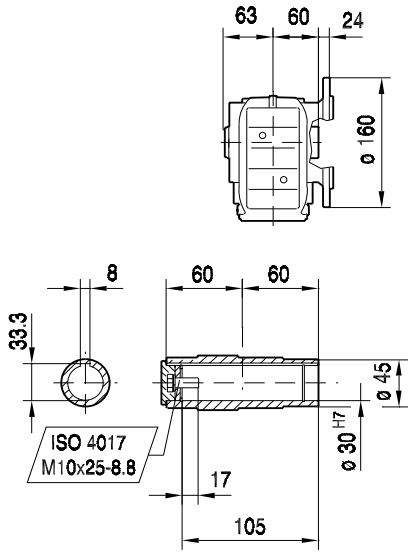

KHF37..

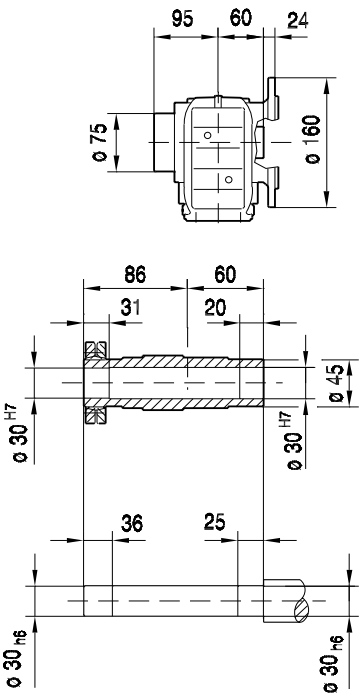

KVF37..

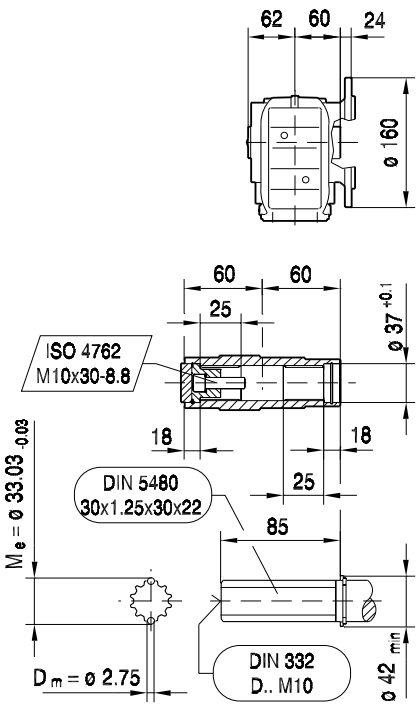

(→ 105)	CT71D	CT80N	CT90L								
AC	145	145	197								
AD	126	126	160								
L	500	550	563								
LS	563	613	648								
LB	290	340	353								
LBS	353	403	438								

KA37..

39 092 01 00

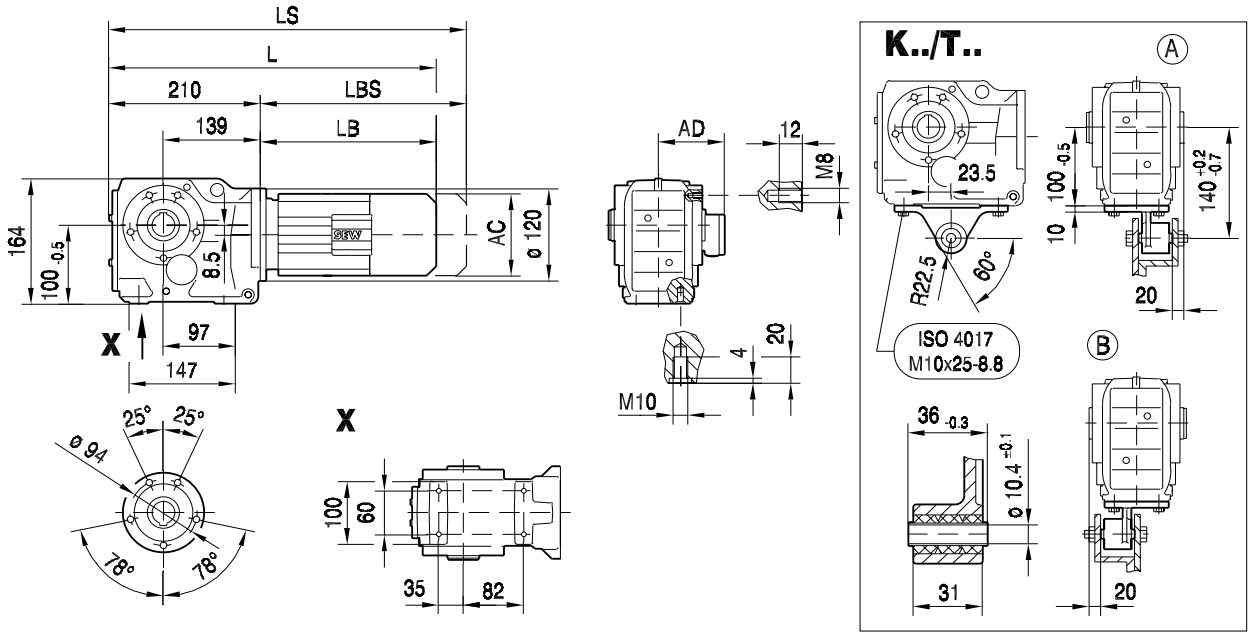

KA37..

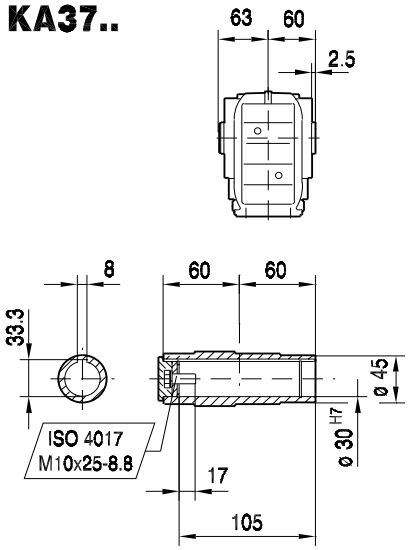

KH37..

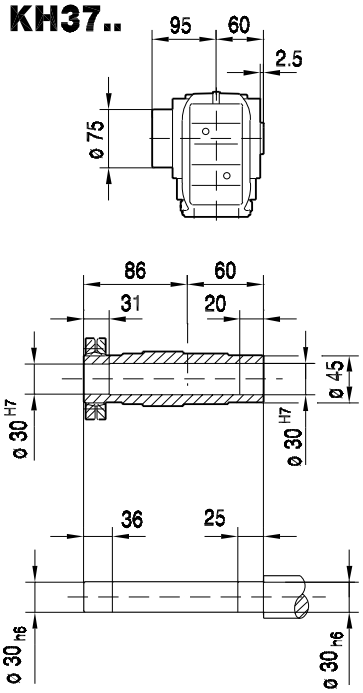

KV37..

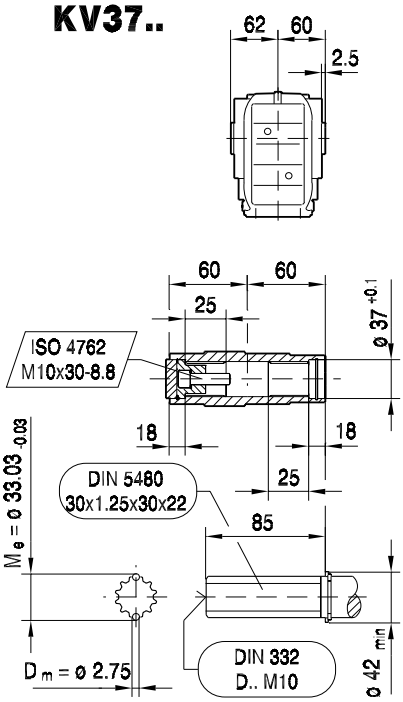

(→ 105)	CT71D	CT80N	CT90L								
AC	145	145	197								
AD	126	126	160								
L	500	550	563								
LS	563	613	648								
LB	290	340	353								
LBS	353	403	438								

39 016 00 04

KAZ37..

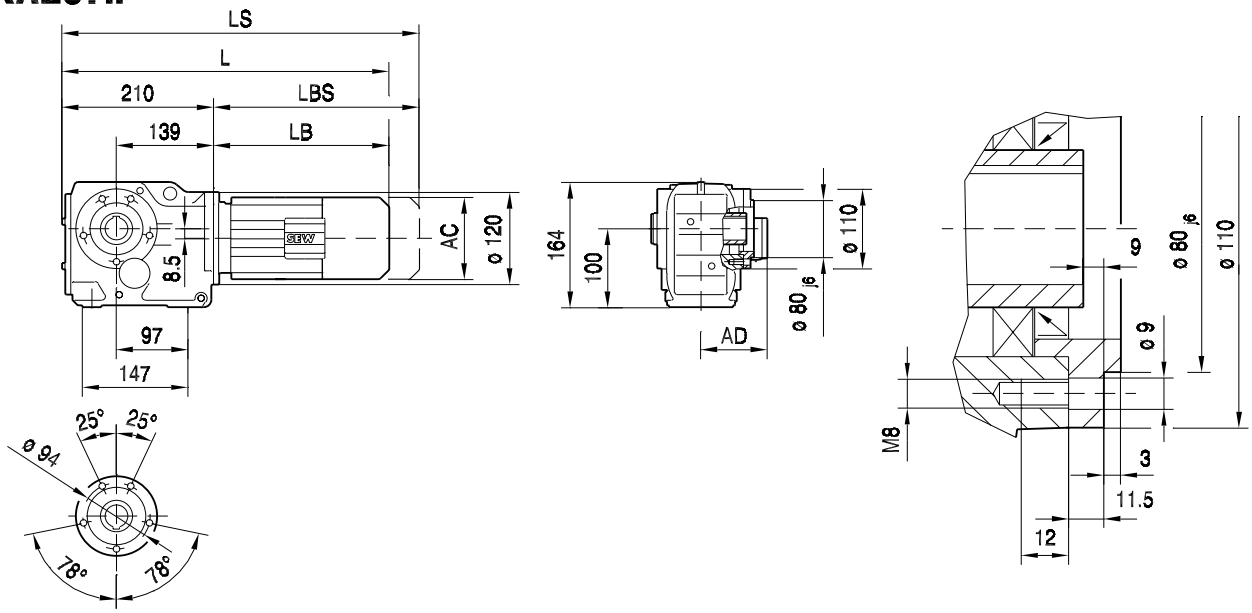

KAZ37..

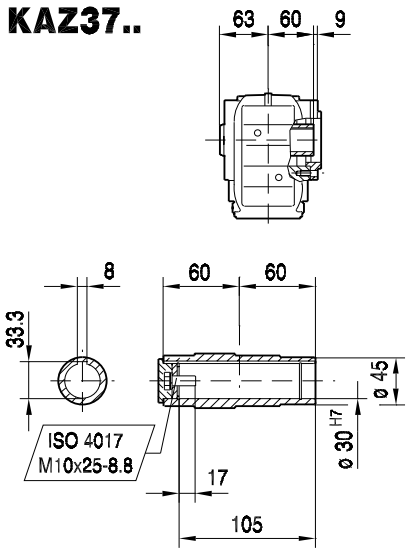

KHZ37..

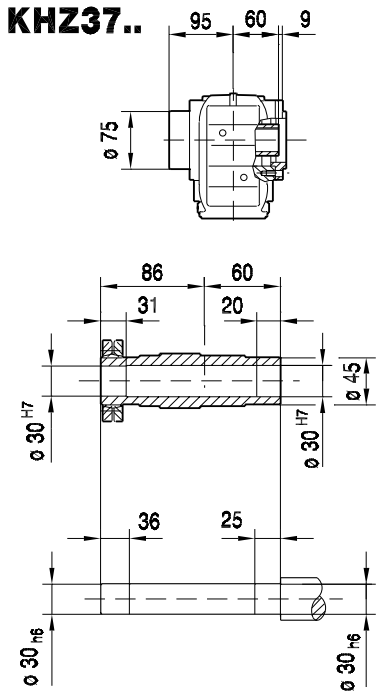

KVZ37..

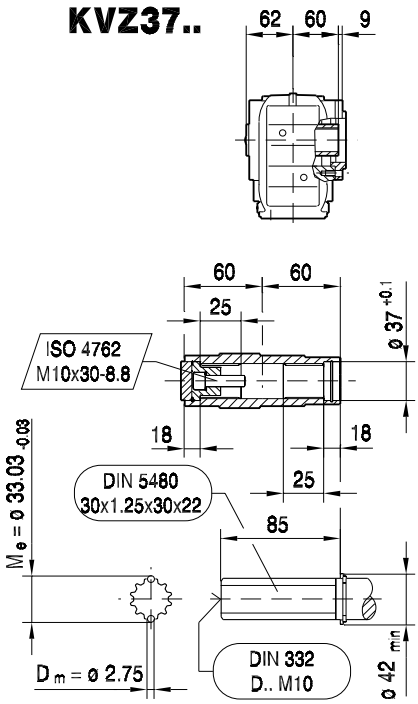

(→ 105)	CT71D	CT80N	CT90L								
AC	145	145	197								
AD	126	126	160								
L	500	550	563								
LS	563	613	648								
LB	290	340	353								
LBS	353	403	438								

39 026 00 04

KT37..

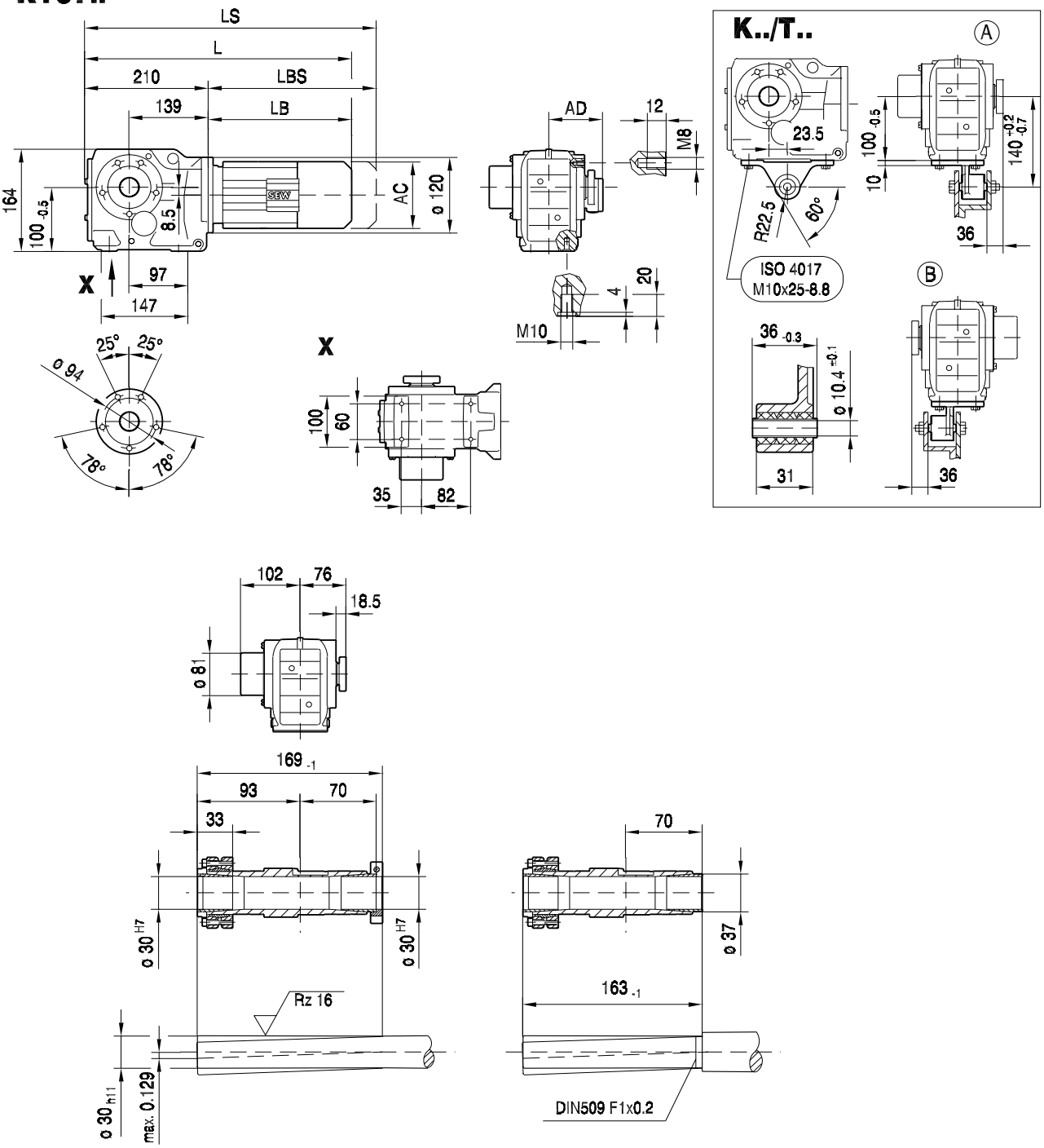

(→ 105)	CT71D	CT80N	CT90L								
AC	145	145	197								
AD	126	126	160								
L	500	550	563								
LS	563	613	648								
LB	290	340	353								
LBS	353	403	438								

34 007 00 04

K47..

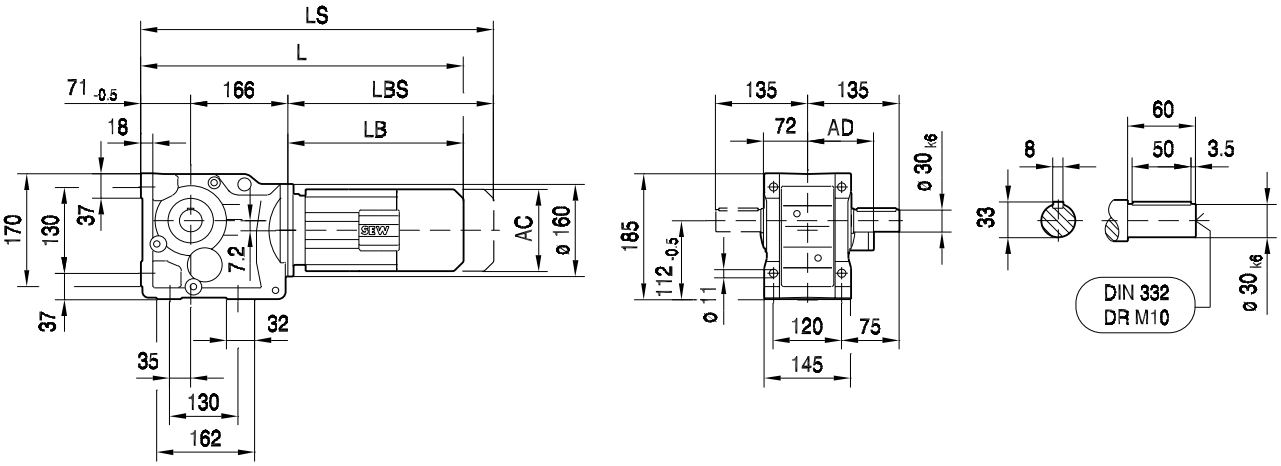

KA47B..

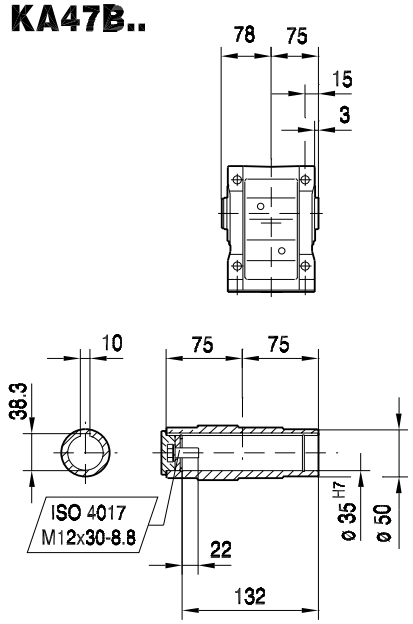

KH47B..

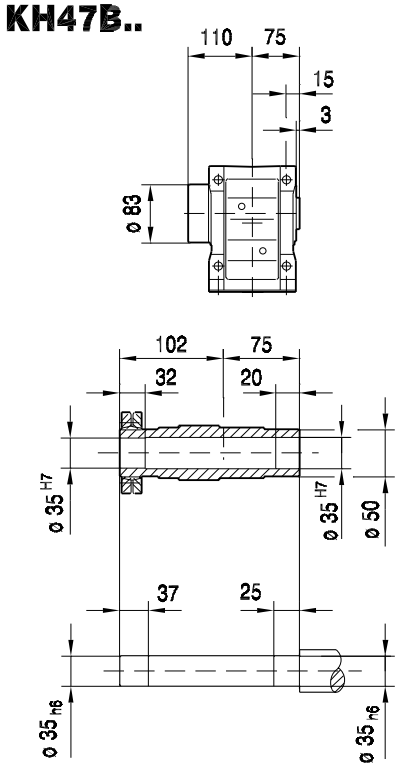

KV47B..

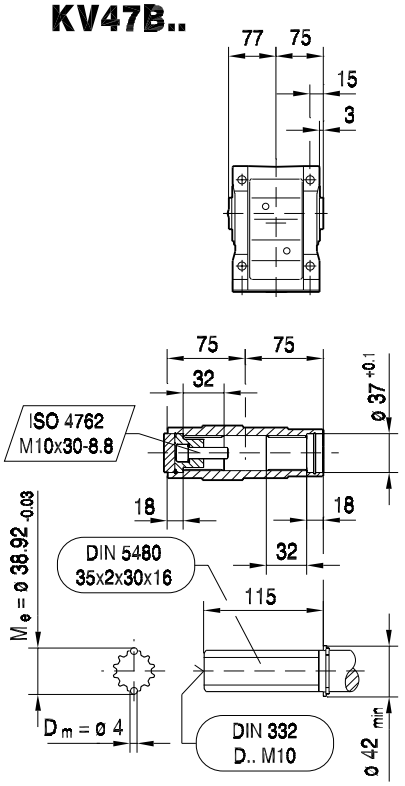

(→ 105)	CT71D	CT80N	CT90L	CV100M							
AC	145	145	197	197							
AD	126	126	160	165							
L	520	570	583	633							
LS	583	633	668	718							
LB	283	333	346	396							
LBS	346	396	431	481							

34 019 00 04

KF47..

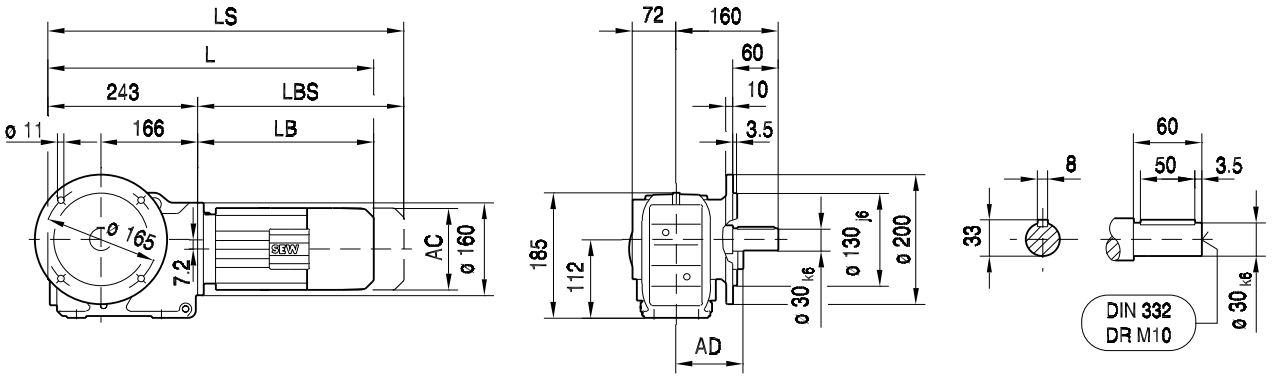

KAF47..

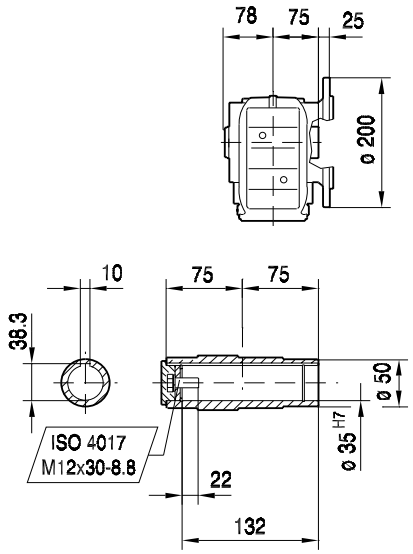

KHF47..

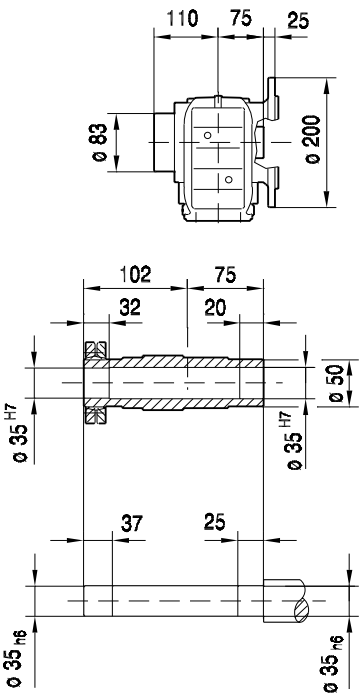

KVF47..

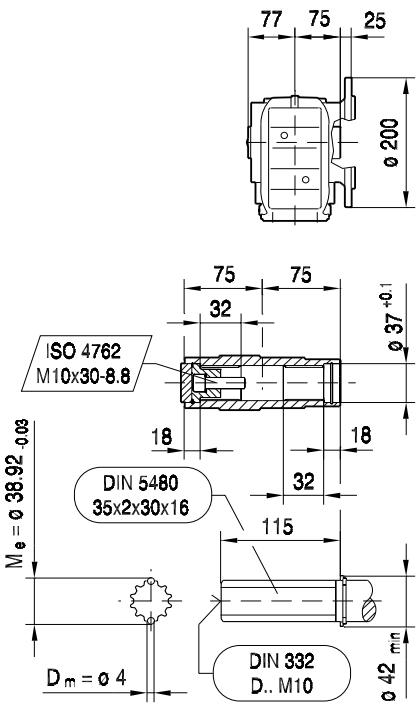

(→ 105)	CT71D	CT80N	CT90L	CV100M							
AC	145	145	197	197							
AD	126	126	160	165							
L	526	576	589	639							
LS	589	639	674	724							
LB	283	333	346	396							
LBS	346	396	431	481							

KA47..

39 093 01 00

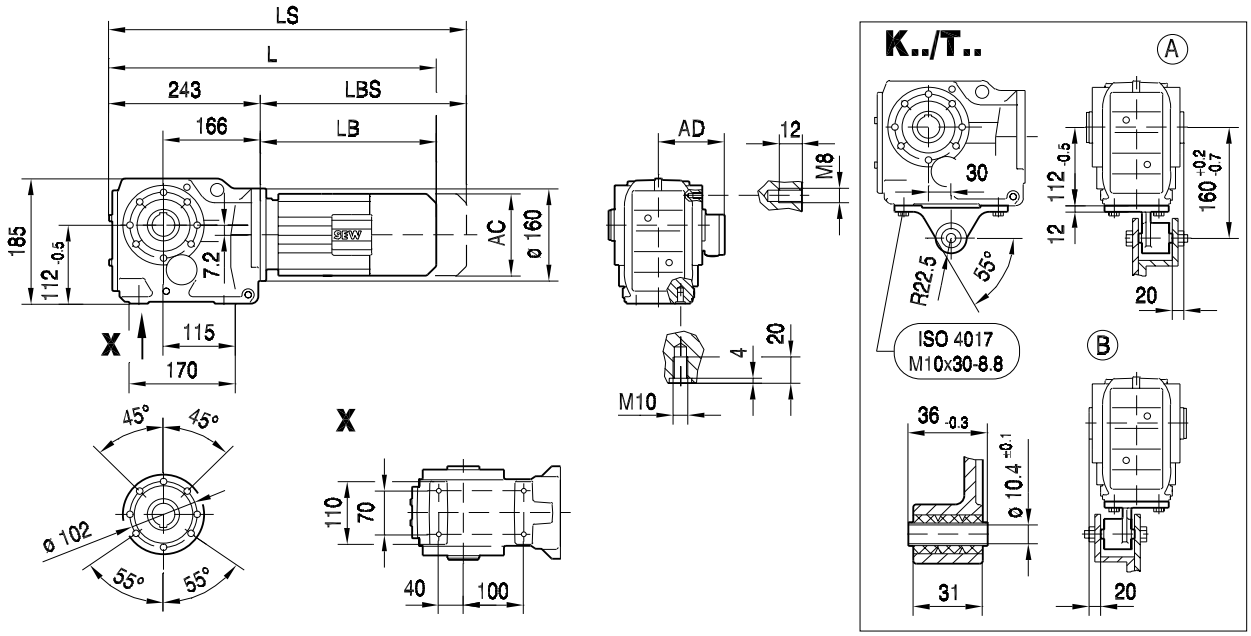

KA47..

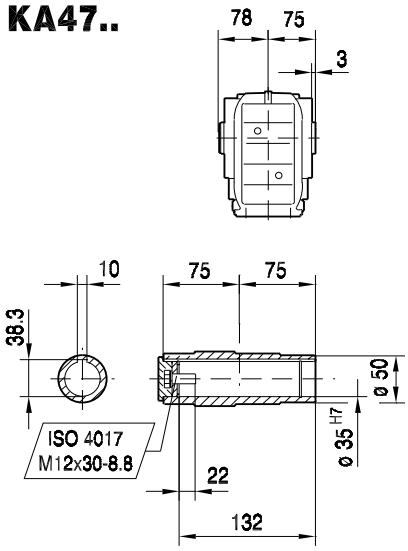

KH47..

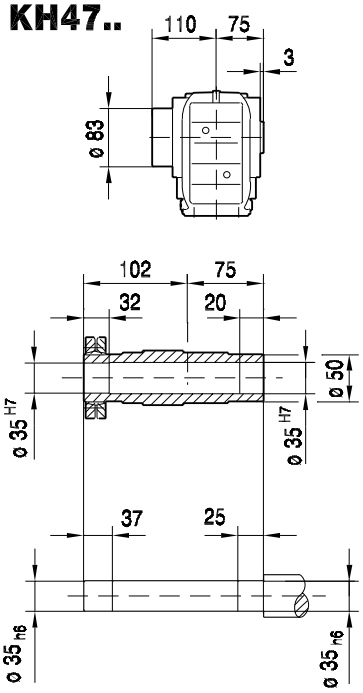

KV47..

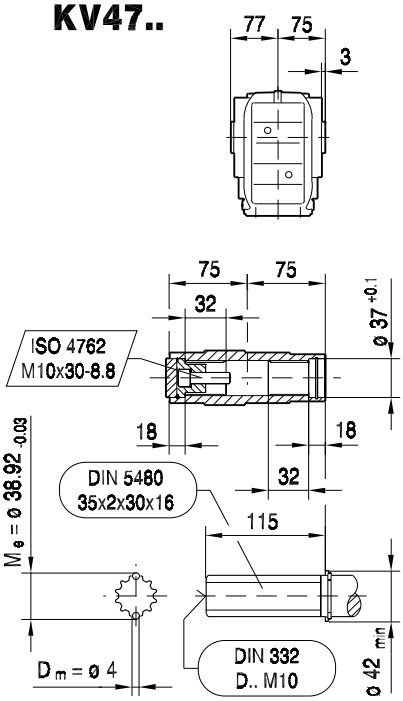

(→ 105)	CT71D	CT80N	CT90L	CV100M							
AC	145	145	197	197							
AD	126	126	160	165							
L	526	576	589	639							
LS	589	639	674	724							
LB	283	333	346	396							
LBS	346	396	431	481							

39 017 00 04

KAZ47..

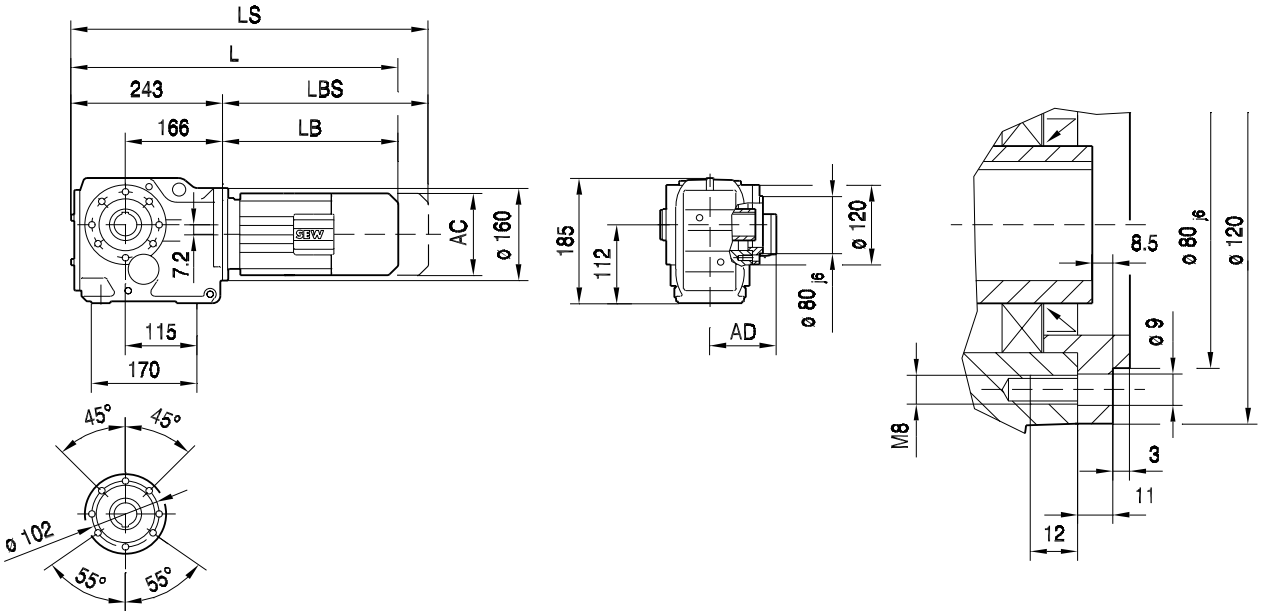

KAZ47..

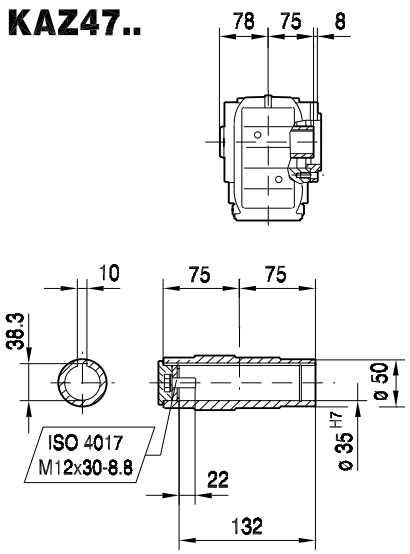

KHZ47..

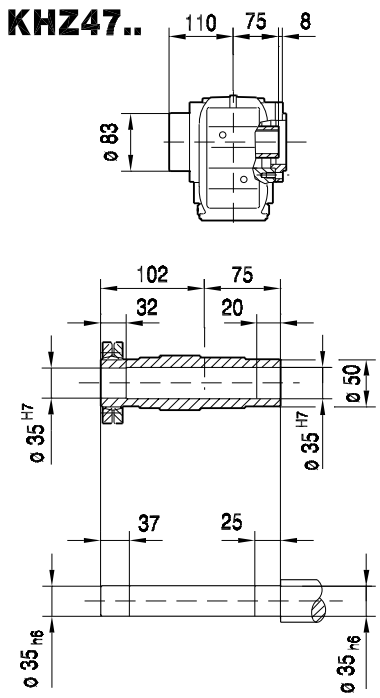

KVZ47..

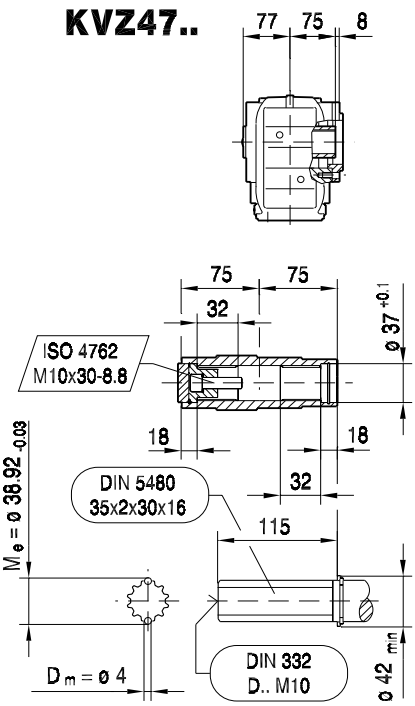

(→ 105)	CT71D	CT80N	CT90L	CV100M							
AC	145	145	197	197							
AD	126	126	160	165							
L	526	576	589	639							
LS	589	639	674	724							
LB	283	333	346	396							
LBS	346	396	431	481							

39 027 00 04

KT47..

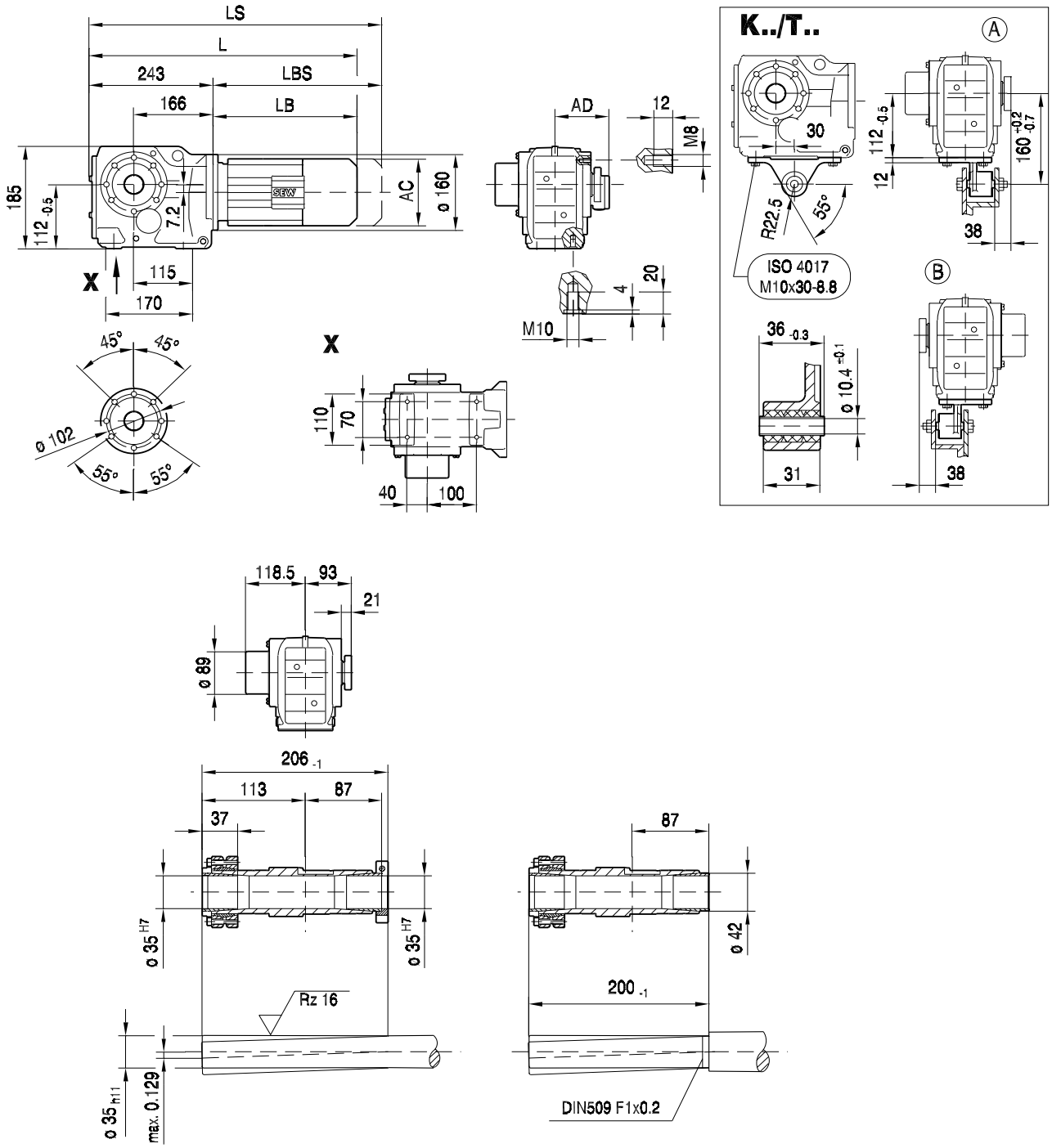

(→ 105)	CT71D	CT80N	CT90L	CV100M							
AC	145	145	197	197							
AD	126	126	160	165							
L	526	576	589	639							
LS	589	639	674	724							
LB	283	333	346	396							
LBS	346	396	431	481							

34 008 00 04

K57..

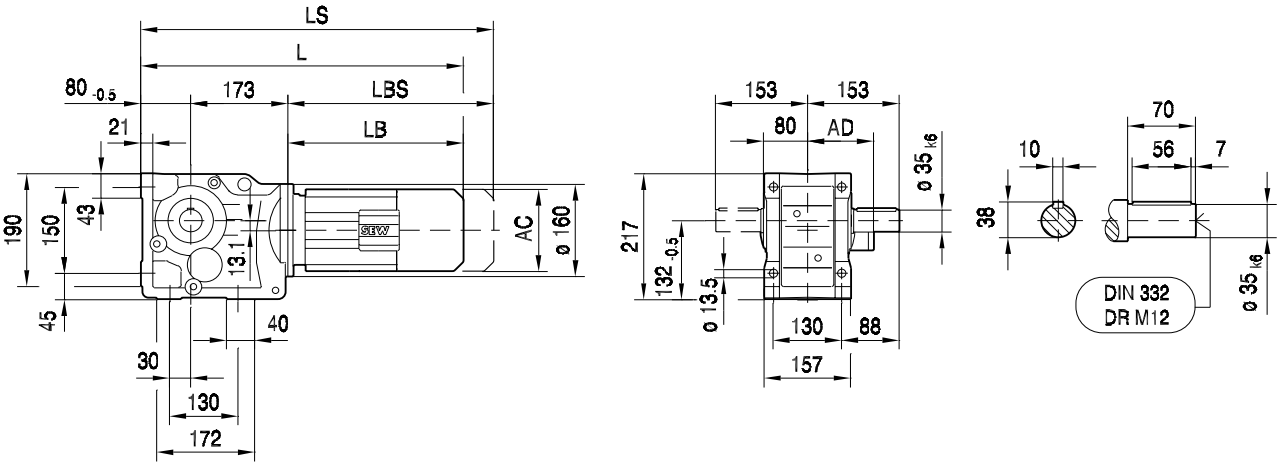

KA57B..

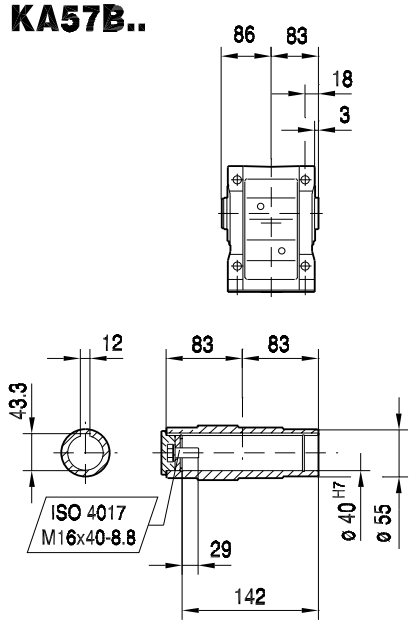

KH57B..

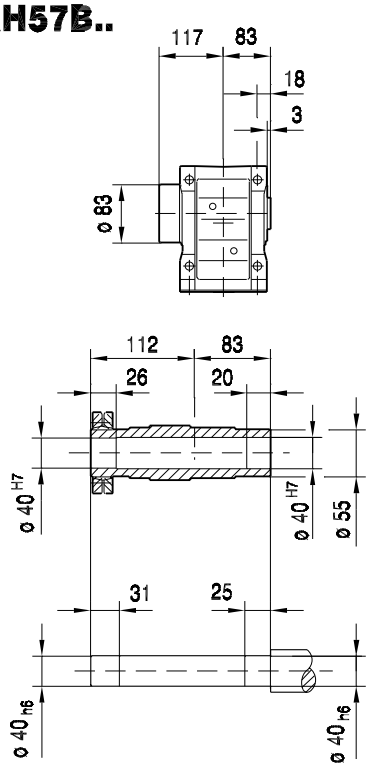

KV57B..

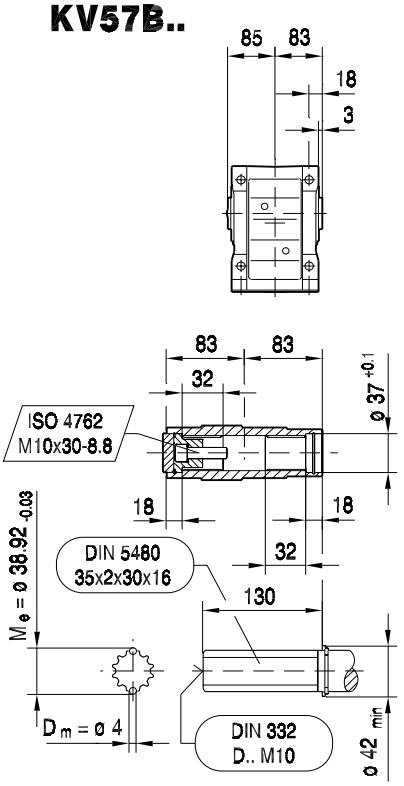

(→ 105)	CT71D	CT80N	CT90L	CV100M	CV100L						
AC	145	145	197	197	197						
AD	126	126	160	165	165						
L	536	586	599	649	679						
LS	599	649	684	734	764						
LB	283	333	346	396	426						
LBS	346	396	431	481	511						

34 020 00 04

KF57..

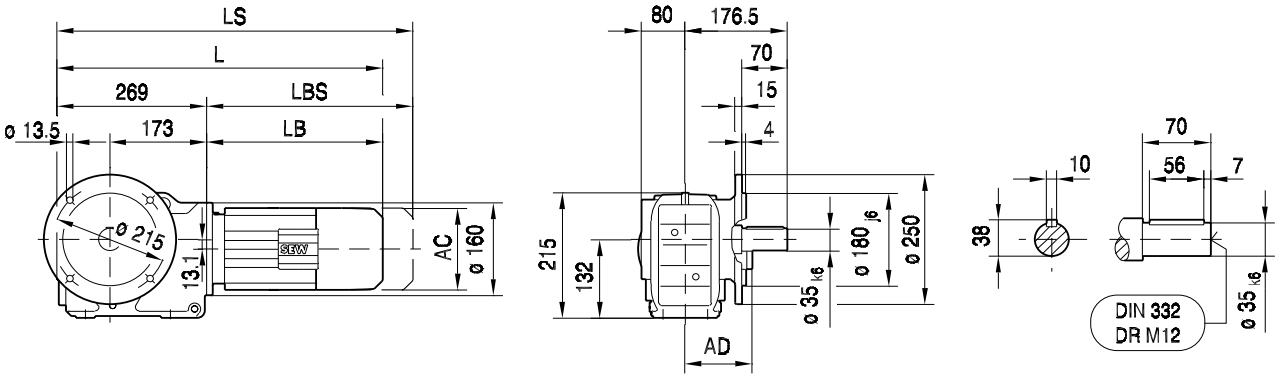

KAF57..

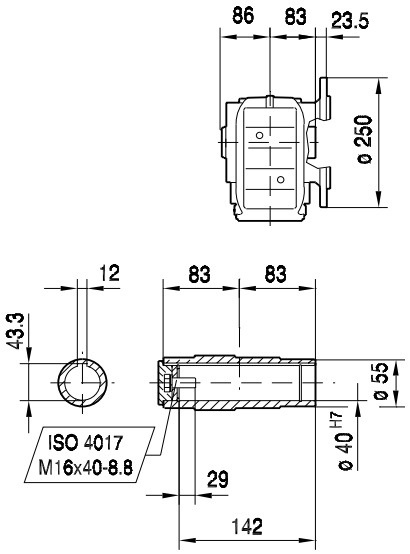

KHF57..

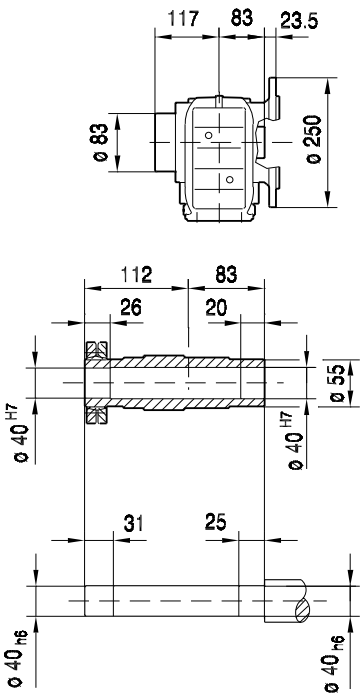

KVF57..

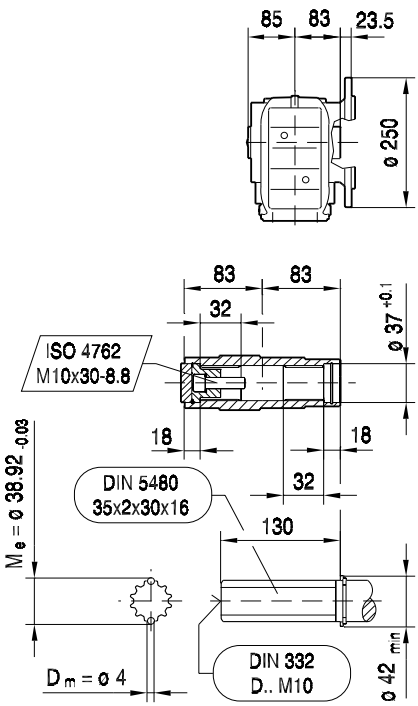

(→ 105)	CT71D	CT80N	CT90L	CV100M	CV100L						
AC	145	145	197	197	197						
AD	126	126	160	165	165						
L	552	602	615	665	695						
LS	615	665	700	750	780						
LB	283	333	346	396	426						
LBS	346	396	431	481	511						

KA57..

39 094 01 00

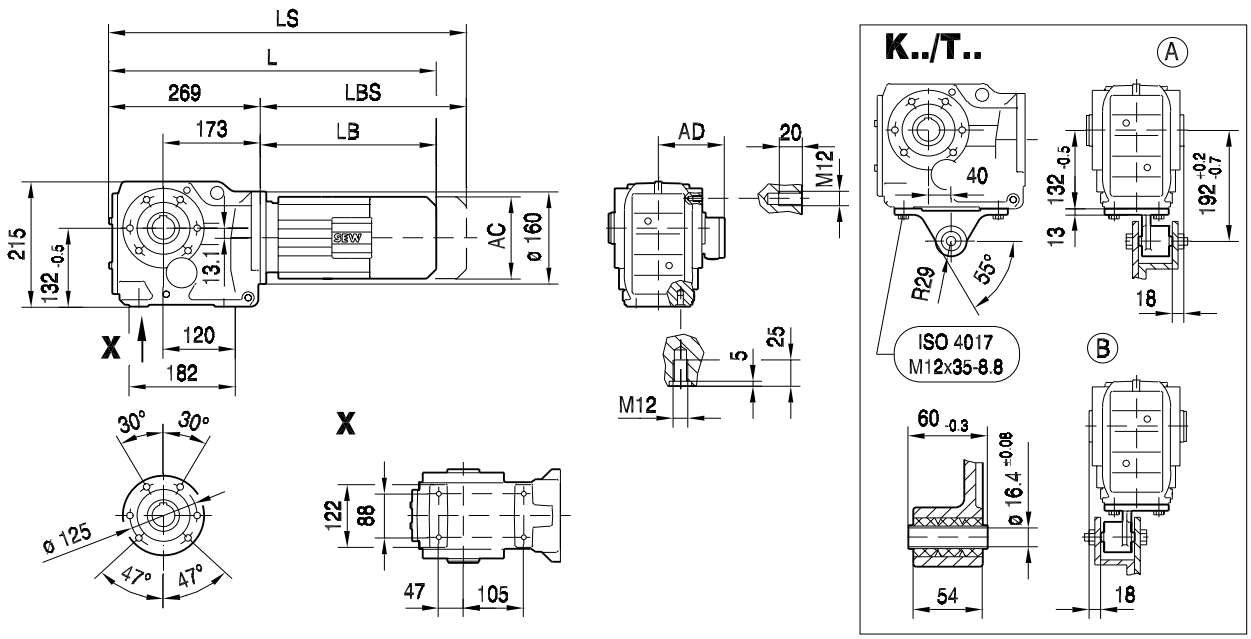

KA57..

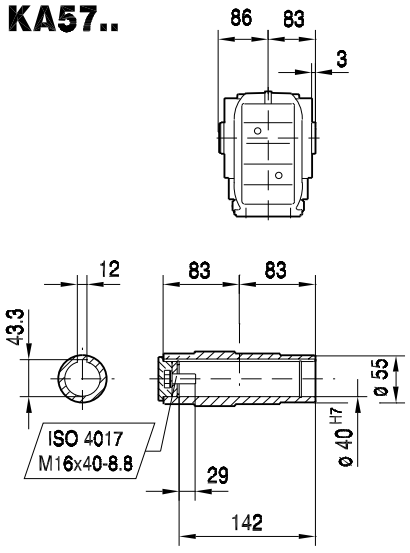

KH57..

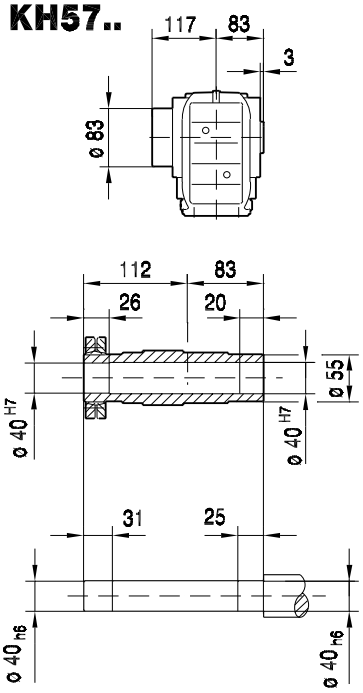

KV57..

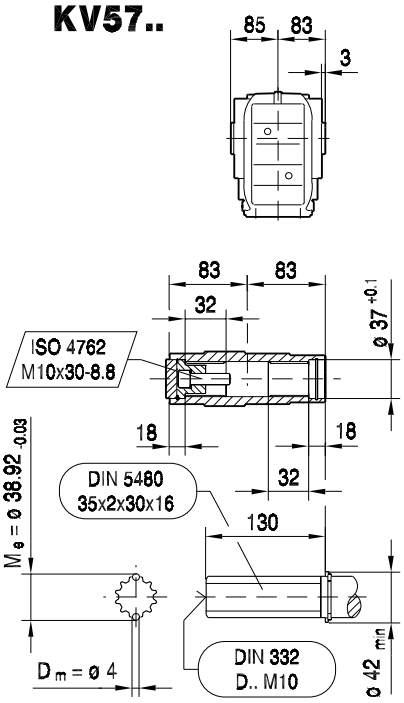

(→ 105)	CT71D	CT80N	CT90L	CV100M	CV100L						
AC	145	145	197	197	197						
AD	126	126	160	165	165						
L	552	602	615	665	695						
LS	615	665	700	750	780						
LB	283	333	346	396	426						
LBS	346	396	431	481	511						

39 018 00 04

KAZ57..

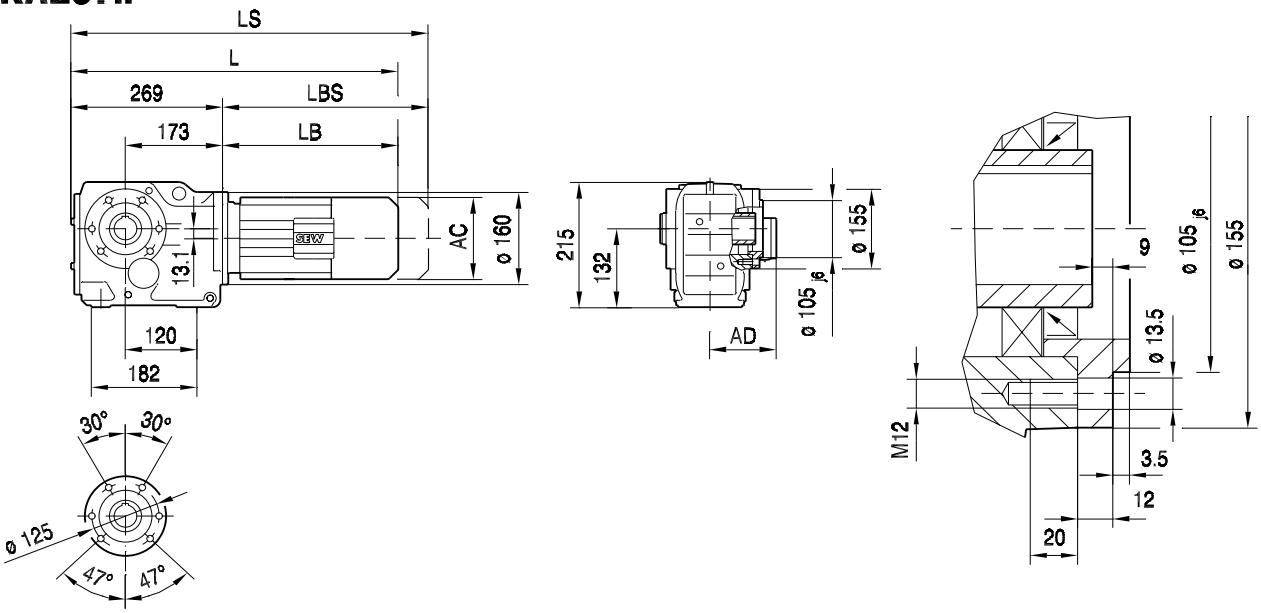

KAZ57..

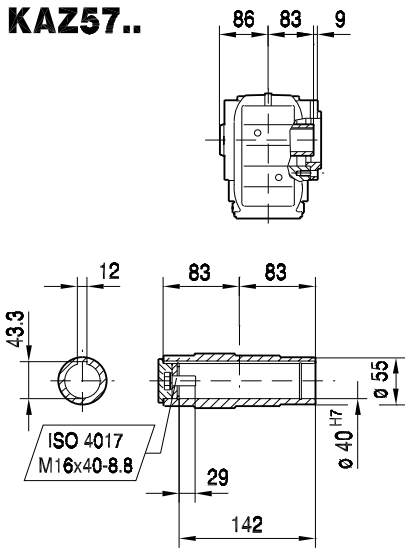

KHZ57..

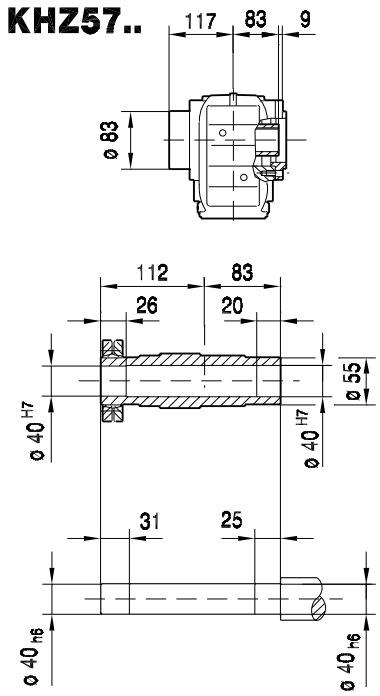

KVZ57..

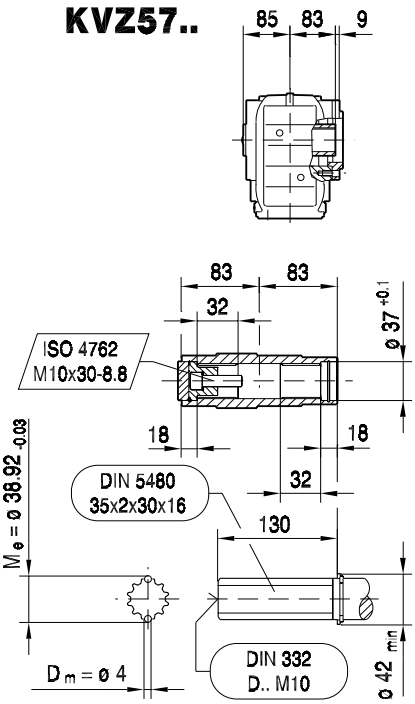

(→ 105)	CT71D	CT80N	CT90L	CV100M	CV100L						
AC	145	145	197	197	197						
AD	126	126	160	165	165						
L	552	602	615	665	695						
LS	615	665	700	750	780						
LB	283	333	346	396	426						
LBS	346	396	431	481	511						

39 028 00 04

KT57..

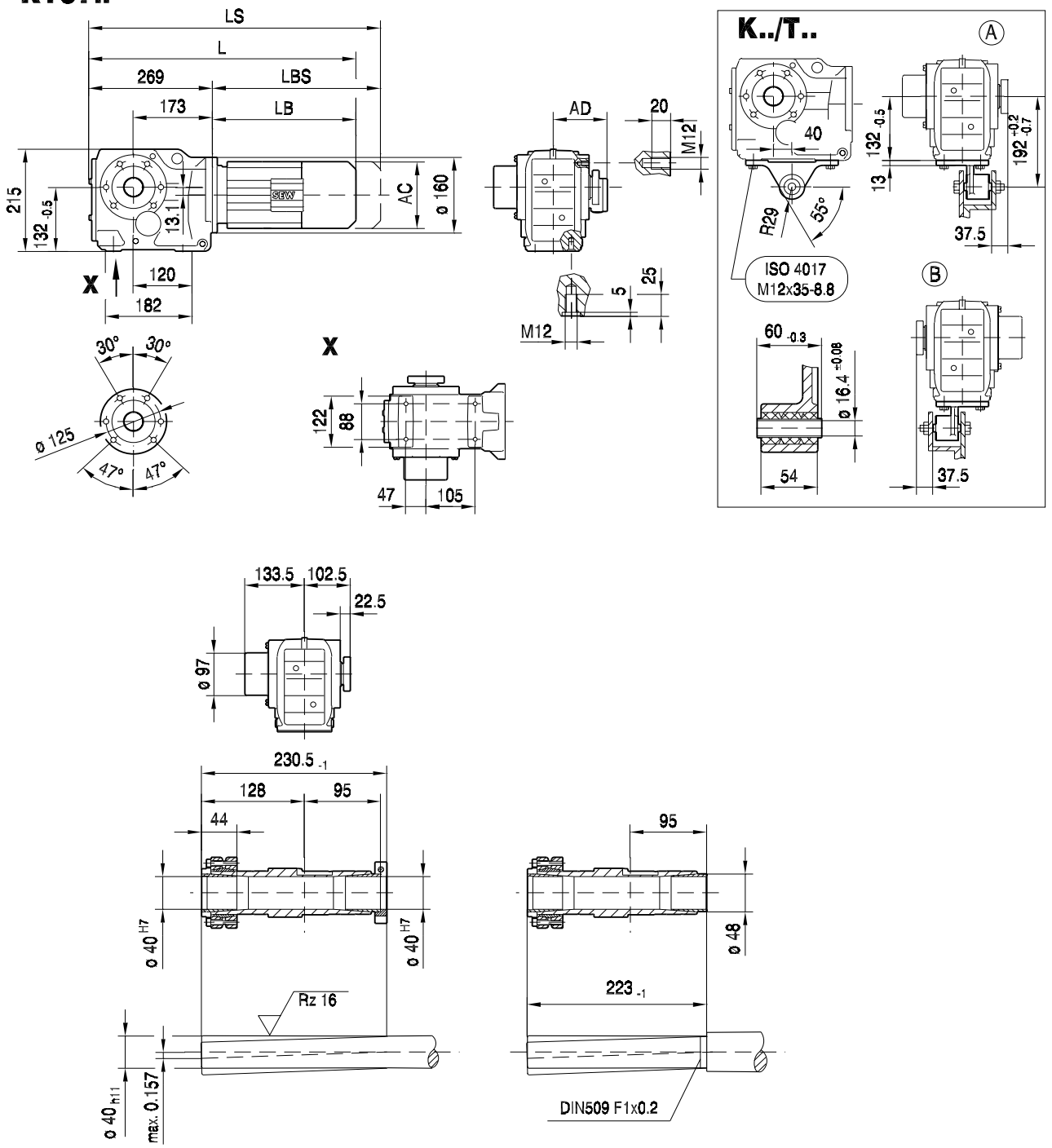

(→ 105)	CT71D	CT80N	CT90L	CV100M	CV100L						
AC	145	145	197	197	197						
AD	126	126	160	165	165						
L	552	602	615	665	695						
LS	615	665	700	750	780						
LB	283	333	346	396	426						
LBS	346	396	431	481	511						

34 009 00 04

K67..

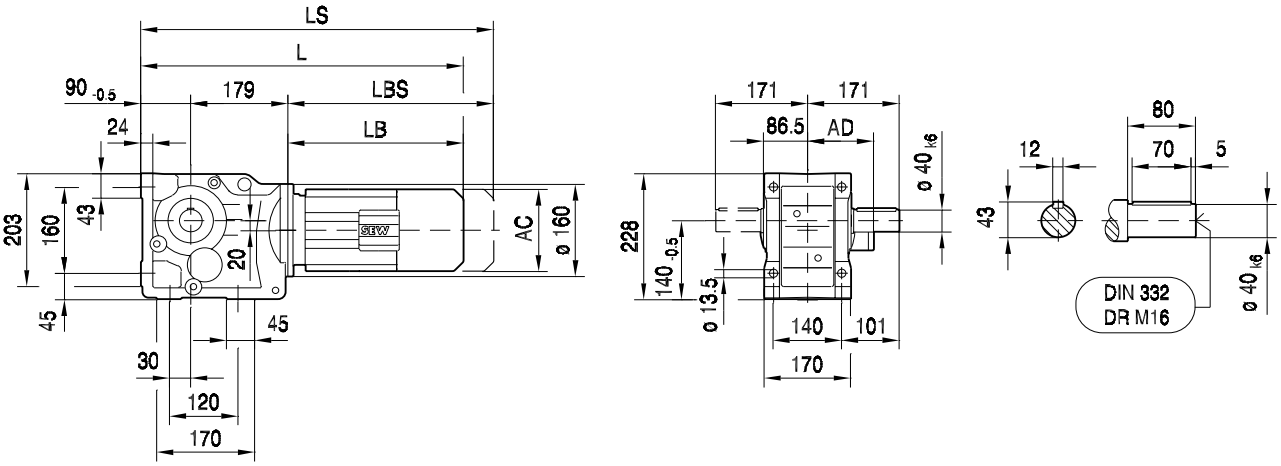

KA67B..

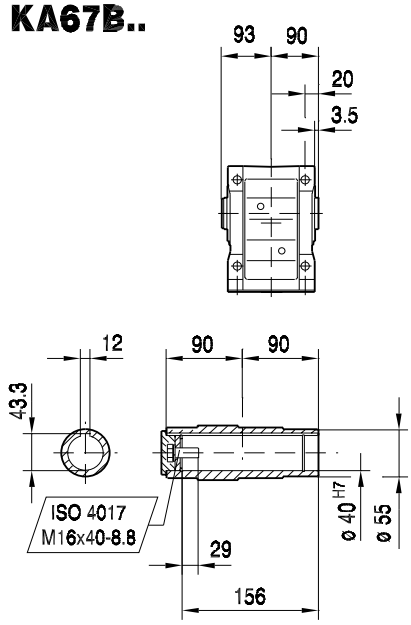

KH67B..

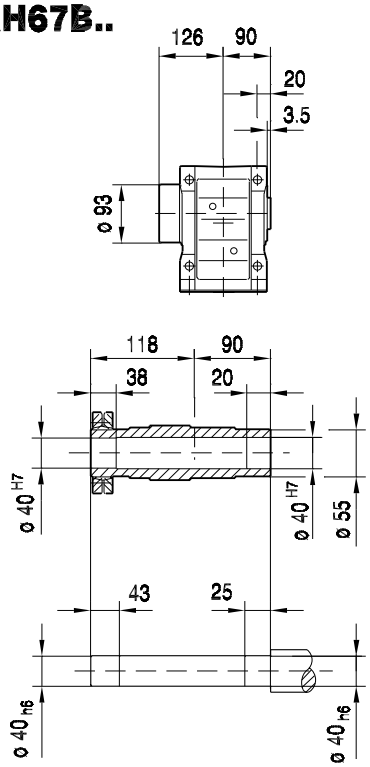

KV67B..

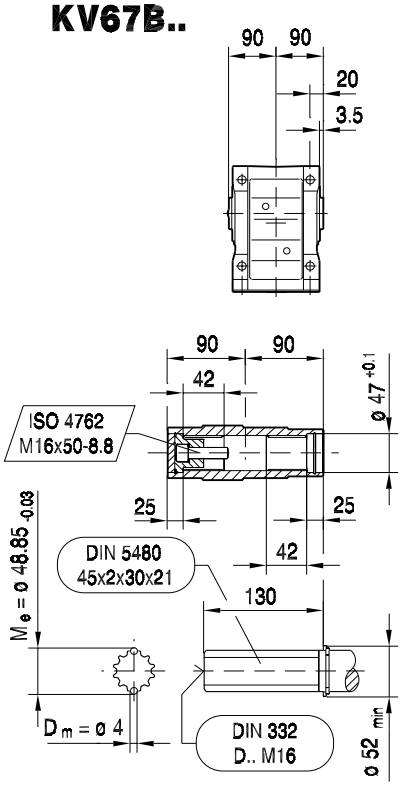

(→ 105)	CT71D	CT80N	CT90L	CV100M	CV100L	CV132S	CV132M				
AC	145	145	197	197	197	221	285				
AD	126	126	160	165	165	178	229				
L	552	602	615	665	695	747	932				
LS	615	665	700	750	780	827	932				
LB	283	333	346	396	426	478	663				
LBS	346	396	431	481	511	558	663				

34 021 00 04

KF67..

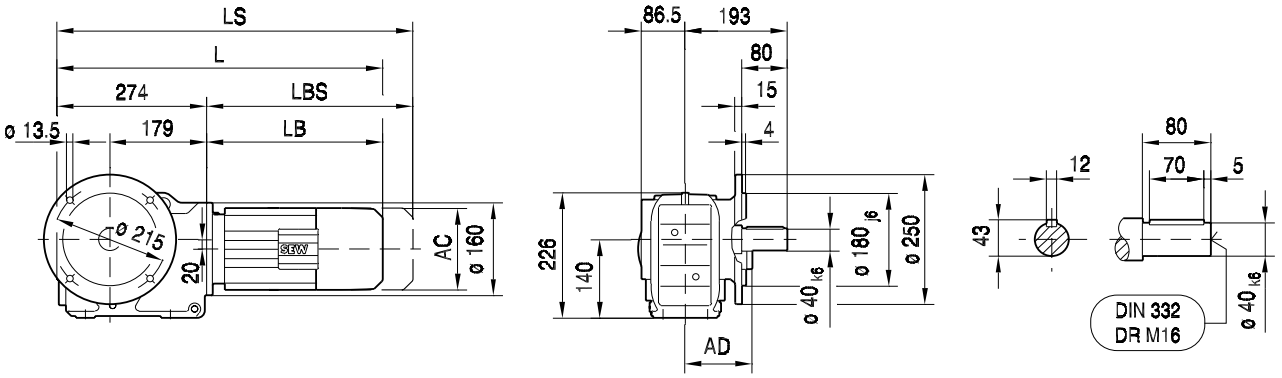

KAF67..

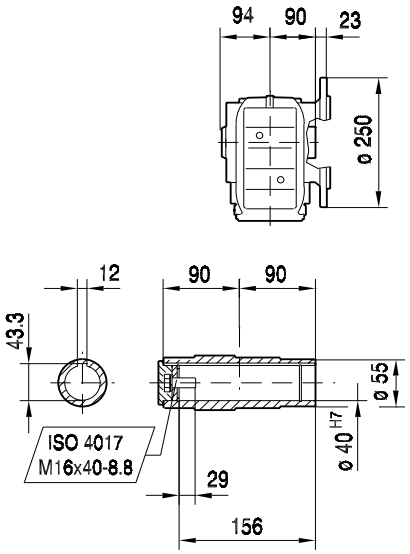

KHF67..

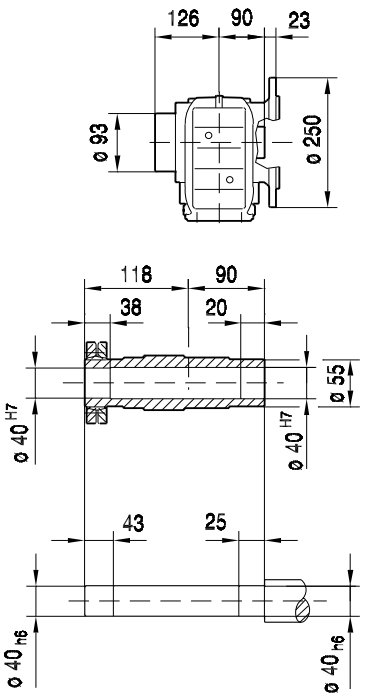

KVF67..

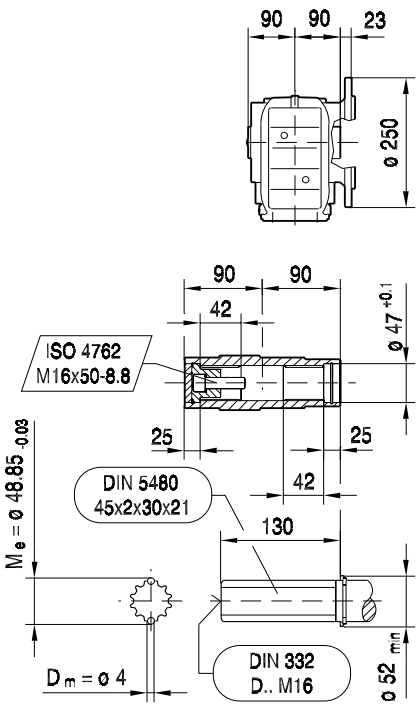

(→ 105)	CT71D	CT80N	CT90L	CV100M	CV100L	CV132S	CV132M				
AC	145	145	197	197	197	221	285				
AD	126	126	160	165	165	178	229				
L	557	607	620	670	700	752	937				
LS	620	670	705	755	785	832	937				
LB	283	333	346	396	426	478	663				
LBS	346	396	431	481	511	558	663				

KA67..

39 095 01 00

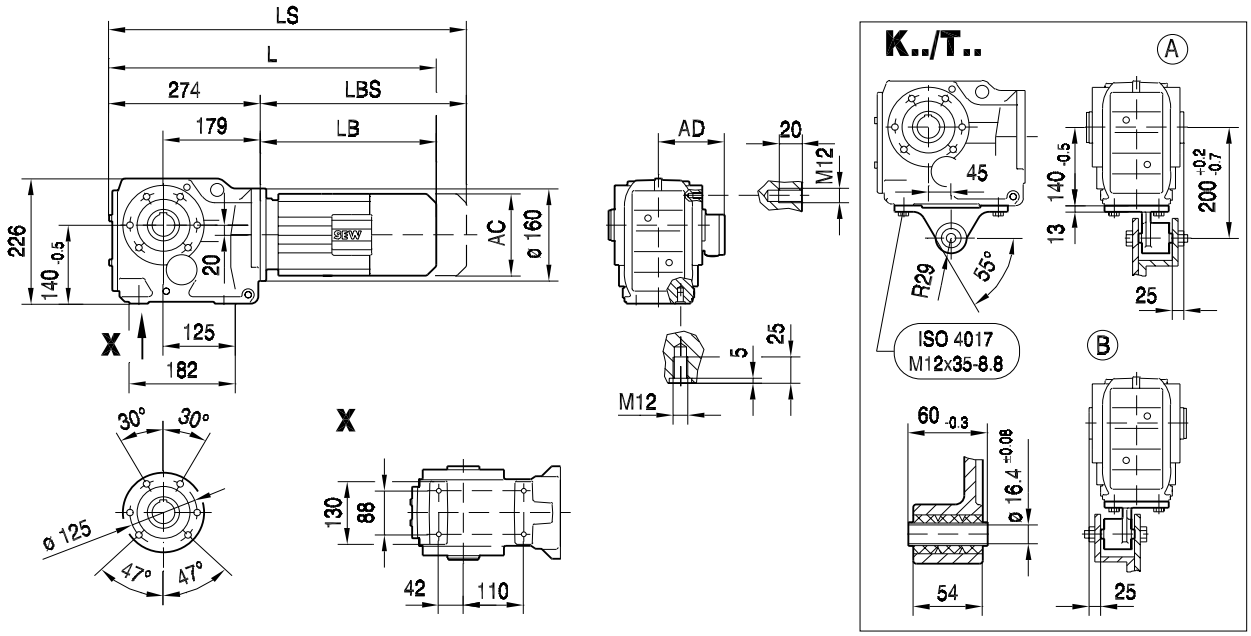

KA67..

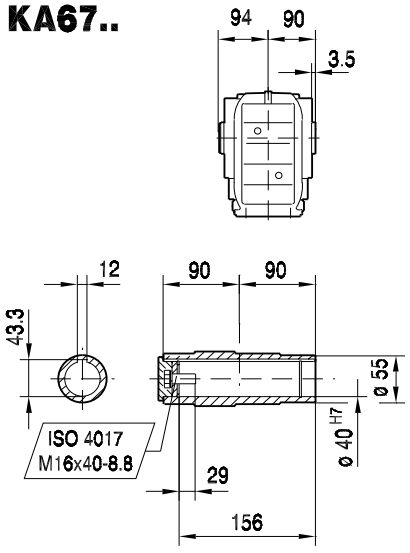

KH67..

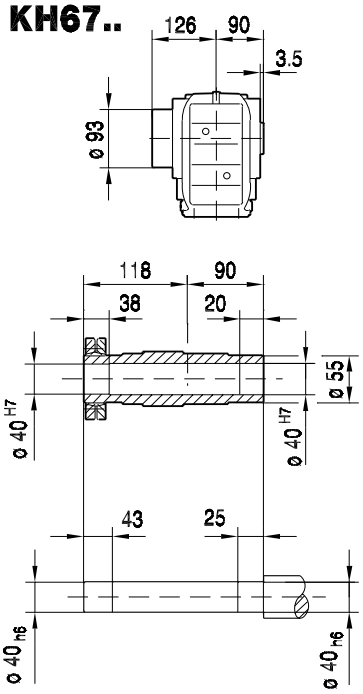

KV67..

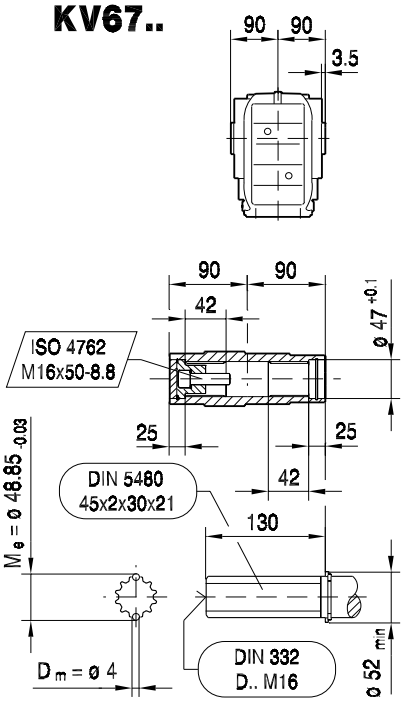

(→ 105)	CT71D	CT80N	CT90L	CV100M	CV100L	CV132S	CV132M				
AC	145	145	197	197	197	221	285				
AD	126	126	160	165	165	178	229				
L	557	607	620	670	700	752	937				
LS	620	670	705	755	785	832	937				
LB	283	333	346	396	426	478	663				
LBS	346	396	431	481	511	558	663				

39 019 00 04

KAZ67..

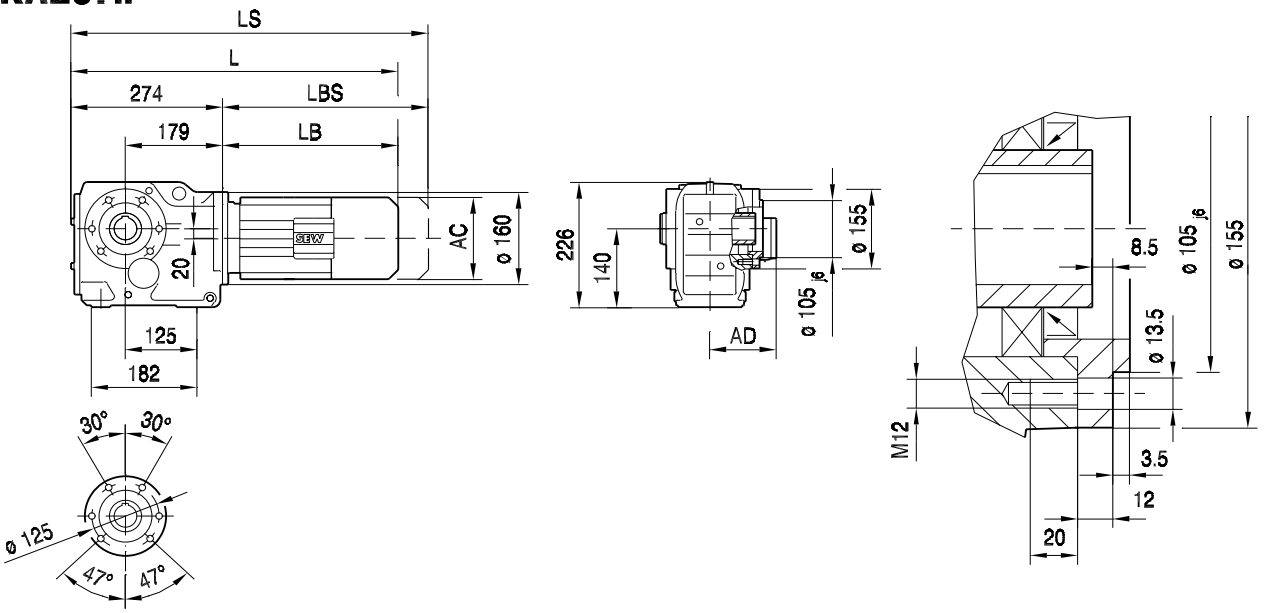

KAZ67..

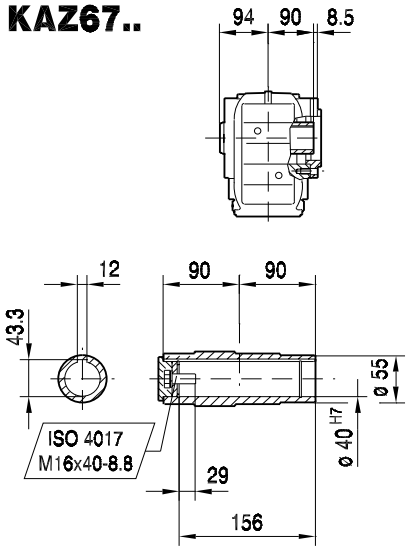

KHZ67..

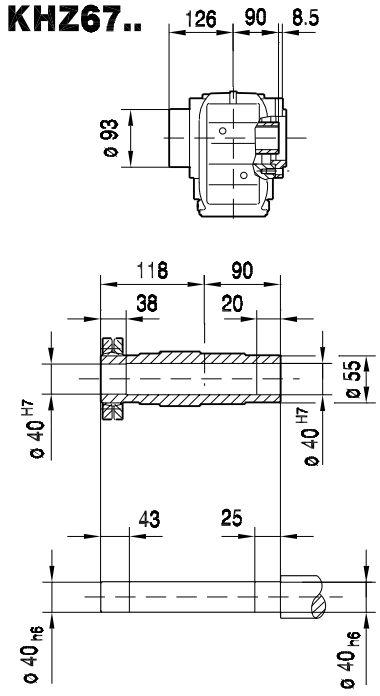

KVZ67..

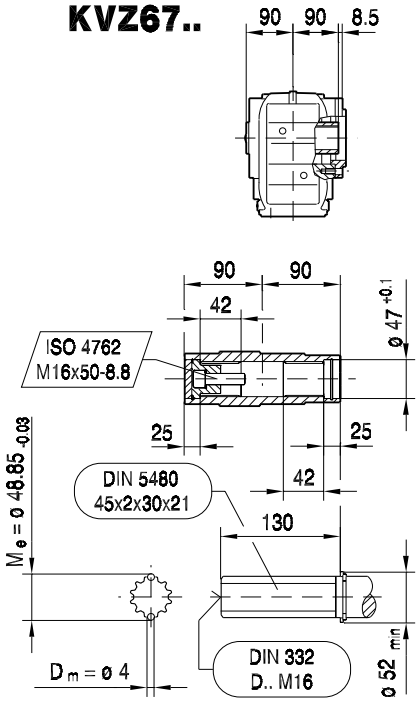

(→ 105)	CT71D	CT80N	CT90L	CV100M	CV100L	CV132S	CV132M				
AC	145	145	197	197	197	221	285				
AD	126	126	160	165	165	178	229				
L	557	607	620	670	700	752	937				
LS	620	670	705	755	785	832	937				
LB	283	333	346	396	426	478	663				
LBS	346	396	431	481	511	558	663				

39 029 00 04

KT67..

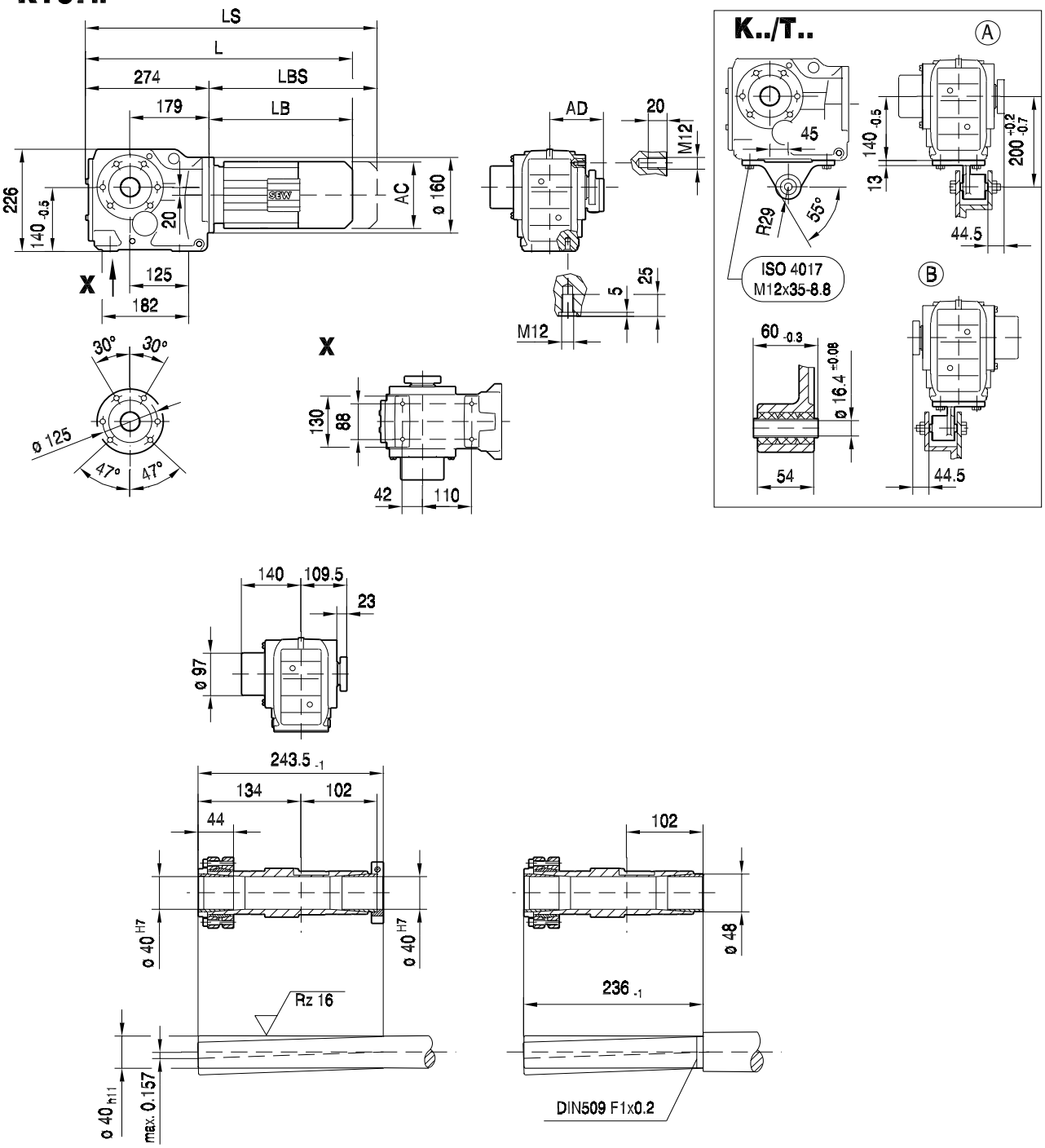

(→ 105)	CT71D	CT80N	CT90L	CV100M	CV100L	CV132S	CV132M				
AC	145	145	197	197	197	221	285				
AD	126	126	160	165	165	178	229				
L	557	607	620	670	700	752	937				
LS	620	670	705	755	785	832	937				
LB	283	333	346	396	426	478	663				
LBS	346	396	431	481	511	558	663				

34 010 00 04

K77..

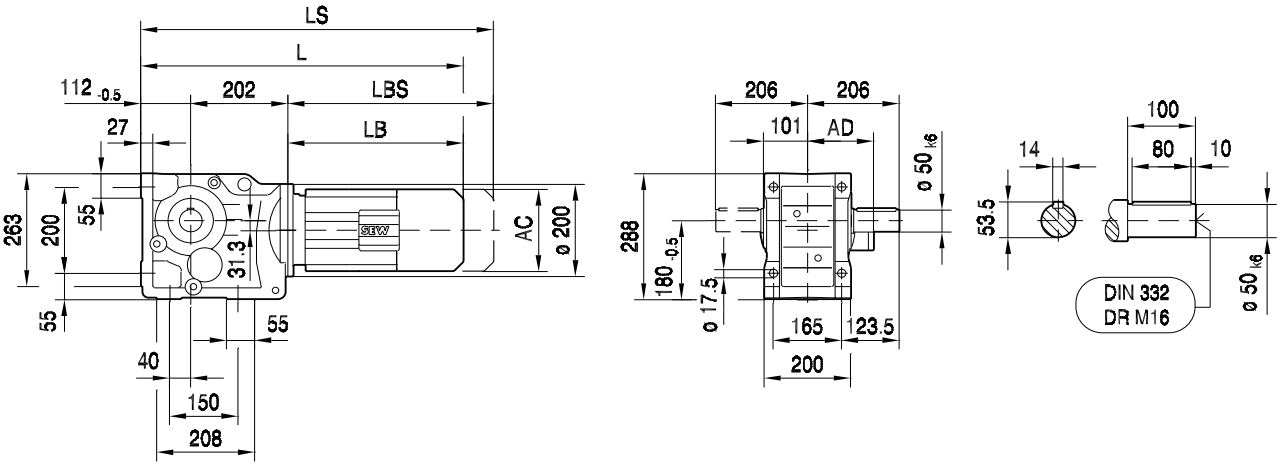

KA77B..

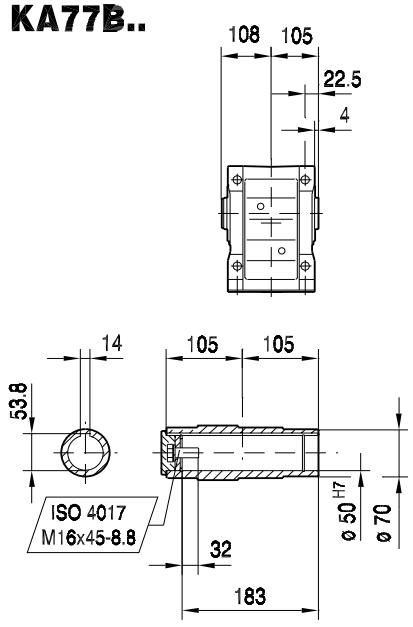

KH77B..

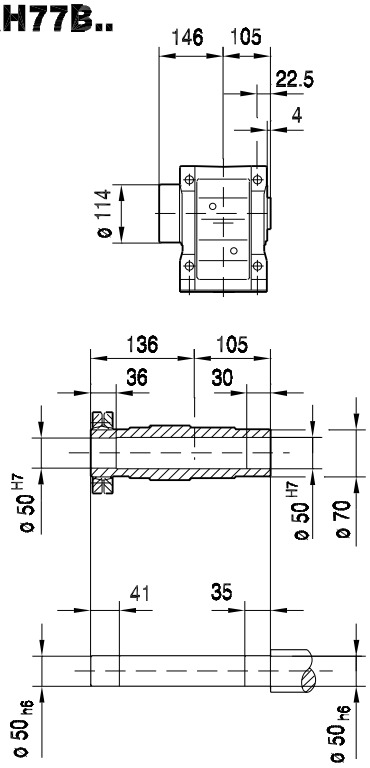

KV77B..

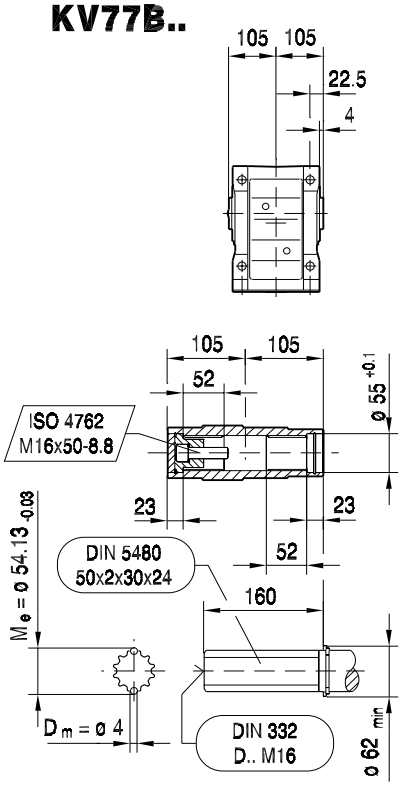

(→ 105)	CT71D	CT80N	CT90L	CV100M	CV100L	CV132S	CV132M	CV132ML	CV160M		
AC	145	145	197	197	197	221	285	285	285		
AD	126	126	160	165	165	178	229	229	229		
L	591	641	652	702	732	780	965	1025	1025		
LS	654	704	737	787	817	860	965	1025	1025		
LB	277	327	338	388	418	466	651	711	711		
LBS	340	390	423	473	503	546	651	711	711		

34 022 00 04

KF77..

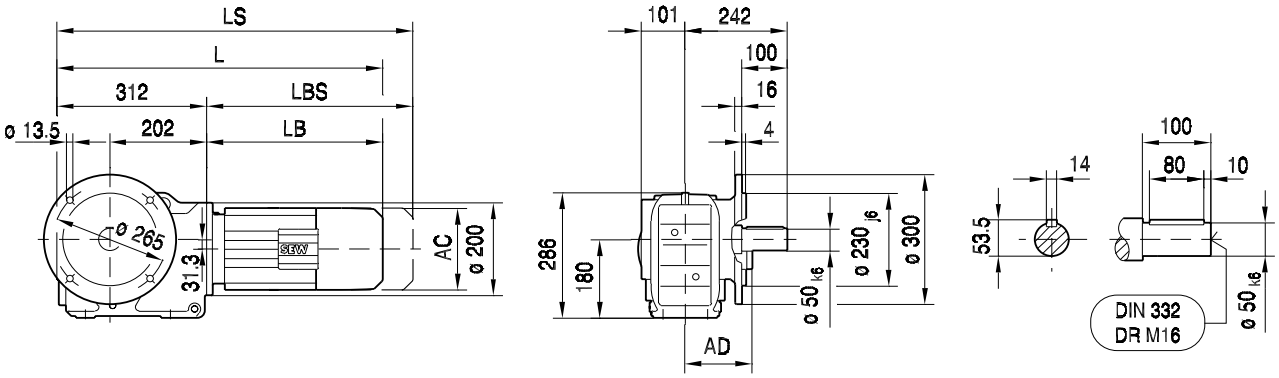

KAF77..

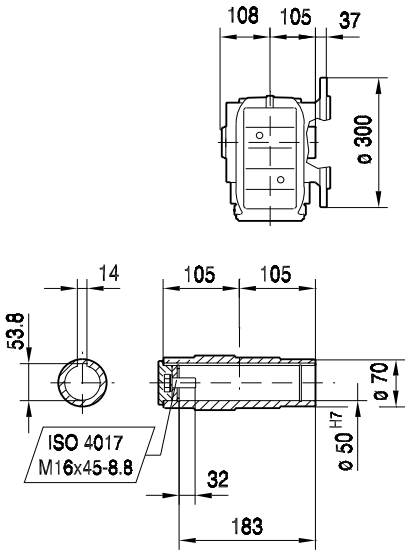

KHF77..

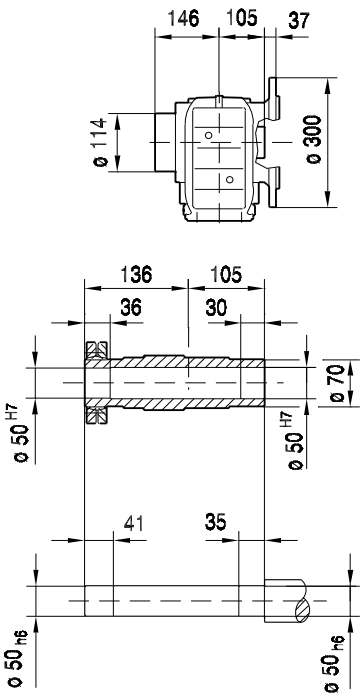

KVF77..

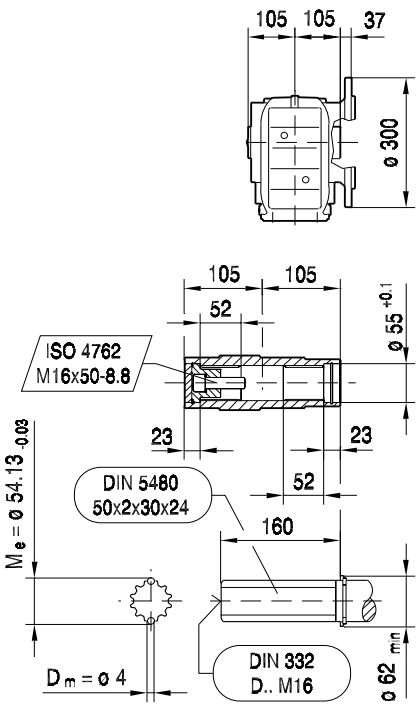

(→ 105)	CT71D	CT80N	CT90L	CV100M	CV100L	CV132S	CV132M	CV132ML	CV160M		
AC	145	145	197	197	197	221	285	285	285		
AD	126	126	160	165	165	178	229	229	229		
L	589	639	650	700	730	778	963	1023	1023		
LS	652	702	735	785	815	858	963	1023	1023		
LB	277	327	338	388	418	466	651	711	711		
LBS	340	390	423	473	503	546	651	711	711		

KA77..

39 096 01 00

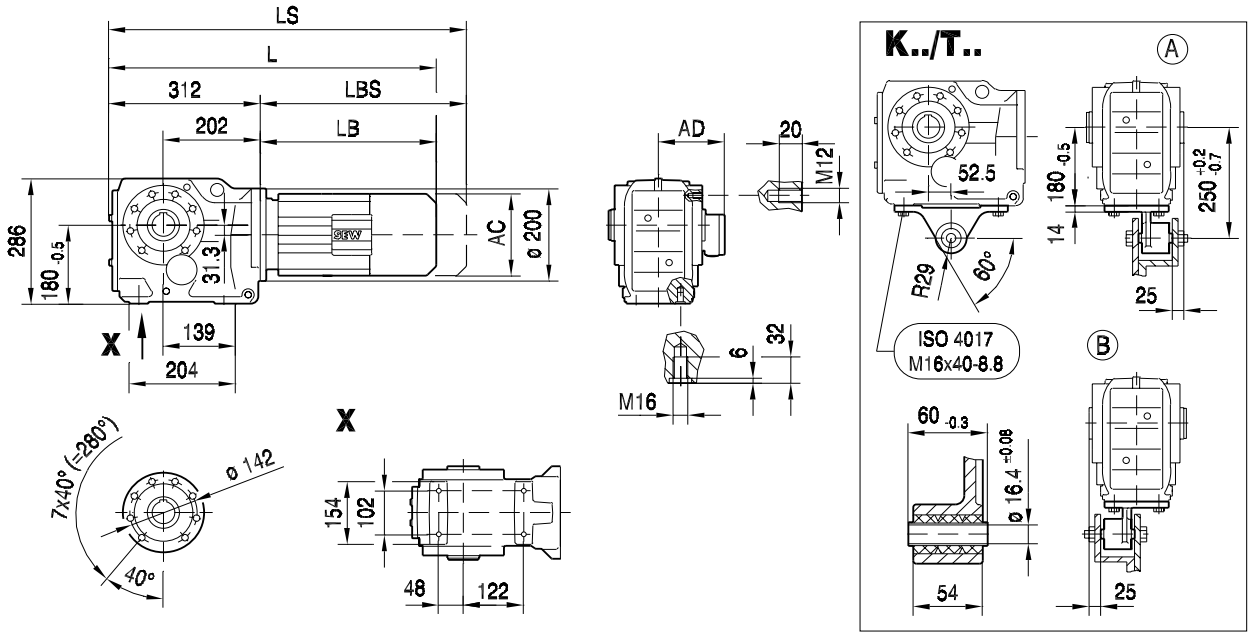

KA77..

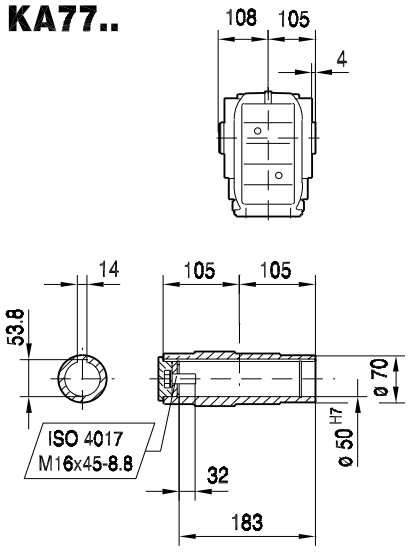

KH77..

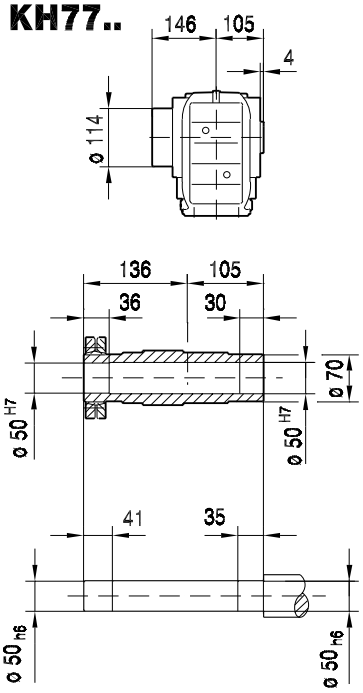

KV77..

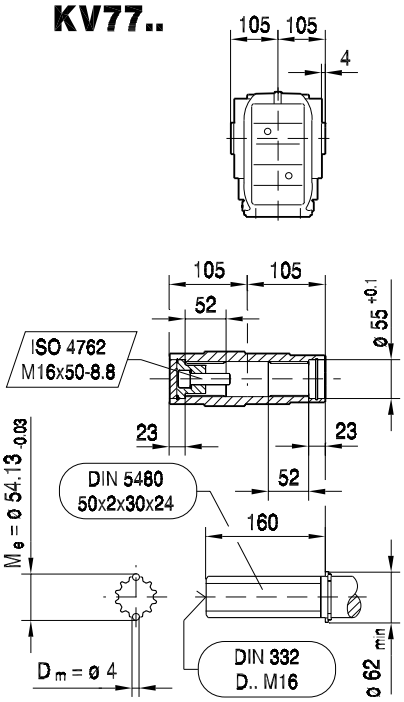

(→ 105)	CT71D	CT80N	CT90L	CV100M	CV100L	CV132S	CV132M	CV132ML	CV160M		
AC	145	145	197	197	197	221	285	285	285		
AD	126	126	160	165	165	178	229	229	229		
L	589	639	650	700	730	778	963	1023	1023		
LS	652	702	735	785	815	858	963	1023	1023		
LB	277	327	338	388	418	466	651	711	711		
LBS	340	390	423	473	503	546	651	711	711		

39 020 00 04

KAZ77..

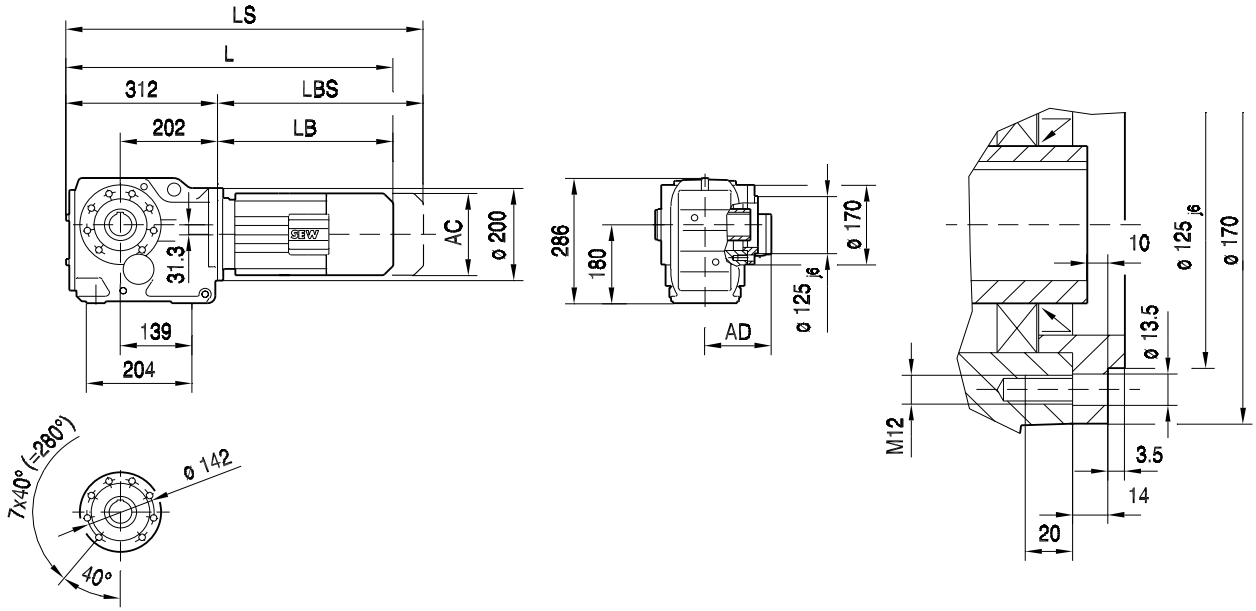

KAZ77..

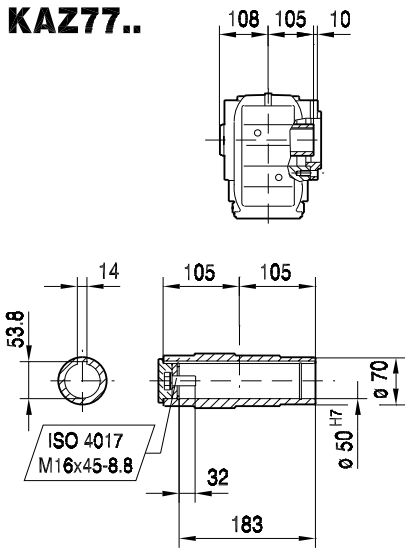

KHZ77..

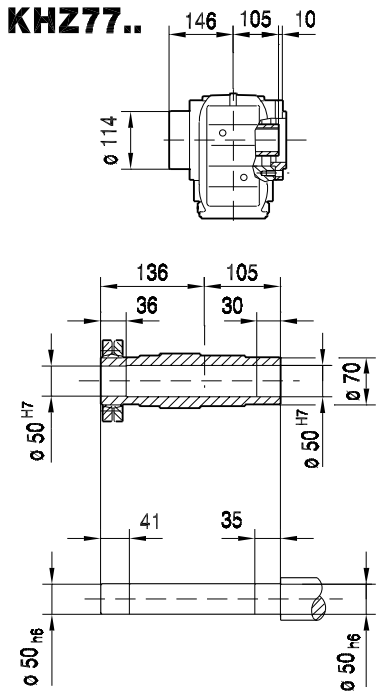

KVZ77..

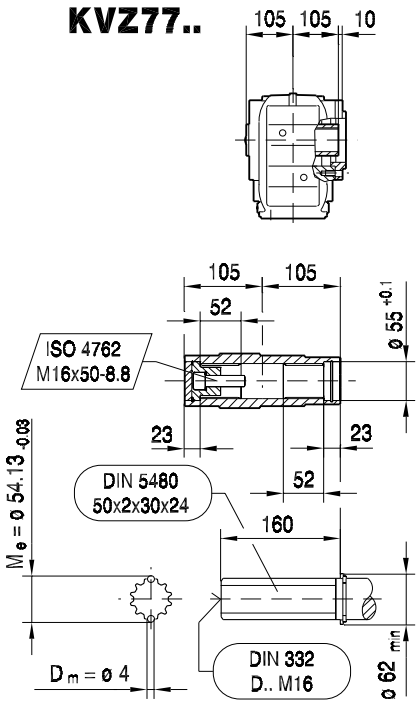

(→ 105)	CT71D	CT80N	CT90L	CV100M	CV100L	CV132S	CV132M	CV132ML	CV160M		
AC	145	145	197	197	197	221	285	285	285		
AD	126	126	160	165	165	178	229	229	229		
L	589	639	650	700	730	778	963	1023	1023		
LS	652	702	735	785	815	858	963	1023	1023		
LB	277	327	338	388	418	466	651	711	711		
LBS	340	390	423	473	503	546	651	711	711		

39 030 00 04

KT77..

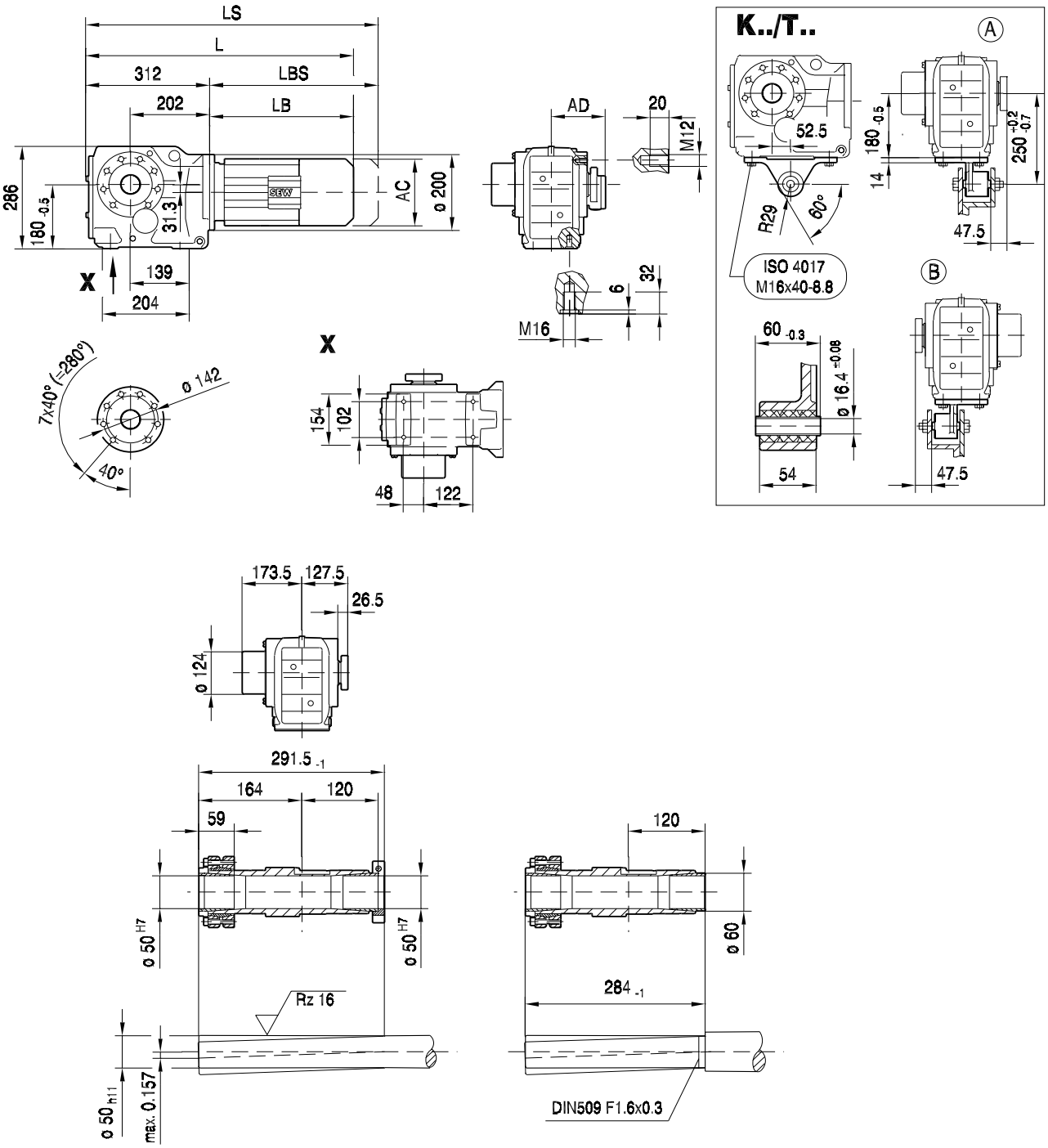

(→ 105)	CT71D	CT80N	CT90L	CV100M	CV100L	CV132S	CV132M	CV132ML	CV160M		
AC	145	145	197	197	197	221	285	285	285		
AD	126	126	160	165	165	178	229	229	229		
L	589	639	650	700	730	778	963	1023	1023		
LS	652	702	735	785	815	858	963	1023	1023		
LB	277	327	338	388	418	466	651	711	711		
LBS	340	390	423	473	503	546	651	711	711		

34 011 00 04

K87..

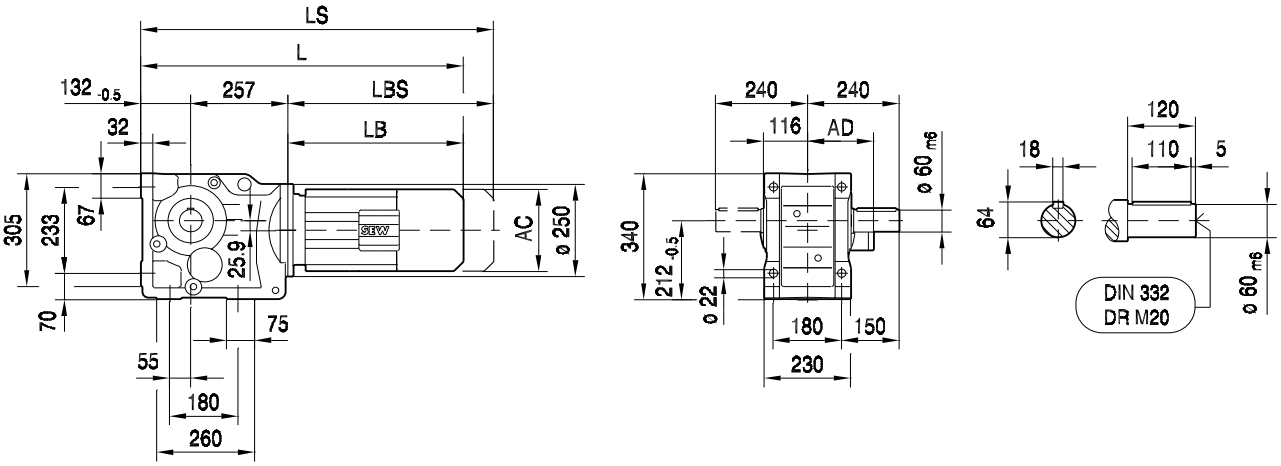

KA87B..

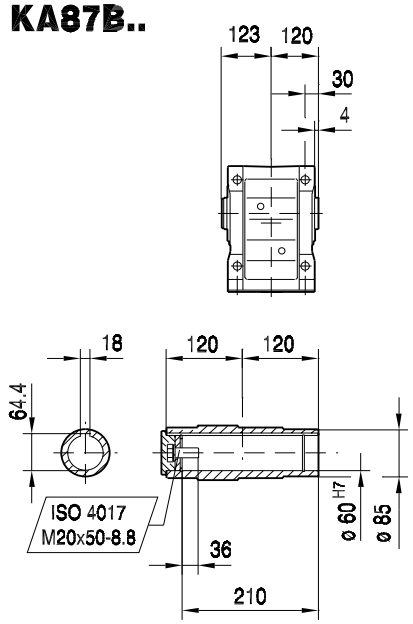

KH87B..

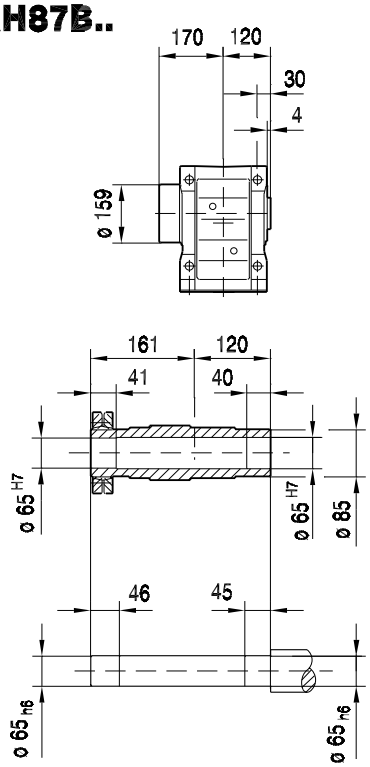

KV87B..

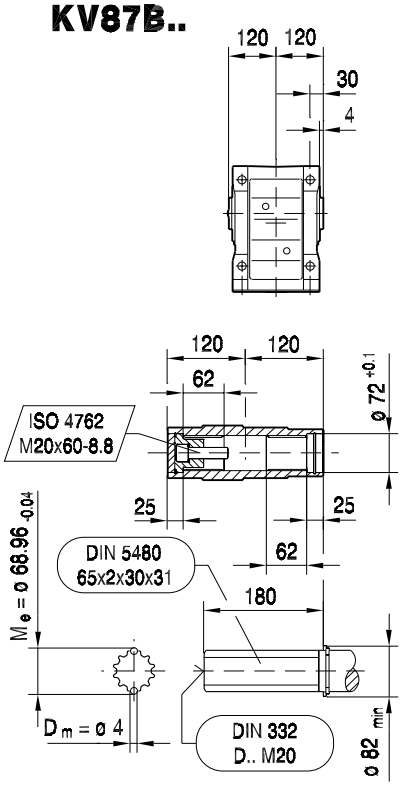

(→ 105)	CT80N	CT90L	CV100M	CV100L	CV132S	CV132M	CV132ML	CV160M	CV160L	CV180..	
AC	145	197	197	197	221	285	285	285	342	342	
AD	126	160	165	165	178	229	229	229	252	252	
L	711	723	773	803	850	1035	1095	1095	1183	1255	
LS	774	808	858	888	930	1035	1095	1095	1183	1255	
LB	322	334	384	414	461	646	706	706	794	866	
LBS	385	419	469	499	541	646	706	706	794	866	

34 023 00 04

KF87..

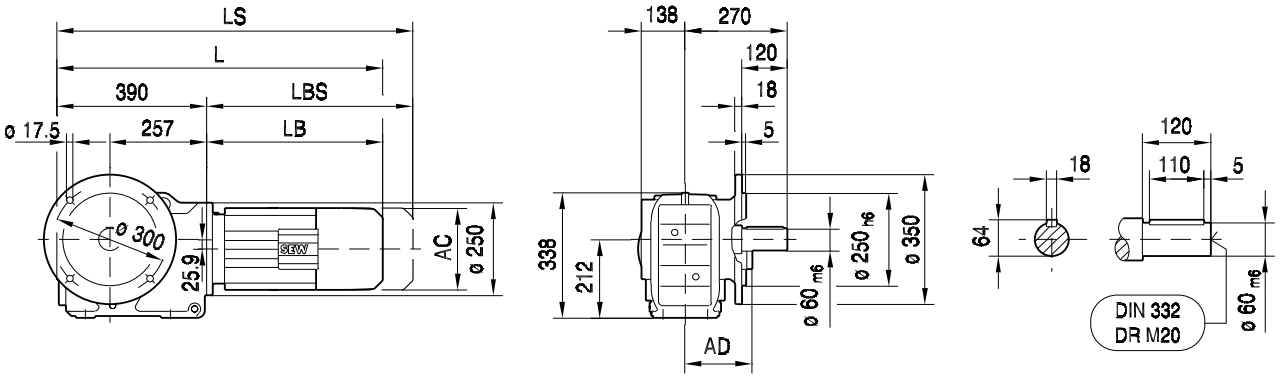

KAF87..

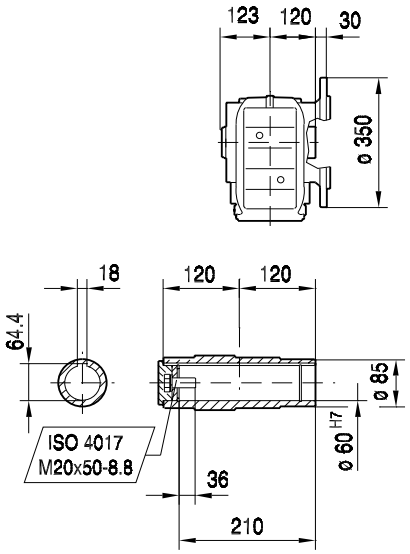

KHF87..

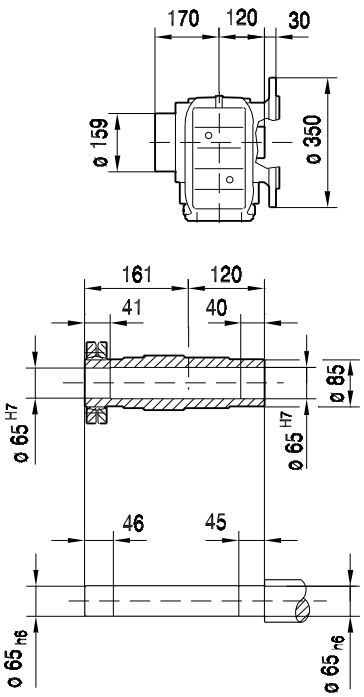

KVF87..

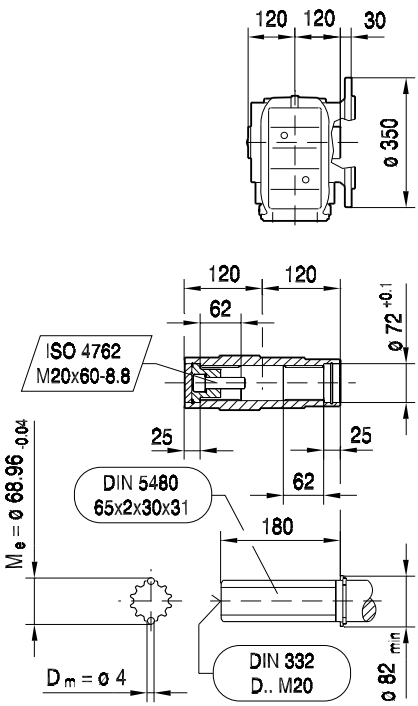

(→ 105)	CT80N	CT90L	CV100M	CV100L	CV132S	CV132M	CV132ML	CV160M	CV160L	CV180..	
AC	145	197	197	197	221	285	285	285	342	342	
AD	126	160	165	165	178	229	229	229	252	252	
L	712	724	774	804	851	1036	1096	1096	1184	1256	
LS	775	809	859	889	931	1036	1096	1096	1184	1256	
LB	322	334	384	414	461	646	706	706	794	866	
LBS	385	419	469	499	541	646	706	706	794	866	

39 097 01 00

KA87..

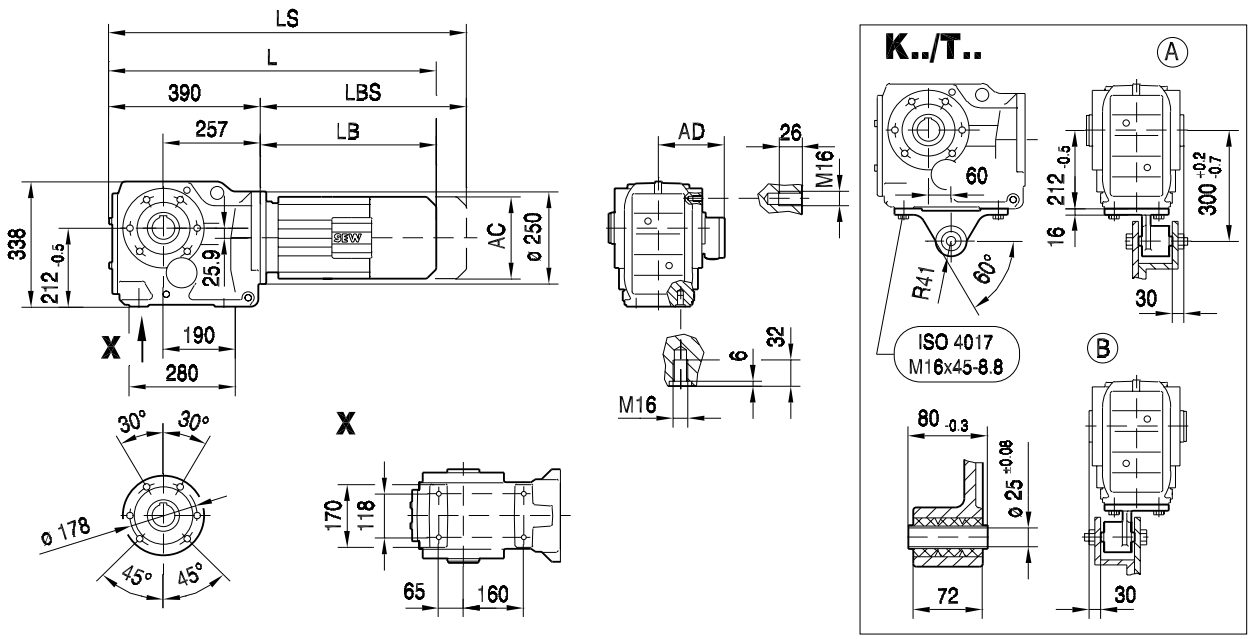

KA87..

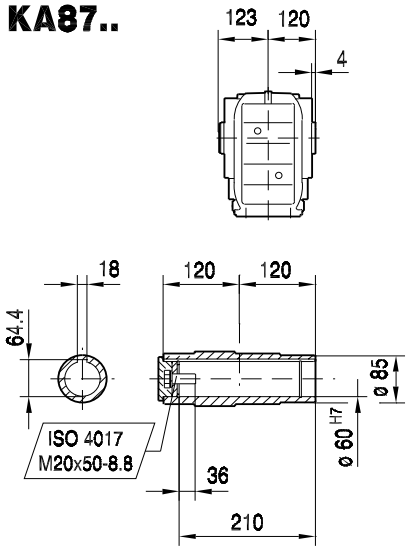

KH87..

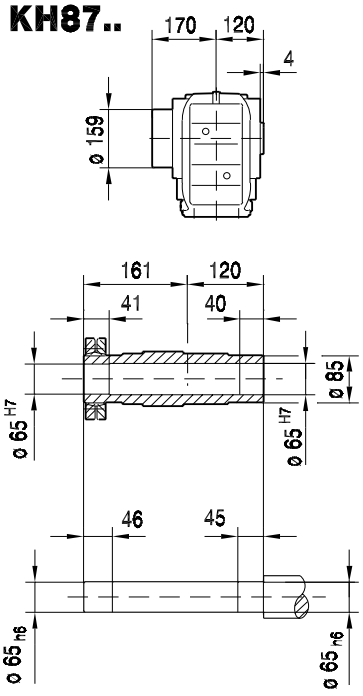

KV87..

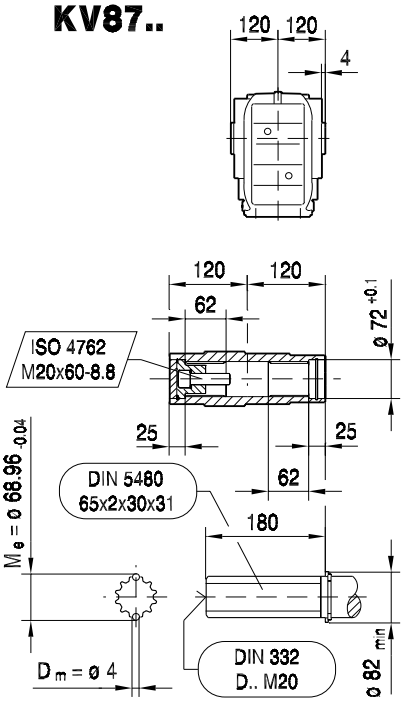

(→ 105)	CT80N	CT90L	CV100M	CV100L	CV132S	CV132M	CV132ML	CV160M	CV160L	CV180..	
AC	145	197	197	197	221	285	285	285	342	342	
AD	126	160	165	165	178	229	229	229	252	252	
L	712	724	774	804	851	1036	1096	1096	1184	1256	
LS	775	809	859	889	931	1036	1096	1096	1184	1256	
LB	322	334	384	414	461	646	706	706	794	866	
LBS	385	419	469	499	541	646	706	706	794	866	

39 021 00 04

KAZ87..

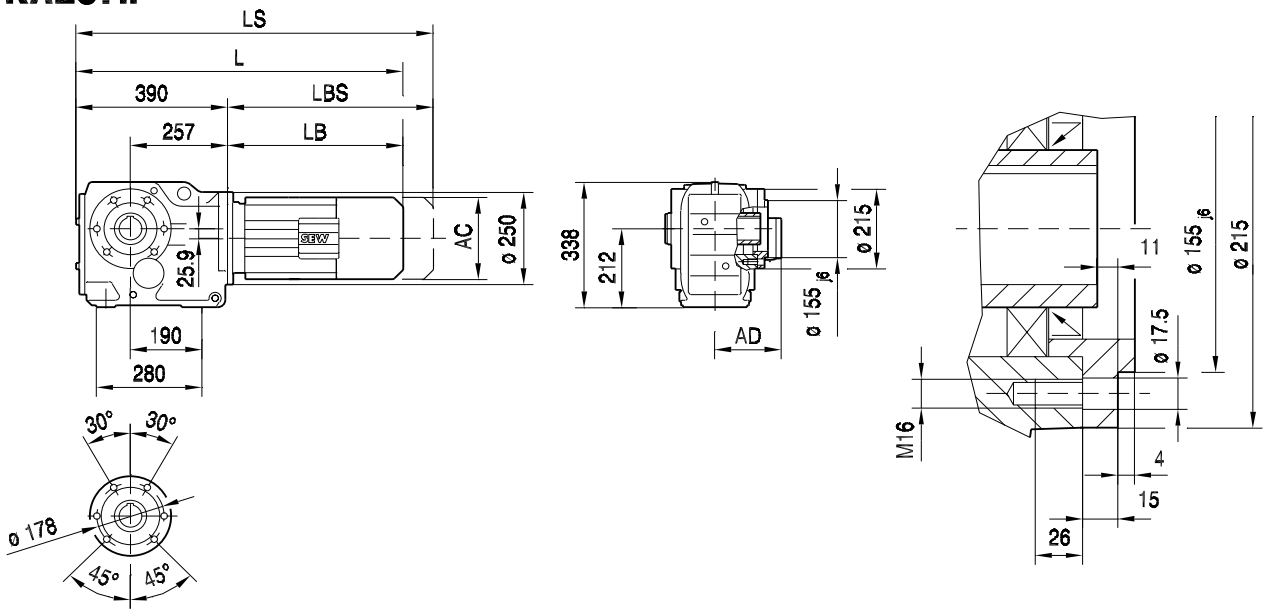

KAZ87..

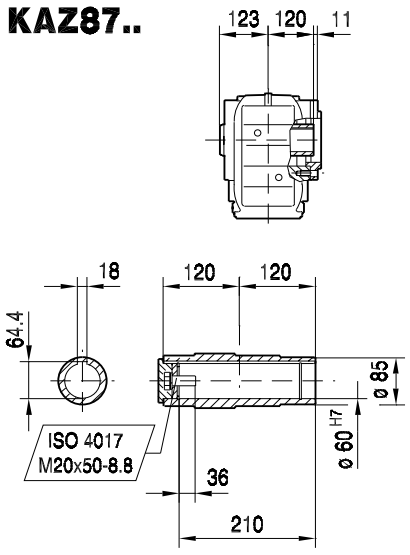

KHZ87..

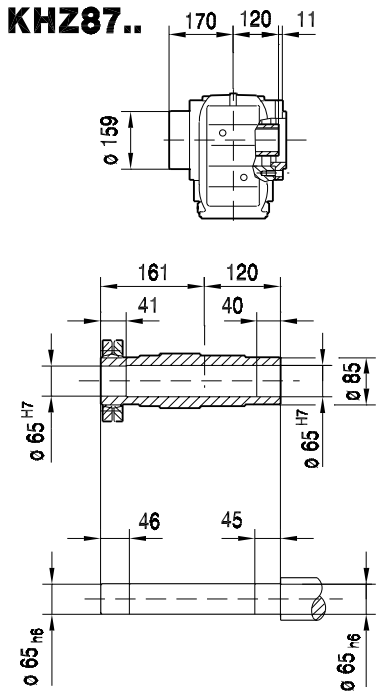

KVZ87..

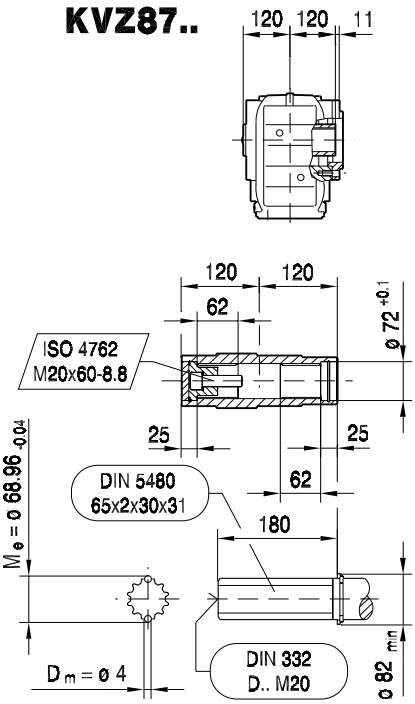

(→ 105)	CT80N	CT90L	CV100M	CV100L	CV132S	CV132M	CV132ML	CV160M	CV160L	CV180..	
AC	145	197	197	197	221	285	285	285	342	342	
AD	126	160	165	165	178	229	229	229	252	252	
L	712	724	774	804	851	1036	1096	1096	1184	1256	
LS	775	809	859	889	931	1036	1096	1096	1184	1256	
LB	322	334	384	414	461	646	706	706	794	866	
LBS	385	419	469	499	541	646	706	706	794	866	

39 031 00 04

KT87..

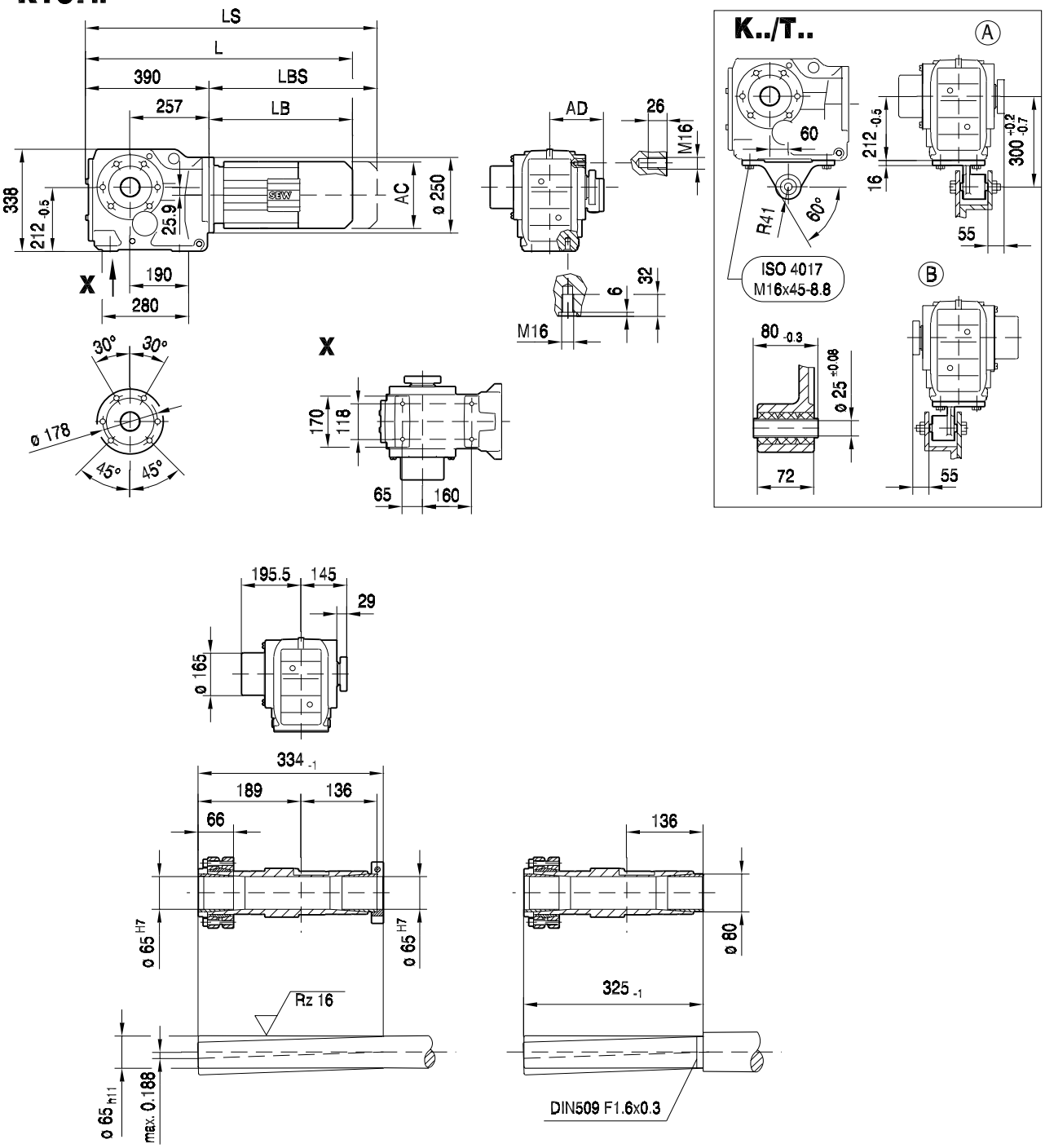

(→ 105)	CT80N	CT90L	CV100M	CV100L	CV132S	CV132M	CV132ML	CV160M	CV160L	CV180..	
AC	145	197	197	197	221	285	285	285	342	342	
AD	126	160	165	165	178	229	229	229	252	252	
L	712	724	774	804	851	1036	1096	1096	1184	1256	
LS	775	809	859	889	931	1036	1096	1096	1184	1256	
LB	322	334	384	414	461	646	706	706	794	866	
LBS	385	419	469	499	541	646	706	706	794	866	

34 012 00 04

K97..

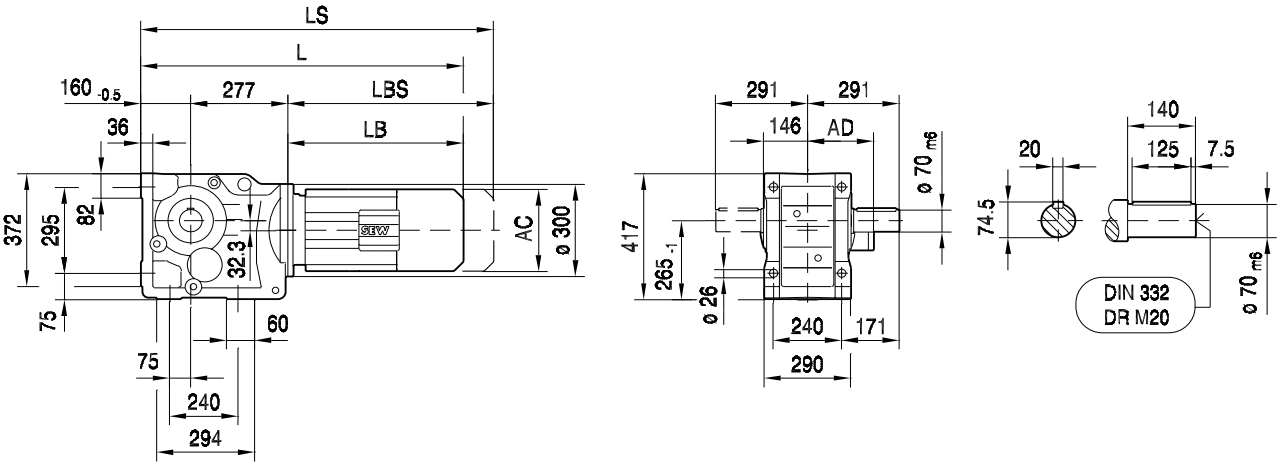

KA97B..

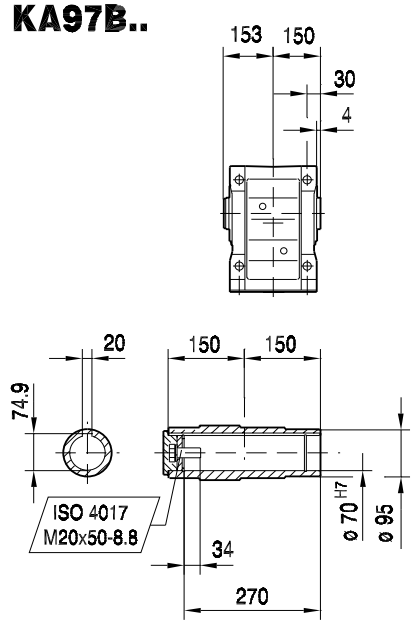

KH97B..

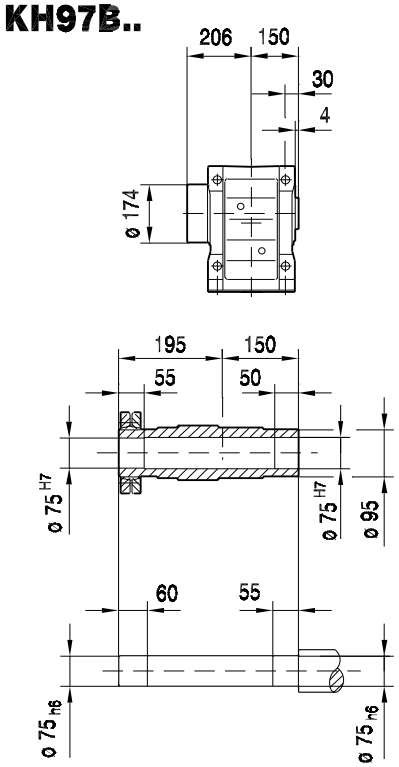

KV97B..

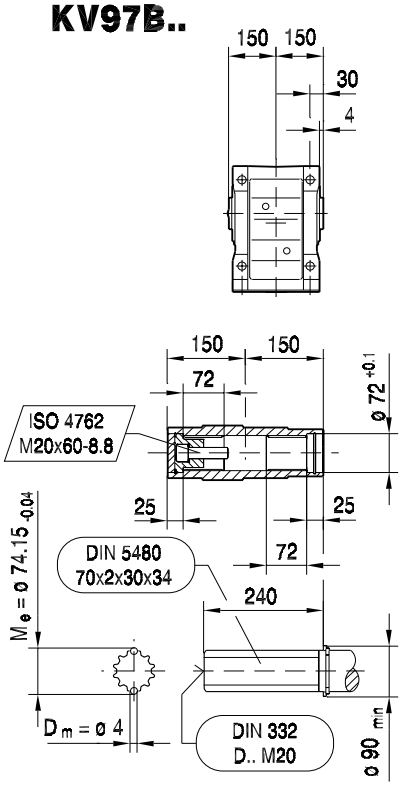

(→ 105)	CT80N	CT90L	CV100M	CV100L	CV132S	CV132M	CV132ML	CV160M	CV160L	CV180..	CV200L
AC	145	197	197	197	221	285	285	285	342	342	394
AD	126	160	165	165	178	229	229	229	252	252	285
L	752	765	815	845	893	1078	1138	1138	1226	1298	1357
LS	815	850	900	930	973	1078	1138	1138	1226	1298	1357
LB	315	328	378	408	456	641	701	701	789	861	920
LBS	378	413	463	493	536	641	701	701	789	861	920

34 024 00 04

KF97..

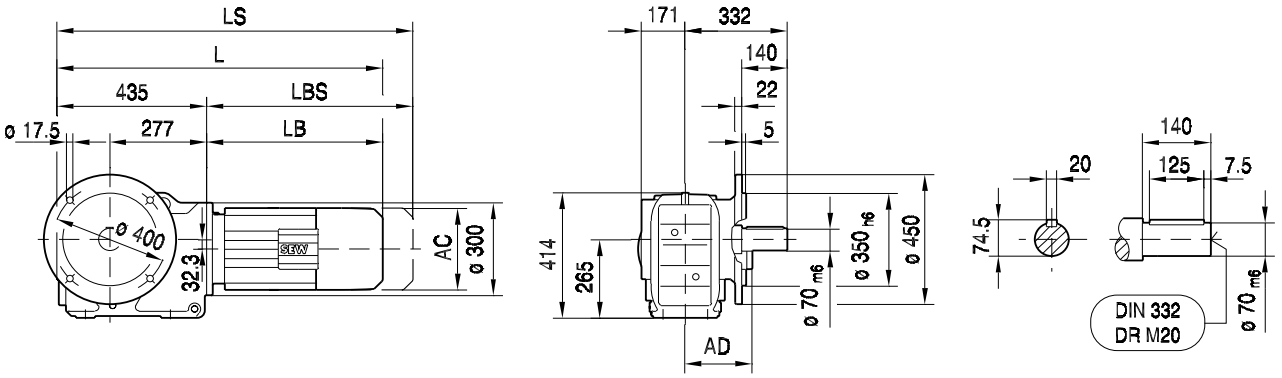

KAF97..

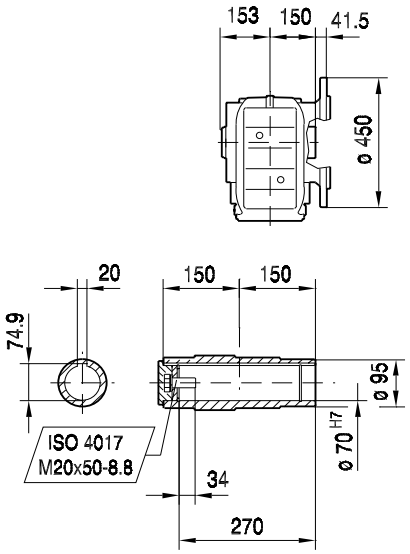

KHF97..

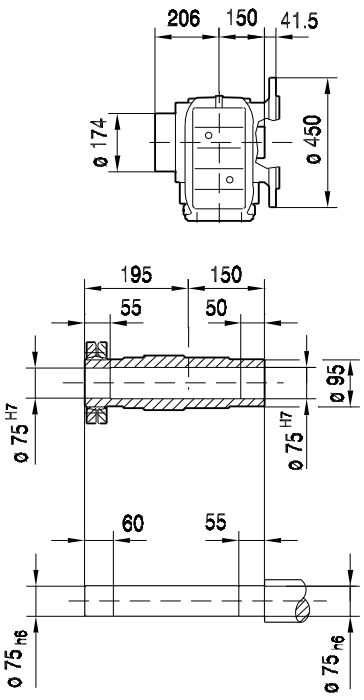

KVF97..

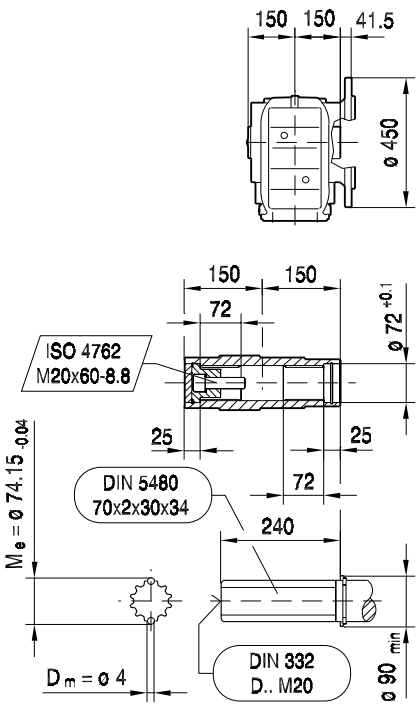

(→ 105)	CT80N	CT90L	CV100M	CV100L	CV132S	CV132M	CV132ML	CV160M	CV160L	CV180..	CV200L
AC	145	197	197	197	221	285	285	285	342	342	394
AD	126	160	165	165	178	229	229	229	252	252	285
L	750	763	813	843	891	1076	1136	1136	1224	1296	1355
LS	813	848	898	928	971	1076	1136	1136	1224	1296	1355
LB	315	328	378	408	456	641	701	701	789	861	920
LBS	378	413	463	493	536	641	701	701	789	861	920

KA97..

39 098 01 00

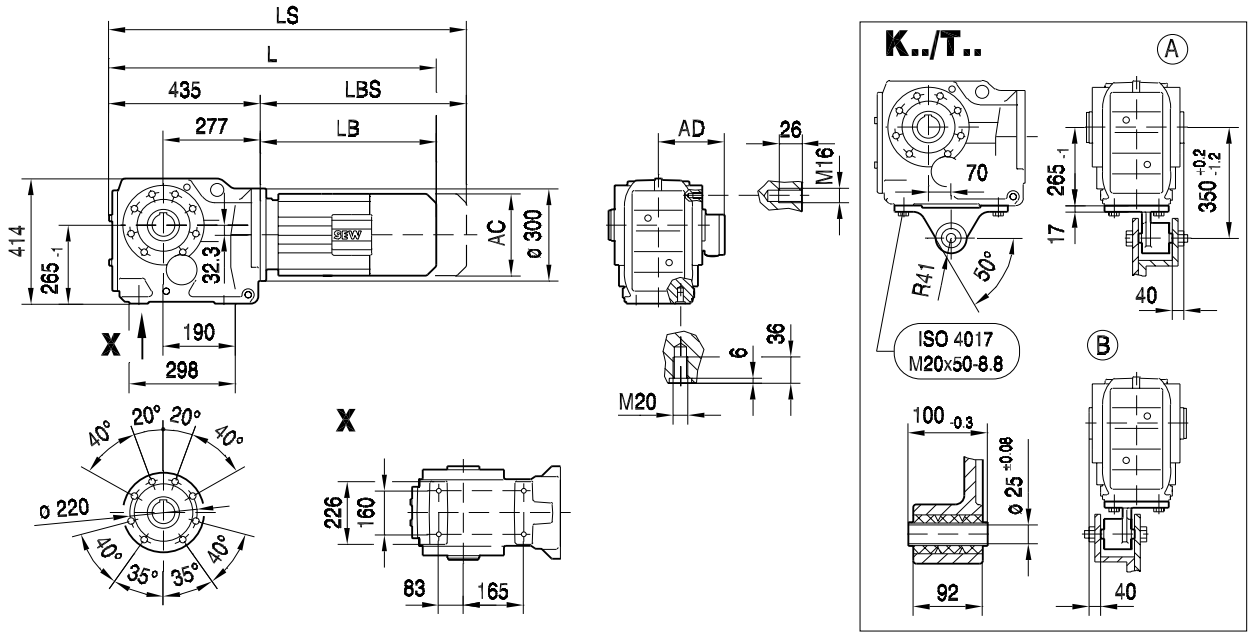

KA97..

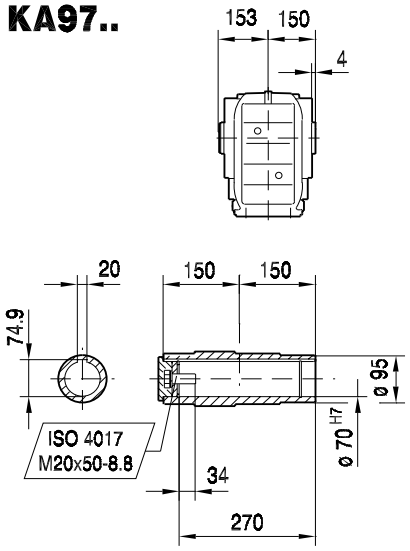

KH97..

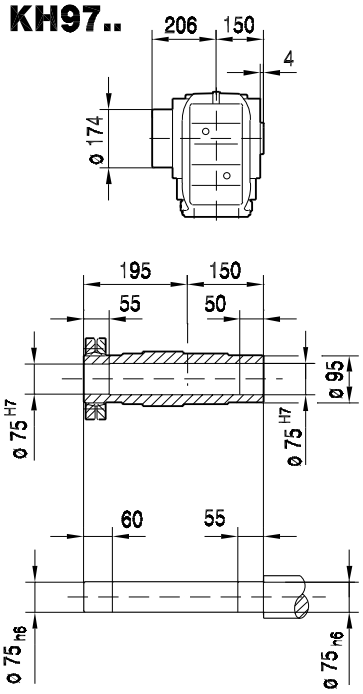

KV97..

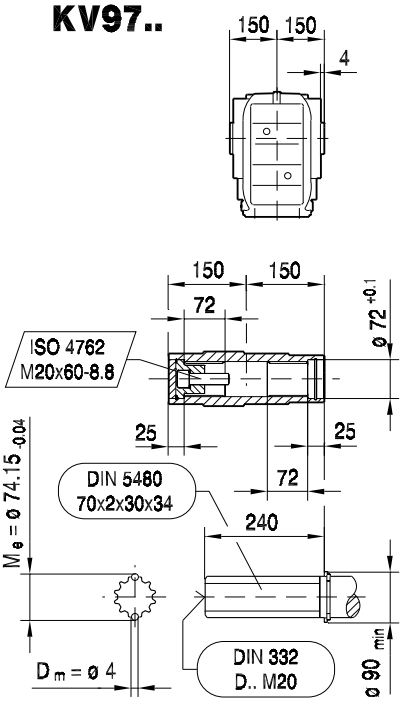

(→ 105)	CT80N	CT90L	CV100M	CV100L	CV132S	CV132M	CV132ML	CV160M	CV160L	CV180..	CV200L
AC	145	197	197	197	221	285	285	285	342	342	394
AD	126	160	165	165	178	229	229	229	252	252	285
L	750	763	813	843	891	1076	1136	1136	1224	1296	1355
LS	813	848	898	928	971	1076	1136	1136	1224	1296	1355
LB	315	328	378	408	456	641	701	701	789	861	920
LBS	378	413	463	493	536	641	701	701	789	861	920

39 022 00 04

KAZ97..

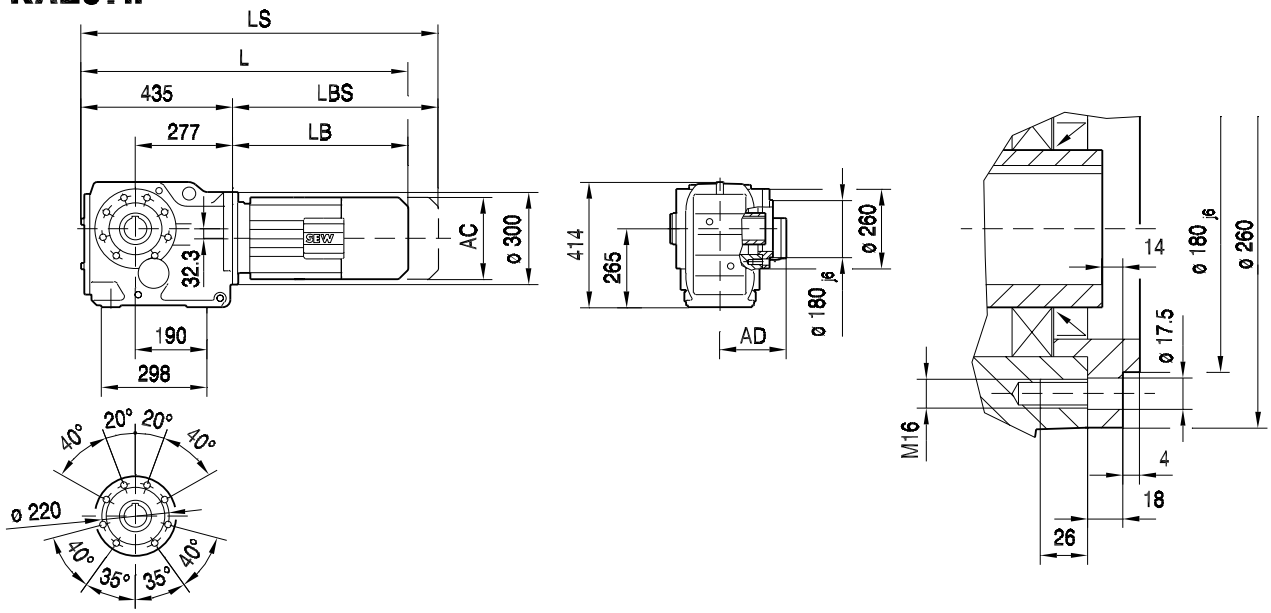

KAZ97..

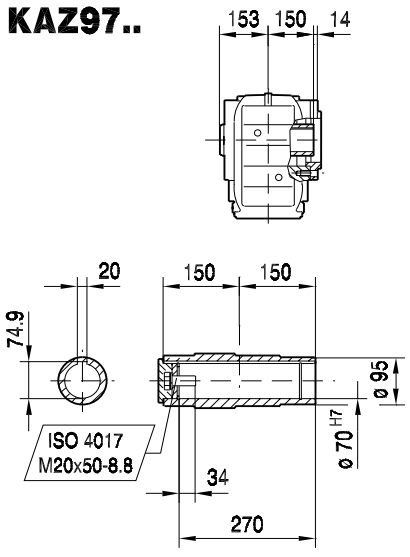

KHZ97..

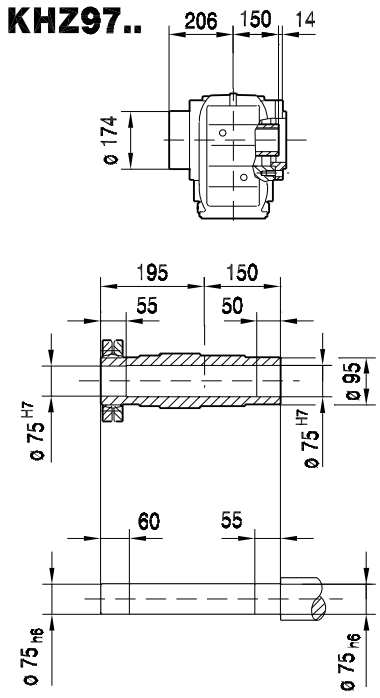

KVZ97..

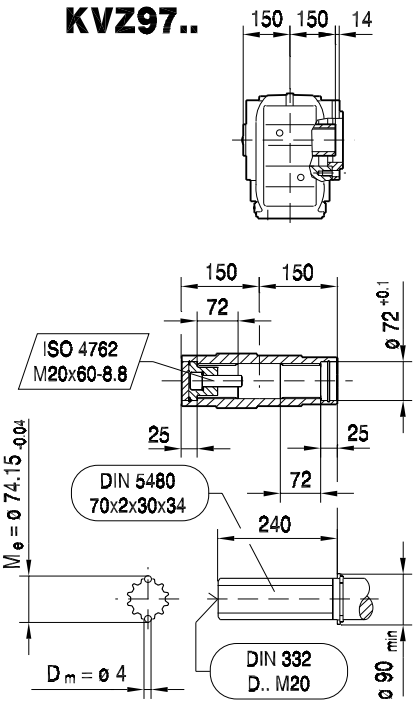

(→ 105)	CT80N	CT90L	CV100M	CV100L	CV132S	CV132M	CV132ML	CV160M	CV160L	CV180..	CV200L
AC	145	197	197	197	221	285	285	285	342	342	394
AD	126	160	165	165	178	229	229	229	252	252	285
L	750	763	813	843	891	1076	1136	1136	1224	1296	1355
LS	813	848	898	928	971	1076	1136	1136	1224	1296	1355
LB	315	328	378	408	456	641	701	701	789	861	920
LBS	378	413	463	493	536	641	701	701	789	861	920

39 032 00 04

KT97..

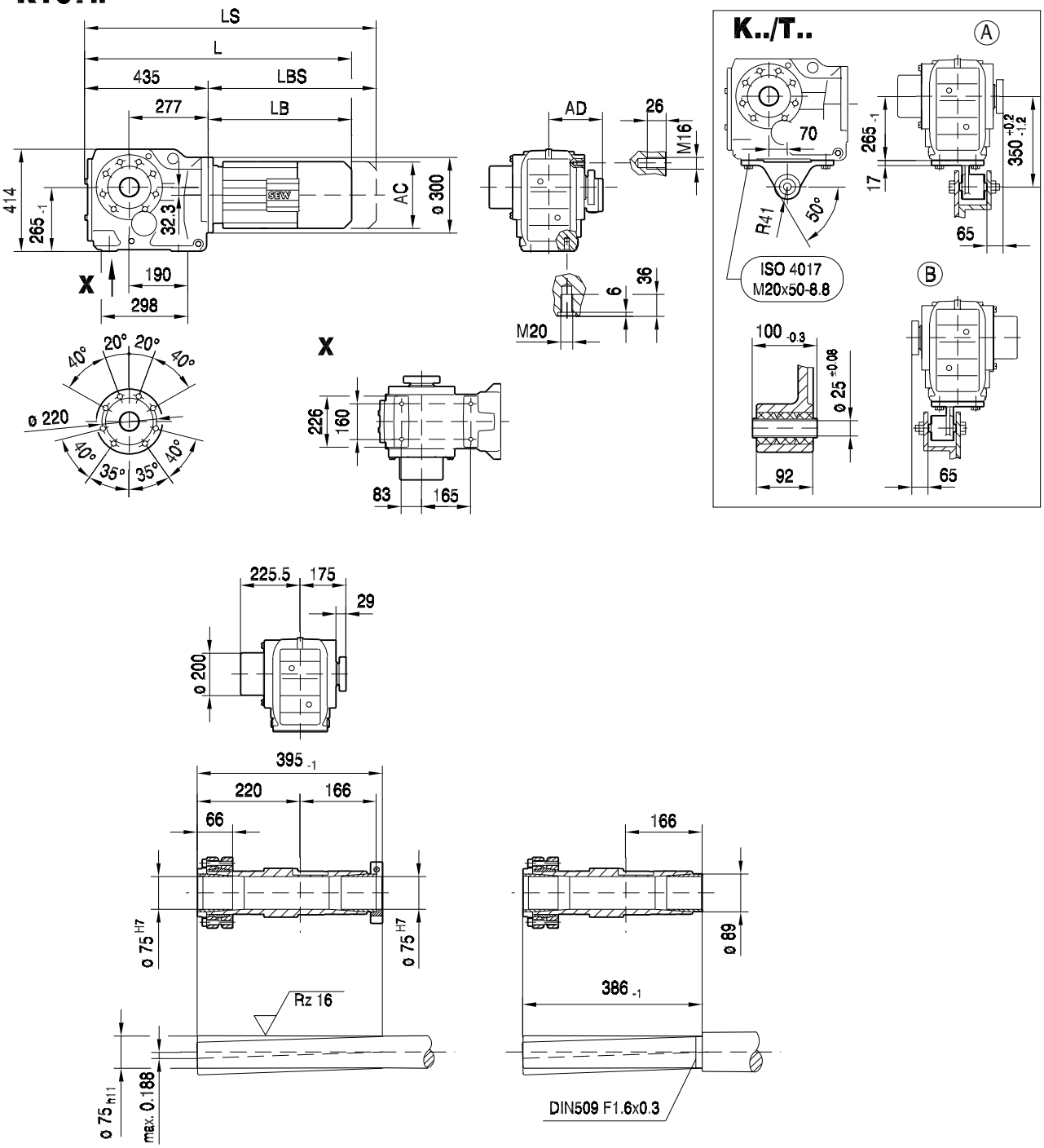

(→ 105)	CT80N	CT90L	CV100M	CV100L	CV132S	CV132M	CV132ML	CV160M	CV160L	CV180..	CV200L
AC	145	197	197	197	221	285	285	285	342	342	394
AD	126	160	165	165	178	229	229	229	252	252	285
L	750	763	813	843	891	1076	1136	1136	1224	1296	1355
LS	813	848	898	928	971	1076	1136	1136	1224	1296	1355
LB	315	328	378	408	456	641	701	701	789	861	920
LBS	378	413	463	493	536	641	701	701	789	861	920

34 013 00 04

K107..

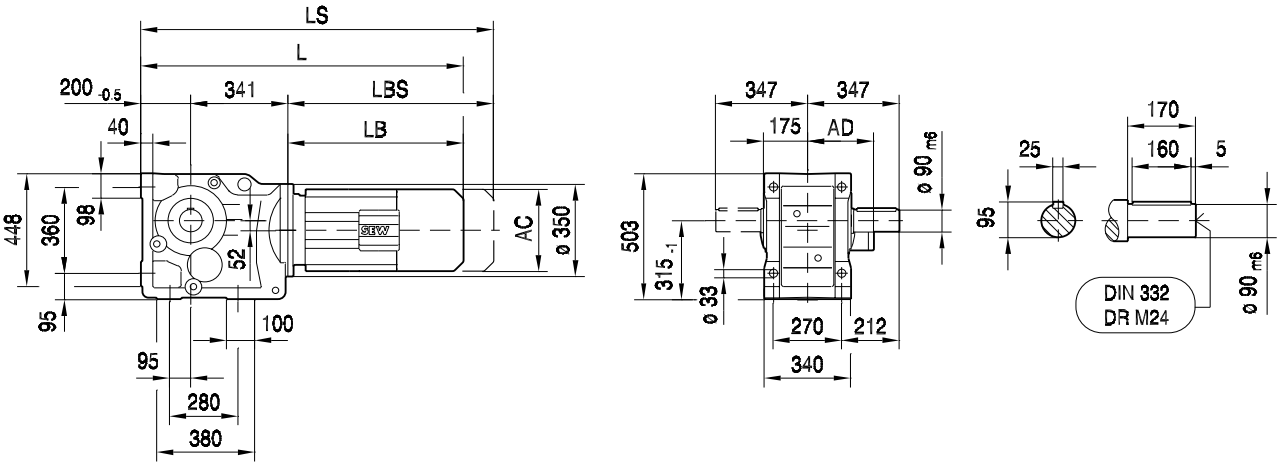

KA107B..

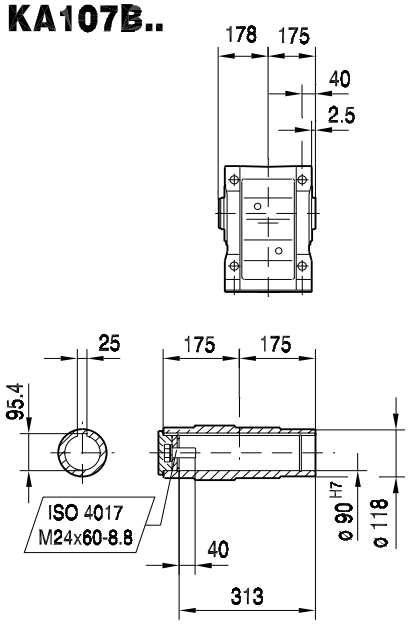

KH107B..

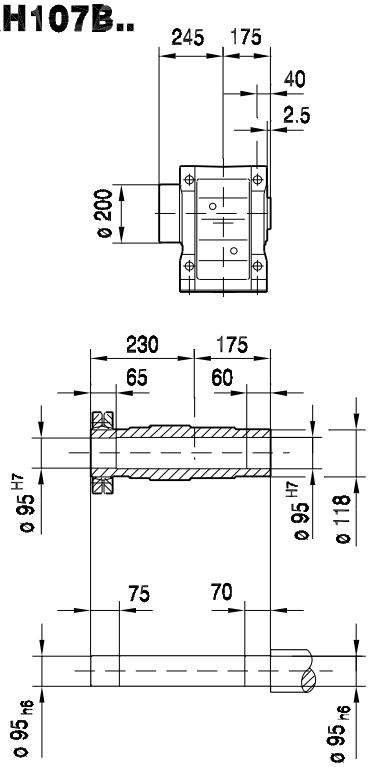

KV107B..

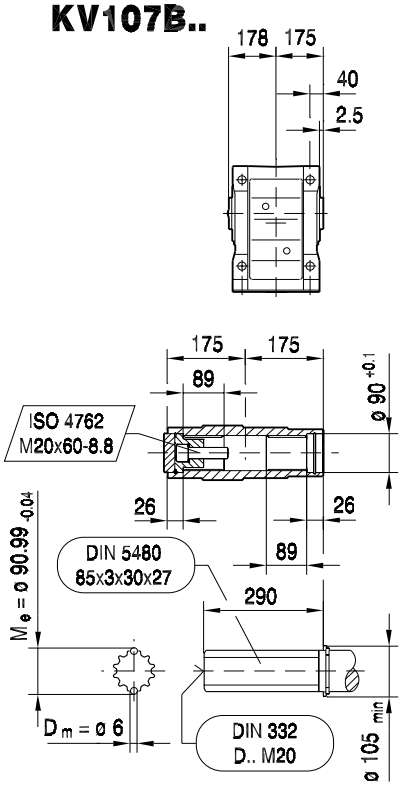

(→ 105)	CV100M	CV100L	CV132S	CV132M	CV132ML	CV160M	CV160L	CV180..	CV200L		
AC	197	197	221	285	285	285	342	342	394		
AD	165	165	178	229	229	229	252	252	285		
L	913	943	991	1176	1236	1236	1324	1396	1455		
LS	998	1028	1071	1176	1236	1236	1324	1396	1455		
LB	372	402	450	635	695	695	783	855	914		
LBS	457	487	530	635	695	695	783	855	914		

34 083 01 00

KF107..

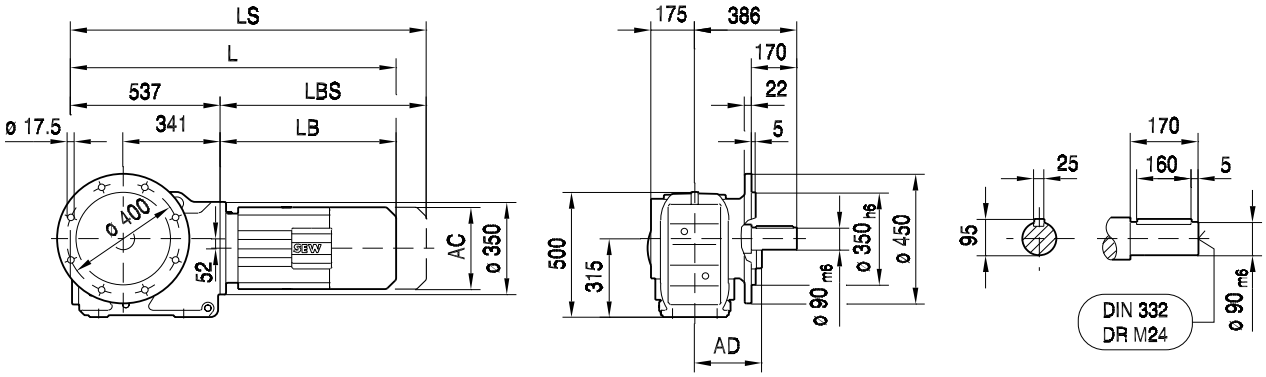

KAF107..

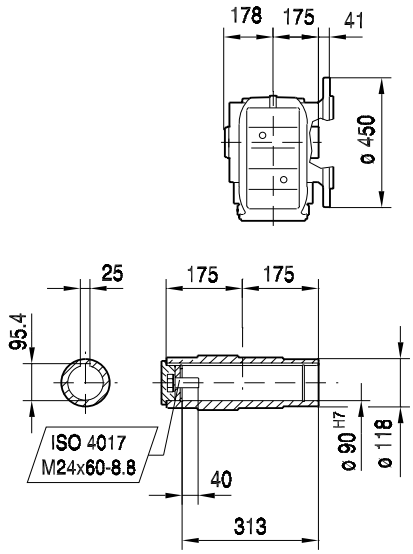

KHF107..

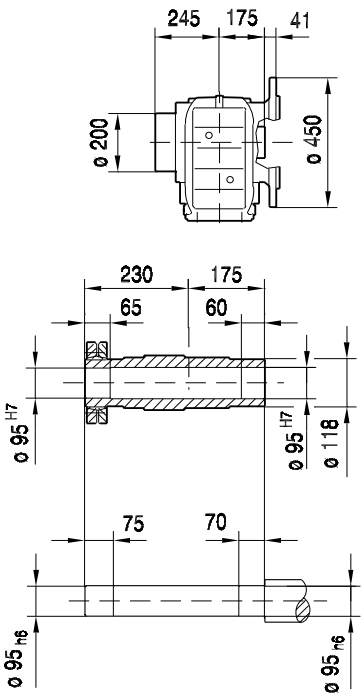

KVF107..

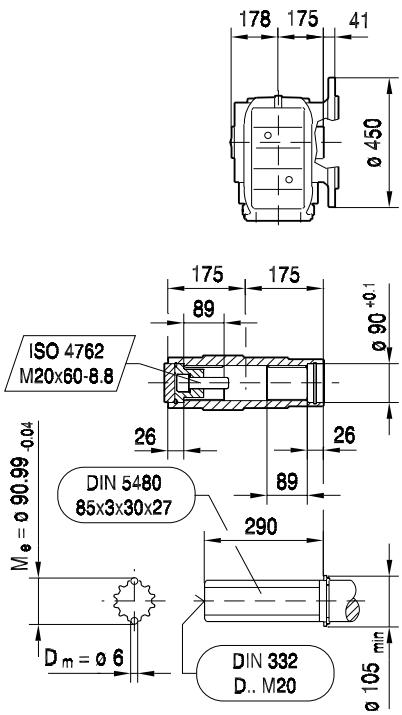

(→ 105)	CV100M	CV100L	CV132S	CV132M	CV132ML	CV160M	CV160L	CV180..	CV200L		
AC	197	197	221	285	285	285	342	342	394		
AD	165	165	178	229	229	229	252	252	285		
L	909	939	987	1172	1232	1232	1320	1392	1451		
LS	994	1024	1067	1172	1232	1232	1320	1392	1451		
LB	372	402	450	635	695	695	783	855	914		
LBS	457	487	530	635	695	695	783	855	914		

39 099 01 00

KA107..

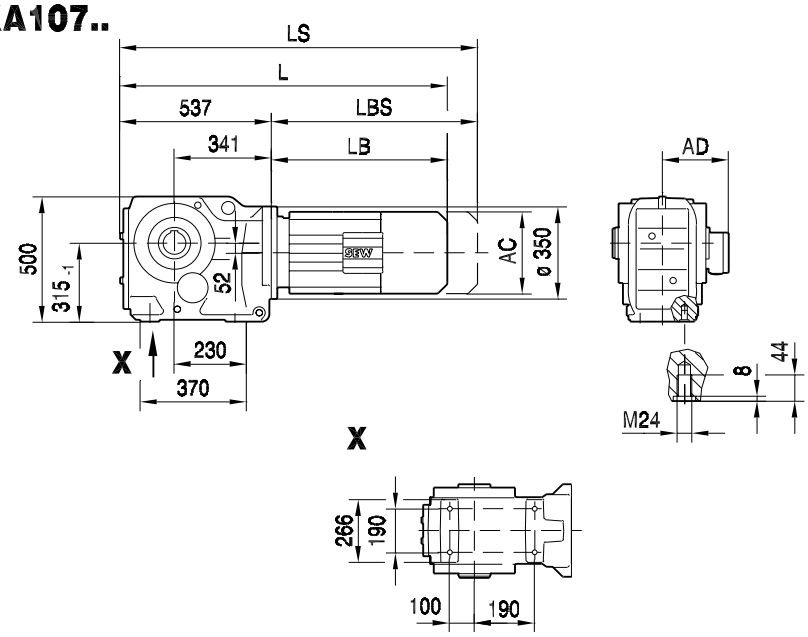

K../T..

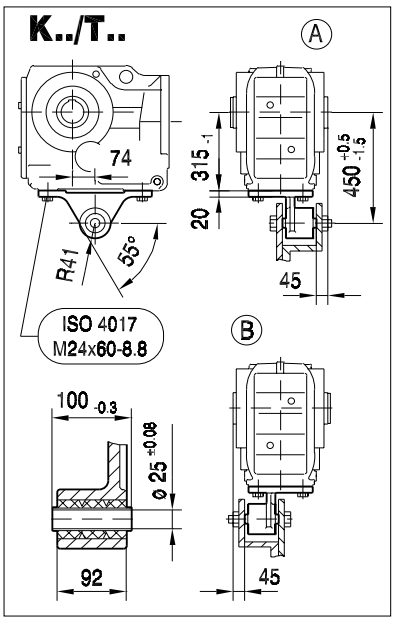

KA107..

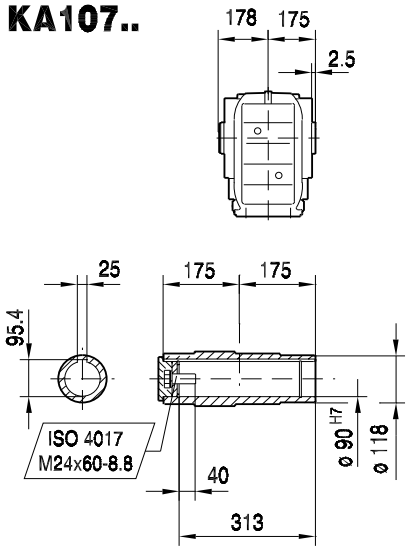

KH107..

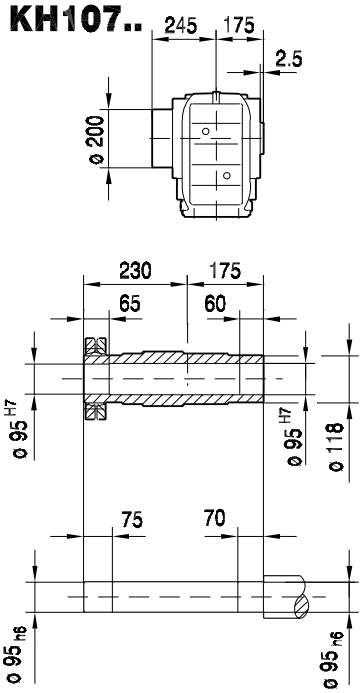

KV107..

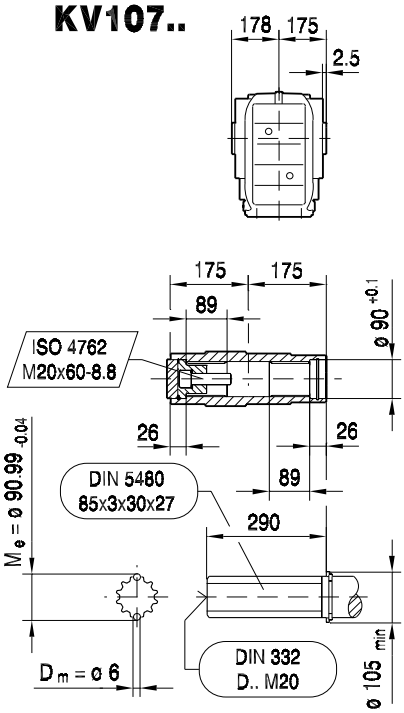

(→ 105)	CV100M	CV100L	CV132S	CV132M	CV132ML	CV160M	CV160L	CV180..	CV200L		
AC	197	197	221	285	285	285	342	342	394		
AD	165	165	178	229	229	229	252	252	285		
L	909	939	987	1172	1232	1232	1320	1392	1451		
LS	994	1024	1067	1172	1232	1232	1320	1392	1451		
LB	372	402	450	635	695	695	783	855	914		
LBS	457	487	530	635	695	695	783	855	914		

KAZ107..

39 023 00 04

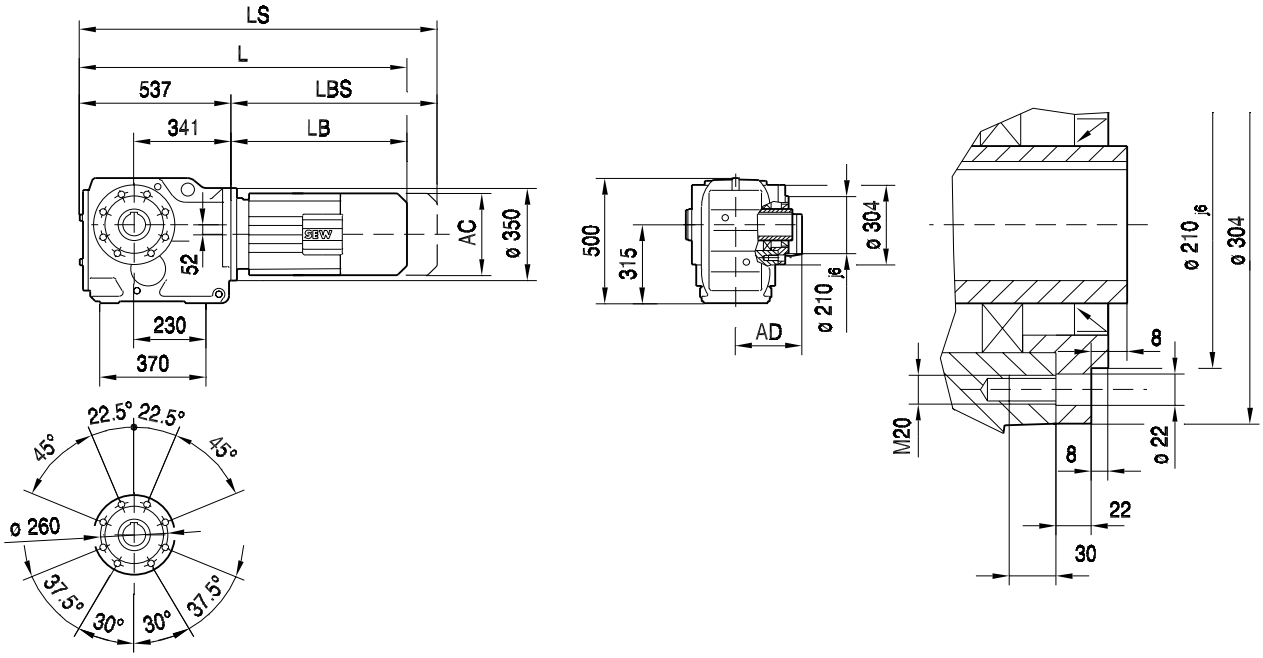

KAZ107..

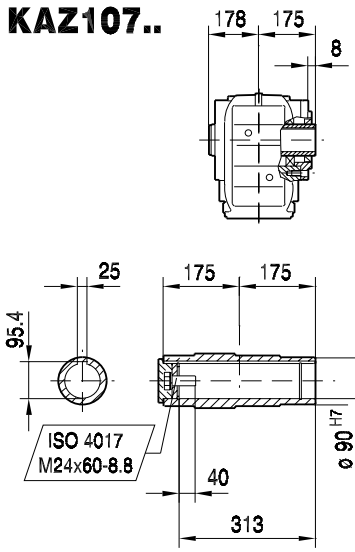

KHZ107..

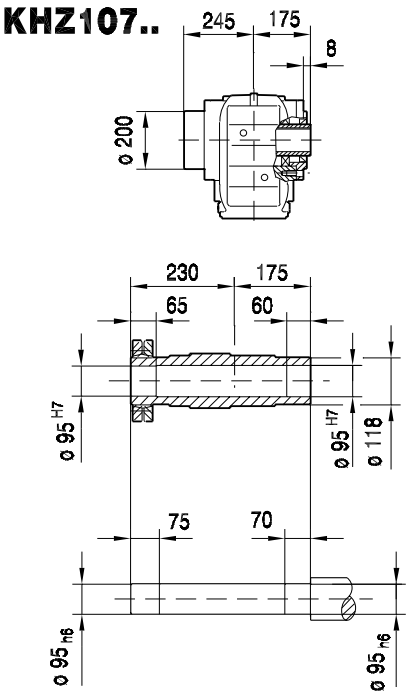

KVZ107..

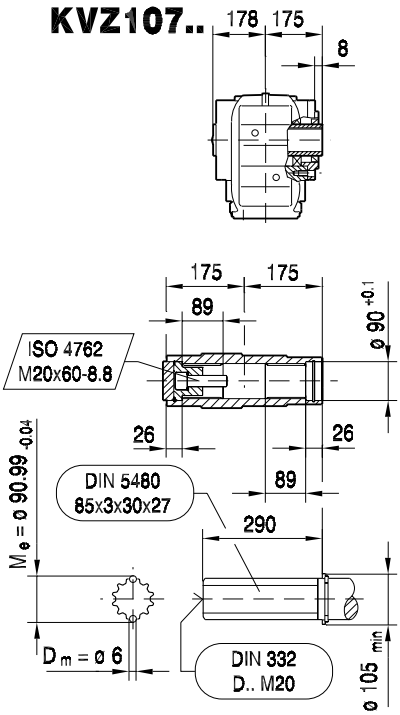

(→ 105)	CV100M	CV100L	CV132S	CV132M	CV132ML	CV160M	CV160L	CV180..	CV200L		
AC	197	197	221	285	285	285	342	342	394		
AD	165	165	178	229	229	229	252	252	285		
L	909	939	987	1172	1232	1232	1320	1392	1451		
LS	994	1024	1067	1172	1232	1232	1320	1392	1451		
LB	372	402	450	635	695	695	783	855	914		
LBS	457	487	530	635	695	695	783	855	914		

34 014 00 04

K127..

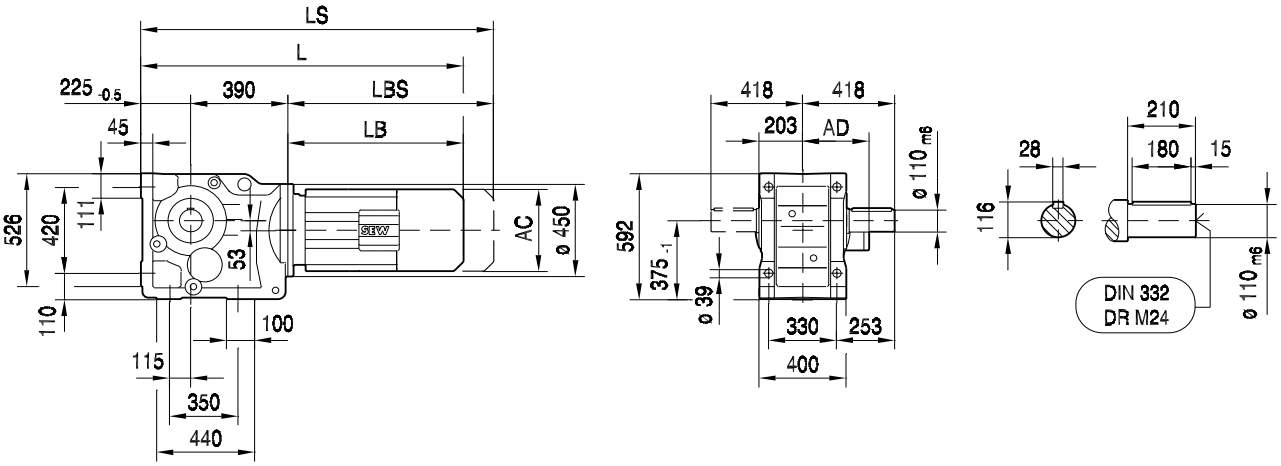

KA127B..

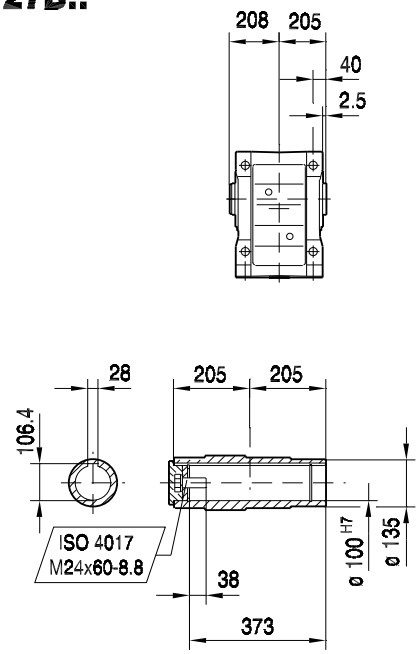

KH127B..

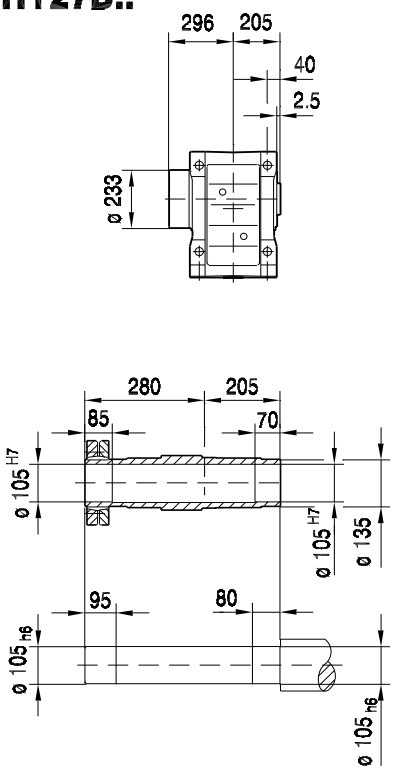

(→ 105)	CV132M	CV132ML	CV160M	CV160L	CV180..	CV200L					
AC	285	285	285	342	342	394					
AD	229	229	229	252	252	285					
L	1235	1295	1295	1383	1455	1514					
LS	1235	1295	1295	1383	1455	1514					
LB	620	680	680	768	840	899					
LBS	620	680	680	768	840	899					

34 084 01 00

KF127..

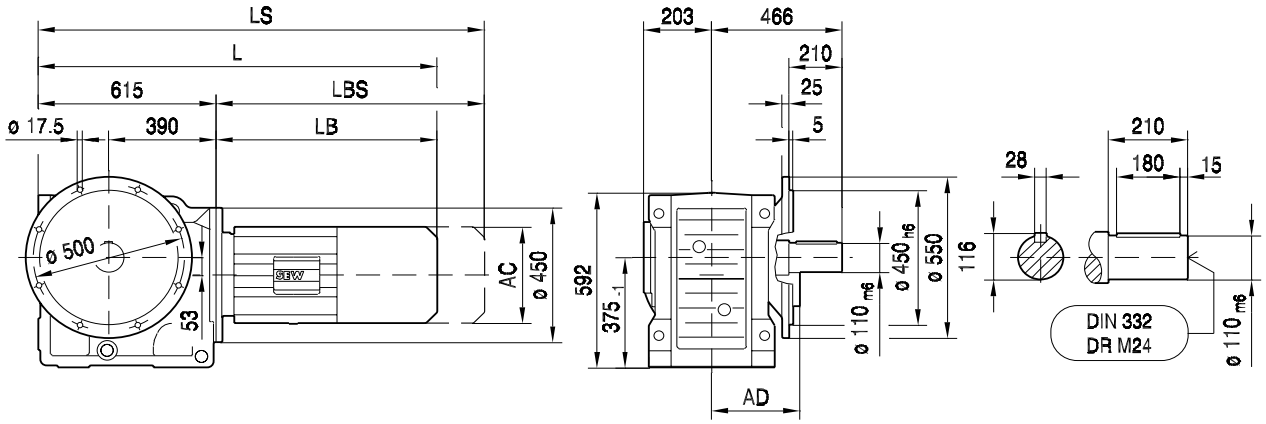

KAF127..

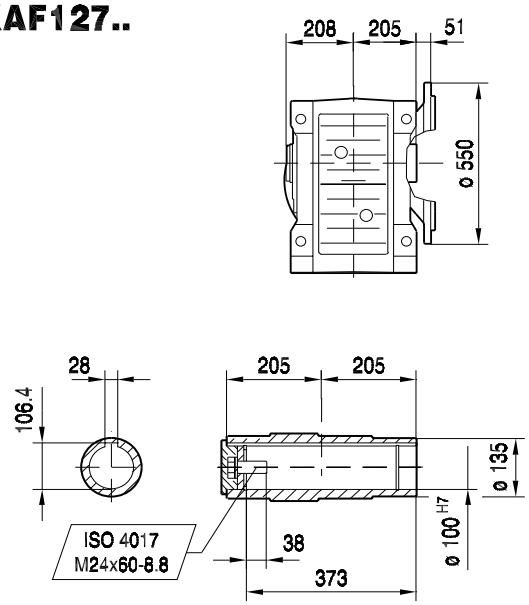

KHF127..

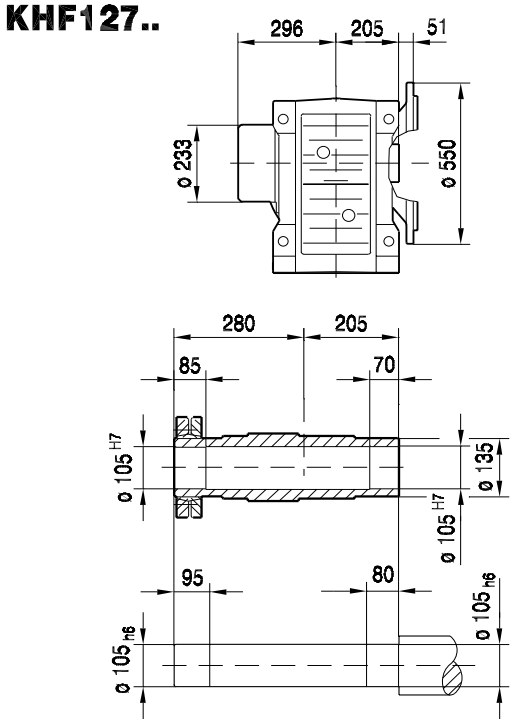

(→ 105)	CV132M	CV132ML	CV160M	CV160L	CV180..	CV200L					
AC	285	285	285	342	342	394					
AD	229	229	229	252	252	285					
L	1235	1295	1295	1383	1455	1514					
LS	1235	1295	1295	1383	1455	1514					
LB	620	680	680	768	840	899					
LBS	620	680	680	768	840	899					

39 100 01 00

KA127..

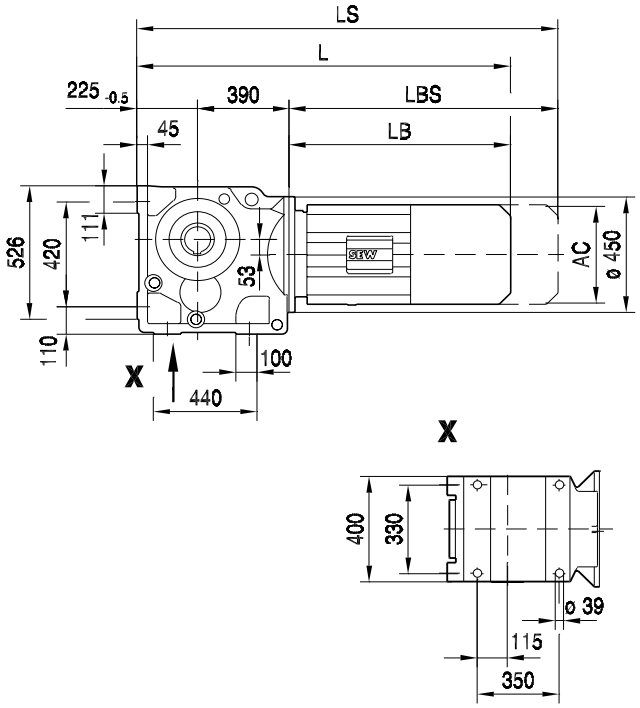

K../T..

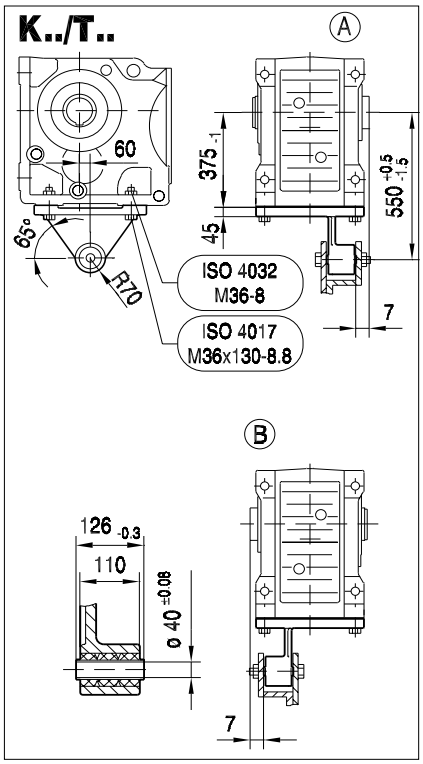

KA127..

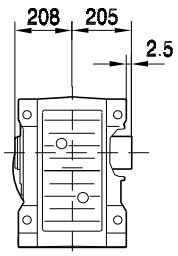

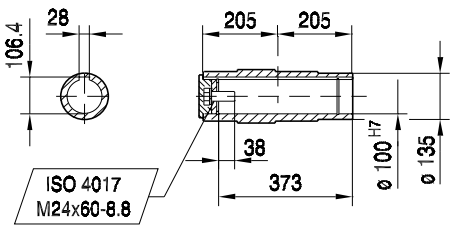

KH127..

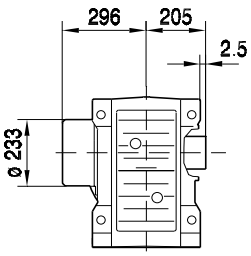

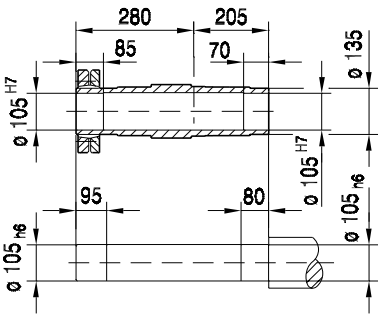

(→ 105)	CV132M	CV132ML	CV160M	CV160L	CV180..	CV200L					
AC	285	285	285	342	342	394					
AD	229	229	229	252	252	285					
L	1235	1295	1295	1383	1455	1514					
LS	1235	1295	1295	1383	1455	1514					
LB	620	680	680	768	840	899					
LBS	620	680	680	768	840	899					

KAZ127..

39 024 00 04

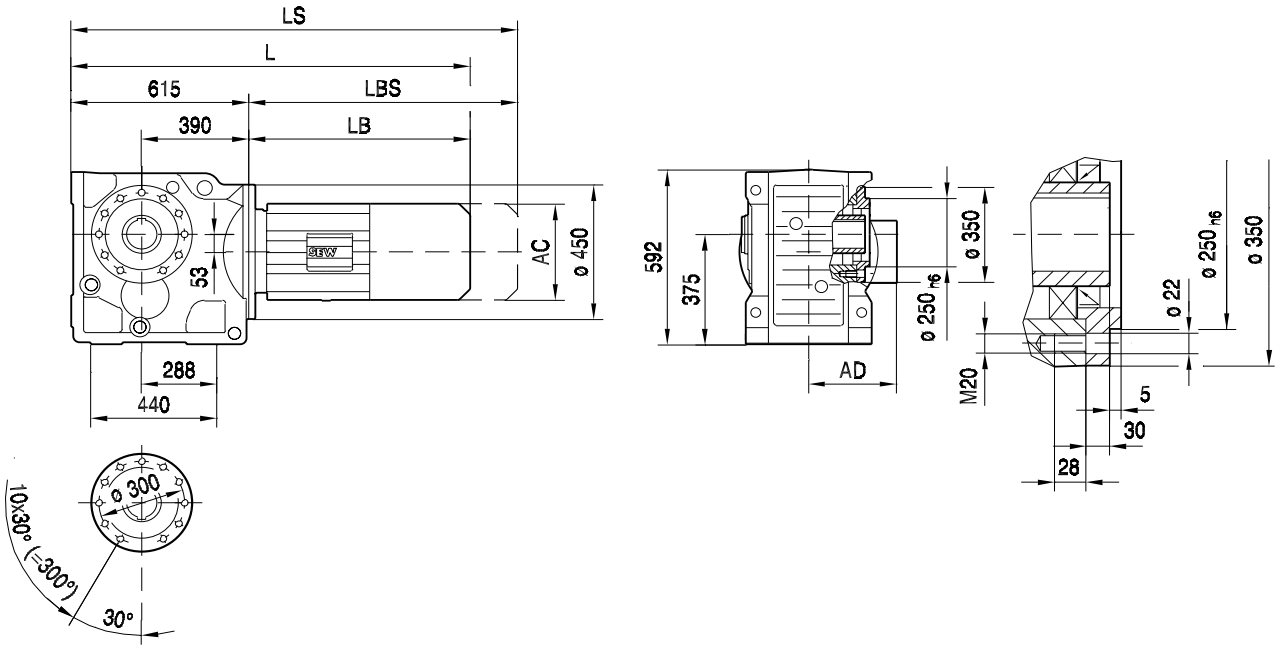

KAZ127..

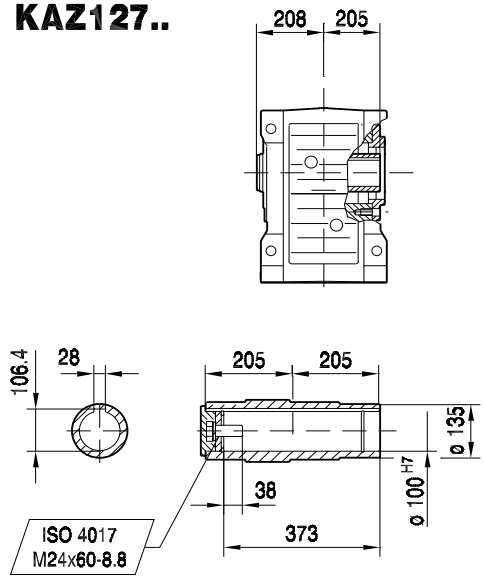

KHZ127..

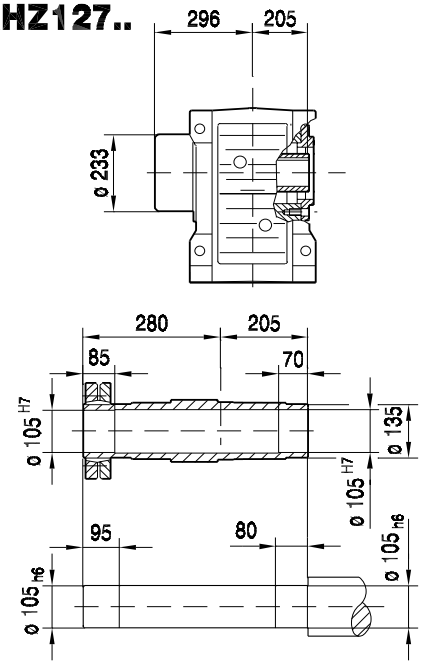

(→ 105)	CV132M	CV132ML	CV160M	CV160L	CV180..	CV200L					
AC	285	285	285	342	342	394					
AD	229	229	229	252	252	285					
L	1235	1295	1295	1383	1455	1514					
LS	1235	1295	1295	1383	1455	1514					
LB	620	680	680	768	840	899					
LBS	620	680	680	768	840	899					

34 015 00 04

K157..

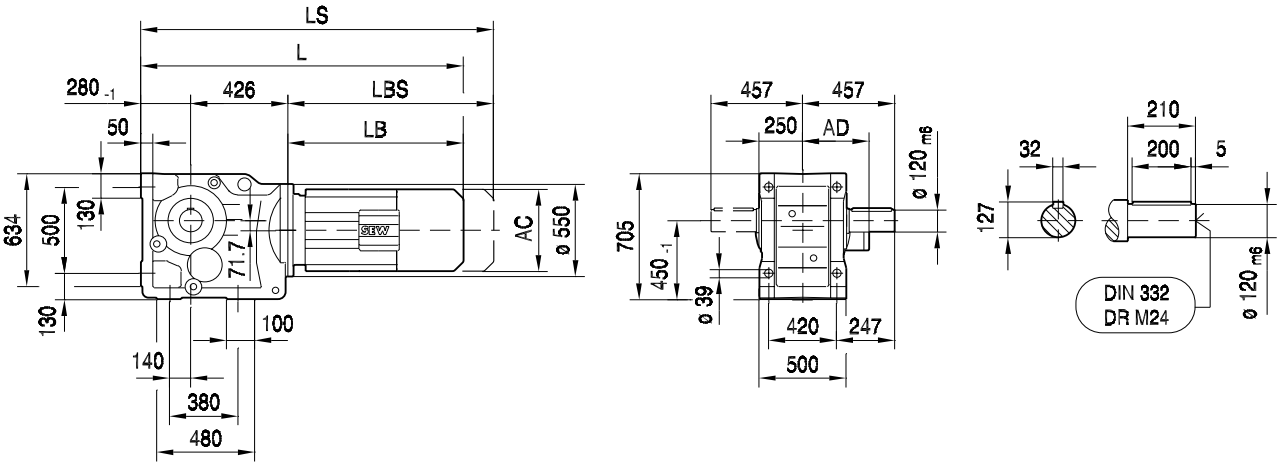

KA157B..

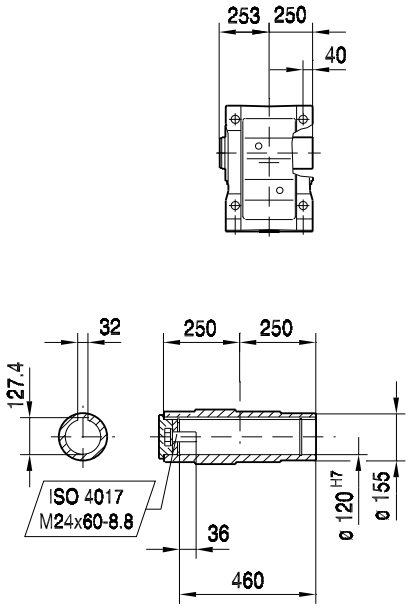

KH157B..

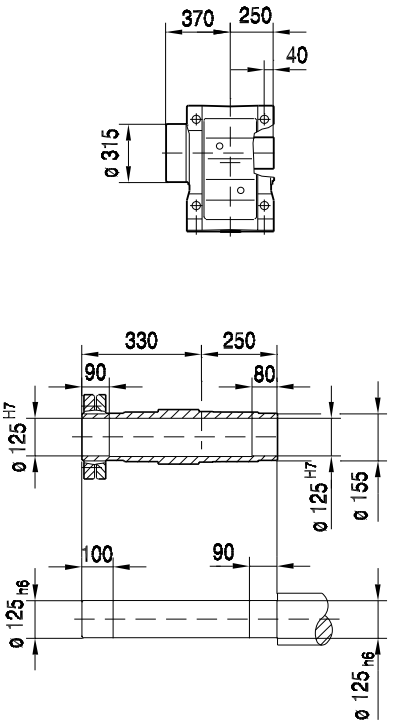

(→ 105)	CV132ML	CV160M	CV160L	CV180..	CV200L						
AC	285	285	342	342	394						
AD	229	229	252	252	285						
L	1378	1378	1466	1538	1597						
LS	1378	1378	1466	1538	1597						
LB	672	672	760	832	891						
LBS	672	672	760	832	891						

34 085 01 00

KF157..

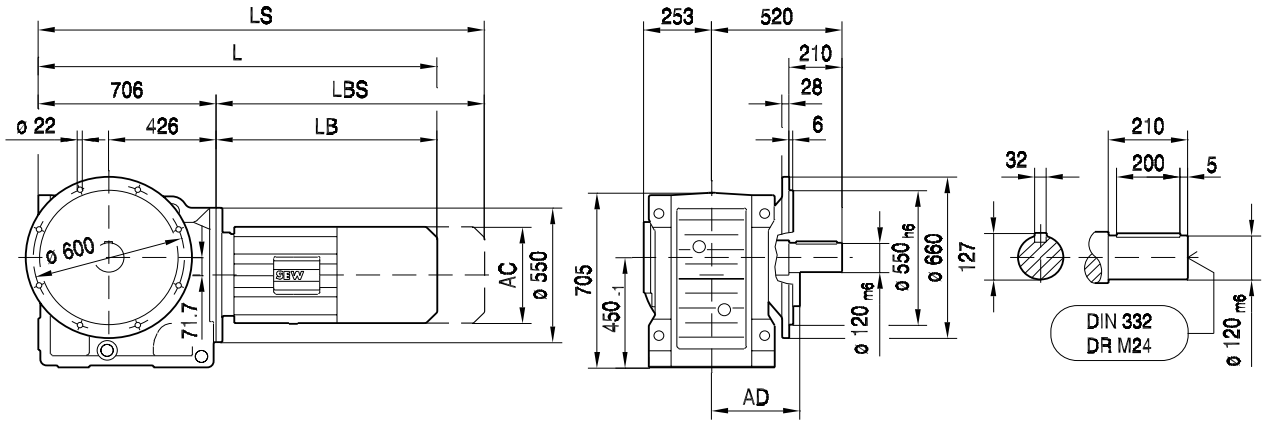

KAF157..

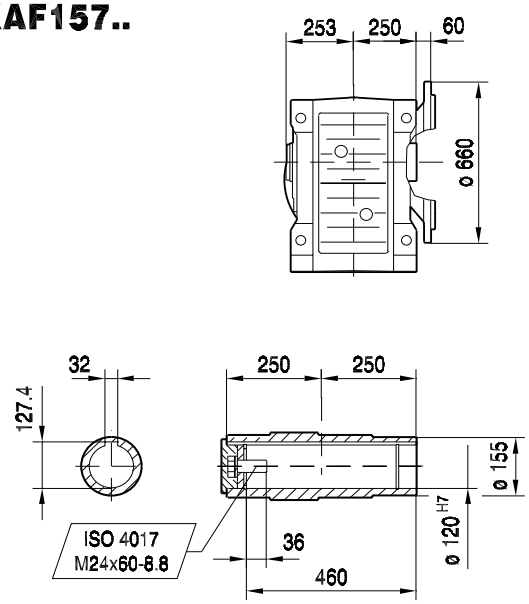

KHF157..

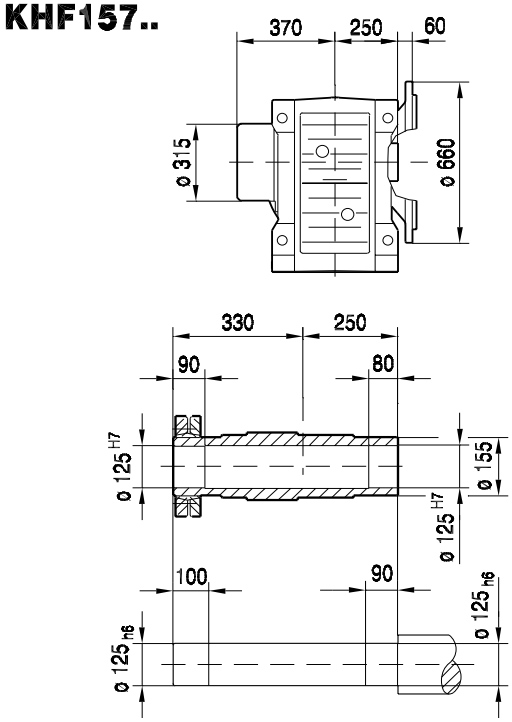

(→ 105)	CV132ML	CV160M	CV160L	CV180..	CV200L						
AC	285	285	342	342	394						
AD	229	229	252	252	285						
L	1378	1378	1466	1538	1597						
LS	1378	1378	1466	1538	1597						
LB	672	672	760	832	891						
LBS	672	672	760	832	891						

39 101 01 00

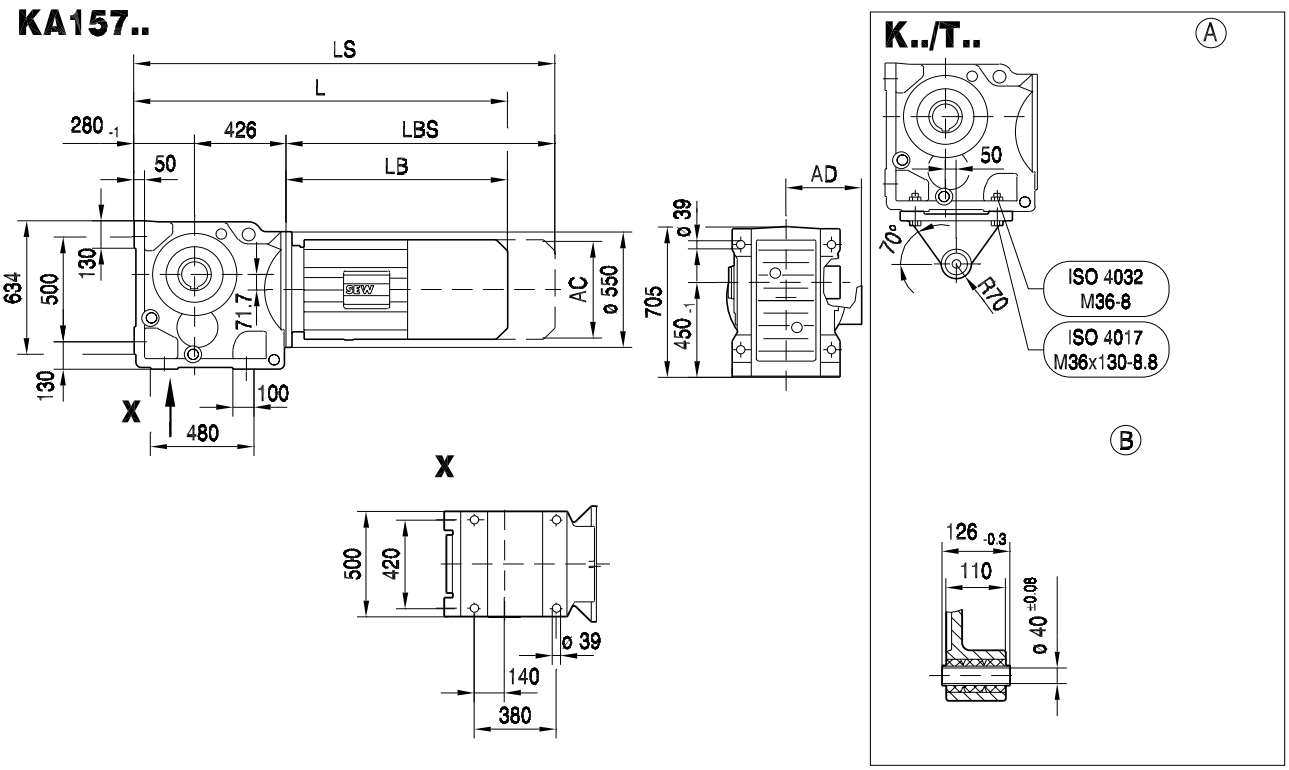

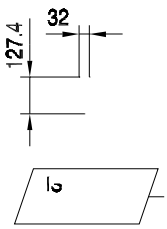

(→ 105)	CV132ML	CV160M	CV160L	CV180..	CV200L						
AC	285	285	342	342	394						
AD	229	229	252	252	285						
L	1378	1378	1466	1538	1597						
LS	1378	1378	1466	1538	1597						
LB	672	672	760	832	891						
LBS	672	672	760	832	891						

39 025 00 04

KAZ157..

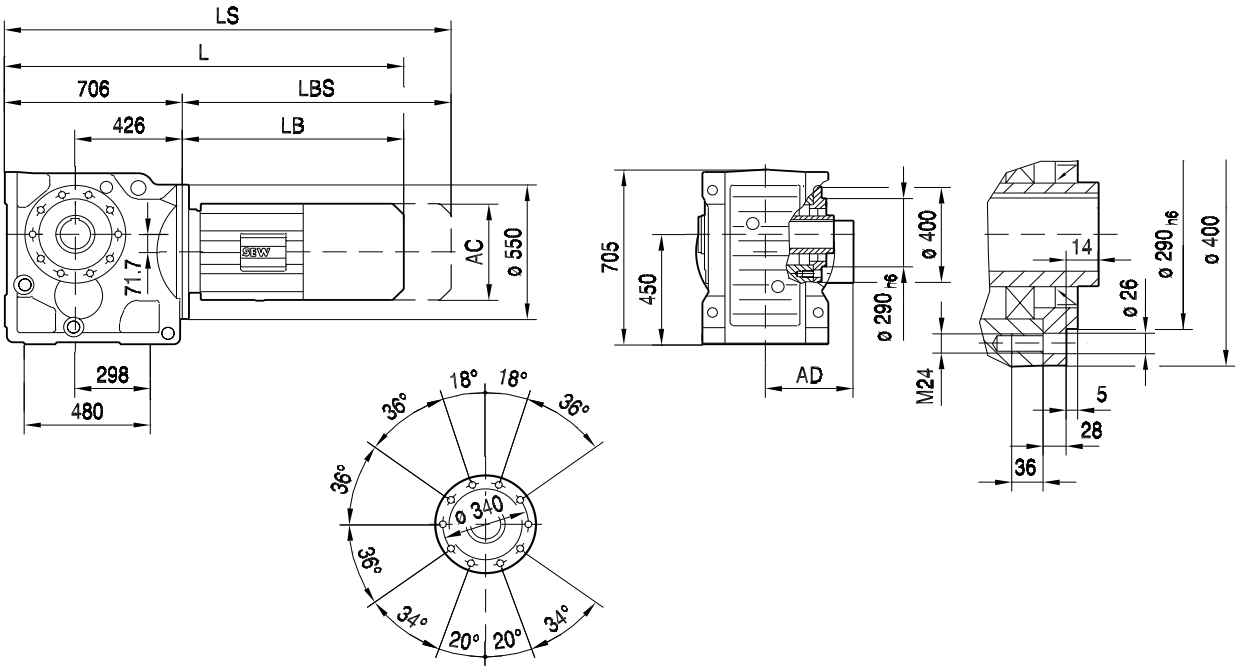

KAZ157..

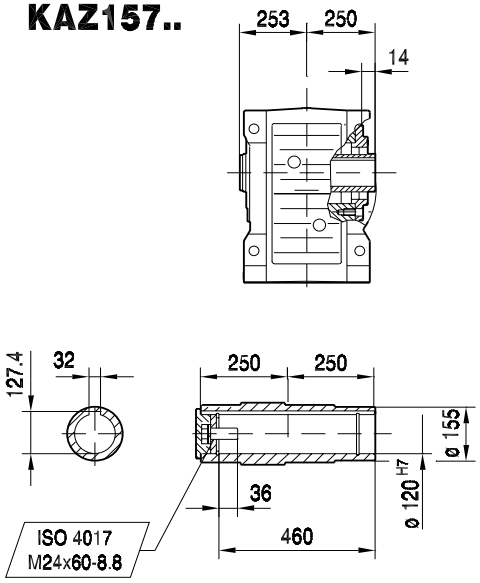

KHZ157..

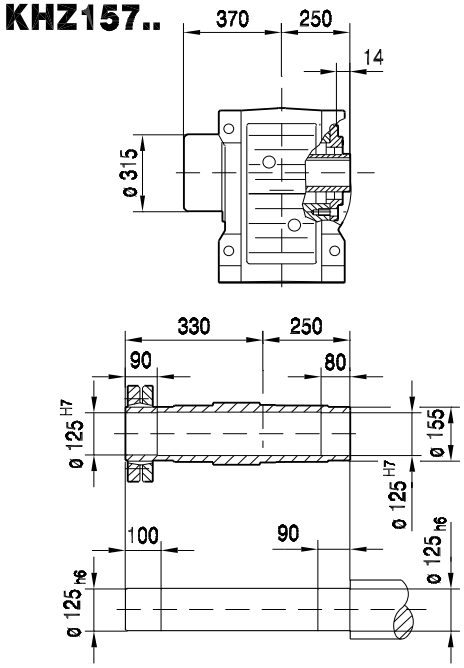

(→ 105)	CV132ML	CV160M	CV160L	CV180..	CV200L						
AC	285	285	342	342	394						
AD	229	229	252	252	285						
L	1378	1378	1466	1538	1597						
LS	1378	1378	1466	1538	1597						
LB	672	672	760	832	891						
LBS	672	672	760	832	891						

34 016 00 04

K167..

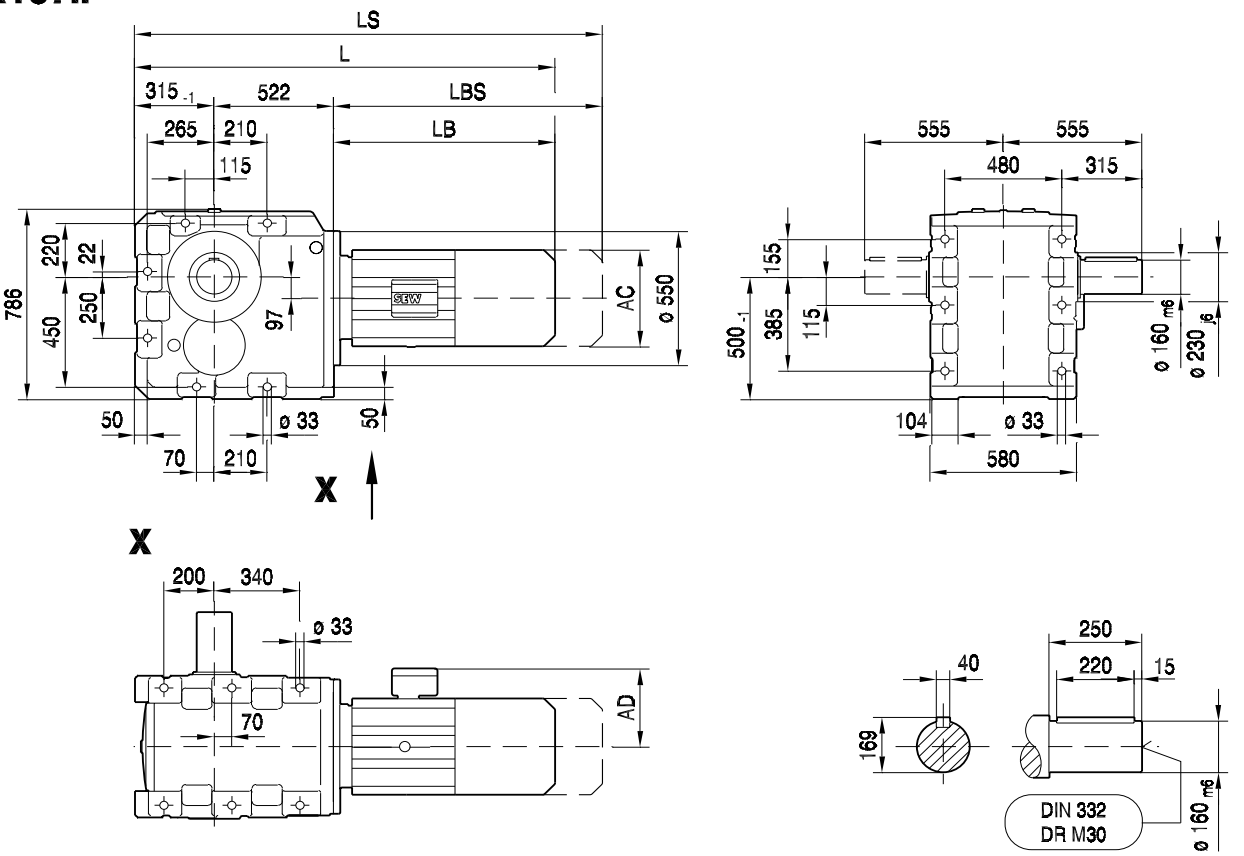

14

KH167B..

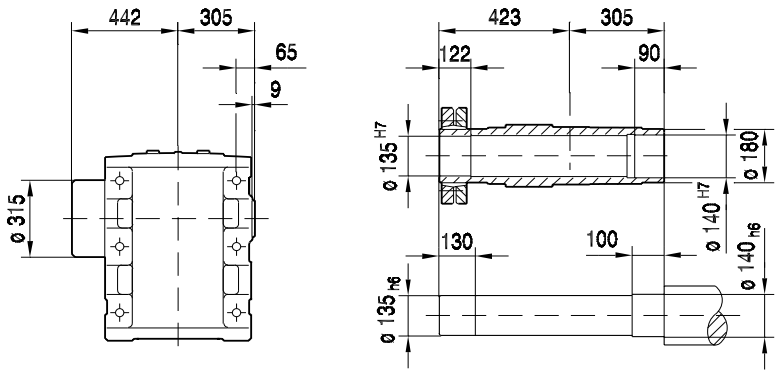

(→ 105)	CV132ML	CV160M	CV160L	CV180..	CV200L						
AC	285	285	342	342	394						
AD	229	229	252	252	285						
L	1509	1509	1597	1669	1728						
LS	1509	1509	1597	1669	1728						
LB	672	672	760	832	891						
LBS	672	672	760	832	891						

39 102 01 00

KH167..

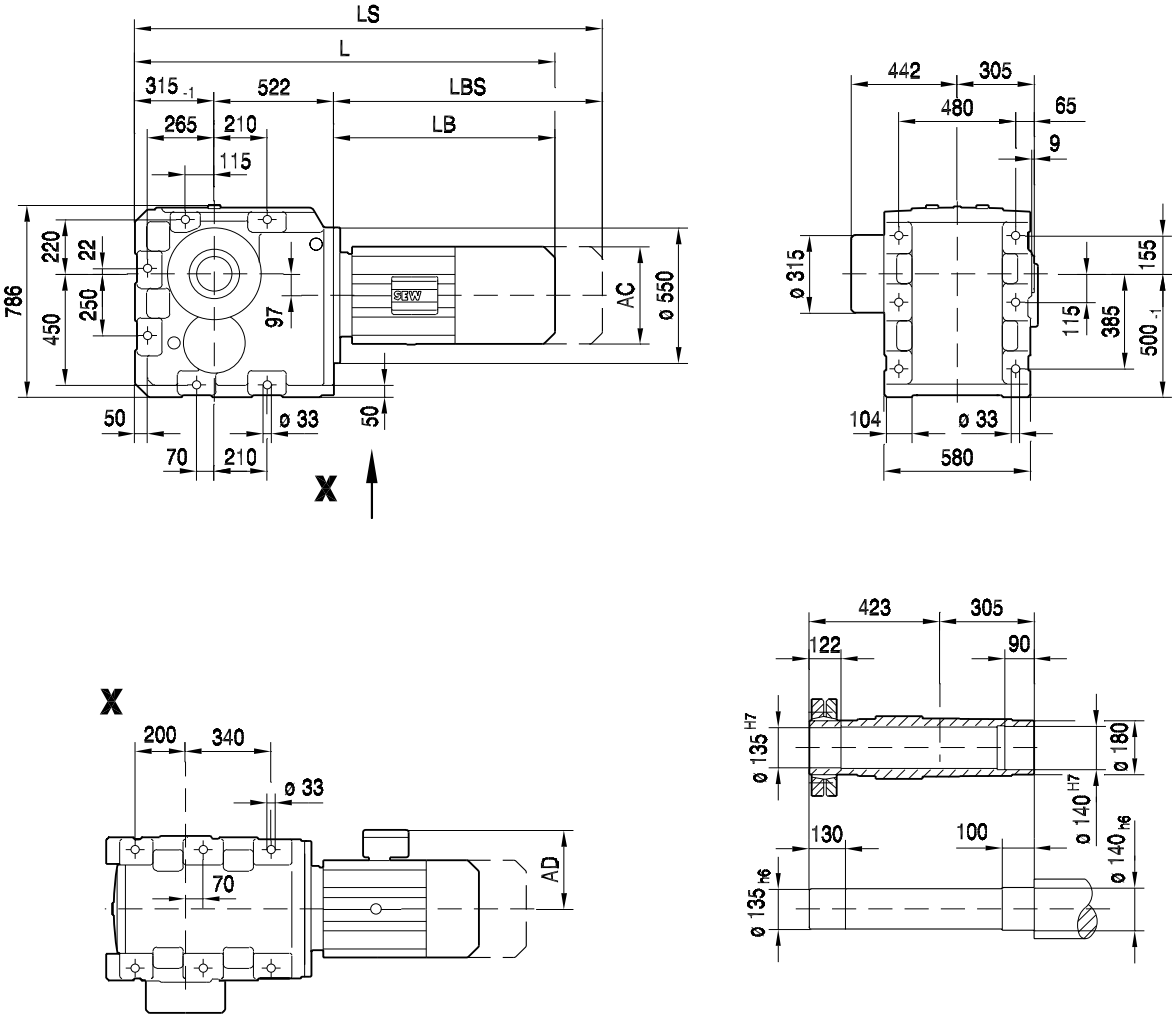

(→ 105)	CV132ML	CV160M	CV160L	CV180..	CV200L						
AC	285	285	342	342	394						
AD	229	229	252	252	285						
L	1509	1509	1597	1669	1728						
LS	1509	1509	1597	1669	1728						
LB	672	672	760	832	891						
LBS	672	672	760	832	891						

34 017 00 04

K187..

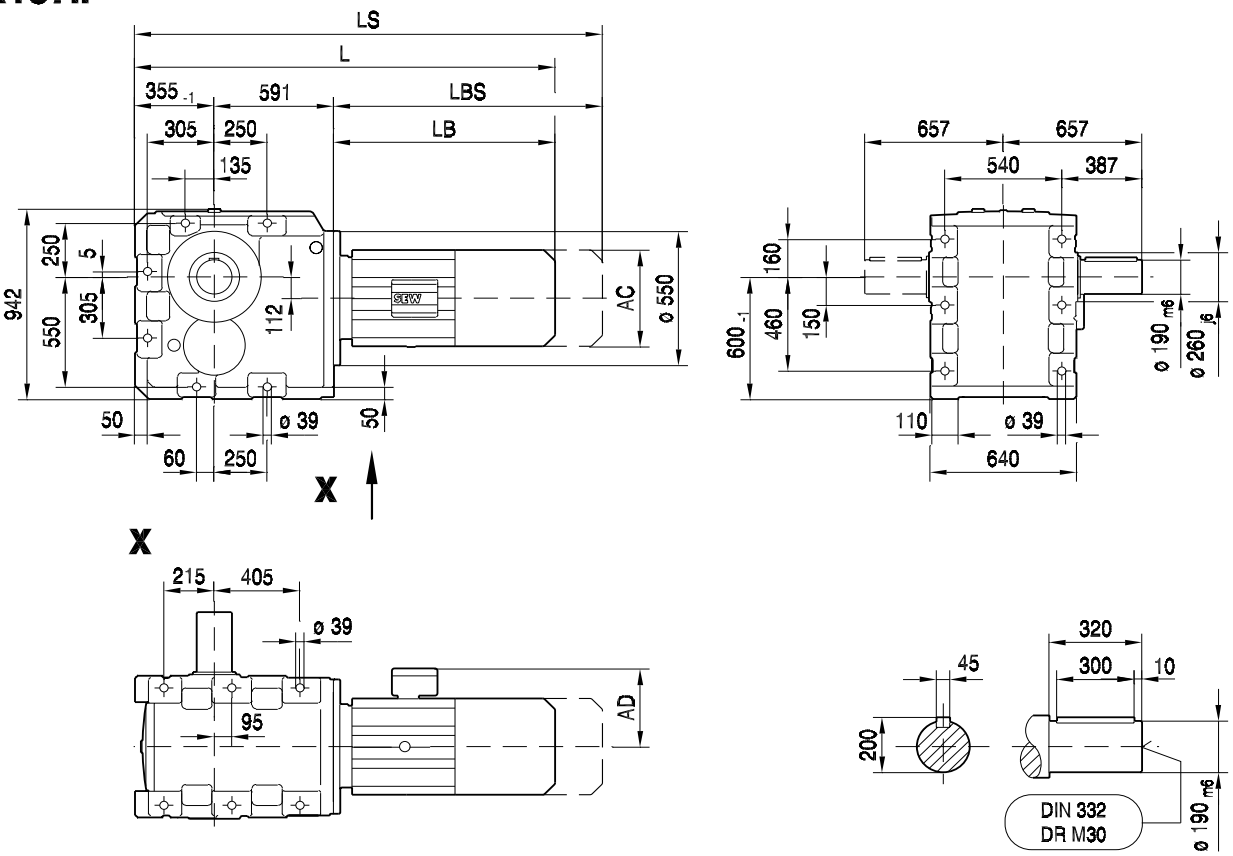

14

KH187B..

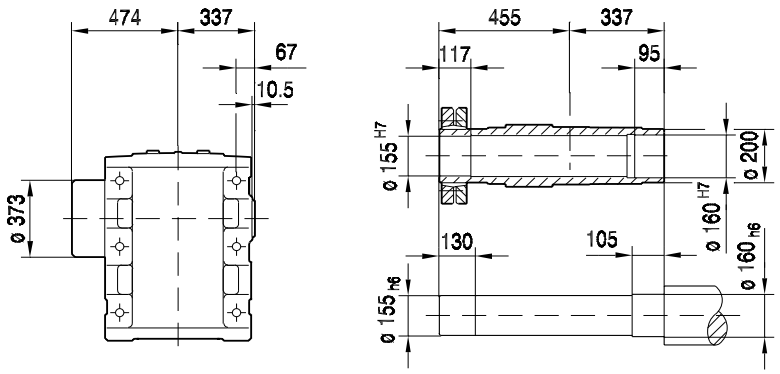

(→ 105)	CV132ML	CV160M	CV160L	CV180..	CV200L						
AC	285	285	342	342	394						
AD	229	229	252	252	285						
L	1618	1618	1706	1778	1837						
LS	1618	1618	1706	1778	1837						
LB	672	672	760	832	891						
LBS	672	672	760	832	891						

39 103 01 00

KH187..

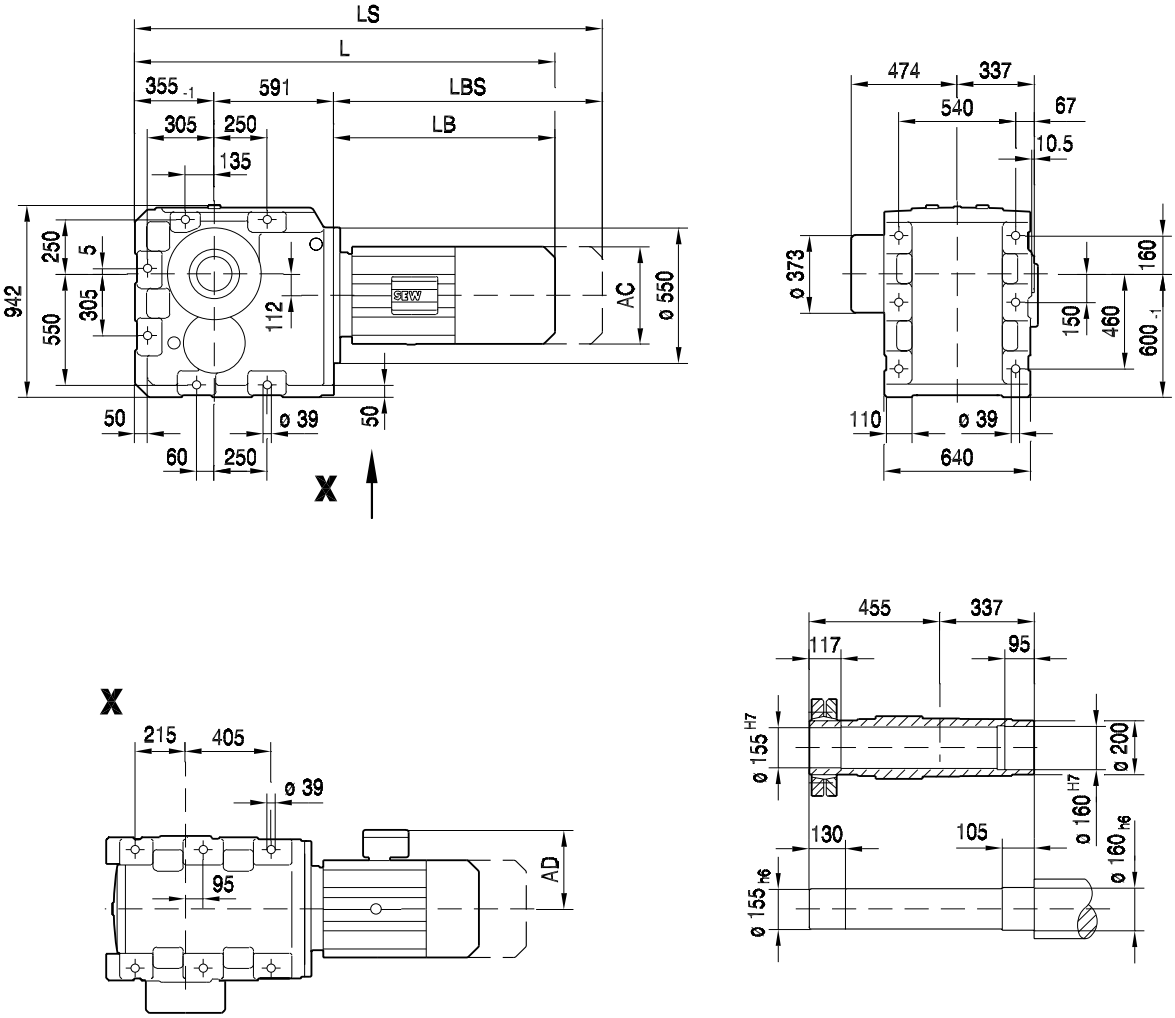

(→ 105)	CV132ML	CV160M	CV160L	CV180..	CV200L						
AC	285	285	342	342	394						
AD	229	229	252	252	285						
L	1618	1618	1706	1778	1837						
LS	1618	1618	1706	1778	1837						
LB	672	672	760	832	891						
LBS	672	672	760	832	891						

15 S..CT/CV..

15.1 S, SF, SAF, SHF, SA, SH, SAZ, SHZ..CT/CV

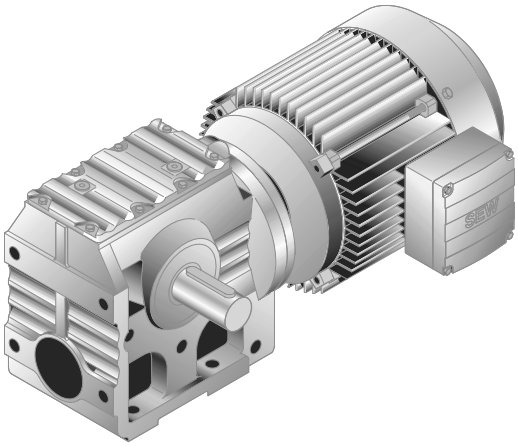

S..CT/CV..

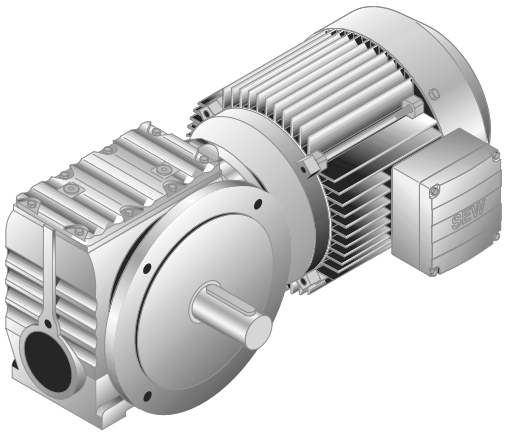

SF..CT/CV..

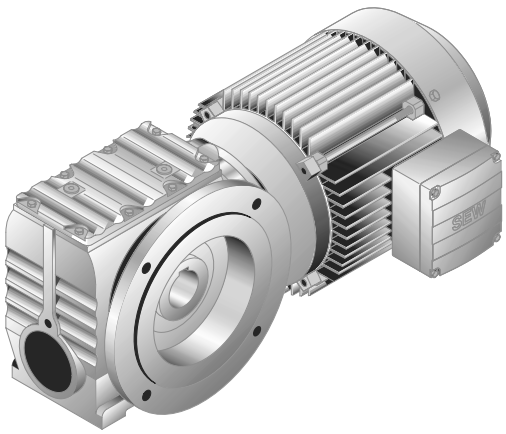

SAF..CT/CV..

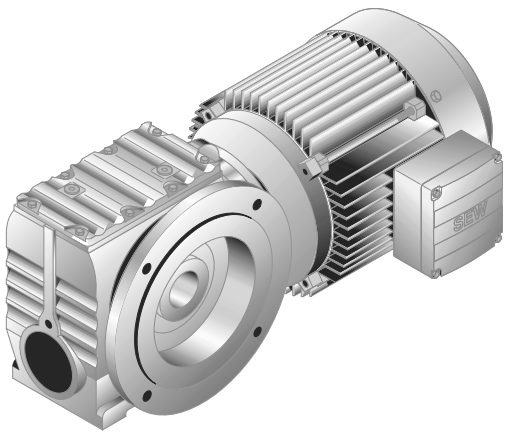

SHF..CT/CV..

52833AXX

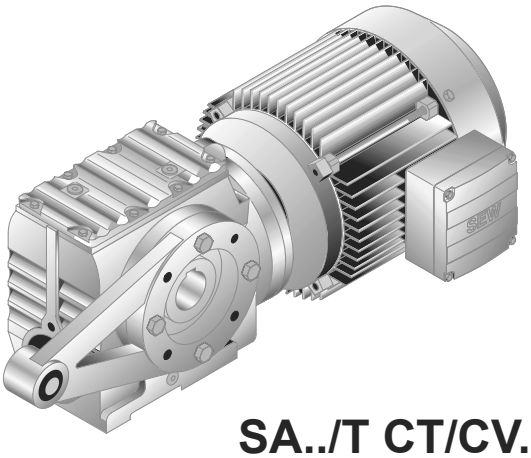

SA../T CT/CV..

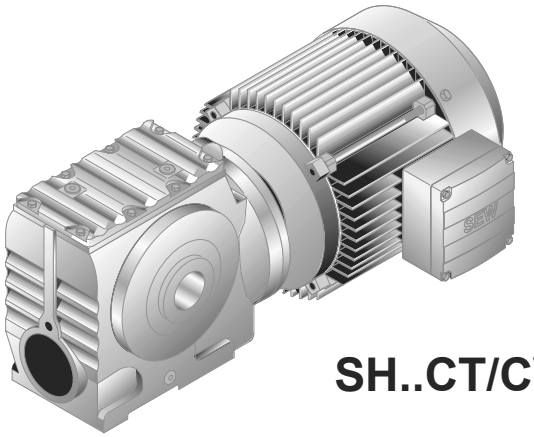

SH..CT/CV..

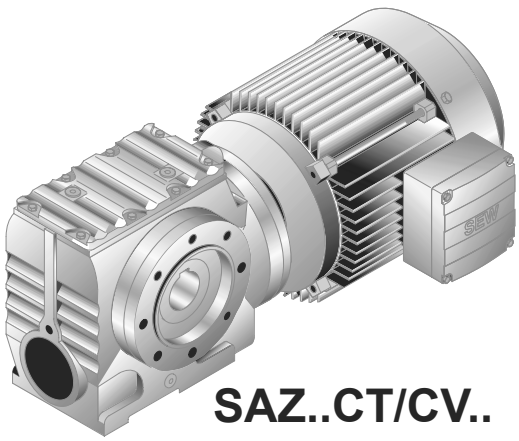

SAZ..CT/CV..

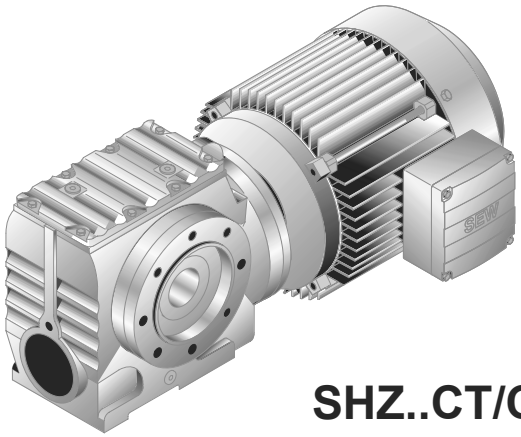

SHZ..CT/CV..

52834AXX

15.2 S37 CT.. [Nm]

	$M_{a\ max}$ [Nm]	i	η	$F_{Ra}(S)$ [N]	$F_{Ra}(SA)$ [N]	$J_G 10^{-4}$ [kgm^2]	CT	
							71D	80N
S37	81	43.68	78	3000	4000	0.12		
	79	37.66	79	3000	4000	0.15		
SF37	78	35.10*	79	3000	4000	0.16		
	76	30.68	80	2870	4000	0.20		
SA37	75	28.76	80	2800	4000	0.22		
	74	25.38*	81	2660	3810	0.27		
SAF37	73	22.50*	81	2530	3630	0.32		
	71	19.13*	82	2380	3420	0.43		
	50	15.53	88	2240	3220	0.13		
	49	13.39	88	2110	3040	0.16		
	48	12.48*	88	2060	2970	0.18		
	48	10.91	89	1940	2800	0.22		
	47	10.23	89	1900	2740	0.24		
	46	9.02*	89	1810	2610	0.30		
	45	8.00*	90	1730	2500	0.36		
	43	6.80*	90	1630	2360	0.47		

m [kg]	CT	
	71D	80N
S37	13	16

SF37: + 1.3 kg / SA37: -- kg / SAF37: + 1.3 kg

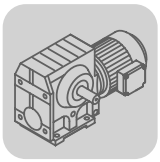

15.3 S47 CT.. [Nm]

	$M_{a\ max}$ [Nm]	i	η	$F_{Ra}(S)$ [N]	$F_{Ra}(SA)$ [N]	$J_G 10^{-4}$ [kgm^2]	CT		
							71D	80N	90L
S47	155	54.59	78	5150	7000	0.18			
	155	47.32	79	4850	6680	0.23			
SF47	155	44.22*	79	4710	6490	0.25			
	155	38.23	80	4430	6100	0.31			
SA47	155	32.48*	81	4120	5690	0.41			
	155	29.00*	81	3920	5420	0.49			
SAF47	155	24.77	82	3650	5050	0.65			
	152	23.20*	82	3570	4940	0.72			
	110	20.33	88	3370	4650	0.20			
	144	19.54	83	3370	4660	0.94			
	110	17.62	88	3160	4360	0.26			
	110	16.47*	89	3060	4230	0.28			
	110	14.24	89	2850	3950	0.35			
	109	12.10*	90	2650	3670	0.47			
	109	10.80*	90	2500	3480	0.57			
	109	9.23*	90	2310	3210	0.74			
	109	8.64*	90	2230	3110	0.83			
	103	7.28	91	2110	2940	1.10			

m [kg]	CT		
	71D	80N	90L
S47	16	19	25

SF47: + 3.6 kg / SA47: + 1.1 kg / SAF47: + 2.8 kg

15.4 S57 CT.. [Nm]

	$M_{a\ max}$ [Nm]	i	η	$F_{Ra}(S)$ [N]	$F_{Ra}(SA)$ [N]	$J_G 10^{-4}$ [kgm^2]	CT		
							71D	80N	90L
S57	245	54.59	79	7520	7000	0.23			
	245	47.32	80	7520	6580	0.28			
SF57	245	44.22*	80	7520	6380	0.32			
	245	38.23	81	7320	5970	0.39			
SA57	245	32.48*	82	6840	5540	0.54			
	245	29.00*	82	6520	5250	0.65			
SAF57	245	24.77	83	6100	4870	0.85			
	245	23.20*	83	5930	4710	0.95			
	168	20.33	88	5690	4560	0.28			
	215	19.54	84	5720	4610	1.27			
	168	17.62	89	5350	4260	0.36			
	168	16.47*	89	5200	4120	0.40			
	169	14.24	89	4860	3810	0.51			
	169	12.10*	90	4520	3360	0.70			
	169	10.80*	90	4290	3000	0.85			
	169	9.23*	91	3990	2530	1.14			
	166	8.64*	91	3900	2430	1.29			
	146	7.28	91	3790	2620	1.74			

m [kg]	CT		
	71D	80N	90L
S57	20	23	29

SF57: + 3.8 kg / SA57: -- kg / SAF57: + 2.6 kg

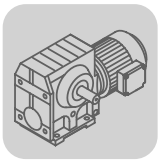

15.5 S67 CT/CV.. [Nm]

	$M_{a\ max}$ [Nm]	i	η	F_{Ra}(S) [N]	F_{Ra}(SA) [N]	$J_G 10^{-4}$ [kgm^2]	CT			CV	
							71D	80N	90L	100M	100L
S67	480	75.06	80	9020	10700	0.43					
	480	65.63	81	9020	10100	0.53					
SF67	480	62.35*	81	9020	9850	0.59					
	480	54.70	82	8670	9280	0.84					
SA67	480	46.40*	82	8060	8600	1.09					
	480	41.89	83	7690	8200	1.29					
SAF67	480	36.85	83	7250	7710	1.63					
	480	34.80*	84	7060	7490	1.78					
	480	29.63	84	6540	6920	2.22					
	480	26.93	85	6240	6590	2.58					
	340	24.44	90	6040	6270	0.63					
	480	23.33	85	5810	6120	3.24					
	340	23.22*	90	5890	6110	0.71					
	340	20.37	90	5520	5700	0.99					
	425	20.30*	86	5760	6090	4.05					
	340	17.28*	90	5080	4990	1.30					
	340	15.60*	91	4820	4480	1.54					
	340	13.73*	91	4510	3870	1.99					
	340	12.96*	91	4310	3610	2.20					
	340	11.03	92	3660	2890	2.82					
	340	10.03	92	3290	2480	3.33					
	335	8.69	92	2860	2020	4.27					
	295	7.56*	92	3220	2540	5.44					

m [kg]	CT			CV	
	71D	80N	90L	100M	100L
S67	32	35	41	45	48

SF67: + 6.5 kg / SA67: + 1.0 kg / SAF67: + 5.5 kg

15.6 S..CT/CV.. [mm]

05 092 01 00

S37..

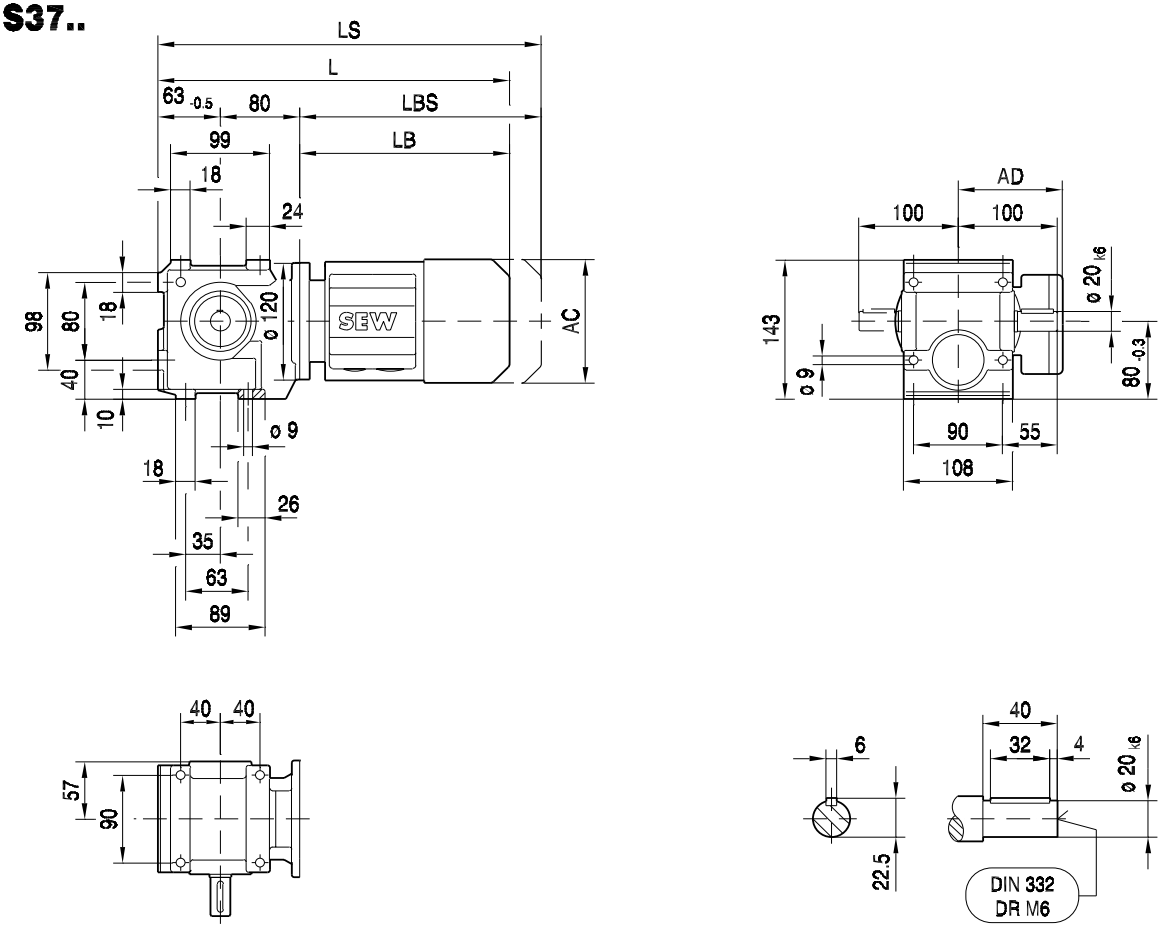

(→ 105)	CT71D	CT80N									
AC	145	145									
AD	126	126									
L	433	483									
LS	496	546									
LB	290	340									
LBS	353	403									

05 096 01 00

SF37..

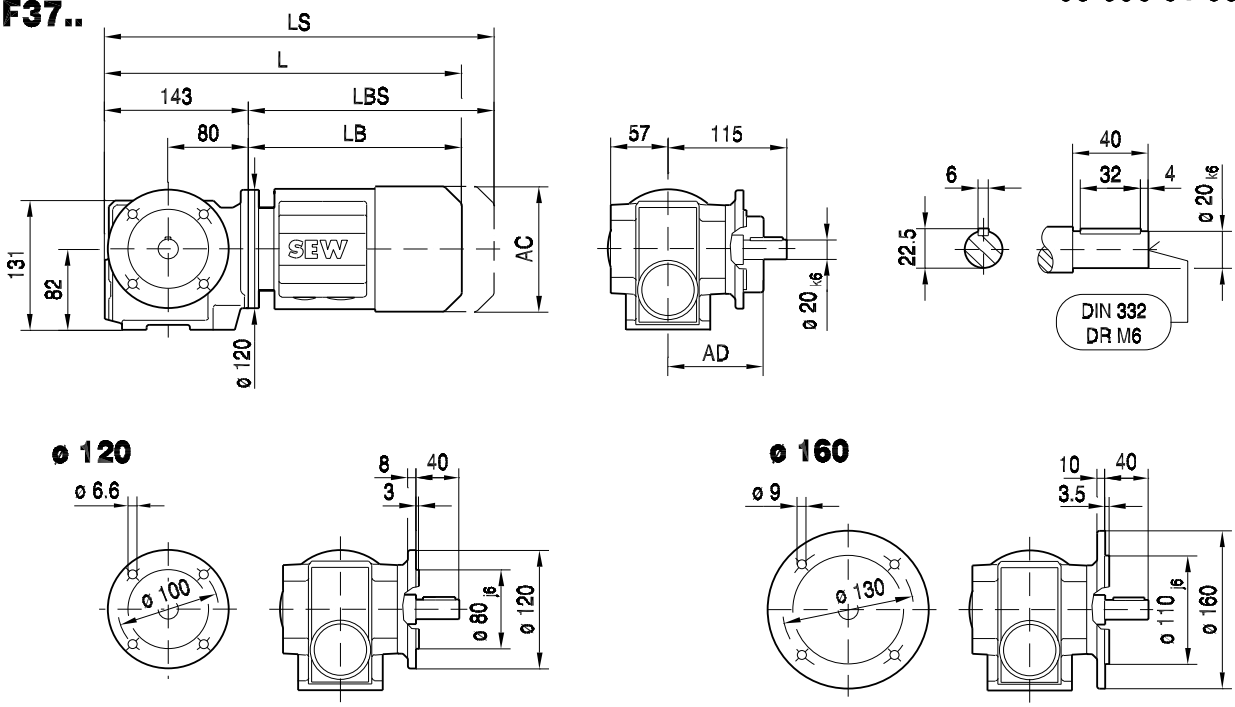

SAF37..

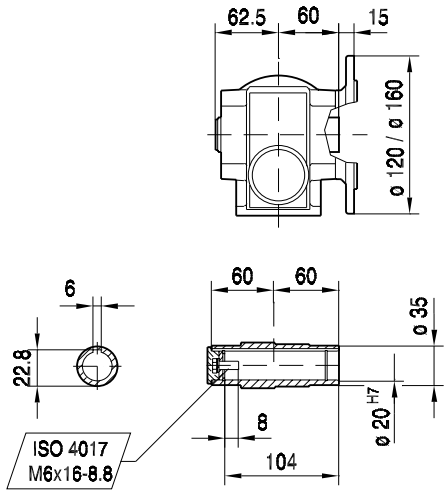

SHF37..

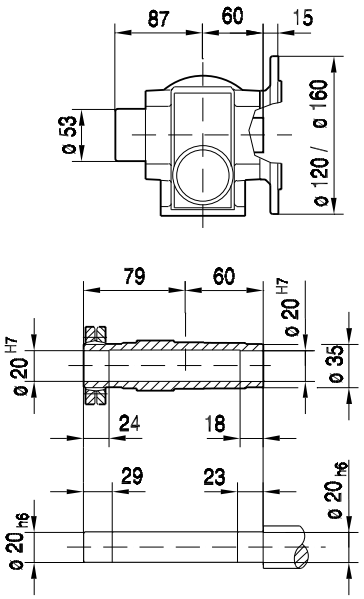

(→ 105)	CT71D	CT80N									
AC	145	145									
AD	126	126									
L	433	483									
LS	496	546									
LB	290	340									
LBS	353	403									

28 023 00 04

SA37..

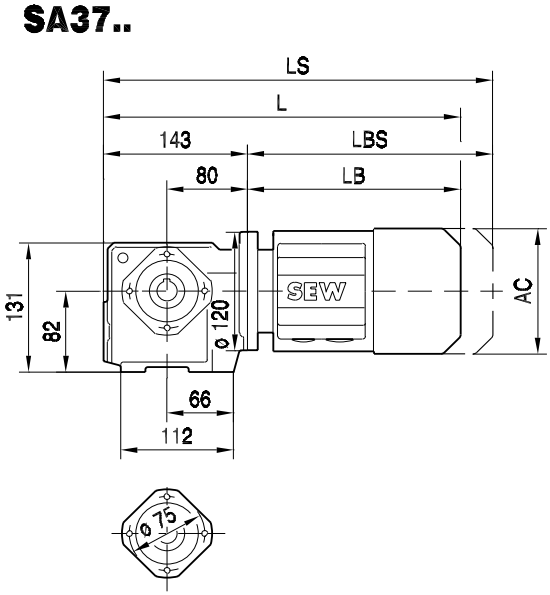

S.. / T..

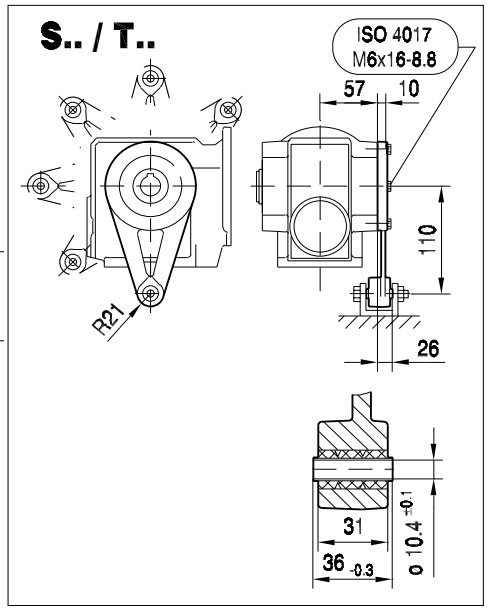

SA37..

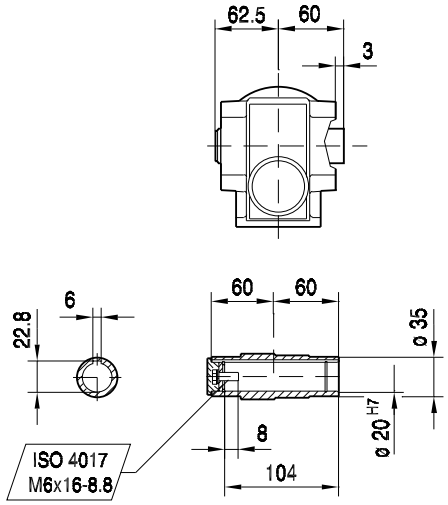

SH37..

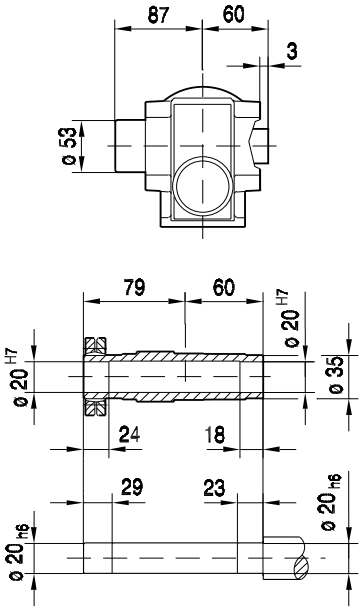

(→ 105)	CT71D	CT80N									
AC	145	145									
AD	126	126									
L	433	483									
LS	496	546									
LB	290	340									
LBS	353	403									

28 009 00 04

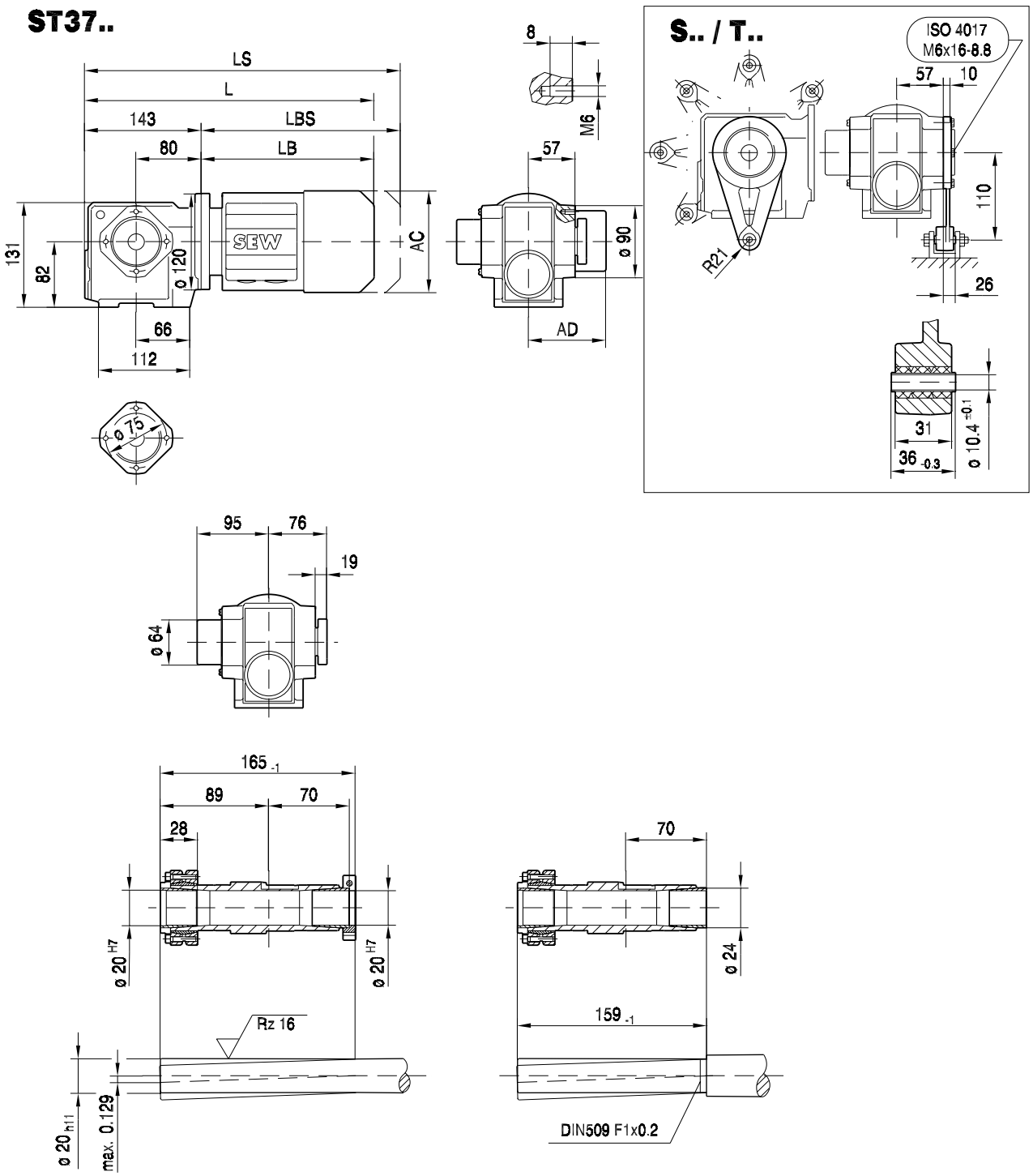

(→ 105)	CT71D	CT80N									
AC	145	145									
AD	126	126									
L	433	483									
LS	496	546									
LB	290	340									
LBS	353	403									

05 093 01 00

S47..

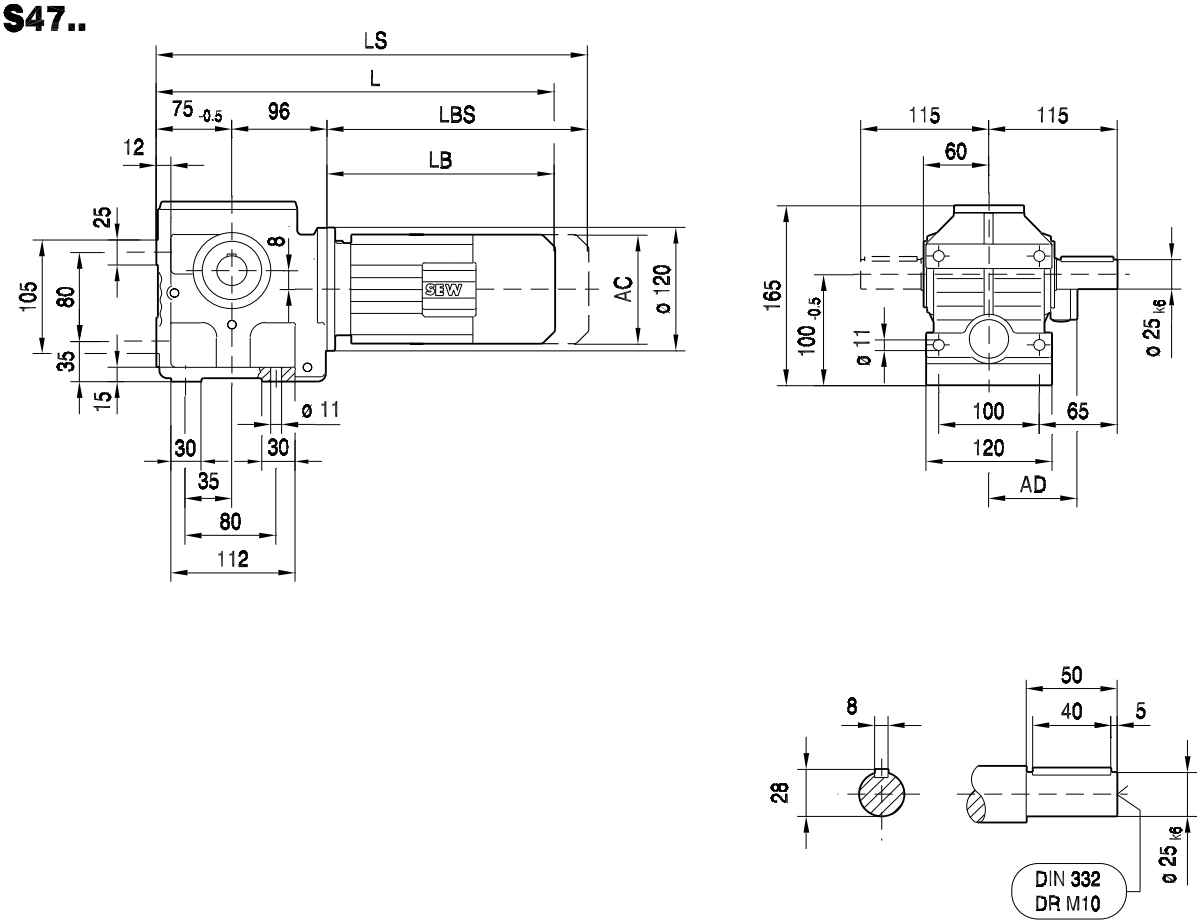

(→ 105)	CT71D	CT80N	CT90L								
AC	145	145	197								
AD	126	126	160								
L	461	511	524								
LS	524	574	609								
LB	290	340	353								
LBS	353	403	438								

05 097 01 00

SF47..

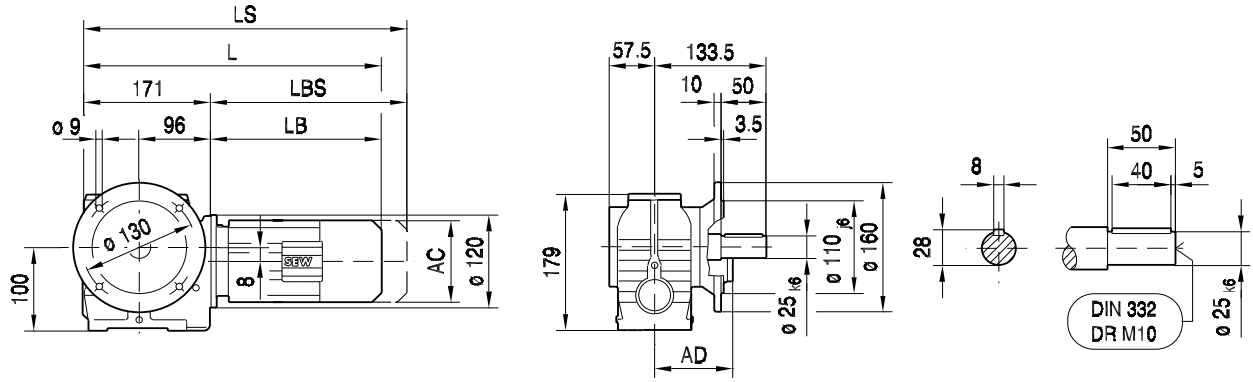

SAF47..

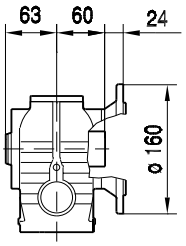

ø 30 H7

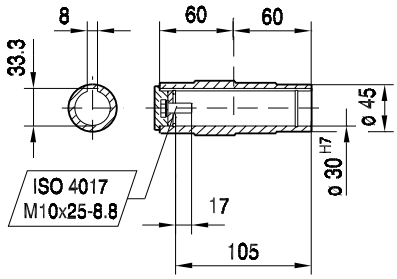

ø 25 H7

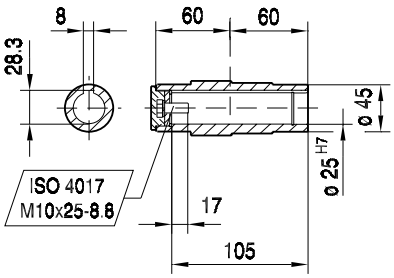

SHF47..

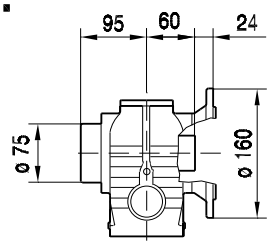

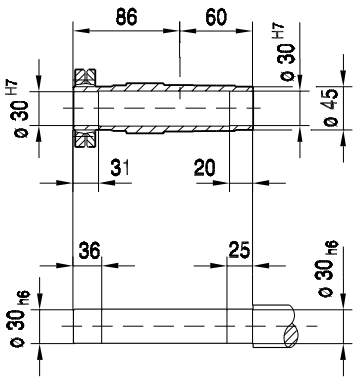

(→ 105)	CT71D	CT80N	CT90L								
AC	145	145	197								
AD	126	126	160								
L	461	511	524								
LS	524	574	609								
LB	290	340	353								
LBS	353	403	438								

28 024 00 04

SA47..

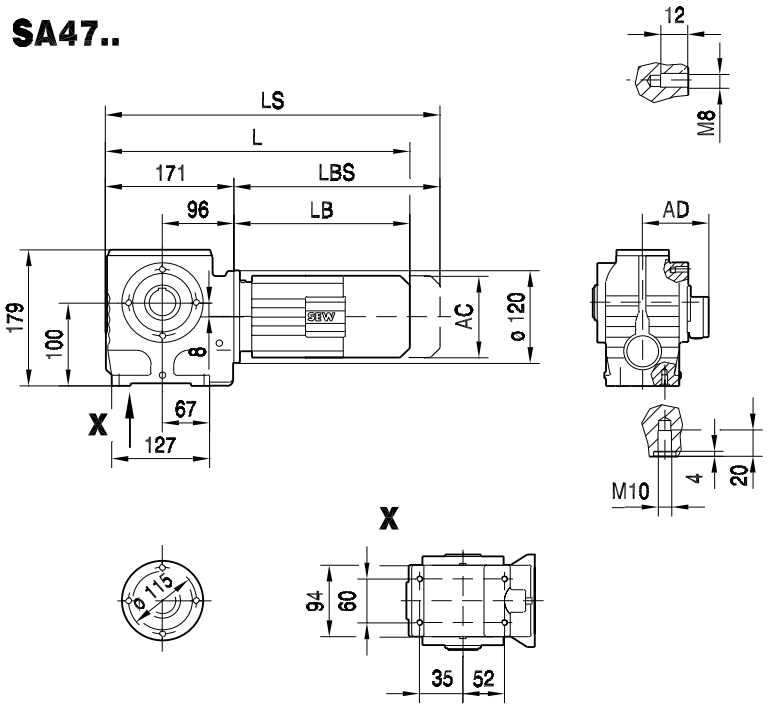

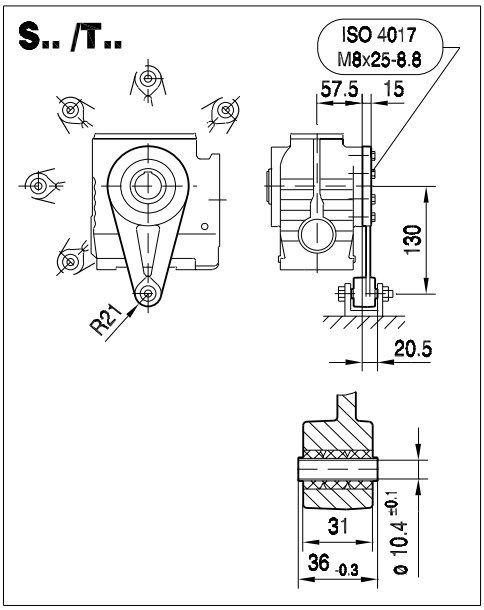

SA47..

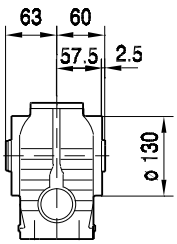

SH47..

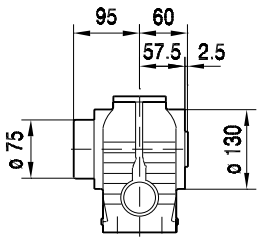

ø 30 H7

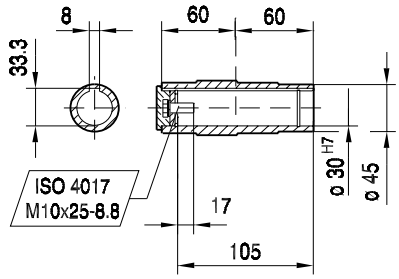

ø 25 H7

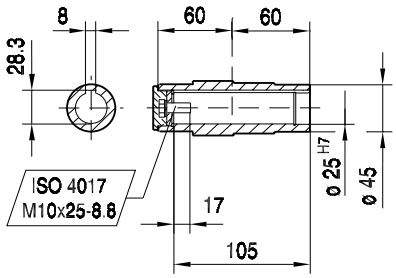

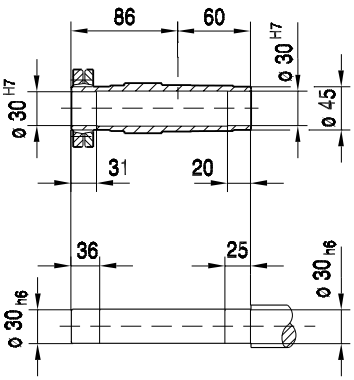

(→ 105)	CT71D	CT80N	CT90L								
AC	145	145	197								
AD	126	126	160								
L	461	511	524								
LS	524	574	609								
LB	290	340	353								
LBS	353	403	438								

28 003 00 04

SAZ47..

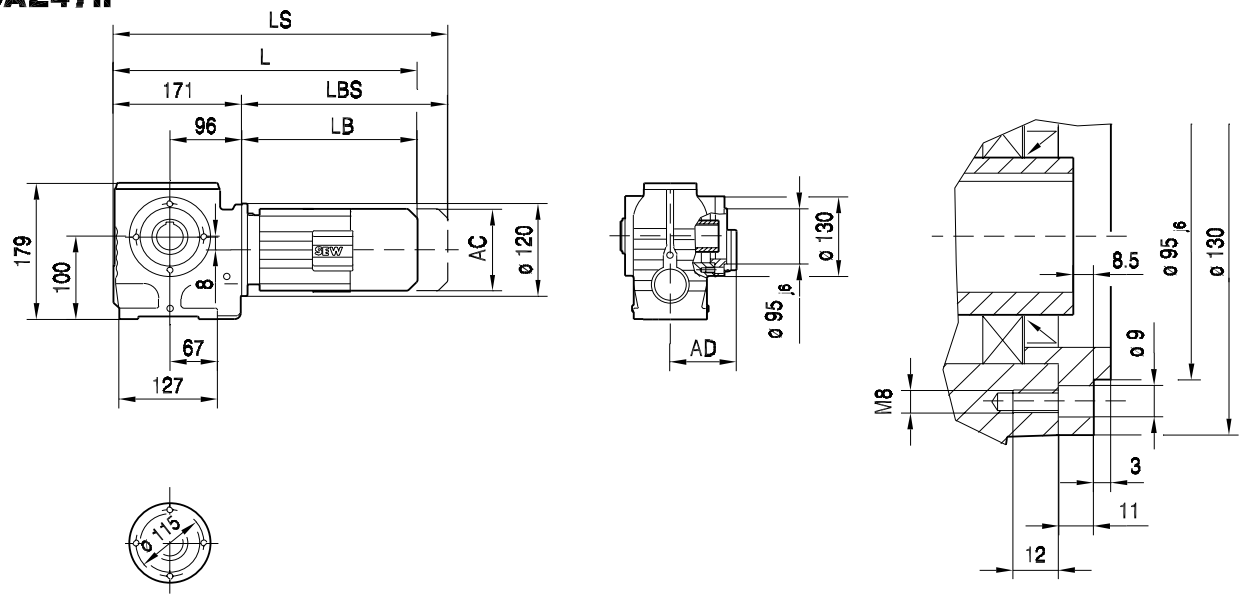

SAZ47..

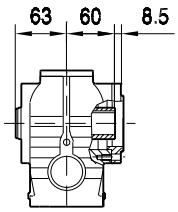

SHZ47..

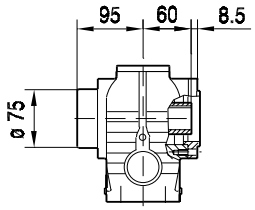

ø 30 H7

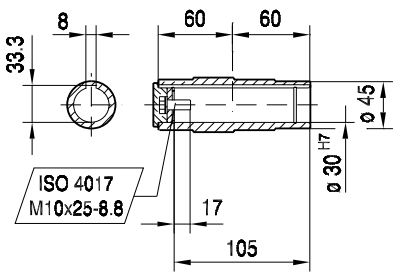

ø 25 H7

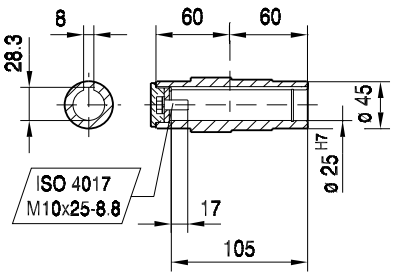

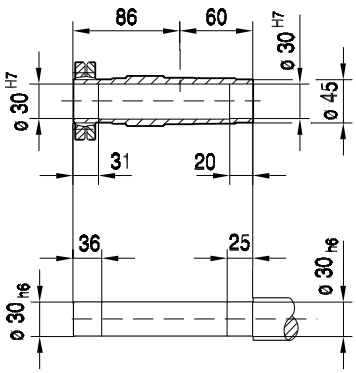

(→ 105)	CT71D	CT80N	CT90L								
AC	145	145	197								
AD	126	126	160								
L	461	511	524								
LS	524	574	609								
LB	290	340	353								
LBS	353	403	438								

ST47..

28 010 00 04

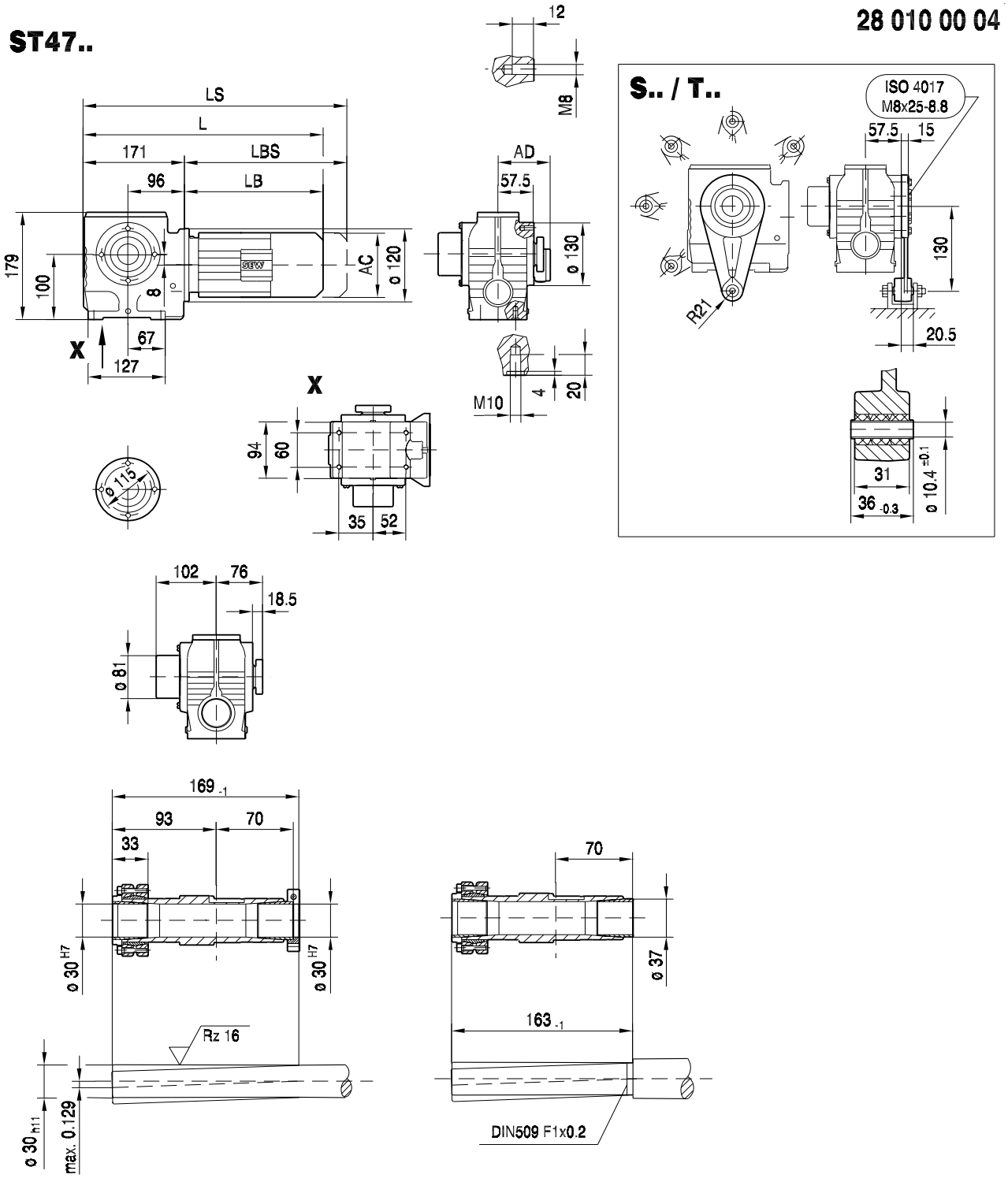

(→ 105)	CT71D	CT80N	CT90L								
AC	145	145	197								
AD	126	126	160								
L	461	511	524								
LS	524	574	609								
LB	290	340	353								
LBS	353	403	438								

05 094 01 00

S57..

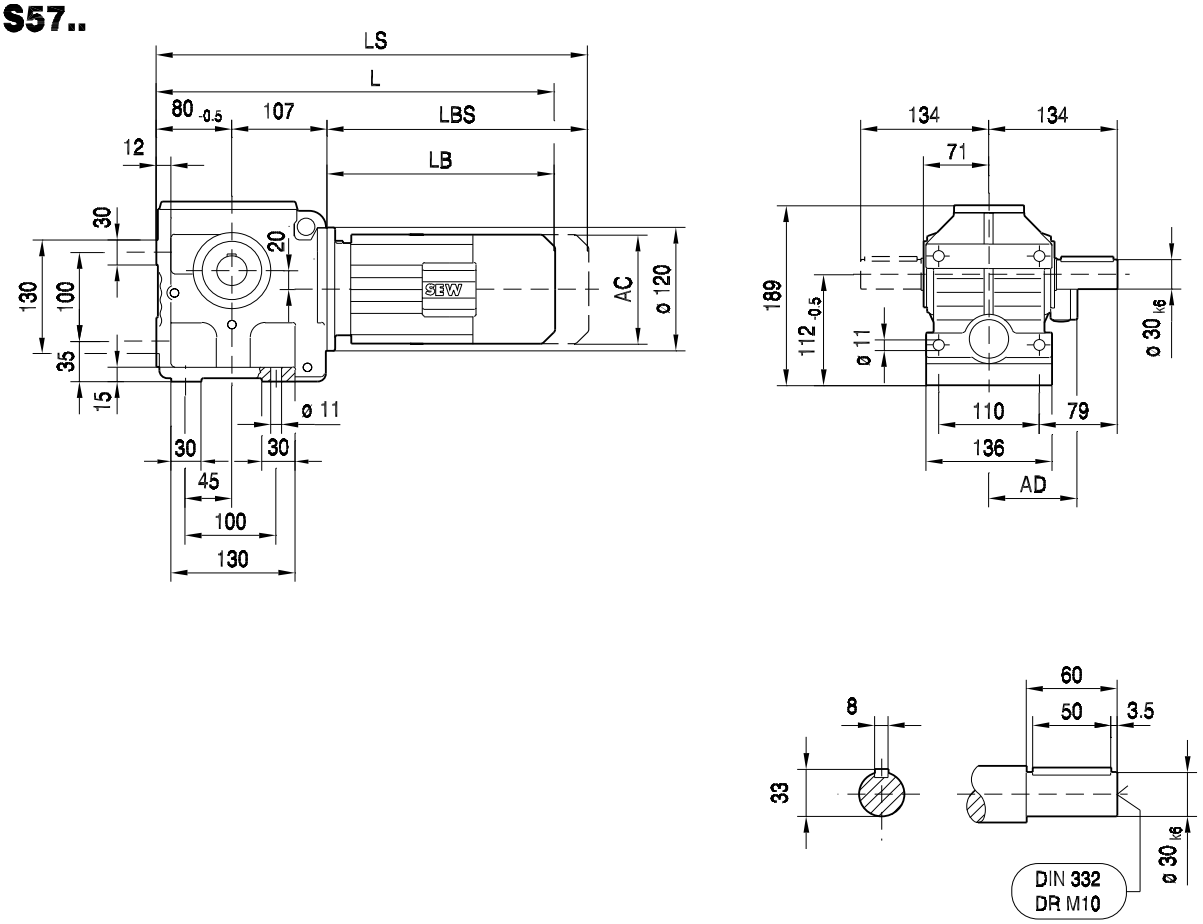

(→ 105)	CT71D	CT80N	CT90L								
AC	145	145	197								
AD	126	126	160								
L	477	527	540								
LS	540	590	625								
LB	290	340	353								
LBS	353	403	438								

05 098 01 00

SF57..

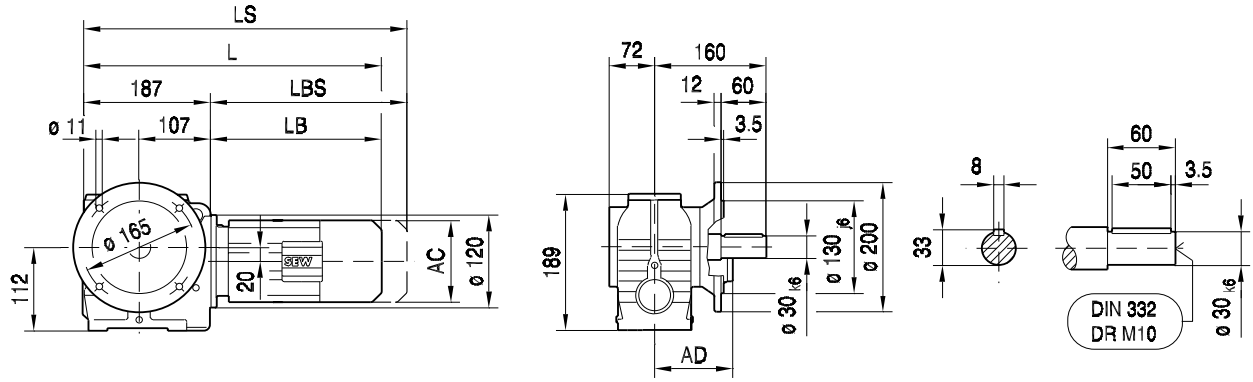

SAF57..

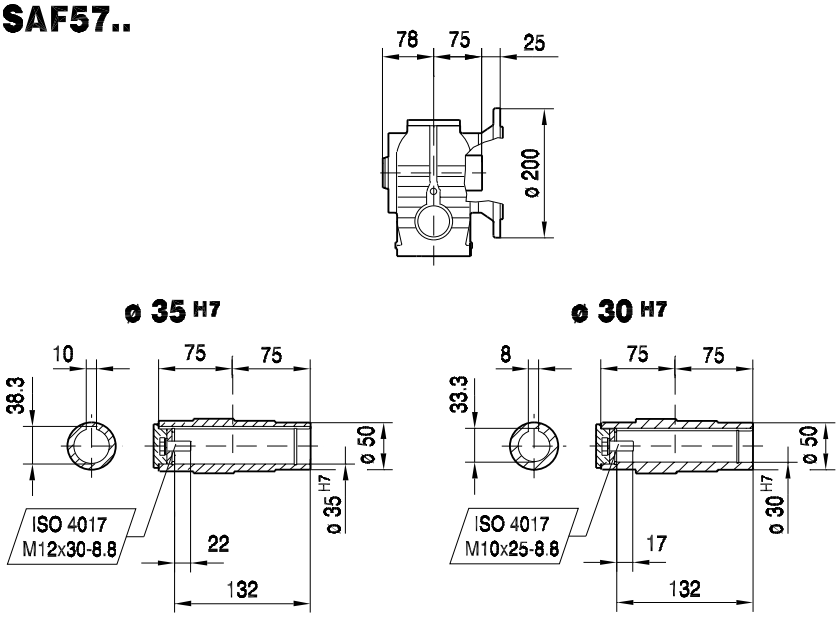

SHF57..

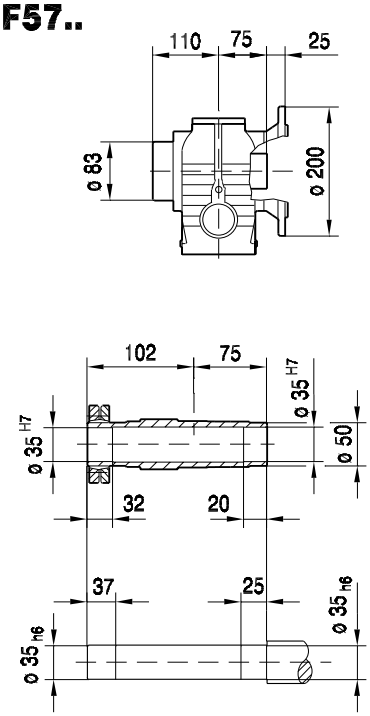

(→ 105)	CT71D	CT80N	CT90L								
AC	145	145	197								
AD	126	126	160								
L	477	527	540								
LS	540	590	625								
LB	290	340	353								
LBS	353	403	438								

28 025 00 04

SA57..

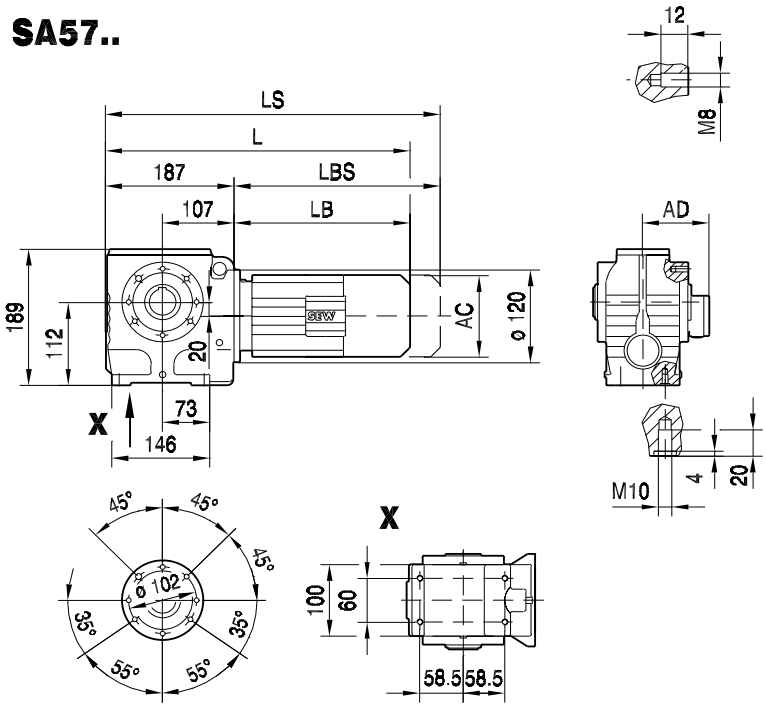

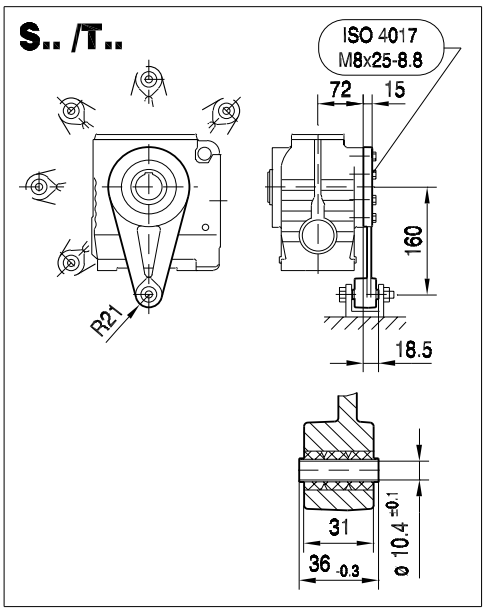

SA57..

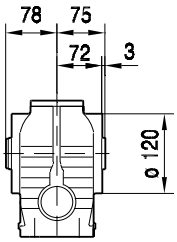

SH57..

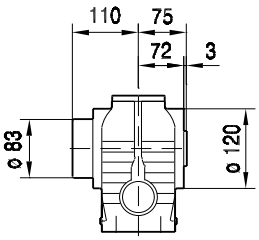

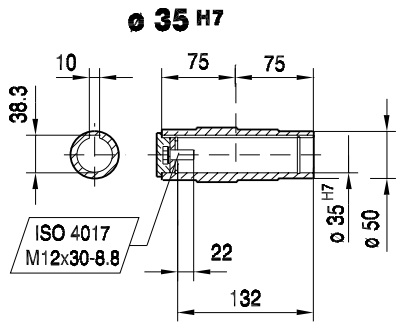

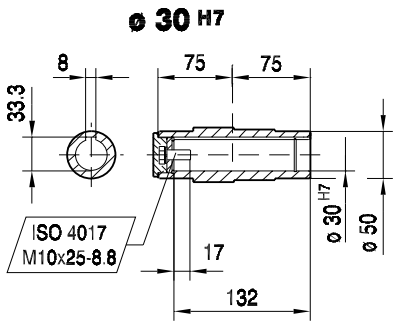

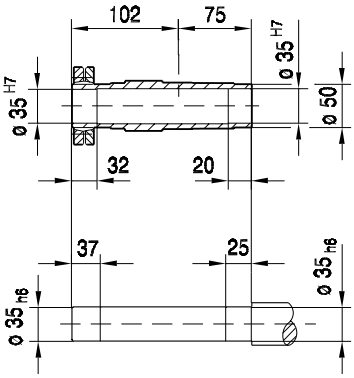

(→ 105)	CT71D	CT80N	CT90L								
AC	145	145	197								
AD	126	126	160								
L	477	527	540								
LS	540	590	625								
LB	290	340	353								
LBS	353	403	438								

28 004 00 04

SAZ57..

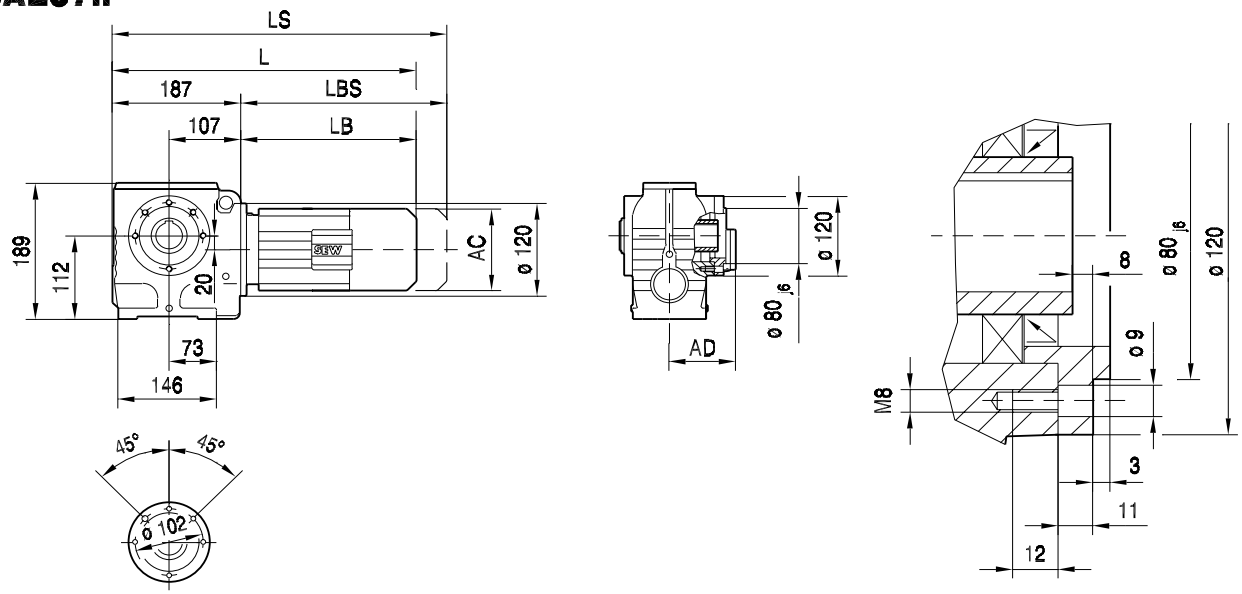

SAZ57..

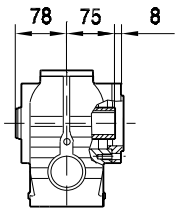

SHZ57..

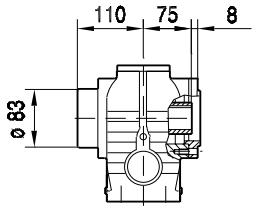

ø 35 H7

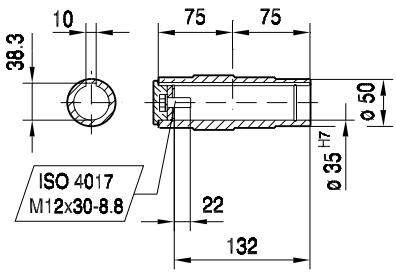

ø 30 H7

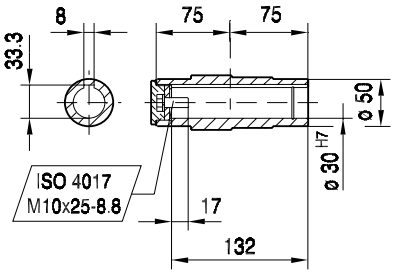

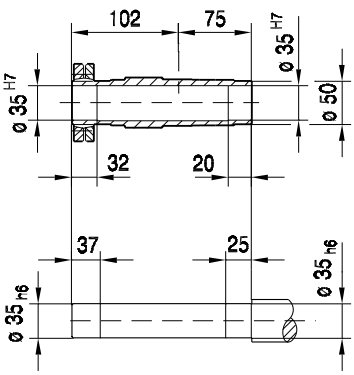

(→ 105)	CT71D	CT80N	CT90L								
AC	145	145	197								
AD	126	126	160								
L	477	527	540								
LS	540	590	625								
LB	290	340	353								
LBS	353	403	438								

ST57..

28 011 00 04

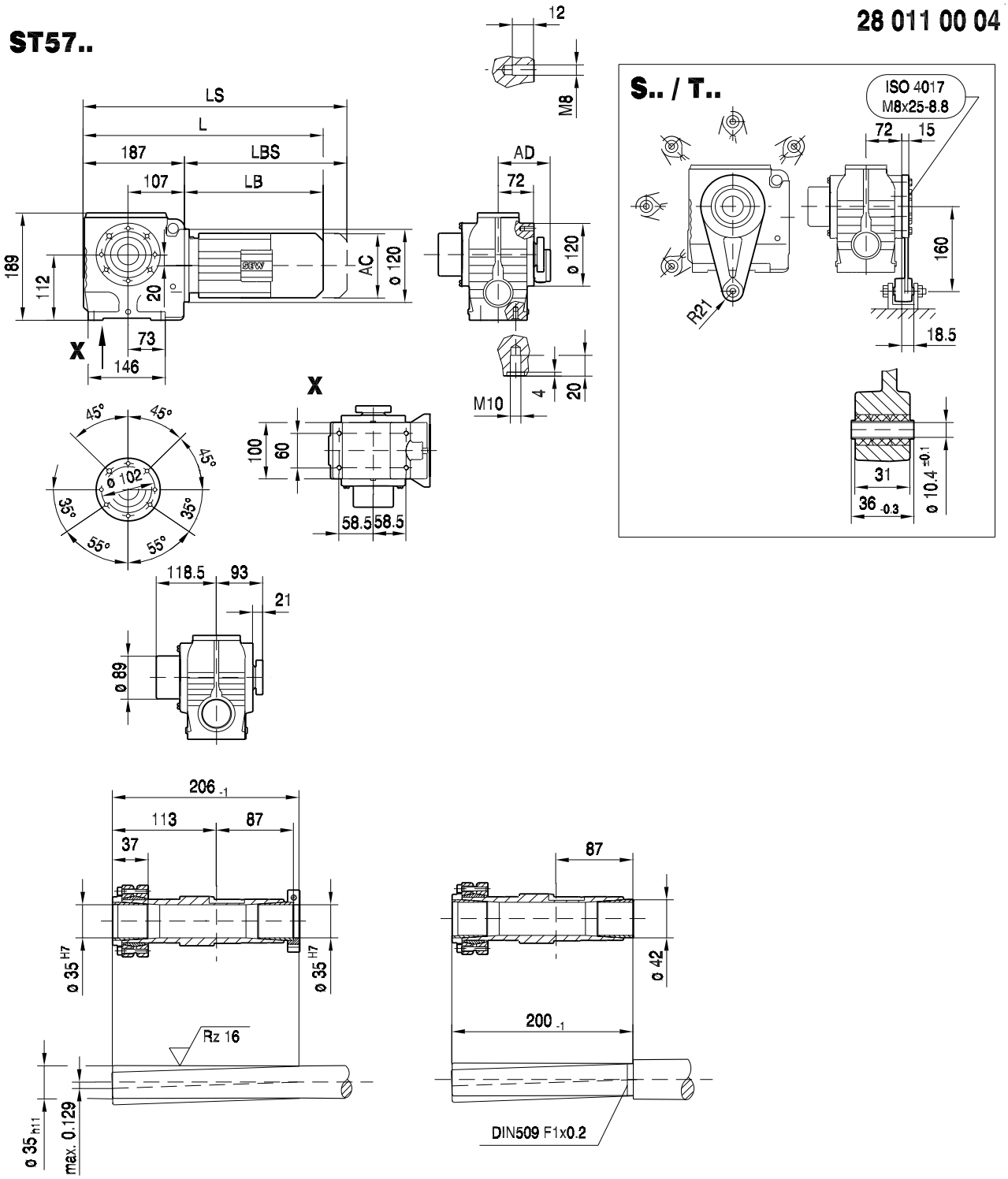

(→ 105)	CT71D	CT80N	CT90L								
AC	145	145	197								
AD	126	126	160								
L	477	527	540								
LS	540	590	625								
LB	290	340	353								
LBS	353	403	438								

05 095 01 00

S67..

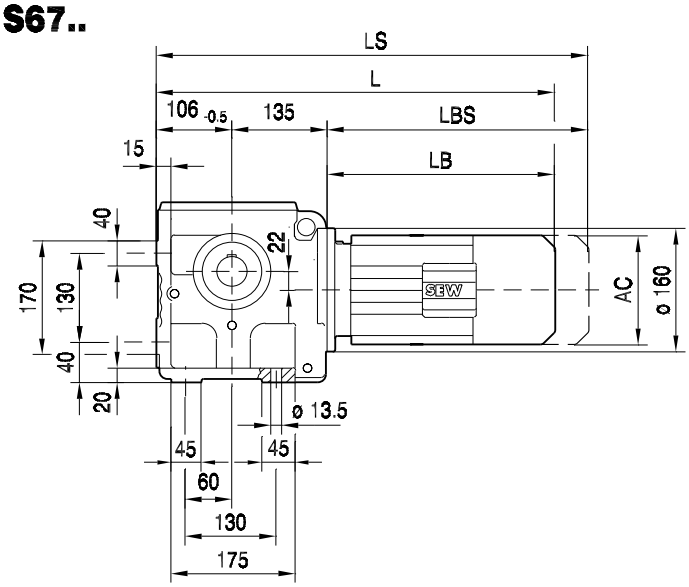

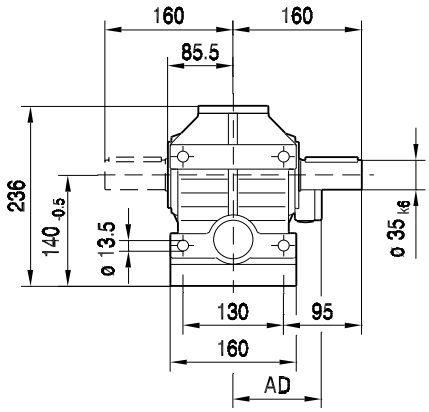

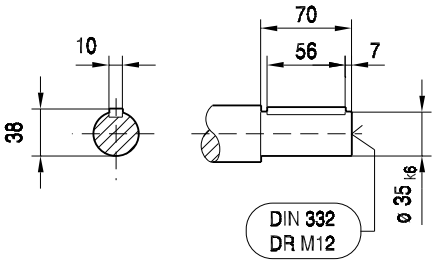

(→ 105)	CT71D	CT80N	CT90L	CV100M	CV100L						
AC	145	145	197	197	197						
AD	126	126	160	165	165						
L	524	574	587	637	667						
LS	587	637	672	722	752						
LB	283	333	346	396	426						
LBS	346	396	431	481	511						

05 099 01 00

SF67..

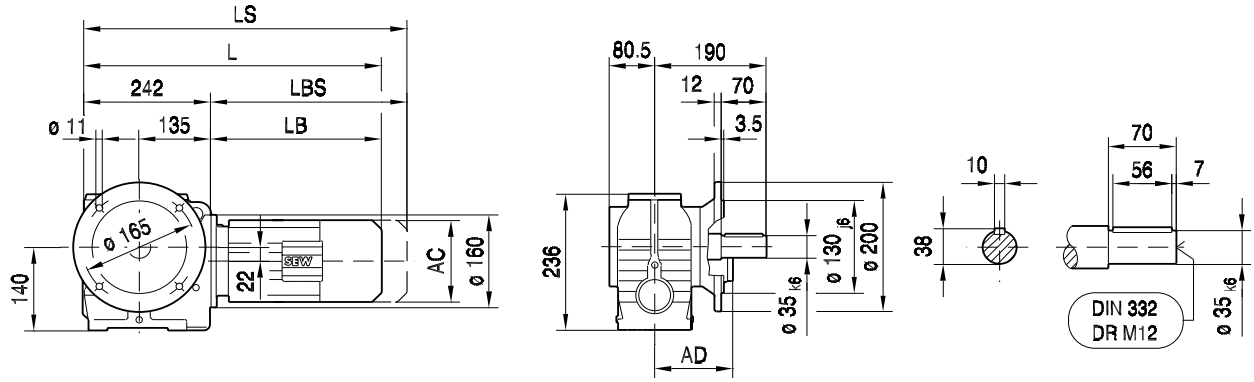

SAF67..

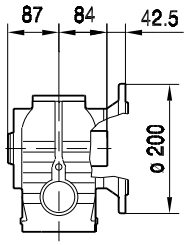

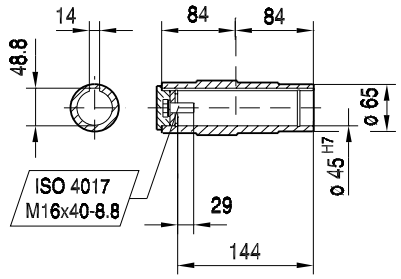

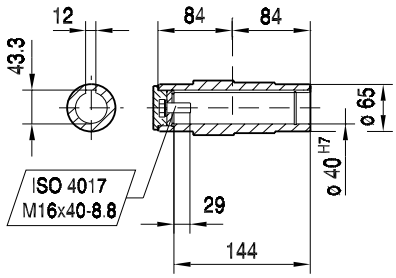

SHF67..

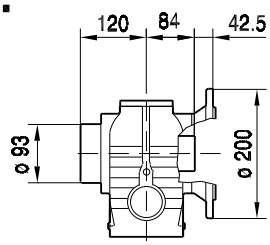

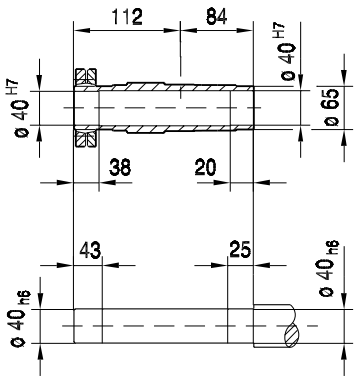

(→ 105)	CT71D	CT80N	CT90L	CV100M	CV100L						
AC	145	145	197	197	197						
AD	126	126	160	165	165						
L	525	575	588	638	668						
LS	588	638	673	723	753						
LB	283	333	346	396	426						
LBS	346	396	431	481	511						

28 026 00 04

SA67..

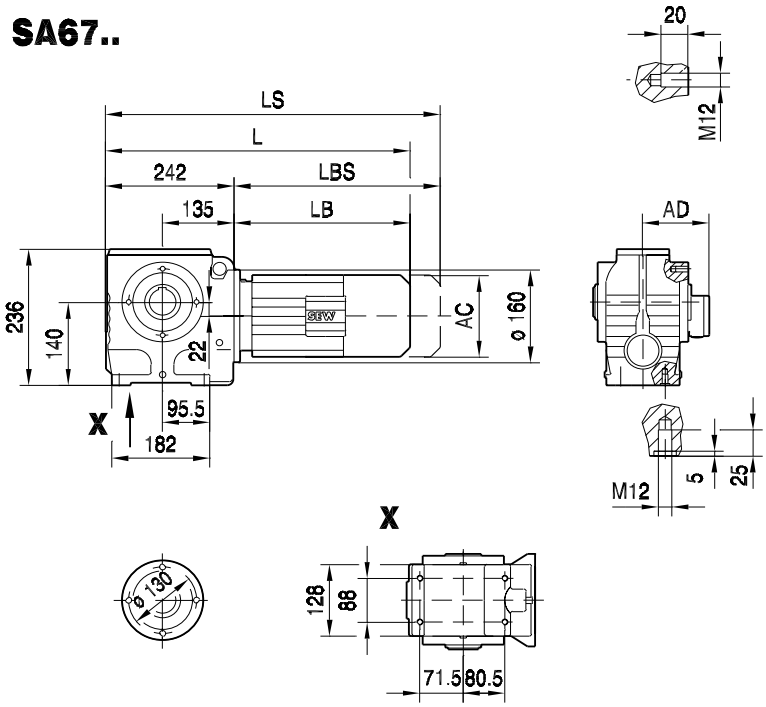

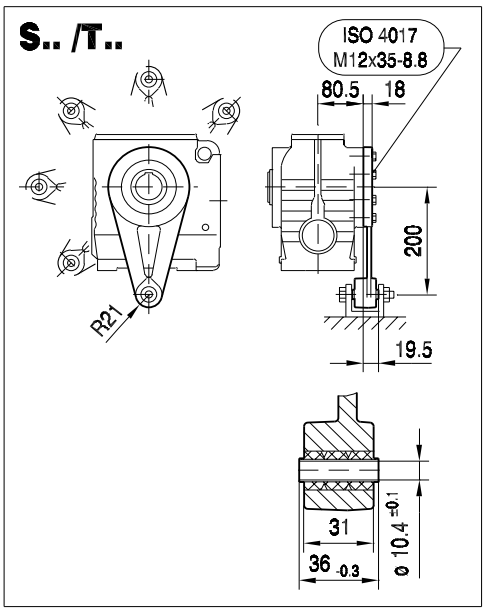

SA67..

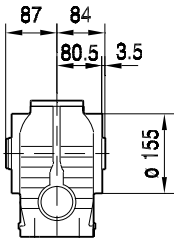

SH67..

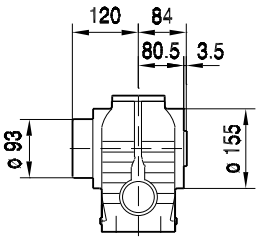

ø 45 H7

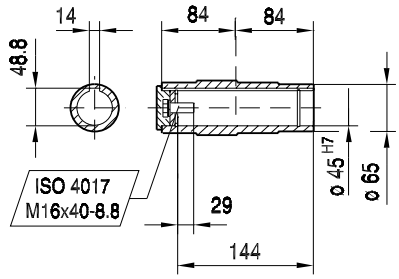

ø 40 H7

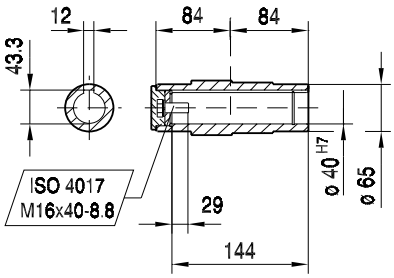

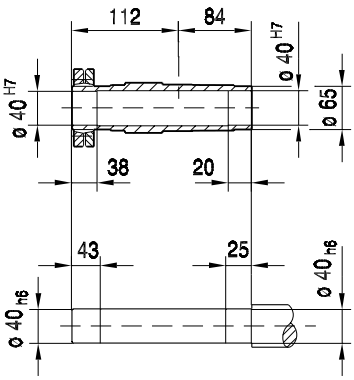

(→ 105)	CT71D	CT80N	CT90L	CV100M	CV100L						
AC	145	145	197	197	197						
AD	126	126	160	165	165						
L	525	575	588	638	668						
LS	588	638	673	723	753						
LB	283	333	346	396	426						
LBS	346	396	431	481	511						

28 005 00 04

SAZ67..

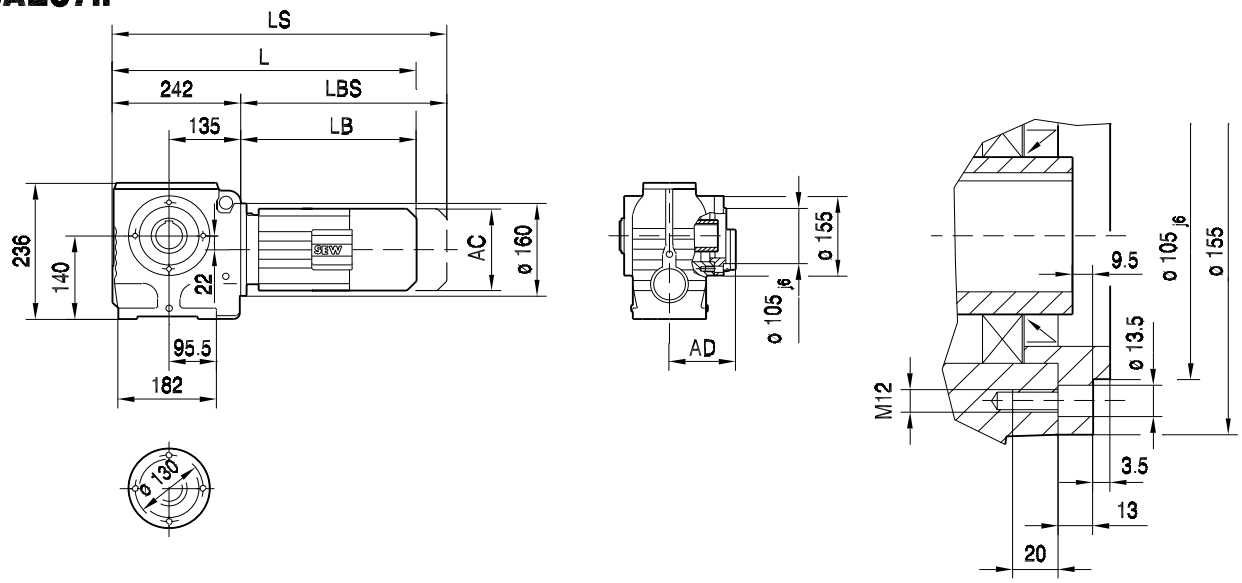

SAZ67..

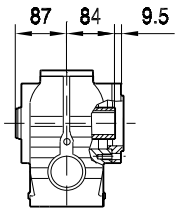

SHZ67..

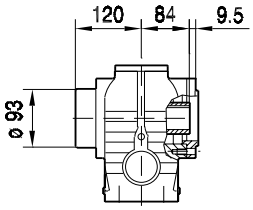

ø 45 H7

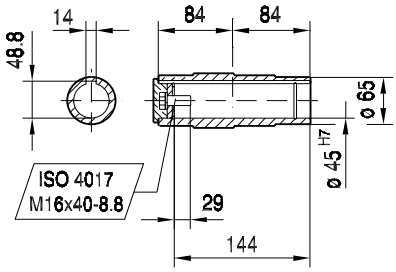

ø 40 H7

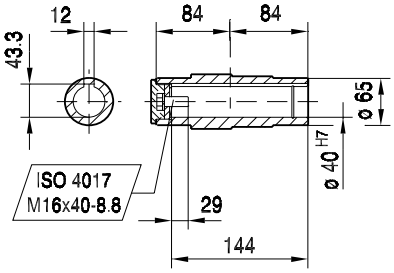

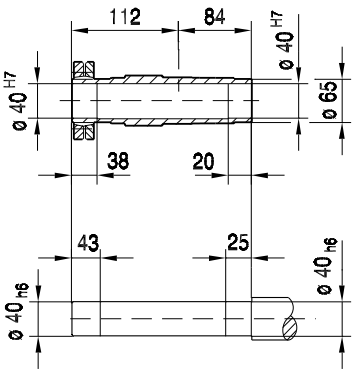

(→ 105)	CT71D	CT80N	CT90L	CV100M	CV100L						
AC	145	145	197	197	197						
AD	126	126	160	165	165						
L	525	575	588	638	668						
LS	588	638	673	723	753						
LB	283	333	346	396	426						
LBS	346	396	431	481	511						

ST67..

28 012 00 04

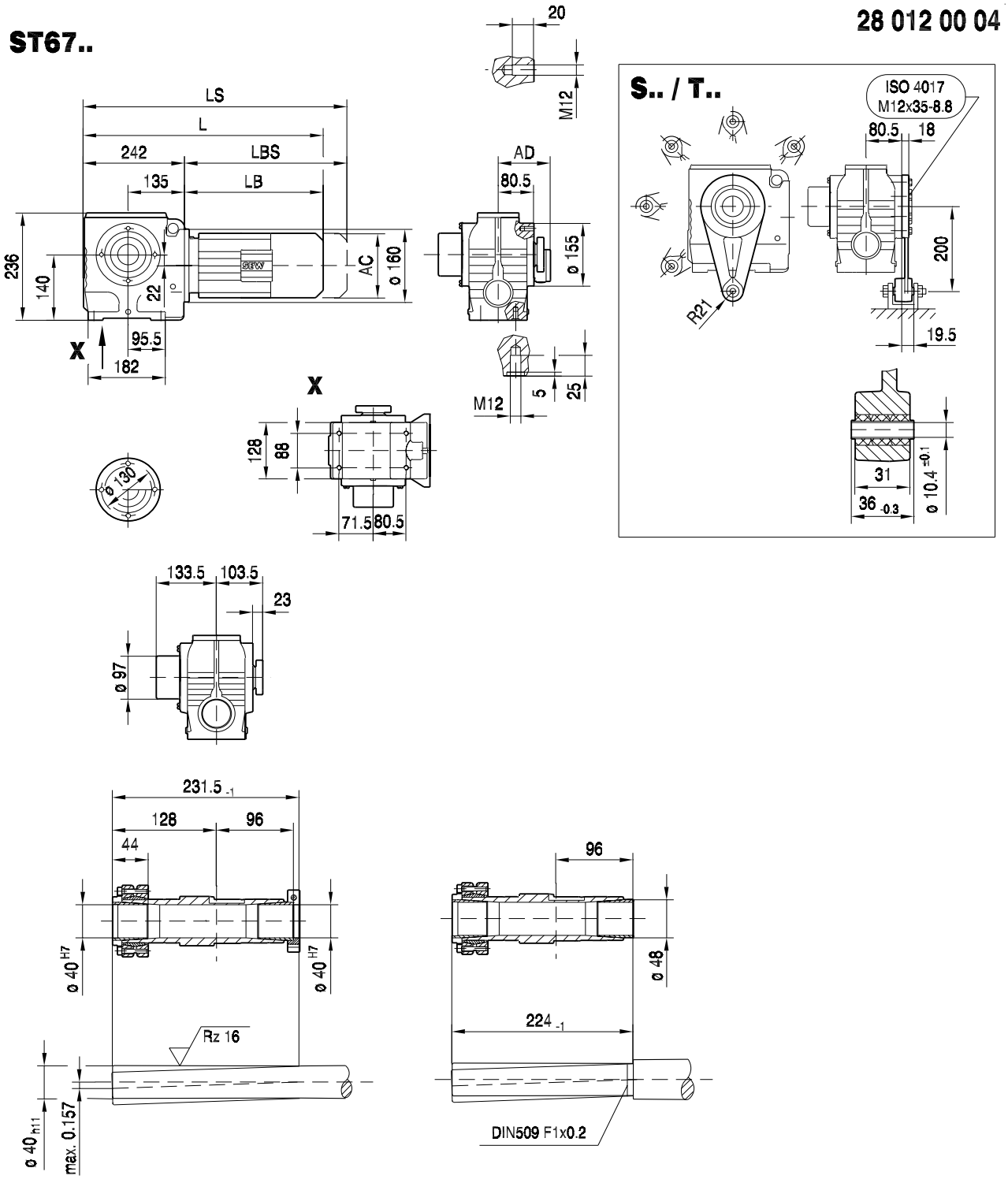

(→ 105)	CT71D	CT80N	CT90L	CV100M	CV100L						
AC	145	145	197	197	197						
AD	126	126	160	165	165						
L	525	575	588	638	668						
LS	588	638	673	723	753						
LB	283	333	346	396	426						
LBS	346	396	431	481	511						

16 CT/CV Asynchronous Servomotors

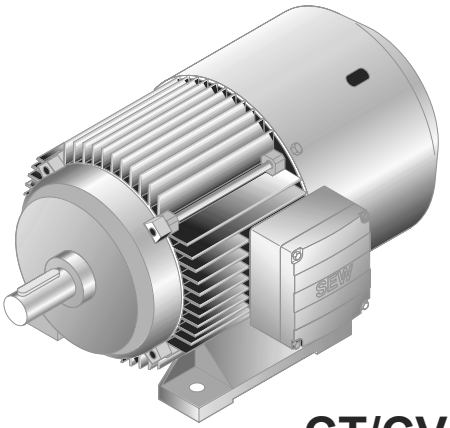

CT/CV../BM(G)

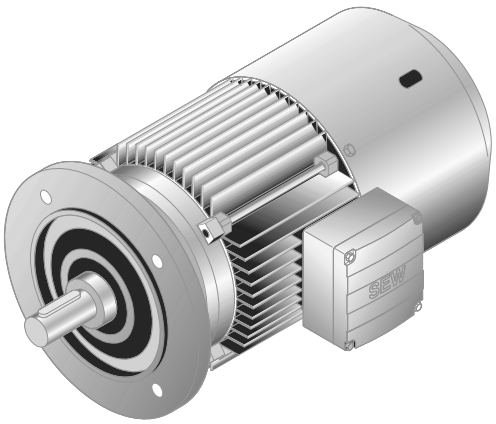

CFT/CFV../BM(G)

52498AXX

16.1 Unit designation of asynchronous servomotors

Examples

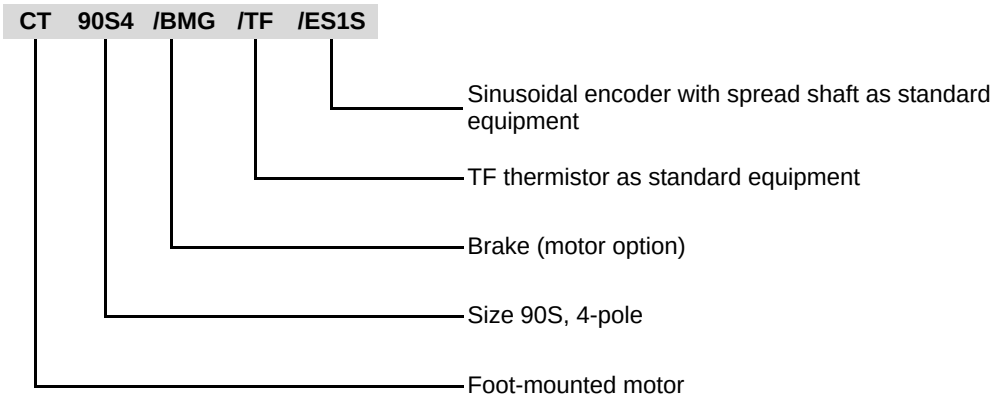

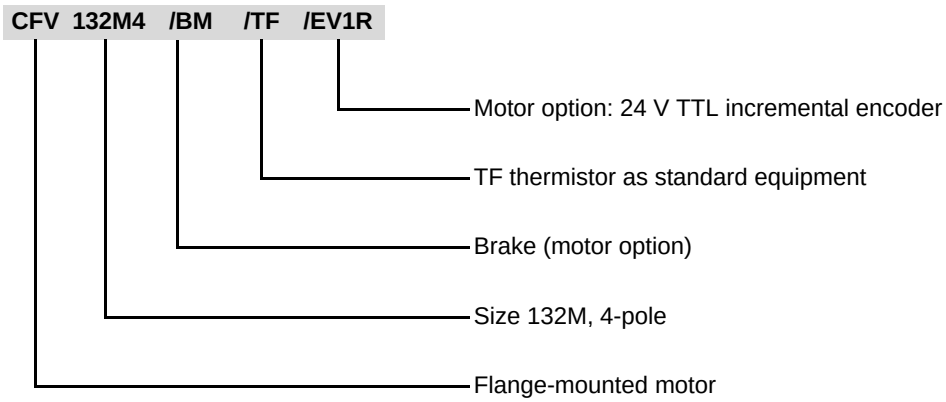

16.2 Standards and regulations

SEW motors conform to standards

The asynchronous servomotors from SEW-EURODRIVE conform to the relevant standards and regulations, in particular to:

- IEC 34-1, EN 60034-1

  Rotating electrical machinery, rating and performance.
- IEC 34-5, EN 60034-5

  IP enclosures
- IEC 60072

  Dimensions and performance of rotating electrical machinery.
- EN 50262

  Metric threads of cable glands.
- DIN 42925

  Terminal box cable entries for three-phase AC motors.
- DIN 44080

  Thermistors; PTC, technical terms and tests.

Rated data

Specific data of an asynchronous servomotor:

- Size
- Rated torque
- Cyclic duration factor
- Rated speed
- Rated current
- Rated voltage
- Enclosure
- Thermal class

These data are indicated on the nameplate of the motor. In accordance with IEC34 (EN 60034), the nameplate data apply to a maximum ambient temperature of 40 °C and a maximum altitude of 1000 m above sea level.

Motor nameplate

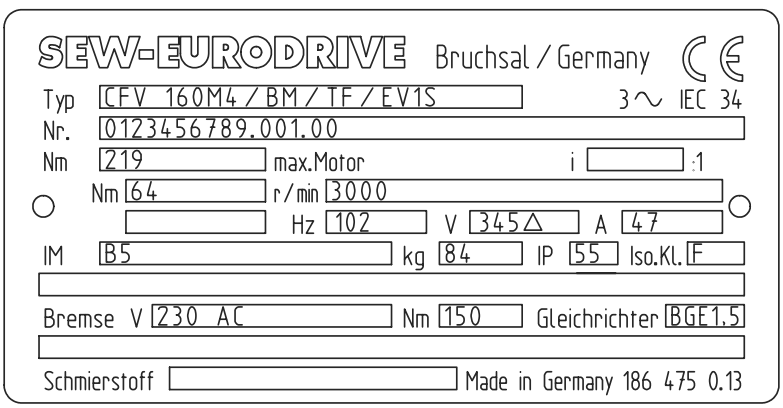

52839ADE

16.3 Circuit breaker and protective equipment

EMC measures

The designated use of SEW-EURODRIVE asynchronous servomotors is as components for installation in machinery and systems. The designer of the machine or system is responsible for complying with the EMC Directive 89/336/EEC. Please refer to the publication "Drive Engineering - Practical Implementation, Electromagnetic Compatibility (EMC) in Drive Engineering" for detailed information about this topic.

Brake motors

Install the brake cables of brake motors separately from the other power cables, maintaining a distance of at least 200 mm. Joint installation is only permitted if either the brake cable or the power cable is shielded.

Encoder connection

Please observe the following instructions when connecting an encoder:

- Use a shielded cable with twisted pair conductors only.
- Connect the shield to the PE potential on both ends over a large surface area.
- Route signal cables separately from power cables or brake cables (min. distance 200 mm).

Positive temperature coefficient thermistor

Install the connecting lead of the positive temperature coefficient (PTC) thermistor TF separately from other power cables, maintaining a distance of at least 200 mm. Collective installation is only permitted if either the TF cable or the power cable is shielded.

16.4 Thermal characteristics

Power reduction

The thermally permitted torque of a motor depends on the ambient temperature and the installation altitude. The rated torque given on the nameplate applies to a maximum ambient temperature of 40 °C and a maximum altitude of 1000 m above sea level. The torque must be reduced according to the following formula in the case of higher ambient temperatures or altitudes:

$$M_{Nred} = M_N \times f_T \times f_H$$

M_N	= rated torque
M_{Nred}	= reduced rated torque
f_H	= factor for the installation altitude above sea level
f_T	= factor for the ambient temperature

Refer to the following diagrams for factors f_T and f_H:

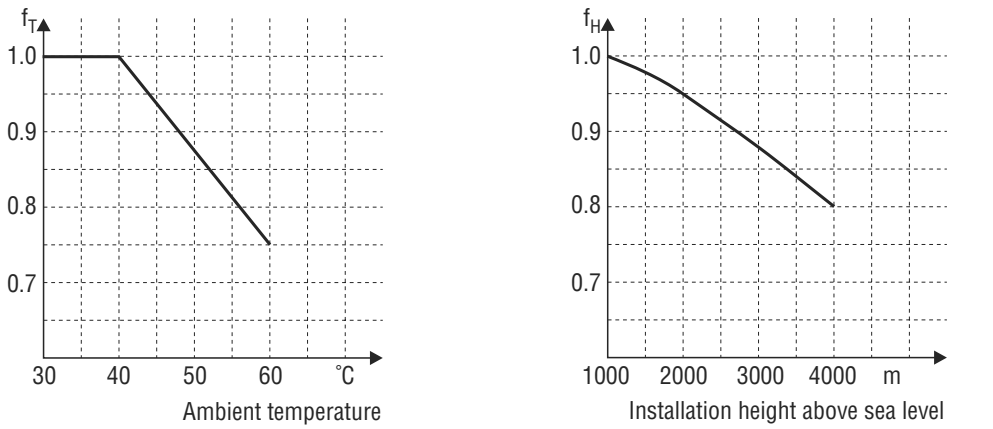

00627BEN

Figure 73: Torque reduction dependent on ambient temperature and altitude

16

16.5 Mechanical characteristics

Enclosures to IEC 34-5 (EN 60034-5)

Asynchronous servomotors are supplied with IP54 enclosure as standard. IP55 or IP65 enclosure is also available on request.

Other options

Increased corrosion protection for metal parts and additional winding impregnation (moisture and acid protection) are possible.

Vibration severity grade of motors

The rotors of SEW AC motors are dynamically balanced with a half key. The motors correspond to vibration severity grade "N" acc. to IEC 34-14 (EN 60034-14).

16.6 Overhung loads

For general information on overhung loads, refer to section "Overhung and axial loads" on page 49. The following table shows permitted overhung loads F_{Ra} and axial forces F_{Ax} of CT/CV motors:

Mounting position	[1/min]	[N]	Size									
			71	80	90	100	132S	132ML 132M	160M	160L	180	200
Foot-mounted motor	1200	F_{RA}	600	800	1200	1400	1600	2200	3000	3300	4800	5200
		F_{Ax}	150	200	250	300	400	500	750	750	1000	1900
	1700	F_{RA}	550	700	1000	1200	1400	1900	2500	3000	4300	4500
		F_{Ax}	110	150	200	250	250	400	600	600	900	1900
	2100	F_{RA}	500	650	900	1100	1300	1800	2300	2800	4100	4300
		F_{Ax}	100	130	180	250	250	350	550	550	900	1900
	3000	F_{RA}	400	500	700	900	1100	1400	2000	2300	3400	3700
		F_{Ax}	80	100	150	200	200	300	500	500	800	1900
Flange-mounted motor	1200	F_{RA}	750	1000	1400	1800	2000	2700	3700	4100	6000	6500
		F_{Ax}	180	250	300	400	500	600	900	900	1300	2300
	1700	F_{RA}	650	900	1200	1600	1800	2400	3100	3700	5400	5700
		F_{Ax}	140	200	250	350	350	500	800	800	1200	2300
	2100	F_{RA}	600	800	1100	1400	1600	2200	2900	3500	5000	5300
		F_{Ax}	120	170	200	300	300	450	700	700	1100	2300
	3000	F_{RA}	500	650	900	1200	1300	1800	2500	2900	4300	4600
		F_{Ax}	100	130	180	250	250	400	600	600	1000	2300

Overhung load conversion for off-center force application

The **permitted overhung loads** must be calculated using the following formulae in the event of force application not in the center of the shaft end.

The smaller of the two values F_{RxL} (according to bearing service life) and F_{RxW} (according to shaft strength) is the permitted value for the overhung load at point x. The following applies:

F_{RxL} based on bearing life:

$$F_{RxL} = F_{Ra} \times \frac{a}{b + x} \text{ [N]}$$

F_{RxW} from the shaft strength:

$$F_{RxW} = \frac{c}{f + x} \text{ [N]}$$

F_{Ra} = permitted overhung load (x = l/2) in [N]

F_{RxL} = permitted overhung load at point x based on bearing service life in [N]

F_{RxW} = permitted overhung load at point x based on shaft strength in [N]

x = distance from the shaft shoulder to the force application point in [mm]

a, b, f = motor constants for overhung load conversion in [mm]

c = motor constant for overhung load conversion in [Nmm]

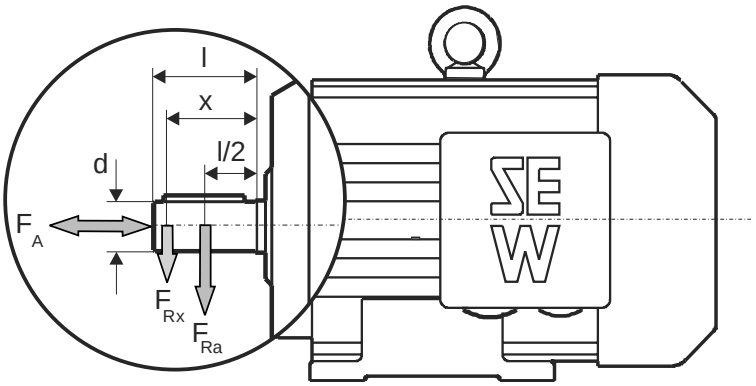

03074AXX

Figure 74: Overhung load F_{Rx} for off-center force application

Motor constants for overhung load conversion

Size	a [mm]	b [mm]	f [mm]	d[mm]	l [mm]
CT71	158.5	143.8	13.6	14	30
CT80	213.8	193.8	13.6	19	40
CT90	227.8	202.8	13.1	24	50
CV100M	270.8	240.8	14.1	28	60
CV100L	300.8	270.8	14.1	28	60
CV132S	341.8	301.8	24.1	38	80
CV132M	344.5	304.5	20.1	38	80
CV132ML	404.5	364.5	20.1	38	80
CV160M	419.5	364.5	20.1	42	110
CV160L	435.5	380.5	22.15	42	110
CV180	507.5	452.5	22.15	48	110
CV200L	537.5	482.5	0	55	110

Size	Motor constant c [10^3 Nmm]			
	1200 [1/min]	1700 [1/min]	2100 [1/min]	3000 [1/min]
CT71	17.0	15.5	14.0	11.5
CT80	27.0	23.5	22.0	17.0
CT90	45.0	38.0	34.0	27.0
CV100	62.0	53.0	50.0	40.0
CV132S	103.0	90.0	84.0	70.0
CV132M/ML	132.0	114.0	108.0	85.0
CV160M	225.0	190.0	175.0	150.0
CV160L	255.0	230.0	215.0	175.0
CV180	370.0	335.0	315.0	265.0
CV200L	285.0	250.0	235.0	200.0

Motor bearings used

The following table shows which bearings are used in SEW-EURODRIVE AC (brake) motors:

Motor type	Drive-end bearing			Non drive-end bearing	
	Flange-mounted motor	Gearmotor	Foot-mounted motor	without brake	with brake
CT71-80	6204-2Z-J	6303-2Z-J	6204-2Z-J	6203-2Z-J	6203-2RS-J-C3
CT90-CV100	6306-2Z-J			6205-2Z-J	6205-2RS-J-C3
CV112-132S	6208-2Z-J	6307-2Z-J	6208-2Z-J	6207-2Z-J	6207-2RS-J-C3
CV132M-160M	6309-2Z-J-C3			6209-2Z-J-C3	
CV160L-180L	6312-2Z-J-C3			6213-2Z-J-C3	
CV200-225	6314-2Z-J-C3			6314-2Z-J-C3	

16.7 Data tables and combination overviews

Structure and legend of data tables and combination overviews

n_N	Motor	M_N	I_N	U_N	J_{mot}	J_{bmot}	m_{mot}	m_{bmot}	M_B
[min^{-1}]		[Nm]	[A]	[V]	[10^{-4} kgm^2]		[kg]		[Nm]
1200	**CT80N4**	5	2.0	350	8.7	9.6	12	14	10
	CT90L4	10	3.5	345	34	39.5	18	28	20
	CV100M4	15	4.7	345	53	59	27	37	40

n_N	Speed class
M_N	Rated torque
I_N	Rated current
U_N	Rated voltage
J_{mot}	Mass moment of inertia of the motor
J_{bmot}	Mass moment of inertia of the brake motor
m_{mot}	Weight of the motor
m_{bmot}	Weight of the brake motor
M_B	Maximum braking torque

n_N	Motor	M_N	I_N	M_{max} [Nm] n_{Eck} [Hz]	MOVIDRIVE®									
					MDX				MDV / MCV / MCH / MDX					
					0005	0008	0011	0014	0015	0022	0030	0040	0055	0075
[min^{-1}]		[Nm]	[A]						4.0 [A]	5.5 [A]	7.0 [A]	9.5 [A]	12.5 [A]	16.0 [A]
1200	**CT71D4**	3	1.27	M_{max}	7.7	7.7								
				n_{Eck}	429	429								
	CT80N4	5	2.0	M_{max}			15.6	15.6						
				n_{Eck}			550	550						

n_N	Speed class
M_N	Rated torque
I_N	Rated current
M_{max}	Maximum torque
n_{Eck}	Transition speed up to which M_{max} is available when utilizing the maximum inverter peak current.



Data of asynchronous servomotors with 400 V system voltage

n_N	Motor	M_N	I_N	U_N	J_{mot}	J_{bmot}	m_{mot}	m_{bmot}	M_B
[min^{-1}]		[Nm]	[A]	[V]	[10^{-4} kgm^2]		[kg]		[Nm]
	CT71D4	3	1.27	369	4.6	5.5	7	10	5
	CT80N4	5	2.0	350	8.7	9.6	12	14	10
	CT90L4	10	3.5	345	34	39.5	18	28	20
	CV100M4	15	4.7	345	53	59	27	37	40
	CV100L4	26	8.9	310	65	71	30	40	40
	CV132S4	37	11.1	340	146	158	51	66	75
1200	**CV132M4**	50	15.5	340	280	324	72	96	100
	CV132ML4	61	17.6	345	330	374	81	106	150
	CV160M4	73	22.5	335	400	440	90	115	150
	CV160L4	95	29	330	925	1030	134	176	200
	CV180M4	110	34	330	1120	1226	185	226	300
	CV180L4	125	35	345	1290	1396	196	238	300
	CV200L4	200	58	330	2340	2475	256	307	300
	CT71D4	3	1.64	375	4.6	5.5	7	10	5
	CT80N4	5	2.8	350	8.7	9.6	12	14	10
	CT90L4	10	4.8	345	34	39.5	18	28	20
	CV100M4	15	6.5	345	53	59	27	37	40
	CV100L4	26	13.6	315	65	71	30	40	40
	CV132S4	37	15.2	340	146	158	51	66	75
1700	**CV132M4**	48	20.8	335	280	324	72	96	100
	CV132ML4	58	24.4	320	330	374	81	106	150
	CV160M4	71	29.8	340	400	440	90	115	150
	CV160L4	89	37.5	330	925	1030	134	176	200
	CV180M4	105	44.5	335	1120	1226	185	226	300
	CV180L4	115	48.5	325	1290	1396	196	238	300
	CV200L4	190	77	330	2340	2475	256	307	300
	CT71D4	3	2.2	352	4.6	5.5	7	10	5
	CT80N4	5	3.5	340	8.7	9.6	12	14	10
	CT90L4	10	6.1	335	34	39.5	18	28	20
	CV100M4	15	8.1	335	53	59	27	37	40
	CV100L4	25	14.8	305	65	71	30	40	40
	CV132S4	37	19.2	335	146	158	51	66	75
2100	**CV132M4**	48	26	335	280	324	72	96	100
	CV132ML4	58	29	340	330	374	81	106	150
	CV160M4	70	37	330	400	440	90	115	150
	CV160L4	88	46	330	925	1030	134	176	200
	CV180M4	100	53	330	1120	1226	185	226	300
	CV180L4	115	56	345	1290	1396	196	238	300
	CV200L4	175	88	325	2340	2475	256	307	300
	CT71D4	3	3	370	4.6	5.5	7	10	5
	CT80N4	4.5	4.3	350	8.7	9.6	12	14	10
	CT90L4	9.5	7.9	345	34	39.5	18	28	20
	CV100M4	15	11.3	345	53	59	27	37	40
	CV100L4	21	17.0	310	65	71	30	40	40
	CV132S4	35	25.0	340	146	158	51	66	75
3000	**CV132M4**	45	34	335	280	324	72	96	100
	CV132ML4	52	38	320	330	374	81	106	150
	CV160M4	64	47	345	400	440	90	115	150
	CV160L4	85	62	335	925	1030	134	176	200
	CV180M4	93	68	340	1120	1226	185	226	300
	CV180L4	110	81	325	1290	1396	196	238	300
	CV200L4	145	102	330	2340	2475	256	307	300



Combination overview of synchronous servomotors / servo controllers for 400 V system voltage, peak torque in Nm

Assignment to MOVIDRIVE® 0005 - 0075 (1200 - 1700 min-1)

n_N	Motor	M_N	I_N	M_{max} [Nm] n_{Eck} [min^{-1}]	MOVIDRIVE®									
					MDX				MDV / MCV / MCH / MDX					
					0005	0008	0011	0014	0015	0022	0030	0040	0055	0075
[min^{-1}]		[Nm]	[A]		2.0 [A]	2.4 [A]	3.1 [A]	4.0 [A]	4.0 [A]	5.5 [A]	7.0 [A]	9.5 [A]	12.5 [A]	16.0 [A]
1200	CT71D4	2.5	1.27	M_{max}	7.7	7.7								
				n_{Eck}	429	429								
	CT80N4	5	2.0	M_{max}			15.6	15.6						
				n_{Eck}			550	550						
	CT90L4	10	3.5	M_{max}				18.2	18.2	25.7	30.5			
				n_{Eck}				928	928	781	685			
	CV100M4	15	4.7	M_{max}						29	37	45		
				n_{Eck}						883	781	680		
	CV100L4	26	8.9	M_{max}							32.6	45.3	60	75
				n_{Eck}							1062	947	813	675
	CV132S4	37	11.1	M_{max}									64	84
				n_{Eck}									992	915
	CV132M4	50	15.5	M_{max}										82
				n_{Eck}										1011
1700	CT71D4	2.5	1.27	M_{max}	7	7.7	7.7							
				n_{Eck}	986	890	890							
	CT80N4	5	2.8	M_{max}				15.6	12.6	15.6				
				n_{Eck}				992	1152	992				
	CT90L4	10	4.8	M_{max}						18	23.5	30.5		
				n_{Eck}						1400	1280	1150		
	CV100M4	15	6.5	M_{max}							25.7	36	45	
				n_{Eck}							1402	1274	1150	
	CV100L4	26	13.6	M_{max}								32.9	44.2	57
				n_{Eck}								1510	1402	1274
	CV132S4	37	15.2	M_{max}										59
				n_{Eck}										1470



Assignment to MOVIDRIVE® 0110 - 1320 (1200 - 1700 min-1)

n_N	Motor	M_N	I_N	M_{max} [Nm] n_{Eck} [min^{-1}]	MOVIDRIVE®										
					MDV / MCV / MCH / MDX										
					0110	0150	0220	0300	0370	0450	0550	0750	0900	1100	1320
[min^{-1}]		[Nm]	[A]		24.0 [A]	32.0 [A]	46.0 [A]	60.0 [A]	73.0 [A]	89.0 [A]	105 [A]	130 [A]	170 [A]	200 [A]	250 [A]
1200	CV132S4	37	11.1	M_{max}	110										
				n_{Eck}	815										
	CV132M4	50	15.5	M_{max}	125	150									
				n_{Eck}	877	770									
	CV132ML4	61	17.6	M_{max}	126	169	183								
				n_{Eck}	922	819	725								
	CV160M4	73	22.5	M_{max}	125	169	219								
				n_{Eck}	986	909	840								
	CV160L4	95	29	M_{max}		163	240	294							
				n_{Eck}		1043	954	915							
	CV180M4	110	34	M_{max}			241	320	360						
				n_{Eck}			1050	986	1005						
	CV180L4	125	35	M_{max}			231	308	360	360					
				n_{Eck}			1018	973	973	1081					
	CV200L4	200	58	M_{max}				326	402	494	567				
				n_{Eck}				1011	986	947	941				
1700	CV100L4	26	13.6	M_{max}	75										
				n_{Eck}	1090										
	CV132S4	37	15.2	M_{max}	91	110									
				n_{Eck}	1330	1280									
	CV132M4	48	20.8	M_{max}	89	121	150								
				n_{Eck}	1440	1330	1250								
	CV132ML4	58	24.4	M_{max}	83	114	166	183							
				n_{Eck}	1562	1485	1331	1325							
	CV160M4	71	29.8	M_{max}		120	176	219							
				n_{Eck}		1420	1310	1250							
	CV160L4	89	37.5	M_{max}			170	226	277	294					
				n_{Eck}			1470	1400	1330	1380					
	CV180M4	105	44.5	M_{max}			168	227	280	345	360				
				n_{Eck}			1555	1510	1459	1402	1504				
	CV180L4	115	48.5	M_{max}				217	270	333	360	360			
				n_{Eck}				1453	1421	1370	1446	1619			
	CV200L4	190	77	M_{max}						353	420	524	567		
				n_{Eck}						1421	1395	1344	1472		



Assignment to MOVIDRIVE® 0005 - 0075 (2100 -3000 min-1)

n_N	Motor	M_N	I_N	M_{max} [Nm] n_{Eck} [min^{-1}]	MOVIDRIVE®									
					MDX				MDV / MCV / MCH / MDX					
					0005	0008	0011	0014	0015	0022	0030	0040	0055	0075
[min^{-1}]		[Nm]	[A]		2.0 [A]	2.4 [A]	3.1 [A]	4.0 [A]	4.0 [A]	5.5 [A]	7.0 [A]	9.5 [A]	12.5 [A]	16.0 [A]
2100	CT71D4	3	2.2	M_{max}		6.6	7.7	7.7						
				n_{Eck}		1472	1318	1318						
	CT80N4	5	3.5	M_{max}				13.4	9.7	13.8	15.6			
				n_{Eck}				1536	1754	1510	1421			
	CT90L4	10	6.1	M_{max}							18.3	25.5	30.5	
				n_{Eck}							1843	1677	1625	
	CV100M4	15	8.1	M_{max}								28	38.1	45
				n_{Eck}								1760	1626	1550
	CV100L4	25	14.8	M_{max}									33.7	44
				n_{Eck}									2003	1894
3000	CT71D4	3	3	M_{max}				7.7	6	7.7				
				n_{Eck}				2093	2381	2093				
	CT80N4	4.5	4.3	M_{max}						9.7	12.7	15.5		
				n_{Eck}						2566	2362	2202		
	CT90L4	9.5	7.9	M_{max}							12.7	18	24	30.5
				n_{Eck}							2790	2650	2490	2360
	CV100M4	15	11.3	M_{max}									26.5	34.6
				n_{Eck}									2620	2490
	CV100L4	21	17.0	M_{max}										31.8
				n_{Eck}										2800



Assignment to MOVIDRIVE® 0110 - 1320 (2100 -3000 min-1)

n_N	Motor	M_N	I_N	M_{max}[Nm] n_{Eck} [min^{-1}]	MOVIDRIVE® MDV / MCV / MCH / MDX										
					0110	**0150**	**0220**	**0300**	**0370**	**0450**	**0550**	**0750**	**0900**	**1100**	**1320**
[min^{-1}]		[Nm]	[A]		24.0 [A]	32.0 [A]	46.0 [A]	60.0 [A]	73.0 [A]	89.0 [A]	105 [A]	130 [A]	170 [A]	200 [A]	250 [A]
2100	**CV100L4**	25	14.8	M_{max}	67	75									
				n_{Eck}	1645	1550									
	CV132S4	37	19.2	M_{max}	72	97	110								
				n_{Eck}	1850	1722	1730								
	CV132M4	48	26	M_{max}		95	138	150							
				n_{Eck}		1850	1670	1670							
	CV132ML4	58	29	M_{max}			139	183							
				n_{Eck}			1715	1574							
	CV160M4	70	37	M_{max}			138	183	219						
				n_{Eck}			1792	1690	1625						
	CV160L4	88	46	M_{max}				177	218	268	294				
				n_{Eck}				1882	1824	1740	1760				
	CV180M4	100	53	M_{max}					218	270	322	360			
				n_{Eck}					1939	1894	1837	1933			
	CV180L4	115	56	M_{max}						260	310	360	360		
				n_{Eck}						1824	1786	1850	2061		
	CV200L4	175	88	M_{max}							329	412	468	567	
				n_{Eck}							1830	1792	1747	1869	
3000	**CV100M4**	15	11.3	M_{max}	45										
				n_{Eck}	2425										
	CV100L4	21	17.0	M_{max}	49	66	75								
				n_{Eck}	2600	2380	2290								
	CV132S4	35	25.0	M_{max}	51	69	101	110							
				n_{Eck}	2740	2650	2455	2580							
	CV132M4	45	34	M_{max}		67	99	131	150						
				n_{Eck}		2750	2600	2450	2400						
	CV132ML4	52	38	M_{max}			94	124	152	183					
				n_{Eck}			2765	2656	2547	2400					
	CV160M4	64	47	M_{max}			98	131	161	198	219				
				n_{Eck}			2630	2550	2470	2370	2380				
	CV160L4	85	62	M_{max}				124	155	192	228	285	294		
				n_{Eck}				2726	2682	2618	2554	2438	2630		
	CV180M4	93	68	M_{max}					150	190	229	288	349	360	
				n_{Eck}					2790	2752	2707	2637	2560	2919	
	CV180L4	110	81	M_{max}						181	219	277	336	360	
				n_{Eck}						2618	2592	2541	2483	2816	
	CV200L4	145	102	M_{max}								293	356	462	567
				n_{Eck}								2573	2541	2483	2464

Torque curves

CT71D4 asynchronous servomotors with MD_60A, MC_4_A, MDX 61 B drive inverters

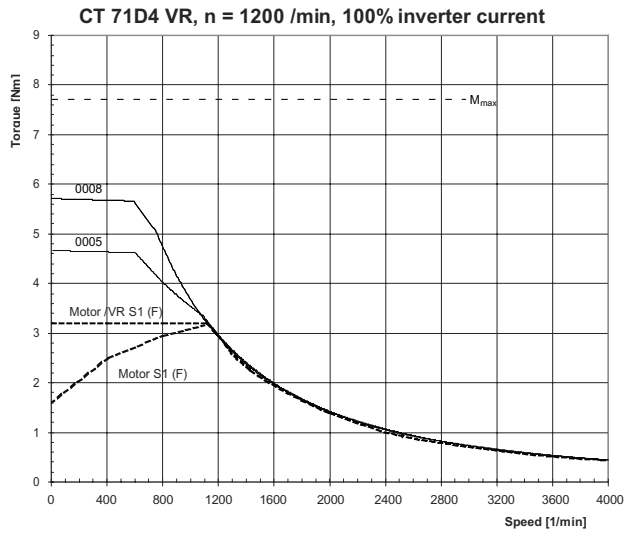

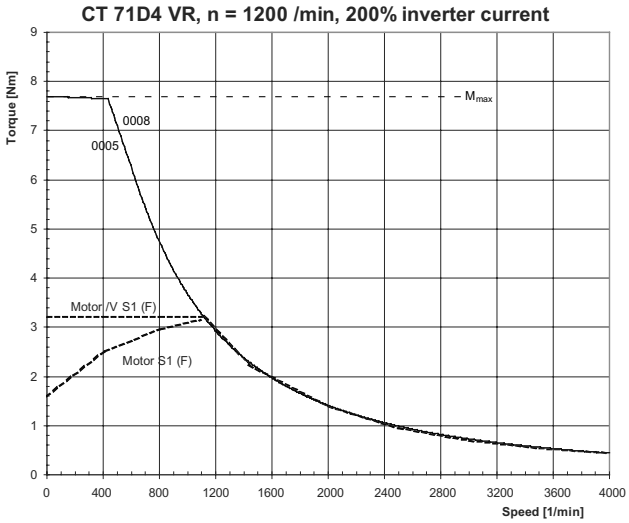

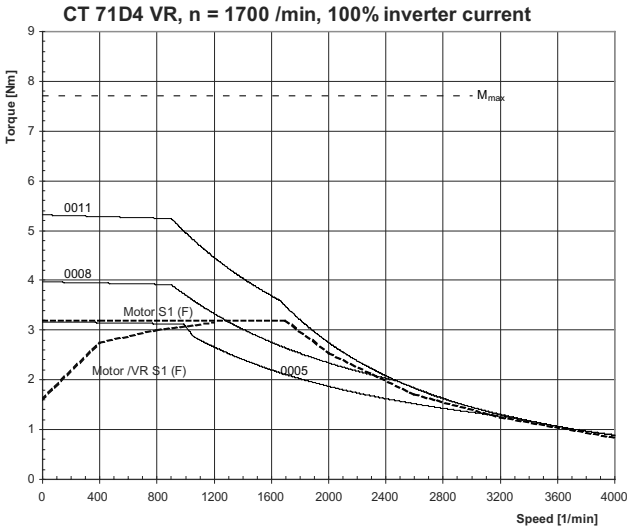

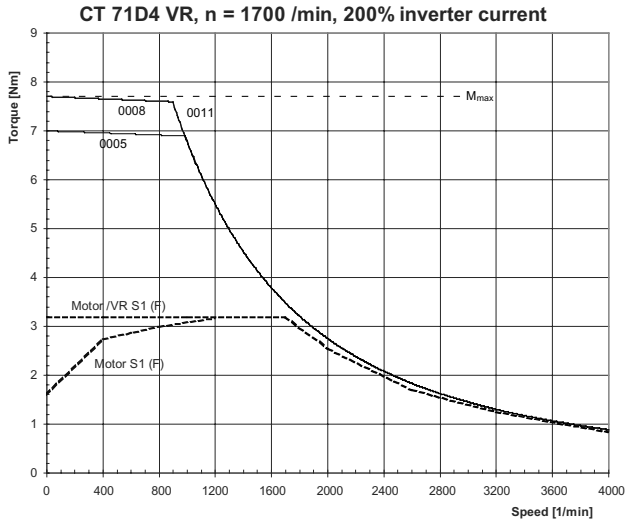

CT 71D4 VR, n = 2100 /min, 100% inverter current

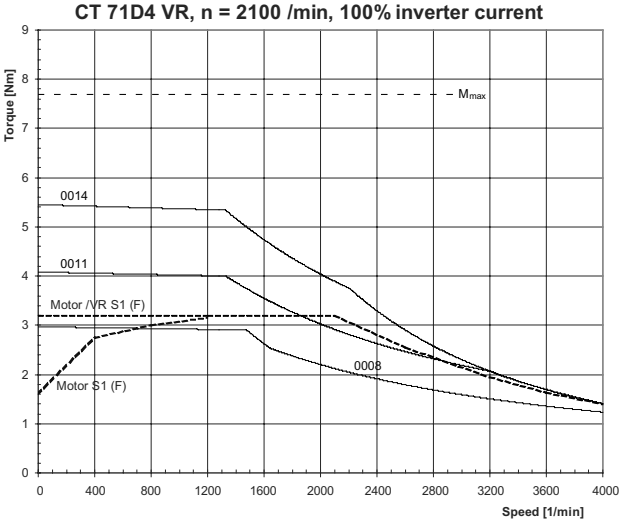

CT 71D4 VR, n = 2100 /min, 200% inverter current

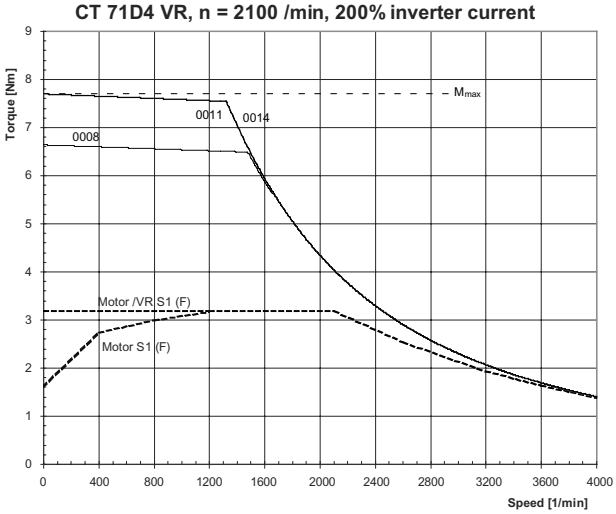

CT 71D4 VR, n = 3000 /min, 100% inverter current

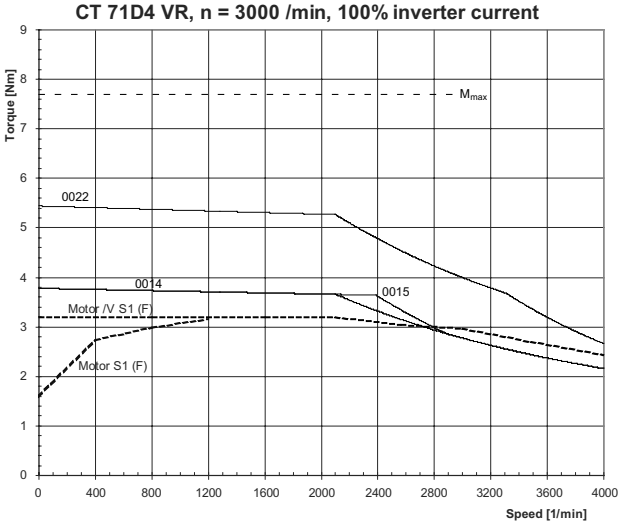

CT 71D4 VR, n = 3000 /min, 200% inverter current (BG1: 150%)

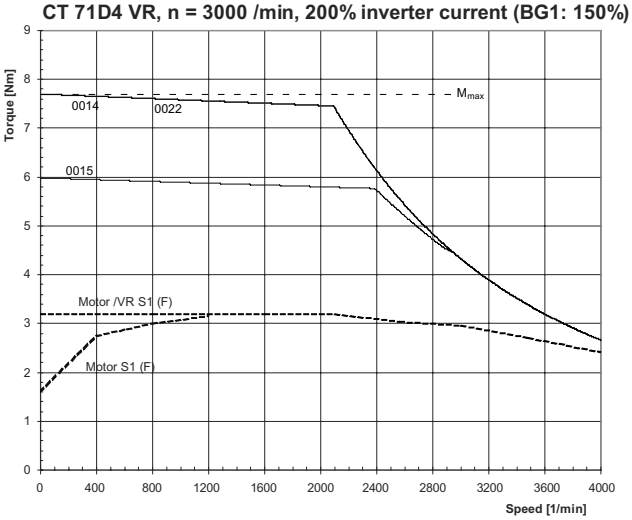

CT80N4 asynchronous servomotors with MD_60A, MC_4_A drive inverters

CT 80N4 VR, n = 1200 /min, 100% inverter current

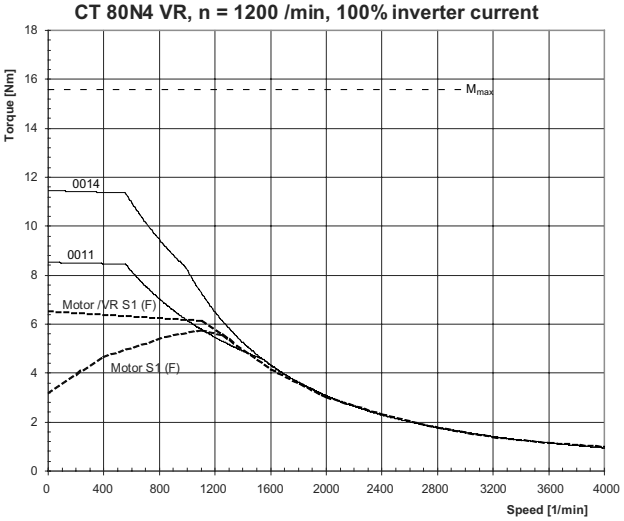

CT 80N4 VR, n = 1200 /min, 150% inverter current (BG0: 200%)

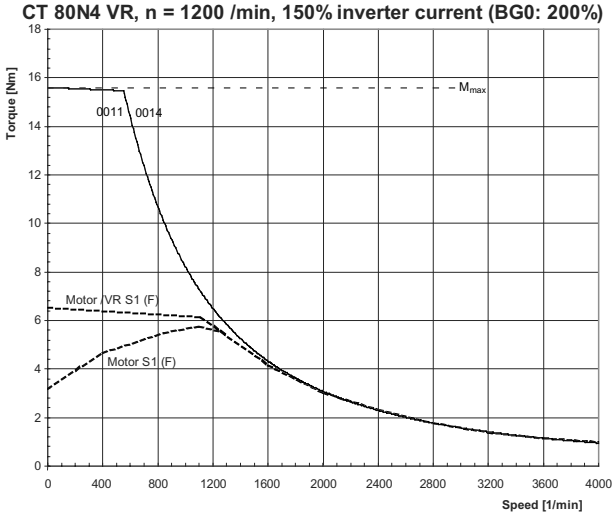

CT 80N4 VR, n = 1700 /min, 100% inverter current

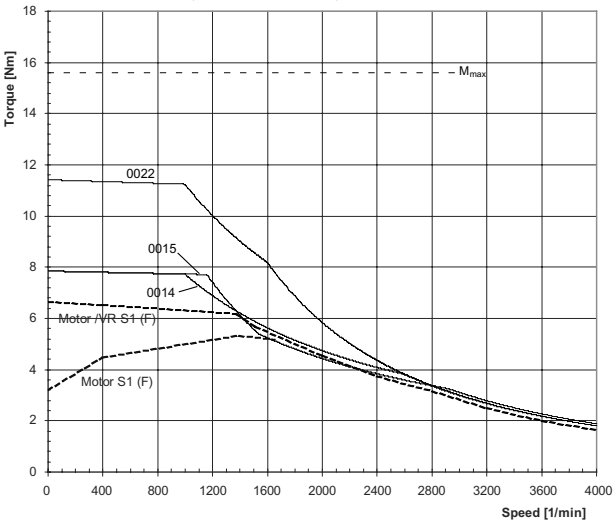

CT 80N4 VR, n = 1700 /min, 150% inverter current (BG0: 200%)

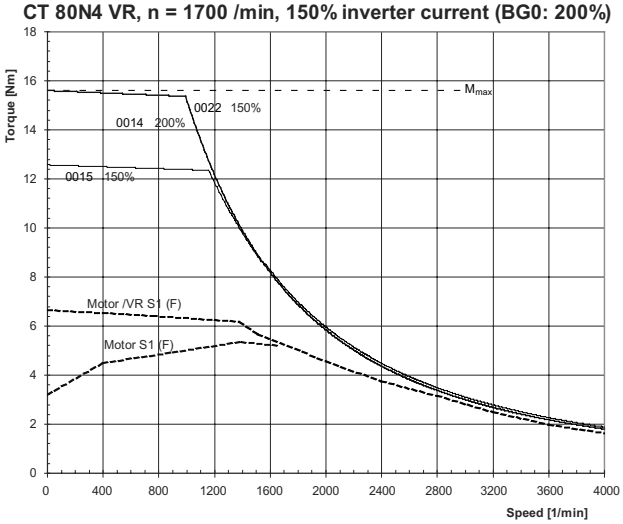

CT 80N4 VR, n = 2100 /min, 100% inverter current

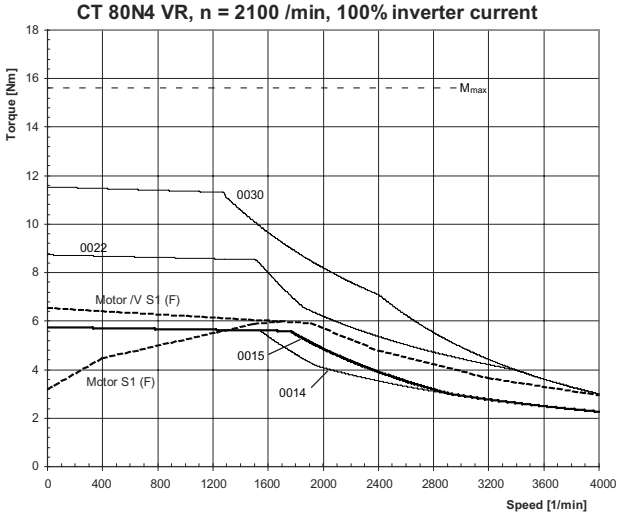

CT 80N4 VR, n = 2100 /min, 150% inverter current (BG0: 200%)

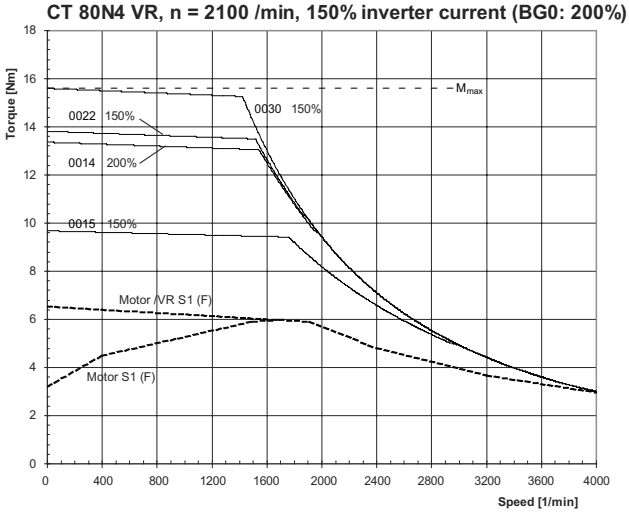

CT 80N4 VR, n = 3000 /min, 100% inverter current

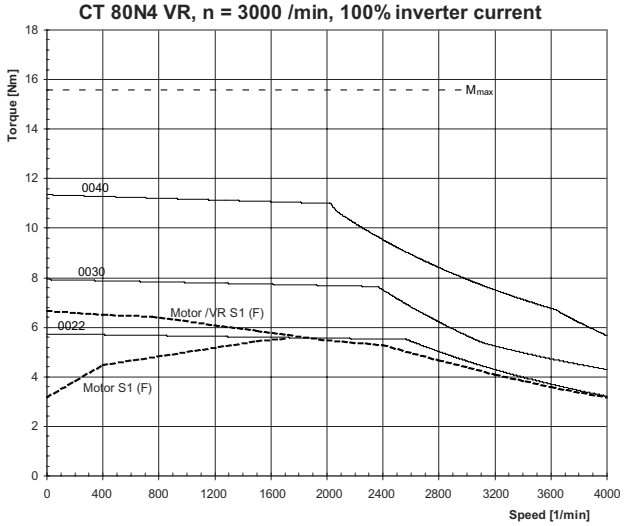

CT 80N4 V, n = 3000 /min | 150% inverter current

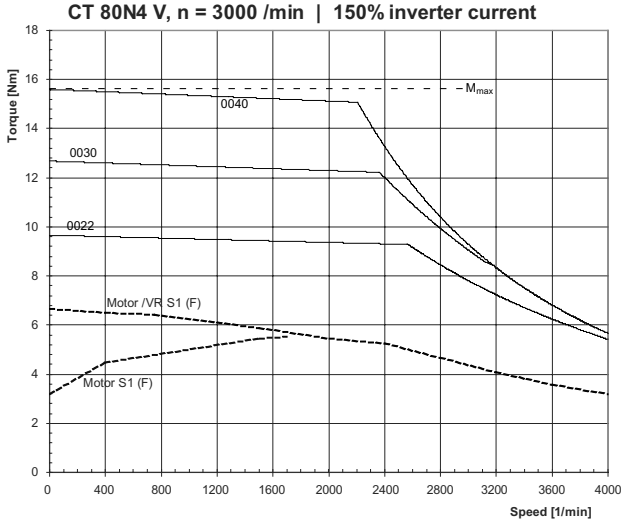

CT90L4 asynchronous servomotors with MD_60A, MC_4_A drive inverters

CT 90L4 VR, n = 1200 /min , 100% inverter current

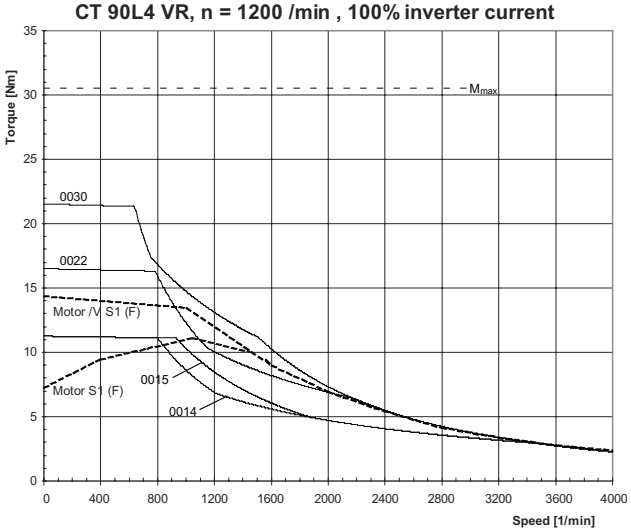

CT 90L4 VR, n = 1200 /min, 150% inverter current (BG0: 200%)

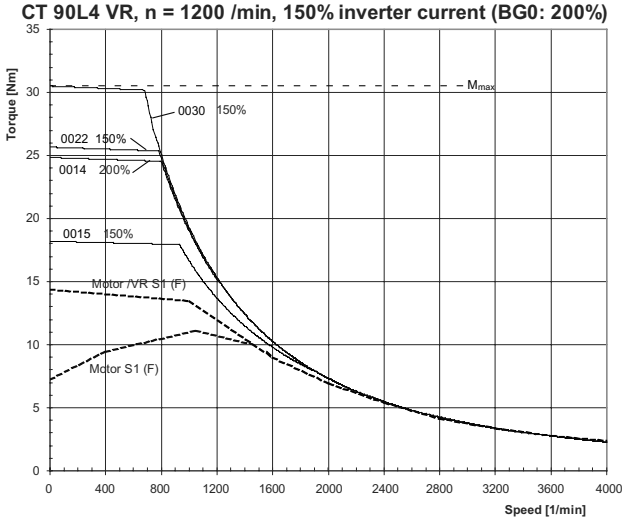

CT 90L4 VR, n = 1700 /min, 100% inverter current

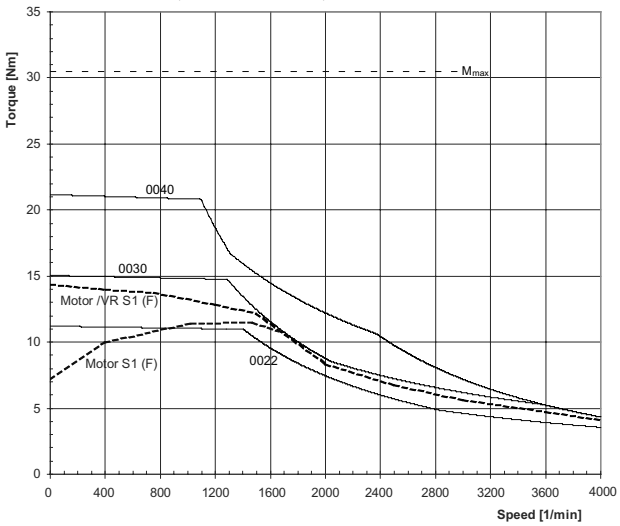

CT 90L4 VR, n = 1700 /min, 150% inverter current

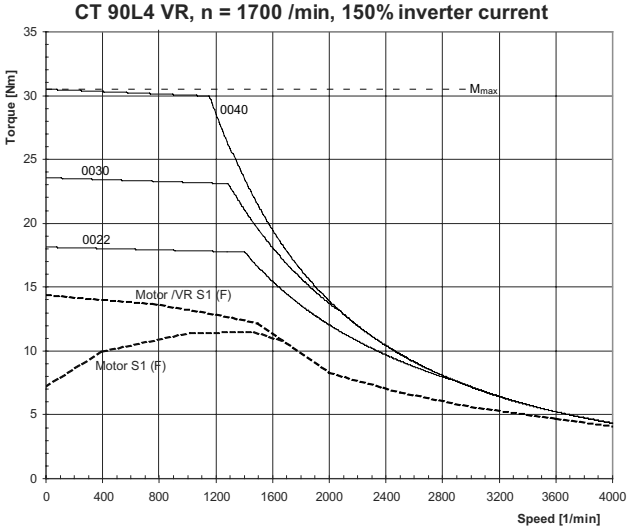

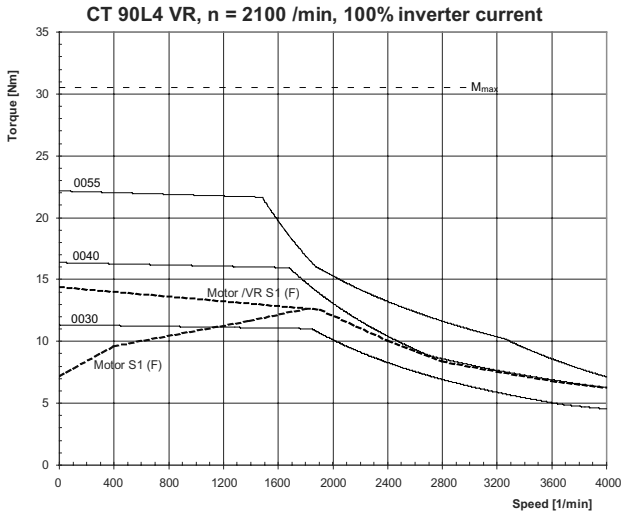
CT 90L4 VR, n = 2100 /min, 100% inverter current
Torque [Nm]
Speed [1/min]
M_{max}
0055
0040
Motor /VR S1 (F)
0030
Motor S1 (F)

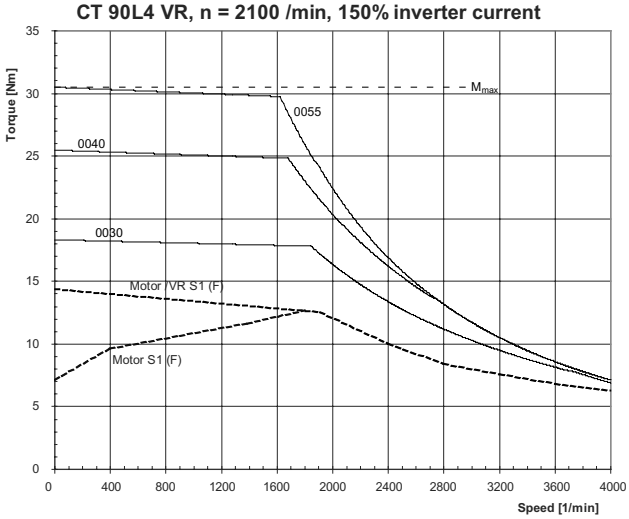
CT 90L4 VR, n = 2100 /min, 150% inverter current
Torque [Nm]
Speed [1/min]
M_{max}
0055
0040
0030
Motor /VR S1 (F)
Motor S1 (F)

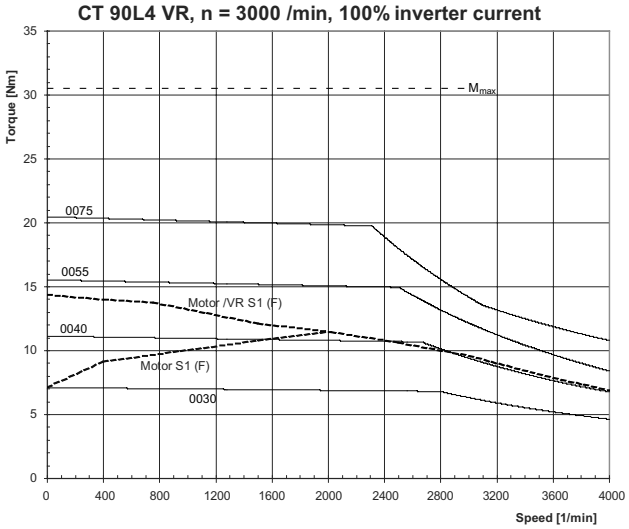
CT 90L4 VR, n = 3000 /min, 100% inverter current
Torque [Nm]
Speed [1/min]
M_{max}
0075
0055
Motor /VR S1 (F)
0040
Motor S1 (F)
0030

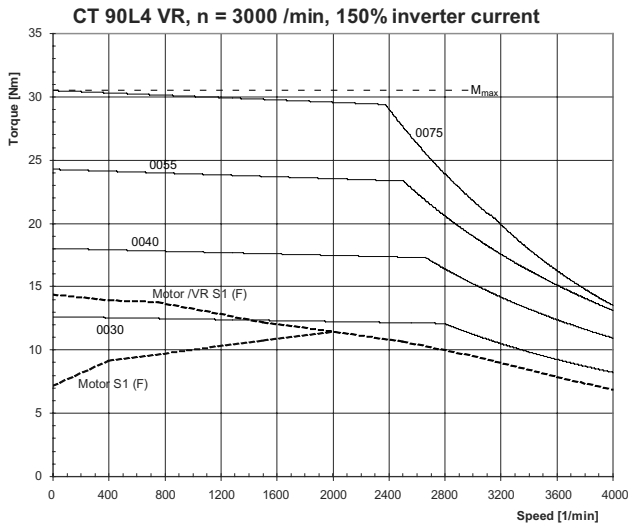
CT 90L4 VR, n = 3000 /min, 150% inverter current
Torque [Nm]
Speed [1/min]
M_{max}
0075
0055
0040
Motor /VR S1 (F)
0030
Motor S1 (F)

CV100M4 asynchronous servomotors with MD_60A, MC_4_A drive inverters

CV 100M4 VR, Y n = 1200 /min, 150 % inverter current

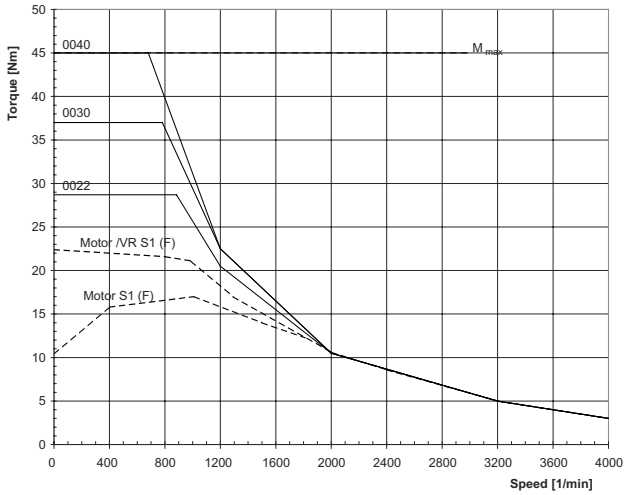

CV 100M4 VR, Y n = 1200 /min, 150 % inverter current

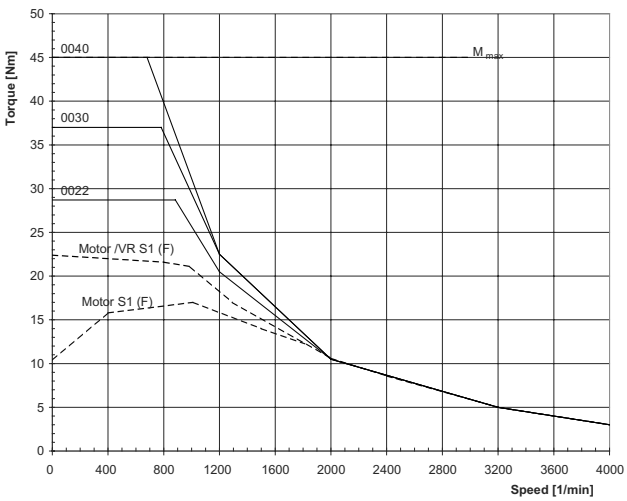

CV 100M4 VR, Y n = 1700 /min, 100% inverter current

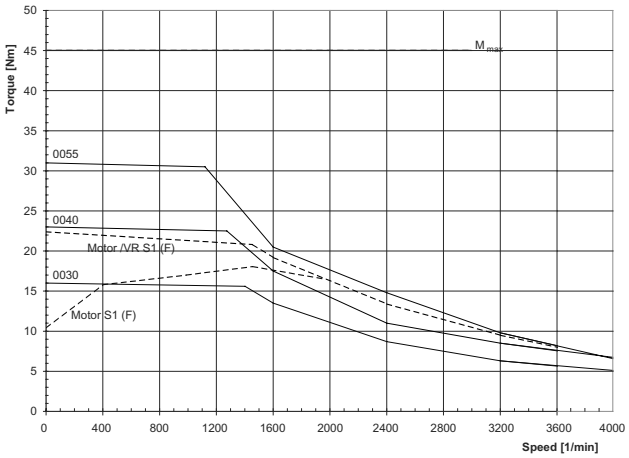

CV 100M4 VR, Y n = 1700 /min, 150% inverter current

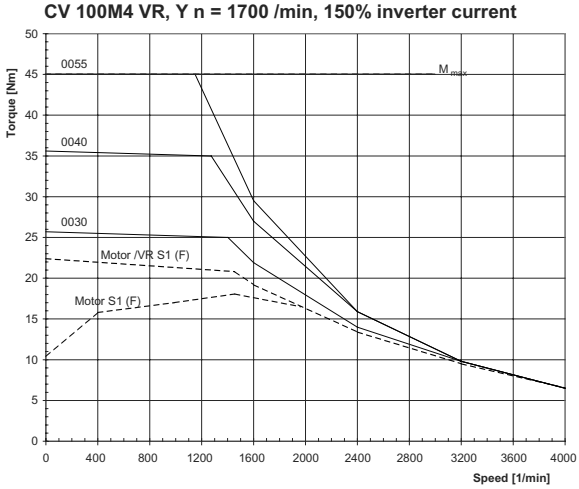

CV 100M4 VR, n = 2100 /min, 100% inverter current

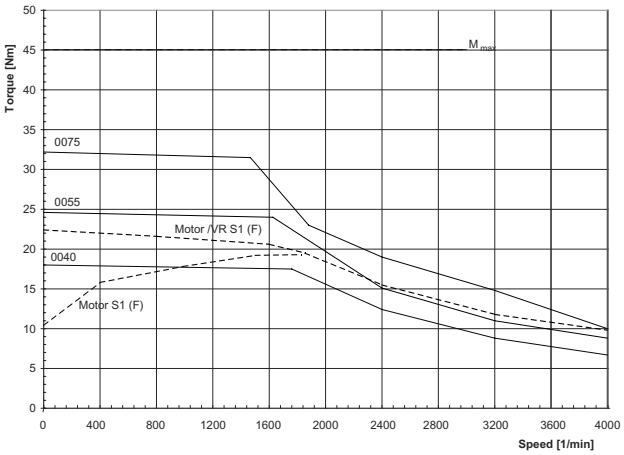

CV 100M4 VR, n = 2100 /min, 150% inverter current

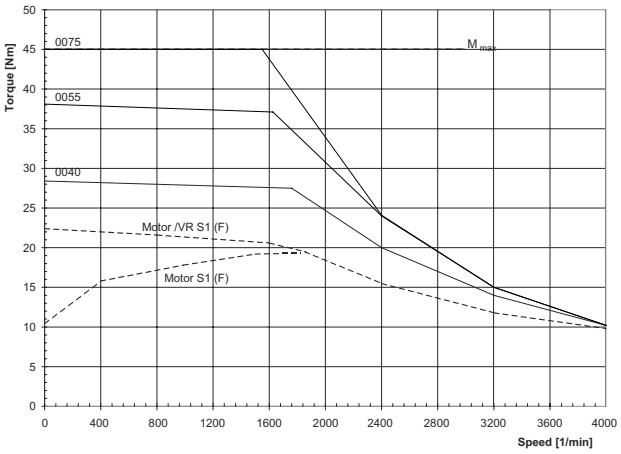

CV 100M4 VR, n = 3000 /min, 100% inverter current

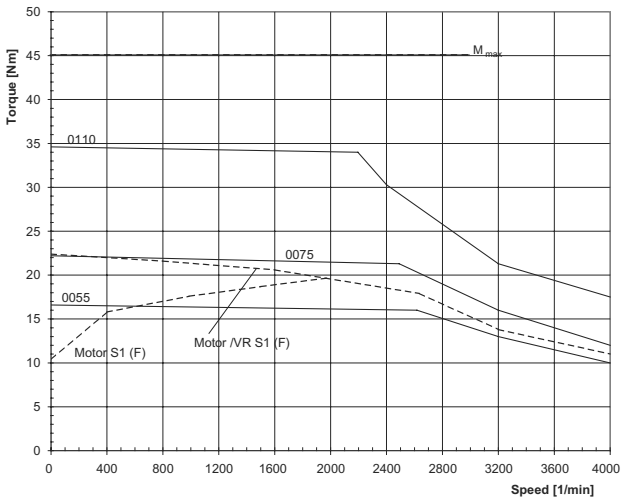

CV 100M4 VR, n = 3000 /min, 150% inverter current

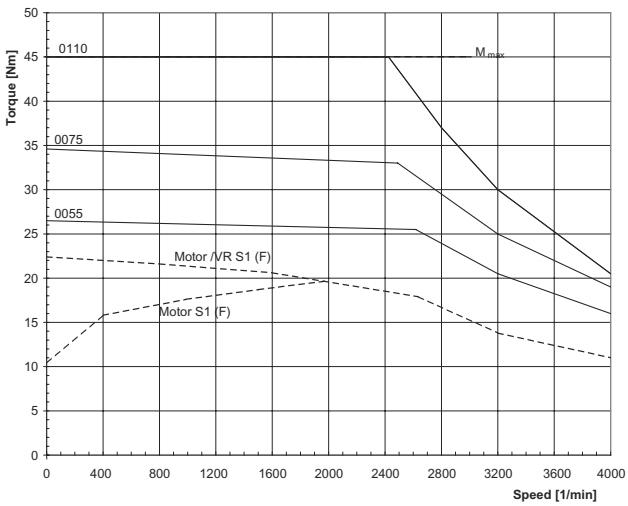

CV100L4 asynchronous servomotors with MD_60A, MC_4_A drive inverters

CV 100L4 VR, Y n = 1200 /min, 100% inverter current

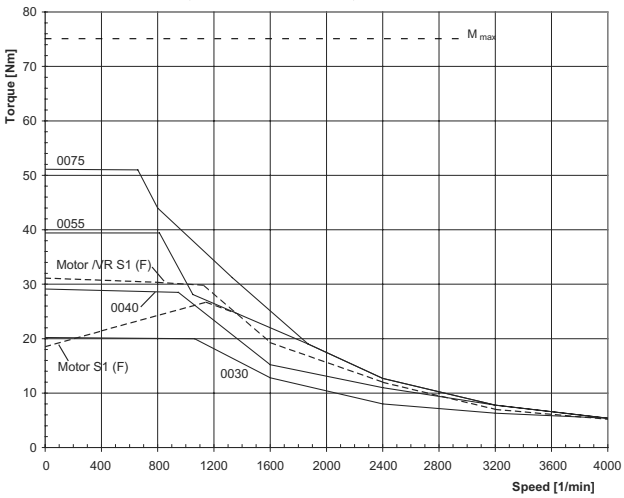

CV 100L4 VR, Y n = 1200 /min, 150% inverter current

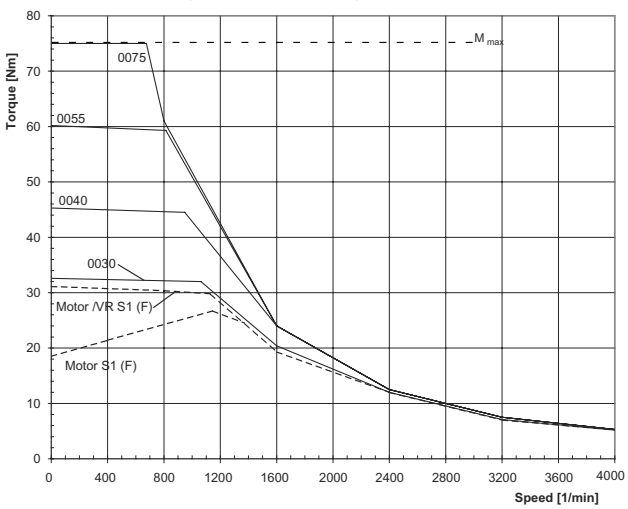

CV 100L4 VR, Y n = 1700 /min, 100% inverter current

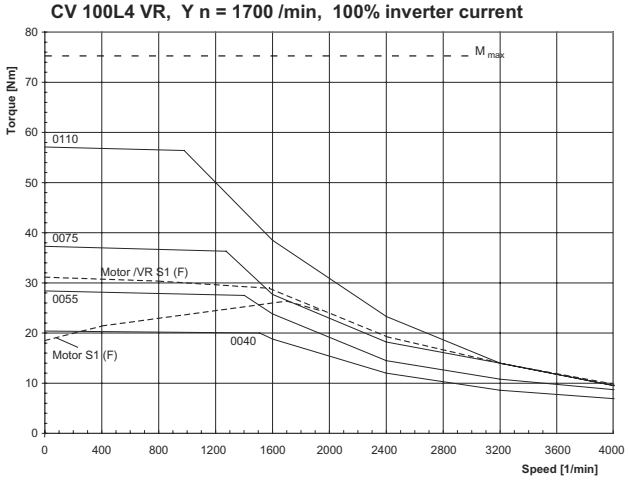

CV 100L4 VR, Y n = 1700 /min, 150% inverter current

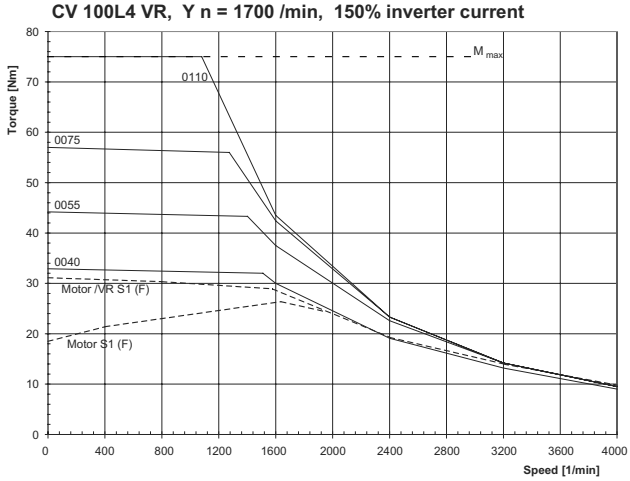

16

CV 100L4 VR, n = 2100 /min, 100% inverter current

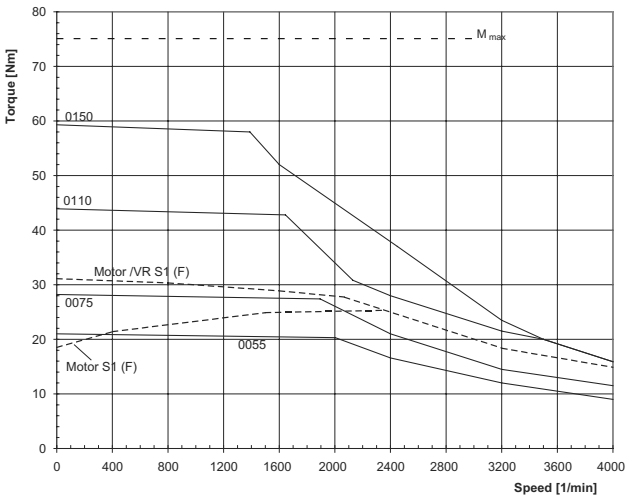

CV 100L4 VR, n = 2100 /min, 150% inverter current

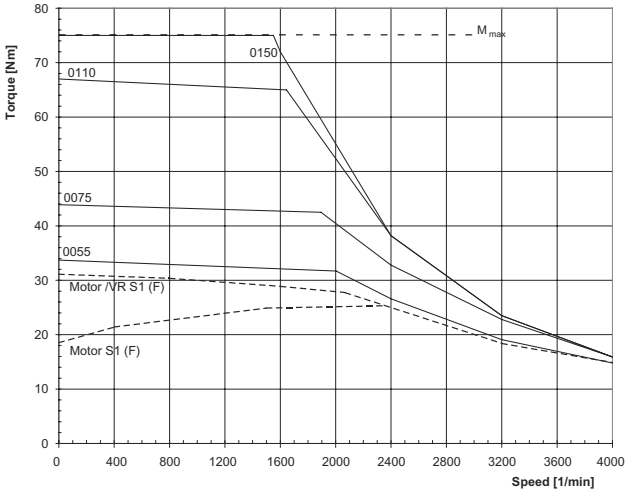

CV 100L4 VR, n = 3000 /min, 100% inverter current

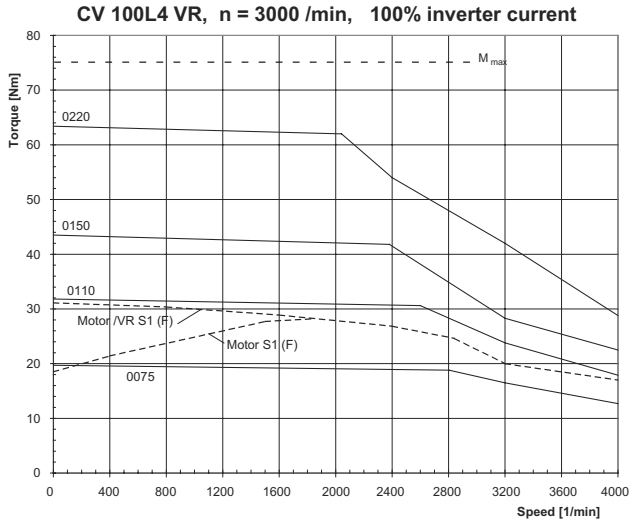

CV 100L4 VR, n = 3000 /min, 150% inverter current

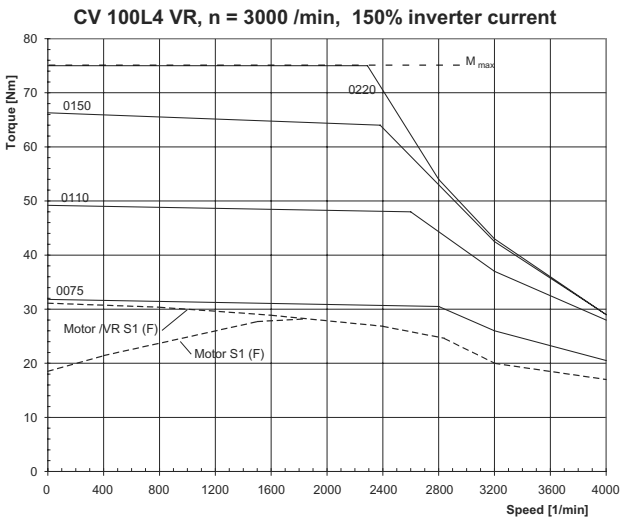

CV132S4 asynchronous servomotors with MD_60A, MC_4_A drive inverters

CV 132S4 VR, Y n = 1200 /min, inverter current 100%

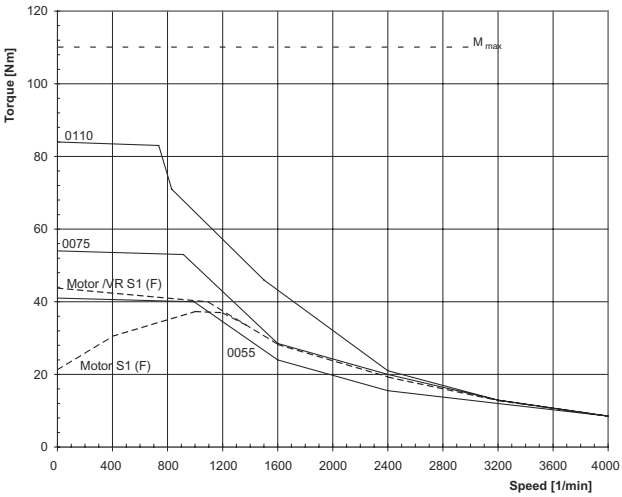

CV 132S4 VR, Y n = 1200 /min, 150% inverter current

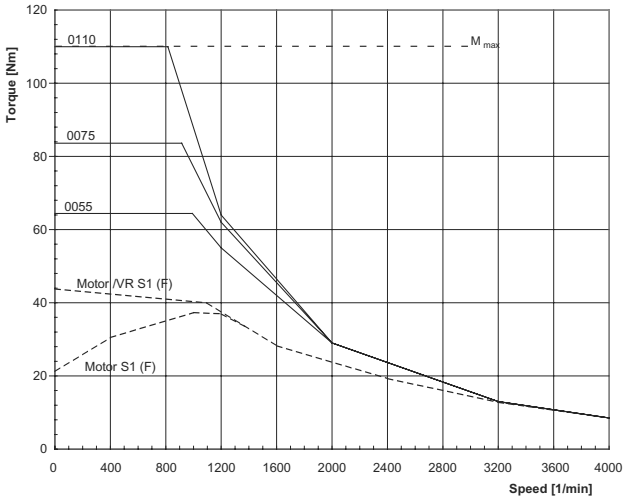

CV 132S4 VR, Y n = 1700 /min, inverter current 100%

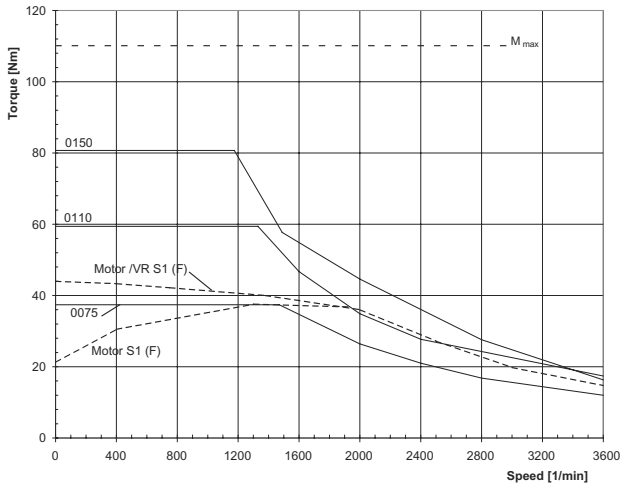

CV 132S4 VR, Y n = 1700 /min, inverter current 150%

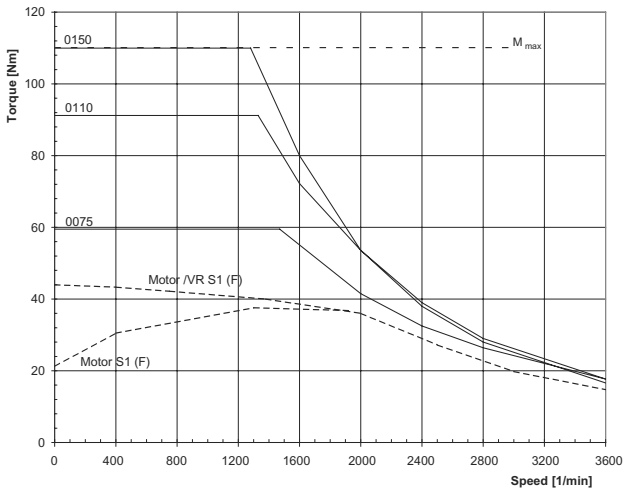

CV 132S4 VR, n = 2100 /min, inverter current 100%

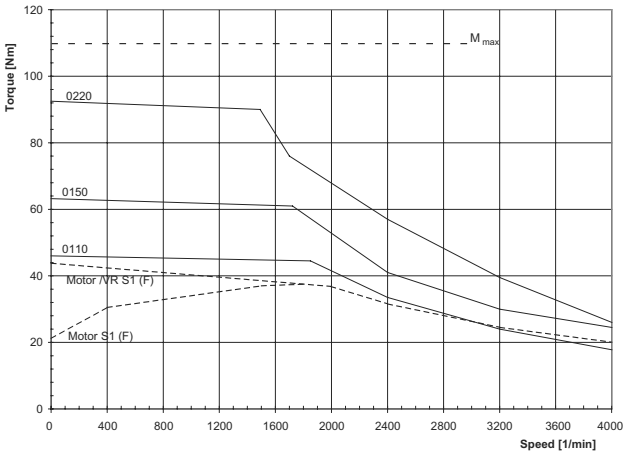

CV 132S4 VR, n = 2100 /min, inverter current 150%

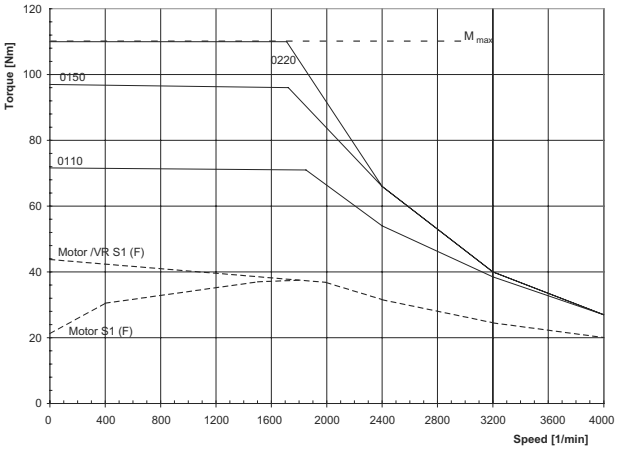

CV 132S4 VR, n = 3000 /min, inverter current 100%

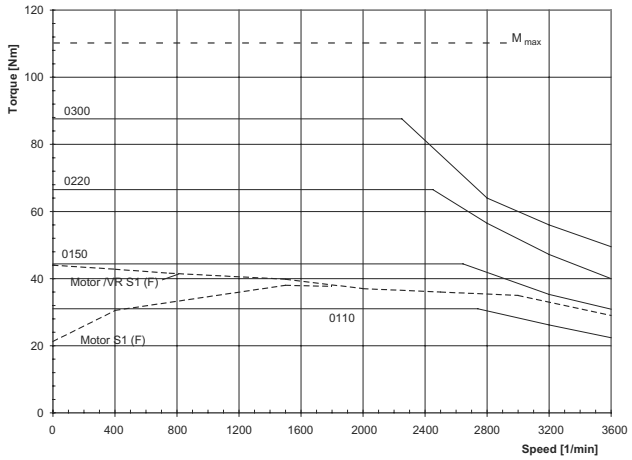

CV 132S4 VR, n = 3000 /min, inverter current 150%

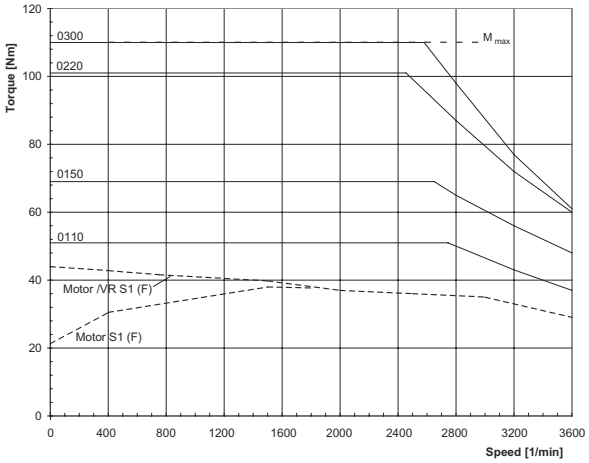

CV132M4 asynchronous servomotors with MD_60A, MC_4_A drive inverters

CV 132M4 V, Y n = 1200 /min, 100% inverter current

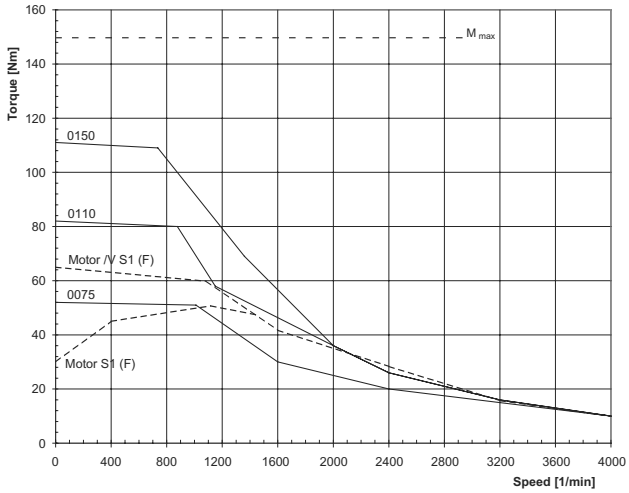

CV 132M4 V, Y n = 1200 /min, 150% inverter current

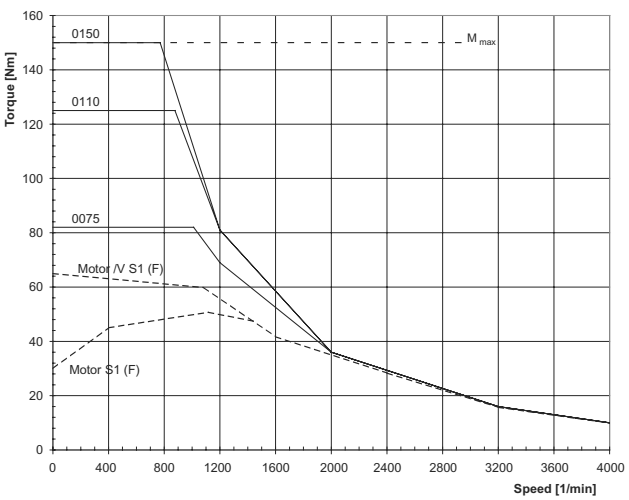

CV 132M4 V, Y n = 1700 /min, 100% inverter current

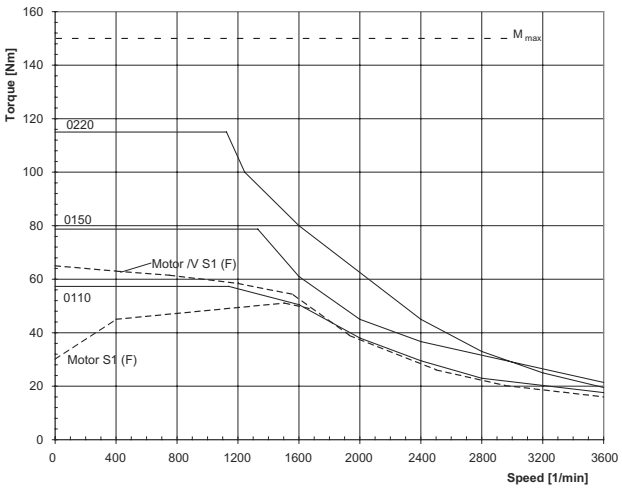

CV 132M4 V, Y n = 1700 /min, 150% inverter current

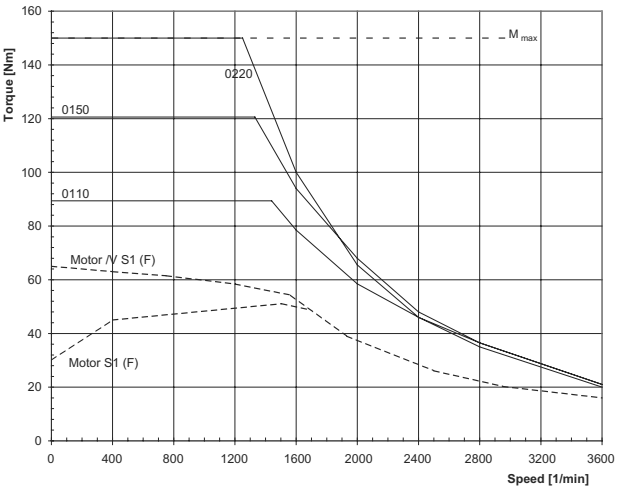

CV 132M4 V, n = 2100 /min, 100% inverter current

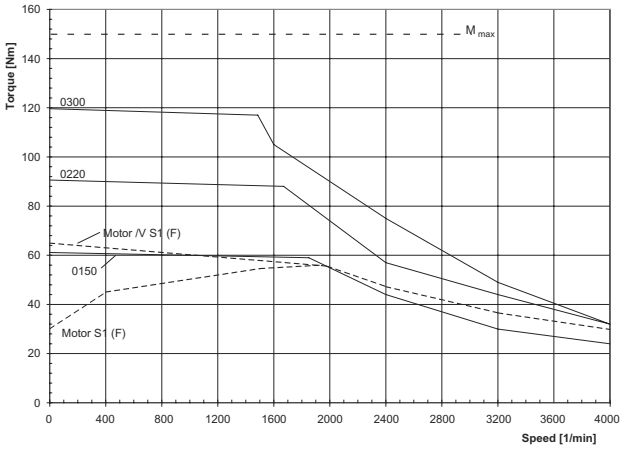

CV 132M4 V, n = 2100 /min, 150% inverter current

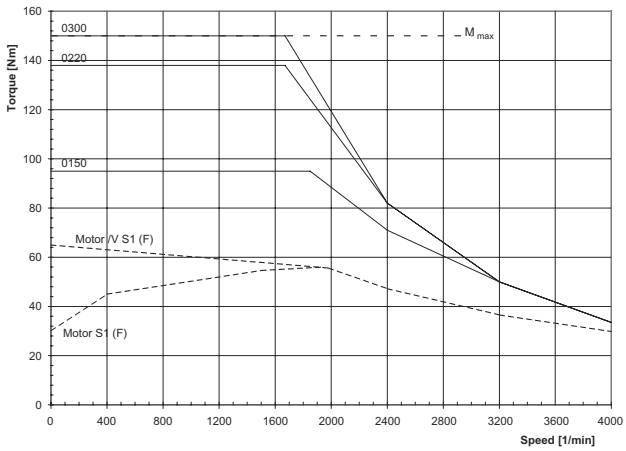

CV 132M4 V, n = 3000 /min, 100% inverter current

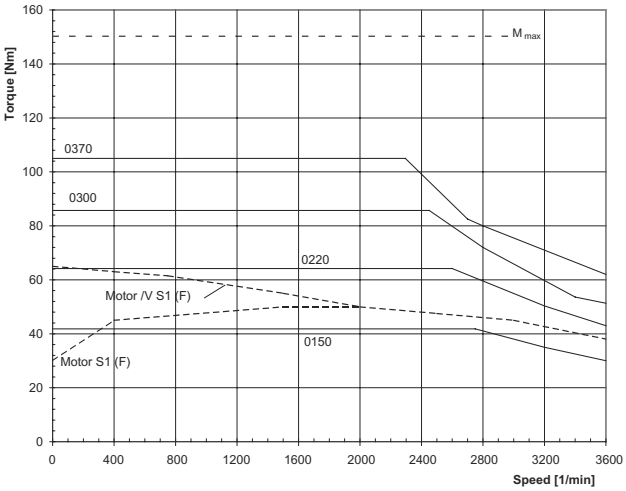

CV 132M4 V, n = 3000 /min, 150% inverter current

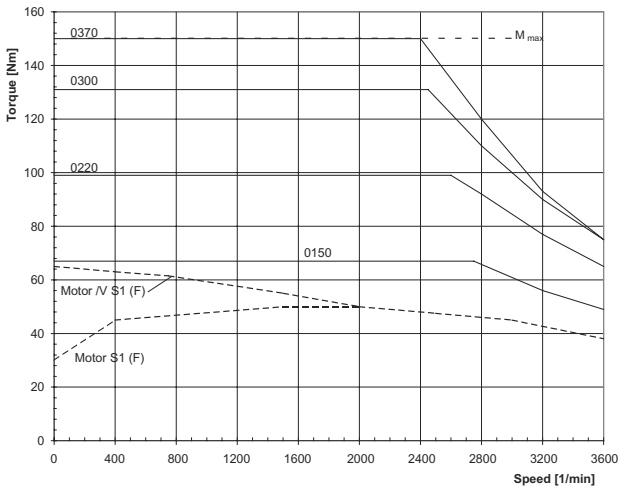

CV132ML4 asynchronous servomotors with MD_60A, MC_4_A drive inverters

CV 132ML4 V, Y n = 1200 /min, 100% inverter current

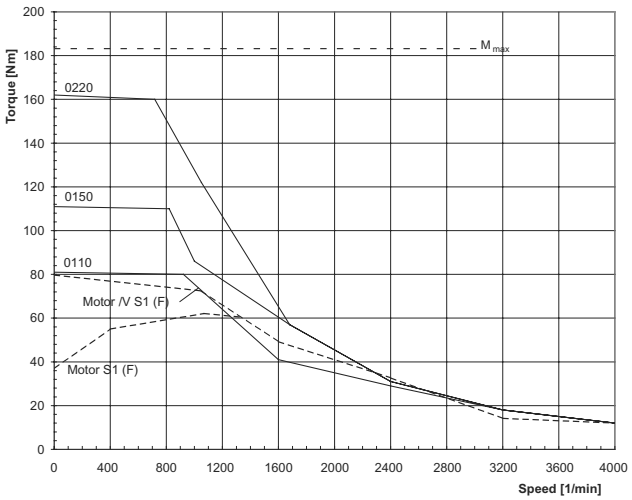

CV 132ML4 V, Y n = 1200 /min, 150% inverter current

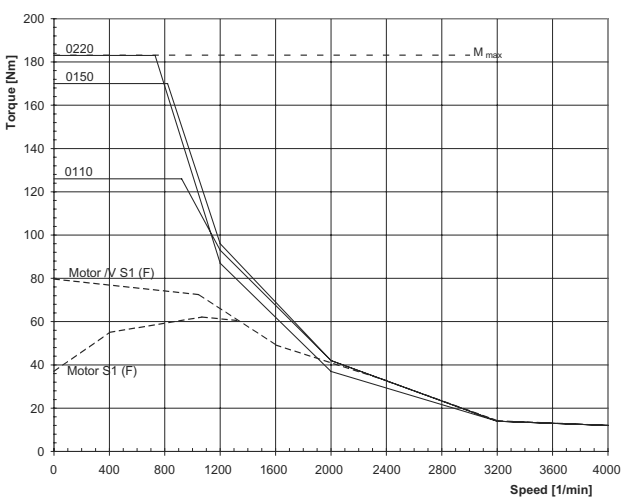

CV 132ML4 V, Y n = 1700 /min, 100% inverter current

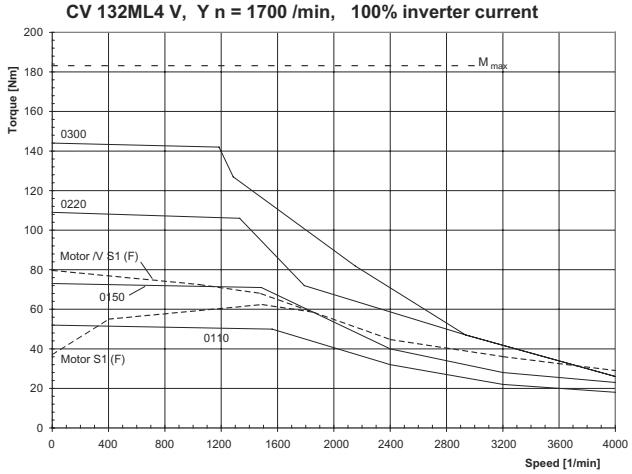

CV 132ML4 V, Y n = 1700 /min, 150% inverter current

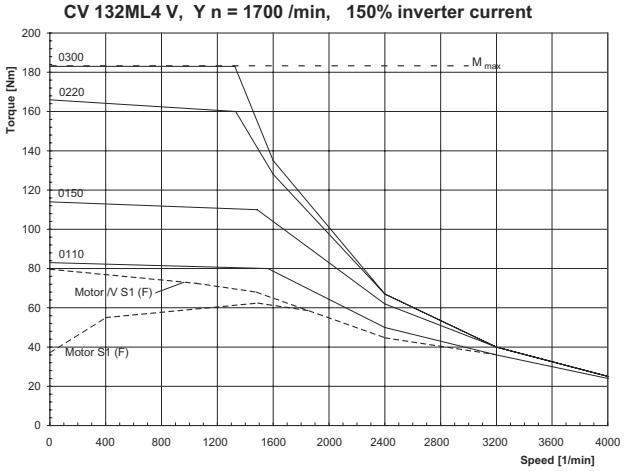

CV 132ML4 V, n = 2100 /min, 100% inverter current

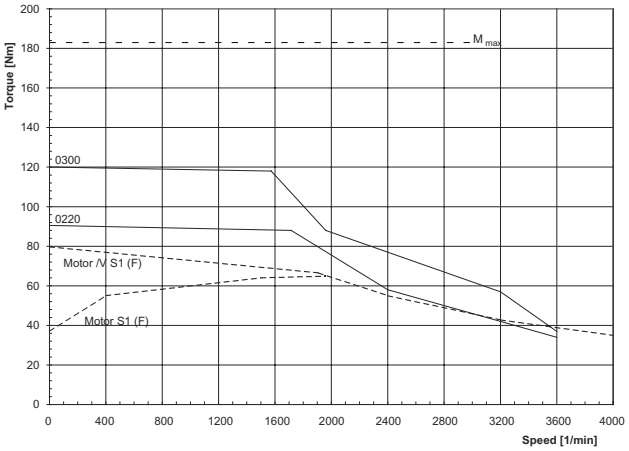

CV 132ML4 V, n = 2100 /min, 150% inverter current

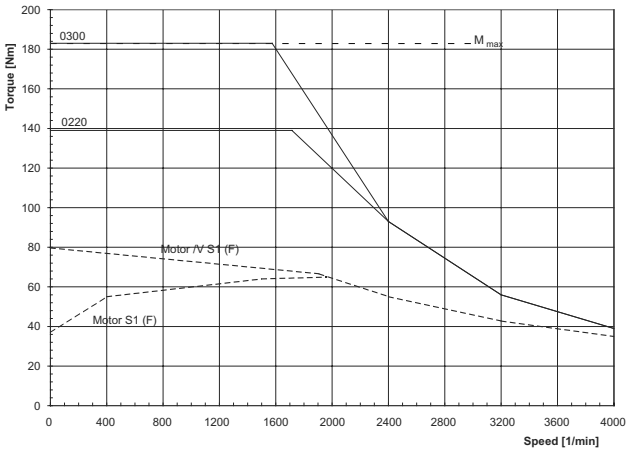

CV 132ML4 V, n = 3000 /min, 100% inverter current

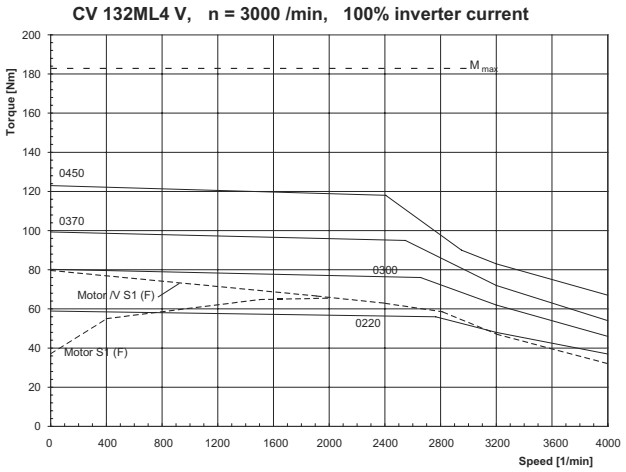

CV 132ML4 V, n = 3000 /min, 150% inverter current

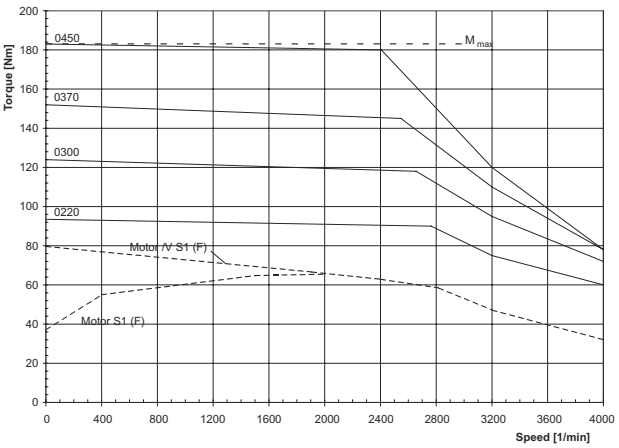

CV160M4 asynchronous servomotors with MD_60A, MC_4_A drive inverters

CV 160M4 V, Y n = 1200 /min, 100% inverter current

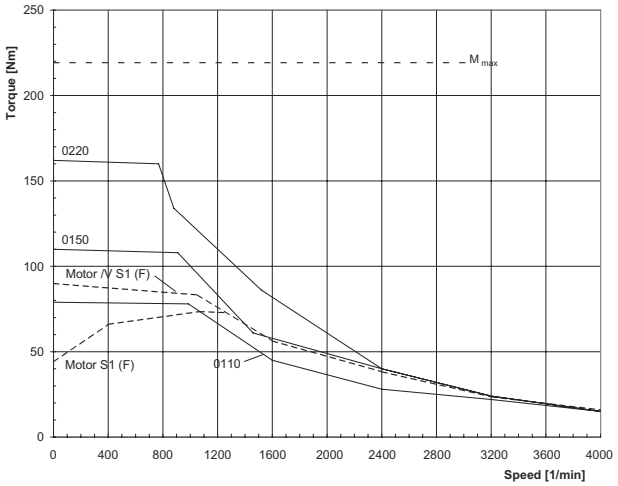

CV 160M4 V, Y n = 1200 /min, 150% inverter current

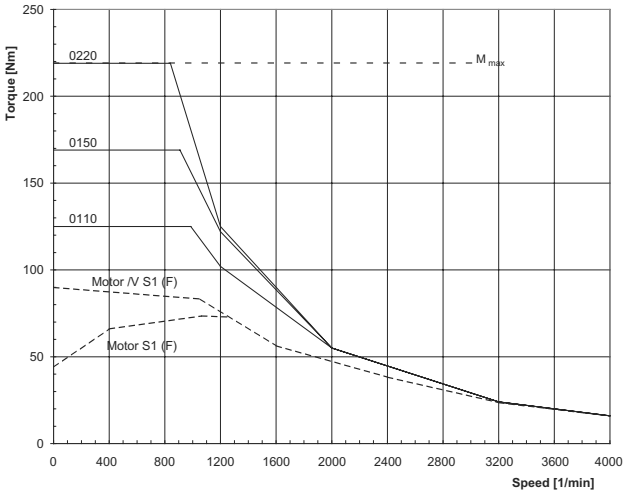

CV 160M4 V, Y n = 1700 /min, 100% inverter current

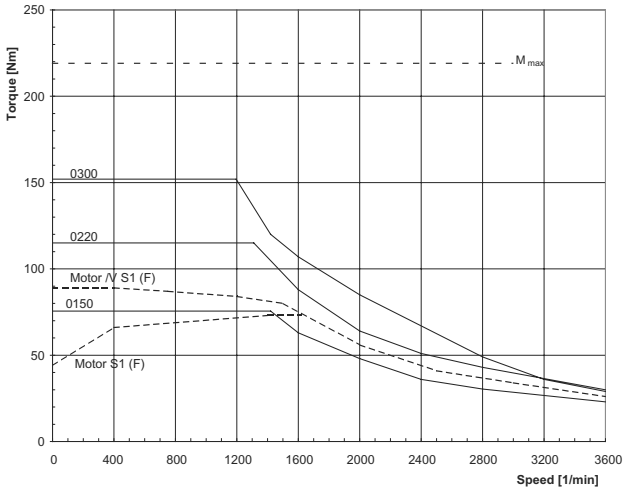

CV 160M4 V, Y n = 1700 /min, 150% inverter current

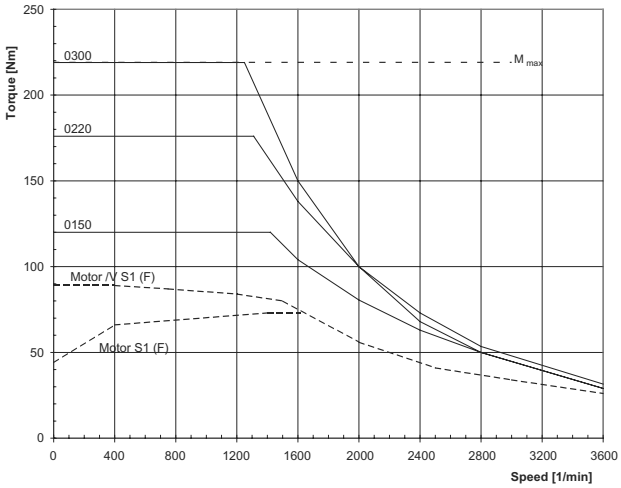

CV 160M4 V, n = 2100 /min, 100% inverter current

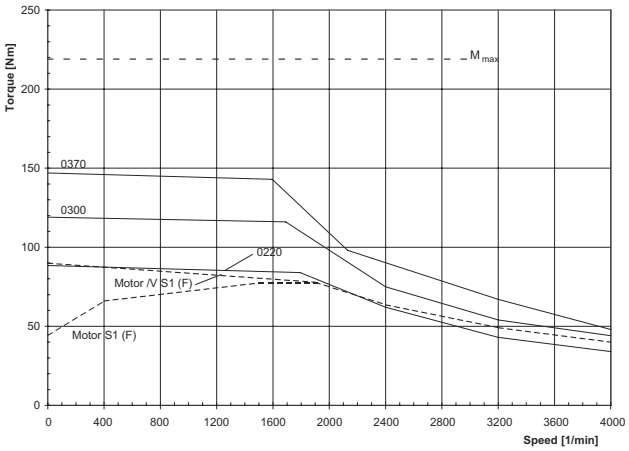

CV 160M4 V, n = 2100 /min, 150% inverter current

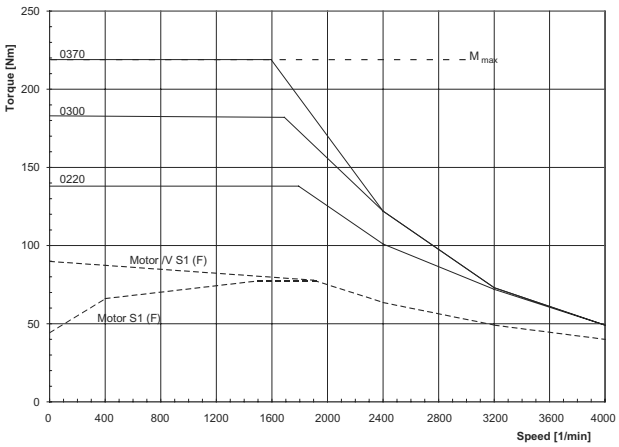

CV 160M4 V, n = 3000 /min, 100% inverter current

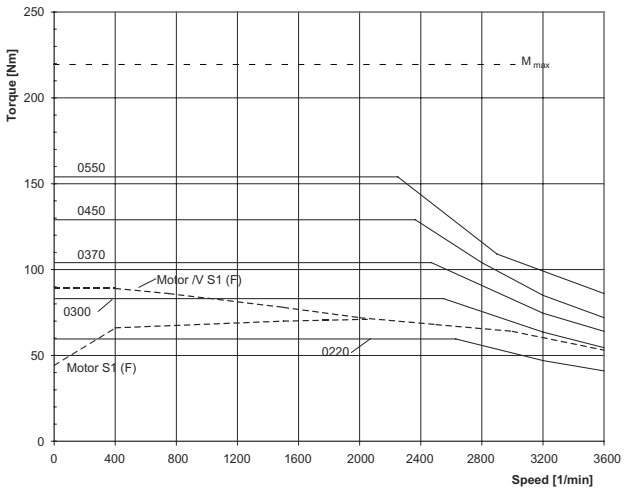

CV 160M4 V, n = 3000 /min, 150% inverter current

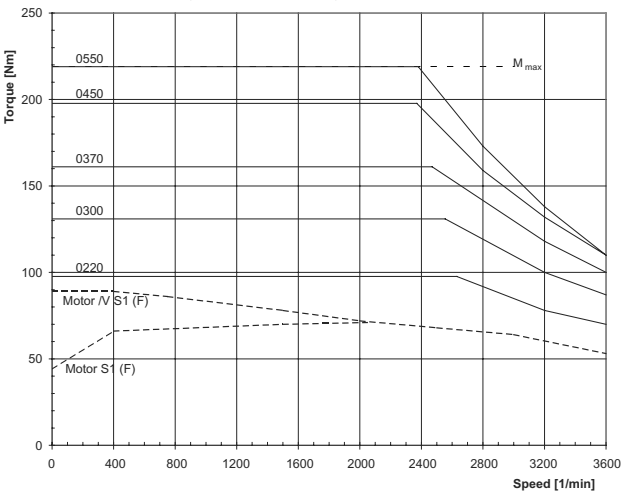

CV160L4 asynchronous servomotors with MD_60A, MC_4_A drive inverters

CV160L4 V, n = 1200 /min, 100% inverter current

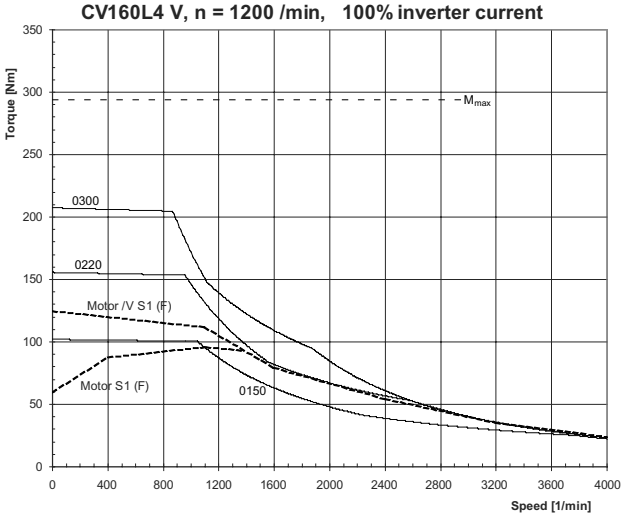

CV 160L4 V, n = 1200 /min, 150% inverter current

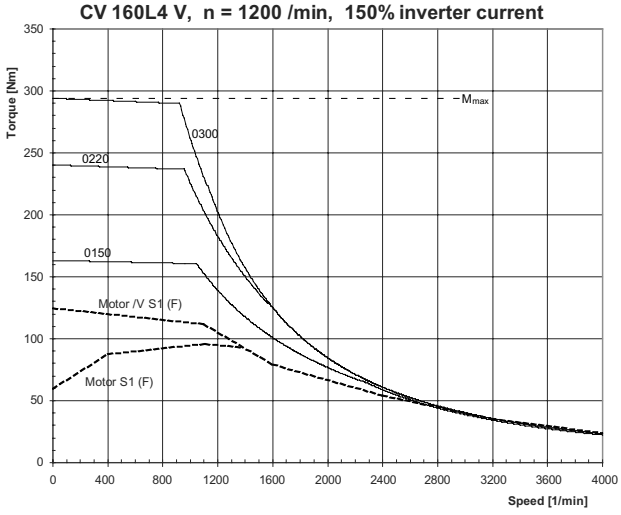

CV 160L4 V, n = 1700 /min, 100% inverter current

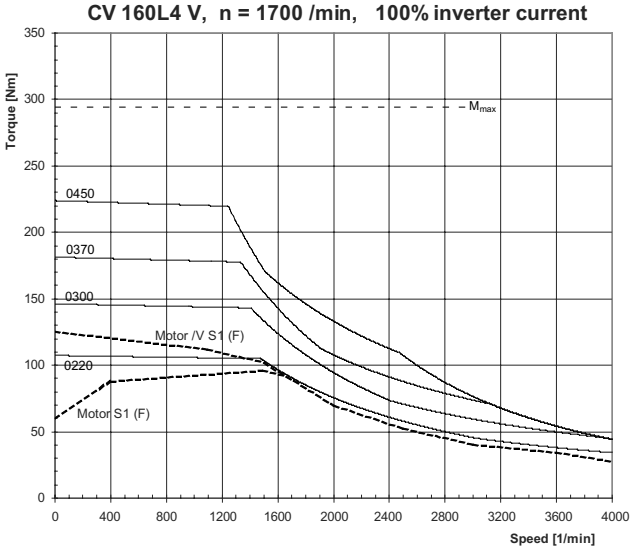

CV 160L4 V, n = 1700 /min, 150% inverter current

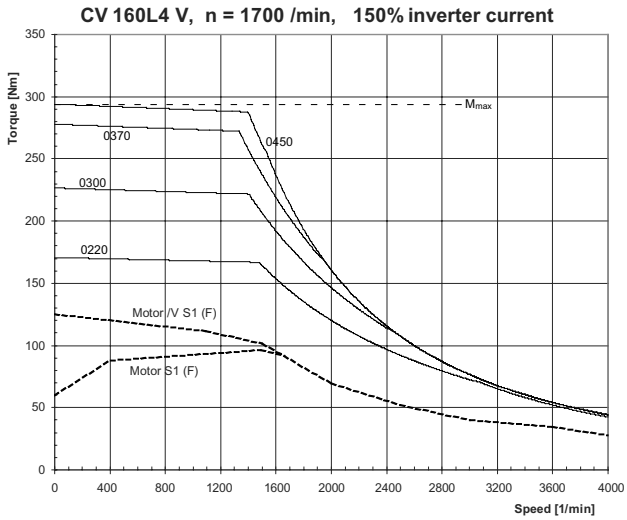

CV 160L4 V, n = 2100 /min, 100% inverter current

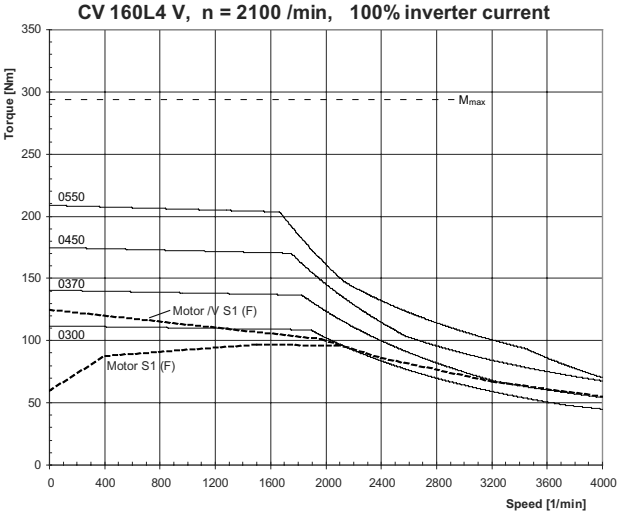

CV 160L4 V, n = 2100 /min, 150% inverter current

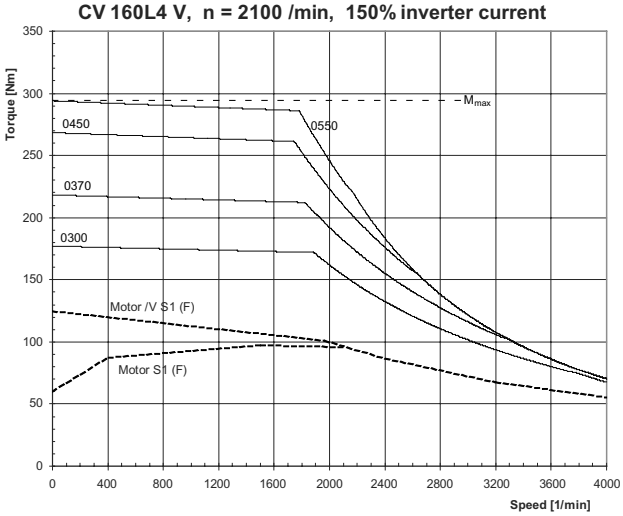

CV 160L4 V, n = 3000 /min, 100% inverter current

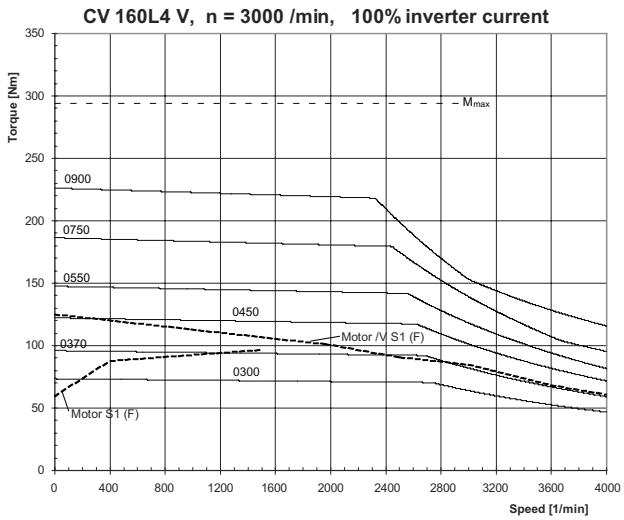

CV 160L4 V, n = 3000 /min, 150% inverter current

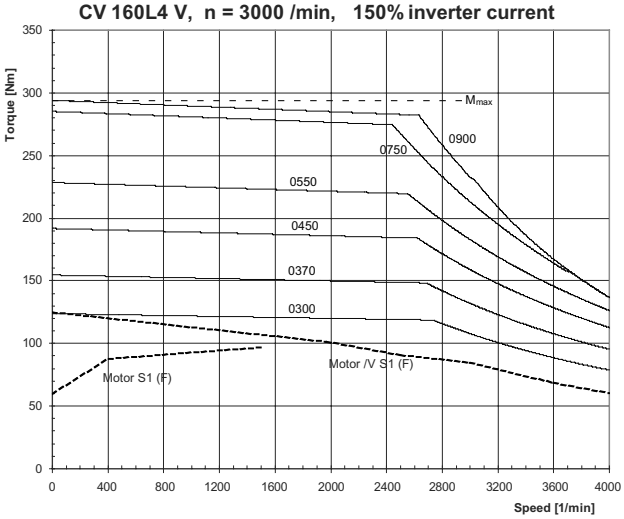

CV180M4 asynchronous servomotors with MD_60A, MC_4_A drive inverters

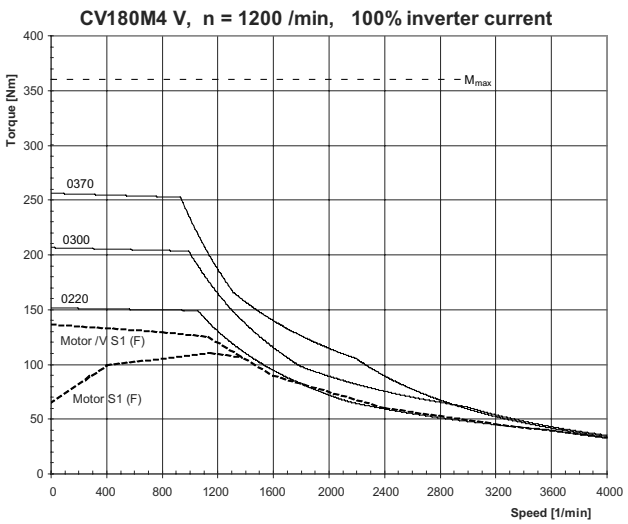

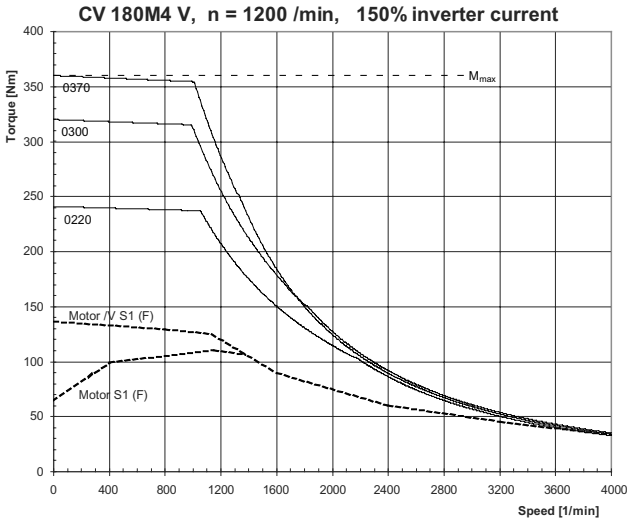

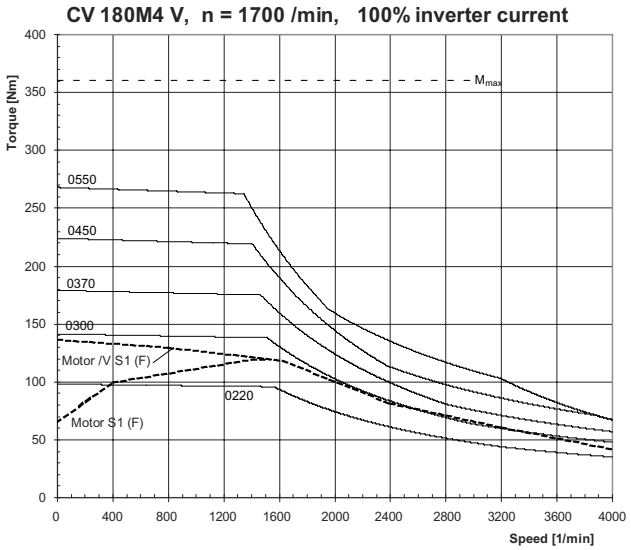

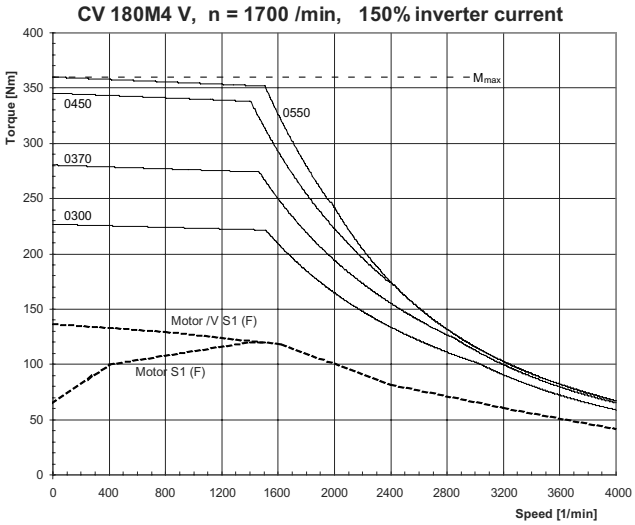

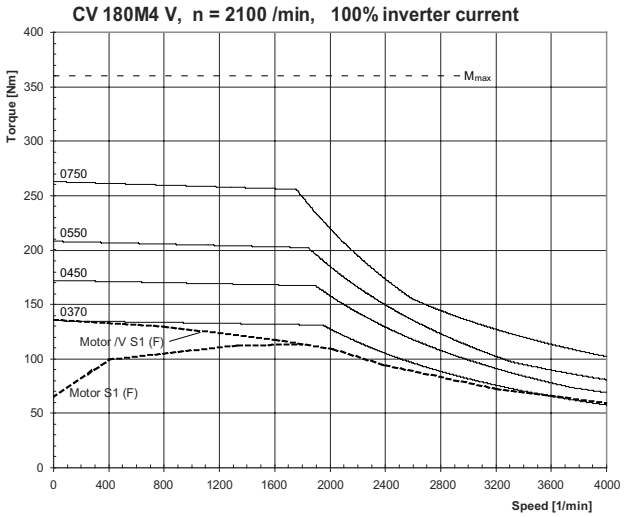
CV 180M4 V, n = 2100 /min, 100% inverter current
Torque [Nm]
Speed [1/min]
Mmax
0750
0550
0450
0370
Motor /V S1 (F)
Motor S1 (F)

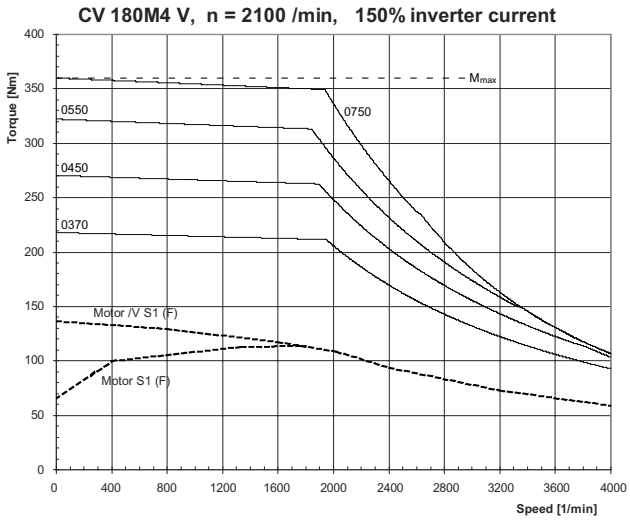
CV 180M4 V, n = 2100 /min, 150% inverter current
Torque [Nm]
Speed [1/min]
Mmax
0550
0750
0450
0370
Motor /V S1 (F)
Motor S1 (F)

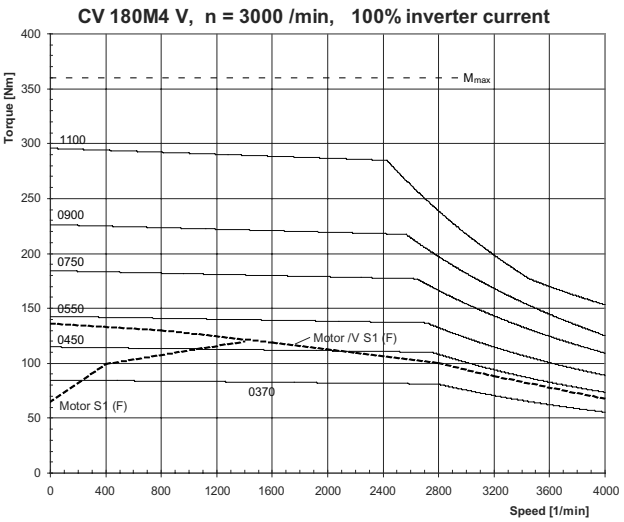
CV 180M4 V, n = 3000 /min, 100% inverter current
Torque [Nm]
Speed [1/min]
Mmax
1100
0900
0750
0550
0450
0370
Motor /V S1 (F)
Motor S1 (F)

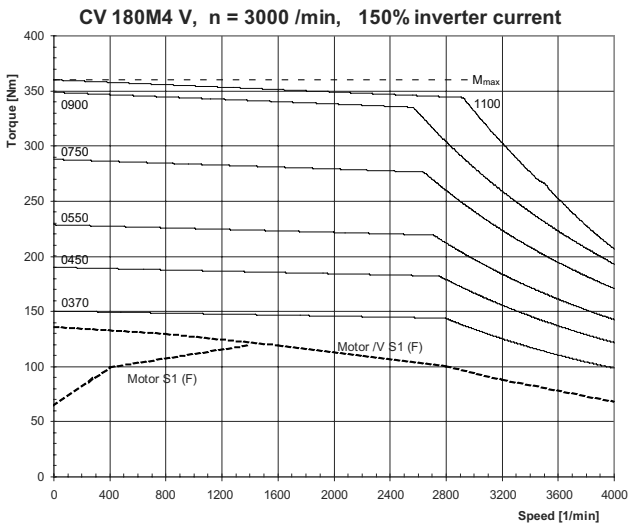
CV 180M4 V, n = 3000 /min, 150% inverter current
Torque [Nm]
Speed [1/min]
Mmax
0900
1100
0750
0550
0450
0370
Motor /V S1 (F)
Motor S1 (F)

CV180L4 asynchronous servomotors with MD_60A, MC_4_A drive inverters

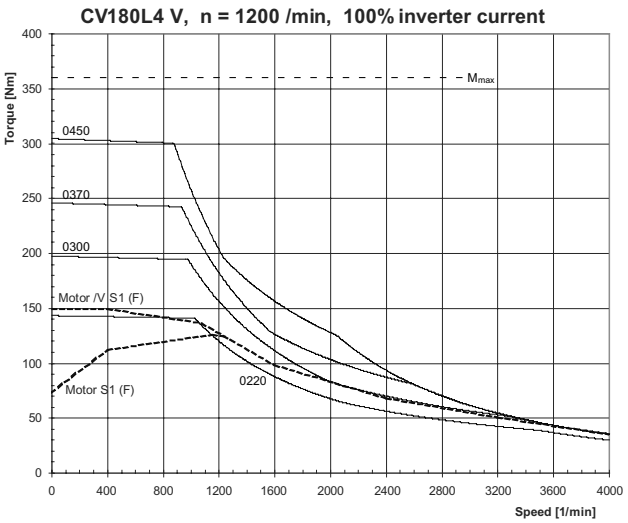

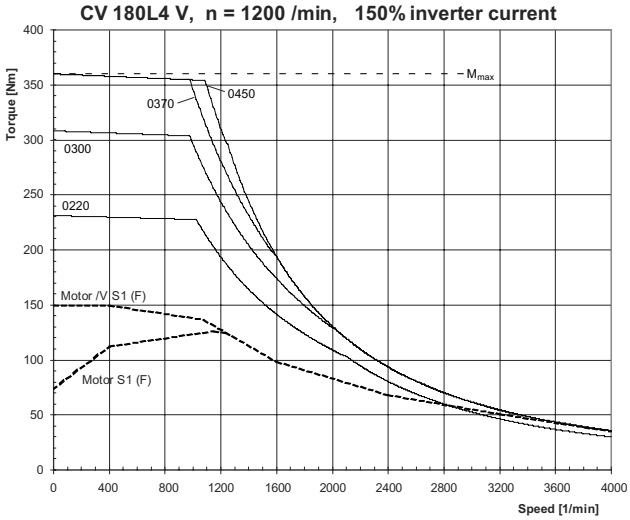

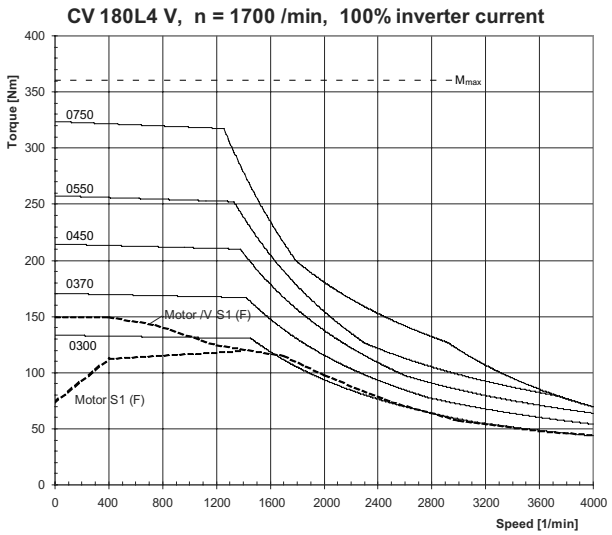

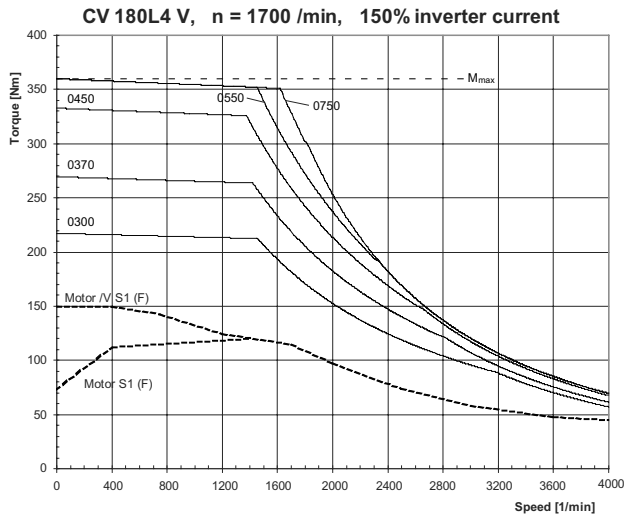

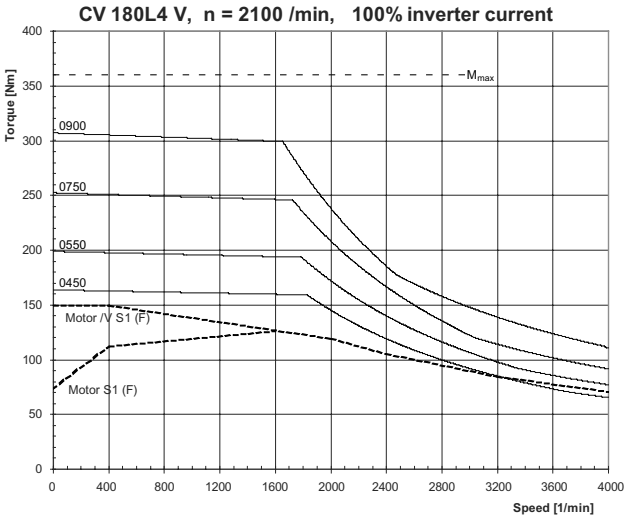
CV 180L4 V, n = 2100 /min, 100% inverter current
Torque [Nm]
Speed [1/min]
M_{max}
0900
0750
0550
0450
Motor /V S1 (F)
Motor S1 (F)

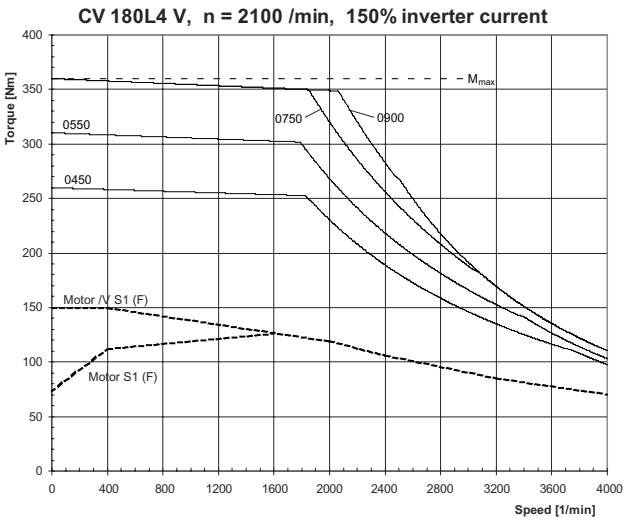
CV 180L4 V, n = 2100 /min, 150% inverter current
Torque [Nm]
Speed [1/min]
M_{max}
0900
0750
0550
0450
Motor /V S1 (F)
Motor S1 (F)

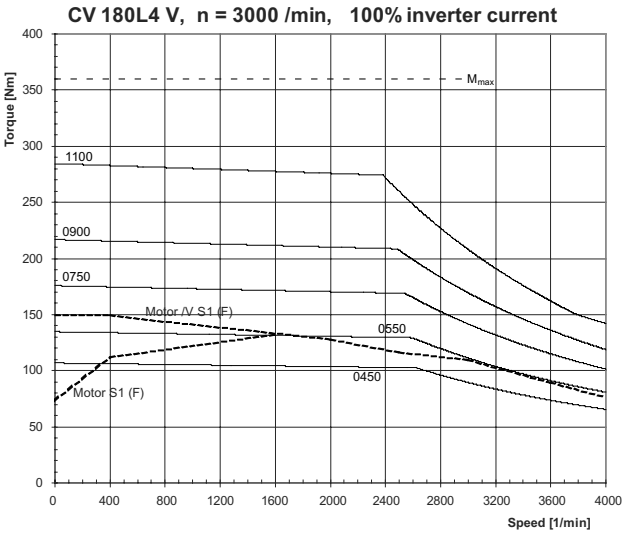
CV 180L4 V, n = 3000 /min, 100% inverter current
Torque [Nm]
Speed [1/min]
M_{max}
1100
0900
0750
0550
0450
Motor /V S1 (F)
Motor S1 (F)

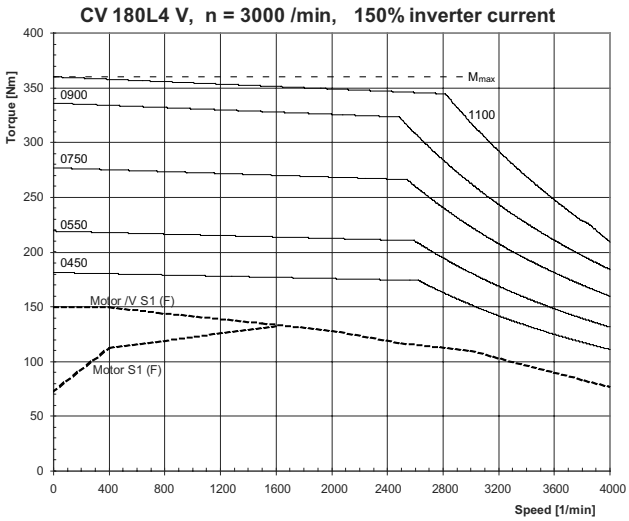
CV 180L4 V, n = 3000 /min, 150% inverter current
Torque [Nm]
Speed [1/min]
M_{max}
1100
0900
0750
0550
0450
Motor /V S1 (F)
Motor S1 (F)

CV200L4 asynchronous servomotors with MD_60A, MC_4_A drive inverters

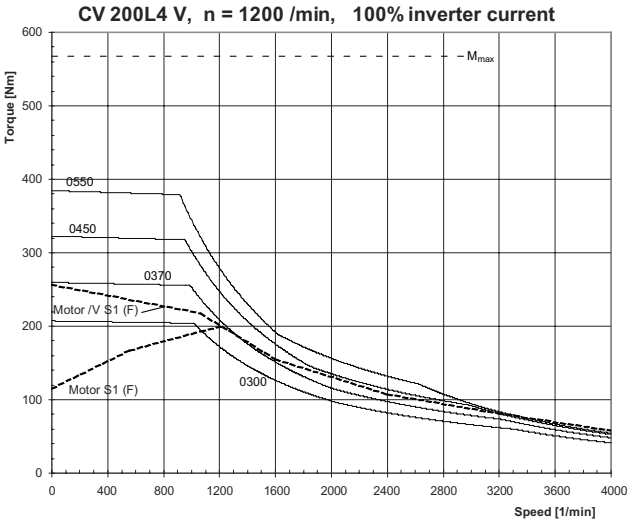

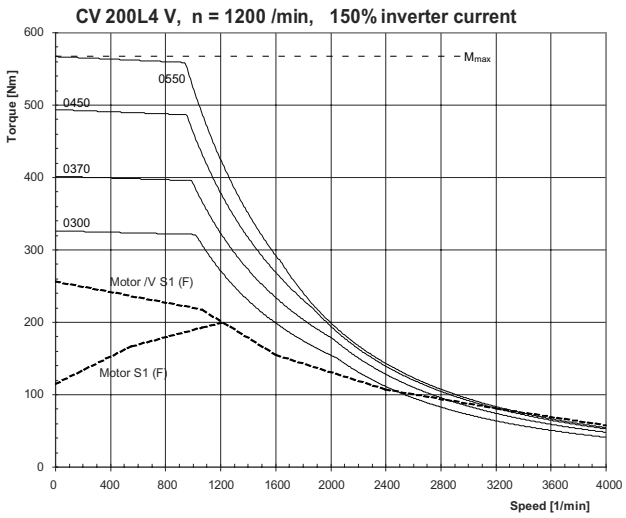

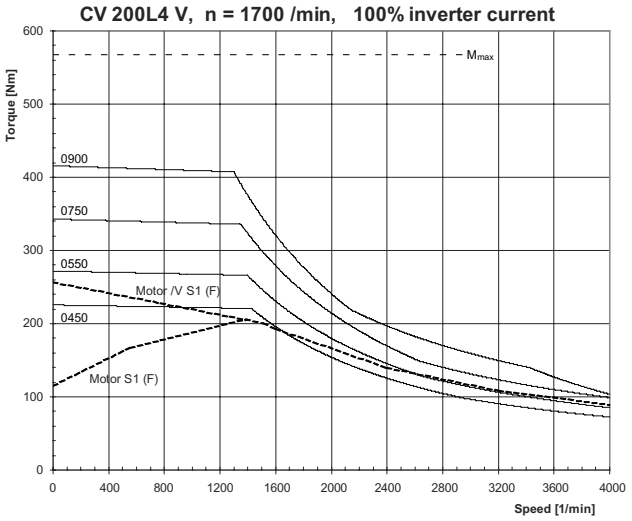

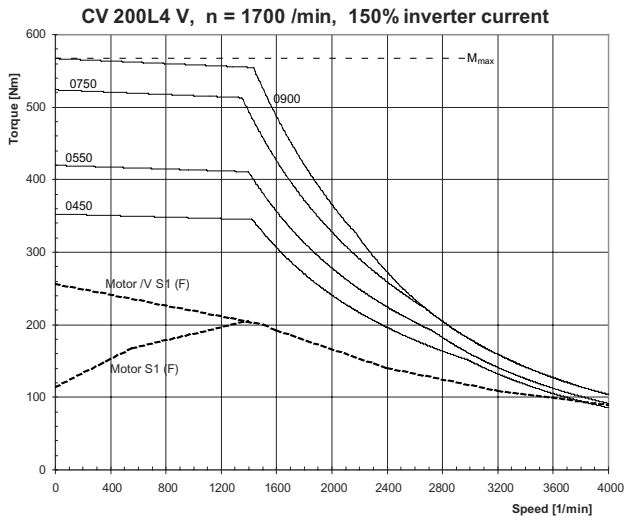

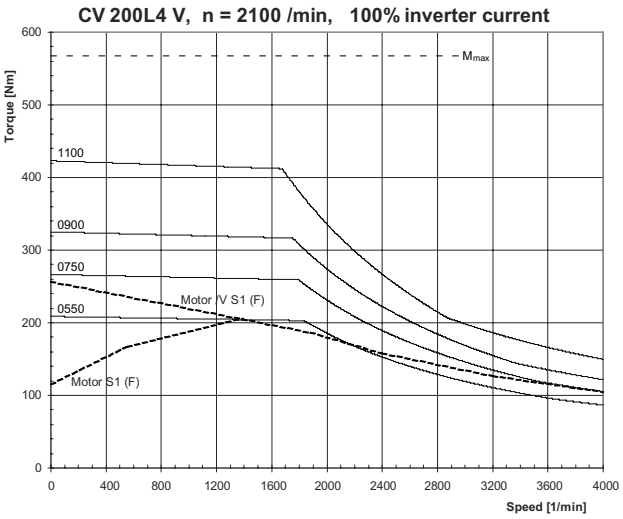
CV 200L4 V, n = 2100 /min, 100% inverter current
Torque [Nm]
Speed [1/min]
Mmax
1100
0900
0750
0550
Motor /V S1 (F)
Motor S1 (F)

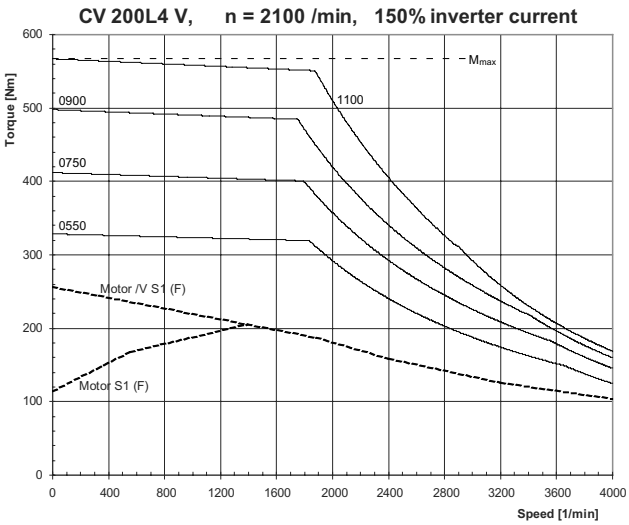
CV 200L4 V, n = 2100 /min, 150% inverter current
Torque [Nm]
Speed [1/min]
Mmax
1100
0900
0750
0550
Motor /V S1 (F)
Motor S1 (F)

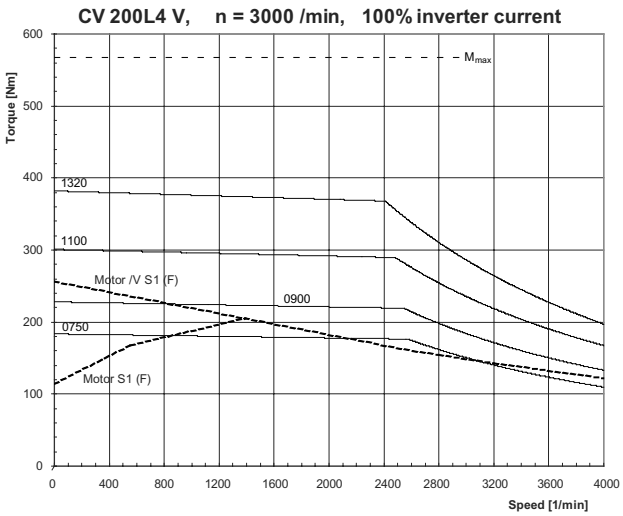
CV 200L4 V, n = 3000 /min, 100% inverter current
Torque [Nm]
Speed [1/min]
Mmax
1320
1100
0900
0750
Motor /V S1 (F)
Motor S1 (F)

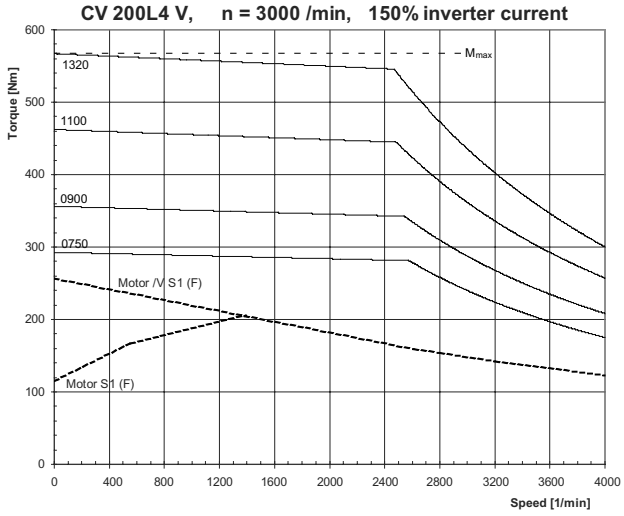
CV 200L4 V, n = 3000 /min, 150% inverter current
Torque [Nm]
Speed [1/min]
Mmax
1320
1100
0900
0750
Motor /V S1 (F)
Motor S1 (F)

16.8 Motor options / equipment

The following motor options are available for CT and CV asynchronous motors:

1. Protection canopy C
2. Tachometer
3. Encoder mounting adapter
4. Forced cooling fans VR/V/VS
5. BM(G) disc brake
6. IS integrated plug connector
7. Installed plug connectors (Harting A..7)

1. Protection canopy C

Liquids and/or solid foreign objects can penetrate the air outlet openings of motors in a vertical mounting position with their input shaft pointing downwards. SEW-EURODRIVE offers the motor option "protection canopy C" for this purpose.



03269AXX

Figure 75: AC motor with protection canopy C

2. Tachometer

The tachometers that can be mounted to SEW CT../ CV.. servomotors are available in various versions depending on the application and motor size. With only a few exceptions, the encoders can also be combined with other optional motor add-ons such as brakes and forced cooling fans.

Overview of encoders

Designation	For motor	Encoder type	Shaft	Power supply	Signal
ES1S	CT71...CV100	Encoder	Spreadshaft	9 -26 V_{DC}	1 V_{SS} sin/cos
ES1R					TTL/RS-422
ES2S	CV132S				1 V_{SS} sin/cos
ES2R					TTL/RS-422
EV1S	CT71...CV200		Solid shaft	10 -30 V_{DC}	1 V_{SS} sin/cos
EV1R					TTL/RS-422
AV1Y	CT71...CV200	Absolute encoder	Solid shaft		MSSI interface and 1 V_{SS} sin/cos
AV1H	CT71 ... CV200	Absolute encoder	Solid shaft	7 -12 V_{DC}	1 V_{SS} sin/cos + Hiperface
EV1A	CT71 ... CV200	Mounting attach-ment	Solid shaft	–	–

Encoder connection

When connecting the encoders to the inverters, always follow the operating instructions for the relevant inverter and the wiring diagrams supplied with the encoders!

- Max. line length (inverter encoder):

  100 m with a cable capacitance ≤ 120 nF/km
- Core cross section: 0.20 ... 0.5 mm^2
- Use a shielded cable with twisted-pair conductors and the shield connected at both ends over a wide area:

  –To the encoder in the cable gland or in the encoder plug
  –To the inverter on the electronics shield clamp or to the housing of the sub D plug
- Install the encoder cables separately from the power cables, maintaining a distance of at least 200 mm.

Prefabricated cables

SEW offers pre-fabricated cables for a straightforward and reliable connection of encoder systems.

Incremental impulse generators (encoders)

SEW encoders are incremental encoders with 1024 signals/revolution. They have two signal tracks and an index signal track, making six tracks with inversion.

Spreadshaft encoder



01934AXX

Figure 76: SEW encoders with spread shaft

for CT71...CV100 servomotors		ES1S[1]	ES1R
for CV112...132S servomotors		**ES2S[1]**	**ES2R**
Supply voltage	U_B	DC 9 - 26 V ±20%	
Max. current consumption	I_{in}	160 mA	180 mA
Output amplitude per track	U_{high} U_{low}	1 V_{SS}	≥ DC 2.5 V ≤ DC 0.5 V
Signal output		sin/cos	TTL/RS-422
Output current per track	I_{out}	40 mA	20 mA
Max. pulse frequency	f_{max}	120 kHz	
Pulses (sine cycles) per revolution	**A, B** **C**	1024 1	
Mark-to-space ratio		1 : 1 ±20%	
Phase angle A : B		90° ±20%	
Ambient temperature	ϑ_U	-30°C...+60°C (EN 60721-3-3, class 3K3)	
Enclosure		IP66 (EN 60529)	
Connection		Terminal box on encoder	

1) Recommended encoder for operation with MOVIDRIVE®



Solid shaft encoders

Solid shaft encoder for CT71...CV200 servomotors		EV1S [1]	EV1R
Supply voltage	U_B	DC 10 -30 V ±20%	
Max. current consumption	I_{in}	160 mA	180 mA
Output amplitude per track	U_{high} U_{low}	1 V_{SS}	DC 2.5 V ≤ DC 0.5 V
Signal output		sin/cos	TTL/RS-422
Output current per track	I_{out}	40 mA	20 mA
Max. pulse frequency	f_{max}	120 kHz	
Pulses (sine cycles) per revolution	**A, B** **C**	1024 1	
Mark-to-space ratio		1 : 1 ±20%	
Phase angle A : B		90° ±20%	
Ambient temperature	ϑ_U	-40°C...+60°C (EN 60721-3-3, class 3K3)[2]	
Enclosure		IP66 (EN 60529)	
Connection		Terminal box on encoder	

1) Recommended encoder for operation with MOVIDRIVE®

2) Fixed installed cable

Absolute encoder

SEW AV1Y absolute encoders are combination encoders. They contain a multiturn absolute encoder and a high-resolution sinusoidal encoder.

Absolute encoder for CT71...CV200 servomotors		AV1Y	AV1H
Supply voltage	U_B	10...**15...24**...30 V_{DC}	7 ...**8** ... 12 V_{DC}
Max. current consumption	I_{in}	250 mA	140 mA
Maximum operating frequency	f_{Grenz}	≥ 100 kHz	≥ 200 kHz
Pulses (sine cycles) per revolution	**A, B**	512	1024
Output amplitude per track		1 V_{SS} sin/cos	
Scanning code		Gray code	Binary code
Single-turn resolution		4096 increments/revolution (12 bit)	32768 increments/revolution (15 bit)
Multi-turn resolution		4096 revolutions (12-bit)	4096 revolutions (12-bit)
Data transmission absolute values		Synchronous, serial (SSI)	Asynchronous, serial
Serial data output		Driver according to EIA RS-485	
Serial clock input		Opto-coupler, recommended driver to EIA RS-485	–
Cycle frequency		Permitted range: 90...**300**...1100 kHz (max. 100 m cable length with 300 kHz)	9600 kHz
Switching gap time		12...35 µs	–
Vibration (55...2000 Hz)		≤ 100 m/s^2 (DIN IEC 68-2-6)	≤ 300 m/s^2 (DIN IEC 68-2-6)
Maximum speed	n_{max}	6000 min^{-1}	
Mass	**m**	0.30 kg	0.55 kg
Operating temperature	ϑ_B	-40°C...+60°C (EN 60721-3-3, class 3K3, with fixed installed cable)	-20°C...+60°C (EN 60721-3-3, class 3K3, with fixed installed cable)
Enclosure		IP65 (EN 60529)	
Connection		1 m cable with 17-pin round connector, suitable for female connector SPUC 17B FRAN (part number 198 886 7)	1 m cable with 12-pin round connector, suitable for female connector AKUA020MR041 (part number 199 647 9)

3. Encoder mounting adapter

On request, motors can be equipped with a variety of encoder mounting adapters for mounting of encoders made by various manufacturers.

Technical data

Type	EV1A
For motors	CT71...CV200
for	Solid shaft encoder (synchronous flange)
Flange diameter	58 mm
Center bore diameter	50 mm
Shaft end diameter	6 mm
Length of shaft end	10 mm

The encoder is attached to the EV1A (synchro flange) using three encoder mounting clamps (bolts with eccentric discs) for 3 mm flange thickness.

4. VR/V/VS forced cooling fan

Forced cooling fan

Asynchronous servomotors can be equipped with a forced cooling fan if required.

When is a forced cooling fan required?

SEW-EURODRIVE recommends a forced cooling fan for inverter drives that have to produce high torques at low speeds or standstill.

The following tables show the technical data of the forced cooling fans and their assignment to motor sizes.

Forced cooling fan VR

.

Forced cooling fan type	**VR**		
For motor size	CT71 .. 80	CT90 .. CV100	CV132S
Supply voltage [V_{DC}]	24 +/– 10 % (with power supply unit also 100 .. 240 V_{AC})		
Current consumption [A_{DC}]	0.36	0.82	0.82
Power consumption [W]	8.3	20	20
Air discharge rate [m^3/h]	118	235	275
Ambient temperature [°C]	0 ... + 60		
Enclosure	IP54 / IP55		
Electrical connection	Plug connector		
Max. cable cross section [mm^2]	3 × 1		
Connection cable, max. Ø	7 mm		

UWU51A switched-mode power supply

The AC voltage type includes a VR forced cooling fan and the UWU51A switched-mode power supply.

Input: 100 ... 240 V_{AC} – 6 % / + 10 %, 50/60 Hz

Output: DC 24 V – 1 % / + 2 %, 1.3 A

Connection: Terminal screws 0.2 ... 2.5 mm^2, separable

Enclosure: IP20; attachment to EN 50022 support rail in the control cabinet

Part number: 187 441 1

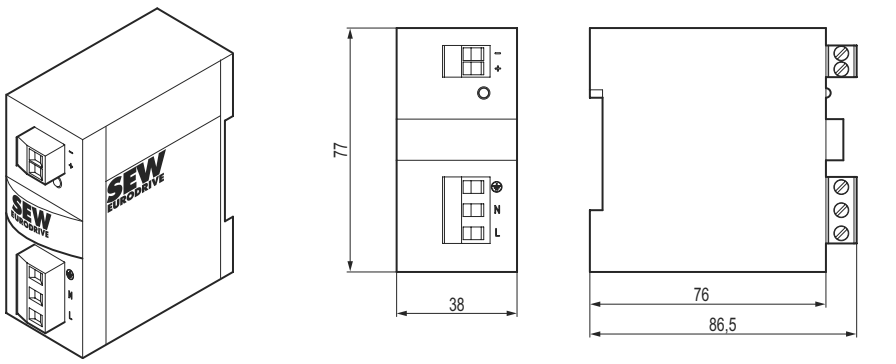

Figure 77: UWU51A switched-mode power supply



Forced cooling fan V

Forced cooling fan type		V					
For motor size		CV132M ... 160M		CV160L ... 180		CV200	
Supply voltage[1] [V_{AC}]	Δ 人	3×220...290 3×380...500	3×220...304 3x380...525	3×200...290 3×346...500	3×200...330 3×346...575	3×200...290 3×346...500	3×200...330 3×346...575
Frequency [Hz]		50	60	50	60	50	60
Current consumption [A_{AC}]	Δ 人	0.42 ... 0.63 0.24 ... 0.36	0.51 ... 0.54 0.29 ... 0.31	0.53 0.3	0.48 0.28	1.0 0.57	0.9 0.52
Power consumption [W]		129 ... 180	180 ... 226	78 ... 90	100 ... 129	196 ... 220	273 ... 328
Air discharge rate [m^3/h]		682	757	483	532	895	985
Ambient temperature [°C]		-20 ... +60					
Enclosure		IP55					
Electrical connection		Terminal board in the terminal box					
Max. cable cross section [mm^2]		4×1.5					
Thread for cable gland		M16×1.5					

1) Other supply voltages on request.

Forced cooling fan VS

Forced cooling fan type	VS					
For motor size	CT71 .. 80		CT90 ... CV100		CV132S	
Supply voltage[1] [V_{AC}]	220 .. 266 (1~)					
Frequency [Hz]	50	60	50	60	50	60
Current consumption [V_{AC}]	0.22 .. 0.35	0.24 .. 0.39	0.27 .. 0.33	0.33 .. 0.4	0.27 .. 0.29	0.35 .. 0.38
Power consumption [W]	46 ... 78	51 ... 86	59 ... 78	73 ... 97	64 ... 80	78 ... 98
Air discharge rate [m^3/h]	98	109	265	304	306	355
Ambient temperature [°C]	-45 ... +60					
Enclosure	IP54 (optionally IP55)					
Electrical connection	Terminal block in terminal box					
Max. cable cross section [mm^2]	4×1.5					
Thread for cable gland	1 × M16×1.5 / 1 × M32×1.5					

1) Other supply voltages on request.

Combination with encoders

Forced cooling fans can be combined with the following motor encoders:

Motor encoder	Motor size	Forced cooling fan		
		VR	V	VS
ES1R, ES1S	CT71 .. CV100	•	-	
ES2R, ES2S	CV132S	•	-	
EV1R, EV1S	CT71 .. CV132S			•
EV1R, EV1S	CV132M .. 200	-	•	
AV1Y, AV1H	CT71 .. CV132S	•	-	•
AV1Y, AV1H	CV132M .. 200	-	•	

5. Disc brake BM(G)

General information

On request, SEW motors and gearmotors can be supplied with an integrated mechanical brake. The SEW brake is a DC-operated electromagnetic disc brake that is released electrically and applied using spring force. The brake is applied in case of a power failure. This means it complies with fundamental safety requirements. The SEW brake can also be released mechanically if equipped with manual brake release. For this purpose, either a hand lever or a setscrew is supplied with the brake. The hand lever springs back automatically and the setscrew is lockable. The brake is activated by a brake control system accommodated either in the wiring space of the motor or in the control cabinet.

A significant advantage of SEW brakes is their very short length. The brake bearing end shield is a part of both the motor and the brake. The integrated construction of the SEW brake motor permits particularly compact and sturdy solutions.

Basic structure

The illustration below shows the basic structure of the SEW brake.

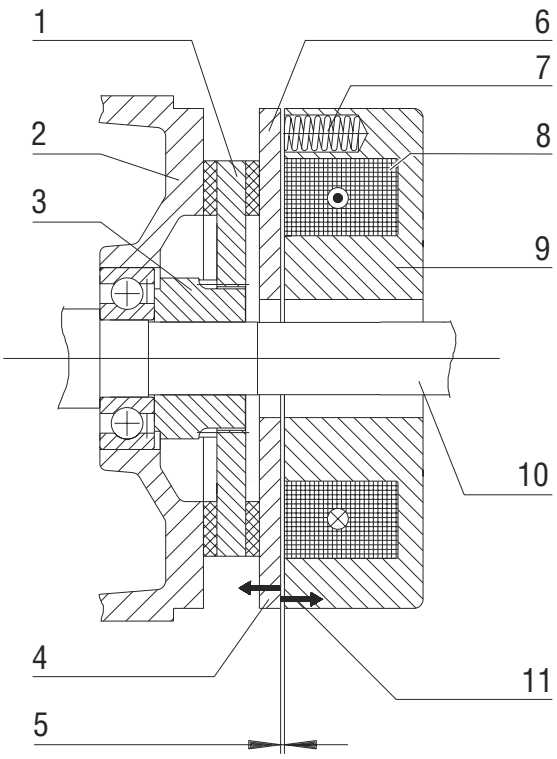

Figure 78: Basic structure of the SEW brake

1 Brake disc	5 Working air gap	9 Brake coil body
2 Brake bearing end shield	6 Pressure plate	10 Motor shaft
3 Carrier	7 Brake spring	11 Electromagnetic force
4 Spring force	8 Brake coil	

Short response times

A particular feature of the SEW brake is its patented two coil system. This system comprises the accelerator coil BS and the coil section TS. The special SEW brake control system ensures that the accelerator coil is switched on with a high current inrush when the brake is released, after which the coil section is switched on. The result is a particularly short response time when releasing the brake. The brake disk moves clear very swiftly and the motor starts up with hardly any brake friction.

This principle of the two coil system also reduces self-induction so that the brake is applied more rapidly. The result is a reduced braking distance. The SEW brake can be cut off in the DC and AC circuits to achieve particularly short response times when applying the brake, for example for hoists.

Overview

The asynchronous servo brake motors are equipped with the following SEW brake types:

Brake type	For motor	Description
BMG	CT71...CV132S	Double-disc, spring-loaded brake
BM	CV132M...CV200	Double-disc, spring-loaded brake

Technical data

The following table lists the technical data of SEW brakes. The type and number of brake springs determines the level of the braking torque. Maximum braking torque M_{Bmax} is installed as standard, unless specified otherwise in the order. Other brake spring combinations can result in reduced braking torque values M_{Bred}.

Brake type	For motor size	M_{Bmax} [Nm]	reduced braking torques M_{Bred} [Nm]							W [10^6 J]	t_1 [10-3s]	t_2		P_B [W]
												t_2II [10-3s]	t_2I [10-3s]	
BMG05	**CT71**	5.0	4	2.5	1.6	1.2				120	20	5	35	32
BMG1	**CT80**	10	7.5	6						120	20	8	40	36
BMG2	**CT90**	20	16	10	6.6	5				260	30	12	80	40
BMG4	**CV100**	40	30	24						260	35	15	80	50
BMG8	**CV132S**	75	55	45	37	30	19	12.6	9.5	600	35	10	50	65
BM15	**CV132M**	100	75	50	35	25				1000	40	14	70	95
	CV132M/L CV160M	150	125	100	75	50	35	25		1000	50	12	50	95
BM30	**CV160L**	200	150	125	100	75	50			1500	55	18	90	130
	CV180M/L	300	250	200	150	125	100	75	50	1500	60	16	80	130
BM31	**CV200**	300	250	200	150	125	100	75	50	1500	60	16	80	130

M_{Bmax} Maximum braking torque

M_{Bred} Reduced braking torque

W Braking work until service

t_1 Response time

t_2I Brake application time for cut-off in the AC circuit

t_2II Brake application time for cut-off in the DC and AC circuits

P_B Braking power

The response and application times are recommended values in relation to the maximum braking torque.

Current and braking torque

Cut-off in the AC circuit

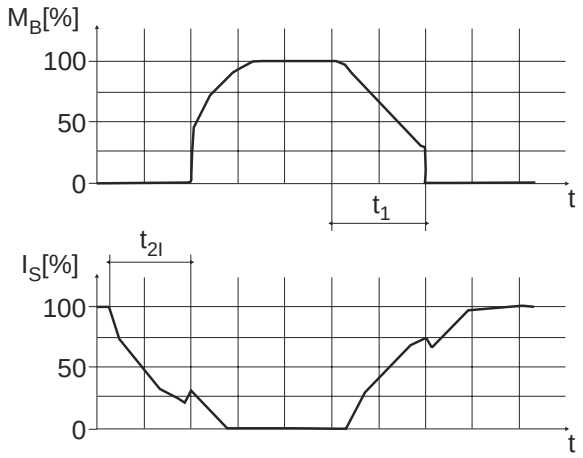

54615AXX

Figure 79: Current and braking torque for cut-off in the AC circuit

Cut-off in the DC and AC circuits

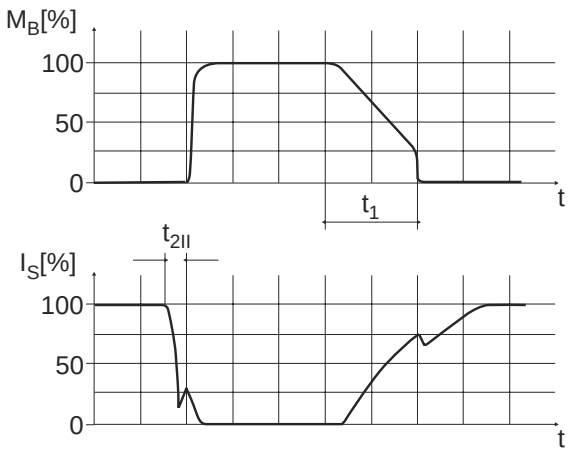

54616AXX

Figure 80: Current and braking torque for cut-off in the DC and AC circuits

M_B = Braking torque

I_S = Coil current

Actuation force for manual brake release

In brake motors with the .../HR "brake with self-reengaging manual brake release" option, you can release the brake manually using the provided lever. The following table specifies the actuation force required at maximum braking torque to release the brake by hand. It is assumed that the lever is operated at its top end.

Brake type	Actuation force F_H [N]	
BMG05	20	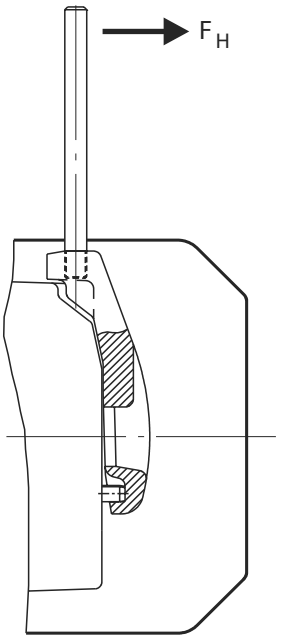 06449AXX
BMG1	40	
BMG2	70	
BMG4	140	
BMG8	170	
BM15	280	
BM30 ... BM31	500	

Permitted work done by the brake

If you are using a brake motor, you have to check whether the brake is suited for use with the required starting frequency Z. The following diagrams show the permitted work done W_{max} per cycle for the various SEW brakes and rated speeds. The values are given with reference to the required starting frequency Z in cycles/hour (c/h).

Example: The rated speed is 1500 min^{-1} and the SEW brake BM 30 is used. At 200 cycles per hour, the permitted work done per cycle is 5000 J.

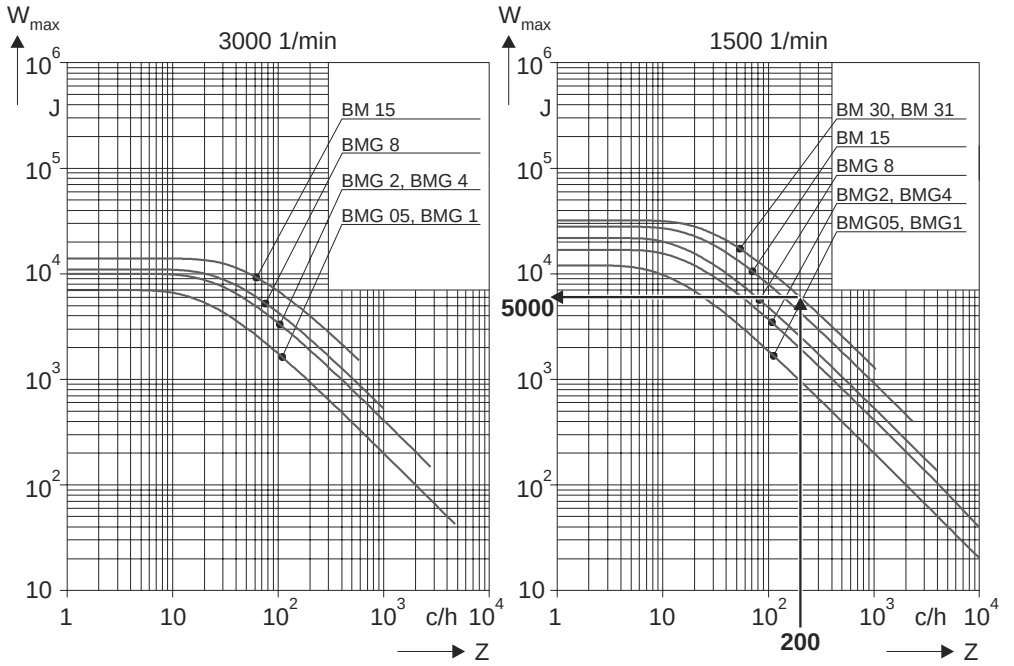

Figure 81: Maximum permitted work done per cycle at 3000 min^{-1} and 1500 min^{-1}

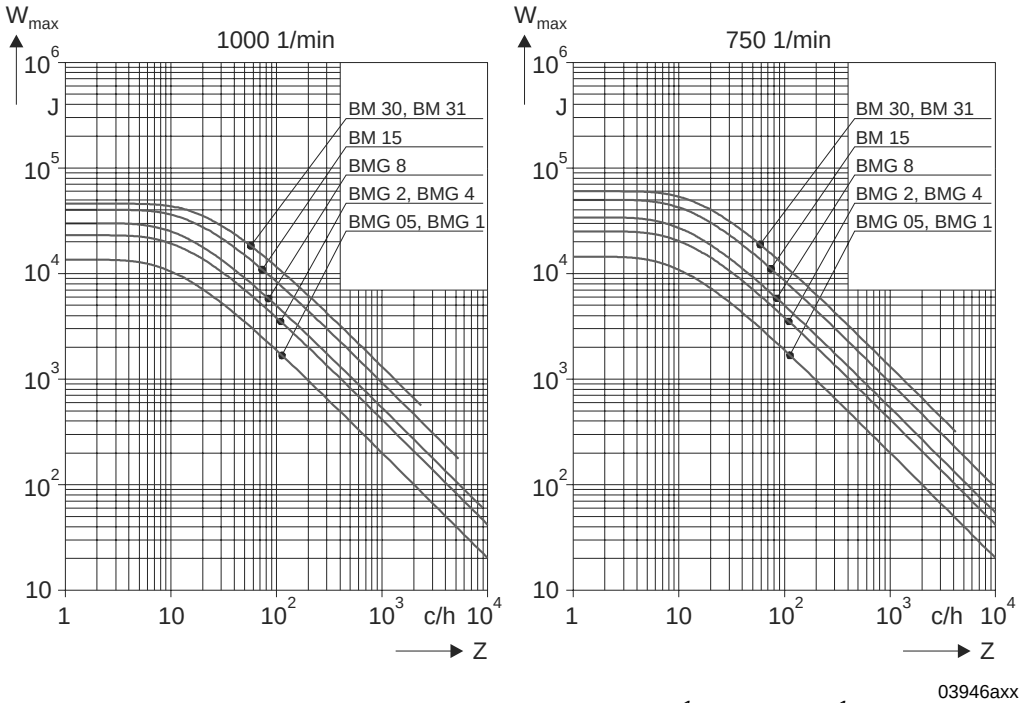

Figure 82: Maximum permitted work done per cycle at 1000 min^{-1} and 750 min^{-1}



Brake control

Various brake control systems are available for controlling SEW disk brakes with a DC coil, depending on the requirements and the application conditions. All SEW brake control systems are protected against overvoltage by varistors as standard. For more information, refer to the "Brakes and Accessores" manual.

The brake control systems are either installed directly on the motor in the wiring space or in the control cabinet.

Standard type

As standard, CT/CV...BM(G) servomotors are supplied with installed brake system BGE for AC connection or an installed control unit BSG for DC 24 V connection. The motors are then completely ready for connection.

Motor type	AC connection	24 V_{DC} connection
CT71 - CV100../BMG	BGE	BSG
CV132S../BMG - CV200../BM	BGE	BSG

Supply voltage AC

The supply voltage for brakes with an AC connection is supplied externally.

Motor wiring space

The following table lists SEW brake control systems for installation in the motor wiring space. The different housings have different colors (= color code) to make them easier to distinguish.

Brake control	Function	Voltage	Holding current I_{Hmax} [A]	Type	Part number	Color code	Special note
BGE	One-way rectifier with electronic switching	150...500 V_{AC}	1.5	BGE 1	827 599 8	Red	Only with IS size 71 ... 90
		150...500 V_{AC}	1.5	BGE 1.5	825 385 4	Red	-
		42...150 V_{AC}	3.0	BGE 3	825 387 0	Blue	-
BUR	One-way rectifier + voltage relay for cut-off in the DC circuit	150...500 V_{AC}	1.0	BGE 1.5 + UR 15	825 385 4 + 825 773 6		-
		42...150 V_{AC}	1.0	BGE 3 + UR 11	825 387 0 + 825 776 0		-
BSG	Electronic switch mode	24 V_{DC}	5.0	BSG	825 459 1	White	Recommended up to max. brake size BMG4 due to cross section of connecting lead

Combinations

The following table lists the possible combinations of brake control systems for the motor wiring space with the various motor sizes and connection types.

Brake control	Version	Standard terminal box
BGE	BGE1.5 BGE3	71-200 71-200
BUR	BGE1.5 + UR15 BGE3 + UR11	71-200 71-200
BSG	BSG	71-200

Control cabinet

The following table lists SEW brake control systems for installation in the control cabinet. The different housings have different colors (= color code) to make them easier to distinguish.

Brake control system	Function	Voltage	Holding current I_{Hmax} (A)	Type	Part number	Color code
BME	One-way rectifier with electronic switching like BGE	AC 150...500 V	1.5	BME 1.5	825 722 1	Red
		AC 42...150 V	3.0	BME 3	825 723 X	Blue
BMH	One-way rectifier with electronic switching and heating function	AC 150..500 V	1.5	BMH 1.5	825 818 X	Green
		AC 42...150 V	3	BMH 3	825 819 8	Yellow
BMP	One-way rectifier with electronic switching, integrated voltage relay for cut-off in the DC circuit	AC 150...500 V	1.5	BMP 1.5	825 685 3	White
		AC 42...150 V	3.0	BMP 3	826 566 6	Light blue
BMK	One-way rectifier with electronic switch mode, 24 V_{DC} control input and separation in the DC circuit	AC 150...500 V	1.5	BMK 1.5	826 463 5	Water blue
		AC 42...150 V	3.0	BMK 3	826 567 4	Bright red
BMV	One-way rectifier with electronic switch mode, 24 V_{DC} control input and separation in the DC circuit	24 V_{DC}	5.0	BMV 5	130 000 63	White

Combinations

The following table lists the possible combinations of brake control systems for control cabinet installation with the various motor sizes and connection types.

Brake control	Type	Standard terminal box
BME	BME 1.5 BME 3	CT71 ... CV200
BMP	BMP 1.5 BMP 3	
BMH	BMH 1.5 BMH 3	
BMK	BMK 1.5 BMK 3	
BMV	BMV 5	



Operating currents

The following tables list the operating currents of the brakes at different voltages. The following values are specified:

- Inrush current ratio I_B/I_H.
- Holding current
- Rated voltage

The accelerator current (= inrush current) only flows for a short time (ca. 120 ms) when the brake is being released or during voltage dips below 70 % of rated voltage.

The values for the holding currents are r.m.s. values (at DC 24 V arithmetic mean value). Use suitable measuring instruments for current measurement.

Brake			**BMG05**	**BMG1**	**BMG2**	**BMG4**
For motor size			CT71	CT80	CT90	CV100
M_{Bmax} [Nm]			5.0	10	20	40
P_B [W]			32	36	40	50
Inrush current ratio I_B/I_H			4	4	4	4
Rated voltage U_N			I_H [A_{AC}]	I_H [A_{AC}]	I_H [A_{AC}]	I_H [A_{AC}]
V_{AC}		**V_{DC}**				
		24	1.38[1)]	1.54[1)]	1.77[1]	2.20[1)]
24	(23-25)	**10**	2.0	2.4	-	-
42	(40-46)	**18**	1.14	1.37	1.46	1.80
48	(47-52)	**20**	1.02	1.22	1.30	1.60
56	(53-58)	**24**	0.90	1.09	1.16	1.43
60	(59-66)	**27**	0.81	0.97	1.03	1.27
73	(67-73)	**30**	0.72	0.86	0.92	1.14
77	(74-82)	**33**	0.64	0.77	0.82	1.00
88	(83-92)	**36**	0.57	0.69	0.73	0.90
97	(93-104)	**40**	0.51	0.61	0.65	0.80
110	(105-116)	**48**	0.45	0.54	0.58	0.72
125	(117-131)	**52**	0.40	0.48	0.52	0.64
139	(132-147)	**60**	0.36	0.43	0.46	0.57
153	(148-164)	**66**	0.32	0.39	0.41	0.51
175	(165-185)	**72**	0.29	0.34	0.37	0.45
200	(186-207)	**80**	0.26	0.31	0.33	0.40
230	(208-233)	**96**	0.23	0.27	0.29	0.36
240	(234-261)	**110**	0.20	0.24	0.26	0.32
290	(262-293)	**117**	0.18	0.22	0.23	0.29
318	(294-329)	**125**	0.16	0.19	0.21	0.25
346	(330-369)	**147**	0.14	0.17	0.18	0.23
400	(370-414)	**167**	0.13	0.15	0.16	0.20
440	(415-464)	**185**	0.11	0.14	0.15	0.18
500	(465-522)	**208**	0.10	0.12	0.13	0.16

1) Direct current in BSG operation

I_B [A]	Accelerator current
I_H [A]	Holding current
M_{Bmax} [Nm]	Maximum braking torque
P_B [W]	Braking power
U_N [V]	Rated voltage

Brake			BMG8	BM15	BM30/31
For motor size			CV132S	CV132M ... 160M	CV160L ... 200
M_{Bmax} [Nm]			75	150	300
P_B [W]			65	95	130
Inrush current ratio I_B/I_H			6.3	7.5	8.5
Rated voltage U_N			I_H [A_{AC}]	I_H [A_{AC}]	I_H [A_{AC}]
V_{AC}		V_{DC}			
		24	2.77[1)]	4.15[1)]	4.00[1)]
24	(23-25)		-	-	-
42	(40-46)		2.31	3.35	-
48	(47-52)		2.10	2.95	-
56	(53-58)		1.84	2.65	-
60	(59-66)		1.64	2.35	-
73	(67-73)		1.46	2.10	-
77	(74-82)		1.30	1.87	-
88	(83-92)		1.16	1.67	-
97	(93-104)		1.04	1.49	-
110	(105-116)		0.93	1.32	1.78
125	(117-131)		0.82	1.18	1.60
139	(132-147)		0.73	1.05	1.43
153	(148-164)		0.66	0.94	1.27
175	(165-185)		0.59	0.84	1.13
200	(186-207)		0.52	0.74	1.00
230	(208-233)		0.46	0.66	0.90
240	(234-261)		0.41	0.59	0.80
290	(262-293)		0.36	0.53	0.71
318	(294-329)		0.33	0.47	0.63
346	(330-369)		0.29	0.42	0.57
400	(370-414)		0.26	0.37	0.50
440	(415-464)		0.24	0.33	0.44
500	(465-522)		0.20	0.30	0.40

1) Direct current in BSG operation

I_B [A]	Accelerator current
I_H [A]	Holding current
M_{Bmax} [Nm]	Maximum braking torque
P_B [W]	Braking power
U_N [V]	Rated voltage

Cross section of the brake cable

Select the cross section of the brake cables according to the currents in your application. Bear in mind the inrush current of the brake when selecting the cross section. The voltage drop resulting from the inrush current must not cause the voltage to fall below 90 % of the supply voltage.

Note

Wire cross sections of max. 2.5 mm^2 can be connected to the terminals of the brake control systems. Intermediate terminals must be used in case of larger cross sections. Keep the distance between the intermediate terminal and the brake control system as short as possible.

Observe the voltage drop along the cable and particularly of the DC 24 V brake coil when dimensioning the cross sections for the brake cable. The accelerator current is decisive for the calculation.

The permitted tolerance for the rated voltage outside the range limit is ± **5%**.

Key to the block diagrams of the brake control system



Cut-off in the AC circuit (normal application of the brake)

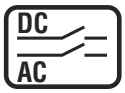

Cut-off in the DC and AC circuits (rapid application of the brake)

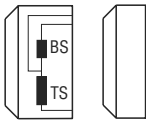

Brake
BS = Accelerator coil
TS = Coil section

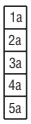

Auxiliary terminal strip in the terminal box



Motor with delta connection



Motor with star connection

Color code according to IEC 757:

WH	White
RD	Red
BU	Blue
BN	Brown
BK	Black



Control cabinet limit

BGE, BME

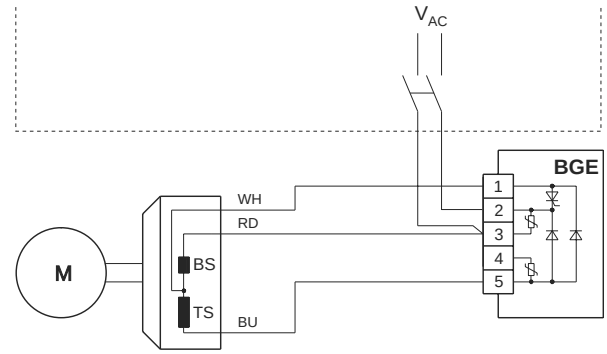

01533BXX

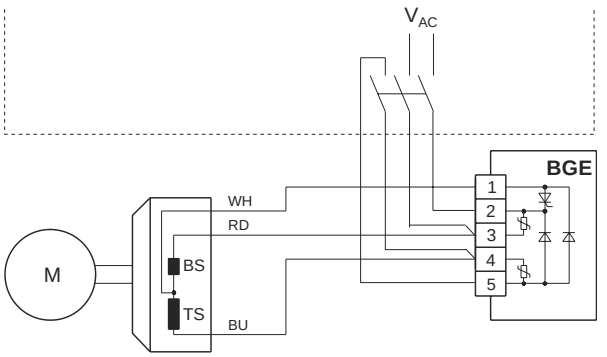

01534BXX

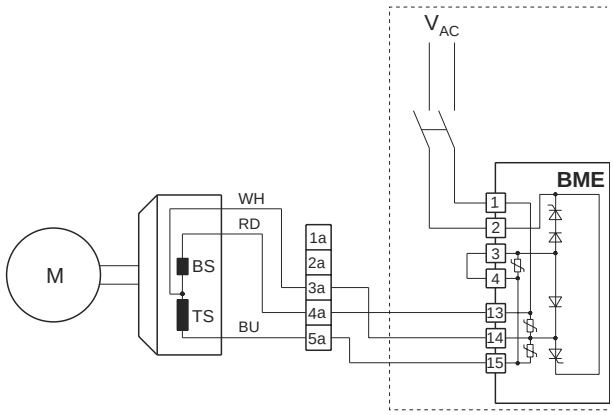

01535BXX

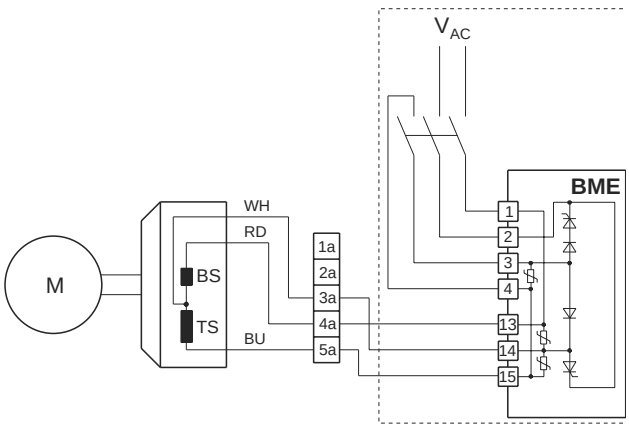

01536BXX

BUR

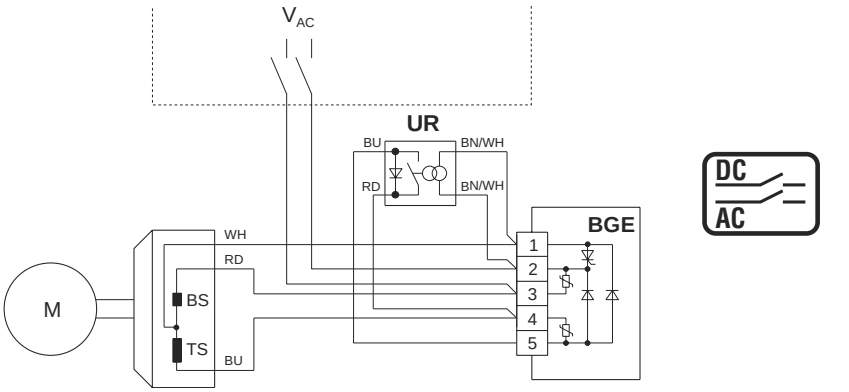

01634BXX

BSG

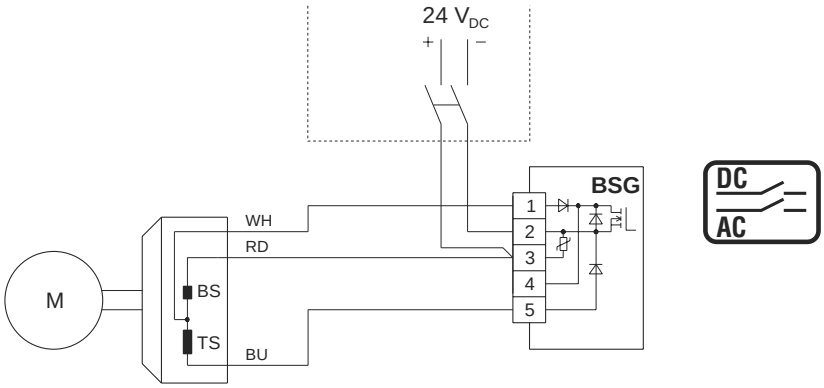

01539BXX

BMK

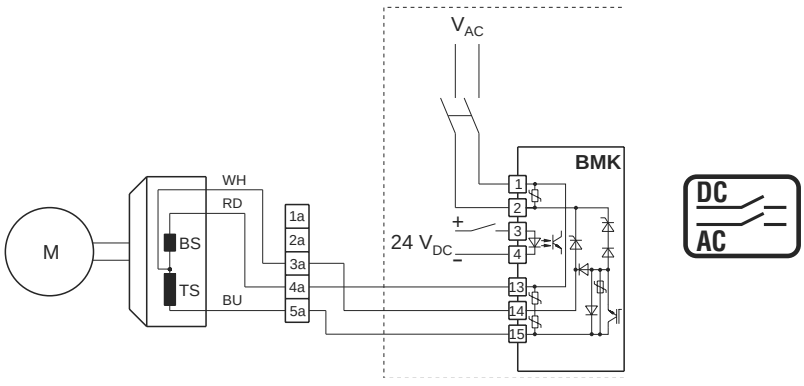

03252AXX

BMV

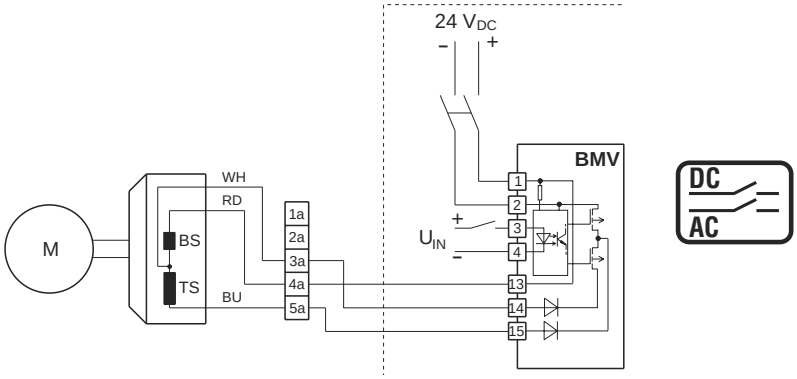

54944AXX

BMP

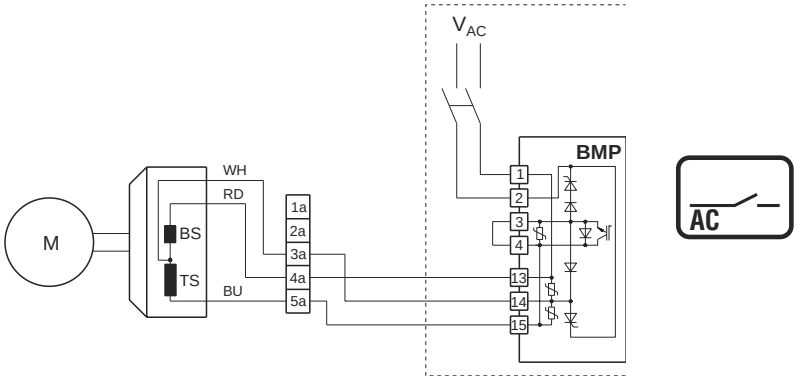

01540BXX

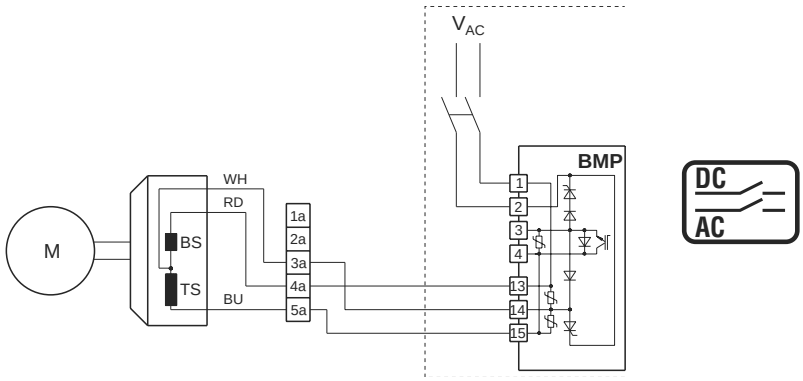

01541BXX

BMH

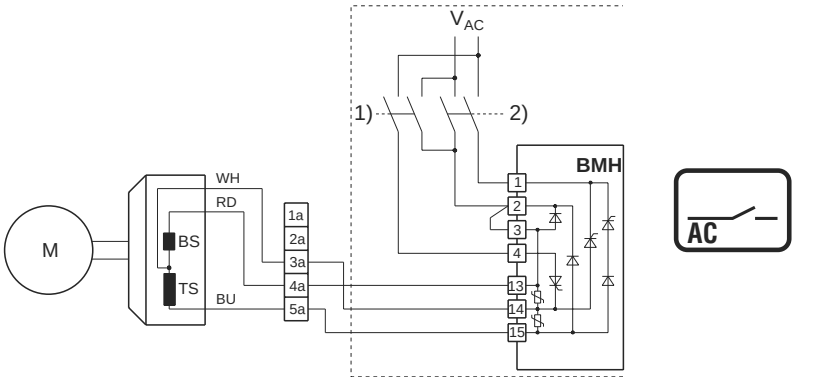

01542BXX

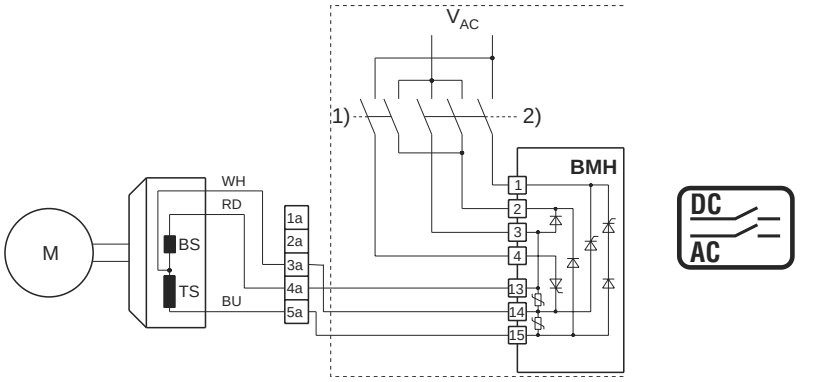

01543BXX

1) Heat

2) Ventilate

6. IS integrated plug connector

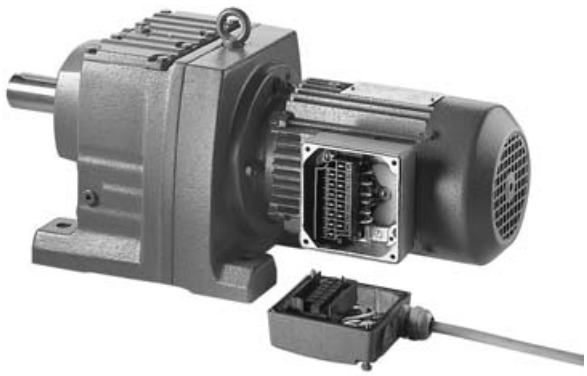

03075AXX

Figure 83: Asynchronous servomotor with IS integrated plug connector

Asynchronous servomotors of the CT71 ... CV132S.. series can be supplied with the integrated, 12-pin IS plug connector instead of the standard terminal box. The IS top part (mating connector) is included in the scope of delivery. The IS plug connector is particularly compact and offers the following connection options:

- Motor
- Brake
- Temperature monitoring (TF or TH)

As with the terminal box, the cable run with the IS integrated plug connector can be from four different directions offset at 90°.

Technical data

IS size	1	2
For asynchronous servomotors	CT71 ... CT90	CV100 ... CV132S
Number of contacts	12 + 2 × PE	
Contact connection	Screw connection	
Contact type	Blade / bushing	
Max. voltage / (CSA)	AC 690 V / (AC 600 V)	
Max. contact load	16 A_{eff}	
Enclosure	Corresponding to motor protection type (IP54, IP55, optionally IP65)	
Ambient temperature	-40 °C...+40 °C	

The IS plug connector requires a clearance of 30 mm for removing the connector.

The following motors can be equipped with the IS integrated plug connector depending on the speed class:

Motor type	1200 1/min	1700 1/min	2100 1/min	3000 1/min
CT71D4	1.27	1.64	2.2	3
CT80N4	2	2.8	3.5	4.3
CT90L4	3.5	4.8	6.1	7.9
CV100M4	4.7	6.5	8.1	11.3
CV100L4	8.9	13.6	15	17
CV132S4	11.1	15.2	19	25

7. Installed plug connectors AB..7, AM..7, AC..7 and AS..7

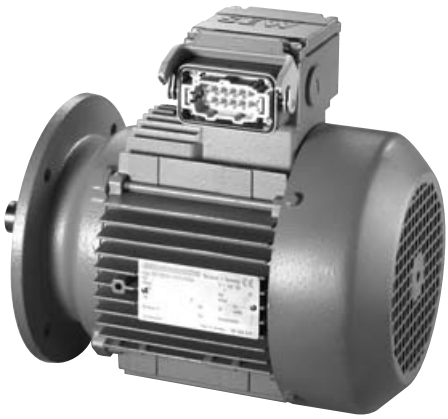

05664AXX

Figure 84: AC motor with ASE.7 plug connector

The installed AB.., AD.., AM.., AC.. and AS connector systems are based on the connector systems made by Harting.

- AB.., AD.., AM.. → Han Modular®.
- AC.., AS.. → Han 10E / 10ES.

The plugs are mounted on the side of the terminal box. They are locked either using two clamps or one clamp on the terminal box (→ Technical data page 683 and page 684).

UL approval has been granted for the plug connectors.

The mating connectors (sleeve housing) with contact tubes are not included in the scope of delivery.

Types AC.., AS..:

Types AC.. and AS.. differ as follows:

- AC = Crimp contacts and shortened contacts for thermal motor protection
- AS = Spring cage contacts

DESINA

The ASD.. and ASE.. types with single clip longitudinal closure correspond to the DESINA regulation issued by the Association of German Machine Tool Manufacturers (VDW).

Note the following point:

- Cable entry in position 1 is not available for motor sizes CT71 ... CV132S.

Technical data for AB..7, AD..7, AM..7

For motors CV71 - CV180L

Plug connector	AMB7	ABB7	AME7	ABE7
For motors	CT71 ... CV132S			
Locking of mating connector	Double clamp	Double clamp	Single clamp	Single clamp
Connector viewed from motor end	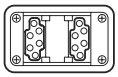	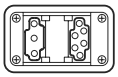	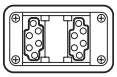	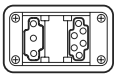
Basic connector system	Harting, EMC aluminum housing Han Modular 10B			
Number of contacts	2×6	$1 \times 3 + 1 \times 6$	2×6	$1 \times 3 + 1 \times 6$
Module type[1)]	$2 \times$ E-module	$1 \times$ C-module + $1 \times$ E-module	$2 \times$ E-module	$1 \times$ C-module + $1 \times$ E-module
Max. contact load	$12 \times 16\ A_{r.m.s.}$	$3 \times 25\ A_{r.m.s.}$ + $6 \times 16\ A_{r.m.s.}$	$12 \times 16\ A_{r.m.s.}$	$3 \times 25\ A_{r.m.s.}$ + $6 \times 16\ A_{r.m.s.}$
PE connection	2 contacts on articulated frame			
Max. voltage / (CSA)	AC 500 V / (AC 600 V)			
Contact connection	Crimp			
Contact type	Pin / (socket = from customer)			
Enclosure	Corresponding to motor protection type (IP54, IP55, optionally IP65)			
Ambient temperature	-40°C ... +40°C (→ diagram page 684)			

1) The module type depends on the current. C-module for more than 16 A, E-module for less than or equal 16 A.

Plug connector	ABB7	ABE7
For motors	CV32M ... CV180L	
Locking of mating connector	Double clamp	Single clamp
Connector viewed from motor end	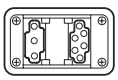	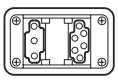
Basic connector system	Harting, gray-cast iron EMC housing Han Modular 10B	
Number of contacts	$1 \times 3 + 1 \times 6$	$1 \times 3 + 1 \times 6$
Module type[1)]	$1 \times$ C-module	
Max. contact load	$3 \times 36\ A_{r.m.s.} + 6 \times 36\ A_{r.m.s.}$	
PE connection	2 contacts on articulated frame	
Max. voltage / (CSA)	AC 500 V / (AC 600 V)	
Contact connection	Crimp	
Contact type	Pin / (socket = from customer)	
Enclosure	Corresponding to motor protection type (IP54, IP55, optionally IP65)	
Ambient temperature	-40°C ... +40°C (→ diagram page 684)	

1) The module type depends on the current. C-module for more than 16 A, E-module for less than or equal 16 A.

Technical data AC..7, AS..7

Plug connector	ACB7, ASB7	ACE7, ASE7
For motors	CT71 ... CV132S	
Locking of mating connector	Double clamp	Single clamp
Connector viewed from motor end	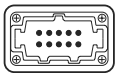	
Basic connector system	Harting, aluminum EMC housing, AC.. = Han 10E, AS.. = Han 10ES	
Number of contacts	10	
Max. contact load	10 × 16 $A_{r.m.s.}$	
PE connection	2 contacts on insulator	
Max. voltage / (CSA)	AC 500 V / (AC 600 V)	
Contact connection	AC = Crimp contacts AS = Spring cage contacts	
Contact type	Pin / (socket = from customer)	
Enclosure	Corresponding to motor protection type (IP54, IP55, optionally IP65)	
Ambient temperature	-40°C ... +40°C (→ diagram page 684)	

Contact rating depending on the temperature

The "Technical data" tablesfor plug connectors lists electrical current values for the maximum permitted contact load (= max. contact load) of the plug connectors. These current values are valid for ambient temperatures of up to max. 40 °C. Higher ambient temperatures apply for reduced current values. The following illustration shows the permitted contact load as a function of the ambient temperature.

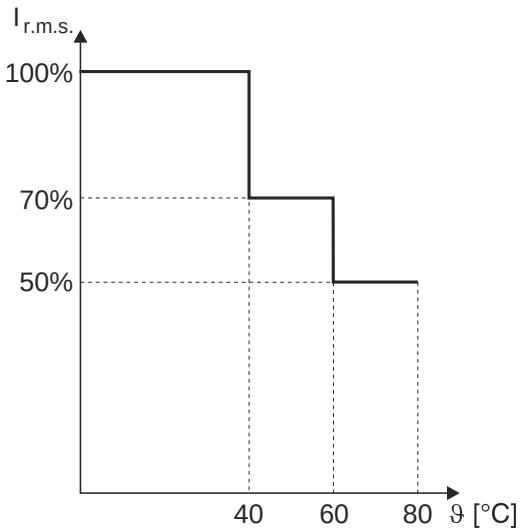

06443AXX

Figure 85: Permitted contact load as a function of the ambient temperature

$I_{r.m.s.}$ = Current value of the maximum permitted contact load, 100 % = value as listed in the "Technical data" table

ϑ = Ambient temperature

16.9 Dimension sheets for asynchronous servomotors

Dimension sheet information

Observe the following notes regarding dimension sheets for asynchronous servomotors:

- The following dimension sheets show the sine encoder ES1S / ES2S / EV1S. The other optional encoders ES1R / ES2R / EV1R are the same size.
- The foot dimensions of CT90, CV132ML and CV180 motors differ from IEC dimensions.
- Manual brake release can be pivoted through 90° together with the terminal box, with the exception of CT71.., CT90.., CV132M and CV160L foot-mounted motors.
- With brake motors, please leave adequate room (= diameter of the fan guard) for removing the fan guard.
- CT71.., CT90.., CV132M and CV160L foot-mounted motors are not available with a flat-topped fan guard and must be supported if necessary.
- Motors from size CV112.. are equipped with lifting eyebolts. The lifting eyebolts can be unscrewed.
- Leave a clearance of about half the fan guard diameter to allow for unhindered air inflow.
- The diameters of the fan guards on the following motors and brake motors are different when solid shaft encoders EV.. and AV.. are installed:

  –CT71 and CT80 d = 150 mm
  –CT90 and CV100 d = 201 mm
  –CV112 and CV132S d = 226 mm
  –CV132M to CV160M d = 285 mm
  –CV160L to CV180 L d = 342 mm

CT71D / ES1S

08 055 00 04
1 (2)

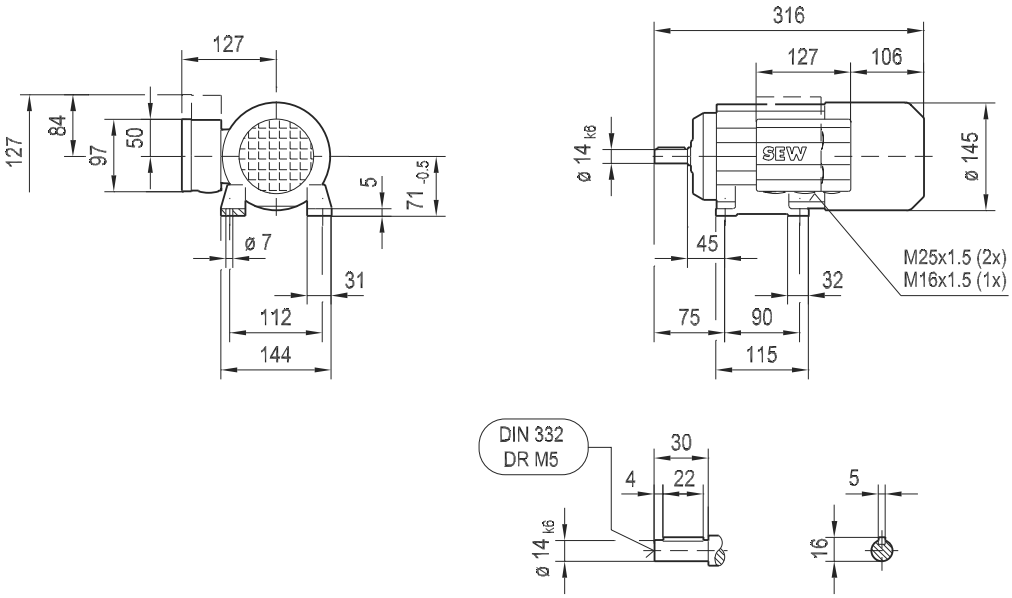

CFT71D / ES1S

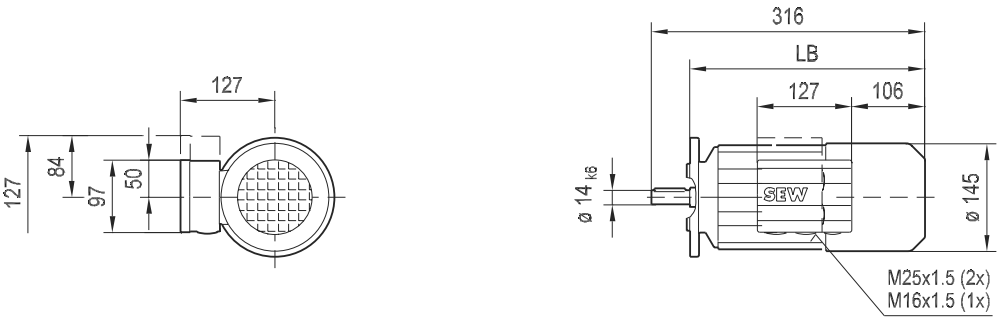

ø 160 IEC (FF130)

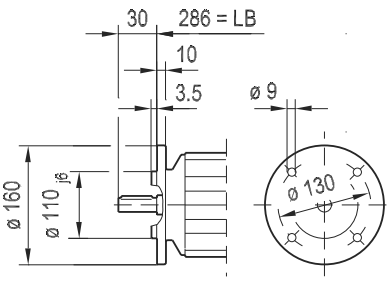

ø 200 (FF165)

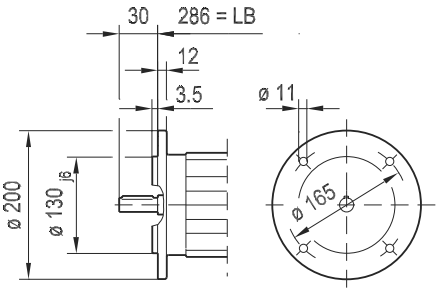

C(F)T71D / ES1S

08 055 00 04
2 (2)

/ A.B.

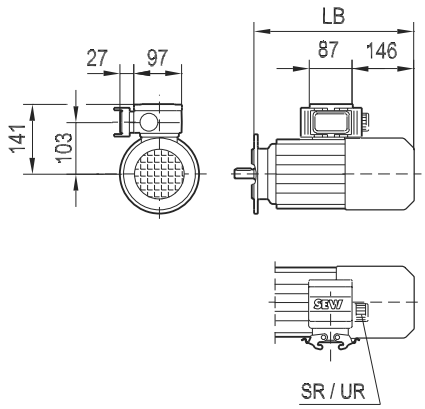

/ A.E.

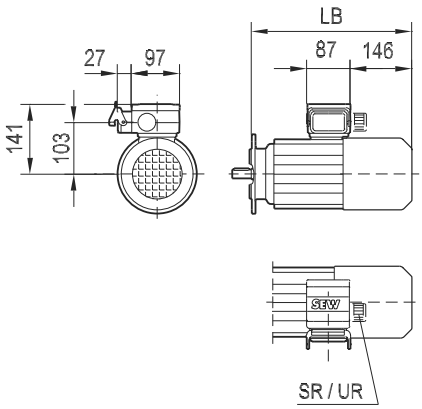

/ IS

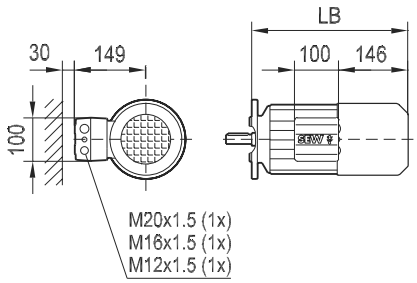

/ VR : X = 83
/ EV1. / VR : X = 206
/ AV1. / VR : X = 206

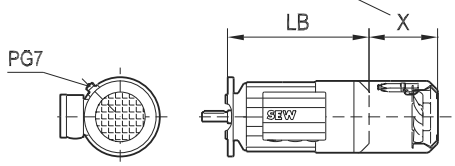

/ EV1.

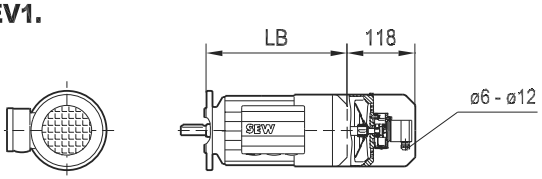

/ AV1.

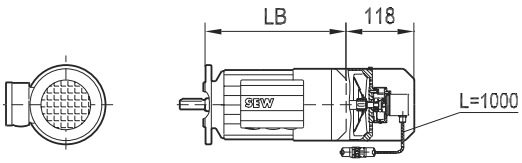

/ EV1. / VS : X = 209
/ AV1. / VS : X = 209

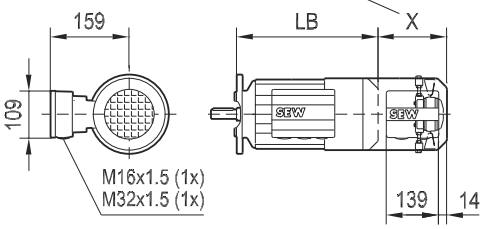

16

CT71D / ES1S / BMG

09 045 00 04
1 (2)

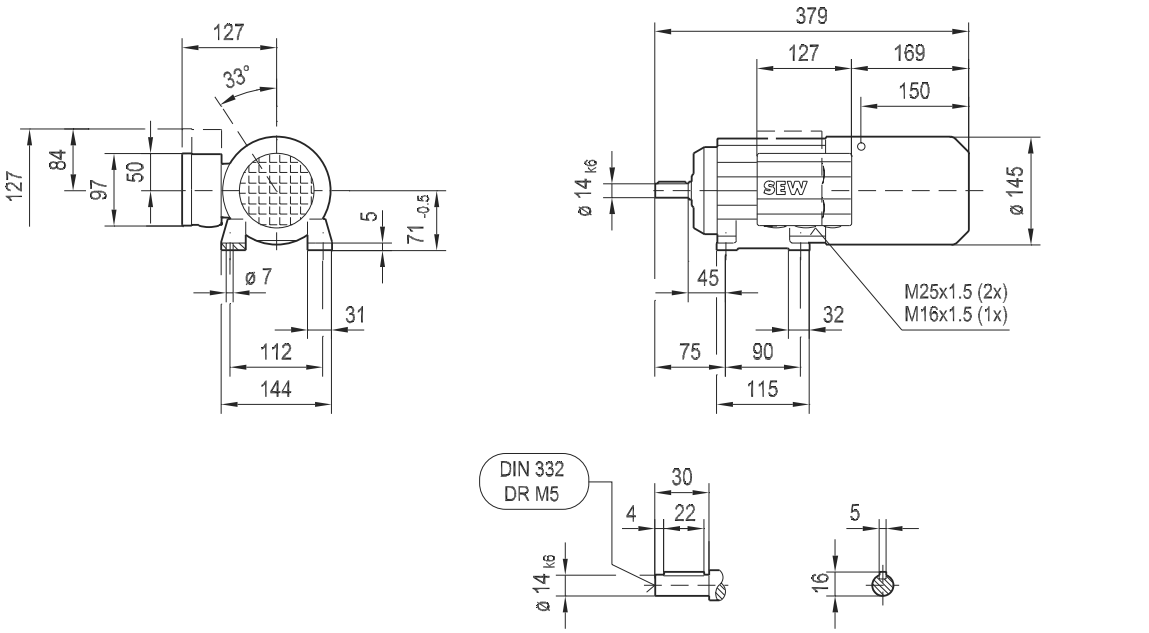

CFT71D / ES1S / BMG

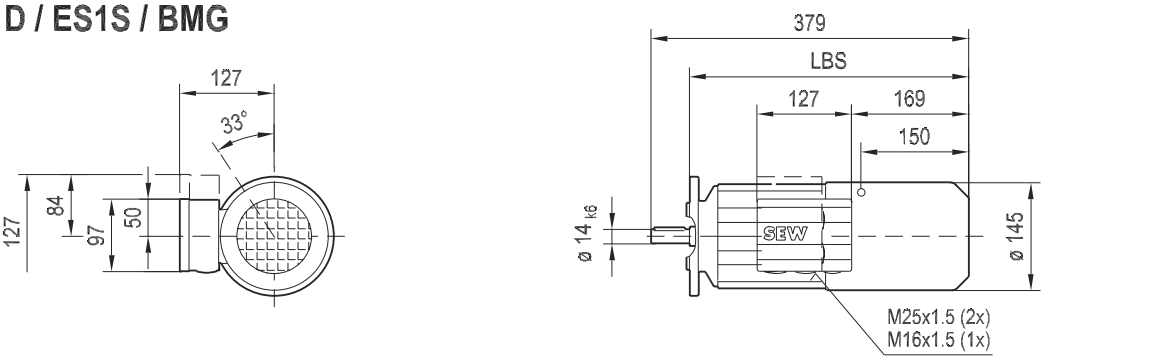

ø 160 IEC (FF130)

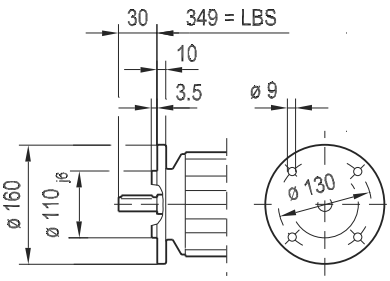

ø 200 (FF165)

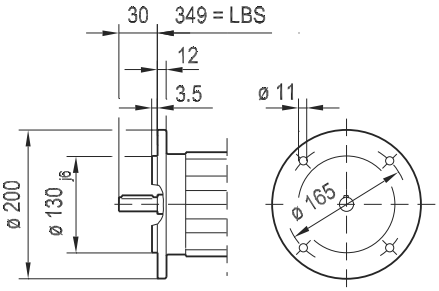

C(F)T71D / ES1S / BMG

09 045 00 04
2 (2)

/ A.B.

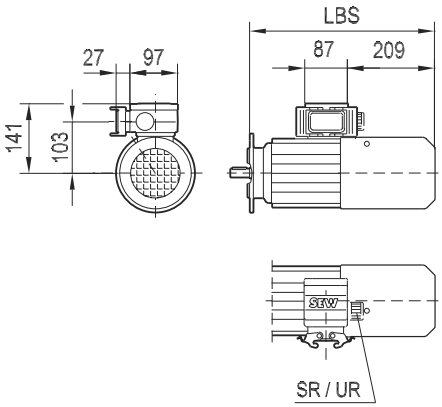

/ A.E.

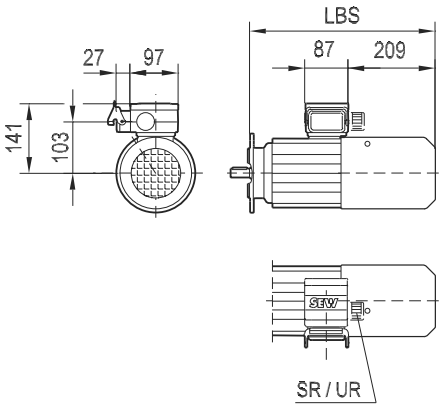

/ IS

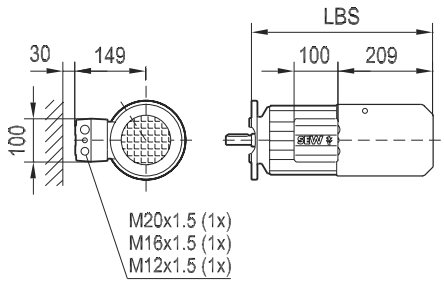

/ VR : X = 83
/ EV1. / VR : X = 143
/ AV1. / VR : X = 143

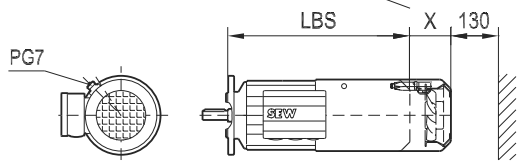

/ EV1.

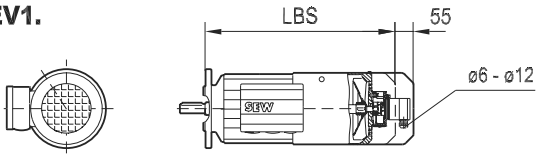

/ EV1. / VS : X = 146
/ AV1. / VS : X = 146

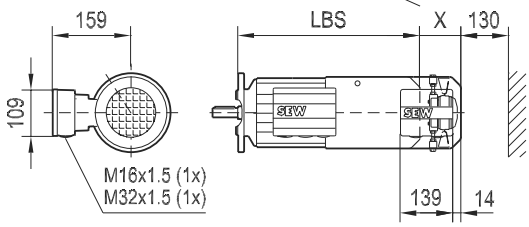

/ AV1.

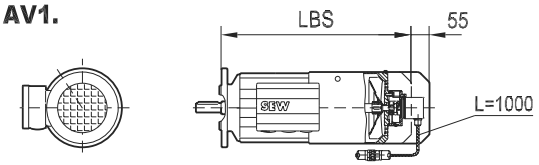

CT80 / ES1S

08 056 00 04
1 (2)

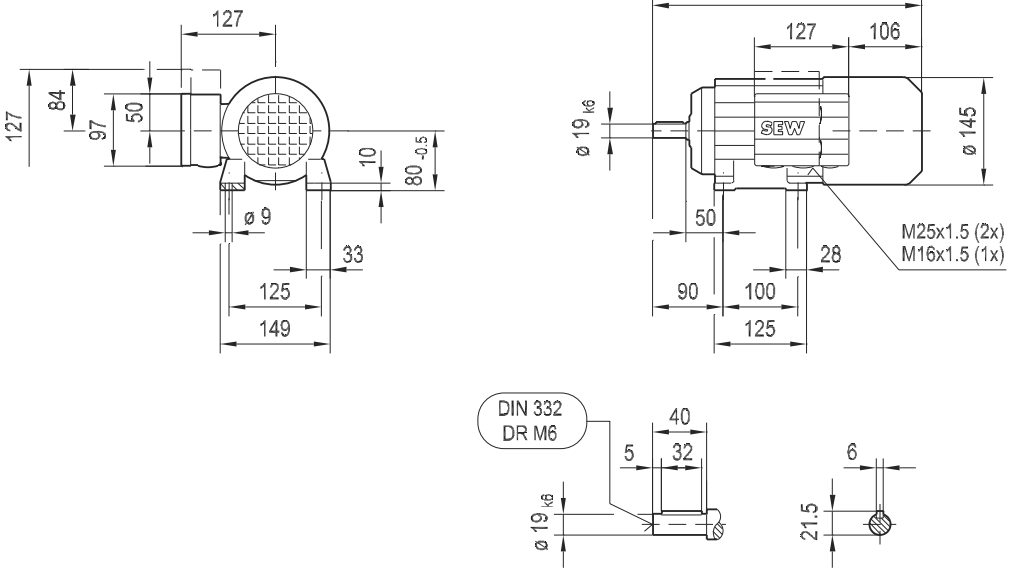

CFT80 / ES1S

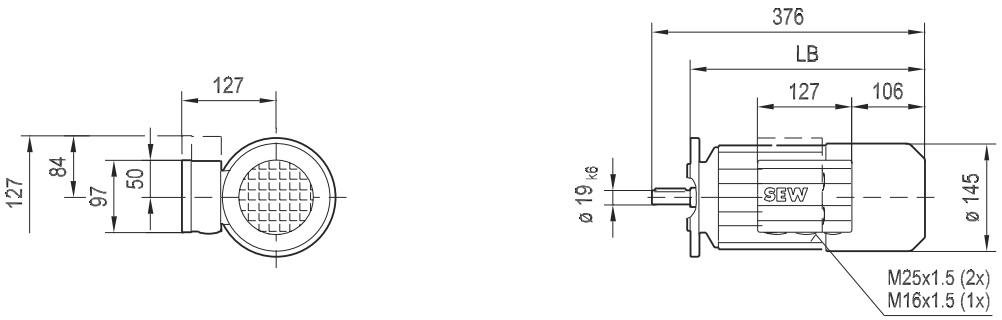

ø 160 (FF130)

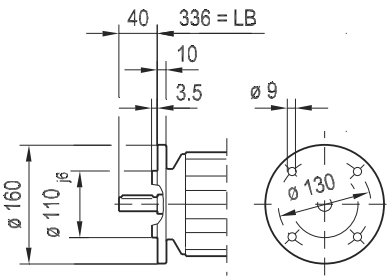

ø 200 IEC (FF165)

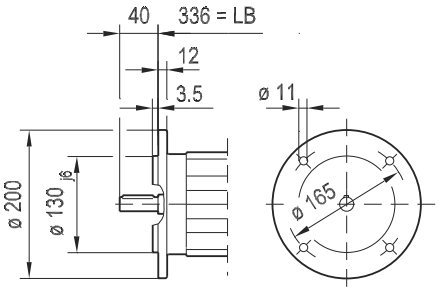

C(F)T80 / ES1S

08 056 00 04
2 (2)

/ A.B.

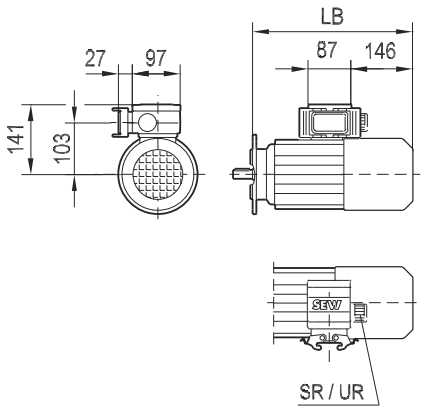

/ A.E.

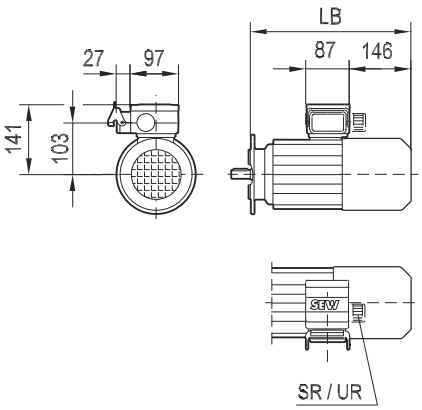

/ IS

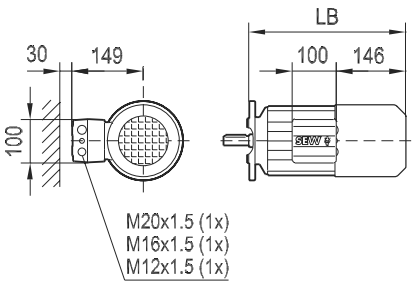

/ VR
/ EV1. / VR
/ AV1. / VR

: X = 83
: X = 206
: X = 206

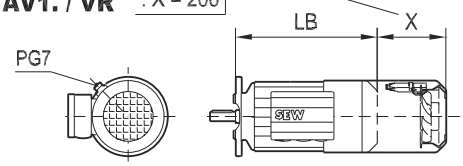

/ EV1.

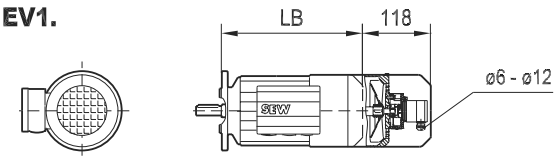

/ AV1.

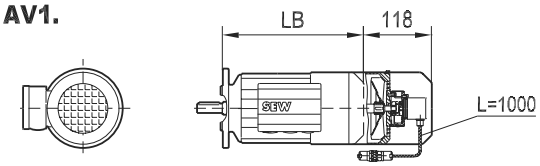

/ EV1. / VS
/ AV1. / VS

: X = 209
: X = 209

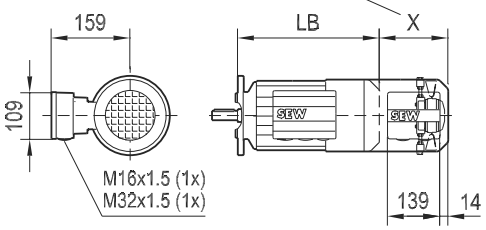

CT80 / ES1S / BMG

09 046 00 04
1 (2)

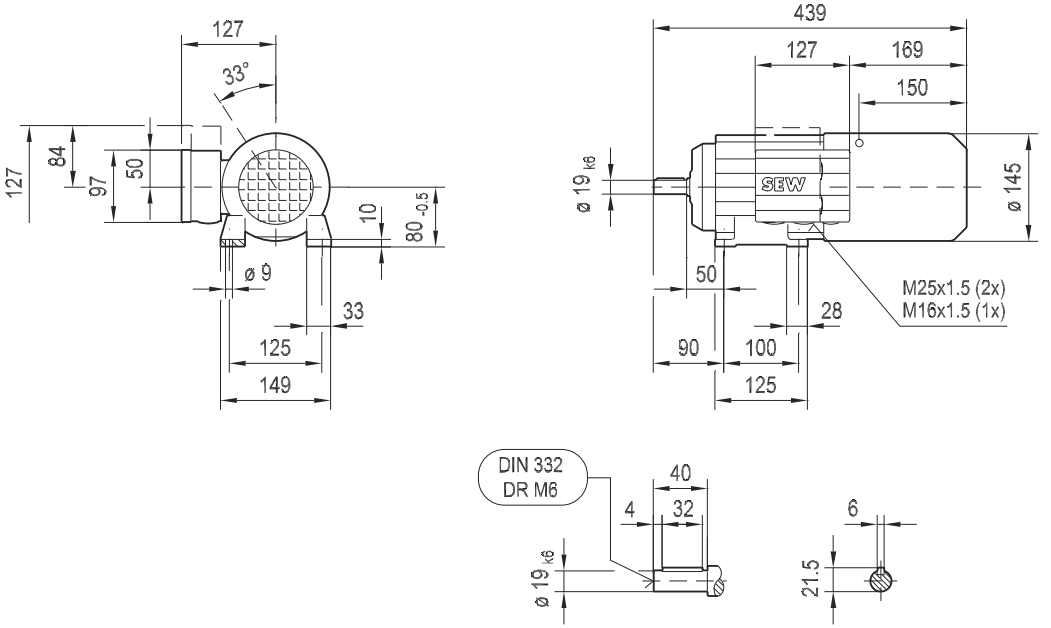

CFT80 / ES1S / BMG

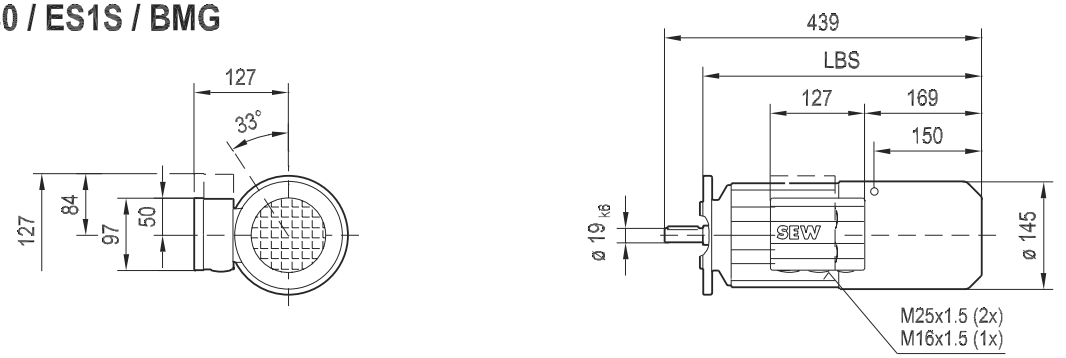

ø 160 (FF130)

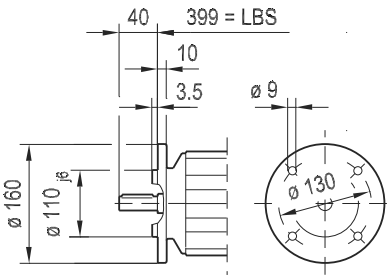

ø 200 IEC (FF165)

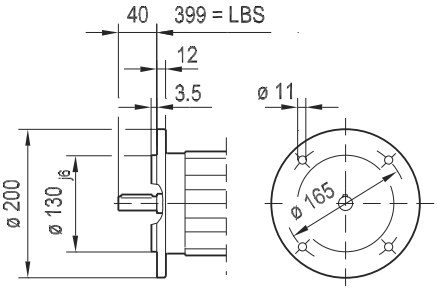

C(F)T80 / ES1S / BMG

09 046 00 04
2 (2)

/ A.B.

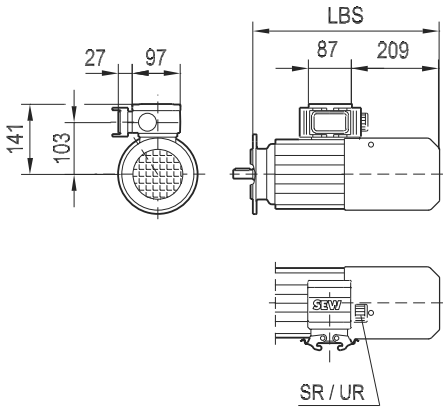

/ A.E.

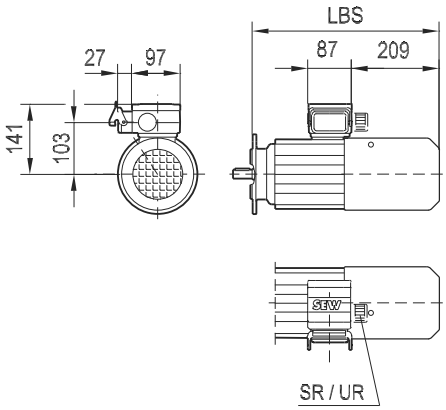

/ IS

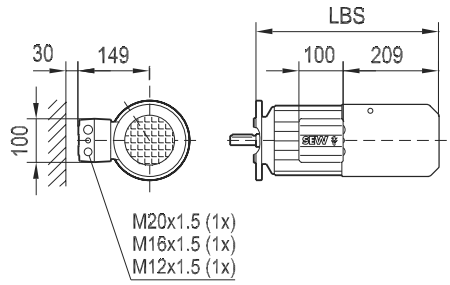

/ VR : X = 83
/ EV1. / VR : X = 143
/ AV1. / VR : X = 143

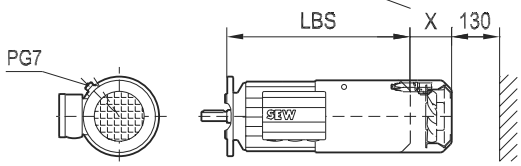

/ EV1.

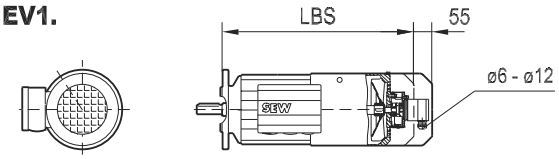

/ EV1. / VS : X = 146
/ AV1. / VS : X = 146

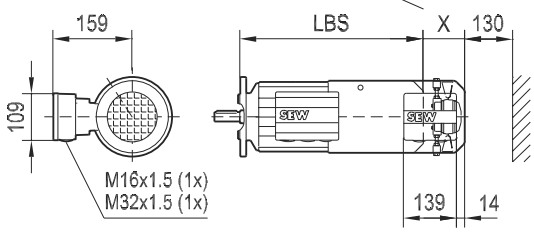

/ AV1.

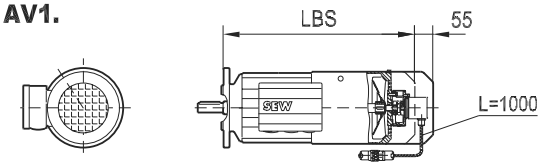

CT90 / ES1S

08 057 00 04
1 (2)

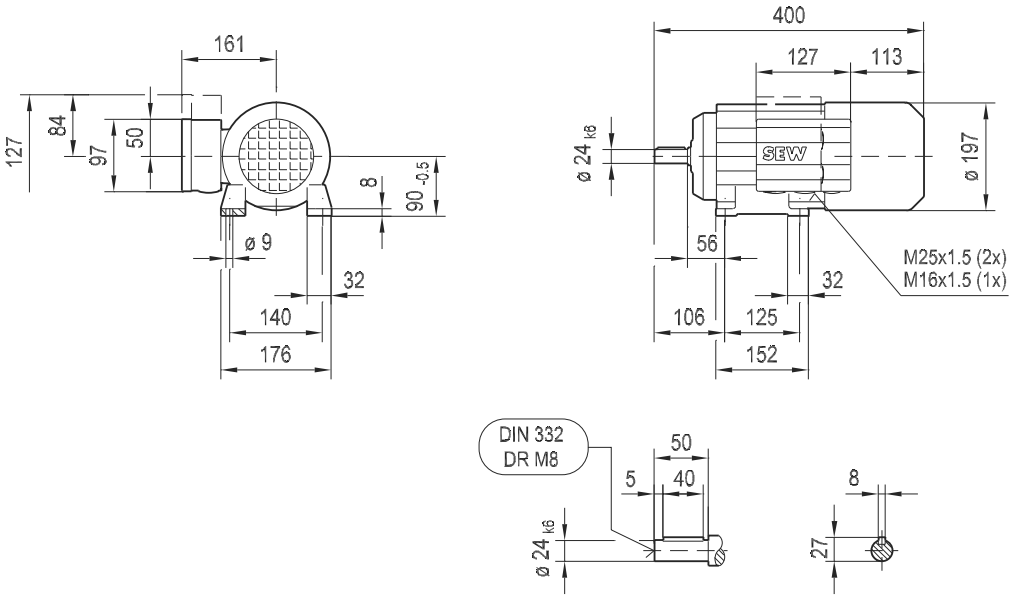

CFT90 / ES1S

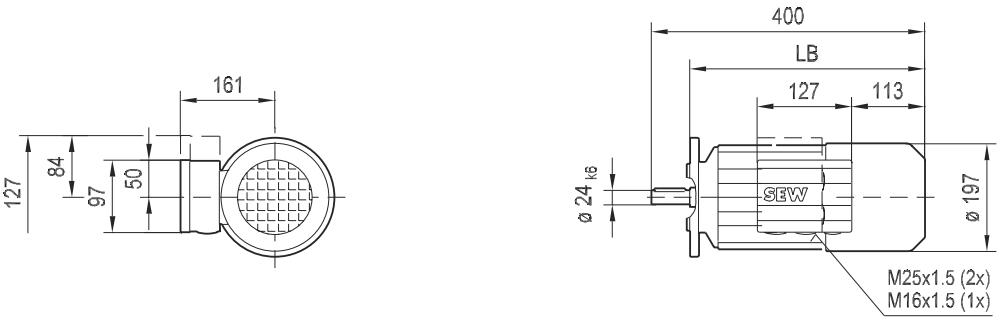

ø 200 IEC (FF165)

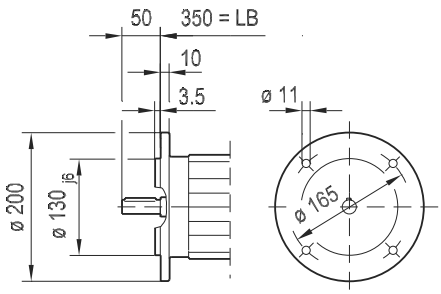

ø 250 (FF215)

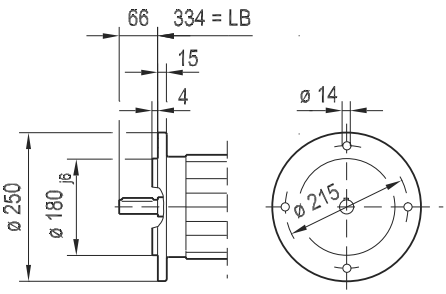

C(F)T90 / ES1S

08 057 00 04
2 (2)

/ A.B.

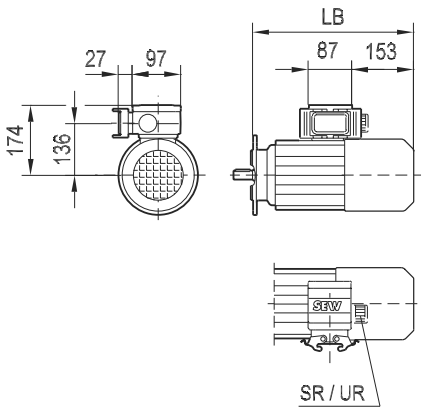

/ A.E.

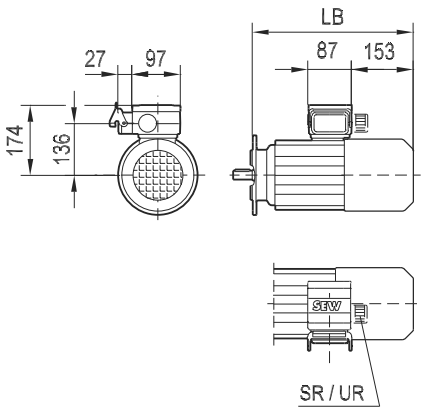

/ IS

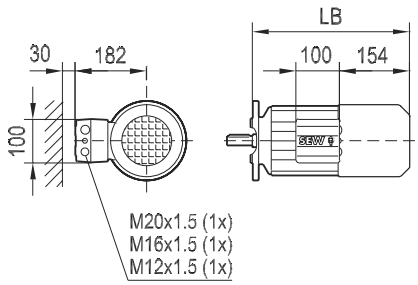

/ VR
/ EV1. / VR
/ AV1. / VR

: X = 101
: X = 228
: X = 228

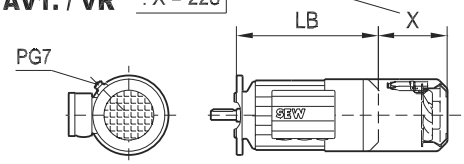

/ EV1.

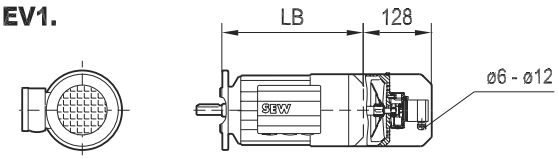

/ AV1.

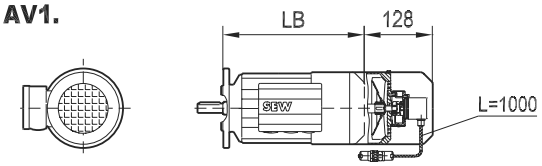

/ EV1. / VS
/ AV1. / VS

: X = 255
: X = 255

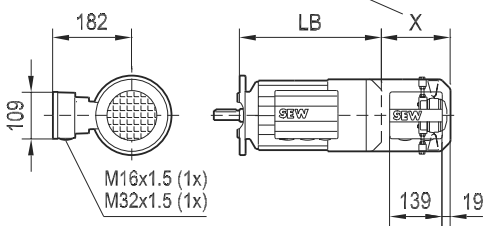

CT90 / ES1S / BMG

09 047 00 04
1 (2)

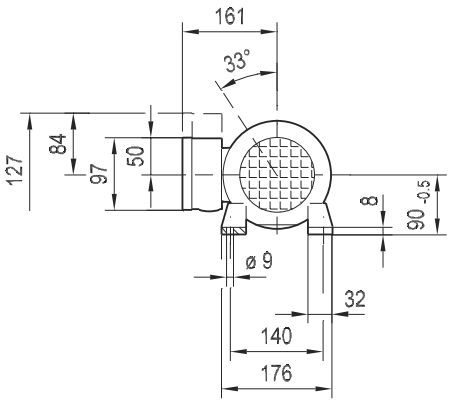

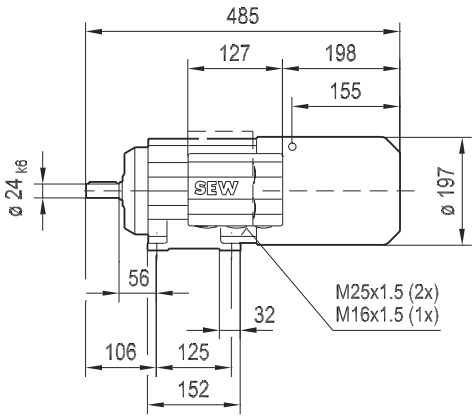

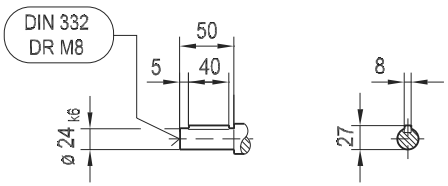

CFT90 / ES1S / BMG

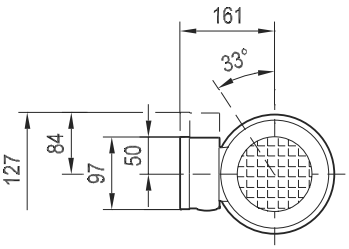

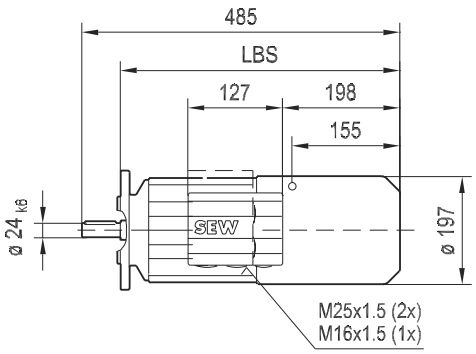

ø 200 IEC (FF165)

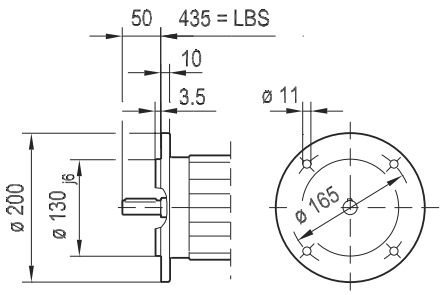

ø 250 (FF215)

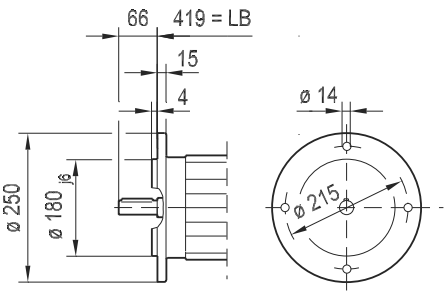

C(F)T90 / ES1S / BMG

09 047 00 04
2 (2)

/ A.B.

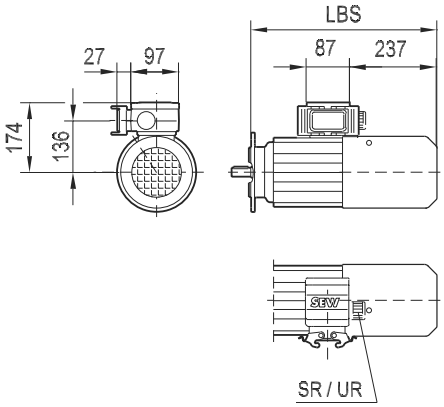

/ A.E.

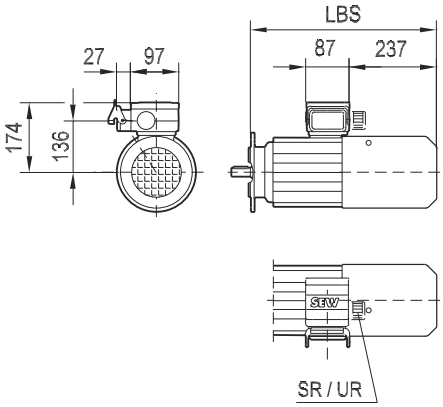

/ IS

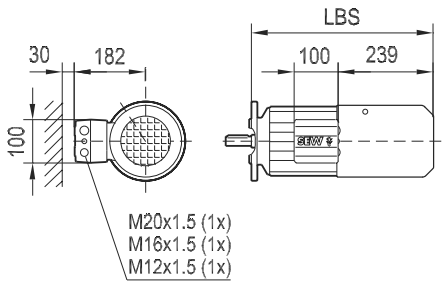

/ VR : X = 101
/ EV1. / VR : X = 146
/ AV1. / VR : X = 146

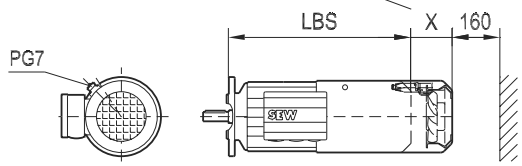

/ EV1.

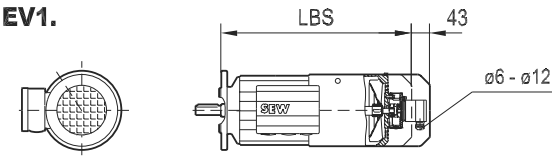

/ AV1.

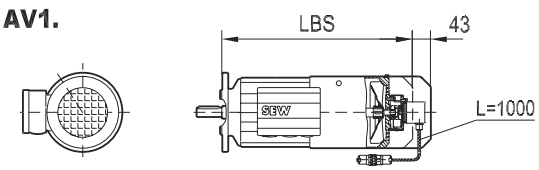

/ EV1. / VS : X = 170
/ AV1. / VS : X = 170

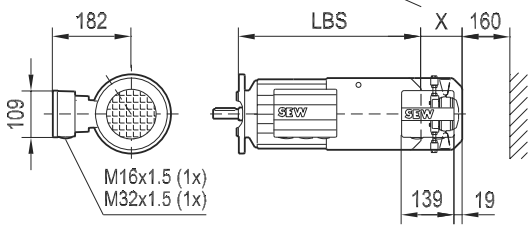

CV100 / ES1S

08 058 00 04
1 (2)

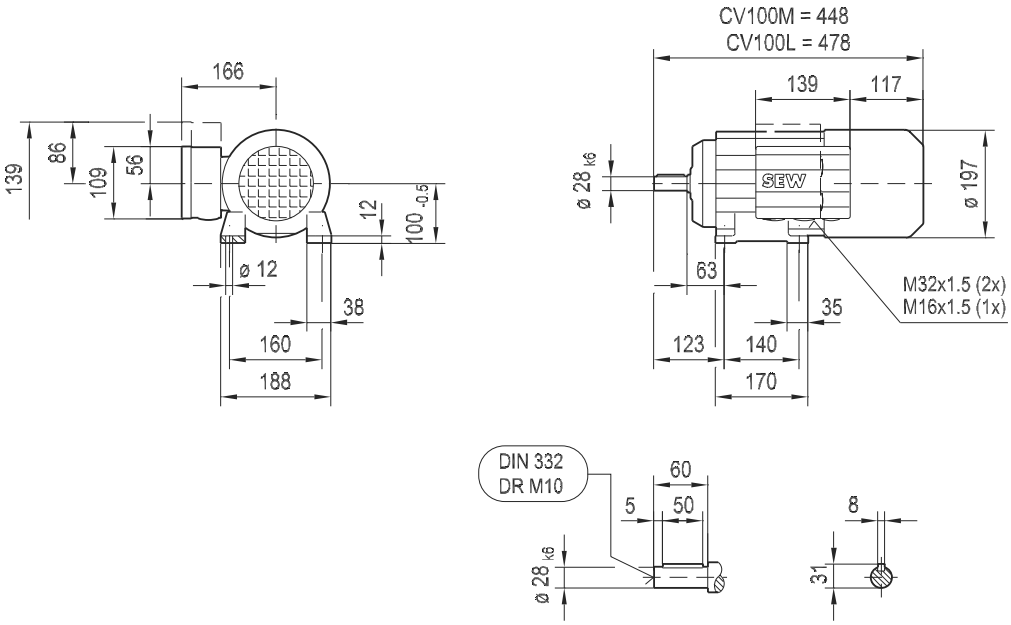

CFV100 / ES1S

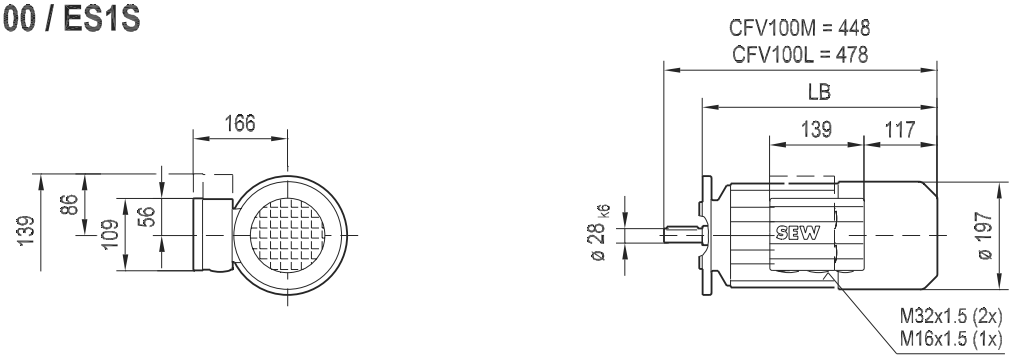

ø 200 (FF165)

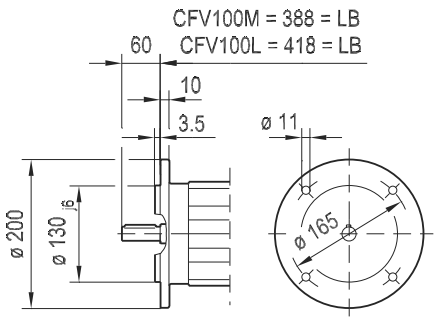

ø 250 IEC (FF215)

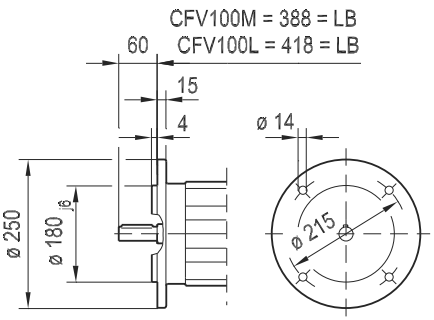

C(F)V100 / ES1S

08 058 00 04
2 (2)

/ A.B.

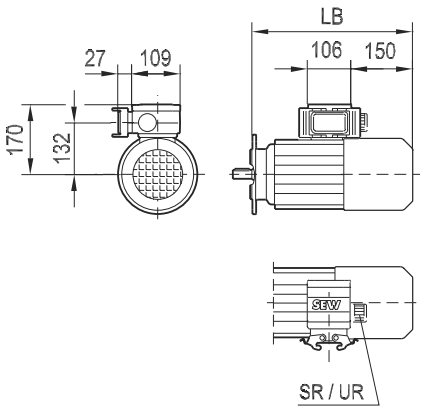

/ A.E.

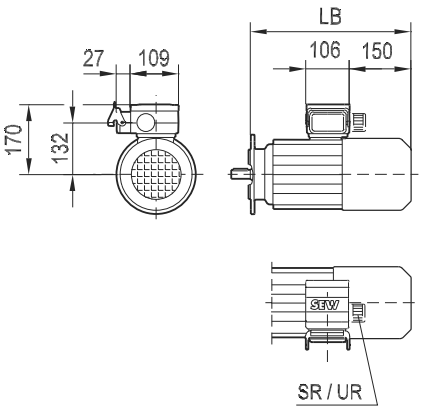

/ IS

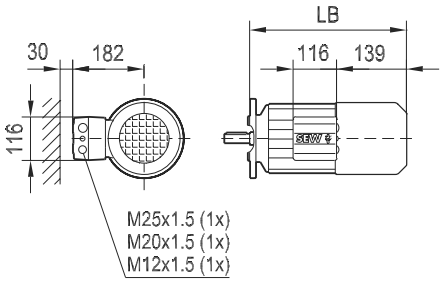

/ VR : X = 101
/ EV1. / VR : X = 228
/ AV1. / VR : X = 228

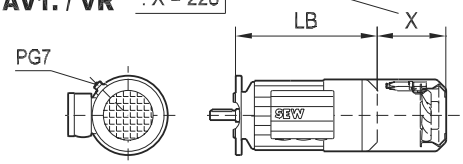

/ EV1.

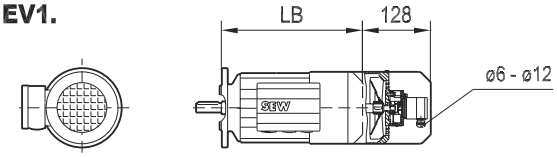

/ AV1.

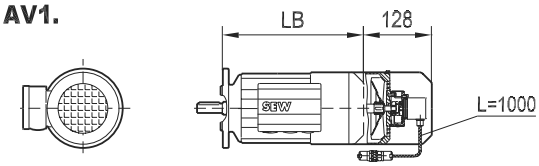

/ EV1. / VS : X = 255
/ AV1. / VS : X = 255

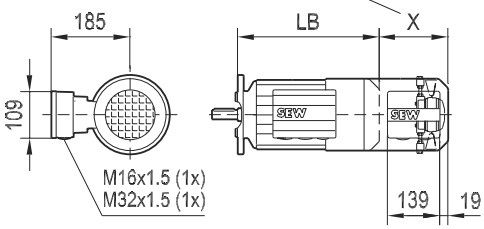

CV100 / ES1S / BMG

09 048 00 04
1 (2)

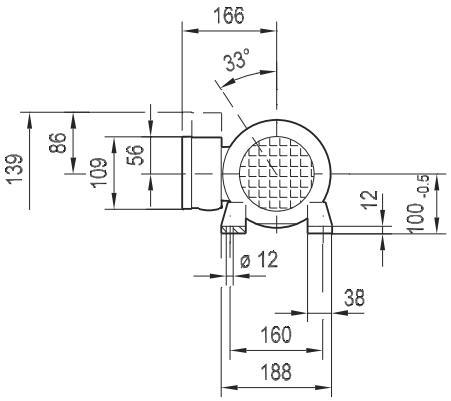

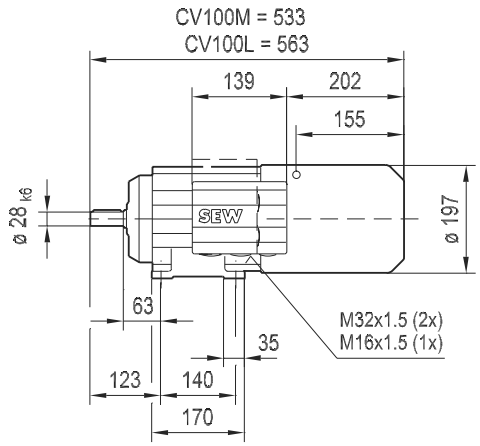

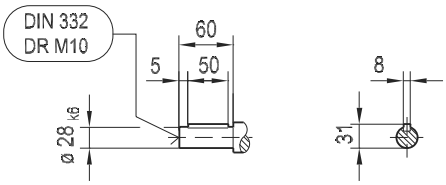

CFV100 / ES1S / BMG

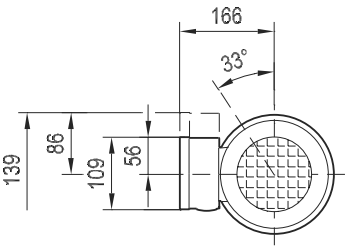

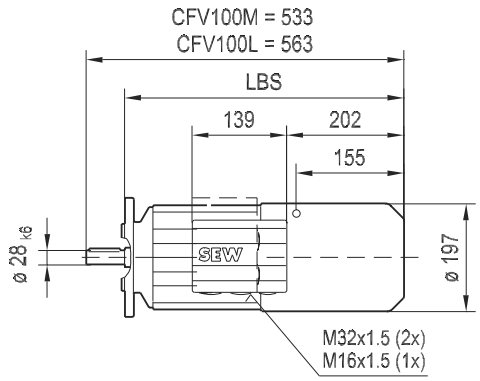

ø 200 (FF165)

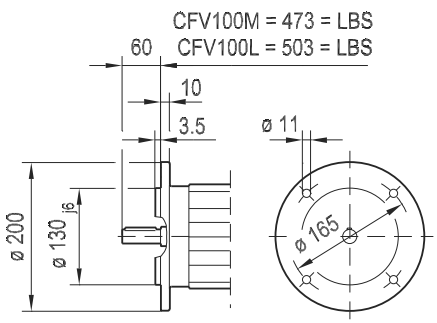

ø 250 IEC (FF215)

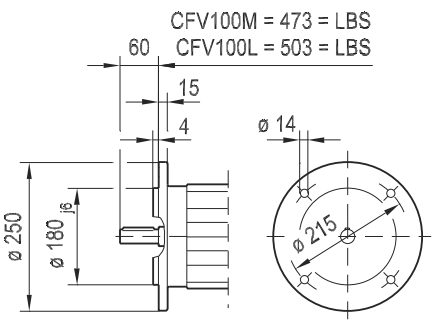

C(F)V100 / ES1S / BMG

09 048 00 04
2 (2)

/ A.B.

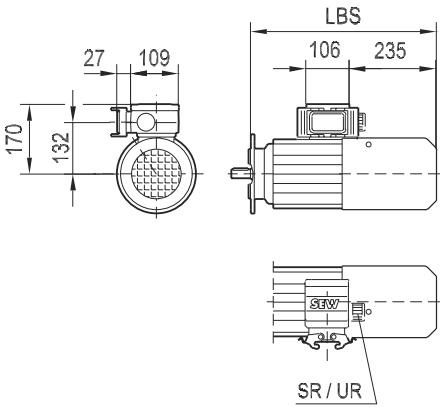

/ A.E.

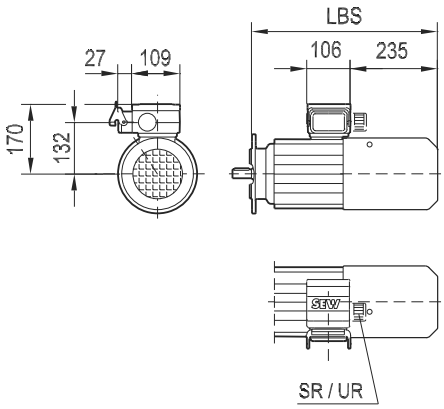

/ IS

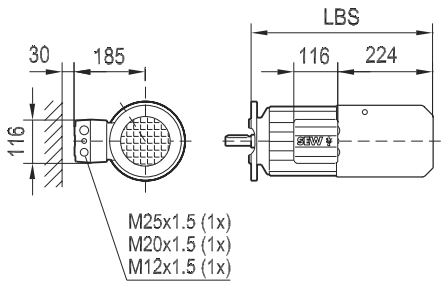

/ VR : X = 101
/ EV1. / VR : X = 146
/ AV1. / VR : X = 146

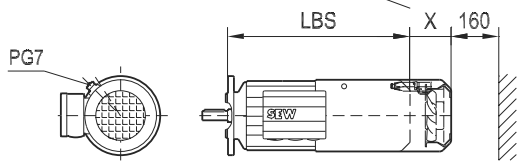

/ EV1.

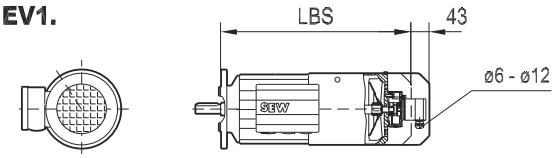

/ EV1. / VS : X = 170
/ AV1. / VS : X = 170

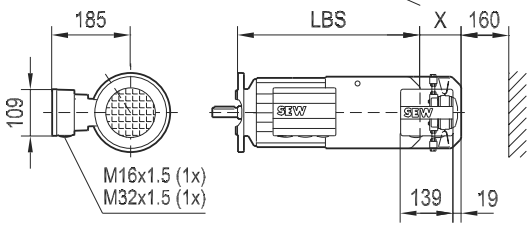

/ AV1.

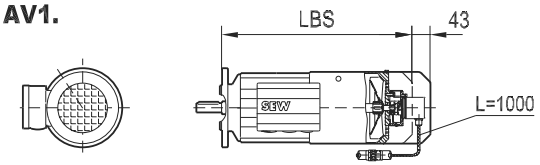

CV132S / ES2S

08 059 00 04
1 (2)

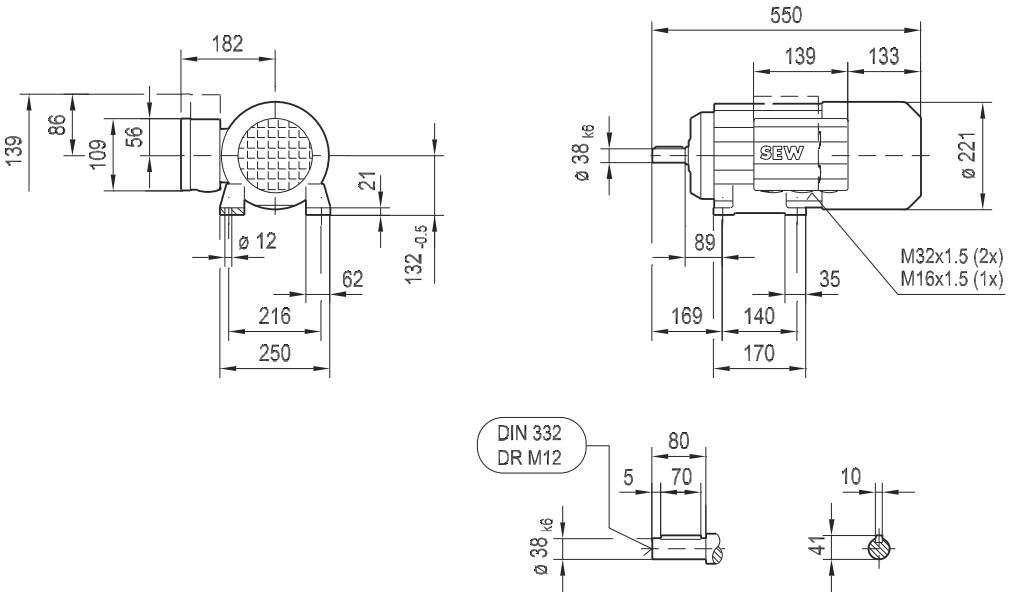

CFV132S / ES2S

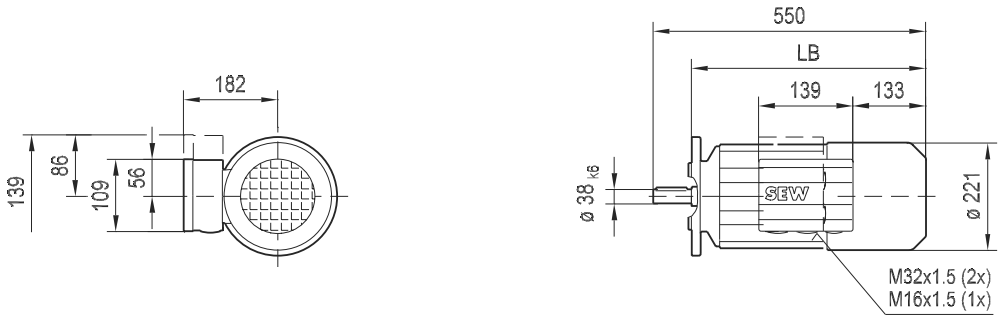

ø 250 (FF215)

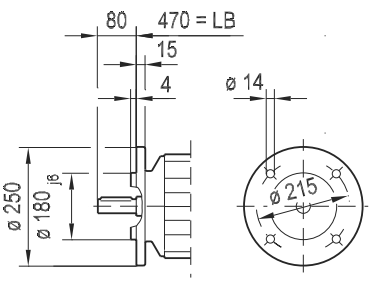

ø 300 IEC (FF265)

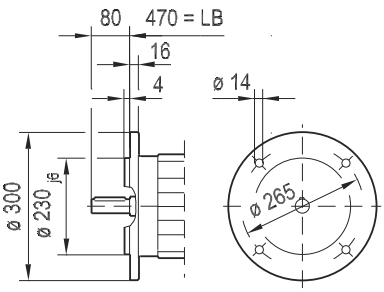

ø 350 (FF300)

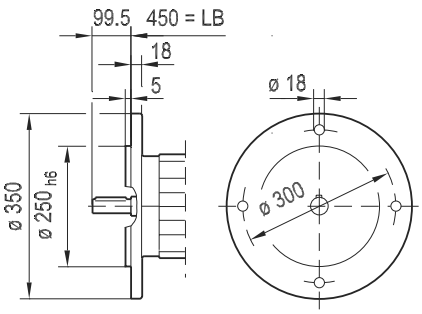

C(F)V132S / ES2S

08 059 00 04
2 (2)

/ A.B.

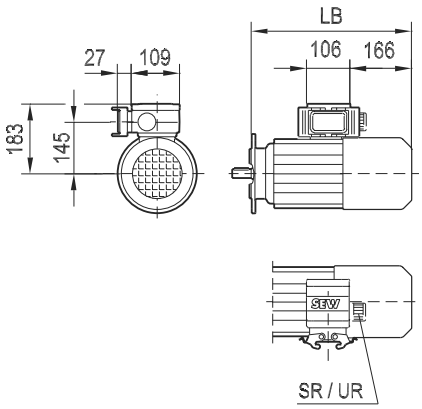

/ A.E.

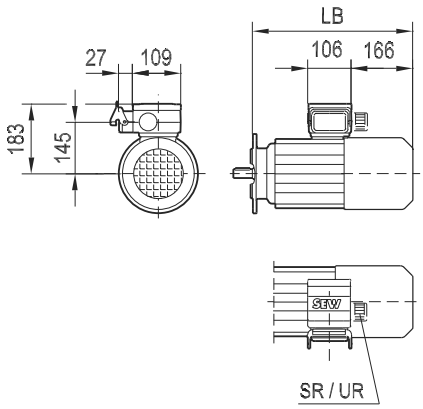

/ IS

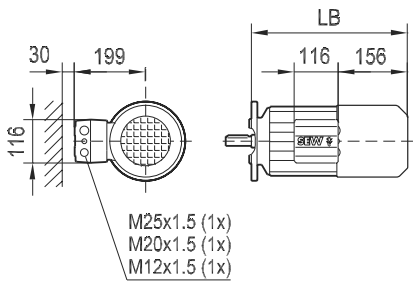

/ VR : X = 65
/ EV1. / VR : X = 195
/ AV1. / VR : X = 195

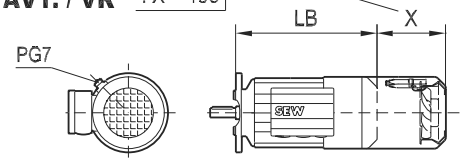

/ EV1.

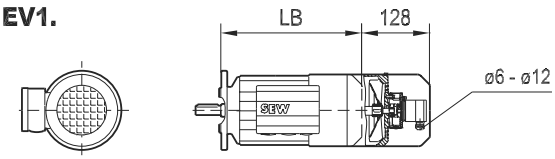

/ AV1.

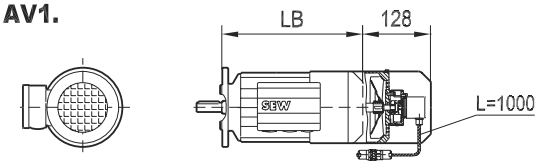

/ EV1. / VS : X = 261
/ AV1. / VS : X = 261

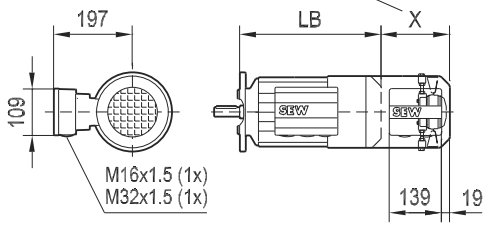

CV132S / ES2S / BMG

09 049 00 04
1 (2)

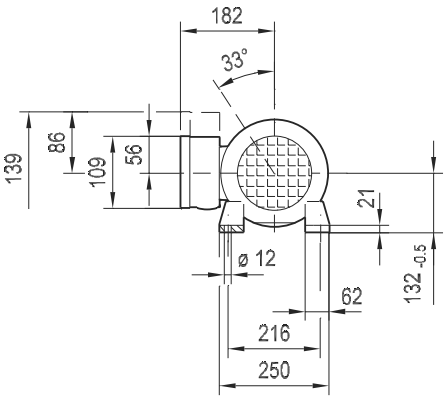

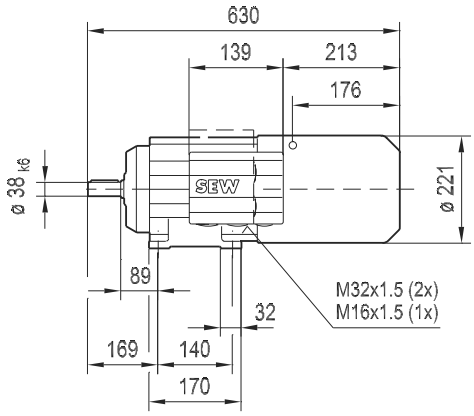

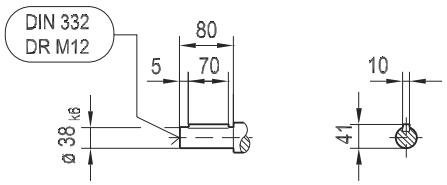

CFV132S / ES2S / BMG

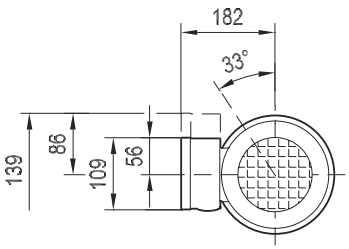

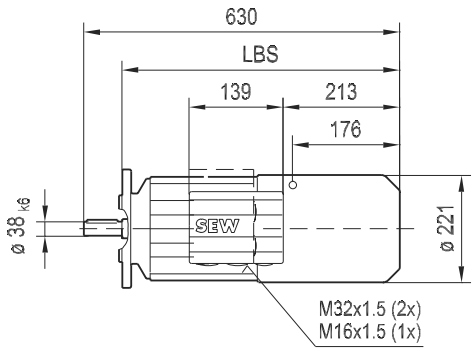

ø 250 (FF215)

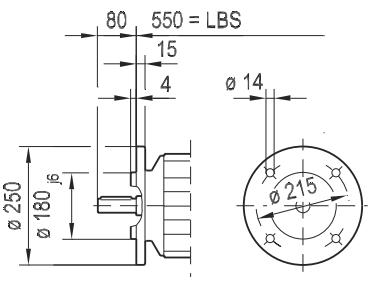

ø 300 IEC (FF265)

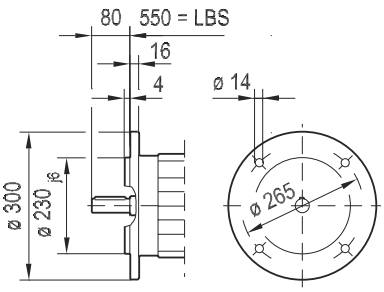

ø 350 (FF300)

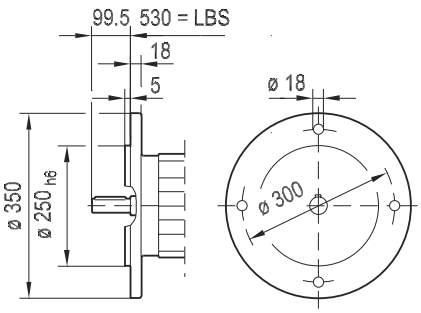

C(F)V132S / ES2S / BMG

09 049 00 04
2 (2)

/ A.B.

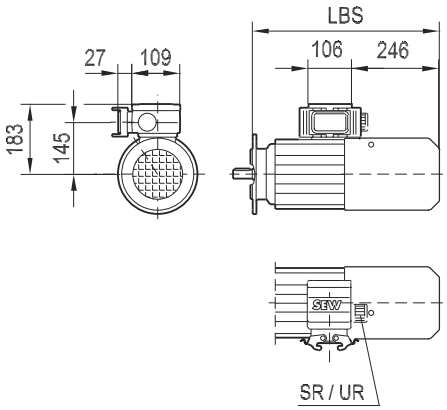

/ A.E.

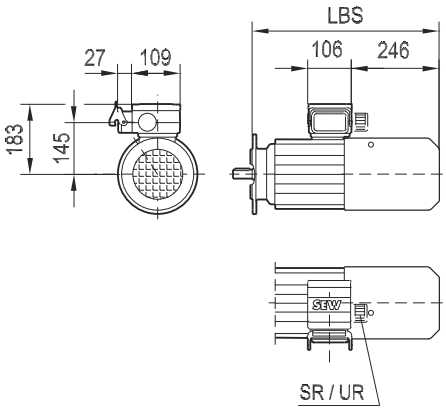

/ IS

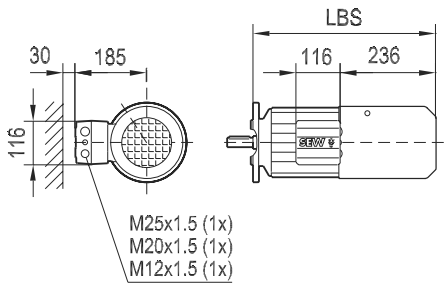

/ VR : X = 67
/ EV1. / VR : X = 115
/ AV1. / VR : X = 115

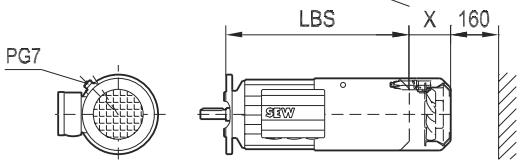

/ EV1.

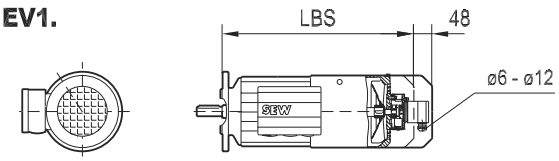

/ EV1. / VS : X = 181
/ AV1. / VS : X = 181

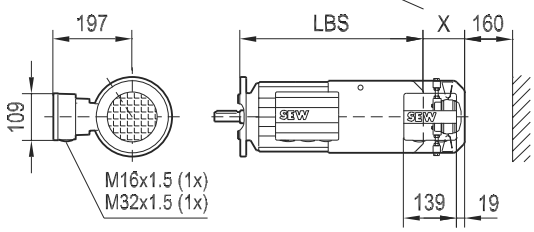

/ AV1.

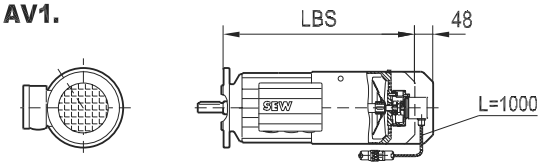

CV132M / EV1S

08 060 00 04
1 (2)

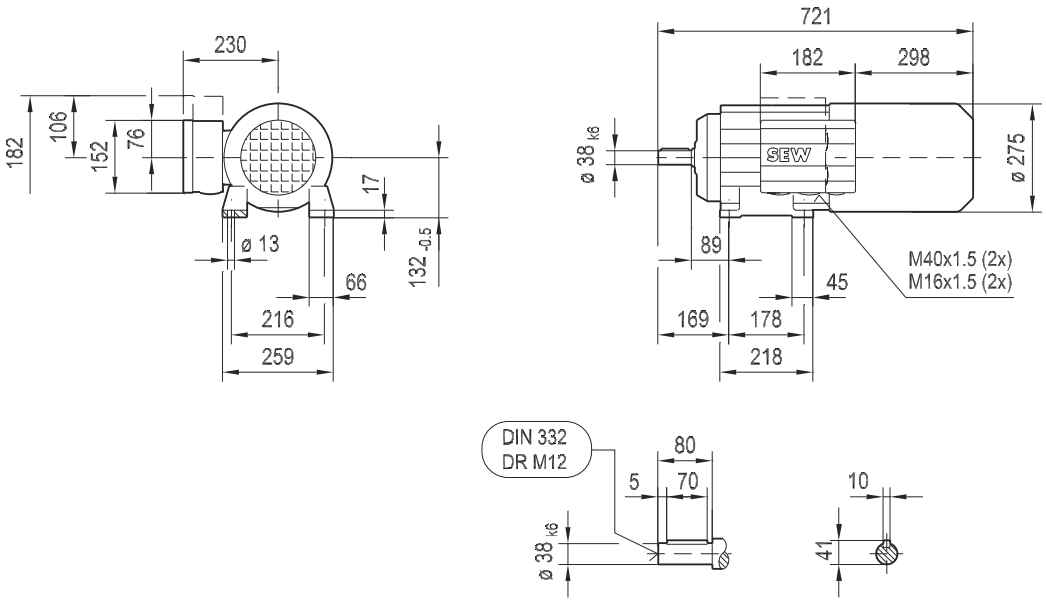

CFV132M / EV1S

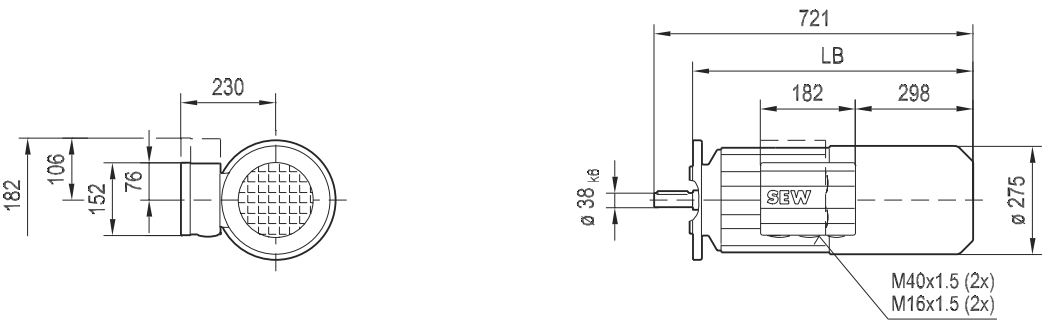

ø 250 (FF215)

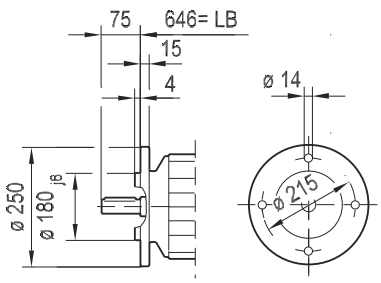

ø 300 IEC (FF265)

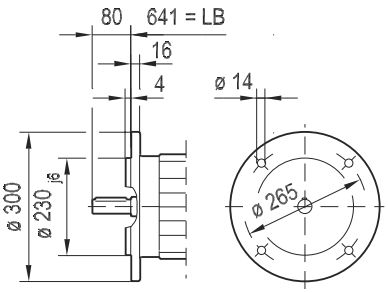

ø 350 (FF300)

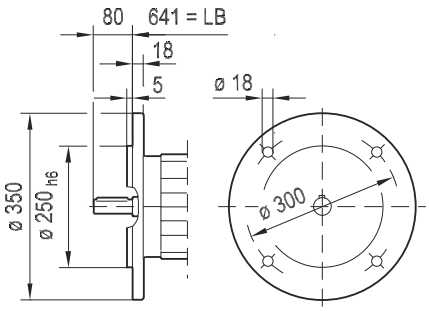

C(F)V132M / EV1S

08 060 00 04
2 (2)

/ A.B.

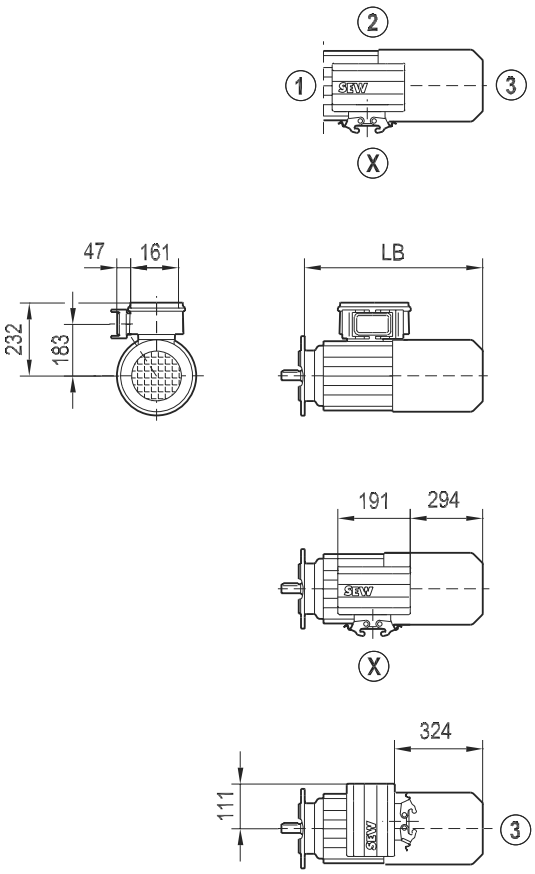

/ A.E.

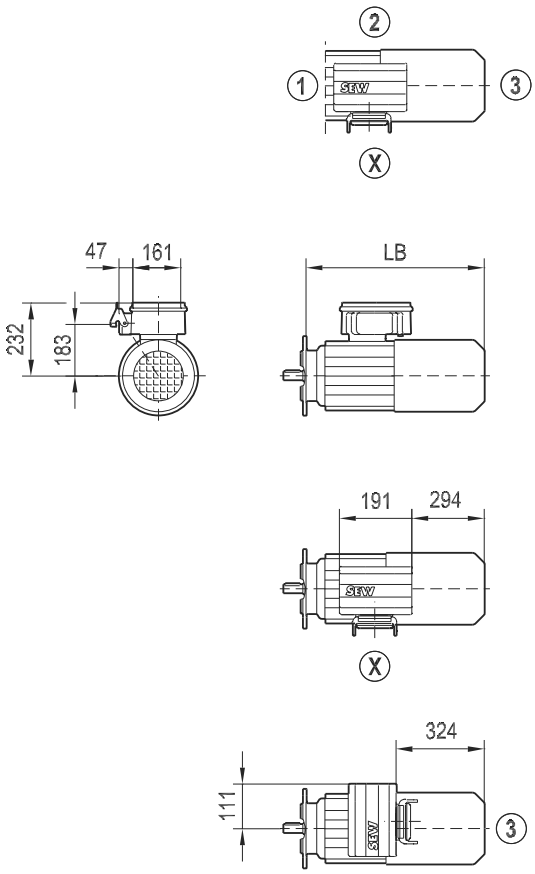

/ AV1.

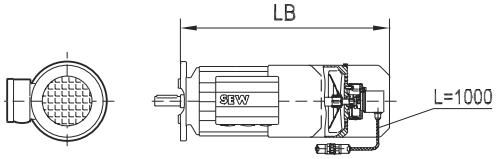

/ V

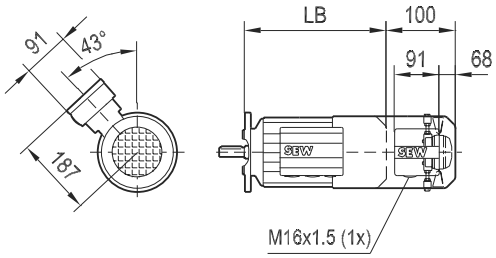

CV132M / EV1S / BM

09 050 00 04
1 (2)

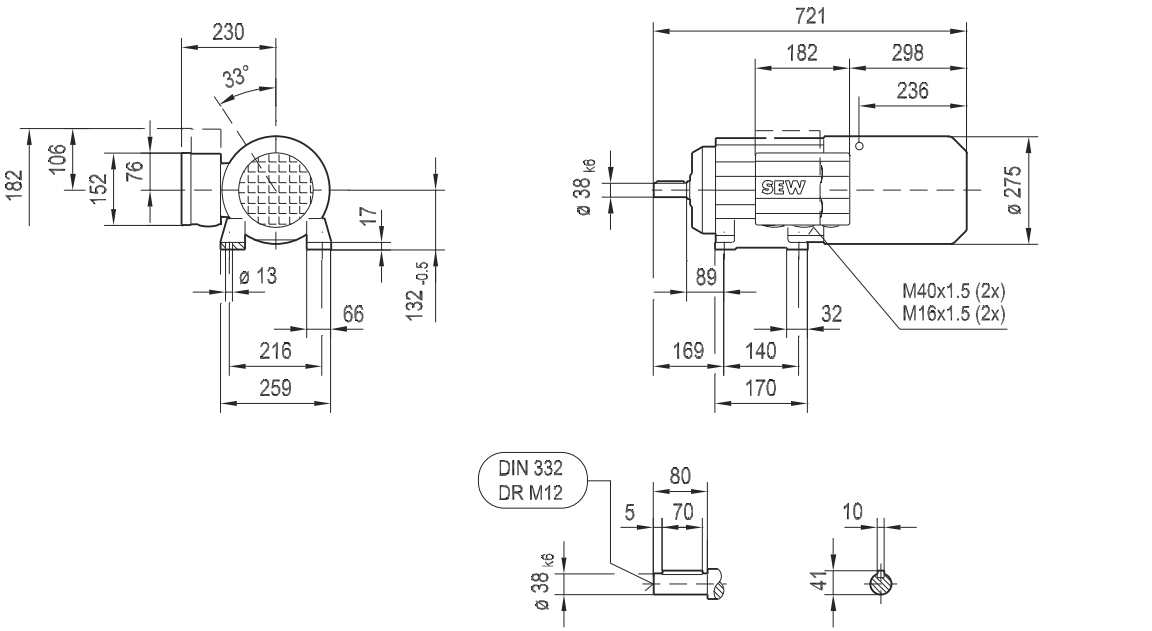

CFV132M / EV1S / BM

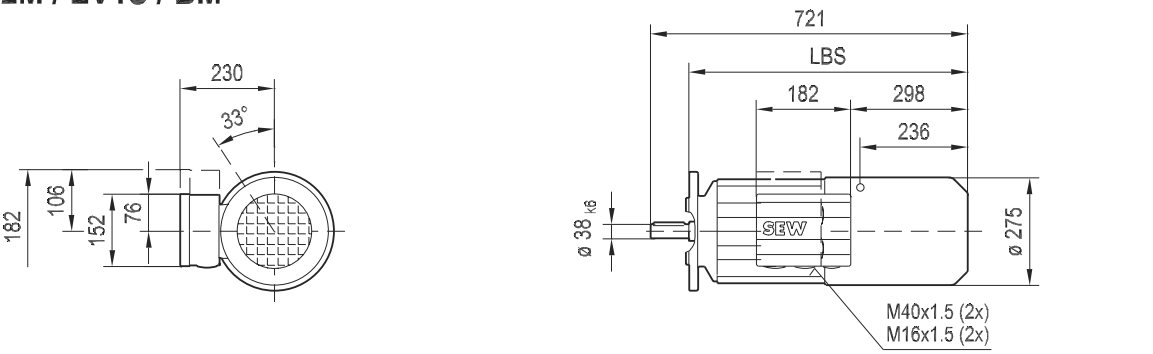

ø 250 (FF215)

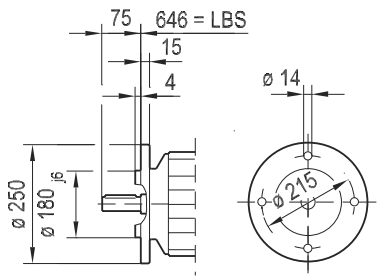

ø 300 IEC (FF265)

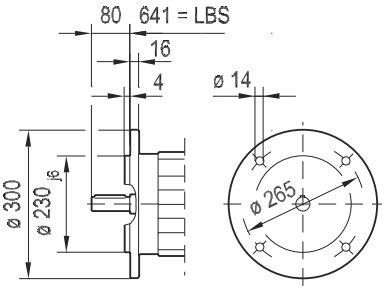

ø 350 (FF300)

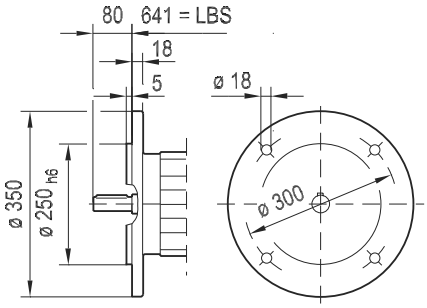

C(F)V132M / EV1S / BM

09 050 00 04
2 (2)

/ A.B.

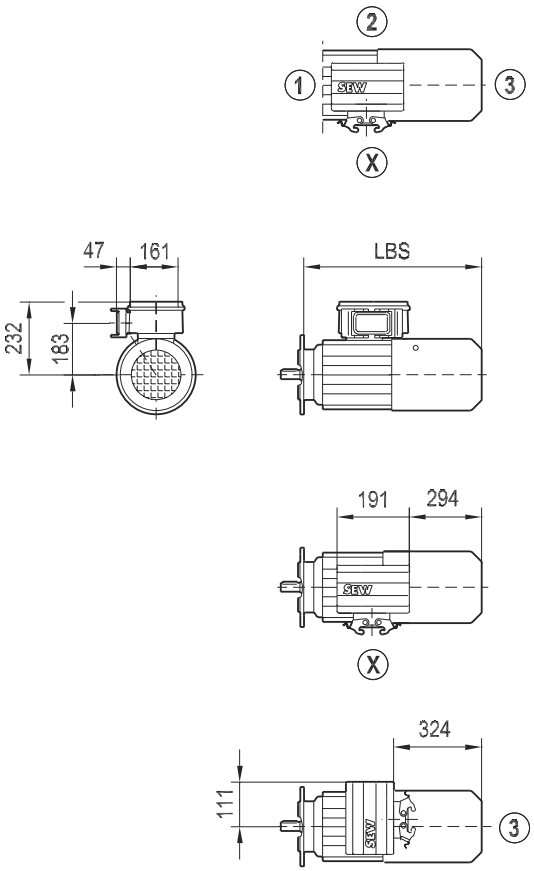

/ A.E.

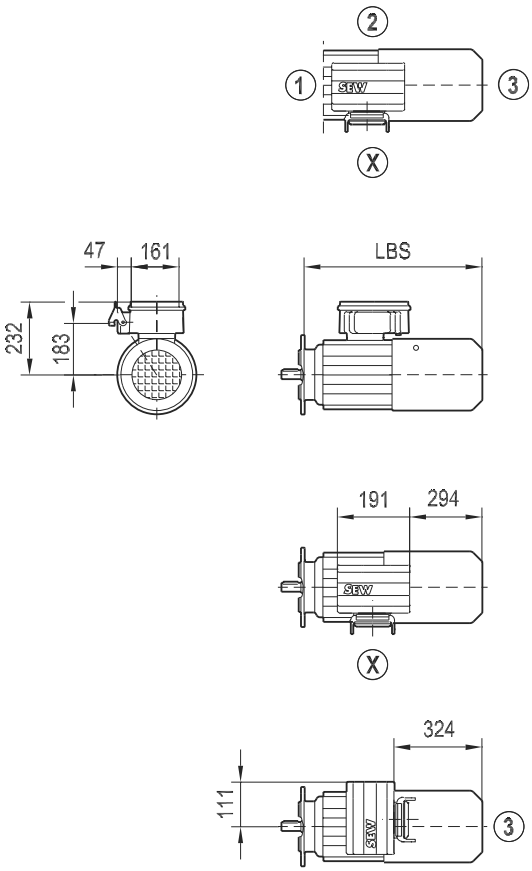

/ AV1.

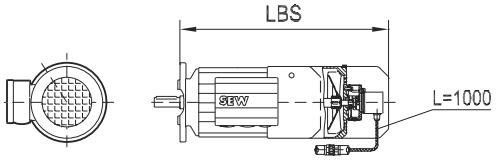

/ V

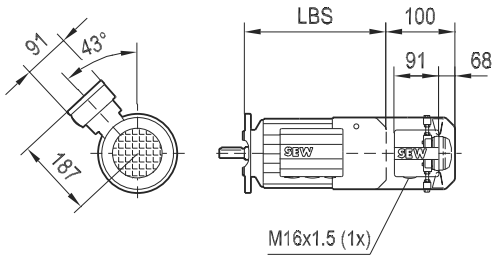

CV132ML / EV1S

08 061 00 04
1 (2)

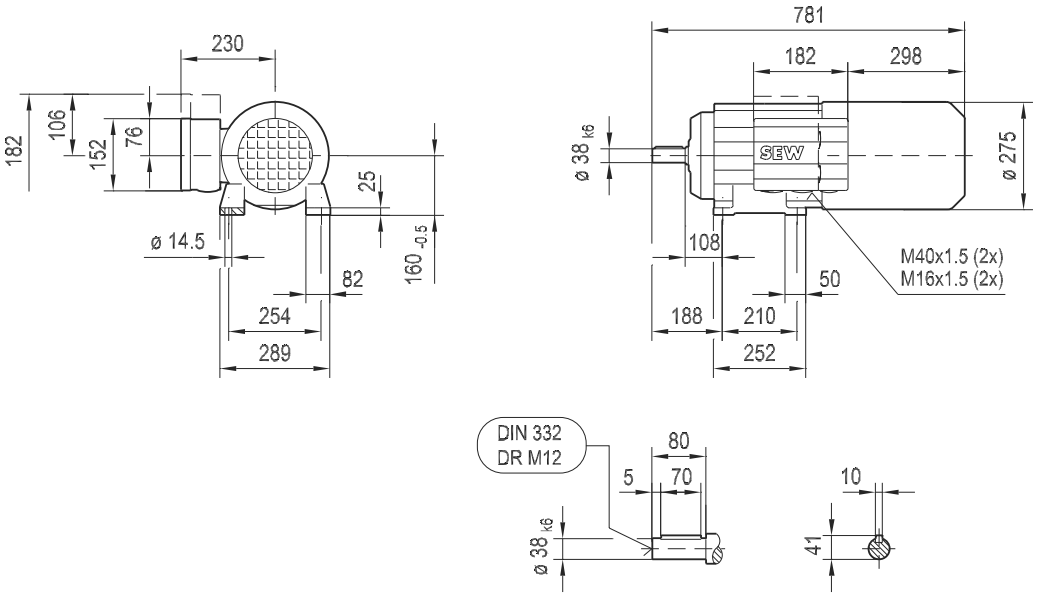

CFV132ML / EV1S

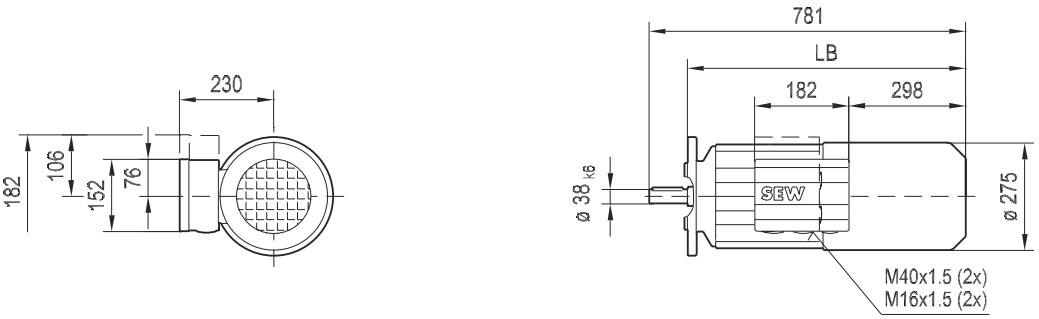

ø 300 IEC (FF265)

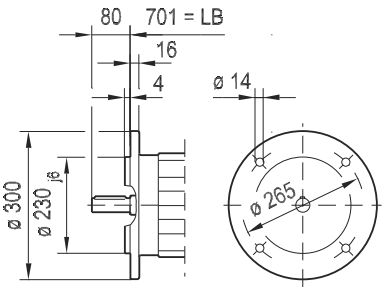

ø 350 (FF300)

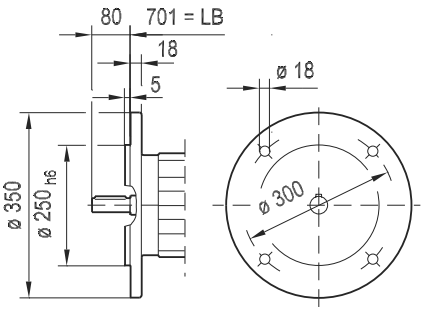

C(F)V132ML / EV1S

08 061 00 04
2 (2)

/ A.B.

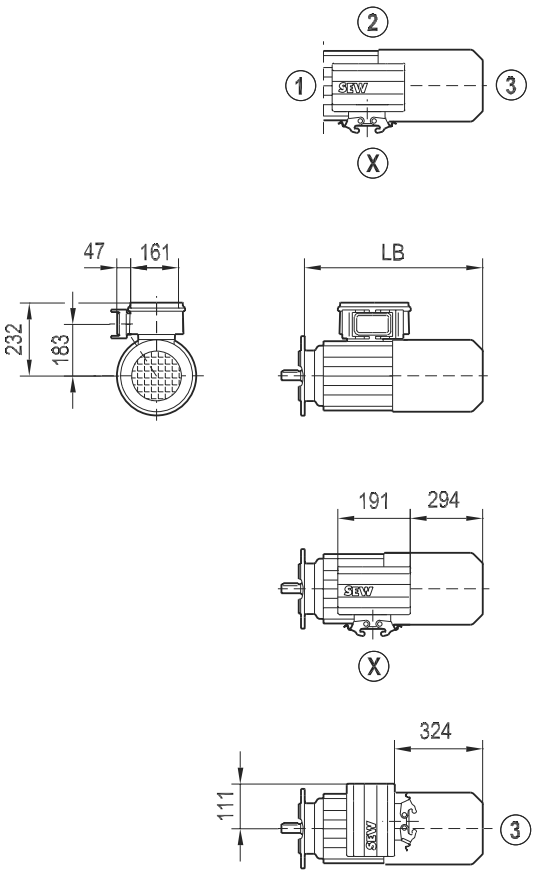

/ A.E.

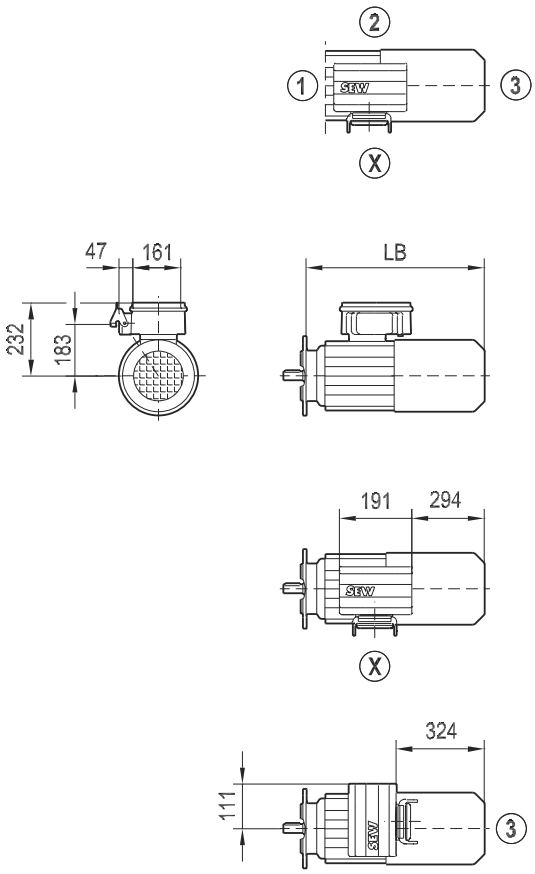

/ AV1.

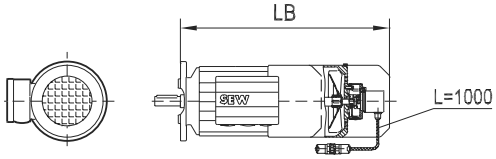

/ V

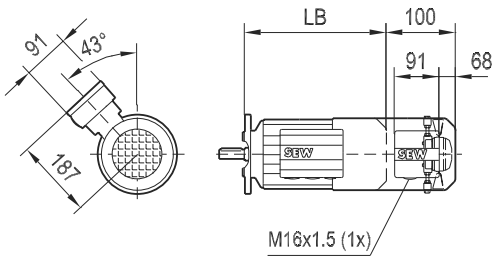

CV132ML / EV1S / BM

09 051 00 04
1 (2)

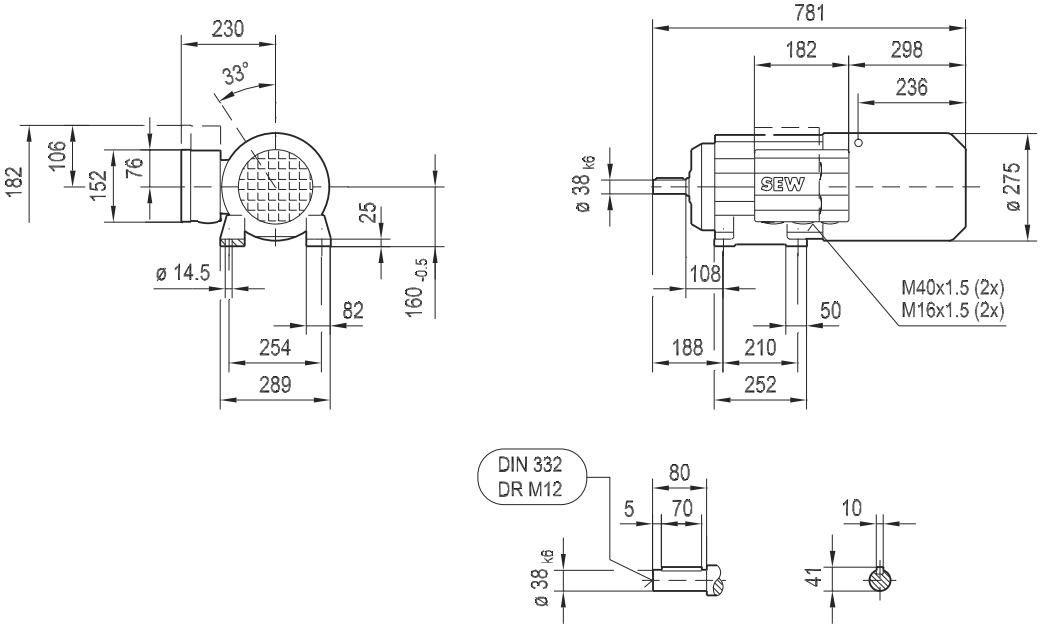

CFV132ML / EV1S / BM

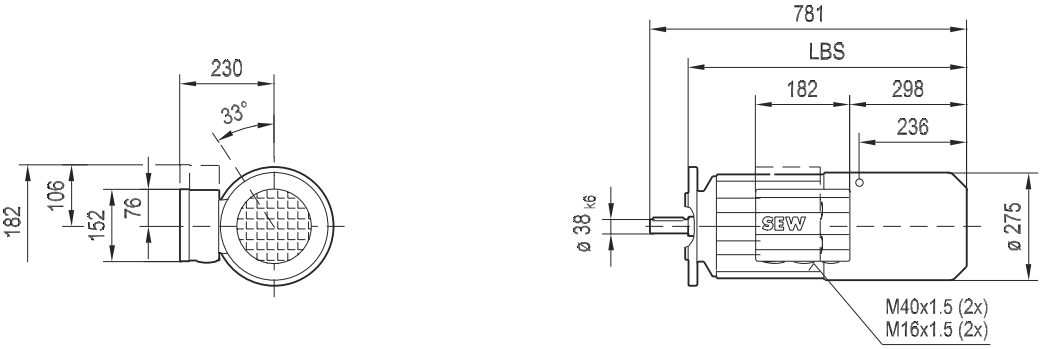

ø 300 IEC (FF265)

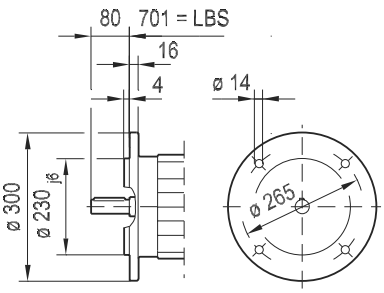

ø 350 (FF300)

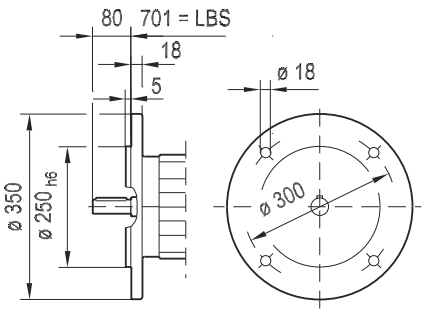

C(F)V132ML / EV1S / BM

09 051 00 04
2 (2)

/ A.B.

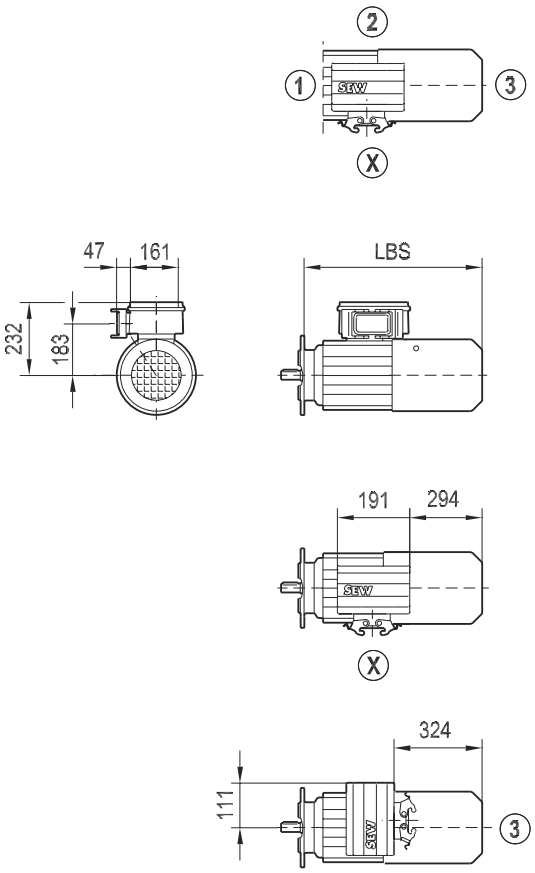

/ A.E.

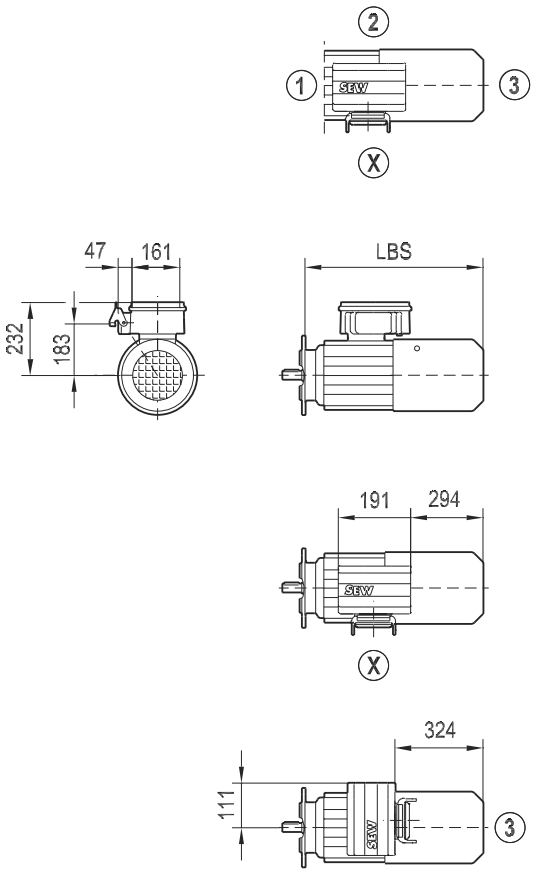

/ AV1.

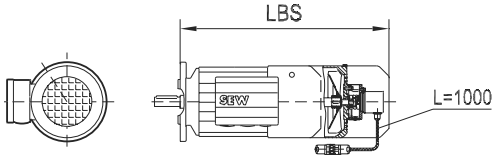

/ V

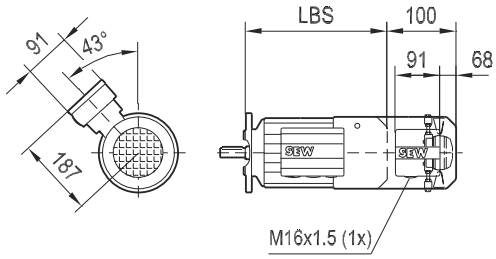

CV160M / EV1S

08 062 00 04
1 (2)

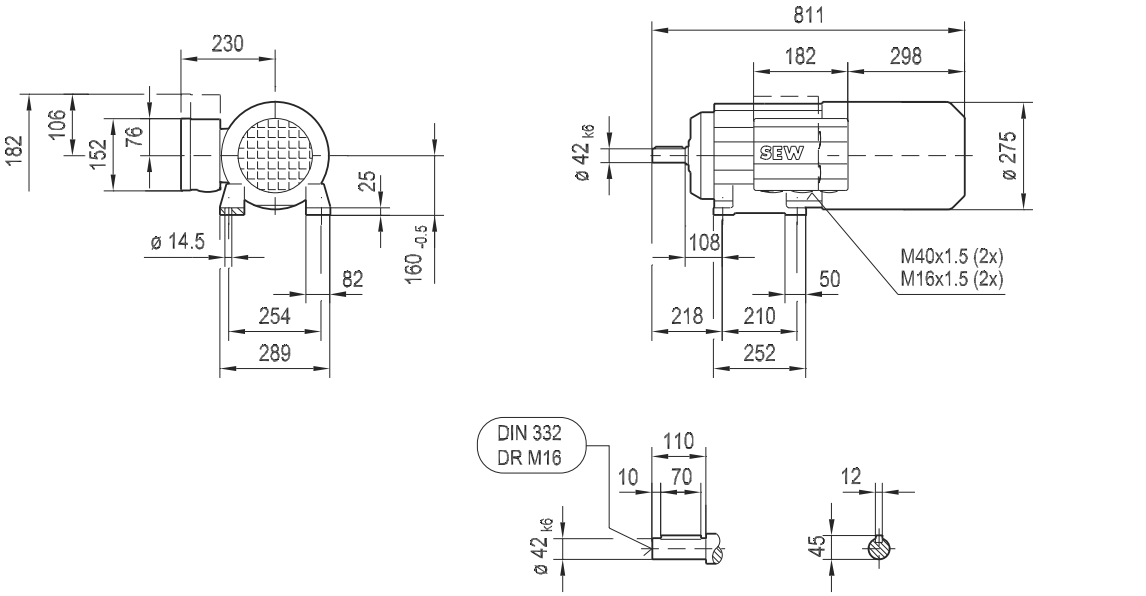

CFV160M / EV1S

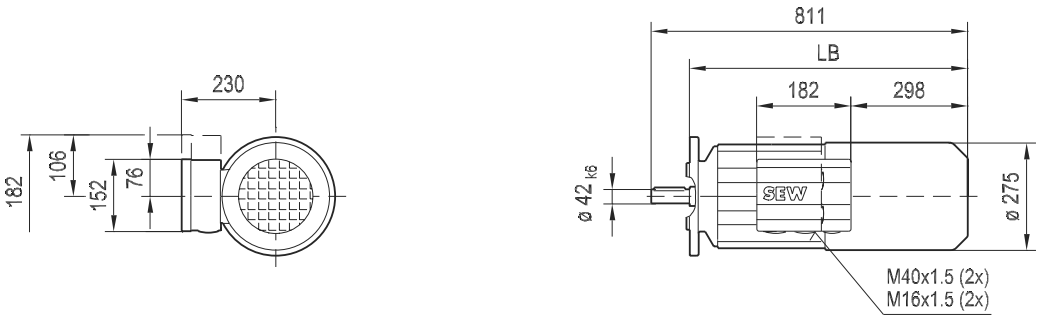

ø 300 (FF265)

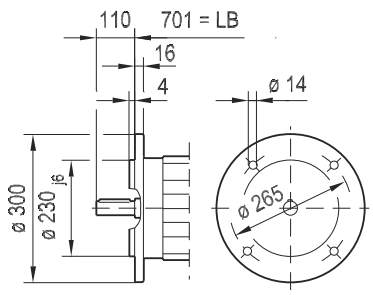

ø 350 IEC (FF300)

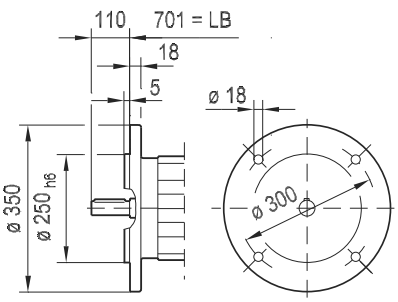

ø 450 (FF400)

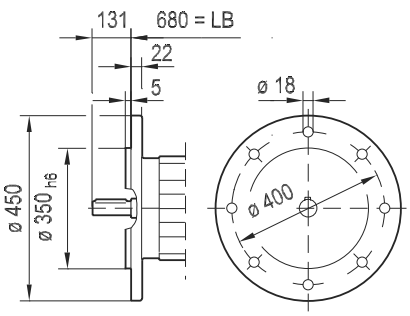

C(F)V160M / EV1S

08 062 00 04
2 (2)

/ A.B.

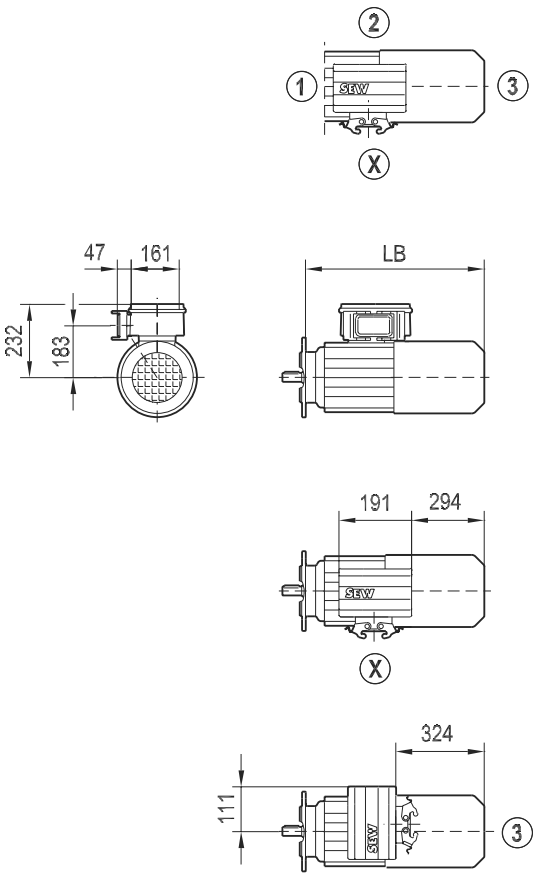

/ A.E.

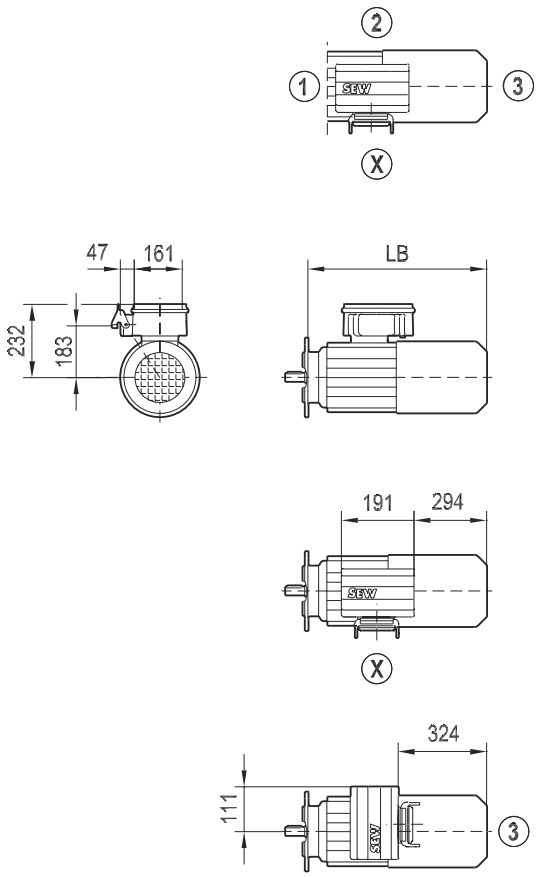

/ AV1.

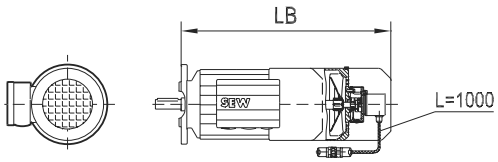

/ V

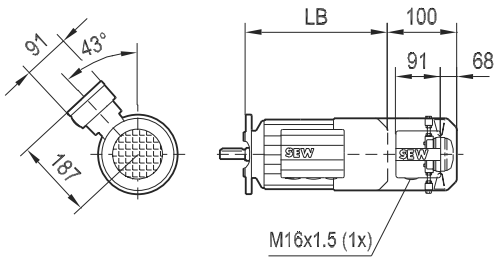

CV160M / EV1S / BM

09 052 00 04
1 (2)

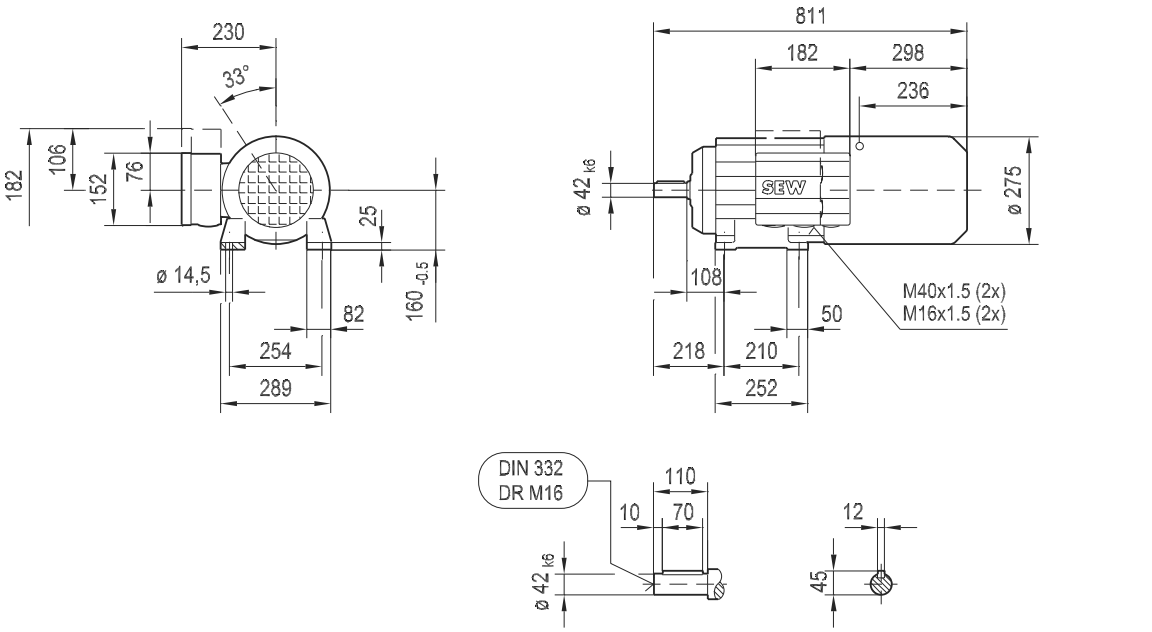

CFV160M / EV1S / BM

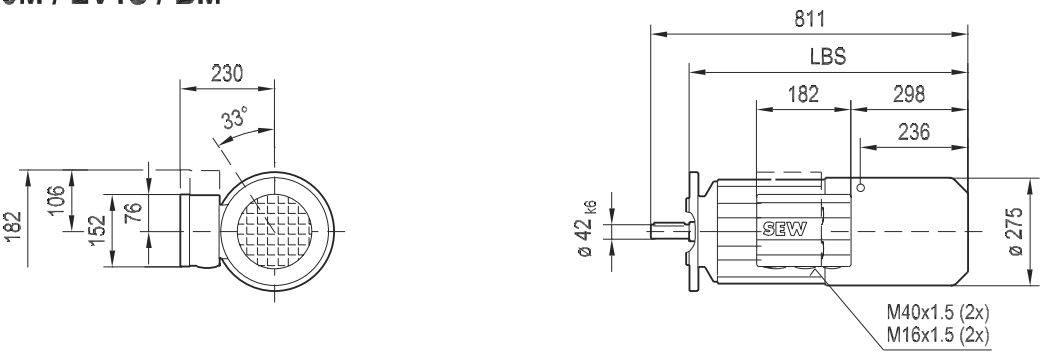

ø 300 (FF265)

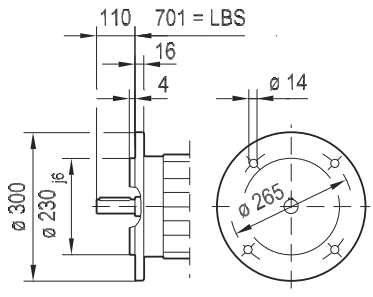

ø 350 IEC (FF300)

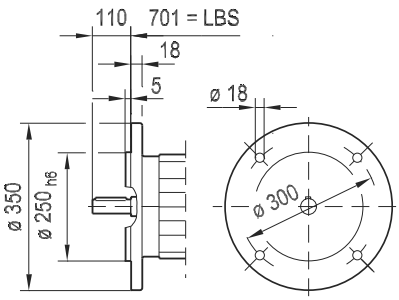

ø 450 (FF400)

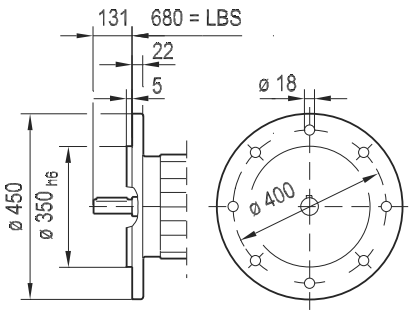

C(F)V160M / EV1S / BM

09 052 00 04
2 (2)

/ A.B.

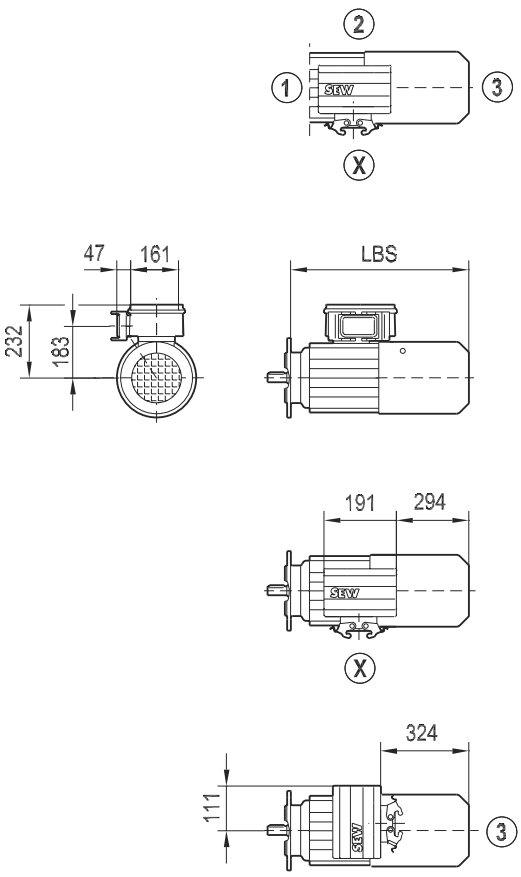

/ A.E.

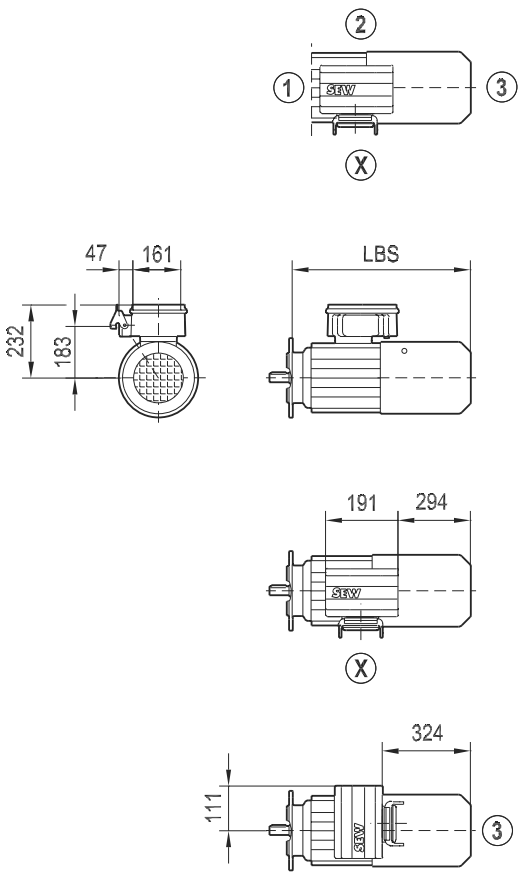

/ AV1.

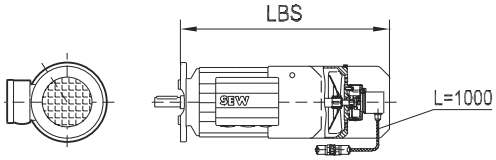

/ V

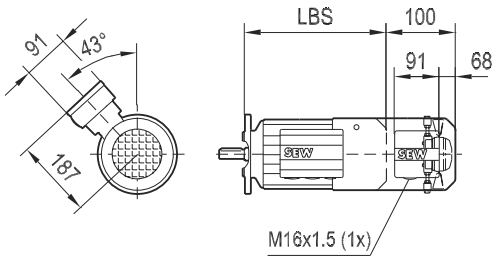

CV160L / EV1S

08 063 00 04
1 (2)

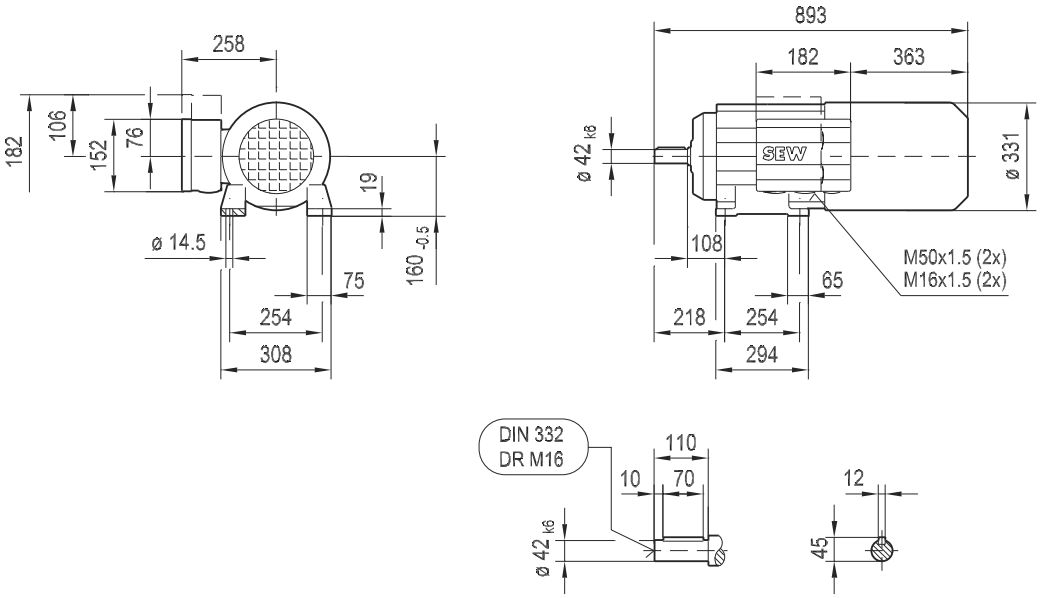

CFV160L / EV1S

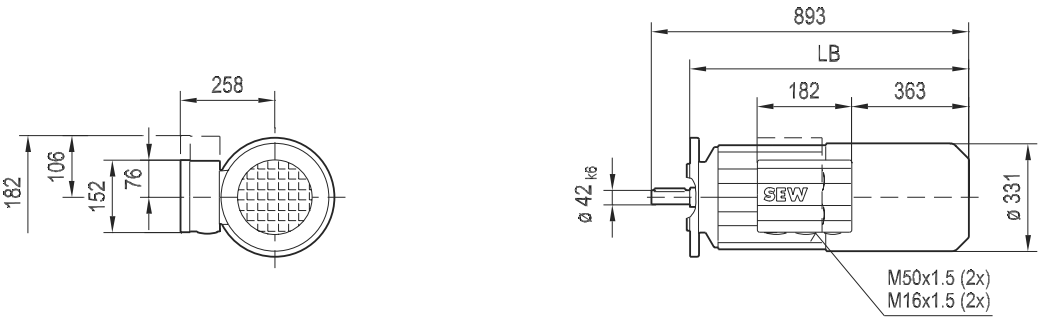

ø 300 (FF265)

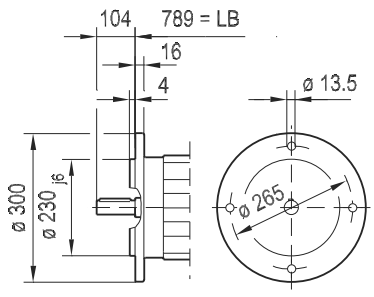

ø 350 IEC (FF300)

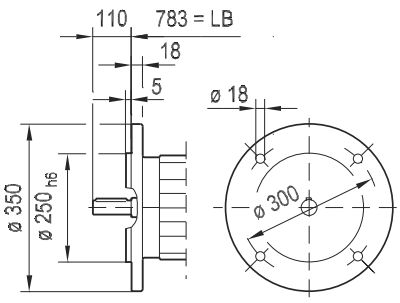

ø 450 (FF400)

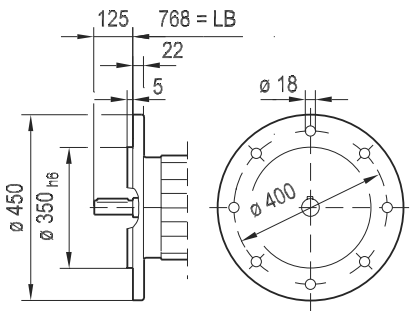

C(F)V160L / EV1S

08 063 00 04
2 (2)

/ A.B.

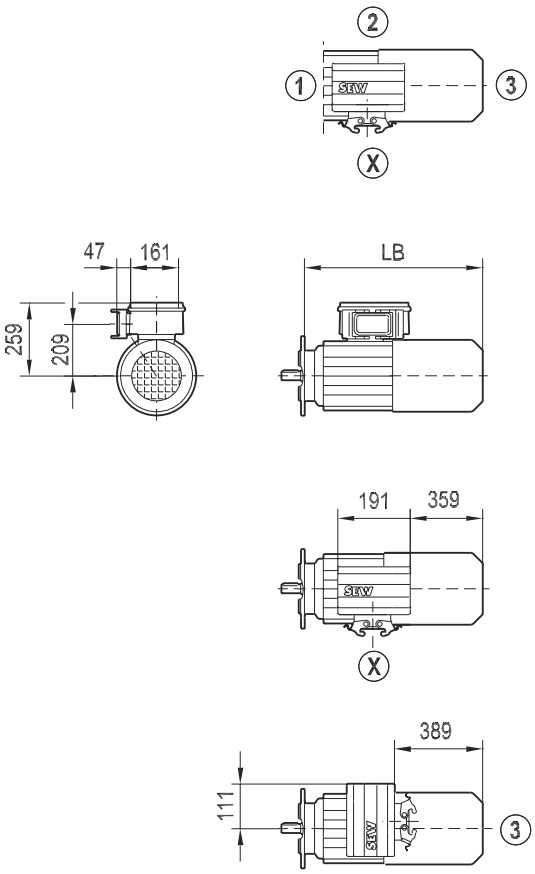

/ A.E.

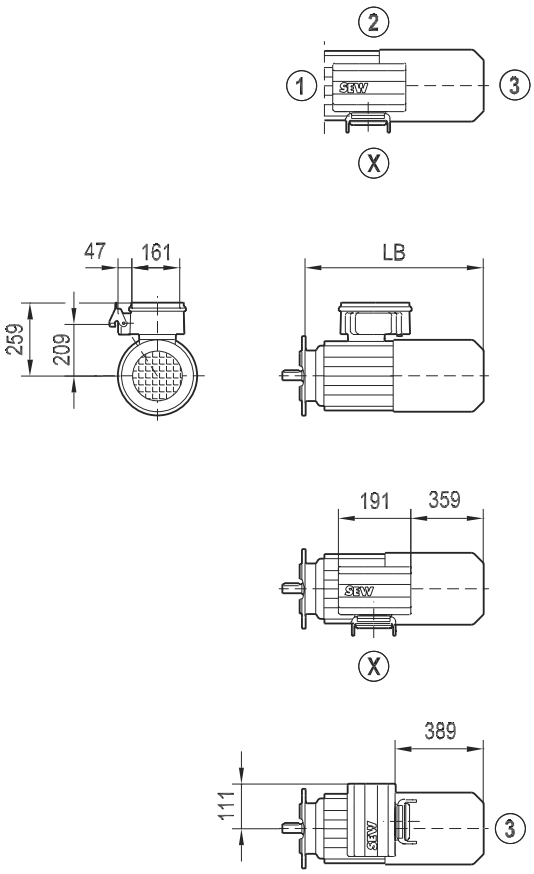

/ AV1.

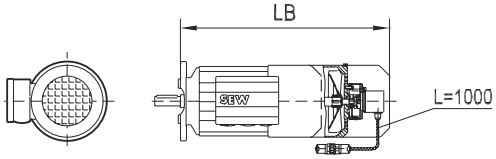

/ V

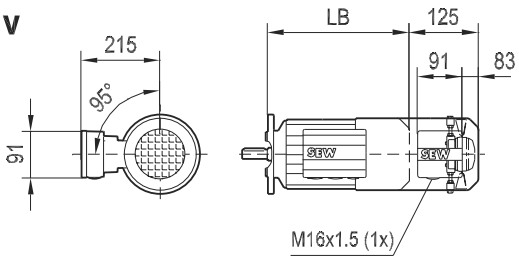

CV160L / EV1S / BM

09 053 00 04
1 (2)

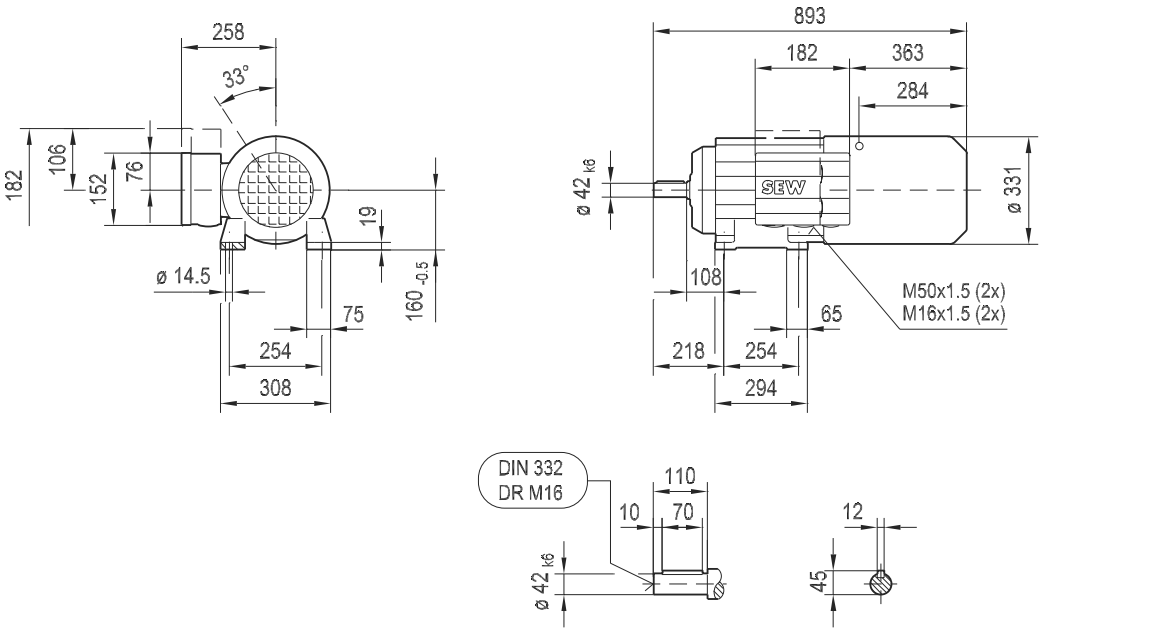

CFV160L / EV1S / BM

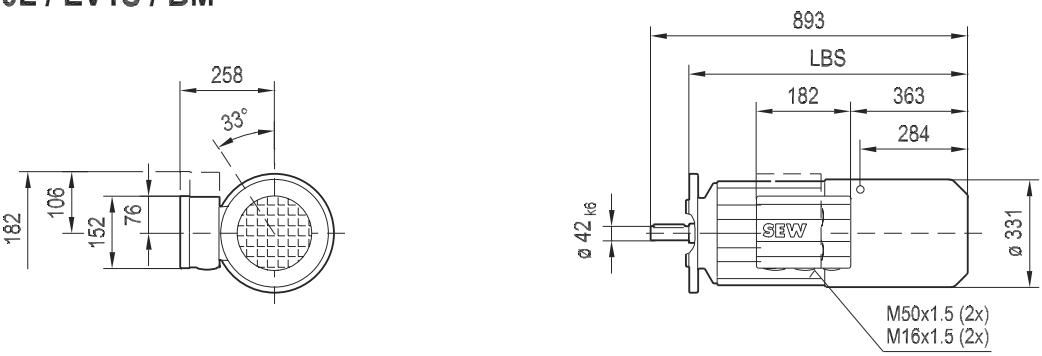

ø 300 (FF265)

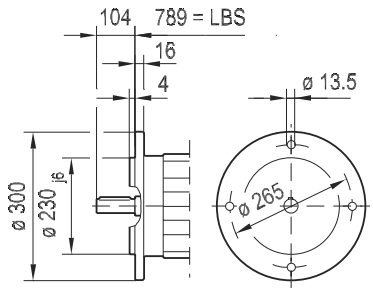

ø 350 IEC (FF300)

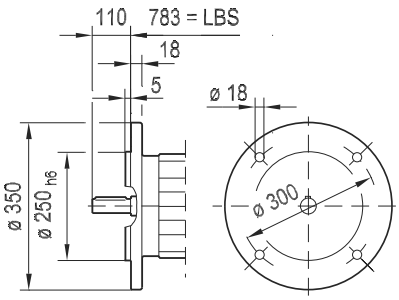

ø 450 (FF400)

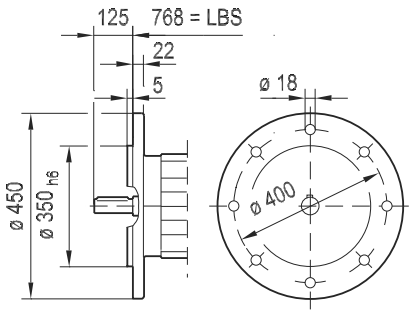

C(F)V160L / EV1S / BM

09 053 00 04
2 (2)

/ A.B.

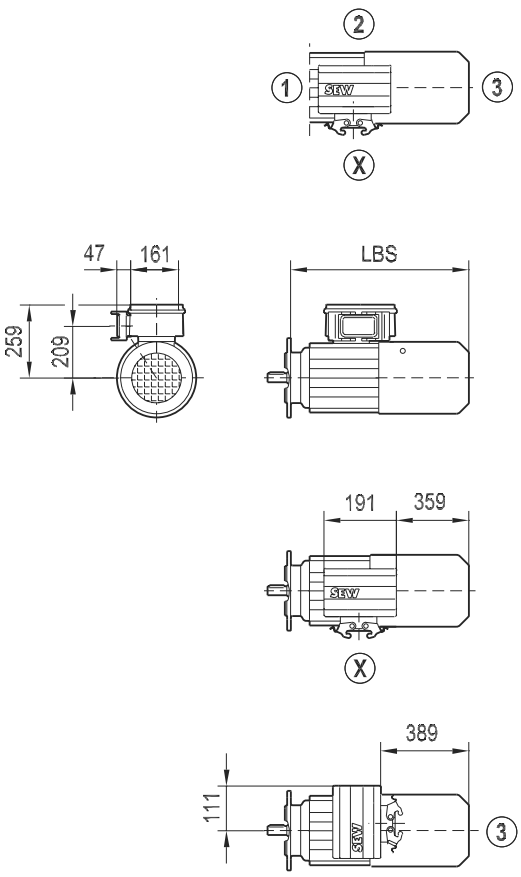

/ A.E.

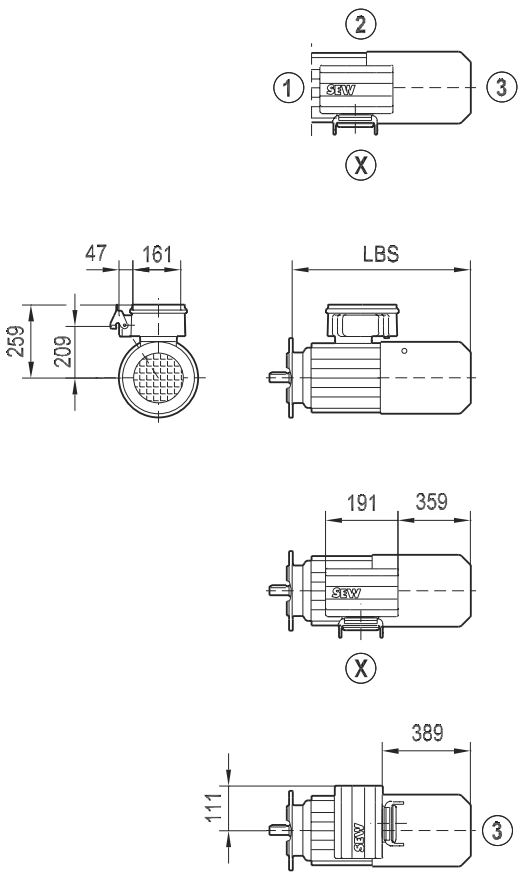

/ AV1.

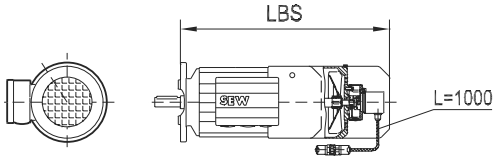

/ V

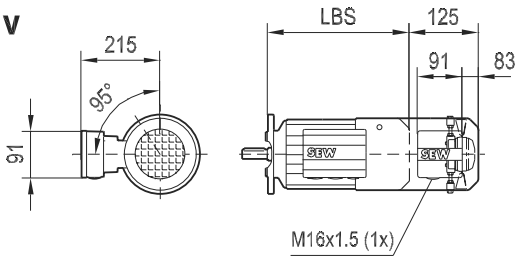

CV180 / EV1S

08 064 00 04
1 (2)

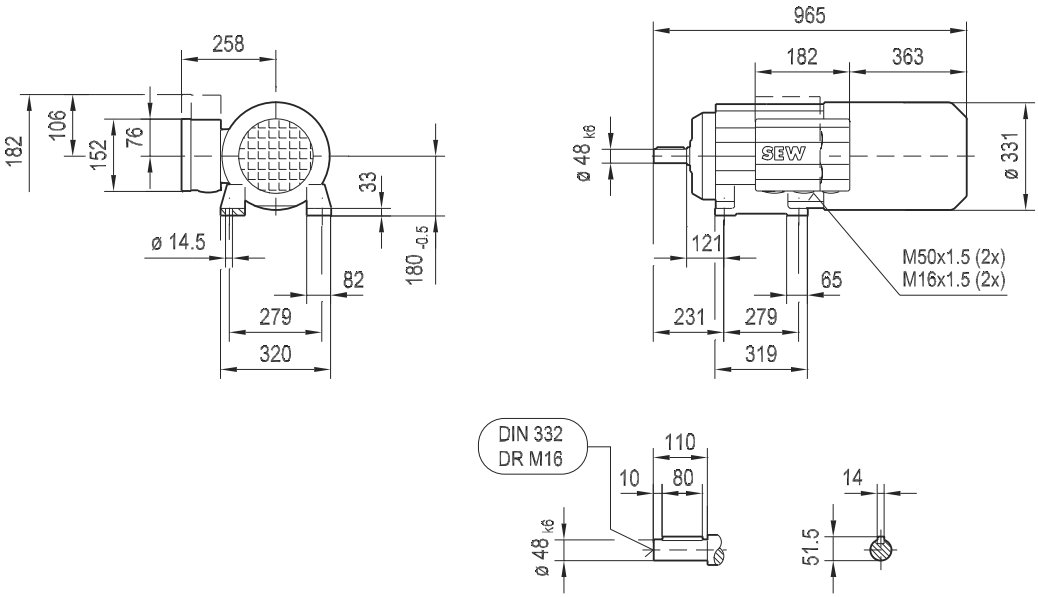

CFV180 / EV1S

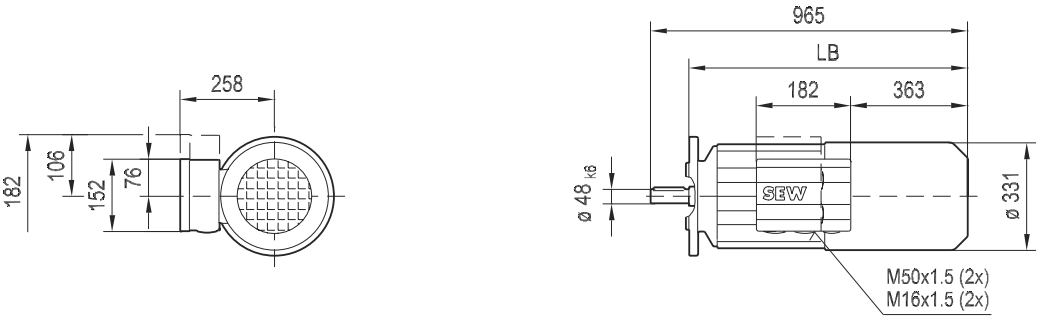

ø 300 (FF265)

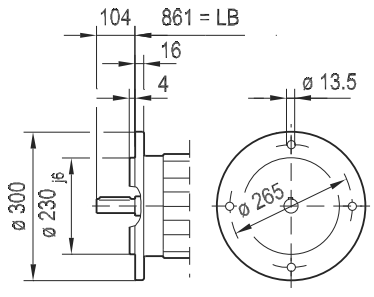

ø 350 IEC (FF300)

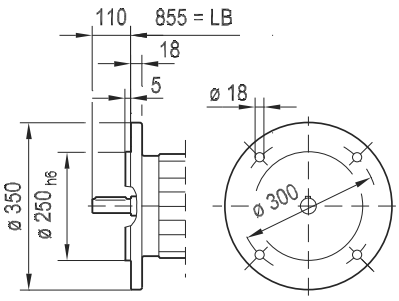

ø 450 (FF400)

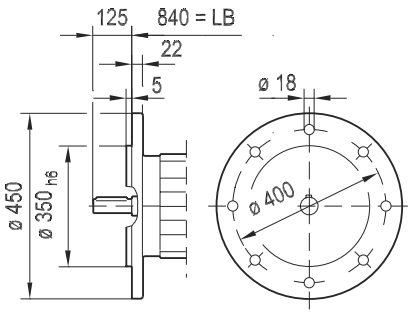

C(F)V180 / EV1S

08 064 00 04
2 (2)

/ A.B.

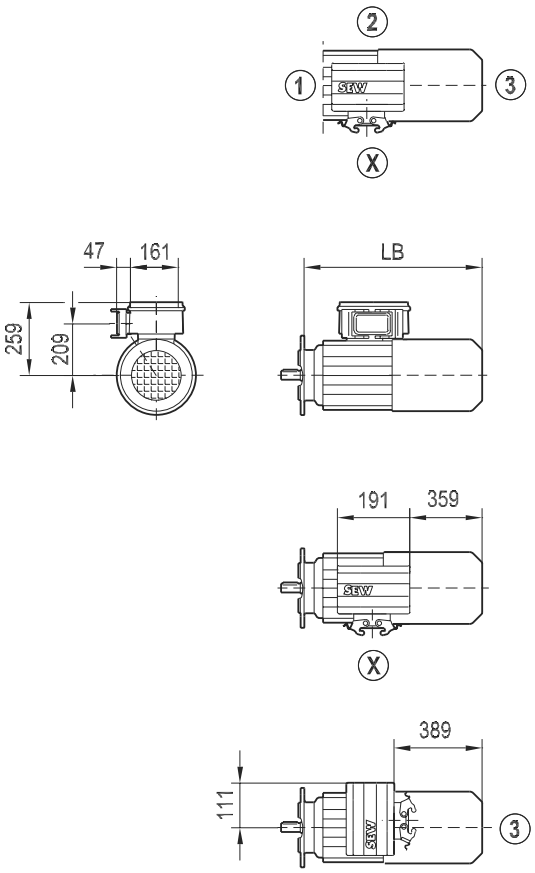

/ A.E.

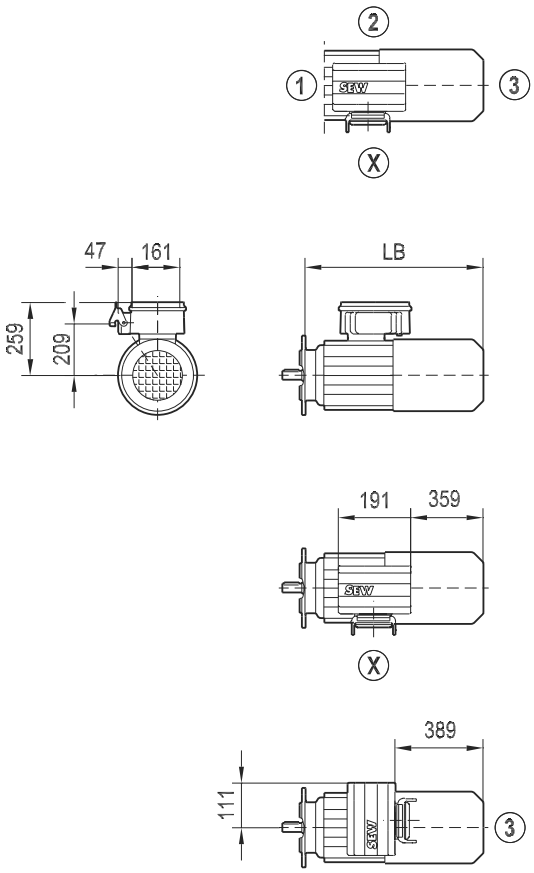

/ AV1.

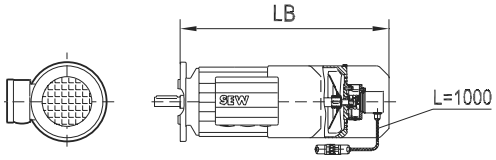

/ V

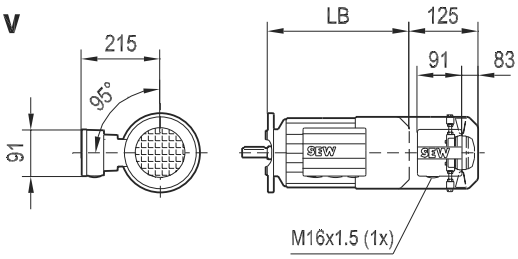

CV180 / EV1S / BM

09 054 00 04
1 (2)

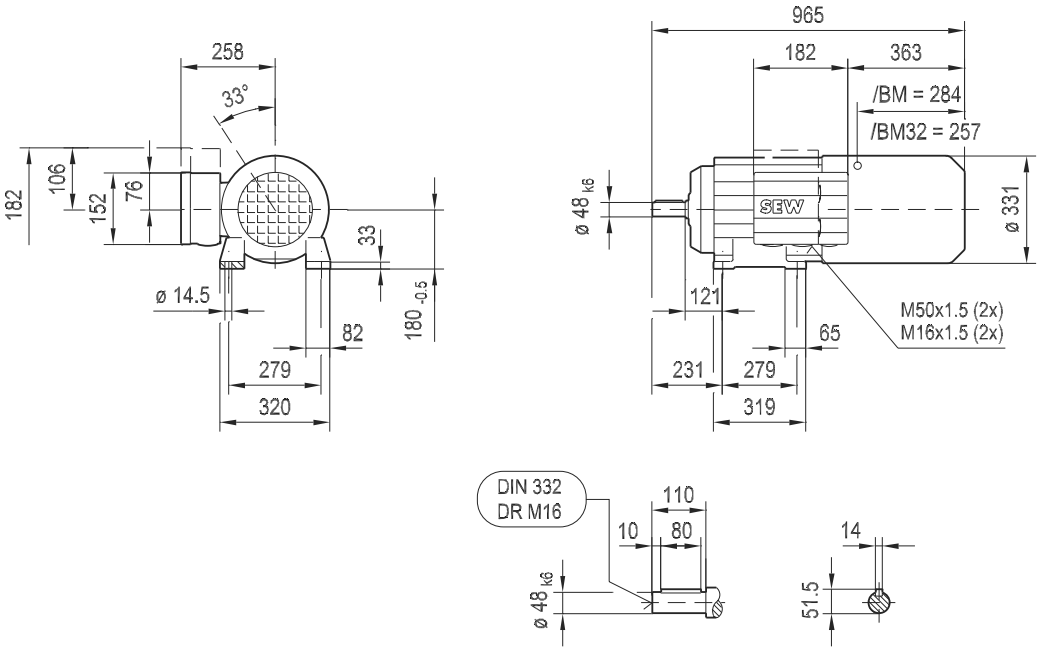

CFV180 / EV1S / BM

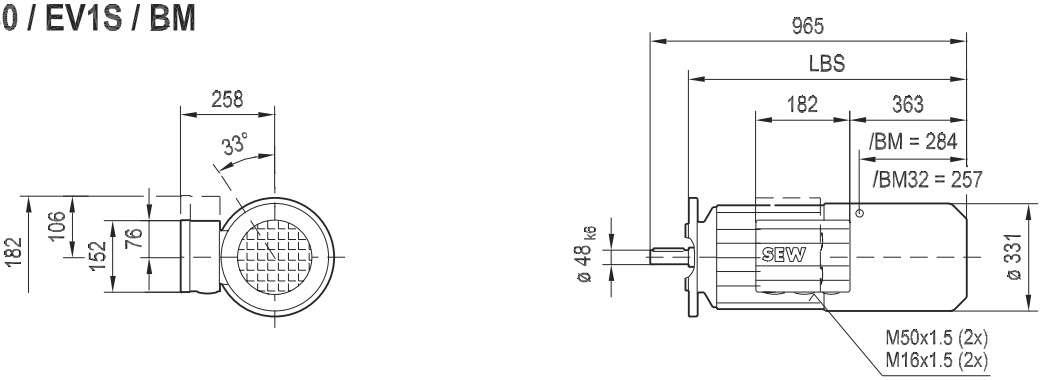

ø 300 (FF265)

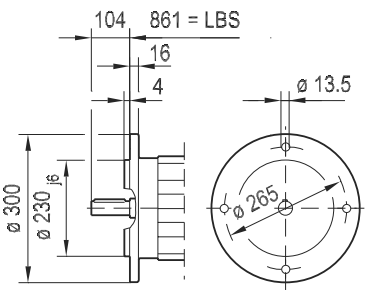

ø 350 IEC (FF300)

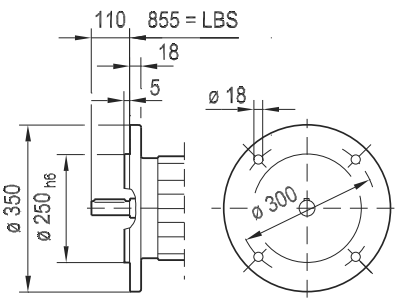

ø 450 (FF400)

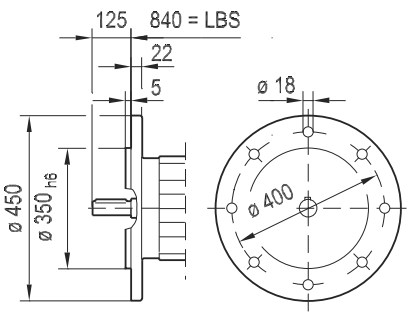

C(F)V180 / EV1S / BM

09 054 00 04
2 (2)

/ A.B.

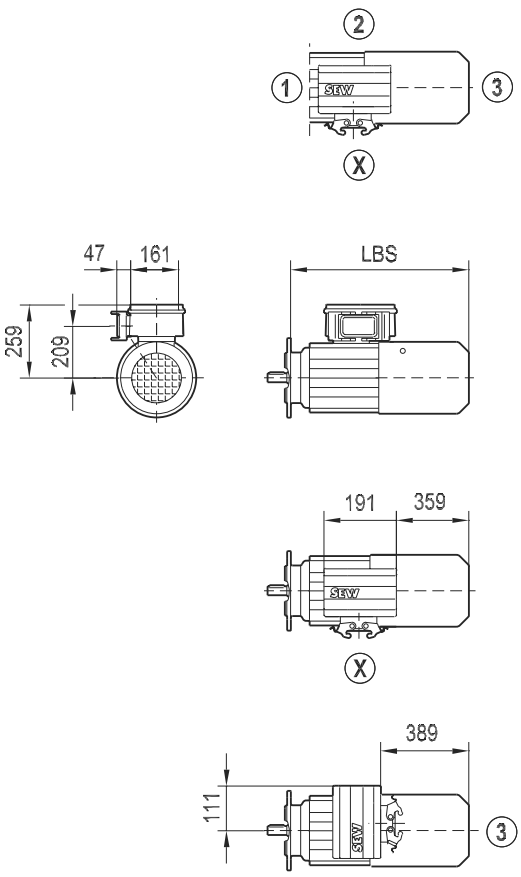

/ A.E.

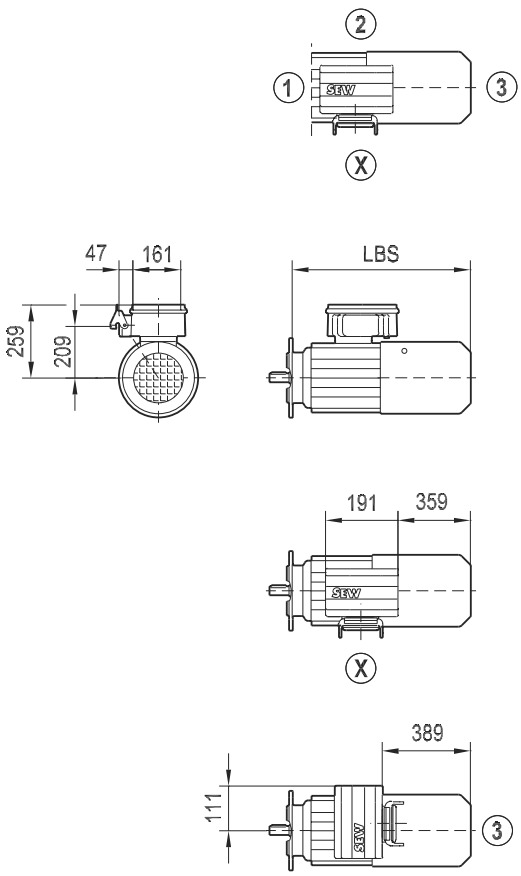

/ AV1.

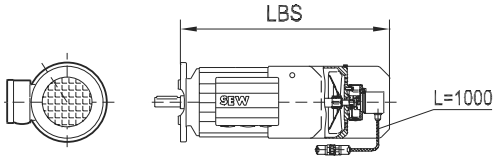

/ V

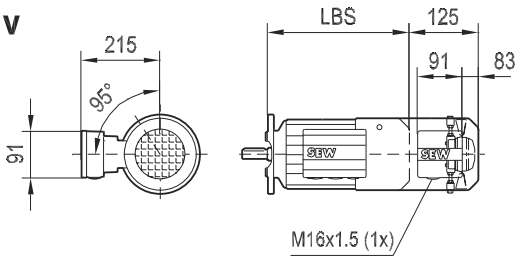

CV200 / EV1S

08 065 00 04
1 (2)

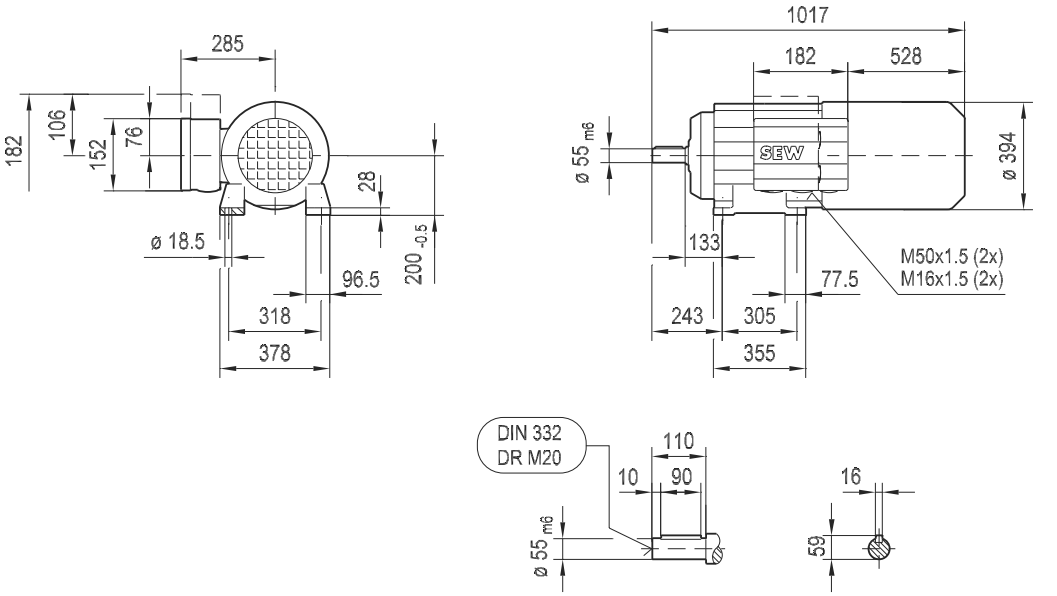

CFV200 / EV1S

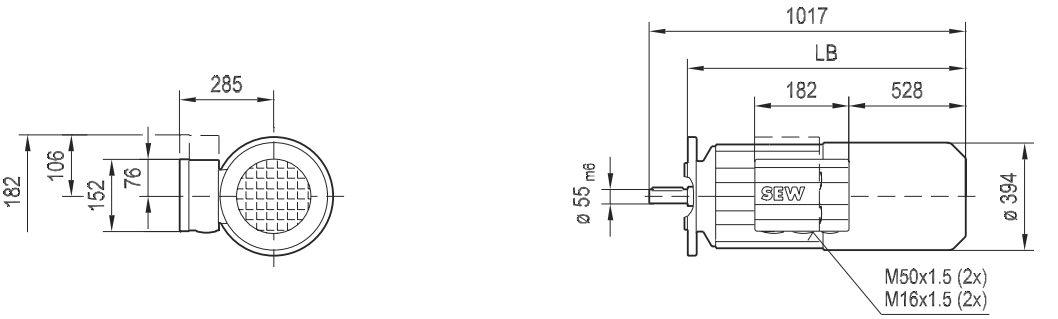

ø 350 (FF300)

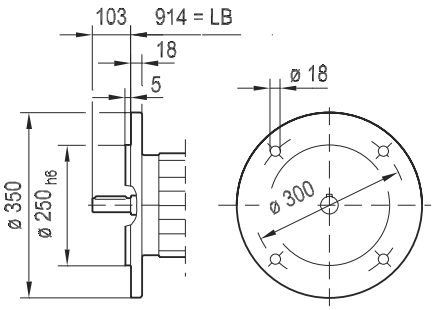

ø 400 IEC (FF350)

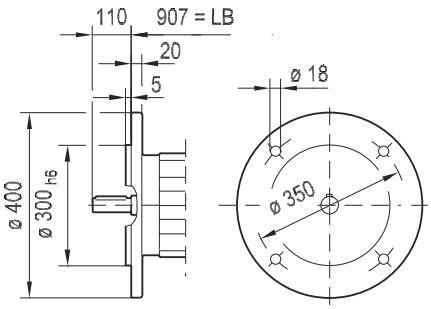

C(F)V200 / EV1S

08 065 00 04
2 (2)

/ AV1.

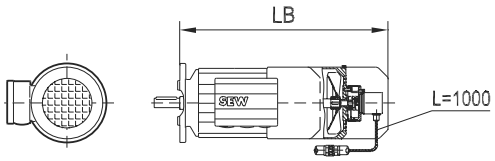

/ V

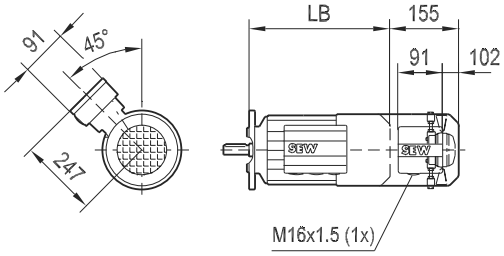

CV200 / EV1S / BM

09 055 00 04
1 (2)

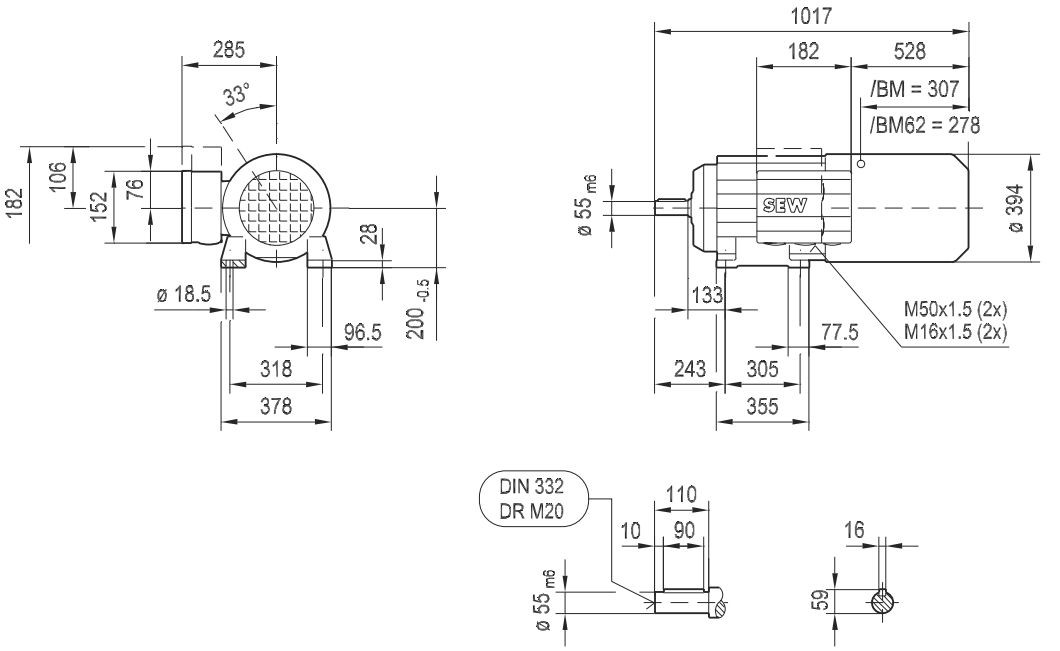

CFV200 / EV1S / BM

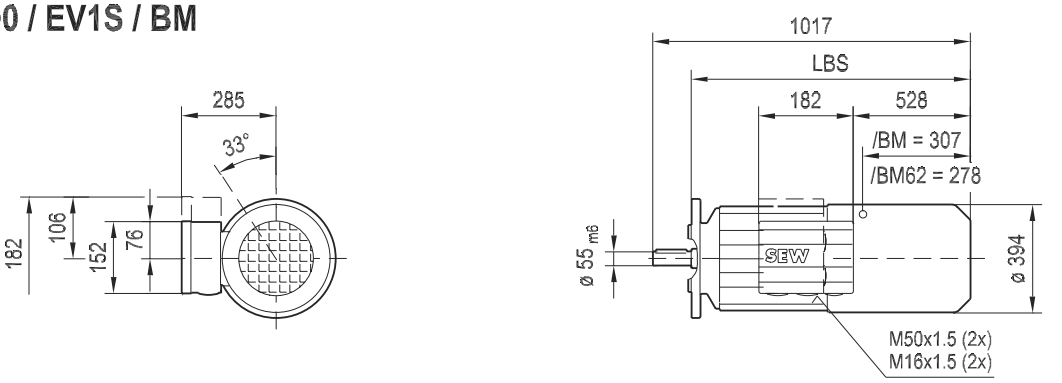

ø 350 (FF300)

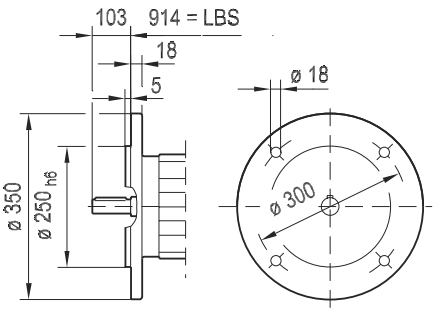

ø 400 IEC (FF350)

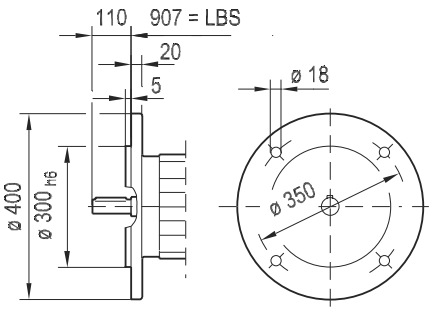

C(F)V200 / EV1S / BM

09 055 00 04
2 (2)

/ AV1.

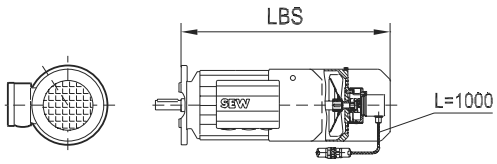

/ V

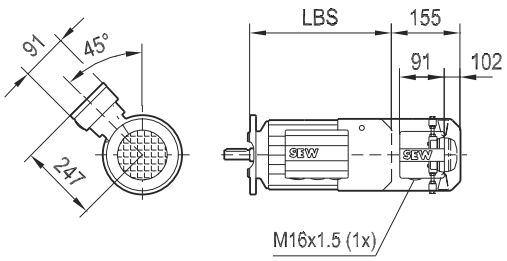

17 Appendix

17.1 Abbreviation key

a, b, e, f	Constants for converting overhung loads	[mm]
c	Constant for converting overhung load	[Nmm]
c_K	Pull-out rigidity	[Nm/ ']
c_T	Torsional rigidity	[Nm/ ']
d	Shaft diameter	[mm]
d_0	Average diameter of mounted transmission element	[mm]
cdf	Cyclic duration factor	%
f_D	Speed constant	[1/min]
f_K	Correction factor	–
f_N	Rated frequency	[Hz]
f_Z	Transmission element factor	–
F_A	Axial load	[N]
F_{Aa1}	Permitted axial load on the output end, central axial load	[N]
F_{Aa2}	Required axial load on the output end, central axial load	[N]
F_{Aax}	Calculated axial load given simultaneous overhung load at point x	[N]
F_R	Maximum permitted overhung load	[N]
F_{Ra1}	Permitted overhung load on the output end (given axial load FAa1), force acting on the middle of the shaft end	[N]
F_{Ra2}	Permitted overhung load Output end, force application midpoint Shaft end	[N]
F_{RxL}	Permitted overhung load at point x based on bearing service life	[N]
F_{RxW}	Permitted overhung load at point x based on shaft strength	[N]
H	Installation altitude	[m above sea level]
i	Gear ratio	–
I_N	Rated current	[A]
I_0	Current at standstill	[A]
I_{0VR}	Standstill current for motor with forced cooling fan	[A]
I_{max}	Maximum permitted current	[A]
J	Mass moment of inertia of the gear unit with reference to the input shaft	[10^{-4} kgm^2]
$J_{b\ mot}$	Mass moment of inertia of the brake motor	[10^{-4} kgm^2]
J_{Rot}	Mass moment of inertia of the rotor	[10^{-4} kgm^2]
K_M / K_P	Calculation factors for determining the starting frequency	–
L	Length of the shaft shoulder	[mm]
ϑ_U	Ambient temperature	[° C]
a	Circumferential backlash	[']
m	Weight of the gear unit without lubricant fill	[kg]
m_{mot}	Weight of the motor	[kg]
$m_{b\ mot}$	Weight of the brake motor	[kg]
M_0	Rated torque	[Nm]
M_{0VR}	Rated torque for motor and forced cooling fan	[Nm]
$M_{a\ max}$	Maximum output torque assumed for the drive in project planning	[Nm]
M_{am}	Average output torque	[Nm]
M_B	Maximum acceleration torque	[Nm]
M_N	Rated torque (→ selection tables)	[Nm]
M_{NOTAUS}	Maximum braking torque at emergency stop braking	[Nm]

$n_{a\ max}$	Maximum output speed	[1/min]
n_{am}	Average output speed	[1/min]
$n_{e\ max}$	Maximum input speed	[1/min]
n_N	Rated speed	[1/min]
S3	Intermittent periodic duty	–
U_{Pol}	Rotor voltage	[V]
η	Efficiency	–
x	Position of the interface	[mm]

17.2 Index

A
Absolute value encoder AV1Y, AV1H, EV1H 332
Altitudes 31, 310
Ambient temperatures 31, 310
Anti-friction bearing greases 82
Application of force 32
Assignment of gear unit to motor 37
Available torque arms 102

B
Bemessungsdaten Servomotoren DS/CM 621
Brake control systems CT/CV 671
Brake control, DS/CM servomotors 321
Brake data DS/CM 324, 667
Brake motors 10
Brake operating currents DS/CM 326, 673
Brakes 321

C
Cable carrier installation of accessory cables 383
Cable carrier installation of brake power cables 381
Cable carrier installation of power cables 380
Cable entry for CM motors with plug connector 56
Cable entry for DS motors with plug connector 54
Cable entry in motor terminal box KK5 and KK6 58
Cable entry position for CM motors 55
Cable, resolver 366
CFM motors 53
Chamfers on hollow shafts 91
Change in mounting position 60
Coating 9
Combination overview of synchronous servomotors / servo controllers for 400 V system voltage 629
Components for decentralized installation 8
Connection with terminal box KK 317
Contact rating of plug connectors 684
Content of the catalog 8
Corrosion protection 23
Corrosion protection KS 23
Covers, fixed 103
Crimping tools DS/CM 384
CT/CV servomotors
Brake control systems 671
Encoder mounting adapters 663
permitted work done by the brake 670
Protection canopy 659
Tachometer 660
with brake 666

D
Data of asynchronous servomotors with 400 V system voltage 628
DEH11B for Hiperface encoder 51
DER11B for resolver 51
Description of TorqLOC® 92
Design and operating notes 31
Determining application data 28
Determining overhung load 32, 312
Dimension sheets
DS/CM servomotors 335, 685
Notes 105
Disc brake BM(G) 666
Documentation, additional 26
Drive and gear unit selection, required data 27
DS/CM servomotors
Brake control 321
Brake data 324, 667
Dimension sheets 335, 685
Operating currents of the brake 326, 673
with brake 321

E
Electronically controlled drives 7
EMC compliant cabling 317
EMC measures DS/CM servomotors 296, 622
Encoder 663
Encoder mounting adapters CT/CV 663
Extended storage, gear units 25

F
Fastening of gear units 102
Features of synchronous servomotors 36
Features of the gear units 30
Feedback cable 366
Finite gear unit reduction ratios i 37
Fixed installation of accessory cables 382
Fixed installation of brake power cables 381
Fixed installation of power cables 380
Flange contours RF.. and R..F 101
Forced cooling fan VR 333
Forced cooling fan VR/V/VS 664

G
Gear unit constants for overhung load conversion 35
Gear units, extended storage 25
Gearmotors 7

H
Helical gearmotors 11
Mounting Positions 62
Helical-bevel gearmotors 14
Mounting Positions 70
Helical-worm gear units
Features 30
Run-in phase 30
Self-locking 30
Helical-worm gearmotors 16
Mounting Positions 75
Hiperface encoder AS1H / ES1H 332
Hollow shaft mounting system, TorqLOC® 92
Hollow shaft, shouldered with shrink disc 94

I

Input speeds 9
Installation / removal kit 89
Installation of gear units with hollow shaft and key
Supplied fastening parts 88
Use the SEW installation/removal kit 89
Installed plug connectors AB..7, AM..7, AC..7 and AS..7 682
Integrated plug connector IS 681
International markets 10

L

Lifting eyebolts, suspension eye lugs 106
Lubricant fill quantities 84
Lubricant table 81
Lubricants 81
Lubricant table 83

M

Mechanical variable speed drives 8
Motor bearings used 314, 626
Motor dimensions 106
Motor options / equipment 659
Mounting position designations for BSF.. helical-bevel servo gear units 52
Mounting positions
Helical gearmotors 62
Helical-bevel gearmotors 70
Helical-worm gearmotors 75
Parallel shaft helical gearmotors 67

N

Nameplate DS/CM servomotors 295
NOCO® fluid 10
NOCO® fluid 10, 24
Noise levels 9
Notes on selecting servomotors 37

O

Order code helical-bevel servo gearmotors 22
Order information
Direction of rotation of the output with a backstop 59
Examples 60
Position of motor terminal box and cable entry 58
Position of output end in right-angle gear units 60
Position of the output shaft and output flange 59
Other catalogs 8
Overhung load conversion for off-center force application 34

P

Parallel shaft helical gearmotors 12
Mounting Positions 67
Permitted axial forces 33
Permitted overhung load 32
Permitted work done by the brake CT/CV 670
Plug connector 53
Plug connector SM / SB 315
Plug connectors AB.., AD.., AM..
Technical data 683
Plug connectors AC.., AS..
Technical data 684
Plug connectors, contact rating 684
Position of cable entry for DS motors 54
Position of motor terminal box and cable entry 58
Power and torque 9
Power cable CFM 360
Power cable DFS 356
Prefabricated cable DS 350
PRODRIVE 28
Project planning for a travel drive in S3 operation 39
Project planning for cable cross section 354
Project planning for drives
Additional documentation 26
Procedure 29
Project planning for gear units
Force application, definition 33
Permitted axial force 33
Project planning procedure 29
Protection canopy C 659
Protection canopy CT/CV servomotors 659

R

Rated data DS/CM servomotors 295
Reduced backlash gear units 10
Removal of gear units with hollow shaft and key
Using the SEW installation/removal kit 90
Resolver 331
Resolver cable 366

S

Selection of options and accessories 51
Self-locking 30
Services 8
Servomotoren DS/CM
Bemessungsdaten 621
Typenschild 621
Servomotors DS/CM
Nameplate 295
Rated data 295
Standards and regulations 295
SEW-EURODRIVE product range 7
Shaft used as stop 31
Shrink disc connection 106
Sine/cosine encoder 36
Special motor/gear unit combinations 91
Special protective measures 24
Splined hollow shaft 106
Storage conditions 25
Structure of feedback cables 353
Structure of power cables for CFM motors 352
Structure of power cables for DFS motors 351

Supplied fastening parts 88
Surface protection 23
Switched-mode power supply UWU51A 333, 664
Symbols used 61

T

Tachometer 660
Tachometer CT/CV 660
Technical data
IS plug connector 681
Plug connectors ASA1/ASD1 and AMA1/AMD1 683, 684
Thermal motor protection 296
Tolerances 105
TorqLOC® hollow shaft mounting system 92
Torque arms
Design proposals for KH167.. and KH187.. 102
Torque curves 633

U

Unit designation
Gear units and options 18

V

Versions, possible
Brake motors 10
For international markets 10
Reduced backlash 10
Very slow motor speeds 37

W

Weights 9



Address Directory

Germany			
Headquarters Production Sales	**Bruchsal**	SEW-EURODRIVE GmbH & Co KG Ernst-Blickle-Straße 42 D-76646 Bruchsal P.O. Box Postfach 3023 · D-76642 Bruchsal	Tel. +49 7251 75-0 Fax +49 7251 75-1970 http://www.sew-eurodrive.de sew@sew-eurodrive.de
Production	**Graben**	SEW-EURODRIVE GmbH & Co KG Ernst-Blickle-Straße 1 D-76676 Graben-Neudorf P.O. Box Postfach 1220 · D-76671 Graben-Neudorf	Tel. +49 7251 75-0 Fax +49 7251 75-2970
Production	**Östringen**	SEW-EURODRIVE Östringen GmbH Franz-Gurk-Straße 2 D-76684 Östringen P.O. Box Postfach 1174 · D-76677 Östringen	Tel. +49 7253 92540 Fax +49 7253 925490 oestringen@sew-eurodrive.de
Service Competence Center	**Central** Gear units / Motors	SEW-EURODRIVE GmbH & Co KG Ernst-Blickle-Straße 1 D-76676 Graben-Neudorf	Tel. +49 7251 75-1710 Fax +49 7251 75-1711 sc-mitte-gm@sew-eurodrive.de
	Central Electronics	SEW-EURODRIVE GmbH & Co KG Ernst-Blickle-Straße 42 D-76646 Bruchsal	Tel. +49 7251 75-1780 Fax +49 7251 75-1769 sc-mitte-e@sew-eurodrive.de
	North	SEW-EURODRIVE GmbH & Co KG Alte Ricklinger Straße 40-42 D-30823 Garbsen (near Hannover)	Tel. +49 5137 8798-30 Fax +49 5137 8798-55 sc-nord@sew-eurodrive.de
	East	SEW-EURODRIVE GmbH & Co KG Dänkritzer Weg 1 D-08393 Meerane (near Zwickau)	Tel. +49 3764 7606-0 Fax +49 3764 7606-30 sc-ost@sew-eurodrive.de
	South	SEW-EURODRIVE GmbH & Co KG Domagkstraße 5 D-85551 Kirchheim (near München)	Tel. +49 89 909552-10 Fax +49 89 909552-50 sc-sued@sew-eurodrive.de
	West	SEW-EURODRIVE GmbH & Co KG Siemensstraße 1 D-40764 Langenfeld (near Düsseldorf)	Tel. +49 2173 8507-30 Fax +49 2173 8507-55 sc-west@sew-eurodrive.de
	Drive Service Hotline / 24 Hour Service		+49 180 5 SEWHELP +49 180 5 7394357
Technical Offices	**Augsburg**	SEW-EURODRIVE GmbH & Co KG August-Wessels-Straße 29 D-86156 Augsburg	Tel. +49 821 22779-10 Fax +49 821 22779-50 tb-augsburg@sew-eurodrive.de
	Berlin	SEW-EURODRIVE GmbH & Co KG Lilienthalstraße 3a D-12529 Schönefeld	Tel. +49 33762 2266-30 Fax +49 33762 2266-36 tb-berlin@sew-eurodrive.de
	Bodensee	SEW-EURODRIVE GmbH & Co KG Burgbergring 91 D-88662 Überlingen	Tel. +49 7551 9226-30 Fax +49 7551 9226-56 tb-bodensee@sew-eurodrive.de
	Bremen	SEW-EURODRIVE GmbH & Co KG Kohlhökerstr.48 D-28203 Bremen	Tel. +49 421 33918-0 Fax +49 421 33918-22 tb-bremen@sew-eurodrive.de
	Dortmund	SEW-EURODRIVE GmbH & Co KG Hildastraße 10 D-44145 Dortmund	Tel. +49 231 912050-10 Fax +49 231 912050-20 tb-dortmund@sew-eurodrive.de
	Dresden	SEW-EURODRIVE GmbH & Co KG Hauptstraße 32 D-01445 Radebeul	Tel. +49 351 26338-0 Fax +49 351 26338-38 tb-dresden@sew-eurodrive.de
	Erfurt	SEW-EURODRIVE GmbH & Co KG Blumenstraße 70 D-99092 Erfurt	Tel. +49 361 21709-70 Fax +49 361 21709-79 tb-erfurt@sew-eurodrive.de
	Güstrow	SEW-EURODRIVE GmbH & Co KG Thünenweg 19 D-18273 Güstrow P.O. Box Postfach 1216 · D-18262 Güstrow	Tel. +49 3843 8557-80 Fax +49 3843 8557-88 tb-guestrow@sew-eurodrive.de

Germany			
	Hamburg	SEW-EURODRIVE GmbH & Co KG Wohldorfer Straße 5 D-22081 Hamburg P.O. Box Postfach 7610 07 · D-22060 Hamburg	Tel. +49 40 298109-60 Fax +49 40 298109-70 tb-hamburg@sew-eurodrive.de
	Hannover/Garbsen	SEW-EURODRIVE GmbH & Co KG Alte Ricklinger Str.40-42 D-30823 Garbsen P.O. Box Postfach 1104 53 · D-30804 Garbsen	Tel. +49 5137 8798-10 Fax +49 5137 8798-50 tb-hannover@sew-eurodrive.de
	Heilbronn	SEW-EURODRIVE GmbH & Co KG Zeppelinstraße 7 D-74357 Bönnigheim P.O. Box Postfach 68 · D-74355 Bönnigheim	Tel. +49 7143 8738-0 Fax +49 7143 8738-25 tb-heilbronn@sew-eurodrive.de
	Herford	SEW-EURODRIVE GmbH & Co KG Radewiger Straße 21 D-32052 Herford P.O. Box Postfach 4108 · D-32025 Herford	Tel. +49 5221 9141-0 Fax +49 5221 9141-20 tb-herford@sew-eurodrive.de
	Karlsruhe	SEW-EURODRIVE GmbH & Co KG Ettlinger Weg 2 D-76467 Bietigheim P.O. Box Postfach 43 · D-76463 Bietigheim	Tel. +49 7245 9190-10 Fax +49 7245 9190-20 tb-karlsruhe@sew-eurodrive.de
	Kassel	SEW-EURODRIVE GmbH & Co KG Lange Straße 14 D-34253 Lohfelden	Tel. +49 561 95144-80 Fax +49 561 95144-90 tb-kassel@sew-eurodrive.de
	Koblenz	SEW-EURODRIVE GmbH & Co KG Bahnstraße 17a D-56743 Mendig	Tel. +49 2652 9713-30 Fax +49 2652 9713-40 tb-koblenz@sew-eurodrive.de
	Lahr	SEW-EURODRIVE GmbH & Co KG Europastraße 3 D-77933 Lahr / Schwarzwald	Tel. +49 7821 90999-60 Fax +49 7821 90999-79 tb-lahr@sew-eurodrive.de
	Langenfeld	SEW-EURODRIVE GmbH & Co KG Siemensstraße 1 D-40764 Langenfeld	Tel. +49 2173 8507-10 Fax +49 2173 8507-50 tb-langenfeld@sew-eurodrive.de
	Magdeburg	SEW-EURODRIVE GmbH & Co KG Burgstraße 7 D-39326 Wolmirstedt	Tel. +49 39201 7004-1 Fax +49 39201 7004-9 tb-magdeburg@sew-eurodrive.de
	Mannheim	SEW-EURODRIVE GmbH & Co KG Radeberger Straße 2 D-68309 Mannheim	Tel. +49 621 71683-10 Fax +49 621 71683-22 tb-mannheim@sew-eurodrive.de
	München	SEW-EURODRIVE GmbH & Co KG Domagkstraße 5 D-85551 Kirchheim	Tel. +49 89 909551-10 Fax +49 89 909551-50 tb-muenchen@sew-eurodrive.de
	Münster	SEW-EURODRIVE GmbH & Co KG Von-Vincke-Straße 14 D-48143 Münster	Tel. +49 251 41475-11 Fax +49 251 41475-50 tb-muenster@sew-eurodrive.de
	Nürnberg	SEW-EURODRIVE GmbH & Co KG Plattenäckerweg 6 D-90455 Nürnberg	Tel. +49 911 98884-50 Fax +49 911 98884-60 tb-nuernberg@sew-eurodrive.de
	Regensburg	SEW-EURODRIVE GmbH & Co KG Im Gewerbepark A15 D-93059 Regensburg	Tel. +49 941 46668-68 Fax +49 941 46668-66 tb-regensburg@sew-eurodrive.de
	Rhein-Main	SEW-EURODRIVE GmbH & Co KG Niederstedter Weg 5 D-61348 Bad Homburg	Tel. +49 6172 9617-0 Fax +49 6172 9617-50 tb-rheinmain@sew-eurodrive.de
	Stuttgart	SEW-EURODRIVE GmbH & Co KG Friedrich-List-Straße 46 D-70771 Leinfelden-Echterdingen	Tel. +49 711 16072-0 Fax +49 711 16072-72 tb-stuttgart@sew-eurodrive.de
	Ulm	SEW-EURODRIVE GmbH & Co KG Dieselstraße 14 D-89160 Dornstadt	Tel. +49 7348 9885-0 Fax +49 7348 9885-90 tb-ulm@sew-eurodrive.de



Germany			
	Würzburg	SEW-EURODRIVE GmbH & Co KG Nürnbergerstraße 118 D-97076 Würzburg-Lengfeld	Tel. +49 931 27886-60 Fax +49 931 27886-66 tb-wuerzburg@sew-eurodrive.de
	Zwickau / Meerane	SEW-EURODRIVE GmbH & Co KG Dänkritzer Weg1 D-08393 Meerane	Tel. +49 3764 7606-0 Fax +49 3764 7606-20 tb-zwickau@sew-eurodrive.de

France			
Production Sales Service	**Haguenau**	SEW-USOCOME 48-54, route de Soufflenheim B. P. 20185 F-67506 Haguenau Cedex	Tel. +33 3 88 73 67 00 Fax +33 3 88 73 66 00 http://www.usocome.com sew@usocome.com
Assembly Sales Service	**Bordeaux**	SEW-USOCOME Parc d'activités de Magellan 62, avenue de Magellan - B. P. 182 F-33607 Pessac Cedex	Tel. +33 5 57 26 39 00 Fax +33 5 57 26 39 09
	Lyon	SEW-USOCOME Parc d'Affaires Roosevelt Rue Jacques Tati F-69120 Vaulx en Velin	Tel. +33 4 72 15 37 00 Fax +33 4 72 15 37 15
	Paris	SEW-USOCOME Zone industrielle 2, rue Denis Papin F-77390 Verneuil l'Etang	Tel. +33 1 64 42 40 80 Fax +33 1 64 42 40 88
Technical Offices	**Alsace Franche-Comté**	SEW-USOCOME 15, rue de Mambourg F-68240 Sigolsheim	Tel. +33 3 89 78 45 11 Fax +33 3 89 78 45 12
	Alsace Nord	SEW-USOCOME 35, rue Jeanne d'Arc F-67250 Surbourg	Tel. +33 3 88 54 74 44 Fax +33 3 88 80 47 62
	Aquitaine	SEW-USOCOME Parc d'activités de Magellan 62, avenue de Magellan B.P.182 F-33607 Pessac Cedex	Tel. +33 5 57 26 39 00 Fax +33 5 57 26 39 09
	Ardennes Lorraine	SEW-USOCOME 7, rue de Prény F-54000 Nancy	Tel. +33 3 83 96 28 04 Fax +33 3 83 96 28 07
	Bourgogne	SEW-USOCOME 10, rue de la Poste F-71350 Saint Loup Géanges	Tel. +33 3 85 49 92 18 Fax +33 3 85 49 92 19
	Bretagne Ouest	SEW-USOCOME 4, rue des Châtaigniers F-44830 Brains	Tel. +33 2 51 70 54 04 Fax +33 2 51 70 54 05
	Centre Auvergne	SEW-USOCOME 27, avenue du Colombier F-19150 Laguenne	Tel. +33 5 55 20 12 10 Fax +33 5 55 20 12 11
	Centre Pays de Loire	SEW-USOCOME 9, rue des Erables F-37540 Saint Cyr sur Loire	Tel. +33 2 47 41 33 23 Fax +33 2 47 41 34 03
	Champagne	SEW-USOCOME 2, chemin des Suivots F-10120 Saint André les Vergers	Tel. +33 3 25 79 63 24 Fax +33 3 25 79 63 25
	Lyon Nord-Est	SEW-USOCOME Parc d'Affaires Roosevelt Rue Jacques Tati F-69120 Vaulx en Velin	Tel. +33 4 72 15 37 03 Fax +33 4 72 15 37 15
	Lyon Ouest	SEW-USOCOME Parc d'Affaires Roosevelt Rue Jacques Tati F-69120 Vaulx en Velin	Tel. +33 4 72 15 37 04 Fax +33 4 72 15 37 15
	Lyon Sud-Est	SEW-USOCOME Montée de la Garenne F-26750 Génissieux	Tel. +33 4 75 05 65 95 Fax +33 4 75 05 65 96

France			
	Nord	SEW-USOCOME 348, rue du Calvaire F-59213 Bermerain Cidex 102	Tel. +33 3 27 27 07 88 Fax +33 3 27 27 24 41
	Normandie	SEW-USOCOME 5 rue de la Redoute F-14880 Colleville Montgomery	Tel. +33 2 31 37 92 86 Fax +33 2 31 74 68 15
	Paris Est	SEW-USOCOME Résidence Le Bois de Grâce 2, allée des Souches Vertes F-77420 Champs sur Marne	Tel. +33 1 64 68 40 50 Fax +33 1 64 68 45 00
	Paris Ouest	SEW-USOCOME 24b quai de l'Oise F-78570 Andresy	Tel. +33 1 39 27 85 59 Fax +33 1 39 27 93 57
	Paris Picardie	SEW-USOCOME 25 bis, rue Kléber F-92300 Levallois Perret	Tel. +33 1 41 05 92 74 Fax +33 1 41 05 92 75
	Paris Sud	SEW-USOCOME 6. chemin des Bergers Lieu-dit Marchais F-91410 Roinville sous Dourdan	Tel. +33 1 60 81 10 56 Fax +33 1 60 81 10 57
	Provence	SEW-USOCOME Résidence Les Hespérides Bât. B2 67, boulevard des Alpes F-13012 Marseille	Tel. +33 4 91 18 00 11 Fax +33 4 91 18 00 12
	Pyrénées	SEW-USOCOME 271, Lieu-dit Ninaut F-31190 Caujac	Tel. +33 5 61 08 15 85 Fax +33 5 61 08 16 44
	Sud-Atlantique	SEW-USOCOME 12, rue des Pinsons F-44120 Vertou	Tel. +33 2 40 80 32 23 Fax +33 2 40 80 32 13

Algeria			
Sales	**Alger**	Réducom 16, rue des Frères Zaghnoun Bellevue El-Harrach 16200 Alger	Tel. +213 21 8222-84 Fax +213 21 8222-84

Argentina			
Assembly **Sales** **Service**	**Buenos Aires**	SEW EURODRIVE ARGENTINA S.A. Centro Industrial Garin, Lote 35 Ruta Panamericana Km 37,5 1619 Garin	Tel. +54 3327 4572-84 Fax +54 3327 4572-21 sewar@sew-eurodrive.com.ar

Australia			
Assembly **Sales** **Service**	**Melbourne**	SEW-EURODRIVE PTY. LTD. 27 Beverage Drive Tullamarine, Victoria 3043	Tel. +61 3 9933-1000 Fax +61 3 9933-1003 http://www.sew-eurodrive.com.au enquires@sew-eurodrive.com.au
	Sydney	SEW-EURODRIVE PTY. LTD. 9, Sleigh Place, Wetherill Park New South Wales, 2164	Tel. +61 2 9725-9900 Fax +61 2 9725-9905 enquires@sew-eurodrive.com.au
Technical Offices	**Adelaide**	SEW-EURODRIVE PTY. LTD. Unit 1/601 Anzac Highway Glenelg, S.A. 5045	Tel. +61 8 8294-8277 Fax +61 8 8294-2893 enquires@sew-eurodrive.com.au
	Perth	SEW-EURODRIVE PTY. LTD. 105 Robinson Avenue Belmont, W.A. 6104	Tel. +61 8 9478-2688 Fax +61 8 9277-7572 enquires@sew-eurodrive.com.au
	Brisbane	SEW-EURODRIVE PTY.LTD. 1 /34 Collinsvale St Rocklea, Queensland, 4106	Tel. +61 7 3272-7900 Fax +61 7 3272-7901 enquires@sew-eurodrive.com.au



Austria			
Assembly **Sales** **Service**	**Wien**	SEW-EURODRIVE Ges.m.b.H. Richard-Strauss-Strasse 24 A-1230 Wien	Tel. +43 1 617 55 00-0 Fax +43 1 617 55 00-30 http://sew-eurodrive.at sew@sew-eurodrive.at
Technical Offices	**Linz**	SEW-EURODRIVE Ges.m.b.H. Reuchlinstr. 6/3 A-4020 Linz	Tel. +43 732 655 109-0 Fax +43 732 655 109-20 tb-linz@sew-eurodrive.at
	Graz	SEW-EURODRIVE Ges.m.b.H. Grabenstraße 231 A-8045 Graz	Tel. +43 316 685 756-0 Fax +43 316 685 755 tb-graz@sew-eurodrive.at
	Dornbirn	SEW-EURODRIVE Ges.m.b.H. Lustenauerstraße 27/1 A-6850 Dornbirn	Tel. +43 5572 3725 99-0 Fax +43 5572 3725 99-20 tb-dornbirn@sew-eurodrive.at

Bangladesh			
	Dhaka	Triangle Trade International Bldg-5, Road-2, Sec-3, Uttara Model Town Dhaka-1230 Bangladesh	Tel. +880 2 8912246 Fax +880 2 8913344

Belgium			
Assembly **Sales** **Service**	**Brüssel**	SEW Caron-Vector S.A. Avenue Eiffel 5 B-1300 Wavre	Tel. +32 10 231-311 Fax +32 10 231-336 http://www.caron-vector.be info@caron-vector.be
Technical Office	**Vlaanderen**	SEW Caron-Vector S.A. Industrieweg 112-114 B-9032 Gent (Wondelgem)	Tel. +32 92 273-452 Fax +32 92 274-155

Bolivia			
	La Paz	GRUPO LARCOS LTDA. Av. Jose Carrasco Not. 1398 Entre Hugo Estrada Y Av. Busch La Paz	Tel. +591 2 221808 Fax +591 2 220085 larcos@ceibo.entelnet.bo

Brazil			
Production **Sales** **Service**	**Sao Paulo**	SEW-EURODRIVE Brasil Ltda. Avenida Amâncio Gaiolli, 50 Caixa Postal: 201-07111-970 Guarulhos/SP - Cep.: 07251-250	Tel. +55 11 6489-9133 Fax +55 11 6480-3328 http://www.sew.com.br sew@sew.com.br
	Additional addresses for service in Brazil provided on request!		

Bulgaria			
Sales	**Sofia**	BEVER-DRIVE GmbH Bogdanovetz Str.1 BG-1606 Sofia	Tel. +359 2 9532565 Fax +359 2 9549345 bever@fastbg.net

Cameroon			
Sales	**Douala**	Electro-Services Rue Drouot Akwa B.P. 2024 Douala	Tel. +237 4322-99 Fax +237 4277-03

Canada			
Assembly **Sales** **Service**	**Toronto**	SEW-EURODRIVE CO. OF CANADA LTD. 210 Walker Drive Bramalea, Ontario L6T3W1	Tel. +1 905 791-1553 Fax +1 905 791-2999 http://www.sew-eurodrive.ca l.reynolds@sew-eurodrive.ca
	Vancouver	SEW-EURODRIVE CO. OF CANADA LTD. 7188 Honeyman Street Delta. B.C. V4G 1 E2	Tel. +1 604 946-5535 Fax +1 604 946-2513 b.wake@sew-eurodrive.ca
	Montreal	SEW-EURODRIVE CO. OF CANADA LTD. 2555 Rue Leger Street LaSalle, Quebec H8N 2V9	Tel. +1 514 367-1124 Fax +1 514 367-3677 a.peluso@sew-eurodrive.ca

Canada			
	Additional addresses for service in Canada provided on request!		

Chile			
Assembly **Sales** **Service**	**Santiago de Chile**	SEW-EURODRIVE CHILE LTDA. Las Encinas 1295 Parque Industrial Valle Grande LAMPA RCH-Santiago de Chile P.O. Box Casilla 23 Correo Quilicura - Santiago - Chile	Tel. +56 2 75770-00 Fax +56 2 75770-01 ventas@sew-eurodrive.cl

China			
Production **Assembly** **Sales** **Service**	**Tianjin**	SEW-EURODRIVE (Tianjin) Co., Ltd. No. 46, 7th Avenue, TEDA Tianjin 300457	Tel. +86 22 25322612 Fax +86 22 25322611 gm-tianjin@sew-eurodrive.cn http://www.sew.com.cn
Assembly **Sales** **Service**	**Suzhou**	SEW-EURODRIVE (Suzhou) Co., Ltd. 333, Suhong Middle Road Suzhou Industrial Park Jiangsu Province, 215021 P. R. China	Tel. +86 512 62581781 Fax +86 512 62581783 suzhou@sew.com.cn
	Guangzhou	SEW-EURODRIVE (Guangzhou) Co., Ltd. No. 9, JunDa Road East Section of GETDD Guangzhou 510530 P. R. China	Tel. +86 20 82267890 Fax +86 20 82267891 sewguangzhou@sew.com.cn



China			
Technical Offices	**Beijing**	SEW-EURODRIVE (Tianjin) Co., LTD Room 1205/1206, Golden Corner Building, No. 129 Xuanwumen Xidajie, Xicheng District Beijing 100031	Tel. +86 10 66412026 Fax +86 10 66411017 beijing@sew.com.cn
	Chengdu	SEW-Eurodrive (Tianjin) Co. Ltd. Room 715, Sichuan International Building No. 206, Shun Cheng Avenue Chengdu 610015	Tel. +86 28 6521560 Fax +86 28 6521563 chengdu@sew.com.cn
	Fuzhou	SEW-Eurodrive (Tianjin) Co. Ltd. Unit D, 15/F, Oriental Hotel Fujian Fuzhou 350001	Tel. +86 591 7507596 Fax +86 591 7507285 fuzhou@sew.com.cn
	Jinan	SEW-Eurodrive (Tianjin) Co.Ltd. Room 2008-2009, Liang You Fu Lin Hotel No. 5, Luo Yuan Avenue Jinan 250063	Tel. +86 531 6412622 Fax +86 531 6412430 jinan@sew.com.cn
	Kunming	SEW-EURODRIVE (Tianjin) Co., Ltd Room 1401 Dong Yuan Business Building No. 464 Tuodong Road, Kunming Yunnan Province 650011	Tel. +86 871 3113677 Fax +86 871 3154454 kunming@sew.com.cn
	Nanjing	SEW-Eurodrive (Tianjing) Co.Ltd. Room 710, Jianda Plaza No. 223, North Zhongshan Road Nanjing 210009	Tel. +86 25 3346768 Fax +86 25 3346871 nanjing@sew.com.cn
	Shanghai	SEW-EURODRIVE (TIANJIN) CO., Ltd 16/F, E Block, Jinxuan Building No. 238 South Dandong Road Xuhui District Shanghai 200030	Tel. +86 21 64693534 Fax +86 21 64695532 shanghai@sew.com.cn
	Shenyang	SEW-EURODRIVE (Tianjin) Co., Ltd Shenyang OfficeRoom 0605 Koh Brother Building No. 21 Beijing Street Shenhe District Shenyang City, 110013	Tel. +86 24 22521596 Fax +86 24 22521579 shenyang@sew.com.cn
	Wuhan	SEW-Eurodrive (Tianjin) Co.Ltd. Room 911, Tai He Plaza Wusheng Road Wuhan 430033	Tel. +86 27 85712293 Fax +86 27 85712282 wuhan@sew.com.cn
	Xian	SEW-EURODRIVE (TIANJIN) Co., Ltd Rm 611, Fan Mei Building No. 1 Nan Guan Main Street Xian 710068, Shanxi Province	Tel. +86 29 7811327 Fax +86 29 7811327 xian@sew.com.cn

Colombia			
Assembly **Sales** **Service**	**Bogotá**	SEW-EURODRIVE COLOMBIA LTDA. Calle 22 No. 132-60 Bodega 6, Manzana B Santafé de Bogotá	Tel. +57 1 54750-50 Fax +57 1 54750-44 sewcol@sew-eurodrive.com.co

Croatia			
Sales **Service**	**Zagreb**	KOMPEKS d. o. o. PIT Erdödy 4 II HR 10 000 Zagreb	Tel. +385 1 4613-158 Fax +385 1 4613-158 kompeks@net.hr

Czech Republic			
Sales	**Praha**	SEW-EURODRIVE CZ S.R.O. Business Centrum Praha Luná 591 CZ-16000 Praha 6 - Vokovice	Tel. +420 a220121236 Fax +420 220121237 http://www.sew-eurodrive.cz sew@sew-eurodrive.cz

Czech Republic			
Technical Offices	**Brno**	SEW-EURODRIVE CZ S.R.O. Krenova 52 CZ -60200 Brno	Tel. +420 543256151 + 543256163 Fax +420 543256845
	Hradec Kralove	SEW-EURODRIVE CZ S.R.O. Technicka Kancelar - vychodni Cechy Svermova CZ-53374 Horni Jeleni	Tel. +420 466673711 Fax +420 466673634
	Klatovy	SEW-EURODRIVE CZ S.R.O. Technical Office Klatovy Kollarova 528 CZ-33901 Klatovy 3	Tel. +420 376310729 Fax +420 376310725

Denmark			
Assembly **Sales** **Service**	**Kopenhagen**	SEW-EURODRIVEA/S Geminivej 28-30, P.O. Box 100 DK-2670 Greve	Tel. +45 43 9585-00 Fax +45 43 9585-09 http://www.sew-eurodrive.dk sew@sew-eurodrive.dk
Technical Offices	**Aarhus**	SEW-EURODRIVEA/S Birkenhaven 45 DK-8520 Lystrup	Tel. +45 86 2283-44 Fax +45 86 2284-90
	Helsingør	SEW-EURODRIVEA/S Rømøvej 2 DK-3140 Ålsgårde	Tel. +45 49 7557-00 Fax +45 49 7558-00
	Odense	SEW-EURODRIVEA/S Lindelyvei 29, Nr. Søby DK-5792 Arslev	Tel. +45 65 9020-70 Fax +45 65 9023-09

Egypt			
Sales **Service**	**Cairo**	Copam Egypt for Engineering & Agencies 33 El Hegaz ST, Heliopolis, Cairo	Tel. +20 2 2566-299 + 1 23143088 Fax +20 2 2594-757 copam@datum.com.eg

Estonia			
Sales	**Tallin**	ALAS-KUUL AS Paldiski mnt.125 EE 0006 Tallin	Tel. +372 6593230 Fax +372 6593231 veiko.soots@alas-kuul.ee

Finland			
Assembly **Sales** **Service**	**Lahti**	SEW-EURODRIVE OY Vesimäentie 4 FIN-15860 Hollola 2	Tel. +358 201 589-300 Fax +358 3 780-6211 http://www.sew-eurodrive.fi sew@sew.fi
Technical Offices	**Helsinki**	SEW-EURODRIVE OY Luutnantinaukio 5C LT2 FIN-00410 Helsinki	Tel. +358 201 589-300 Fax + 358 9 5666-311
	Vaasa	SEW-EURODRIVE OY Kauppapuistikko 11 E FIN-65100 Vaasa	Tel. +358 3 589-300 Fax +358 6 3127-470

Gabon			
Sales	**Libreville**	Electro-Services B.P. 1889 Libreville	Tel. +241 7340-11 Fax +241 7340-12

Great Britain			
Assembly **Sales** **Service**	**Normanton**	SEW-EURODRIVE Ltd. Beckbridge Industrial Estate P.O. Box No.1 GB-Normanton, West- Yorkshire WF6 1QR	Tel. +44 1924 893-855 Fax +44 1924 893-702 http://www.sew-eurodrive.co.uk info@sew-eurodrive.co.uk



Great Britain			
Technical Offices	**London**	SEW-EURODRIVE Ltd. 764 Finchely Road, Temple Fortune GB-London N.W.11 7TH	Tel. +44 20 8458-8949 Fax +44 20 8458-7417
	Midlands	SEW-EURODRIVE Ltd. 5 Sugar Brook court, Aston Road, Bromsgrove, Worcs B60 3EX	Tel. +44 1527 877-319 Fax +44 1527 575-245
	Scotland	SEW-EURODRIVE Ltd. Scottish Office No 37 Enterprise House Springkerse Business Park GB-Stirling FK7 7UF Scotland	Tel. +44 17 8647-8730 Fax +44 17 8645-0223

Greece			
Sales **Service**	**Athen**	Christ. Boznos & Son S.A. 12, Mavromichali Street P.O. Box 80136, GR-18545 Piraeus	Tel. +30 2 1042 251-34 Fax +30 2 1042 251-59 http://www.boznos.gr info@boznos.gr
Technical Office	**Thessaloniki**	Christ. Boznos & Son S.A. Maiandrou 15 562 24 Evosmos, Thessaloniki	Tel. +30 2 310 7054-00 Fax +30 2 310 7055-15 info@boznos.gr

Hong Kong			
Assembly **Sales** **Service**	**Hong Kong**	SEW-EURODRIVE LTD. Unit No. 801-806, 8th Floor Hong Leong Industrial Complex No. 4, Wang Kwong Road Kowloon, Hong Kong	Tel. +852 2 7960477 + 79604654 Fax +852 2 7959129 sew@sewhk.com

Hungary			
Sales **Service**	**Budapest**	SEW-EURODRIVE Kft. H-1037 Budapest Kunigunda u. 18	Tel. +36 1 437 06-58 Fax +36 1 437 06-50 office@sew-eurodrive.hu

Iceland			
	Hafnarfirdi	VARMAVERK ehf Dalshrauni 5 IS - 220 Hafnarfirdi	Tel. +354 5 6517-50 Fax +354 5 6519-51 varmaverk@varmaverk.is

India			
Assembly **Sales** **Service**	**Baroda**	SEW-EURODRIVE India Pvt. Ltd. Plot No. 4, Gidc Por Ramangamdi · Baroda - 391 243 Gujarat	Tel. +91 265 2831086 Fax +91 265 2831087 mdoffice@seweurodriveindia.com

India			
Technical Offices	**Bangalore**	SEW-EURODRIVE India Private Limited 308, Prestige Centre Point 7, Edward Road Bangalore	Tel. +91 80 22266565 Fax +91 80 22266569 salesbang@seweurodriveinindia.com
	Calcutta	SEW EURODRIVE INDIA PVT. LTD. Juthika Apartment, Flat No. B1 11/1, Sunny Park Calcutta - 700 019	Tel. +91 33 24615820 Fax +91 33 24615826 sewcal@cal.vsnl.net.in
	Chennai	SEW-EURODRIVE India Private Limited F2, 1st Floor, Sarvamangala Indira New No. 67, Bazullah Road Chennai - 600 017	Tel. +91 44 28144461 Fax +91 44 28144463 saleschen@seweurodriveindia.com
	Hyderabad	SEW-EURODRIVE India Pvt. Limited 408, 4th Floor, Meridian Place Green Park Road Amerpeet Hyderabad	Tel. +91 40 23414698 Fax +91 40 23413884 saleshyd@seweurodriveindia.com
	Mumbai	SEW-EURODRIVE India Private Limited 312 A, 3rd Floor, Acme Plaza Andheri Kurla Road, Andheri (E) Mumbai	Tel. +91 22 28348440 Fax +91 22 28217858 salesmumbai@seweurodriveindia.com
	New Delhi	SEW-EURODRIVE India Private Limited 303 Kirti Deep, 2-Nangal Raya Business Centre New Delhi 110 046	Tel. +91 11 28521566 Fax +91 11 28521577 salesdelhi@seweurodriveindia.com
	Pune	SEW-EURODRIVE India Private Limited 206, Metro House 7 Mangaldas Road Pune 411001, Maharashtra	Tel. +91 20 26111054 Fax +91 20 26132337 salespune@seweurodriveindia.com

Indonesia			
Technical Office	**Jakarta**	SEW-EURODRIVE Pte Ltd. Jakarta Liaison Office, Menara Graha Kencana Jl. Perjuangan No. 88, LT 3 B, Kebun Jeruk, Jakarta 11530	Tel. +62 21 5359066 Fax +62 21 5363686

Ireland			
Sales **Service**	**Dublin**	Alperton Engineering Ltd. 48 Moyle Road Dublin Industrial Estate Glasnevin, Dublin 11	Tel. +353 1 830-6277 Fax +353 1 830-6458

Israel			
Sales	**Tel-Aviv**	Liraz Handasa Ltd. Ahofer Str 34B / 228 58858 Holon	Tel. +972 3 5599511 Fax +972 3 5599512 lirazhandasa@barak-online.net

Italy			
Assembly **Sales** **Service**	**Milano**	SEW-EURODRIVE di R. Blickle & Co.s.a.s. Via Bernini,14 I-20020 Solaro (Milano)	Tel. +39 02 96 9801 Fax +39 02 96 799781 sewit@sew-eurodrive.it

Italy			
Technical Offices	**Bologna**	SEW-EURODRIVE di R. Blickle & Co.s.a.s. Via Emilia,172 I-40064 Ozzano dell'Emilia (Bo)	Tel. +39 051 796-660 Fax +39 051 796-595
	Caserta	SEW-EURODRIVE di R. Blickle & Co.s.a.s. Viale Carlo III Km. 23,300 I-81020 S. Nicola la Strada (Caserta)	Tel. +39 0823 450611 Fax +39 0823 421414
	Firenze	RIMA Via Einstein, 14 I-50013 Campi Bisenzio (Firenze)	Tel. +39 055 898 58-21 Fax +39 055 898 58-30
	Pescara	SEW-EURODRIVE di R. Blickle & Co.s.a.s. Via Emilia,172 I-40064 Ozzano dell'Emilia (Bo)	Tel. +39 051 796-660 Fax +39 051 796-595
	Torino	SEW-EURODRIVE di R. Blickle & Co.s.a.s. Filiale Torino c.so Unione Sovietica 612/15 - int. C I-11035 Torino	Tel. +39 011 3473780 Fax +39 011 3473783
	Verona	SEW-EURODRIVE di R. Blickle & Co.s.a.s. Via P. Sgulmero, 27/A I-37132 Verona	Tel. +39 045 97-7722 Fax +39 045 97-6079

Ivory Coast			
Sales	**Abidjan**	SICA Ste industrielle et commerciale pour l'Afrique 165, Bld de Marseille B.P. 2323, Abidjan 08	Tel. +225 2579-44 Fax +225 2584-36

Japan			
Assembly **Sales** **Service**	**Toyoda-cho**	SEW-EURODRIVE JAPAN CO., LTD 250-1, Shimoman-no, Iwata Shizuoka 438-0818	Tel. +81 538 373811 Fax +81 538 373814 sewjapan@sew-eurodrive.co.jp
Technical Offices	**Fukuoka**	SEW-EURODRIVE JAPAN CO., LTD. C-go, 5th-floor, Yakuin-Hiruzu-Bldg. 1-5-11, Yakuin, Chuo-ku Fukuoka, 810-0022	Tel. +81 92 713-6955 Fax +81 92 713-6860 sewkyushu@jasmine.ocn.ne.jp
	Osaka	SEW-EURODRIVE JAPAN CO., LTD. B-Space EIRAI Bldg., 3rd Floor 1-6-9 Kyoumachibori, Nishi-ku, Osaka, 550-0003	Tel. +81 6 6444--8330 Fax +81 6 6444--8338 sewosaka@crocus.ocn.ne.jp
	Tokyo	SEW-EURODRIVE JAPAN CO., LTD. Izumi-Bldg. 5 F 3-2-15 Misaki-cho Chiyoda-ku, Tokyo 101-0061	Tel. +81 3 3239-0469 Fax +81 3 3239-0943 sewtokyo@basil.ocn.ne.jp

Korea			
Assembly **Sales** **Service**	**Ansan-City**	SEW-EURODRIVE KOREA CO., LTD. B 601-4, Banweol Industrial Estate Unit 1048-4, Shingil-Dong Ansan 425-120	Tel. +82 31 492-8051 Fax +82 31 492-8056 master@sew-korea.co.kr
	Busan	SEW-EURODRIVE KOREA Co., Ltd. No. 1720 - 11, Songjeong - dong Gangseo-ku Busan 618-270	Tel. +82 51 832-0204 Fax +82 51 832-0230 master@sew-korea.co.kr

Korea			
Technical Offices	**Daegu**	SEW-EURODRIVE KOREA Co., Ltd. No.1108 Sungan officete l 87-36, Duryu 2-dong, Dalseo-ku Daegu 704-712	Tel. +82 53 650-7111 Fax +82 53 650-7112 sewdaegu@netsgo.com
	DaeJeon	SEW-EURODRIVE KOREA Co., Ltd. No. 2017, Hongin offictel 536-9, Bongmyung-dong, Yusung-ku Daejeon 305-301	Tel. +82 42 828-6461 Fax +82 42 828-6463 sewdaejeon@netsgo.com
	Kwangju	SEW-EURODRIVE KOREA Co., Ltd. 4fl., Shinhyun B/D 96-16 Unam-dong, Buk-ku Kwangju 500-170	Tel. +82 62 511-9172 Fax +82 62 511-9174 sewkwangju@netsgo.com
	Seoul	SEW-EURODRIVE KOREA Co., Ltd. No.1104 Sunkyung officetel 106-4 Kuro 6-dong, Kuro-ku Seoul 152-054	Tel. +82 2 862-8051 Fax +82 2 862-8199 sewseoul@netsgo.com

Latvia			
Sales	**Riga**	SIA Alas-Kuul Katlakalna 11C LV-1073 Riga	Tel. +371 7139386 Fax +371 7139386 info@alas-kuul.ee

Lebanon			
Sales	**Beirut**	Gabriel Acar & Fils sarl B. P. 80484 Bourj Hammoud, Beirut	Tel. +961 1 4947-86 +961 1 4982-72 +961 3 2745-39 Fax +961 1 4949-71 gacar@beirut.com

Lithuania			
Sales	**Alytus**	UAB Irseva Merkines g. 2A LT-62252 Alytus	Tel. +370 315 79204 Fax +370 315 56175 info@irseva.lt www.sew-eurodrive.lt

Luxembourg			
Assembly **Sales** **Service**	**Brüssel**	CARON-VECTOR S.A. Avenue Eiffel 5 B-1300 Wavre	Tel. +32 10 231-311 Fax +32 10 231-336 http://www.caron-vector.be info@caron-vector.be

Malaysia			
Assembly **Sales** **Service**	**Johore**	SEW-EURODRIVE SDN BHD No. 95, Jalan Seroja 39, Taman Johor Jaya 81000 Johor Bahru, Johor West Malaysia	Tel. +60 7 3549409 Fax +60 7 3541404 kchtan@pd.jaring.my
Technical Offices	**Kota Kinabalu**	SEW-EURODRIVE Sdn Bhd (Kota Kinabalu Branch) Lot No. 2,1st Floor, Inanam Baru Phase III, Miles 5.1 /2, Jalan Tuaran, Inanam 89350 Kota Kinabalu Sabah, Malaysia	Tel. +60 88 424792 Fax +60 88 424807
	Kuala Lumpur	SEW-EURODRIVE Sdn. Bhd. No. 2, Jalan Anggerik Mokara 31/46 Kota Kemuning Seksyen 31 40460 Shah Alam Selangor Darul Ehsan	Tel. +60 3 5229633 Fax +60 3 5229622 sewpjy@po.jaring.my
	Kuching	SEW-EURODRIVE Sdn. Bhd. Lot 268, Section 9 KTLD Lorong 9, Jalan Satok 93400 Kuching, Sarawak East Malaysia	Tel. +60 82 232380 Fax +60 82 242380
	Penang	SEW-EURODRIVE Sdn. Bhd. No. 38, Jalan Bawal Kimsar Garden 13700 Prai, Penang	Tel. +60 4 3999349 Fax +60 4 3999348 seweurodrive@po.jaring.my



Mexico			
Assembly **Sales** **Service**	**Queretaro**	SEW-EURODRIVE, Sales and Distribution, S. A. de C. V. Privada Tequisquiapan No. 102 Parque Ind. Queretaro C. P. 76220 Queretaro, Mexico	Tel. +52 442 1030-300 Fax +52 442 1030-301 scmexico@seweurodrive.com.mx

Morocco			
Sales	**Casablanca**	S. R. M. Société de Réalisations Mécaniques 5, rue Emir Abdelkader 05 Casablanca	Tel. +212 2 6186-69 + 6186-70 + 6186-71 Fax +212 2 6215-88 srm@marocnet.net.ma

Netherlands			
Assembly **Sales** **Service**	**Rotterdam**	VECTOR Aandrijftechniek B.V. Industrieweg 175 NL-3044 AS Rotterdam Postbus 10085 NL-3004 AB Rotterdam	Tel. +31 10 4463-700 Fax +31 10 4155-552 http://www.vector.nu info@vector.nu

New Zealand			
Assembly **Sales** **Service**	**Auckland**	SEW-EURODRIVE NEW ZEALAND LTD. P.O. Box 58-428 82 Greenmount drive East Tamaki Auckland	Tel. +64 9 2745627 Fax +64 9 2740165 sales@sew-eurodrive.co.nz
	Christchurch	SEW-EURODRIVE NEW ZEALAND LTD. 10 Settlers Crescent, Ferrymead Christchurch	Tel. +64 3 384-6251 Fax +64 3 384-6455 sales@sew-eurodrive.co.nz
Technical Office	**Palmerston North**	SEW-EURODRIVE NEW ZEALAND LTD. C/-Grant Shearman, RD 5, Aronui Road Palmerston North	Tel. +64 6 355-2165 Fax +64 6 355-2316 sales@sew-eurodrive.co.nz

Norway			
Assembly **Sales** **Service**	**Moss**	SEW-EURODRIVE A/S Solgaard skog 71 N-1599 Moss	Tel. +47 69 241-020 Fax +47 69 241-040 sew@sew-eurodrive.no

Pakistan			
Technical Office	**Karachi**	SEW-EURODRIVE Pte. Ltd. Karachi Liaison Office A/3, 1st Floor, Central Commercial Area Sultan Ahmed Shah Road Block 7/8, K.C.H.S. Union Ltd., Karachi	Tel. +92 21 4529369 Fax +92 21 4547365 seweurodrive@cyber.net.pk

Peru			
Assembly **Sales** **Service**	**Lima**	SEW DEL PERU MOTORES REDUCTORES S.A.C. Los Calderos, 120-124 Urbanizacion Industrial Vulcano, ATE, Lima	Tel. +51 1 3495280 Fax +51 1 3493002 sewperu@sew-eurodrive.com.pe

Philippines			
Technical Office	**Manila**	SEW-EURODRIVE Pte Ltd Manila Liaison Office Suite 110, Ground Floor Comfoods Building Senator Gil Puyat Avenue 1200 Makati City	Tel. +63 2 894275254 Fax +63 2 8942744 sewmla@i-next.net

Poland			
Assembly **Sales** **Service**	**Lodz**	SEW-EURODRIVE Polska Sp.z.o.o. ul. Techniczna 5 PL-92-518 Lodz	Tel. +48 42 67710-90 Fax +48 42 67710-99 http://www.sew-eurodrive.pl sew@sew-eurodrive.pl

Poland			
Technical Office	**Katowice**	SEW-EURODRIVE Polska Sp.z.o.o. ul. Nad Jeziorem 87 PL-43-100 Tychy	Tel. +48 32 2175026 + 32 2175027 Fax +48 32 2277910
	Bydgoszcz	SEW-EURODRIVE Polska Sp.z.o.o. ul. Fordonska 246 PL-85-959 Bydgoszcz	Tel. +48 52 3606590 Fax +48 52 3606591
	Szczecinek	SEW-EURODRIVE Polska Sp.z.o.o. ul. Mickiewicza 2 pok. 36 PL-78-400 Szczecinek	Tel. +48 94 3728820 Fax +48 94 3728821

Portugal			
Assembly **Sales** **Service**	**Coimbra**	SEW-EURODRIVE, LDA. Apartado 15 P-3050-901 Mealhada	Tel. +351 231 20 9670 Fax +351 231 20 3685 http://www.sew-eurodrive.pt infosew@sew-eurodrive.pt
Technical Offices	**Lisboa**	Tertir Edifício Lisboa Gabinete 119 P-2615 Alverca do Ribatejo	Tel. +351 21 958-0198 Fax +351 21 958-0245 esc.lisboa@sew-eurodrive.pt
	Porto	Av. D. Afonso Henriques, 1196 - 1° - sala 102 Edifício ACIA P- 4450-016 Matosinhos	Tel. +351 229 350 383 Fax +351 229 350 384 MobilTel. +351 9 332559110 esc.porto@sew-eurodrive.pt

Romania			
Sales **Service**	**Bucuresti**	Sialco Trading SRL str. Madrid nr.4 011785 Bucuresti	Tel. +40 21 230-1328 Fax +40 21 230-7170 sialco@sialco.ro

Russia			
Sales	**St. Petersburg**	ZAO SEW-EURODRIVE P.O. Box 263 RUS-195220 St. Petersburg	Tel. +7 812 5357142 +812 5350430 Fax +7 812 5352287 http://www.sew-eurodrive.ru sew@sew-eurodrive.ru
Technical Office	**Moskau**	ZAO SEW-EURODRIVE RUS-119180 Moskau	Tel. +7 095 9337090 Fax +7 095 9337094 mso@sew-eurodrive.ru
	Novosibirsk	ZAO SEW-EURODRIVE pr. K Marksa, d.30 RUS-630087 Novosibirsk	Tel. +7 3832 350200 Fax +7 3832 462544 nso@sew-eurodrive.ru

Senegal			
Sales	**Dakar**	SENEMECA Mécanique Générale Km 8, Route de Rufisque B.P. 3251, Dakar	Tel. +221 849 47-70 Fax +221 849 47-71 senemeca@sentoo.sn

Serbia and Montenegro			
Sales	**Beograd**	DIPAR d.o.o. Kajmakcalanska 54 SCG-11000 Beograd	Tel. +381 11 3088677 / +381 11 3088678 Fax +381 11 3809380 dipar@yubc.net

Singapore			
Assembly **Sales** **Service**	**Singapore**	SEW-EURODRIVE PTE. LTD. No 9, Tuas Drive 2 Jurong Industrial Estate Singapore 638644	Tel. +65 68621701 Fax +65 68612827 sewsingapore@sew-eurodrive.com

Slovakia			
Sales	**Sered**	SEW-Eurodrive SK s.r.o. Trnavska 920 SK-926 01 Sered	Tel. +421 31 7891311 Fax +421 31 7891312 sew@sew-eurodrive.sk



Slovenia			
Sales **Service**	**Celje**	Pakman - Pogonska Tehnika d.o.o. UI. XIV. divizije 14 SLO – 3000 Celje	Tel. +386 3 490 83-20 Fax +386 3 490 83-21 pakman@siol.net

South Africa			
Assembly **Sales** **Service**	**Johannesburg**	SEW-EURODRIVE (PROPRIETARY) LIMITED Eurodrive House Cnr. Adcock Ingram and Aerodrome Roads Aeroton Ext. 2 Johannesburg 2013 P.O.Box 90004 Bertsham 2013	Tel. +27 11 248-7000 Fax +27 11 494-3104 dross@sew.co.za
	Capetown	SEW-EURODRIVE (PROPRIETARY) LIMITED Rainbow Park Cnr. Racecourse & Omuramba Road Montague Gardens Cape Town P.O.Box 36556 Chempet 7442 Cape Town	Tel. +27 21 552-9820 Fax +27 21 552-9830 Telex 576 062 dswanepoel@sew.co.za
	Durban	SEW-EURODRIVE (PROPRIETARY) LIMITED 2 Monaceo Place Pinetown Durban P.O. Box 10433, Ashwood 3605	Tel. +27 31 700-3451 Fax +27 31 700-3847 dtait@sew.co.za
	Nelspruit	SEW-EURODRIVE (PTY) LTD. 7 Christie Crescent Vintonia P.O.Box 1942 Nelspruit 1200	Tel. +27 13 752-8007 Fax +27 13 752-8008 robermeyer@sew.co.za
Technical Offices	**Port Elizabeth**	SEW-EURODRIVE PTY LTD. 5 b Linsay Road Neave Township 6000 Port Elizabeth	Tel. +27 41 453-0303 Fax +27 41 453-0305 dswanepoel@sew.co.za
	Richards Bay	SEW-EURODRIVE PTY LTD. 25 Eagle Industrial Park Alton Richards Bay P.O. Box 458 Richards Bay 3900	Tel. +27 35 797-3805 Fax +27 35 797-3819 dtait@sew.co.za

Spain			
Assembly **Sales** **Service**	**Bilbao**	SEW-EURODRIVE ESPAÑA, S.L. Parque Tecnológico, Edificio, 302 E-48170 Zamudio (Vizcaya)	Tel. +34 9 4431 84-70 Fax +34 9 4431 84-71 sew.spain@sew-eurodrive.es
Technical Offices	**Barcelona**	Delegación Barcelona Avenida Francesc Maciá 40-44 Oficina 3.1 E-08206 Sabadell (Barcelona)	Tel. +34 9 37 162200 Fax +34 9 37 233007
	Lugo	Delegación Noroeste Apartado, 1003 E-27080 Lugo	Tel. +34 6 3940 3348 Fax +34 9 8220 2934
	Madrid	Delegación Madrid Gran Via. 48-2° A-D E-28220 Majadahonda (Madrid)	Tel. +34 9 1634 2250 Fax +34 9 1634 0899

Sri Lanka			
	Colombo 4	SM International (Pte) Ltd 254, Galle Raod Colombo 4, Sri Lanka	Tel. +94 1 2584887 Fax +94 1 2582981

Sweden			
Assembly **Sales** **Service**	**Jönköping**	SEW-EURODRIVE AB Gnejsvägen 6-8 S-55303 Jönköping Box 3100 S-55003 Jönköping	Tel. +46 36 3442-00 Fax +46 36 3442-80 http://www.sew-eurodrive.se info@sew-eurodrive.se

Sweden			
Technical Offices	**Göteborg**	SEW-EURODRIVE AB Gustaf Werners gata 8 S-42131 Västra Frölunda	Tel. +46 31 70968-80 Fax +46 31 70968-93
	Malmö	SEW-EURODRIVE AB Borrgatan 5 S-21124 Malmö	Tel. +46 40 68064-80 Fax +46 40 68064-93
	Stockholm	SEW-EURODRIVE AB Björkholmsvägen 10 S-14125 Huddinge	Tel. +46 8 44986-80 Fax +46 8 44986-93
	Skellefteå	SEW-EURODRIVE AB Trädgårdsgatan 8 S-93131 Skellefteå	Tel. +46 910 7153-80 Fax +46 910 7153-93

Switzerland			
Assembly **Sales** **Service**	**Basel**	Alfred Imhof A.G. Jurastrasse 10 CH-4142 Münchenstein bei Basel	Tel. +41 61 41717-17 Fax +41 61 41717-00 http://www.imhof-sew.ch info@imhof-sew.ch
Technical Offices	**Suisse romande**	André Gerber Es Perreyres 1436 Chamblon	Tel. +41 2 444538-50 Fax +41 2 444548-87
	Bern	Rudolf Bühler Allerheiligenstraße 97d 2540 Grenchen	Tel. +41 3 265223-39 Fax +41 3 265223-31
	Luzern	Beat Lütolf Baumacher 11 6244 Nebikon	Tel. +41 6 275647-80 Fax +41 6 275647-86
	Zürich	René Rothenbühler Nörgelbach 7 8493 Saland	Tel. +41 5 238631-50 Fax +41 5 238632-13

Taiwan (R.O.C.)			
	Nan Tou	Ting Shou Trading Co., Ltd. No. 55 Kung Yeh N. Road Industrial District Nan Tou 540	Tel. +886 49 255353 Fax +886 49 257878
	Taipei	Ting Shou Trading Co., Ltd. 6F-3, No. 267, Sec. 2 Tung Hwa South Road, Taipei	Tel. +886 2 27383535 Fax +886 2 27368268 Telex 27 245 sewtwn@ms63.hinet.net

Thailand			
Assembly **Sales** **Service**	**Chon Buri**	SEW-EURODRIVE (Thailand) Ltd. Bangpakong Industrial Park 2 700/456, Moo.7, Tambol Donhuaroh Muang District Chon Buri 20000	Tel. +66 38 454281 Fax +66 38 454288 sewthailand@sew-eurodrive.co.th
Technical Offices	**Bangkok**	SEW-EURODRIVE PTE LTD Bangkok Liaison Office 6th floor, TPS Building 1023, Phattanakarn Road Klongtan, Phrakanong, Bangkok,10110	Tel. +66 2 7178149 Fax +66 2 7178152 sewthailand@sew-eurodrive.co.th
	Hadyai	SEW-EURODRIVE (Thailand) Ltd. Hadyai Country Home Condominium 59/101 Soi.17/1 Rachas-Utid Road. Hadyai, Songkhla 90110	Tel. +66 74 359441 Fax +66 74 359442 sewhdy@ksc.th.com
	Khonkaen	SEW-EURODRIVE (Thailand) Ltd. 4th Floor, Kaow-U-HA MOTOR Bldg, 359/2, Mitraphab Road. Muang District Khonkaen 40000	Tel. +66 43 225745 Fax +66 43 324871 sewkk@cscoms.com
	Lampang	SEW-EURODRIVE (Thailand) Ltd. 264 Chatchai Road, sob-tuy, Muang, Lampang 52100	Tel. +66 54 310241 Fax +66 54 310242 sewthailand@sew-eurodrive.co.th



Tunisia			
Sales	**Tunis**	T. M.S. Technic Marketing Service 7, rue Ibn El Heithem Z.I. SMMT 2014 Mégrine Erriadh	Tel. +216 1 4340-64 + 1 4320-29 Fax +216 1 4329-76

Turkey			
Assembly **Sales** **Service**	**Istanbul**	SEW-EURODRIVE Hareket Sistemleri Sirketi Bagdat Cad. Koruma Cikmazi No. 3 TR-34846 Maltepe ISTANBUL	Tel. +90 216 4419163 + 216 4419164 + 216 3838014 Fax +90 216 3055867 sew@sew-eurodrive.com.tr
Technical Offices	**Ankara**	SEW-EURODRIVE Hareket Sistemleri Ticaret Ltd. Sirketi Özcelik Is Merkezi, 14. Sok, No. 4/42 TR-06370 Ostim/Ankara	Tel. +90 312 2868014 Fax +90 312 2868015
	Bursa	SEW-EURODRIVE Hareket Sistemleri San. ve Tic. Ltd. Sti. Besevler Küçük Sanayi Parkoop Parçacilar Sitesi 48. Sokak No. 47 TR Nilüfer/Bursa	Tel. +90 224 443 4559 Fax +90 224 443 4558
	Izmir	SEW-EURODRIVE Hareket Sistemleri Ticaret Ltd. Sirketi 1203/11 Sok. No. 4/613 Hasan Atli Is Merkezi TR-35110 Yenisehir-Izmir	Tel. +90 232 4696264 Fax +90 232 4336105

Ukraine			
Sales **Service**	**Dnepropetrovsk**	SEW-EURODRIVE Str. Rabochaja 23-B, Office 409 49008 Dnepropetrovsk	Tel. +380 56 370 3211 Fax +380 56 372 2078 m.piatnitsa@sew-eurodrive.de

Uruguay			
	Montevideo	SEW-EURODRIVE Argentina S. A. Sucursal Uruguay German Barbato 1526 CP 11200 Montevideo	Tel. +598 2 90181-89 Fax +598 2 90181-88 sewuy@sew-eurodrive.com.uy

USA			
Production **Assembly** **Sales** **Service**	**Greenville**	SEW-EURODRIVE INC. 1295 Old Spartanburg Highway P.O. Box 518 Lyman, S.C. 29365	Tel. +1 864 439-7537 Fax Sales +1 864 439-7830 Fax Manuf. +1 864 439-9948 Fax Ass. +1 864 439-0566 Telex 805 550 http://www.seweurodrive.com cslyman@seweurodrive.com
Assembly **Sales** **Service**	**San Francisco**	SEW-EURODRIVE INC. 30599 San Antonio St. Hayward, California 94544-7101	Tel. +1 510 487-3560 Fax +1 510 487-6381 cshayward@seweurodrive.com
	Philadelphia/PA	SEW-EURODRIVE INC. Pureland Ind. Complex 2107 High Hill Road, P.O. Box 481 Bridgeport, New Jersey 08014	Tel. +1 856 467-2277 Fax +1 856 845-3179 csbridgeport@seweurodrive.com
	Dayton	SEW-EURODRIVE INC. 2001 West Main Street Troy, Ohio 45373	Tel. +1 937 335-0036 Fax +1 937 440-3799 cstroy@seweurodrive.com
	Dallas	SEW-EURODRIVE INC. 3950 Platinum Way Dallas, Texas 75237	Tel. +1 214 330-4824 Fax +1 214 330-4724 csdallas@seweurodrive.com
	Additional addresses for service in the USA provided on request!		

Venezuela			
Assembly **Sales** **Service**	**Valencia**	SEW-EURODRIVE Venezuela S.A. Av. Norte Sur No. 3, Galpon 84-319 Zona Industrial Municipal Norte Valencia, Estado Carabobo	Tel. +58 241 832-9804 Fax +58 241 838-6275 sewventas@cantv.net sewfinanzas@cantv.net



How we're driving the world

With people who think fast and develop the future with you.

With a worldwide service network that is always close at hand.

With drives and controls that automatically improve your productivity.

With comprehensive knowledge in virtually every branch of industry today.

With uncompromising quality that reduces the cost and complexity of daily operations.



SEW-EURODRIVE
Driving the world

With a global presence that offers responsive and reliable solutions. Anywhere.

With innovative technology that solves tomorrow's problems today.

With online information and software updates, via the Internet, available around the clock.









SEW-EURODRIVE GmbH & Co KG
P.O. Box 3023 · D-76642 Bruchsal / Germany
Phone +49 7251 75-0 · Fax +49 7251 75-1970
sew@sew-eurodrive.com

→ **www.sew-eurodrive.com**