SEW EURODRIVE

INTERBUS UFI11A Fieldbus Interface

Edition

06/2002

Manual

1052 5114 / EN

SEW EURODRIVE

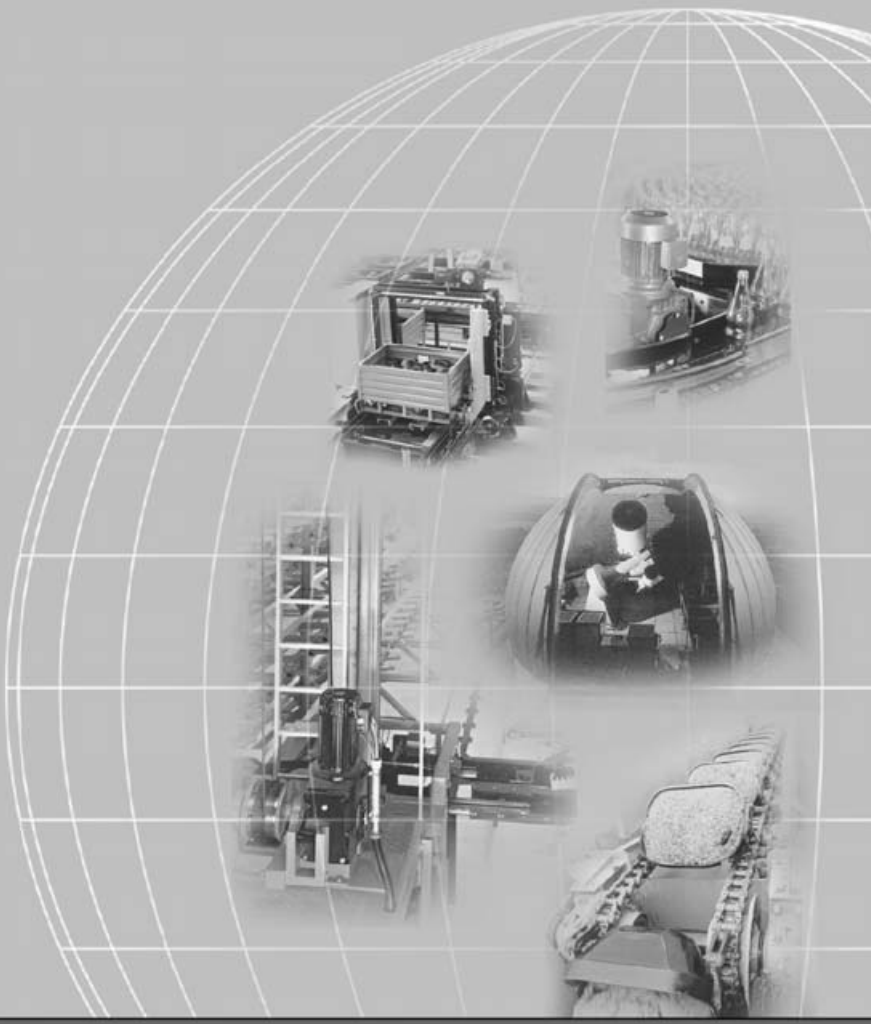

SEW-EURODRIVE

1 Overview of the System ... 4
2 Unit Structure ... 5
2.1 Front view ... 5
3 Installation and Operation with Autosetup ... 6
3.1 Installation notes ... 6
3.2 Setting the inverter parameters ... 10
3.3 Autosetup ... 10
3.4 Configuring the fieldbus master ... 11
3.5 Starting the inverters ... 12
4 Installation and Operation with a PC ... 13
4.1 Installation notes ... 13
4.2 PC connection ... 17
4.3 Setting the inverter parameters ... 17
4.4 Startup software ... 17
4.5 Configuring the fieldbus master ... 18
4.6 Starting the inverters ... 19
5 INTERBUS Interface ... 20
5.1 Startup of the INTERBUS master ... 20
5.2 Configuring the INTERBUS interface ... 28
5.3 Examples of DIP switch settings for process data and PCP communication in Autosetup mode ... 31
5.4 Control via INTERBUS ... 34
5.5 PCP interface ... 35
5.6 Return codes for parameter setting ... 44
5.7 Autosetup ... 46
6 Error Response ... 48
6.1 Fieldbus timeout ... 48
6.2 SBus timeout ... 48
6.3 Unit errors ... 48
7 Diagnostic LEDs ... 49
7.1 States of the LEDs UL, RC, BA, TR and RD ... 49
8 DIP Switches ... 51
9 Application examples ... 52
9.1 Control via process data ... 52
9.2 Parameter setting via the PCP interface ... 52
9.3 Representation of the coding examples ... 53
9.4 Sequence of a parameter setting process ... 53
9.5 Reading of an UFI parameter ... 54
9.6 Writing of UFI11A or drive parameters via object 8288 ... 55
9.7 Reading of UFI11A or drive parameters via object 8288 ... 56
10 Parameter List ... 58
11 List of Errors ... 59
12 Technical Data ... 61
13 Dimensions ... 62
14 Index ... 63

1 Overview of the System

The UFI11A INTERBUS fieldbus interface serves as a gateway for connecting one or more MOVIDRIVE, MOVIDRIVEcompact or MOVITRAC 07 inverters to INTERBUS. Several inverters can be connected to the INTERBUS UFI11A interface via the SBus. The INTERBUS UFI11A interface provides the translation between the INTERBUS and the SBus.

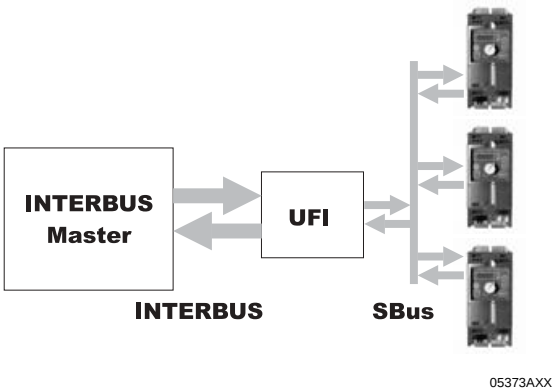

Fig. 1: Overview of the system: INTERBUS master – UFI11A – inverter

Copying data

The UFI11A settings can be copied with the UBP11A parameter module from UFI11A to UFI11A. For safety reasons, all inverters connected to the UFI11A must be turned off when writing data.

2 Unit Structure

2.1 Front view

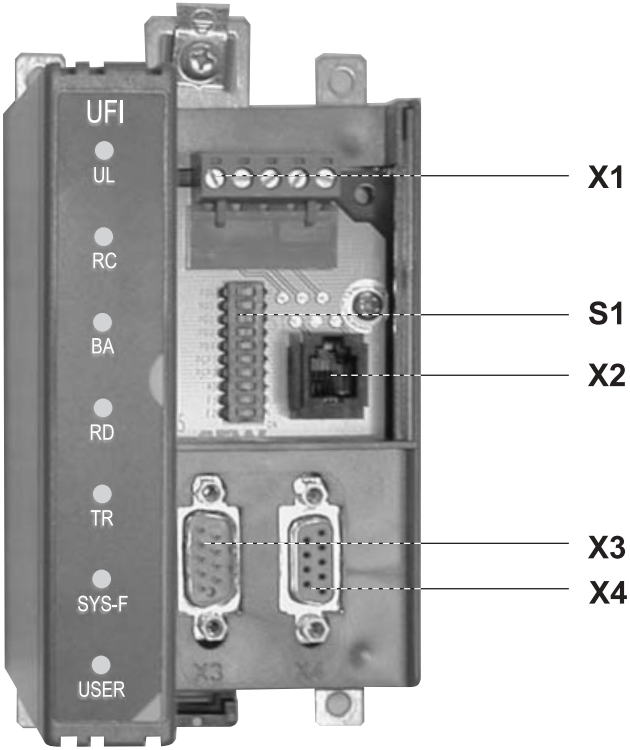

Fig. 2: Arrangement of LEDs, connectors and DIP switches

X1	SBus and 24 V connection
X2	Diagnostic interface
X3	INTERBUS remote in (incoming remote bus)
X4	INTERBUS remote out (outgoing remote bus)
S1	DIP switches
UL	Logic voltage
RC	Incoming remote bus OK
BA	Bus mode active
RD	Outgoing remote bus switched off
TR	Parameter data exchange via PCP channel
SYS-F	System fault
USER	Expert mode

3 Installation and Operation with Autosetup

3.1 Installation notes

Mounting

The unit can be mounted using the integrated DIN rail mounting option or directly onto a switch cabinet wall using the four holes integrated into the back wall of the housing. In the latter case, the two retaining screws for the DIN rail mounting must be removed. Basically, there are no restrictions regarding positioning in relation to the inverters to be connected (e.g. MOVITRAC® 07). In laying out the system, consider the maximum cable length and the fact that the UFI11A must be the first or last node on the system bus (SBus).

The UFI11A must have additional HF-compliant grounding if the DIN rail mounting option is used in conjunction with SBus cables more than 1 m in length.

Pin assignment

The UFI11A fieldbus interface is equipped with a 9-pin sub D male connector for the incoming bus signal and a 9-pin sub D female connector for the outgoing bus signal according to EN 50170.

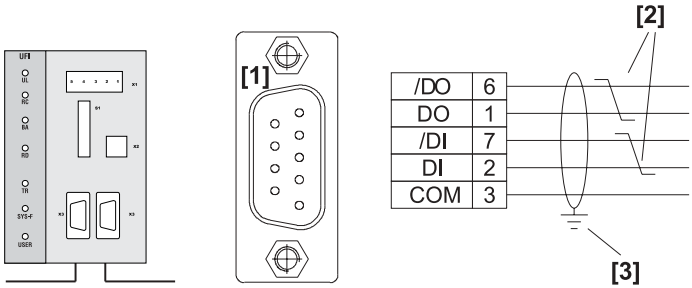

05406AXX

*Fig. 3: Pinout of the 9-pin sub D male connector **X3** to EN 50170 ([1] = 9-pin sub D male connector; [2] = Signal lines twisted pair; [3] = Conductive connection between the connector housing and the shield)*

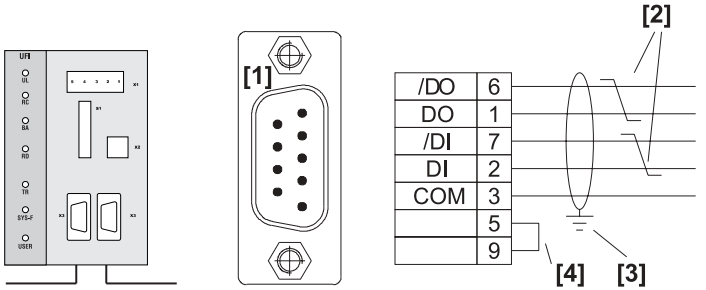

*Fig. 4: Pinout of the 9-pin sub D female connector **X4** to EN 50170 ([1] = 9-pin sub D female connector; [2] = Signal lines twisted pair; [3] = Conductive connection between the connector housing and the shield; [4] = Jumper)*

As a rule, the fieldbus interface is connected to the INTERBUS system using a twisted, shielded cable. The shield of the INTERBUS cable must be connected on both ends, for example on the plug housing. Note the maximum supported transmission rate when you are selecting the bus connector.

The cable is connected to the INTERBUS plug using pins 6 and 1 (/DO and DO) and pins 7 and 2 (/DI and DI). Communication takes place via these contacts. The RS-485 signals /DO and DO as well as /DI and DI must have the same contacts on all INTERBUS stations. Otherwise, communication via the bus will not function.

Connection

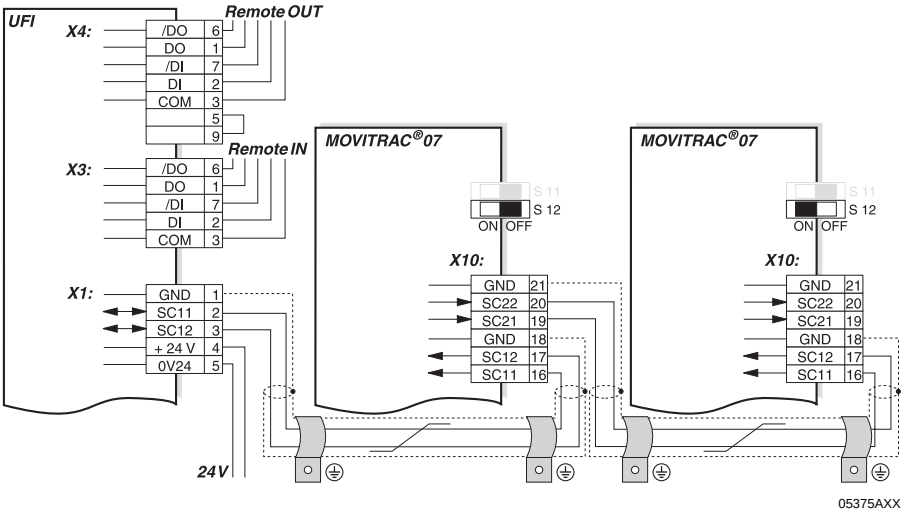

Fig. 5: System bus connection

UFI11A
COM = RS-485 reference
/DO = Data out inverted
DO = Data out
/DI = Data in inverted
DI = Data in
GND = System bus reference
SC11 = System bus high
SC12 = System bus low

MOVITRAC® 07
GND = System bus reference
SC22 = System bus outgoing low
SC21 = System bus outgoing high
SC12 = System bus incoming low
SC11 = System bus incoming high
S12 = System bus terminating resistor

Notes on SBus configuration:

- Use a twisted and shielded copper cable (data transmission cable with braided copper shield). Connect the shield at both ends to the electronics shield clamp of MOVITRAC® 07 or the UFI11A and ensure a large area of contact between the shield and clamp. Also connect the ends of the shield to GND. The cable must meet the following specifications (CAN bus or DeviceNet cables are suitable, for example):

  –Conductor cross section 0.75 mm^2 (AWG18)
  –Cable resistance 120 Ω at 1 MHz
  –Capacitance per unit length ≤ 40 pF/m (12 pF/ft) at 1 kHz

- The permitted total cable length depends on the baud rate setting of the SBus:

  –250 kbaud: 160 m (528 ft)
  –500 kbaud: 80 m (264 ft)
  –1000 kbaud: 40 m (132 ft)

- Switch on the system bus terminating resistor (S12 = ON) of the node end of the system bus. Switch off the terminating resistor on the other units (S12 = OFF). The UFI11A fieldbus interface must always be the first or last node on the system bus. It has an integrated terminating resistor.
- There must not be any potential difference between the units connected to the SBus. Take suitable measures such as connecting each unit's ground lug to a central grounding point in the cabinet to avoid potential differences.
- Point-to-point cabling is not permitted.

24 V connection

An external 24 VDC voltage supply must be connected to terminals X1:4 and X1:5.

The voltage range for the 24 VDC voltage supply is 18 – 30 V. The current consumption of the UFI11A fieldbus interface is 300 mA.

Shielding and routing of the bus cables

The INTERBUS interface supports RS-485 transmission technology and requires the cable type specified as the physical medium for INTERBUS. This cable must be a shielded, twisted-pair cable with 3 x 2 cores.

Having the bus cable correctly shielded eliminates parasitic interference which can occur in an industrial environment. The following measures ensure the best possible shielding:

- Finter-tighten the retaining screws of plugs, modules and equipotential bonding conductors.
- Use only connectors with a metal housing or a metallized housing.
- Maximize the contact area between the shield and the connector housing.
- Shield the bus cable on both ends.
- Do not route the signal and bus cables in parallel with the power cables (motor leads); use separate cable ducts if possible.
- Only use grounded-metal cable trays in industrial environments.
- Join the signal cables and the associated equipotential bonding together at closely spaced intervals by the shortest route.
- Avoid using plug connectors to extend bus cables.
- Route the bus cables closely adjacent to available grounding surfaces.

In the event of fluctuations in the ground potential, a compensating current may flow along the shield which is connected at both ends and to the ground potential (PE). In this case, make adequate provision for equipotential bonding in accordance with the relevant VDE regulations.

3.2 Setting the inverter parameters

The settings can be entered using the inverter control panel. Refer to the inverter operating instructions for more information.

- Switch on the voltage supply for the UFI11A and all connected inverters.
- Set an individual SBus address (P813) on the inverters. Recommendation: Assign the addresses starting from address 1 and working in ascending order according to the arrangement of inverters in the switch cabinet. Do not assign address 0 since this is used by the UFI11A.
- Check the SBus baud rate (P816, factory setting = 500 kbaud).
- Set the Setpoint source (P100) to SBus (value 10).
- Set the Control signal source (P101) to SBus (value 3).
- Set the terminal assignment of the binary inputs. The value 0 is recommended for P60- in MOVITRAC® 07. This corresponds to the following assignment:

  –DI01 CW/STOP (applied to 24 V, enable CW direction of rotation)
  –DI02 CCW/STOP (applied to 24 V, enable CCW direction of rotation)
  –DI03 FIX SETPT SW.OV(not connected)
  –DI04 n11/n21 (not connected)
  –DI05 n12/n22 (not connected)
  –Program the unused terminals to "NO FUNCTION" if you are using a MOVIDRIVE® or MOVIDRIVE compact.
- Important: If you need to set P815 SBus timeout delay for MOVITRAC® 07, this is only possible using a PC. The default value is 0, which means timeout monitoring is switched off. Set P815 to the value 1 s.

3.3 Autosetup

Switch on the Autosetup function using the DIP switch on the UFI11A. The function is active for as long as the SYS-FLT LED is flashing briefly with a long interval between flashes. The LED stays off after the scanning process if at least one inverter has been detected. *The Autosetup DIP switch must stay switched on.* Autosetup can be reactivated by switching the DIP switch off and on again. The SYS-FLT LED remains on following Autosetup if no inverter is detected. In this case, check the cabling of the SBus, the terminating resistors of the SBus, the voltage supply to the inverters and the SBus address settings (P813).

3.4 Configuration of the fieldbus master

You will find detailed information in the section "INTERBUS interface."

- Set the required process data length via DIP switches 1 ... 5. You will need three process data words for each drive inverter connected to the UFI11A. That means you will have to set 9 words in case you are operating three MOVITRAC® 07 units. A change in the DIP switch settings will become active after turning the UFI11A off and on again.

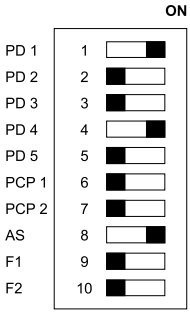

- Start the "CMD Tool" project planning software for your INTERBUS interface.
- Enter the bus setup via "Configuration frame / Read in" or "Read in configuration frame."
- Assign program addresses of the control program to the INTERBUS process data of the inverters. This assignment takes place via the context menu "Process data" or "Process data manager."
- Enhance the control program by the data exchange with the UFI11A.

3.5 Starting the inverters

You can operate up to eight inverters on the INTERBUS via one UFI11A. The INTERBUS master and the UFI11A will exchange setpoints and actual values of all inverters connected to the UFI11A in contiguous data packages. It is important for you to know where a particular inverter is located in the data package (process image). The relationship is shown in the following illustration:

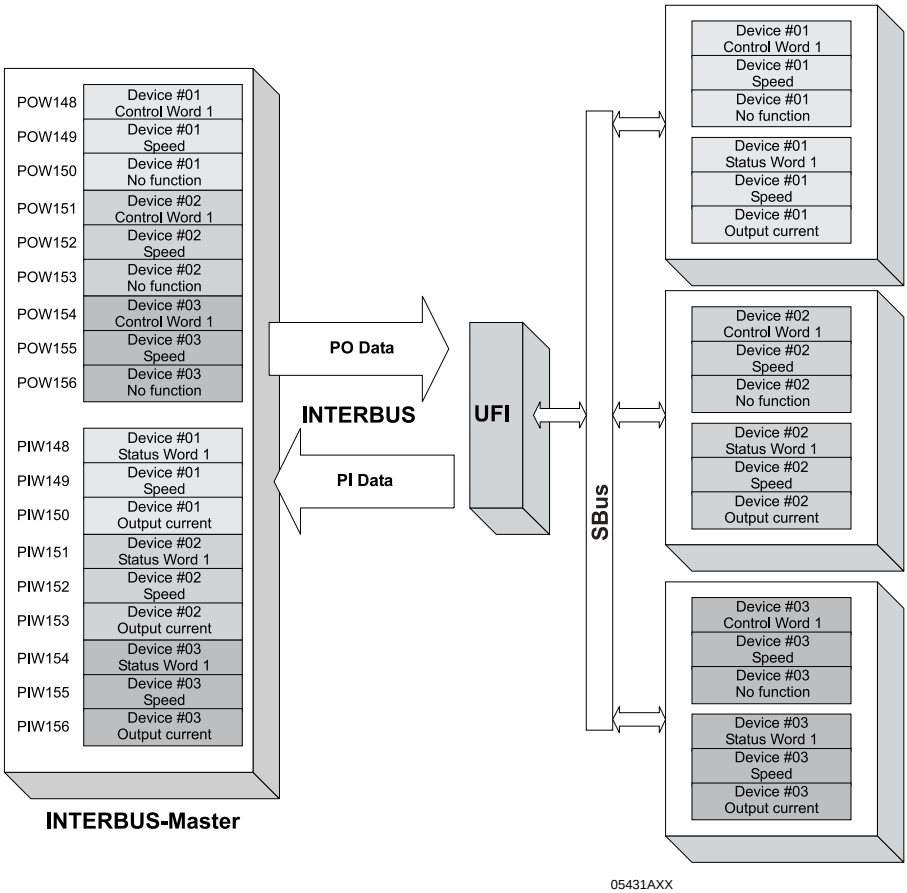

Fig. 6: Data exchange INTERBUS master – UFI11A – inverter

You can enable the inverter by writing the value 0006h in the corresponding control word. You can enter the speed setpoint in the following word; it is scaled with 0.2 1/min per digit.

4 Installation and Operation with a PC

4.1 Installation notes

Mounting

The unit can be mounted using the integrated DIN rail mounting option or directly onto a switch cabinet wall using the four holes integrated into the back wall of the housing. In the latter case, the two retaining screws for the DIN rail mounting must be removed. Basically, there are no restrictions regarding positioning in relation to the inverters to be connected (e.g. MOVITRAC® 07). In laying out the system, consider the maximum cable length and the fact that the UFI11A must be the first or last node on the system bus (SBus).

The UFI11A must have additional HF-compliant grounding if the DIN rail mounting option is used in conjunction with SBus cables more than 1 m in length.

Pin assignment

The UFI11A fieldbus interface is equipped with a 9-pin sub D male connector for the incoming bus signal and a 9-pin sub D female connector for the outgoing bus signal.

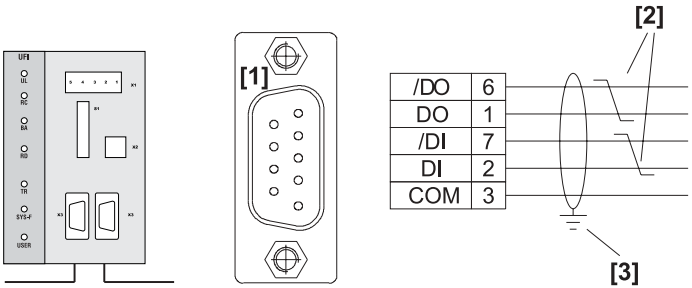

05406AXX

*Fig. 7: Pinout of the 9-pin sub D male connector **X3** to EN 50170 ([1] = 9-pin sub D male connector; [2] = Signal lines twisted pair; [3] = Conductive connection between the connector housing and the shield)*

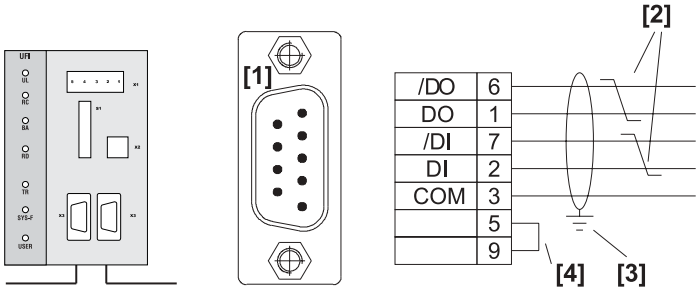

05374AXX

*Fig. 8: Pinout of the 9-pin sub D female connector **X4** to EN 50170 ([1] = 9-pin sub D female connector; [2] = Signal lines twisted pair; [3] = Conductive connection between the connector housing and the shield; [4] = Jumper)*

As a rule, the fieldbus interface is connected to the INTERBUS system using a twisted, shielded cable. The shield of the INTERBUS cable must be connected on both ends, for example on the plug housing. Note the maximum supported transmission rate when you are selecting the bus connector.

The cable is connected to the INTERBUS plug using pins 6 and 1 (/DO and DO) and pins 7 and 2 (/DI and DI). Communication takes place via these contacts. The RS-485 signals /DO and DO as well as /DI and DI must have the same contacts on all INTERBUS stations. Otherwise, communication via the bus will not function.

Connection

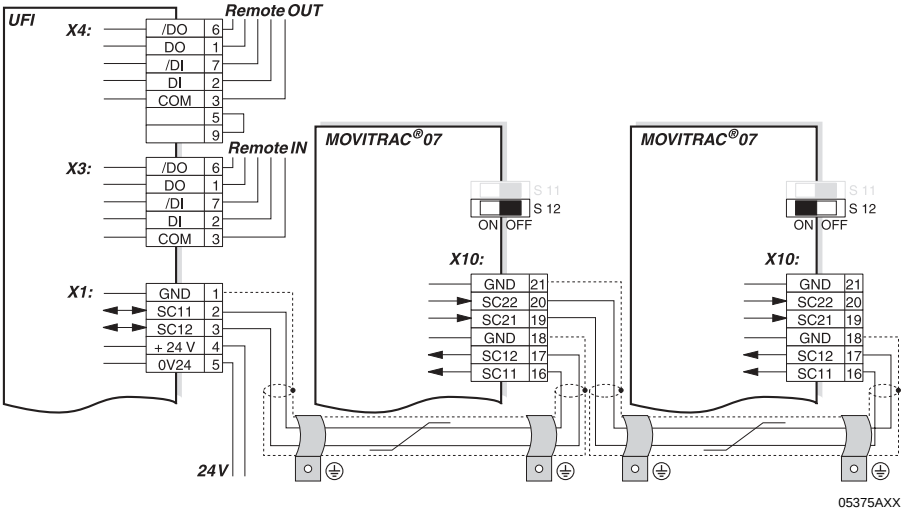

Fig. 9: System bus connection

UFI11A
COM = RS-485 reference
/DO = Data out inverted
DO = Data out
/DI = Data in inverted
DI = Data in
GND = System bus reference
SC11 = System bus high
SC12 = System bus low

MOVITRAC® 07
GND = System bus reference
SC22 = System bus outgoing low
SC21 = System bus outgoing high
SC12 = System bus incoming low
SC11 = System bus incoming high
S12 = System bus terminating resistor

Notes on SBus configuration:

- Use a twisted and shielded copper cable (data transmission cable with braided copper shield). Connect the shield at both ends to the electronics shield clamp of MOVITRAC® 07 or the UFI11A and ensure a large area of contact between the shield and clamp. Also connect the ends of the shield to GND. The cable must meet the following specifications (CAN bus or DeviceNet cables are suitable):

  –Conductor cross section 0.75 mm^2 (AWG18)
  –Cable resistance 120 Ω at 1 MHz
  –Capacitance per unit length ≤ 40 pF/m (12 pF/ft) at 1 kHz

- The permitted total cable length depends on the baud rate setting of the SBus:

  –250 kbaud: 160 m (528 ft)
  –500 kbaud: 80 m (264 ft)
  –1000 kbaud: 40 m (132 ft)

- Switch on the system bus terminating resistor (S12 = ON) of the node end of the system bus. Switch off the terminating resistor on the other units (S12 = OFF). The UFI11A fieldbus interface must always be the first or last node on the system bus. It has an integrated terminating resistor.
- There must not be any potential difference between the units connected to the SBus. Take suitable measures such as connecting each unit's ground lug to a central grounding point in the cabinet to avoid potential differences.
- Point-to-point cabling is not permitted.

24 V connection

An external 24 VDC voltage supply must be connected to terminals X1:4 and X1:5.

The voltage range for the 24 VDC voltage supply is 18 – 30 V. The current consumption of the UFI11A fieldbus interface is 300 mA.

Shielding and routing of the bus cables

The INTERBUS interface supports RS-485 transmission technology and requires the cable type specified as the physical medium for INTERBUS. This cable must be a shielded, twisted-pair cable with 3 x 2 cores.

Having the bus cable correctly shielded eliminates parasitic interference which can occur in an industrial environment. The following measures ensure the best possible shielding:

- Finter-tighten the retaining screws of plugs, modules and equipotential bonding conductors.
- Use only connectors with a metal housing or a metallized housing.
- Maximize the contact area between the shield and the connector housing.
- Shield the bus cable on both ends.
- Do not route the signal and bus cables in parallel with the power cables (motor leads); use separate cable ducts if possible.
- Only use grounded-metal cable trays in industrial environments.
- Join the signal cables and the associated equipotential bonding together at closely spaced intervals by the shortest route.
- Avoid using plug connectors to extend bus cables.
- Route the bus cables closely adjacent to available grounding surfaces.

In the event of fluctuations in the ground potential, a compensating current may flow along the shield which is connected at both ends and to the ground potential (PE). In this case, make adequate provision for equipotential bonding in accordance with the relevant VDE regulations.

4.2 PC connection

The UFI11A is equipped with a 4-pole RJ12 socket on the front. The option UWS21A with item no. 8230773 establishes the connection to a COM interface on your PC. Connect the desired COM of the PC with the UWS21A via the enclosed serial cable. The UWS21A will be connected with the UFI11A via the enclosed RJ11 cable.

4.3 Setting the inverter parameters

The settings can be entered using the inverter control panel. Refer to the inverter operating instructions for more information.

- Switch on the voltage supply for the UFI11A and all connected inverters.
- Set an individual SBus address (P813) on the inverters. Recommendation: Assign the addresses starting from address 1 and working in ascending order according to the arrangement of inverters in the switch cabinet. Do not assign address 0 since this is used by the UFI11A.

4.4 Startup software

- Install the MOVITOOLS software package as of version 2.70 on your PC.
- Start the software. Select the COM to which the UFI11A has been connected and press the "Update“ button. The UFI11A should appear at address 0 and the connected inverters on the following addresses. In case you do not see an entry in the window, please check the COM interface and the connection via the UWS21. If you only see the UFI11A as an entry in the window, please check the SBus cabling and the terminating resistors.
- Select the UFI11A and start the UFx Configurator.
- Select the menu item "New configuration of fieldbus node.“
- Select your project path and name. Press the "Next" button.
- Press the "Update“ button. You should now see all inverters connected to the UFI11A. You can customize the configuration with the "Insert“, "Edit“ and "Delete“ buttons. Press the "Next" button.
- Press the "Autoconfiguration“ button. You will now see the process image for the UFI11A in your control. The process data length is displayed at the bottom. This value is important for the configuration of the fieldbus master. Press the "Next" button."
- Save the project data and press the "Download“ button. If you experience problems with the download, you have probably set the DIP switch to AUTOSETUP. You need to turn off the autosetup feature when configuring with a PC.

- You can see the data being exchanged between fieldbus master and UFI11A with the process data monitor.
- You will have to enable the unit via the terminals to control the inverter via fieldbus. You have already connected the terminals. Select the first inverter with address 1 in the window "Connected units" to check the pinout and start "Shell." Make the following settings for the pinout of the MOVITRAC® 07:

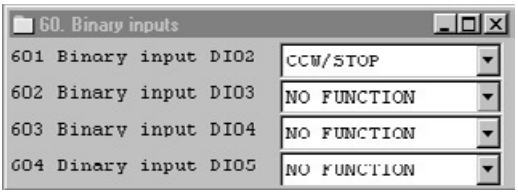

- Repeat this step for all inverters listed in the window "Connected units."

4.5 Configuration of the fieldbus master

You will find detailed information in the section "INTERBUS interface."

- Set the required process data length via DIP switches 1 ... 5. You will need three process data words for each drive inverter connected to the UFI11A. That means you will have to set 9 words in case you are operating three MOVITRAC® 07 units. A change in the DIP switch settings will become active after turning the UFI11A off and on again.

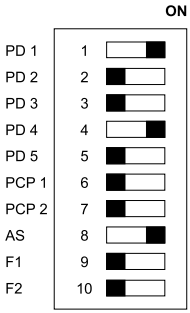

- Start the "CMD Tool" project planning software for your INTERBUS interface.
- Enter the bus setup via "Configuration frame / Read in" or "Read in configuration frame."
- Assign program addresses of the control program to the INTERBUS process data of the inverters. This assignment takes place via the context menu "Process data" or "Process data manager."
- Enhance the control program by the data exchange with the UFI11A.

4.6 Starting the inverters

You can operate up to eight inverters on the INTERBUS via one UFI11A. The INTERBUS master and the UFI11A will exchange setpoints and actual values of all inverters connected to the UFI11A in contiguous data packages. It is important for you to know where a particular inverter is located in the data package (process image). The relationship can be seen in the process data monitor of the UFx Configurator.

You can enable the inverter by writing the value 0006h in the corresponding control word. You can enter the speed setpoint in the following word; it is scaled with 0.2 1/min per digit.

5 INTERBUS Interface

5.1 Startup of the INTERBUS master

Project planning of the UFI11A in the INTERBUS interface module with the "CMD Tool" (CMD = Configuration-Monitoring-Diagnostics) project planning software takes place in two steps. In the first step, you will set up the bus structure. The second step involves a station description and address entry of process data.

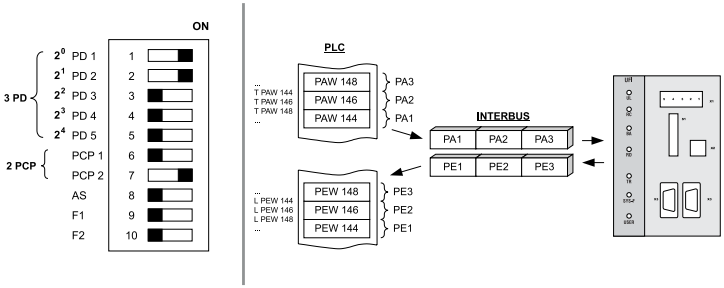

Fig. 10: Project planning example for 3PD + 2PCP

The following illustrations show the CMD Tool settings for a UFI11A configured with 3PD + 2PCP according to Fig. 10 on the input/output addresses 144...149 of the control.

Configuring the bus structure

Off-line configuration: Insert with ID code

You can configure the bus structure with the CMD Tool on-line or off-line. In the off-ine status, the drive inverter will be configured with the menu item "Edit / Insert with ID code" in the CMD tool. In this mode, you will have to enter the ID code, process data channel and device type according to Fig. 11.

Fig. 11: Off-line configuration with the CMD Tool

Not all combinations are available. You will find the valid settings in the following table. The insert with ID Code has to correspond to the setting of DIP switches 6 and 7. The process data channel setting has to correspond to the setting of DIP switches 1-5. Any conflicting settings will prevent operation of the INTERBUS. See also the section on configuration of the Interbus interface via DIP switches.“

	Program setting	**Function**
ID Code	3 dez (03 hex)	No parameter channel PCP
Process data channel:	16 Bit	1 process data word (1 PD)
	32 Bit	2 process Data Words (2 PD)
	48 Bit	3 process data words (3 PD)
	64 Bit	4 process data words (4 PD)
	80 Bit	5 process data words (5 PD)
	96 Bit	6 process data words (6 PD)
	112 Bit	7 process data words (7 PD)
	128 Bit	8 process data words (8 PD)
	144 Bit	9 process data words (9 PD)
	160 Bit	10 process data words (10 PD)
	192 Bit	12 process data words (12 PD)
	224 Bit	14 process data words (14 PD)
	256 Bit	16 process data words (16 PD)
	384 Bit	24 process data words (24 PD)
ID Code	227 dez (E3 hex)	Parameter channel PCP: 1 word
Process data channel:	16 Bit	1 process data word (Param + 1 PD)
	32 Bit	2 process data words (Param + 2 PD)
	48 Bit	3 process data words (Param + 3 PD)
	64 Bit	4 process data words (Param + 4 PD)
	80 Bit	5 process data words (Param + 5 PD)
	96 Bit	6 process data words (Param + 6 PD)
	112 Bit	7 process data words (Param + 7 PD)
	128 Bit	8 process data words (Param + 8 PD)
	144 Bit	9 process data words (Param + 9 PD)
	176 Bit	11 process data words (Param + 11PD)
	218 Bit	13 process data words (Param + 13 PD)
	240 Bit	15 process data words (Param + 15 PD)
	368 Bit	23 process data words (Param + 23 PD)

	Program setting	Function
ID Code	224 dez (E0 hex)	Parameter channel PCP: 2 words
Process data channel:	16 Bit	1 process data word (Param + 1 PD)
	32 Bit	2 process data words (Param + 2 PD)
	48 Bit	3 process data words (Param + 3 PD)
	64 Bit	4 process data words (Param + 4 PD)
	80 Bit	5 process data words (Param + 5 PD)
	96 Bit	6 process data words (Param + 6 PD)
	112 Bit	7 process data words (Param + 7 PD)
	128 Bit	8 process data words (Param + 8 PD)
	160 Bit	10 process data words (Param + 10 PD)
	192 Bit	12 process data words (Param + 12 PD)
	224 Bit	14 process data words (Param + 14 PD)
	352 Bit	22 process data words (Param + 22 PD)
	384 Bit	24 process data words (Param + 24 PD)
ID Code	225 dez (E1 hex)	Parameter channel PCP: 4 words
Process data channel:	16 Bit	1 process data word (Param + 1 PD)
	32 Bit	2 process data words (Param + 2 PD)
	48 Bit	3 process data words (Param + 3 PD)
	64 Bit	4 process data words (Param + 4 PD)
	80 Bit	5 process data words (Param + 5 PD)
	96 Bit	6 process data words (Param + 6 PD)
	128 Bit	8 process data words (Param + 8 PD)
	160 Bit	10 process data words (Param + 10 PD)
	192 Bit	12 process data words (Param + 12 PD)
	320 Bit	20 process data words (Param + 20 PD)
	352 Bit	22 process data words (Param + 22 PD)

On-line configuration: Configuration frame / Read in

You can initially install the INTERBUS system completely and then set the DIP switches of the UFI11A. The entire bus structure (configuration frame) can then be read in via the CMD Tool. All stations will be automatically identified with their set data length.

Insert device description

You can create an individual device description for the UFI11A in the INTERBUS system to clearly identify and describe the INTERBUS stations. The following entries are of importance in this instance:

In the fields "Manufacturer Name" and "Device Type" you must enter the

– Manufacturer Name: SEW-EURODRIVE
– Device Type: UFI

so that the drive can be configured via the INTERBUS interface module (Fig. 12) with a management PC from the management level.

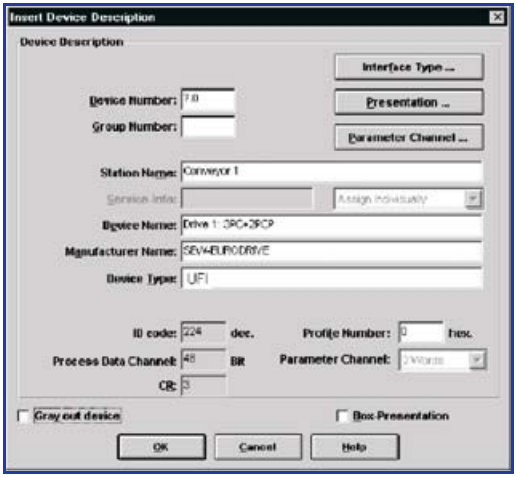

05655AXX

Fig. 12: Device description for UFI

Select "Remote Bus" as interface type.

As of CMD Tool version 4.50, you can copy your own ICO files in the directory ".\IBSCMD\Pict32\" (Fig. 13) for easier identification of the drive inverter. You will find the "INTERBUS description files for CMD Tool" under "Software / Movitrac" on the SEW homepage at http://www.SEW-EURODRIVE.com.

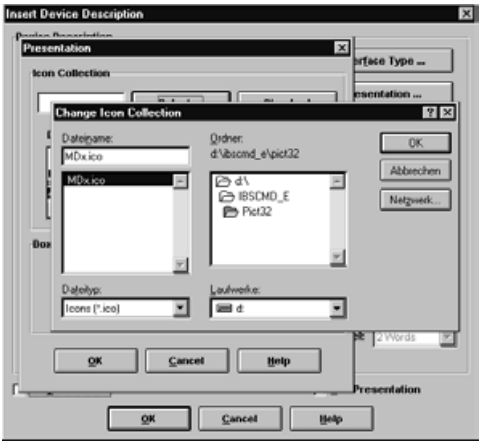

03716AXX

Fig. 13: Linking device description with ICO files

Parameter channel

The following settings of the parameter channel will become necessary if you want to use the PCP channel for configuring the UFI11A or a drive inverter connected to the UFI11A:

- Message Lengths / Transmit / Receive: 243 bytes each
- Supported Parameter Channel Services (Standard): Read / Write

03717AXX

Fig. 14: Setting the parameter channel (PCP)

Assigning process data

You assign the INTERBUS process data of the drive inverters to the program addresses of the control system with the context menu "Process Data."

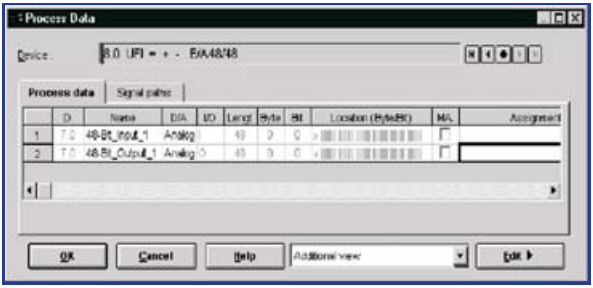

05657AXX

Fig. 15: Assignment of INTERBUS process data and PLC program addresses

Testing the PCP connection

You can use the MONITOR mode of the CMD Tool to test the PCP connection to the UFI. The following illustrations demonstrate the PCP test. You are basically establishing a PCP connection with this method and read the parameter list (object directory) stored in the device. Change the CMD Tool to the "Monitoring" operating state.

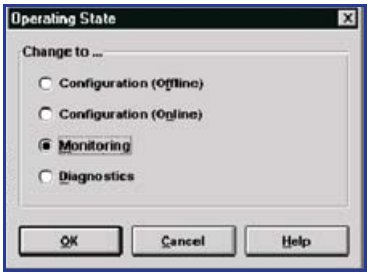

05658AXX

Fig. 16: Change the CMD Tool to the "MONITORING" operating state

Click on the UFI to which you would like to establish a PCP connection. Open the context menu with the right mouse button and select the menu item "Device Parameterization".

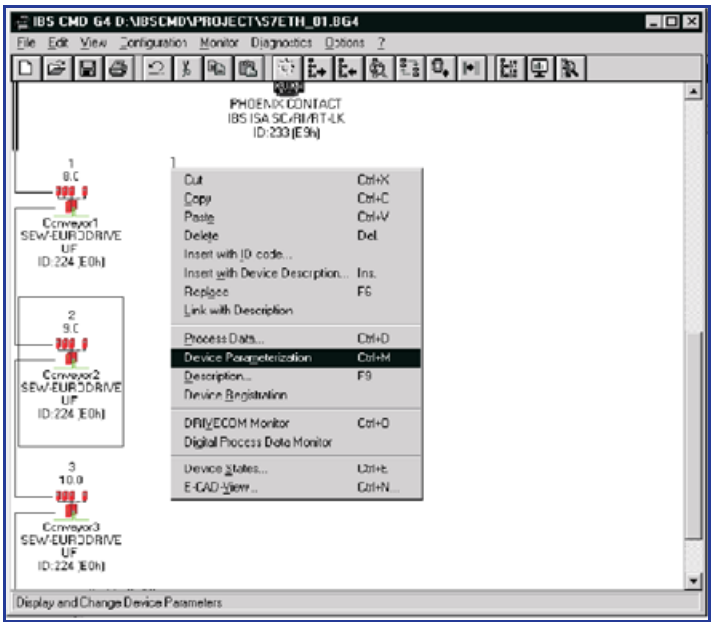

Fig. 17: Testing the PCP device parameterization

Activate the menu item "Device / Read Parameter List" in the window "Device Parameterization."

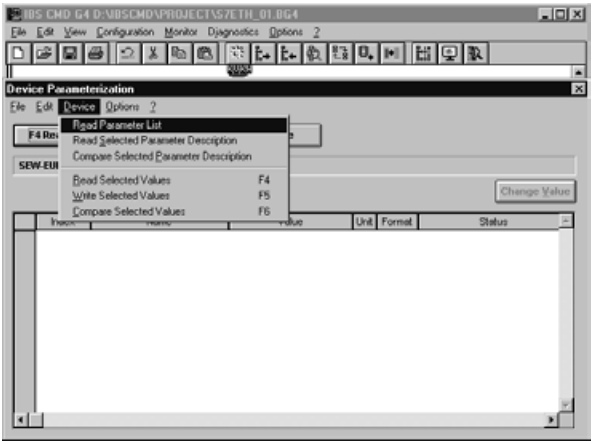

03722AXX

Fig. 18: Window for device parameterization via CMD Tool

The configuration of the PCP channel is correct if the device parameters are now read in. You can cancel the read-in process. If you receive an error message instead of the progression bar, check the PCP configuration and assignment of the CRs. You may want to format the parameterization memory of the interface module once again and write the current project once again into the parameterization memory. Repeat the configuration of the interface module and the sequence for testing the PCP connection.

03713AXX

Fig. 19: CMD Tool reads in device parameters, indicating that the PCP communication is ok

5.2 Configuration of the INTERBUS interface

Under the cover plate, there is a DIP switch for setting the INTERBUS data length of the fieldbus interface. The process data length can be set to a maximum of 24 words using switches S1-1 to S1-5. The PCP length can be set using switches S1-6 and S1-7. PCP is the parameter channel of the INTERBUS and is used for setting the parameters of the UFI11A and the connected inverters.

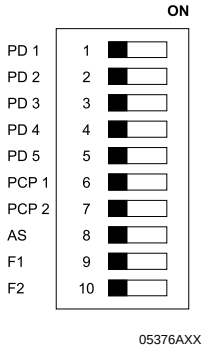

Fig. 20: UFI11A DIP switches

The process data channel is the means by which the connected inverters are controlled and their status read. Since all data of the connected inverters are transmitted by the INTERBUS, you will have to enter the sum of the process data lengths of all individual inverters. In Autosetup, this means three words per inverter.

Fig. 21 shows an example setting of six process data words for two inverters. The value of each switch in determining the process data length is shown on the right.

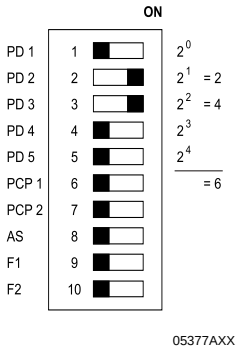

Fig. 21: Process data words

A maximum of 3PDs can be assigned to one station on the SBus.

The PCP channel can be set to 0, 1, 2, or 4 words. At least one word must be set to enable parameter data to be exchanged. Higher settings increase the transmission speed. Fig. 8 shows the possible settings for the PCP channel.

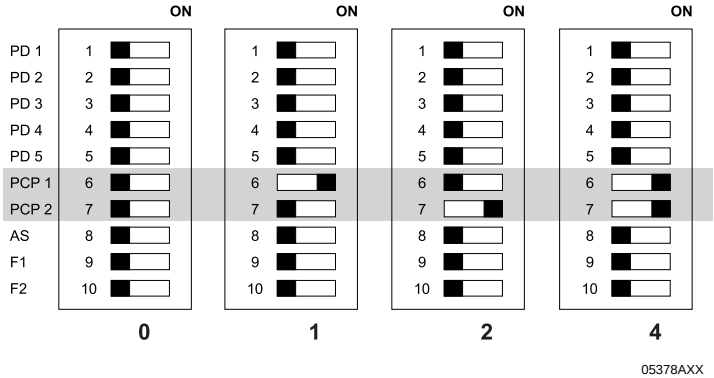

Fig. 22: Possible settings for PCP words

Note that if the total of process data and PCP words exceeds 10 words, you must select a value equal to or greater than your required data length from the following settings:

0 – 10 words set directly, 12 words, 14 words, 16 words, 24 words and 26 words.

Use the following table for the valid settings. You can also refer to the example settings given below if you are operating the fieldbus interface in Autosetup mode.

Number of process data words	0 PCP words	1 PCP word	2 PCP words	4 PCP words
1	X	X	X	X
2	X	X	X	X
3	X	X	X	X
4	X	X	X	X
5	X	X	X	X
6	X	X	X	X
7	X	X	X	
8	X	X	X	X
9	X	X		
10	X		X	X
11		X		
12	X		X	X
13		X		
14	X		X	
15		X		
16	X			
17				
18				
19				
20				X
21				
22			X	X
23		X		
24	X		X	

De-energize the UFI11A before adjusting the DIP switch settings. The settings of DIP switches S1-1 to S1-7 are only read during the power-up initialization.

The UFI11A signals the "Microprocessor not ready" ID code (38h) if the settings of DIP switches S1-1 to S1-7 are invalid.

5.3 Examples of DIP switch settings for process data and PCP communication in Autosetup mode

1 inverter (3 process data words)

3 process data words are set. 0, 1, 2 and 4 PCP words can be set using DIP switches PCP1 and PCP2.

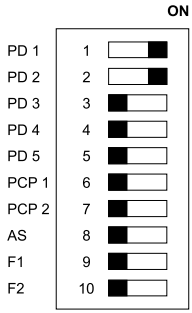

2 inverters (6 process data words)

6 process data words are set. 0, 1, 2 and 4 PCP words can be set using DIP switches PCP1 and PCP2.

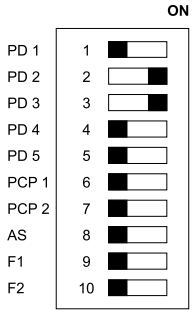

3 inverters (9 process data words)

9 process data words are set. 0 and 1 PCP word can be set using DIP switches PCP1 and PCP2.

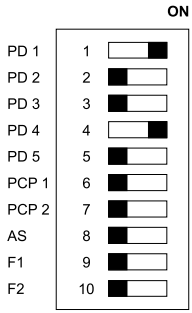

4 inverters (12 process data words)

12 process data words are set. 0, 2 and 4 PCP words can be set using DIP switches PCP1 and PCP2.

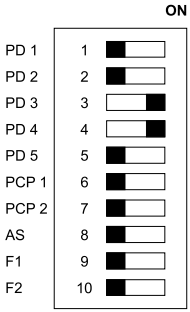

5 inverters (15 process data words)

15 process data words are set. Only 1 PCP word can be set using DIP switches PCP1 and PCP2.

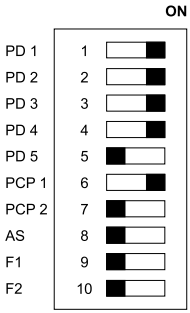

6 inverters (18 process data words)

20 process data words are set. 4 PCP words must be set using DIP switches PCP1 and PCP2.

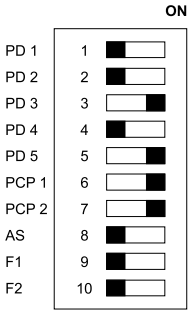

7 inverters (21 process data words)

22 process data words are set. 2 and 4 PCP words can be set using DIP switches PCP1 and PCP2.

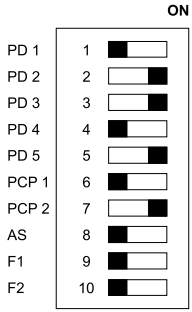

8 inverters (24 process data words)

24 process data words are set. 0 and 2 PCP words can be set using DIP switches PCP1 and PCP2.

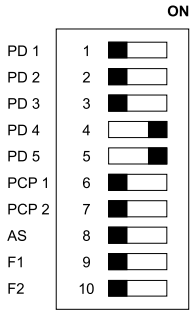

5.4 Control via INTERBUS

Data exchange between the INTERBUS master and the UFI11A takes place using the I/O area. The process data for all inverters connected to the UFI11A are located in a contiguous block in this area.

If there is more than one inverter, the associated process data words are appended at the end (see Fig. 23). The number of process data words per inverter is 3 words with Autosetup.

The inverters are located in ascending (SBus) address sequence with their associated process data lengths in the process image, for example an inverter with address 1 and 3 words, then an inverter with address 2 and 3 words, then an inverter with address 3 and 2 words, etc.

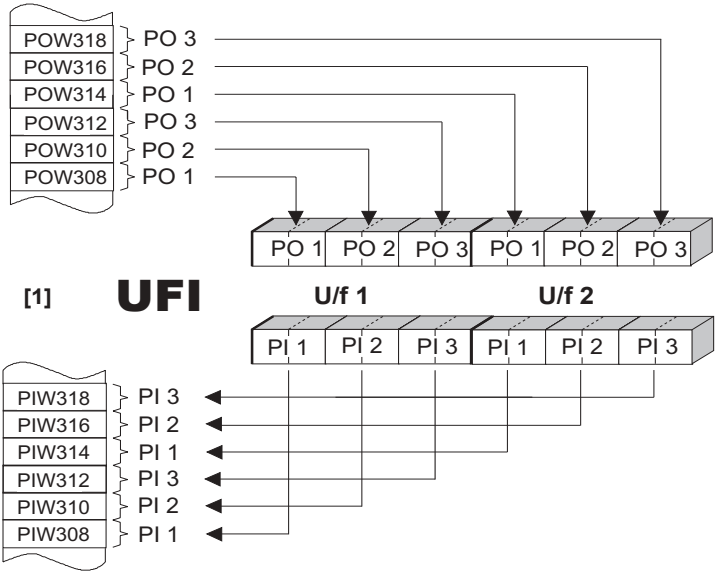

Fig. 23: Representation of the INTERBUS data in the PLC address area ([1] = PLC address area / U/f = Inverter)

5.5 PCP interface

The UFI11A fieldbus interface offers a standardized interface for parameter setting using the "Peripherals Communication Protocol" (PCP). This communications channel gives you full access to the parameters of the UFI11A fieldbus interface and the drive parameters of the inverters connected to the UFI11A.

Overview of basic structure

The PCP channel must be set to one, two or four words using the DIP switches on the UFI11A to enable access to the parameter values of the UFI11A fieldbus interface or the inverter. Changing the number of PCP words varies the access speed to parameter values via the PCP channel. The PCP interface is implemented using PCP version 3.0 in the UFI11A.

PCP services

The UFI11A fieldbus interface supports the PCP services shown in Fig. 10. However, only the following services are relevant for setting parameters:

- Establishing the connection (Initiate)
- Reading of parameter values (Read)
- Writing of parameter values (Write)
- Cancelling the connection (Abort)

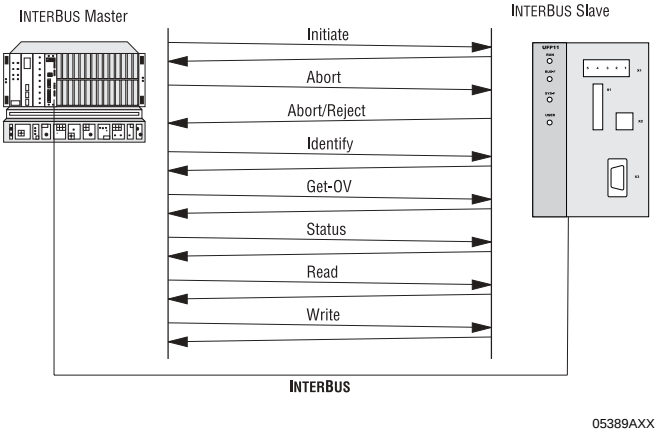

Fig. 24: PCP services supported by the UFI11A fieldbus interface

Establishing the communications link with "Initiate"

The "Initiate" PCP service establishes a communication link for exchanging parameters between an INTERBUS master and the UFI11A fieldbus interface. The connection is always established from the INTERBUS master. Various arrangements relating to the communication link are checked during establishment of the connection, such as supported PCP services, user data length, etc. The fieldbus interface responds with a positive initiate response if the connection is established successfully. If the connection can not be established, then the arrangements for the communications link on the INTERBUS master do not match those on the fieldbus interface. The fieldbus interface responds with an initiate error response. In this case, compare the configured communications relationship list in the INTERBUS master with that in the fieldbus interface.

As a rule, an attempt to re-establish an existing communication link leads to an abort. The communication link is then dropped, which means the "Initiate" PCP service must be run a third time in order to re-establish the communication connection.

Canceling the communications link with "Abort"

The "Abort" PCP service cancels an existing communications link between the INTERBUS master and the fieldbus interface. Abort is an unconfirmed PCP service and can be triggered either from the INTERBUS master or from the fieldbus interface.

Reading parameter values with "Read"

The "Read" PCP service gives the INTERBUS master read access to all communication objects (drive parameters) of the fieldbus interface. All drive parameters and their coding are presented in detail in the Fieldbus Unit Profile documentation and the list of MOVIDRIVE® parameters.

Writing parameter values with "Write"

The "Write" PCP service gives the INTERBUS master write access to all parameters of the fieldbus interface. The fieldbus interface generates a write error response if incorrect access is made to a parameter (e.g. the value written is too large). Precise information is given relating to the cause of the error.

Parameters in the object list

The "Read" and "Write" PCP services give the INTERBUS master access to all parameters defined in the object list of the UFI11A. All the parameters of the fieldbus interface which can be accessed via the bus system are described as communication objects in the static object list of the UFI11A. All objects in the static object list are addressed using indices. The following table shows the structure of the object list of the UFI11A.

The index range is subdivided into three logical areas. The UFI11A parameters are addressed using indices 8300 – 8313dec. Indices below 8300dec can be used for accessing parameters which are not contained in the object list, or for addressing parameters which are found on an inverter connected to the UFI11A.

Parameter index (decimal)	Name of the communication object
8288	Variable data channel with acyclical routing (UFI11A and parameters of the connected inverters can be reached)
8296	Download parameter block
8297	Last PCP index
8299	MOVILINK parameter channel acyclical (only UFI11A parameters can be reached)
8300 – 8313	UFI11A parameters
8314 – 9999	Parameters of the UFI11A or of an inverter connected to the UFI11A which can be addressed via object 8288.
> 10000	Table, program and variable memory of the UFI11A or an inverter connected to the UFI11A. These parameters can be addressed with object 8288.

Object description of the UFI11A or drive parameters

The parameters of the connected inverters are described in detail in the SEW document "Parameter List." In addition to the parameter index, additional information about coding, the range of values and the meaning of the parameter data is provided. The object description in the object list is identical for all parameters. Even read-only parameters are given the Read all/Write all attribute in the object list because the inverter undertakes the corresponding check itself and sends back a return code if necessary. The following table shows the object description of all parameters.

Index:	8300 ... 8313
Object code:	7 (simple variable)
Data type index :	10 (octet string)
Length:	4
Local address:	
Password:	
Access groups:	
Access rights:	Read all/Write all
Name[16]:	-
Extension length:	-

"Variable data channel with acyclical routing" object

This object enables you to address all the parameters of the UFI11A itself and the connected inverters. The object contains a selection option for the subchannel and address information for selecting the target unit. It contains information about the data length and frame type and an acyclical MOVILINK parameter channel. The required service and data value are specified here. The length is fixed at 12 bytes.

Octet	0	1	2	3	4	5	6	7	8	9	10	11
Meaning	Subchannel	Subaddress	Frame type	Data length	Admin	Reserved	Index High	Index Low	Data MSB	Data	Data	Data LSB
Fine structure	Subchannel	Subaddress	Frame type	Data length	Admin	Reserved	Parameter index		4 bytes data			
Coarse structure	Routing information				MOVILINK parameter channel acyclical							

The subchannel determines to which interface the data will be directed. The setting 0 addresses the parameters of the UFI11A and the subaddress is of no importance. The setting 1 on the subchannel addresses the standard interface (the SBus in case of the UFI11A).

The subaddress byte allows selection of the target unit. If you want to address the parameters of a drive inverter connected to the UFI11A via SBus, you will enter the SBus address of the respective drive inverter.

The frame type must be set to 86hex (only acyclical parameter data). The data length for this frame type is fixed at 8 bytes.

Variable data channel performs a write service

If a write service is performed via the data channel (e.g. write parameter or write parameter volatile), the UFI11A responds with the current service confirmation when the service has been performed. The corresponding error code is returned if the write service is not successful.

This method offers the advantage that the write services are processed simply by sending a WRITE "MOVILINK parameter channel" once and evaluating the "write confirmation." The following table shows how write services are performed via the variable data channel.

Control (master)	UFI11A fieldbus interface
1. Initiate the service coded in the parameter channel by means of a WRITE to the "MOVILINK parameter channel cyclical" object.	
WRITE 8288 (parameter channel) →	
← Service confirmation (OK/error code)	

The WRITE service coded in the parameter channel is performed and the service confirmation is returned directly as the response.

Variable data channel performs a read type service

A PCP WRITE service has to be performed before a parameter can be read via the data channel. The PCP WRITE service defines where the UFI11A data should be available. A read service must take place on the variable data channel in order for these data to get to the master. As a result, a PCP WRITE and a PCP READ are always required for performing read services via the variable data channel. The following table shows how read services are performed via the variable data channel.

Control (master)	UFI11A fieldbus interface
1. Initiate the service coded in the parameter channel by means of a WRITE to the "MOVILINK parameter channel cyclical" object.	
WRITE 8288 (parameter channel) →	
← OK	
2. READ "MOVILINK parameter channel cyclical" and evaluation of the service confirmation in the parameter channel.	
READ 8288 (parameter channel) →	
← Data = Parameter channel with result	

1. Reception is confirmed immediately, the data channel is evaluated and the requested service performed.
2. Service confirmation is entered in the data channel and can be evaluated by READ access in the master.

The "variable data channel with acyclical routing" object is only handled locally on the fieldbus interface and is defined as in the following table.

Index:	8288
Object code:	11 (string variable)
Data type index :	10 (octet string)
Length:	11
Local address:	
Password:	
Access groups:	
Access rights:	Read all/Write all
Name[16]:	-
Extension length:	-

"Download parameter block" object

The "download parameter block" object enables up to 38 drive parameters of the UFI11A or an inverter connected to the UFI11A to be written at the same time with only one write service. This object gives you the opportunity to set the parameters of the inverter in the startup phase, by calling the write service only once. In general, only a few parameters vary from application to application so that this parameter block with its max. 38 parameters is sufficient for almost all applications. The user data area is defined as 38 x 6 + 2 bytes = 230 bytes (byte format). The following table shows the structure of the "download parameter block" object.

Octet	Meaning	Note
0	Address	Target address: 0 or 254 for the UFI11A or SBus address of the target inverter
1	Number of parameters	1 – 38 parameters
2	Index high	1st parameter
3	Index low	
4	Data MSB	
5	Data	
6	Data	
7	Data LSB	
8	Index high	2nd parameter
...	...	
223	Data LSB	
224	Index high	38th parameter
225	Index low	
226	Data MSB	
227	Data	
228	Data	
229	Data LSB	

The "download parameter block" object is only handled locally on the fieldbus interface and is defined as in the following table.

Index:	8296
Object code:	7 (simple variable)
Data type index :	10 (octet string)
Length:	230
Local address:	
Password:	
Access groups:	
Access rights:	Write all
Name[16]:	-
Extension length:	-

The WRITE service on the "download parameter block" object starts a parameterization mechanism on the UFI11A. This writes all the parameters specified in the user data area of the object one after the other in the UFI11A itself or a connected inverter and therefore sets the parameters of the UFI11A or the inverter. The UFI11A is addressed using address 0. An inverter connected to the UFI11A is addressed using its SBus address. The write service is terminated with a positive write response once the download parameter block has been processed successfully (i.e. all parameters transferred by the INTERBUS fieldbus interface have been written). A negative write response is returned in case of an error. The return code contains more detailed information about the type of error, as well as the number of the parameter (no. 1 – 38) where the error occurred (see example).

Example

```
Write error response for an error when writing the 11th parameter:
Error class: 8 Other
Error code: 0 Other
Additional code high: 11dec Error when writing parameter 11
Additional code low: 15hex Value too large
```

Note the following points when using the download parameter block:

- Do not perform a factory setting within the download parameter block!
- All parameters written after the parameter lock has been activated will be rejected.

"Last PCP index" object

This object is 4 bytes long and, when read access is executed, it returns the numerical value of the last index which can be addressed directly using the PCP services. PCP accesses to indices greater than this numerical value must be made using the "MOVILINK parameter channel with acyclical routing" object. Access is also possible using object 8299 "MOVILINK parameter channel acyclical" if the parameters of the UFI11A are to be addressed.

Index:	8297
Object code:	7 (simple variable)
Data type index :	10 (octet string)
Length:	4
Local address:	
Password:	
Access groups:	
Access rights:	Read all
Name[16]:	-
Extension length:	-

MOVILINK parameter channel acyclical

The "MOVILINK parameter channel acyclical" object is 8 bytes long and contains the MOVILINK parameter channel. This object can be used for acyclical parameter accesses, i.e. the inverter processes the service coded in the parameter channel every time a WRITE service is received on this object.

The handshake bit is not evaluated! The following table shows the structure of the "MOVILINK parameter channel acyclical."

Octet	0	1	2	3	4	5	6	7
Meaning	Admin	Reserved	Index high	Index low	Data MSB	Data	Data	Data LSB
Note	Admin	Reserved	Parameter index		4 bytes data			

There are two different procedures involved in setting the drive inverter parameters via the acyclical MOVILINK parameter channel:

- Parameter channel performs a write service
- Parameter channel performs a read service

Parameter channel performs a write service

If a write service is performed via the acyclical parameter channel (e.g. write parameter or write parameter volatile), the UFI11A responds with the current service confirmation when the service has been performed. The appropriate error code is returned if the write access is not successful.

This method offers the advantage that the write services are processed simply by sending a WRITE "MOVILINK parameter channel" once and evaluating the "write confirmation". The following table shows how write services are performed via the acyclical MOVILINK parameter channel.

Control (master)	**UFI11A fieldbus interface**
1. Initiate the service coded in the parameter channel by means of a WRITE to the "MOVILINK parameter channel cyclical" object.	
WRITE 8299 (parameter channel) →	
Service confirmation (OK/error code) ←	

The WRITE service coded in the parameter channel is performed and the service confirmation is returned directly as the response.

Parameter channel performs a read type service

A PCP WRITE service must be performed before a parameter can be read via the parameter channel. The PCP WRITE service defines where the UFI11A data should be available. A read service must take place on the acyclical parameter channel in order for these data to get to the master. As a result, a PCP WRITE and a PCP READ are always required for performing read services via the parameter channel. The following table shows how read services are performed via the acyclical MOVILINK parameter channel.

Control (master)	**UFI11A fieldbus interface**
1. Initiate the service coded in the parameter channel by means of a WRITE to the "MOVILINK parameter channel cyclical" object.	
WRITE 8299 (parameter channel) →	
← OK	
2. READ "MOVILINK parameter channel cyclical" and evaluation of the service confirmation in the parameter channel.	
READ 8299 (parameter channel) →	
← Data = Parameter channel with result	

1. Reception is confirmed immediately, the parameter channel is evaluated and the requested service performed.
2. Service confirmation is entered in the parameter channel and can be evaluated by READ access in the master.

The acyclical MOVILINK parameter channel is only handled locally on the fieldbus interface and is defined as in the following table.

Index:	8299
Object code:	7 (simple variable)
Data type index :	10 (octet string)
Length:	8
Local address:	
Password:	
Access groups:	
Access rights:	Read all/Write all
Name[16]:	-
Extension length:	-

5.6 Return codes for parameter setting

Different return codes will be sent back to the master used for parameter setting in case of inccorrect parameters. These codes will give the user a detailed insight into the reason for an error. The return codes are usually structured according to EN 50170 with the following elements:

- Error class
- Error code
- Additional code

These return codes apply to all communication interfaces of the UFI11A.

Error class

The element "Error class" classifies the type of error. The following error classes are listed according to EN 50170.

Class (hex)	Designation	Meaning
1	vfd-state	Status error of the virtual field device
2	application-reference	Error in application program
3	definition	Definition error
4	resource	Resource error
5	service	Error during service execution
6	access	Access error
7	ov	Error in object directory
8	other	Other error (see Additional code)

Except for error class 8 = Other error, the error class is generated by the communication software of the fieldbus card in case of communication problems. Return codes generated by the inverter system are all classified as error class 8 = Other error. You will get a more detailed analysis of the error with the element "Additional code."

Error code

The element "Error code" gives you more detailed information on the reason for the error within the "Error class" and is generated by the communication software of the fieldbus card in case of communication problems. Error code = 0 (other error code) is the only error code that has been defined for error class 8 = Other error. You will find detailed information for this error in "Additional code."

Additional code

The "Additional code" contains all SEW-specific return codes for incorrect parameter setting of the drive inverters. These codes are sent back to the master as "Error class 8 = Other error." Table 2 lists all possible codes for the additional code.

Add. code high (hex)	Add. code low (hex)	Meaning
00	00	No error
00	10	Incorrect parameter index
00	11	Function/parameter not available
00	12	Read access only
00	13	Parameter block is active
00	14	Factory setting is active
00	15	Value too large for parameter
00	16	Value too small for parameter
00	17	No option card available for this function/parameter
00	18	Error in system software
00	19	Parameter access via RS485 process interface on X13 only
00	1A	Parameter access via RS485 diagnostics interface only
00	1B	Limited-access parameter
00	1C	Requires controller inhibit
00	1D	Invalid parameter value
00	1E	Factory setting has been activated
00	1F	Parameter was not saved in EEPROM
00	20	Parameter cannot be changed with enabled output stage

Special case "Internal communication error"

The return code listed in the following table will be generated in case of a communication error between option card and inverter system. The PCP service transmitted via fieldbus may not have been executed and should be repeated. In case this error occurs frequently, the drive inverter will have to be turned off and on again to start a new initialization.

	Code (dez)	Meaning
Error class:	6	Access
Error code:	2	Hardware problem
Add. code high:	0	-
Add. code low:	0	-

Error correction

Repeat the read or write service. If the error occurs once again, turn off the drive inverter completely and turn it on again. Please consult the SEW Electronics Service If this error occurs permanently.

Extension of the Additional code

00 23h Parameter may only be changed in IPOS program "Stop"

00 24h Parameter may only be changed with Autosetup turned off

Extension of the special return codes

	Code (dez)	Meaning
Error class:	06	Access
Error code:	01	Object does not exist
Add. code high:	0	-
Add. code low:	0	-

Remedy: You are trying to exchange parameters with a drive inverter and have not configured a parameter channel.

5.7 Autosetup

You can start up the UFI11A without a PC with the Autosetup function. It is activated with the Autosetup DIP switch. Turning on the Autosetup DIP switch will execute the function once. *The DIP switch will have to stay turned on afterwards.* The function can be executed once again by turning the switch off and on again. Upon activation of the Autosetup feature, the UFI11A automatically searches for inverters on the lower-level SBus and indicates this activity with a brief blinking of the SYS-FLT LED. Each inverter on the SBus must be assigned a unique SBus address (P813). To avoid confusion with data assignments, it is recommended to assign the addresses from address 1 ans working in ascending order according to the arrangement of inverters in the control cabinet. The process image on the fieldbus side will be extended by three words for each located inverter. The SYS-FLT LED stays on if no inverters are found. A maximum of eight inverters can be configured. The figure shows the process image for three inverters with three words in the process output data and process input data. Following the search, the UFI11A cyclically exchanges three process data words with each connected inverter. The process output data are collected from the fieldbus, divided into blocks of three and sent. The process input data are read by the inverters, assembled and sent to the fieldbus master.

Autosetup has to be executed only once. The detected configuration will be saved in the non-volatile memory. See section "Installation and operation without PC."

Important: Execute Autosetup again in case you change the process data assignment of the inverters connected to the UFI11A, because the UFI11A saves these values once only during Autosetup. Likewise, the process data assignments (P860 ... P865) of the connected inverters must not be altered dynamically either, for example by an IPOS program, following Autosetup.

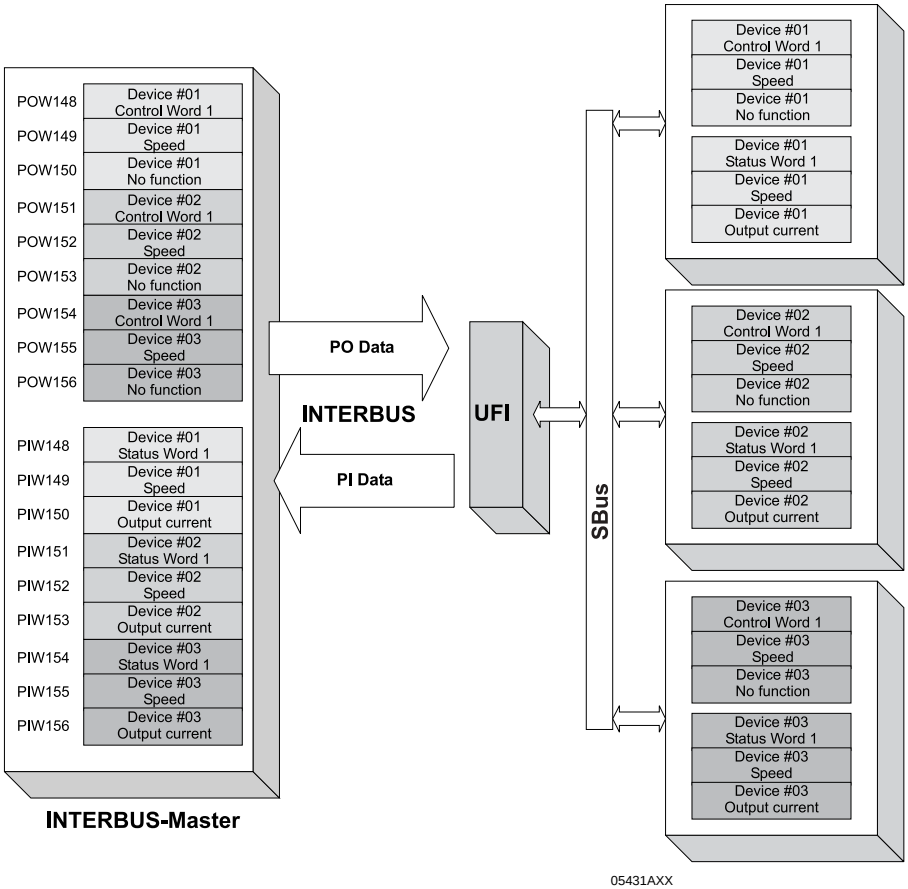

Fig. 25: Data exchange INTERBUS master – UFI11A – inverter

6 Error Response

6.1 Fieldbus timeout

Switching off the fieldbus master or a wire break in the fieldbus cabling leads to a fieldbus timeout in the UFI11A. The connected inverters are set to a safe status by zeros being sent on the process output data. This corresponds to a rapid stop on control word 1. The fieldbus timeout error is self-resetting, meaning the inverters will begin receiving the current process output data from the master immediately after fieldbus communication is re-established. This error response can be deactivated using P831 on the UFI11A.

6.2 SBus timeout

If one or more inverters on the Sbus can no longer be addressed by the UFI11A, the UFI11A enters error code 91, "System error," in status word 1 of the corresponding inverter. The SYS-FLT LED lights up and the error is also displayed via the diagnostic interface. P815 SBus timeout delay must be set to a value other than 0 on the inverter if it is to stop. The error is self-resetting on the UFI11A, meaning the current process data are exchanged again immediately after communication resumes.

6.3 Unit errors

UFI11A fieldbus interfaces detect a range of hardware defects and respond with an inhibit condition. Refer to the list of errors for the exact error responses and measures to remedy the problem. A hardware defect means error 91 is entered in the process input data of the fieldbus in status word 1 of all inverters. The SYS-FLT LED on the UFI11A then flashes evenly. The exact error code is displayed in the status of the UFI11A using the diagnostic interface of MOVITOOLS.

7 Diagnostic LEDs

The UFI11A INTERBUS interface has 7 diagnostic LEDs.

- LED "UL" (green) Logic voltage
- LED "RC" (green) Incoming remote bus OK
- LED "BA" (green) Bus mode active
- LED "RD" (yellow) Outgoing remote bus switches off
- LED "TR" (green) Parameter data exchange via PCP channel
- LED "SYS-FAULT" (red) for displaying system errors and operating conditions of the UFI11A
- LED "USER" (green) for application-specific diagnostics in expert mode

7.1 States of the LEDs UL, RC, BA, TR and RD

LED UL "U-Logic" (green)

Status	Meaning	Remedy
on	Supply voltage of bus electronics is present	-
off	Supply voltage of bus electronics is missing	Check the 24V voltage supply of the UFI11A.

LED RC "Cable Check" (green)

Status	Meaning	Remedy
on	Incoming remote bus connection is ok	-
off	Incoming remote bus connection is faulty	Check the incoming remote bus connection.

LED BA "Bus Active" (green)

Status	Meaning	Remedy
on	Data transmission via INTERBUS active	-
off	No data transmission; INTERBUS has been stopped	Check the incoming remote bus cable. Use the diagnostics display of the INTERBUS interface module (master) for additional error localization.

LED RD "Remote Bus Disable" (red)

Status	Meaning	Remedy
on	Outgoing remote bus turned off	-
off	Outgoing remote bus not turned off	-

LED TR "Transmit" (green)

Status	Meaning	Remedy
The LED TR corresponds in the color green according to the Interbus standard.		
off	No PCP communication	-
green	PCP communication active or INTERBUS start (parameter access via INTERBUS PCP channel)	-

LED TR "Transmit" (yellow or red)

Status	Meaning	Remedy
The LED TR signals system-internal states with the colors yellow and red that usually do not occur during INTERBUS operation.		
off or green	Standard operation (see table for TR = green)	-
flashing yellow	Inverter is in initialization phase	-
steady red	Incorrect DIP switch configuration selected, no INTERBUS operation possible.	Check the settings of DIP switch S1. Correct the settings of the DIP switches and turn the unit on again.
flashing red	Incorrect DIP switch configuration or defective INTERBUS option card, no INTERBUS operation possible.	Check the setting of DIP switch S1. If the setting is correct, contact SEW Electronics Service.

LED "SYSFAULT" (red)

Status	Meaning
OFF	Standard operating status. The UFI11A is exchanging data with the connected inverters.
FLASHES 1 x briefly with long pause	Autosetup has been selected using the DIP switch and the UFI11A is currently setting up its configuration. If this status lasts for more than one minute, turn off the Autosetup mode and turn it on again. Replace the module if the behavior persists.
FLASHES regularly	UFI11A is in error status. If you started the UFI11A using the Autosetup DIP switch, turn the UFI11A off and on again. If the LED is still on, restart Autosetup by turning the DIP switch off and on again. If you started the UFI11A with MOVITOOLS, you will see an error message in the status window. Consult the corresponding error description.
ON	The UFI11A is not exchanging data with the connected inverters. Either is has not been configured or one or more of the connected inverters are not responding. Reconfigure the UFI11A. If you started up the UFI11A using Autosetup, please switch the Autosetup DIPswitch off and on again. If the LED stays on after Autosetup, please check the cabling and the terminating resistors of the SBus as well as the inverter voltage supply. If you started up the UFI11A using MOVITOOLS, click the "Update" button in the Movitools Manager. All the inverters should be displayed in the "Connected Inverters" window. If this is not the case, please check the cabling and the terminating resistors of the SBus as well as the inverter voltage supply. Reconfigure the UFI11A with MOVITOOLS if necessary.

LED "USER" (green)

Statuts	Meaning
OFF	Standard operating status. The "USER" LED is reserved for expert mode.

8 DIP Switches

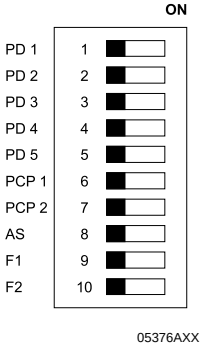

Fig. 26: DIP switches

PD1 – PD5

Binary setting of the process data length

The following example shows how the DIP switch settings are determined for a process data length of 17. Divide each required process data length by the number two and make a note of the remainder. The remainder can only be 0 or 1. This corresponds to the setting of the DIP switches.

Table 1: Example for determining the DIP switch settings for process data width 17

Calculation	Remainder	DIP switch setting	Significance
17 ÷ 2 = 8	1	X1 = 20 = **ON**	**1**
8 ÷ 2 = 4	0	X2 = 21 = OFF	2
4 ÷ 2 = 2	0	X3 = 22 = OFF	4
2 ÷ 2 = 1	0	X4 = 23 = OFF	8
1 ÷ 2 = 0	1	X5 = 24 = **ON**	**16**

PCP 1, 2

You can set the lengths of the PCP channel in words using these two DIP switches. Possible values are 0, 1, 2 and 4 words.

PCP 1	PCP 2	
OFF	OFF	0
ON	OFF	1
OFF	ON	2
ON	ON	4

Process data length

Please note that INTERBUS does not support all data lengths which can be set. The total data length of process data and PCP words can be 1 – 10, 12, 14, 16, 24, 26 and 36 words.

If you require a number of words which lies between these settings, the next higher number must be used. For example, 9PD + 4 words PCP results in 14 words.

AUTO SETUP: See Sec. Quickstart without PC

9 Application examples

This section describes small application examples for the exchange of process data and configuration of the UFI11A or a drive inverter connected to the UFI11A via the PCP interface.

9.1 Control via process data

Control of the drive inverters via process data takes place by simple reading/writing of the program addresses to which the INTERBUS process data of the drive inverters have been written. A simple STEP7 program for the Simatic S7 looks as follows:

```
L W#16#0006
T PAW 144 //write 6hex to PO1 (control word = enable)
L 1500
T PAW 146 //write 1500dez to PO2 (speed setpoint = 300 1/min)
L W#16#0000
T PAW 148 //write 0hex to PO3 (has no function after factory setting)
```

You will find additional information concerning control of the drive inverters via the process data channel, especially coding of the control and status word, in the manual for the fieldbus unit profile of the corresponding drive inverter.

9.2 Parameter setting via the PCP interface

This section describes how you can read or write parameters and IPOS variables via the standardized INTERBUS PCP services "Read" and "Write." The example is valid for all INTERBUS interface modules of generation 4 (G4) and is explained in the PHOENIX nomenclature. The coding examples described in the following sections are represented in the same manner as described in the INTERBUS user manual "Peripherals Communication Protocol (PCP)" published by Phoenix Contact.

Prerequisites

You should have access to the following user manuals:

- INTERBUS user manual "Peripherals Communication Protocol (PCP)", PHOENIX CONTACT, IBS SYS PCP G4 UM
- Manual for the fieldbus unit profile of the drive inverter connected to the UFI11A

9.3 Representation of the coding examples

All information of a PCP service is represented in a word-by-word manner with one word listed below the other. This means you can consider a word as an PLC word (for example Simatic data word). You will find a coding example for the UFI11A in the right table column.

Select the UFI11A to be configured with the "Communication Reference (CR)." In the following examples, the UFI11A has been assigned the CR = 02 hex in the CMD tool. The index defines the parameter that is to be accessed.

Before you can use the PCP channel of the UFI11A, you will have to configure the device description for the inverter in the CMD Tool.

9.4 Sequence of a parameter setting process

The Peripherals Communication Protocol (PCP) of the INTERBUS standardizes the access to parameter data of INTERBUS stations and establishes the following sequence:

- Establishing the PCP connection with the "Initiate" service.
- Reading or writing parameters with the "Read" and "Write" services.
- If the communication connection is no longer necessary, it can be disconnected with the "Abort" service (not explained here since it often is not necessary, see PCP manual).
- Initialization of the PCP connection with the "Initiate" service.

Access to the parameters of the Interbus station takes place only after the PCP connection has been established with "Initiate_Request." This step can be established during the initial startup of the system.

Word	Meaning		Coding (hex)
1	Command_Code = Initiate_Request		00 8B
2	Parameter_Count		00 02
3	-	Comm._Reference	00 02
4	Password	Access_Groups	00 00
Bits	15 ... 8	7 ... 0	

After sending the service, you should receive a confirmation with "Initiate_Confirmation" (see PCP manual in case of a non-confirming message).

9.5 Reading of an UFI parameter

You read an UFI11A parameter with the "Read" service. The parameters are typically 4 bytes long (1 double word). This read service accesses only those parameters with indices between 8300dez and 8310dez. Parameter access to all other parameters of the UFI11A or a drive inverter connected to the UFI11A takes place via object 8288 "Variable data channel with acyclical routing." The access is decribed in the next section.

Example

Reading of index 8301 unit type (Index 8301dez = 206Dhex)

Word	Meaning		Coding (hex)
1	Command_Code = Read_Request		00 81
2	Parameter_Count		00 03
3	Invoke_ID	Comm._Reference	00 02
4	Index		20 6D
5	Subindex	-	00 00
Bits	15 ... 8	7 ... 0	

After sending the service, you should receive a confirmation with "Read_Confirmation."

Word	Meaning		Coding (hex)
1	Message_Code = Read_Confirmation (+)		80 81
2	Parameter_Count		00 05
3	Invoke_ID	Comm._Reference	00 02
4	Result (+)		00 00
5	-	Length	00 04
6	Data [1]	Data [2]	00 28
7	Data [3]	Data [4]	01 00
Bits	15 ... 8	7 ... 0	

The parameter data are displayed as follows in the Motorola format (Simatic format):

Data [1] = High Byte	Data [2] = Low Byte	Data [3] = High Byte	Data [4] = Low Byte
00 hex	28 hex	01 hex	00 hex

00 28 01 00 hex = Identification for UFI11A

You will find additional information on the UFI11A parameters in the section "Parameter List."

9.6 Writing of UFI11A or drive parameters via object 8288

The UFI offers a special parameter access via the object 8288 "variable data channel with acyclical routing" for the universal write access to all data of the UFI or a drive inverter connected to the UFI (parameters, IPOS variables, IPOS program code, etc.). The following description is the mechanism that can be used to change IPOS variables or other variables via the parameter channel. The "variable data channel with acyclical routing" is available via index 8288 dez (2060 hex).

Example

Writing the value 74565 of the IPOS variable H0 = Index 11000 dez (2AF8 hex). The value 74565 dez (0001 2345 hex) has to be written to the drive inverter with SBus address 1.

Word	Meaning		Coding (hex)
1	Command_Code = Write_Request		00 82
2	Parameter_Count		00 09
3	Invoke_ID	Comm._Reference	00 02
4	Index = 8288		20 60
5	Subindex	Length	00 0C
6	Data[1] = Subkanal	Data[2] = Subadresse	01 01
7	Data[3] = Frametyp	Data[4] = Datenlänge	86 08
8	Data[5] = Verwaltung	Data[6] = Reserviert	32 00
9	Data[7] = Index High	Data[8] = Index Low	2A F8
10	Data[9]	Data[10]	00 01
11	Data[11]	Data[12]	23 45
Bits	15 ... 8	7 ... 0	

After sending this service, you will receive the "Write_Confirmation." You can once again use the return codes for the evaluation of a negative message.

9.7 Reading of UFI11A or drive parameters via object 8288

The UFI offers a special parameter access via the object 8288 "variable data channel with acyclical routing" for the universal read access to all data of the UFI or a drive inverter connected to the UFI (parameters, IPOS variables, IPOS program code, etc.). The following description is the mechanism that can be used to read the IPOS variables or other variables via the parameter channel of a drive inverter connected to the UFI (with SBus address 1). This process requires a two-setp sequence:

- Writing the "variable data channel with acyclical routing“ with the order "Read IPOS variable H0 to sub channel 1, sub address 1“
- Reading of the "variable data channel with acyclical routing“

The "variable data channel with acyclical routing“ is available via index 8288 dez (2060 hex).

Example

Reading the IPOS variable H0 = Index 11000 dez (2AF8 hex) of the drive inverter with SBus address 1.

Word	Meaning		Coding (hex)
1	Command_Code = Write_Request		00 82
2	Parameter_Count		00 09
3	Invoke_ID	Comm._Reference	00 02
4	Index = 8288		20 60
5	Subindex	Length	00 0C
6	Data[1] = Subkanal	Data[2] = Subadresse	01 01
7	Data[3] = Frametyp	Data[4] = Datenlänge	86 08
8	Data[5] = Verwaltung	Data[6] = Reserviert	31 00
9	Data[7] = Index High	Data[8] = Index Low	2A F8
10	Data[9]	Data[10]	00 00
11	Data[11]	Data[12]	00 00
Bits	15 ... 8	7 ... 0	

After receiving the positive "Write_Confirmation (+)," there will be a read access to the "variable data channel with acyclical routing“ that will read in the data read with the read order defined in the "Write_Request" into the interface module.

Word	Meaning		Coding (hex)
1	Command_Code = Read_Request		00 81
2	Parameter_Count		00 03
3	Invoke_ID	Comm._Reference	00 02
4	Index = 8288		20 60
5	Subindex	-	00 00
Bits	15 ... 8	7 ... 0	

After sending this service, you should receive a positive "Read_Confirmation."

Word	Meaning		Coding (hex)
1	Command_Code = Read_Confirmation (+)		80 81
2	Parameter_Count		00 09
3	Invoke_ID	Comm._Reference	00 02
4	Result (+)		00 00
5	-	Length	00 0C
6	Data[1] = Subkanal	Data[2] = Subadresse	01 01
7	Data[3] = Frametyp	Data[4] = Datenlänge	86 08
8	Data[5] = Verwaltung	Data[6] = Reserviert	31 00
9	Data[7] = Index High	Data[8] = Index Low	2A F8
10	Data[9]	Data[10]	00 01
11	Data[11]	Data[12]	23 45
Bits	15 ... 8	7 ... 0	

You can use the return codes for the evaluation of negative messages.

Word	Meaning		Coding (hex)
1	Command_Code = Read_Confirmation		80 81
2	Parameter_Count		00 03
3	Invoke_ID	Comm._Reference	00 02
4	Error_Class	Error_Code	08 00
5	Additional_Code		00 10
Bits	15 ... 8	7 ... 0	

10 Parameter List

Par. no.	Parameter	Index	Unit	Access	Default	Meaning / Value range
010	Unit status	8310		RO	0	
011	Operating status	8310		RO	0	
012	Error status	8310		RO	0	
013	Current parameter set	8310		RO	0	
015	Operating hours	8328	s	RO/N	0	
070	Device type	8301		RO	0	
076	Firmware basic unit	8300		RO	0	
090	PD – configuration	8451		RO	4	
091	Fieldbus type	8452		RO	2	
092	Baud rate fieldbus	8453		RO	0	
093	Fieldbus address	8454		RO	0	
094	PO1 setpoint	8455		RO	0	
095	PO2 setpoint	8456		RO	0	
096	PO3 setpoint	8457		RO	0	
097	PI1 actual value	8458		RO	0	
098	PI2 actual value	8459		RO	0	
099	PI3 actual value	8460		RO	0	
802	Factory setting	8594		R/RW	0	0: NO 1: YES 2: DELIVERY STATUS
810	RS485 address	8597		R0	0	
812	RS485 timeout delay	8599	s	R/RW	1	
816	SBUS Baud rate	8603		R/RW	0	0: 125 kBaud 1: 250 kBaud 2: 500 kBaud 3: 1000 kBaud
819	Fieldbus timeout delay	8606	s	RO	0.630	
831	RESPONSE fieldbus timeout	8610		R/RW	10	0: NO RESPONSE 10: PO DATA = 0 / WARN
840	Manual reset	8617		R/RW		
870	Setpoint description PO1	8304		RO	12	IPOS PO DATA
871	Setpoint description PO2	8305		RO	12	IPOS PO DATA
872	Setpoint description PO3	8306		RO	12	IPOS PO DATA
873	Acutal value description PI1	8307		RO	9	IPOS PI DATA
874	Actual value description PI2	8308		RO	9	IPOS PI DATA
875	Actual value description PI3	8309		RO	9	IPOS PI DATA

11 List of Errors

Error code	Name	Response	Cause	Action
10	IPOS ILLOP	IPOS program stop	Error in IPOS program, see IPOS variable H469 for more information	Correct the IPOS program, load and reset
17	Stack overflow	SBus communication stopped	Inverter electronics disrupted, possibly due to effect of EMC	Check ground connections and shields; improve them if necessary. Contact SEW Service for advice if this reoccurs.
18	Stack underflow	SBus communication stopped	"	"
19	NMI	SBus communication stopped	"	"
20	Undefined opcode	SBus communication stopped	"	"
21	Protection error	SBus communication stopped	"	"
22	Illegal word operand access	SBus communication stopped	"	"
23	Illegal instruction access	SBus communication stopped	"	"
24	Illegal external bus access	SBus communication stopped	"	"
25	EEPROM	SBus communication stopped	Error when accessing EEPROM	Call up default setting, perform reset and set parameters of UFI11A again. Contact SEW Service for advice if this reoccurs.
28	Fieldbus timeout	Connected inverters stopped (control word = 0)	No master-slave communication took place within the configured response monitoring period.	• Check master communication routine • Extend the fieldbus timeout delay (response monitoring) in the master configuration or turn off monitoring
32	IPOS index overflow	IPOS program stop	Basic programming rules violated causing stack overflow in system.	Check IPOS user program and correct if necessary
37	Watchdog error	SBus communication stopped	Error in system software procedure	Check ground connections and shields; improve them if necessary. Contact SEW Service for advice if this reoccurs.
45	Initialization error	SBus communication stopped	Error after self-test in reset	Ensure DIP switches F1 and F2 are off. Perform reset. Contact SEW Service for advice if problem persists.
77	Invalid IPOS control word	IPOS program stopped	Attempt was made to set an invalid automatic mode (via external control).	Check write values of external control

Error code	Name	Response	Cause	Action
91	System error	None	Please check the red SYS-FLT LED on the UFI11A. If this LED is on, then one or more stations on the SBus could not be addressed within the timeout delay. If the red SYS-FLT LED is flashing, then the UFI11A itself is in error status. In this instance, error 91 alone was transmitted to the control via the fieldbus.	Check the voltage supply and the SBus cabling, check the SBus terminating resistors. Check the configuration if the UFI11A was configured with the PC. Switch the UFI11A off and on again. Check the error code using the diagnostic interface if the error remains, and take the action described in this table.
97	Copy data	SBus communication stopped	An error occurred while the data record was being copied. The data are not consistent.	Carry out the "delivery condition" factory setting, perform a reset and then try to copy the data again.

12 Technical Data

	Part number:	823 898 7
	Startup utility:	MOVITOOLS V 2.70 or later
	Voltage supply:	24 V_{DC}, external supply
	Parameter setting and diagnostic interface:	RS-485
	Parameter setting:	Autoconfiguration
		Using MOVITOOLS from V 2.70 or later
	Diagnostics:	LEDs on the front panel of the unit
		MOVITOOLS
	Mounting:	Screw mounting or support rail
	Ambient temperature:	-10 °C...+50 °C
SBus	Maximum transmission speed:	1 MBaud
	Transfer protocol:	MOVILINK
	Number of units on SBus:	max. 8
	Process data words per unit:	max. 3 PD
	Connection technology:	Disconnectable screw terminals

13 Dimensions

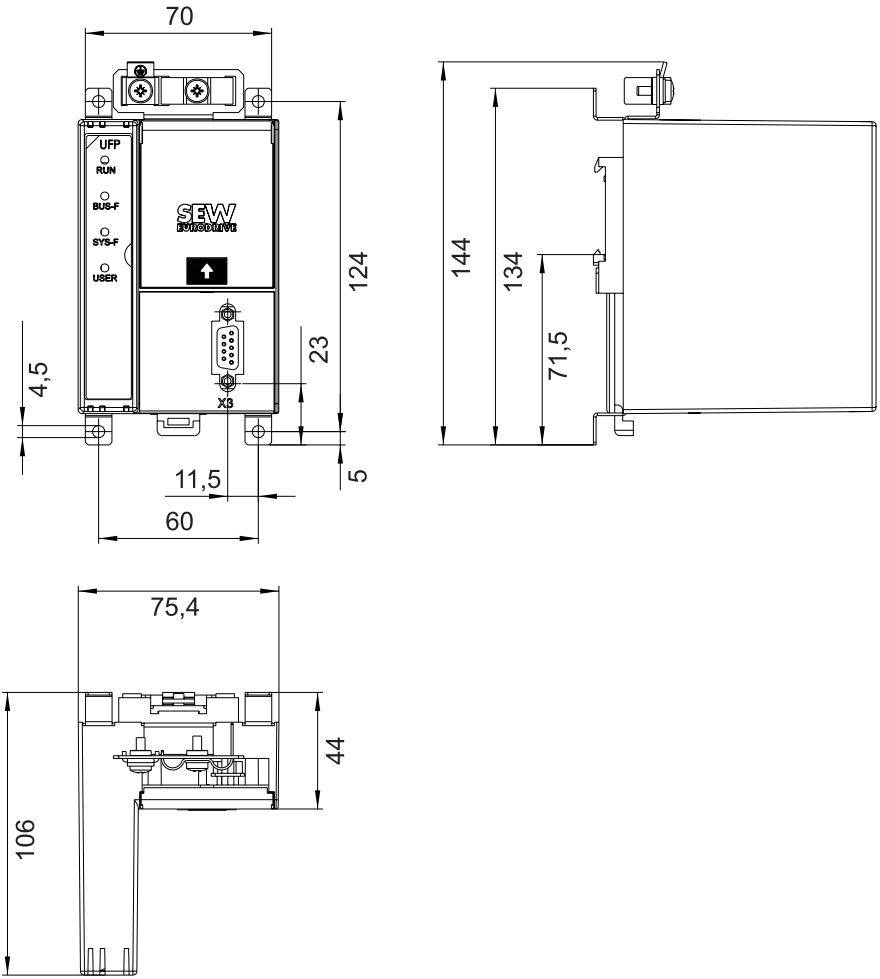

Fig. 27: Dimension drawing

14 Index

A

Abort 36
Additional code 45
Additional codes, extension 46
Address information 38
Application examples 52
Autosetup 46

B

BA 49
Baud rate 8, 15
Bus Active 49
Bus configuration 20
Bus structure 20
Bus termination 9, 16

C

Cable Check 49
CC 49
Communication error 45
Communications link, breaking off 36
Communications link, establishing 36
Configuration 18, 28
Configuration of the fieldbus master 11
Configuring the fieldbus master 11, 18
Connection 7, 8, 14, 15
Connection, breaking off 36
Connection, establishing 36
Control via process data 52

D

Device description 23
Diagnostic interface 5
Diagnostic LEDs 49
Dimension drawing 62
DIP switches 5, 11, 18, 51
Display elements 49
Download parameter block 40

E

Error class 44
Error code 44

F

Fieldbus timeout 48
Front view 5

I

ICO files 24
Initiate 36
Installation notes 6, 13
Internal communication error 45
Inverter parameters 10, 17

L

Last PCP index 41
LED BA 49
LED CC 49
LED RD 49
LED SYS-FAULT 50
LED TR 50
LED UL 49
LEDs 49
List of errors 59

M

MOVILINK parameter channel acyclical 42

O

Object description 37

P

Parameter channel 25
Parameter list 58
Parameter module 4
Parameter setting via the PCP interface 52
Parameter setting, Return codes 44
PC connection 17
PCP configuration 27
PCP connection 26
PCP interface 35
PCP services 35
Pin assignment 6, 13
Process data 25
PROFIBUS address 11, 18
Program addresses 25

R

RD 49
Read 36
Read parameter values 36
Reading of an UFI parameter 54
Reading of UFI11A or drive parameters via object 8288 56
Remote Bus Disable 49
Representation of the coding examples 53
Return codes 44
Return codes, extension 46

S

SBus timeout 48
Sequence of a parameter setting process 53
Setting the inverter parameters 10, 17
Shielding 7, 8, 9, 14, 15, 16
Starting the inverters 12, 19
Startup 10, 17, 20
Subchannel 38
SYS-FAULT 50

T

Technical data 61
TR 50
Transmit 50

U

UL 49
U-Logic 49
Unit errors 48
Unit structure 5
UWS21A 17

V

Variable data channel with acyclical routing object 38

W

Write 35, 36, 38, 42
Write parameter values 35, 36, 38, 42
Writing of UFI11A or drive parameters via object 8288 55
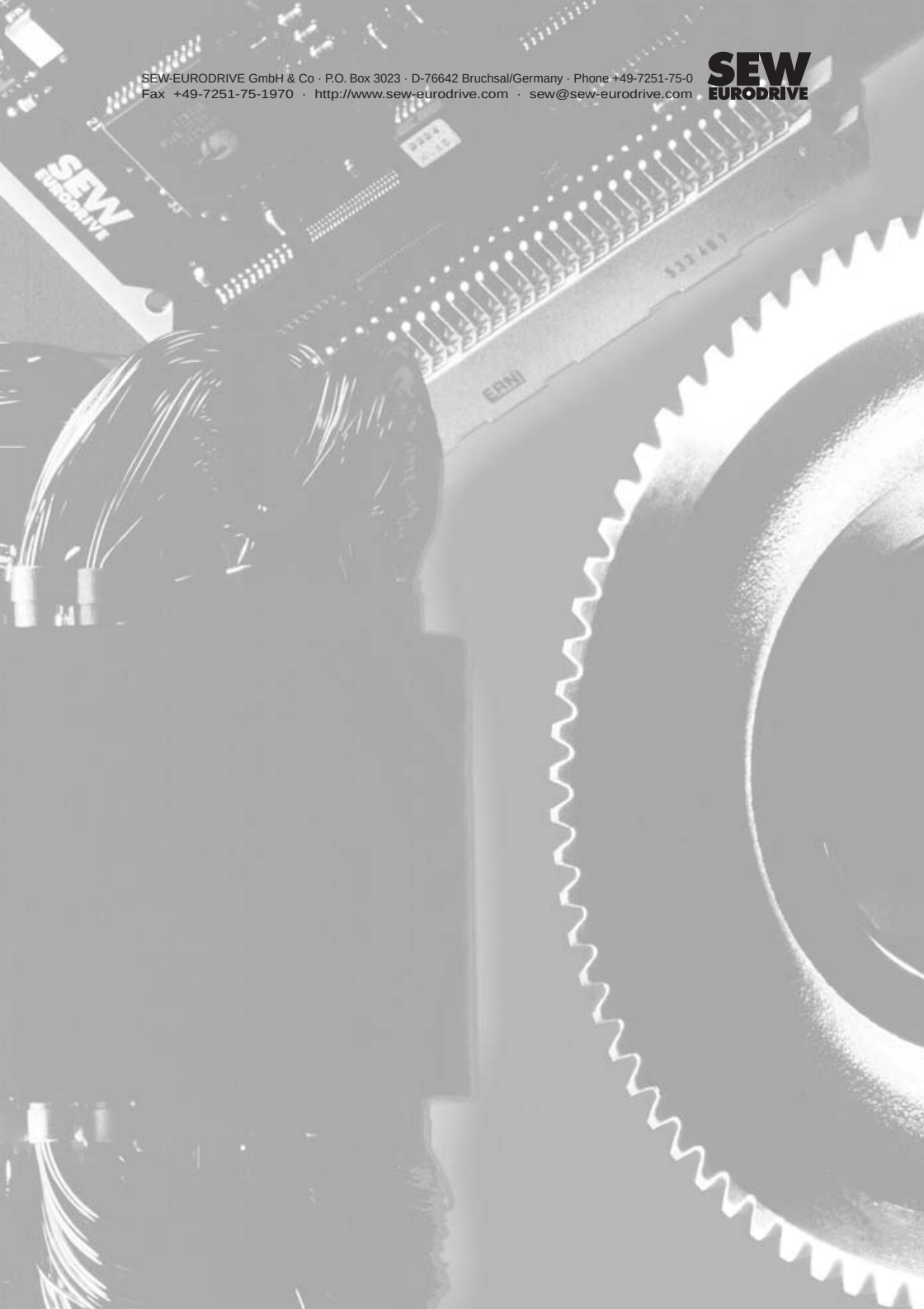
SEW-EURODRIVE GmbH & Co · P.O. Box 3023 · D-76642 Bruchsal/Germany · Phone +49-7251-75-0
Fax +49-7251-75-1970 · http://www.sew-eurodrive.com · sew@sew-eurodrive.com