SEW EURODRIVE

Assembly and Operating Instructions

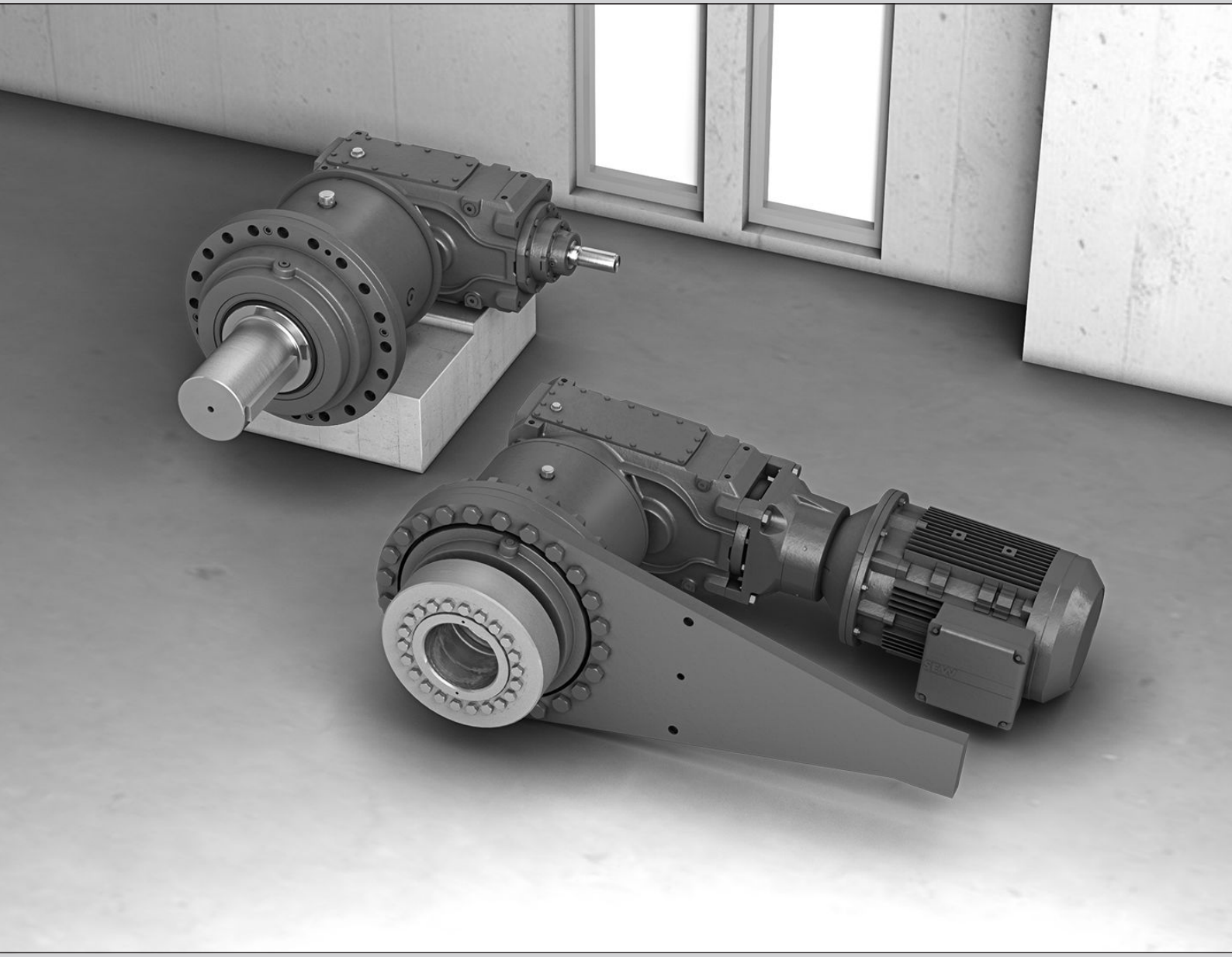

Industrial Gear Units

P-X Series

Torque classes from 100 kNm to 500 kNm

Edition 05/2016

22124705/EN

Table of contents

1 General information ... 6
1.1 About the operating instructions ... 6
1.2 Structure of the safety notes ... 6
1.3 Rights to claim under limited warranty ... 7
1.4 Exclusion of liability ... 8
1.5 Copyright notice ... 8

2 Safety notes ... 9
2.1 Preliminary remark ... 9
2.2 General ... 9
2.3 Target group ... 10
2.4 Designated use ... 10
2.5 Other applicable documentation ... 10
2.6 Safety symbols on the gear unit ... 11
2.7 Symbols on the packaging ... 15
2.8 Transport ... 16
2.9 Storage and transport conditions ... 18

3 Gear unit structure ... 21
3.1 P-X gear unit series ... 21
3.2 Type designation ... 22
3.3 Nameplate ... 23
3.4 Mounting positions ... 24
3.5 Fixed and variable pivoted mounting positions ... 25
3.6 Directions of rotation dependencies ... 32
3.7 Mounting position of the primary gear unit ... 33
3.8 Sealing system ... 34
3.9 Oil level check and gear unit venting ... 35
3.10 Oil filling ... 35
3.11 Oil drain ... 36
3.12 Lubrication type ... 36
3.13 Corrosion and surface protection ... 37

4 Structure of options ... 38
4.1 Shaft end pump /SEP ... 38
4.2 Motor pump /ONP ... 39
4.3 Cooling types ... 39
4.4 Fan ... 39
4.5 Water cooling cartridge ... 40
4.6 Oil heater ... 41
4.7 Motor adapters /MA ... 42
4.8 Backstop ... 43
4.9 Torque arm ... 44
4.10 Pressure switch /PS ... 44
4.11 Temperature sensor /PT100 ... 44
4.12 Temperature switch /NTB ... 45

22124705/EN – 05/2016

4.13 Temperature switch /TSK ... 45
4.14 Diagnostic unit DUO10A (oil aging) ... 45
4.15 Oil-water cooler for splash lubrication /OWC ... 46
4.16 Oil-air cooler for splash lubrication /OAC ... 46
4.17 Oil-water cooler for pressure lubrication /OWP ... 46
4.18 Oil-air cooler for pressure lubrication /OAP ... 46

5 Installation/assembly ... 47
5.1 Required tools/resources ... 47
5.2 Tolerances ... 47
5.3 Important notes ... 48
5.4 Requirements for assembly ... 50
5.5 Installing the gear unit ... 51
5.6 Filling gear units with oil / delivered without oil fill (standard) ... 53
5.7 Gear units delivered with oil fill (option) ... 55
5.8 Gear units with solid shaft ... 56
5.9 Coupling ... 58
5.10 Motor adapter /MA ... 59
5.11 Motor pump /ONP ... 64
5.12 Fan /FAN ... 64
5.13 Limit temperature for gear unit start ... 65
5.14 Oil heater ... 66
5.15 Water cooling cartridge ... 73
5.16 Torque arm ... 79
5.17 Flange-mounted gear units ... 82
5.18 Output shaft as hollow shaft with shrink disk ... 83
5.19 Oil-water cooler for splash lubrication /OWC ... 89
5.20 Oil-air cooler for splash lubrication /OAC ... 89
5.21 Oil-water cooler for pressure lubrication /OWP ... 89
5.22 Oil-air cooler for pressure lubrication /OAP ... 89
5.23 Pressure switch /PS ... 90
5.24 Temperature sensor /PT100 ... 91
5.25 Temperature switch /NTB ... 92
5.26 Temperature switch /TSK ... 93

6 Startup ... 94
6.1 Important notes ... 94
6.2 Shaft end pump /SEP ... 95
6.3 Motor pump /ONP ... 95
6.4 Water cooling cartridge /CCT ... 96
6.5 Oil heater /OH ... 96
6.6 Starting up the gear unit at low ambient temperatures ... 97
6.7 Backstop /BS ... 98
6.8 Measuring surface and oil temperature ... 99
6.9 Oil-water cooler with motor pump for splash lubrication /OWC ... 99
6.10 Oil-air cooler with motor pump for splash lubrication /OAC ... 99
6.11 Oil-water cooler for pressure lubrication /OWP ... 99

22124705/EN – 05/2016

6.12 Oil-air cooler with motor pump for pressure lubrication /OAP 100
6.13 Gear unit shutdown / gear unit conservation 101

7 Inspection/maintenance 103
7.1 Preliminary work regarding inspection and maintenance 103
7.2 Inspection and maintenance intervals 104
7.3 Lubricant change intervals 106
7.4 Checking the oil level 107
7.5 Checking the oil consistency 111
7.6 Changing the oil 112
7.7 Checking and cleaning the breather 115
7.8 Refilling grease 116
7.9 Oil heater /OH 117
7.10 Water cooling cartridge 118
7.11 Fan 122
7.12 Oil-water cooler for splash lubrication /OWC 122
7.13 Oil-air cooler for splash lubrication /OAC 122
7.14 Oil-water cooler for pressure lubrication /OWP 122
7.15 Oil-air cooler for pressure lubrication /OAP 122
7.16 Motor pump /ONP 123
7.17 Shaft end pump /SEP 123

8 Permitted lubricants 124
8.1 Lubricant selection 124
8.2 Structure of the tables and abbreviations 125
8.3 Explanation of the various lubricants 126
8.4 Explanation of the oil supply systems and the oil viscosity 126
8.5 Lubricant tables 127
8.6 Lubricant fill quantities 130
8.7 Sealing greases / rolling bearing greases 130

9 Malfunctions/remedy 132
9.1 Troubleshooting information 132
9.2 Service 132
9.3 Possible malfunctions/remedy 132
9.4 Waste disposal 134

10 Address list 135

Index 146

22124705/EN – 05/2016

1 General information

1.1 About the operating instructions

Operating instructions are an integral part of the product and contain important information for operation and service. The operating instructions are written for all employees who assemble, install, start up, and service the product.

The operating instructions must be legible and accessible at all times. Ensure that persons responsible for the machinery and its operation as well as persons who work on the device independently have read through the documentation carefully and understood it. If you are unclear about any of the information in this documentation or require further information, please contact SEW-EURODRIVE.

1.2 Structure of the safety notes

1.2.1 Meaning of signal words

The following table shows the grading and meaning of the signal words for safety notes.

Signal word	Meaning	Consequences if disregarded
⚠ **DANGER**	Imminent hazard	Severe or fatal injuries.
⚠ **WARNING**	Possible dangerous situation	Severe or fatal injuries.
⚠ **CAUTION**	Possible dangerous situation	Minor injuries
NOTICE	Possible damage to property	Damage to the drive system or its environment.
INFORMATION	Useful information or tip: Simplifies handling of the drive system.	

1.2.2 Structure of section-related safety notes

Section-related safety notes do not apply to a specific action but to several actions pertaining to one subject. The hazard symbols used either indicate a general hazard or a specific hazard.

This is the formal structure of a safety note for a specific section:

SIGNAL WORD

Type and source of hazard.

Possible consequence(s) if disregarded.

- Measure(s) to prevent the hazard.

22124705/EN – 05/2016

Meaning of the hazard symbols

The hazard symbols in the safety notes have the following meaning:

Hazard symbol	Meaning
	General hazard
	Warning of dangerous electrical voltage
	Warning of hot surfaces
	Warning of risk of crushing
	Warning of suspended load
	Warning of automatic restart

1.2.3 Structure of embedded safety notes

Embedded safety notes are directly integrated into the instructions just before the description of the dangerous action.

This is the formal structure of an embedded safety note:

- ⚠ **SIGNAL WORD** Type and source of hazard.

  Possible consequence(s) if disregarded.

  – Measure(s) to prevent the hazard.

1.3 Rights to claim under limited warranty

Read the information in this documentation. This is essential for fault-free operation and fulfillment of any rights to claim under limited warranty. Read the documentation before you start working with the unit!

22124705/EN – 05/2016

1.4 Exclusion of liability

Read the information in this documentation, otherwise safe operation is impossible. You must comply with the information contained in this documentation to achieve the specified product characteristics and performance features. SEW-EURODRIVE assumes no liability for injury to persons or damage to equipment or property resulting from non-observance of these operating instructions. In such cases, SEW-EURODRIVE assumes no liability for defects.

1.5 Copyright notice

© 2016 SEW-EURODRIVE. All rights reserved.

Unauthorized reproduction, modification, distribution or any other use of the whole or any part of this documentation is strictly prohibited.

22124705/EN – 05/2016

2 Safety notes

The following basic safety notes must be read carefully to prevent injury to persons and damage to property. The user must ensure that the basic safety notes are read and observed. Ensure that persons responsible for the machinery and its operation as well as persons who work on the unit independently have read through the documentation carefully and understood it. If you are unclear about any of the information in this documentation, or if you require further information, please contact SEW-EURODRIVE.

2.1 Preliminary remark

The following safety notes are primarily concerned with the use of gear units. If using gearmotors, also refer to the safety notes for motors in the corresponding operating instructions.

Also observe the supplementary safety notes in the individual sections of these operating instructions.

2.2 General

⚠ WARNING

During operation, the gear units can have movable or rotating parts and hot surfaces.

Severe or fatal injuries

- All work related to transportation, storage, installation, assembly, connection, startup, maintenance and repair may only be carried out by qualified personnel, in strict observance of:
  - The relevant detailed operating instructions
  - Warning and safety signs on the gear unit
  - All other project planning documents, operating instructions and wiring diagrams related to the drive
  - The specific regulations and requirements for the system
  - National/regional regulations governing safety and the prevention of accidents
- Never install damaged products.
- Report any damage to the shipping company immediately.
- Unauthorized removal of covers, improper use, or incorrect installation and operation may result in severe injury to persons, or damage to machinery.

Refer to the documentation for additional information.

22124705/EN – 05/2016

2.3 Target group

Any mechanical work may only be performed by adequately qualified personnel. Qualified personnel in this context are persons who are familiar with the setup, mechanical installation, troubleshooting and maintenance for this product. Further, they are qualified as follows:

- Training in mechanical engineering, e.g. as a mechanic or mechatronics technician (final examinations must have been passed).
- They are familiar with these operating instructions.

Any electronic work may only be performed by adequately qualified electricians. Qualified electricians in this context are persons who are familiar with the electronic installation, startup, troubleshooting and maintenance for this product. Further, they are qualified as follows:

- Training in electrical engineering, e.g. as an electrician or mechatronics technician (final examinations must have been passed).
- They are familiar with these operating instructions.

All work in the areas of transportation, storage, operation and waste disposal must be carried out by persons who are trained appropriately.

All qualified personnel must wear appropriate protective clothing.

2.4 Designated use

The industrial gear units are gear units run by motors for industrial and commercial systems. The units may only be run at the speeds and powers shown in the technical data or on the nameplate. Implementing gear unit loads other than the permitted values or operating the gear units in areas of application other than industrial and commercial systems is only permitted after consultation with SEW-EURODRIVE.

Using these products in potentially explosive atmospheres is prohibited, unless specifically designated otherwise.

In compliance with the EC Machinery Directive 2006/42/EC, the X.. series industrial gear units are components for installation in machinery and systems. In the scope of the EC directive, you must not take the machinery into operation in the designated fashion until you have established that the end product complies with the Machinery Directive 2006/42/EC.

2.5 Other applicable documentation

The following publications and documents have to be observed as well:

- Catalog P-X series
- Order documents, e.g. dimension sheet, order confirmation, etc.
- If required, the "AC Motors" operating instructions
- Operating instructions of the options installed, if required

22124705/EN – 05/2016

2.6 Safety symbols on the gear unit

⚠ CAUTION

Safety symbols or signs can become dirty or illegible over time.

Risk of injury due to illegible symbols.

- Always make sure that safety, warning, and operating notes are legible.
- Replace damaged safety symbols and signs.

The safety symbols on the gear unit must be observed. They have the following meaning:

Safety symbols	Meaning
	Indicates the **bleeder screw**.
	Indicates the **oil filling location**. Also serves as proper venting during the oil change.
	Indicates the **oil drain**.
	Indicates the position of the **breather**. Serves to avoid mistaking the oil measuring position for the venting position.
	Indicates the positions for **relubrication** and makes it easier to find the locations to be lubricated. Helps avoid bearing damage.
	Indicates the **water supply** and serves to locate the connection option.
	Indicates the **water return** and serves to locate the connection option.
	Indicates the **oil supply** and serves to locate the connection option.
	Indicates the **oil return** and serves to locate the connection option.
	Indicates the position of the **temperature sensor** / **temperature switch.**
	Indicates the **grease drain plug** and serves to locate the grease drain. Helps avoid bearing damage.

22124705/EN – 05/2016

Safety symbols	Meaning
	Helps avoid errors caused by lack of understanding. Read the information in the operating instructions.
	For pivoted mounting positions, this symbol on the information sign indicates the mounting position of the gear unit for **checking the oil**.
	Caution: Risk of burns caused by hot surface.
	Caution: Removing the dipstick during operation may result in damage to the gear unit.
	Caution: Risk of burns due to hot gear oil.

After startup, you may remove the following labels from the gear unit.

Meaning
The brake is not set at the factory.

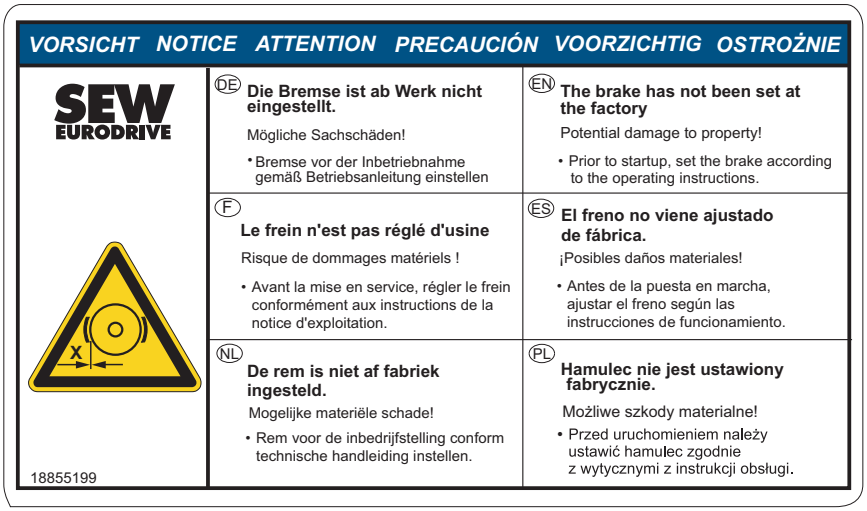

5315830155

22124705/EN – 05/2016

Meaning
The coupling is supplied without grease.

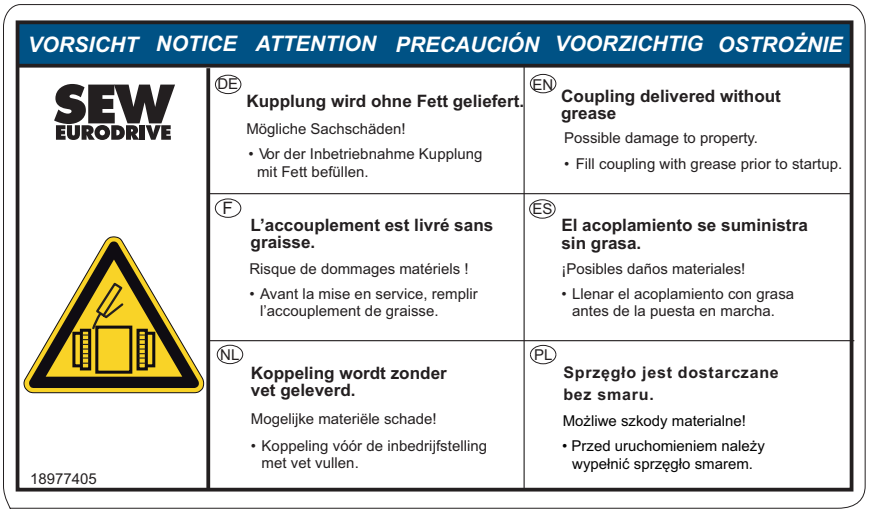

VORSICHT NOTICE ATTENTION PRECAUCIÓN VOORZICHTIG OSTROŻNIE

SEW EURODRIVE

18977405

(DE) **Kupplung wird ohne Fett geliefert.** Mögliche Sachschäden! • Vor der Inbetriebnahme Kupplung mit Fett befüllen.	(EN) **Coupling delivered without grease** Possible damage to property. • Fill coupling with grease prior to startup.
(F) **L'accouplement est livré sans graisse.** Risque de dommages matériels ! • Avant la mise en service, remplir l'accouplement de graisse.	(ES) **El acoplamiento se suministra sin grasa.** ¡Posibles daños materiales! • Llenar el acoplamiento con grasa antes de la puesta en marcha.
(NL) **Koppeling wordt zonder vet geleverd.** Mogelijke materiële schade! • Koppeling vóór de inbedrijfstelling met vet vullen.	(PL) **Sprzęgło jest dostarczane bez smaru.** Możliwe szkody materialne! • Przed uruchomieniem należy wypełnić sprzęgło smarem.

5315832331

The coupling is supplied without oil.

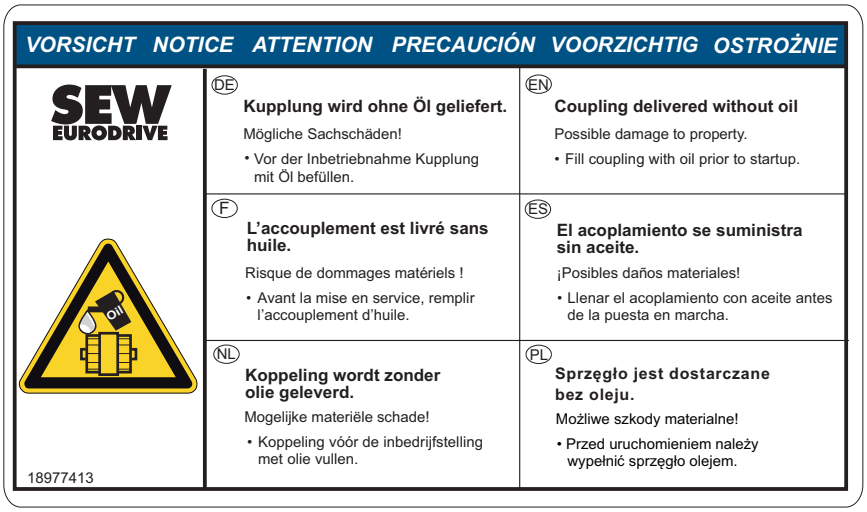

VORSICHT NOTICE ATTENTION PRECAUCIÓN VOORZICHTIG OSTROŻNIE

SEW EURODRIVE

18977413

(DE) **Kupplung wird ohne Öl geliefert.** Mögliche Sachschäden! • Vor der Inbetriebnahme Kupplung mit Öl befüllen.	(EN) **Coupling delivered without oil** Possible damage to property. • Fill coupling with oil prior to startup.
(F) **L'accouplement est livré sans huile.** Risque de dommages matériels ! • Avant la mise en service, remplir l'accouplement d'huile.	(ES) **El acoplamiento se suministra sin aceite.** ¡Posibles daños materiales! • Llenar el acoplamiento con aceite antes de la puesta en marcha.
(NL) **Koppeling wordt zonder olie geleverd.** Mogelijke materiële schade! • Koppeling vóór de inbedrijfstelling met olie vullen.	(PL) **Sprzęgło jest dostarczane bez oleju.** Możliwe szkody materialne! • Przed uruchomieniem należy wypełnić sprzęgło olejem.

5317135371

22124705/EN – 05/2016

Meaning
The gear unit is protected against corrosion with VCI.

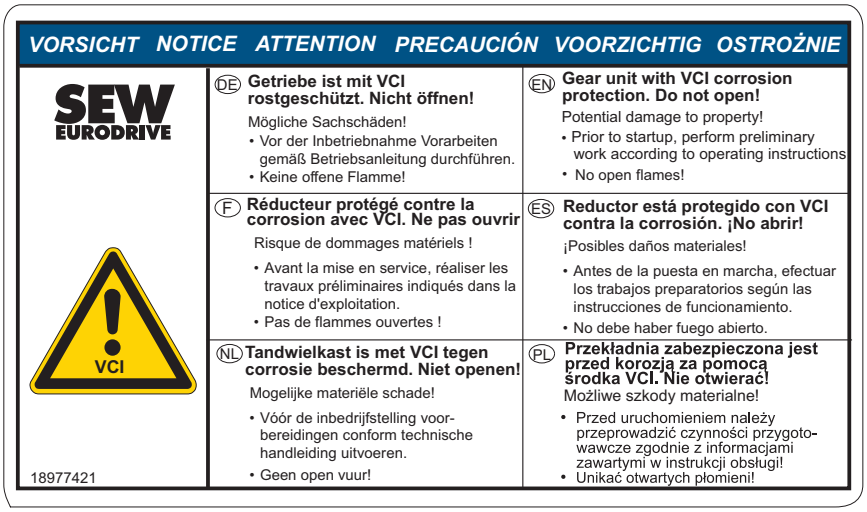

5315834507

Gear unit is supplied without oil.

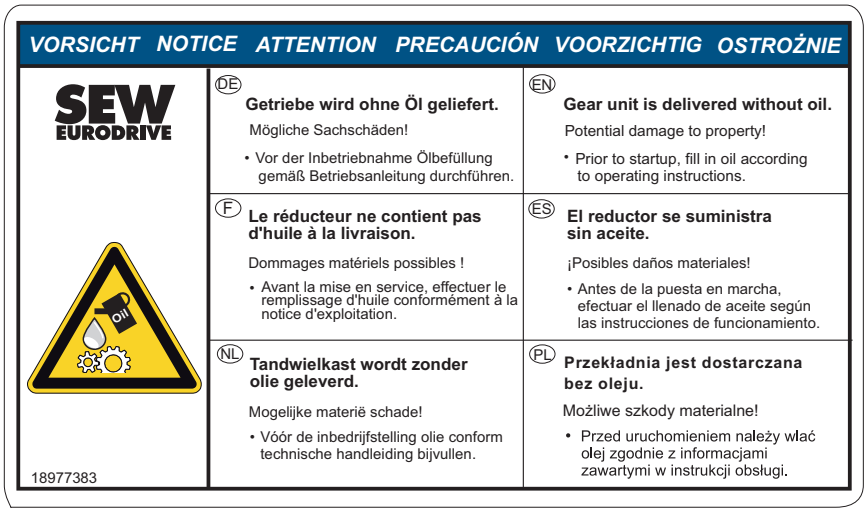

5315836683

22124705/EN – 05/2016

2.7 Symbols on the packaging

The symbols on the packaging must be observed. They have the following meaning:

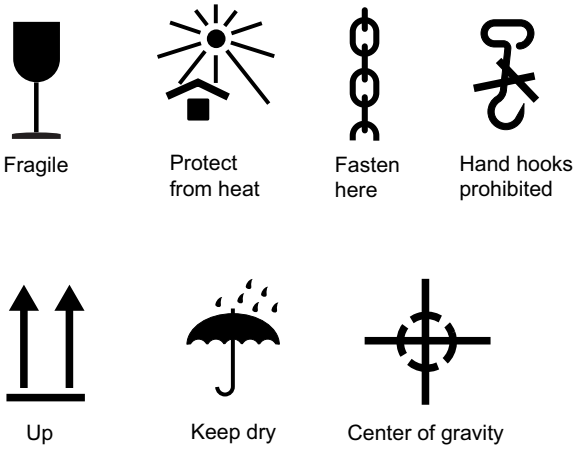

1811486091

2.8 Transport

2.8.1 General information

⚠ WARNING

Suspended loads can fall.

Severe or fatal injuries.

- Do not stand under the suspended load.
- Secure the danger zone.
- Use suitable, sufficiently rated and undamaged handling equipment.
- Consider the gear unit dimensions, the center of gravity and the weight that has to be moved when selecting lifting equipment or crane (see dimension drawing).

⚠ CAUTION

Risk of slipping of unsecured mount-on components, such as keys.

Potential risk of crushing due to falling parts.

- Secure the mount-on components.

⚠ CAUTION

Risk of slipping due to lubricant leaking from damaged seals.

Minor injuries.

- Check the gear unit and mount-on components for leaking lubricant.

NOTICE

Improper transport can damage the gear unit.

Possible damage to property.

- Observe the following notes.

- Inspect the shipment for damage as soon as you receive the delivery. Inform the shipping company immediately about any damage. It may be necessary to suspend startup.
- The weight of the gear unit (without oil) is indicated on the nameplate or on the dimension sheet. Observe the loads and specifications given there.
- If possible, transport the gear unit without oil fill. If this is not possible, note that the weight indicated on the nameplate refers only to the gear unit without oil fill, and replace the breather with a screw plug.
- Transport the gear unit in such a way that the lifting gear is tensioned only vertically.
- The gear unit must be transported in a manner that prevents damage to the gear unit and to mount-on components. For example, impacts against exposed shaft ends can damage the gear unit.
- Use only the prescribed suspension points to transport the gear unit [1] (see order documents). The load suspensions of the motor or mount-on components are provided for stabilization purposes only.

22124705/EN – 05/2016

2.8.2 Transport without motor

The following figure illustrates how to transport the gear unit with the provided lifting points [1].

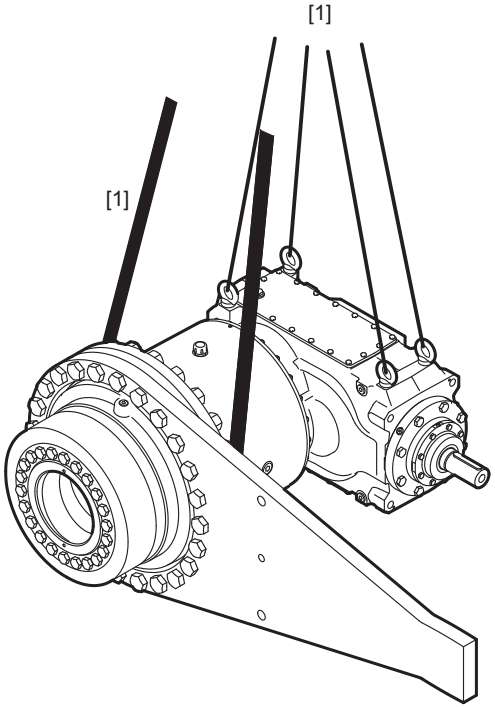

14124642443

2.8.3 Transport with motor

The following figure illustrates how to transport the gear unit with the provided lifting points [1].

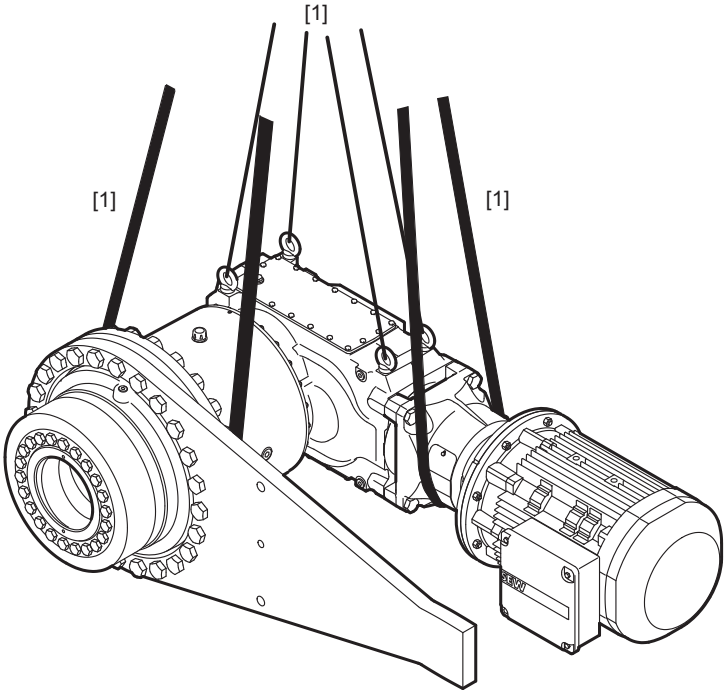

14124722571

22124705/EN – 05/2016

2.8.4 Transport with motor scoop

The following figure illustrates how to transport the gear unit with the provided lifting points [1]. For the actual lifting points refer to the order dimension sheet.

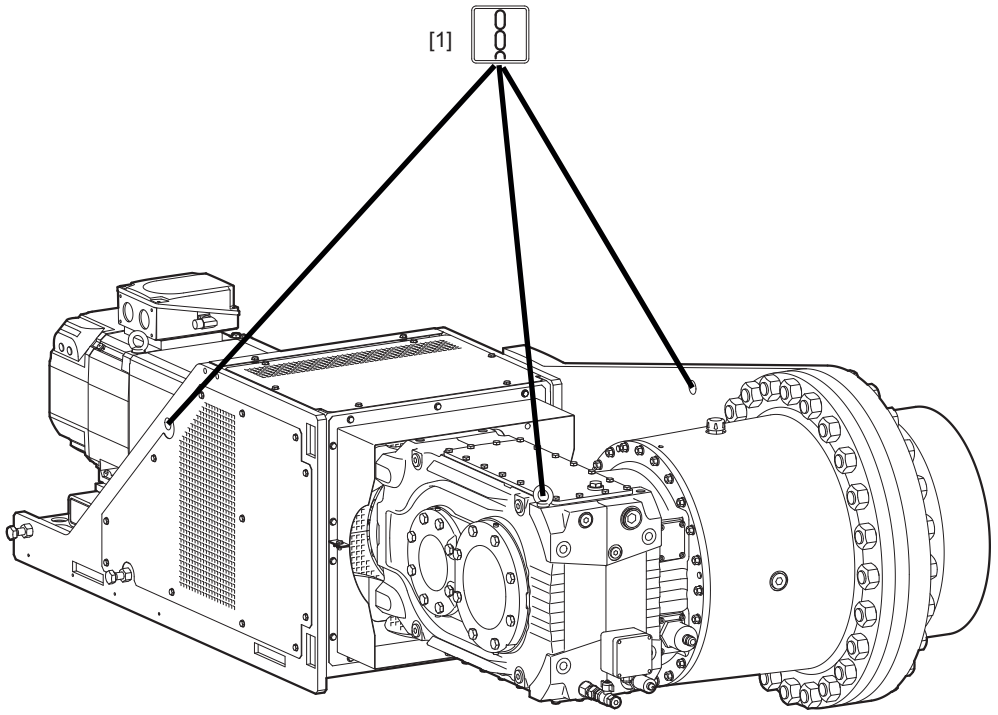

14416502027

2.9 Storage and transport conditions

The gear units can be provided with the following protection and packaging types depending on the storage and transport conditions.

2.9.1 Internal conservation

Standard corrosion protection

After the test run, the test oil fill is drained out of the gear unit. The remaining oil film protects the gear unit against corrosion for a limited period of time. If specified in the order, the gear unit can be delivered with oil. Refer to the order documents for more information.

Long-term corrosion protection

After the test run, the test oil fill is drained out of the gear unit and the interior space is filled with a vapor phase inhibitor. The breather filter is replaced by a screw plug and enclosed with the gear unit.

Corrosion protection with VCI anti-corrosion agent is not permitted for gear units that are operated with food grade lubricants. Contact SEW-EURODRIVE in such cases.

22124705/EN – 05/2016

2.9.2 External corrosion protection

The following measures are taken for exterior corrosion protection:

- Anti-corrosion agent is applied to bare, non-painted functional surfaces of shafts, flanges, mounting and foot surfaces of the housing. Remove it only using an appropriate solvent that is not harmful to the oil seal.
- Small parts and loose pieces, such as bolts, nuts, etc., are packed in plastic (VCI) corrosion protection bags.
- Threaded holes and blind holes are covered by plastic plugs.
- If the gear unit is stored longer than 6 months, regularly check the protective coating of unpainted areas as well as the paint coating. Areas in which the protective coating and/or painting has been damaged may have to be repainted.

2.9.3 Packaging

Standard packaging

The gear unit is delivered on a pallet, securely attached and without cover.

Use: Land transport

Long-term packaging

The gear unit is delivered in a wooden box that is also appropriate for sea transport.

Application: Sea transport and/or for long-term storage

2.9.4 Storage conditions

NOTICE

Improper storage may result in damages to the gear unit.

Possible damage to property.

- During storage up to startup, the gear unit must be stored in a shock-free manner to prevent damage to the rolling bearing races.
- The output shaft must be rotated at least one full rotation every 6 months so that the position of the rolling elements in the bearings of the input and output shafts changes.

INFORMATION

The gear units are delivered without oil as standard; different protection systems are required depending on the storage period and storage conditions as shown in the table below.

Corrosion protection + packaging	Storage location	Storage duration
Standard corrosion protection + standard packaging	Under roof and enclosed at constant temperature and atmospheric humidity (5 °C < ϑ < 60 °C, < 50% relative humidity). No sudden temperature fluctuations. Controlled ventilation with filter (free from dust and dirt). No aggressive vapors, no shocks.	Max. 6 months with intact surface protection.

22124705/EN – 05/2016

Corrosion protection + packaging	Storage location	Storage duration
Long-term corrosion protection + standard packaging	Under roof and enclosed at constant temperature and atmospheric humidity (5 °C < ϑ < 60 °C, < 50% relative humidity). No sudden temperature fluctuations. Controlled ventilation of the storage location with filter (free from dust and dirt). No aggressive vapors, no shocks.	Max. 3 years with regular inspection and checking for intactness.
Long-term corrosion protection + long-term packaging	With roof, protected against rain and shocks.	Max. 3 years with regular inspection and checking for intactness.

INFORMATION

If stored in tropical zones, provide for sufficient protection against insect damage. Contact SEW-EURODRIVE for differing requirements.

22124705/EN – 05/2016

3 Gear unit structure

3.1 P-X gear unit series

The P-X gear unit is a combination of

- Planetary gear unit P.. output stage
- Primary gear unit bevel-helical gear unit X... series
- Mount-on components: Motor, coupling and motor adapter

There are 7 sizes of P-X series with rated torques from 100 170 Nm to 500 000 Nm.

The gear units have a **shared oil chamber**.

The following figure shows a sample combination of a planetary gear unit, a primary gear unit and a motor with torque arm.

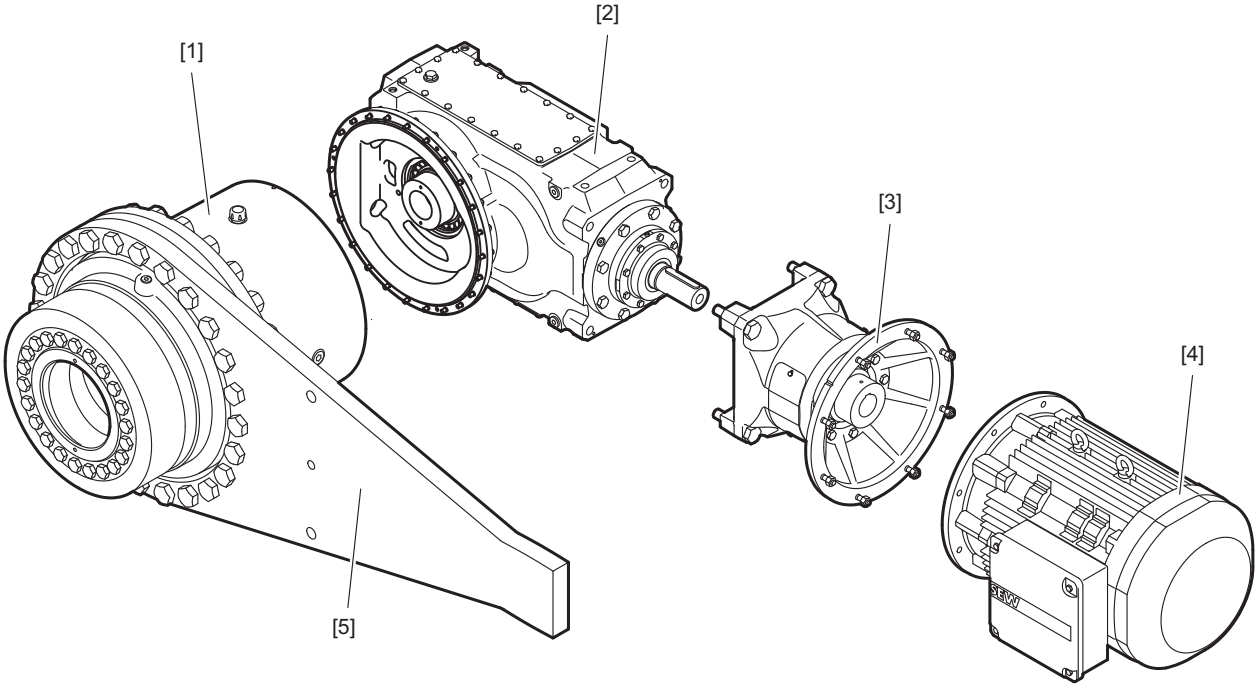

13861088779

[1] Planetary gear units
[2] X.. series bevel-helical gear unit
[3] Motor adapter
[4] Motor
[5] Torque arm design

22124705/EN – 05/2016

3.2 Type designation

The type designation is set up as follows:

PHF042 /T X2KP110/HP/F	
P..	P.. series planetary gear unit
PH..	Foot-mounted design, hollow shaft with shrink disk
PF..	Flange-mounted design, solid shaft
PHF..	Flange-mounted design, hollow shaft with shrink disk
042	Size
/T	Torque arm
X2KP	X series bevel-helical gear unit
110	Size
/HP	Housing for planetary gear unit
/F	Flange-mounted design

22124705/EN – 05/2016

3.3 Nameplate

3.3.1 P-X gear unit series

The following example shows the structure of the nameplate.

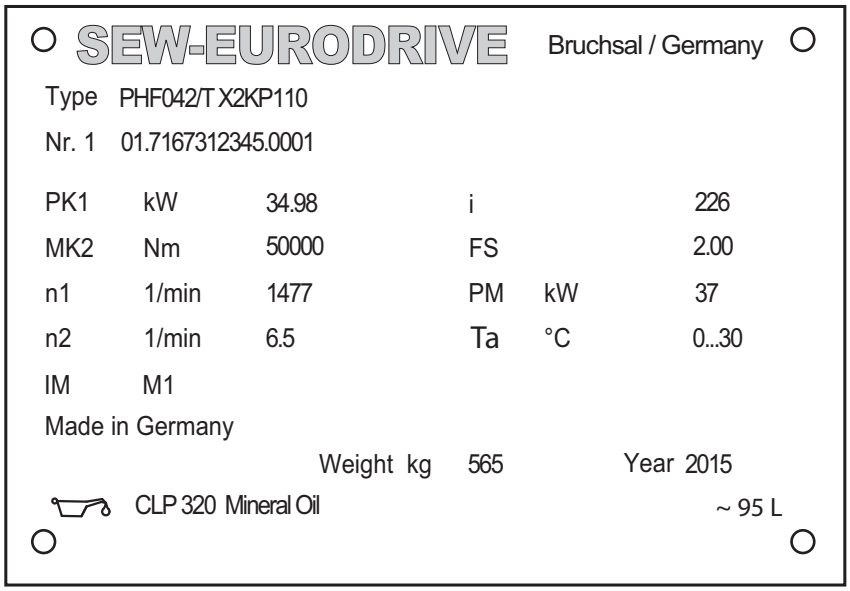

9007212064450315

Type		Type designation
No. 1		Serial number
P_{K1}	[kW]	Operating power on the input shaft (HSS)
M_{K2}	[Nm]	Gear unit output torque
n_1	[1/min]	Input speed (HSS)
n_2	[1/min]	Output speed (LSS)
i		Exact gear unit ratio
F_S		Service factor
P_M	[kW]	Nominal motor power
T_a	[°C]	Approved temperature range
IM		Mounting position
Weight	[kg]	Weight of the gear unit
Year		Year of manufacture
		Oil grade and viscosity class / oil quantity

22124705/EN – 05/2016

3.4 Mounting positions

3.4.1 Standard mounting position

The mounting position defines the spatial orientation of the gear unit housing and is designated **M1...M6**. Standard mounting position is **M1**.

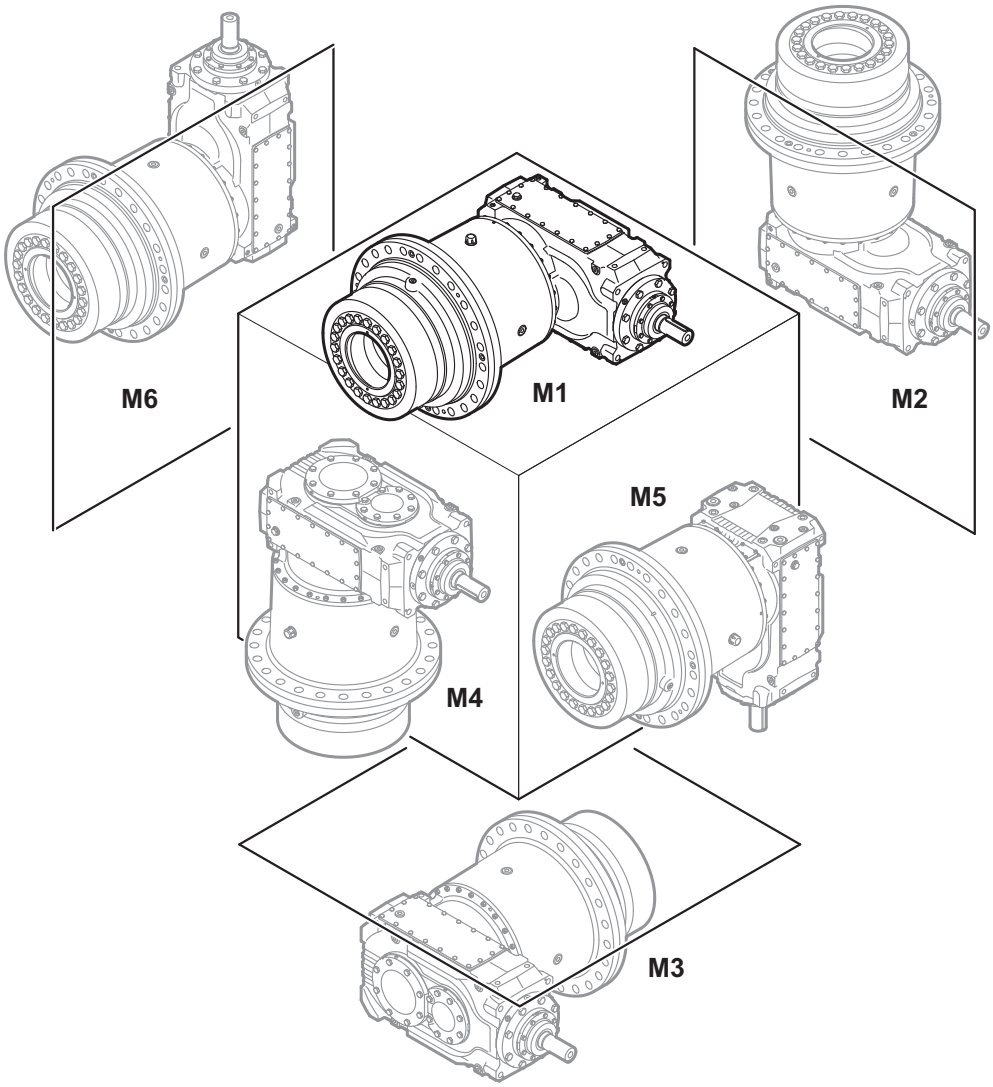

13861140107

INFORMATION

Contact SEW-EURODRIVE in case of a mounting position deviating from M1.

22124705/EN – 05/2016

3.5 Fixed and variable pivoted mounting positions

Mounting positions deviating from the standard are differentiated between **fixed** and **variable** pivoted mounting positions.

INFORMATION

- Fixed and variable pivoted mounting positions are only possible after consultation with SEW-EURODRIVE. Observe the order documents, such as the dimension sheet.
- Fixed and variable pivoted mounting positions might involve restrictions concerning accessories and technical data. Also, delivery times might be longer. Contact SEW-EURODRIVE.

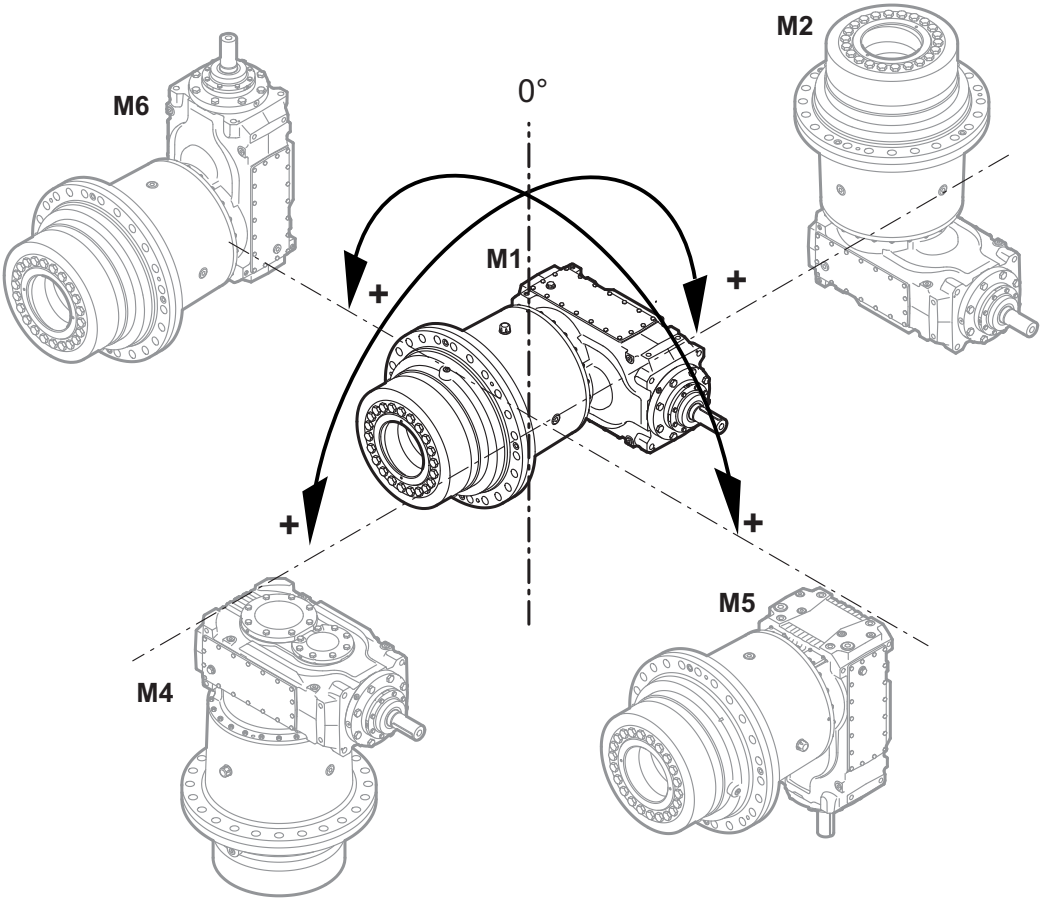

14442483979

22124705/EN – 05/2016

3.5.1 Fixed pivoted mounting position

Definition:

Gear units with fixed pivoted mounting position have a fixed mounting position that differs from the standard.

This means the gear unit does not change its mounting position during operation.

Example:

The type designation is set up as follows:

M1 = initial mounting position

M5 = pivoting direction

9° = fixed pivoting angle

Pivoted from mounting position M1 to M5 by 9°

This results in the following fixed pivoted mounting position:

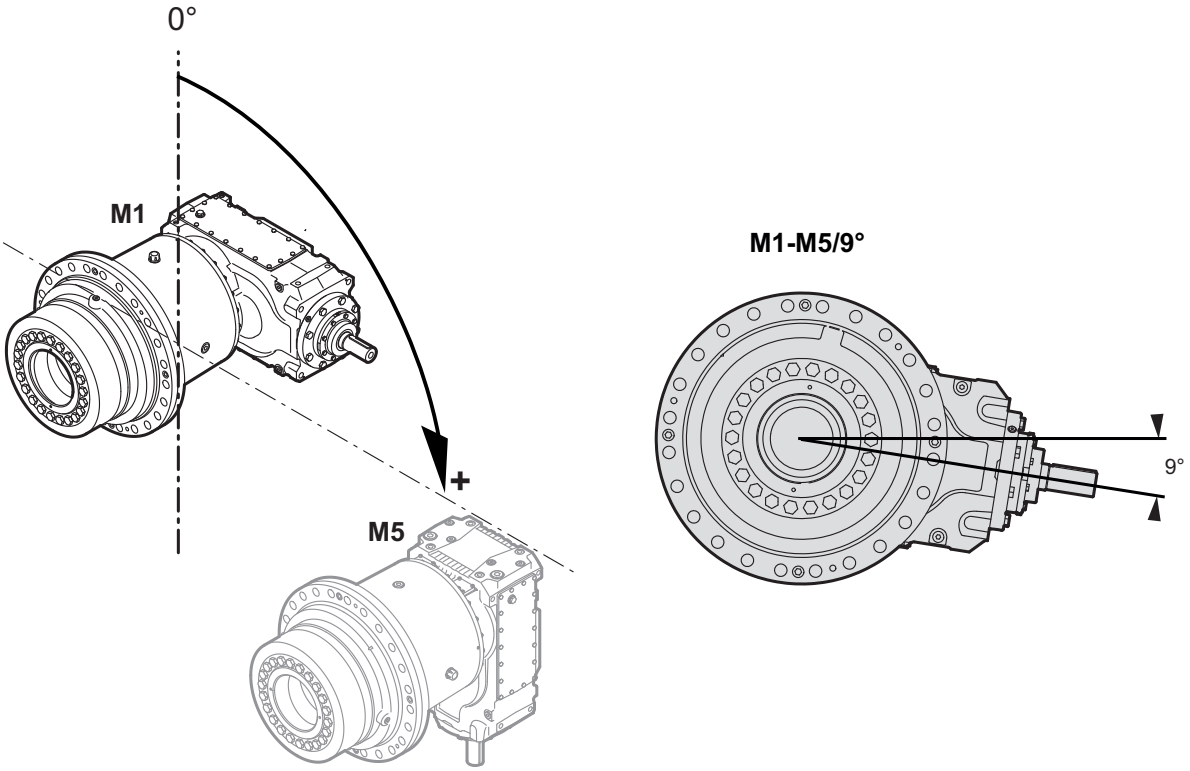

14450270347

The oil level is checked in the selected fixed pivoted mounting position.

22124705/EN – 05/2016

The fixed pivoted mounting position is shown on the nameplate.

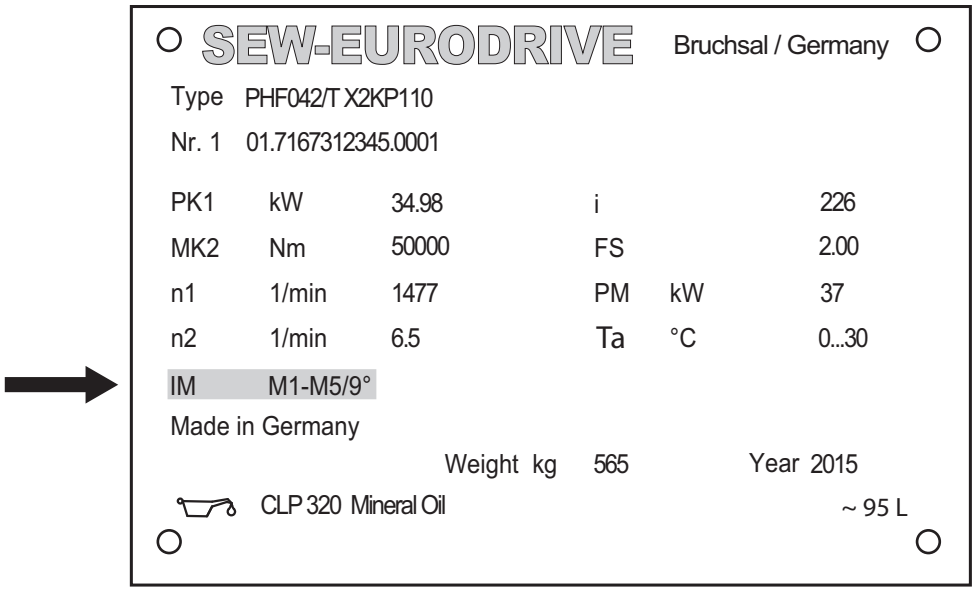

14618364299

22124705/EN – 05/2016

3.5.2 Variable pivoted mounting position

Definition:

Gear units with variable pivoted mounting position can change the mounting position during operation **variably** within the specified max./min. range.

Example:

The gear unit is operated in variable pivoted mounting position M1 to M2 = 9° and M1 to M4 = 12°.

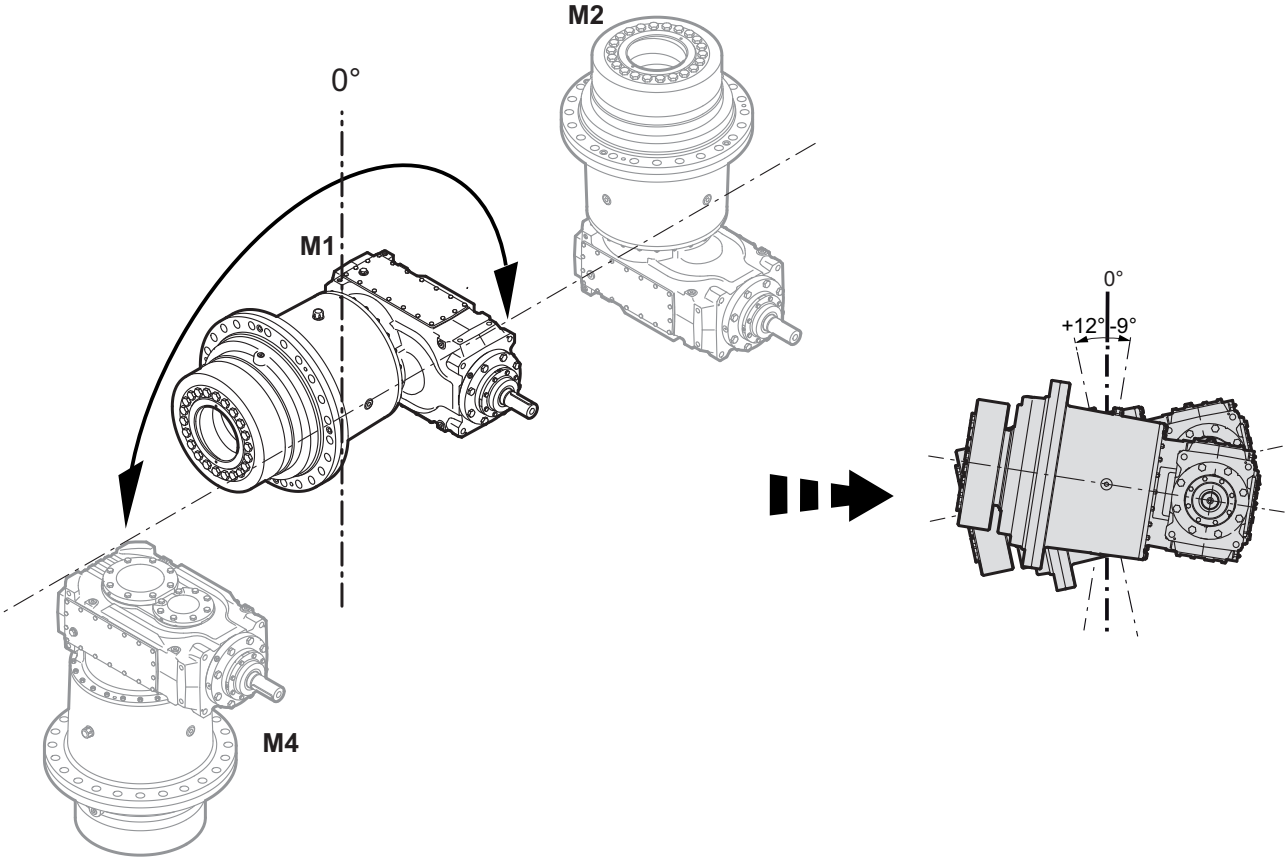

14457396107

Step 1:

The largest pivoting angle determines the positive pivoting direction (12° > 9°). In this example, this is 12° towards M4.

Pivoted from M1 to M4 by +12°

22124705/EN – 05/2016

Pivoted from M1 to M2 by -9°

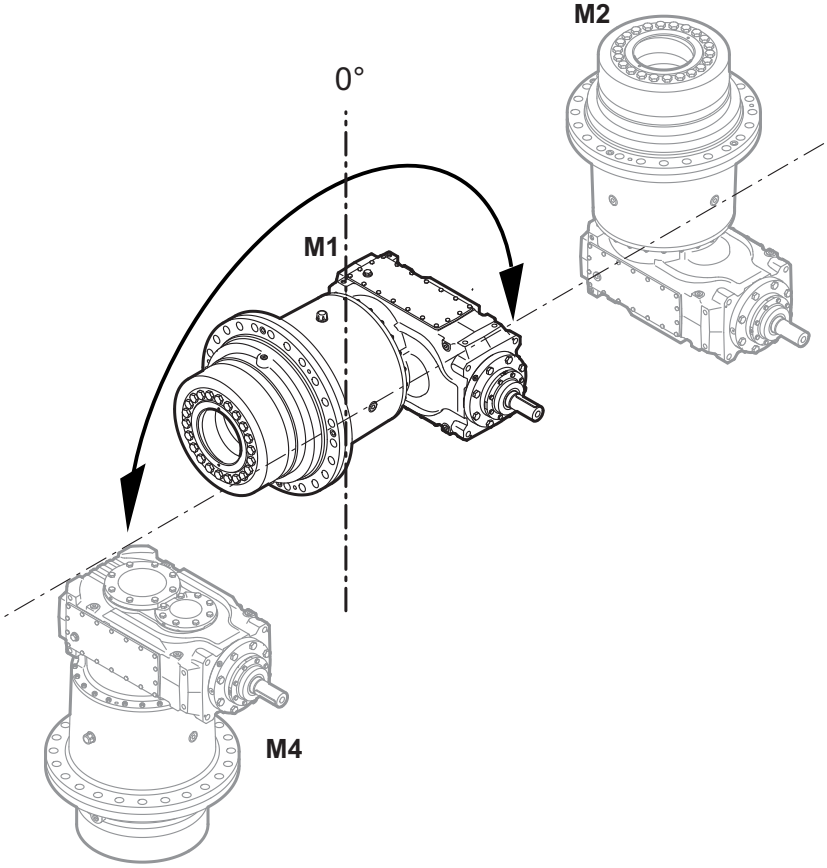

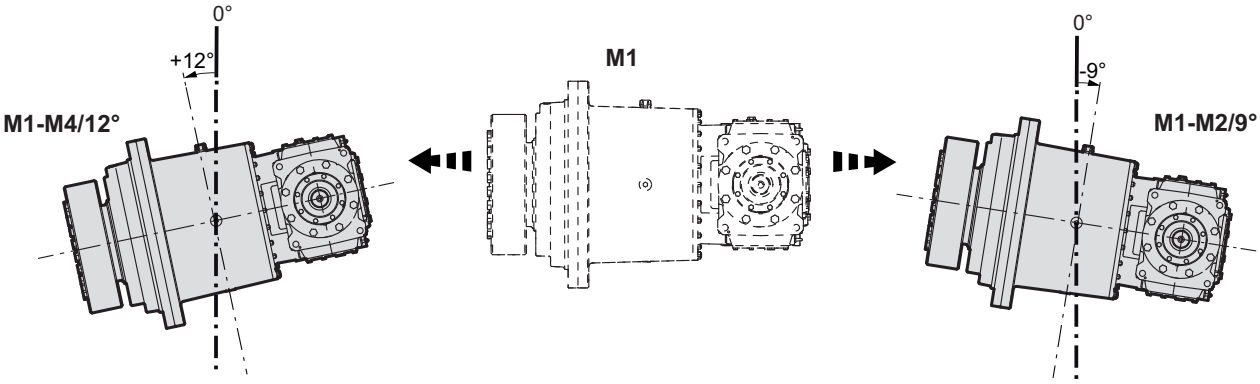

14457419019

The type designation for this example is:

M1-M4/–9°...12°

M1 = initial mounting position

M4 = pivoting direction

12° = pivoted from M1 to M4 by 12°

-9° = pivoted from M1 to M2 by 9° (= pivoted from M1 to M4 by -9°)

22124705/EN – 05/2016

The variable pivoted mounting position is shown on the nameplate.

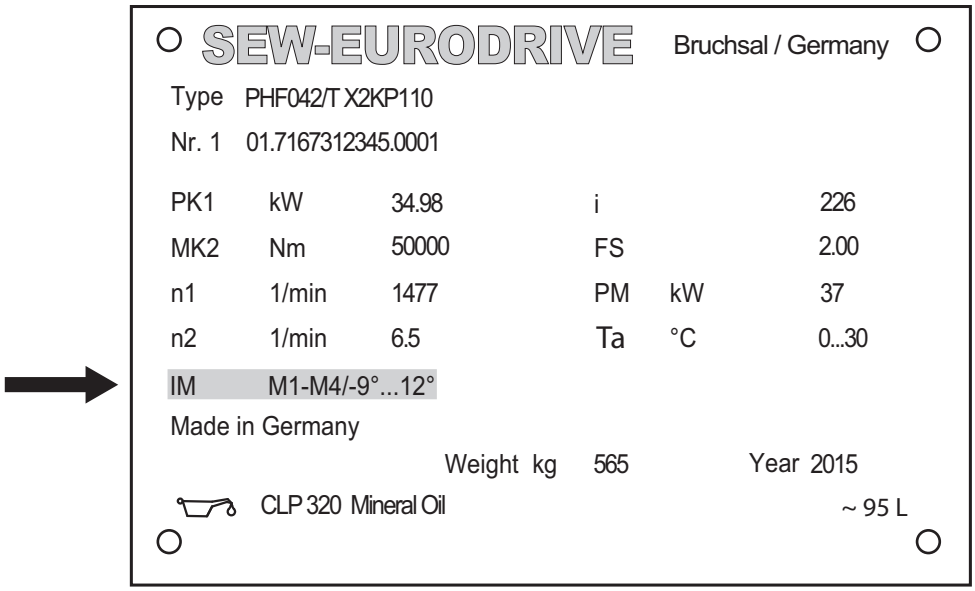

14618368907

Step 2:

For variable pivoted mounting positions, the customer must determine the pivoting angle in which the oil level is checked.

An additional nameplate is used to clearly indicate the oil check angle. This nameplate lists the mounting position for the oil level check.

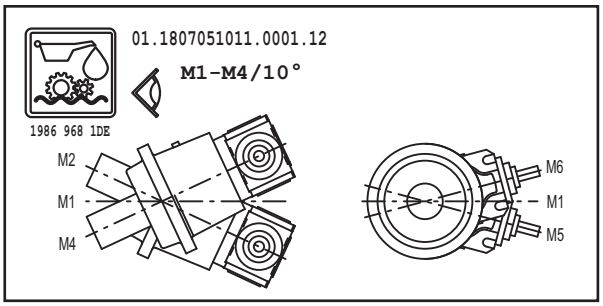

14618845195

22124705/EN – 05/2016

3.5.3 Combination of fixed and variable pivoted mounting positions

Fixed and variable pivoted mounting positions can be combined.

Example:

The following example shows a combination of fixed and variable pivoted mounting position.

The type designation is set up as follows:

M1-M4/9° (fixed pivoted mounting position)

M1 = initial mounting position

M4 = pivoting direction

9° = fixed pivoting angle

M1-M6/–9°...12° (variable pivoted mounting position)

M1 = initial mounting position

M6 = pivoting direction

12° = 12° from M1 to M6

-9° = 9° from M1 to M5 (= -9° from M1 to M6)

The fixed and variable pivoted mounting position are shown on the nameplate.

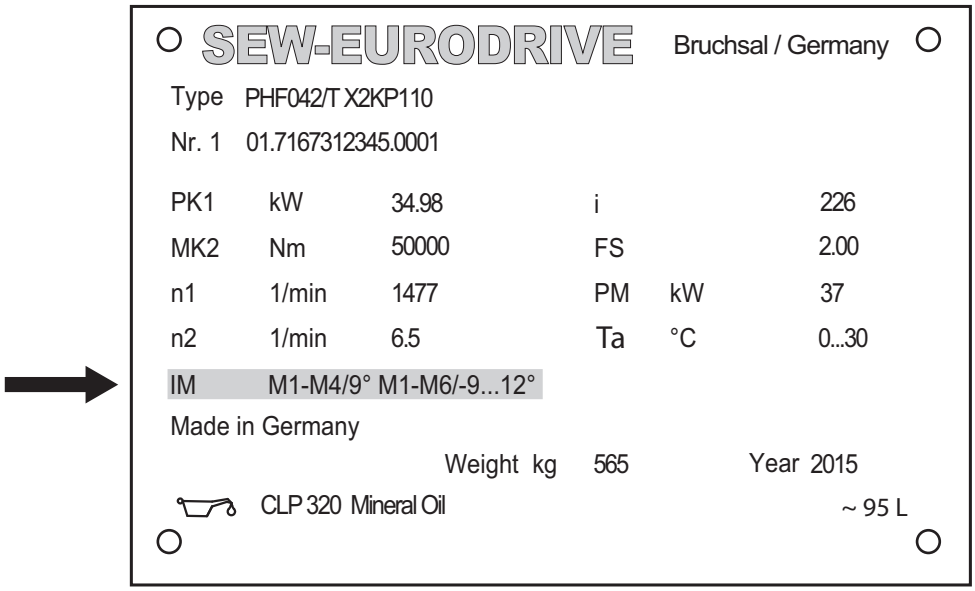

14618853899

When combining fixed and variable pivoted mounting position, the customer must determine the variable pivoting angle in which the oil level is checked. The fixed angle for the oil level check is already defined.

The gear unit has an additional nameplate to ensure correct oil level checks. This nameplate lists the mounting position for the oil level check.

22124705/EN – 05/2016

In this example, the operator checks the oil level at M1-M4/9° M1-M6/10°.

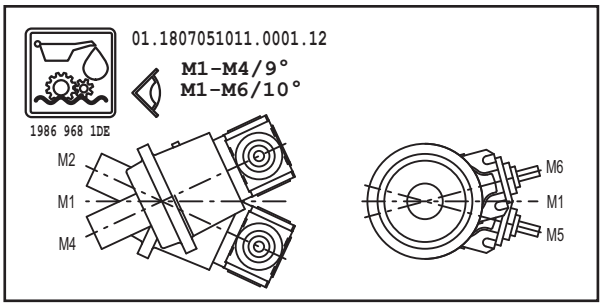

14618847627

3.6 Directions of rotation dependencies

The following figure shows the direction of rotation dependencies between input and output shafts. The gear units as well as the position of the backstop are schematically shown.

Shaft position	03
End gear position	4
P.**X2K..**	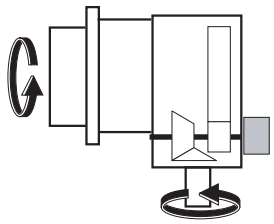

14185479179

▯ = Position of the backstop

3.7 Mounting position of the primary gear unit

As standard, the primary gear unit can be mounted in the mounting positions **0°** and **180°**.

The mounting positions are shown in the following table.

Primary gear unit mounting position 0°
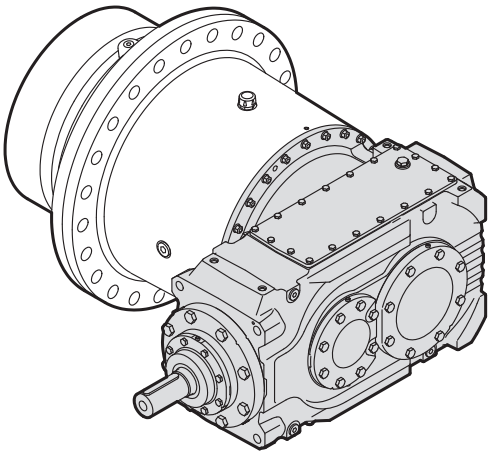 13900311947

Primary gear unit mounting position 180 °
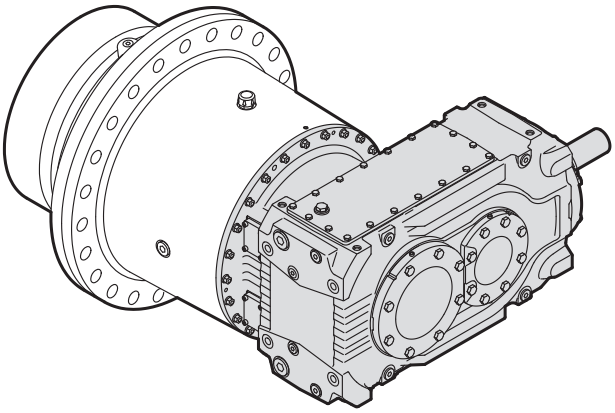 13900315275

INFORMATION

In case of deviating mounting positions of the primary gear unit of 90° (lower input shaft) and 270° (upper input shaft) contact SEW-EURODRIVE. In this case different accessories are available.

22124705/EN – 05/2016

3.8 Sealing system

3.8.1 Input shaft

Standard	Dust-proof	Dust-proof Regreasable	Radial labyrinth seal (Taconite) Regreasable
Single oil seal with dust protection lip	Single oil seal with dust protection cover	Double oil seal with dust protection cover	Single oil seal with radial labyrinth seal
• Normal environment	• **Medium** dust load with abrasive particles	• **High** dust load with abrasive particles	• **Very high** dust load with abrasive particles
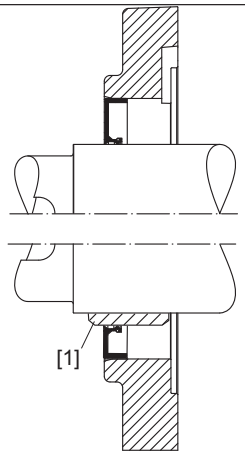	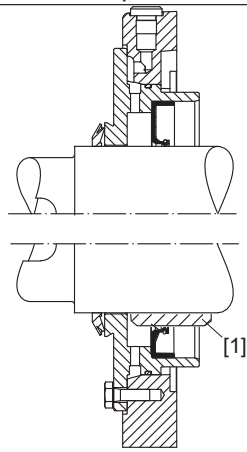	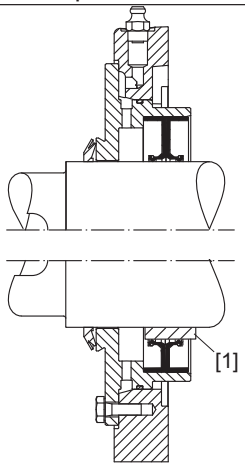	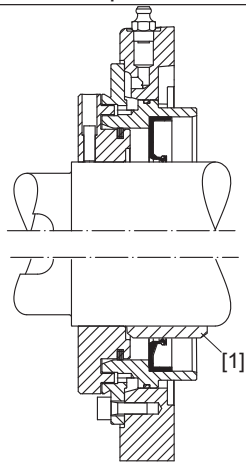

[1] Optional with oil seal sleeve

3.8.2 Output shaft

Seal	Design
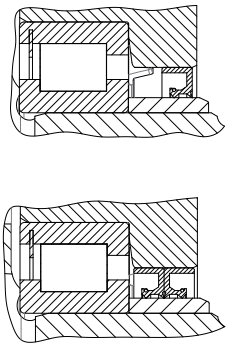	Sealing with 1 oil seal Optional 2 oil seals on a hardened sleeve
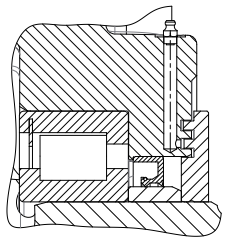	Sealing with lubricated labyrinth seal plus 1 oil seal (regreasable) on a hardened sleeve

22124705/EN – 05/2016

3.9 Oil level check and gear unit venting

Due to the shared oil chamber the oil level check is performed via oil dipstick [1] at the upper inspection cover of the primary gear unit depending on the mounting position. The gear unit venting [2] is performed at the planetary gear unit.

As standard, oil dipstick [1] and venting [2] are made of steel. Optional they are available made of plastic or stainless steel.

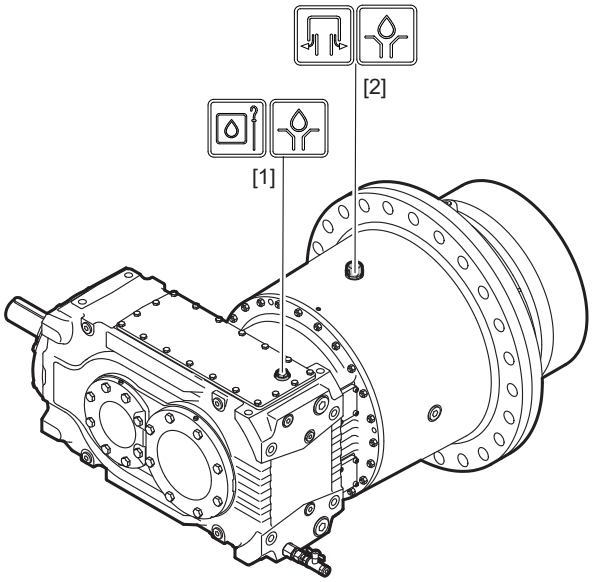

13861204619

3.10 Oil filling

Oil filling can be performed either via the oil dipstick bore [1] on the primary gear unit or via the venting [2] on the planetary gear unit.

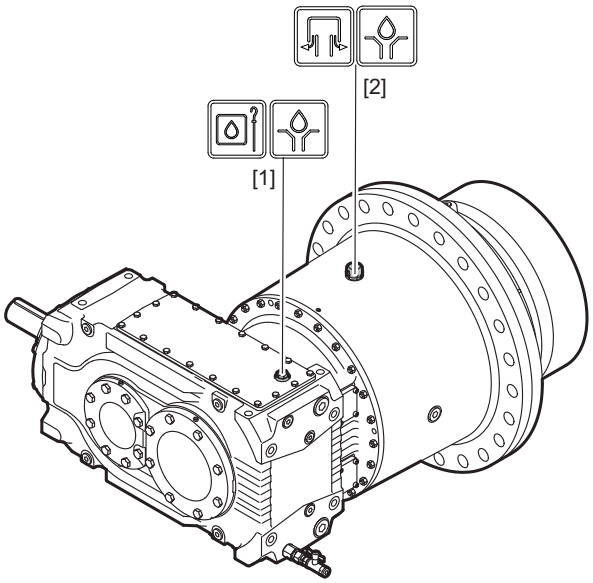

13861204619

22124705/EN – 05/2016

3.11 Oil drain

As standard, the oil drain is performed via the oil drain valve [1] at the primary gear unit.

In case a complete oil drain is required, additional screw plugs [2] at the planetary gear unit or the primary gear unit [3] can be used.

These screw plugs are also available in magnetic design as an option.

As an alternative, an additional oil drain valve can be attached to the planetary gear unit instead of the screw plug [2].

INFORMATION

The position of the oil drain can change at pivoted mounting positions. Please contact SEW-EURODRIVE in this case.

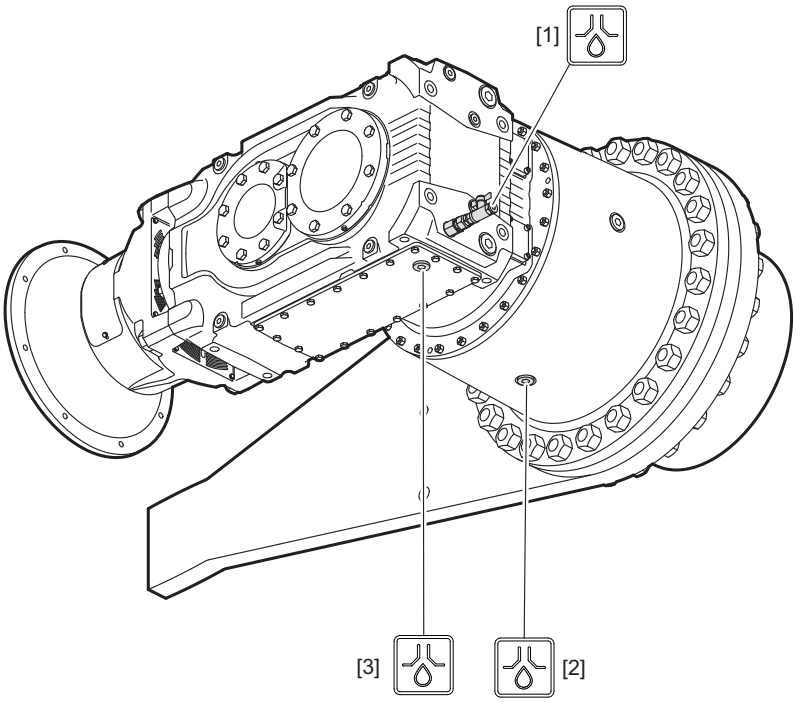

13886291851

3.12 Lubrication type

Splash lubrication is the standard lubrication type.

The mark on the oil dipstick is decisive for filling of the gear unit. Gearing and bearing parts that are not immersed in the oil bath are lubricated by splashing oil.

For other mounting positions than the mounting position M1 oil bath lubrication might be necessary. Please contact SEW-EURODRIVE in such cases.

22124705/EN – 05/2016

3.13 Corrosion and surface protection

3.13.1 OS surface protection

Gear units are available with surface protection OS1, OS2, and OS3.

The following table provides an overview of coating and surface protection systems.

SEW design	OS1 Low environmental impact	OS2 Medium environmental impact	OS3 High environmental impact
Used as surface protection with typical ambient conditions Corrosion categories DIN EN ISO 12944-2	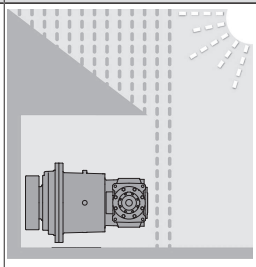	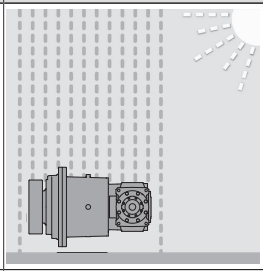	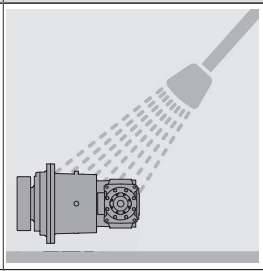
	Suited for environments prone to condensation and atmospheres with low humidity or contamination, such as outdoor applications under roof or with protection, unheated buildings where condensation can build up. According to corrosivity category: C2 (low)	Suited for environments with high humidity or moderate atmospheric contamination, such as applications outdoors subject to direct weathering. According to corrosivity category: C3 (moderate)	Suitable for environments with high humidity and occasionally severe atmospheric and chemical contamination. Occasionally acidic or caustic wet cleaning. Also for applications in coastal areas with moderate salt load. According to corrosivity category: C4 (high)
Sample applications	• Systems in saw mills • Agitators and mixers	• Applications in gravel plants • Cable cars	• Port cranes • Sewage treatment plants • Mining applications
Condensation test ISO 6270	120 h	120 h	240 h
Salt spray test ISO 7253	–	240 h	480 h
Top coat color[1)]	RAL 7031	RAL 7031	RAL 7031
Color according to RAL	Yes	Yes	Yes
Uncoated parts: shaft end/ flanges	Water and hand perspiration repelling rust preventive applied at the factory for external preservation		

1) Standard color

INFORMATION

Sheet metal parts (e.g. protection covers) are painted in RAL 1003.

Special surface protection is also available, please contact SEW-EURODRIVE.

22124705/EN – 05/2016

4 Structure of options

4.1 Shaft end pump /SEP

The figure shows an example of a shaft end pump.

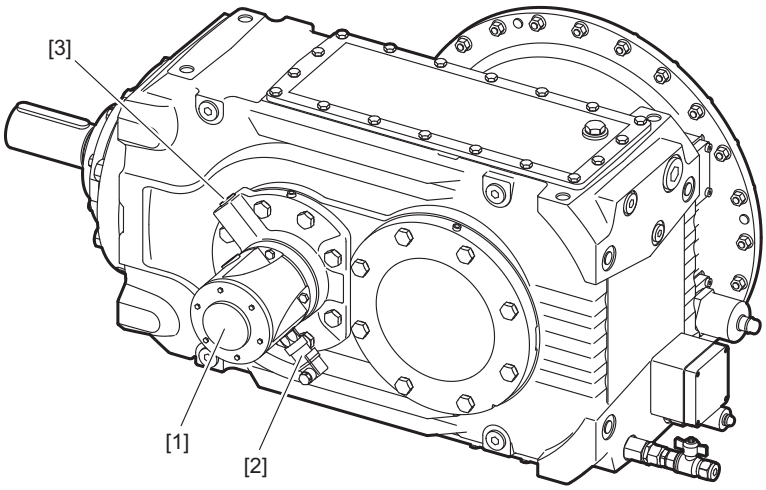

14665697419

[1] Shaft end pump
[2] Pressure switch
[3] Oil filling hole

With pressure lubrication, a direction-independent shaft end pump [1] supplies all bearing points and gearing outside the oil sump with oil via a tube system.

The shaft end pump [1] is mounted externally to the gear unit and is driven by the input shaft or intermediate shaft of the gear unit via a coupling. This ensures a high degree of reliability of the pump functions.

The shaft end pump [1] is available in 5 different pump sizes. The adequate flow rate for the specific application depends on the following factors:

- Required oil quantity for supplying lubrication points
- Position of the pump (connected with input shaft or intermediate shaft)
- Gear unit ratio
- Dimensioned for a speed of the gear unit

INFORMATION

- Proper functioning of the shaft end pump is monitored via the connected pressure switch. Refer to chapter ""Pressure switch"" (→ 🗎 44) for information.
- Contact SEW-EURODRIVE for information on the pump size selection.
- A minimum input speed is required for the shaft end pump to operate properly. If you use variable input speeds (e.g. inverter-controlled drives) or if you intend to change the input speed of a gear unit equipped with a shaft end pump, it is essential that you contact SEW-EURODRIVE.

22124705/EN – 05/2016

4.2 Motor pump /ONP

INFORMATION

For descriptions on the unit structure, refer to the manufacturer's documentation and the addendum to the operating instructions "Motor Pump /ONP".

4.3 Cooling types

4.3.1 Fan cooling

A fan is installed on the gear unit input shaft. Its airflow improves the transmission of heat from the gear unit surface to the environment. Refer to chapter "Fan" for further information.

4.3.2 Built-in cooling

This refers to cooling systems installed directly in the gear unit housing or mounted very close to it, such as a water cooling cartridge.

4.3.3 Circulation cooling

The gear unit oil is pumped out of the gear unit to an external heat exchanger by a pump (motor pump or shaft end pump). This normally involves oil supply systems with oil-water or oil-air heat exchangers.

4.4 Fan

A fan may be installed in the motor adapter to raise the thermal rating or when the ambient conditions change after gear unit startup. The direction of rotation of the gear unit does not influence the operation of the fan.

22124705/EN – 05/2016

4.5 Water cooling cartridge

The water cooling cartridge can be installed above or beneath the oil level. The water connection must be installed by the user.

The amount of heat that can be dissipated depends on the intake temperature and the flow rate of the cooling medium that flows through the unit.

The data given in the technical specifications must be observed.

4.5.1 Structure

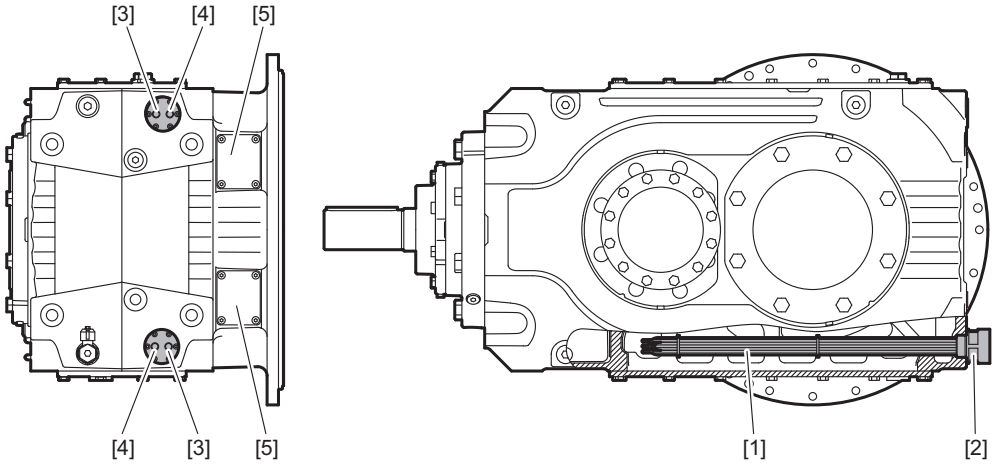

14460603019

[1] Cooling pipes
[2] Tube plate with adapter piece
[3] Return
[4] Supply
[5] Assembly opening for optional water cooling cartridge

The water cooling cartridge consists of 3 main parts:

- Cooling pipes (CuNi alloy)
- Tube plate (brass)
- Connection piece (brass; gray cast iron; steel)

For connection to the cooling circuit, 2 bores with

- pipe thread G1/4" for sizes X110 – X170

are available. The piping is not included in the scope of delivery.

Gear units with water cooling cartridge are delivered completely assembled.

Water cooling cartridges can be retrofitted to a certain extent. Contact SEW-EURODRIVE.

4.5.2 Notes on connection and operation

To achieve the thermal rating specified in the selection tables of the P-X series Industrial Gear Units catalog, different cooling water flow rates are required depending on the gear unit utilization. The required cooling water flow rate depends on the following characteristics:

- Gear unit size
- Mounting position
- Lubrication type

22124705/EN – 05/2016

The cooling water quantity has to be dimensioned individually for each cooling cartridge.

Size / port	Max. cooling water flow rate [l/min]
X2K110/X2K130 – G1’’	12
X2K150/X2K170 – G1 1/4’’	15

INFORMATION

The cooling circuit must be connected in parallel for gear units with several water cooling cartridges. Observe "section "Installation" > "Water cooling cartridge"" (→ 🗎 73).

INFORMATION

Contact SEW-EURODRIVE in the following cases:

- When special cooling media are used (then the cooling capacity of the water cooling cartridge changes).
- When aggressive cooling media are used, such as brackish water or salt water.

4.6 Oil heater

An oil heater may be required to ensure lubrication during a cold gear unit startup when the ambient temperature is low.

The oil heater consists of 2 basic parts:

1. Heating element in the oil sump ("oil heater") with connection unit
2. Thermostat with integrated temperature sensor

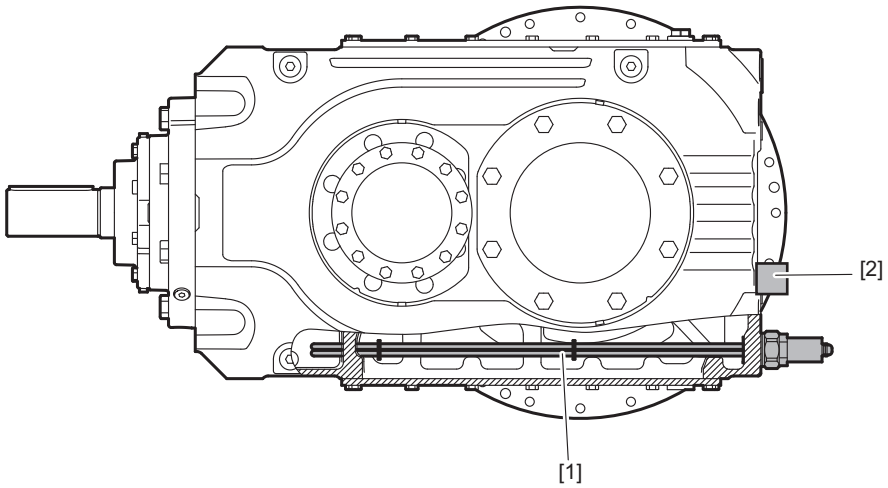

14221631115

[1] Oil heater

[2] Thermostat with integrated temperature sensor

22124705/EN – 05/2016

INFORMATION

- For reduced heating times a second heating element (OH-F) can optionally be used at the mounting flange. Contact SEW-EURODRIVE in this case.
- The position of the thermostat varies with variant and mounting position of the gear unit.

4.7 Motor adapters /MA

Motor adapters [1] are available for mounting

- **IEC (B5) motors** of sizes 200 to 355
- **NEMA ("C" face) motors** of sizes 324 to 449

INFORMATION

- The gear unit must be installed in such a way that no liquids can enter the motor adapter (on HSS end) and accumulate there. Otherwise the oil seal can be damaged, and subsequent damage can create a possible ignition source.
- An elastic claw coupling is included in the scope of delivery of the motor adapter.
- All motor adapters can have a fan installed.

The following figure shows an example of the motor adapter [1] connected to the gear unit:

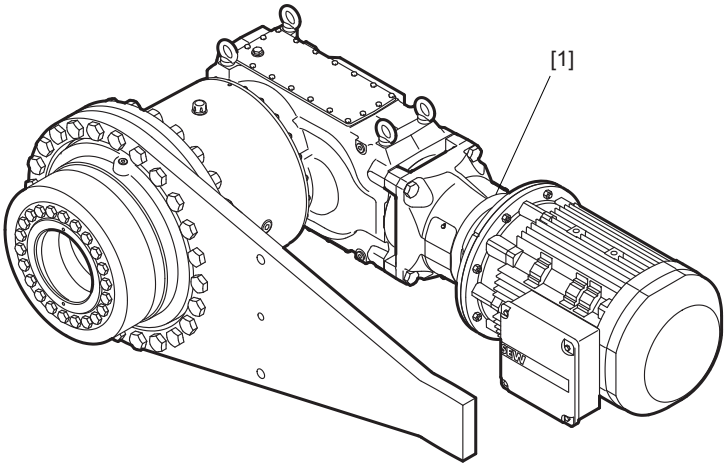

14273472011

22124705/EN – 05/2016

4.8 Backstop

The purpose of a backstop [1] is to prevent unwanted directions of rotation. During operation, the backstop permits rotation in only one specified direction of rotation.

The backstop functions by using centrifugal lift-off sprags. Once the lift-off speed is reached, the sprags completely lift off from the contact surface of the outer ring. The backstop is lubricated with gear oil.

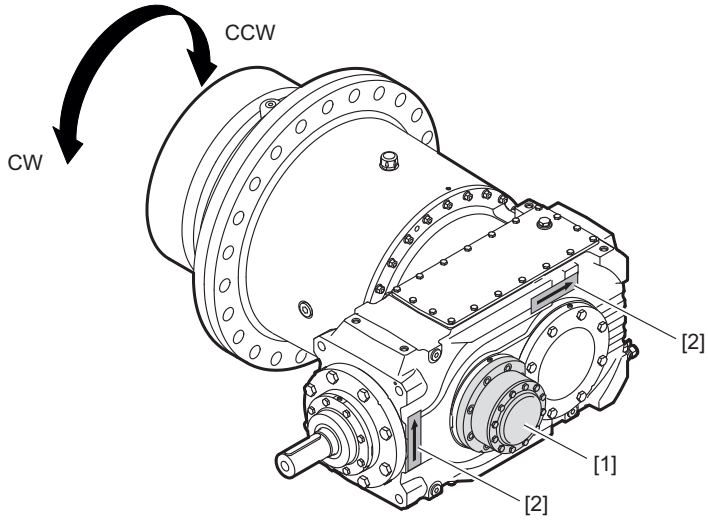

14645541643

The direction of rotation is specified as viewed onto the output shaft (LSS)

- CW = Clockwise rotation
- CCW = Counterclockwise rotation

The permitted direction of rotation [2] is indicated on the housing.

Contact SEW-EURODRIVE for differing requirements.

The backstop might wear off when operated below lift-off speed.

In the following cases **always** contact SEW-EURODRIVE for specifying the maintenance intervals:

- Input speed rates n_1 < 950 min^{-1}
- or any of the following gear unit designs:

n_1 [min^{-1}]	Size
950...1150	X2K100..170 i_N ≥ 10

n_1 = Input speed (HSS) i_N = Nominal gear unit ratio

22124705/EN – 05/2016

4.9 Torque arm

A torque arm is available to support the reaction torque of solid and hollow shaft gear units in the shaft-mounted design.

Depending on the load direction and type of the customer load bearing point, the reaction torque acts as a tensile or compressive force.

4.9.1 Single-sided torque arm

The torque arm [1] is enclosed in the delivery or can be mounted according to customer requirements. The retaining screws are included in the scope of delivery.

The following figure shows a sample combination of a planetary gearmotor with a torque arm on one side.

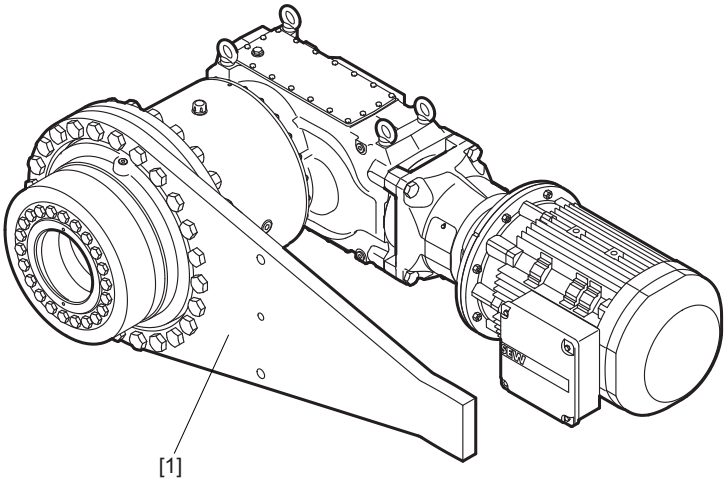

14301287691

4.10 Pressure switch /PS

All gear units with pressure lubrication are equipped with a pressure switch for function monitoring.

The pressure switch is to be connected and integrated into the system in such a way that the gear unit can only be operated when the oil pump is building up pressure. A short-term compensation (max **10 sec.**) during startup is permitted.

Customers are responsible for the electrical connection and the evaluation of the signal.

4.11 Temperature sensor /PT100

The PT100 temperature sensor can be used to measure the temperature of the gear unit oil.

The temperature sensor is located in the oil sump of the gear unit. The exact position depends on the gear unit type and shaft position.

22124705/EN – 05/2016

4.12 Temperature switch /NTB

A temperature switch with preset switching temperatures of 70, 80, 90 or 100 °C is used for monitoring the gear unit oil temperature.

For various functions, the temperature switch is also used as limit value switch, for example

- as "early warning"

  or

- as "main alarm" for switching off the main motor.

To guarantee a long service life and functioning under all conditions, it is recommended to use a relay in the power circuit instead of a direct connection through the temperature switch.

The temperature switch is located in the oil sump of the gear unit. The exact position depends on the gear unit type and shaft position.

4.13 Temperature switch /TSK

The TSK temperature switch is used with oil supply systems for circulation cooling. It is provided with two fixed switching points (60 °C and 90 °C) for controlling and monitoring the system.

The temperature switch is integrated into the circuit of the oil supply system as follows:

- The cooling system is activated when the oil temperature reaches 60 °C
- Warning signal or disconnection of the gear unit when the oil temperature exceeds 90 °C (usually a sign of malfunction in the oil supply system)

To guarantee a long service life and functioning under all conditions, it is recommended to use a relay in the power circuit instead of a direct connection through the temperature switch.

The temperature switch is located in the oil sump of the gear unit. The exact position depends on the gear unit version and shaft position.

4.14 Diagnostic unit DUO10A (oil aging)

If specified in the order, the gear unit can be equipped with a DUO10A diagnostic unit. The DUO10A diagnostic unit is used for planning oil change intervals.

The diagnostic unit consists of a PT100 temperature sensor and an evaluation unit. The temperature sensor installed in the gear unit measures the present gear unit oil temperature. The diagnostic unit calculates the estimated remaining service life for the gear unit oil based on the measured oil temperature. This calculated value is continuously shown on the display of the evaluation unit; when needed, the display can be changed to the current gear unit oil temperature.

INFORMATION

You find more information on the evaluation unit in the "DUO10A Diagnostic Unit" manual, publication number 11473428.

22124705/EN – 05/2016

4.15 Oil-water cooler for splash lubrication /OWC

INFORMATION

For descriptions on the unit structure, refer to the manufacturer's documentation and the addendum to the operating instructions "Oil-water cooler for splash lubrication / OWC".

4.16 Oil-air cooler for splash lubrication /OAC

INFORMATION

For descriptions on the unit structure, refer to the manufacturer's documentation and the addendum to the operating instructions "Oil-air cooler for splash lubrication / OAC".

4.17 Oil-water cooler for pressure lubrication /OWP

INFORMATION

For descriptions on the unit structure, refer to the manufacturer's documentation and the addendum to the operating instructions "Oil-water cooler for pressure lubrication / OWP".

4.18 Oil-air cooler for pressure lubrication /OAP

INFORMATION

For descriptions on the unit structure, refer to the manufacturer's documentation and the addendum to the operating instructions "Oil-air cooler for pressure lubrication / OAP".

22124705/EN – 05/2016

5 Installation/assembly

5.1 Required tools/resources

Not included in the delivery:

- Set of wrenches
- Torque wrench
- Mounting device
- Compensation elements (shims, spacer rings), if necessary
- Fasteners for input and output elements
- Lubricant, e.g. NOCO® fluid from SEW → except for hollow shaft gear units
- For hollow shaft gear units → aids for mounting onto and removal from the machine shaft
- Fasteners for the gear unit base

5.2 Tolerances

5.2.1 Gear unit P-X series

INFORMATION

Refer to the dimension sheet in your order documents for the tolerances of the interfaces for gear unit connection.

22124705/EN – 05/2016

5.3 Important notes

Observe the following notes before you start installing/assembling the system.

⚠ WARNING

Risk of crushing if the drive starts up unintentionally.

Severe or fatal injuries.

- Work on the gear unit only when the machine is not in use. Secure the drive unit against unintentional power-up. Attach an information sign near the ON switch to warn that the gear unit is being worked on.

⚠ WARNING

A customer machine that is not appropriately secured can fall during gear unit installation or removal.

Severe or fatal injuries.

- Protect the operator's machine against unintentional movement when installing or removing the gear unit.

⚠ WARNING

Risk of burns due to hot gear unit and hot gear unit oil.

Serious injury.

- Let the gear unit cool down before you start working on it.
- Carefully remove the oil level plug and oil drain plug.

⚠ CAUTION

Danger due to unsecured mount-on components, such as keys.

Possible injury to persons due to falling parts.

- Install appropriate protective devices.
- Secure the mount-on components.

⚠ CAUTION

Risk of slipping due to lubricant leaking from damaged seals.

Minor injuries.

- Check the gear unit and mount-on components for leaking lubricant.

⚠ CAUTION

Risk of injury due to protruding parts.

Minor injuries.

- Gear units and mount-on components must not protrude into footways.

22124705/EN – 05/2016

NOTICE

Improper installation and mounting may result in damage to the gear unit.

Possible damage to property.

- Observe the following notes:

- Make sure that the customer components are designed for the load.
- The gear units are delivered without oil fill as standard.
- Do not change the mounting position without prior consultation of SEW-EURODRIVE. The warranty will become void without prior consultation.
- The most important technical data is provided on the nameplate.

  Additional data relevant for operation is available in drawings, on the order confirmation or any order-specific documentation.
- Do not modify the gear unit or the mount-on components without prior consultation of SEW-EURODRIVE.
- Protect rotating drive parts, such as couplings, gears, or belt drives using suitable devices that protect from contact.
- Install/mount the gear unit only in the specified mounting position on a level, vibration-damping, and torsionally rigid support structure. Do not twist housing legs and mounting flanges against each other.
- Make sure that the oil level plugs and oil drain plug, as well as the breather plugs are freely accessible!
- When installing a filter in the OAP and OWP cooling units, make sure there is sufficient height for removing the filter element and the filter hood.
- Use plastic inserts if there is a risk of electrochemical corrosion between the gear unit and the driven machine (connection between different metals such as cast iron and stainless steel). Likewise, fit the screws with plastic washers. Always ground the gear unit housing.
- It is important that only authorized personnel is allowed to assemble gear head units with motors and adapters. Please contact SEW-EURODRIVE.
- Do not weld anywhere on the drive. Do not use the drive as a ground point for welding work. Welding may destroy gearing components and bearings.
- Units installed outdoors must be protected from the sun. Suitable protective devices are required, such as covers or roofs. Avoid the accumulation of heat. The operator must ensure that foreign objects do not impair the function of the gear unit (e.g. falling objects or coverings).
- Protect the gear unit from direct cold air currents. Condensation may cause water to accumulate in the oil.
- For use in damp areas or outdoors, the gear units can be supplied with a suitable painting. Repair any damage to the paint work (e.g. on the breather plug).
- Do not modify the existing piping.
- For gear units that are filled with oil at the factory, check to see that the breather plug is installed before you start up the gear unit.
- Strictly observe the safety notes in the individual chapters.

22124705/EN – 05/2016

5.4 Requirements for assembly

Check that the following conditions have been met:

- The information on the motor's nameplate must match the voltage supply system.
- The drive has not been damaged during transportation or storage.
- The ambient temperature matches the information in the order documents.
- No harmful oils, acids, gases, vapors, radiation etc. in the vicinity
- Clean the output shafts and flange surfaces thoroughly to ensure they are free of anti-corrosion agents, contamination or similar. Use a standard solvent. Do not let the solvent come into contact with the sealing lips of the oil seals as this might damage the material.

5.4.1 Extended storage of gear units

Important: The service life of the lubricant in the bearings is reduced if the unit is stored for ≥ 1 year (applies only to bearings with grease lubrication).

Replace the provided breather filter with the screw plug.

22124705/EN – 05/2016

5.5 Installing the gear unit

5.5.1 Tightening torques: Retaining screws of gear unit mount-on parts

Tighten the screws of gear unit mount-on parts and protection covers using the following tightening torque.

INFORMATION

The tightening torques do not apply to mounting types such as flange coupling, torque arm, mounting flange, hollow shaft with shrink disk, etc. Those are described in the individual chapters.

Bolt/nut	Tightening torque Strength class 8.8 [Nm]
M6	11
M8	27
M10	54
M12	93
M14	148
M16	230

INFORMATION

The bolts must not be lubricated during assembly.

22124705/EN – 05/2016

5.5.2 Foundation

To ensure quick and successful gear unit mounting, the proper foundation should be selected and the mounting carefully planned in advance. Foundation drawings with all necessary construction and dimension details should be available.

When mounting the gear unit on a steel construction, ensure adequate stiffness to avoid harmful vibrations and oscillations. The foundation must be dimensioned according to the weight and torque of the gear unit, taking into account the forces acting on the gear unit.

Tighten retaining screws or nuts to the specified torque. Screws and tightening torques have to be planned according to section "Torque arm" (→ 🗎 79) and section Flange-mounted gear units.

NOTICE

An improper foundation may result in damage to the gear unit.

Possible damage to property.

- The foundation must be level and flat; the gear unit may not be deformed when tightening the retaining screws. Unevenness must be leveled out appropriately.
- Observe the weight specified on the nameplate.

5.5.3 Aligning the shaft axis

⚠ WARNING

Shafts can break if the shaft axis is not aligned accurately.

Severe or fatal injuries.

- Refer to the separate operation instructions regarding the requirements of the couplings.

The service life of the shafts, bearings and couplings depends on the precision of the alignment of the shaft axes with each other.

Always try to achieve zero misalignment. When doing so, you should also consult the special operating instructions regarding the requirements of the couplings, for example.

22124705/EN – 05/2016

5.6 Filling gear units with oil / delivered without oil fill (standard)

Observe the notes in chapter "Important notes" (→ 🗎 48).

5.6.1 General information

The gear unit is delivered without oil fill as standard.

⚠ WARNING

Risk of crushing if the drive starts up unintentionally.

Severe or fatal injuries.

- De-energize the motor before you start working on the unit.
- Secure the motor against unintended power-up.

NOTICE

Improper oil filling may cause damage to the gear unit.

Possible damage to property.

- Observe the following notes.

- Fill the oil only when the gear unit is in the intended mounting position.
- Make sure the oil has ambient temperature when filling it into the gear unit.
- For gear units with external supply pipes, e.g. oil supply systems, establish the connections prior to the filling process.
- Observe the additional notes depending on the lubrication type in the following chapters.
- Fill the gear unit with the oil grade and oil quantity specified on the nameplate. The oil quantity specified on the nameplate is an approximate quantity. The mark on the oil dipstick is the decisive indicator of the correct oil quantity.

  When additional attachments, e.g. an oil supply system, are mounted to the gear unit, the oil fill quantity is higher. In this case, observe the respective SEW operating instructions "Oil Supply System". For more information, refer to chapter ""Changing the oil"" (→ 🗎 112).
- Check the oil level via the oil dipstick. For detailed information, refer to chapter ""Checking the oil level"" (→ 🗎 107).
- Use a funnel to fill the oil (max. filter mesh 25 µm).

5.6.2 Gear units with shaft end pump /SEP

NOTICE

Improper installation and mounting of the shaft end pump [1] can damage the gear unit.

Possible damage to property.

- Observe the following notes.

- Fill the gear unit with the oil type and oil quantity corresponding to the nameplate data, see chapter ""Changing the oil"" (→ 🗎 112).

22124705/EN – 05/2016

- Check the oil level using the oil dipstick. For additional information, refer to chapter ""Checking the oil level"" (→ 🗎 107).
- Directly before taking the gear unit into operation the first time, open the screw plug [3] and fill the shaft end pump [1] completely with oil. After having filled in the oil, close the screw plug [3].

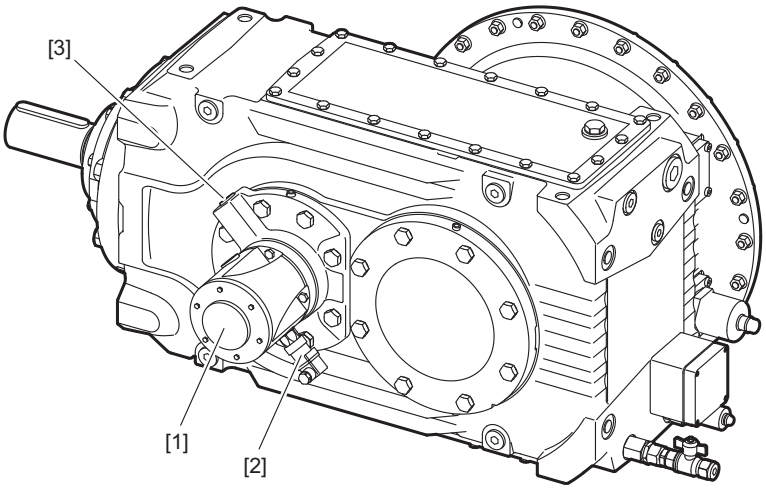

14665697419

This procedure must be repeated after a idling time of more than 6 months.

For detailed information, refer to chapter ""Startup" > "Shaft end pump / SEP"" (→ 🗎 95) and the manufacturer documentation.

Pressure switch

Gear units with shaft end pump are equipped with a pressure switch [2] for function monitoring as standard. Connection has to be carried out by the operator. Observe the chapter ""Pressure switch"" (→ 🗎 90).

22124705/EN – 05/2016

5.7 Gear units delivered with oil fill (option)

If the gear unit is delivered with oil fill, you have to install the breather plug prior to startup. It is enclosed with the delivery.

The following illustration serves as an example. The position of the breather plug is specified in the order documents.

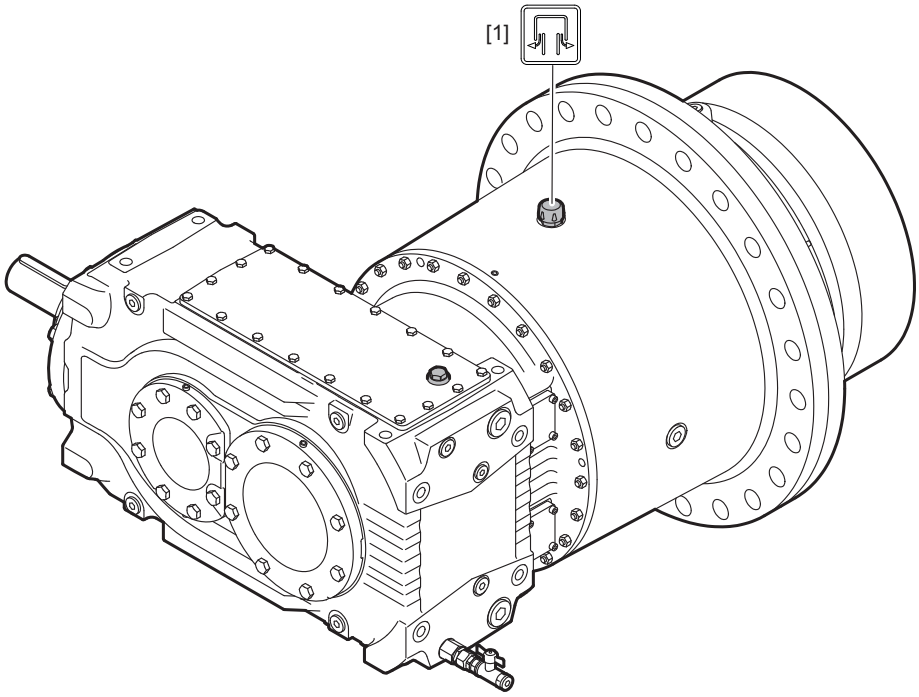

14299527563

1. Remove the closing plug.
2. Insert the breather plug [1].
3. Check the oil level. Observe the information in chapter ""Checking the oil level"" (→ 🗎 107).

22124705/EN – 05/2016

5.8 Gear units with solid shaft

5.8.1 Assembling the input and output components

NOTICE

Bearings, housing or shaft may be damaged due to improper assembly.

Possible damage to property.

- Only use a mounting device for installing input and output elements. Use the center hole and the thread on the shaft end for positioning.
- Never force belt pulleys, couplings, pinions, etc. onto the shaft end by hitting them with a hammer. This may damage the bearing, the housing and the shaft.
- If belt pulleys are used, make sure the belt is tensioned correctly in accordance with the manufacturer's instructions.

Installation with mounting device

The following figure shows a mounting device for installing couplings or hubs on gear unit or motor shaft ends. Should you be able to tighten the screw without any problems, you may not need the thrust bearing on the mounting device.

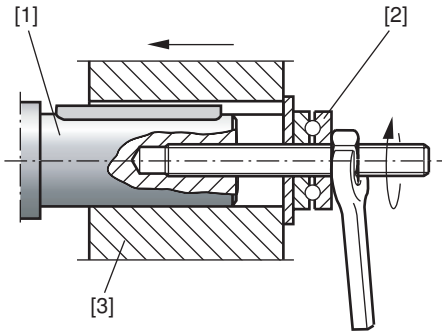

211368587

[1] Gear unit shaft end

[2] Thrust bearing

[3] Coupling hub

22124705/EN – 05/2016

Avoid excessive overhung loads

To avoid high overhung loads: Install the gear or chain sprocket according to figure **A** if possible.

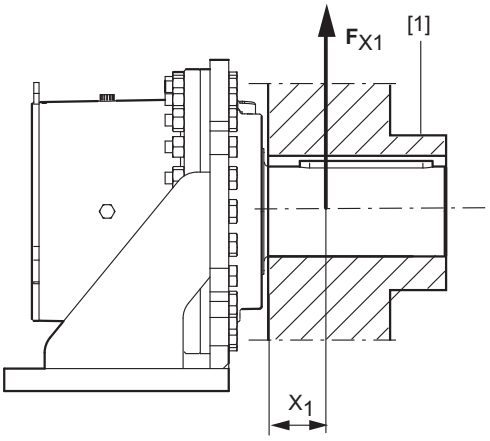

[A]

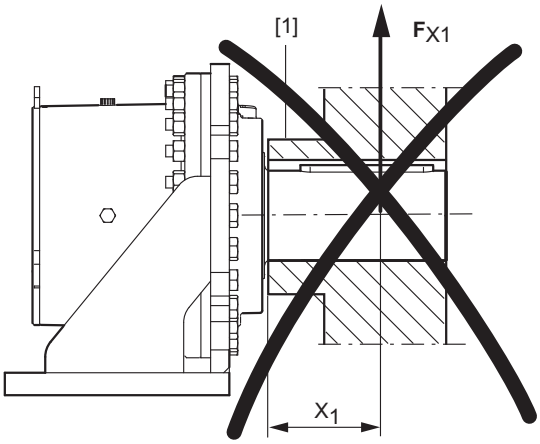

[B]

1055550219

[1] Hub

[A] correct

[B] unfavorable

INFORMATION

Mounting is easier if you first apply lubricant to the output element and/or heat it up briefly (to 80 ... 140 ˚C).

221247705/EN – 05/2016

5.9 Coupling

INFORMATION

Observe the operating instructions of the respective coupling manufacturer.

Adjust the following misalignments according to the coupling manufacturer's specifications when mounting couplings.

a) Axial misalignment

b) Radial misalignment

c) Angular misalignment

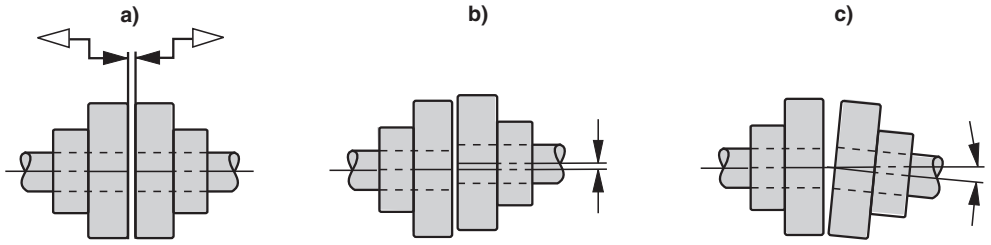

211395595

22124705/EN – 05/2016

5.10 Motor adapter /MA

5.10.1 Max. permitted motor weight

When mounting a motor at the gear unit the approved maximum motor weight in regard to the motor adapter size must be verified.

INFORMATION

- The maximally permitted motor weight may not be exceeded.
- In case of a deviating mounting position, contact SEW-EURODRIVE.

2. Maximum motor weight depending on motor adapter size

The following maximum loads on the motor adapter must not be exceeded.

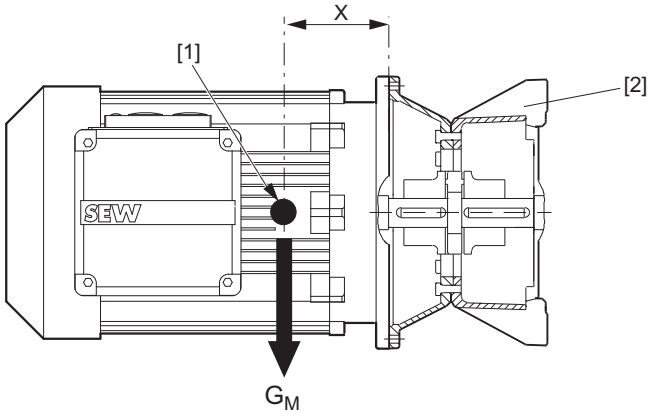

9007199611271819

[1] Center of gravity of the motor
[2] Motor adapter
X = Distance from the center of gravity
G_M = Weight of the mounted motor

INFORMATION

The table only applies to stationary applications. For mobile applications (e.g. travel drives), consult SEW-EURODRIVE.

Motor adapter		G_M	X
IEC	NEMA	[kg]	[mm]
100/112	182/184	60	190
132	213/215	110	230
160/180	254/286	220	310
200	324	280	340
225	326	400	420
250 / 280	364 - 405	820	480
315S-L	444 - 449	1450	680
315		2000	740
355		2500	740

The maximum permitted weight G_M must be linearly reduced if the centroidal distance **X** is increased. G_M cannot be increased if the centroidal distance is reduced.

22124705/EN – 05/2016

5.10.2 Claw coupling

INFORMATION

Observe the operating instructions of the respective coupling manufacturer.

ROTEX® coupling

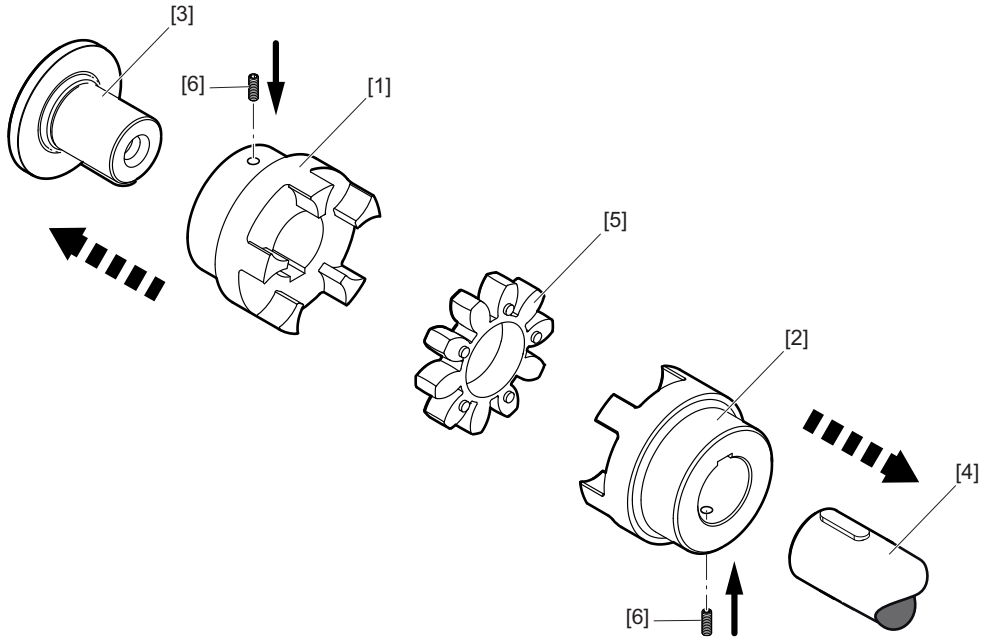

9007205071635979

Observe the chapter "Preliminary work regarding inspection/maintenance" (→ 🗎 103).

1. Mount the coupling halves [1][2] onto the input and output shafts [3][4].

NOTICE

Improper assembly can damage the hubs [1][2].

Possible damage to property.

- Heat the coupling half to about 80 °C to facilitate assembly.

2. Insert the spider [5] or DZ elements into the claws of the input and output coupling halves [1][2].
3. Push the gear unit/motor in axial direction until dimension **E** is reached. If the gear unit/motor has already been installed permanently, set dimension **E** by moving the coupling halves [1][2] axially on the input and output shafts [3][4].

NOTICE

Improper mounting may result in damage to the coupling.

Possible damage to property.

- During assembly, it is essential to observe dimension **E** so that the spider remains axially flexible during operation. The dimension **E** is listed in the following table.

22124705/EN – 05/2016

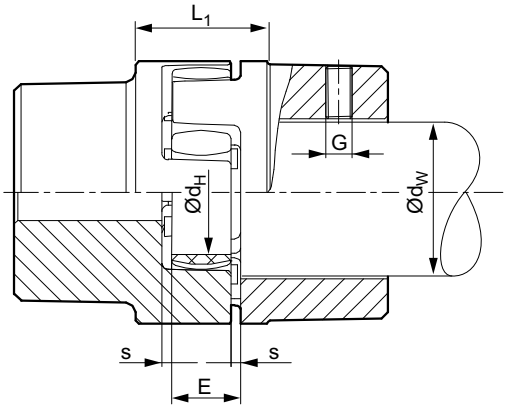

5815628427

4. Secure the coupling halves by tightening the set screws [6].

Coupling size	Mounting dimensions			Set screw	
	E [mm]	s [mm]	d_H [mm]	G	Tightening torque [Nm]
14	13	1.5	10	M4	1.5
19	16	2	18	M5	2
24	18	2	27	M5	2
28	20	2.5	30	M8	10
38	24	3	38	M8	10
42	26	3	46	M8	10
48	28	3.5	51	M8	10
55	30	4	60	M10	17
65	35	4.5	68	M10	17
75	40	5	80	M10	17
90	45	5.5	100	M12	40
100	50	6	113	M12	40
110	55	6.5	127	M16	80
125	60	7	147	M16	80
140	65	7.5	165	M20	140
160	75	9	190	M20	140
180	85	10.5	220	M20	140

Displacement – Aligning the coupling

NOTICE

Improper mounting of the coupling may result in damage.

Possible damage to property.

- The shaft ends must be aligned accurately to ensure a long service life of the coupling. Strictly adhere to the displacement values specified in the following chapters. Exceeding these values will damage the coupling. Exact coupling alignment increases its service life.

Important:

- The displacement values specified in the table (see next page) are maximum values that must not occur simultaneously. If radial offset and angular offset occur at the same time, the permitted displacement values may only be used proportionately.
- Use dial indicator, linear or feeler gauge to check whether the permitted displacement values specified in the table (see next page) are adhered to.

22124705/EN – 05/2016

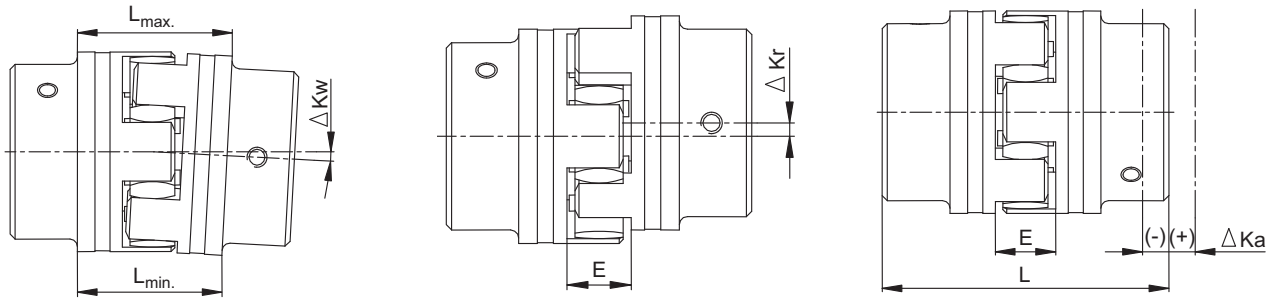

Angular misalignments | Radial misalignments | Axial misalignments

$\Delta K_w = L_{1max.} - L_{1min.}$ [mm]

$L_{max} = L + \Delta K_a$ [mm]

5989511307

Example of specified displacement combinations (see diagram):

Example 1:

$\Delta K_r = 30\%$

$\Delta K_w = 70\%$

Example 2:

$\Delta K_r = 60\%$

$\Delta K_w = 40\%$

$$\Delta K_{total} = \Delta K_r + \Delta K_w \leq 100\ \%$$

6001385227

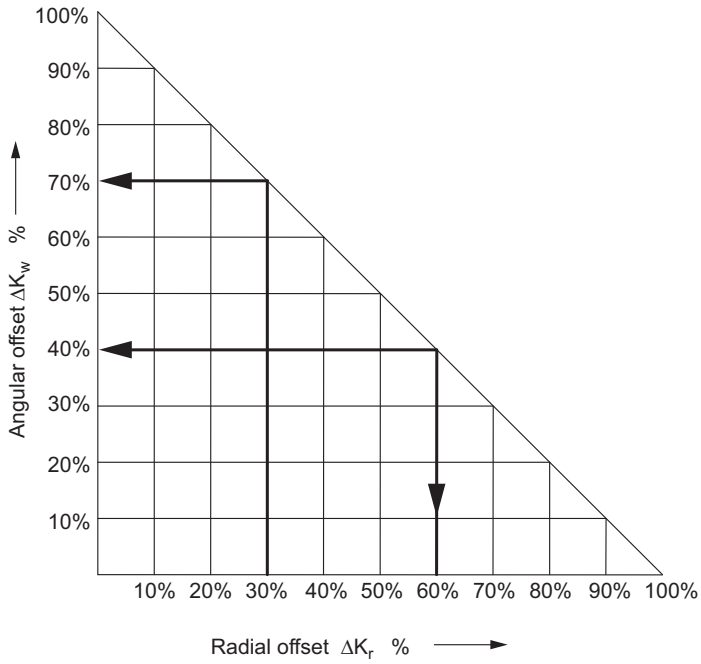

5989508747

Displacement values

The table below shows the displacement values:

ROTEX® size	14	19	24	28	38	42	48	55	65	75	90	100	110	125	140	160	180
Max. axial displacement ΔK_a [mm]	-0.5	-0.5	-0.5	-0.7	-0.7	-1.0	-1.0	-1.0	-1.0	-1.5	-1.5	-1.5	-2.0	-2.0	-2.0	-2.5	-2.5
	1.0	1.2	1.4	1.5	1.8	2.0	2.1	2.2	2.6	3.0	3.4	3.8	4.2	4.6	5.0	5.7	6.4

22124705/EN – 05/2016

Max. radial displacement ΔK_r [mm]	1500 rpm	0.17	0.20	0.22	0.25	0.28	0.32	0.36	0.38	0.42	0.48	0.50	0.52	0.55	0.60	0.62	0.64	0.68
	1800 rpm	0.11	0.13	0.15	0.17	0.19	0.21	0.25	0.26	0.28	0.32	0.34	0.36	0.38	-	-	-	-
ΔK_w [degree] angular displacement when n = 1500 rpm ΔK_w [mm]		1.2	1.2	0.9	0.9	1.0	1.0	1.1	1.1	1.2	1.2	1.2	1.2	1.3	1.3	1.2	1.2	1.2
		0.67	0.82	0.85	1.05	1.35	1.7	2.0	2.3	2.7	3.3	4.3	4.8	5.6	6.5	6.6	7.6	9.0
ΔK_w [degree] angular displacement when n = 3000 rpm ΔK_w [mm]		1.1	1.1	0.8	0.8	0.8	0.8	0.9	1.0	1.0	1.0	1.1	1.1	1.1	-	-	-	-
		0.62	0.7	0.75	0.84	1.1	1.4	1.6	2.0	2.3	2.9	3.8	4.2	5.0	-	-	-	-

5.10.3 Attaching the motor to the motor adapter

1. Clean the motor shaft and flange surfaces of the motor and the motor adapter. They must be dry and free of grease.

INFORMATION

To avoid contact corrosion, SEW-EURODRIVE recommends to apply NOCO® fluid to the motor shaft before mounting the coupling half.

2. Push the coupling half onto the motor shaft and position it. When doing this, observe the information in chapter ""Claw coupling"" (→ 🗎 60) and the figure below. The coupling size and type are indicated on the coupling.

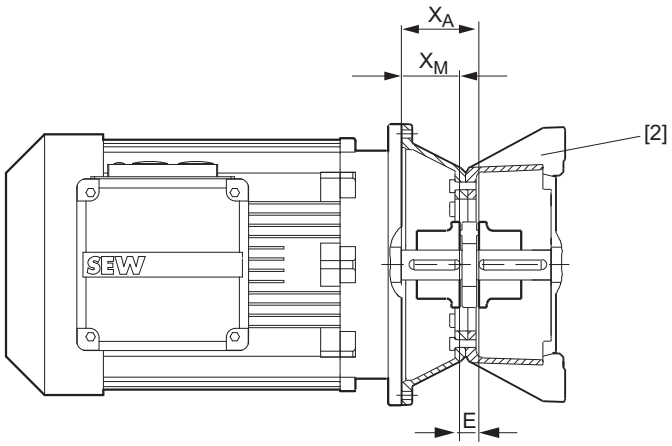

9007199705735691

[1]	Motor adapter	XA	Distance between the coupling and the motor adapter flange surface
E	Installation dimensions → XM = XA - E	XM	Distance between the coupling and the motor flange surface

3. Secure the coupling halves using the setscrew.
4. Mount the motor onto the motor adapter, making sure that the claws of the coupling engage each other.

22124705/EN – 05/2016

5.11 Motor pump /ONP

INFORMATION

Before installation/assembly, first read the addendum to the operating instructions "Motor Pump /ONP", which includes the manufacturer's documentation.

5.12 Fan /FAN

Note the following:

- When protective devices for couplings or similar are installed on gear units equipped with a fan, sufficient clearance must be provided for the intake of cooling air.

  For the required clearance, refer to the dimension drawing in the catalog or the order documents.
- Never operate the gear unit if the protective housing is not installed.
- Protect the fan guard from external damage.
- Make sure the air intake vents of the fan are not blocked or covered.

Observe the following tightening torques for installing the fan guard

Bolt/nut	Tightening torque Strength class 8.8 [Nm]
M6	11
M8	27
M10	54
M12	93
M14	148
M16	230

22124705/EN – 05/2016

5.13 Limit temperature for gear unit start

The minimum permitted ambient temperature/oil temperature for gear unit startup depends on the viscosity of the oil used and the lubrication type of the gear unit.

INFORMATION

- Before startup, it might be necessary to heat up the oil with an oil heater to the temperature specified under "Initial temperature". Observe the lubricant table in chapter "Permitted lubricants" (→ 🗎 124). For the design and dimensioning of the required oil heater, contact SEW-EURODRIVE.
- For the minimally permitted initial temperature for mineral and synthetic oil, refer to the chapter "Permitted lubricants" (→ 🗎 124).

22124705/EN – 05/2016

5.14 Oil heater

⚠ WARNING

Danger of electric shock.

Severe or fatal injuries.

- De-energize the oil heater before you start working on the unit.
- Secure the oil heater against unintended power-up.

NOTICE

Improper installation of the oil heater may result in damage to the gear unit.

Possible damage to property.

- Make sure the heating elements are fully immersed in the oil bath to avoid any damage.

NOTICE

Improper change of the mounting position might result in malfunction of the gear unit heater.

Possible damage to property.

- Do not change the mounting position without prior consultation with SEW-EURODRIVE. The warranty will become void without prior consultation.

INFORMATION

The electrical connection of the heating elements and the thermostat may only be established by qualified personnel according to the current supply conditions on site.

Observe the connection voltage and the switching capacity of the thermostat. Improper or incorrect cabling can damage the electrical components.

22124705/EN – 05/2016

5.14.1 Information on the function of the oil heater

- The heater is screwed into the gear unit housing ex works and is controlled by a thermostat. The trip temperature of the thermostat is set at the factory depending on the lubricant used.
- The trip point of the thermostat of the oil heater, see table "Thermostat setting on delivery" is factory-set to a temperature of about 5 K above the respective limit temperature "initial temperature for gear unit startup", see chapter "Limit temperature for gear unit startup".

  At this temperature, see table "Minimum permitted initial temperature for gear unit start", the thermostat disables the oil heater. Only then, the gear unit may be started up. The thermostat activates the oil heater again once the temperature is about 5 K below the trip point.
- In order to prevent the oil from burning, the heating elements of the heater have a maximum surface load. This is why the heating process for cold gear unit oil can take between one and several hours. The exact duration of the heating process before the start varies depending on the gear unit size, type, mounting position, oil fill quantity, and ambient temperature.

  This is why the thermostat has to be energized permanently even when the drive is at a brief standstill.

  If the drive is at standstill over a longer period, for example during holidays, and the thermostat is not energized, you have to make sure that the thermostat is energized in due time before the drive is started up.
- Thermostat and oil heater are installed and ready for operation. Prior to startup, wire them properly and connect them to the current supply.
- Consult SEW-EURODRIVE if a differing oil viscosity class is used or if ambient temperatures fall below the specified limit temperature.
- During installation, check the thermostat setting according to chapter "Thermostat".

22124705/EN – 05/2016

5.14.2 Thermostat

Electrical connection

⚠ WARNING

Risk of injury due to electric shock.

Severe or fatal injuries.

- Disconnect the unit from the supply system if live parts can be touched during work on the unit.

The following figure shows the electrical connection.

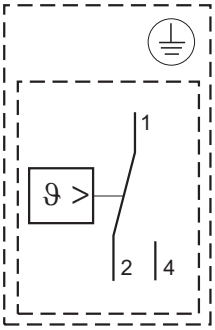

18014398960475019

- Connect to terminals (1, 2 and 4) as shown in the wiring diagram
- Connect the protective earth to terminal "PE"

INFORMATION

- Observe the manufacturer's documentation.

Technical data

Maximum switching capacity:			
AMTHs-SW-2	Current		Voltage
	Terminal 2	Terminal 4	
	10 A	10 A	AC 230 + 10% cosφ = 1 (0.6)
	0.25 A	0.25 A	DC 230 + 10%
Contact reliability: To ensure the greatest contact reliability possible, the manufacturer recommends a minimum load of AC / DC 24 V, 100 mA for silver terminals.			
Nominal impulse voltage: **Overvoltage category II**	2500 V (via the switching contacts 400 V)		
Required fusing:	See maximum switching current		

- Permitted ambient temperature: -40 ˚C to +80 °C
- Permitted storage temperature: min. -50 °C, max. +50 °C
- Scale range: -40 ˚C to +100 °C
- Cable entry: M20x1.5 for a cable diameter of 6 to 13 mm
- IP65 degree of protection according to EN 60529

22124705/EN – 05/2016

The following figure shows the possible setting range of the thermostat. In this example, the pointer is on 50 °C.

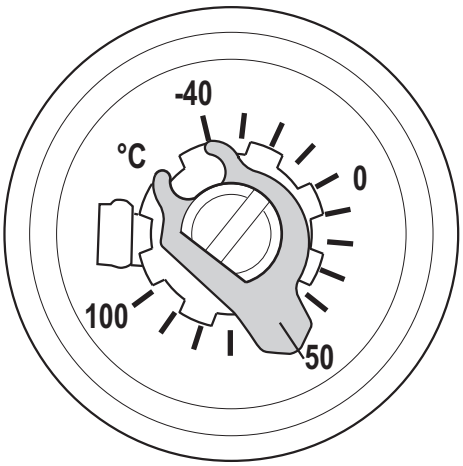

16834938379

22124705/EN – 05/2016

5.14.3 Connection power

The table shows the power of the heating that may be installed.

Peripheral conditions: T_{amb} = -20 °C; Mounting position M1 (Splash lubrication)					
Size	Heating element		P_{Inst} [W]	Heating over 4h [K]	Max. heating [K]
P042 X2K110	1	OH	550	15.3	18.5
	2	OH-F & OH	250 + 550	22.2	26.9
P052 X2K110	1	OH	550	14.1	17.6
	2	OH-F & OH	250 + 550	20.6	25.6
P052 X2K130	1	OH	680	15	18.6
	2	OH-F & OH	250 + 680	20.5	25.4
P062 X2K130	1	OH	680	12.5	16.1
	2	OH-F & OH	250 + 680	17.6	22
P072 X2K130	1	OH	680	10.8	14.5
	2	OH-F & OH	250 + 680	14.7	19.8
P072 X2K150	1	OH	800	11.3	15.6
	2	OH-F & OH	700 + 800	21.2	29.3
P082 X2K150	1	OH	800	9.7	14
	2	OH-F & OH	700 + 800	18.2	16.3
P092 X2K150	1	OH	800	8.5	12.9
	2	OH-F & OH	700 + 800	16	24.3
P102 X2K150	1	OH	800	7.4	11.7
	2	OH-F & OH	700 + 800	13.8	21.9
P092 X2K170	1	OH	940	8.6	12.7
	2	OH-F & OH	780 + 940	15.6	23.2
P102 X2K170	1	OH	940	7.5	11.6
	2	OH-F & OH	780 + 940	13.8	21.3

P_{inst} = Power of the installed heater

OH = Oil heater in the gear unit

OH-F = Oil heater in the flange

22124705/EN – 05/2016

5.14.4 Example of heating

Example of heating with the gear unit combination P072 X2K150

With the following basic conditions:

2 heating elements Peripheral Conditions: T_{amb} = -20 °C; Mounting position M1 (Splash lubrication)		
Duration [h]	**Heating** [K]	**Temperature** [°C]
0	0	-20
1	8.0	-12.0
2	13.9	-6.1
3	18.1	-1.9
4	21.2	1.2
5	23.4	3.4
6	25.0	5.0
7	26.2	6.2
8	27.1	7.1
9	27.7	7.7
10	28.1	8.1
11	28.5	8.5
12	28.7	8.7

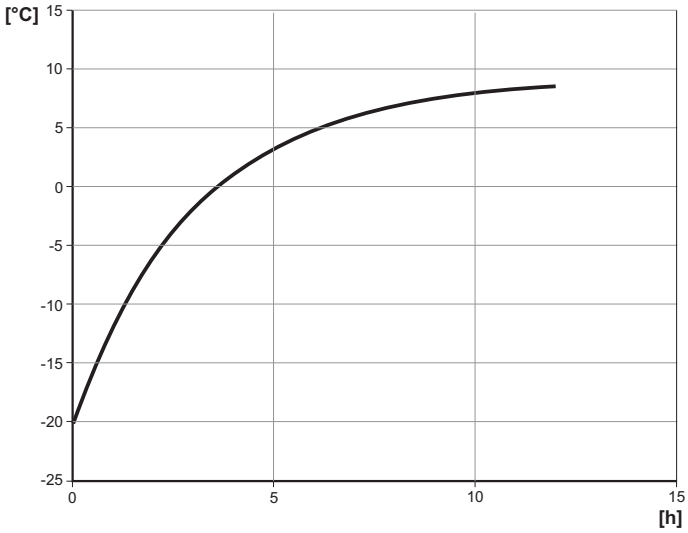

14381964939

°C = Temperature
h = Heating duration

22124705/EN – 05/2016

5.14.5 Connection power and electrical connection of resistor element

The gear unit heater comes equipped with cable glands and jumpers. They are included in the scope of delivery of the screw-in heaters and are already preassembled. The gear unit heater is connected to the current supply via terminal studs. They do not depend on the size of the heater and always have an M4 thread. We recommend using RKS4 ring cable lugs with small grommets.

AC voltage / 1-phase / 230 V / parallel connection

The following figure shows the wiring ex works (connection space):

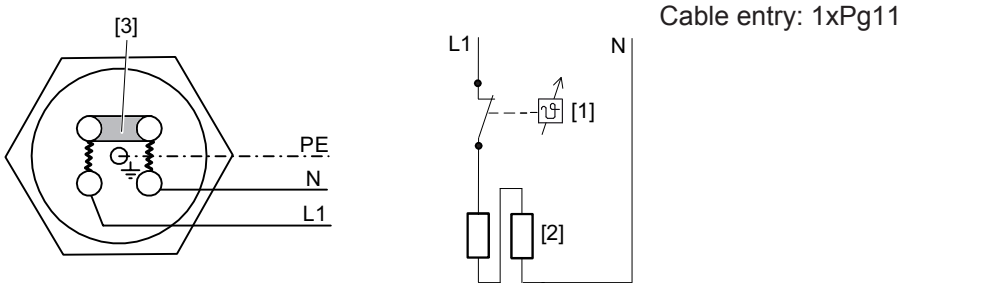

9007202007368715

Observe the electrical characteristics of the control range

[1] Thermostat

[2] Heater

[3] Jumper

	X2K size	Heating element
OH	X2K110 - 170	G1"
OH-F	X2K110 - 130	

OH = Oil heater in the gear unit

OH-F = Oil heater in the flange

22124705/EN – 05/2016

AC voltage / 1-phase / 230 V / parallel connection

The following figure shows the wiring ex works (connection space):

Cable entry: 1xPg11

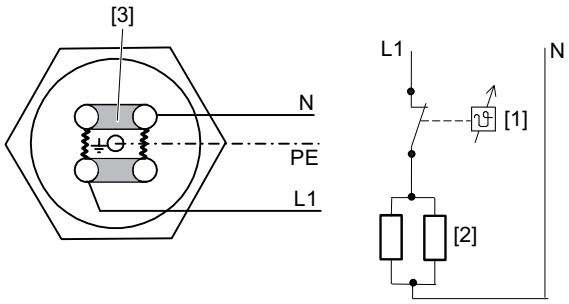

9007202007371531

Observe the electrical characteristics of the control range

[1] Thermostat

[2] Heater

[3] Jumper

	X2K size	Heating element
OH-F	X2K150 - 170	G1,5"

OH-F = Oil heater in the flange

5.15 Water cooling cartridge

5.15.1 Notes on connection / installation

NOTICE

Improper mounting of the water cooling cartridge may result in damage to the gear unit.

Possible damage to property.

- Observe the following information:

- Using thread seal tape on the pipe threads increases the resistance between the connection parts as well as the risk of cracking in the cast parts of the water cooling cartridge. Do not tighten the threads excessively.
- The water cooling cartridges are not equipped with a water drain. In the event of repair work, you have to install a drain on the cooling water outlet to ensure proper draining of the cooling water.
- For connecting the water cooling cartridge, use only piping and mounting parts of the same or of compatible material.
- Check the water cooling cartridge to see that it is free from soiling and foreign objects in the pipe connection to ensure unobstructed flow of the cooling media.
- Avoid tensions on the connection points when connecting the piping. Support the pipes properly, if required.

22124705/EN – 05/2016

- Install the cooling water outlet pipe in such a way that the water cooling cartridge is permanently flooded by cooling water.
- Refer to "chapter "Requirements on the water quality"" (→ 🗎 75) to determine the permitted cooling media.
- Cooling water temperature and flow rate according to the order documents.
- Make sure the cooling water pressure does not exceed 10 bars.
- In the event of temperature levels below 0 °C and longer downtimes, drain the cooling water from the circuit. Use compressed air to remove any remaining water.
- SEW-EURODRIVE recommends to filter the cooling media to 100 µm.
- Connect the water cooling cartridge to the existing cooling circuit. The direction of flow is user-defined.
- For gear units with more than one water cooling cartridge, connect the cooling circuit in parallel, see following figure.

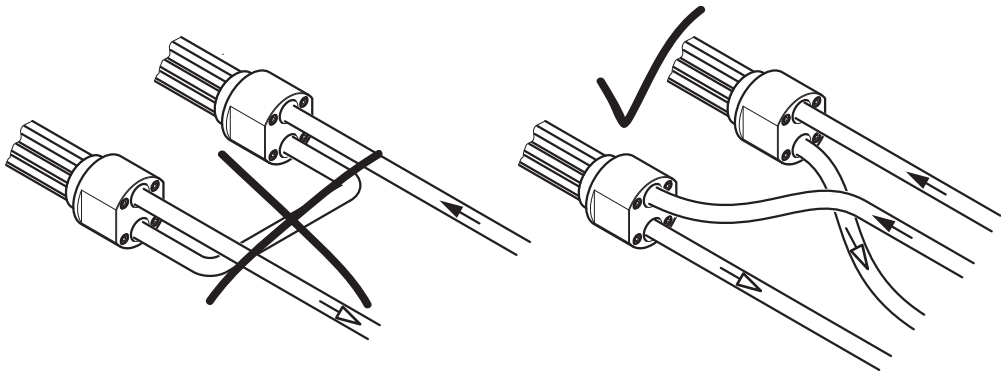

370075915

← Supply (cold water)

→ Return (warm water outflow)

The following measures can be taken to ensure proper functioning in different systems:

- Install a safety valve in the cooling water inlet to prevent fluctuations in pressure and volume.
- Install filters in the cooling water inlet to protect the heat exchanger from dirt and mud in particular if the cooling water is obtained from sources other than the municipal water supply system.
- Install an automatic throttle valve in the respective inlet to compensate pressure.

22124705/EN – 05/2016

5.15.2 Removal

Observe the notes in chapter ""Inspection/maintenance"" (→ 🗎 118).

5.15.3 Requirements on the water quality

INFORMATION

Special measures have to be taken when using sea water or brackish water. Contact SEW-EURODRIVE.

The following requirements on the water quality are recommendations. In exceptional cases, certain concentrations of substances of content might cause unforeseen reactions.

The quality of the water as well as its substances are important factors for assessing the cooling water available for water cooling cartridges. The water quality is determined by the water hardness and the pH value of the water.

Water hardness

Water hardness is defined by the amount of hardeners (carbonates and bicarbonates) in the water. Hardeners accumulate on the surface of the water cooling cartridge in particular at high temperatures and in this way impair the performance. Take these deposits into account when selecting the water cooling cartridge for extremely hard water.

The following table shows the classification of German degrees of hardness to water quality °dH:

Degree of hardness[1)]	Water quality
0 – 5 °dH	Very soft water
5 – 10 °dH	Soft water
10 – 20 °dH	Medium hard water
20 – 30 °dH	Hard water
> 30 °dH	Very hard water

1) 10 mg/l of hardener corresponds to 1 °dH

22124705/EN – 05/2016

pH value

- The water cooling cartridge partially consists of a copper and nickel alloy, to which the following applies:

  → Corrosion problems when **pH value < 6**
- With alkaline water:

  → Corrosion problems when **water hardness < 6°dH**.

  Smaller values can cause corrosion due to free carbonic acid.

  The following table describes the classification of the water quality based on the pH value:

pH Value	Water quality
4.5	Very acidic
4.5 – 6.0	Acidic
6.0 – 6.8	Slightly acidic
7.0	Neutral
7.2 – 7.7	Slightly alkaline
7.7 – 8.2	Alkaline
8.2	Very alkaline

22124705/EN – 05/2016

Cooling water assessment based on water substances

The following table provides an overview of the resistance of copper pipes against substances in non-potable water.

Assessment criterion	Approximate concentration [mg/l]	Evaluation CuNi10Fe1Mn
pH Value	< 6	0
	6 to 9	+
	> 9	0
Chloride	up to 1000	+
	> 1000	+ (< 25000 mg/l)
Sulfate	up to 70	+
	70 to 300	+
	> 300	+ (< 25000 mg/l)
Nitrate	up to 100	+
	> 100	0
Free (aggressive) carbonic acid	up to 20	+
	20 to 50	0
	> 50	–
Oxygen	up to 2	+
	> 2	+
Ammonium	up to 2	+
	2 to 20	+
	> 20	–
Iron (dissolved)	up to 10	0
	> 10	–
Manganese (dissolved)	up to 1	0
	> 1	–
Free chlorine	up to 5	permanently < 0.5 mg/l
	> 5	intermittently < 3.0 mg/l
Sulfide		0
Ammonia		+ (< 15 mg/l)

Key

+	= usually good resistivity
0	= corrosion problems can occur in particular if several factors are assessed with 0
–	= we advise against use

22124705/EN – 05/2016

Types of cooling water/characteristics

Note the following conditions:

Industrial water

- Usually untreated water (no drinking water)
- Often very contaminated
- A water analysis is necessary for assessment
- Copper, brass and steel are very resistant against industrial water

Stream water and river water

- We recommend using copper brass pipes
- Cast iron parts must be protected against corrosion by suitable coating
- Usually untreated water (no drinking water)
- Often very contaminated
- A water analysis is necessary for assessment

22124705/EN – 05/2016

5.16 Torque arm

5.16.1 Notes on installation

⚠ WARNING

Insufficiently secured gear units can fall down during assembly/disassembly.

Severe or fatal injuries.

- Secure the gear unit during assembly/disassembly. Support the gear unit using appropriate tools.

NOTICE

Deforming the torque arm leads to constraining forces on the output shaft, which may negatively influence the service life of the output shaft bearings.

Possible damage to property.

- Do not deform the torque arm.

NOTICE

Strain on the torque arm might break the housing.

Possible damage to property.

- Adhere to the specified screw size, tightening torques and required screw strength.

INFORMATION

- Retaining screws are included in the scope of delivery.
- When using a shrink disk cover, install the torque arm before mounting the cover.

22124705/EN – 05/2016

5.16.2 Single-sided torque arm (standard)

Installation on site

The torque arm can be installed at 0° to 360° in consideration of the order-specific configuration.

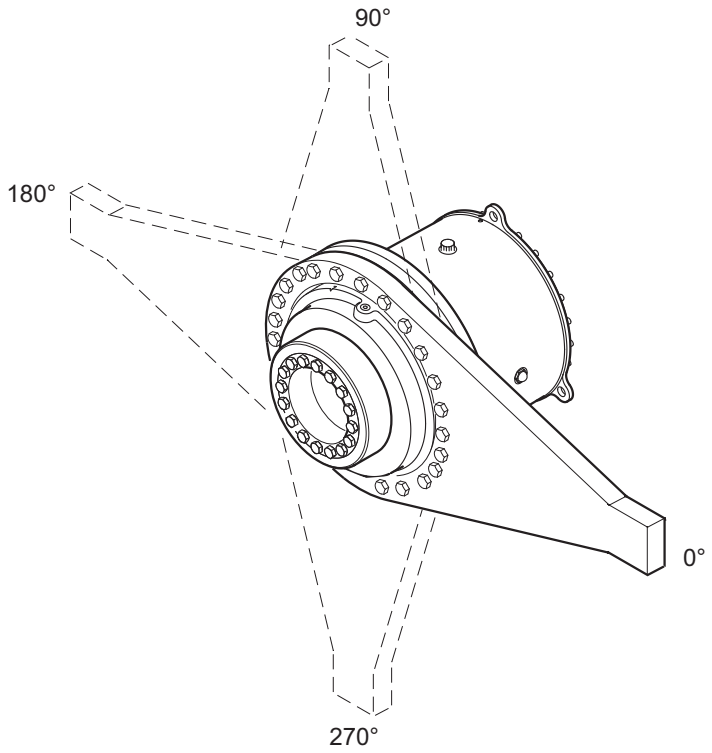

9007203491563787

The reactive force resulting from the gear unit torque is absorbed via the torque arm with lever arm A. The figure on the next page shows an example of a customer fixture in a welded structure. Two supporting plates are welded to the machine structure. Once the gear unit has been mounted, a connecting cover plate is welded onto the two supporting plates. The force of the gear unit torque acts on the support, divided by the length of the lever arm A. The reaction force also acts on the gear unit and machine shafts.

The following figure shows a sample mounting position and the combination of a planetary gear unit with torque arm.

22124705/EN – 05/2016

Dimensions

The following figure shows a sample torque arm with dimensions.

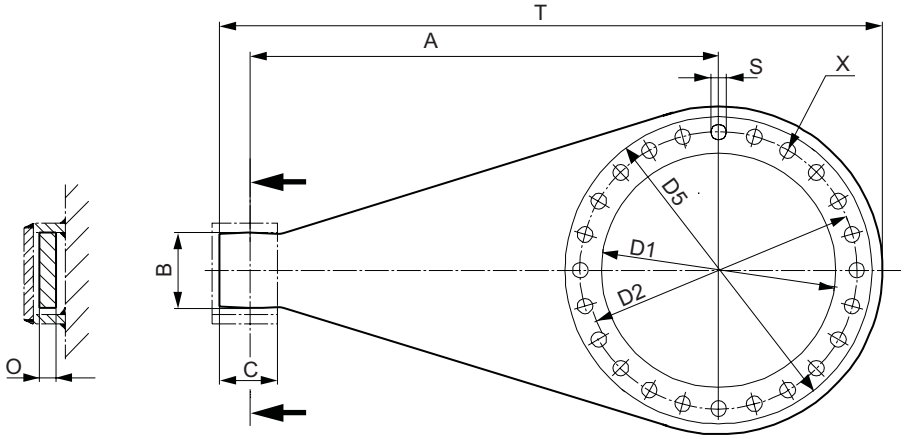

1143100811

Size	Dimensions in [mm]								Quantity	Weight
	A	B	C	D1	D2	O	S	T	X	[Kg]
P.042	900	150	120	484	560	40	33	1270	20	93
P.052	1000	160	130	534	590	40	33	1390	24	102
P.062	1200	180	150	614	690	50	39	1655	24	183
P.072	1500	230	200	694	770	60	39	2020	24	317
P.082	1600	230	200	754	840	70	45	2160	24	420
P.092	1650	250	220	804	870	70	45	2235	24	440
P.102	1700	250	220	854	960	70	45	2335	24	510

Tightening torques

Size	Thread	Quantity	Tightening torque [Nm]	Strength classes	Bolts
P.042	M30	20	2274	10.9	EN ISO 4017 EN ISO 4762
P.052	M30	24	2274		
P.062	M36	24	3957		
P.072	M36	24	3957		
P.082	M42	24	5610		
P.092	M42	24	5610		
P.102	M42	24	5610		

22124705/EN – 05/2016

5.17 Flange-mounted gear units

When mounting the gear unit to the torque arm and/or machine frame, secure the screws [1] additionally using Loctite® 640.

The following figure shows an example of how flange-mounted gear units are installed.

Retaining screws [1] are not included in the scope of delivery.

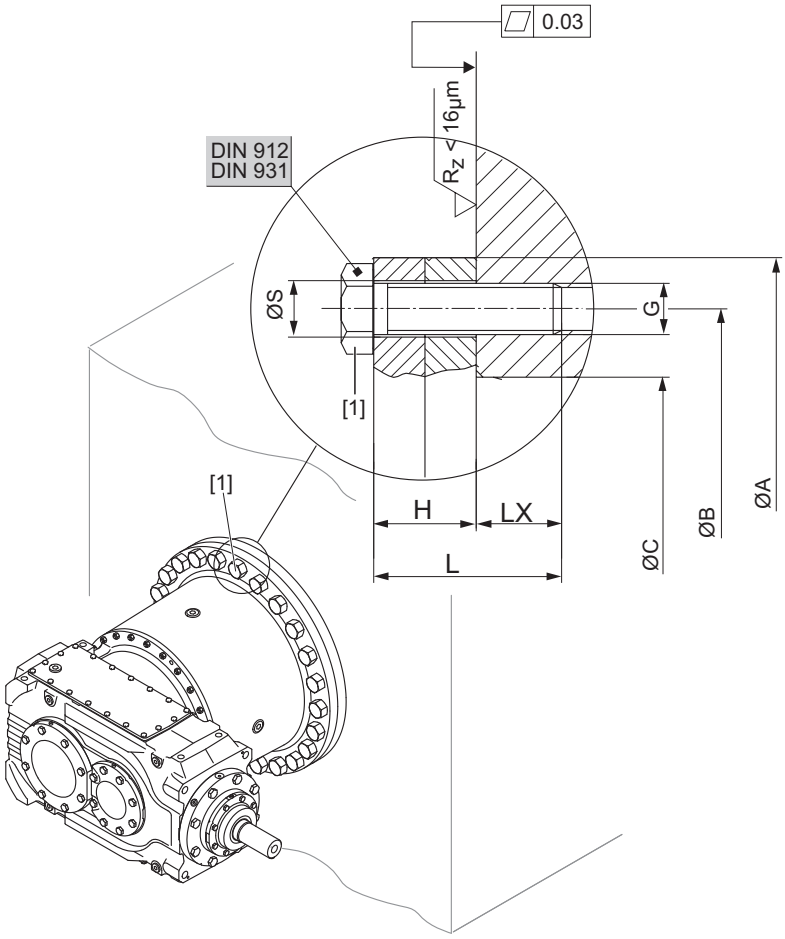

14301903243

The following values in the table apply to steel constructions. Observe the additional information on the customer dimension sheet.

Size	Thread	Quantity	Tightening torque	Dimensions in [mm]							Strength classes	Bolts EN ISO
			[Nm]	Ø S	H	min. L	min. LX	Ø A	Ø B	Ø C		
P.042	M30	20	1674	33	64	114	50	620	560	480_{f9}	10.9	4017 4762
P.052	M30	24	1674	33	64	114	50	650	590	530_{f9}		
P.062	M36	24	3957	39	74	134	60	760	690	610_{f9}		
P.072	M36	24	3957	39	84	144	60	840	770	690_{f9}		
P.082	M42	24	5610	45	84	154	70	920	840	750_{f9}		
P.092	M42	24	5610	45	90	160	70	950	870	800_{f9}		
P.102	M42	24	5610	45	100	180	80	1050	960	850_{f9}		

22124705/EN – 05/2016

5.18 Output shaft as hollow shaft with shrink disk

Observe the notes in chapter "Important information" (→ 🗎 48).

INFORMATION

Make sure the dimensions of the machine shaft correspond to SEW specifications.

INFORMATION

Note that the shrink disk is secured with 2 screws [1] on delivery. Remove the screws prior to assembly.

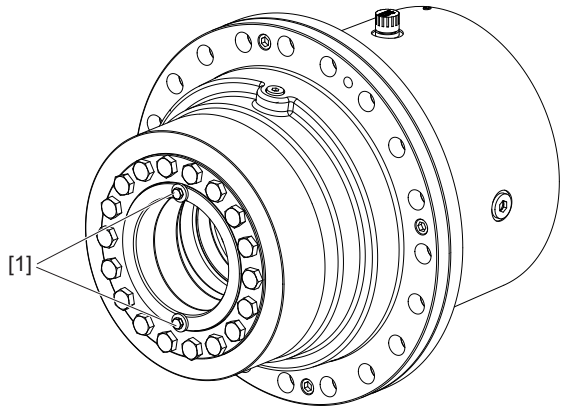

18014401949251467

22124705/EN – 05/2016

5.18.1 Assembly

1. Before installing the shrink disk, clean and degrease the hub [1] and the machine shaft [2]. This is very important for reliable torque transmission.

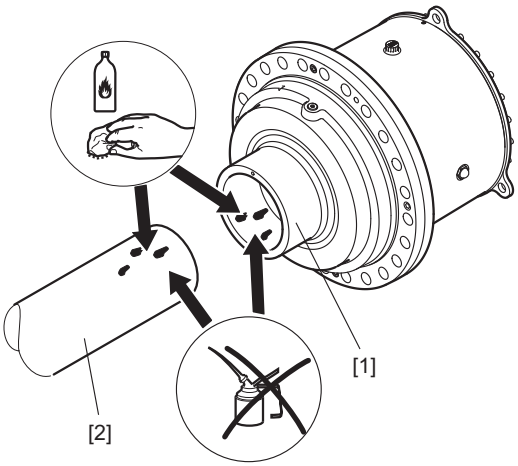

9007200307592459

2. ⚠ **CAUTION!**
   The loose shrink disk could slip.

   Potential risk of crushing due to falling parts.

   - Secure the shrink disk against slipping.

   Push the loose shrink disk onto the hollow shaft.

3. **NOTICE!**
   Tightening the screws [4] without installed shaft might deform the hollow shaft.

   Possible damage to property.

   - Never tighten the locking screws [4] without the shaft installed [2].

   Check for correct position of the shrink disk [3]. The shrink disk is positioned correctly when it is in contact with the shaft shoulder [8].

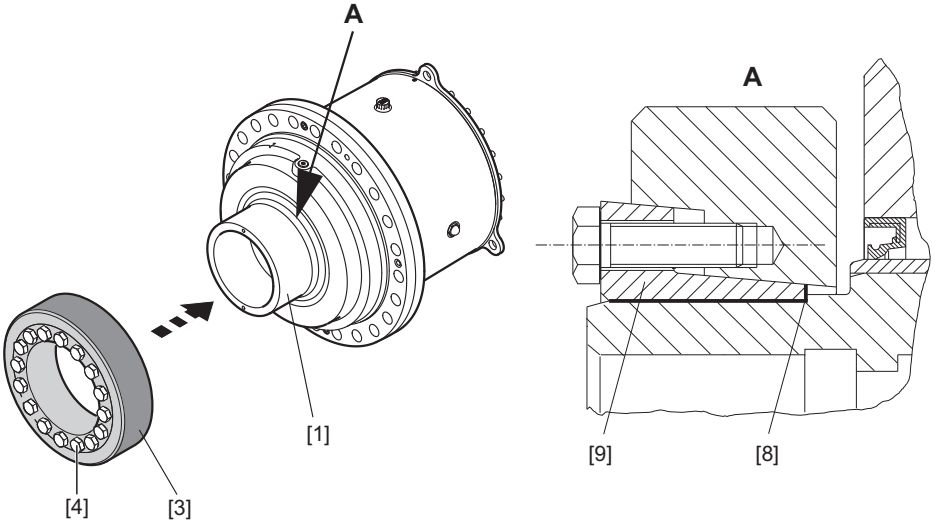

9007200308274059

22124705/EN – 05/2016

4. Install the machine shaft [2], which means push the gear unit [5] onto the machine shaft [2] all the way. Carry out the individual installation steps slowly to allow the compressed air to escape around the outside of the shaft.

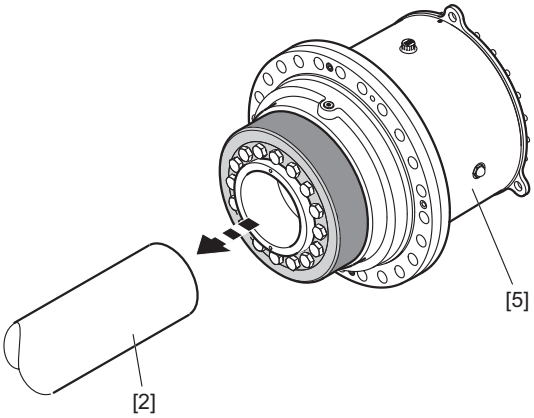

9007200308277259

5. First tighten the locking screws [4] manually. Then tighten all locking screws by working round equally (not in diametrically opposite sequence) in 1/4 turn increments.

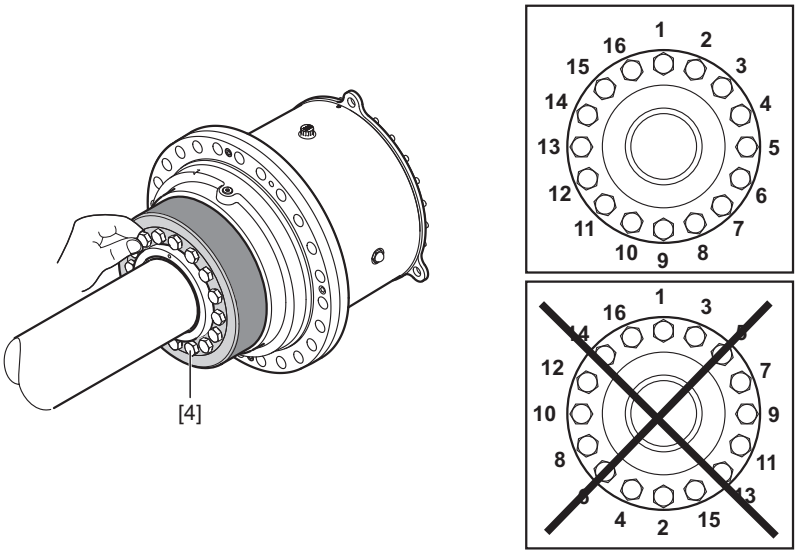

9007200308280459

22124705/EN – 05/2016

6. Adhere to the tightening torque in the table below. Continue to tighten the locking screws [4] by working round in 1/4 turns until you reach the tightening torque. Additionally, you can visually check to see that the front lateral surfaces are aligned to the inner [9] and outer rings [10].

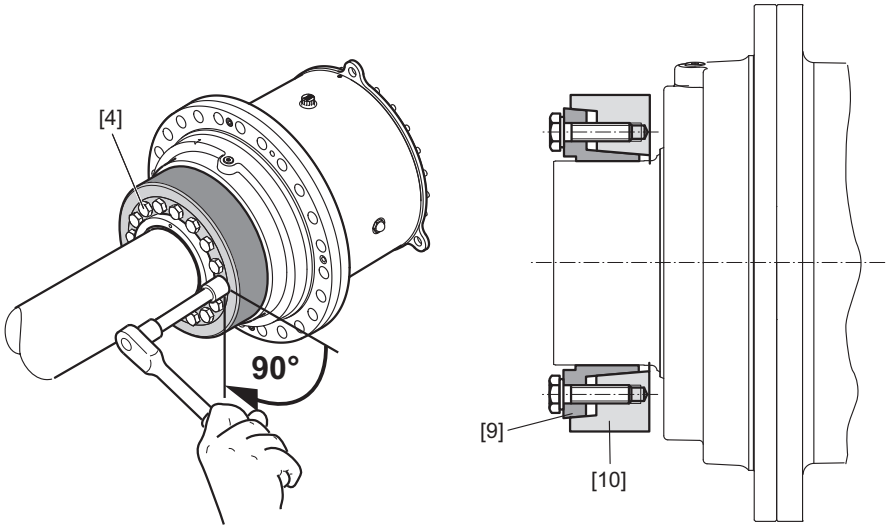

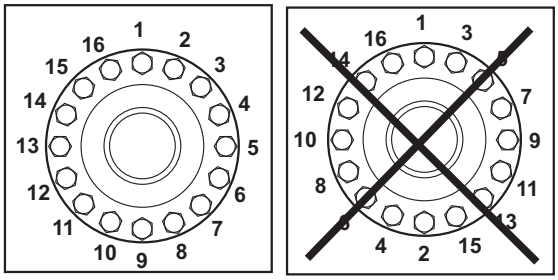

9007200308284299

7. Verify the type details on your shrink disk and choose the tightening torque.

Shrink disk type	Size	Bolts	Rated torque [Nm]	Tightening torque [Nm] ± 20%
3181	P.042	M20	194000	570
	P.052	M20	255000	570
	P.062	M24	405000	980
	P.072	M24	525000	980
	P.082	M24	720000	980
	P.092	M27	906000	1450
	P.102	M27	1160000	1450

INFORMATION

If the taper (outer ring) and the taper bushing (inner ring) cannot be aligned on the face that holds the screws, remove the shrink disk again. Clean and lubricate the component parts as described in the next chapter.

22124705/EN – 05/2016

5.18.2 Removal

NOTICE

Improper disassembly may damage bearings and other components.

Possible damage to property.

- You may only use the hollow shaft as a support for disassembly. Note that supporting on any other parts of the gear unit may damage the material.
- Remove the shrink disk properly. Never completely unscrew the retaining screws because the shrink disk might jump off and cause an injury.
- Shrink disks and corresponding parts of different gear units must not be swapped.

1. Loosen the locking screws [4] by a quarter turn one after the other to avoid straining the connecting surface.
   - **INFORMATION** If the bevel (outer ring) and the taper bushing (inner ring) do not separate by themselves:

     Take the necessary number of locking screws and screw them evenly into the disassembly bores. Tighten the locking screws in several steps until the tapered bushing separates from the tapered ring.

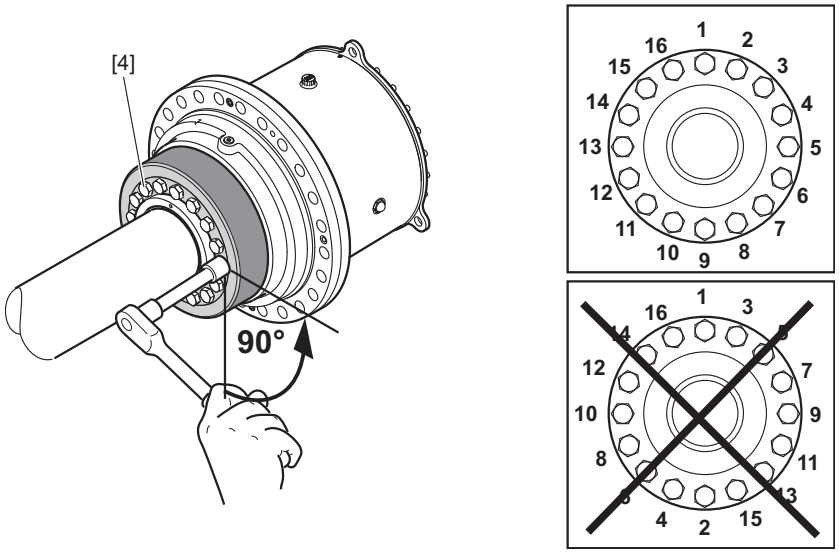

1056915211

22124705/EN – 05/2016

2. Remove the machine shaft [2] or pull the hub [1] off the customer shaft. If rust has formed on the shaft in front of the hub, you must remove the rust first.

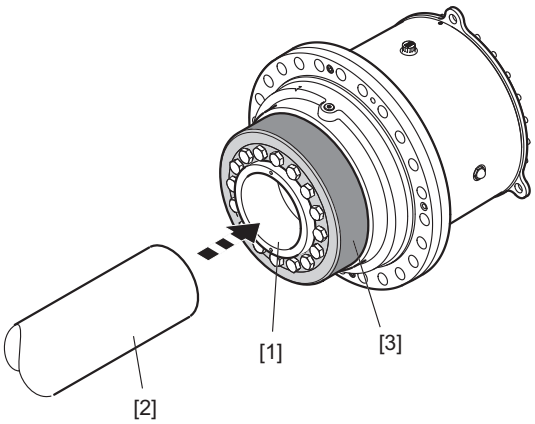

9007200311659403

3. Remove the shrink disk [3] from the hub [1].

5.18.3 Cleaning and lubrication

INFORMATION

You must perform the following steps carefully to ensure proper functioning of the shrink disk. Use only products that are comparable to the specified lubricant.

- If the tapered surfaces of the shrink disk are damaged, the shrink disk can no longer be used and must be replaced.
- Used shrink disks have to be disassembled and cleaned. The manufacturer has applied a solid lubricant to the tapered surfaces (for example Weicon "Anti-Seize"). Use "Anti-Seize" for regreasing undamaged tapered surfaces. Grease screw threads with Weicon "Anti-Seize".
- Use a solid lubricant with a friction coefficient of μ = 0.04.

Lubricant	Sold as
Molykote 321 R (lube coat)	Spray
Molykote spray (powder spray)	Spray
Molykote G Rapid	Spray or paste
Aemasol MO 19R	Spray or paste
Molykombin UMFT 1	Spray
Unimoly P5	Powder

22124705/EN – 05/2016

5.19 Oil-water cooler for splash lubrication /OWC

Observe the notes in chapter "Important notes" (→ 🗎 48).

INFORMATION

Before installation/assembly, first read the addendum to the operating instructions "Oil-Water Cooler with Motor Pump for Splash Lubrication /OWC", which includes the manufacturer's documentation.

5.20 Oil-air cooler for splash lubrication /OAC

Observe the notes in chapter "Important notes" (→ 🗎 48).

INFORMATION

Before installation/assembly, first read the addendum to the operating instructions "Oil-Air Cooler for Splash Lubrication /OAC", which includes the manufacturer's documentation.

5.21 Oil-water cooler for pressure lubrication /OWP

Observe the notes in chapter "Important notes" (→ 🗎 48).

INFORMATION

Before installation/assembly, first read the addendum to the operating instructions "Oil-Water Cooler for Pressure Lubrication /OWP", which includes the manufacturer's documentation.

5.22 Oil-air cooler for pressure lubrication /OAP

Observe the notes in chapter "Important notes" (→ 🗎 48).

INFORMATION

Before installation/assembly, first read the addendum to the operating instructions "Oil-Air Cooler for Pressure Lubrication /OAP", which includes the manufacturer's documentation.

22124705/EN – 05/2016

5.23 Pressure switch /PS

The pressure switch indicates the correct oil pressure in the pressure pipe and in this way indicates the operational readiness of pressure lubrication. The pressure switch must be monitored by the operator.

During the starting phase of a gear unit with shaft end pump, pressure might build up with a delay. The slow building up of pressure during this phase can cause the pressure switch to issue a fault signal. You can prevent this by timing the pressure switch to **5 seconds up to a maximum of 10 seconds**.

Another switch-off delay is not permitted as this might damage the gear unit.

5.23.1 Dimensions

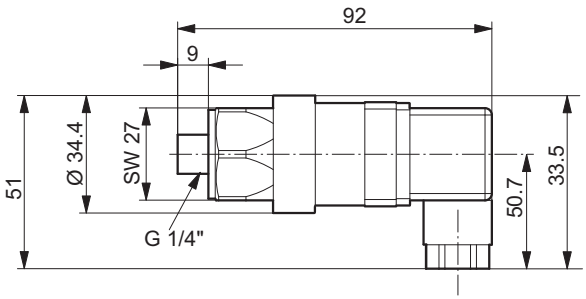

721994635

5.23.2 Electrical connection

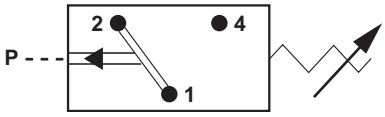

722003723

[1][2] NC contact
[1][4] NO contact

5.23.3 Technical data

- Switching pressure 0.5 ± 0.2 bar
- Maximum switching capacity 4 A - V_{AC} 250; 4 A - V_{DC} 24
- Plug connector DIN EN 175301-803
- The tightening torque for the retaining screw in the back of the plug connector for electrical connection is 0.25 Nm

22124705/EN – 05/2016

5.24 Temperature sensor /PT100

5.24.1 Dimensions

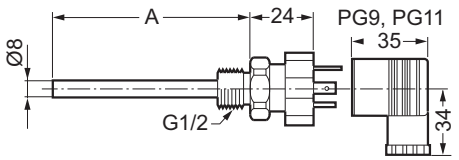

18014398868636427

A [mm]
50
150

5.24.2 Electrical connection

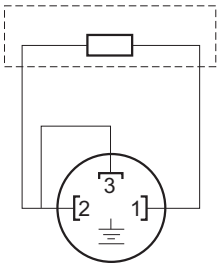

359158539

[1][2] Resistor element connection

5.24.3 Technical data

- Design with thermowell and changeable measuring insert
- Sensor tolerance [K] ± (0.3 + 0.005 x T), (corresponds to DIN IEC 751 class B),
  T = Oil temperature [°C]
- Plug connector: DIN EN 175301-803 PG9 (IP65)
- The tightening torque for the retaining screw in the back of the plug connector for electrical connection is 0.25 Nm.

5.25 Temperature switch /NTB

5.25.1 Dimensions

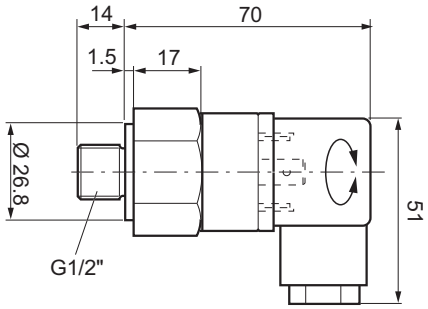

9007199621265931

5.25.2 Electrical connection

To guarantee a long service life and trouble-free functioning, we recommend that you use a relay in the power circuit instead of a direct connection through the temperature switch.

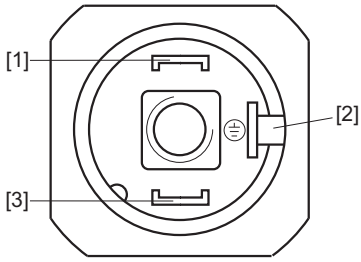

366532491

[1][3] NC contact (without vacuum)
[2] Grounding terminal 6.3 x 0.8

5.25.3 Technical data

- Trigger temperature: 70°C, 80°C, 90°C, 100°C ± 5°C
- Contact capacity: 10 A - AC 240 V
- Plug connector: DIN EN 175301-803 PG9 (IP65)
- The tightening torque for the retaining screw in the back of the plug connector for electrical connection is 0.25 Nm

22124705/EN – 05/2016

5.26 Temperature switch /TSK

5.26.1 Dimensions

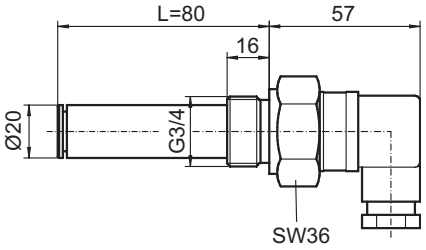

893872779

5.26.2 Electrical connection

To guarantee a long service life and trouble-free functioning, we recommend that you use a relay in the power circuit instead of a direct connection through the temperature switch.

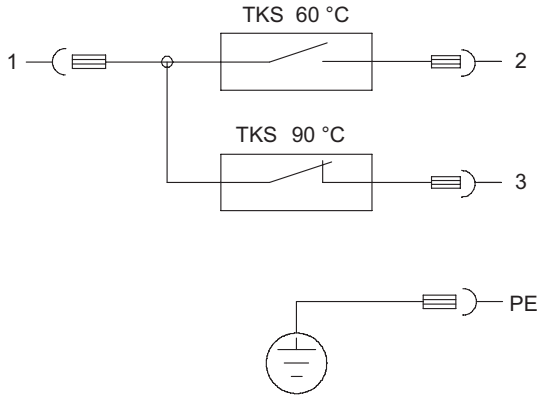

27021598658101131

[1][2] Switch 60 °C NO contact
[1][3] Switch 90 °C NC contact
PE Grounding terminal

5.26.3 Technical data

- Switching temperatures: 60 °C and 90 °C
- Contact capacity: 2 A - AC 240 V
- Plug connector: DIN EN 175301-803 PG11 (IP65)
- The tightening torque for the retaining screw in the back of the plug connector for electrical connection is 0.25 Nm

22124705/EN – 05/2016

6 Startup

6.1 Important notes

⚠ CAUTION

Risk of slipping due to lubricant leaking from damaged seals.

Minor injuries.

- Check the gear unit and mount-on components for leaking lubricant.

NOTICE

Improper startup may result in damage to the gear unit.

Possible damage to property.

- Observe the following notes.

- Fill the gear unit with the oil grade specified on the nameplate. The oil quantity specified on the nameplate is an approximate quantity. The mark on the oil dipstick is the decisive indicator of the correct oil quantity. For additional information, refer to chapter ""Checking the oil level"" (→ 🗎 107).

  When additional attachments, e.g. an oil supply system, are mounted to the gear unit, the oil fill quantity is higher. In this case, observe the respective SEW operating instructions "Oil Supply System". For more information, refer to chapter ""Changing the oil"" (→ 🗎 112).
- The most important technical data is provided on the nameplate. Additional data relevant for operation is available in drawings, on the order confirmation or any order-specific documentation.
- Prior to startup, make sure that monitoring devices (such as pressure switch, temperature switch) are fully operational.
- After having installed the gear unit, check to see that all retaining screws are tight.
- Make sure that the alignment has not changed after tightening the mounting elements.
- Prior to startup, ensure that rotating shafts as well as couplings are equipped with suitable protective covers.
- If there are any oil drain valves, ensure that they cannot be opened unintentionally.
- If an oil level glass is used for checking the oil level, ensure that it is protected against damage.
- It is essential that there is no open fire or risk of sparks when working on the gear unit.
- Make sure that the gear unit is grounded. Electrical mount-on components, such as motors, frequency inverters, etc. must be grounded separately.
- Protect the gear unit from falling objects.
- If the gear unit is equipped with a fan on the input shaft, check for free air intake within the specified angle.
- Ensure that the external coolant supply is guaranteed for gear units with circulation cooling, water cooling covers and water cooling cartridges.

22124705/EN – 05/2016

- When operated in areas with low ambient temperatures, be sure that the gear unit is not below the limit temperature for gear unit startup. Allow for a sufficient heating period.
- Gear units with pressure lubrication may only be taken into operation when the pressure switch is connected.
- For gear units with long-term protection: Replace the screw plug at the location indicated on the gear unit with a breather plug (position → see order documents).
- Remove transport protection prior to startup.
- Strictly observe the safety notes in the individual chapters.

6.1.1 Permitted axial force

For applications with axial loads, consult SEW-EURODRIVE.

INFORMATION

- Please consult SEW-EURODRIVE if you use the PH.. design in combination with overhung forces, or the PHF.. variant with flange mounting.
- If only an axial load but no additional overhung load act on the output shaft, it is necessary that you contact SEW-EURODRIVE.

6.2 Shaft end pump /SEP

NOTICE

Improper startup of gear units with pressure lubrication can damage the gear unit.

Possible damage to property.

- Observe the following notes.

- Do not start up the gear unit if the pressure switch is not connected.
- It is essential that the gear unit is sufficiently lubricated from the very beginning. Contact SEW-EURODRIVE if the pump does not build up pressure within 20 seconds after the gear unit has been started up.
- A minimum speed of ≥ 400 rpm is required for proper operation of the shaft end pump. If you use variable input speeds (e.g. inverter-controlled drives) or if you intend to change the input speed of a gear unit equipped with a shaft end pump, it is essential that you contact SEW-EURODRIVE.
- An oil heater is mandatory when operating gear units with shaft end pump at low ambient temperatures. For more information, see the chapter "Limit temperature for gear unit startup".
- Observe the notes in chapter ""Filling the gear unit with oil"" (→ 🗎 53).

6.3 Motor pump /ONP

INFORMATION

Before startup, first read the addendum to the operating instructions "Motor Pump / ONP", which includes the manufacturer's documentation.

22124705/EN – 05/2016

6.4 Water cooling cartridge /CCT

NOTICE

Risk of damage to the system due to power loss.

Possible damage to property.

- A power loss may result from the formation of scale on the inside of the pipe. Refer to chapter "Inspection/Maintenance".

NOTICE

Risk of damage to components caused by aggressive cooling media, such as sea water or brackish water.

Possible damage to property.

- Sea water or brackish water and other caustic fluids must not be used as cooling media for the standard models. Special materials are necessary when using these aggressive cooling media.

After having installed the water cooling cartridge in the system, it can be taken into operation and operated without taking further preparatory measures. After startup, check the water cooling cartridge for proper function.

Make the following checks:

- Check the connection points for tightness.
- If necessary, check the valves, fittings, and filters for unrestricted flow and proper functioning.
- Check for proper function of the water cooling cartridge.

6.5 Oil heater /OH

NOTICE

Malfunctioning oil heater when changing the mounting position

Possible damage to property.

- Do not change the mounting position without prior consultation with SEW-EURODRIVE, otherwise proper functioning is no longer ensured.

The oil heater comes equipped with cable glands and jumpers. They are included in the scope of delivery of the heating elements and are already installed in the gear unit. The oil heater is connected to the power supply using terminal studs. They do not depend on the size of the heating element and always have an M4 thread. We recommend using RKS4 ring cable lugs with small grommets.

6.5.1 Positioning the thermostat

The required position of the thermostat may vary depending on the installation space.

Proceed as follows to position the thermostat:

1. Open the clamping screws [2].

22124705/EN – 05/2016

2. Turn the thermostat to the required position.

NOTICE

Observe the position of the cable gland.

Possible damage to property.

- Mount it in such a way that no moisture can enter.

3. Tighten the clamping screws [2].

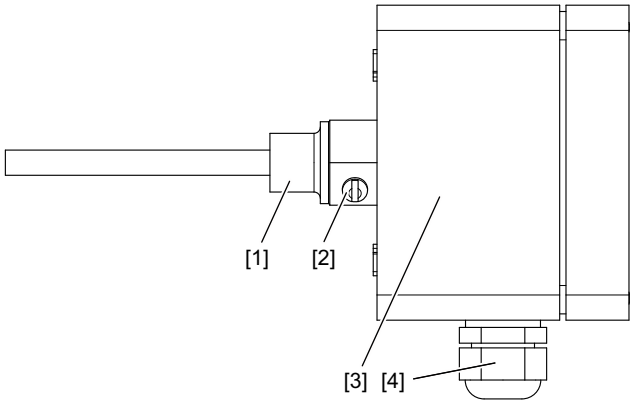

2338432139

[1] Threaded jacket
[2] Clamping screw
[3] Thermostat
[4] Cable gland

A protective sleeve prevents oil from leaking. The sensor of the thermostat is inserted in the sleeve and attached via the 2 clamping screws.

6.6 Starting up the gear unit at low ambient temperatures

NOTICE

Starting up the gear unit below the permitted minimum oil temperature for gear unit startup may damage the unit.

Possible damage to property.

- Prior to starting up the gear unit, make sure that the oil heater heats up the oil to the temperature specified for "without heater".

22124705/EN – 05/2016

6.7 Backstop /BS

NOTICE

Operation in blocking direction might destroy the backstop [1].

Possible damage to property

- The motor may not be operated in blocking direction. Ensure a correct current supply to the motor, so that it rotates in the required direction. Operation in blocking direction might destroy the backstop [1].
- Observe the addendum to the operating instructions when you change the blocking direction.
- Additional values for the speed range that must be adhered when a backstop is used can be found on the nameplate.

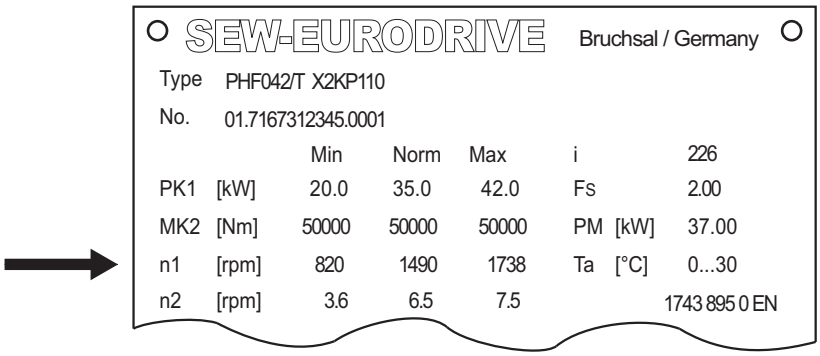

*14689167755*Operationexceedingthe speed range specified on the nameplate is not approved.

The direction of rotation is specified as viewed onto the output shaft (LSS):

- CW rotation
- CCW rotation

The permitted direction of rotation [2] is indicated on the housing.

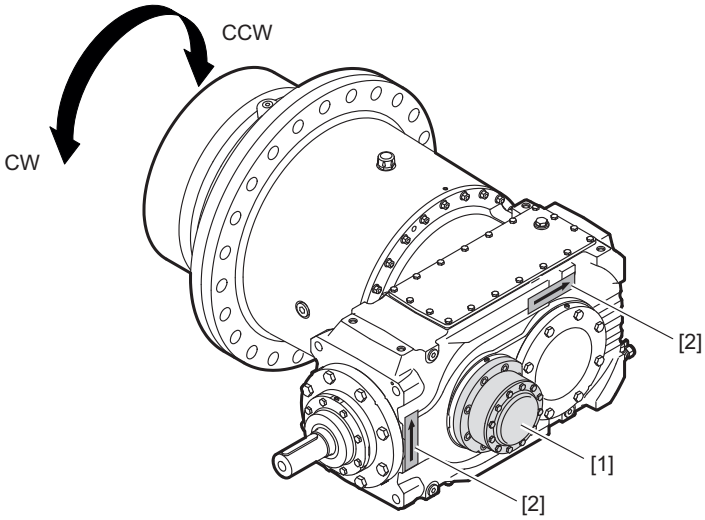

14645541643

6.8 Measuring surface and oil temperature

6.8.1 Measuring the surface temperature

It is essential to measure the surface temperature at maximum load when starting up the gear unit.

The measurement can be made using standard thermometers. The surface temperature must be measured in a steady-state condition. The temperature must not exceed 100 ˚C.

Stop the drive immediately if the temperature is above this value. Contact SEW-EURODRIVE.

The measuring of the surface temperature depends on the mounting position of the planetary gear unit.

6.8.2 Measuring the oil temperature

The oil temperature must be measured to determine the oil change intervals. See chapter ""Lubricant change intervals" (→ 🗎 106)" for a description. Measure the temperature at the bottom of the gear unit. If the gear unit has an oil drain plug, measure the temperature on this plug. Add 10 K to the measured value. This value is the basis for the oil change intervals.

6.9 Oil-water cooler with motor pump for splash lubrication /OWC

INFORMATION

Before installation/assembly, first read the addendum to the operating instructions "Oil-Water Cooler with Motor Pump for Splash Lubrication /OWC", which includes the manufacturer's documentation.

6.10 Oil-air cooler with motor pump for splash lubrication /OAC

INFORMATION

Before startup, first read the addendum to the operating instructions "Oil-Air Cooler with Motor Pump for Splash Lubrication /OAC", which includes the manufacturer's documentation.

6.11 Oil-water cooler for pressure lubrication /OWP

INFORMATION

Before startup, first read the addendum to the operating instructions "Oil-Water Cooler for Pressure Lubrication / OWP", which includes the manufacturer's documentation.

22124705/EN – 05/2016

6.12 Oil-air cooler with motor pump for pressure lubrication /OAP

INFORMATION

Before startup, first read the addendum to the operating instructions "Oil-Air Cooler with Motor Pump for Pressure Lubrication /OAP", which includes the manufacturer's documentation.

22124705/EN – 05/2016

6.13 Gear unit shutdown / gear unit conservation

⚠ WARNING

Risk of crushing if the drive starts up unintentionally.

Severe or fatal injuries.

- De-energize the motor before you start working on the unit.
- Secure the motor against unintended power-up.

INFORMATION

Gear units with water cooling system: disrupt the cooling water supply and drain the water from the cooling circuit. Gear units with oil supply system: Please contact SEW-EURODRIVE.

Additional conservation measures are required if the gear unit is to be shut-down for a longer period. Depending on the location, the ambient conditions, and the lubrication state, even a few weeks of downtime might require conservation measures.

6.13.1 Internal conservation

- **New or hardly used gear units:**
  - For internal conservation, SEW-EURODRIVE recommends the VCI conservation method.
  - Apply the required amount of VCI anti-corrosion agent to the inside of the gear unit (e.g. FUCHS LUBRITECH Anticorit VCI UNI IP-40, www.fuchs-lubritech.com). The amount depends on the free space inside the gear unit. Any existing oil may usually remain in the drive.
  - Replace the breather filter with a screw plug and close the gear unit so that it is air tight. Prior to startup, re-install the breather filter.
- **After longer gear unit operation:**
  - The oil might be contaminated (oil sludge, water, etc.) after long periods of operation. Therefore, drain the oil and thoroughly rinse the inside of the gear unit with new oil prior to conservation. Observe the information in chapter "Changing the oil" in the corresponding operating instructions. The inside of the gear unit can then be conserved as described above.

INFORMATION

For gear units with contactless sealing systems, consult SEW-EURODRIVE.

For gear units without contactless sealing systems, you may also use the oil type indicated on the nameplate to perform the conservation. In this case, the gear unit must be completely filled with clean oil. Replace the breather filter with a screw plug and fill in the oil from the highest point of the gear unit. In order to provide for sufficient conservation, all the gearing and bearing components must be completely covered in oil.

6.13.2 External corrosion protection

- Clean the respective surfaces.

22124705/EN – 05/2016

- Grease the shaft near the sealing lip to separate the sealing lip of the oil seal and the anti-corrosion agent.
- Apply a wax-based protective coating to shaft ends and unpainted surfaces as external corrosion protection (e.g. Herm. Hölterhoff Hölterol MF 1424, www.hoelterhoff.de).

INFORMATION

Consult the respective supplier regarding the compatibility with the oil that is used and the length of corrosion protection for your particular gear unit version.

Observe the information in chapter "Storage and Transport Conditions" in the corresponding operating instructions. This chapter provides information on the possible storage periods in conjunction with adequate packaging – depending on the storage location.

22124705/EN – 05/2016

7 Inspection/maintenance

7.1 Preliminary work regarding inspection and maintenance

Observe the following notes before you start with inspection/maintenance work.

⚠ WARNING

Risk of crushing if the drive starts up unintentionally.

Severe or fatal injuries.

- De-energize the motor before you start working on the unit.
- Secure the motor against unintended power-up.

⚠ WARNING

A customer machine that is not appropriately secured can fall during gear unit installation or removal.

Severe or fatal injuries.

- Safeguard the customer machine against unintentional movement when installing or removing the gear unit.
- Before releasing shaft connections, be sure that there are no active torsional moments present (tensions within the system).

⚠ WARNING

Risk of burns due to hot gear unit and hot gear unit oil.

Serious injury.

- Let the gear unit cool down before you start working on it.
- Carefully remove the oil level plug and oil drain plug.

NOTICE

Filling in the wrong oil may result in significantly different lubricant characteristics.

Possible damage to property.

- Do not mix different synthetic lubricants and do not mix synthetic with mineral lubricants.

NOTICE

Improper maintenance may result in damage to the gear unit.

Possible damage to property.

- Observe the following notes.

- Strict adherence to the inspection and maintenance intervals is absolutely necessary to ensure safe working conditions.
- Note that the gear units have a **common oil chamber**.
- Use only original spare parts according to the delivered spare and wearing parts lists.

22124705/EN – 05/2016

- If you remove the inspection cover, you must apply new sealing compound to the sealing surface. Otherwise, the sealing properties of the gear unit might be impaired. Consult SEW-EURODRIVE in this case!
- Prevent foreign particles from entering into the gear unit during maintenance and inspection work.
- Never clean the gear unit with a high-pressure cleaning device. If one is used, water may enter into the gear unit and the seals may be damaged.
- Replace any damaged seals.
- The gear unit must be cleaned in such a way that liquids cannot enter the motor adapter (HSS end) or the mounting flange (LSS end) and accumulate there.
- Perform safety and functional check following all maintenance and repair work.
- For third-party parts, such as cooling systems, observe the separate inspection and maintenance intervals of the manufacturer's documentation.
- Strictly observe the safety notes in the individual chapters.

7.2 Inspection and maintenance intervals

Adhere to the following inspection and maintenance intervals:

Time interval	What to do?
• **Daily**	• Check the housing temperature: – Mineral oil: max 90 ˚C – Synthetic oil: max 100 ˚C • Check gear unit noise
• **Monthly**	• Check the gear unit for signs of leakage • Checking the oil level
• **After 500 operating hours**	• First oil change after initial startup
• **Every 6 months**	• Check all screw fittings and pipes for leakage
• **Every 3000 operating hours, at least every 6 months**	• Checking the oil consistency • Fill regreasable sealing systems with grease • For V-belt drives: Check the belt tension and condition of the V-belt pulleys and belts

22124705/EN – 05/2016

Time interval	What to do?
• **Depending on the operating conditions, at least every 12 months**	• Check whether retaining screws are tightly secured • Check the condition of the motor pump /ONP, replace filter element if necessary • Check the condition of the oil-water cooler /OWC (see addendum to the operating instructions) • Check the condition of the oil-air cooler /OAC (see addendum to the operating instructions) • Check the condition of the oil-water cooler /OWP, replace filter element if necessary (see addendum to the operating instructions) • Check the condition of the oil-air cooler /OAP, replace filter element if necessary (see addendum to the operating instructions) • Clean the oil filter, replace filter element if necessary • Check the condition of the water cooling cartridge /CCT • Check the condition of the water cooling cover /CCV • Check the breather valves, replace them if necessary • Check the alignment of the input and output shaft • Check the condition and tightness of all the rubber tubes (aging effects)
• **At least every 3 years depending on the operating conditions (see figure on next page)**	• Change mineral oil
• **At least every 5 years, depending on the operating conditions (see figure on next page)**	• Change synthetic oil
• **Varying (depending on external factors)**	• Check the installed hose pipes • Clean the gear unit housing surface and the fan • Touch up or renew the surface/corrosion protection • Replace backstop The backstop might wear off when operated below lift-off speed. This is why you should consult SEW-EURODRIVE for defining the maintenance intervals for: – Speed on input shaft < 950 1/min – See backstop, chapter 4 • Check built-in cooler (such as water cooling cover/cartridge) for deposits • Check the oil heater (at same time as the oil change): – Are all connecting leads and terminals tightened securely and free from corrosion? – Clean encrusted heating elements, replace if necessary

22124705/EN – 05/2016

7.3 Lubricant change intervals

Change the oil more frequently when using special designs subject to more severe/aggressive ambient conditions.

INFORMATION

Mineral CLP lubricants and synthetic polyalphaolefin-based (PAO) lubricants are used for lubrication. The synthetic lubricant CLP HC (according to DIN 51502) shown in the following illustration corresponds to the PAO oils.

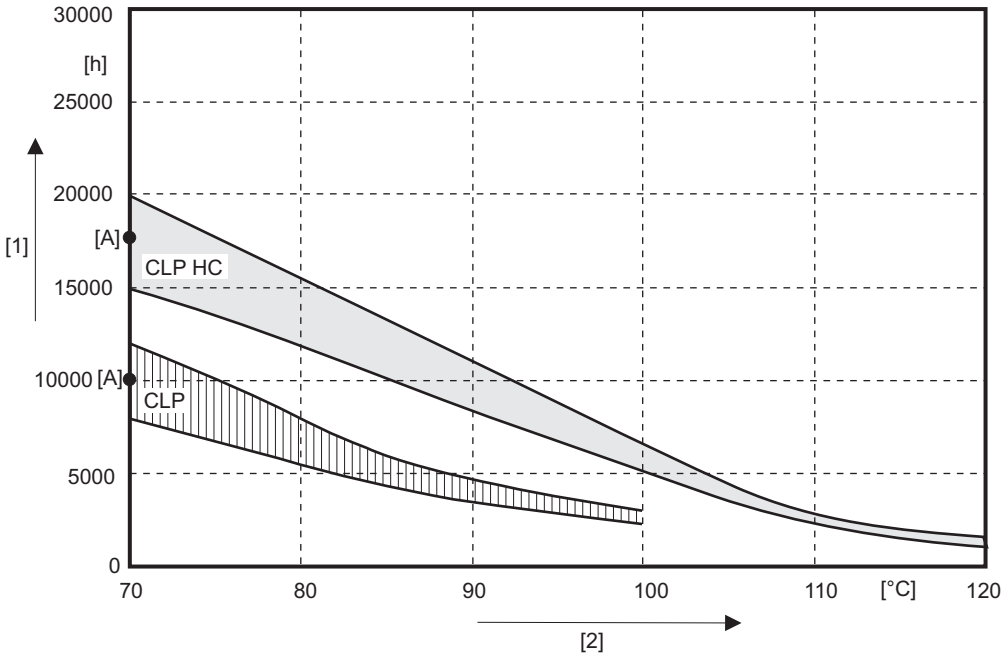

9007199665294731

[1] Operating hours
[2] Sustained oil bath temperature
[A] Average value per oil type at 70 °C

INFORMATION

SEW-EURODRIVE recommends that the gear unit oil is analyzed regularly to optimize the lubricant change intervals, see ""Checking the oil consistency“" (→ 🗎 111).

22124705/EN – 05/2016

7.4 Checking the oil level

7.4.1 General information

Note the following when checking the oil level.

NOTICE

Improper checking of the oil level may result in damage to the gear unit.

Possible damage to property.

- Check the oil level only when the gear unit is at standstill.
- For gear units in fixed and variable pivoted mounting position, observe the notes on the following pages.
- Elements for controlling the oil level, oil drain, and oil fill openings are indicated on the gear unit by safety symbols.
- Check the oil level again after a few operating hours.

7.4.2 Standard procedure

Oil dipstick

Observe the chapter "Preliminary work regarding inspection/maintenance" (→ 🗎 103).

1. Unscrew the oil dipstick and remove it.
2. Clean the oil dipstick and re-insert it by turning it hand-tight into the gear unit up to the stop.
3. Remove the oil dipstick and check the oil level.

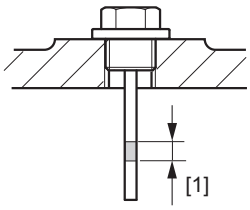

9007199714426251

4. Proceed as follows if the oil level is too low:
- Open the oil fill plug.
- Fill in new oil of the same type via the oil fill plug up to the mark [1].
- Check the oil level again.
5. Screw in the oil dipstick.

22124705/EN – 05/2016

7.4.3 Notes on the procedure for fixed and variabel pivoted mounting positions

Observe the information on the nameplate and in the order documents.

Fixed pivoted mounting positions

Procedure

Check the oil level in the fixed, intended position. Observe the notes in chapter ""Standard procedure"" (→ 🗎 107).

The following figure shows an example of how to check the oil level.

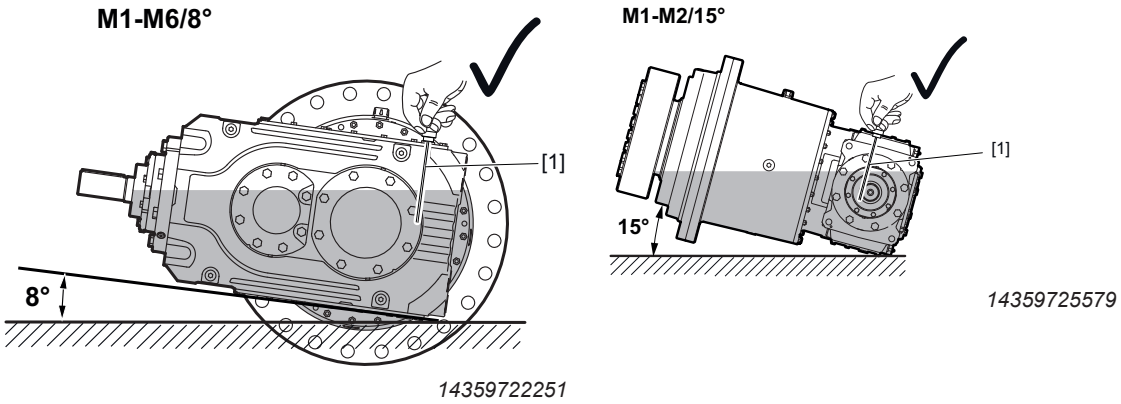

[1] Oil dipstick
Oil

Variable pivoted mounting positions

Procedure

Before checking the oil level of gear units with variable pivoted mounting position, position the gear unit in the mounting position defined in the order documents. Observe the notes in chapter ""Standard procedure"" (→ 🗎 107).

The following figure shows an example of how to check the oil level.

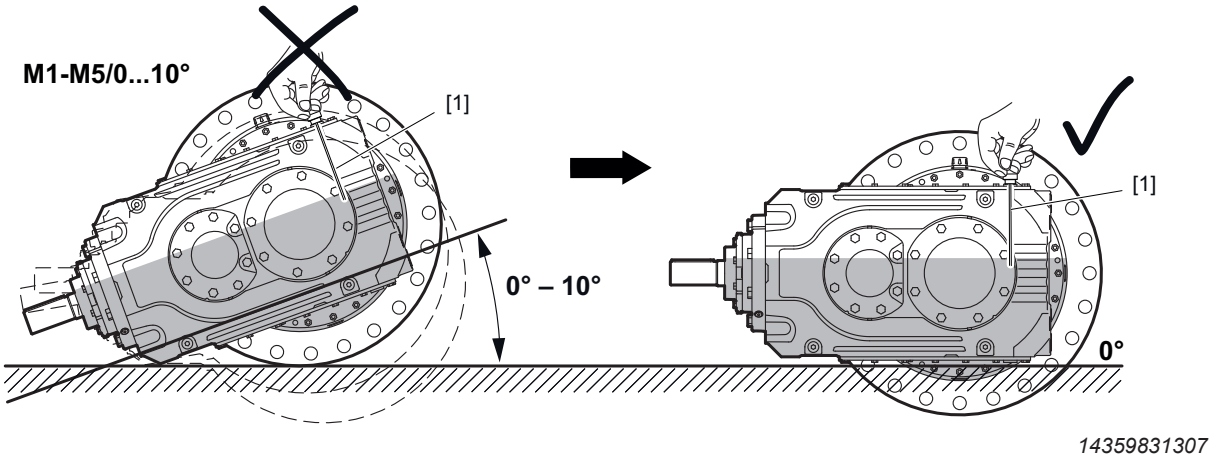

[1] Oil dipstick
Oil

22124705/EN – 05/2016

Information sign

Observe the additional **information sign on the gear unit**. Check the oil level in the test mounting position specified on the information sign.

The following figure shows an example of the information sign for check mounting position 0°.

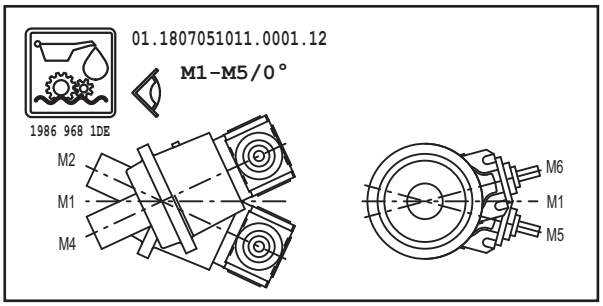

14623164683

The following figure shows an example of the information sign for check mounting position 10°.

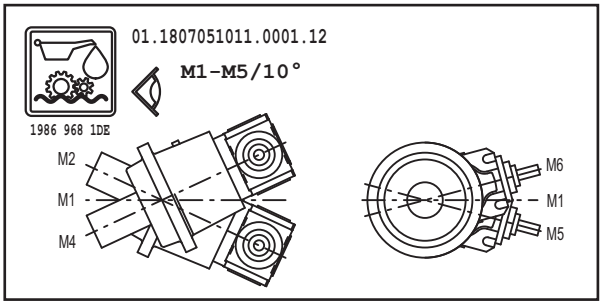

14623167115

Combination of fixed and variable pivoted mounting positions

Procedure

Observe the following procedure when combining **fixed and variable pivoted mounting position**.

Before checking the oil level of gear units with fixed and variable pivoted mounting position, position the gear unit in the mounting position defined in the order documents. Observe the notes in chapter ""Standard procedure"" (→ 🗎 107).

The following figure shows an example of the position that must be used to check the oil level.

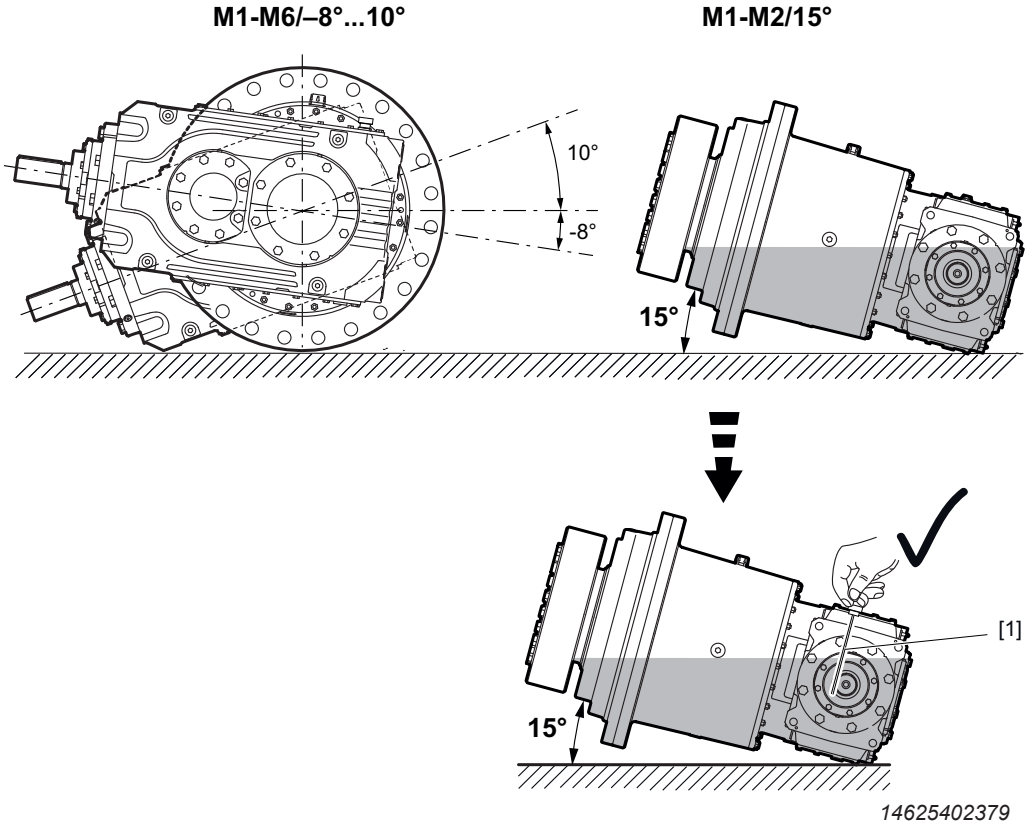

[1] Oil dipstick

Oil

Information sign

Observe the additional information sign on the gear unit. Check the oil level in the test mounting position specified on the nameplate.

The following figure shows an example of the information sign for check mounting position M1-M2/15° at M1-M6/5°.

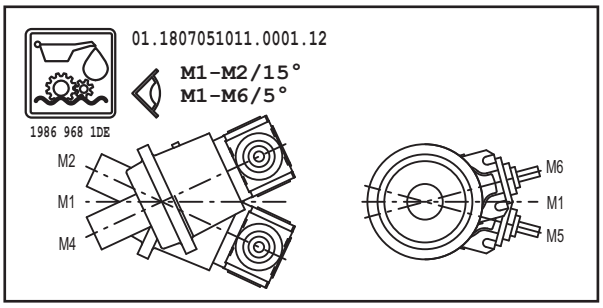

14625406091

22124705/EN – 05/2016

7.5 Checking the oil consistency

Observe the chapter "Preliminary work regarding inspection/maintenance" (→ 🗎 103).

Proceed as follows to check the oil consistency:

1. Determine the oil drain position and place a container underneath.
2. Slowly open the oil drain and drain some oil.
3. Close the oil drain valve.
4. Check the oil consistency:

- Check the drained oil for appearance, color, and contamination.
- If the oil sample is severely contaminated (e.g. water, color, dirt), consult a specialist to find out the cause.
- For more detailed information on checking the oil for water content and viscosity, contact your lubricant manufacturer.

22124705/EN – 05/2016

7.6 Changing the oil

7.6.1 Notes

Observe the following when changing the oil.

⚠ WARNING

Risk of burns due to hot gear unit and hot gear unit oil.

Serious injury.

- Carefully remove the oil level plug and oil drain plug.

NOTICE

Improper oil change may result in damage to the gear unit.

Possible damage to property.

- Observe the following notes.

- Perform the oil change quickly after you have switched off the gear unit to prevent solids from settling. Drain the oil while it is still warm. Avoid oil temperatures well above 50 °C.
- Always fill the gear unit with the same oil grade as before. Mixing oils of different grades and/or manufacturers is not permitted. Especially synthetic oils may not be mixed with mineral oils or other synthetic oils. Flush the gear unit with the new oil grade thoroughly when switching from mineral oil and/or when switching from synthetic oil of one basis to synthetic oil of a different basis.

  Refer to the lubricant table for information on the permitted oil of the various lubricant manufacturers.
- The oil grade and oil viscosity are listed on the nameplate of the gear unit. The oil quantity specified on the nameplate is an approximate quantity. The mark on the oil dipstick is the decisive indicator of the correct oil quantity.
- When changing the oil, flush the gear unit interior thoroughly with oil to remove oil sludge, oil residue, and abrasion. Use the same oil grade for this purpose as for operating the gear unit. Fill in fresh oil only after all residues have been removed.
- For the position of the oil level plug, oil drain plug and breather plug, refer to the order documents.
- An oil level above the max marking might indicate that foreign liquids (e.g. water) have entered. An oil level below the min marking might indicate a leakage. Find out and eliminate the cause before you fill in new oil.
- If required, empty accessories e.g. filters and pipes.
- Replace any damaged gaskets of the oil drain plug.
- If present, clean the magnetic oil drain plugs and the oil dipstick with magnet tip.
- Empty the oil-bearing system of gear units with circulation lubrication and oil supply systems according to the manufacturer's maintenance instructions.
- Elements for controlling the oil level, oil drain, and oil fill openings are indicated on the gear unit by safety symbols.
- Use a funnel to fill the oil (max. filter mesh 25 µm).

22124705/EN – 05/2016

- Remove any dripping oil immediately with oil binding agent. Dispose of the used oil in accordance with applicable regulations.
- Before changing the oil, bring the gear unit into the following initial mounting position.

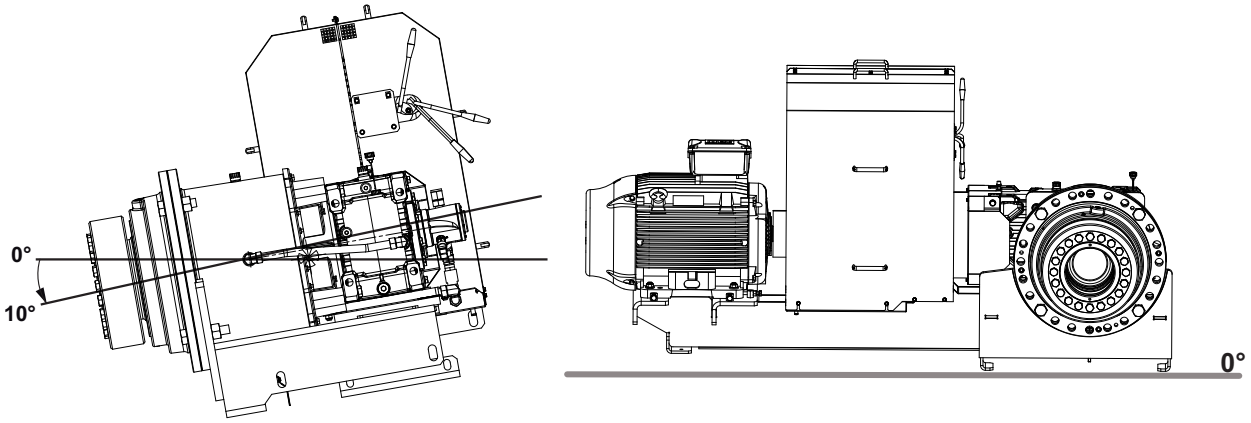

15026701835

7.6.2 Procedure

The following figure shows an example of a gear unit.

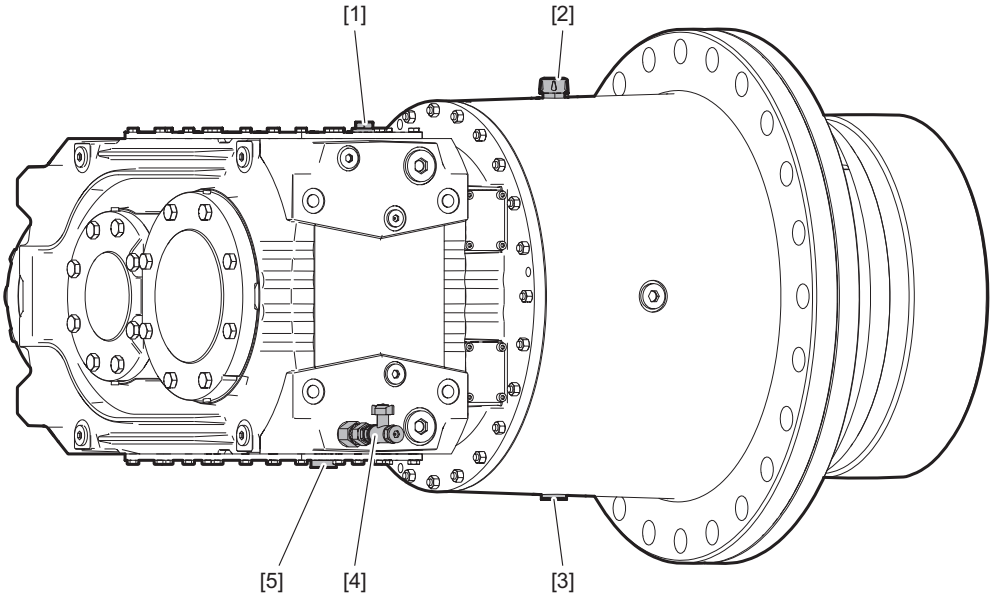

14303237643

Observe the chapter "Preliminary work regarding inspection/maintenance" (→ 🗎 103).

1. Place a suitable container underneath the oil drain [3][4][5].
2. Open the oil drain valve [4].
3. Remove the oil dipstick [1] and the breather plugs [2].
4. Drain the oil into the container.

   To completely drain the remaining oil remove the oil drain plugs [3][5].

22124705/EN – 05/2016

5. Close the oil drain [3][4][5] appropriately.
6. Fill the oil via the openings [2].
   - Use a funnel to fill the oil (max. filter mesh 25 µm).
   - Fill the gear unit with the oil grade specified on the nameplate. The oil quantity specified on the nameplate is an approximate quantity. The mark on the oil dipstick is the decisive indicator of the correct oil quantity, see chapter ""Checking the oil level"" (→ 🗎 107).
7. Insert the breather plug [2] and the oil dipstick [1].

22124705/EN – 05/2016

7.7 Checking and cleaning the breather

NOTICE

Improper cleaning of the breather may damage the gear unit.

Possible damage to property.

- Prevent foreign particles from entering into the gear unit when performing the following work.

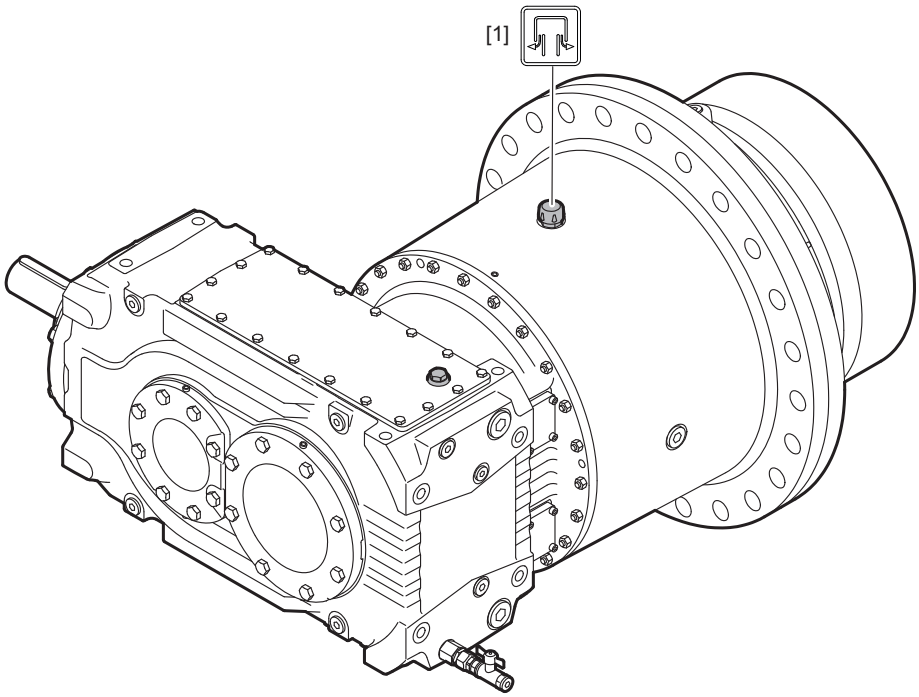

14299527563

Observe the chapter "Preliminary work regarding inspection/maintenance" (→ 🗎 103).

1. Remove any deposits near the breather valves [1].
2. Replace the clogged breather valves [1] with a new one.

22124705/EN – 05/2016

7.8 Refilling grease

⚠ WARNING

Risk of crushing due to rotating parts.

Severe or fatal injuries.

- Make sure to provide for sufficient safety measures for relubrication.

INFORMATION

- Slowly turn the shaft when you relubricate the gaskets to ensure a better spreading of the grease.
- Immediately remove the old grease that leaked out.

Observe the chapter "Preliminary work regarding inspection/maintenance" (→ 🗎 103).

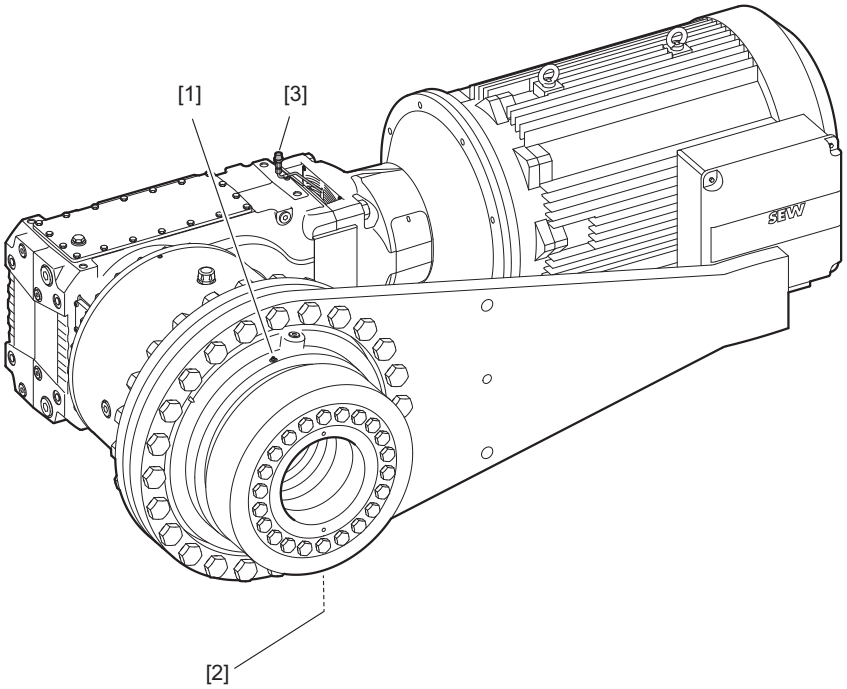

14419897483

7.8.1 Planetary gear unit

1. Open the grease drain screw [2] so that old excess grease can escape.
2. Use moderate pressure to force grease into each lubrication point [1] until grease leaks out of the bore.
3. Insert the grease drain screw plug [2].

7.8.2 Bevel-helical gear unit

1. Use moderate pressure to force grease into lubrication point [3].

22124705/EN – 05/2016

7.9 Oil heater /OH

⚠ WARNING

Danger of electric shock!

Severe or fatal injuries.

- De-energize the oil heater before you start working on the unit.
- Secure the oil heater against unintended power-up.

Observe the chapter "Preliminary work regarding inspection/maintenance" (→ 🗎 103).

1. Before disassembling the oil heater, drain the "oil" (→ 🗎 112).
2. Disassemble the oil heater.

NOTICE

Possible damage to property.

- Do not destroy the heating elements by scratching or scraping.
- Clean the tubular heating elements with solvent.
- Replace the defective heating elements.

3. Apply LOCTITE® 577 to 2 threads and screw on the oil heater and tighten the hex head screw.
4. Screw in the oil drain plug again.
5. Fill new oil of the same type as the old oil through the oil fill plug (if you want to change the oil type, contact our customer service first).

- Use a funnel to fill the oil (max. filter mesh 25 µm).
- Fill in the oil according to the quantity specified on the nameplate. The oil quantity specified on the nameplate is an approximate value.
- Check to see that the oil level is correct, refer to chapter ""Checking the oil level"" (→ 🗎 107).

6. Connect the oil heater.

22124705/EN – 05/2016

7.10 Water cooling cartridge

Observe the chapter "Preliminary work regarding inspection/maintenance" (→ 🗎 103).

INFORMATION

Do not carry out any repair work on the pipe bundle of the water cooling cartridge unless in case of an emergency. Contact SEW-EURODRIVE in that case. Analyze the situation and report the failure symptoms.

7.10.1 Maintenance intervals

The service life of the water cooling cartridge depends to a large degree on the quality of the media and their substances. The operator is responsible for specifying the maintenance intervals. Use the performance parameters and power rating determined during operation to define the maintenance intervals.

Specify the maintenance intervals in such a way that a power loss of the water cooling cartridge does not pose a hazard to the operation of the system.

7.10.2 Cleaning

Use the performance parameters and power rating determined during operation to define the cleaning intervals. Specify the intervals in such a way that a power loss of the water cooling cartridge does not pose a hazard to the operation of the system.

Safety notes

⚠ WARNING

Risk of burns due to media under pressure and hot component parts.

Serious injury.

- Unpressurize all systems before carrying out any disassembly work on the water cooling cartridge. Safeguard the systems according to the applicable accident prevention regulations.
- Risk of burns when touching hot parts (such as supply lines) of the water cooling cartridge. Let the parts cool down before you remove the water cooling cartridge and the supply lines.

⚠ WARNING

Cleaning the water cooling cartridge with cleaning agents such as hydrochloric acid and comparable cleaning agents can pose a risk of chemical burn to parts of the body and the eyes if the applicable work safety regulations are not adhered to.

Serious injury.

- Always adhere to the applicable work safety regulations when handling cleaning agents. Wear protective clothing, protective gloves and, if necessary, safety goggles and breathing protection when working with aggressive cleaning media.

22124705/EN – 05/2016

NOTICE

Risk of destroying components of the water cooling cartridge.

Possible damage to property.

- To exclude damage resulting from improper handling of the water cooling cartridge, always contact SEW-EURODRIVE before you use other comparable, aggressive cleaning agents.

NOTICE

Risk of contamination of the medium.

Possible damage to property.

- According to experience, it is not possible to remove the cleaning agent without any residues. It is therefore important that you select only cleaning agents that are compatible with the medium.

NOTICE

Risk of damaging components of the water cooling cartridge.

Possible damage to property.

- Properly vent the water cooling cartridge and the connected systems before taking them into operation again.

NOTICE

Risk of contamination due to drained media.

Possible damage to property.

- Drain media in such a way that it is not discharged into the soil or sewage system. Drain media in suitable containers and dispose of them according to the applicable environmental regulations.

22124705/EN – 05/2016

Disassembly

Observe the chapter "Preliminary work regarding inspection/maintenance" (→ 🗎 103).

1. Unpressurize the water cooling cartridge and the connected system pipes. Shut them off with the corresponding valve.
2. Before "disassembly" (→ 🗎 112), drain all the gear unit oil.
3. Completely drain the cooling medium using the drain screws and/or drains provided for this purpose.
4. Loosen the water cooling cartridge by applying torque only to the head of the hex screw on the tube plate and remove the water cooling cartridge.
5. Remove the flat gasket. Remove any gasket residues from the sealing surface.
   - ⚠**NOTICE** Be careful not to damage the sealing surface.

     Possible damage to property.

     – Damage to the sealing surfaces can result in leakage.
6. Clean the water cooling cartridge.
7. Insert a new gasket and make sure it is seated properly. If present, replace the O-ring.
8. Apply LOCTITE® 577 to 2 threads and screw on the water cooling cartridge and tighten the hex head screw by applying torque only to the head of the screw on the tube plate using an adequate tool.
9. Re-connect the cooling water supply and return pipes to the water cooling cartridges.
10. Fill new oil of the same type as the old oil through the oil fill plug (if you want to change the oil type, contact our customer service first).
    - Use a funnel to fill the oil (max. filter mesh 25 µm).
    - Fill in the oil according to the quantity specified on the nameplate. The oil quantity specified on the nameplate is an approximate value.
    - Check the oil level.
11. Before starting the system again, vent the pipes.

22124705/EN – 05/2016

Cleaning the inside of the water cooling cartridge

Observe the notes in the previous chapter.

NOTICE

Risk of corrosion due to scratches.

Possible damage to property.

- Scratches on the inner surface of the pipe bundle can result in increased corrosion. Use a brush with soft bristles to clean the inner surface of the pipe bundle.

NOTICE

Risk of damaging components of the water cooling cartridge.

Possible damage to property.

- For information on suitable cleaning agents, consult SEW-EURODRIVE.

We recommend that you take the following measures for cleaning:

- To remove scale deposits from the inside of pipes, use a mixture of 50% hydrochloric acid with inhibitors and 50% water.
- To clean the inside of the pipe bundle, you can use a brush if the pipe diameter is > 5 mm. Make sure you use a brush with soft bristles to prevent the surface from pipe walls from being scratched.
- Contact SEW-EURODRIVE if you want to use other cleaning agents to remove scale deposits.
- After cleaning, make sure all cleaning agents have been removed completely from the pipes before taking the water cooling cartridge into operation again.

22124705/EN – 05/2016

7.11 Fan

Observe the chapter "Preliminary work regarding inspection/maintenance" (→ 🗎 103).

1. Remove the fan guard.
2. Remove any dirt from the fan wheel, fan guard and protective grid using a hard brush, for example.
3. Before starting the fan again, make sure the fan guard is mounted properly. The fan must not touch the fan guard.

7.12 Oil-water cooler for splash lubrication /OWC

Observe the chapter "Preliminary work regarding inspection/maintenance" (→ 🗎 103).

INFORMATION

Before inspection/maintenance, first read the addendum to the operating instructions "Oil-Water Cooler for Splash Lubrication /OWC", which includes the manufacturer's documentation.

7.13 Oil-air cooler for splash lubrication /OAC

Observe the chapter "Preliminary work regarding inspection/maintenance" (→ 🗎 103).

INFORMATION

Before inspection/maintenance, first read the addendum to the operating instructions "Oil-Air Cooler for Splash Lubrication /OAC", which includes the manufacturer's documentation.

7.14 Oil-water cooler for pressure lubrication /OWP

Observe the chapter "Preliminary work regarding inspection/maintenance" (→ 🗎 103).

INFORMATION

Before inspection/maintenance, first read the addendum to the operating instructions "Oil-Water Cooler for Pressure Lubrication /OWP", which includes the manufacturer's documentation.

7.15 Oil-air cooler for pressure lubrication /OAP

Observe the chapter "Preliminary work regarding inspection/maintenance" (→ 🗎 103).

INFORMATION

Before inspection/maintenance, first read the addendum to the operating instructions "Oil-Air Cooler for Pressure Lubrication /OAP", which includes the manufacturer's documentation.

22124705/EN – 05/2016

7.16 Motor pump /ONP

Observe the chapter "Preliminary work regarding inspection/maintenance" (→ 🗎 103).

INFORMATION

Before inspection/maintenance, first read the addendum to the operating instructions "Motor pump /ONP" including the manufacturer documentation.

7.17 Shaft end pump /SEP

Observe the chapter "Preliminary work regarding inspection/maintenance" (→ 🗎 103).

INFORMATION

Observe the manufacturer's documentation before beginning inspection/maintenance work.

22124705/EN – 05/2016

8 Permitted lubricants

This chapter describes the permitted lubricants and the permitted temperatures for industrial gear units from SEW-EURODRIVE.

8.1 Lubricant selection

Note the following when selecting the lubricants.

NOTICE

Selecting improper lubricants may damage the gear unit.

Possible damage to property.

- Observe the following notes.

- The oil viscosity and type (mineral/synthetic) to be used are determined by SEW-EURODRIVE specifically for each order. This information is noted in the order confirmation and on the gear unit's nameplate.

  If other lubricants are used in the gear units and/or in other temperature ranges as those recommended, the right to claim under warranty will become invalid. Exceptions are application-specific approvals that have to be confirmed by SEW-EURODRIVE in written form.

  The lubricant recommendation in the lubricant table in no way represents a guarantee regarding the quality of the lubricant delivered by each respective supplier. Each lubricant manufacturer is responsible for the quality of its product.
- Oils of the same viscosity class from different manufacturers do not have the same characteristics. In particular, the minimum permitted oil bath temperatures are manufacturer-specific. These temperatures are specified in the lubricant tables.
- The minimum permitted oil bath temperatures depend on the lubrication type used. These temperatures are specified in the lubricant tables. The values correspond to the maximum viscosity of the individual lubricants.
- The values specified in the lubricant tables apply as of the time of printing of this document. The data of the lubricants are subject to dynamic change on the part of the lubricant manufacturers. For up-to-date information about the lubricants, visit:

  www.sew-eurodrive.de/lubricants
- Do not mix different synthetic lubricants and do not mix synthetic with mineral lubricants.
- Check the compatibility of the greases and oils used.
- Strictly observe the safety notes in the individual chapters.

22124705/EN – 05/2016

8.2 Structure of the tables and abbreviations

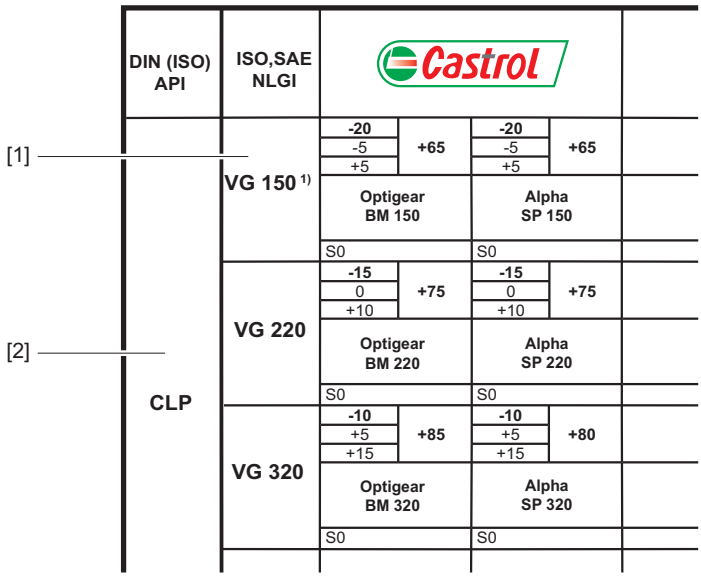

9007217174587531

[1] Viscosity class
[2] Lubricant type

Abbreviations

Icons	Designation
CLP	= Mineral oil
CLP HC	= Synthetic polyalphaolefin (PAO)
E	= Ester-based oil
	= Mineral lubricant
	= Synthetic lubricant
	= Lubricant for the food industry (**NSF H1**-compliant)
	= Biodegradable oil (lubricant for agriculture, forestry, and water management)
1)	= Lubricants may only be used if service factor $F_s \geq 1.3$

22124705/EN – 05/2016

8.3 Explanation of the various lubricants

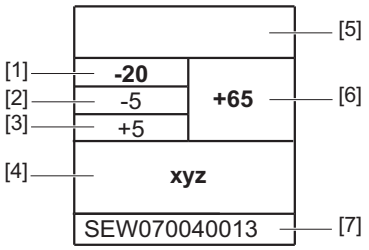

18014416413363467

[1] Lowest cold start temperature in °C for splash lubrication*
[2] Lowest cold start temperature in °C for drives with pumps up to a max. oil viscosity of 5000 cSt*
[3] Lowest cold start temperature in °C for drives with pumps up to a max. oil viscosity of 2000 cSt*
[4] Trade name
[5] Manufacturer
[6] Highest oil bath temperature in °C. MUST NOT BE EXCEEDED.
[7] Approvals

*In case of low temperatures, the oil must be heated to the specified minimum temperature, for example by using an oil heater. The maximally permitted oil viscosity per pump type is specified in the following chapter.

8.4 Explanation of the oil supply systems and the oil viscosity

The following pressure lubrications are designed for an oil viscosity of 2000 cSt:

- Motor pump for pressure lubrication /ONP
- Motor pump incl. air cooler for pressure lubrication /OAP
- Motor pump incl. water cooler for pressure lubrication /OWP

Exceptions are the shaft end pumps. They are designed for an oil viscosity of 5000 cSt.

22124705/EN – 05/2016

8.5 Lubricant tables

The lubricant table is valid when this document is printed. Please refer to www.sew-eurodrive.de/lubricants for the latest version of the table.

DIN (ISO) API	ISO,SAE NLGI	Castrol		FUCHS		Mobil®		KLÜBER LUBRICATION	Shell	TEXACO	TOTAL
CLP	VG 150 1)	-20 -5< +5	+65	-20 -5 +5	+65	-20 -5 +5	+65	-20 -5 +5	+65		-20 -5 +5	+65	
		Optigear BM 150		Alpha SP 150		Renolin CLP 150 Plus	Renolin HighGear 150	Mobilgear 600 XP 150		Klüberoil GEM 1-150 N		Meropa 150	
		S0		S0		S0	S0	SEW070030013		S0		S0	
	VG 220	-15 0 +10	+75	-15 0 +10	+75	-15 0 +10	+75	-15 0 +10	+75	-15 0 +10	+75	-15 0 +10	+75	-15 0 +10	+75
		Optigear BM 220		Alpha SP 220		Renolin CLP 220 Plus	Renolin HighGear 220	Mobilgear 600 XP 220		Klüberoil GEM 1-220 N	Shell Omala Oil F 220	Meropa 220	Carter EP 220
		S0		S0		S0	S0	SEW070030013		S0	S0	S0	S0
	VG 320	-10 +5 +15	+85	-10 +5 +15	+80	-10 +5 +15	+80	-10 +5 +15	+80	-10 +5 +15	+80	-10 +5 +15	+80	-10 +5 +15	+80
		Optigear BM 320		Alpha SP 320		Renolin CLP 320 Plus	Renolin HighGear 320	Mobilgear 600 XP 320		Klüberoil GEM 1-320 N	Shell Omala Oil F 320	Meropa 320	Carter EP 320
		S0		S0		S0	S0	SEW070030013		S0	S0	S0	S0
	VG 460	-5 +10 +20	+90	-5 +10 +20	+90	-5 +10 +20	+90	-5 +10 +20	+90	-5 +10 +20	+90	-5 +10 +20	+90	-5 +10 +20	+90
		Optigear BM 460		Alpha SP 460		Renolin CLP 460 Plus	Renolin HighGear 460	Mobilgear 600 XP 460		Klüberoil GEM 1-460 N	Shell Omala Oil F 460	Meropa 460	Carter EP 460
		S0		S0		S0	S0	SEW070030013		S0	S0	S0	S0
	VG 680	0 +15 +25	+90	0 +15 +25	+90	0 +15 +25	+90	0 +15 +25	+90	0 +15 +25	+90	0 +15 +25	+90	0 +15 +25	+90
		Optigear BM 680		Alpha SP 680		Renolin CLP 680 Plus	Renolin HighGear 680	Mobilgear 600 XP 680		Klüberoil GEM 1-680 N		Meropa 680	Carter EP 680
		S0		S0		S0	S0	SEW070030013		S0		S0	S0
	VG 1000	+5 +20 +30	+90										
		Optigear BM 1000											
		S0											

17909427211

The lubricant table is valid when this document is printed. Please refer to www.sew-eurodrive.de/lubricants for the latest version of the table.

DIN (ISO) API	ISO,SAE NLGI	Castrol		FUCHS		Mobil®		KLÜBER LUBRICATION	Shell	TEXACO	TOTAL
CLP HC	VG 32 1)					-40 / -30 / -25 / +30 SHC 624 S0					
	VG 68 1)			-35 / -20 / -10 / +50 Renolin Unisyn CLP 68 S0		-40 / -25 / -15 / +50 SHC 626 S0		-35 / -20 / -10 / +50 Klübersynth GEM 4-68 N S0	-40 / -20 / -10 / +50 Omala S4 GX 68 S0		
	VG 150 1)	-25 / -10 / 0 / +70 Alphasyn EP 150 S0	-30 / -10 / 0 / +70 Optigear Synthetic X 150 S0	-30 / -10 / +0 / +70 Renolin Unisyn CLP 150 S0		-30 / -10 / 0 / +75 SHC 629 S0	-35 / -15 / -5 / +75 SHC Gear 150 S0	-25 / -10 / 0 / 70 Klübersynth GEM 4-150 N S0	-30 / -10 / 0 / +75 Omala S4 GX 150 S0	-25 / -10 / 0 / +70 Pinnacle EP 150 S0	-35 / -15 / -5 / +75 Carter SH 150 S0
	VG 220	-25 / -5 / +5 / +80 Alphasyn EP 220 S0	-25 / -5 / +5 / +80 Optigear Synthetic X 220 S0	-25 / -5 / +5 / +80 Renolin Unisyn CLP 220 S0	-20 / 0 / +10 / +75 HighGear Synth 220 S0	-25 / -5 / 0 / +85 SHC 630 S0	-30 / -10 / +5 / +85 SHC Gear 220 S0	-25 / -5 / +5 / +80 Klübersynth GEM 4-220 N S0	-25 / -5 / +5 / +85 Omala S4 GX 220 S0	-25 / -5 / +5 / +80 Pinnacle EP 220 S0	-25 / -5 / +5 / +80 Carter SH 220 S0
	VG 320	-20 / 0 / +10 / +90 Alphasyn EP 320 S0	-20 / 0 / +10 / +90 Optigear Synthetic X 320 S0	-20 / 0 / +10 / +90 Renolin Unisyn CLP 320 S0	-15 / 0 / +15 / +85 HighGear Synth 320 S0	-20 / 0 / +10 / +95 SHC 632 S0	-25 / -5 / +10 / +95 SHC Gear 320 S0	-20 / 0 / +10 / +95 Klübersynth GEM 4-320 N S0	-20 / 0 / +10 / +95 Omala S4 GX 320 S0	-20 / 0 / +10 / +90 Pinnacle EP 320 S0	-20 / 0 / +10 / +90 Carter SH 320 S0
	VG 460	-15 / +5 / +15 / +100 Alphasyn EP 460 S0	-15 / +5 / +15 / +100 Optigear Synthetic X 460 S0	-15 / +5 / +15 / +100 Renolin Unisyn CLP 460 S0	-10 / +5 / +20 / +95 HighGear Synth 460 S0	-15 / +5 / +15 / +105 SHC 634 S0	-20 / 0 / +15 / +110 SHC Gear 460 S0	-15 / +5 / +20 / +105 Klübersynth GEM 4-460 N S0	-15 / +5 / +15 / +105 Omala S4 GX 460 S0	-15 / +5 / +15 / +100 Pinnacle EP 460 S0	-15 / +5 / +15 / +100 Carter SH 460 S0
	VG 680		-10 / +10 / +25 / +110 Optigear Synthetic X 680 S0	-10 / +10 / +25 / +110 Renolin Unisyn CLP 680 S0	-5 / +10 / +25 / +110 HighGear Synth 680 S0	-10 / +10 / +25 / +110 SHC 636 S0	-15 / +10 / +25 / +110 SHC Gear 680 S0	-10 / +10 / +25 / +110 Klübersynth GEM 4-680 N S0	-10 / +10 / +25 / +110 Omala S4 GX 680 S0		-10 / +10 / +25 / +110 Carter SH 680 S0
	VG 1000					-10 / +15 / +30 / +110 SHC 639 S0	-10 / +15 / +30 / +110 SHC Gear 1000 S0	0 / +20 / +30 / +110 Klübersynth EG4-1000 S0			

17909421835

The lubricant table is valid when this document is printed. Please refer to www.sew-eurodrive.de/lubricants for the latest version of the table.

DIN (ISO) API	ISO,SAE NLGI	bremer & leguil	Castrol	FUCHS	KLÜBER LUBRICATION
	VG 68 [1]	-35 -20 -10 +45 Cassida Fluid HF 68 S0	-40 -25 -15 +45 Optileb HY 68 S0		-35 -20 -10 +45 Klüberoil 4UH1-68 N S0
CLP HC NSF H1	VG 220 [1]	-20 -5 +5 +75 Cassida Fluid GL 220 S0	-25 -5 +5 +75 Optileb GT 220 S0		-25 -5 +5 +75 Klüberoil 4UH1-220 N S0
	VG 460 [1]	-15 +5 +20 +90 Cassida Fluid GL 460 S0	-15 +5 +20 +95 Optileb GT 460 S0		-15 +5 +15 +95 Klüberoil 4UH1-460 N S0
E	VG 460			-15 +5 +15 +95 Plantogear 460 S S0	-15 +5 +15 +95 Klüberbio CA2-460 S0

17909432587

8.6 Lubricant fill quantities

The specified lubricant fill quantities are **guide values** and apply only to the gear unit without mount-on components such as the oil supply system. The precise value varies depending on the gear ratio and the number of stages.

INFORMATION

- P-X gear units are supplied without lubricant!
- For pivoted mounting positions adhere to the lubricant fill quantity on the nameplates.
- For variable pivoted mounting positions adhere to the control mounting position on the additional nameplate "Oil control angle".
- The required oil quantity depends on the mark on the oil dipstick.

The following table shows the lubricant quantities for splash lubrication.

X2K..	P042		P052		P062		P072		P082		P092		P102	
110	27	27	-	29	-	-	-	-	-	-	-	-	-	-
130	-	-	36	-	43	43	-	47	-	-	-	-	-	-
150	-	-	-	-	-	-	63	-	74	74	-	84		93
170	-	-	-	-	-	-		-	-	-	111	-	119	-

8.7 Sealing greases / rolling bearing greases

The table shows the greases recommended by SEW-EURODRIVE for an operating temperature of –40 °C to 100 °C.

Manufacturer	Grease	Group
Fuchs	**Renolit CX TOM 15 OEM**[1)]	Group 1
BP	Energrease LS-EP 2	
Castrol	Longtime PD 2	
Castrol	Spheerol EP 2	
Klüber	Centoplex EP2	
Klüber	Petamo GHY 133 N	
Kuwait	Q8 Rembrandt EP2	
Mobil	Mobilux EP 2	
Shell	Gadus S2 V220 2	
Texaco	Mulifak EP2	
Total	Multis EP 2	
Castrol	**Obeen FS 2**[2)]	Group 2
Fuchs	**Plantogel 2 S**[3)]	Group 3

1) Grease used by the factory should be preferred.
2) Grease used by the factory should be preferred.
3) Grease used by the factory should be preferred.

22124705/EN – 05/2016

INFORMATION

- The greases may only be interchanged within the same group. It is not permitted to mix different groups.
- If a customer wants to use a grease that is not listed in the table, the customer has to make sure that it is suitable for the intended application.

22124705/EN – 05/2016

9 Malfunctions/remedy

9.1 Troubleshooting information

Read the following notes before you proceed with troubleshooting.

⚠ WARNING

Risk of crushing if the drive starts up unintentionally.

Severe or fatal injuries.

- Work on the gear unit only when the machine is not in use. Secure the drive unit against unintentional power-up. Attach an information sign near the ON switch to warn that the gear unit is being worked on.

⚠ WARNING

Risk of burns due to hot gear unit and hot gear unit oil.

Serious injury.

- Let the gear unit cool down before you start working on it.
- Carefully remove the oil level plug and oil drain plug.

NOTICE

Improper handling of the gear unit and the motor may lead to damage.

Possible damage to property.

- Only qualified personnel is permitted to separate drive and motor and to carry out repair work on SEW drives.
- Please contact the SEW-EURODRIVE Service.

9.2 Service

Please have the following information available if you require customer service assistance:

- Complete nameplate data
- Type and extent of the problem
- Time the problem occurred and any accompanying circumstances
- Assumed cause
- A digital photograph, if possible

9.3 Possible malfunctions/remedy

Fault	Possible cause	Measure
Unusual noise in the area where the gear unit is mounted	• Gear unit mounting has loosened	• Tighten retaining screws and nuts to the specified torque • Replace the damaged/defective retaining screws or nuts

22124705/EN – 05/2016

Fault	Possible cause	Measure
Operating temperature too high	• Too much oil	• Check oil level, correct if necessary
	• Oil too old	• Check when the oil was last changed; change the oil, if necessary
	• The oil is heavily contaminated	• Analyze the oil to determine the cause; take measures, if necessary; change the oil
	• Ambient temperature too high	• Protect the gear unit from external heat sources (e.g. provide shade)
Operating temperature too high	• Too much oil	• Check oil level, correct if necessary
	• Oil too old	• Check when the oil was last changed; change the oil, if necessary
	• The oil is heavily contaminated	• Analyze the oil to determine the cause; take measures, if necessary; change the oil
	• Ambient temperature too high	• Protect the gear unit from external heat sources (e.g. provide shade)
	• Gear units with fan: Air intake opening/gear unit housing contaminated	• Check air intake openings, clean them if necessary; clean the gear unit housing
	• For gear units with built-in cooling: Cooling liquid flow rate too low; cooling liquid temperature too high; deposits in cooling system	• Check the cooling liquid flow rate; check the entry temperature of the cooling liquid; clean the cooling system
	• Malfunction of the oil-air or oil-water cooling system	• Observe the separate operating instructions for the oil-water and oil-air cooling system.
	• Malfunction in the water cooling (water cooling cover, water cooling cartridge)	• Check the cooling water throughput and the entry temperature of the cooling water, clean the cooling system
Temperature at bearing points too high	• Not enough oil	• Check oil level, correct if necessary
	• Oil too old	• Check when the oil was last changed; change the oil, if necessary
	• Bearing damaged	• Check the bearing and replace it if necessary. Contact SEW-EURODRIVE.
Oil leaking • From cover plate • From inspection cover • From bearing cover • From mounting flange	• Seal not tight at: – Cover plate – Inspection cover – Bearing cover – Mounting flange	• Tighten the bolts on the respective cover. Observe the gear unit. Contact SEW-EURODRIVE if oil is still leaking

22124705/EN – 05/2016

Fault	Possible cause	Measure
Oil leaking[1)] • From oil seal	• Too much oil • Sealing lip of the oil seal turned up • Oil seal damaged/worn	• Check oil level, correct if necessary • Vent the gear unit, observe the gear unit. Contact SEW-EURODRIVE if oil is still leaking. • Check oil seals; replace if necessary
Oil leaking • from gear unit breather	• Too much oil • Drive not installed in proper mounting position • Frequent cold starts (oil foaming) and/or high oil level	• Check oil level, correct if necessary • Install breather plug correctly and adjust the oil level • Install oil expansion tank
Oil leaking • from the screw plug • from the oil drain valve	• Seal not tight • Fittings loosened	• Retighten screw • Retighten the fitting and screw
Gear unit does not reach cold start temperature	• Thermostat set incorrectly • Oil heating defective or connected incorrectly • Heat dissipation too great due to unfavorable climatic conditions	• Check the setting of the thermostat • Check the oil heater for proper connection and function; replace if necessary • Protect the gear unit from cooling off during the warm-up phase
Operating temperature at backstop too high, no blocking function	• Damaged/defective backstop	• Check the backstop, replace it if necessary • Consult SEW-EURODRIVE.
Malfunction in the oil-water or oil-air cooling system	• Malfunction of the oil-water or oil-air cooling system	• Observe the separate operating instructions for the oil-water or oil-air cooling system.

1) During the run-in phase (24-hour runtime), it is normal for (small amounts of) oil/grease to leak from the oil seal (see also DIN 3761).

9.4 Waste disposal

Dispose gear units in accordance with the regulations in force regarding respective materials:

- Steel scrap
  - Housing parts
  - Gears
  - Shafts
  - Rolling bearing
- Collect waste oil and dispose of it according to the regulations in force.

22124705/EN – 05/2016

10 Address list

Algeria			
Sales	Algiers	REDUCOM Sarl 16, rue des Frères Zaghnoune Bellevue 16200 El Harrach Alger	Tel. +213 21 8214-91 Fax +213 21 8222-84 http://www.reducom-dz.com info@reducom-dz.com
Argentina			
Assembly Sales	Buenos Aires	SEW EURODRIVE ARGENTINA S.A. Ruta Panamericana Km 37.5, Lote 35 (B1619IEA) Centro Industrial Garín Prov. de Buenos Aires	Tel. +54 3327 4572-84 Fax +54 3327 4572-21 http://www.sew-eurodrive.com.ar sewar@sew-eurodrive.com.ar
Australia			
Assembly Sales Service	Melbourne	SEW-EURODRIVE PTY. LTD. 27 Beverage Drive Tullamarine, Victoria 3043	Tel. +61 3 9933-1000 Fax +61 3 9933-1003 http://www.sew-eurodrive.com.au enquires@sew-eurodrive.com.au
	Sydney	SEW-EURODRIVE PTY. LTD. 9, Sleigh Place, Wetherill Park New South Wales, 2164	Tel. +61 2 9725-9900 Fax +61 2 9725-9905 enquires@sew-eurodrive.com.au
Austria			
Assembly Sales Service	Vienna	SEW-EURODRIVE Ges.m.b.H. Richard-Strauss-Strasse 24 1230 Wien	Tel. +43 1 617 55 00-0 Fax +43 1 617 55 00-30 http://www.sew-eurodrive.at sew@sew-eurodrive.at
Bangladesh			
Sales	Bangladesh	SEW-EURODRIVE INDIA PRIVATE LIMITED 345 DIT Road East Rampura Dhaka-1219, Bangladesh	Tel. +88 01729 097309 salesdhaka@seweurodrivebangladesh.com
Belarus			
Sales	Minsk	Foreign unitary production enterprise SEW-EURODRIVE RybalkoStr. 26 220033 Minsk	Tel. +375 17 298 47 56 / 298 47 58 Fax +375 17 298 47 54 http://www.sew.by sales@sew.by
Belgium			
Assembly Sales Service	Brussels	SEW-EURODRIVE n.v./s.a. Researchpark Haasrode 1060 Evenementenlaan 7 3001 Leuven	Tel. +32 16 386-311 Fax +32 16 386-336 http://www.sew-eurodrive.be info@sew-eurodrive.be
Service Competence Center	Industrial Gears	SEW-EURODRIVE n.v./s.a. Rue de Parc Industriel, 31 6900 Marche-en-Famenne	Tel. +32 84 219-878 Fax +32 84 219-879 http://www.sew-eurodrive.be service-wallonie@sew-eurodrive.be
Brazil			
Production Sales Service	São Paulo	SEW-EURODRIVE Brasil Ltda. Estrada Municipal José Rubim, 205 – Rodovia Santos Dumont Km 49 Indaiatuba – 13347-510 – SP	Tel. +55 19 3835-8000 sew@sew.com.br
Assembly Sales Service	Rio Claro	SEW-EURODRIVE Brasil Ltda. Rodovia Washington Luiz, Km 172 Condomínio Industrial Conpark Caixa Postal: 327 13501-600 – Rio Claro / SP	Tel. +55 19 3522-3100 Fax +55 19 3524-6653 montadora.rc@sew.com.br
	Joinville	SEW-EURODRIVE Brasil Ltda. Rua Dona Francisca, 12.346 – Pirabeiraba 89239-270 – Joinville / SC	Tel. +55 47 3027-6886 Fax +55 47 3027-6888 filial.sc@sew.com.br
Bulgaria			
Sales	Sofia	BEVER-DRIVE GmbH Bogdanovetz Str.1 1606 Sofia	Tel. +359 2 9151160 Fax +359 2 9151166 bever@bever.bg

22124705/EN – 05/2016

Cameroon			
Sales	Douala	SEW-EURODRIVE S.A.R.L. Ancienne Route Bonaberi P.O. Box B.P 8674 Douala-Cameroun	Tel. +237 233 39 02 10 Fax +237 233 39 02 10 sew@sew-eurodrive.cm
Canada			
Assembly Sales Service	Toronto	SEW-EURODRIVE CO. OF CANADA LTD. 210 Walker Drive Bramalea, ON L6T 3W1	Tel. +1 905 791-1553 Fax +1 905 791-2999 http://www.sew-eurodrive.ca l.watson@sew-eurodrive.ca
	Vancouver	SEW-EURODRIVE CO. OF CANADA LTD. Tilbury Industrial Park 7188 Honeyman Street Delta, BC V4G 1G1	Tel. +1 604 946-5535 Fax +1 604 946-2513 b.wake@sew-eurodrive.ca
	Montreal	SEW-EURODRIVE CO. OF CANADA LTD. 2555 Rue Leger Lasalle, PQ H8N 2V9	Tel. +1 514 367-1124 Fax +1 514 367-3677 a.peluso@sew-eurodrive.ca
Chile			
Assembly Sales Service	Santiago de Chile	SEW-EURODRIVE CHILE LTDA Las Encinas 1295 Parque Industrial Valle Grande LAMPA Santiago de Chile P.O. Box Casilla 23 Correo Quilicura - Santiago - Chile	Tel. +56 2 2757 7000 Fax +56 2 2757 7001 http://www.sew-eurodrive.cl ventas@sew-eurodrive.cl
China			
Production Assembly Sales Service	Tianjin	SEW-EURODRIVE (Tianjin) Co., Ltd. No. 78, 13th Avenue, TEDA Tianjin 300457	Tel. +86 22 25322612 Fax +86 22 25323273 http://www.sew-eurodrive.cn info@sew-eurodrive.cn
Assembly Sales Service	Suzhou	SEW-EURODRIVE (Suzhou) Co., Ltd. 333, Suhong Middle Road Suzhou Industrial Park Jiangsu Province, 215021	Tel. +86 512 62581781 Fax +86 512 62581783 suzhou@sew-eurodrive.cn
	Guangzhou	SEW-EURODRIVE (Guangzhou) Co., Ltd. No. 9, JunDa Road East Section of GETDD Guangzhou 510530	Tel. +86 20 82267890 Fax +86 20 82267922 guangzhou@sew-eurodrive.cn
	Shenyang	SEW-EURODRIVE (Shenyang) Co., Ltd. 10A-2, 6th Road Shenyang Economic Technological Develop-ment Area Shenyang, 110141	Tel. +86 24 25382538 Fax +86 24 25382580 shenyang@sew-eurodrive.cn
	Taiyuan	SEW-EURODRIVE (Taiyuan) Co,. Ltd. No.3, HuaZhang Street, TaiYuan Economic & Technical Development Zone ShanXi, 030032	Tel. +86-351-7117520 Fax +86-351-7117522 taiyuan@sew-eurodrive.cn
	Wuhan	SEW-EURODRIVE (Wuhan) Co., Ltd. 10A-2, 6th Road No. 59, the 4th Quanli Road, WEDA 430056 Wuhan	Tel. +86 27 84478388 Fax +86 27 84478389 wuhan@sew-eurodrive.cn
	Xi'An	SEW-EURODRIVE (Xi'An) Co., Ltd. No. 12 Jinye 2nd Road Xi'An High-Technology Industrial Development Zone Xi'An 710065	Tel. +86 29 68686262 Fax +86 29 68686311 xian@sew-eurodrive.cn
Sales Service	Hong Kong	SEW-EURODRIVE LTD. Unit No. 801-806, 8th Floor Hong Leong Industrial Complex No. 4, Wang Kwong Road Kowloon, Hong Kong	Tel. +852 36902200 Fax +852 36902211 contact@sew-eurodrive.hk

22124705/EN – 05/2016

Colombia			
Assembly Sales Service	Bogota	SEW-EURODRIVE COLOMBIA LTDA. Calle 17 No. 132-18 Interior 2 Bodega 6, Manzana B Santafé de Bogotá	Tel. +57 1 54750-50 Fax +57 1 54750-44 http://www.sew-eurodrive.com.co sew@sew-eurodrive.com.co
Croatia			
Sales Service	Zagreb	KOMPEKS d. o. o. Zeleni dol 10 10 000 Zagreb	Tel. +385 1 4613-158 Fax +385 1 4613-158 kompeks@inet.hr
Czech Republic			
Assembly Sales Service	Hostivice	SEW-EURODRIVE CZ s.r.o. Floriánova 2459 253 01 Hostivice	Tel. +420 255 709 601 Fax +420 235 350 613 http://www.sew-eurodrive.cz sew@sew-eurodrive.cz
	Drive Service Hotline / 24 Hour Service	+420 800 739 739 (800 SEW SEW)	Service Tel. +420 255 709 632 Fax +420 235 358 218 servis@sew-eurodrive.cz
Denmark			
Assembly Sales Service	Copenhagen	SEW-EURODRIVEA/S Geminivej 28-30 2670 Greve	Tel. +45 43 95 8500 Fax +45 43 9585-09 http://www.sew-eurodrive.dk sew@sew-eurodrive.dk
Egypt			
Sales Service	Cairo	Copam Egypt for Engineering & Agencies Building 10, Block 13005, First Industrial Zone, Obour City Cairo	Tel. +202 44812673 / 79 (7 lines) Fax +202 44812685 http://www.copam-egypt.com copam@copam-egypt.com
Estonia			
Sales	Tallin	ALAS-KUUL AS Reti tee 4 75301 Peetri küla, Rae vald, Harjumaa	Tel. +372 6593230 Fax +372 6593231 http://www.alas-kuul.ee veiko.soots@alas-kuul.ee
Finland			
Assembly Sales Service	Hollola	SEW-EURODRIVE OY Vesimäentie 4 15860 Hollola 2	Tel. +358 201 589-300 Fax +358 3 780-6211 http://www.sew-eurodrive.fi sew@sew.fi
Service	Hollola	SEW-EURODRIVE OY Keskikankaantie 21 15860 Hollola	Tel. +358 201 589-300 Fax +358 3 780-6211 http://www.sew-eurodrive.fi sew@sew.fi
Production Assembly	Karkkila	SEW Industrial Gears Oy Santasalonkatu 6, PL 8 03620 Karkkila, 03601 Karkkila	Tel. +358 201 589-300 Fax +358 201 589-310 http://www.sew-eurodrive.fi sew@sew.fi
France			
Production Sales Service	Hagenau	SEW-USOCOME 48-54 route de Soufflenheim B. P. 20185 67506 Haguenau Cedex	Tel. +33 3 88 73 67 00 Fax +33 3 88 73 66 00 http://www.usocome.com sew@usocome.com
Production	Forbach	SEW-USOCOME Zone industrielle Technopôle Forbach Sud B. P. 30269 57604 Forbach Cedex	Tel. +33 3 87 29 38 00
	Brumath	SEW-USOCOME 1 Rue de Bruxelles 67670 Mommenheim Cedex	Tel. +33 3 88 37 48 00
Assembly Sales Service	Bordeaux	SEW-USOCOME Parc d'activités de Magellan 62 avenue de Magellan – B. P. 182 33607 Pessac Cedex	Tel. +33 5 57 26 39 00 Fax +33 5 57 26 39 09

22124705/EN – 05/2016

France			
	Lyon	SEW-USOCOME 75 rue Antoine Condorcet 38090 Vaulx-Milieu	Tel. +33 4 74 99 60 00 Fax +33 4 74 99 60 15
	Nantes	SEW-USOCOME Parc d'activités de la forêt 4 rue des Fontenelles 44140 Le Bignon	Tel. +33 2 40 78 42 00 Fax +33 2 40 78 42 20
	Paris	SEW-USOCOME Zone industrielle 2 rue Denis Papin 77390 Verneuil l'Étang	Tel. +33 1 64 42 40 80 Fax +33 1 64 42 40 88
Gabon			
Sales	Libreville	SEW-EURODRIVE SARL 183, Rue 5.033.C, Lalala à droite P.O. Box 15682 Libreville	Tel. +241 03 28 81 55 +241 06 54 81 33 http://www.sew-eurodrive.cm sew@sew-eurodrive.cm
Germany			
Headquarters Production Sales	Bruchsal	SEW-EURODRIVE GmbH & Co KG Ernst-Blickle-Straße 42 76646 Bruchsal P.O. Box Postfach 3023 – D-76642 Bruchsal	Tel. +49 7251 75-0 Fax +49 7251 75-1970 http://www.sew-eurodrive.de sew@sew-eurodrive.de
Production / Industrial Gears	Bruchsal	SEW-EURODRIVE GmbH & Co KG Christian-Pähr-Str. 10 76646 Bruchsal	Tel. +49 7251 75-0 Fax +49 7251 75-2970
Production	Graben	SEW-EURODRIVE GmbH & Co KG Ernst-Blickle-Straße 1 76676 Graben-Neudorf P.O. Box Postfach 1220 – D-76671 Graben-Neudorf	Tel. +49 7251 75-0 Fax +49 7251-2970
	Östringen	SEW-EURODRIVE GmbH & Co KG, Werk Östringen Franz-Gurk-Straße 2 76684 Östringen	Tel. +49 7253 9254-0 Fax +49 7253 9254-90 oestringen@sew-eurodrive.de
Service Competence Center	Mechanics / Mechatronics	SEW-EURODRIVE GmbH & Co KG Ernst-Blickle-Straße 1 76676 Graben-Neudorf	Tel. +49 7251 75-1710 Fax +49 7251 75-1711 scc-mechanik@sew-eurodrive.de
	Electronics	SEW-EURODRIVE GmbH & Co KG Ernst-Blickle-Straße 42 76646 Bruchsal	Tel. +49 7251 75-1780 Fax +49 7251 75-1769 scc-elektronik@sew-eurodrive.de
Drive Technology Center	North	SEW-EURODRIVE GmbH & Co KG Alte Ricklinger Straße 40-42 30823 Garbsen (Hannover)	Tel. +49 5137 8798-30 Fax +49 5137 8798-55 dtc-nord@sew-eurodrive.de
	East	SEW-EURODRIVE GmbH & Co KG Dänkritzer Weg 1 08393 Meerane (Zwickau)	Tel. +49 3764 7606-0 Fax +49 3764 7606-30 dtc-ost@sew-eurodrive.de
	South	SEW-EURODRIVE GmbH & Co KG Domagkstraße 5 85551 Kirchheim (München)	Tel. +49 89 909552-10 Fax +49 89 909552-50 dtc-sued@sew-eurodrive.de
	West	SEW-EURODRIVE GmbH & Co KG Siemensstraße 1 40764 Langenfeld (Düsseldorf)	Tel. +49 2173 8507-30 Fax +49 2173 8507-55 dtc-west@sew-eurodrive.de
Drive Center	Berlin	SEW-EURODRIVE GmbH & Co KG Alexander-Meißner-Straße 44 12526 Berlin	Tel. +49 306331131-30 Fax +49 306331131-36 dc-berlin@sew-eurodrive.de
	Ludwigshafen	SEW-EURODRIVE GmbH & Co KG c/o BASF SE Gebäude W130 Raum 101 67056 Ludwigshafen	Tel. +49 7251 75 3759 Fax +49 7251 75 503759 dc-ludwigshafen@sew-eurodrive.de
	Saarland	SEW-EURODRIVE GmbH & Co KG Gottlieb-Daimler-Straße 4 66773 Schwalbach Saar – Hülzweiler	Tel. +49 6831 48946 10 Fax +49 6831 48946 13 dc-saarland@sew-eurodrive.de
	Ulm	SEW-EURODRIVE GmbH & Co KG Dieselstraße 18 89160 Dornstadt	Tel. +49 7348 9885-0 Fax +49 7348 9885-90 dc-ulm@sew-eurodrive.de

22124705/EN – 05/2016

Germany			
	Würzburg	SEW-EURODRIVE GmbH & Co KG Nürnbergerstraße 118 97076 Würzburg-Lengfeld	Tel. +49 931 27886-60 Fax +49 931 27886-66 dc-wuerzburg@sew-eurodrive.de
Drive Service Hotline / 24 Hour Service			0 800 SEWHELP 0 800 7394357
Great Britain			
Assembly Sales Service	Normanton	SEW-EURODRIVE Ltd. DeVilliers Way Trident Park Normanton West Yorkshire WF6 1GX	Tel. +44 1924 893-855 Fax +44 1924 893-702 http://www.sew-eurodrive.co.uk info@sew-eurodrive.co.uk
	Drive Service Hotline / 24 Hour Service		Tel. 01924 896911
Greece			
Sales	Athens	Christ. Boznos & Son S.A. 12, K. Mavromichali Street P.O. Box 80136 18545 Piraeus	Tel. +30 2 1042 251-34 Fax +30 2 1042 251-59 http://www.boznos.gr info@boznos.gr
Hungary			
Sales Service	Budapest	SEW-EURODRIVE Kft. Csillaghegyí út 13. 1037 Budapest	Tel. +36 1 437 06-58 Fax +36 1 437 06-50 http://www.sew-eurodrive.hu office@sew-eurodrive.hu
Iceland			
Sales	Reykjavik	Varma & Vélaverk ehf. Knarrarvogi 4 104 Reykjavík	Tel. +354 585 1070 Fax +354 585)1071 http://www.varmaverk.is vov@vov.is
India			
Registered Office Assembly Sales Service	Vadodara	SEW-EURODRIVE India Private Limited Plot No. 4, GIDC POR Ramangamdi • Vadodara - 391 243 Gujarat	Tel. +91 265 3045200 Fax +91 265 3045300 http://www.seweurodriveindia.com salesvadodara@seweurodriveindia.com
Assembly Sales Service	Chennai	SEW-EURODRIVE India Private Limited Plot No. K3/1, Sipcot Industrial Park Phase II Mambakkam Village Sriperumbudur - 602105 Kancheepuram Dist, Tamil Nadu	Tel. +91 44 37188888 Fax +91 44 37188811 saleschennai@seweurodriveindia.com
	Pune	SEW-EURODRIVE India Private Limited Plant: Plot No. D236/1, Chakan Industrial Area Phase- II, Warale, Tal- Khed, Pune-410501, Maharashtra	Tel. +91 21 35 628700 Fax +91 21 35 628715 salespune@seweurodriveindia.com
Indonesia			
Sales	Medan	PT. Serumpun Indah Lestari Jl.Pulau Solor no. 8, Kawasan Industri Medan II Medan 20252	Tel. +62 61 687 1221 Fax +62 61 6871429 / +62 61 6871458 / +62 61 30008041 sil@serumpunindah.com serumpunindah@yahoo.com http://www.serumpunindah.com
	Jakarta	PT. Cahaya Sukses Abadi Komplek Rukan Puri Mutiara Blok A no 99, Sunter Jakarta 14350	Tel. +62 21 65310599 Fax +62 21 65310600 csajkt@cbn.net.id
	Jakarta	PT. Agrindo Putra Lestari JL.Pantai Indah Selatan, Komplek Sentra Industri Terpadu, Pantai indah Kapuk Tahap III, Blok E No. 27 Jakarta 14470	Tel. +62 21 2921-8899 Fax +62 21 2921-8988 aplindo@indosat.net.id http://www.aplindo.com

22124705/EN – 05/2016

Indonesia			
	Surabaya	PT. TRIAGRI JAYA ABADI Jl. Sukosemolo No. 63, Galaxi Bumi Permai G6 No. 11 Surabaya 60111	Tel. +62 31 5990128 Fax +62 31 5962666 sales@triagri.co.id http://www.triagri.co.id
	Surabaya	CV. Multi Mas Jl. Raden Saleh 43A Kav. 18 Surabaya 60174	Tel. +62 31 5458589 Fax +62 31 5317220 sianhwa@sby.centrin.net.id http://www.cvmultimas.com
Ireland			
Sales Service	Dublin	Alperton Engineering Ltd. 48 Moyle Road Dublin Industrial Estate Glasnevin, Dublin 11	Tel. +353 1 830-6277 Fax +353 1 830-6458 http://www.alperton.ie info@alperton.ie
Israel			
Sales	Tel Aviv	Liraz Handasa Ltd. Ahofer Str 34B / 228 58858 Holon	Tel. +972 3 5599511 Fax +972 3 5599512 http://www.liraz-handasa.co.il office@liraz-handasa.co.il
Italy			
Assembly Sales Service	Milan	SEW-EURODRIVE di R. Blickle & Co.s.a.s. Via Bernini,14 20020 Solaro (Milano)	Tel. +39 02 96 980229 Fax +39 02 96 980 999 http://www.sew-eurodrive.it milano@sew-eurodrive.it
Ivory Coast			
Sales	Abidjan	SEW-EURODRIVE SARL Ivory Coast Rue des Pêcheurs, Zone 3 26 BP 916 Abidjan 26	Tel. +225 21 21 81 05 Fax +225 21 25 30 47 info@sew-eurodrive.ci http://www.sew-eurodrive.ci
Japan			
Assembly Sales Service	Iwata	SEW-EURODRIVE JAPAN CO., LTD 250-1, Shimoman-no, Iwata Shizuoka 438-0818	Tel. +81 538 373811 Fax +81 538 373814 http://www.sew-eurodrive.co.jp sewjapan@sew-eurodrive.co.jp hamamatsu@sew-eurodrive.co.jp
Kazakhstan			
Sales	Almaty	SEW-EURODRIVE LLP 291-291A, Tole bi street 050031, Almaty	Tel. +7 (727) 350 5156 Fax +7 (727) 350 5156 http://www.sew-eurodrive.kz sew@sew-eurodrive.kz
	Tashkent	SEW-EURODRIVE LLP Representative office in Uzbekistan 96A, Sharaf Rashidov street, Tashkent, 100084	Tel. +998 71 2359411 Fax +998 71 2359412 http://www.sew-eurodrive.uz sew@sew-eurodrive.uz
	Ulaanbaatar	IM Trading LLC Narny zam street 62 Sukhbaatar district, Ulaanbaatar 14230	Tel. +976-77109997 Fax +976-77109997 imt@imt.mn
Kenya			
Sales	Nairobi	SEW-EURODRIVE Pty Ltd Transnational Plaza, 5th Floor Mama Ngina Street P.O. Box 8998-00100 Nairobi	Tel. +254 791 398840 http://www.sew-eurodrive.co.tz info@sew.co.tz
Latvia			
Sales	Riga	SIA Alas-Kuul Katlakalna 11C 1073 Riga	Tel. +371 6 7139253 Fax +371 6 7139386 http://www.alas-kuul.lv info@alas-kuul.com

22124705/EN – 05/2016

Lebanon			
Sales (Lebanon)	Beirut	Gabriel Acar & Fils sarl B. P. 80484 Bourj Hammoud, Beirut	Tel. +961 1 510 532 Fax +961 1 494 971 ssacar@inco.com.lb
Sales (Jordan, Kuwait , Saudi Arabia, Syria)	Beirut	Middle East Drives S.A.L. (offshore) Sin El Fil. B. P. 55-378 Beirut	Tel. +961 1 494 786 Fax +961 1 494 971 http://www.medrives.com info@medrives.com
Lithuania			
Sales	Alytus	UAB Irseva Statybininku 106C 63431 Alytus	Tel. +370 315 79204 Fax +370 315 56175 http://www.irseva.lt irmantas@irseva.lt
Luxembourg			
representation: Belgium			
Macedonia			
Sales	Skopje	Boznos DOOEL Dime Anicin 2A/7A 1000 Skopje	Tel. +389 23256553 Fax +389 23256554 http://www.boznos.mk
Madagascar			
representation: South Africa			
Malaysia			
Assembly Sales Service	Johor	SEW-EURODRIVE SDN BHD No. 95, Jalan Seroja 39, Taman Johor Jaya 81000 Johor Bahru, Johor West Malaysia	Tel. +60 7 3549409 Fax +60 7 3541404 sales@sew-eurodrive.com.my
Mexiko			
Assembly Sales Service	Quéretaro	SEW-EURODRIVE MEXICO S.A. de C.V. SEM-981118-M93 Tequisquiapan No. 102 Parque Industrial Quéretaro C.P. 76220 Querétaro, México	Tel. +52 442 1030-300 Fax +52 442 1030-301 http://www.sew-eurodrive.com.mx scmexico@seweurodrive.com.mx
Sales Service	Puebla	SEW-EURODRIVE MEXICO S.A. de C.V. Calzada Zavaleta No. 3922 Piso 2 Local 6 Col. Santa Cruz Buenavista C.P. 72154 Puebla, México	Tel. +52 (222) 221 248 http://www.sew-eurodrive.com.mx scmexico@seweurodrive.com.mx
Mongolia			
Technical Office	Ulaanbaatar	IM Trading LLC Narny zam street 62 Union building, Suite A-403-1 Sukhbaatar district, Ulaanbaatar 14230	Tel. +976-77109997 Tel. +976-99070395 Fax +976-77109997 http://imt.mn/ imt@imt.mn
Morocco			
Sales Service	Bouskoura	SEW-EURODRIVE Morocco Parc Industriel CFCIM, Lot 55 and 59 Bouskoura	Tel. +212 522 88 85 00 Fax +212 522 88 84 50 http://www.sew-eurodrive.ma sew@sew-eurodrive.ma
Namibia			
Sales	Swakopmund	DB Mining & Industrial Services Einstein Street Strauss Industrial Park Unit1 Swakopmund	Tel. +264 64 462 738 Fax +264 64 462 734 anton@dbminingnam.com

22124705/EN – 05/2016

Netherlands			
Assembly Sales Service	Rotterdam	SEW-EURODRIVE B.V. Industrieweg 175 3044 AS Rotterdam Postbus 10085 3004 AB Rotterdam	Tel. +31 10 4463-700 Fax +31 10 4155-552 Service: 0800-SEWHELP http://www.sew-eurodrive.nl info@sew-eurodrive.nl
New Zealand			
Assembly Sales Service	Auckland	SEW-EURODRIVE NEW ZEALAND LTD. P.O. Box 58-428 82 Greenmount drive East Tamaki Auckland	Tel. +64 9 2745627 Fax +64 9 2740165 http://www.sew-eurodrive.co.nz sales@sew-eurodrive.co.nz
	Christchurch	SEW-EURODRIVE NEW ZEALAND LTD. 30 Lodestar Avenue, Wigram Christchurch	Tel. +64 3 384-6251 Fax +64 3 384-6455 sales@sew-eurodrive.co.nz
Nigeria			
Sales	Lagos	Greenpeg Nig. Ltd Plot 296A, Adeyemo Akapo Str. Omole GRA Ikeja Lagos-Nigeria	Tel. +234-701-821-9200-1 http://www.greenpegltd.com bolaji.adekunle@greenpegltd.com
Norway			
Assembly Sales Service	Moss	SEW-EURODRIVE A/S Solgaard skog 71 1599 Moss	Tel. +47 69 24 10 20 Fax +47 69 24 10 40 http://www.sew-eurodrive.no sew@sew-eurodrive.no
Pakistan			
Sales	Karachi	Industrial Power Drives Al-Fatah Chamber A/3, 1st Floor Central Commercial Area, Sultan Ahmed Shah Road, Block 7/8, Karachi	Tel. +92 21 452 9369 Fax +92-21-454 7365 seweurodrive@cyber.net.pk
Paraguay			
Sales	Fernando de la Mora	SEW-EURODRIVE PARAGUAY S.R.L De la Victoria 112, Esquina nueva Asunción Departamento Central Fernando de la Mora, Barrio Bernardino	Tel. +595 991 519695 Fax +595 21 3285539 sewpy@sew-eurodrive.com.py
Peru			
Assembly Sales Service	Lima	SEW EURODRIVE DEL PERU S.A.C. Los Calderos, 120-124 Urbanizacion Industrial Vulcano, ATE, Lima	Tel. +51 1 3495280 Fax +51 1 3493002 http://www.sew-eurodrive.com.pe sewperu@sew-eurodrive.com.pe
Philippines			
Sales	Makati	P.T. Cerna Corporation 4137 Ponte St., Brgy. Sta. Cruz Makati City 1205	Tel. +63 2 519 6214 Fax +63 2 890 2802 mech_drive_sys@ptcerna.com http://www.ptcerna.com
Poland			
Assembly Sales Service	Łódź	SEW-EURODRIVE Polska Sp.z.o.o. ul. Techniczna 5 92-518 Łódź	Tel. +48 42 293 00 00 Fax +48 42 293 00 49 http://www.sew-eurodrive.pl sew@sew-eurodrive.pl
	Service	Tel. +48 42 293 0030 Fax +48 42 293 0043	24 Hour Service Tel. +48 602 739 739 (+48 602 SEW SEW) serwis@sew-eurodrive.pl
Portugal			
Assembly Sales Service	Coimbra	SEW-EURODRIVE, LDA. Av. da Fonte Nova, n.º 86 3050-379 Mealhada	Tel. +351 231 20 9670 Fax +351 231 20 3685 http://www.sew-eurodrive.pt infosew@sew-eurodrive.pt

22124705/EN – 05/2016

Romania			
Sales Service	Bucharest	Sialco Trading SRL str. Brazilia nr. 36 011783 Bucuresti	Tel. +40 21 230-1328 Fax +40 21 230-7170 sialco@sialco.ro
Russia			
Assembly Sales Service	St. Petersburg	ЗАО «СЕВ-ЕВРОДРАЙФ» а. я. 36 195220 Санкт-Петербург	Tel. +7 812 3332522 / +7 812 5357142 Fax +7 812 3332523 http://www.sew-eurodrive.ru sew@sew-eurodrive.ru
Sambia			
representation: South Africa.			
Senegal			
Sales	Dakar	SENEMECA Mécanique Générale Km 8, Route de Rufisque B.P. 3251, Dakar	Tel. +221 338 494 770 Fax +221 338 494 771 http://www.senemeca.com senemeca@senemeca.sn
Serbia			
Sales	Belgrade	DIPAR d.o.o. Ustanicka 128a PC Košum, IV floor 11000 Beograd	Tel. +381 11 347 3244 / +381 11 288 0393 Fax +381 11 347 1337 office@dipar.rs
Singapore			
Assembly Sales Service	Singapore	SEW-EURODRIVE PTE. LTD. No 9, Tuas Drive 2 Jurong Industrial Estate Singapore 638644	Tel. +65 68621701 Fax +65 68612827 http://www.sew-eurodrive.com.sg sewsingapore@sew-eurodrive.com
Slovakia			
Sales	Bratislava	SEW-Eurodrive SK s.r.o. Rybničná 40 831 06 Bratislava	Tel.+421 2 33595 202, 217, 201 Fax +421 2 33595 200 http://www.sew-eurodrive.sk sew@sew-eurodrive.sk
	Košice	SEW-Eurodrive SK s.r.o. Slovenská ulica 26 040 01 Košice	Tel. +421 55 671 2245 Fax +421 55 671 2254 Mobile +421 907 671 976 sew@sew-eurodrive.sk
Slovenia			
Sales Service	Celje	Pakman - Pogonska Tehnika d.o.o. Ul. XIV. divizije 14 3000 Celje	Tel. +386 3 490 83-20 Fax +386 3 490 83-21 pakman@siol.net
South Africa			
Assembly Sales Service	Johannesburg	SEW-EURODRIVE (PROPRIETARY) LIMITED Eurodrive House Cnr. Adcock Ingram and Aerodrome Roads Aeroton Ext. 2 Johannesburg 2013 P.O.Box 90004 Bertsham 2013	Tel. +27 11 248-7000 Fax +27 11 248-7289 http://www.sew.co.za info@sew.co.za
	Cape Town	SEW-EURODRIVE (PROPRIETARY) LIMITED Rainbow Park Cnr. Racecourse & Omuramba Road Montague Gardens Cape Town P.O.Box 36556 Chempet 7442	Tel. +27 21 552-9820 Fax +27 21 552-9830 Telex 576 062 bgriffiths@sew.co.za
	Durban	SEW-EURODRIVE (PROPRIETARY) LIMITED 48 Prospecton Road Isipingo Durban P.O. Box 10433, Ashwood 3605	Tel. +27 31 902 3815 Fax +27 31 902 3826 cdejager@sew.co.za

22124705/EN – 05/2016

South Africa			
	Nelspruit	SEW-EURODRIVE (PROPRIETARY) LIMITED 7 Christie Crescent Vintonia P.O.Box 1942 Nelspruit 1200	Tel. +27 13 752-8007 Fax +27 13 752-8008 robermeyer@sew.co.za
South Korea			
Assembly Sales Service	Ansan	SEW-EURODRIVE KOREA CO., LTD. 7, Dangjaengi-ro, Danwon-gu, Ansan-si, Gyeonggi-do, Zip 425-839	Tel. +82 31 492-8051 Fax +82 31 492-8056 http://www.sew-eurodrive.kr master.korea@sew-eurodrive.com
	Busan	SEW-EURODRIVE KOREA CO., LTD. 28, Noksansandan 262-ro 50beon-gil, Gangseo-gu, Busan, Zip 618-820	Tel. +82 51 832-0204 Fax +82 51 832-0230
Spain			
Assembly Sales Service	Bilbao	SEW-EURODRIVE ESPAÑA, S.L. Parque Tecnológico, Edificio, 302 48170 Zamudio (Vizcaya)	Tel. +34 94 43184-70 Fax +34 94 43184-71 http://www.sew-eurodrive.es sew.spain@sew-eurodrive.es
Sri Lanka			
Sales	Colombo	SM International (Pte) Ltd 254, Galle Raod Colombo 4, Sri Lanka	Tel. +94 1 2584887 Fax +94 1 2582981
Swaziland			
Sales	Manzini	C G Trading Co. (Pty) Ltd PO Box 2960 Manzini M200	Tel. +268 2 518 6343 Fax +268 2 518 5033 engineering@cgtrading.co.sz
Sweden			
Assembly Sales Service	Jönköping	SEW-EURODRIVE AB Gnejsvägen 6-8 553 03 Jönköping Box 3100 S-550 03 Jönköping	Tel. +46 36 34 42 00 Fax +46 36 34 42 80 http://www.sew-eurodrive.se jonkoping@sew.se
Switzerland			
Assembly Sales Service	Basel	Alfred Imhof A.G. Jurastrasse 10 4142 Münchenstein bei Basel	Tel. +41 61 417 1717 Fax +41 61 417 1700 http://www.imhof-sew.ch info@imhof-sew.ch
Taiwan			
Sales	Taipei	Ting Shou Trading Co., Ltd. 6F-3, No. 267, Sec. 2 Tung Huw S. Road Taipei	Tel. +886 2 27383535 Fax +886 2 27368268 Telex 27 245 sewtwn@ms63.hinet.net http://www.tingshou.com.tw
	Nan Tou	Ting Shou Trading Co., Ltd. No. 55 Kung Yeh N. Road Industrial District Nan Tou 540	Tel. +886 49 255353 Fax +886 49 257878 sewtwn@ms63.hinet.net http://www.tingshou.com.tw
Tanzania			
Sales	Daressalam	SEW-EURODRIVE PTY LIMITED TANZANIA Plot 52, Regent Estate PO Box 106274 Dar Es Salaam	Tel. +255 0 22 277 5780 Fax +255 0 22 277 5788 http://www.sew-eurodrive.co.tz info@sew.co.tz
Thailand			
Assembly Sales Service	Chonburi	SEW-EURODRIVE (Thailand) Ltd. 700/456, Moo.7, Donhuaroh Muang Chonburi 20000	Tel. +66 38 454281 Fax +66 38 454288 sewthailand@sew-eurodrive.com

22124705/EN – 05/2016

Tunisia			
Sales	Tunis	T. M.S. Technic Marketing Service Zone Industrielle Mghira 2 Lot No. 39 2082 Fouchana	Tel. +216 79 40 88 77 Fax +216 79 40 88 66 http://www.tms.com.tn tms@tms.com.tn
Turkey			
Assembly Sales Service	Kocaeli-Gebze	SEW-EURODRİVE Hareket Sistemleri San. Ve TIC. Ltd. Sti Gebze Organize Sanayi Böl. 400 Sok No. 401 41480 Gebze Kocaeli	Tel. +90 262 9991000 04 Fax +90 262 9991009 http://www.sew-eurodrive.com.tr sew@sew-eurodrive.com.tr
Ukraine			
Assembly Sales Service	Dnipropetrovsk	ООО «СЕВ-Евродрайв» ул. Рабочая, 23-В, офис 409 49008 Днепропетровск	Tel. +380 56 370 3211 Fax +380 56 372 2078 http://www.sew-eurodrive.ua sew@sew-eurodrive.ua
Uruguay			
Assembly Sales	Montevideo	SEW-EURODRIVE Uruguay, S. A. Jose Serrato 3569 Esqina Corumbe CP 12000 Montevideo	Tel. +598 2 21181-89 Fax +598 2 21181-90 sewuy@sew-eurodrive.com.uy
USA			
Production Assembly Sales Service	Southeast Region	SEW-EURODRIVE INC. 1295 Old Spartanburg Highway P.O. Box 518 Lyman, S.C. 29365	Tel. +1 864 439-7537 Fax Sales +1 864 439-7830 Fax Production +1 864 439-9948 Fax Assembly +1 864 439-0566 Fax Confidential/HR +1 864 949-5557 http://www.seweurodrive.com cslyman@seweurodrive.com
Assembly Sales Service	Northeast Region	SEW-EURODRIVE INC. Pureland Ind. Complex 2107 High Hill Road, P.O. Box 481 Bridgeport, New Jersey 08014	Tel. +1 856 467-2277 Fax +1 856 845-3179 csbridgeport@seweurodrive.com
	Midwest Region	SEW-EURODRIVE INC. 2001 West Main Street Troy, Ohio 45373	Tel. +1 937 335-0036 Fax +1 937 332-0038 cstroy@seweurodrive.com
	Southwest Region	SEW-EURODRIVE INC. 3950 Platinum Way Dallas, Texas 75237	Tel. +1 214 330-4824 Fax +1 214 330-4724 csdallas@seweurodrive.com
	Western Region	SEW-EURODRIVE INC. 30599 San Antonio St. Hayward, CA 94544	Tel. +1 510 487-3560 Fax +1 510 487-6433 cshayward@seweurodrive.com
	Wellford	SEW-EURODRIVE INC. 148/150 Finch Rd. Wellford, S.C. 29385	IGLogistics@seweurodrive.com
	Additional addresses for service provided on request!		
Uzbekistan			
Technical Office	Tashkent	SEW-EURODRIVE LLP Representative office in Uzbekistan 96A, Sharaf Rashidov street, Tashkent, 100084	Tel. +998 71 2359411 Fax +998 71 2359412 http://www.sew-eurodrive.uz sew@sew-eurodrive.uz
Vietnam			
Sales	Ho Chi Minh City	Nam Trung Co., Ltd Huế - South Vietnam / Construction Materials 250 Binh Duong Avenue, Thu Dau Mot Town, Binh Duong Province HCM office: 91 Tran Minh Quyen Street District 10, Ho Chi Minh City	Tel. +84 8 8301026 Fax +84 8 8392223 khanh-nguyen@namtrung.com.vn http://www.namtrung.com.vn
	Hanoi	MICO LTD Quảng Trị - North Vietnam / All sectors except Construction Materials 8th Floor, Ocean Park Building, 01 Dao Duy Anh St, Ha Noi, Viet Nam	Tel. +84 4 39386666 Fax +84 4 3938 6888 nam_ph@micogroup.com.vn http://www.micogroup.com.vn

22124705/EN – 05/2016

Index

B

Backstop
- Maintenance intervals ... 104
- Startup ... 98
- Structure ... 43

Bearing greases ... 130
Belt pulley ... 56

C

Change of mounting position ... 96
Check the oil consistency ... 111
Checking and cleaning the breather ... 115
Checking the oil level ... 107
- Notes on the procedure for fixed and variable pivoted mounting positions ... 108
- Standard procedure ... 107

Circulation cooling ... 39
Clockwise rotation ... 43
Cooling types ... 39
Copyright notice ... 8
Corrosion and surface protection ... 37
Counterclockwise rotation ... 43
Coupling ... 58
Customer service ... 132

D

Direction of rotation dependencies ... 32
DUO10A diagnostic unit ... 45

E

Embedded safety notes ... 7
Exclusion of liability ... 8
External corrosion protection ... 19

F

Fan ... 39
- Installation ... 64
- Maintenance ... 122

Fan cooling ... 39
Fixed pivoted mounting position
- Checking the oil level ... 108
- Definition ... 26

Flange-mounted design ... 82
Foundation ... 52

G

Gear unit mounting ... 51
Gear unit venting ... 35
Gear unit with solid shaft ... 56

H

Hazard symbols
- Meaning ... 7

Hollow shaft ... 83
Hollow shaft gear unit with torque arm ... 79

I

IEC ... 42
Inspection intervals ... 104
Installing the coupling ... 58
Internal conservation ... 18

L

Limit temperature for gear unit startup ... 65
Lubricant change intervals ... 106
Lubricant fill quantities ... 130
Lubricating greases ... 130
Lubrication type ... 36

M

Maintenance intervals ... 104
Malfunction
- Ambient temperature ... 133
- Backstop ... 134
- Cold start temperature ... 134
- Oil cooling system ... 134
- Oil drain leaking ... 134
- Oil leakage ... 134
- Oil leaking ... 133
- Operating temperature ... 133
- Temperature of the bearing ... 133
- Venting ... 134

Motor adapter
- Assembly ... 59
- Structure ... 42

Motor pump
- Mechanical connection ... 64
- Startup ... 95
- Structure ... 39

22124705/EN – 05/16

Mounting output elements 56
Mounting position 24
Mounting position of the primary gear unit 33

N

Nameplate 23
NEMA 42
Notes
  Designation in the documentation 6
  Meaning of the hazard symbols 7
NTB 45
NTB temperature switch 45
  Dimensions 92
  Electrical connection 92
  Technical data 92

O

Oil change 112
Oil drain 36
Oil fill for pressure lubrication 53
Oil filling 35
Oil heater
  Connected load 70
  Electrical connection 72
  Limit temperature for gear unit startup 65
  Maintenance 117
  Note on the function 67
  Startup 96
Oil quantities 130
Oil temperature 99
Oil-air cooler for pressure lubrication
  Maintenance 122
  Mechanical connection 89
  Structure 46
Oil-air cooler for splash lubrication
  Inspection 122
  Structure 46
Oil-air cooler with motor pump for pressure lubrication
  Startup 100
Oil-air cooler with motor pump for splash lubrication
  Startup 99
Oil-water cooler for pressure lubrication
  Maintenance 122
  Mechanical installation 89
Oil-water cooler for splash lubrication
  Maintenance 122
  Mechanical connection 89
  Structure 46
Oil-water cooler with motor pump for pressure lubrication
  Startup 99
Oil-water cooler with motor pump for splash lubrication
  Startup 99
Oil-water cooler with pressure lubrication
  Structure 46
OS 37
OWC 46

P

Packaging 19
Pinion 56
Pivoted mounting position
  Checking the oil level 108
  Definition 25
Preliminary work 50
Pressure lubrication 53
Pressure switch 54
  Dimensions 90
  Electrical connection 90
  Startup 95
  Structure 44
  Technical data 90
PT100 ..... 44, 91
PT100 temperature sensor 44
  Dimensions 91
  Electrical connection 91

R

Refilling sealing grease 116
Removing the shrink disk 87
Rights to claim under limited warranty 7

S

Safety notes 9
  Designation in the documentation 6
  Meaning of the hazard symbols 7
  Structure of embedded 7
  Structure of the section-related 6
Sealing grease 130
Section-related safety notes 6

22124705/EN – 05/16

SEP 38
Shaft end pump
Filling with oil 53
Pressure switch 54
Startup 95
Structure 38
Shrink disk 83
Shutting down gear units 101
Signal words in the safety notes 6
Solid shaft 56
Starting up the gear unit at low ambient temperatures 97
Stickers on the gear unit 11
Storage conditions 18, 19
Structure
Oil heater 41
Surface temperature 99
Symbols on the gear unit 11

T

Temperature sensor PT100
Technical data 91
Tightening torques
Of mount-on components for gear units 51
Tightening torques for the torque arm 79
Torque arm 44, 79
Transport 16
Transport conditions 18
TSK 45
TSK temperature switch 45
Dimensions 93
Electrical connection 93
Technical data 93
Type designation 22

V

Variable pivoted mounting position
Checking the oil level 108
Definition 28

W

Warning notes on the gear unit 11
Waste disposal 134
Waste oil 134
Water cooling cartridge
Assembly 73
Cleaning 118
Connecting 73
Disassembling 75
Expansion 120
Interior cleaning 121
Maintenance 118
Maintenance intervals 118
Requirements on the water quality 75
Sizes 40
Startup 96
Structure 40
Types of cooling water 78

22124705/EN – 05/16

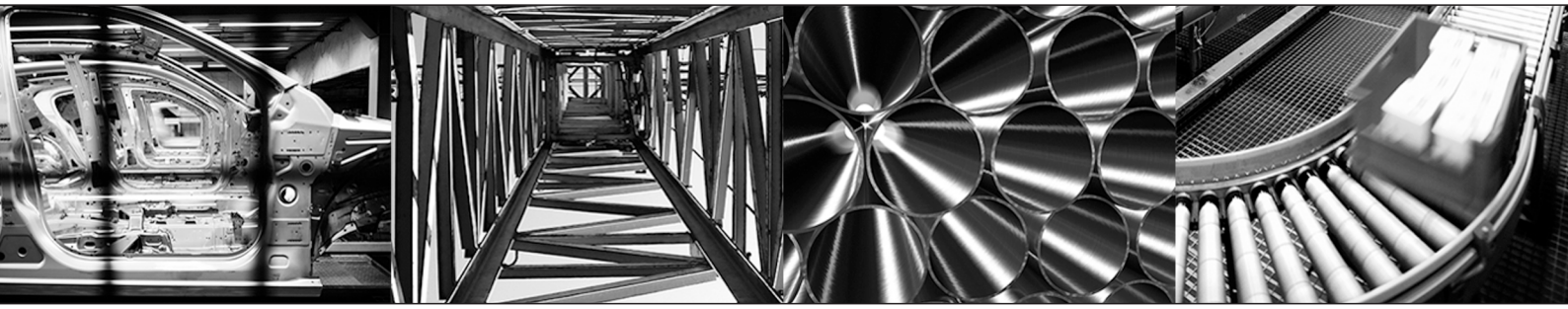

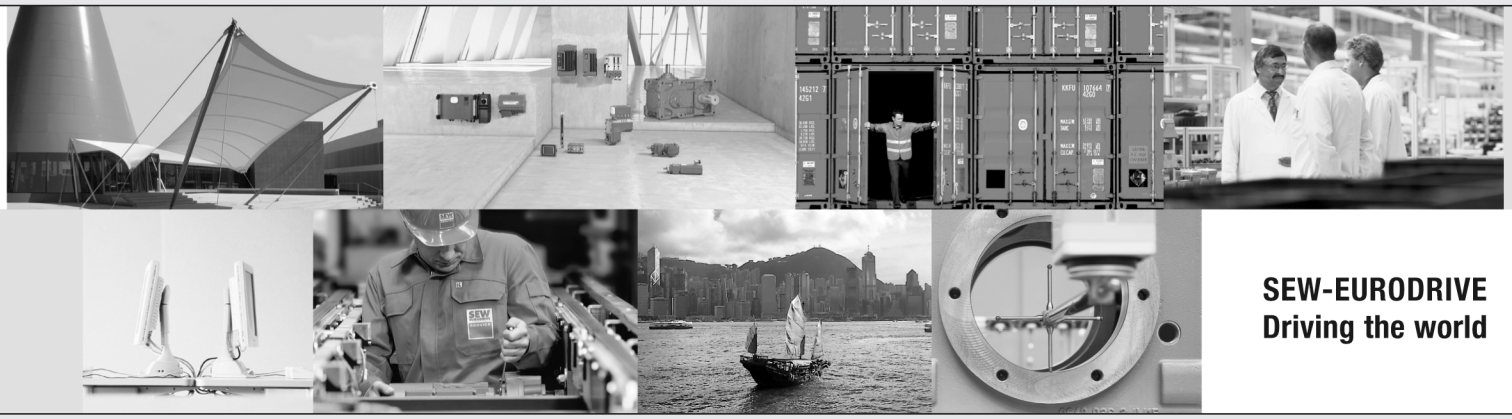

SEW-EURODRIVE
Driving the world

SEW-EURODRIVE GmbH & Co KG
P.O. Box 3023
76642 BRUCHSAL
GERMANY
Phone +49 7251 75-0
Fax +49 7251 75-1970
sew@sew-eurodrive.com
➞ **www.sew-eurodrive.com**