10 Kegelradgetriebemotoren

10.1 Geometrisch mögliche Kombinationen K..DRU..J (IE4)

K19, n_e=1400 min^{-1} — 80 Nm

n_a min^{-1}	M_{amax} Nm	F_{Ra} N	$\varphi_{(/R)}$ '	i	DRU71SJ_FU	DRU71SJ DRU71MJ_FU DRU80SJ_FU	DRU71MJ DRU80SJ DRU80MJ_FU
					2		
24	70	4330	-	58.68			
26	70	4330	-	53.88			
28	70	4330	-	49.69			
31	69	4340	-	44.48			
34	67	4350	-	40.63			
41	64	4370	-	34.29			
44	80	4260	-	31.74			
48	61	4200	-	29.29			
48	80	4120	-	29.14			
52	60	4090	-	27.16			
52	80	3990	-	26.88			
58	80	3820	-	24.06			
64	80	3680	-	21.98			
75	80	3430	-	18.55			
88	80	3210	-	15.84			
95	80	3110	-	14.69			
110	80	2930	-	12.70			
118	79	2850	-	11.84			
136	76	2720	-	10.32			
146	63	2910	-	9.58			
173	80	2590	-	8.09			
203	80	2420	-	6.91			
218	80	2340	-	6.41			
253	80	2200	-	5.54			
271	80	2140	-	5.16			
311	80	2010	-	4.50			

K29, n_e=1400 min^{-1} — 130 Nm

n_a min^{-1}	M_{amax} Nm	F_{Ra} N	$\varphi_{(/R)}$ '	i	DRU71SJ_FU	DRU71SJ DRU71MJ_FU DRU80SJ_FU	DRU71MJ DRU80SJ DRU80MJ_FU	DRU90MJ DRU90MJ_FU DRU90LJ_FU
					2			
19	130	4980	-	71.93				
21	130	4980	-	66.25				
23	130	4980	-	61.28				
26	130	4980	-	54.89				
28	130	4980	-	50.35				
33	128	4790	-	42.87				
36	130	4720	-	38.90				
38	122	4560	-	36.96				
39	130	4560	-	35.83				
42	130	4410	-	33.15				
46	115	4250	-	30.11				
47	130	4210	-	29.69				
51	130	4060	-	27.23				

19391609/DE – 06/2017

K29, n_e=1400 min^{-1} — 130 Nm

n_a min^{-1}	M_{amax} Nm	F_{Ra} N	$\varphi_{(/R)}$ '	i	DRU71SJ_FU	DRU71SJ DRU71MJ_FU DRU80SJ_FU	DRU71MJ DRU80SJ DRU80MJ_FU	DRU90MJ DRU90MJ_FU DRU90LJ_FU
56	109	3980	-	24.91				
60	130	3790	-	23.19				
63	105	3820	-	22.08				
70	130	3550	-	19.99				
86	130	3240	-	16.29				
104	130	2970	-	13.47				
117	130	2810	-	11.94				
141	110	3000	-	9.90				
153	130	2470	-	9.17				
164	122	2740	-	8.53				
187	123	2300	-	7.48				
201	112	2580	-	6.95				
243	112	2370	-	5.75				
275	110	2260	-	5.10				
357	126	1910	-	3.92				
439	110	1830	-	3.19				

K37, n_e=1400 min^{-1} — 200 Nm

n_a min^{-1}	M_{amax} Nm	F_{Ra} N	$\varphi_{(/R)}$ '	i	DRU71SJ_FU	DRU71SJ DRU71MJ_FU DRU80SJ_FU	DRU71MJ DRU80SJ DRU80MJ_FU	DRU90MJ DRU90MJ_FU DRU90LJ_FU
						3		
13	200	5640	6.8	106.38				
14	200	5640	6.8	97.81				
17	200	5640	6.9	83.69				
19	200	5520	6.9	72.54				
21	200	5360	6.9	67.80				
24	200	5020	6.9	58.60				
28	200	4660	7	49.79				
31	200	4420	7	44.46				
37	200	4100	7	37.97				
39	200	3970	7.1	35.57				
47	200	3650	7.1	29.96				
49	200	3580	8.1	28.83				
56	200	3330	8.1	24.99				
60	195	3260	8.2	23.36				
69	185	3110	8.3	20.19				
82	180	2900	8.4	17.15				
91	175	2780	8.5	15.31				
107	165	2650	8.6	13.08				
115	160	2600	11.9	12.14				
133	160	2410	12.2	10.49				
157	160	2200	12.4	8.91				
176	155	2110	12.5	7.96				
206	150	1980	12.8	6.80				
220	145	1950	12.9	6.37				
261	140	1810	13.2	5.36				
352	125	1660	13	3.98				

19391609/DE – 06/2017

K37R17, n_e=1400 min^{-1} — 200 Nm

n_a min^{-1}	M_{amax} Nm	F_{Ra} N	$\varphi_{(/R)}$ '	i	DRU71SJ_FU	DRU71MJ_FU DRU80SJ_FU
					3 3	
0.20	200	5640	-	6832		
0.24	200	5640	-	5922		
0.25	200	5640	-	5491		
0.29	200	5640	-	4759		
0.34	200	5640	-	4160		
0.38	200	5640	-	3645		
0.44	200	5640	-	3205		
0.50	200	5640	-	2801		
0.57	200	5640	-	2454		
0.65	200	5640	-	2166		
0.74	200	5640	-	1891		
0.84	200	5640	-	1660		
0.95	200	5640	-	1466		
1.1	200	5640	-	1288		
1.2	200	5640	-	1136		
					3 2	
1.4	200	5640	-	996		
1.6	200	5640	-	876		
1.8	200	5640	-	761		
2.1	200	5640	-	671		
2.4	200	5640	-	585		
2.7	200	5640	-	512		
3.1	200	5640	-	451		
3.5	200	5640	-	396		
4.0	200	5640	-	346		
4.6	200	5640	-	304		
5.2	200	5640	-	267		
6.0	200	5640	-	234		
6.8	200	5640	-	205		
7.7	200	5640	-	181		
8.8	200	5640	-	160		
10	200	5640	-	136		
11	200	5640	-	127		
13	200	5640	-	110		
15	200	5640	-	96		

K39, n_e=1400 min^{-1} — 300 Nm

n_a min^{-1}	M_{amax} Nm	F_{Ra} N	$\varphi_{(/R)}$ '	i	DRU71SJ_FU	DRU71SJ DRU71MJ_FU DRU80SJ_FU	DRU71MJ DRU80SJ DRU80MJ_FU	DRU80MJ DRU90MJ DRU90MJ_FU DRU90LJ_FU	DRU90LJ DRU100MJ_FU
						2			
24	300	7500	-	58.24					
28	300	7440	-	49.69					
32	300	7000	-	43.45					
34	300	6840	-	41.28					
39	300	6440	-	36.22					
46	300	5960	-	30.72					
50	300	5670	-	27.73					
57	300	5330	-	24.40					

19391609/DE – 06/2017

K39, n_e=1400 min^{-1} — 300 Nm

n_a min^{-1}	M_{amax} Nm	F_{Ra} N	$\varphi_{(/R)}$ '	i	DRU71SJ_FU	DRU71SJ DRU71MJ_FU DRU80SJ_FU	DRU71MJ DRU80SJ DRU80MJ_FU	DRU80MJ DRU90MJ DRU90MJ_FU DRU90LJ_FU	DRU90LJ DRU100MJ_FU
61	300	5180	-	23.04					
71	295	4820	-	19.62					
79	290	4630	-	17.83					
91	280	4380	-	15.44					
104	270	4160	-	13.44					
110	250	4930	-	12.73					
116	255	4790	-	12.09					
132	285	4360	-	10.61					
156	300	3950	-	9.00					
172	300	3760	-	8.12					
196	300	3530	-	7.15					
207	300	3430	-	6.75					
243	275	3300	-	5.75					
268	260	3240	-	5.22					
310	240	3130	-	4.52					
355	215	3070	-	3.94					
498	170	2870	-	2.81					

K39R17, n_e=1400 min^{-1} — 300 Nm

n_a min^{-1}	M_{amax} Nm	F_{Ra} N	$\varphi_{(/R)}$ '	i	DRU71SJ_FU	DRU71MJ_FU DRU80SJ_FU
2 3						
0.35	300	7500	-	4057		
0.42	300	7500	-	3370		
0.48	300	7500	-	2906		
0.56	300	7500	-	2508		
0.59	300	7500	-	2367		
0.65	300	7500	-	2162		
0.74	300	7500	-	1881		
0.79	300	7500	-	1762		
0.86	300	7500	-	1622		
0.94	300	7500	-	1494		
1.1	300	7500	-	1321		
1.2	300	7500	-	1169		
1.3	300	7500	-	1093		
2 2						
1.5	300	7500	-	956		
1.7	300	7500	-	814		
2.0	300	7500	-	711		
2.3	300	7500	-	605		
2.8	300	7500	-	504		
3.1	300	7500	-	454		
3.5	300	7500	-	399		
3.8	300	7500	-	365		
4.5	300	7500	-	312		
4.7	300	7500	-	299		
5.5	300	7500	-	254		
6.0	300	7500	-	234		
6.7	300	7500	-	210		

19391609/DE – 06/2017

K39R17, n_e=1400 min^{-1} — 300 Nm

n_a min^{-1}	M_{amax} Nm	F_{Ra} N	$\varphi_{(/R)}$ '	i	DRU71SJ_FU	DRU71MJ_FU DRU80SJ_FU
7.4	300	7500	-	189		
8.0	300	7500	-	174		
9.0	300	7500	-	156		
9.9	300	7500	-	142		
12	300	7500	-	117		
19	295	7500	-	75		

K47, n_e=1400 min^{-1} — 400 Nm

n_a min^{-1}	M_{amax} Nm	F_{Ra} N	$\varphi_{(/R)}$ '	i	DRU71SJ_FU	DRU71SJ DRU71MJ_FU DRU80SJ_FU	DRU71MJ DRU80SJ DRU80MJ_FU	DRU80MJ DRU90MJ DRU90MJ_FU DRU90LJ_FU	DRU90LJ DRU100MJ_FU
						3			
11	400	5920	6.4	131.87*					
12	400	5920	6.4	121.48*					
13	400	5920	6.4	104.37					
15	400	5920	6.4	90.86					
16	400	5920	6.4	85.12*					
19	400	5920	6.5	75.20*					
20	400	5920	6.5	69.84					
22	400	5920	6.5	63.30*					
25	400	5920	6.5	56.83					
29	400	5920	6.6	48.95*					
30	400	5920	6.6	46.03*					
35	400	5920	6.6	39.61					
40	400	5920	6.7	35.39					
45	400	5700	7.5	31.30					
48	400	5520	7.5	29.32					
54	400	5170	7.6	25.91					
58	400	4970	7.7	24.06					
64	400	4710	7.7	21.81					
72	400	4440	7.7	19.58					
83	380	4220	7.8	16.86					
88	380	4080	7.9	15.86					
103	360	3890	8	13.65					
115	350	3720	8.3	12.19					
119	280	4060	10.5	11.77					
133	280	3830	10.6	10.56					
154	280	3540	10.7	9.10					
164	270	3500	10.8	8.56					
190	250	3380	11	7.36					
213	240	3270	11.5	6.58					
241	230	3140	11.8	5.81					
302	205	2980	12	4.64					

K47R37, n_e=1400 min^{-1} — 400 Nm

n_a min^{-1}	M_{amax} Nm	F_{Ra} N	$\varphi_{(/R)}$ '	i	DRU71SJ_FU	DRU71SJ DRU71MJ_FU DRU80SJ_FU	DRU71MJ DRU80SJ DRU80MJ_FU	DRU90MJ DRU90MJ_FU DRU90LJ_FU	DRU90LJ DRU100MJ_FU
						3 3			
0.14	400	5920	-	10138					
0.16	400	5920	-	8534					

19391609/DE – 06/2017

K47R37, n_e=1400 min^{-1} — 400 Nm

n_a min^{-1}	M_{amax} Nm	F_{Ra} N	$\varphi_{(/R)}$ '	i	DRU71SJ_FU	DRU71SJ DRU71MJ_FU DRU80SJ_FU	DRU71MJ DRU80SJ DRU80MJ_FU	DRU90MJ DRU90MJ_FU DRU90LJ_FU	DRU90LJ DRU100MJ_FU
0.18	400	5920	-	7662					
0.21	400	5920	-	6826					
0.23	400	5920	-	5983					
0.27	400	5920	-	5159					
0.30	400	5920	-	4601*					
0.36	400	5920	-	3940					
0.40	400	5920	-	3477					
0.46	400	5920	-	3043					
0.51	400	5920	-	2733					
0.59	400	5920	-	2354					
0.68	400	5920	-	2063					
0.77	400	5920	-	1819					
0.88	400	5920	-	1586					
1.0	400	5920	-	1388					
						3 2			
1.1	400	5920	-	1222					
1.3	400	5920	-	1097					
1.5	400	5920	-	945					
1.7	400	5920	-	831*					
1.9	400	5920	-	718*					
2.2	400	5920	-	639					
2.5	400	5920	-	552					
2.8	400	5920	-	495					
3.3	400	5920	-	426					
3.7	400	5920	-	375					
4.3	400	5920	-	327					
4.8	400	5920	-	289					
5.5	400	5920	-	256					
6.2	400	5920	-	225					
7.1	400	5920	-	198					
8.2	400	5920	-	171					
9.2	400	5920	-	153					
11	400	5920	-	131					
12	400	5920	-	112					
14	400	5920	-	99					
15	400	5920	-	94					

K49, n_e=1400 min^{-1} — 500 Nm

n_a min^{-1}	M_{amax} Nm	F_{Ra} N	$\varphi_{(/R)}$ '	i	DRU71SJ_FU	DRU71SJ DRU71MJ_FU DRU80SJ_FU	DRU71MJ DRU80SJ DRU80MJ_FU	DRU80MJ DRU90MJ DRU90MJ_FU DRU90LJ_FU	DRU90LJ DRU100MJ_FU	DRU100MJ DRU100LJ DRU100LJ_FU
							2			
19	475	9000	-	75.20						
20	445	9000	-	70.19						
23	500	9000	-	60.27						
26	500	8590	-	52.94						
28	500	8380	-	50.29						
32	500	7900	-	44.44						
37	500	7310	-	37.98						
40	500	7000	-	34.81						

19391609/DE – 06/2017

K49, n_e=1400 min^{-1} — 500 Nm

n_a min^{-1}	M_{amax} Nm	F_{Ra} N	$\varphi_{(/R)}$ '	i	DRU71SJ_FU	DRU71SJ DRU71MJ_FU DRU80SJ_FU	DRU71MJ DRU80SJ DRU80MJ_FU	DRU80MJ DRU90MJ DRU90MJ_FU DRU90LJ_FU	DRU90LJ DRU100MJ_FU	DRU100MJ DRU100LJ DRU100LJ_FU
46	500	6550	-	30.55						
48	500	6370	-	28.95						
55	500	5940	-	25.34						
61	500	5610	-	22.83						
70	500	5220	-	20.03						
79	500	4860	-	17.67						
89	490	4590	-	15.67						
105	470	4320	-	13.38						
123	495	5000	-	11.37						
134	480	4860	-	10.42						
153	500	4460	-	9.14						
162	500	4340	-	8.66						
185	500	4050	-	7.58						
205	500	3840	-	6.83						
234	500	3570	-	5.99						
265	485	3400	-	5.29						
299	465	3270	-	4.69						
350	440	3110	-	4.00						

K49R37, n_e=1400 min^{-1} — 500 Nm

n_a min^{-1}	M_{amax} Nm	F_{Ra} N	$\varphi_{(/R)}$ '	i	DRU71SJ_FU	DRU71SJ DRU71MJ_FU DRU80SJ_FU	DRU71MJ DRU80SJ DRU80MJ_FU	DRU90MJ DRU90MJ_FU DRU90LJ_FU	DRU90LJ DRU100MJ_FU
						2 3			
0.20	500	9000	-	7137					
0.23	500	9000	-	5991					
0.27	500	9000	-	5120					
0.35	500	9000	-	4034					
0.39	500	9000	-	3580					
0.45	500	9000	-	3081					
0.50	500	9000	-	2773					
0.55	500	9000	-	2545					
0.59	500	9000	-	2372					
0.66	500	9000	-	2118					
0.72	500	9000	-	1941					
0.80	500	9000	-	1741					
0.86	500	9000	-	1632					
0.92	500	9000	-	1521					
1.1	500	9000	-	1228					
1.4	500	9000	-	1000					
						2 2			
0.98	500	9000	-	1424					
1.1	500	9000	-	1309					
1.2	500	9000	-	1120					
1.5	500	9000	-	908					
1.7	500	9000	-	802					
2.0	500	9000	-	701					
2.2	500	9000	-	645					
2.4	500	9000	-	595					
2.6	500	9000	-	543					

19391609/DE – 06/2017

K49R37, n_e=1400 min^{-1} — 500 Nm

n_a min^{-1}	M_{amax} Nm	F_{Ra} N	$\varphi_{(/R)}$ '	i	DRU71SJ_FU	DRU71SJ DRU71MJ_FU DRU80SJ_FU	DRU71MJ DRU80SJ DRU80MJ_FU	DRU90MJ DRU90MJ_FU DRU90LJ_FU	DRU90LJ DRU100MJ_FU
2.8	500	9000	-	501					
3.1	500	9000	-	449					
3.5	500	9000	-	401					
3.9	500	9000	-	360					
4.2	500	9000	-	330					
4.7	500	9000	-	300					
5.1	500	9000	-	274					
5.8	500	9000	-	243					
6.5	500	9000	-	217					
7.3	500	9000	-	193					
8.0	500	9000	-	176					
9.2	500	9000	-	152					
11	500	9000	-	125					
14	500	9000	-	99					

K57, n_e=1400 min^{-1} — 600 Nm

n_a min^{-1}	M_{amax} Nm	F_{Ra} N	$\varphi_{(/R)}$ '	i	DRU71SJ_FU	DRU71SJ DRU71MJ_FU DRU80SJ_FU	DRU71MJ DRU80SJ DRU80MJ_FU	DRU80MJ DRU90MJ DRU90MJ_FU DRU90LJ_FU	DRU90LJ DRU100MJ_FU
						3			
9.6	600	7630	5.9	145.14*					
11	600	7630	5.9	123.85					
13	600	7630	5.9	108.29					
14	600	7630	5.9	102.88*					
16	600	7630	5.9	90.26*					
18	600	7630	5.9	76.56*					
20	600	7630	6	69.12					
23	600	7630	6	60.81*					
24	600	7630	6	57.42*					
29	600	7630	6	48.89					
32	600	7630	6.1	44.43					
36	600	7630	6.1	38.49					
39	600	7630	6.8	35.70					
46	600	7300	6.9	30.28					
51	600	6930	6.9	27.34					
58	600	6480	6.9	24.05					
62	600	6280	6.9	22.71					
72	575	5910	7	19.34					
80	555	5740	7.2	17.57					
92	535	5430	7.3	15.22					
106	510	5190	7.4	13.25					
117	415	5150	9.4	11.92					
124	415	4990	9.5	11.26					
146	405	4650	9.6	9.59					
161	390	4520	10	8.71					
185	365	4360	10.2	7.55					
213	345	4180	10.4	6.57					
299	300	3800	11	4.69					

19391609/DE – 06/2017

K57R37, n_e=1400 min^{-1} — 600 Nm

n_a min^{-1}	M_{amax} Nm	F_{Ra} N	$\varphi_{(/R)}$ '	i	DRU71SJ_FU	DRU71SJ DRU71MJ_FU DRU80SJ_FU	DRU71MJ DRU80SJ DRU80MJ_FU	DRU90MJ DRU90MJ_FU DRU90LJ_FU	DRU90LJ DRU100MJ_FU
						3 3			
0.12	600	7630	-	12169					
0.13	600	7630	-	11162*					
0.15	600	7630	-	9503					
0.16	600	7630	-	8547					
0.19	600	7630	-	7277					
0.22	600	7630	-	6478*					
0.25	600	7630	-	5662*					
0.28	600	7630	-	5033					
0.32	600	7630	-	4340					
0.36	600	7630	-	3854					
0.41	600	7630	-	3390					
0.48	600	7630	-	2924					
0.54	600	7630	-	2593					
0.62	600	7630	-	2249					
0.70	600	7630	-	1986					
						3 2			
0.80	600	7630	-	1743					
0.91	600	7630	-	1539					
1.0	600	7630	-	1354					
1.2	600	7630	-	1174					
1.4	600	7630	-	1036*					
1.5	600	7630	-	906*					
1.7	600	7630	-	806					
2.0	600	7630	-	699					
2.3	600	7630	-	615					
2.6	600	7630	-	544*					
3.0	600	7630	-	473					
3.3	600	7630	-	421					
3.9	600	7630	-	362					
4.4	600	7630	-	319					
5.0	600	7630	-	280					
5.7	600	7630	-	246					
6.5	600	7630	-	215					
7.3	600	7630	-	192					
8.4	600	7630	-	166					
9.7	600	7630	-	145					
11	600	7630	-	129					
13	600	7630	-	111					
14	600	7630	-	97					

K67, n_e=1400 min^{-1} — 820 Nm

n_a min^{-1}	M_{amax} Nm	F_{Ra} N	$\varphi_{(/R)}$ '	i	DRU71SJ_FU	DRU71SJ DRU71MJ_FU DRU80SJ_FU	DRU71MJ DRU80SJ DRU80MJ_FU	DRU80MJ DRU90MJ DRU90MJ_FU DRU90LJ_FU	DRU90LJ DRU100MJ_FU
						3			
9.7	820	10300	6.2	144.79*					
11	820	10300	6.2	123.54					
13	820	10300	6.1	108.03					

19391609/DE – 06/2017

K67, n_e=1400 min^{-1} — 820 Nm

n_a min^{-1}	M_{amax} Nm	F_{Ra} N	$\varphi_{(/R)}$ '	i	DRU71SJ_FU	DRU71SJ DRU71MJ_FU DRU80SJ_FU	DRU71MJ DRU80SJ DRU80MJ_FU	DRU80MJ DRU90MJ DRU90MJ_FU DRU90LJ_FU	DRU90LJ DRU100MJ_FU
14	820	10300	6.1	102.62					
16	820	10300	6.2	90.04					
18	820	10300	6.2	76.37					
20	820	10300	6.2	68.95					
23	820	10300	6.2	60.66					
24	820	10300	6.2	57.28					
29	820	10300	6.3	48.77					
32	820	10300	6.3	44.32					
36	800	10500	6.4	38.39					
39	820	10300	7.1	35.62					
46	820	10300	7.1	30.22					
51	820	10300	7.1	27.28					
58	800	10500	7.2	24.00					
62	780	10700	7.2	22.66					
73	760	10800	7.3	19.30					
80	740	11000	7.5	17.54					
92	700	11300	7.5	15.19					
106	670	11500	7.6	13.22					
112	530	12300	8.6	12.48					
132	500	11800	8.8	10.63					
145	480	11500	9.1	9.66					
167	440	11100	9.3	8.37					
192	420	10700	9.4	7.28					
269	350	9860	10	5.20					

K67R37, n_e=1400 min^{-1} — 820 Nm

n_a min^{-1}	M_{amax} Nm	F_{Ra} N	$\varphi_{(/R)}$ '	i	DRU71SJ_FU	DRU71SJ DRU71MJ_FU DRU80SJ_FU	DRU71MJ DRU80SJ DRU80MJ_FU	DRU90MJ DRU90MJ_FU DRU90LJ_FU	DRU90LJ DRU100MJ_FU
						3 3			
0.12	820	10300	-	12139					
0.13	820	10300	-	11134					
0.15	820	10300	-	9479					
0.17	820	10300	-	8173					
0.19	820	10300	-	7259					
0.22	820	10300	-	6462					
0.25	820	10300	-	5648					
0.29	820	10300	-	4846					
0.32	820	10300	-	4329					
0.37	820	10300	-	3750					
0.42	820	10300	-	3315					
0.48	820	10300	-	2917					
0.55	820	10300	-	2532					
0.62	820	10300	-	2244					
0.71	820	10300	-	1981					
						3 2			
0.81	820	10300	-	1739					
0.91	820	10300	-	1535					
1.0	820	10300	-	1351					
1.2	820	10300	-	1171					

19391609/DE – 06/2017

K67R37, n_e=1400 min^{-1} — 820 Nm

n_a min^{-1}	M_{amax} Nm	F_{Ra} N	$\varphi_{(/R)}$ '	i	DRU71SJ_FU	DRU71SJ DRU71MJ_FU DRU80SJ_FU	DRU71MJ DRU80SJ DRU80MJ_FU	DRU90MJ DRU90MJ_FU DRU90LJ_FU	DRU90LJ DRU100MJ_FU
1.4	820	10300	-	1034					
1.6	820	10300	-	903					
1.8	820	10300	-	793					
2.0	820	10300	-	697					
2.3	820	10300	-	613					
2.6	820	10300	-	542					
3.0	820	10300	-	471					
3.3	820	10300	-	420					
3.9	820	10300	-	361					
4.3	820	10300	-	323					
5.0	820	10300	-	279					
5.7	820	10300	-	246					
6.5	820	10300	-	217					
7.3	820	10300	-	191					
8.4	820	10300	-	166					
9.7	820	10300	-	144					
11	820	10300	-	122					

K77, n_e=1400 min^{-1} — 1550 Nm

n_a min^{-1}	M_{amax} Nm	F_{Ra} N	$\varphi_{(/R)}$ '	i	DRU71SJ_FU	DRU71SJ DRU71MJ_FU DRU80SJ_FU	DRU71MJ DRU80SJ DRU80MJ_FU	DRU80MJ DRU90MJ DRU90MJ_FU DRU90LJ_FU	DRU90LJ DRU100MJ_FU	DRU100MJ DRU100LJ DRU100LJ_FU
						3				
7.3	1450	16100	5.4	192.18						
7.8	1450	16100	5.4	179.37						
9.1	1550	15400	5.4	154.02						
10	1550	15400	5.4	135.28						
11	1550	15400	5.4	128.52						
12	1550	15400	5.4	113.56						
14	1550	15400	5.4	97.05						
16	1550	15400	5.4	88.97						
18	1550	15400	5.4	78.07						
19	1550	15400	5.4	73.99						
22	1550	15400	5.5	64.75						
24	1550	15400	5.5	58.34						
27	1550	15400	5.5	51.18						
31	1550	15400	5.5	45.16						
35	1550	15400	5.6	40.04						
36	1500	15700	6	38.39						
40	1550	15400	6	35.20						
45	1550	15400	6.1	30.89						
48	1550	15400	6.1	29.27						
55	1550	15400	6.1	25.62						
61	1550	15400	6.3	23.08						
69	1500	15700	6.3	20.25						
78	1450	16100	6.3	17.87						
88	1400	15500	6.4	15.84						
104	1340	14800	6.5	13.52						
113	1000	15100	7.9	12.36						
129	990	14400	7.8	10.84						

19391609/DE – 06/2017

K77, n_e=1400 min^{-1} — 1550 Nm

n_a min^{-1}	M_{amax} Nm	F_{Ra} N	$\varphi_{(/R)}$ '	i	DRU71SJ_FU	DRU71SJ DRU71MJ_FU DRU80SJ_FU	DRU71MJ DRU80SJ DRU80MJ_FU	DRU80MJ DRU90MJ DRU90MJ_FU DRU90LJ_FU	DRU90LJ DRU100MJ_FU	DRU100MJ DRU100LJ DRU100LJ_FU
146	940	13900	7.9	9.56						
165	890	13500	8.2	8.48						
193	820	13100	8.3	7.24						

K77R37, n_e=1400 min^{-1} — 1550 Nm

n_a min^{-1}	M_{amax} Nm	F_{Ra} N	$\varphi_{(/R)}$ '	i	DRU71SJ_FU	DRU71SJ DRU71MJ_FU DRU80SJ_FU	DRU71MJ DRU80SJ DRU80MJ_FU	DRU90MJ DRU90MJ_FU DRU90LJ_FU	DRU90LJ DRU100MJ_FU
						3 3			
0.09	1550	15400	-	15310					
0.10	1550	15400	-	14043					
0.12	1550	15400	-	11955					
0.14	1550	15400	-	10217					
0.16	1550	15400	-	8809					
0.19	1550	15400	-	7528					
0.21	1550	15400	-	6606					
0.24	1550	15400	-	5774					
0.28	1550	15400	-	5089					
0.31	1550	15400	-	4489					
0.35	1550	15400	-	3961					
0.40	1550	15400	-	3485					
0.48	1550	15400	-	2901					
0.52	1550	15400	-	2717					
0.59	1550	15400	-	2370					
						3 2			
0.68	1550	15400	-	2050					
0.79	1550	15400	-	1772					
0.92	1550	15400	-	1514					
1.0	1550	15400	-	1388					
1.1	1550	15400	-	1218					
1.3	1550	15400	-	1053					
1.5	1550	15400	-	924					
1.7	1550	15400	-	815					
2.0	1550	15400	-	709					
2.3	1550	15400	-	622					
2.5	1550	15400	-	552					
2.9	1550	15400	-	485					
3.3	1550	15400	-	428					
3.8	1550	15400	-	367					
4.3	1550	15400	-	328					
4.8	1550	15400	-	290					
5.6	1550	15400	-	252					
6.3	1550	15400	-	221					
7.2	1550	15400	-	195					
8.0	1550	15400	-	175					
9.1	1550	15400	-	154					

19391609/DE – 06/2017

K87, n_e=1400 min^{-1} — 2700 Nm

n_a min^{-1}	M_{amax} Nm	F_{Ra} N	$\varphi_{(/R)}$ '	i	DRU71MJ_FU DRU80SJ_FU	DRU71MJ DRU80SJ DRU80MJ_FU	DRU80MJ DRU90MJ DRU90MJ_FU DRU90LJ_FU	DRU90LJ DRU100MJ_FU	DRU100MJ DRU100LJ DRU100LJ_FU
						3			
7.1	2700	27300	5.3	197.37					
8.0	2700	27300	5.3	174.19					
8.5	2700	27300	5.3	164.34*					
9.5	2700	27300	5.4	147.32*					
11	2700	27300	5.4	126.91*					
12	2700	27300	5.4	115.82					
14	2700	27300	5.4	102.71*					
16	2700	27300	5.4	86.34					
18	2700	27300	5.4	79.34					
20	2700	27300	5.4	70.46					
22	2700	26200	5.4	63.00*					
25	2700	25000	5.5	56.64					
28	2700	23500	5.5	49.16					
32	2600	22800	5.5	44.02					
38	2500	21400	5.5	36.52*					
45	2700	19200	6.1	31.39					
50	2600	18500	6.1	27.88					
56	2500	18000	6.1	24.92					
62	2300	17900	6.2	22.41					
72	2300	16800	6.3	19.45					
80	2200	16300	6.3	17.42					
88	1800	16000	6.5	16.00					
97	2100	15300	6.4	14.45					
111	2000	14800	6.5	12.56					
125	1500	14900	6.7	11.17					
140	1500	14200	6.8	10.00					
169	1400	13500	7	8.29					
194	1300	13200	7.1	7.21					

K87R57, n_e=1400 min^{-1} — 2700 Nm

n_a min^{-1}	M_{amax} Nm	F_{Ra} N	$\varphi_{(/R)}$ '	i	DRU71SJ_FU	DRU71SJ DRU71MJ_FU DRU80SJ_FU	DRU71MJ DRU80SJ DRU80MJ_FU	DRU80MJ DRU90MJ DRU90MJ_FU DRU90LJ_FU	DRU90LJ DRU100MJ_FU
						3 3			
0.09	2700	27300	-	14829					
0.11	2700	27300	-	13168					
0.12	2700	27300	-	11737					
0.14	2700	27300	-	10217					
0.15	2700	27300	-	9073					
0.18	2700	27300	-	7854					
0.20	2700	27300	-	6832					
0.24	2700	27300	-	5930					
0.27	2700	27300	-	5240					
0.31	2700	27300	-	4562					
0.35	2700	27300	-	4037					
0.39	2700	27300	-	3609					
0.45	2700	27300	-	3107					
0.51	2700	27300	-	2728					

19391609/DE – 06/2017

K87R57, n_e=1400 min^{-1} — 2700 Nm

n_a min^{-1}	M_{amax} Nm	F_{Ra} N	$\varphi_{(/R)}$ '	i	DRU71SJ_FU	DRU71SJ DRU71MJ_FU DRU80SJ_FU	DRU71MJ DRU80SJ DRU80MJ_FU	DRU80MJ DRU90MJ DRU90MJ_FU DRU90LJ_FU	DRU90LJ DRU100MJ_FU
0.59	2700	27300	-	2371					
						3 2			
0.67	2700	27300	-	2088					
0.76	2700	27300	-	1854					
0.84	2700	27300	-	1657					
0.99	2700	27300	-	1415					
1.1	2700	27300	-	1229					
1.3	2700	27300	-	1078					
1.5	2700	27300	-	951					
1.7	2700	27300	-	837					
1.9	2700	27300	-	726					
2.2	2700	27300	-	638					
2.5	2700	27300	-	562*					
3.0	2700	27300	-	474*					
3.3	2700	27300	-	426					
3.8	2700	27300	-	373					
4.2	2700	27300	-	330					
4.8	2700	27300	-	294					
5.6	2700	27300	-	250					
5.9	2700	27300	-	236					
7.0	2700	27300	-	201					
7.7	2700	27300	-	183					
8.8	2700	27300	-	159					
9.9	2600	27400	-	141					

K97, n_e=1400 min^{-1} — 4300 Nm

n_a min^{-1}	M_{amax} Nm	F_{Ra} N	$\varphi_{(/R)}$ '	i	DRU71MJ_FU DRU80SJ_FU	DRU71MJ DRU80SJ DRU80MJ_FU	DRU80MJ DRU90MJ DRU90MJ_FU DRU90LJ_FU	DRU90LJ DRU100MJ_FU	DRU100MJ DRU100LJ DRU100LJ_FU
						3			
8.0	4300	40000	6.8	176.05*					
9.1	4300	40000	6.8	153.21*					
10.0	4300	40000	6.8	140.28					
11	4300	40000	6.8	123.93*					
13	4300	40000	6.8	105.13					
14	4300	40000	6.8	96.80					
16	4300	38800	6.8	86.52					
18	4300	37100	6.8	77.89*					
20	4300	35600	6.9	70.54					
22	4300	33800	6.9	62.55					
25	4300	32300	6.9	56.55					
29	4300	30000	6.9	47.93*					
33	4300	28300	6.9	41.87					
37	4300	27100	7.4	38.30					
41	4300	25700	7.5	34.23					
45	4300	24500	7.5	30.82					
50	4300	23300	7.5	27.91					
57	4300	22000	7.6	24.75					
63	4300	20900	7.6	22.37					

19391609/DE – 06/2017

K97, n_e=1400 min^{-1}									4300 Nm
n_a min^{-1}	M_{amax} Nm	F_{Ra} N	$\varphi_{(/R)}$ '	i	DRU71MJ_FU DRU80SJ_FU	DRU71MJ DRU80SJ DRU80MJ_FU	DRU80MJ DRU90MJ DRU90MJ_FU DRU90LJ_FU	DRU90LJ DRU100MJ_FU	DRU100MJ DRU100LJ DRU100LJ_FU
74	4300	19100	7.6	18.96					
85	4300	17800	7.7	16.56					
101	4300	16100	7.7	13.85					
117	3890	16200	7.8	11.99					
134	2870	16400	9.7	10.41					
161	2660	15800	9.8	8.71					
186	2400	15700	10	7.54					

K97R57, n_e=1400 min^{-1}									4300 Nm
n_a min^{-1}	M_{amax} Nm	F_{Ra} N	$\varphi_{(/R)}$ '	i	DRU71SJ_FU	DRU71SJ DRU71MJ_FU DRU80SJ_FU	DRU71MJ DRU80SJ DRU80MJ_FU	DRU80MJ DRU90MJ DRU90MJ_FU DRU90LJ_FU	DRU90LJ DRU100MJ_FU
						3 3			
0.08	4300	40000	-	18091					
0.08	4300	40000	-	16666					
0.09	4300	40000	-	14897					
0.11	4300	40000	-	13182					
0.12	4300	40000	-	11677					
0.14	4300	40000	-	10317					
0.15	4300	40000	-	9083					
0.17	4300	40000	-	8054					
0.20	4300	40000	-	6970					
0.23	4300	40000	-	6027					
0.26	4300	40000	-	5391					
0.30	4300	40000	-	4669					
0.34	4300	40000	-	4082					
0.39	4300	40000	-	3583					
0.45	4300	40000	-	3108*					
0.51	4300	40000	-	2757					
						3 2			
0.58	4300	40000	-	2419					
0.66	4300	40000	-	2123					
0.75	4300	40000	-	1856					
0.86	4300	40000	-	1625					
0.98	4300	40000	-	1430					
1.1	4300	40000	-	1261					
1.3	4300	40000	-	1102					
1.5	4300	40000	-	957					
1.6	4300	40000	-	855					
1.9	4300	40000	-	743					
2.1	4300	40000	-	652*					
2.4	4300	40000	-	573					
2.8	4300	40000	-	504					
3.2	4300	40000	-	437					
3.7	4300	40000	-	382*					
4.1	4300	40000	-	342*					
4.6	4300	40000	-	305					
5.4	4300	40000	-	258					

19391609/DE – 06/2017

K97R57, n_e=1400 min^{-1}									4300 Nm
n_a min^{-1}	M_{amax} Nm	F_{Ra} N	$\varphi_{(/R)}$ '	i	DRU71SJ_FU	DRU71SJ DRU71MJ_FU DRU80SJ_FU	DRU71MJ DRU80SJ DRU80MJ_FU	DRU80MJ DRU90MJ DRU90MJ_FU DRU90LJ_FU	DRU90LJ DRU100MJ_FU
6.0	4300	40000	-	232					
7.0	4300	40000	-	199					

19391609/DE – 06/2017

10.2 Auswahltabellen K..DRU..J (IE4), 50 Hz

P_m = 0.18 kW

n_a min^{-1} 50Hz	n_a min^{-1} 10-50Hz	M_a Nm	i	F_{Ra} 1) N	SEW f_B					m kg	
-	**2.1 - 10**	166	144.79*	13000	4.9	**K**	**67**	**DRU**	**71SJ4**	36	606
						KF	**67**	**DRU**	**71SJ4**	42	607
						KA	**67**	**DRU**	**71SJ4**	34	608
						KAF	**67**	**DRU**	**71SJ4**	39	607
-	**2.1 - 10**	166	145.14*	9740	3.6	**K**	**57**	**DRU**	**71SJ4**	31	600
12	**2.4 - 12**	142	123.85	9810	4.2	**KF**	**57**	**DRU**	**71SJ4**	35	601
14	**2.8 - 14**	124	108.29	9860	4.8	**KA**	**57**	**DRU**	**71SJ4**	29	602
						KAF	**57**	**DRU**	**71SJ4**	34	601
-	**2.3 - 11**	151	131.87*	8000	2.6						
-	**2.5 - 12**	139	121.48*	8050	2.9	**K**	**47**	**DRU**	**71SJ4**	25	590
14	**2.9 - 14**	120	104.37	8110	3.3	**KF**	**47**	**DRU**	**71SJ4**	28	591
17	**3.3 - 17**	104	90.86	8160	3.8	**KA**	**47**	**DRU**	**71SJ4**	24	592
18	**3.5 - 18**	98	85.12*	8170	4.1	**KAF**	**47**	**DRU**	**71SJ4**	27	591
20	**4.0 - 20**	86	75.20*	8200	4.6						
-	**2.8 - 14**	122	106.38	6320	1.65						
-	**3.1 - 15**	112	97.81	6380	1.80						
18	**3.6 - 18**	96	83.69	6460	2.1						
21	**4.1 - 21**	83	72.54	6420	2.4	**K**	**37**	**DRU**	**71SJ4**	19	580
22	**4.4 - 22**	78	67.80	6310	2.6	**KF**	**37**	**DRU**	**71SJ4**	21	581
26	**5.1 - 26**	67	58.60	6070	3.0	**KA**	**37**	**DRU**	**71SJ4**	18	582
30	**6.0 - 30**	57	49.79	5810	3.5	**KAF**	**37**	**DRU**	**71SJ4**	20	581
34	**6.7 - 34**	51	44.46	5630	3.9						
40	**7.9 - 40**	44	37.97	5390	4.6						
42	**8.4 - 42**	41	35.57	5290	4.9						
-	**5.5 - 27**	57	54.89	5300	2.3						
-	**6.0 - 30**	52	50.35	5320	2.5	**K**	**29**	**DRU**	**71SJ4**	12	573
35	**7.0 - 35**	45	42.87	5350	2.9	**KF**	**29**	**DRU**	**71SJ4**	14	577
41	**8.1 - 41**	38	36.96	5260	3.2	**KA**	**29**	**DRU**	**71SJ4**	12	579
50	**10.0 - 50**	31	30.11	4960	3.7	**KAF**	**29**	**DRU**	**71SJ4**	13	577
-	**6.7 - 34**	46	44.48	4470	1.50						
-	**7.4 - 37**	42	40.63	4500	1.60						
44	**8.7 - 44**	36	34.29	4500	1.80						
51	**10 - 51**	31	29.29	4460	2.0						
55	**11 - 55**	28	27.16	4370	2.1						
-	**12 - 62**	26	24.06	4270	3.1						
-	**14 - 68**	23	21.98	4160	3.4	**K**	**19**	**DRU**	**71SJ4**	11	567
81	**16 - 81**	20	18.55	3950	4.0	**KF**	**19**	**DRU**	**71SJ4**	11	570
95	**19 - 95**	17	15.84	3770	4.8	**KA**	**19**	**DRU**	**71SJ4**	11	572
102	**20 - 102**	16	14.69	3680	5.1	**KAF**	**19**	**DRU**	**71SJ4**	11	570
118	**24 - 118**	14	12.70	3520	5.9						
127	**25 - 127**	13	11.84	3450	6.3						
145	**29 - 145**	11	10.32	3310	6.9						
-	**31 - 157**	10	9.58	3250	6.0						
185	**37 - 185**	8.8	8.09	3080	9.1						

P_m = 0.25 kW

n_a min^{-1} 50Hz	n_a min^{-1} 10-50Hz	M_a Nm	i	F_{Ra} 1) N	SEW f_B					m kg	
-	**1.6 - 7.8**	305	192.18	20000	4.7	**K**	**77**	**DRU**	**71SJ4**	63	612
						KF	**77**	**DRU**	**71SJ4**	71	613
						KA	**77**	**DRU**	**71SJ4**	55	614
						KAF	**77**	**DRU**	**71SJ4**	63	613
-	**2.1 - 10**	230	144.79*	13000	3.6	**K**	**67**	**DRU**	**71SJ4**	36	606
12	**2.4 - 12**	197	123.54	13000	4.2	**KF**	**67**	**DRU**	**71SJ4**	42	607
14	**2.8 - 14**	172	108.03	13000	4.8	**KA**	**67**	**DRU**	**71SJ4**	34	608
						KAF	**67**	**DRU**	**71SJ4**	39	607

19391609/DE – 06/2017

P_m = 0.25 kW

n_a min^{-1} 50Hz	n_a min^{-1} 10-50Hz	M_a Nm	i	F_{Ra} [1] N	SEW f_B					m kg	
-	**2.1 - 10**	230	145.14*	9530	2.6						
12	**2.4 - 12**	197	123.85	9640	3.0	**K**	**57**	**DRU**	**71SJ4**	31	600
14	**2.8 - 14**	172	108.29	9720	3.5	**KF**	**57**	**DRU**	**71SJ4**	35	601
15	**2.9 - 15**	164	102.88*	9740	3.7	**KA**	**57**	**DRU**	**71SJ4**	29	602
17	**3.3 - 17**	144	90.26*	9800	4.2	**KAF**	**57**	**DRU**	**71SJ4**	34	601
20	**3.9 - 20**	122	76.56*	9860	4.9						
						K	**49**	**DRU**	**71SJ4**	37	596
-	**4.0 - 20**	120	75.20	9000	4.0	**KF**	**49**	**DRU**	**71SJ4**	39	597
-	**4.3 - 21**	112	70.19	9000	4.0	**KA**	**49**	**DRU**	**71SJ4**	35	598
						KAF	**49**	**DRU**	**71SJ4**	39	597
-	**2.3 - 11**	205	131.87*	7720	1.90						
-	**2.5 - 12**	193	121.48*	7810	2.1						
14	**2.9 - 14**	166	104.37	7940	2.4						
17	**3.3 - 17**	145	90.86	8030	2.8	**K**	**47**	**DRU**	**71SJ4**	25	590
18	**3.5 - 18**	136	85.12*	8060	3.0	**KF**	**47**	**DRU**	**71SJ4**	28	591
20	**4.0 - 20**	120	75.20*	8110	3.3	**KA**	**47**	**DRU**	**71SJ4**	24	592
21	**4.3 - 21**	111	69.84	8140	3.6	**KAF**	**47**	**DRU**	**71SJ4**	27	591
24	**4.7 - 24**	101	63.30*	8170	4.0						
26	**5.3 - 26**	90	56.83	8190	4.4						
						K	**39**	**DRU**	**71SJ4**	24	586
-	**5.2 - 26**	93	58.24	7500	3.2	**KF**	**39**	**DRU**	**71SJ4**	25	587
30	**6.0 - 30**	79	49.69	7500	3.8	**KA**	**39**	**DRU**	**71SJ4**	23	588
						KAF	**39**	**DRU**	**71SJ4**	24	587
-	**2.8 - 14**	169	106.38	5960	1.20						
-	**3.1 - 15**	156	97.81	6070	1.30						
18	**3.6 - 18**	133	83.69	6240	1.50						
21	**4.1 - 21**	115	72.54	6120	1.75						
22	**4.4 - 22**	108	67.80	6030	1.85	**K**	**37**	**DRU**	**71SJ4**	19	580
26	**5.1 - 26**	93	58.60	5830	2.1	**KF**	**37**	**DRU**	**71SJ4**	21	581
30	**6.0 - 30**	79	49.79	5610	2.5	**KA**	**37**	**DRU**	**71SJ4**	18	582
34	**6.7 - 34**	71	44.46	5450	2.8	**KAF**	**37**	**DRU**	**71SJ4**	20	581
40	**7.9 - 40**	60	37.97	5230	3.3						
42	**8.4 - 42**	57	35.57	5140	3.5						
50	**10 - 50**	48	29.96	4910	4.2						
52	**10 - 52**	46	28.83	4860	4.4						
-	**5.5 - 27**	79	54.89	5220	1.65						
-	**6.0 - 30**	73	50.35	5240	1.80						
35	**7.0 - 35**	62	42.87	5280	2.1						
41	**8.1 - 41**	53	36.96	5110	2.3	**K**	**29**	**DRU**	**71SJ4**	12	573
50	**10.0 - 50**	44	30.11	4840	2.6	**KF**	**29**	**DRU**	**71SJ4**	14	577
-	**10 - 51**	44	29.69	4860	3.0	**KA**	**29**	**DRU**	**71SJ4**	12	579
-	**11 - 55**	40	27.23	4740	3.2	**KAF**	**29**	**DRU**	**71SJ4**	13	577
60	**12 - 60**	36	24.91	4590	3.0						
65	**13 - 65**	34	23.19	4530	3.8						
68	**14 - 68**	32	22.08	4440	3.3						
-	**6.7 - 34**	64	44.48	4370	1.05						
-	**7.4 - 37**	59	40.63	4400	1.15						
44	**8.7 - 44**	50	34.29	4460	1.30						
51	**10 - 51**	42	29.29	4320	1.45						
55	**11 - 55**	39	27.16	4240	1.55						
-	**12 - 62**	36	24.06	4170	2.2						
-	**14 - 68**	32	21.98	4060	2.5						
81	**16 - 81**	27	18.55	3870	2.9	**K**	**19**	**DRU**	**71SJ4**	11	567
95	**19 - 95**	23	15.84	3700	3.4	**KF**	**19**	**DRU**	**71SJ4**	11	570
102	**20 - 102**	22	14.69	3620	3.7	**KA**	**19**	**DRU**	**71SJ4**	11	572
118	**24 - 118**	19	12.70	3470	4.3	**KAF**	**19**	**DRU**	**71SJ4**	11	570
127	**25 - 127**	18	11.84	3400	4.5						
145	**29 - 145**	15	10.32	3260	5.0						
-	**31 - 157**	14	9.58	3220	4.3						
185	**37 - 185**	12	8.09	3050	6.5						
217	**43 - 217**	10	6.91	2910	7.7						
234	**47 - 234**	9.7	6.41	2840	8.3						
271	**54 - 271**	8.4	5.54	2710	9.6						

19391609/DE – 06/2017

P_m = 0.37 kW

n_a min^{-1} 50Hz	n_a min^{-1} 10-50Hz	M_a Nm	i	F_{Ra} [1] N	SEW f_B					m kg	
						K	77	DRU	71MJ4	63	612
-	1.9 - 9.7	360	154.02	19900	4.3	KF	77	DRU	71MJ4	71	613
11	2.2 - 11	315	135.28	20000	4.9	KA	77	DRU	71MJ4	55	614
						KAF	77	DRU	71MJ4	63	613
-	2.4 - 12	290	123.54	13000	2.8						
14	2.8 - 14	250	108.03	13000	3.2	K	67	DRU	71MJ4	36	606
15	2.9 - 15	240	102.62	13000	3.4	KF	67	DRU	71MJ4	42	607
17	3.3 - 17	210	90.04	13000	3.9	KA	67	DRU	71MJ4	34	608
20	3.9 - 20	180	76.37	13000	4.6	KAF	67	DRU	71MJ4	39	607
-	2.4 - 12	290	123.85	9320	2.1						
14	2.8 - 14	255	108.29	9450	2.4						
15	2.9 - 15	240	102.88*	9490	2.5	K	57	DRU	71MJ4	31	600
17	3.3 - 17	210	90.26*	9590	2.8	KF	57	DRU	71MJ4	35	601
20	3.9 - 20	180	76.56*	9690	3.3	KA	57	DRU	71MJ4	29	602
22	4.3 - 22	163	69.12	9750	3.7	KAF	57	DRU	71MJ4	34	601
25	4.9 - 25	143	60.81*	9800	4.2						
26	5.2 - 26	135	57.42*	9830	4.4						
						K	49	DRU	71MJ4	37	596
-	5.0 - 25	142	60.27	9000	3.5	KF	49	DRU	71MJ4	39	597
						KA	49	DRU	71MJ4	35	598
						KAF	49	DRU	71MJ4	39	597
-	2.9 - 14	245	104.37	7490	1.65						
17	3.3 - 17	210	90.86	7690	1.85						
18	3.5 - 18	200	85.12*	7770	2.0						
20	4.0 - 20	177	75.20*	7890	2.3						
21	4.3 - 21	164	69.84	7940	2.4	K	47	DRU	71MJ4	25	590
24	4.7 - 24	149	63.30*	8010	2.7	KF	47	DRU	71MJ4	28	591
26	5.3 - 26	134	56.83	8060	3.0	KA	47	DRU	71MJ4	24	592
31	6.1 - 31	115	48.95*	8120	3.5	KAF	47	DRU	71MJ4	27	591
33	6.5 - 33	108	46.03*	8140	3.7						
38	7.6 - 38	93	39.61	8180	4.3						
42	8.5 - 42	83	35.39	8210	4.8						
-	6.0 - 30	117	49.69	7500	2.6	K	39	DRU	71MJ4	24	586
35	6.9 - 35	102	43.45	7500	2.9	KF	39	DRU	71MJ4	25	587
36	7.3 - 36	97	41.28	7500	3.1	KA	39	DRU	71MJ4	23	588
41	8.3 - 41	85	36.22	7500	3.5	KAF	39	DRU	71MJ4	24	587
-	3.6 - 18	197	83.69	5670	1.00						
21	4.1 - 21	171	72.54	5620	1.15						
22	4.4 - 22	160	67.80	5560	1.25						
26	5.1 - 26	138	58.60	5430	1.45						
30	6.0 - 30	117	49.79	5260	1.70						
34	6.7 - 34	105	44.46	5140	1.90						
40	7.9 - 40	89	37.97	4970	2.2	K	37	DRU	71MJ4	19	580
42	8.4 - 42	84	35.57	4900	2.4	KF	37	DRU	71MJ4	21	581
50	10 - 50	71	29.96	4700	2.8	KA	37	DRU	71MJ4	18	582
-	10 - 52	68	28.83	4660	3.0	KAF	37	DRU	71MJ4	20	581
60	12 - 60	59	24.99	4490	3.4						
64	13 - 64	55	23.36	4420	3.5						
74	15 - 74	48	20.19	4250	3.9						
87	17 - 87	40	17.15	4070	4.5						
98	20 - 98	36	15.31	3940	4.8						
-	7.0 - 35	92	42.87	5020	1.40						
41	8.1 - 41	79	36.96	4860	1.55						
50	10.0 - 50	64	30.11	4630	1.80	K	29	DRU	71MJ4	12	573
60	12 - 60	53	24.91	4420	2.0	KF	29	DRU	71MJ4	14	577
-	13 - 65	51	23.19	4380	2.6	KA	29	DRU	71MJ4	12	579
68	14 - 68	47	22.08	4280	2.2	KAF	29	DRU	71MJ4	13	577
75	15 - 75	44	19.99	4210	3.0						
92	18 - 92	36	16.29	3980	3.6						

19391609/DE – 06/2017

P_m = 0.37 kW

n_a min^{-1} 50Hz	n_a min^{-1} 10-50Hz	M_a Nm	i	F_{Ra} [1] N	SEW f_B					m kg	
-	**8.7 - 44**	73	34.29	4190	0.85						
51	**10 - 51**	63	29.29	4060	0.95						
55	**11 - 55**	58	27.16	4000	1.05						
-	**16 - 81**	41	18.55	3740	1.95						
95	**19 - 95**	35	15.84	3590	2.3						
102	**20 - 102**	32	14.69	3520	2.5	**K**	**19**	**DRU**	**71MJ4**	11	567
118	**24 - 118**	28	12.70	3380	2.9	**KF**	**19**	**DRU**	**71MJ4**	11	570
127	**25 - 127**	26	11.84	3310	3.0	**KA**	**19**	**DRU**	**71MJ4**	11	572
145	**29 - 145**	23	10.32	3190	3.4	**KAF**	**19**	**DRU**	**71MJ4**	11	570
-	**37 - 185**	18	8.09	3010	4.4						
217	**43 - 217**	15	6.91	2870	5.2						
234	**47 - 234**	14	6.41	2800	5.6						
271	**54 - 271**	12	5.54	2680	6.5						
291	**58 - 291**	12	5.16	2620	6.9						
333	**67 - 333**	10	4.50	2510	8.0						

P_m = 0.55 kW

n_a min^{-1} 50Hz	n_a min^{-1} 10-50Hz	M_a Nm	i	F_{Ra} [1] N	SEW f_B					m kg	
-	**1.5 - 7.6**	690	197.37	28900	3.9	**K**	**87**	**DRU**	**80SJ4**	105	618
8.6	**1.7 - 8.6**	605	174.19	29000	4.4	**KF**	**87**	**DRU**	**80SJ4**	110	619
9.1	**1.8 - 9.1**	575	164.34*	29000	4.7	**KA**	**87**	**DRU**	**80SJ4**	91	620
						KAF	**87**	**DRU**	**80SJ4**	105	619
-	**1.9 - 9.7**	535	154.02	19600	2.9						
11	**2.2 - 11**	470	135.28	19700	3.3	**K**	**77**	**DRU**	**80SJ4**	66	612
12	**2.3 - 12**	450	128.52	19800	3.4	**KF**	**77**	**DRU**	**80SJ4**	74	613
13	**2.6 - 13**	395	113.56	19900	3.9	**KA**	**77**	**DRU**	**80SJ4**	58	614
15	**3.1 - 15**	335	97.05	19900	4.6	**KAF**	**77**	**DRU**	**80SJ4**	66	613
17	**3.4 - 17**	310	88.97	20000	5.0						
-	**2.4 - 12**	430	123.54	12700	1.90						
14	**2.8 - 14**	375	108.03	12900	2.2						
15	**2.9 - 15**	355	102.62	12900	2.3						
17	**3.3 - 17**	315	90.04	13000	2.6	**K**	**67**	**DRU**	**80SJ4**	41	606
20	**3.9 - 20**	265	76.37	13000	3.1	**KF**	**67**	**DRU**	**80SJ4**	47	607
22	**4.4 - 22**	240	68.95	13000	3.4	**KA**	**67**	**DRU**	**80SJ4**	39	608
25	**4.9 - 25**	210	60.66	13000	3.9	**KAF**	**67**	**DRU**	**80SJ4**	44	607
26	**5.2 - 26**	200	57.28	13000	4.1						
31	**6.2 - 31**	171	48.77	13000	4.8						
-	**2.4 - 12**	430	123.85	8730	1.40						
14	**2.8 - 14**	375	108.29	8970	1.60						
15	**2.9 - 15**	360	102.88*	9050	1.65						
17	**3.3 - 17**	315	90.26*	9220	1.90						
20	**3.9 - 20**	265	76.56*	9400	2.2	**K**	**57**	**DRU**	**80SJ4**	35	600
22	**4.3 - 22**	240	69.12	9490	2.5	**KF**	**57**	**DRU**	**80SJ4**	40	601
25	**4.9 - 25**	210	60.81*	9590	2.8	**KA**	**57**	**DRU**	**80SJ4**	33	602
26	**5.2 - 26**	200	57.42*	9630	3.0	**KAF**	**57**	**DRU**	**80SJ4**	39	601
31	**6.1 - 31**	171	48.89	9720	3.5						
34	**6.8 - 34**	156	44.43	9770	3.9						
39	**7.8 - 39**	135	38.49	9830	4.5						
42	**8.4 - 42**	125	35.70	9860	4.8						
-	**5.0 - 25**	210	60.27	9000	2.4						
28	**5.7 - 28**	185	52.94	9000	2.7	**K**	**49**	**DRU**	**80SJ4**	40	596
30	**6.0 - 30**	176	50.29	9000	2.8	**KF**	**49**	**DRU**	**80SJ4**	42	597
34	**6.8 - 34**	156	44.44	9000	3.2	**KA**	**49**	**DRU**	**80SJ4**	38	598
40	**7.9 - 40**	133	37.98	9000	3.8	**KAF**	**49**	**DRU**	**80SJ4**	43	597

19391609/DE – 06/2017

P_m = 0.55 kW

n_a min^{-1} 50Hz	n_a min^{-1} 10-50Hz	M_a Nm	i	F_{Ra} [1] N	SEW f_B					m kg	
-	**2.9 - 14**	365	104.37	6380	1.10						
17	**3.3 - 17**	315	90.86	6890	1.25						
18	**3.5 - 18**	295	85.12*	7080	1.35						
20	**4.0 - 20**	260	75.20*	7360	1.50						
21	**4.3 - 21**	240	69.84	7500	1.65						
24	**4.7 - 24**	220	63.30*	7650	1.80						
26	**5.3 - 26**	199	56.83	7780	2.0	**K**	**47**	**DRU**	**80SJ4**	30	590
31	**6.1 - 31**	171	48.95*	7910	2.3	**KF**	**47**	**DRU**	**80SJ4**	33	591
33	**6.5 - 33**	161	46.03*	7960	2.5	**KA**	**47**	**DRU**	**80SJ4**	29	592
38	**7.6 - 38**	139	39.61	8050	2.9	**KAF**	**47**	**DRU**	**80SJ4**	32	591
42	**8.5 - 42**	124	35.39	7960	3.2						
48	**9.6 - 48**	110	31.30	7720	3.6						
51	**10 - 51**	103	29.32	7580	3.9						
58	**12 - 58**	91	25.91	7340	4.4						
62	**12 - 62**	84	24.06	7190	4.8						
-	**6.0 - 30**	174	49.69	7500	1.70						
35	**6.9 - 35**	152	43.45	7500	1.95						
36	**7.3 - 36**	145	41.28	7500	2.1	**K**	**39**	**DRU**	**80SJ4**	28	586
41	**8.3 - 41**	127	36.22	7500	2.4	**KF**	**39**	**DRU**	**80SJ4**	30	587
49	**9.8 - 49**	108	30.72	7420	2.8	**KA**	**39**	**DRU**	**80SJ4**	27	588
54	**11 - 54**	97	27.73	7230	3.1	**KAF**	**39**	**DRU**	**80SJ4**	29	587
61	**12 - 61**	85	24.40	6990	3.5						
65	**13 - 65**	81	23.04	6890	3.7						
30	**6.0 - 30**	174	49.79	4740	1.15						
34	**6.7 - 34**	156	44.46	4680	1.30						
40	**7.9 - 40**	133	37.97	4570	1.50						
42	**8.4 - 42**	124	35.57	4520	1.60						
50	**10 - 50**	105	29.96	4390	1.90						
-	**10 - 52**	101	28.83	4360	2.0	**K**	**37**	**DRU**	**80SJ4**	22	580
60	**12 - 60**	88	24.99	4230	2.3	**KF**	**37**	**DRU**	**80SJ4**	24	581
64	**13 - 64**	82	23.36	4170	2.4	**KA**	**37**	**DRU**	**80SJ4**	22	582
74	**15 - 74**	71	20.19	4040	2.6	**KAF**	**37**	**DRU**	**80SJ4**	23	581
87	**17 - 87**	60	17.15	3890	3.0						
98	**20 - 98**	54	15.31	3780	3.3						
115	**23 - 115**	46	13.08	3640	3.6						
124	**25 - 124**	42	12.14	3570	3.8						
143	**29 - 143**	37	10.49	3430	4.4						
-	**7.0 - 35**	136	42.87	4570	0.95						
41	**8.1 - 41**	118	36.96	4470	1.05						
50	**10.0 - 50**	96	30.11	4320	1.20						
60	**12 - 60**	79	24.91	4160	1.35						
-	**13 - 65**	75	23.19	4160	1.70	**K**	**29**	**DRU**	**80SJ4**	16	573
68	**14 - 68**	70	22.08	4060	1.50	**KF**	**29**	**DRU**	**80SJ4**	17	577
75	**15 - 75**	65	19.99	4020	2.0	**KA**	**29**	**DRU**	**80SJ4**	15	579
92	**18 - 92**	53	16.29	3820	2.5	**KAF**	**29**	**DRU**	**80SJ4**	17	577
111	**22 - 111**	44	13.47	3640	3.0						
126	**25 - 126**	39	11.94	3530	3.4						
-	**30 - 152**	33	9.90	3420	3.4						
-	**16 - 81**	60	18.55	3540	1.35						
95	**19 - 95**	52	15.84	3410	1.55						
102	**20 - 102**	48	14.69	3360	1.65						
118	**24 - 118**	41	12.70	3240	1.95						
127	**25 - 127**	38	11.84	3180	2.0	**K**	**19**	**DRU**	**80SJ4**	14	567
145	**29 - 145**	34	10.32	3070	2.3	**KF**	**19**	**DRU**	**80SJ4**	15	570
-	**37 - 185**	27	8.09	2940	3.0	**KA**	**19**	**DRU**	**80SJ4**	14	572
217	**43 - 217**	23	6.91	2810	3.5	**KAF**	**19**	**DRU**	**80SJ4**	14	570
234	**47 - 234**	21	6.41	2750	3.8						
271	**54 - 271**	18	5.54	2630	4.3						
291	**58 - 291**	17	5.16	2580	4.7						
333	**67 - 333**	15	4.50	2470	5.3						

19391609/DE – 06/2017

P_m = 0.75 kW

n_a min^{-1} 50Hz	n_a min^{-1} 10-50Hz	M_a Nm	i	F_{Ra} [1] N	SEW f_B					m kg	
-	**1.7 - 8.6**	830	174.19	28900	3.2	**K**	**87**	**DRU**	**80MJ4**	105	618
-	**1.8 - 9.1**	780	164.34*	28900	3.4	**KF**	**87**	**DRU**	**80MJ4**	115	619
10	**2.0 - 10**	700	147.32*	28900	3.8	**KA**	**87**	**DRU**	**80MJ4**	94	620
12	**2.4 - 12**	605	126.91*	29000	4.5	**KAF**	**87**	**DRU**	**80MJ4**	105	619
13	**2.6 - 13**	550	115.82	29000	4.9						
-	**2.2 - 11**	645	135.28	19400	2.4						
-	**2.3 - 12**	610	128.52	19500	2.5						
13	**2.6 - 13**	540	113.56	19600	2.9	**K**	**77**	**DRU**	**80MJ4**	68	612
15	**3.1 - 15**	460	97.05	19800	3.3	**KF**	**77**	**DRU**	**80MJ4**	77	613
17	**3.4 - 17**	420	88.97	19800	3.6	**KA**	**77**	**DRU**	**80MJ4**	61	614
19	**3.8 - 19**	370	78.07	19900	4.2	**KAF**	**77**	**DRU**	**80MJ4**	69	613
20	**4.1 - 20**	350	73.99	19900	4.4						
-	**2.8 - 14**	515	108.03	12300	1.60						
-	**2.9 - 15**	490	102.62	12500	1.65						
17	**3.3 - 17**	425	90.04	12700	1.90						
20	**3.9 - 20**	360	76.37	12900	2.2						
22	**4.4 - 22**	325	68.95	13000	2.5	**K**	**67**	**DRU**	**80MJ4**	44	606
25	**4.9 - 25**	285	60.66	13000	2.8	**KF**	**67**	**DRU**	**80MJ4**	50	607
26	**5.2 - 26**	270	57.28	13000	3.0	**KA**	**67**	**DRU**	**80MJ4**	41	608
31	**6.2 - 31**	230	48.77	13000	3.5	**KAF**	**67**	**DRU**	**80MJ4**	47	607
34	**6.8 - 34**	210	44.32	13000	3.9						
39	**7.8 - 39**	183	38.39	13000	4.4						
42	**8.4 - 42**	170	35.62	13000	4.8						
-	**2.8 - 14**	515	108.29	8290	1.15						
-	**2.9 - 15**	490	102.88*	8460	1.20						
17	**3.3 - 17**	430	90.26*	8740	1.40						
20	**3.9 - 20**	365	76.56*	9030	1.65						
22	**4.3 - 22**	330	69.12	9170	1.80						
25	**4.9 - 25**	290	60.81*	9320	2.1	**K**	**57**	**DRU**	**80MJ4**	38	600
26	**5.2 - 26**	270	57.42*	9380	2.2	**KF**	**57**	**DRU**	**80MJ4**	43	601
31	**6.1 - 31**	230	48.89	9520	2.6	**KA**	**57**	**DRU**	**80MJ4**	36	602
34	**6.8 - 34**	210	44.43	9590	2.8	**KAF**	**57**	**DRU**	**80MJ4**	42	601
39	**7.8 - 39**	184	38.49	9680	3.3						
42	**8.4 - 42**	170	35.70	9720	3.5						
50	**9.9 - 50**	145	30.28	9800	4.2						
55	**11 - 55**	130	27.34	9760	4.6						
-	**5.7 - 28**	250	52.94	9000	2.0						
-	**6.0 - 30**	240	50.29	9000	2.1						
34	**6.8 - 34**	210	44.44	9000	2.4	**K**	**49**	**DRU**	**80MJ4**	43	596
40	**7.9 - 40**	181	37.98	9000	2.8	**KF**	**49**	**DRU**	**80MJ4**	45	597
43	**8.6 - 43**	166	34.81	9000	3.0	**KA**	**49**	**DRU**	**80MJ4**	40	598
49	**9.8 - 49**	146	30.55	8870	3.4	**KAF**	**49**	**DRU**	**80MJ4**	45	597
52	**10 - 52**	138	28.95	8750	3.6						
20	**4.0 - 20**	355	75.20*	6450	1.10						
-	**4.3 - 21**	330	69.84	6740	1.20						
24	**4.7 - 24**	300	63.30*	7040	1.30						
26	**5.3 - 26**	270	56.83	7300	1.45						
31	**6.1 - 31**	230	48.95*	7570	1.70						
33	**6.5 - 33**	215	46.03*	7660	1.80						
38	**7.6 - 38**	189	39.61	7810	2.1	**K**	**47**	**DRU**	**80MJ4**	32	590
42	**8.5 - 42**	169	35.39	7620	2.4	**KF**	**47**	**DRU**	**80MJ4**	35	591
-	**9.6 - 48**	149	31.30	7410	2.7	**KA**	**47**	**DRU**	**80MJ4**	31	592
-	**10 - 51**	140	29.32	7300	2.9	**KAF**	**47**	**DRU**	**80MJ4**	34	591
58	**12 - 58**	124	25.91	7090	3.2						
-	**12 - 62**	115	24.06	6960	3.5						
69	**14 - 69**	104	21.81	6790	3.8						
77	**15 - 77**	94	19.58	6600	4.3						
89	**18 - 89**	80	16.86	6340	4.7						
127	**25 - 127**	56	11.77	5720	5.0						

19391609/DE – 06/2017

P_m = 0.75 kW

n_a min^{-1} 50Hz	n_a min^{-1} 10-50Hz	M_a Nm	i	F_{Ra} 1) N	SEW f_B					m kg	
-	**6.9 - 35**	205	43.45	7500	1.45						
-	**7.3 - 36**	197	41.28	7500	1.50						
41	**8.3 - 41**	173	36.22	7330	1.75						
49	**9.8 - 49**	147	30.72	7080	2.0	**K**	**39**	**DRU**	**80MJ4**	31	586
54	**11 - 54**	132	27.73	6930	2.3	**KF**	**39**	**DRU**	**80MJ4**	33	587
61	**12 - 61**	116	24.40	6720	2.6	**KA**	**39**	**DRU**	**80MJ4**	30	588
65	**13 - 65**	110	23.04	6640	2.7	**KAF**	**39**	**DRU**	**80MJ4**	32	587
76	**15 - 76**	94	19.62	6380	3.1						
84	**17 - 84**	85	17.83	6230	3.4						
97	**19 - 97**	74	15.44	6000	3.8						
-	**7.9 - 40**	181	37.97	4130	1.10						
-	**8.4 - 42**	170	35.57	4110	1.20						
-	**10 - 50**	143	29.96	4040	1.40						
-	**12 - 60**	119	24.99	3940	1.70						
-	**13 - 64**	112	23.36	3900	1.75						
-	**15 - 74**	96	20.19	3810	1.90						
-	**17 - 87**	82	17.15	3690	2.2	**K**	**37**	**DRU**	**80MJ4**	24	580
-	**20 - 98**	73	15.31	3610	2.4	**KF**	**37**	**DRU**	**80MJ4**	27	581
-	**23 - 115**	62	13.08	3480	2.6	**KA**	**37**	**DRU**	**80MJ4**	24	582
-	**25 - 124**	58	12.14	3430	2.8	**KAF**	**37**	**DRU**	**80MJ4**	26	581
-	**29 - 143**	50	10.49	3310	3.2						
-	**34 - 168**	43	8.91	3180	3.8						
-	**38 - 188**	38	7.96	3090	4.1						
-	**44 - 221**	32	6.80	2960	4.6						
-	**47 - 236**	30	6.37	2910	4.8						
-	**10.0 - 50**	131	30.11	3970	0.90						
-	**12 - 60**	108	24.91	3870	1.00						
-	**14 - 68**	96	22.08	3800	1.10						
-	**15 - 75**	89	19.99	3810	1.45						
-	**18 - 92**	72	16.29	3650	1.80	**K**	**29**	**DRU**	**80MJ4**	18	573
-	**22 - 111**	60	13.47	3500	2.2	**KF**	**29**	**DRU**	**80MJ4**	20	577
-	**25 - 126**	53	11.94	3400	2.5	**KA**	**29**	**DRU**	**80MJ4**	18	579
-	**33 - 164**	41	9.17	3190	3.2	**KAF**	**29**	**DRU**	**80MJ4**	19	577
-	**35 - 176**	39	8.53	3210	3.2						
-	**40 - 201**	33	7.48	3020	3.7						
-	**43 - 216**	31	6.95	3030	3.6						
-	**19 - 95**	70	15.84	3220	1.15						
-	**20 - 102**	65	14.69	3180	1.25						
-	**24 - 118**	56	12.70	3080	1.40						
-	**25 - 127**	52	11.84	3040	1.50	**K**	**19**	**DRU**	**80MJ4**	17	567
-	**29 - 145**	46	10.32	2950	1.65	**KF**	**19**	**DRU**	**80MJ4**	17	570
-	**43 - 217**	31	6.91	2740	2.6	**KA**	**19**	**DRU**	**80MJ4**	17	572
-	**47 - 234**	29	6.41	2680	2.8	**KAF**	**19**	**DRU**	**80MJ4**	17	570
-	**54 - 271**	25	5.54	2580	3.2						
-	**58 - 291**	23	5.16	2530	3.4						
-	**67 - 333**	20	4.50	2430	3.9						

P_m = 1.1 kW

n_a min^{-1} 50Hz	n_a min^{-1} 10-50Hz	M_a Nm	i	F_{Ra} 1) N	SEW f_B					m kg	
8.5	**1.7 - 8.5**	1230	176.05*	40000	3.5	**K**	**97**	**DRU**	**90MJ4**	170	624
9.8	**2.0 - 9.8**	1070	153.21*	40000	4.0	**KF**	**97**	**DRU**	**90MJ4**	190	625
11	**2.1 - 11**	980	140.28	40000	4.4	**KA**	**97**	**DRU**	**90MJ4**	150	626
12	**2.4 - 12**	860	123.93*	40000	5.0	**KAF**	**97**	**DRU**	**90MJ4**	175	625
10	**2.0 - 10**	1030	147.32*	28800	2.6						
12	**2.4 - 12**	880	126.91*	28800	3.0	**K**	**87**	**DRU**	**90MJ4**	110	618
13	**2.6 - 13**	810	115.82	28900	3.3	**KF**	**87**	**DRU**	**90MJ4**	120	619
15	**2.9 - 15**	715	102.71*	28900	3.8	**KA**	**87**	**DRU**	**90MJ4**	97	620
17	**3.5 - 17**	600	86.34	29000	4.5	**KAF**	**87**	**DRU**	**90MJ4**	110	619
19	**3.8 - 19**	555	79.34	29000	4.9						

19391609/DE – 06/2017

P_m = 1.1 kW

n_a min^{-1} 50Hz	n_a min^{-1} 10-50Hz	M_a Nm	i	F_{Ra} [1)] N	SEW f_B					m kg	
13	**2.6 - 13**	795	113.56	19000	1.95						
15	**3.1 - 15**	675	97.05	19300	2.3						
17	**3.4 - 17**	620	88.97	19400	2.5						
19	**3.8 - 19**	545	78.07	19600	2.8	**K**	**77**	**DRU**	**90MJ4**	72	612
20	**4.1 - 20**	515	73.99	19700	3.0	**KF**	**77**	**DRU**	**90MJ4**	81	613
23	**4.6 - 23**	450	64.75	19800	3.4	**KA**	**77**	**DRU**	**90MJ4**	65	614
26	**5.1 - 26**	405	58.34	19800	3.8	**KAF**	**77**	**DRU**	**90MJ4**	73	613
29	**5.9 - 29**	355	51.18	19900	4.3						
33	**6.6 - 33**	315	45.16	20000	4.9						
17	**3.3 - 17**	630	90.04	11700	1.30						
20	**3.9 - 20**	530	76.37	12200	1.55						
22	**4.4 - 22**	480	68.95	12500	1.70						
25	**4.9 - 25**	420	60.66	12700	1.95						
26	**5.2 - 26**	400	57.28	12800	2.0						
31	**6.2 - 31**	340	48.77	13000	2.4	**K**	**67**	**DRU**	**90MJ4**	48	606
34	**6.8 - 34**	310	44.32	13000	2.6	**KF**	**67**	**DRU**	**90MJ4**	53	607
39	**7.8 - 39**	265	38.39	13000	3.0	**KA**	**67**	**DRU**	**90MJ4**	45	608
42	**8.4 - 42**	245	35.62	13000	3.3	**KAF**	**67**	**DRU**	**90MJ4**	51	607
50	**9.9 - 50**	210	30.22	13000	3.9						
55	**11 - 55**	191	27.28	13000	4.3						
63	**13 - 63**	168	24.00	13000	4.8						
66	**13 - 66**	159	22.66	13000	4.9						
20	**3.9 - 20**	535	76.56*	8140	1.10						
22	**4.3 - 22**	480	69.12	8500	1.25						
25	**4.9 - 25**	425	60.81*	8770	1.40						
26	**5.2 - 26**	400	57.42*	8870	1.50						
31	**6.1 - 31**	340	48.89	9120	1.75						
34	**6.8 - 34**	310	44.43	9240	1.95						
39	**7.8 - 39**	265	38.49	9400	2.2	**K**	**57**	**DRU**	**90MJ4**	42	600
42	**8.4 - 42**	250	35.70	9470	2.4	**KF**	**57**	**DRU**	**90MJ4**	46	601
50	**9.9 - 50**	210	30.28	9590	2.8	**KA**	**57**	**DRU**	**90MJ4**	40	602
55	**11 - 55**	191	27.34	9360	3.1	**KAF**	**57**	**DRU**	**90MJ4**	45	601
62	**12 - 62**	168	24.05	9060	3.6						
66	**13 - 66**	159	22.71	8930	3.8						
78	**16 - 78**	135	19.34	8570	4.2						
85	**17 - 85**	123	17.57	8350	4.5						
126	**25 - 126**	84	11.92	7430	5.0						
34	**6.8 - 34**	310	44.44	9000	1.60						
40	**7.9 - 40**	265	37.98	8750	1.90						
43	**8.6 - 43**	240	34.81	8600	2.0	**K**	**49**	**DRU**	**90MJ4**	47	596
49	**9.8 - 49**	210	30.55	8380	2.3	**KF**	**49**	**DRU**	**90MJ4**	49	597
52	**10 - 52**	200	28.95	8280	2.5	**KA**	**49**	**DRU**	**90MJ4**	44	598
59	**12 - 59**	177	25.34	8040	2.8	**KAF**	**49**	**DRU**	**90MJ4**	49	597
66	**13 - 66**	160	22.83	7850	3.1						
75	**15 - 75**	140	20.03	7610	3.6						
26	**5.3 - 26**	395	56.83	5950	1.00						
31	**6.1 - 31**	340	48.95*	6640	1.15						
33	**6.5 - 33**	320	46.03*	6850	1.25						
38	**7.6 - 38**	275	39.61	7140	1.45						
42	**8.5 - 42**	245	35.39	7020	1.60						
58	**12 - 58**	181	25.91	6650	2.2						
69	**14 - 69**	153	21.81	6420	2.6						
77	**15 - 77**	137	19.58	6270	2.9	**K**	**47**	**DRU**	**90MJ4**	36	590
89	**18 - 89**	118	16.86	6060	3.2	**KF**	**47**	**DRU**	**90MJ4**	39	591
95	**19 - 95**	111	15.86	5970	3.4	**KA**	**47**	**DRU**	**90MJ4**	35	592
110	**22 - 110**	96	13.65	5760	3.8	**KAF**	**47**	**DRU**	**90MJ4**	38	591
123	**25 - 123**	85	12.19	5590	4.1						
127	**25 - 127**	82	11.77	5510	3.4						
142	**28 - 142**	74	10.56	5360	3.8						
165	**33 - 165**	64	9.10	5150	4.4						
175	**35 - 175**	60	8.56	5070	4.5						
204	**41 - 204**	52	7.36	4860	4.8						

19391609/DE – 06/2017

P_m = 1.1 kW

n_a min^{-1} 50Hz	n_a min^{-1} 10-50Hz	M_a Nm	i	F_{Ra} 1) N	SEW f_B					m kg	
41	**8.3 - 41**	250	36.22	6630	1.20						
49	**9.8 - 49**	215	30.72	6490	1.40						
54	**11 - 54**	194	27.73	6390	1.55						
61	**12 - 61**	171	24.40	6260	1.75	**K**	**39**	**DRU**	**90MJ4**	35	586
65	**13 - 65**	161	23.04	6190	1.85	**KF**	**39**	**DRU**	**90MJ4**	36	587
76	**15 - 76**	137	19.62	6000	2.1	**KA**	**39**	**DRU**	**90MJ4**	34	588
84	**17 - 84**	125	17.83	5890	2.3	**KAF**	**39**	**DRU**	**90MJ4**	35	587
97	**19 - 97**	108	15.44	5700	2.6						
112	**22 - 112**	94	13.44	5520	2.9						
141	**28 - 141**	74	10.61	5430	3.8						
74	**15 - 74**	141	20.19	3400	1.30						
87	**17 - 87**	120	17.15	3340	1.50						
98	**20 - 98**	107	15.31	3300	1.65						
115	**23 - 115**	92	13.08	3220	1.80						
143	**29 - 143**	74	10.49	3100	2.2	**K**	**37**	**DRU**	**90MJ4**	29	580
168	**34 - 168**	62	8.91	3000	2.6	**KF**	**37**	**DRU**	**90MJ4**	31	581
188	**38 - 188**	56	7.96	2930	2.8	**KA**	**37**	**DRU**	**90MJ4**	29	582
221	**44 - 221**	48	6.80	2830	3.1	**KAF**	**37**	**DRU**	**90MJ4**	30	581
236	**47 - 236**	45	6.37	2780	3.2						
280	**56 - 280**	38	5.36	2670	3.7						
377	**75 - 377**	28	3.98	2470	4.5						
92	**18 - 92**	106	16.29	3350	1.25						
111	**22 - 111**	88	13.47	3250	1.50						
126	**25 - 126**	78	11.94	3180	1.65	**K**	**29**	**DRU**	**90MJ4**	23	573
164	**33 - 164**	60	9.17	3020	2.2	**KF**	**29**	**DRU**	**90MJ4**	24	577
201	**40 - 201**	49	7.48	2880	2.5	**KA**	**29**	**DRU**	**90MJ4**	23	579
216	**43 - 216**	46	6.95	2930	2.4	**KAF**	**29**	**DRU**	**90MJ4**	24	577
261	**52 - 261**	38	5.75	2790	2.9						
294	**59 - 294**	34	5.10	2700	3.2						

P_m = 1.5 kW

n_a min^{-1} 50Hz	n_a min^{-1} 10-50Hz	M_a Nm	i	F_{Ra} 1) N	SEW f_B					m kg	
-	**1.7 - 8.5**	1680	176.05*	40000	2.6						
9.8	**2.0 - 9.8**	1460	153.21*	40000	2.9	**K**	**97**	**DRU**	**90LJ4**	170	624
11	**2.1 - 11**	1330	140.28	40000	3.2	**KF**	**97**	**DRU**	**90LJ4**	190	625
12	**2.4 - 12**	1180	123.93*	40000	3.6	**KA**	**97**	**DRU**	**90LJ4**	150	626
14	**2.9 - 14**	1000	105.13	40000	4.3	**KAF**	**97**	**DRU**	**90LJ4**	175	625
16	**3.1 - 16**	920	96.80	40000	4.7						
-	**2.0 - 10**	1400	147.32*	28500	1.90						
12	**2.4 - 12**	1210	126.91*	28700	2.2						
13	**2.6 - 13**	1100	115.82	28700	2.4						
15	**2.9 - 15**	980	102.71*	28800	2.8	**K**	**87**	**DRU**	**90LJ4**	110	618
17	**3.5 - 17**	820	86.34	28900	3.3	**KF**	**87**	**DRU**	**90LJ4**	120	619
19	**3.8 - 19**	755	79.34	28900	3.6	**KA**	**87**	**DRU**	**90LJ4**	100	620
21	**4.3 - 21**	670	70.46	28900	4.0	**KAF**	**87**	**DRU**	**90LJ4**	115	619
24	**4.8 - 24**	600	63.00*	29000	4.5						
26	**5.3 - 26**	540	56.64	29000	5.0						
-	**2.6 - 13**	1080	113.56	18000	1.45						
15	**3.1 - 15**	920	97.05	18600	1.65						
17	**3.4 - 17**	840	88.97	18800	1.80						
19	**3.8 - 19**	745	78.07	19100	2.1						
20	**4.1 - 20**	705	73.99	19200	2.2	**K**	**77**	**DRU**	**90LJ4**	75	612
23	**4.6 - 23**	615	64.75	19500	2.5	**KF**	**77**	**DRU**	**90LJ4**	83	613
26	**5.1 - 26**	555	58.34	19600	2.8	**KA**	**77**	**DRU**	**90LJ4**	68	614
29	**5.9 - 29**	485	51.18	19700	3.2	**KAF**	**77**	**DRU**	**90LJ4**	76	613
33	**6.6 - 33**	430	45.16	19800	3.6						
37	**7.5 - 37**	380	40.04	19900	4.0						
39	**7.8 - 39**	365	38.39	19900	4.1						
43	**8.5 - 43**	335	35.20	19900	4.6						

19391609/DE – 06/2017

P_m = 1.5 kW

n_a min^{-1} 50Hz	n_a min^{-1} 10-50Hz	M_a Nm	i	F_{Ra} [1)] N	SEW f_B					m kg	
20	**3.9 - 20**	725	76.37	11100	1.10						
22	**4.4 - 22**	655	68.95	11500	1.25						
25	**4.9 - 25**	575	60.66	12000	1.40						
26	**5.2 - 26**	545	57.28	12200	1.50						
31	**6.2 - 31**	465	48.77	12600	1.75						
34	**6.8 - 34**	420	44.32	12700	1.95						
39	**7.8 - 39**	365	38.39	12900	2.2						
-	**8.4 - 42**	340	35.62	13000	2.4	**K**	**67**	**DRU**	**90LJ4**	50	606
50	**9.9 - 50**	285	30.22	13000	2.8	**KF**	**67**	**DRU**	**90LJ4**	56	607
55	**11 - 55**	260	27.28	13000	3.1	**KA**	**67**	**DRU**	**90LJ4**	48	608
63	**13 - 63**	225	24.00	13000	3.5	**KAF**	**67**	**DRU**	**90LJ4**	53	607
66	**13 - 66**	215	22.66	13000	3.6						
78	**16 - 78**	184	19.30	13000	4.1						
86	**17 - 86**	167	17.54	13000	4.4						
99	**20 - 99**	145	15.19	13000	4.8						
120	**24 - 120**	119	12.48	13000	4.5						
141	**28 - 141**	102	10.63	13000	4.9						
25	**4.9 - 25**	580	60.81*	7790	1.05						
26	**5.2 - 26**	545	57.42*	8050	1.10						
31	**6.1 - 31**	465	48.89	8580	1.30						
34	**6.8 - 34**	420	44.43	8780	1.40						
39	**7.8 - 39**	365	38.49	9020	1.65						
-	**8.4 - 42**	340	35.70	9130	1.75						
50	**9.9 - 50**	285	30.28	9080	2.1						
55	**11 - 55**	260	27.34	8900	2.3	**K**	**57**	**DRU**	**90LJ4**	44	600
62	**12 - 62**	225	24.05	8660	2.6	**KF**	**57**	**DRU**	**90LJ4**	49	601
66	**13 - 66**	215	22.71	8550	2.8	**KA**	**57**	**DRU**	**90LJ4**	42	602
78	**16 - 78**	185	19.34	8240	3.1	**KAF**	**57**	**DRU**	**90LJ4**	48	601
85	**17 - 85**	168	17.57	8060	3.3						
99	**20 - 99**	145	15.22	7780	3.7						
113	**23 - 113**	126	13.25	7500	4.0						
126	**25 - 126**	114	11.92	7200	3.6						
133	**27 - 133**	108	11.26	7100	3.9						
156	**31 - 156**	92	9.59	6800	4.4						
172	**34 - 172**	83	8.71	6630	4.7						
-	**6.8 - 34**	420	44.44	8180	1.20						
40	**7.9 - 40**	360	37.98	8050	1.40						
43	**8.6 - 43**	330	34.81	7970	1.50						
49	**9.8 - 49**	290	30.55	7820	1.70						
52	**10 - 52**	275	28.95	7750	1.80	**K**	**49**	**DRU**	**90LJ4**	50	596
59	**12 - 59**	240	25.34	7580	2.1	**KF**	**49**	**DRU**	**90LJ4**	52	597
66	**13 - 66**	215	22.83	7430	2.3	**KA**	**49**	**DRU**	**90LJ4**	47	598
75	**15 - 75**	191	20.03	7240	2.6	**KAF**	**49**	**DRU**	**90LJ4**	52	597
85	**17 - 85**	169	17.67	7050	3.0						
96	**19 - 96**	150	15.67	6860	3.3						
112	**22 - 112**	128	13.38	6610	3.7						
38	**7.6 - 38**	375	39.61	6220	1.05						
42	**8.5 - 42**	335	35.39	6330	1.20						
-	**12 - 58**	245	25.91	6140	1.60						
69	**14 - 69**	205	21.81	5990	1.90						
77	**15 - 77**	187	19.58	5890	2.1						
89	**18 - 89**	161	16.86	5730	2.4						
95	**19 - 95**	151	15.86	5660	2.5						
110	**22 - 110**	130	13.65	5490	2.8	**K**	**47**	**DRU**	**90LJ4**	39	590
123	**25 - 123**	116	12.19	5360	3.0	**KF**	**47**	**DRU**	**90LJ4**	42	591
127	**25 - 127**	112	11.77	5260	2.5	**KA**	**47**	**DRU**	**90LJ4**	38	592
142	**28 - 142**	101	10.56	5140	2.8	**KAF**	**47**	**DRU**	**90LJ4**	41	591
165	**33 - 165**	87	9.10	4960	3.2						
175	**35 - 175**	82	8.56	4890	3.3						
204	**41 - 204**	70	7.36	4710	3.6						
228	**46 - 228**	63	6.58	4580	3.8						
258	**52 - 258**	56	5.81	4430	4.1						
324	**65 - 324**	44	4.64	4170	4.6						

19391609/DE – 06/2017

P_m = 1.5 kW

n_a min^{-1} 50Hz	n_a min^{-1} 10-50Hz	M_a Nm	i	F_{Ra} [1] N	SEW f_B					m kg	
-	**8.3 - 41**	345	36.22	5840	0.85						
49	**9.8 - 49**	290	30.72	5820	1.00						
54	**11 - 54**	260	27.73	5790	1.15						
61	**12 - 61**	230	24.40	5720	1.30						
65	**13 - 65**	220	23.04	5690	1.35	**K**	**39**	**DRU**	**90LJ4**	38	586
76	**15 - 76**	187	19.62	5570	1.55	**KF**	**39**	**DRU**	**90LJ4**	39	587
84	**17 - 84**	170	17.83	5500	1.70	**KA**	**39**	**DRU**	**90LJ4**	37	588
97	**19 - 97**	147	15.44	5370	1.90	**KAF**	**39**	**DRU**	**90LJ4**	38	587
112	**22 - 112**	128	13.44	5230	2.1						
-	**28 - 141**	101	10.61	5270	2.8						
167	**33 - 167**	86	9.00	5050	3.5						
185	**37 - 185**	78	8.12	4910	3.9						
-	**17 - 87**	164	17.15	2950	1.10						
-	**20 - 98**	146	15.31	2940	1.20						
-	**23 - 115**	125	13.08	2920	1.30						
-	**29 - 143**	100	10.49	2860	1.60	**K**	**37**	**DRU**	**90LJ4**	32	580
-	**34 - 168**	85	8.91	2800	1.90	**KF**	**37**	**DRU**	**90LJ4**	34	581
-	**38 - 188**	76	7.96	2750	2.0	**KA**	**37**	**DRU**	**90LJ4**	32	582
-	**44 - 221**	65	6.80	2670	2.3	**KAF**	**37**	**DRU**	**90LJ4**	33	581
-	**47 - 236**	61	6.37	2640	2.4						
-	**56 - 280**	51	5.36	2550	2.7						
-	**75 - 377**	38	3.98	2380	3.3						
-	**18 - 92**	144	16.29	3010	0.90						
-	**22 - 111**	119	13.47	2970	1.10						
-	**25 - 126**	106	11.94	2930	1.25						
-	**33 - 164**	81	9.17	2820	1.60	**K**	**29**	**DRU**	**90LJ4**	26	573
-	**40 - 201**	66	7.48	2720	1.85	**KF**	**29**	**DRU**	**90LJ4**	27	577
-	**43 - 216**	63	6.95	2820	1.80	**KA**	**29**	**DRU**	**90LJ4**	25	579
-	**52 - 261**	52	5.75	2700	2.1	**KAF**	**29**	**DRU**	**90LJ4**	26	577
-	**59 - 294**	46	5.10	2620	2.4						
-	**77 - 383**	35	3.92	2440	3.5						
-	**94 - 470**	29	3.19	2310	3.8						

P_m = 2.2 kW

n_a min^{-1} 50Hz	n_a min^{-1} 10-50Hz	M_a Nm	i	F_{Ra} [1] N	SEW f_B					m kg	
-	**2.0 - 9.8**	2140	153.21*	40000	2.0						
-	**2.1 - 11**	1960	140.28	40000	2.2						
12	**2.4 - 12**	1730	123.93*	40000	2.5						
14	**2.9 - 14**	1470	105.13	40000	2.9	**K**	**97**	**DRU**	**100MJ4**	175	624
16	**3.1 - 16**	1350	96.80	40000	3.2	**KF**	**97**	**DRU**	**100MJ4**	195	625
17	**3.5 - 17**	1210	86.52	40000	3.5	**KA**	**97**	**DRU**	**100MJ4**	155	626
19	**3.9 - 19**	1090	77.89*	40000	3.9	**KAF**	**97**	**DRU**	**100MJ4**	180	625
21	**4.3 - 21**	980	70.54	40000	4.3						
24	**4.8 - 24**	870	62.55	40000	4.9						
-	**2.4 - 12**	1770	126.91*	28300	1.50						
-	**2.6 - 13**	1620	115.82	28400	1.65						
15	**2.9 - 15**	1430	102.71*	28500	1.90						
17	**3.5 - 17**	1200	86.34	28700	2.2						
19	**3.8 - 19**	1110	79.34	28700	2.4	**K**	**87**	**DRU**	**100MJ4**	115	618
21	**4.3 - 21**	980	70.46	28800	2.7	**KF**	**87**	**DRU**	**100MJ4**	125	619
24	**4.8 - 24**	880	63.00*	28800	3.1	**KA**	**87**	**DRU**	**100MJ4**	105	620
26	**5.3 - 26**	790	56.64	28900	3.4	**KAF**	**87**	**DRU**	**100MJ4**	115	619
31	**6.1 - 31**	685	49.16	28900	3.9						
34	**6.8 - 34**	615	44.02	29000	4.2						
41	**8.2 - 41**	510	36.52*	28700	4.9						

19391609/DE – 06/2017

P_m = 2.2 kW

n_a min^{-1} 50Hz	n_a min^{-1} 10-50Hz	M_a Nm	i	F_{Ra} [1)] N	SEW f_B					m kg	
-	**3.1 - 15**	1350	97.05	16600	1.15						
-	**3.4 - 17**	1240	88.97	17200	1.25						
19	**3.8 - 19**	1090	78.07	17900	1.40						
20	**4.1 - 20**	1030	73.99	18200	1.50						
23	**4.6 - 23**	900	64.75	18600	1.70						
26	**5.1 - 26**	810	58.34	18900	1.90						
29	**5.9 - 29**	715	51.18	19200	2.2	**K**	**77**	**DRU**	**100MJ4**	80	612
33	**6.6 - 33**	630	45.16	19400	2.5	**KF**	**77**	**DRU**	**100MJ4**	88	613
37	**7.5 - 37**	560	40.04	19600	2.8	**KA**	**77**	**DRU**	**100MJ4**	73	614
-	**7.8 - 39**	535	38.39	19600	2.8	**KAF**	**77**	**DRU**	**100MJ4**	80	613
-	**8.5 - 43**	490	35.20	19700	3.1						
49	**9.7 - 49**	430	30.89	19800	3.6						
51	**10 - 51**	405	29.27	19800	3.8						
59	**12 - 59**	355	25.62	19900	4.3						
65	**13 - 65**	320	23.08	20000	4.8						
-	**5.2 - 26**	800	57.28	10500	1.00						
-	**6.2 - 31**	680	48.77	11400	1.20						
-	**6.8 - 34**	620	44.32	11800	1.30						
-	**7.8 - 39**	535	38.39	12200	1.50						
-	**9.9 - 50**	420	30.22	12700	1.95						
-	**11 - 55**	380	27.28	12900	2.1						
-	**13 - 63**	335	24.00	13000	2.4						
-	**13 - 66**	315	22.66	13000	2.5	**K**	**67**	**DRU**	**100MJ4**	55	606
-	**16 - 78**	270	19.30	13000	2.8	**KF**	**67**	**DRU**	**100MJ4**	61	607
-	**17 - 86**	245	17.54	13000	3.0	**KA**	**67**	**DRU**	**100MJ4**	52	608
-	**20 - 99**	210	15.19	13000	3.3	**KAF**	**67**	**DRU**	**100MJ4**	58	607
-	**23 - 114**	185	13.22	13000	3.6						
-	**24 - 120**	175	12.48	13000	3.0						
-	**28 - 141**	149	10.63	13000	3.4						
-	**31 - 155**	135	9.66	13000	3.5						
-	**36 - 179**	117	8.37	13000	3.8						
-	**41 - 206**	102	7.28	12500	4.1						
-	**58 - 288**	73	5.20	11500	4.8						
-	**7.8 - 39**	535	38.49	8120	1.10						
-	**9.9 - 50**	420	30.28	8200	1.40						
-	**11 - 55**	380	27.34	8100	1.55						
-	**12 - 62**	335	24.05	7960	1.80						
-	**13 - 66**	315	22.71	7890	1.90						
-	**16 - 78**	270	19.34	7680	2.1						
-	**17 - 85**	245	17.57	7540	2.3	**K**	**57**	**DRU**	**100MJ4**	49	600
-	**20 - 99**	210	15.22	7330	2.5	**KF**	**57**	**DRU**	**100MJ4**	54	601
-	**23 - 113**	186	13.25	7120	2.8	**KA**	**57**	**DRU**	**100MJ4**	47	602
-	**25 - 126**	167	11.92	6800	2.5	**KAF**	**57**	**DRU**	**100MJ4**	53	601
-	**27 - 133**	158	11.26	6720	2.6						
-	**31 - 156**	134	9.59	6480	3.0						
-	**34 - 172**	122	8.71	6340	3.2						
-	**40 - 199**	106	7.55	6120	3.5						
-	**46 - 228**	92	6.57	5910	3.8						
-	**64 - 320**	66	4.69	5410	4.6						
-	**7.9 - 40**	530	37.98	6830	0.95						
-	**8.6 - 43**	485	34.81	6850	1.05						
49	**9.8 - 49**	425	30.55	6840	1.15						
52	**10 - 52**	405	28.95	6820	1.25						
59	**12 - 59**	350	25.34	6760	1.40						
66	**13 - 66**	315	22.83	6700	1.55	**K**	**49**	**DRU**	**100MJ4**	55	596
75	**15 - 75**	280	20.03	6600	1.80	**KF**	**49**	**DRU**	**100MJ4**	57	597
85	**17 - 85**	245	17.67	6480	2.0	**KA**	**49**	**DRU**	**100MJ4**	52	598
96	**19 - 96**	215	15.67	6360	2.2	**KAF**	**49**	**DRU**	**100MJ4**	57	597
112	**22 - 112**	187	13.38	6180	2.5						
-	**26 - 132**	159	11.37	6390	3.1						
-	**29 - 144**	146	10.42	6250	3.3						
164	**33 - 164**	128	9.14	6040	3.9						

19391609/DE – 06/2017

P_m = 2.2 kW

n_a min^{-1} 50Hz	n_a min^{-1} 10-50Hz	M_a Nm	i	F_{Ra} 1) N	SEW f_B					m kg	
-	**14 - 69**	305	21.81	5250	1.30						
-	**15 - 77**	270	19.58	5220	1.45						
-	**18 - 89**	235	16.86	5160	1.60						
-	**19 - 95**	220	15.86	5120	1.70						
-	**22 - 110**	191	13.65	5030	1.90						
-	**25 - 123**	171	12.19	4940	2.0	**K**	**47**	**DRU**	**100MJ4**	43	590
-	**25 - 127**	165	11.77	4840	1.70	**KF**	**47**	**DRU**	**100MJ4**	47	591
-	**28 - 142**	148	10.56	4760	1.90	**KA**	**47**	**DRU**	**100MJ4**	43	592
-	**33 - 165**	127	9.10	4640	2.2	**KAF**	**47**	**DRU**	**100MJ4**	45	591
-	**35 - 175**	120	8.56	4580	2.2						
-	**41 - 204**	103	7.36	4450	2.4						
-	**46 - 228**	92	6.58	4340	2.6						
-	**52 - 258**	81	5.81	4220	2.8						
-	**65 - 324**	65	4.64	4000	3.2						
-	**12 - 61**	340	24.40	4790	0.90						
-	**13 - 65**	320	23.04	4800	0.95						
-	**15 - 76**	270	19.62	4820	1.05						
-	**17 - 84**	245	17.83	4810	1.15						
-	**19 - 97**	215	15.44	4770	1.30						
-	**22 - 112**	188	13.44	4720	1.45	**K**	**39**	**DRU**	**100MJ4**	42	586
-	**33 - 167**	126	9.00	4820	2.4	**KF**	**39**	**DRU**	**100MJ4**	44	587
-	**37 - 185**	114	8.12	4700	2.6	**KA**	**39**	**DRU**	**100MJ4**	41	588
-	**42 - 210**	100	7.15	4560	3.0	**KAF**	**39**	**DRU**	**100MJ4**	43	587
-	**44 - 222**	95	6.75	4490	3.2						
-	**52 - 261**	80	5.75	4310	3.4						
-	**57 - 287**	73	5.22	4200	3.5						
-	**66 - 332**	63	4.52	4040	3.8						
-	**76 - 381**	55	3.94	3890	3.9						

P_m = 3.0 kW

n_a min^{-1} 50Hz	n_a min^{-1} 10-50Hz	M_a Nm	i	F_{Ra} 1) N	SEW f_B					m kg	
12	**2.4 - 12**	2360	123.93*	40000	1.80						
14	**2.9 - 14**	2000	105.13	40000	2.1						
16	**3.1 - 16**	1840	96.80	40000	2.3						
17	**3.5 - 17**	1650	86.52	40000	2.6	**K**	**97**	**DRU**	**100LJ4**	180	624
19	**3.9 - 19**	1480	77.89*	40000	2.9	**KF**	**97**	**DRU**	**100LJ4**	200	625
21	**4.3 - 21**	1340	70.54	40000	3.2	**KA**	**97**	**DRU**	**100LJ4**	160	626
24	**4.8 - 24**	1190	62.55	40000	3.6	**KAF**	**97**	**DRU**	**100LJ4**	185	625
27	**5.3 - 27**	1080	56.55	40000	4.0						
31	**6.3 - 31**	910	47.93*	40000	4.7						
15	**2.9 - 15**	1960	102.71*	28100	1.40						
17	**3.5 - 17**	1640	86.34	28400	1.65						
19	**3.8 - 19**	1510	79.34	28500	1.80						
21	**4.3 - 21**	1340	70.46	28600	2.0						
24	**4.8 - 24**	1200	63.00*	28700	2.2	**K**	**87**	**DRU**	**100LJ4**	120	618
26	**5.3 - 26**	1080	56.64	28700	2.5	**KF**	**87**	**DRU**	**100LJ4**	130	619
31	**6.1 - 31**	930	49.16	28800	2.9	**KA**	**87**	**DRU**	**100LJ4**	105	620
34	**6.8 - 34**	840	44.02	28900	3.1	**KAF**	**87**	**DRU**	**100LJ4**	120	619
41	**8.2 - 41**	695	36.52*	28000	3.6						
48	**9.6 - 48**	595	31.39	27000	4.5						
54	**11 - 54**	530	27.88	26200	4.9						

19391609/DE – 06/2017

P_m = 3.0 kW

n_a min^{-1} 50Hz	n_a min^{-1} 10-50Hz	M_a Nm	i	F_{Ra} [1)] N	SEW f_B					m kg	
19	**3.8 - 19**	1490	78.07	15800	1.05						
20	**4.1 - 20**	1410	73.99	16300	1.10						
23	**4.6 - 23**	1230	64.75	17300	1.25						
26	**5.1 - 26**	1110	58.34	17800	1.40						
29	**5.9 - 29**	970	51.18	18400	1.60						
33	**6.6 - 33**	860	45.16	18800	1.80						
37	**7.5 - 37**	760	40.04	19100	2.0	**K**	**77**	**DRU**	**100LJ4**	83	612
49	**9.7 - 49**	585	30.89	19500	2.6	**KF**	**77**	**DRU**	**100LJ4**	91	613
51	**10 - 51**	555	29.27	19600	2.8	**KA**	**77**	**DRU**	**100LJ4**	76	614
59	**12 - 59**	485	25.62	19700	3.2	**KAF**	**77**	**DRU**	**100LJ4**	83	613
65	**13 - 65**	440	23.08	19800	3.5						
74	**15 - 74**	385	20.25	19900	3.9						
84	**17 - 84**	340	17.87	19900	4.2						
95	**19 - 95**	300	15.84	20000	4.6						
121	**24 - 121**	235	12.36	18800	4.2						
138	**28 - 138**	205	10.84	18200	4.8						
49	**9.8 - 49**	580	30.55	5720	0.85						
52	**10 - 52**	550	28.95	5760	0.90						
59	**12 - 59**	480	25.34	5830	1.05						
66	**13 - 66**	435	22.83	5860	1.15						
75	**15 - 75**	380	20.03	5860	1.30	**K**	**49**	**DRU**	**100LJ4**	58	596
85	**17 - 85**	335	17.67	5830	1.50	**KF**	**49**	**DRU**	**100LJ4**	60	597
96	**19 - 96**	295	15.67	5780	1.65	**KA**	**49**	**DRU**	**100LJ4**	55	598
112	**22 - 112**	255	13.38	5690	1.85	**KAF**	**49**	**DRU**	**100LJ4**	60	597
164	**33 - 164**	175	9.14	5820	2.9						
173	**35 - 173**	165	8.66	5750	3.0						
198	**40 - 198**	145	7.58	5560	3.5						
220	**44 - 220**	130	6.83	5410	3.8						

19391609/DE – 06/2017

10.3 Auswahltabellen K..DRU..J (IE4), 87 Hz

P_m = 0.25 kW

	n_a min^{-1} 10-87Hz	M_a Nm	i	F_{Ra} 1) N	SEW f_B					m kg	
-	**2.1 - 18**	133	145.14*	9830	4.5	**K**	**57**	**DRU**	**71SJ4**	31	600
						KF	**57**	**DRU**	**71SJ4**	35	601
						KA	**57**	**DRU**	**71SJ4**	29	602
						KAF	**57**	**DRU**	**71SJ4**	34	601
-	**2.3 - 20**	121	131.87*	8110	3.3	**K**	**47**	**DRU**	**71SJ4**	25	590
-	**2.5 - 21**	111	121.48*	8140	3.6	**KF**	**47**	**DRU**	**71SJ4**	28	591
-	**2.9 - 25**	96	104.37	8180	4.2	**KA**	**47**	**DRU**	**71SJ4**	24	592
-	**3.3 - 29**	83	90.86	8210	4.8	**KAF**	**47**	**DRU**	**71SJ4**	27	591
-	**2.8 - 25**	97	106.38	5890	2.1						
-	**3.1 - 27**	90	97.81	5780	2.2						
-	**3.6 - 31**	76	83.69	5560	2.6	**K**	**37**	**DRU**	**71SJ4**	19	580
-	**4.1 - 36**	66	72.54	5360	3.0	**KF**	**37**	**DRU**	**71SJ4**	21	581
-	**4.4 - 38**	62	67.80	5270	3.2	**KA**	**37**	**DRU**	**71SJ4**	18	582
-	**5.1 - 45**	54	58.60	5070	3.7	**KAF**	**37**	**DRU**	**71SJ4**	20	581
-	**6.0 - 52**	46	49.79	4850	4.4						
-	**6.7 - 59**	41	44.46	4700	4.9						
-	**5.5 - 48**	46	54.89	4900	2.9	**K**	**29**	**DRU**	**71SJ4**	12	573
-	**6.0 - 52**	42	50.35	4790	3.1	**KF**	**29**	**DRU**	**71SJ4**	14	577
-	**7.0 - 61**	36	42.87	4580	3.6	**KA**	**29**	**DRU**	**71SJ4**	12	579
-	**8.1 - 71**	31	36.96	4390	4.0	**KAF**	**29**	**DRU**	**71SJ4**	13	577
-	**6.7 - 59**	37	44.48	4170	1.85						
-	**7.4 - 64**	34	40.63	4070	2.0						
-	**8.7 - 76**	29	34.29	3890	2.2						
-	**10 - 89**	24	29.29	3720	2.5						
-	**11 - 96**	23	27.16	3640	2.7						
-	**12 - 108**	20	24.06	3560	3.9	**K**	**19**	**DRU**	**71SJ4**	11	567
-	**14 - 119**	19	21.98	3460	4.3	**KF**	**19**	**DRU**	**71SJ4**	11	570
-	**16 - 141**	16	18.55	3290	5.1	**KA**	**19**	**DRU**	**71SJ4**	11	572
-	**19 - 165**	13	15.84	3140	5.9	**KAF**	**19**	**DRU**	**71SJ4**	11	570
-	**20 - 178**	12	14.69	3070	6.4						
-	**24 - 205**	11	12.70	2940	7.4						
-	**25 - 220**	10	11.84	2870	7.8						
-	**29 - 253**	8.8	10.32	2750	8.7						
-	**31 - 272**	8.3	9.58	2710	7.6						

P_m = 0.37 kW

	n_a min^{-1} 10-87Hz	M_a Nm	i	F_{Ra} 1) N	SEW f_B					m kg	
-	**2.1 - 18**	196	144.79*	13000	4.2	**K**	**67**	**DRU**	**71SJ4**	36	606
-	**2.4 - 21**	167	123.54	13000	4.9	**KF**	**67**	**DRU**	**71SJ4**	42	607
						KA	**67**	**DRU**	**71SJ4**	34	608
						KAF	**67**	**DRU**	**71SJ4**	39	607
-	**2.1 - 18**	196	145.14*	9640	3.0	**K**	**57**	**DRU**	**71SJ4**	31	600
-	**2.4 - 21**	168	123.85	9730	3.6	**KF**	**57**	**DRU**	**71SJ4**	35	601
-	**2.8 - 24**	147	108.29	9790	4.1	**KA**	**57**	**DRU**	**71SJ4**	29	602
-	**2.9 - 25**	139	102.88*	9820	4.3	**KAF**	**57**	**DRU**	**71SJ4**	34	601
-	**3.3 - 29**	122	90.26*	9860	4.9						
-	**2.3 - 20**	178	131.87*	7880	2.2						
-	**2.5 - 21**	164	121.48*	7940	2.4						
-	**2.9 - 25**	141	104.37	8040	2.8	**K**	**47**	**DRU**	**71SJ4**	25	590
-	**3.3 - 29**	123	90.86	8100	3.2	**KF**	**47**	**DRU**	**71SJ4**	28	591
-	**3.5 - 31**	115	85.12*	8130	3.5	**KA**	**47**	**DRU**	**71SJ4**	24	592
-	**4.0 - 35**	102	75.20*	8160	3.9	**KAF**	**47**	**DRU**	**71SJ4**	27	591
-	**4.3 - 37**	95	69.84	8180	4.2						
-	**4.7 - 41**	86	63.30*	8200	4.7						
-	**5.2 - 45**	79	58.24	7500	3.8	**K**	**39**	**DRU**	**71SJ4**	24	586
						KF	**39**	**DRU**	**71SJ4**	25	587
						KA	**39**	**DRU**	**71SJ4**	23	588
						KAF	**39**	**DRU**	**71SJ4**	24	587

19391609/DE – 06/2017

P_m = 0.37 kW

	n_a min^{-1} 10-87Hz	M_a Nm	i	F_{Ra} [1] N	SEW f_B					m kg	
-	**2.8 - 25**	144	106.38	5470	1.40						
-	**3.1 - 27**	132	97.81	5390	1.50						
-	**3.6 - 31**	113	83.69	5220	1.75						
-	**4.1 - 36**	98	72.54	5070	2.0						
-	**4.4 - 38**	92	67.80	5000	2.2	**K**	**37**	**DRU**	**71SJ4**	19	580
-	**5.1 - 45**	79	58.60	4830	2.5	**KF**	**37**	**DRU**	**71SJ4**	21	581
-	**6.0 - 52**	67	49.79	4650	3.0	**KA**	**37**	**DRU**	**71SJ4**	18	582
-	**6.7 - 59**	60	44.46	4520	3.3	**KAF**	**37**	**DRU**	**71SJ4**	20	581
-	**7.9 - 69**	51	37.97	4340	3.9						
-	**8.4 - 73**	48	35.57	4260	4.2						
-	**10 - 87**	41	29.96	4070	4.9						
-	**5.5 - 48**	68	54.89	4680	1.90						
-	**6.0 - 52**	62	50.35	4590	2.1						
-	**7.0 - 61**	53	42.87	4410	2.4						
-	**8.1 - 71**	45	36.96	4240	2.7	**K**	**29**	**DRU**	**71SJ4**	12	573
-	**10.0 - 87**	37	30.11	4020	3.1	**KF**	**29**	**DRU**	**71SJ4**	14	577
-	**10 - 88**	37	29.69	4030	3.5	**KA**	**29**	**DRU**	**71SJ4**	12	579
-	**11 - 96**	34	27.23	3940	3.8	**KAF**	**29**	**DRU**	**71SJ4**	13	577
-	**12 - 105**	31	24.91	3810	3.6						
-	**14 - 118**	27	22.08	3680	3.9						
-	**6.7 - 59**	55	44.48	3950	1.25						
-	**7.4 - 64**	50	40.63	3870	1.35						
-	**8.7 - 76**	42	34.29	3720	1.50						
-	**10 - 89**	36	29.29	3580	1.70						
-	**11 - 96**	33	27.16	3510	1.80						
-	**12 - 108**	30	24.06	3460	2.6						
-	**14 - 119**	28	21.98	3370	2.9						
-	**16 - 141**	23	18.55	3220	3.4	**K**	**19**	**DRU**	**71SJ4**	11	567
-	**19 - 165**	20	15.84	3070	4.0	**KF**	**19**	**DRU**	**71SJ4**	11	570
-	**20 - 178**	18	14.69	3010	4.3	**KA**	**19**	**DRU**	**71SJ4**	11	572
-	**24 - 205**	16	12.70	2880	5.0	**KAF**	**19**	**DRU**	**71SJ4**	11	570
-	**25 - 220**	15	11.84	2820	5.3						
-	**29 - 253**	13	10.32	2710	5.9						
-	**31 - 272**	12	9.58	2680	5.1						
-	**37 - 323**	10	8.09	2540	7.7						
-	**43 - 378**	8.9	6.91	2420	9.0						
-	**47 - 407**	8.2	6.41	2360	9.7						

P_m = 0.55 kW

	n_a min^{-1} 10-87Hz	M_a Nm	i	F_{Ra} [1] N	SEW f_B					m kg	
-	**2.4 - 21**	245	123.54	13000	3.3	**K**	**67**	**DRU**	**71MJ4**	36	606
-	**2.8 - 24**	215	108.03	13000	3.8	**KF**	**67**	**DRU**	**71MJ4**	42	607
-	**2.9 - 25**	205	102.62	13000	4.0	**KA**	**67**	**DRU**	**71MJ4**	34	608
-	**3.3 - 29**	181	90.04	13000	4.5	**KAF**	**67**	**DRU**	**71MJ4**	39	607
-	**2.4 - 21**	245	123.85	9470	2.4						
-	**2.8 - 24**	215	108.29	9570	2.8						
-	**2.9 - 25**	205	102.88*	9610	2.9	**K**	**57**	**DRU**	**71MJ4**	31	600
-	**3.3 - 29**	182	90.26*	9690	3.3	**KF**	**57**	**DRU**	**71MJ4**	35	601
-	**3.9 - 34**	154	76.56*	9770	3.9	**KA**	**57**	**DRU**	**71MJ4**	29	602
-	**4.3 - 38**	139	69.12	9820	4.3	**KAF**	**57**	**DRU**	**71MJ4**	34	601
-	**4.9 - 43**	122	60.81*	9860	4.9						
-	**2.9 - 25**	210	104.37	7720	1.90						
-	**3.3 - 29**	183	90.86	7860	2.2						
-	**3.5 - 31**	171	85.12*	7920	2.3						
-	**4.0 - 35**	151	75.20*	8000	2.6	**K**	**47**	**DRU**	**71MJ4**	25	590
-	**4.3 - 37**	140	69.84	8040	2.9	**KF**	**47**	**DRU**	**71MJ4**	28	591
-	**4.7 - 41**	127	63.30*	8020	3.1	**KA**	**47**	**DRU**	**71MJ4**	24	592
-	**5.3 - 46**	114	56.83	7800	3.5	**KAF**	**47**	**DRU**	**71MJ4**	27	591
-	**6.1 - 53**	98	48.95*	7500	4.1						
-	**6.5 - 57**	93	46.03*	7380	4.3						

19391609/DE – 06/2017

P_m = 0.55 kW

	n_a min^{-1} 10-87Hz	M_a Nm	i	F_{Ra} [1] N	SEW f_B					m kg	
-	**6.0 - 53**	100	49.69	7280	3.0	**K**	**39**	**DRU**	**71MJ4**	24	586
-	**6.9 - 60**	87	43.45	7040	3.4	**KF**	**39**	**DRU**	**71MJ4**	25	587
-	**7.3 - 63**	83	41.28	6940	3.6	**KA**	**39**	**DRU**	**71MJ4**	23	588
						KAF	**39**	**DRU**	**71MJ4**	24	587
-	**3.6 - 31**	168	83.69	4720	1.20						
-	**4.1 - 36**	146	72.54	4640	1.35						
-	**4.4 - 38**	136	67.80	4590	1.45						
-	**5.1 - 45**	118	58.60	4480	1.70						
-	**6.0 - 52**	100	49.79	4350	2.0	**K**	**37**	**DRU**	**71MJ4**	19	580
-	**6.7 - 59**	90	44.46	4250	2.2	**KF**	**37**	**DRU**	**71MJ4**	21	581
-	**7.9 - 69**	76	37.97	4110	2.6	**KA**	**37**	**DRU**	**71MJ4**	18	582
-	**8.4 - 73**	72	35.57	4050	2.8	**KAF**	**37**	**DRU**	**71MJ4**	20	581
-	**10 - 87**	60	29.96	3890	3.3						
-	**10 - 91**	58	28.83	3860	3.5						
-	**12 - 104**	50	24.99	3720	4.0						
-	**13 - 112**	47	23.36	3660	4.2						
-	**15 - 129**	41	20.19	3520	4.6						
-	**7.0 - 61**	78	42.87	4150	1.65						
-	**8.1 - 71**	68	36.96	4020	1.80						
-	**10.0 - 87**	55	30.11	3840	2.1	**K**	**29**	**DRU**	**71MJ4**	12	573
-	**12 - 105**	46	24.91	3660	2.4	**KF**	**29**	**DRU**	**71MJ4**	14	577
-	**13 - 113**	43	23.19	3630	3.0	**KA**	**29**	**DRU**	**71MJ4**	12	579
-	**14 - 118**	40	22.08	3550	2.6	**KAF**	**29**	**DRU**	**71MJ4**	13	577
-	**15 - 131**	37	19.99	3490	3.5						
-	**8.7 - 76**	63	34.29	3470	1.00						
-	**10 - 89**	54	29.29	3360	1.15						
-	**11 - 96**	50	27.16	3310	1.20						
-	**16 - 141**	35	18.55	3100	2.3						
-	**19 - 165**	30	15.84	2970	2.7						
-	**20 - 178**	27	14.69	2920	2.9						
-	**24 - 205**	24	12.70	2800	3.4	**K**	**19**	**DRU**	**71MJ4**	11	567
-	**25 - 220**	22	11.84	2750	3.6	**KF**	**19**	**DRU**	**71MJ4**	11	570
-	**29 - 253**	19	10.32	2640	3.9	**KA**	**19**	**DRU**	**71MJ4**	11	572
-	**37 - 323**	15	8.09	2500	5.2	**KAF**	**19**	**DRU**	**71MJ4**	11	570
-	**43 - 378**	13	6.91	2380	6.1						
-	**47 - 407**	12	6.41	2330	6.5						
-	**54 - 471**	11	5.54	2220	7.6						
-	**58 - 506**	9.8	5.16	2180	8.1						
-	**67 - 580**	8.6	4.50	2090	9.3						

P_m = 0.75 kW

	n_a min^{-1} 10-87Hz	M_a Nm	i	F_{Ra} [1] N	SEW f_B					m kg	
						K	**87**	**DRU**	**80SJ4**	105	618
-	**1.5 - 13**	540	197.37	29000	5.0	**KF**	**87**	**DRU**	**80SJ4**	110	619
						KA	**87**	**DRU**	**80SJ4**	91	620
						KAF	**87**	**DRU**	**80SJ4**	105	619
-	**1.9 - 17**	420	154.02	19800	3.7	**K**	**77**	**DRU**	**80SJ4**	66	612
-	**2.2 - 19**	370	135.28	19900	4.2	**KF**	**77**	**DRU**	**80SJ4**	74	613
-	**2.3 - 20**	350	128.52	19900	4.4	**KA**	**77**	**DRU**	**80SJ4**	58	614
-	**2.6 - 23**	310	113.56	20000	5.0	**KAF**	**77**	**DRU**	**80SJ4**	66	613
-	**2.4 - 21**	335	123.54	13000	2.4						
-	**2.8 - 24**	295	108.03	13000	2.8						
-	**2.9 - 25**	280	102.62	13000	2.9	**K**	**67**	**DRU**	**80SJ4**	41	606
-	**3.3 - 29**	245	90.04	13000	3.3	**KF**	**67**	**DRU**	**80SJ4**	47	607
-	**3.9 - 34**	205	76.37	13000	3.9	**KA**	**67**	**DRU**	**80SJ4**	39	608
-	**4.4 - 38**	189	68.95	13000	4.3	**KAF**	**67**	**DRU**	**80SJ4**	44	607
-	**4.9 - 43**	166	60.66	13000	4.9						

19391609/DE – 06/2017

P_m = 0.75 kW

	n_a min^{-1} 10-87Hz	M_a Nm	i	F_{Ra} [1] N	SEW f_B					m kg	
-	**2.4 - 21**	335	123.85	9130	1.75						
-	**2.8 - 24**	295	108.29	9300	2.0						
-	**2.9 - 25**	280	102.88*	9350	2.1						
-	**3.3 - 29**	245	90.26*	9470	2.4	**K**	**57**	**DRU**	**80SJ4**	35	600
-	**3.9 - 34**	210	76.56*	9600	2.9	**KF**	**57**	**DRU**	**80SJ4**	40	601
-	**4.3 - 38**	190	69.12	9660	3.2	**KA**	**57**	**DRU**	**80SJ4**	33	602
-	**4.9 - 43**	167	60.81*	9740	3.6	**KAF**	**57**	**DRU**	**80SJ4**	39	601
-	**5.2 - 45**	158	57.42*	9760	3.8						
-	**6.1 - 53**	134	48.89	9830	4.5						
-	**6.8 - 59**	122	44.43	9570	4.9						
-	**5.0 - 43**	165	60.27	9000	3.0	**K**	**49**	**DRU**	**80SJ4**	40	596
-	**5.7 - 49**	145	52.94	8860	3.4	**KF**	**49**	**DRU**	**80SJ4**	42	597
-	**6.0 - 52**	138	50.29	8740	3.6	**KA**	**49**	**DRU**	**80SJ4**	38	598
						KAF	**49**	**DRU**	**80SJ4**	43	597
-	**2.9 - 25**	285	104.37	7180	1.40						
-	**3.3 - 29**	245	90.86	7460	1.60						
-	**3.5 - 31**	230	85.12*	7570	1.70						
-	**4.0 - 35**	205	75.20*	7740	1.95						
-	**4.3 - 37**	192	69.84	7820	2.1						
-	**4.7 - 41**	174	63.30*	7670	2.3	**K**	**47**	**DRU**	**80SJ4**	30	590
-	**5.3 - 46**	156	56.83	7480	2.6	**KF**	**47**	**DRU**	**80SJ4**	33	591
-	**6.1 - 53**	134	48.95*	7230	3.0	**KA**	**47**	**DRU**	**80SJ4**	29	592
-	**6.5 - 57**	126	46.03*	7120	3.2	**KAF**	**47**	**DRU**	**80SJ4**	32	591
-	**7.6 - 66**	109	39.61	6860	3.7						
-	**8.5 - 74**	97	35.39	6670	4.1						
-	**9.6 - 83**	86	31.30	6450	4.7						
-	**10 - 89**	80	29.32	6340	5.0						
-	**6.0 - 53**	136	49.69	6970	2.2						
-	**6.9 - 60**	119	43.45	6760	2.5	**K**	**39**	**DRU**	**80SJ4**	28	586
-	**7.3 - 63**	113	41.28	6680	2.6	**KF**	**39**	**DRU**	**80SJ4**	30	587
-	**8.3 - 72**	99	36.22	6470	3.0	**KA**	**39**	**DRU**	**80SJ4**	27	588
-	**9.8 - 85**	84	30.72	6210	3.6	**KAF**	**39**	**DRU**	**80SJ4**	29	587
-	**11 - 94**	76	27.73	6050	3.9						
-	**4.1 - 36**	199	72.54	4150	1.00						
-	**4.4 - 38**	186	67.80	4140	1.10						
-	**5.1 - 45**	161	58.60	4090	1.25						
-	**6.0 - 52**	137	49.79	4020	1.45						
-	**6.7 - 59**	122	44.46	3960	1.65						
-	**7.9 - 69**	104	37.97	3860	1.90						
-	**8.4 - 73**	98	35.57	3820	2.0	**K**	**37**	**DRU**	**80SJ4**	22	580
-	**10 - 87**	82	29.96	3690	2.4	**KF**	**37**	**DRU**	**80SJ4**	24	581
-	**10 - 91**	79	28.83	3670	2.5	**KA**	**37**	**DRU**	**80SJ4**	22	582
-	**12 - 104**	69	24.99	3560	2.9	**KAF**	**37**	**DRU**	**80SJ4**	23	581
-	**13 - 112**	64	23.36	3500	3.0						
-	**15 - 129**	55	20.19	3390	3.3						
-	**17 - 152**	47	17.15	3260	3.8						
-	**20 - 170**	42	15.31	3170	4.2						
-	**23 - 200**	36	13.08	3040	4.6						
-	**25 - 215**	33	12.14	2980	4.8						
-	**7.0 - 61**	107	42.87	3870	1.20						
-	**8.1 - 71**	92	36.96	3780	1.30						
-	**10.0 - 87**	75	30.11	3640	1.55						
-	**12 - 105**	62	24.91	3500	1.75	**K**	**29**	**DRU**	**80SJ4**	16	573
-	**13 - 113**	59	23.19	3490	2.2	**KF**	**29**	**DRU**	**80SJ4**	17	577
-	**14 - 118**	55	22.08	3400	1.90	**KA**	**29**	**DRU**	**80SJ4**	15	579
-	**15 - 131**	51	19.99	3370	2.5	**KAF**	**29**	**DRU**	**80SJ4**	17	577
-	**18 - 160**	42	16.29	3200	3.1						
-	**22 - 194**	34	13.47	3050	3.8						

19391609/DE – 06/2017

P_m = 0.75 kW

	n_a min^{-1} 10-87Hz	M_a Nm	i	F_{Ra} 1) N	SEW f_B					m kg	
-	**10 - 89**	73	29.29	3120	0.85						
-	**11 - 96**	68	27.16	3090	0.90						
-	**16 - 141**	47	18.55	2970	1.70						
-	**19 - 165**	40	15.84	2860	2.0						
-	**20 - 178**	37	14.69	2810	2.1						
-	**24 - 205**	32	12.70	2710	2.5	**K**	**19**	**DRU**	**80SJ4**	14	567
-	**25 - 220**	30	11.84	2660	2.6	**KF**	**19**	**DRU**	**80SJ4**	15	570
-	**29 - 253**	26	10.32	2570	2.9	**KA**	**19**	**DRU**	**80SJ4**	14	572
-	**37 - 323**	21	8.09	2450	3.8	**KAF**	**19**	**DRU**	**80SJ4**	14	570
-	**43 - 378**	18	6.91	2340	4.5						
-	**47 - 407**	17	6.41	2290	4.8						
-	**54 - 471**	14	5.54	2200	5.5						
-	**58 - 506**	13	5.16	2150	6.0						
-	**67 - 580**	12	4.50	2060	6.8						

P_m = 1.1 kW

	n_a min^{-1} 10-87Hz	M_a Nm	i	F_{Ra} 1) N	SEW f_B					m kg	
-	**1.7 - 15**	700	174.19	28900	3.9	**K**	**87**	**DRU**	**80MJ4**	105	618
-	**1.8 - 16**	660	164.34*	28900	4.1	**KF**	**87**	**DRU**	**80MJ4**	115	619
-	**2.0 - 18**	590	147.32*	29000	4.5	**KA**	**87**	**DRU**	**80MJ4**	94	620
						KAF	**87**	**DRU**	**80MJ4**	105	619
-	**2.2 - 19**	540	135.28	19600	2.9						
-	**2.3 - 20**	515	128.52	19700	3.0	**K**	**77**	**DRU**	**80MJ4**	68	612
-	**2.6 - 23**	455	113.56	19800	3.4	**KF**	**77**	**DRU**	**80MJ4**	77	613
-	**3.1 - 27**	390	97.05	19900	4.0	**KA**	**77**	**DRU**	**80MJ4**	61	614
-	**3.4 - 29**	355	88.97	19900	4.3	**KAF**	**77**	**DRU**	**80MJ4**	69	613
-	**3.8 - 33**	310	78.07	20000	4.9						
-	**2.8 - 24**	430	108.03	12700	1.90						
-	**2.9 - 25**	410	102.62	12800	2.0						
-	**3.3 - 29**	360	90.04	12900	2.3						
-	**3.9 - 34**	305	76.37	13000	2.7	**K**	**67**	**DRU**	**80MJ4**	44	606
-	**4.4 - 38**	275	68.95	13000	3.0	**KF**	**67**	**DRU**	**80MJ4**	50	607
-	**4.9 - 43**	240	60.66	13000	3.4	**KA**	**67**	**DRU**	**80MJ4**	41	608
-	**5.2 - 46**	230	57.28	13000	3.6	**KAF**	**67**	**DRU**	**80MJ4**	47	607
-	**6.2 - 54**	196	48.77	13000	4.2						
-	**6.8 - 59**	178	44.32	13000	4.6						
-	**2.8 - 24**	435	108.29	8720	1.40						
-	**2.9 - 25**	410	102.88*	8820	1.45						
-	**3.3 - 29**	360	90.26*	9040	1.65						
-	**3.9 - 34**	305	76.56*	9260	1.95						
-	**4.3 - 38**	275	69.12	9370	2.2	**K**	**57**	**DRU**	**80MJ4**	38	600
-	**4.9 - 43**	240	60.81*	9480	2.5	**KF**	**57**	**DRU**	**80MJ4**	43	601
-	**5.2 - 45**	230	57.42*	9530	2.6	**KA**	**57**	**DRU**	**80MJ4**	36	602
-	**6.1 - 53**	197	48.89	9420	3.0	**KAF**	**57**	**DRU**	**80MJ4**	42	601
-	**6.8 - 59**	179	44.43	9200	3.4						
-	**7.8 - 68**	155	38.49	8870	3.9						
-	**8.4 - 73**	144	35.70	8700	4.2						
-	**9.9 - 86**	122	30.28	8330	4.9						
-	**5.7 - 49**	210	52.94	8370	2.4						
-	**6.0 - 52**	200	50.29	8280	2.5	**K**	**49**	**DRU**	**80MJ4**	43	596
-	**6.8 - 59**	179	44.44	8060	2.8	**KF**	**49**	**DRU**	**80MJ4**	45	597
-	**7.9 - 69**	153	37.98	7770	3.3	**KA**	**49**	**DRU**	**80MJ4**	40	598
-	**8.6 - 75**	140	34.81	7600	3.6	**KAF**	**49**	**DRU**	**80MJ4**	45	597

19391609/DE – 06/2017

P_m = 1.1 kW

	n_a min^{-1} 10-87Hz	M_a Nm	i	F_{Ra} [1] N	SEW f_B					m kg	
-	**3.3 - 29**	365	90.86	6380	1.10						
-	**3.5 - 31**	340	85.12*	6640	1.15						
-	**4.0 - 35**	300	75.20*	7040	1.30						
-	**4.3 - 37**	280	69.84	7150	1.40						
-	**4.7 - 41**	250	63.30*	7050	1.55						
-	**5.3 - 46**	225	56.83	6930	1.75						
-	**6.1 - 53**	197	48.95*	6750	2.0	**K**	**47**	**DRU**	**80MJ4**	32	590
-	**6.5 - 57**	185	46.03*	6670	2.2	**KF**	**47**	**DRU**	**80MJ4**	35	591
-	**7.6 - 66**	159	39.61	6480	2.5	**KA**	**47**	**DRU**	**80MJ4**	31	592
-	**8.5 - 74**	142	35.39	6320	2.8	**KAF**	**47**	**DRU**	**80MJ4**	34	591
-	**9.6 - 83**	126	31.30	6150	3.2						
-	**10 - 89**	118	29.32	6060	3.4						
-	**12 - 101**	104	25.91	5880	3.8						
-	**12 - 108**	97	24.06	5780	4.1						
-	**14 - 120**	88	21.81	5630	4.6						
-	**6.9 - 60**	175	43.45	6280	1.70						
-	**7.3 - 63**	166	41.28	6230	1.80						
-	**8.3 - 72**	146	36.22	6080	2.1	**K**	**39**	**DRU**	**80MJ4**	31	586
-	**9.8 - 85**	124	30.72	5870	2.4	**KF**	**39**	**DRU**	**80MJ4**	33	587
-	**11 - 94**	112	27.73	5740	2.7	**KA**	**39**	**DRU**	**80MJ4**	30	588
-	**12 - 107**	98	24.40	5580	3.0	**KAF**	**39**	**DRU**	**80MJ4**	32	587
-	**13 - 113**	93	23.04	5510	3.2						
-	**15 - 133**	79	19.62	5300	3.7						
-	**6.0 - 52**	200	49.79	3440	1.00						
-	**6.7 - 59**	179	44.46	3440	1.10						
-	**7.9 - 69**	153	37.97	3420	1.30						
-	**8.4 - 73**	143	35.57	3400	1.40						
-	**10 - 87**	121	29.96	3340	1.65						
-	**12 - 104**	101	24.99	3270	2.0						
-	**13 - 112**	94	23.36	3230	2.1	**K**	**37**	**DRU**	**80MJ4**	24	580
-	**15 - 129**	81	20.19	3160	2.3	**KF**	**37**	**DRU**	**80MJ4**	27	581
-	**17 - 152**	69	17.15	3060	2.6	**KA**	**37**	**DRU**	**80MJ4**	24	582
-	**20 - 170**	62	15.31	2990	2.8	**KAF**	**37**	**DRU**	**80MJ4**	26	581
-	**23 - 200**	53	13.08	2890	3.1						
-	**25 - 215**	49	12.14	2840	3.3						
-	**29 - 249**	42	10.49	2750	3.8						
-	**34 - 293**	36	8.91	2640	4.5						
-	**38 - 328**	32	7.96	2560	4.8						
-	**8.1 - 71**	135	36.96	3340	0.90						
-	**10.0 - 87**	110	30.11	3290	1.05						
-	**12 - 105**	91	24.91	3210	1.20						
-	**14 - 118**	81	22.08	3150	1.30	**K**	**29**	**DRU**	**80MJ4**	18	573
-	**15 - 131**	75	19.99	3160	1.75	**KF**	**29**	**DRU**	**80MJ4**	20	577
-	**18 - 160**	61	16.29	3030	2.1	**KA**	**29**	**DRU**	**80MJ4**	18	579
-	**22 - 194**	50	13.47	2900	2.6	**KAF**	**29**	**DRU**	**80MJ4**	19	577
-	**25 - 219**	45	11.94	2820	2.9						
-	**33 - 285**	34	9.17	2640	3.8						
-	**35 - 306**	33	8.53	2670	3.8						
-	**19 - 165**	59	15.84	2670	1.35						
-	**20 - 178**	55	14.69	2630	1.45						
-	**24 - 205**	47	12.70	2560	1.70						
-	**25 - 220**	44	11.84	2520	1.80	**K**	**19**	**DRU**	**80MJ4**	17	567
-	**29 - 253**	39	10.32	2450	1.95	**KF**	**19**	**DRU**	**80MJ4**	17	570
-	**43 - 378**	26	6.91	2280	3.0	**KA**	**19**	**DRU**	**80MJ4**	17	572
-	**47 - 407**	24	6.41	2230	3.3	**KAF**	**19**	**DRU**	**80MJ4**	17	570
-	**54 - 471**	21	5.54	2140	3.8						
-	**58 - 506**	20	5.16	2100	4.1						
-	**67 - 580**	17	4.50	2020	4.7						

19391609/DE – 06/2017

P_m = 1.5 kW

	n_a min^{-1} 10-87Hz	M_a Nm	i	F_{Ra} [1] N	SEW f_B					m kg	
-	**1.7 - 15**	960	176.05*	40000	4.5	**K**	**97**	**DRU**	**90MJ4**	170	624
						KF	**97**	**DRU**	**90MJ4**	190	625
						KA	**97**	**DRU**	**90MJ4**	150	626
						KAF	**97**	**DRU**	**90MJ4**	175	625
-	**2.0 - 18**	800	147.32*	28900	3.3	**K**	**87**	**DRU**	**90MJ4**	110	618
-	**2.4 - 21**	695	126.91*	28900	3.9	**KF**	**87**	**DRU**	**90MJ4**	120	619
-	**2.6 - 23**	635	115.82	28900	4.2	**KA**	**87**	**DRU**	**90MJ4**	97	620
-	**2.9 - 25**	560	102.71*	29000	4.8	**KAF**	**87**	**DRU**	**90MJ4**	110	619
-	**2.6 - 23**	620	113.56	19400	2.5						
-	**3.1 - 27**	530	97.05	19600	2.9						
-	**3.4 - 29**	485	88.97	19700	3.2	**K**	**77**	**DRU**	**90MJ4**	72	612
-	**3.8 - 33**	425	78.07	19800	3.6	**KF**	**77**	**DRU**	**90MJ4**	81	613
-	**4.1 - 35**	405	73.99	19800	3.8	**KA**	**77**	**DRU**	**90MJ4**	65	614
-	**4.6 - 40**	355	64.75	19900	4.4	**KAF**	**77**	**DRU**	**90MJ4**	73	613
-	**5.1 - 45**	320	58.34	20000	4.8						
-	**3.3 - 29**	490	90.04	12400	1.65						
-	**3.9 - 34**	415	76.37	12700	1.95						
-	**4.4 - 38**	375	68.95	12900	2.2						
-	**4.9 - 43**	330	60.66	13000	2.5	**K**	**67**	**DRU**	**90MJ4**	48	606
-	**5.2 - 46**	310	57.28	13000	2.6	**KF**	**67**	**DRU**	**90MJ4**	53	607
-	**6.2 - 54**	265	48.77	13000	3.1	**KA**	**67**	**DRU**	**90MJ4**	45	608
-	**6.8 - 59**	240	44.32	13000	3.4	**KAF**	**67**	**DRU**	**90MJ4**	51	607
-	**7.8 - 68**	210	38.39	13000	3.8						
-	**8.4 - 73**	196	35.62	13000	4.2						
-	**9.9 - 86**	166	30.22	13000	5.0						
-	**3.3 - 29**	495	90.26*	8440	1.20						
-	**3.9 - 34**	420	76.56*	8790	1.45						
-	**4.3 - 38**	375	69.12	8970	1.60						
-	**4.9 - 43**	330	60.81*	9160	1.80						
-	**5.2 - 45**	315	57.42*	9230	1.90						
-	**6.1 - 53**	265	48.89	8950	2.2	**K**	**57**	**DRU**	**90MJ4**	42	600
-	**6.8 - 59**	240	44.43	8780	2.5	**KF**	**57**	**DRU**	**90MJ4**	46	601
-	**7.8 - 68**	210	38.49	8500	2.8	**KA**	**57**	**DRU**	**90MJ4**	40	602
-	**8.4 - 73**	196	35.70	8360	3.1	**KAF**	**57**	**DRU**	**90MJ4**	45	601
-	**9.9 - 86**	166	30.28	8040	3.6						
-	**11 - 95**	150	27.34	7840	4.0						
-	**12 - 109**	132	24.05	7590	4.5						
-	**13 - 115**	125	22.71	7480	4.8						
-	**6.8 - 59**	240	44.44	7590	2.0						
-	**7.9 - 69**	205	37.98	7370	2.4						
-	**8.6 - 75**	191	34.81	7240	2.6	**K**	**49**	**DRU**	**90MJ4**	47	596
-	**9.8 - 85**	168	30.55	7040	3.0	**KF**	**49**	**DRU**	**90MJ4**	49	597
-	**10 - 90**	159	28.95	6960	3.1	**KA**	**49**	**DRU**	**90MJ4**	44	598
-	**12 - 103**	139	25.34	6750	3.6	**KAF**	**49**	**DRU**	**90MJ4**	49	597
-	**13 - 114**	125	22.83	6580	4.0						
-	**4.7 - 41**	345	63.30*	6340	1.15						
-	**5.3 - 46**	310	56.83	6300	1.30						
-	**6.1 - 53**	265	48.95*	6200	1.50						
-	**6.5 - 57**	250	46.03*	6160	1.60						
-	**7.6 - 66**	215	39.61	6030	1.85						
-	**8.5 - 74**	194	35.39	5930	2.1	**K**	**47**	**DRU**	**90MJ4**	36	590
-	**12 - 101**	142	25.91	5590	2.8	**KF**	**47**	**DRU**	**90MJ4**	39	591
-	**14 - 120**	120	21.81	5390	3.3	**KA**	**47**	**DRU**	**90MJ4**	35	592
-	**15 - 133**	108	19.58	5260	3.7	**KAF**	**47**	**DRU**	**90MJ4**	38	591
-	**18 - 155**	93	16.86	5080	4.1						
-	**19 - 165**	87	15.86	5000	4.4						
-	**22 - 191**	75	13.65	4820	4.8						
-	**25 - 222**	65	11.77	4610	4.3						
-	**28 - 247**	58	10.56	4480	4.8						

19391609/DE – 06/2017

P_m = 1.5 kW

	n_a min^{-1} 10-87Hz	M_a Nm	i	F_{Ra} [1] N	SEW f_B					m kg	
-	**8.3 - 72**	199	36.22	5620	1.50						
-	**9.8 - 85**	169	30.72	5490	1.80						
-	**11 - 94**	152	27.73	5400	1.95						
-	**12 - 107**	134	24.40	5270	2.2	**K**	**39**	**DRU**	**90MJ4**	35	586
-	**13 - 113**	126	23.04	5220	2.4	**KF**	**39**	**DRU**	**90MJ4**	36	587
-	**15 - 133**	108	19.62	5050	2.7	**KA**	**39**	**DRU**	**90MJ4**	34	588
-	**17 - 146**	98	17.83	4940	3.0	**KAF**	**39**	**DRU**	**90MJ4**	35	587
-	**19 - 169**	85	15.44	4790	3.3						
-	**22 - 194**	74	13.44	4630	3.7						
-	**8.4 - 73**	195	35.57	2930	1.00						
-	**10 - 87**	164	29.96	2950	1.20						
-	**15 - 129**	111	20.19	2890	1.65						
-	**17 - 152**	94	17.15	2830	1.90						
-	**20 - 170**	84	15.31	2790	2.1	**K**	**37**	**DRU**	**90MJ4**	29	580
-	**23 - 200**	72	13.08	2720	2.3	**KF**	**37**	**DRU**	**90MJ4**	31	581
-	**29 - 249**	58	10.49	2610	2.8	**KA**	**37**	**DRU**	**90MJ4**	29	582
-	**34 - 293**	49	8.91	2520	3.3	**KAF**	**37**	**DRU**	**90MJ4**	30	581
-	**38 - 328**	44	7.96	2460	3.5						
-	**44 - 384**	37	6.80	2370	4.0						
-	**47 - 410**	35	6.37	2340	4.2						
-	**56 - 487**	29	5.36	2240	4.8						
-	**12 - 105**	124	24.91	2880	0.90						
-	**14 - 118**	110	22.08	2860	0.95						
-	**18 - 160**	83	16.29	2830	1.55						
-	**22 - 194**	69	13.47	2740	1.90	**K**	**29**	**DRU**	**90MJ4**	23	573
-	**25 - 219**	61	11.94	2680	2.1	**KF**	**29**	**DRU**	**90MJ4**	24	577
-	**33 - 285**	47	9.17	2530	2.8	**KA**	**29**	**DRU**	**90MJ4**	23	579
-	**40 - 349**	38	7.48	2420	3.2	**KAF**	**29**	**DRU**	**90MJ4**	24	577
-	**43 - 375**	36	6.95	2450	3.1						
-	**52 - 454**	30	5.75	2330	3.7						

P_m = 2.2 kW

	n_a min^{-1} 10-87Hz	M_a Nm	i	F_{Ra} [1] N	SEW f_B					m kg	
-	**1.7 - 15**	1410	176.05*	40000	3.0	**K**	**97**	**DRU**	**90LJ4**	170	624
-	**2.0 - 17**	1230	153.21*	40000	3.5	**KF**	**97**	**DRU**	**90LJ4**	190	625
-	**2.1 - 19**	1120	140.28	40000	3.8	**KA**	**97**	**DRU**	**90LJ4**	150	626
-	**2.4 - 21**	990	123.93*	40000	4.3	**KAF**	**97**	**DRU**	**90LJ4**	175	625
-	**2.0 - 18**	1180	147.32*	28700	2.3						
-	**2.4 - 21**	1020	126.91*	28800	2.6						
-	**2.6 - 23**	930	115.82	28800	2.9	**K**	**87**	**DRU**	**90LJ4**	110	618
-	**2.9 - 25**	820	102.71*	28900	3.3	**KF**	**87**	**DRU**	**90LJ4**	120	619
-	**3.5 - 30**	695	86.34	28900	3.9	**KA**	**87**	**DRU**	**90LJ4**	100	620
-	**3.8 - 33**	635	79.34	28900	4.2	**KAF**	**87**	**DRU**	**90LJ4**	115	619
-	**4.3 - 37**	565	70.46	29000	4.8						
-	**2.6 - 23**	910	113.56	18600	1.70						
-	**3.1 - 27**	780	97.05	19000	2.0						
-	**3.4 - 29**	715	88.97	19200	2.2						
-	**3.8 - 33**	625	78.07	19400	2.5						
-	**4.1 - 35**	595	73.99	19500	2.6	**K**	**77**	**DRU**	**90LJ4**	75	612
-	**4.6 - 40**	520	64.75	19700	3.0	**KF**	**77**	**DRU**	**90LJ4**	83	613
-	**5.1 - 45**	465	58.34	19700	3.3	**KA**	**77**	**DRU**	**90LJ4**	68	614
-	**5.9 - 51**	410	51.18	19800	3.8	**KAF**	**77**	**DRU**	**90LJ4**	76	613
-	**6.6 - 58**	360	45.16	19900	4.3						
-	**7.5 - 65**	320	40.04	20000	4.8						
-	**7.8 - 68**	305	38.39	20000	4.8						

19391609/DE – 06/2017

P_m = 2.2 kW

	n_a min^{-1} 10-87Hz	M_a Nm	i	F_{Ra} [1] N	SEW f_B					m kg	
-	**3.3 - 29**	720	90.04	11100	1.15						
-	**3.9 - 34**	610	76.37	11800	1.35						
-	**4.4 - 38**	555	68.95	12100	1.50						
-	**4.9 - 43**	485	60.66	12500	1.70						
-	**5.2 - 46**	460	57.28	12600	1.80						
-	**6.2 - 54**	390	48.77	12800	2.1	**K**	**67**	**DRU**	**90LJ4**	50	606
-	**6.8 - 59**	355	44.32	13000	2.3	**KF**	**67**	**DRU**	**90LJ4**	56	607
-	**7.8 - 68**	305	38.39	13000	2.6	**KA**	**67**	**DRU**	**90LJ4**	48	608
-	**8.4 - 73**	285	35.62	13000	2.9	**KAF**	**67**	**DRU**	**90LJ4**	53	607
-	**9.9 - 86**	240	30.22	13000	3.4						
-	**11 - 96**	215	27.28	13000	3.7						
-	**13 - 109**	193	24.00	13000	4.1						
-	**13 - 115**	182	22.66	13000	4.3						
-	**16 - 135**	155	19.30	13000	4.9						
-	**4.3 - 38**	555	69.12	7980	1.10						
-	**4.9 - 43**	485	60.81*	8310	1.25						
-	**5.2 - 45**	460	57.42*	8270	1.30						
-	**6.1 - 53**	390	48.89	8130	1.50						
-	**6.8 - 59**	355	44.43	8030	1.70						
-	**7.8 - 68**	305	38.49	7860	1.95						
-	**8.4 - 73**	285	35.70	7760	2.1						
-	**9.9 - 86**	240	30.28	7530	2.5	**K**	**57**	**DRU**	**90LJ4**	44	600
-	**11 - 95**	220	27.34	7380	2.7	**KF**	**57**	**DRU**	**90LJ4**	49	601
-	**12 - 109**	194	24.05	7180	3.1	**KA**	**57**	**DRU**	**90LJ4**	42	602
-	**13 - 115**	183	22.71	7100	3.3	**KAF**	**57**	**DRU**	**90LJ4**	48	601
-	**16 - 135**	156	19.34	6840	3.7						
-	**17 - 149**	142	17.57	6690	3.9						
-	**20 - 171**	122	15.22	6460	4.4						
-	**23 - 197**	107	13.25	6230	4.8						
-	**25 - 219**	96	11.92	5980	4.3						
-	**27 - 232**	91	11.26	5890	4.6						
-	**6.8 - 59**	355	44.44	6770	1.40						
-	**7.9 - 69**	305	37.98	6660	1.65						
-	**8.6 - 75**	280	34.81	6600	1.80						
-	**9.8 - 85**	245	30.55	6480	2.0	**K**	**49**	**DRU**	**90LJ4**	50	596
-	**10 - 90**	230	28.95	6420	2.1	**KF**	**49**	**DRU**	**90LJ4**	52	597
-	**12 - 103**	200	25.34	6280	2.5	**KA**	**49**	**DRU**	**90LJ4**	47	598
-	**13 - 114**	184	22.83	6160	2.7	**KAF**	**49**	**DRU**	**90LJ4**	52	597
-	**15 - 130**	161	20.03	6000	3.1						
-	**17 - 148**	142	17.67	5850	3.5						
-	**19 - 167**	126	15.67	5690	3.9						
-	**6.1 - 53**	390	48.95*	5250	1.00						
-	**6.5 - 57**	370	46.03*	5260	1.10						
-	**7.6 - 66**	315	39.61	5260	1.25						
-	**8.5 - 74**	280	35.39	5240	1.40						
-	**12 - 101**	205	25.91	5090	1.90						
-	**14 - 120**	176	21.81	4960	2.3						
-	**15 - 133**	158	19.58	4880	2.5						
-	**18 - 155**	136	16.86	4750	2.8	**K**	**47**	**DRU**	**90LJ4**	39	590
-	**19 - 165**	128	15.86	4700	3.0	**KF**	**47**	**DRU**	**90LJ4**	42	591
-	**22 - 191**	110	13.65	4550	3.3	**KA**	**47**	**DRU**	**90LJ4**	38	592
-	**25 - 214**	98	12.19	4440	3.6	**KAF**	**47**	**DRU**	**90LJ4**	41	591
-	**25 - 222**	95	11.77	4370	3.0						
-	**28 - 247**	85	10.56	4260	3.3						
-	**33 - 287**	73	9.10	4120	3.8						
-	**35 - 305**	69	8.56	4060	3.9						
-	**41 - 354**	59	7.36	3910	4.2						
-	**46 - 397**	53	6.58	3800	4.5						
-	**52 - 449**	47	5.81	3680	4.9						

19391609/DE – 06/2017

P_m = 2.2 kW

	n_a min^{-1} 10-87Hz	M_a Nm	i	F_{Ra} [1] N	SEW f_B					m kg	
-	**8.3 - 72**	290	36.22	4820	1.05						
-	**9.8 - 85**	245	30.72	4810	1.20						
-	**11 - 94**	220	27.73	4780	1.35						
-	**12 - 107**	196	24.40	4740	1.55	**K**	**39**	**DRU**	**90LJ4**	38	586
-	**13 - 113**	185	23.04	4710	1.60	**KF**	**39**	**DRU**	**90LJ4**	39	587
-	**15 - 133**	158	19.62	4620	1.85	**KA**	**39**	**DRU**	**90LJ4**	37	588
-	**17 - 146**	144	17.83	4550	2.0	**KAF**	**39**	**DRU**	**90LJ4**	38	587
-	**19 - 169**	124	15.44	4450	2.2						
-	**22 - 194**	108	13.44	4340	2.5						
-	**28 - 246**	85	10.61	4380	3.3						
-	**15 - 129**	162	20.19	2420	1.15						
-	**17 - 152**	138	17.15	2430	1.30						
-	**20 - 170**	123	15.31	2430	1.40						
-	**23 - 200**	105	13.08	2410	1.55	**K**	**37**	**DRU**	**90LJ4**	32	580
-	**29 - 249**	84	10.49	2370	1.90	**KF**	**37**	**DRU**	**90LJ4**	34	581
-	**34 - 293**	72	8.91	2320	2.2	**KA**	**37**	**DRU**	**90LJ4**	32	582
-	**38 - 328**	64	7.96	2280	2.4	**KAF**	**37**	**DRU**	**90LJ4**	33	581
-	**44 - 384**	55	6.80	2210	2.7						
-	**47 - 410**	51	6.37	2190	2.8						
-	**56 - 487**	43	5.36	2110	3.2						
-	**75 - 656**	32	3.98	1980	3.9						
-	**18 - 160**	122	16.29	2490	1.05						
-	**22 - 194**	101	13.47	2460	1.30						
-	**25 - 219**	89	11.94	2420	1.45	**K**	**29**	**DRU**	**90LJ4**	26	573
-	**33 - 285**	69	9.17	2340	1.90	**KF**	**29**	**DRU**	**90LJ4**	27	577
-	**40 - 349**	56	7.48	2260	2.2	**KA**	**29**	**DRU**	**90LJ4**	25	579
-	**43 - 375**	53	6.95	2340	2.1	**KAF**	**29**	**DRU**	**90LJ4**	26	577
-	**52 - 454**	44	5.75	2240	2.5						
-	**59 - 512**	39	5.10	2170	2.8						

P_m = 3.0 kW

	n_a min^{-1} 10-87Hz	M_a Nm	i	F_{Ra} [1] N	SEW f_B					m kg	
-	**2.0 - 17**	1680	153.21*	40000	2.6						
-	**2.1 - 19**	1530	140.28	40000	2.8	**K**	**97**	**DRU**	**100MJ4**	175	624
-	**2.4 - 21**	1360	123.93*	40000	3.2	**KF**	**97**	**DRU**	**100MJ4**	195	625
-	**2.9 - 25**	1150	105.13	40000	3.7	**KA**	**97**	**DRU**	**100MJ4**	155	626
-	**3.1 - 27**	1060	96.80	40000	4.0	**KAF**	**97**	**DRU**	**100MJ4**	180	625
-	**3.5 - 30**	940	86.52	40000	4.5						
-	**2.4 - 21**	1390	126.91*	28500	1.95						
-	**2.6 - 23**	1270	115.82	28600	2.1						
-	**2.9 - 25**	1120	102.71*	28700	2.4	**K**	**87**	**DRU**	**100MJ4**	115	618
-	**3.5 - 30**	940	86.34	28800	2.9	**KF**	**87**	**DRU**	**100MJ4**	125	619
-	**3.8 - 33**	870	79.34	28800	3.1	**KA**	**87**	**DRU**	**100MJ4**	105	620
-	**4.3 - 37**	770	70.46	28600	3.5	**KAF**	**87**	**DRU**	**100MJ4**	115	619
-	**4.8 - 41**	690	63.00*	27900	3.9						
-	**5.3 - 46**	620	56.64	27200	4.3						
-	**3.1 - 27**	1060	97.05	18000	1.45						
-	**3.4 - 29**	970	88.97	18400	1.60						
-	**3.8 - 33**	850	78.07	18800	1.80						
-	**4.1 - 35**	810	73.99	19000	1.90						
-	**4.6 - 40**	710	64.75	19200	2.2	**K**	**77**	**DRU**	**100MJ4**	80	612
-	**5.1 - 45**	640	58.34	19400	2.4	**KF**	**77**	**DRU**	**100MJ4**	88	613
-	**5.9 - 51**	560	51.18	19600	2.8	**KA**	**77**	**DRU**	**100MJ4**	73	614
-	**6.6 - 58**	495	45.16	19700	3.1	**KAF**	**77**	**DRU**	**100MJ4**	80	613
-	**7.5 - 65**	435	40.04	19800	3.5						
-	**7.8 - 68**	420	38.39	19800	3.6						
-	**8.5 - 74**	385	35.20	19900	4.0						
-	**9.7 - 85**	335	30.89	19900	4.6						
-	**10 - 89**	320	29.27	20000	4.8						

19391609/DE – 06/2017

P_m = 3.0 kW

	n_a min^{-1} 10-87Hz	M_a Nm	i	F_{Ra} [1] N	SEW f_B					m kg	
-	**4.4 - 38**	755	68.95	10800	1.10						
-	**4.9 - 43**	665	60.66	11500	1.25						
-	**5.2 - 46**	625	57.28	11700	1.30						
-	**6.2 - 54**	535	48.77	12200	1.55						
-	**6.8 - 59**	485	44.32	12500	1.70						
-	**7.8 - 68**	420	38.39	12700	1.90						
-	**9.9 - 86**	330	30.22	13000	2.5						
-	**11 - 96**	295	27.28	13000	2.7	**K**	**67**	**DRU**	**100MJ4**	55	606
-	**13 - 109**	260	24.00	13000	3.0	**KF**	**67**	**DRU**	**100MJ4**	61	607
-	**13 - 115**	245	22.66	13000	3.1	**KA**	**67**	**DRU**	**100MJ4**	52	608
-	**16 - 135**	210	19.30	13000	3.6	**KAF**	**67**	**DRU**	**100MJ4**	58	607
-	**17 - 149**	192	17.54	13000	3.9						
-	**20 - 172**	167	15.19	13000	4.2						
-	**23 - 197**	145	13.22	12600	4.6						
-	**24 - 209**	137	12.48	12200	3.9						
-	**28 - 246**	117	10.63	11800	4.3						
-	**31 - 270**	106	9.66	11500	4.5						
-	**36 - 312**	92	8.37	11100	4.8						
-	**6.1 - 53**	535	48.89	7190	1.10						
-	**6.8 - 59**	485	44.43	7180	1.25						
-	**7.8 - 68**	420	38.49	7120	1.40						
-	**9.9 - 86**	330	30.28	6950	1.80						
-	**11 - 95**	300	27.34	6860	2.0						
-	**12 - 109**	260	24.05	6720	2.3						
-	**13 - 115**	245	22.71	6660	2.4						
-	**16 - 135**	210	19.34	6470	2.7	**K**	**57**	**DRU**	**100MJ4**	49	600
-	**17 - 149**	193	17.57	6350	2.9	**KF**	**57**	**DRU**	**100MJ4**	54	601
-	**20 - 171**	167	15.22	6160	3.2	**KA**	**57**	**DRU**	**100MJ4**	47	602
-	**23 - 197**	145	13.25	5980	3.5	**KAF**	**57**	**DRU**	**100MJ4**	53	601
-	**25 - 219**	131	11.92	5720	3.2						
-	**27 - 232**	124	11.26	5640	3.4						
-	**31 - 272**	105	9.59	5440	3.9						
-	**34 - 300**	96	8.71	5320	4.1						
-	**40 - 346**	83	7.55	5130	4.4						
-	**46 - 397**	72	6.57	4950	4.8						
-	**7.9 - 69**	415	37.98	5860	1.20						
-	**8.6 - 75**	380	34.81	5860	1.30						
-	**9.8 - 85**	335	30.55	5830	1.50						
-	**10 - 90**	315	28.95	5810	1.55						
-	**12 - 103**	275	25.34	5740	1.80	**K**	**49**	**DRU**	**100MJ4**	55	596
-	**13 - 114**	250	22.83	5680	2.0	**KF**	**49**	**DRU**	**100MJ4**	57	597
-	**15 - 130**	215	20.03	5580	2.3	**KA**	**49**	**DRU**	**100MJ4**	52	598
-	**17 - 148**	194	17.67	5470	2.6	**KAF**	**49**	**DRU**	**100MJ4**	57	597
-	**19 - 167**	172	15.67	5360	2.9						
-	**22 - 195**	147	13.38	5200	3.2						
-	**26 - 230**	125	11.37	5350	4.0						
-	**8.5 - 74**	385	35.39	4450	1.05						
-	**14 - 120**	235	21.81	4480	1.65						
-	**15 - 133**	210	19.58	4440	1.85						
-	**18 - 155**	185	16.86	4380	2.0						
-	**19 - 165**	174	15.86	4340	2.2						
-	**22 - 191**	150	13.65	4250	2.4						
-	**25 - 214**	134	12.19	4170	2.6	**K**	**47**	**DRU**	**100MJ4**	43	590
-	**25 - 222**	129	11.77	4090	2.2	**KF**	**47**	**DRU**	**100MJ4**	47	591
-	**28 - 247**	116	10.56	4010	2.4	**KA**	**47**	**DRU**	**100MJ4**	43	592
-	**33 - 287**	100	9.10	3900	2.8	**KAF**	**47**	**DRU**	**100MJ4**	45	591
-	**35 - 305**	94	8.56	3860	2.9						
-	**41 - 354**	81	7.36	3740	3.1						
-	**46 - 397**	72	6.58	3640	3.3						
-	**52 - 449**	64	5.81	3540	3.6						
-	**65 - 563**	51	4.64	3350	4.0						

19391609/DE – 06/2017

P_m = 3.0 kW

	n_a min^{-1} 10-87Hz	M_a Nm	i	F_{Ra} [1)] N	SEW f_B					m kg	
-	**9.8 - 85**	335	30.72	4040	0.90						
-	**11 - 94**	300	27.73	4090	1.00						
-	**12 - 107**	265	24.40	4120	1.10						
-	**13 - 113**	250	23.04	4130	1.20						
-	**15 - 133**	215	19.62	4120	1.35	**K**	**39**	**DRU**	**100MJ4**	42	586
-	**17 - 146**	196	17.83	4100	1.50	**KF**	**39**	**DRU**	**100MJ4**	44	587
-	**19 - 169**	170	15.44	4060	1.65	**KA**	**39**	**DRU**	**100MJ4**	41	588
-	**22 - 194**	148	13.44	4000	1.85	**KAF**	**39**	**DRU**	**100MJ4**	43	587
-	**33 - 290**	99	9.00	4040	3.0						
-	**37 - 321**	89	8.12	3940	3.4						
-	**42 - 365**	78	7.15	3820	3.8						

P_m = 4.0 kW

	n_a min^{-1} 10-87Hz	M_a Nm	i	F_{Ra} [1)] N	SEW f_B					m kg	
-	**2.4 - 21**	1810	123.93*	40000	2.4						
-	**2.9 - 25**	1530	105.13	40000	2.8						
-	**3.1 - 27**	1410	96.80	40000	3.0	**K**	**97**	**DRU**	**100LJ4**	180	624
-	**3.5 - 30**	1260	86.52	40000	3.4	**KF**	**97**	**DRU**	**100LJ4**	200	625
-	**3.9 - 34**	1130	77.89*	39200	3.8	**KA**	**97**	**DRU**	**100LJ4**	160	626
-	**4.3 - 37**	1030	70.54	38300	4.2	**KAF**	**97**	**DRU**	**100LJ4**	185	625
-	**4.8 - 42**	910	62.55	37200	4.7						
-	**2.9 - 25**	1500	102.71*	28500	1.80						
-	**3.5 - 30**	1260	86.34	28600	2.1						
-	**3.8 - 33**	1160	79.34	28200	2.3						
-	**4.3 - 37**	1030	70.46	27600	2.6	**K**	**87**	**DRU**	**100LJ4**	120	618
-	**4.8 - 41**	920	63.00*	27000	2.9	**KF**	**87**	**DRU**	**100LJ4**	130	619
-	**5.3 - 46**	820	56.64	26400	3.3	**KA**	**87**	**DRU**	**100LJ4**	105	620
-	**6.1 - 53**	715	49.16	25600	3.8	**KAF**	**87**	**DRU**	**100LJ4**	120	619
-	**6.8 - 59**	640	44.02	25000	4.0						
-	**8.2 - 71**	530	36.52*	23900	4.7						
-	**3.8 - 33**	1140	78.07	17700	1.35						
-	**4.1 - 35**	1080	73.99	18000	1.45						
-	**4.6 - 40**	940	64.75	18500	1.65						
-	**5.1 - 45**	850	58.34	18800	1.80						
-	**5.9 - 51**	745	51.18	19100	2.1	**K**	**77**	**DRU**	**100LJ4**	83	612
-	**6.6 - 58**	660	45.16	19400	2.4	**KF**	**77**	**DRU**	**100LJ4**	91	613
-	**7.5 - 65**	585	40.04	19500	2.6	**KA**	**77**	**DRU**	**100LJ4**	76	614
-	**9.7 - 85**	450	30.89	19800	3.4	**KAF**	**77**	**DRU**	**100LJ4**	83	613
-	**10 - 89**	425	29.27	19800	3.6						
-	**12 - 102**	370	25.62	19400	4.1						
-	**13 - 113**	335	23.08	18900	4.6						
-	**9.8 - 85**	445	30.55	5030	1.10						
-	**10 - 90**	420	28.95	5050	1.20						
-	**12 - 103**	370	25.34	5080	1.35						
-	**13 - 114**	330	22.83	5080	1.50	**K**	**49**	**DRU**	**100LJ4**	58	596
-	**15 - 130**	290	20.03	5050	1.70	**KF**	**49**	**DRU**	**100LJ4**	60	597
-	**17 - 148**	255	17.67	5010	1.95	**KA**	**49**	**DRU**	**100LJ4**	55	598
-	**19 - 167**	225	15.67	4950	2.1	**KAF**	**49**	**DRU**	**100LJ4**	60	597
-	**22 - 195**	196	13.38	4850	2.4						
-	**33 - 286**	134	9.14	4890	3.7						
-	**35 - 301**	127	8.66	4830	3.9						

19391609/DE – 06/2017

10.4 Geometrisch mögliche Kombinationen K..DRE..J (IE2)

K19, n_e=1400 min^{-1} — 80 Nm

n_a min^{-1}	M_{amax} Nm	F_{Ra} N	$\varphi_{(/R)}$ '	i	DRE71SJ_FU	DRE71SJ DRE71MJ_FU DRE80SJ_FU	DRE71MJ DRE80SJ DRE80MJ_FU
					2		
24	70	4330	-	58.68			
26	70	4330	-	53.88			
28	70	4330	-	49.69			
31	69	4340	-	44.48			
34	67	4350	-	40.63			
41	64	4370	-	34.29			
44	80	4260	-	31.74			
48	61	4200	-	29.29			
48	80	4120	-	29.14			
52	60	4090	-	27.16			
52	80	3990	-	26.88			
58	80	3820	-	24.06			
64	80	3680	-	21.98			
75	80	3430	-	18.55			
88	80	3210	-	15.84			
95	80	3110	-	14.69			
110	80	2930	-	12.70			
118	79	2850	-	11.84			
136	76	2720	-	10.32			
146	63	2910	-	9.58			
173	80	2590	-	8.09			
203	80	2420	-	6.91			
218	80	2340	-	6.41			
253	80	2200	-	5.54			
271	80	2140	-	5.16			
311	80	2010	-	4.50			

K29, n_e=1400 min^{-1} — 130 Nm

n_a min^{-1}	M_{amax} Nm	F_{Ra} N	$\varphi_{(/R)}$ '	i	DRE71SJ_FU	DRE71SJ DRE71MJ_FU DRE80SJ_FU	DRE71MJ DRE80SJ DRE80MJ_FU	DRE90MJ DRE90MJ_FU DRE90LJ_FU
					2			
19	130	4980	-	71.93				
21	130	4980	-	66.25				
23	130	4980	-	61.28				
26	130	4980	-	54.89				
28	130	4980	-	50.35				
33	128	4790	-	42.87				
36	130	4720	-	38.90				
38	122	4560	-	36.96				
39	130	4560	-	35.83				
42	130	4410	-	33.15				
46	115	4250	-	30.11				
47	130	4210	-	29.69				
51	130	4060	-	27.23				
56	109	3980	-	24.91				
60	130	3790	-	23.19				

19391609/DE – 06/2017

K29, n_e=1400 min^{-1} — 130 Nm

n_a min^{-1}	M_{amax} Nm	F_{Ra} N	$\varphi_{(/R)}$ '	i	DRE71SJ_FU	DRE71SJ DRE71MJ_FU DRE80SJ_FU	DRE71MJ DRE80SJ DRE80MJ_FU	DRE90MJ DRE90MJ_FU DRE90LJ_FU
63	105	3820	-	22.08				
70	130	3550	-	19.99				
86	130	3240	-	16.29				
104	130	2970	-	13.47				
117	130	2810	-	11.94				
141	110	3000	-	9.90				
153	130	2470	-	9.17				
164	122	2740	-	8.53				
187	123	2300	-	7.48				
201	112	2580	-	6.95				
243	112	2370	-	5.75				
275	110	2260	-	5.10				
357	126	1910	-	3.92				
439	110	1830	-	3.19				

K37, n_e=1400 min^{-1} — 200 Nm

n_a min^{-1}	M_{amax} Nm	F_{Ra} N	$\varphi_{(/R)}$ '	i	DRE71SJ_FU	DRE71SJ DRE71MJ_FU DRE80SJ_FU	DRE71MJ DRE80SJ DRE80MJ_FU	DRE90MJ DRE90MJ_FU DRE90LJ_FU
						3		
13	200	5640	6.8	106.38				
14	200	5640	6.8	97.81				
17	200	5640	6.9	83.69				
19	200	5520	6.9	72.54				
21	200	5360	6.9	67.80				
24	200	5020	6.9	58.60				
28	200	4660	7	49.79				
31	200	4420	7	44.46				
37	200	4100	7	37.97				
39	200	3970	7.1	35.57				
47	200	3650	7.1	29.96				
49	200	3580	8.1	28.83				
56	200	3330	8.1	24.99				
60	195	3260	8.2	23.36				
69	185	3110	8.3	20.19				
82	180	2900	8.4	17.15				
91	175	2780	8.5	15.31				
107	165	2650	8.6	13.08				
115	160	2600	11.9	12.14				
133	160	2410	12.2	10.49				
157	160	2200	12.4	8.91				
176	155	2110	12.5	7.96				
206	150	1980	12.8	6.80				
220	145	1950	12.9	6.37				
261	140	1810	13.2	5.36				
352	125	1660	13	3.98				

19391609/DE – 06/2017

K37R17, n_e=1400 min^{-1} — 200 Nm

n_a min^{-1}	M_{amax} Nm	F_{Ra} N	$\varphi_{(/R)}$ '	i	DRE71SJ_FU	DRE71MJ_FU DRE80SJ_FU
					3 3	
0.20	200	5640	-	6832		
0.24	200	5640	-	5922		
0.25	200	5640	-	5491		
0.29	200	5640	-	4759		
0.34	200	5640	-	4160		
0.38	200	5640	-	3645		
0.44	200	5640	-	3205		
0.50	200	5640	-	2801		
0.57	200	5640	-	2454		
0.65	200	5640	-	2166		
0.74	200	5640	-	1891		
0.84	200	5640	-	1660		
0.95	200	5640	-	1466		
1.1	200	5640	-	1288		
1.2	200	5640	-	1136		
					3 2	
1.4	200	5640	-	996		
1.6	200	5640	-	876		
1.8	200	5640	-	761		
2.1	200	5640	-	671		
2.4	200	5640	-	585		
2.7	200	5640	-	512		
3.1	200	5640	-	451		
3.5	200	5640	-	396		
4.0	200	5640	-	346		
4.6	200	5640	-	304		
5.2	200	5640	-	267		
6.0	200	5640	-	234		
6.8	200	5640	-	205		
7.7	200	5640	-	181		
8.8	200	5640	-	160		
10	200	5640	-	136		
11	200	5640	-	127		
13	200	5640	-	110		
15	200	5640	-	96		

K39, n_e=1400 min^{-1} — 300 Nm

n_a min^{-1}	M_{amax} Nm	F_{Ra} N	$\varphi_{(/R)}$ '	i	DRE71SJ_FU	DRE71SJ DRE71MJ_FU DRE80SJ_FU	DRE71MJ DRE80SJ DRE80MJ_FU	DRE80MJ DRE90MJ DRE90MJ_FU DRE90LJ_FU	DRE90LJ DRE100MJ_FU
						2			
24	300	7500	-	58.24					
28	300	7440	-	49.69					
32	300	7000	-	43.45					
34	300	6840	-	41.28					
39	300	6440	-	36.22					
46	300	5960	-	30.72					
50	300	5670	-	27.73					
57	300	5330	-	24.40					

19391609/DE – 06/2017

K39, n_e=1400 min^{-1} — 300 Nm

n_a min^{-1}	M_{amax} Nm	F_{Ra} N	$\varphi_{(/R)}$ '	i	DRE71SJ_FU	DRE71SJ DRE71MJ_FU DRE80SJ_FU	DRE71MJ DRE80SJ DRE80MJ_FU	DRE80MJ DRE90MJ DRE90MJ_FU DRE90LJ_FU	DRE90LJ DRE100MJ_FU
61	300	5180	-	23.04					
71	295	4820	-	19.62					
79	290	4630	-	17.83					
91	280	4380	-	15.44					
104	270	4160	-	13.44					
110	250	4930	-	12.73					
116	255	4790	-	12.09					
132	285	4360	-	10.61					
156	300	3950	-	9.00					
172	300	3760	-	8.12					
196	300	3530	-	7.15					
207	300	3430	-	6.75					
243	275	3300	-	5.75					
268	260	3240	-	5.22					
310	240	3130	-	4.52					
355	215	3070	-	3.94					
498	170	2870	-	2.81					

K39R17, n_e=1400 min^{-1} — 300 Nm

n_a min^{-1}	M_{amax} Nm	F_{Ra} N	$\varphi_{(/R)}$ '	i	DRE71SJ_FU	DRE71MJ_FU DRE80SJ_FU
2 3						
0.35	300	7500	-	4057		
0.42	300	7500	-	3370		
0.48	300	7500	-	2906		
0.56	300	7500	-	2508		
0.59	300	7500	-	2367		
0.65	300	7500	-	2162		
0.74	300	7500	-	1881		
0.79	300	7500	-	1762		
0.86	300	7500	-	1622		
0.94	300	7500	-	1494		
1.1	300	7500	-	1321		
1.2	300	7500	-	1169		
1.3	300	7500	-	1093		
2 2						
1.5	300	7500	-	956		
1.7	300	7500	-	814		
2.0	300	7500	-	711		
2.3	300	7500	-	605		
2.8	300	7500	-	504		
3.1	300	7500	-	454		
3.5	300	7500	-	399		
3.8	300	7500	-	365		
4.5	300	7500	-	312		
4.7	300	7500	-	299		
5.5	300	7500	-	254		
6.0	300	7500	-	234		
6.7	300	7500	-	210		

19391609/DE – 06/2017

K39R17, n_e=1400 min^{-1} — 300 Nm

n_a min^{-1}	M_{amax} Nm	F_{Ra} N	$\varphi_{(/R)}$ '	i	DRE71SJ_FU	DRE71MJ_FU DRE80SJ_FU
7.4	300	7500	-	189		
8.0	300	7500	-	174		
9.0	300	7500	-	156		
9.9	300	7500	-	142		
12	300	7500	-	117		
19	295	7500	-	75		

K47, n_e=1400 min^{-1} — 400 Nm

n_a min^{-1}	M_{amax} Nm	F_{Ra} N	$\varphi_{(/R)}$ '	i	DRE71SJ_FU	DRE71SJ DRE71MJ_FU DRE80SJ_FU	DRE71MJ DRE80SJ DRE80MJ_FU	DRE80MJ DRE90MJ DRE90MJ_FU DRE90LJ_FU	DRE90LJ DRE100MJ_FU
						3			
11	400	5920	6.4	131.87*					
12	400	5920	6.4	121.48*					
13	400	5920	6.4	104.37					
15	400	5920	6.4	90.86					
16	400	5920	6.4	85.12*					
19	400	5920	6.5	75.20*					
20	400	5920	6.5	69.84					
22	400	5920	6.5	63.30*					
25	400	5920	6.5	56.83					
29	400	5920	6.6	48.95*					
30	400	5920	6.6	46.03*					
35	400	5920	6.6	39.61					
40	400	5920	6.7	35.39					
45	400	5700	7.5	31.30					
48	400	5520	7.5	29.32					
54	400	5170	7.6	25.91					
58	400	4970	7.7	24.06					
64	400	4710	7.7	21.81					
72	400	4440	7.7	19.58					
83	380	4220	7.8	16.86					
88	380	4080	7.9	15.86					
103	360	3890	8	13.65					
115	350	3720	8.3	12.19					
119	280	4060	10.5	11.77					
133	280	3830	10.6	10.56					
154	280	3540	10.7	9.10					
164	270	3500	10.8	8.56					
190	250	3380	11	7.36					
213	240	3270	11.5	6.58					
241	230	3140	11.8	5.81					
302	205	2980	12	4.64					

K47R37, n_e=1400 min^{-1} — 400 Nm

n_a min^{-1}	M_{amax} Nm	F_{Ra} N	$\varphi_{(/R)}$ '	i	DRE71SJ_FU	DRE71SJ DRE71MJ_FU DRE80SJ_FU	DRE71MJ DRE80SJ DRE80MJ_FU	DRE90MJ DRE90MJ_FU DRE90LJ_FU	DRE90LJ DRE100MJ_FU
						3 3			
0.14	400	5920	-	10138					
0.16	400	5920	-	8534					

19391609/DE – 06/2017

K47R37, n_e=1400 min^{-1} — 400 Nm

n_a min^{-1}	M_{amax} Nm	F_{Ra} N	$\varphi_{(/R)}$ '	i	DRE71SJ_FU	DRE71SJ DRE71MJ_FU DRE80SJ_FU	DRE71MJ DRE80SJ DRE80MJ_FU	DRE90MJ DRE90MJ_FU DRE90LJ_FU	DRE90LJ DRE100MJ_FU
0.18	400	5920	-	7662					
0.21	400	5920	-	6826					
0.23	400	5920	-	5983					
0.27	400	5920	-	5159					
0.30	400	5920	-	4601*					
0.36	400	5920	-	3940					
0.40	400	5920	-	3477					
0.46	400	5920	-	3043					
0.51	400	5920	-	2733					
0.59	400	5920	-	2354					
0.68	400	5920	-	2063					
0.77	400	5920	-	1819					
0.88	400	5920	-	1586					
1.0	400	5920	-	1388					
						3 2			
1.1	400	5920	-	1222					
1.3	400	5920	-	1097					
1.5	400	5920	-	945					
1.7	400	5920	-	831*					
1.9	400	5920	-	718*					
2.2	400	5920	-	639					
2.5	400	5920	-	552					
2.8	400	5920	-	495					
3.3	400	5920	-	426					
3.7	400	5920	-	375					
4.3	400	5920	-	327					
4.8	400	5920	-	289					
5.5	400	5920	-	256					
6.2	400	5920	-	225					
7.1	400	5920	-	198					
8.2	400	5920	-	171					
9.2	400	5920	-	153					
11	400	5920	-	131					
12	400	5920	-	112					
14	400	5920	-	99					
15	400	5920	-	94					

K49, n_e=1400 min^{-1} — 500 Nm

n_a min^{-1}	M_{amax} Nm	F_{Ra} N	$\varphi_{(/R)}$ '	i	DRE71SJ_FU	DRE71SJ DRE71MJ_FU DRE80SJ_FU	DRE71MJ DRE80SJ DRE80MJ_FU	DRE80MJ DRE90MJ DRE90MJ_FU DRE90LJ_FU	DRE90LJ DRE100MJ_FU	DRE100MJ
						2				
19	475	9000	-	75.20						
20	445	9000	-	70.19						
23	500	9000	-	60.27						
26	500	8590	-	52.94						
28	500	8380	-	50.29						
32	500	7900	-	44.44						
37	500	7310	-	37.98						
40	500	7000	-	34.81						

19391609/DE – 06/2017

K49, n_e=1400 min^{-1} — 500 Nm

n_a min^{-1}	M_{amax} Nm	F_{Ra} N	$\varphi_{(/R)}$ '	i	DRE71SJ_FU	DRE71SJ DRE71MJ_FU DRE80SJ_FU	DRE71MJ DRE80SJ DRE80MJ_FU	DRE80MJ DRE90MJ DRE90MJ_FU DRE90LJ_FU	DRE90LJ DRE100MJ_FU	DRE100MJ
46	500	6550	-	30.55						
48	500	6370	-	28.95						
55	500	5940	-	25.34						
61	500	5610	-	22.83						
70	500	5220	-	20.03						
79	500	4860	-	17.67						
89	490	4590	-	15.67						
105	470	4320	-	13.38						
123	495	5000	-	11.37						
134	480	4860	-	10.42						
153	500	4460	-	9.14						
162	500	4340	-	8.66						
185	500	4050	-	7.58						
205	500	3840	-	6.83						
234	500	3570	-	5.99						
265	485	3400	-	5.29						
299	465	3270	-	4.69						
350	440	3110	-	4.00						

K49R37, n_e=1400 min^{-1} — 500 Nm

n_a min^{-1}	M_{amax} Nm	F_{Ra} N	$\varphi_{(/R)}$ '	i	DRE71SJ_FU	DRE71SJ DRE71MJ_FU DRE80SJ_FU	DRE71MJ DRE80SJ DRE80MJ_FU	DRE90MJ DRE90MJ_FU DRE90LJ_FU	DRE90LJ DRE100MJ_FU
						2 3			
0.20	500	9000	-	7137					
0.23	500	9000	-	5991					
0.27	500	9000	-	5120					
0.35	500	9000	-	4034					
0.39	500	9000	-	3580					
0.45	500	9000	-	3081					
0.50	500	9000	-	2773					
0.55	500	9000	-	2545					
0.59	500	9000	-	2372					
0.66	500	9000	-	2118					
0.72	500	9000	-	1941					
0.80	500	9000	-	1741					
0.86	500	9000	-	1632					
0.92	500	9000	-	1521					
1.1	500	9000	-	1228					
1.4	500	9000	-	1000					
						2 2			
0.98	500	9000	-	1424					
1.1	500	9000	-	1309					
1.2	500	9000	-	1120					
1.5	500	9000	-	908					
1.7	500	9000	-	802					
2.0	500	9000	-	701					
2.2	500	9000	-	645					
2.4	500	9000	-	595					
2.6	500	9000	-	543					

19391609/DE – 06/2017

K49R37, n_e=1400 min^{-1} — 500 Nm

n_a min^{-1}	M_{amax} Nm	F_{Ra} N	$\varphi_{(/R)}$ '	i	DRE71SJ_FU	DRE71SJ DRE71MJ_FU DRE80SJ_FU	DRE71MJ DRE80SJ DRE80MJ_FU	DRE90MJ DRE90MJ_FU DRE90LJ_FU	DRE90LJ DRE100MJ_FU
2.8	500	9000	-	501					
3.1	500	9000	-	449					
3.5	500	9000	-	401					
3.9	500	9000	-	360					
4.2	500	9000	-	330					
4.7	500	9000	-	300					
5.1	500	9000	-	274					
5.8	500	9000	-	243					
6.5	500	9000	-	217					
7.3	500	9000	-	193					
8.0	500	9000	-	176					
9.2	500	9000	-	152					
11	500	9000	-	125					
14	500	9000	-	99					

K57, n_e=1400 min^{-1} — 600 Nm

n_a min^{-1}	M_{amax} Nm	F_{Ra} N	$\varphi_{(/R)}$ '	i	DRE71SJ_FU	DRE71SJ DRE71MJ_FU DRE80SJ_FU	DRE71MJ DRE80SJ DRE80MJ_FU	DRE80MJ DRE90MJ DRE90MJ_FU DRE90LJ_FU	DRE90LJ DRE100MJ_FU
						3			
9.6	600	7630	5.9	145.14*					
11	600	7630	5.9	123.85					
13	600	7630	5.9	108.29					
14	600	7630	5.9	102.88*					
16	600	7630	5.9	90.26*					
18	600	7630	5.9	76.56*					
20	600	7630	6	69.12					
23	600	7630	6	60.81*					
24	600	7630	6	57.42*					
29	600	7630	6	48.89					
32	600	7630	6.1	44.43					
36	600	7630	6.1	38.49					
39	600	7630	6.8	35.70					
46	600	7300	6.9	30.28					
51	600	6930	6.9	27.34					
58	600	6480	6.9	24.05					
62	600	6280	6.9	22.71					
72	575	5910	7	19.34					
80	555	5740	7.2	17.57					
92	535	5430	7.3	15.22					
106	510	5190	7.4	13.25					
117	415	5150	9.4	11.92					
124	415	4990	9.5	11.26					
146	405	4650	9.6	9.59					
161	390	4520	10	8.71					
185	365	4360	10.2	7.55					
213	345	4180	10.4	6.57					
299	300	3800	11	4.69					

19391609/DE – 06/2017

K57R37, n_e=1400 min^{-1} — 600 Nm

n_a min^{-1}	M_{amax} Nm	F_{Ra} N	$\varphi_{(/R)}$ '	i	DRE71SJ_FU	DRE71SJ DRE71MJ_FU DRE80SJ_FU	DRE71MJ DRE80SJ DRE80MJ_FU	DRE90MJ DRE90MJ_FU DRE90LJ_FU	DRE90LJ DRE100MJ_FU
						3 3			
0.12	600	7630	-	12169					
0.13	600	7630	-	11162*					
0.15	600	7630	-	9503					
0.16	600	7630	-	8547					
0.19	600	7630	-	7277					
0.22	600	7630	-	6478*					
0.25	600	7630	-	5662*					
0.28	600	7630	-	5033					
0.32	600	7630	-	4340					
0.36	600	7630	-	3854					
0.41	600	7630	-	3390					
0.48	600	7630	-	2924					
0.54	600	7630	-	2593					
0.62	600	7630	-	2249					
0.70	600	7630	-	1986					
						3 2			
0.80	600	7630	-	1743					
0.91	600	7630	-	1539					
1.0	600	7630	-	1354					
1.2	600	7630	-	1174					
1.4	600	7630	-	1036*					
1.5	600	7630	-	906*					
1.7	600	7630	-	806					
2.0	600	7630	-	699					
2.3	600	7630	-	615					
2.6	600	7630	-	544*					
3.0	600	7630	-	473					
3.3	600	7630	-	421					
3.9	600	7630	-	362					
4.4	600	7630	-	319					
5.0	600	7630	-	280					
5.7	600	7630	-	246					
6.5	600	7630	-	215					
7.3	600	7630	-	192					
8.4	600	7630	-	166					
9.7	600	7630	-	145					
11	600	7630	-	129					
13	600	7630	-	111					
14	600	7630	-	97					

K67, n_e=1400 min^{-1} — 820 Nm

n_a min^{-1}	M_{amax} Nm	F_{Ra} N	$\varphi_{(/R)}$ '	i	DRE71SJ_FU	DRE71SJ DRE71MJ_FU DRE80SJ_FU	DRE71MJ DRE80SJ DRE80MJ_FU	DRE80MJ DRE90MJ DRE90MJ_FU DRE90LJ_FU	DRE90LJ DRE100MJ_FU
						3			
9.7	820	10300	6.2	144.79*					
11	820	10300	6.2	123.54					
13	820	10300	6.1	108.03					

19391609/DE – 06/2017

K67, n_e=1400 min^{-1} — 820 Nm

n_a min^{-1}	M_{amax} Nm	F_{Ra} N	$\varphi_{(/R)}$ '	i	DRE71SJ_FU	DRE71SJ DRE71MJ_FU DRE80SJ_FU	DRE71MJ DRE80SJ DRE80MJ_FU	DRE80MJ DRE90MJ DRE90MJ_FU DRE90LJ_FU	DRE90LJ DRE100MJ_FU
14	820	10300	6.1	102.62					
16	820	10300	6.2	90.04					
18	820	10300	6.2	76.37					
20	820	10300	6.2	68.95					
23	820	10300	6.2	60.66					
24	820	10300	6.2	57.28					
29	820	10300	6.3	48.77					
32	820	10300	6.3	44.32					
36	800	10500	6.4	38.39					
39	820	10300	7.1	35.62					
46	820	10300	7.1	30.22					
51	820	10300	7.1	27.28					
58	800	10500	7.2	24.00					
62	780	10700	7.2	22.66					
73	760	10800	7.3	19.30					
80	740	11000	7.5	17.54					
92	700	11300	7.5	15.19					
106	670	11500	7.6	13.22					
112	530	12300	8.6	12.48					
132	500	11800	8.8	10.63					
145	480	11500	9.1	9.66					
167	440	11100	9.3	8.37					
192	420	10700	9.4	7.28					
269	350	9860	10	5.20					

K67R37, n_e=1400 min^{-1} — 820 Nm

n_a min^{-1}	M_{amax} Nm	F_{Ra} N	$\varphi_{(/R)}$ '	i	DRE71SJ_FU	DRE71SJ DRE71MJ_FU DRE80SJ_FU	DRE71MJ DRE80SJ DRE80MJ_FU	DRE90MJ DRE90MJ_FU DRE90LJ_FU	DRE90LJ DRE100MJ_FU
						3 3			
0.12	820	10300	-	12139					
0.13	820	10300	-	11134					
0.15	820	10300	-	9479					
0.17	820	10300	-	8173					
0.19	820	10300	-	7259					
0.22	820	10300	-	6462					
0.25	820	10300	-	5648					
0.29	820	10300	-	4846					
0.32	820	10300	-	4329					
0.37	820	10300	-	3750					
0.42	820	10300	-	3315					
0.48	820	10300	-	2917					
0.55	820	10300	-	2532					
0.62	820	10300	-	2244					
0.71	820	10300	-	1981					
						3 2			
0.81	820	10300	-	1739					
0.91	820	10300	-	1535					
1.0	820	10300	-	1351					
1.2	820	10300	-	1171					

19391609/DE – 06/2017

K67R37, n_e=1400 min^{-1} — 820 Nm

n_a min^{-1}	M_{amax} Nm	F_{Ra} N	$\varphi_{(/R)}$ '	i	DRE71SJ_FU	DRE71SJ DRE71MJ_FU DRE80SJ_FU	DRE71MJ DRE80SJ DRE80MJ_FU	DRE90MJ DRE90MJ_FU DRE90LJ_FU	DRE90LJ DRE100MJ_FU
1.4	820	10300	-	1034					
1.6	820	10300	-	903					
1.8	820	10300	-	793					
2.0	820	10300	-	697					
2.3	820	10300	-	613					
2.6	820	10300	-	542					
3.0	820	10300	-	471					
3.3	820	10300	-	420					
3.9	820	10300	-	361					
4.3	820	10300	-	323					
5.0	820	10300	-	279					
5.7	820	10300	-	246					
6.5	820	10300	-	217					
7.3	820	10300	-	191					
8.4	820	10300	-	166					
9.7	820	10300	-	144					
11	820	10300	-	122					

K77, n_e=1400 min^{-1} — 1550 Nm

n_a min^{-1}	M_{amax} Nm	F_{Ra} N	$\varphi_{(/R)}$ '	i	DRE71SJ_FU	DRE71SJ DRE71MJ_FU DRE80SJ_FU	DRE71MJ DRE80SJ DRE80MJ_FU	DRE80MJ DRE90MJ DRE90MJ_FU DRE90LJ_FU	DRE90LJ DRE100MJ_FU	DRE100MJ
						3				
7.3	1450	16100	5.4	192.18						
7.8	1450	16100	5.4	179.37						
9.1	1550	15400	5.4	154.02						
10	1550	15400	5.4	135.28						
11	1550	15400	5.4	128.52						
12	1550	15400	5.4	113.56						
14	1550	15400	5.4	97.05						
16	1550	15400	5.4	88.97						
18	1550	15400	5.4	78.07						
19	1550	15400	5.4	73.99						
22	1550	15400	5.5	64.75						
24	1550	15400	5.5	58.34						
27	1550	15400	5.5	51.18						
31	1550	15400	5.5	45.16						
35	1550	15400	5.6	40.04						
36	1500	15700	6	38.39						
40	1550	15400	6	35.20						
45	1550	15400	6.1	30.89						
48	1550	15400	6.1	29.27						
55	1550	15400	6.1	25.62						
61	1550	15400	6.3	23.08						
69	1500	15700	6.3	20.25						
78	1450	16100	6.3	17.87						
88	1400	15500	6.4	15.84						
104	1340	14800	6.5	13.52						
113	1000	15100	7.9	12.36						
129	990	14400	7.8	10.84						

19391609/DE – 06/2017

K77, n_e=1400 min^{-1} — 1550 Nm

n_a min^{-1}	M_{amax} Nm	F_{Ra} N	$\varphi_{(/R)}$ '	i	DRE71SJ_FU	DRE71SJ DRE71MJ_FU DRE80SJ_FU	DRE71MJ DRE80SJ DRE80MJ_FU	DRE80MJ DRE90MJ DRE90MJ_FU DRE90LJ_FU	DRE90LJ DRE100MJ_FU	DRE100MJ
146	940	13900	7.9	9.56						
165	890	13500	8.2	8.48						
193	820	13100	8.3	7.24						

K77R37, n_e=1400 min^{-1} — 1550 Nm

n_a min^{-1}	M_{amax} Nm	F_{Ra} N	$\varphi_{(/R)}$ '	i	DRE71SJ_FU	DRE71SJ DRE71MJ_FU DRE80SJ_FU	DRE71MJ DRE80SJ DRE80MJ_FU	DRE90MJ DRE90MJ_FU DRE90LJ_FU	DRE90LJ DRE100MJ_FU
						3 3			
0.09	1550	15400	-	15310					
0.10	1550	15400	-	14043					
0.12	1550	15400	-	11955					
0.14	1550	15400	-	10217					
0.16	1550	15400	-	8809					
0.19	1550	15400	-	7528					
0.21	1550	15400	-	6606					
0.24	1550	15400	-	5774					
0.28	1550	15400	-	5089					
0.31	1550	15400	-	4489					
0.35	1550	15400	-	3961					
0.40	1550	15400	-	3485					
0.48	1550	15400	-	2901					
0.52	1550	15400	-	2717					
0.59	1550	15400	-	2370					
						3 2			
0.68	1550	15400	-	2050					
0.79	1550	15400	-	1772					
0.92	1550	15400	-	1514					
1.0	1550	15400	-	1388					
1.1	1550	15400	-	1218					
1.3	1550	15400	-	1053					
1.5	1550	15400	-	924					
1.7	1550	15400	-	815					
2.0	1550	15400	-	709					
2.3	1550	15400	-	622					
2.5	1550	15400	-	552					
2.9	1550	15400	-	485					
3.3	1550	15400	-	428					
3.8	1550	15400	-	367					
4.3	1550	15400	-	328					
4.8	1550	15400	-	290					
5.6	1550	15400	-	252					
6.3	1550	15400	-	221					
7.2	1550	15400	-	195					
8.0	1550	15400	-	175					
9.1	1550	15400	-	154					

19391609/DE – 06/2017

K87, n_e=1400 min^{-1} — 2700 Nm

n_a min^{-1}	M_{amax} Nm	F_{Ra} N	$\varphi_{(/R)}$ '	i	DRE71MJ_FU DRE80SJ_FU	DRE71MJ DRE80SJ DRE80MJ_FU	DRE80MJ DRE90MJ DRE90MJ_FU DRE90LJ_FU	DRE90LJ DRE100MJ_FU	DRE100MJ
						3			
7.1	2700	27300	5.3	197.37					
8.0	2700	27300	5.3	174.19					
8.5	2700	27300	5.3	164.34*					
9.5	2700	27300	5.4	147.32*					
11	2700	27300	5.4	126.91*					
12	2700	27300	5.4	115.82					
14	2700	27300	5.4	102.71*					
16	2700	27300	5.4	86.34					
18	2700	27300	5.4	79.34					
20	2700	27300	5.4	70.46					
22	2700	26200	5.4	63.00*					
25	2700	25000	5.5	56.64					
28	2700	23500	5.5	49.16					
32	2600	22800	5.5	44.02					
38	2500	21400	5.5	36.52*					
45	2700	19200	6.1	31.39					
50	2600	18500	6.1	27.88					
56	2500	18000	6.1	24.92					
62	2300	17900	6.2	22.41					
72	2300	16800	6.3	19.45					
80	2200	16300	6.3	17.42					
88	1800	16000	6.5	16.00					
97	2100	15300	6.4	14.45					
111	2000	14800	6.5	12.56					
125	1500	14900	6.7	11.17					
140	1500	14200	6.8	10.00					
169	1400	13500	7	8.29					
194	1300	13200	7.1	7.21					

K87R57, n_e=1400 min^{-1} — 2700 Nm

n_a min^{-1}	M_{amax} Nm	F_{Ra} N	$\varphi_{(/R)}$ '	i	DRE71SJ_FU	DRE71SJ DRE71MJ_FU DRE80SJ_FU	DRE71MJ DRE80SJ DRE80MJ_FU	DRE80MJ DRE90MJ DRE90MJ_FU DRE90LJ_FU	DRE90LJ DRE100MJ_FU
						3 3			
0.09	2700	27300	-	14829					
0.11	2700	27300	-	13168					
0.12	2700	27300	-	11737					
0.14	2700	27300	-	10217					
0.15	2700	27300	-	9073					
0.18	2700	27300	-	7854					
0.20	2700	27300	-	6832					
0.24	2700	27300	-	5930					
0.27	2700	27300	-	5240					
0.31	2700	27300	-	4562					
0.35	2700	27300	-	4037					
0.39	2700	27300	-	3609					
0.45	2700	27300	-	3107					
0.51	2700	27300	-	2728					

19391609/DE – 06/2017

K87R57, n_e=1400 min^{-1} — 2700 Nm

n_a min^{-1}	M_{amax} Nm	F_{Ra} N	$\varphi_{(/R)}$ '	i	DRE71SJ_FU	DRE71SJ DRE71MJ_FU DRE80SJ_FU	DRE71MJ DRE80SJ DRE80MJ_FU	DRE80MJ DRE90MJ DRE90MJ_FU DRE90LJ_FU	DRE90LJ DRE100MJ_FU
0.59	2700	27300	-	2371					
						3 2			
0.67	2700	27300	-	2088					
0.76	2700	27300	-	1854					
0.84	2700	27300	-	1657					
0.99	2700	27300	-	1415					
1.1	2700	27300	-	1229					
1.3	2700	27300	-	1078					
1.5	2700	27300	-	951					
1.7	2700	27300	-	837					
1.9	2700	27300	-	726					
2.2	2700	27300	-	638					
2.5	2700	27300	-	562*					
3.0	2700	27300	-	474*					
3.3	2700	27300	-	426					
3.8	2700	27300	-	373					
4.2	2700	27300	-	330					
4.8	2700	27300	-	294					
5.6	2700	27300	-	250					
5.9	2700	27300	-	236					
7.0	2700	27300	-	201					
7.7	2700	27300	-	183					
8.8	2700	27300	-	159					
9.9	2600	27400	-	141					

K97, n_e=1400 min^{-1} — 4300 Nm

n_a min^{-1}	M_{amax} Nm	F_{Ra} N	$\varphi_{(/R)}$ '	i	DRE71MJ_FU DRE80SJ_FU	DRE71MJ DRE80SJ DRE80MJ_FU	DRE80MJ DRE90MJ DRE90MJ_FU DRE90LJ_FU	DRE90LJ DRE100MJ_FU	DRE100MJ
						3			
8.0	4300	40000	6.8	176.05*					
9.1	4300	40000	6.8	153.21*					
10.0	4300	40000	6.8	140.28					
11	4300	40000	6.8	123.93*					
13	4300	40000	6.8	105.13					
14	4300	40000	6.8	96.80					
16	4300	38800	6.8	86.52					
18	4300	37100	6.8	77.89*					
20	4300	35600	6.9	70.54					
22	4300	33800	6.9	62.55					
25	4300	32300	6.9	56.55					
29	4300	30000	6.9	47.93*					
33	4300	28300	6.9	41.87					
37	4300	27100	7.4	38.30					
41	4300	25700	7.5	34.23					
45	4300	24500	7.5	30.82					
50	4300	23300	7.5	27.91					
57	4300	22000	7.6	24.75					
63	4300	20900	7.6	22.37					

19391609/DE – 06/2017

K97, n_e=1400 min^{-1}									4300 Nm
n_a min^{-1}	M_{amax} Nm	F_{Ra} N	$\varphi_{(/R)}$ '	i	DRE71MJ_FU DRE80SJ_FU	DRE71MJ DRE80SJ DRE80MJ_FU	DRE80MJ DRE90MJ DRE90MJ_FU DRE90LJ_FU	DRE90LJ DRE100MJ_FU	DRE100MJ
74	4300	19100	7.6	18.96					
85	4300	17800	7.7	16.56					
101	4300	16100	7.7	13.85					
117	3890	16200	7.8	11.99					
134	2870	16400	9.7	10.41					
161	2660	15800	9.8	8.71					
186	2400	15700	10	7.54					

K97R57, n_e=1400 min^{-1}									4300 Nm
n_a min^{-1}	M_{amax} Nm	F_{Ra} N	$\varphi_{(/R)}$ '	i	DRE71SJ_FU	DRE71SJ DRE71MJ_FU DRE80SJ_FU	DRE71MJ DRE80SJ DRE80MJ_FU	DRE80MJ DRE90MJ DRE90MJ_FU DRE90LJ_FU	DRE90LJ DRE100MJ_FU
						3 3			
0.08	4300	40000	-	18091					
0.08	4300	40000	-	16666					
0.09	4300	40000	-	14897					
0.11	4300	40000	-	13182					
0.12	4300	40000	-	11677					
0.14	4300	40000	-	10317					
0.15	4300	40000	-	9083					
0.17	4300	40000	-	8054					
0.20	4300	40000	-	6970					
0.23	4300	40000	-	6027					
0.26	4300	40000	-	5391					
0.30	4300	40000	-	4669					
0.34	4300	40000	-	4082					
0.39	4300	40000	-	3583					
0.45	4300	40000	-	3108*					
0.51	4300	40000	-	2757					
						3 2			
0.58	4300	40000	-	2419					
0.66	4300	40000	-	2123					
0.75	4300	40000	-	1856					
0.86	4300	40000	-	1625					
0.98	4300	40000	-	1430					
1.1	4300	40000	-	1261					
1.3	4300	40000	-	1102					
1.5	4300	40000	-	957					
1.6	4300	40000	-	855					
1.9	4300	40000	-	743					
2.1	4300	40000	-	652*					
2.4	4300	40000	-	573					
2.8	4300	40000	-	504					
3.2	4300	40000	-	437					
3.7	4300	40000	-	382*					
4.1	4300	40000	-	342*					
4.6	4300	40000	-	305					
5.4	4300	40000	-	258					

19391609/DE – 06/2017

K97R57, n_e=1400 min^{-1}									4300 Nm
n_a min^{-1}	M_{amax} Nm	F_{Ra} N	$\varphi_{(/R)}$ '	i	DRE71SJ_FU	DRE71SJ DRE71MJ_FU DRE80SJ_FU	DRE71MJ DRE80SJ DRE80MJ_FU	DRE80MJ DRE90MJ DRE90MJ_FU DRE90LJ_FU	DRE90LJ DRE100MJ_FU
6.0	4300	40000	-	232					
7.0	4300	40000	-	199					

19391609/DE – 06/2017

10.5 Auswahltabellen K..DRE..J (IE2), 50 Hz

P_m = 0.37 kW

n_a min^{-1} 50Hz	n_a min^{-1} 10-50Hz	M_a Nm	i	F_{Ra} [1] N	SEW f_B					m kg	
-	1.6 - 7.8	450	192.18	19800	3.2	K	77	DRE	71SJ4	63	612
-	1.7 - 8.4	420	179.37	19800	3.4	KF	77	DRE	71SJ4	71	613
9.7	1.9 - 9.7	360	154.02	19900	4.3	KA	77	DRE	71SJ4	55	614
11	2.2 - 11	315	135.28	20000	4.9	KAF	77	DRE	71SJ4	63	613
-	2.1 - 10	340	144.79*	13000	2.4						
12	2.4 - 12	290	123.54	13000	2.8	K	67	DRE	71SJ4	36	606
14	2.8 - 14	250	108.03	13000	3.2	KF	67	DRE	71SJ4	42	607
15	2.9 - 15	240	102.62	13000	3.4	KA	67	DRE	71SJ4	34	608
17	3.3 - 17	210	90.04	13000	3.9	KAF	67	DRE	71SJ4	39	607
20	3.9 - 20	180	76.37	13000	4.6						
-	2.1 - 10	340	145.14*	9120	1.75						
12	2.4 - 12	290	123.85	9320	2.1						
14	2.8 - 14	255	108.29	9450	2.4						
15	2.9 - 15	240	102.88*	9490	2.5	K	57	DRE	71SJ4	31	600
17	3.3 - 17	210	90.26*	9590	2.8	KF	57	DRE	71SJ4	35	601
20	3.9 - 20	180	76.56*	9690	3.3	KA	57	DRE	71SJ4	29	602
22	4.3 - 22	163	69.12	9750	3.7	KAF	57	DRE	71SJ4	34	601
25	4.9 - 25	143	60.81*	9800	4.2						
26	5.2 - 26	135	57.42*	9830	4.4						
-	4.0 - 20	177	75.20	9000	2.7	K	49	DRE	71SJ4	37	596
-	4.3 - 21	165	70.19	9000	2.7	KF	49	DRE	71SJ4	39	597
25	5.0 - 25	142	60.27	9000	3.5	KA	49	DRE	71SJ4	35	598
						KAF	49	DRE	71SJ4	39	597
-	2.3 - 11	310	131.87*	6960	1.30						
-	2.5 - 12	285	121.48*	7180	1.40						
14	2.9 - 14	245	104.37	7490	1.65						
17	3.3 - 17	210	90.86	7690	1.85						
18	3.5 - 18	200	85.12*	7770	2.0						
20	4.0 - 20	177	75.20*	7890	2.3	K	47	DRE	71SJ4	25	590
21	4.3 - 21	164	69.84	7940	2.4	KF	47	DRE	71SJ4	28	591
24	4.7 - 24	149	63.30*	8010	2.7	KA	47	DRE	71SJ4	24	592
26	5.3 - 26	134	56.83	8060	3.0	KAF	47	DRE	71SJ4	27	591
31	6.1 - 31	115	48.95*	8120	3.5						
33	6.5 - 33	108	46.03*	8140	3.7						
38	7.6 - 38	93	39.61	8180	4.3						
42	8.5 - 42	83	35.39	8210	4.8						
-	5.2 - 26	137	58.24	7500	2.2						
30	6.0 - 30	117	49.69	7500	2.6	K	39	DRE	71SJ4	24	586
35	6.9 - 35	102	43.45	7500	2.9	KF	39	DRE	71SJ4	25	587
36	7.3 - 36	97	41.28	7500	3.1	KA	39	DRE	71SJ4	23	588
41	8.3 - 41	85	36.22	7500	3.5	KAF	39	DRE	71SJ4	24	587
18	3.6 - 18	197	83.69	5670	1.00						
21	4.1 - 21	171	72.54	5620	1.15						
22	4.4 - 22	160	67.80	5560	1.25						
26	5.1 - 26	138	58.60	5430	1.45						
30	6.0 - 30	117	49.79	5260	1.70						
34	6.7 - 34	105	44.46	5140	1.90						
40	7.9 - 40	89	37.97	4970	2.2	K	37	DRE	71SJ4	19	580
42	8.4 - 42	84	35.57	4900	2.4	KF	37	DRE	71SJ4	21	581
50	10 - 50	71	29.96	4700	2.8	KA	37	DRE	71SJ4	18	582
52	10 - 52	68	28.83	4660	3.0	KAF	37	DRE	71SJ4	20	581
60	12 - 60	59	24.99	4490	3.4						
64	13 - 64	55	23.36	4420	3.5						
74	15 - 74	48	20.19	4250	3.9						
87	17 - 87	40	17.15	4070	4.5						
98	20 - 98	36	15.31	3940	4.8						

19391609/DE – 06/2017

P_m = 0.37 kW

n_a min^{-1} 50Hz	n_a min^{-1} 10-50Hz	M_a Nm	i	F_{Ra} [1] N	SEW f_B					m kg	
-	**5.5 - 27**	118	54.89	5070	1.10						
-	**6.0 - 30**	108	50.35	5110	1.20						
35	**7.0 - 35**	92	42.87	5020	1.40						
41	**8.1 - 41**	79	36.96	4860	1.55						
50	**10.0 - 50**	64	30.11	4630	1.80	**K**	**29**	**DRE**	**71SJ4**	12	573
-	**10 - 51**	65	29.69	4670	2.0	**KF**	**29**	**DRE**	**71SJ4**	14	577
-	**11 - 55**	60	27.23	4570	2.2	**KA**	**29**	**DRE**	**71SJ4**	12	579
60	**12 - 60**	53	24.91	4420	2.0	**KAF**	**29**	**DRE**	**71SJ4**	13	577
65	**13 - 65**	51	23.19	4380	2.6						
68	**14 - 68**	47	22.08	4280	2.2						
75	**15 - 75**	44	19.99	4210	3.0						
92	**18 - 92**	36	16.29	3980	3.6						
44	**8.7 - 44**	73	34.29	4190	0.85						
51	**10 - 51**	63	29.29	4060	0.95						
55	**11 - 55**	58	27.16	4000	1.05						
-	**12 - 62**	53	24.06	3990	1.50						
-	**14 - 68**	48	21.98	3900	1.65						
81	**16 - 81**	41	18.55	3740	1.95						
95	**19 - 95**	35	15.84	3590	2.3						
102	**20 - 102**	32	14.69	3520	2.5	**K**	**19**	**DRE**	**71SJ4**	11	567
118	**24 - 118**	28	12.70	3380	2.9	**KF**	**19**	**DRE**	**71SJ4**	11	570
127	**25 - 127**	26	11.84	3310	3.0	**KA**	**19**	**DRE**	**71SJ4**	11	572
145	**29 - 145**	23	10.32	3190	3.4	**KAF**	**19**	**DRE**	**71SJ4**	11	570
-	**31 - 157**	21	9.58	3160	2.9						
185	**37 - 185**	18	8.09	3010	4.4						
217	**43 - 217**	15	6.91	2870	5.2						
234	**47 - 234**	14	6.41	2800	5.6						
271	**54 - 271**	12	5.54	2680	6.5						
291	**58 - 291**	12	5.16	2620	6.9						
333	**67 - 333**	10	4.50	2510	8.0						

P_m = 0.55 kW

n_a min^{-1} 50Hz	n_a min^{-1} 10-50Hz	M_a Nm	i	F_{Ra} [1] N	SEW f_B					m kg	
-	**1.5 - 7.6**	690	197.37	28900	3.9	**K**	**87**	**DRE**	**71MJ4**	99	618
8.6	**1.7 - 8.6**	605	174.19	29000	4.4	**KF**	**87**	**DRE**	**71MJ4**	110	619
9.1	**1.8 - 9.1**	575	164.34*	29000	4.7	**KA**	**87**	**DRE**	**71MJ4**	87	620
						KAF	**87**	**DRE**	**71MJ4**	100	619
-	**1.9 - 9.7**	535	154.02	19600	2.9						
11	**2.2 - 11**	470	135.28	19700	3.3	**K**	**77**	**DRE**	**71MJ4**	64	612
12	**2.3 - 12**	450	128.52	19800	3.4	**KF**	**77**	**DRE**	**71MJ4**	72	613
13	**2.6 - 13**	395	113.56	19900	3.9	**KA**	**77**	**DRE**	**71MJ4**	56	614
15	**3.1 - 15**	335	97.05	19900	4.6	**KAF**	**77**	**DRE**	**71MJ4**	64	613
17	**3.4 - 17**	310	88.97	20000	5.0						
-	**2.4 - 12**	430	123.54	12700	1.90						
14	**2.8 - 14**	375	108.03	12900	2.2						
15	**2.9 - 15**	355	102.62	12900	2.3						
17	**3.3 - 17**	315	90.04	13000	2.6	**K**	**67**	**DRE**	**71MJ4**	39	606
20	**3.9 - 20**	265	76.37	13000	3.1	**KF**	**67**	**DRE**	**71MJ4**	45	607
22	**4.4 - 22**	240	68.95	13000	3.4	**KA**	**67**	**DRE**	**71MJ4**	36	608
25	**4.9 - 25**	210	60.66	13000	3.9	**KAF**	**67**	**DRE**	**71MJ4**	42	607
26	**5.2 - 26**	200	57.28	13000	4.1						
31	**6.2 - 31**	171	48.77	13000	4.8						

19391609/DE – 06/2017

P_m = 0.55 kW

n_a min^{-1} 50Hz	n_a min^{-1} 10-50Hz	M_a Nm	i	F_{Ra} [1] N	SEW f_B					m kg	
-	**2.4 - 12**	430	123.85	8730	1.40						
14	**2.8 - 14**	375	108.29	8970	1.60						
15	**2.9 - 15**	360	102.88*	9050	1.65						
17	**3.3 - 17**	315	90.26*	9220	1.90						
20	**3.9 - 20**	265	76.56*	9400	2.2	**K**	**57**	**DRE**	**71MJ4**	33	600
22	**4.3 - 22**	240	69.12	9490	2.5	**KF**	**57**	**DRE**	**71MJ4**	38	601
25	**4.9 - 25**	210	60.81*	9590	2.8	**KA**	**57**	**DRE**	**71MJ4**	31	602
26	**5.2 - 26**	200	57.42*	9630	3.0	**KAF**	**57**	**DRE**	**71MJ4**	37	601
31	**6.1 - 31**	171	48.89	9720	3.5						
34	**6.8 - 34**	156	44.43	9770	3.9						
39	**7.8 - 39**	135	38.49	9830	4.5						
42	**8.4 - 42**	125	35.70	9860	4.8						
-	**5.0 - 25**	210	60.27	9000	2.4						
28	**5.7 - 28**	185	52.94	9000	2.7	**K**	**49**	**DRE**	**71MJ4**	38	596
30	**6.0 - 30**	176	50.29	9000	2.8	**KF**	**49**	**DRE**	**71MJ4**	40	597
34	**6.8 - 34**	156	44.44	9000	3.2	**KA**	**49**	**DRE**	**71MJ4**	36	598
40	**7.9 - 40**	133	37.98	9000	3.8	**KAF**	**49**	**DRE**	**71MJ4**	40	597
-	**2.9 - 14**	365	104.37	6380	1.10						
17	**3.3 - 17**	315	90.86	6890	1.25						
18	**3.5 - 18**	295	85.12*	7080	1.35						
20	**4.0 - 20**	260	75.20*	7360	1.50						
21	**4.3 - 21**	240	69.84	7500	1.65						
24	**4.7 - 24**	220	63.30*	7650	1.80						
26	**5.3 - 26**	199	56.83	7780	2.0	**K**	**47**	**DRE**	**71MJ4**	27	590
31	**6.1 - 31**	171	48.95*	7910	2.3	**KF**	**47**	**DRE**	**71MJ4**	31	591
33	**6.5 - 33**	161	46.03*	7960	2.5	**KA**	**47**	**DRE**	**71MJ4**	26	592
38	**7.6 - 38**	139	39.61	8050	2.9	**KAF**	**47**	**DRE**	**71MJ4**	29	591
42	**8.5 - 42**	124	35.39	7960	3.2						
48	**9.6 - 48**	110	31.30	7720	3.6						
51	**10 - 51**	103	29.32	7580	3.9						
58	**12 - 58**	91	25.91	7340	4.4						
62	**12 - 62**	84	24.06	7190	4.8						
-	**6.0 - 30**	174	49.69	7500	1.70						
35	**6.9 - 35**	152	43.45	7500	1.95						
36	**7.3 - 36**	145	41.28	7500	2.1	**K**	**39**	**DRE**	**71MJ4**	26	586
41	**8.3 - 41**	127	36.22	7500	2.4	**KF**	**39**	**DRE**	**71MJ4**	28	587
49	**9.8 - 49**	108	30.72	7420	2.8	**KA**	**39**	**DRE**	**71MJ4**	25	588
54	**11 - 54**	97	27.73	7230	3.1	**KAF**	**39**	**DRE**	**71MJ4**	27	587
61	**12 - 61**	85	24.40	6990	3.5						
65	**13 - 65**	81	23.04	6890	3.7						
30	**6.0 - 30**	174	49.79	4740	1.15						
34	**6.7 - 34**	156	44.46	4680	1.30						
40	**7.9 - 40**	133	37.97	4570	1.50						
42	**8.4 - 42**	124	35.57	4520	1.60						
50	**10 - 50**	105	29.96	4390	1.90						
-	**10 - 52**	101	28.83	4360	2.0	**K**	**37**	**DRE**	**71MJ4**	20	580
60	**12 - 60**	88	24.99	4230	2.3	**KF**	**37**	**DRE**	**71MJ4**	22	581
64	**13 - 64**	82	23.36	4170	2.4	**KA**	**37**	**DRE**	**71MJ4**	20	582
74	**15 - 74**	71	20.19	4040	2.6	**KAF**	**37**	**DRE**	**71MJ4**	21	581
87	**17 - 87**	60	17.15	3890	3.0						
98	**20 - 98**	54	15.31	3780	3.3						
115	**23 - 115**	46	13.08	3640	3.6						
124	**25 - 124**	42	12.14	3570	3.8						
143	**29 - 143**	37	10.49	3430	4.4						
-	**7.0 - 35**	136	42.87	4570	0.95						
41	**8.1 - 41**	118	36.96	4470	1.05						
50	**10.0 - 50**	96	30.11	4320	1.20						
60	**12 - 60**	79	24.91	4160	1.35						
-	**13 - 65**	75	23.19	4160	1.70	**K**	**29**	**DRE**	**71MJ4**	14	573
68	**14 - 68**	70	22.08	4060	1.50	**KF**	**29**	**DRE**	**71MJ4**	15	577
75	**15 - 75**	65	19.99	4020	2.0	**KA**	**29**	**DRE**	**71MJ4**	13	579
92	**18 - 92**	53	16.29	3820	2.5	**KAF**	**29**	**DRE**	**71MJ4**	15	577
111	**22 - 111**	44	13.47	3640	3.0						
126	**25 - 126**	39	11.94	3530	3.4						
-	**30 - 152**	33	9.90	3420	3.4						

19391609/DE – 06/2017

P_m = 0.55 kW

n_a min^{-1} 50Hz	n_a min^{-1} 10-50Hz	M_a Nm	i	F_{Ra} [1] N	SEW f_B					m kg	
-	**16 - 81**	60	18.55	3540	1.35						
95	**19 - 95**	52	15.84	3410	1.55						
102	**20 - 102**	48	14.69	3360	1.65						
118	**24 - 118**	41	12.70	3240	1.95						
127	**25 - 127**	38	11.84	3180	2.0	**K**	**19**	**DRE**	**71MJ4**	12	567
145	**29 - 145**	34	10.32	3070	2.3	**KF**	**19**	**DRE**	**71MJ4**	13	570
-	**37 - 185**	27	8.09	2940	3.0	**KA**	**19**	**DRE**	**71MJ4**	12	572
217	**43 - 217**	23	6.91	2810	3.5	**KAF**	**19**	**DRE**	**71MJ4**	12	570
234	**47 - 234**	21	6.41	2750	3.8						
271	**54 - 271**	18	5.54	2630	4.3						
291	**58 - 291**	17	5.16	2580	4.7						
333	**67 - 333**	15	4.50	2470	5.3						

P_m = 0.75 kW

n_a min^{-1} 50Hz	n_a min^{-1} 10-50Hz	M_a Nm	i	F_{Ra} [1] N	SEW f_B					m kg	
-	**1.5 - 7.6**	940	197.37	28800	2.9						
8.6	**1.7 - 8.6**	830	174.19	28900	3.2	**K**	**87**	**DRE**	**71MJ4**	99	618
9.1	**1.8 - 9.1**	780	164.34*	28900	3.4	**KF**	**87**	**DRE**	**71MJ4**	110	619
10	**2.0 - 10**	700	147.32*	28900	3.8	**KA**	**87**	**DRE**	**71MJ4**	87	620
12	**2.4 - 12**	605	126.91*	29000	4.5	**KAF**	**87**	**DRE**	**71MJ4**	100	619
13	**2.6 - 13**	550	115.82	29000	4.9						
-	**1.9 - 9.7**	735	154.02	19200	2.1						
11	**2.2 - 11**	645	135.28	19400	2.4						
12	**2.3 - 12**	610	128.52	19500	2.5	**K**	**77**	**DRE**	**71MJ4**	64	612
13	**2.6 - 13**	540	113.56	19600	2.9	**KF**	**77**	**DRE**	**71MJ4**	72	613
15	**3.1 - 15**	460	97.05	19800	3.3	**KA**	**77**	**DRE**	**71MJ4**	56	614
17	**3.4 - 17**	420	88.97	19800	3.6	**KAF**	**77**	**DRE**	**71MJ4**	64	613
19	**3.8 - 19**	370	78.07	19900	4.2						
20	**4.1 - 20**	350	73.99	19900	4.4						
-	**2.4 - 12**	585	123.54	12000	1.40						
14	**2.8 - 14**	515	108.03	12300	1.60						
15	**2.9 - 15**	490	102.62	12500	1.65						
17	**3.3 - 17**	425	90.04	12700	1.90						
20	**3.9 - 20**	360	76.37	12900	2.2	**K**	**67**	**DRE**	**71MJ4**	39	606
22	**4.4 - 22**	325	68.95	13000	2.5	**KF**	**67**	**DRE**	**71MJ4**	45	607
25	**4.9 - 25**	285	60.66	13000	2.8	**KA**	**67**	**DRE**	**71MJ4**	36	608
26	**5.2 - 26**	270	57.28	13000	3.0	**KAF**	**67**	**DRE**	**71MJ4**	42	607
31	**6.2 - 31**	230	48.77	13000	3.5						
34	**6.8 - 34**	210	44.32	13000	3.9						
39	**7.8 - 39**	183	38.39	13000	4.4						
42	**8.4 - 42**	170	35.62	13000	4.8						
-	**2.4 - 12**	590	123.85	7700	1.00						
14	**2.8 - 14**	515	108.29	8290	1.15						
15	**2.9 - 15**	490	102.88*	8460	1.20						
17	**3.3 - 17**	430	90.26*	8740	1.40						
20	**3.9 - 20**	365	76.56*	9030	1.65						
22	**4.3 - 22**	330	69.12	9170	1.80	**K**	**57**	**DRE**	**71MJ4**	33	600
25	**4.9 - 25**	290	60.81*	9320	2.1	**KF**	**57**	**DRE**	**71MJ4**	38	601
26	**5.2 - 26**	270	57.42*	9380	2.2	**KA**	**57**	**DRE**	**71MJ4**	31	602
31	**6.1 - 31**	230	48.89	9520	2.6	**KAF**	**57**	**DRE**	**71MJ4**	37	601
34	**6.8 - 34**	210	44.43	9590	2.8						
39	**7.8 - 39**	184	38.49	9680	3.3						
42	**8.4 - 42**	170	35.70	9720	3.5						
50	**9.9 - 50**	145	30.28	9800	4.2						
55	**11 - 55**	130	27.34	9760	4.6						
-	**5.0 - 25**	285	60.27	9000	1.75						
28	**5.7 - 28**	250	52.94	9000	2.0						
30	**6.0 - 30**	240	50.29	9000	2.1	**K**	**49**	**DRE**	**71MJ4**	38	596
34	**6.8 - 34**	210	44.44	9000	2.4	**KF**	**49**	**DRE**	**71MJ4**	40	597
40	**7.9 - 40**	181	37.98	9000	2.8	**KA**	**49**	**DRE**	**71MJ4**	36	598
43	**8.6 - 43**	166	34.81	9000	3.0	**KAF**	**49**	**DRE**	**71MJ4**	40	597
49	**9.8 - 49**	146	30.55	8870	3.4						
52	**10 - 52**	138	28.95	8750	3.6						

19391609/DE – 06/2017

P_m = 0.75 kW

n_a min^{-1} 50Hz	n_a min^{-1} 10-50Hz	M_a Nm	i	F_{Ra} [1] N	SEW f_B					m kg	
20	**4.0 - 20**	355	75.20*	6450	1.10						
21	**4.3 - 21**	330	69.84	6740	1.20						
24	**4.7 - 24**	300	63.30*	7040	1.30						
26	**5.3 - 26**	270	56.83	7300	1.45						
31	**6.1 - 31**	230	48.95*	7570	1.70						
33	**6.5 - 33**	215	46.03*	7660	1.80						
38	**7.6 - 38**	189	39.61	7810	2.1	**K**	**47**	**DRE**	**71MJ4**	27	590
42	**8.5 - 42**	169	35.39	7620	2.4	**KF**	**47**	**DRE**	**71MJ4**	31	591
48	**9.6 - 48**	149	31.30	7410	2.7	**KA**	**47**	**DRE**	**71MJ4**	26	592
51	**10 - 51**	140	29.32	7300	2.9	**KAF**	**47**	**DRE**	**71MJ4**	29	591
58	**12 - 58**	124	25.91	7090	3.2						
62	**12 - 62**	115	24.06	6960	3.5						
69	**14 - 69**	104	21.81	6790	3.8						
77	**15 - 77**	94	19.58	6600	4.3						
89	**18 - 89**	80	16.86	6340	4.7						
127	**25 - 127**	56	11.77	5720	5.0						
-	**6.0 - 30**	235	49.69	7500	1.25						
35	**6.9 - 35**	205	43.45	7500	1.45						
36	**7.3 - 36**	197	41.28	7500	1.50						
41	**8.3 - 41**	173	36.22	7330	1.75						
49	**9.8 - 49**	147	30.72	7080	2.0	**K**	**39**	**DRE**	**71MJ4**	26	586
54	**11 - 54**	132	27.73	6930	2.3	**KF**	**39**	**DRE**	**71MJ4**	28	587
61	**12 - 61**	116	24.40	6720	2.6	**KA**	**39**	**DRE**	**71MJ4**	25	588
65	**13 - 65**	110	23.04	6640	2.7	**KAF**	**39**	**DRE**	**71MJ4**	27	587
76	**15 - 76**	94	19.62	6380	3.1						
84	**17 - 84**	85	17.83	6230	3.4						
97	**19 - 97**	74	15.44	6000	3.8						
40	**7.9 - 40**	181	37.97	4130	1.10						
42	**8.4 - 42**	170	35.57	4110	1.20						
50	**10 - 50**	143	29.96	4040	1.40						
-	**10 - 52**	138	28.83	4020	1.45						
60	**12 - 60**	119	24.99	3940	1.70						
64	**13 - 64**	112	23.36	3900	1.75						
74	**15 - 74**	96	20.19	3810	1.90	**K**	**37**	**DRE**	**71MJ4**	20	580
87	**17 - 87**	82	17.15	3690	2.2	**KF**	**37**	**DRE**	**71MJ4**	22	581
98	**20 - 98**	73	15.31	3610	2.4	**KA**	**37**	**DRE**	**71MJ4**	20	582
115	**23 - 115**	62	13.08	3480	2.6	**KAF**	**37**	**DRE**	**71MJ4**	21	581
124	**25 - 124**	58	12.14	3430	2.8						
143	**29 - 143**	50	10.49	3310	3.2						
168	**34 - 168**	43	8.91	3180	3.8						
188	**38 - 188**	38	7.96	3090	4.1						
221	**44 - 221**	32	6.80	2960	4.6						
236	**47 - 236**	30	6.37	2910	4.8						
50	**10.0 - 50**	131	30.11	3970	0.90						
60	**12 - 60**	108	24.91	3870	1.00						
-	**13 - 65**	103	23.19	3920	1.25						
68	**14 - 68**	96	22.08	3800	1.10						
75	**15 - 75**	89	19.99	3810	1.45						
92	**18 - 92**	72	16.29	3650	1.80	**K**	**29**	**DRE**	**71MJ4**	14	573
111	**22 - 111**	60	13.47	3500	2.2	**KF**	**29**	**DRE**	**71MJ4**	15	577
126	**25 - 126**	53	11.94	3400	2.5	**KA**	**29**	**DRE**	**71MJ4**	13	579
-	**30 - 152**	45	9.90	3350	2.5	**KAF**	**29**	**DRE**	**71MJ4**	15	577
164	**33 - 164**	41	9.17	3190	3.2						
176	**35 - 176**	39	8.53	3210	3.2						
201	**40 - 201**	33	7.48	3020	3.7						
216	**43 - 216**	31	6.95	3030	3.6						

19391609/DE – 06/2017

P_m = 0.75 kW

n_a min^{-1} 50Hz	n_a min^{-1} 10-50Hz	M_a Nm	i	F_{Ra} [1] N	SEW f_B					m kg	
-	**16 - 81**	82	18.55	3310	0.95						
95	**19 - 95**	70	15.84	3220	1.15						
102	**20 - 102**	65	14.69	3180	1.25						
118	**24 - 118**	56	12.70	3080	1.40						
127	**25 - 127**	52	11.84	3040	1.50	**K**	**19**	**DRE**	**71MJ4**	12	567
145	**29 - 145**	46	10.32	2950	1.65	**KF**	**19**	**DRE**	**71MJ4**	13	570
-	**37 - 185**	37	8.09	2860	2.2	**KA**	**19**	**DRE**	**71MJ4**	12	572
217	**43 - 217**	31	6.91	2740	2.6	**KAF**	**19**	**DRE**	**71MJ4**	12	570
234	**47 - 234**	29	6.41	2680	2.8						
271	**54 - 271**	25	5.54	2580	3.2						
291	**58 - 291**	23	5.16	2530	3.4						
333	**67 - 333**	20	4.50	2430	3.9						

P_m = 1.1 kW

n_a min^{-1} 50Hz	n_a min^{-1} 10-50Hz	M_a Nm	i	F_{Ra} [1] N	SEW f_B					m kg	
8.5	**1.7 - 8.5**	1230	176.05*	40000	3.5	**K**	**97**	**DRE**	**80SJ4**	160	624
9.8	**2.0 - 9.8**	1070	153.21*	40000	4.0	**KF**	**97**	**DRE**	**80SJ4**	180	625
11	**2.1 - 11**	980	140.28	40000	4.4	**KA**	**97**	**DRE**	**80SJ4**	145	626
12	**2.4 - 12**	860	123.93*	40000	5.0	**KAF**	**97**	**DRE**	**80SJ4**	170	625
-	**1.5 - 7.6**	1380	197.37	28600	1.95						
8.6	**1.7 - 8.6**	1210	174.19	28700	2.2						
9.1	**1.8 - 9.1**	1150	164.34*	28700	2.4						
10	**2.0 - 10**	1030	147.32*	28800	2.6	**K**	**87**	**DRE**	**80SJ4**	105	618
12	**2.4 - 12**	880	126.91*	28800	3.0	**KF**	**87**	**DRE**	**80SJ4**	110	619
13	**2.6 - 13**	810	115.82	28900	3.3	**KA**	**87**	**DRE**	**80SJ4**	91	620
15	**2.9 - 15**	715	102.71*	28900	3.8	**KAF**	**87**	**DRE**	**80SJ4**	105	619
17	**3.5 - 17**	600	86.34	29000	4.5						
19	**3.8 - 19**	555	79.34	29000	4.9						
-	**1.9 - 9.7**	1070	154.02	18000	1.45						
11	**2.2 - 11**	940	135.28	18500	1.65						
12	**2.3 - 12**	900	128.52	18700	1.70						
13	**2.6 - 13**	795	113.56	19000	1.95						
15	**3.1 - 15**	675	97.05	19300	2.3	**K**	**77**	**DRE**	**80SJ4**	66	612
17	**3.4 - 17**	620	88.97	19400	2.5	**KF**	**77**	**DRE**	**80SJ4**	74	613
19	**3.8 - 19**	545	78.07	19600	2.8	**KA**	**77**	**DRE**	**80SJ4**	58	614
20	**4.1 - 20**	515	73.99	19700	3.0	**KAF**	**77**	**DRE**	**80SJ4**	66	613
23	**4.6 - 23**	450	64.75	19800	3.4						
26	**5.1 - 26**	405	58.34	19800	3.8						
29	**5.9 - 29**	355	51.18	19900	4.3						
33	**6.6 - 33**	315	45.16	20000	4.9						
14	**2.8 - 14**	755	108.03	10800	1.10						
15	**2.9 - 15**	715	102.62	11100	1.15						
17	**3.3 - 17**	630	90.04	11700	1.30						
20	**3.9 - 20**	530	76.37	12200	1.55						
22	**4.4 - 22**	480	68.95	12500	1.70						
25	**4.9 - 25**	420	60.66	12700	1.95						
26	**5.2 - 26**	400	57.28	12800	2.0	**K**	**67**	**DRE**	**80SJ4**	41	606
31	**6.2 - 31**	340	48.77	13000	2.4	**KF**	**67**	**DRE**	**80SJ4**	47	607
34	**6.8 - 34**	310	44.32	13000	2.6	**KA**	**67**	**DRE**	**80SJ4**	39	608
39	**7.8 - 39**	265	38.39	13000	3.0	**KAF**	**67**	**DRE**	**80SJ4**	44	607
42	**8.4 - 42**	245	35.62	13000	3.3						
50	**9.9 - 50**	210	30.22	13000	3.9						
55	**11 - 55**	191	27.28	13000	4.3						
63	**13 - 63**	168	24.00	13000	4.8						
66	**13 - 66**	159	22.66	13000	4.9						

19391609/DE – 06/2017

P_m = 1.1 kW

n_a min^{-1} 50Hz	n_a min^{-1} 10-50Hz	M_a Nm	i	F_{Ra} [1] N	SEW f_B					m kg	
20	**3.9 - 20**	535	76.56*	8140	1.10						
22	**4.3 - 22**	480	69.12	8500	1.25						
25	**4.9 - 25**	425	60.81*	8770	1.40						
26	**5.2 - 26**	400	57.42*	8870	1.50						
31	**6.1 - 31**	340	48.89	9120	1.75						
34	**6.8 - 34**	310	44.43	9240	1.95						
39	**7.8 - 39**	265	38.49	9400	2.2	**K**	**57**	**DRE**	**80SJ4**	35	600
42	**8.4 - 42**	250	35.70	9470	2.4	**KF**	**57**	**DRE**	**80SJ4**	40	601
50	**9.9 - 50**	210	30.28	9590	2.8	**KA**	**57**	**DRE**	**80SJ4**	33	602
55	**11 - 55**	191	27.34	9360	3.1	**KAF**	**57**	**DRE**	**80SJ4**	39	601
62	**12 - 62**	168	24.05	9060	3.6						
66	**13 - 66**	159	22.71	8930	3.8						
78	**16 - 78**	135	19.34	8570	4.2						
85	**17 - 85**	123	17.57	8350	4.5						
126	**25 - 126**	84	11.92	7430	5.0						
-	**5.0 - 25**	420	60.27	9000	1.20						
28	**5.7 - 28**	370	52.94	9000	1.35						
30	**6.0 - 30**	350	50.29	9000	1.40						
34	**6.8 - 34**	310	44.44	9000	1.60						
40	**7.9 - 40**	265	37.98	8750	1.90	**K**	**49**	**DRE**	**80SJ4**	40	596
43	**8.6 - 43**	240	34.81	8600	2.0	**KF**	**49**	**DRE**	**80SJ4**	42	597
49	**9.8 - 49**	210	30.55	8380	2.3	**KA**	**49**	**DRE**	**80SJ4**	38	598
52	**10 - 52**	200	28.95	8280	2.5	**KAF**	**49**	**DRE**	**80SJ4**	43	597
59	**12 - 59**	177	25.34	8040	2.8						
66	**13 - 66**	160	22.83	7850	3.1						
75	**15 - 75**	140	20.03	7610	3.6						
26	**5.3 - 26**	395	56.83	5950	1.00						
31	**6.1 - 31**	340	48.95*	6640	1.15						
33	**6.5 - 33**	320	46.03*	6850	1.25						
38	**7.6 - 38**	275	39.61	7140	1.45						
42	**8.5 - 42**	245	35.39	7020	1.60						
48	**9.6 - 48**	215	31.30	6880	1.80						
51	**10 - 51**	205	29.32	6800	1.95						
58	**12 - 58**	181	25.91	6650	2.2						
62	**12 - 62**	168	24.06	6550	2.4	**K**	**47**	**DRE**	**80SJ4**	30	590
69	**14 - 69**	153	21.81	6420	2.6	**KF**	**47**	**DRE**	**80SJ4**	33	591
77	**15 - 77**	137	19.58	6270	2.9	**KA**	**47**	**DRE**	**80SJ4**	29	592
89	**18 - 89**	118	16.86	6060	3.2	**KAF**	**47**	**DRE**	**80SJ4**	32	591
95	**19 - 95**	111	15.86	5970	3.4						
110	**22 - 110**	96	13.65	5760	3.8						
123	**25 - 123**	85	12.19	5590	4.1						
127	**25 - 127**	82	11.77	5510	3.4						
142	**28 - 142**	74	10.56	5360	3.8						
165	**33 - 165**	64	9.10	5150	4.4						
175	**35 - 175**	60	8.56	5070	4.5						
204	**41 - 204**	52	7.36	4860	4.8						
-	**6.0 - 30**	345	49.69	6800	0.85						
35	**6.9 - 35**	300	43.45	6750	1.00						
36	**7.3 - 36**	285	41.28	6720	1.05						
41	**8.3 - 41**	250	36.22	6630	1.20						
49	**9.8 - 49**	215	30.72	6490	1.40						
54	**11 - 54**	194	27.73	6390	1.55						
61	**12 - 61**	171	24.40	6260	1.75	**K**	**39**	**DRE**	**80SJ4**	28	586
65	**13 - 65**	161	23.04	6190	1.85	**KF**	**39**	**DRE**	**80SJ4**	30	587
76	**15 - 76**	137	19.62	6000	2.1	**KA**	**39**	**DRE**	**80SJ4**	27	588
84	**17 - 84**	125	17.83	5890	2.3	**KAF**	**39**	**DRE**	**80SJ4**	29	587
97	**19 - 97**	108	15.44	5700	2.6						
112	**22 - 112**	94	13.44	5520	2.9						
118	**24 - 118**	89	12.73	5710	2.8						
124	**25 - 124**	85	12.09	5630	3.0						
141	**28 - 141**	74	10.61	5430	3.8						

19391609/DE – 06/2017

P_m = 1.1 kW

n_a min^{-1} 50Hz	n_a min^{-1} 10-50Hz	M_a Nm	i	F_{Ra} [1] N	SEW f_B					m kg	
60	**12 - 60**	175	24.99	3440	1.15						
64	**13 - 64**	164	23.36	3430	1.20						
74	**15 - 74**	141	20.19	3400	1.30						
87	**17 - 87**	120	17.15	3340	1.50						
98	**20 - 98**	107	15.31	3300	1.65						
115	**23 - 115**	92	13.08	3220	1.80	**K**	**37**	**DRE**	**80SJ4**	22	580
124	**25 - 124**	85	12.14	3180	1.90	**KF**	**37**	**DRE**	**80SJ4**	24	581
143	**29 - 143**	74	10.49	3100	2.2	**KA**	**37**	**DRE**	**80SJ4**	22	582
168	**34 - 168**	62	8.91	3000	2.6	**KAF**	**37**	**DRE**	**80SJ4**	23	581
188	**38 - 188**	56	7.96	2930	2.8						
221	**44 - 221**	48	6.80	2830	3.1						
236	**47 - 236**	45	6.37	2780	3.2						
280	**56 - 280**	38	5.36	2670	3.7						
377	**75 - 377**	28	3.98	2470	4.5						
-	**13 - 65**	151	23.19	3490	0.85						
75	**15 - 75**	130	19.99	3440	1.00						
92	**18 - 92**	106	16.29	3350	1.25						
111	**22 - 111**	88	13.47	3250	1.50						
126	**25 - 126**	78	11.94	3180	1.65	**K**	**29**	**DRE**	**80SJ4**	16	573
-	**30 - 152**	66	9.90	3210	1.65	**KF**	**29**	**DRE**	**80SJ4**	17	577
164	**33 - 164**	60	9.17	3020	2.2	**KA**	**29**	**DRE**	**80SJ4**	15	579
176	**35 - 176**	57	8.53	3090	2.1	**KAF**	**29**	**DRE**	**80SJ4**	17	577
201	**40 - 201**	49	7.48	2880	2.5						
216	**43 - 216**	46	6.95	2930	2.4						
261	**52 - 261**	38	5.75	2790	2.9						
294	**59 - 294**	34	5.10	2700	3.2						
102	**20 - 102**	96	14.69	2860	0.85						
118	**24 - 118**	83	12.70	2810	0.95						
127	**25 - 127**	77	11.84	2790	1.05						
145	**29 - 145**	67	10.32	2730	1.15	**K**	**19**	**DRE**	**80SJ4**	14	567
-	**37 - 185**	54	8.09	2720	1.50	**KF**	**19**	**DRE**	**80SJ4**	15	570
217	**43 - 217**	46	6.91	2620	1.75	**KA**	**19**	**DRE**	**80SJ4**	14	572
234	**47 - 234**	43	6.41	2580	1.90	**KAF**	**19**	**DRE**	**80SJ4**	14	570
271	**54 - 271**	37	5.54	2480	2.2						
291	**58 - 291**	34	5.16	2440	2.3						
333	**67 - 333**	30	4.50	2350	2.7						

P_m = 1.5 kW

n_a min^{-1} 50Hz	n_a min^{-1} 10-50Hz	M_a Nm	i	F_{Ra} [1] N	SEW f_B					m kg	
8.5	**1.7 - 8.5**	1680	176.05*	40000	2.6						
9.8	**2.0 - 9.8**	1460	153.21*	40000	2.9	**K**	**97**	**DRE**	**80MJ4**	165	624
11	**2.1 - 11**	1330	140.28	40000	3.2	**KF**	**97**	**DRE**	**80MJ4**	185	625
12	**2.4 - 12**	1180	123.93*	40000	3.6	**KA**	**97**	**DRE**	**80MJ4**	145	626
14	**2.9 - 14**	1000	105.13	40000	4.3	**KAF**	**97**	**DRE**	**80MJ4**	170	625
16	**3.1 - 16**	920	96.80	40000	4.7						
-	**1.7 - 8.6**	1660	174.19	28300	1.60						
-	**1.8 - 9.1**	1560	164.34*	28400	1.70						
10	**2.0 - 10**	1400	147.32*	28500	1.90						
12	**2.4 - 12**	1210	126.91*	28700	2.2						
13	**2.6 - 13**	1100	115.82	28700	2.4	**K**	**87**	**DRE**	**80MJ4**	105	618
15	**2.9 - 15**	980	102.71*	28800	2.8	**KF**	**87**	**DRE**	**80MJ4**	115	619
17	**3.5 - 17**	820	86.34	28900	3.3	**KA**	**87**	**DRE**	**80MJ4**	94	620
19	**3.8 - 19**	755	79.34	28900	3.6	**KAF**	**87**	**DRE**	**80MJ4**	105	619
21	**4.3 - 21**	670	70.46	28900	4.0						
24	**4.8 - 24**	600	63.00*	29000	4.5						
26	**5.3 - 26**	540	56.64	29000	5.0						

19391609/DE – 06/2017

P_m = 1.5 kW

n_a min^{-1} 50Hz	n_a min^{-1} 10-50Hz	M_a Nm	i	F_{Ra} [1] N	SEW f_B					m kg	
-	**2.2 - 11**	1290	135.28	17000	1.20						
-	**2.3 - 12**	1220	128.52	17300	1.25						
13	**2.6 - 13**	1080	113.56	18000	1.45						
15	**3.1 - 15**	920	97.05	18600	1.65						
17	**3.4 - 17**	840	88.97	18800	1.80						
19	**3.8 - 19**	745	78.07	19100	2.1	**K**	**77**	**DRE**	**80MJ4**	68	612
20	**4.1 - 20**	705	73.99	19200	2.2	**KF**	**77**	**DRE**	**80MJ4**	77	613
23	**4.6 - 23**	615	64.75	19500	2.5	**KA**	**77**	**DRE**	**80MJ4**	61	614
26	**5.1 - 26**	555	58.34	19600	2.8	**KAF**	**77**	**DRE**	**80MJ4**	69	613
29	**5.9 - 29**	485	51.18	19700	3.2						
33	**6.6 - 33**	430	45.16	19800	3.6						
37	**7.5 - 37**	380	40.04	19900	4.0						
39	**7.8 - 39**	365	38.39	19900	4.1						
43	**8.5 - 43**	335	35.20	19900	4.6						
20	**3.9 - 20**	725	76.37	11100	1.10						
22	**4.4 - 22**	655	68.95	11500	1.25						
25	**4.9 - 25**	575	60.66	12000	1.40						
26	**5.2 - 26**	545	57.28	12200	1.50						
31	**6.2 - 31**	465	48.77	12600	1.75						
34	**6.8 - 34**	420	44.32	12700	1.95						
39	**7.8 - 39**	365	38.39	12900	2.2						
42	**8.4 - 42**	340	35.62	13000	2.4	**K**	**67**	**DRE**	**80MJ4**	44	606
50	**9.9 - 50**	285	30.22	13000	2.8	**KF**	**67**	**DRE**	**80MJ4**	50	607
55	**11 - 55**	260	27.28	13000	3.1	**KA**	**67**	**DRE**	**80MJ4**	41	608
63	**13 - 63**	225	24.00	13000	3.5	**KAF**	**67**	**DRE**	**80MJ4**	47	607
66	**13 - 66**	215	22.66	13000	3.6						
78	**16 - 78**	184	19.30	13000	4.1						
86	**17 - 86**	167	17.54	13000	4.4						
99	**20 - 99**	145	15.19	13000	4.8						
120	**24 - 120**	119	12.48	13000	4.5						
141	**28 - 141**	102	10.63	13000	4.9						
25	**4.9 - 25**	580	60.81*	7790	1.05						
26	**5.2 - 26**	545	57.42*	8050	1.10						
31	**6.1 - 31**	465	48.89	8580	1.30						
34	**6.8 - 34**	420	44.43	8780	1.40						
39	**7.8 - 39**	365	38.49	9020	1.65						
42	**8.4 - 42**	340	35.70	9130	1.75						
50	**9.9 - 50**	285	30.28	9080	2.1						
55	**11 - 55**	260	27.34	8900	2.3	**K**	**57**	**DRE**	**80MJ4**	38	600
62	**12 - 62**	225	24.05	8660	2.6	**KF**	**57**	**DRE**	**80MJ4**	43	601
66	**13 - 66**	215	22.71	8550	2.8	**KA**	**57**	**DRE**	**80MJ4**	36	602
78	**16 - 78**	185	19.34	8240	3.1	**KAF**	**57**	**DRE**	**80MJ4**	42	601
85	**17 - 85**	168	17.57	8060	3.3						
99	**20 - 99**	145	15.22	7780	3.7						
113	**23 - 113**	126	13.25	7500	4.0						
126	**25 - 126**	114	11.92	7200	3.6						
133	**27 - 133**	108	11.26	7100	3.9						
156	**31 - 156**	92	9.59	6800	4.4						
172	**34 - 172**	83	8.71	6630	4.7						
-	**5.7 - 28**	505	52.94	8270	1.00						
-	**6.0 - 30**	480	50.29	8250	1.05						
34	**6.8 - 34**	420	44.44	8180	1.20						
40	**7.9 - 40**	360	37.98	8050	1.40						
43	**8.6 - 43**	330	34.81	7970	1.50						
49	**9.8 - 49**	290	30.55	7820	1.70	**K**	**49**	**DRE**	**80MJ4**	43	596
52	**10 - 52**	275	28.95	7750	1.80	**KF**	**49**	**DRE**	**80MJ4**	45	597
59	**12 - 59**	240	25.34	7580	2.1	**KA**	**49**	**DRE**	**80MJ4**	40	598
66	**13 - 66**	215	22.83	7430	2.3	**KAF**	**49**	**DRE**	**80MJ4**	45	597
75	**15 - 75**	191	20.03	7240	2.6						
85	**17 - 85**	169	17.67	7050	3.0						
96	**19 - 96**	150	15.67	6860	3.3						
112	**22 - 112**	128	13.38	6610	3.7						

19391609/DE – 06/2017

P_m = 1.5 kW

n_a min^{-1} 50Hz	n_a min^{-1} 10-50Hz	M_a Nm	i	F_{Ra} [1)] N	SEW f_B					m kg	
38	**7.6 - 38**	375	39.61	6220	1.05						
42	**8.5 - 42**	335	35.39	6330	1.20						
-	**9.6 - 48**	295	31.30	6270	1.35						
-	**10 - 51**	280	29.32	6230	1.45						
58	**12 - 58**	245	25.91	6140	1.60						
-	**12 - 62**	225	24.06	6080	1.75						
69	**14 - 69**	205	21.81	5990	1.90						
77	**15 - 77**	187	19.58	5890	2.1						
89	**18 - 89**	161	16.86	5730	2.4	**K**	**47**	**DRE**	**80MJ4**	32	590
95	**19 - 95**	151	15.86	5660	2.5	**KF**	**47**	**DRE**	**80MJ4**	35	591
110	**22 - 110**	130	13.65	5490	2.8	**KA**	**47**	**DRE**	**80MJ4**	31	592
123	**25 - 123**	116	12.19	5360	3.0	**KAF**	**47**	**DRE**	**80MJ4**	34	591
127	**25 - 127**	112	11.77	5260	2.5						
142	**28 - 142**	101	10.56	5140	2.8						
165	**33 - 165**	87	9.10	4960	3.2						
175	**35 - 175**	82	8.56	4890	3.3						
204	**41 - 204**	70	7.36	4710	3.6						
228	**46 - 228**	63	6.58	4580	3.8						
258	**52 - 258**	56	5.81	4430	4.1						
324	**65 - 324**	44	4.64	4170	4.6						
41	**8.3 - 41**	345	36.22	5840	0.85						
49	**9.8 - 49**	290	30.72	5820	1.00						
54	**11 - 54**	260	27.73	5790	1.15						
61	**12 - 61**	230	24.40	5720	1.30						
65	**13 - 65**	220	23.04	5690	1.35						
76	**15 - 76**	187	19.62	5570	1.55	**K**	**39**	**DRE**	**80MJ4**	31	586
84	**17 - 84**	170	17.83	5500	1.70	**KF**	**39**	**DRE**	**80MJ4**	33	587
97	**19 - 97**	147	15.44	5370	1.90	**KA**	**39**	**DRE**	**80MJ4**	30	588
112	**22 - 112**	128	13.44	5230	2.1	**KAF**	**39**	**DRE**	**80MJ4**	32	587
-	**24 - 118**	122	12.73	5520	2.1						
-	**25 - 124**	115	12.09	5450	2.2						
141	**28 - 141**	101	10.61	5270	2.8						
167	**33 - 167**	86	9.00	5050	3.5						
185	**37 - 185**	78	8.12	4910	3.9						
-	**17 - 87**	164	17.15	2950	1.10						
-	**20 - 98**	146	15.31	2940	1.20						
-	**23 - 115**	125	13.08	2920	1.30						
-	**25 - 124**	116	12.14	2900	1.40						
-	**29 - 143**	100	10.49	2860	1.60	**K**	**37**	**DRE**	**80MJ4**	24	580
-	**34 - 168**	85	8.91	2800	1.90	**KF**	**37**	**DRE**	**80MJ4**	27	581
-	**38 - 188**	76	7.96	2750	2.0	**KA**	**37**	**DRE**	**80MJ4**	24	582
-	**44 - 221**	65	6.80	2670	2.3	**KAF**	**37**	**DRE**	**80MJ4**	26	581
-	**47 - 236**	61	6.37	2640	2.4						
-	**56 - 280**	51	5.36	2550	2.7						
-	**75 - 377**	38	3.98	2380	3.3						
-	**18 - 92**	144	16.29	3010	0.90						
-	**22 - 111**	119	13.47	2970	1.10						
-	**25 - 126**	106	11.94	2930	1.25						
-	**33 - 164**	81	9.17	2820	1.60						
-	**35 - 176**	77	8.53	2960	1.60	**K**	**29**	**DRE**	**80MJ4**	18	573
-	**40 - 201**	66	7.48	2720	1.85	**KF**	**29**	**DRE**	**80MJ4**	20	577
-	**43 - 216**	63	6.95	2820	1.80	**KA**	**29**	**DRE**	**80MJ4**	18	579
-	**52 - 261**	52	5.75	2700	2.1	**KAF**	**29**	**DRE**	**80MJ4**	19	577
-	**59 - 294**	46	5.10	2620	2.4						
-	**77 - 383**	35	3.92	2440	3.5						
-	**94 - 470**	29	3.19	2310	3.8						
-	**29 - 145**	92	10.32	2480	0.85						
-	**43 - 217**	63	6.91	2490	1.30	**K**	**19**	**DRE**	**80MJ4**	17	567
-	**47 - 234**	58	6.41	2450	1.40	**KF**	**19**	**DRE**	**80MJ4**	17	570
-	**54 - 271**	50	5.54	2380	1.60	**KA**	**19**	**DRE**	**80MJ4**	17	572
-	**58 - 291**	47	5.16	2340	1.70	**KAF**	**19**	**DRE**	**80MJ4**	17	570
-	**67 - 333**	41	4.50	2270	1.95						

19391609/DE – 06/2017

P_m = 2.2 kW

n_a min^{-1} 50Hz	n_a min^{-1} 10-50Hz	M_a Nm	i	F_{Ra} [1] N	SEW f_B					m kg	
8.5	**1.7 - 8.5**	2460	176.05*	40000	1.75						
9.8	**2.0 - 9.8**	2140	153.21*	40000	2.0						
11	**2.1 - 11**	1960	140.28	40000	2.2						
12	**2.4 - 12**	1730	123.93*	40000	2.5	**K**	**97**	**DRE**	**90MJ4**	170	624
14	**2.9 - 14**	1470	105.13	40000	2.9	**KF**	**97**	**DRE**	**90MJ4**	190	625
16	**3.1 - 16**	1350	96.80	40000	3.2	**KA**	**97**	**DRE**	**90MJ4**	150	626
17	**3.5 - 17**	1210	86.52	40000	3.5	**KAF**	**97**	**DRE**	**90MJ4**	175	625
19	**3.9 - 19**	1090	77.89*	40000	3.9						
21	**4.3 - 21**	980	70.54	40000	4.3						
24	**4.8 - 24**	870	62.55	40000	4.9						
10	**2.0 - 10**	2060	147.32*	28000	1.30						
12	**2.4 - 12**	1770	126.91*	28300	1.50						
13	**2.6 - 13**	1620	115.82	28400	1.65						
15	**2.9 - 15**	1430	102.71*	28500	1.90						
17	**3.5 - 17**	1200	86.34	28700	2.2	**K**	**87**	**DRE**	**90MJ4**	110	618
19	**3.8 - 19**	1110	79.34	28700	2.4	**KF**	**87**	**DRE**	**90MJ4**	120	619
21	**4.3 - 21**	980	70.46	28800	2.7	**KA**	**87**	**DRE**	**90MJ4**	96	620
24	**4.8 - 24**	880	63.00*	28800	3.1	**KAF**	**87**	**DRE**	**90MJ4**	110	619
26	**5.3 - 26**	790	56.64	28900	3.4						
31	**6.1 - 31**	685	49.16	28900	3.9						
34	**6.8 - 34**	615	44.02	29000	4.2						
41	**8.2 - 41**	510	36.52*	28700	4.9						
15	**3.1 - 15**	1350	97.05	16600	1.15						
17	**3.4 - 17**	1240	88.97	17200	1.25						
19	**3.8 - 19**	1090	78.07	17900	1.40						
20	**4.1 - 20**	1030	73.99	18200	1.50						
23	**4.6 - 23**	900	64.75	18600	1.70						
26	**5.1 - 26**	810	58.34	18900	1.90						
29	**5.9 - 29**	715	51.18	19200	2.2	**K**	**77**	**DRE**	**90MJ4**	73	612
33	**6.6 - 33**	630	45.16	19400	2.5	**KF**	**77**	**DRE**	**90MJ4**	81	613
37	**7.5 - 37**	560	40.04	19600	2.8	**KA**	**77**	**DRE**	**90MJ4**	65	614
39	**7.8 - 39**	535	38.39	19600	2.8	**KAF**	**77**	**DRE**	**90MJ4**	73	613
43	**8.5 - 43**	490	35.20	19700	3.1						
49	**9.7 - 49**	430	30.89	19800	3.6						
51	**10 - 51**	405	29.27	19800	3.8						
59	**12 - 59**	355	25.62	19900	4.3						
65	**13 - 65**	320	23.08	20000	4.8						
26	**5.2 - 26**	800	57.28	10500	1.00						
31	**6.2 - 31**	680	48.77	11400	1.20						
34	**6.8 - 34**	620	44.32	11800	1.30						
39	**7.8 - 39**	535	38.39	12200	1.50						
42	**8.4 - 42**	495	35.62	12400	1.65						
50	**9.9 - 50**	420	30.22	12700	1.95						
55	**11 - 55**	380	27.28	12900	2.1						
63	**13 - 63**	335	24.00	13000	2.4						
66	**13 - 66**	315	22.66	13000	2.5	**K**	**67**	**DRE**	**90MJ4**	48	606
78	**16 - 78**	270	19.30	13000	2.8	**KF**	**67**	**DRE**	**90MJ4**	53	607
86	**17 - 86**	245	17.54	13000	3.0	**KA**	**67**	**DRE**	**90MJ4**	45	608
99	**20 - 99**	210	15.19	13000	3.3	**KAF**	**67**	**DRE**	**90MJ4**	51	607
114	**23 - 114**	185	13.22	13000	3.6						
120	**24 - 120**	175	12.48	13000	3.0						
141	**28 - 141**	149	10.63	13000	3.4						
155	**31 - 155**	135	9.66	13000	3.5						
179	**36 - 179**	117	8.37	13000	3.8						
206	**41 - 206**	102	7.28	12500	4.1						
288	**58 - 288**	73	5.20	11500	4.8						

19391609/DE – 06/2017

P_m = 2.2 kW

n_a min^{-1} 50Hz	n_a min^{-1} 10-50Hz	M_a Nm	i	F_{Ra} [1)] N	SEW f_B					m kg	
39	**7.8 - 39**	535	38.49	8120	1.10						
42	**8.4 - 42**	500	35.70	8320	1.20						
50	**9.9 - 50**	420	30.28	8200	1.40						
55	**11 - 55**	380	27.34	8100	1.55						
62	**12 - 62**	335	24.05	7960	1.80						
66	**13 - 66**	315	22.71	7890	1.90						
78	**16 - 78**	270	19.34	7680	2.1						
85	**17 - 85**	245	17.57	7540	2.3	**K**	**57**	**DRE**	**90MJ4**	42	600
99	**20 - 99**	210	15.22	7330	2.5	**KF**	**57**	**DRE**	**90MJ4**	47	601
113	**23 - 113**	186	13.25	7120	2.8	**KA**	**57**	**DRE**	**90MJ4**	40	602
126	**25 - 126**	167	11.92	6800	2.5	**KAF**	**57**	**DRE**	**90MJ4**	45	601
133	**27 - 133**	158	11.26	6720	2.6						
156	**31 - 156**	134	9.59	6480	3.0						
172	**34 - 172**	122	8.71	6340	3.2						
199	**40 - 199**	106	7.55	6120	3.5						
228	**46 - 228**	92	6.57	5910	3.8						
320	**64 - 320**	66	4.69	5410	4.6						
34	**6.8 - 34**	620	44.44	6760	0.80						
40	**7.9 - 40**	530	37.98	6830	0.95						
43	**8.6 - 43**	485	34.81	6850	1.05						
49	**9.8 - 49**	425	30.55	6840	1.15						
52	**10 - 52**	405	28.95	6820	1.25						
59	**12 - 59**	350	25.34	6760	1.40	**K**	**49**	**DRE**	**90MJ4**	47	596
66	**13 - 66**	315	22.83	6700	1.55	**KF**	**49**	**DRE**	**90MJ4**	49	597
75	**15 - 75**	280	20.03	6600	1.80	**KA**	**49**	**DRE**	**90MJ4**	45	598
85	**17 - 85**	245	17.67	6480	2.0	**KAF**	**49**	**DRE**	**90MJ4**	50	597
96	**19 - 96**	215	15.67	6360	2.2						
112	**22 - 112**	187	13.38	6180	2.5						
132	**26 - 132**	159	11.37	6390	3.1						
144	**29 - 144**	146	10.42	6250	3.3						
164	**33 - 164**	128	9.14	6040	3.9						
58	**12 - 58**	360	25.91	5260	1.10						
69	**14 - 69**	305	21.81	5250	1.30						
77	**15 - 77**	270	19.58	5220	1.45						
89	**18 - 89**	235	16.86	5160	1.60						
95	**19 - 95**	220	15.86	5120	1.70						
110	**22 - 110**	191	13.65	5030	1.90						
123	**25 - 123**	171	12.19	4940	2.0	**K**	**47**	**DRE**	**90MJ4**	36	590
127	**25 - 127**	165	11.77	4840	1.70	**KF**	**47**	**DRE**	**90MJ4**	39	591
142	**28 - 142**	148	10.56	4760	1.90	**KA**	**47**	**DRE**	**90MJ4**	35	592
165	**33 - 165**	127	9.10	4640	2.2	**KAF**	**47**	**DRE**	**90MJ4**	38	591
175	**35 - 175**	120	8.56	4580	2.2						
204	**41 - 204**	103	7.36	4450	2.4						
228	**46 - 228**	92	6.58	4340	2.6						
258	**52 - 258**	81	5.81	4220	2.8						
324	**65 - 324**	65	4.64	4000	3.2						
61	**12 - 61**	340	24.40	4790	0.90						
65	**13 - 65**	320	23.04	4800	0.95						
76	**15 - 76**	270	19.62	4820	1.05						
84	**17 - 84**	245	17.83	4810	1.15						
97	**19 - 97**	215	15.44	4770	1.30						
112	**22 - 112**	188	13.44	4720	1.45						
141	**28 - 141**	149	10.61	5000	1.90	**K**	**39**	**DRE**	**90MJ4**	35	586
167	**33 - 167**	126	9.00	4820	2.4	**KF**	**39**	**DRE**	**90MJ4**	36	587
185	**37 - 185**	114	8.12	4700	2.6	**KA**	**39**	**DRE**	**90MJ4**	34	588
210	**42 - 210**	100	7.15	4560	3.0	**KAF**	**39**	**DRE**	**90MJ4**	35	587
222	**44 - 222**	95	6.75	4490	3.2						
261	**52 - 261**	80	5.75	4310	3.4						
287	**57 - 287**	73	5.22	4200	3.5						
332	**66 - 332**	63	4.52	4040	3.8						
381	**76 - 381**	55	3.94	3890	3.9						

19391609/DE – 06/2017

P_m = 2.2 kW

n_a min^{-1} 50Hz	n_a min^{-1} 10-50Hz	M_a Nm	i	F_{Ra} [1] N	SEW f_B					m kg	
143	**29 - 143**	147	10.49	2440	1.10						
168	**34 - 168**	125	8.91	2440	1.30	**K**	**37**	**DRE**	**90MJ4**	29	580
188	**38 - 188**	112	7.96	2430	1.40	**KF**	**37**	**DRE**	**90MJ4**	31	581
221	**44 - 221**	95	6.80	2400	1.60	**KA**	**37**	**DRE**	**90MJ4**	29	582
236	**47 - 236**	89	6.37	2380	1.65	**KAF**	**37**	**DRE**	**90MJ4**	31	581
280	**56 - 280**	75	5.36	2330	1.85						
377	**75 - 377**	56	3.98	2220	2.2						
126	**25 - 126**	155	11.94	2490	0.85						
164	**33 - 164**	119	9.17	2480	1.10						
201	**40 - 201**	97	7.48	2450	1.25	**K**	**29**	**DRE**	**90MJ4**	23	573
216	**43 - 216**	92	6.95	2630	1.20	**KF**	**29**	**DRE**	**90MJ4**	24	577
261	**52 - 261**	76	5.75	2540	1.45	**KA**	**29**	**DRE**	**90MJ4**	23	579
294	**59 - 294**	68	5.10	2470	1.60	**KAF**	**29**	**DRE**	**90MJ4**	24	577
383	**77 - 383**	52	3.92	2330	2.4						
470	**94 - 470**	42	3.19	2220	2.6						

P_m = 3.0 kW

n_a min^{-1} 50Hz	n_a min^{-1} 10-50Hz	M_a Nm	i	F_{Ra} [1] N	SEW f_B					m kg	
-	**1.7 - 8.5**	3360	176.05*	40000	1.30						
9.8	**2.0 - 9.8**	2920	153.21*	40000	1.45						
11	**2.1 - 11**	2670	140.28	40000	1.60						
12	**2.4 - 12**	2360	123.93*	40000	1.80						
14	**2.9 - 14**	2000	105.13	40000	2.1	**K**	**97**	**DRE**	**90LJ4**	170	624
16	**3.1 - 16**	1840	96.80	40000	2.3	**KF**	**97**	**DRE**	**90LJ4**	190	625
17	**3.5 - 17**	1650	86.52	40000	2.6	**KA**	**97**	**DRE**	**90LJ4**	150	626
19	**3.9 - 19**	1480	77.89*	40000	2.9	**KAF**	**97**	**DRE**	**90LJ4**	175	625
21	**4.3 - 21**	1340	70.54	40000	3.2						
24	**4.8 - 24**	1190	62.55	40000	3.6						
27	**5.3 - 27**	1080	56.55	40000	4.0						
31	**6.3 - 31**	910	47.93*	40000	4.7						
12	**2.4 - 12**	2420	126.91*	27600	1.10						
13	**2.6 - 13**	2210	115.82	27800	1.20						
15	**2.9 - 15**	1960	102.71*	28100	1.40						
17	**3.5 - 17**	1640	86.34	28400	1.65						
19	**3.8 - 19**	1510	79.34	28500	1.80						
21	**4.3 - 21**	1340	70.46	28600	2.0	**K**	**87**	**DRE**	**90LJ4**	110	618
24	**4.8 - 24**	1200	63.00*	28700	2.2	**KF**	**87**	**DRE**	**90LJ4**	120	619
26	**5.3 - 26**	1080	56.64	28700	2.5	**KA**	**87**	**DRE**	**90LJ4**	99	620
31	**6.1 - 31**	930	49.16	28800	2.9	**KAF**	**87**	**DRE**	**90LJ4**	110	619
34	**6.8 - 34**	840	44.02	28900	3.1						
41	**8.2 - 41**	695	36.52*	28000	3.6						
48	**9.6 - 48**	595	31.39	27000	4.5						
54	**11 - 54**	530	27.88	26200	4.9						
19	**3.8 - 19**	1490	78.07	15800	1.05						
20	**4.1 - 20**	1410	73.99	16300	1.10						
23	**4.6 - 23**	1230	64.75	17300	1.25						
26	**5.1 - 26**	1110	58.34	17800	1.40						
29	**5.9 - 29**	970	51.18	18400	1.60						
33	**6.6 - 33**	860	45.16	18800	1.80						
37	**7.5 - 37**	760	40.04	19100	2.0						
39	**7.8 - 39**	730	38.39	19200	2.0	**K**	**77**	**DRE**	**90LJ4**	75	612
43	**8.5 - 43**	670	35.20	19300	2.3	**KF**	**77**	**DRE**	**90LJ4**	84	613
49	**9.7 - 49**	585	30.89	19500	2.6	**KA**	**77**	**DRE**	**90LJ4**	68	614
51	**10 - 51**	555	29.27	19600	2.8	**KAF**	**77**	**DRE**	**90LJ4**	76	613
59	**12 - 59**	485	25.62	19700	3.2						
65	**13 - 65**	440	23.08	19800	3.5						
74	**15 - 74**	385	20.25	19900	3.9						
84	**17 - 84**	340	17.87	19900	4.2						
95	**19 - 95**	300	15.84	20000	4.6						
121	**24 - 121**	235	12.36	18800	4.2						
138	**28 - 138**	205	10.84	18200	4.8						

19391609/DE – 06/2017

P_m = 3.0 kW

n_a min^{-1} 50Hz	n_a min^{-1} 10-50Hz	M_a Nm	i	F_{Ra} [1] N	SEW f_B					m kg	
39	**7.8 - 39**	730	38.39	11000	1.10						
-	**8.4 - 42**	680	35.62	11400	1.20						
50	**9.9 - 50**	575	30.22	12000	1.40						
55	**11 - 55**	520	27.28	12300	1.55						
63	**13 - 63**	455	24.00	12600	1.75						
66	**13 - 66**	430	22.66	12700	1.80						
78	**16 - 78**	365	19.30	12900	2.1	**K**	**67**	**DRE**	**90LJ4**	51	606
86	**17 - 86**	330	17.54	13000	2.2	**KF**	**67**	**DRE**	**90LJ4**	56	607
99	**20 - 99**	290	15.19	13000	2.4	**KA**	**67**	**DRE**	**90LJ4**	48	608
114	**23 - 114**	250	13.22	13000	2.6	**KAF**	**67**	**DRE**	**90LJ4**	54	607
120	**24 - 120**	235	12.48	13000	2.2						
141	**28 - 141**	200	10.63	13000	2.5						
155	**31 - 155**	184	9.66	13000	2.6						
179	**36 - 179**	160	8.37	12700	2.8						
206	**41 - 206**	139	7.28	12300	3.0						
288	**58 - 288**	99	5.20	11300	3.5						
50	**9.9 - 50**	575	30.28	7190	1.05						
55	**11 - 55**	520	27.34	7190	1.15						
62	**12 - 62**	455	24.05	7160	1.30						
66	**13 - 66**	430	22.71	7130	1.40						
78	**16 - 78**	365	19.34	7040	1.55						
85	**17 - 85**	335	17.57	6960	1.65						
99	**20 - 99**	290	15.22	6820	1.85	**K**	**57**	**DRE**	**90LJ4**	45	600
113	**23 - 113**	250	13.25	6680	2.0	**KF**	**57**	**DRE**	**90LJ4**	49	601
126	**25 - 126**	225	11.92	6350	1.80	**KA**	**57**	**DRE**	**90LJ4**	43	602
133	**27 - 133**	215	11.26	6300	1.95	**KAF**	**57**	**DRE**	**90LJ4**	48	601
156	**31 - 156**	183	9.59	6120	2.2						
172	**34 - 172**	166	8.71	6010	2.3						
199	**40 - 199**	144	7.55	5840	2.5						
228	**46 - 228**	125	6.57	5660	2.8						
320	**64 - 320**	90	4.69	5230	3.4						
49	**9.8 - 49**	580	30.55	5720	0.85						
52	**10 - 52**	550	28.95	5760	0.90						
59	**12 - 59**	480	25.34	5830	1.05						
66	**13 - 66**	435	22.83	5860	1.15						
75	**15 - 75**	380	20.03	5860	1.30						
85	**17 - 85**	335	17.67	5830	1.50	**K**	**49**	**DRE**	**90LJ4**	50	596
96	**19 - 96**	295	15.67	5780	1.65	**KF**	**49**	**DRE**	**90LJ4**	52	597
112	**22 - 112**	255	13.38	5690	1.85	**KA**	**49**	**DRE**	**90LJ4**	47	598
132	**26 - 132**	215	11.37	6120	2.3	**KAF**	**49**	**DRE**	**90LJ4**	52	597
144	**29 - 144**	199	10.42	6000	2.4						
164	**33 - 164**	175	9.14	5820	2.9						
173	**35 - 173**	165	8.66	5750	3.0						
198	**40 - 198**	145	7.58	5560	3.5						
220	**44 - 220**	130	6.83	5410	3.8						
77	**15 - 77**	370	19.58	4460	1.05						
89	**18 - 89**	320	16.86	4500	1.20						
95	**19 - 95**	300	15.86	4510	1.25						
110	**22 - 110**	260	13.65	4500	1.40						
123	**25 - 123**	230	12.19	4470	1.50						
127	**25 - 127**	220	11.77	4360	1.25	**K**	**47**	**DRE**	**90LJ4**	39	590
142	**28 - 142**	200	10.56	4330	1.40	**KF**	**47**	**DRE**	**90LJ4**	42	591
165	**33 - 165**	174	9.10	4260	1.60	**KA**	**47**	**DRE**	**90LJ4**	38	592
175	**35 - 175**	163	8.56	4230	1.65	**KAF**	**47**	**DRE**	**90LJ4**	41	591
204	**41 - 204**	141	7.36	4140	1.80						
228	**46 - 228**	126	6.58	4070	1.90						
258	**52 - 258**	111	5.81	3980	2.1						
324	**65 - 324**	88	4.64	3810	2.3						

19391609/DE – 06/2017

P_m = 3.0 kW

n_a min^{-1} 50Hz	n_a min^{-1} 10-50Hz	M_a Nm	i	F_{Ra} [1] N	SEW f_B					m kg	
84	17 - 84	340	17.83	4030	0.85						
97	19 - 97	290	15.44	4100	0.95						
112	22 - 112	255	13.44	4130	1.05						
-	28 - 141	200	10.61	4690	1.40						
167	33 - 167	172	9.00	4560	1.75						
185	37 - 185	155	8.12	4470	1.95	K	39	DRE	90LJ4	38	586
210	42 - 210	137	7.15	4350	2.2	KF	39	DRE	90LJ4	39	587
222	44 - 222	129	6.75	4300	2.3	KA	39	DRE	90LJ4	37	588
261	52 - 261	110	5.75	4140	2.5	KAF	39	DRE	90LJ4	38	587
287	57 - 287	100	5.22	4050	2.6						
332	66 - 332	86	4.52	3910	2.8						
381	76 - 381	75	3.94	3780	2.9						
533	107 - 533	54	2.81	3450	3.2						
-	38 - 188	152	7.96	2060	1.00						
-	44 - 221	130	6.80	2080	1.15	K	37	DRE	90LJ4	32	580
-	47 - 236	122	6.37	2090	1.20	KF	37	DRE	90LJ4	34	581
-	56 - 280	102	5.36	2080	1.35	KA	37	DRE	90LJ4	32	582
-	75 - 377	76	3.98	2040	1.65	KAF	37	DRE	90LJ4	33	581
-	33 - 164	163	9.17	2100	0.80						
-	40 - 201	133	7.48	2130	0.95						
-	43 - 216	126	6.95	2410	0.90	K	29	DRE	90LJ4	26	573
-	52 - 261	104	5.75	2350	1.10	KF	29	DRE	90LJ4	27	577
-	59 - 294	92	5.10	2310	1.20	KA	29	DRE	90LJ4	26	579
-	77 - 383	71	3.92	2210	1.80	KAF	29	DRE	90LJ4	27	577
-	94 - 470	58	3.19	2120	1.90						

P_m = 4.0 kW

n_a min^{-1} 50Hz	n_a min^{-1} 10-50Hz	M_a Nm	i	F_{Ra} [1] N	SEW f_B					m kg	
-	2.0 - 9.8	3900	153.21*	40000	1.10						
-	2.1 - 11	3570	140.28	40000	1.20						
12	2.4 - 12	3150	123.93*	40000	1.35						
14	2.9 - 14	2670	105.13	40000	1.60						
16	3.1 - 16	2460	96.80	40000	1.75						
17	3.5 - 17	2200	86.52	40000	1.95	K	97	DRE	100MJ4	175	624
19	3.9 - 19	1980	77.89*	40000	2.2	KF	97	DRE	100MJ4	195	625
21	4.3 - 21	1790	70.54	40000	2.4	KA	97	DRE	100MJ4	155	626
24	4.8 - 24	1590	62.55	40000	2.7	KAF	97	DRE	100MJ4	180	625
27	5.3 - 27	1440	56.55	40000	3.0						
31	6.3 - 31	1220	47.93*	39800	3.5						
39	7.8 - 39	970	38.30	37800	4.4						
44	8.8 - 44	870	34.23	36800	4.9						
15	2.9 - 15	2610	102.71*	27400	1.05						
17	3.5 - 17	2190	86.34	27900	1.25						
19	3.8 - 19	2020	79.34	28000	1.35						
21	4.3 - 21	1790	70.46	28200	1.50						
24	4.8 - 24	1600	63.00*	28400	1.70						
26	5.3 - 26	1440	56.64	28500	1.85						
31	6.1 - 31	1250	49.16	28600	2.2	K	87	DRE	100MJ4	115	618
34	6.8 - 34	1120	44.02	28000	2.3	KF	87	DRE	100MJ4	125	619
41	8.2 - 41	930	36.52*	27000	2.7	KA	87	DRE	100MJ4	105	620
48	9.6 - 48	795	31.39	26200	3.4	KAF	87	DRE	100MJ4	115	619
54	11 - 54	705	27.88	25500	3.7						
60	12 - 60	630	24.92	24900	3.9						
67	13 - 67	570	22.41	24300	4.0						
77	15 - 77	495	19.45	23500	4.6						
86	17 - 86	440	17.42	22900	5.0						
94	19 - 94	405	16.00	22100	4.4						

19391609/DE – 06/2017

P_m = 4.0 kW

n_a min^{-1} 50Hz	n_a min^{-1} 10-50Hz	M_a Nm	i	F_{Ra} [1] N	SEW f_B					m kg	
26	**5.1 - 26**	1480	58.34	15800	1.05						
29	**5.9 - 29**	1300	51.18	16900	1.20						
33	**6.6 - 33**	1150	45.16	17700	1.35						
37	**7.5 - 37**	1010	40.04	18200	1.50						
-	**7.8 - 39**	970	38.39	18400	1.55						
-	**8.5 - 43**	890	35.20	18700	1.75						
49	**9.7 - 49**	785	30.89	19000	1.95						
51	**10 - 51**	745	29.27	19100	2.1	**K**	**77**	**DRE**	**100MJ4**	80	612
59	**12 - 59**	650	25.62	19400	2.4	**KF**	**77**	**DRE**	**100MJ4**	88	613
65	**13 - 65**	585	23.08	19500	2.6	**KA**	**77**	**DRE**	**100MJ4**	73	614
74	**15 - 74**	515	20.25	19700	2.9	**KAF**	**77**	**DRE**	**100MJ4**	80	613
84	**17 - 84**	450	17.87	19800	3.2						
95	**19 - 95**	400	15.84	19700	3.5						
111	**22 - 111**	340	13.52	19000	3.9						
121	**24 - 121**	310	12.36	18400	3.2						
138	**28 - 138**	275	10.84	17800	3.6						
157	**31 - 157**	240	9.56	17300	3.9						
177	**35 - 177**	215	8.48	16800	4.1						
207	**41 - 207**	184	7.24	16100	4.5						
-	**9.9 - 50**	765	30.22	10700	1.05						
-	**11 - 55**	690	27.28	11300	1.20						
-	**13 - 63**	610	24.00	11800	1.30						
-	**13 - 66**	575	22.66	12000	1.35						
-	**16 - 78**	490	19.30	12400	1.55						
-	**17 - 86**	445	17.54	12600	1.65	**K**	**67**	**DRE**	**100MJ4**	55	606
-	**20 - 99**	385	15.19	12900	1.80	**KF**	**67**	**DRE**	**100MJ4**	61	607
-	**23 - 114**	335	13.22	13000	2.0	**KA**	**67**	**DRE**	**100MJ4**	52	608
-	**24 - 120**	315	12.48	13000	1.65	**KAF**	**67**	**DRE**	**100MJ4**	58	607
-	**28 - 141**	270	10.63	13000	1.85						
-	**31 - 155**	245	9.66	12700	1.95						
-	**36 - 179**	210	8.37	12400	2.1						
-	**41 - 206**	185	7.28	12000	2.3						
-	**58 - 288**	132	5.20	11100	2.6						
-	**13 - 66**	575	22.71	6190	1.05						
-	**16 - 78**	490	19.34	6230	1.15						
-	**17 - 85**	445	17.57	6230	1.25						
-	**20 - 99**	385	15.22	6190	1.40						
-	**23 - 113**	335	13.25	6120	1.50	**K**	**57**	**DRE**	**100MJ4**	49	600
-	**25 - 126**	300	11.92	5790	1.35	**KF**	**57**	**DRE**	**100MJ4**	54	601
-	**27 - 133**	285	11.26	5760	1.45	**KA**	**57**	**DRE**	**100MJ4**	47	602
-	**31 - 156**	240	9.59	5670	1.65	**KAF**	**57**	**DRE**	**100MJ4**	53	601
-	**34 - 172**	220	8.71	5600	1.75						
-	**40 - 199**	192	7.55	5480	1.90						
-	**46 - 228**	167	6.57	5350	2.1						
-	**64 - 320**	119	4.69	5010	2.5						
66	**13 - 66**	580	22.83	4810	0.85						
75	**15 - 75**	505	20.03	4940	1.00						
85	**17 - 85**	450	17.67	5020	1.10						
96	**19 - 96**	395	15.67	5070	1.25						
112	**22 - 112**	340	13.38	5080	1.40						
-	**26 - 132**	285	11.37	5790	1.70	**K**	**49**	**DRE**	**100MJ4**	55	596
-	**29 - 144**	265	10.42	5700	1.80	**KF**	**49**	**DRE**	**100MJ4**	57	597
164	**33 - 164**	230	9.14	5550	2.1	**KA**	**49**	**DRE**	**100MJ4**	52	598
173	**35 - 173**	220	8.66	5490	2.3	**KAF**	**49**	**DRE**	**100MJ4**	57	597
198	**40 - 198**	193	7.58	5340	2.6						
220	**44 - 220**	174	6.83	5210	2.9						
250	**50 - 250**	153	5.99	5050	3.3						
284	**57 - 284**	135	5.29	4900	3.6						
320	**64 - 320**	119	4.69	4760	3.9						

19391609/DE – 06/2017

P_m = 4.0 kW

n_a min^{-1} 50Hz	n_a min^{-1} 10-50Hz	M_a Nm	i	F_{Ra} [1] N	SEW f_B					m kg	
-	**22 - 110**	345	13.65	3840	1.05						
-	**25 - 123**	310	12.19	3880	1.15						
-	**28 - 142**	265	10.56	3780	1.05						
-	**33 - 165**	230	9.10	3800	1.20	**K**	**47**	**DRE**	**100MJ4**	43	590
-	**35 - 175**	215	8.56	3790	1.25	**KF**	**47**	**DRE**	**100MJ4**	47	591
-	**41 - 204**	188	7.36	3770	1.35	**KA**	**47**	**DRE**	**100MJ4**	43	592
-	**46 - 228**	168	6.58	3730	1.45	**KAF**	**47**	**DRE**	**100MJ4**	45	591
-	**52 - 258**	148	5.81	3680	1.55						
-	**65 - 324**	118	4.64	3570	1.75						
-	**33 - 167**	225	9.00	4230	1.30						
-	**37 - 185**	205	8.12	4170	1.45						
-	**42 - 210**	182	7.15	4090	1.65						
-	**44 - 222**	172	6.75	4050	1.75	**K**	**39**	**DRE**	**100MJ4**	42	586
-	**52 - 261**	146	5.75	3930	1.90	**KF**	**39**	**DRE**	**100MJ4**	44	587
-	**57 - 287**	133	5.22	3860	1.95	**KA**	**39**	**DRE**	**100MJ4**	41	588
-	**66 - 332**	115	4.52	3740	2.1	**KAF**	**39**	**DRE**	**100MJ4**	43	587
-	**76 - 381**	100	3.94	3630	2.1						
-	**107 - 533**	72	2.81	3350	2.4						

19391609/DE – 06/2017

10.6 Auswahltabellen K..DRE..J (IE2), 87 Hz

P_m = 0.55 kW

	n_a min^{-1} 10-87Hz	M_a Nm	i	F_{Ra} [1] N	SEW f_B					m kg	
						K	77	DRE	71SJ4	63	612
-	**1.6 - 14**	385	192.18	19900	3.8	KF	77	DRE	71SJ4	71	613
-	**1.7 - 15**	360	179.37	19900	4.0	KA	77	DRE	71SJ4	55	614
						KAF	77	DRE	71SJ4	63	613
-	**2.1 - 18**	290	144.79*	13000	2.8						
-	**2.4 - 21**	245	123.54	13000	3.3	K	67	DRE	71SJ4	36	606
-	**2.8 - 24**	215	108.03	13000	3.8	KF	67	DRE	71SJ4	42	607
-	**2.9 - 25**	205	102.62	13000	4.0	KA	67	DRE	71SJ4	34	608
-	**3.3 - 29**	181	90.04	13000	4.5	KAF	67	DRE	71SJ4	39	607
-	**2.1 - 18**	290	145.14*	9320	2.0						
-	**2.4 - 21**	245	123.85	9470	2.4						
-	**2.8 - 24**	215	108.29	9570	2.8	K	57	DRE	71SJ4	31	600
-	**2.9 - 25**	205	102.88*	9610	2.9	KF	57	DRE	71SJ4	35	601
-	**3.3 - 29**	182	90.26*	9690	3.3	KA	57	DRE	71SJ4	29	602
-	**3.9 - 34**	154	76.56*	9770	3.9	KAF	57	DRE	71SJ4	34	601
-	**4.3 - 38**	139	69.12	9820	4.3						
-	**4.9 - 43**	122	60.81*	9860	4.9						
						K	49	DRE	71SJ4	37	596
-	**4.0 - 35**	151	75.20	9000	3.1	KF	49	DRE	71SJ4	39	597
-	**4.3 - 37**	141	70.19	9000	3.1	KA	49	DRE	71SJ4	35	598
						KAF	49	DRE	71SJ4	39	597
-	**2.3 - 20**	265	131.87*	7350	1.50						
-	**2.5 - 21**	240	121.48*	7500	1.65						
-	**2.9 - 25**	210	104.37	7720	1.90						
-	**3.3 - 29**	183	90.86	7860	2.2						
-	**3.5 - 31**	171	85.12*	7920	2.3	K	47	DRE	71SJ4	25	590
-	**4.0 - 35**	151	75.20*	8000	2.6	KF	47	DRE	71SJ4	28	591
-	**4.3 - 37**	140	69.84	8040	2.9	KA	47	DRE	71SJ4	24	592
-	**4.7 - 41**	127	63.30*	8020	3.1	KAF	47	DRE	71SJ4	27	591
-	**5.3 - 46**	114	56.83	7800	3.5						
-	**6.1 - 53**	98	48.95*	7500	4.1						
-	**6.5 - 57**	93	46.03*	7380	4.3						
-	**5.2 - 45**	117	58.24	7500	2.6	K	39	DRE	71SJ4	24	586
-	**6.0 - 53**	100	49.69	7280	3.0	KF	39	DRE	71SJ4	25	587
-	**6.9 - 60**	87	43.45	7040	3.4	KA	39	DRE	71SJ4	23	588
-	**7.3 - 63**	83	41.28	6940	3.6	KAF	39	DRE	71SJ4	24	587
-	**3.1 - 27**	197	97.81	4800	1.00						
-	**3.6 - 31**	168	83.69	4720	1.20						
-	**4.1 - 36**	146	72.54	4640	1.35						
-	**4.4 - 38**	136	67.80	4590	1.45						
-	**5.1 - 45**	118	58.60	4480	1.70						
-	**6.0 - 52**	100	49.79	4350	2.0	K	37	DRE	71SJ4	19	580
-	**6.7 - 59**	90	44.46	4250	2.2	KF	37	DRE	71SJ4	21	581
-	**7.9 - 69**	76	37.97	4110	2.6	KA	37	DRE	71SJ4	18	582
-	**8.4 - 73**	72	35.57	4050	2.8	KAF	37	DRE	71SJ4	20	581
-	**10 - 87**	60	29.96	3890	3.3						
-	**10 - 91**	58	28.83	3860	3.5						
-	**12 - 104**	50	24.99	3720	4.0						
-	**13 - 112**	47	23.36	3660	4.2						
-	**15 - 129**	41	20.19	3520	4.6						
-	**5.5 - 48**	100	54.89	4360	1.30						
-	**6.0 - 52**	92	50.35	4280	1.40						
-	**7.0 - 61**	78	42.87	4150	1.65						
-	**8.1 - 71**	68	36.96	4020	1.80						
-	**10.0 - 87**	55	30.11	3840	2.1	K	29	DRE	71SJ4	12	573
-	**10 - 88**	55	29.69	3870	2.3	KF	29	DRE	71SJ4	14	577
-	**11 - 96**	51	27.23	3790	2.5	KA	29	DRE	71SJ4	12	579
-	**12 - 105**	46	24.91	3660	2.4	KAF	29	DRE	71SJ4	13	577
-	**13 - 113**	43	23.19	3630	3.0						
-	**14 - 118**	40	22.08	3550	2.6						
-	**15 - 131**	37	19.99	3490	3.5						

19391609/DE – 06/2017

P_m = 0.55 kW

	n_a min^{-1} 10-87Hz	M_a Nm	i	F_{Ra} 1) N	SEW f_B					m kg	
-	**6.7 - 59**	81	44.48	3620	0.85						
-	**7.4 - 64**	74	40.63	3570	0.90						
-	**8.7 - 76**	63	34.29	3470	1.00						
-	**10 - 89**	54	29.29	3360	1.15						
-	**11 - 96**	50	27.16	3310	1.20						
-	**12 - 108**	45	24.06	3310	1.80						
-	**14 - 119**	41	21.98	3230	1.95						
-	**16 - 141**	35	18.55	3100	2.3						
-	**19 - 165**	30	15.84	2970	2.7	**K**	**19**	**DRE**	**71SJ4**	11	567
-	**20 - 178**	27	14.69	2920	2.9	**KF**	**19**	**DRE**	**71SJ4**	11	570
-	**24 - 205**	24	12.70	2800	3.4	**KA**	**19**	**DRE**	**71SJ4**	11	572
-	**25 - 220**	22	11.84	2750	3.6	**KAF**	**19**	**DRE**	**71SJ4**	11	570
-	**29 - 253**	19	10.32	2640	3.9						
-	**31 - 272**	18	9.58	2630	3.4						
-	**37 - 323**	15	8.09	2500	5.2						
-	**43 - 378**	13	6.91	2380	6.1						
-	**47 - 407**	12	6.41	2330	6.5						
-	**54 - 471**	11	5.54	2220	7.6						
-	**58 - 506**	9.8	5.16	2180	8.1						
-	**67 - 580**	8.6	4.50	2090	9.3						

P_m = 0.75 kW

	n_a min^{-1} 10-87Hz	M_a Nm	i	F_{Ra} 1) N	SEW f_B					m kg	
-	**1.5 - 13**	540	197.37	29000	5.0	**K**	**87**	**DRE**	**71MJ4**	99	618
						KF	**87**	**DRE**	**71MJ4**	110	619
						KA	**87**	**DRE**	**71MJ4**	87	620
						KAF	**87**	**DRE**	**71MJ4**	100	619
-	**1.9 - 17**	420	154.02	19800	3.7	**K**	**77**	**DRE**	**71MJ4**	64	612
-	**2.2 - 19**	370	135.28	19900	4.2	**KF**	**77**	**DRE**	**71MJ4**	72	613
-	**2.3 - 20**	350	128.52	19900	4.4	**KA**	**77**	**DRE**	**71MJ4**	56	614
-	**2.6 - 23**	310	113.56	20000	5.0	**KAF**	**77**	**DRE**	**71MJ4**	64	613
-	**2.4 - 21**	335	123.54	13000	2.4						
-	**2.8 - 24**	295	108.03	13000	2.8						
-	**2.9 - 25**	280	102.62	13000	2.9	**K**	**67**	**DRE**	**71MJ4**	39	606
-	**3.3 - 29**	245	90.04	13000	3.3	**KF**	**67**	**DRE**	**71MJ4**	45	607
-	**3.9 - 34**	205	76.37	13000	3.9	**KA**	**67**	**DRE**	**71MJ4**	36	608
-	**4.4 - 38**	189	68.95	13000	4.3	**KAF**	**67**	**DRE**	**71MJ4**	42	607
-	**4.9 - 43**	166	60.66	13000	4.9						
-	**2.4 - 21**	335	123.85	9130	1.75						
-	**2.8 - 24**	295	108.29	9300	2.0						
-	**2.9 - 25**	280	102.88*	9350	2.1						
-	**3.3 - 29**	245	90.26*	9470	2.4	**K**	**57**	**DRE**	**71MJ4**	33	600
-	**3.9 - 34**	210	76.56*	9600	2.9	**KF**	**57**	**DRE**	**71MJ4**	38	601
-	**4.3 - 38**	190	69.12	9660	3.2	**KA**	**57**	**DRE**	**71MJ4**	31	602
-	**4.9 - 43**	167	60.81*	9740	3.6	**KAF**	**57**	**DRE**	**71MJ4**	37	601
-	**5.2 - 45**	158	57.42*	9760	3.8						
-	**6.1 - 53**	134	48.89	9830	4.5						
-	**6.8 - 59**	122	44.43	9570	4.9						
-	**5.0 - 43**	165	60.27	9000	3.0	**K**	**49**	**DRE**	**71MJ4**	38	596
-	**5.7 - 49**	145	52.94	8860	3.4	**KF**	**49**	**DRE**	**71MJ4**	40	597
-	**6.0 - 52**	138	50.29	8740	3.6	**KA**	**49**	**DRE**	**71MJ4**	36	598
						KAF	**49**	**DRE**	**71MJ4**	40	597

19391609/DE – 06/2017

P_m = 0.75 kW

	n_a min^{-1} 10-87Hz	M_a Nm	i	F_{Ra} [1] N	SEW f_B					m kg	
-	**2.9 - 25**	285	104.37	7180	1.40						
-	**3.3 - 29**	245	90.86	7460	1.60						
-	**3.5 - 31**	230	85.12*	7570	1.70						
-	**4.0 - 35**	205	75.20*	7740	1.95						
-	**4.3 - 37**	192	69.84	7820	2.1						
-	**4.7 - 41**	174	63.30*	7670	2.3	**K**	**47**	**DRE**	**71MJ4**	27	590
-	**5.3 - 46**	156	56.83	7480	2.6	**KF**	**47**	**DRE**	**71MJ4**	31	591
-	**6.1 - 53**	134	48.95*	7230	3.0	**KA**	**47**	**DRE**	**71MJ4**	26	592
-	**6.5 - 57**	126	46.03*	7120	3.2	**KAF**	**47**	**DRE**	**71MJ4**	29	591
-	**7.6 - 66**	109	39.61	6860	3.7						
-	**8.5 - 74**	97	35.39	6670	4.1						
-	**9.6 - 83**	86	31.30	6450	4.7						
-	**10 - 89**	80	29.32	6340	5.0						
-	**6.0 - 53**	136	49.69	6970	2.2						
-	**6.9 - 60**	119	43.45	6760	2.5	**K**	**39**	**DRE**	**71MJ4**	26	586
-	**7.3 - 63**	113	41.28	6680	2.6	**KF**	**39**	**DRE**	**71MJ4**	28	587
-	**8.3 - 72**	99	36.22	6470	3.0	**KA**	**39**	**DRE**	**71MJ4**	25	588
-	**9.8 - 85**	84	30.72	6210	3.6	**KAF**	**39**	**DRE**	**71MJ4**	27	587
-	**11 - 94**	76	27.73	6050	3.9						
-	**4.1 - 36**	199	72.54	4150	1.00						
-	**4.4 - 38**	186	67.80	4140	1.10						
-	**5.1 - 45**	161	58.60	4090	1.25						
-	**6.0 - 52**	137	49.79	4020	1.45						
-	**6.7 - 59**	122	44.46	3960	1.65						
-	**7.9 - 69**	104	37.97	3860	1.90						
-	**8.4 - 73**	98	35.57	3820	2.0	**K**	**37**	**DRE**	**71MJ4**	20	580
-	**10 - 87**	82	29.96	3690	2.4	**KF**	**37**	**DRE**	**71MJ4**	22	581
-	**10 - 91**	79	28.83	3670	2.5	**KA**	**37**	**DRE**	**71MJ4**	20	582
-	**12 - 104**	69	24.99	3560	2.9	**KAF**	**37**	**DRE**	**71MJ4**	21	581
-	**13 - 112**	64	23.36	3500	3.0						
-	**15 - 129**	55	20.19	3390	3.3						
-	**17 - 152**	47	17.15	3260	3.8						
-	**20 - 170**	42	15.31	3170	4.2						
-	**23 - 200**	36	13.08	3040	4.6						
-	**25 - 215**	33	12.14	2980	4.8						
-	**7.0 - 61**	107	42.87	3870	1.20						
-	**8.1 - 71**	92	36.96	3780	1.30						
-	**10.0 - 87**	75	30.11	3640	1.55						
-	**12 - 105**	62	24.91	3500	1.75	**K**	**29**	**DRE**	**71MJ4**	14	573
-	**13 - 113**	59	23.19	3490	2.2	**KF**	**29**	**DRE**	**71MJ4**	15	577
-	**14 - 118**	55	22.08	3400	1.90	**KA**	**29**	**DRE**	**71MJ4**	13	579
-	**15 - 131**	51	19.99	3370	2.5	**KAF**	**29**	**DRE**	**71MJ4**	15	577
-	**18 - 160**	42	16.29	3200	3.1						
-	**22 - 194**	34	13.47	3050	3.8						
-	**10 - 89**	73	29.29	3120	0.85						
-	**11 - 96**	68	27.16	3090	0.90						
-	**16 - 141**	47	18.55	2970	1.70						
-	**19 - 165**	40	15.84	2860	2.0						
-	**20 - 178**	37	14.69	2810	2.1						
-	**24 - 205**	32	12.70	2710	2.5	**K**	**19**	**DRE**	**71MJ4**	12	567
-	**25 - 220**	30	11.84	2660	2.6	**KF**	**19**	**DRE**	**71MJ4**	13	570
-	**29 - 253**	26	10.32	2570	2.9	**KA**	**19**	**DRE**	**71MJ4**	12	572
-	**37 - 323**	21	8.09	2450	3.8	**KAF**	**19**	**DRE**	**71MJ4**	12	570
-	**43 - 378**	18	6.91	2340	4.5						
-	**47 - 407**	17	6.41	2290	4.8						
-	**54 - 471**	14	5.54	2200	5.5						
-	**58 - 506**	13	5.16	2150	6.0						
-	**67 - 580**	12	4.50	2060	6.8						

19391609/DE – 06/2017

P_m = 1.1 kW

	n_a min^{-1} 10-87Hz	M_a Nm	i	F_{Ra} 1) N	SEW f_B					m kg	
-	**1.5 - 13**	790	197.37	28900	3.4	**K**	**87**	**DRE**	**71MJ4**	99	618
-	**1.7 - 15**	700	174.19	28900	3.9	**KF**	**87**	**DRE**	**71MJ4**	110	619
-	**1.8 - 16**	660	164.34*	28900	4.1	**KA**	**87**	**DRE**	**71MJ4**	87	620
-	**2.0 - 18**	590	147.32*	29000	4.5	**KAF**	**87**	**DRE**	**71MJ4**	100	619
-	**1.9 - 17**	615	154.02	19500	2.5						
-	**2.2 - 19**	540	135.28	19600	2.9						
-	**2.3 - 20**	515	128.52	19700	3.0	**K**	**77**	**DRE**	**71MJ4**	64	612
-	**2.6 - 23**	455	113.56	19800	3.4	**KF**	**77**	**DRE**	**71MJ4**	72	613
-	**3.1 - 27**	390	97.05	19900	4.0	**KA**	**77**	**DRE**	**71MJ4**	56	614
-	**3.4 - 29**	355	88.97	19900	4.3	**KAF**	**77**	**DRE**	**71MJ4**	64	613
-	**3.8 - 33**	310	78.07	20000	4.9						
-	**2.4 - 21**	495	123.54	12400	1.65						
-	**2.8 - 24**	430	108.03	12700	1.90						
-	**2.9 - 25**	410	102.62	12800	2.0						
-	**3.3 - 29**	360	90.04	12900	2.3	**K**	**67**	**DRE**	**71MJ4**	39	606
-	**3.9 - 34**	305	76.37	13000	2.7	**KF**	**67**	**DRE**	**71MJ4**	45	607
-	**4.4 - 38**	275	68.95	13000	3.0	**KA**	**67**	**DRE**	**71MJ4**	36	608
-	**4.9 - 43**	240	60.66	13000	3.4	**KAF**	**67**	**DRE**	**71MJ4**	42	607
-	**5.2 - 46**	230	57.28	13000	3.6						
-	**6.2 - 54**	196	48.77	13000	4.2						
-	**6.8 - 59**	178	44.32	13000	4.6						
-	**2.4 - 21**	495	123.85	8420	1.20						
-	**2.8 - 24**	435	108.29	8720	1.40						
-	**2.9 - 25**	410	102.88*	8820	1.45						
-	**3.3 - 29**	360	90.26*	9040	1.65						
-	**3.9 - 34**	305	76.56*	9260	1.95						
-	**4.3 - 38**	275	69.12	9370	2.2	**K**	**57**	**DRE**	**71MJ4**	33	600
-	**4.9 - 43**	240	60.81*	9480	2.5	**KF**	**57**	**DRE**	**71MJ4**	38	601
-	**5.2 - 45**	230	57.42*	9530	2.6	**KA**	**57**	**DRE**	**71MJ4**	31	602
-	**6.1 - 53**	197	48.89	9420	3.0	**KAF**	**57**	**DRE**	**71MJ4**	37	601
-	**6.8 - 59**	179	44.43	9200	3.4						
-	**7.8 - 68**	155	38.49	8870	3.9						
-	**8.4 - 73**	144	35.70	8700	4.2						
-	**9.9 - 86**	122	30.28	8330	4.9						
-	**5.0 - 43**	240	60.27	8600	2.1						
-	**5.7 - 49**	210	52.94	8370	2.4	**K**	**49**	**DRE**	**71MJ4**	38	596
-	**6.0 - 52**	200	50.29	8280	2.5	**KF**	**49**	**DRE**	**71MJ4**	40	597
-	**6.8 - 59**	179	44.44	8060	2.8	**KA**	**49**	**DRE**	**71MJ4**	36	598
-	**7.9 - 69**	153	37.98	7770	3.3	**KAF**	**49**	**DRE**	**71MJ4**	40	597
-	**8.6 - 75**	140	34.81	7600	3.6						
-	**3.3 - 29**	365	90.86	6380	1.10						
-	**3.5 - 31**	340	85.12*	6640	1.15						
-	**4.0 - 35**	300	75.20*	7040	1.30						
-	**4.3 - 37**	280	69.84	7150	1.40						
-	**4.7 - 41**	250	63.30*	7050	1.55						
-	**5.3 - 46**	225	56.83	6930	1.75						
-	**6.1 - 53**	197	48.95*	6750	2.0	**K**	**47**	**DRE**	**71MJ4**	27	590
-	**6.5 - 57**	185	46.03*	6670	2.2	**KF**	**47**	**DRE**	**71MJ4**	31	591
-	**7.6 - 66**	159	39.61	6480	2.5	**KA**	**47**	**DRE**	**71MJ4**	26	592
-	**8.5 - 74**	142	35.39	6320	2.8	**KAF**	**47**	**DRE**	**71MJ4**	29	591
-	**9.6 - 83**	126	31.30	6150	3.2						
-	**10 - 89**	118	29.32	6060	3.4						
-	**12 - 101**	104	25.91	5880	3.8						
-	**12 - 108**	97	24.06	5780	4.1						
-	**14 - 120**	88	21.81	5630	4.6						
-	**6.0 - 53**	200	49.69	6420	1.50						
-	**6.9 - 60**	175	43.45	6280	1.70						
-	**7.3 - 63**	166	41.28	6230	1.80						
-	**8.3 - 72**	146	36.22	6080	2.1	**K**	**39**	**DRE**	**71MJ4**	26	586
-	**9.8 - 85**	124	30.72	5870	2.4	**KF**	**39**	**DRE**	**71MJ4**	28	587
-	**11 - 94**	112	27.73	5740	2.7	**KA**	**39**	**DRE**	**71MJ4**	25	588
-	**12 - 107**	98	24.40	5580	3.0	**KAF**	**39**	**DRE**	**71MJ4**	27	587
-	**13 - 113**	93	23.04	5510	3.2						
-	**15 - 133**	79	19.62	5300	3.7						

19391609/DE – 06/2017

P_m = 1.1 kW

	n_a min^{-1} 10-87Hz	M_a Nm	i	F_{Ra} [1] N	SEW f_B					m kg	
-	**6.0 - 52**	200	49.79	3440	1.00						
-	**6.7 - 59**	179	44.46	3440	1.10						
-	**7.9 - 69**	153	37.97	3420	1.30						
-	**8.4 - 73**	143	35.57	3400	1.40						
-	**10 - 87**	121	29.96	3340	1.65						
-	**10 - 91**	116	28.83	3330	1.70						
-	**12 - 104**	101	24.99	3270	2.0	**K**	**37**	**DRE**	**71MJ4**	20	580
-	**13 - 112**	94	23.36	3230	2.1	**KF**	**37**	**DRE**	**71MJ4**	22	581
-	**15 - 129**	81	20.19	3160	2.3	**KA**	**37**	**DRE**	**71MJ4**	20	582
-	**17 - 152**	69	17.15	3060	2.6	**KAF**	**37**	**DRE**	**71MJ4**	21	581
-	**20 - 170**	62	15.31	2990	2.8						
-	**23 - 200**	53	13.08	2890	3.1						
-	**25 - 215**	49	12.14	2840	3.3						
-	**29 - 249**	42	10.49	2750	3.8						
-	**34 - 293**	36	8.91	2640	4.5						
-	**38 - 328**	32	7.96	2560	4.8						
-	**7.0 - 61**	157	42.87	3370	0.80						
-	**8.1 - 71**	135	36.96	3340	0.90						
-	**10.0 - 87**	110	30.11	3290	1.05						
-	**12 - 105**	91	24.91	3210	1.20						
-	**13 - 113**	87	23.19	3250	1.50						
-	**14 - 118**	81	22.08	3150	1.30	**K**	**29**	**DRE**	**71MJ4**	14	573
-	**15 - 131**	75	19.99	3160	1.75	**KF**	**29**	**DRE**	**71MJ4**	15	577
-	**18 - 160**	61	16.29	3030	2.1	**KA**	**29**	**DRE**	**71MJ4**	13	579
-	**22 - 194**	50	13.47	2900	2.6	**KAF**	**29**	**DRE**	**71MJ4**	15	577
-	**25 - 219**	45	11.94	2820	2.9						
-	**30 - 264**	38	9.90	2780	2.9						
-	**33 - 285**	34	9.17	2640	3.8						
-	**35 - 306**	33	8.53	2670	3.8						
-	**16 - 141**	69	18.55	2740	1.15						
-	**19 - 165**	59	15.84	2670	1.35						
-	**20 - 178**	55	14.69	2630	1.45						
-	**24 - 205**	47	12.70	2560	1.70						
-	**25 - 220**	44	11.84	2520	1.80	**K**	**19**	**DRE**	**71MJ4**	12	567
-	**29 - 253**	39	10.32	2450	1.95	**KF**	**19**	**DRE**	**71MJ4**	13	570
-	**37 - 323**	31	8.09	2370	2.6	**KA**	**19**	**DRE**	**71MJ4**	12	572
-	**43 - 378**	26	6.91	2280	3.0	**KAF**	**19**	**DRE**	**71MJ4**	12	570
-	**47 - 407**	24	6.41	2230	3.3						
-	**54 - 471**	21	5.54	2140	3.8						
-	**58 - 506**	20	5.16	2100	4.1						
-	**67 - 580**	17	4.50	2020	4.7						

P_m = 1.5 kW

	n_a min^{-1} 10-87Hz	M_a Nm	i	F_{Ra} [1] N	SEW f_B					m kg	
-	**1.7 - 15**	960	176.05*	40000	4.5	**K**	**97**	**DRE**	**80SJ4**	160	624
						KF	**97**	**DRE**	**80SJ4**	180	625
						KA	**97**	**DRE**	**80SJ4**	145	626
						KAF	**97**	**DRE**	**80SJ4**	170	625
-	**1.5 - 13**	1080	197.37	28700	2.5						
-	**1.7 - 15**	950	174.19	28800	2.8						
-	**1.8 - 16**	900	164.34*	28800	3.0	**K**	**87**	**DRE**	**80SJ4**	105	618
-	**2.0 - 18**	800	147.32*	28900	3.3	**KF**	**87**	**DRE**	**80SJ4**	110	619
-	**2.4 - 21**	695	126.91*	28900	3.9	**KA**	**87**	**DRE**	**80SJ4**	91	620
-	**2.6 - 23**	635	115.82	28900	4.2	**KAF**	**87**	**DRE**	**80SJ4**	105	619
-	**2.9 - 25**	560	102.71*	29000	4.8						

19391609/DE – 06/2017

P_m = 1.5 kW

	n_a min^{-1} 10-87Hz	M_a Nm	i	F_{Ra} [1] N	SEW f_B					m kg	
-	**1.9 - 17**	840	154.02	18800	1.85						
-	**2.2 - 19**	740	135.28	19200	2.1						
-	**2.3 - 20**	705	128.52	19200	2.2						
-	**2.6 - 23**	620	113.56	19400	2.5	**K**	**77**	**DRE**	**80SJ4**	66	612
-	**3.1 - 27**	530	97.05	19600	2.9	**KF**	**77**	**DRE**	**80SJ4**	74	613
-	**3.4 - 29**	485	88.97	19700	3.2	**KA**	**77**	**DRE**	**80SJ4**	58	614
-	**3.8 - 33**	425	78.07	19800	3.6	**KAF**	**77**	**DRE**	**80SJ4**	66	613
-	**4.1 - 35**	405	73.99	19800	3.8						
-	**4.6 - 40**	355	64.75	19900	4.4						
-	**5.1 - 45**	320	58.34	20000	4.8						
-	**2.4 - 21**	675	123.54	11400	1.20						
-	**2.8 - 24**	590	108.03	11900	1.40						
-	**2.9 - 25**	560	102.62	12100	1.45						
-	**3.3 - 29**	490	90.04	12400	1.65						
-	**3.9 - 34**	415	76.37	12700	1.95						
-	**4.4 - 38**	375	68.95	12900	2.2	**K**	**67**	**DRE**	**80SJ4**	41	606
-	**4.9 - 43**	330	60.66	13000	2.5	**KF**	**67**	**DRE**	**80SJ4**	47	607
-	**5.2 - 46**	310	57.28	13000	2.6	**KA**	**67**	**DRE**	**80SJ4**	39	608
-	**6.2 - 54**	265	48.77	13000	3.1	**KAF**	**67**	**DRE**	**80SJ4**	44	607
-	**6.8 - 59**	240	44.32	13000	3.4						
-	**7.8 - 68**	210	38.39	13000	3.8						
-	**8.4 - 73**	196	35.62	13000	4.2						
-	**9.9 - 86**	166	30.22	13000	5.0						
-	**2.8 - 24**	590	108.29	7680	1.00						
-	**2.9 - 25**	560	102.88*	7920	1.05						
-	**3.3 - 29**	495	90.26*	8440	1.20						
-	**3.9 - 34**	420	76.56*	8790	1.45						
-	**4.3 - 38**	375	69.12	8970	1.60						
-	**4.9 - 43**	330	60.81*	9160	1.80						
-	**5.2 - 45**	315	57.42*	9230	1.90	**K**	**57**	**DRE**	**80SJ4**	35	600
-	**6.1 - 53**	265	48.89	8950	2.2	**KF**	**57**	**DRE**	**80SJ4**	40	601
-	**6.8 - 59**	240	44.43	8780	2.5	**KA**	**57**	**DRE**	**80SJ4**	33	602
-	**7.8 - 68**	210	38.49	8500	2.8	**KAF**	**57**	**DRE**	**80SJ4**	39	601
-	**8.4 - 73**	196	35.70	8360	3.1						
-	**9.9 - 86**	166	30.28	8040	3.6						
-	**11 - 95**	150	27.34	7840	4.0						
-	**12 - 109**	132	24.05	7590	4.5						
-	**13 - 115**	125	22.71	7480	4.8						
-	**5.0 - 43**	330	60.27	7960	1.50						
-	**5.7 - 49**	290	52.94	7810	1.70						
-	**6.0 - 52**	275	50.29	7750	1.80						
-	**6.8 - 59**	240	44.44	7590	2.0	**K**	**49**	**DRE**	**80SJ4**	40	596
-	**7.9 - 69**	205	37.98	7370	2.4	**KF**	**49**	**DRE**	**80SJ4**	42	597
-	**8.6 - 75**	191	34.81	7240	2.6	**KA**	**49**	**DRE**	**80SJ4**	38	598
-	**9.8 - 85**	168	30.55	7040	3.0	**KAF**	**49**	**DRE**	**80SJ4**	43	597
-	**10 - 90**	159	28.95	6960	3.1						
-	**12 - 103**	139	25.34	6750	3.6						
-	**13 - 114**	125	22.83	6580	4.0						
-	**4.3 - 37**	380	69.84	6150	1.05						
-	**4.7 - 41**	345	63.30*	6340	1.15						
-	**5.3 - 46**	310	56.83	6300	1.30						
-	**6.1 - 53**	265	48.95*	6200	1.50						
-	**6.5 - 57**	250	46.03*	6160	1.60						
-	**7.6 - 66**	215	39.61	6030	1.85						
-	**8.5 - 74**	194	35.39	5930	2.1						
-	**9.6 - 83**	172	31.30	5800	2.3	**K**	**47**	**DRE**	**80SJ4**	30	590
-	**10 - 89**	161	29.32	5730	2.5	**KF**	**47**	**DRE**	**80SJ4**	33	591
-	**12 - 101**	142	25.91	5590	2.8	**KA**	**47**	**DRE**	**80SJ4**	29	592
-	**12 - 108**	132	24.06	5510	3.0	**KAF**	**47**	**DRE**	**80SJ4**	32	591
-	**14 - 120**	120	21.81	5390	3.3						
-	**15 - 133**	108	19.58	5260	3.7						
-	**18 - 155**	93	16.86	5080	4.1						
-	**19 - 165**	87	15.86	5000	4.4						
-	**22 - 191**	75	13.65	4820	4.8						
-	**25 - 222**	65	11.77	4610	4.3						
-	**28 - 247**	58	10.56	4480	4.8						

19391609/DE – 06/2017

P_m = 1.5 kW

	n_a min^{-1} 10-87Hz	M_a Nm	i	F_{Ra} [1] N	SEW f_B					m kg	
-	**6.0 - 53**	270	49.69	5800	1.10						
-	**6.9 - 60**	235	43.45	5740	1.25						
-	**7.3 - 63**	225	41.28	5710	1.30						
-	**8.3 - 72**	199	36.22	5620	1.50						
-	**9.8 - 85**	169	30.72	5490	1.80						
-	**11 - 94**	152	27.73	5400	1.95	**K**	**39**	**DRE**	**80SJ4**	28	586
-	**12 - 107**	134	24.40	5270	2.2	**KF**	**39**	**DRE**	**80SJ4**	30	587
-	**13 - 113**	126	23.04	5220	2.4	**KA**	**39**	**DRE**	**80SJ4**	27	588
-	**15 - 133**	108	19.62	5050	2.7	**KAF**	**39**	**DRE**	**80SJ4**	29	587
-	**17 - 146**	98	17.83	4940	3.0						
-	**19 - 169**	85	15.44	4790	3.3						
-	**22 - 194**	74	13.44	4630	3.7						
-	**24 - 205**	70	12.73	4770	3.6						
-	**25 - 216**	66	12.09	4700	3.8						
-	**8.4 - 73**	195	35.57	2930	1.00						
-	**10 - 87**	164	29.96	2950	1.20						
-	**10 - 91**	158	28.83	2950	1.25						
-	**12 - 104**	137	24.99	2930	1.45						
-	**13 - 112**	128	23.36	2920	1.50						
-	**15 - 129**	111	20.19	2890	1.65						
-	**17 - 152**	94	17.15	2830	1.90	**K**	**37**	**DRE**	**80SJ4**	22	580
-	**20 - 170**	84	15.31	2790	2.1	**KF**	**37**	**DRE**	**80SJ4**	24	581
-	**23 - 200**	72	13.08	2720	2.3	**KA**	**37**	**DRE**	**80SJ4**	22	582
-	**25 - 215**	67	12.14	2680	2.4	**KAF**	**37**	**DRE**	**80SJ4**	23	581
-	**29 - 249**	58	10.49	2610	2.8						
-	**34 - 293**	49	8.91	2520	3.3						
-	**38 - 328**	44	7.96	2460	3.5						
-	**44 - 384**	37	6.80	2370	4.0						
-	**47 - 410**	35	6.37	2340	4.2						
-	**56 - 487**	29	5.36	2240	4.8						
-	**12 - 105**	124	24.91	2880	0.90						
-	**13 - 113**	118	23.19	2960	1.10						
-	**14 - 118**	110	22.08	2860	0.95						
-	**15 - 131**	102	19.99	2920	1.30						
-	**18 - 160**	83	16.29	2830	1.55						
-	**22 - 194**	69	13.47	2740	1.90	**K**	**29**	**DRE**	**80SJ4**	16	573
-	**25 - 219**	61	11.94	2680	2.1	**KF**	**29**	**DRE**	**80SJ4**	17	577
-	**30 - 264**	52	9.90	2690	2.1	**KA**	**29**	**DRE**	**80SJ4**	15	579
-	**33 - 285**	47	9.17	2530	2.8	**KAF**	**29**	**DRE**	**80SJ4**	17	577
-	**35 - 306**	44	8.53	2590	2.8						
-	**40 - 349**	38	7.48	2420	3.2						
-	**43 - 375**	36	6.95	2450	3.1						
-	**52 - 454**	30	5.75	2330	3.7						
-	**16 - 141**	95	18.55	2480	0.85						
-	**19 - 165**	81	15.84	2450	1.00						
-	**20 - 178**	75	14.69	2430	1.05						
-	**24 - 205**	65	12.70	2380	1.25						
-	**25 - 220**	60	11.84	2360	1.30	**K**	**19**	**DRE**	**80SJ4**	14	567
-	**29 - 253**	53	10.32	2300	1.45	**KF**	**19**	**DRE**	**80SJ4**	15	570
-	**37 - 323**	42	8.09	2280	1.90	**KA**	**19**	**DRE**	**80SJ4**	14	572
-	**43 - 378**	36	6.91	2200	2.2	**KAF**	**19**	**DRE**	**80SJ4**	14	570
-	**47 - 407**	33	6.41	2160	2.4						
-	**54 - 471**	29	5.54	2080	2.8						
-	**58 - 506**	27	5.16	2040	3.0						
-	**67 - 580**	23	4.50	1970	3.4						

P_m = 2.2 kW

	n_a min^{-1} 10-87Hz	M_a Nm	i	F_{Ra} [1] N	SEW f_B					m kg	
-	**1.7 - 15**	1410	176.05*	40000	3.0	**K**	**97**	**DRE**	**80MJ4**	165	624
-	**2.0 - 17**	1230	153.21*	40000	3.5	**KF**	**97**	**DRE**	**80MJ4**	185	625
-	**2.1 - 19**	1120	140.28	40000	3.8	**KA**	**97**	**DRE**	**80MJ4**	145	626
-	**2.4 - 21**	990	123.93*	40000	4.3	**KAF**	**97**	**DRE**	**80MJ4**	170	625

19391609/DE – 06/2017

P_m = 2.2 kW

	n_a min^{-1} 10-87Hz	M_a Nm	i	F_{Ra} [1] N	SEW f_B					m kg	
-	**1.7 - 15**	1400	174.19	28500	1.95						
-	**1.8 - 16**	1320	164.34*	28600	2.0						
-	**2.0 - 18**	1180	147.32*	28700	2.3						
-	**2.4 - 21**	1020	126.91*	28800	2.6	**K**	**87**	**DRE**	**80MJ4**	105	618
-	**2.6 - 23**	930	115.82	28800	2.9	**KF**	**87**	**DRE**	**80MJ4**	115	619
-	**2.9 - 25**	820	102.71*	28900	3.3	**KA**	**87**	**DRE**	**80MJ4**	94	620
-	**3.5 - 30**	695	86.34	28900	3.9	**KAF**	**87**	**DRE**	**80MJ4**	105	619
-	**3.8 - 33**	635	79.34	28900	4.2						
-	**4.3 - 37**	565	70.46	29000	4.8						
-	**2.2 - 19**	1080	135.28	17900	1.40						
-	**2.3 - 20**	1030	128.52	18200	1.50						
-	**2.6 - 23**	910	113.56	18600	1.70						
-	**3.1 - 27**	780	97.05	19000	2.0						
-	**3.4 - 29**	715	88.97	19200	2.2						
-	**3.8 - 33**	625	78.07	19400	2.5	**K**	**77**	**DRE**	**80MJ4**	68	612
-	**4.1 - 35**	595	73.99	19500	2.6	**KF**	**77**	**DRE**	**80MJ4**	77	613
-	**4.6 - 40**	520	64.75	19700	3.0	**KA**	**77**	**DRE**	**80MJ4**	61	614
-	**5.1 - 45**	465	58.34	19700	3.3	**KAF**	**77**	**DRE**	**80MJ4**	69	613
-	**5.9 - 51**	410	51.18	19800	3.8						
-	**6.6 - 58**	360	45.16	19900	4.3						
-	**7.5 - 65**	320	40.04	20000	4.8						
-	**7.8 - 68**	305	38.39	20000	4.8						
-	**3.3 - 29**	720	90.04	11100	1.15						
-	**3.9 - 34**	610	76.37	11800	1.35						
-	**4.4 - 38**	555	68.95	12100	1.50						
-	**4.9 - 43**	485	60.66	12500	1.70						
-	**5.2 - 46**	460	57.28	12600	1.80						
-	**6.2 - 54**	390	48.77	12800	2.1	**K**	**67**	**DRE**	**80MJ4**	44	606
-	**6.8 - 59**	355	44.32	13000	2.3	**KF**	**67**	**DRE**	**80MJ4**	50	607
-	**7.8 - 68**	305	38.39	13000	2.6	**KA**	**67**	**DRE**	**80MJ4**	41	608
-	**8.4 - 73**	285	35.62	13000	2.9	**KAF**	**67**	**DRE**	**80MJ4**	47	607
-	**9.9 - 86**	240	30.22	13000	3.4						
-	**11 - 96**	215	27.28	13000	3.7						
-	**13 - 109**	193	24.00	13000	4.1						
-	**13 - 115**	182	22.66	13000	4.3						
-	**16 - 135**	155	19.30	13000	4.9						
-	**4.3 - 38**	555	69.12	7980	1.10						
-	**4.9 - 43**	485	60.81*	8310	1.25						
-	**5.2 - 45**	460	57.42*	8270	1.30						
-	**6.1 - 53**	390	48.89	8130	1.50						
-	**6.8 - 59**	355	44.43	8030	1.70						
-	**7.8 - 68**	305	38.49	7860	1.95						
-	**8.4 - 73**	285	35.70	7760	2.1						
-	**9.9 - 86**	240	30.28	7530	2.5	**K**	**57**	**DRE**	**80MJ4**	38	600
-	**11 - 95**	220	27.34	7380	2.7	**KF**	**57**	**DRE**	**80MJ4**	43	601
-	**12 - 109**	194	24.05	7180	3.1	**KA**	**57**	**DRE**	**80MJ4**	36	602
-	**13 - 115**	183	22.71	7100	3.3	**KAF**	**57**	**DRE**	**80MJ4**	42	601
-	**16 - 135**	156	19.34	6840	3.7						
-	**17 - 149**	142	17.57	6690	3.9						
-	**20 - 171**	122	15.22	6460	4.4						
-	**23 - 197**	107	13.25	6230	4.8						
-	**25 - 219**	96	11.92	5980	4.3						
-	**27 - 232**	91	11.26	5890	4.6						
-	**5.7 - 49**	425	52.94	6840	1.15						
-	**6.0 - 52**	400	50.29	6820	1.25						
-	**6.8 - 59**	355	44.44	6770	1.40						
-	**7.9 - 69**	305	37.98	6660	1.65						
-	**8.6 - 75**	280	34.81	6600	1.80	**K**	**49**	**DRE**	**80MJ4**	43	596
-	**9.8 - 85**	245	30.55	6480	2.0	**KF**	**49**	**DRE**	**80MJ4**	45	597
-	**10 - 90**	230	28.95	6420	2.1	**KA**	**49**	**DRE**	**80MJ4**	40	598
-	**12 - 103**	200	25.34	6280	2.5	**KAF**	**49**	**DRE**	**80MJ4**	45	597
-	**13 - 114**	184	22.83	6160	2.7						
-	**15 - 130**	161	20.03	6000	3.1						
-	**17 - 148**	142	17.67	5850	3.5						
-	**19 - 167**	126	15.67	5690	3.9						

19391609/DE – 06/2017

P_m = 2.2 kW

	n_a min^{-1} 10-87Hz	M_a Nm	i	F_{Ra} [1] N	SEW f_B					m kg	
-	**6.1 - 53**	390	48.95*	5250	1.00						
-	**6.5 - 57**	370	46.03*	5260	1.10						
-	**7.6 - 66**	315	39.61	5260	1.25						
-	**8.5 - 74**	280	35.39	5240	1.40						
-	**9.6 - 83**	250	31.30	5190	1.60						
-	**10 - 89**	235	29.32	5160	1.70						
-	**12 - 101**	205	25.91	5090	1.90						
-	**12 - 108**	194	24.06	5040	2.1						
-	**14 - 120**	176	21.81	4960	2.3						
-	**15 - 133**	158	19.58	4880	2.5	**K**	**47**	**DRE**	**80MJ4**	32	590
-	**18 - 155**	136	16.86	4750	2.8	**KF**	**47**	**DRE**	**80MJ4**	35	591
-	**19 - 165**	128	15.86	4700	3.0	**KA**	**47**	**DRE**	**80MJ4**	31	592
-	**22 - 191**	110	13.65	4550	3.3	**KAF**	**47**	**DRE**	**80MJ4**	34	591
-	**25 - 214**	98	12.19	4440	3.6						
-	**25 - 222**	95	11.77	4370	3.0						
-	**28 - 247**	85	10.56	4260	3.3						
-	**33 - 287**	73	9.10	4120	3.8						
-	**35 - 305**	69	8.56	4060	3.9						
-	**41 - 354**	59	7.36	3910	4.2						
-	**46 - 397**	53	6.58	3800	4.5						
-	**52 - 449**	47	5.81	3680	4.9						
-	**6.9 - 60**	345	43.45	4780	0.85						
-	**7.3 - 63**	330	41.28	4800	0.90						
-	**8.3 - 72**	290	36.22	4820	1.05						
-	**9.8 - 85**	245	30.72	4810	1.20						
-	**11 - 94**	220	27.73	4780	1.35						
-	**12 - 107**	196	24.40	4740	1.55	**K**	**39**	**DRE**	**80MJ4**	31	586
-	**13 - 113**	185	23.04	4710	1.60	**KF**	**39**	**DRE**	**80MJ4**	33	587
-	**15 - 133**	158	19.62	4620	1.85	**KA**	**39**	**DRE**	**80MJ4**	30	588
-	**17 - 146**	144	17.83	4550	2.0	**KAF**	**39**	**DRE**	**80MJ4**	32	587
-	**19 - 169**	124	15.44	4450	2.2						
-	**22 - 194**	108	13.44	4340	2.5						
-	**24 - 205**	102	12.73	4580	2.4						
-	**25 - 216**	97	12.09	4530	2.6						
-	**28 - 246**	85	10.61	4380	3.3						
-	**13 - 112**	188	23.36	2380	1.05						
-	**15 - 129**	162	20.19	2420	1.15						
-	**17 - 152**	138	17.15	2430	1.30						
-	**20 - 170**	123	15.31	2430	1.40						
-	**23 - 200**	105	13.08	2410	1.55						
-	**25 - 215**	98	12.14	2400	1.65	**K**	**37**	**DRE**	**80MJ4**	24	580
-	**29 - 249**	84	10.49	2370	1.90	**KF**	**37**	**DRE**	**80MJ4**	27	581
-	**34 - 293**	72	8.91	2320	2.2	**KA**	**37**	**DRE**	**80MJ4**	24	582
-	**38 - 328**	64	7.96	2280	2.4	**KAF**	**37**	**DRE**	**80MJ4**	26	581
-	**44 - 384**	55	6.80	2210	2.7						
-	**47 - 410**	51	6.37	2190	2.8						
-	**56 - 487**	43	5.36	2110	3.2						
-	**75 - 656**	32	3.98	1980	3.9						
-	**15 - 131**	149	19.99	2490	0.85						
-	**18 - 160**	122	16.29	2490	1.05						
-	**22 - 194**	101	13.47	2460	1.30						
-	**25 - 219**	89	11.94	2420	1.45	**K**	**29**	**DRE**	**80MJ4**	18	573
-	**33 - 285**	69	9.17	2340	1.90	**KF**	**29**	**DRE**	**80MJ4**	20	577
-	**35 - 306**	65	8.53	2450	1.85	**KA**	**29**	**DRE**	**80MJ4**	18	579
-	**40 - 349**	56	7.48	2260	2.2	**KAF**	**29**	**DRE**	**80MJ4**	19	577
-	**43 - 375**	53	6.95	2340	2.1						
-	**52 - 454**	44	5.75	2240	2.5						
-	**59 - 512**	39	5.10	2170	2.8						
-	**24 - 205**	95	12.70	2070	0.85						
-	**25 - 220**	89	11.84	2070	0.90						
-	**29 - 253**	77	10.32	2050	1.00	**K**	**19**	**DRE**	**80MJ4**	17	567
-	**43 - 378**	53	6.91	2060	1.50	**KF**	**19**	**DRE**	**80MJ4**	17	570
-	**47 - 407**	49	6.41	2030	1.65	**KA**	**19**	**DRE**	**80MJ4**	17	572
-	**54 - 471**	42	5.54	1970	1.90	**KAF**	**19**	**DRE**	**80MJ4**	17	570
-	**58 - 506**	39	5.16	1940	2.0						
-	**67 - 580**	34	4.50	1880	2.3						

19391609/DE – 06/2017

P_m = 3.0 kW

	n_a min^{-1} 10-87Hz	M_a Nm	i	F_{Ra} [1] N	SEW f_B					m kg	
-	**1.7 - 15**	1930	176.05*	40000	2.2						
-	**2.0 - 17**	1680	153.21*	40000	2.6						
-	**2.1 - 19**	1530	140.28	40000	2.8	**K**	**97**	**DRE**	**90MJ4**	170	624
-	**2.4 - 21**	1360	123.93*	40000	3.2	**KF**	**97**	**DRE**	**90MJ4**	190	625
-	**2.9 - 25**	1150	105.13	40000	3.7	**KA**	**97**	**DRE**	**90MJ4**	150	626
-	**3.1 - 27**	1060	96.80	40000	4.0	**KAF**	**97**	**DRE**	**90MJ4**	175	625
-	**3.5 - 30**	940	86.52	40000	4.5						
-	**2.0 - 18**	1610	147.32*	28400	1.65						
-	**2.4 - 21**	1390	126.91*	28500	1.95						
-	**2.6 - 23**	1270	115.82	28600	2.1						
-	**2.9 - 25**	1120	102.71*	28700	2.4	**K**	**87**	**DRE**	**90MJ4**	110	618
-	**3.5 - 30**	940	86.34	28800	2.9	**KF**	**87**	**DRE**	**90MJ4**	120	619
-	**3.8 - 33**	870	79.34	28800	3.1	**KA**	**87**	**DRE**	**90MJ4**	96	620
-	**4.3 - 37**	770	70.46	28600	3.5	**KAF**	**87**	**DRE**	**90MJ4**	110	619
-	**4.8 - 41**	690	63.00*	27900	3.9						
-	**5.3 - 46**	620	56.64	27200	4.3						
-	**2.6 - 23**	1240	113.56	17200	1.25						
-	**3.1 - 27**	1060	97.05	18000	1.45						
-	**3.4 - 29**	970	88.97	18400	1.60						
-	**3.8 - 33**	850	78.07	18800	1.80						
-	**4.1 - 35**	810	73.99	19000	1.90						
-	**4.6 - 40**	710	64.75	19200	2.2	**K**	**77**	**DRE**	**90MJ4**	73	612
-	**5.1 - 45**	640	58.34	19400	2.4	**KF**	**77**	**DRE**	**90MJ4**	81	613
-	**5.9 - 51**	560	51.18	19600	2.8	**KA**	**77**	**DRE**	**90MJ4**	65	614
-	**6.6 - 58**	495	45.16	19700	3.1	**KAF**	**77**	**DRE**	**90MJ4**	73	613
-	**7.5 - 65**	435	40.04	19800	3.5						
-	**7.8 - 68**	420	38.39	19800	3.6						
-	**8.5 - 74**	385	35.20	19900	4.0						
-	**9.7 - 85**	335	30.89	19900	4.6						
-	**10 - 89**	320	29.27	20000	4.8						
-	**4.4 - 38**	755	68.95	10800	1.10						
-	**4.9 - 43**	665	60.66	11500	1.25						
-	**5.2 - 46**	625	57.28	11700	1.30						
-	**6.2 - 54**	535	48.77	12200	1.55						
-	**6.8 - 59**	485	44.32	12500	1.70						
-	**7.8 - 68**	420	38.39	12700	1.90						
-	**8.4 - 73**	390	35.62	12800	2.1						
-	**9.9 - 86**	330	30.22	13000	2.5						
-	**11 - 96**	295	27.28	13000	2.7	**K**	**67**	**DRE**	**90MJ4**	48	606
-	**13 - 109**	260	24.00	13000	3.0	**KF**	**67**	**DRE**	**90MJ4**	53	607
-	**13 - 115**	245	22.66	13000	3.1	**KA**	**67**	**DRE**	**90MJ4**	45	608
-	**16 - 135**	210	19.30	13000	3.6	**KAF**	**67**	**DRE**	**90MJ4**	51	607
-	**17 - 149**	192	17.54	13000	3.9						
-	**20 - 172**	167	15.19	13000	4.2						
-	**23 - 197**	145	13.22	12600	4.6						
-	**24 - 209**	137	12.48	12200	3.9						
-	**28 - 246**	117	10.63	11800	4.3						
-	**31 - 270**	106	9.66	11500	4.5						
-	**36 - 312**	92	8.37	11100	4.8						
-	**6.1 - 53**	535	48.89	7190	1.10						
-	**6.8 - 59**	485	44.43	7180	1.25						
-	**7.8 - 68**	420	38.49	7120	1.40						
-	**8.4 - 73**	390	35.70	7080	1.55						
-	**9.9 - 86**	330	30.28	6950	1.80						
-	**11 - 95**	300	27.34	6860	2.0						
-	**12 - 109**	260	24.05	6720	2.3						
-	**13 - 115**	245	22.71	6660	2.4	**K**	**57**	**DRE**	**90MJ4**	42	600
-	**16 - 135**	210	19.34	6470	2.7	**KF**	**57**	**DRE**	**90MJ4**	47	601
-	**17 - 149**	193	17.57	6350	2.9	**KA**	**57**	**DRE**	**90MJ4**	40	602
-	**20 - 171**	167	15.22	6160	3.2	**KAF**	**57**	**DRE**	**90MJ4**	45	601
-	**23 - 197**	145	13.25	5980	3.5						
-	**25 - 219**	131	11.92	5720	3.2						
-	**27 - 232**	124	11.26	5640	3.4						
-	**31 - 272**	105	9.59	5440	3.9						
-	**34 - 300**	96	8.71	5320	4.1						
-	**40 - 346**	83	7.55	5130	4.4						
-	**46 - 397**	72	6.57	4950	4.8						

19391609/DE – 06/2017

P_m = 3.0 kW

	n_a min^{-1} 10-87Hz	M_a Nm	i	F_{Ra} [1] N	SEW f_B					m kg	
-	**6.8 - 59**	485	44.44	5830	1.05						
-	**7.9 - 69**	415	37.98	5860	1.20						
-	**8.6 - 75**	380	34.81	5860	1.30						
-	**9.8 - 85**	335	30.55	5830	1.50						
-	**10 - 90**	315	28.95	5810	1.55	**K**	**49**	**DRE**	**90MJ4**	47	596
-	**12 - 103**	275	25.34	5740	1.80	**KF**	**49**	**DRE**	**90MJ4**	49	597
-	**13 - 114**	250	22.83	5680	2.0	**KA**	**49**	**DRE**	**90MJ4**	45	598
-	**15 - 130**	215	20.03	5580	2.3	**KAF**	**49**	**DRE**	**90MJ4**	50	597
-	**17 - 148**	194	17.67	5470	2.6						
-	**19 - 167**	172	15.67	5360	2.9						
-	**22 - 195**	147	13.38	5200	3.2						
-	**26 - 230**	125	11.37	5350	4.0						
-	**8.5 - 74**	385	35.39	4450	1.05						
-	**12 - 101**	280	25.91	4510	1.40						
-	**14 - 120**	235	21.81	4480	1.65						
-	**15 - 133**	210	19.58	4440	1.85						
-	**18 - 155**	185	16.86	4380	2.0						
-	**19 - 165**	174	15.86	4340	2.2						
-	**22 - 191**	150	13.65	4250	2.4	**K**	**47**	**DRE**	**90MJ4**	36	590
-	**25 - 214**	134	12.19	4170	2.6	**KF**	**47**	**DRE**	**90MJ4**	39	591
-	**25 - 222**	129	11.77	4090	2.2	**KA**	**47**	**DRE**	**90MJ4**	35	592
-	**28 - 247**	116	10.56	4010	2.4	**KAF**	**47**	**DRE**	**90MJ4**	38	591
-	**33 - 287**	100	9.10	3900	2.8						
-	**35 - 305**	94	8.56	3860	2.9						
-	**41 - 354**	81	7.36	3740	3.1						
-	**46 - 397**	72	6.58	3640	3.3						
-	**52 - 449**	64	5.81	3540	3.6						
-	**65 - 563**	51	4.64	3350	4.0						
-	**9.8 - 85**	335	30.72	4040	0.90						
-	**11 - 94**	300	27.73	4090	1.00						
-	**12 - 107**	265	24.40	4120	1.10						
-	**13 - 113**	250	23.04	4130	1.20						
-	**15 - 133**	215	19.62	4120	1.35	**K**	**39**	**DRE**	**90MJ4**	35	586
-	**17 - 146**	196	17.83	4100	1.50	**KF**	**39**	**DRE**	**90MJ4**	36	587
-	**19 - 169**	170	15.44	4060	1.65	**KA**	**39**	**DRE**	**90MJ4**	34	588
-	**22 - 194**	148	13.44	4000	1.85	**KAF**	**39**	**DRE**	**90MJ4**	35	587
-	**28 - 246**	116	10.61	4200	2.5						
-	**33 - 290**	99	9.00	4040	3.0						
-	**37 - 321**	89	8.12	3940	3.4						
-	**42 - 365**	78	7.15	3820	3.8						
-	**20 - 170**	168	15.31	2020	1.05						
-	**23 - 200**	144	13.08	2060	1.15						
-	**29 - 249**	115	10.49	2090	1.40						
-	**34 - 293**	98	8.91	2080	1.65	**K**	**37**	**DRE**	**90MJ4**	29	580
-	**38 - 328**	87	7.96	2060	1.80	**KF**	**37**	**DRE**	**90MJ4**	31	581
-	**44 - 384**	75	6.80	2030	2.0	**KA**	**37**	**DRE**	**90MJ4**	29	582
-	**47 - 410**	70	6.37	2020	2.1	**KAF**	**37**	**DRE**	**90MJ4**	31	581
-	**56 - 487**	59	5.36	1970	2.4						
-	**75 - 656**	44	3.98	1870	2.9						
-	**22 - 194**	137	13.47	2130	0.95						
-	**25 - 219**	122	11.94	2140	1.05						
-	**33 - 285**	94	9.17	2120	1.40						
-	**40 - 349**	76	7.48	2080	1.60	**K**	**29**	**DRE**	**90MJ4**	23	573
-	**43 - 375**	72	6.95	2220	1.55	**KF**	**29**	**DRE**	**90MJ4**	24	577
-	**52 - 454**	60	5.75	2130	1.85	**KA**	**29**	**DRE**	**90MJ4**	23	579
-	**59 - 512**	53	5.10	2080	2.1	**KAF**	**29**	**DRE**	**90MJ4**	24	577
-	**77 - 667**	41	3.92	1950	3.1						
-	**94 - 818**	33	3.19	1860	3.3						

19391609/DE – 06/2017

P_m = 4.0 kW

	n_a min^{-1} 10-87Hz	M_a Nm	i	F_{Ra} [1] N	SEW f_B					m kg	
-	**1.7 - 15**	2570	176.05*	40000	1.65						
-	**2.0 - 17**	2240	153.21*	40000	1.90						
-	**2.1 - 19**	2050	140.28	40000	2.1						
-	**2.4 - 21**	1810	123.93*	40000	2.4	**K**	**97**	**DRE**	**90LJ4**	170	624
-	**2.9 - 25**	1530	105.13	40000	2.8	**KF**	**97**	**DRE**	**90LJ4**	190	625
-	**3.1 - 27**	1410	96.80	40000	3.0	**KA**	**97**	**DRE**	**90LJ4**	150	626
-	**3.5 - 30**	1260	86.52	40000	3.4	**KAF**	**97**	**DRE**	**90LJ4**	175	625
-	**3.9 - 34**	1130	77.89*	39200	3.8						
-	**4.3 - 37**	1030	70.54	38300	4.2						
-	**4.8 - 42**	910	62.55	37200	4.7						
-	**2.0 - 18**	2150	147.32*	27900	1.25						
-	**2.4 - 21**	1850	126.91*	28200	1.45						
-	**2.6 - 23**	1690	115.82	28300	1.60						
-	**2.9 - 25**	1500	102.71*	28500	1.80						
-	**3.5 - 30**	1260	86.34	28600	2.1	**K**	**87**	**DRE**	**90LJ4**	110	618
-	**3.8 - 33**	1160	79.34	28200	2.3	**KF**	**87**	**DRE**	**90LJ4**	120	619
-	**4.3 - 37**	1030	70.46	27600	2.6	**KA**	**87**	**DRE**	**90LJ4**	99	620
-	**4.8 - 41**	920	63.00*	27000	2.9	**KAF**	**87**	**DRE**	**90LJ4**	110	619
-	**5.3 - 46**	820	56.64	26400	3.3						
-	**6.1 - 53**	715	49.16	25600	3.8						
-	**6.8 - 59**	640	44.02	25000	4.0						
-	**8.2 - 71**	530	36.52*	23900	4.7						
-	**3.1 - 27**	1420	97.05	16200	1.10						
-	**3.4 - 29**	1300	88.97	16900	1.20						
-	**3.8 - 33**	1140	78.07	17700	1.35						
-	**4.1 - 35**	1080	73.99	18000	1.45						
-	**4.6 - 40**	940	64.75	18500	1.65						
-	**5.1 - 45**	850	58.34	18800	1.80						
-	**5.9 - 51**	745	51.18	19100	2.1	**K**	**77**	**DRE**	**90LJ4**	75	612
-	**6.6 - 58**	660	45.16	19400	2.4	**KF**	**77**	**DRE**	**90LJ4**	84	613
-	**7.5 - 65**	585	40.04	19500	2.6	**KA**	**77**	**DRE**	**90LJ4**	68	614
-	**7.8 - 68**	560	38.39	19600	2.7	**KAF**	**77**	**DRE**	**90LJ4**	76	613
-	**8.5 - 74**	515	35.20	19700	3.0						
-	**9.7 - 85**	450	30.89	19800	3.4						
-	**10 - 89**	425	29.27	19800	3.6						
-	**12 - 102**	370	25.62	19400	4.1						
-	**13 - 113**	335	23.08	18900	4.6						
-	**6.2 - 54**	710	48.77	11200	1.15						
-	**6.8 - 59**	645	44.32	11600	1.25						
-	**7.8 - 68**	560	38.39	12100	1.40						
-	**8.4 - 73**	520	35.62	12300	1.55						
-	**9.9 - 86**	440	30.22	12700	1.85						
-	**11 - 96**	395	27.28	12800	2.0						
-	**13 - 109**	350	24.00	13000	2.3						
-	**13 - 115**	330	22.66	13000	2.4	**K**	**67**	**DRE**	**90LJ4**	51	606
-	**16 - 135**	280	19.30	13000	2.7	**KF**	**67**	**DRE**	**90LJ4**	56	607
-	**17 - 149**	255	17.54	13000	2.9	**KA**	**67**	**DRE**	**90LJ4**	48	608
-	**20 - 172**	220	15.19	12700	3.1	**KAF**	**67**	**DRE**	**90LJ4**	54	607
-	**23 - 197**	193	13.22	12300	3.5						
-	**24 - 209**	183	12.48	11900	2.9						
-	**28 - 246**	156	10.63	11500	3.2						
-	**31 - 270**	141	9.66	11200	3.4						
-	**36 - 312**	122	8.37	10900	3.6						
-	**41 - 358**	107	7.28	10500	3.9						
-	**58 - 502**	76	5.20	9610	4.6						

19391609/DE – 06/2017

P_m = 4.0 kW

	n_a min^{-1} 10-87Hz	M_a Nm	i	F_{Ra} [1] N	SEW f_B					m kg	
-	**7.8 - 68**	560	38.49	6200	1.05						
-	**8.4 - 73**	520	35.70	6220	1.15						
-	**9.9 - 86**	440	30.28	6220	1.35						
-	**11 - 95**	400	27.34	6200	1.50						
-	**12 - 109**	350	24.05	6150	1.70						
-	**13 - 115**	330	22.71	6120	1.80						
-	**16 - 135**	280	19.34	6010	2.0						
-	**17 - 149**	255	17.57	5930	2.2	**K**	**57**	**DRE**	**90LJ4**	45	600
-	**20 - 171**	220	15.22	5800	2.4	**KF**	**57**	**DRE**	**90LJ4**	49	601
-	**23 - 197**	194	13.25	5660	2.6	**KA**	**57**	**DRE**	**90LJ4**	43	602
-	**25 - 219**	174	11.92	5390	2.4	**KAF**	**57**	**DRE**	**90LJ4**	48	601
-	**27 - 232**	165	11.26	5340	2.5						
-	**31 - 272**	140	9.59	5180	2.9						
-	**34 - 300**	128	8.71	5080	3.1						
-	**40 - 346**	110	7.55	4920	3.3						
-	**46 - 397**	96	6.57	4770	3.6						
-	**64 - 556**	69	4.69	4390	4.4						
-	**7.9 - 69**	555	37.98	4860	0.90						
-	**8.6 - 75**	505	34.81	4940	1.00						
-	**9.8 - 85**	445	30.55	5030	1.10						
-	**10 - 90**	420	28.95	5050	1.20						
-	**12 - 103**	370	25.34	5080	1.35						
-	**13 - 114**	330	22.83	5080	1.50	**K**	**49**	**DRE**	**90LJ4**	50	596
-	**15 - 130**	290	20.03	5050	1.70	**KF**	**49**	**DRE**	**90LJ4**	52	597
-	**17 - 148**	255	17.67	5010	1.95	**KA**	**49**	**DRE**	**90LJ4**	47	598
-	**19 - 167**	225	15.67	4950	2.1	**KAF**	**49**	**DRE**	**90LJ4**	52	597
-	**22 - 195**	196	13.38	4850	2.4						
-	**26 - 230**	166	11.37	5160	3.0						
-	**29 - 251**	152	10.42	5050	3.1						
-	**33 - 286**	134	9.14	4890	3.7						
-	**35 - 301**	127	8.66	4830	3.9						
-	**12 - 101**	375	25.91	3790	1.05						
-	**14 - 120**	315	21.81	3870	1.25						
-	**15 - 133**	285	19.58	3900	1.40						
-	**18 - 155**	245	16.86	3900	1.55						
-	**19 - 165**	230	15.86	3900	1.65						
-	**22 - 191**	200	13.65	3870	1.80						
-	**25 - 214**	178	12.19	3830	1.95	**K**	**47**	**DRE**	**90LJ4**	39	590
-	**25 - 222**	172	11.77	3740	1.65	**KF**	**47**	**DRE**	**90LJ4**	42	591
-	**28 - 247**	155	10.56	3700	1.80	**KA**	**47**	**DRE**	**90LJ4**	38	592
-	**33 - 287**	133	9.10	3640	2.1	**KAF**	**47**	**DRE**	**90LJ4**	41	591
-	**35 - 305**	125	8.56	3600	2.2						
-	**41 - 354**	108	7.36	3520	2.3						
-	**46 - 397**	96	6.58	3450	2.5						
-	**52 - 449**	85	5.81	3370	2.7						
-	**65 - 563**	68	4.64	3210	3.0						
-	**12 - 107**	355	24.40	3350	0.85						
-	**13 - 113**	335	23.04	3400	0.90						
-	**15 - 133**	285	19.62	3500	1.05						
-	**17 - 146**	260	17.83	3540	1.10						
-	**19 - 169**	225	15.44	3570	1.25						
-	**22 - 194**	197	13.44	3580	1.35						
-	**28 - 246**	155	10.61	3980	1.85	**K**	**39**	**DRE**	**90LJ4**	38	586
-	**33 - 290**	132	9.00	3850	2.3	**KF**	**39**	**DRE**	**90LJ4**	39	587
-	**37 - 321**	119	8.12	3770	2.5	**KA**	**39**	**DRE**	**90LJ4**	37	588
-	**42 - 365**	105	7.15	3670	2.9	**KAF**	**39**	**DRE**	**90LJ4**	38	587
-	**44 - 387**	99	6.75	3620	3.0						
-	**52 - 454**	84	5.75	3480	3.3						
-	**57 - 500**	76	5.22	3400	3.4						
-	**66 - 577**	66	4.52	3280	3.6						
-	**76 - 663**	58	3.94	3170	3.7						

19391609/DE – 06/2017

P_m = 4.0 kW

	n_a min^{-1} 10-87Hz	M_a Nm	i	F_{Ra} 1) N	SEW f_B					m kg	
-	**29 - 249**	154	10.49	1740	1.05						
-	**34 - 293**	130	8.91	1780	1.25	**K**	**37**	**DRE**	**90LJ4**	32	580
-	**38 - 328**	116	7.96	1800	1.35	**KF**	**37**	**DRE**	**90LJ4**	34	581
-	**44 - 384**	100	6.80	1810	1.50	**KA**	**37**	**DRE**	**90LJ4**	32	582
-	**47 - 410**	93	6.37	1810	1.55	**KAF**	**37**	**DRE**	**90LJ4**	33	581
-	**56 - 487**	78	5.36	1790	1.80						
-	**75 - 656**	58	3.98	1740	2.1						
-	**25 - 219**	162	11.94	1770	0.80						
-	**33 - 285**	125	9.17	1840	1.05						
-	**40 - 349**	102	7.48	1850	1.20	**K**	**29**	**DRE**	**90LJ4**	26	573
-	**43 - 375**	96	6.95	2060	1.15	**KF**	**29**	**DRE**	**90LJ4**	27	577
-	**52 - 454**	80	5.75	2000	1.40	**KA**	**29**	**DRE**	**90LJ4**	26	579
-	**59 - 512**	71	5.10	1960	1.55	**KAF**	**29**	**DRE**	**90LJ4**	27	577
-	**77 - 667**	54	3.92	1860	2.3						
-	**94 - 818**	44	3.19	1780	2.5						

P_m = 5.5 kW

	n_a min^{-1} 10-87Hz	M_a Nm	i	F_{Ra} 1) N	SEW f_B					m kg	
-	**2.0 - 17**	3080	153.21*	40000	1.40						
-	**2.1 - 19**	2820	140.28	40000	1.50						
-	**2.4 - 21**	2490	123.93*	40000	1.70						
-	**2.9 - 25**	2110	105.13	39900	2.0						
-	**3.1 - 27**	1940	96.80	39300	2.2	**K**	**97**	**DRE**	**100MJ4**	175	624
-	**3.5 - 30**	1740	86.52	38500	2.5	**KF**	**97**	**DRE**	**100MJ4**	195	625
-	**3.9 - 34**	1560	77.89*	37700	2.7	**KA**	**97**	**DRE**	**100MJ4**	155	626
-	**4.3 - 37**	1410	70.54	37000	3.0	**KAF**	**97**	**DRE**	**100MJ4**	180	625
-	**4.8 - 42**	1250	62.55	36000	3.4						
-	**5.3 - 46**	1130	56.55	35300	3.8						
-	**6.3 - 54**	960	47.93*	34000	4.5						
-	**2.4 - 21**	2550	126.91*	27500	1.05						
-	**2.6 - 23**	2330	115.82	27500	1.15						
-	**2.9 - 25**	2060	102.71*	27200	1.30						
-	**3.5 - 30**	1730	86.34	26800	1.55						
-	**3.8 - 33**	1590	79.34	26500	1.70						
-	**4.3 - 37**	1410	70.46	26000	1.90	**K**	**87**	**DRE**	**100MJ4**	115	618
-	**4.8 - 41**	1260	63.00*	25600	2.1	**KF**	**87**	**DRE**	**100MJ4**	125	619
-	**5.3 - 46**	1130	56.64	25100	2.4	**KA**	**87**	**DRE**	**100MJ4**	105	620
-	**6.1 - 53**	980	49.16	24500	2.7	**KAF**	**87**	**DRE**	**100MJ4**	115	619
-	**6.8 - 59**	880	44.02	24000	2.9						
-	**8.2 - 71**	730	36.52*	23100	3.4						
-	**9.6 - 83**	630	31.39	22400	4.3						
-	**11 - 94**	560	27.88	21800	4.6						
-	**12 - 105**	500	24.92	21200	5.0						
-	**4.1 - 35**	1480	73.99	15800	1.05						
-	**4.6 - 40**	1300	64.75	16900	1.20						
-	**5.1 - 45**	1170	58.34	17600	1.30						
-	**5.9 - 51**	1020	51.18	18200	1.50						
-	**6.6 - 58**	900	45.16	18600	1.70						
-	**7.5 - 65**	800	40.04	19000	1.90						
-	**7.8 - 68**	770	38.39	19100	1.95						
-	**8.5 - 74**	705	35.20	19200	2.2						
-	**9.7 - 85**	620	30.89	19500	2.5	**K**	**77**	**DRE**	**100MJ4**	80	612
-	**10 - 89**	585	29.27	19300	2.6	**KF**	**77**	**DRE**	**100MJ4**	88	613
-	**12 - 102**	515	25.62	18700	3.0	**KA**	**77**	**DRE**	**100MJ4**	73	614
-	**13 - 113**	460	23.08	18300	3.3	**KAF**	**77**	**DRE**	**100MJ4**	80	613
-	**15 - 129**	405	20.25	17800	3.7						
-	**17 - 146**	355	17.87	17300	4.0						
-	**19 - 165**	315	15.84	16800	4.4						
-	**22 - 193**	270	13.52	16200	4.9						
-	**24 - 211**	245	12.36	15700	4.0						
-	**28 - 241**	215	10.84	15200	4.5						
-	**31 - 273**	192	9.56	14700	4.9						

19391609/DE – 06/2017

P_m = 5.5 kW

	n_a min^{-1} 10-87Hz	M_a Nm	i	F_{Ra} [1] N	SEW f_B					m kg	
-	**7.8 - 68**	770	38.39	10700	1.05						
-	**9.9 - 86**	605	30.22	11900	1.35						
-	**11 - 96**	545	27.28	12200	1.50						
-	**13 - 109**	480	24.00	12500	1.65						
-	**13 - 115**	455	22.66	12600	1.70						
-	**16 - 135**	385	19.30	12800	1.95						
-	**17 - 149**	350	17.54	12500	2.1	**K**	**67**	**DRE**	**100MJ4**	55	606
-	**20 - 172**	305	15.19	12200	2.3	**KF**	**67**	**DRE**	**100MJ4**	61	607
-	**23 - 197**	265	13.22	11900	2.5	**KA**	**67**	**DRE**	**100MJ4**	52	608
-	**24 - 209**	250	12.48	11500	2.1	**KAF**	**67**	**DRE**	**100MJ4**	58	607
-	**28 - 246**	210	10.63	11100	2.3						
-	**31 - 270**	194	9.66	10900	2.5						
-	**36 - 312**	168	8.37	10500	2.6						
-	**41 - 358**	146	7.28	10200	2.9						
-	**58 - 502**	105	5.20	9420	3.3						
-	**11 - 95**	550	27.34	5220	1.10						
-	**12 - 109**	480	24.05	5280	1.25						
-	**13 - 115**	455	22.71	5300	1.30						
-	**16 - 135**	385	19.34	5310	1.50						
-	**17 - 149**	350	17.57	5300	1.55						
-	**20 - 171**	305	15.22	5250	1.75	**K**	**57**	**DRE**	**100MJ4**	49	600
-	**23 - 197**	265	13.25	5180	1.90	**KF**	**57**	**DRE**	**100MJ4**	54	601
-	**25 - 219**	235	11.92	4910	1.75	**KA**	**57**	**DRE**	**100MJ4**	47	602
-	**27 - 232**	225	11.26	4880	1.85	**KAF**	**57**	**DRE**	**100MJ4**	53	601
-	**31 - 272**	193	9.59	4790	2.1						
-	**34 - 300**	175	8.71	4720	2.2						
-	**40 - 346**	152	7.55	4620	2.4						
-	**46 - 397**	132	6.57	4500	2.6						
-	**64 - 556**	94	4.69	4200	3.2						
-	**9.8 - 85**	610	30.55	3820	0.80						
-	**10 - 90**	580	28.95	3900	0.85						
-	**12 - 103**	505	25.34	4080	1.00						
-	**13 - 114**	455	22.83	4170	1.10						
-	**15 - 130**	400	20.03	4260	1.25						
-	**17 - 148**	355	17.67	4310	1.40	**K**	**49**	**DRE**	**100MJ4**	55	596
-	**19 - 167**	315	15.67	4330	1.55	**KF**	**49**	**DRE**	**100MJ4**	57	597
-	**22 - 195**	265	13.38	4320	1.75	**KA**	**49**	**DRE**	**100MJ4**	52	598
-	**26 - 230**	225	11.37	4870	2.2	**KAF**	**49**	**DRE**	**100MJ4**	57	597
-	**29 - 251**	205	10.42	4790	2.3						
-	**33 - 286**	184	9.14	4660	2.7						
-	**35 - 301**	174	8.66	4610	2.9						
-	**40 - 344**	153	7.58	4470	3.3						
-	**44 - 382**	137	6.83	4370	3.6						
-	**15 - 133**	390	19.58	3080	1.00						
-	**18 - 155**	335	16.86	3200	1.10						
-	**19 - 165**	315	15.86	3240	1.20						
-	**22 - 191**	270	13.65	3300	1.30						
-	**25 - 214**	245	12.19	3320	1.45						
-	**25 - 222**	235	11.77	3220	1.20	**K**	**47**	**DRE**	**100MJ4**	43	590
-	**28 - 247**	210	10.56	3240	1.30	**KF**	**47**	**DRE**	**100MJ4**	47	591
-	**33 - 287**	183	9.10	3230	1.55	**KA**	**47**	**DRE**	**100MJ4**	43	592
-	**35 - 305**	172	8.56	3220	1.55	**KAF**	**47**	**DRE**	**100MJ4**	45	591
-	**41 - 354**	148	7.36	3190	1.70						
-	**46 - 397**	132	6.58	3160	1.80						
-	**52 - 449**	117	5.81	3110	1.95						
-	**65 - 563**	93	4.64	3010	2.2						

19391609/DE – 06/2017

P_m = 5.5 kW

	n_a min^{-1} 10-87Hz	M_a Nm	i	F_{Ra} [1] N	SEW f_B					m kg	
-	**17 - 146**	355	17.83	2700	0.80						
-	**19 - 169**	310	15.44	2840	0.90						
-	**22 - 194**	270	13.44	2940	1.00						
-	**33 - 290**	181	9.00	3570	1.65						
-	**37 - 321**	164	8.12	3520	1.85	**K**	**39**	**DRE**	**100MJ4**	42	586
-	**42 - 365**	144	7.15	3440	2.1	**KF**	**39**	**DRE**	**100MJ4**	44	587
-	**44 - 387**	136	6.75	3410	2.2	**KA**	**39**	**DRE**	**100MJ4**	41	588
-	**52 - 454**	116	5.75	3300	2.4	**KAF**	**39**	**DRE**	**100MJ4**	43	587
-	**57 - 500**	105	5.22	3240	2.5						
-	**66 - 577**	91	4.52	3140	2.6						
-	**76 - 663**	79	3.94	3040	2.7						
-	**107 - 928**	57	2.81	2800	3.0						

19391609/DE – 06/2017

10.7 Maßblätter K..DR..J in mm

33 012 00 17

K19..

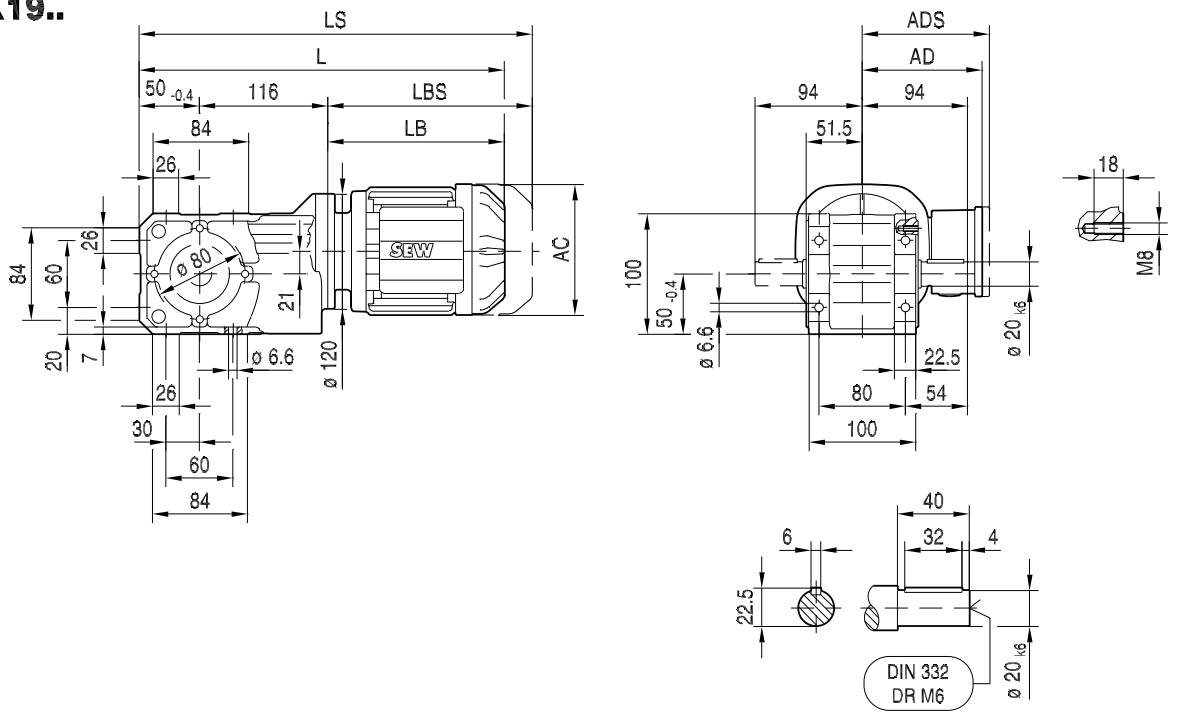

KA19B..

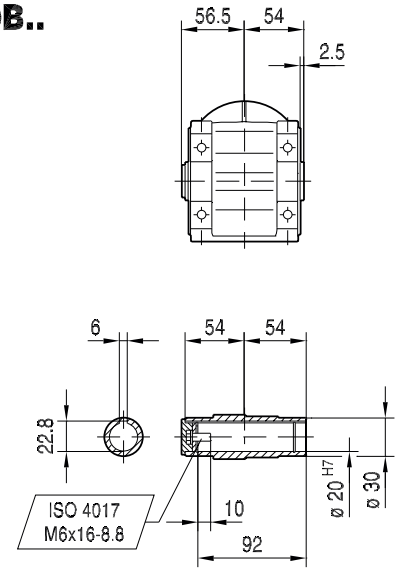

KH19B..

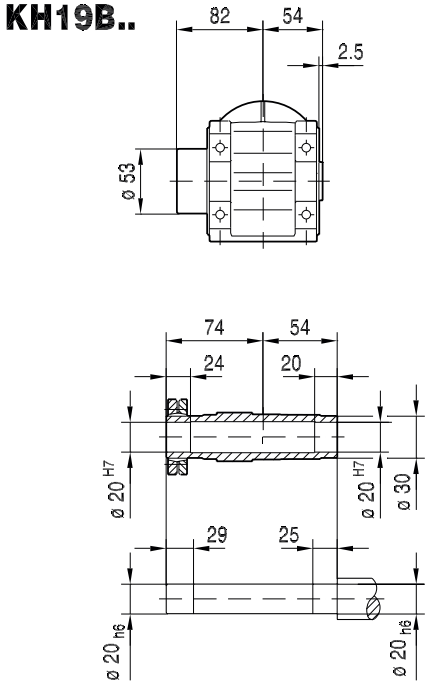

(→ 🗎 176)	DR71S	DR71M	DR80S	DR80M				
AC	139	139	156	156				
AD	119	119	128	128				
ADS	129	129	139	139				
L	368	393	403	434				
LS	436	461	484	515				
LB	202	227	237	268				
LBS	270	295	318	349				

19391609/DE – 06/2017

33 013 00 17

KF19B..

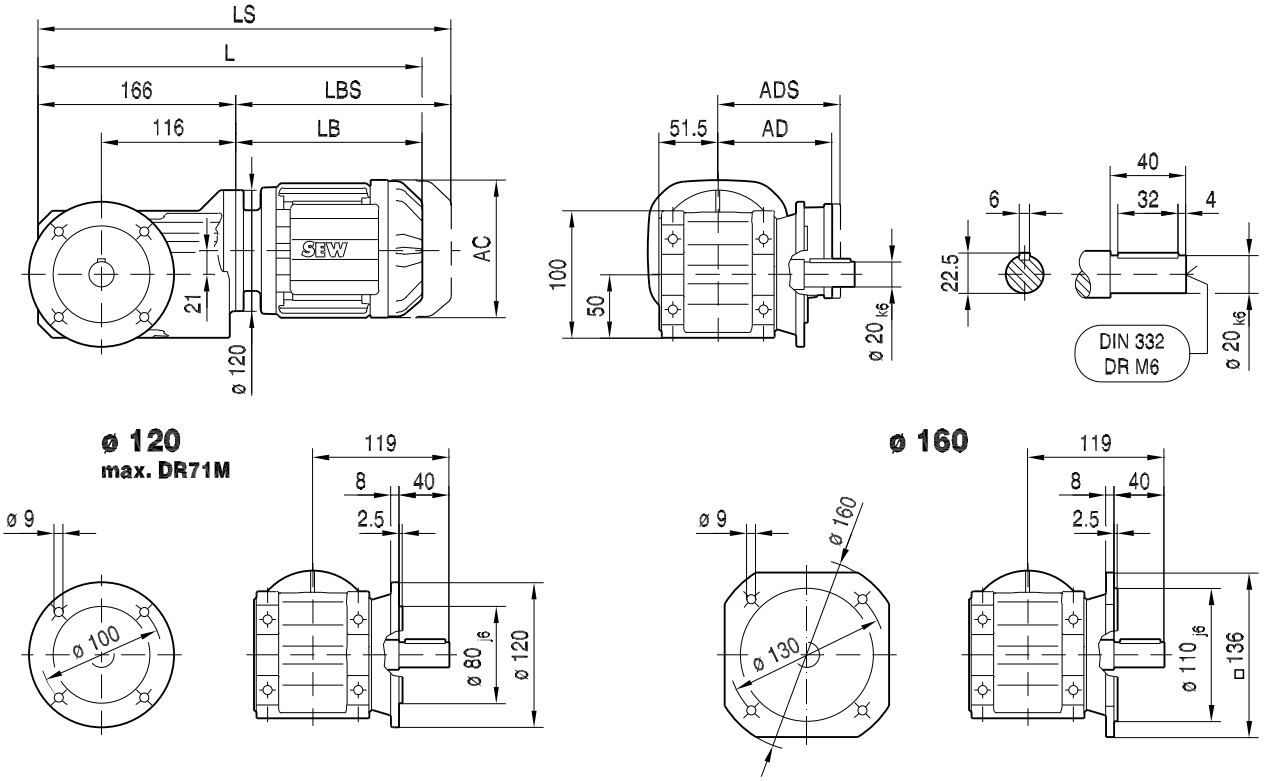

KAF19B..

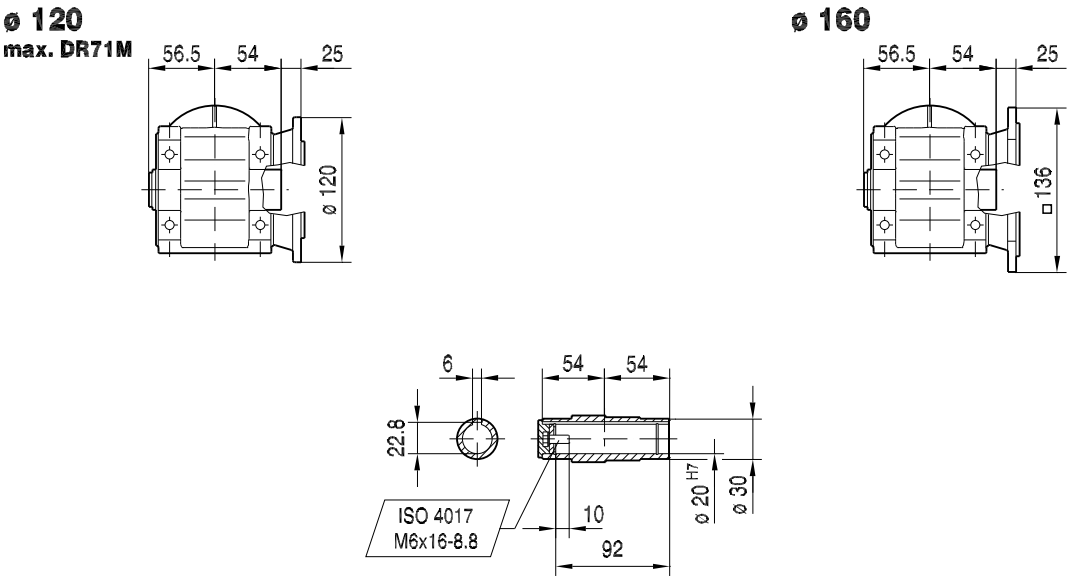

(→ 🗎 176)	DR71S	DR71M	DR80S	DR80M				
AC	139	139	156	156				
AD	119	119	128	128				
ADS	129	129	139	139				
L	368	393	403	434				
LS	436	461	484	515				
LB	202	227	237	268				
LBS	270	295	318	349				

19391609/DE – 06/2017

33 014 00 17

KHF19B..

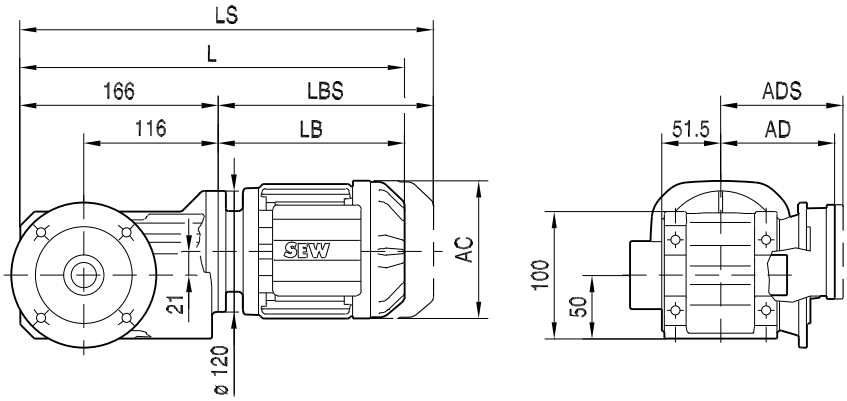

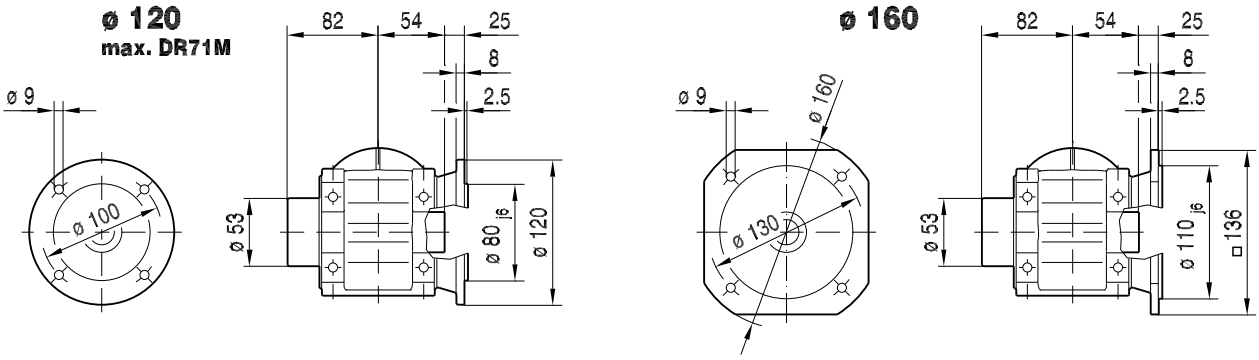

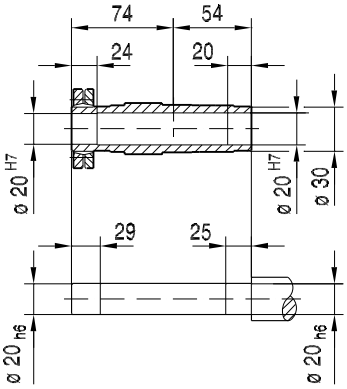

(→ 🗎 176)	DR71S	DR71M	DR80S	DR80M				
AC	139	139	156	156				
AD	119	119	128	128				
ADS	129	129	139	139				
L	368	393	403	434				
LS	436	461	484	515				
LB	202	227	237	268				
LBS	270	295	318	349				

19391609/DE – 06/2017

33 015 00 17

KF19..

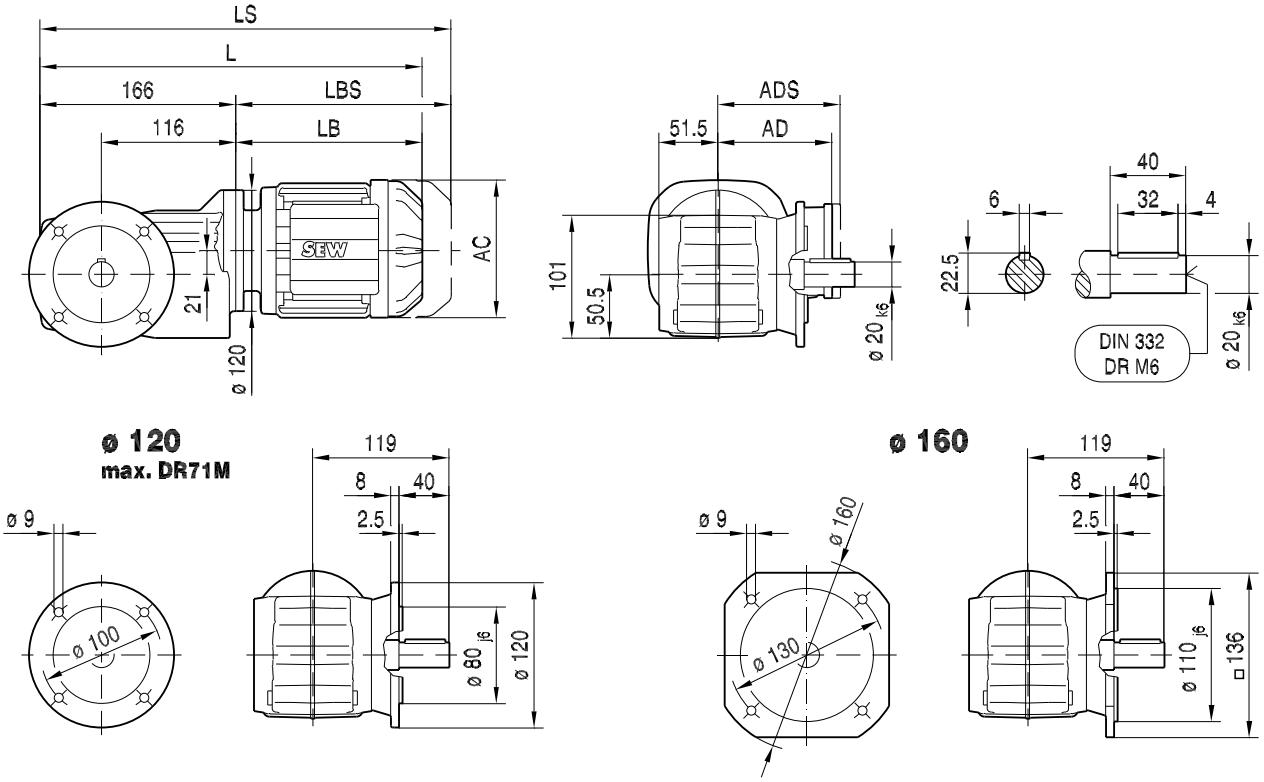

KAF19..

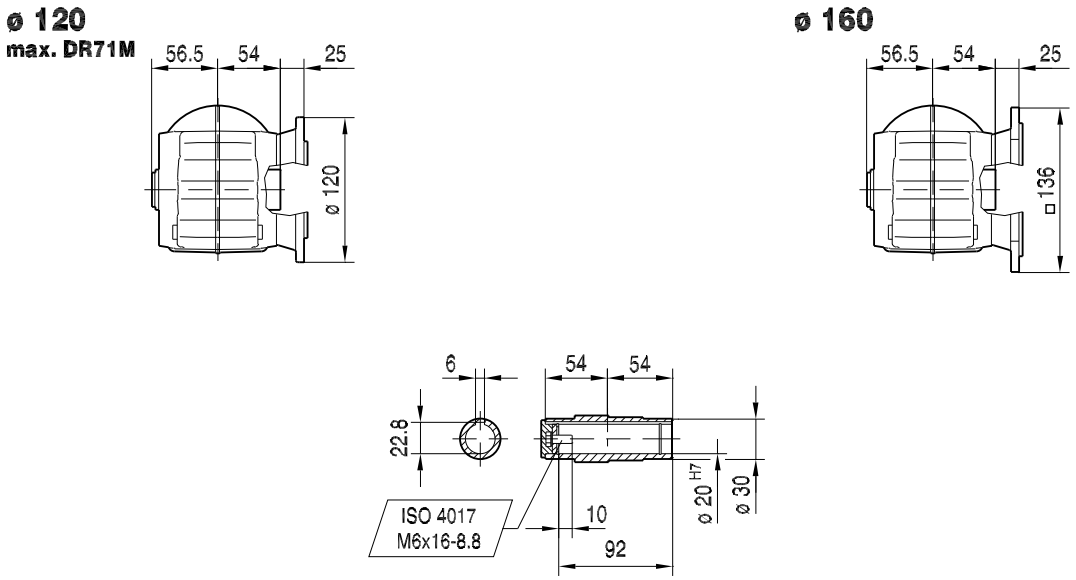

(→ 🗎 176)	DR71S	DR71M	DR80S	DR80M				
AC	139	139	156	156				
AD	119	119	128	128				
ADS	129	129	139	139				
L	368	393	403	434				
LS	436	461	484	515				
LB	202	227	237	268				
LBS	270	295	318	349				

19391609/DE – 06/2017

33 016 00 17

KHF19..

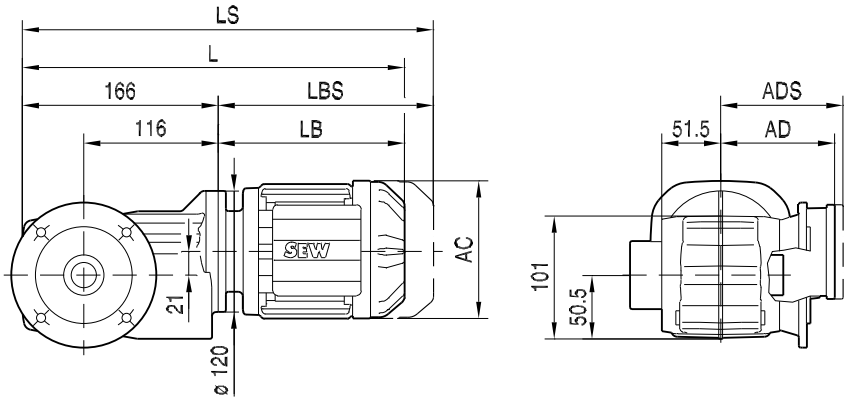

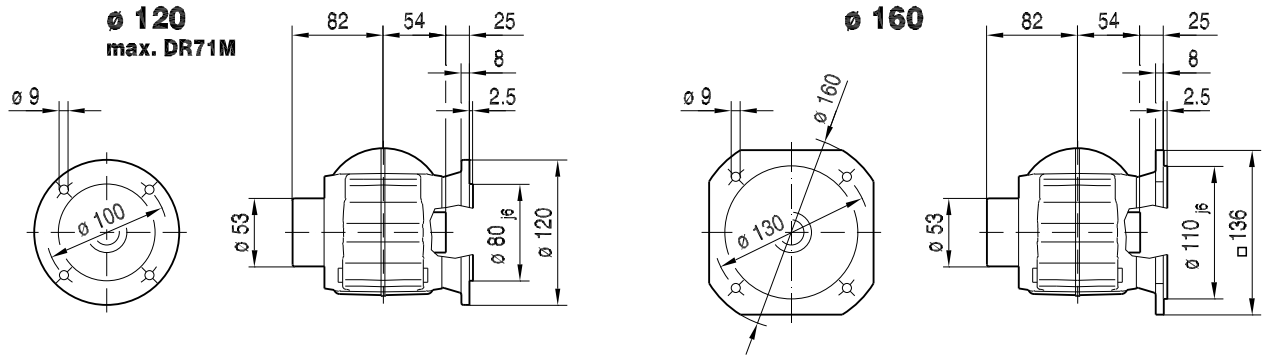

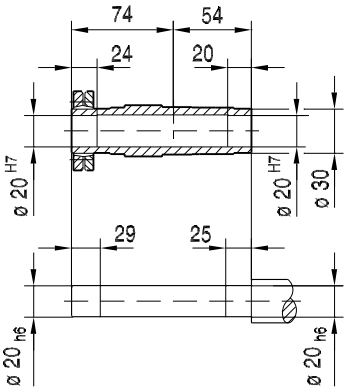

(→ 🗎 176)	DR71S	DR71M	DR80S	DR80M				
AC	139	139	156	156				
AD	119	119	128	128				
ADS	129	129	139	139				
L	368	393	403	434				
LS	436	461	484	515				
LB	202	227	237	268				
LBS	270	295	318	349				

19391609/DE – 06/2017

33 017 00 17

KA19..

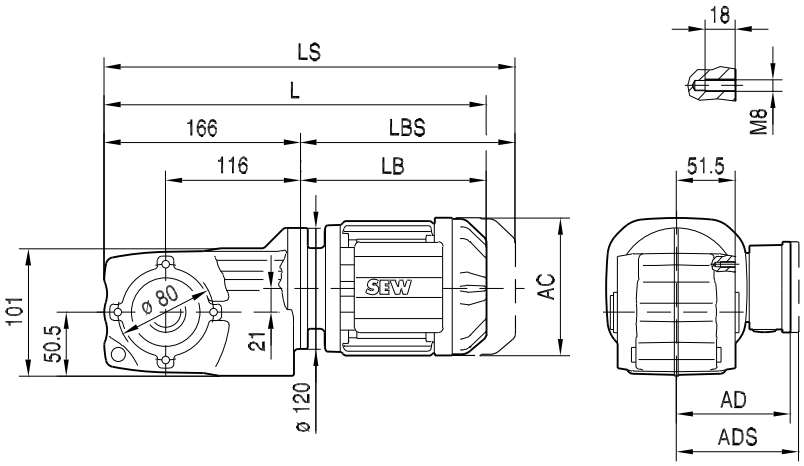

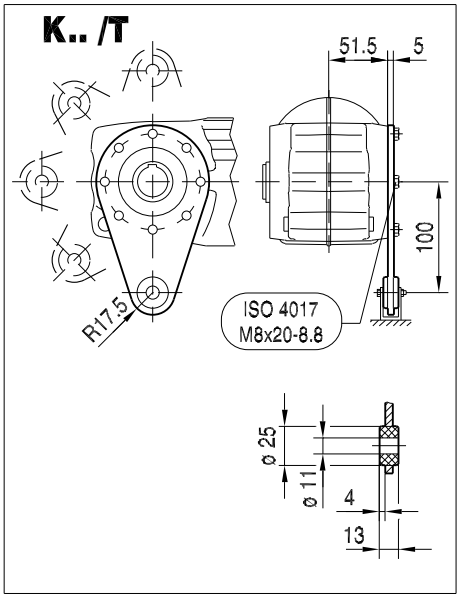

KA19..

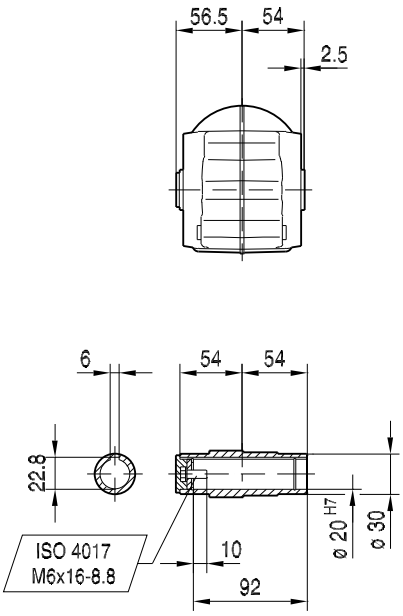

KH19..

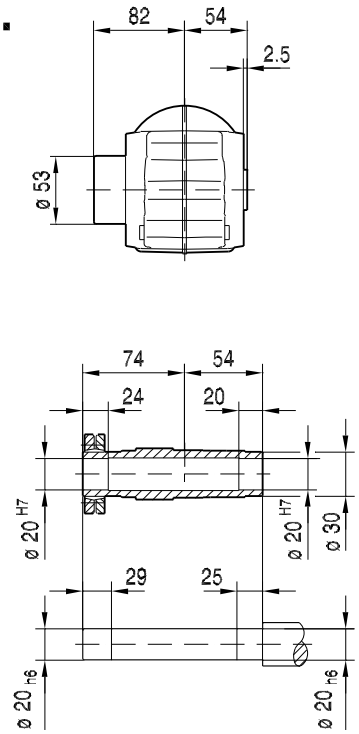

(→ 🗎 176)	DR71S	DR71M	DR80S	DR80M				
AC	139	139	156	156				
AD	119	119	128	128				
ADS	129	129	139	139				
L	368	393	403	434				
LS	436	461	484	515				
LB	202	227	237	268				
LBS	270	295	318	349				

19391609/DE – 06/2017

33 018 00 17

K29..

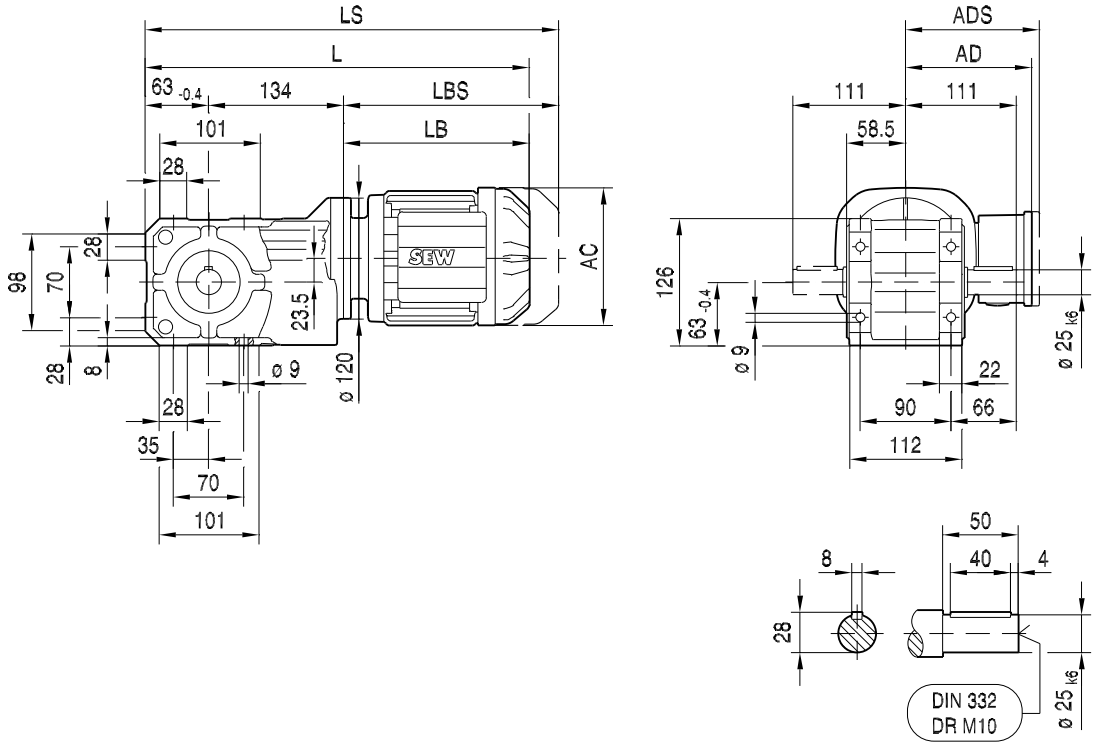

(→ 🗎 176)	DR71S	DR71M	DR80S	DR80M	DR90M	DR90L		
AC	139	139	156	156	179	179		
AD	119	119	128	128	140	140		
ADS	129	129	139	139	150	150		
L	399	424	434	465	469	489		
LS	467	492	515	546	562	582		
LB	202	227	237	268	272	292		
LBS	270	295	318	349	365	385		

19391609/DE – 06/2017

33 019 00 17

KA29B..

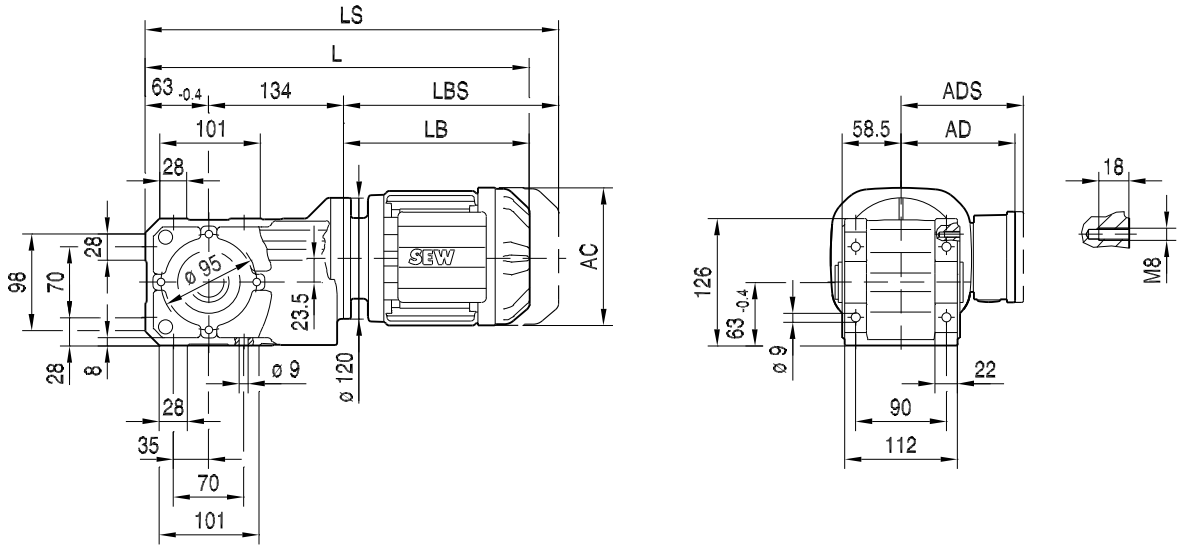

KA29B..

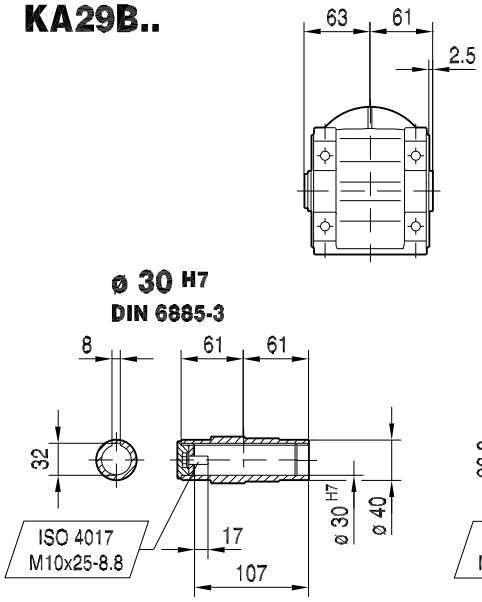

KH29B..

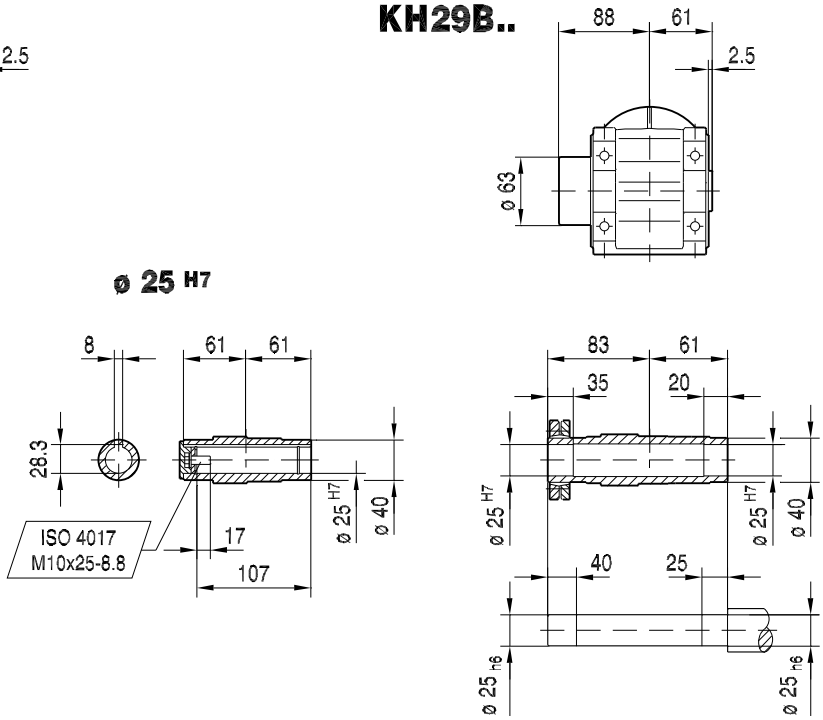

(→ 🗎 176)	DR71S	DR71M	DR80S	DR80M	DR90M	DR90L		
AC	139	139	156	156	179	179		
AD	119	119	128	128	140	140		
ADS	129	129	139	139	150	150		
L	399	424	434	465	469	489		
LS	467	492	515	546	562	582		
LB	202	227	237	268	272	292		
LBS	270	295	318	349	365	385		

19391609/DE – 06/2017

33 020 00 17

KF29B..

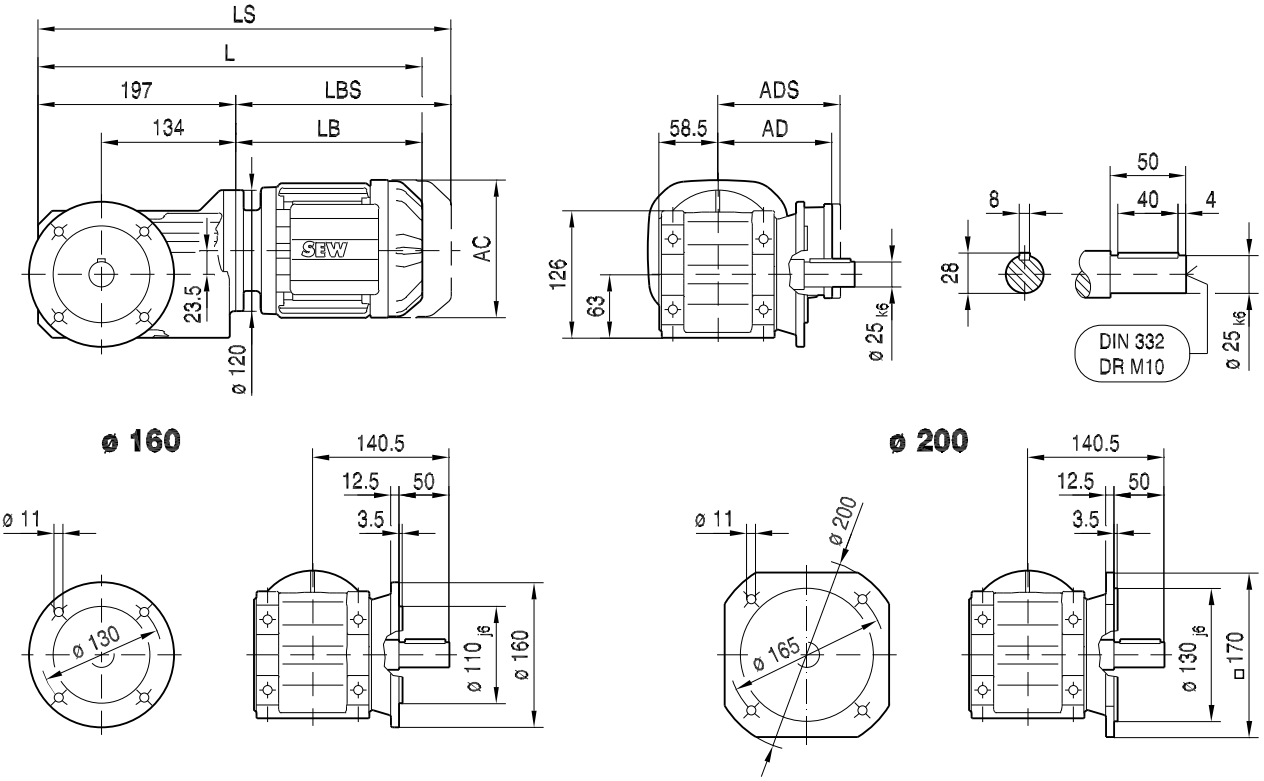

KAF29B..

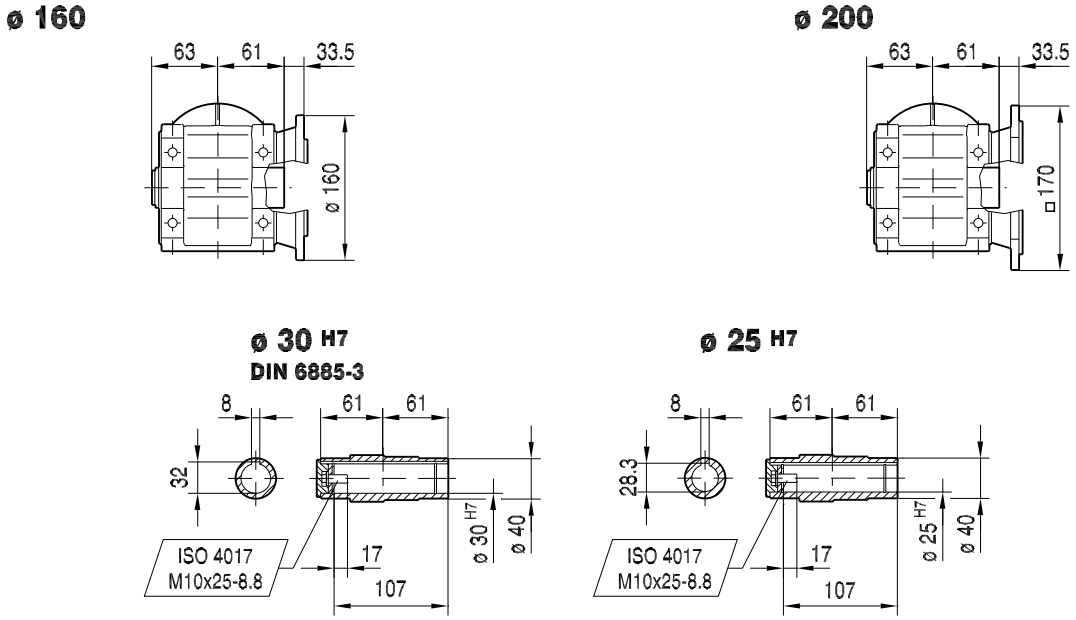

(→ 🗎 176)	DR71S	DR71M	DR80S	DR80M	DR90M	DR90L		
AC	139	139	156	156	179	179		
AD	119	119	128	128	140	140		
ADS	129	129	139	139	150	150		
L	399	424	434	465	469	489		
LS	467	492	515	546	562	582		
LB	202	227	237	268	272	292		
LBS	270	295	318	349	365	385		

19391609/DE – 06/2017

KHF29B..

33 021 00 17

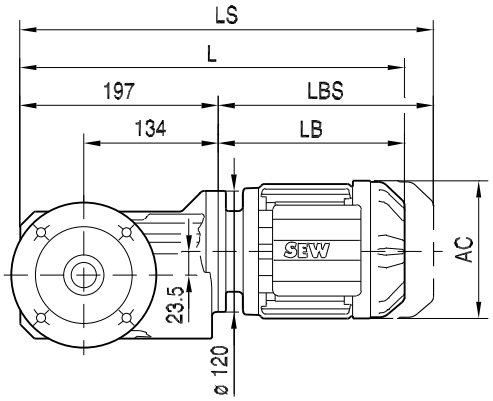

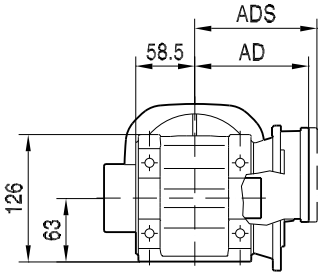

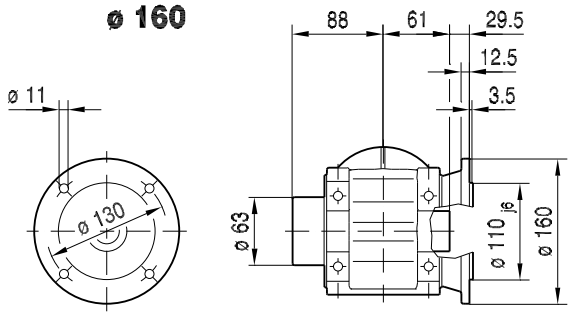

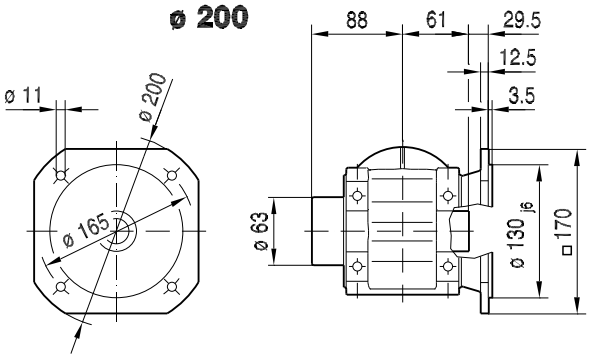

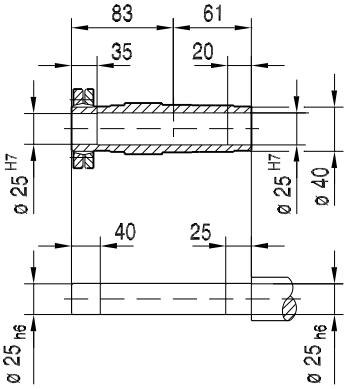

(→ 🗎 176)	DR71S	DR71M	DR80S	DR80M	DR90M	DR90L		
AC	139	139	156	156	179	179		
AD	119	119	128	128	140	140		
ADS	129	129	139	139	150	150		
L	399	424	434	465	469	489		
LS	467	492	515	546	562	582		
LB	202	227	237	268	272	292		
LBS	270	295	318	349	365	385		

19391609/DE – 06/2017

33 022 00 17

KF29..

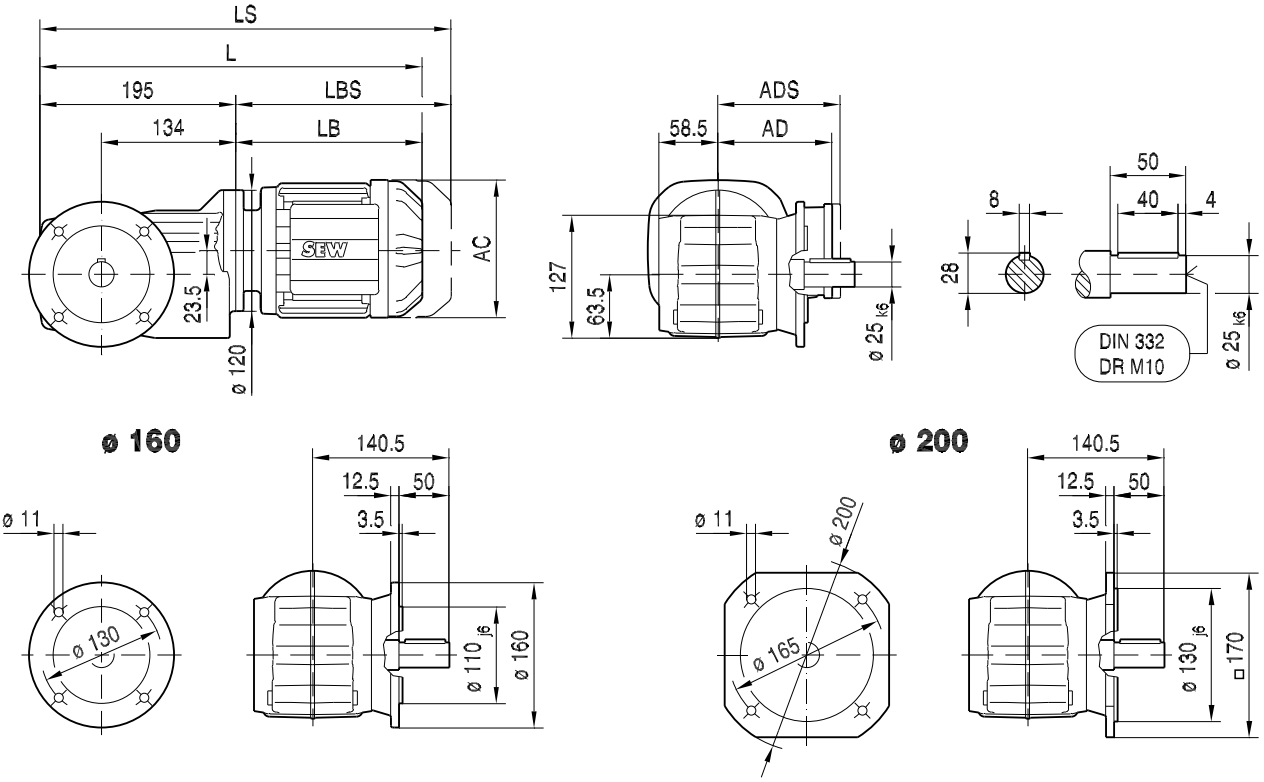

KAF29..

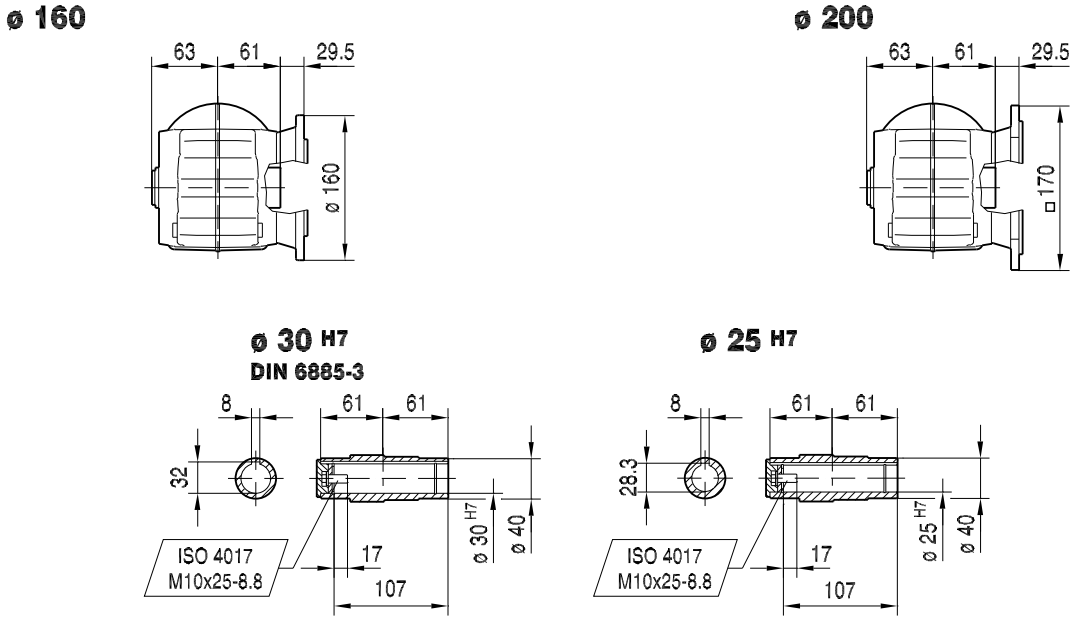

(→ 🗎 176)	DR71S	DR71M	DR80S	DR80M	DR90M	DR90L		
AC	139	139	156	156	179	179		
AD	119	119	128	128	140	140		
ADS	129	129	139	139	150	150		
L	397	422	432	463	467	487		
LS	465	490	513	544	560	580		
LB	202	227	237	268	272	292		
LBS	270	295	318	349	365	385		

19391609/DE – 06/2017

33 023 00 17

KHF29..

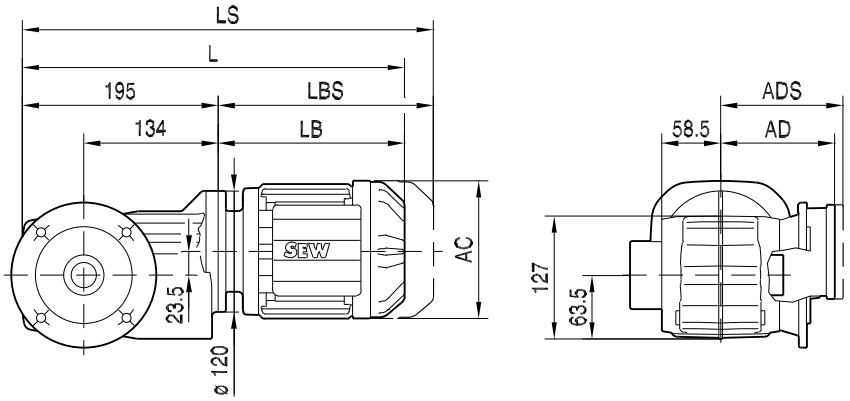

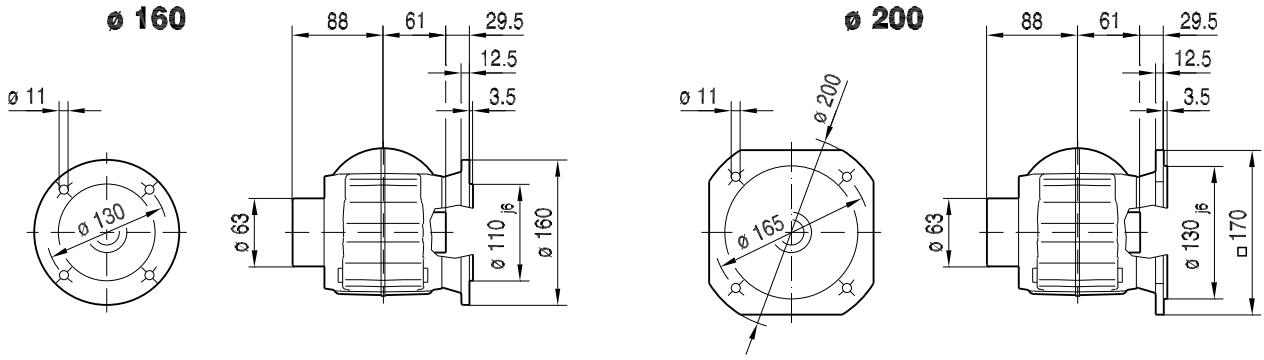

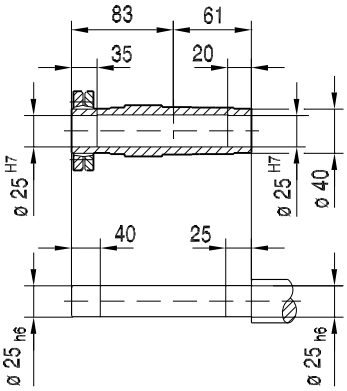

(→ 🗎 176)	DR71S	DR71M	DR80S	DR80M	DR90M	DR90L		
AC	139	139	156	156	179	179		
AD	119	119	128	128	140	140		
ADS	129	129	139	139	150	150		
L	397	422	432	463	467	487		
LS	465	490	513	544	560	580		
LB	202	227	237	268	272	292		
LBS	270	295	318	349	365	385		

19391609/DE – 06/2017

33 024 00 17

KA29..

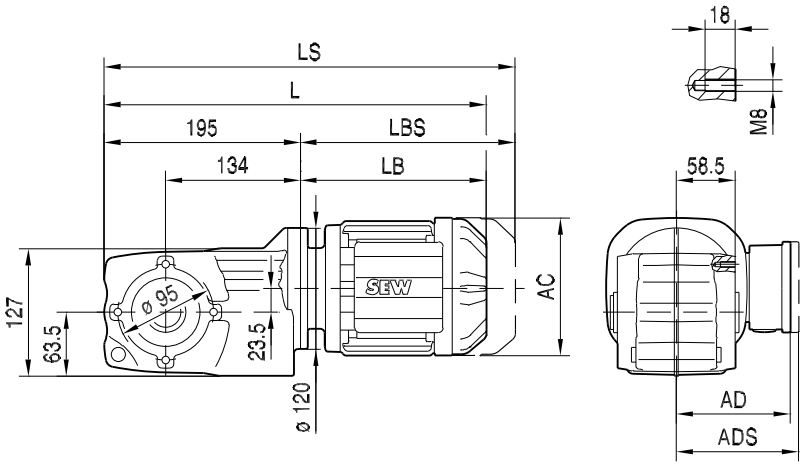

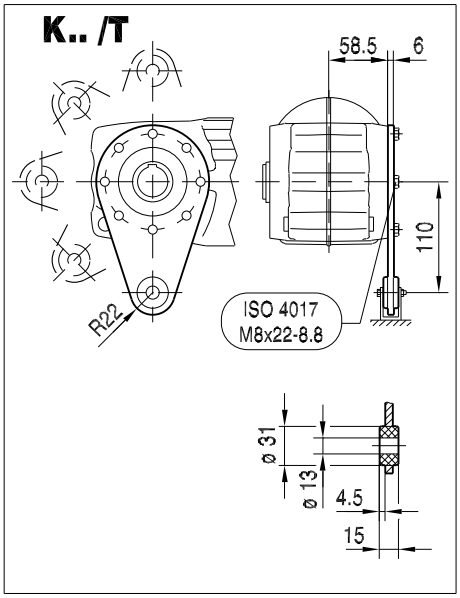

KA29..

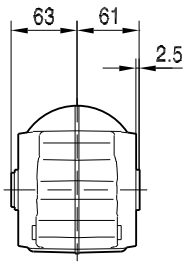

KH29..

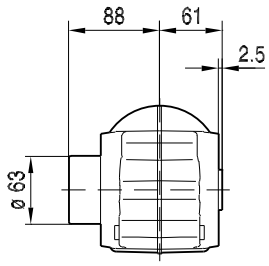

ø 30 H7
DIN 6885-3

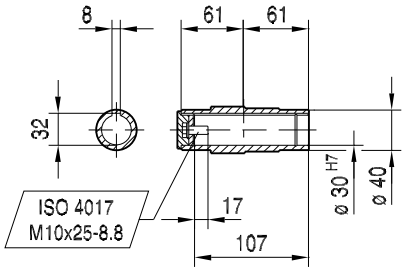

ø 25 H7

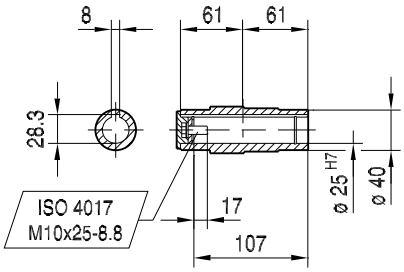

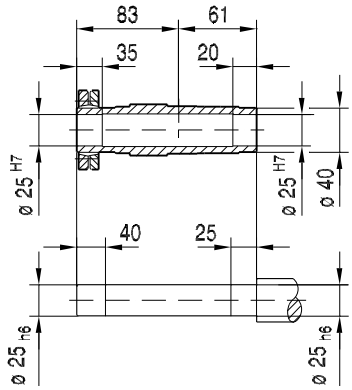

(→ 🗎 176)	DR71S	DR71M	DR80S	DR80M	DR90M	DR90L		
AC	139	139	156	156	179	179		
AD	119	119	128	128	140	140		
ADS	129	129	139	139	150	150		
L	397	422	432	463	467	487		
LS	465	490	513	544	560	580		
LB	202	227	237	268	272	292		
LBS	270	295	318	349	365	385		

19391609/DE – 06/2017

33 025 00 17

K37..

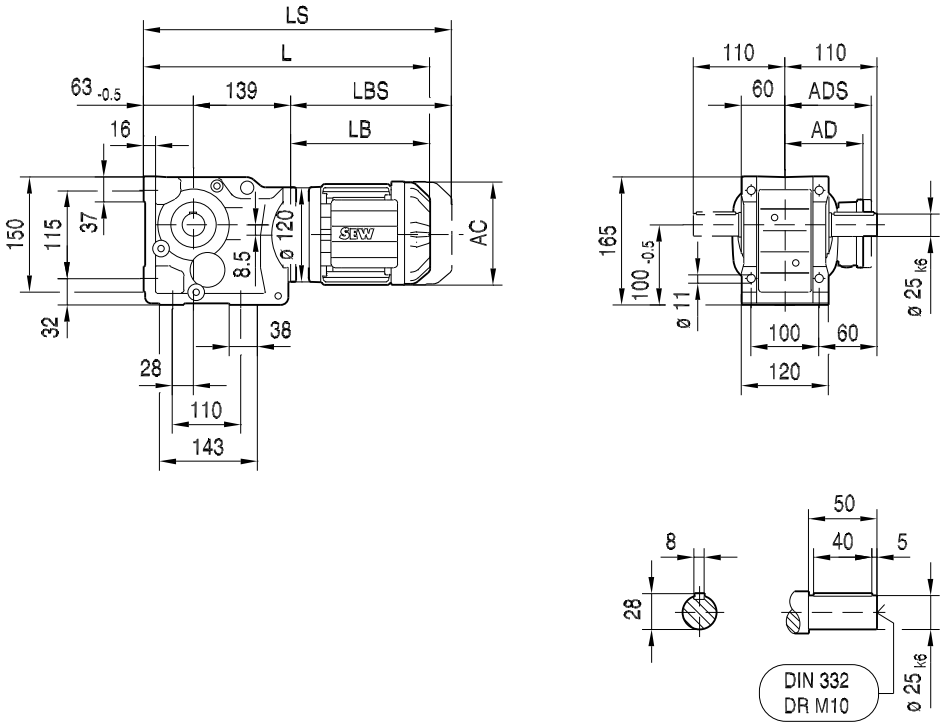

(→ 🗎 176)	DR71S	DR71M	DR80S	DR80M	DR90M	DR90L		
AC	139	139	156	156	179	179		
AD	119	119	128	128	140	140		
ADS	129	129	139	139	150	150		
L	404	429	439	470	474	494		
LS	472	497	520	551	567	587		
LB	202	227	237	268	272	292		
LBS	270	295	318	349	365	385		

19391609/DE – 06/2017

33 026 00 17

KF37..

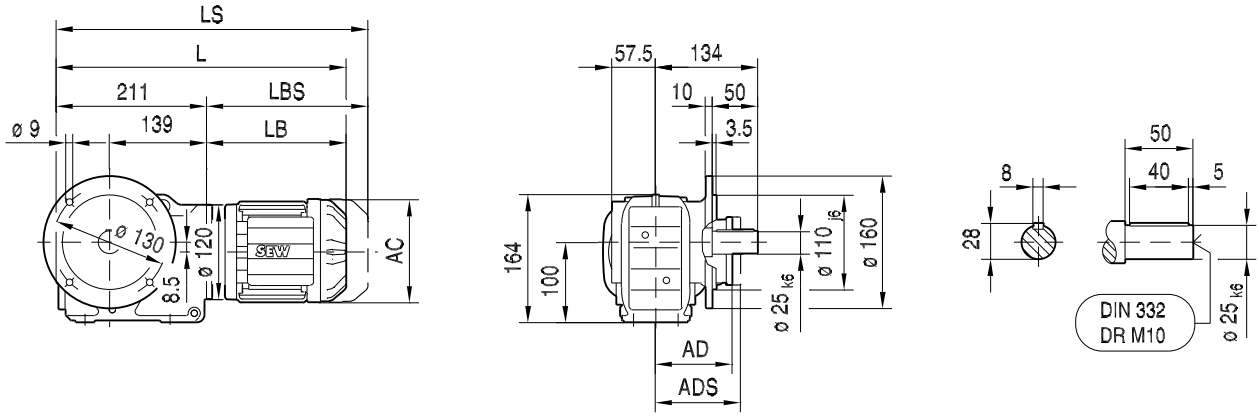

KAF37..

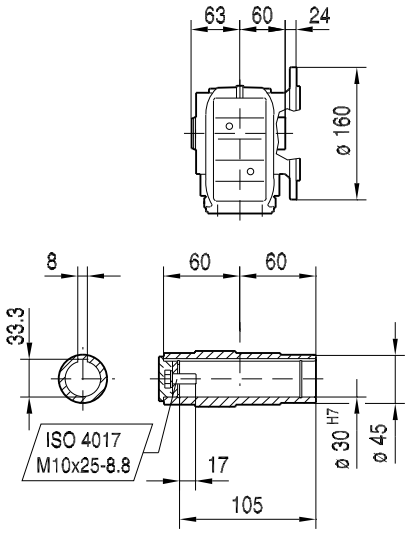

KHF37..

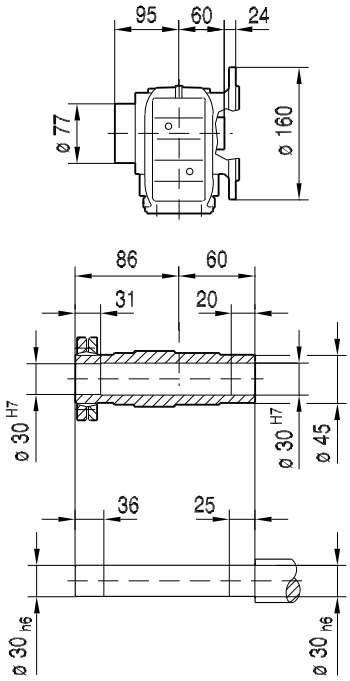

KVF37..

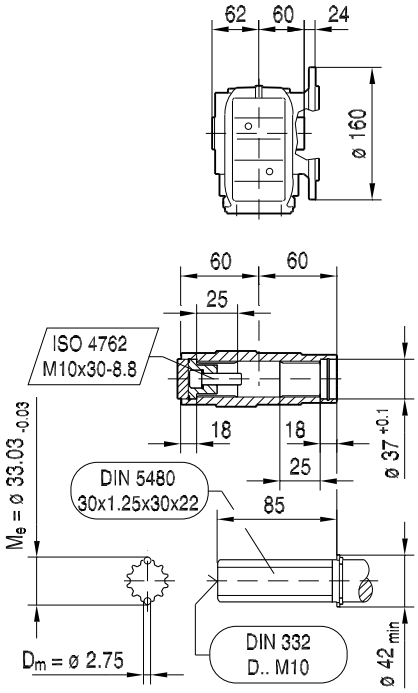

(→ 🗎 176)	DR71S	DR71M	DR80S	DR80M	DR90M	DR90L		
AC	139	139	156	156	179	179		
AD	119	119	128	128	140	140		
ADS	129	129	139	139	150	150		
L	413	438	448	479	483	503		
LS	481	506	529	560	576	596		
LB	202	227	237	268	272	292		
LBS	270	295	318	349	365	385		

19391609/DE – 06/2017

33 027 00 17

KA37..

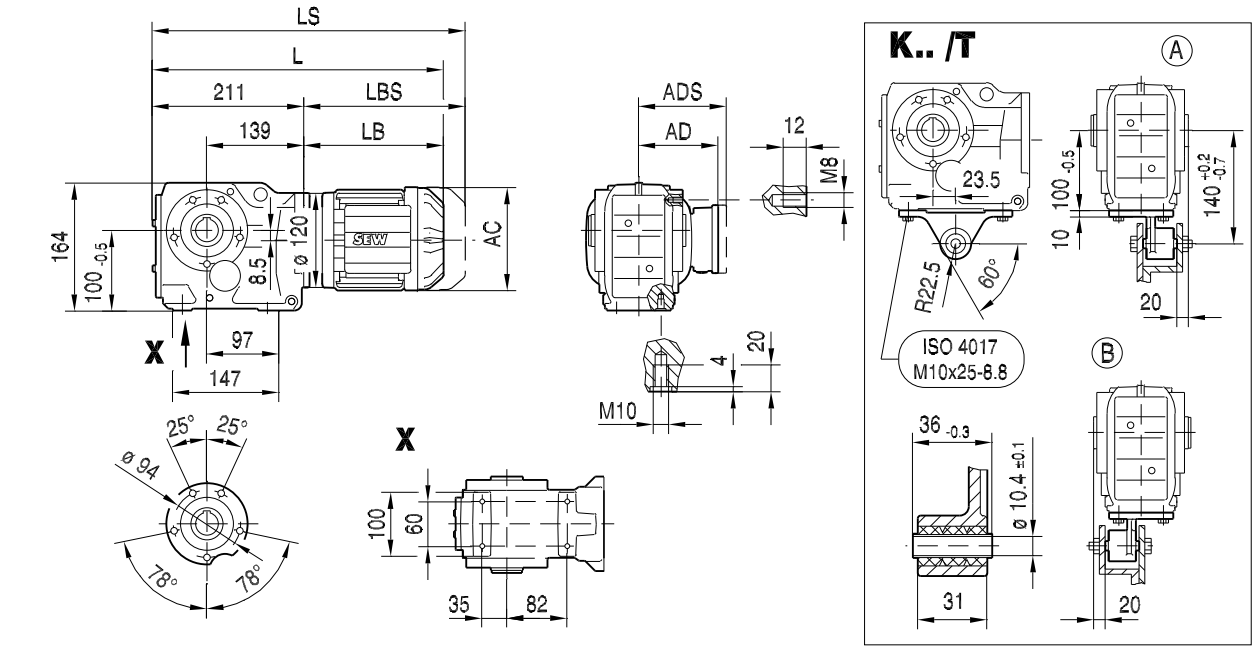

KA37..

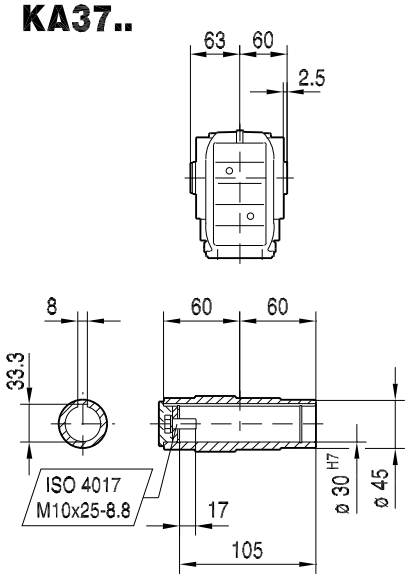

KH37..

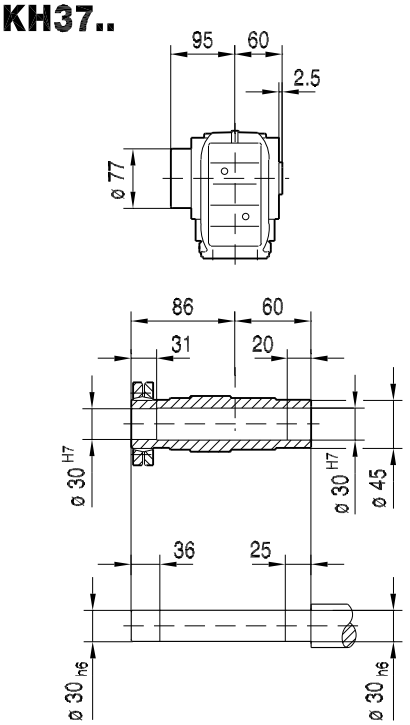

KV37..

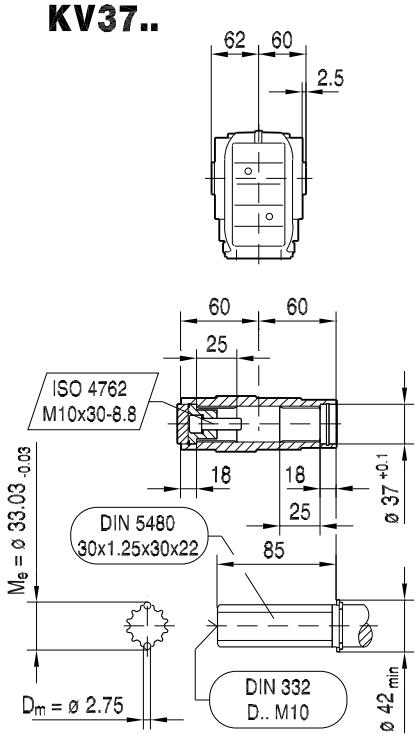

(→ 🗎 176)	DR71S	DR71M	DR80S	DR80M	DR90M	DR90L		
AC	139	139	156	156	179	179		
AD	119	119	128	128	140	140		
ADS	129	129	139	139	150	150		
L	413	438	448	479	483	503		
LS	481	506	529	560	576	596		
LB	202	227	237	268	272	292		
LBS	270	295	318	349	365	385		

19391609/DE – 06/2017

33 028 00 17

KAZ37..

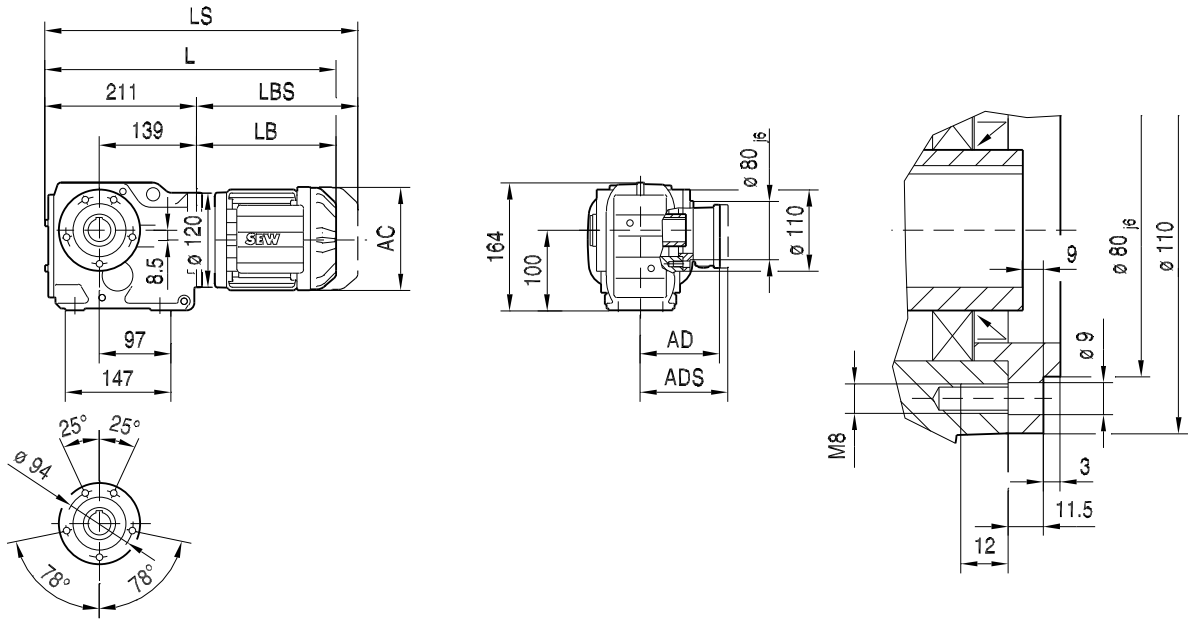

KAZ37..

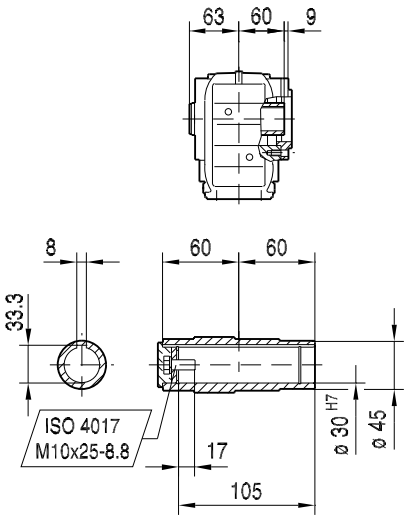

KHZ37..

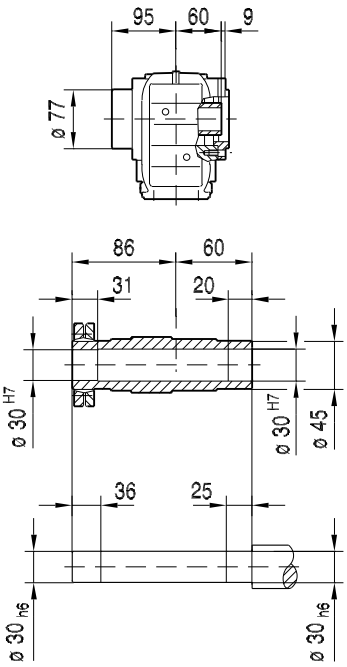

KVZ37..

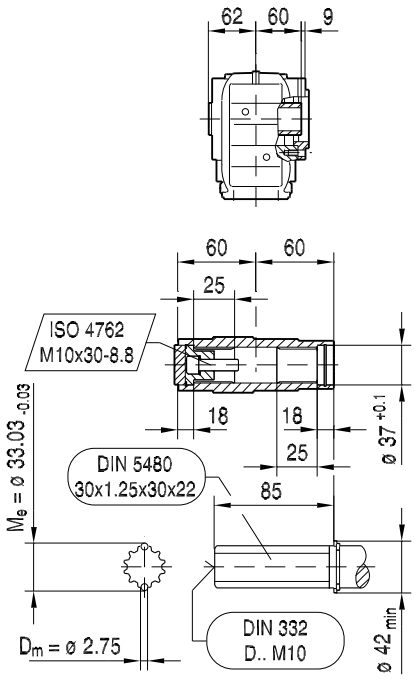

(→ 🗎 176)	DR71S	DR71M	DR80S	DR80M	DR90M	DR90L		
AC	139	139	156	156	179	179		
AD	119	119	128	128	140	140		
ADS	129	129	139	139	150	150		
L	413	438	448	479	483	503		
LS	481	506	529	560	576	596		
LB	202	227	237	268	272	292		
LBS	270	295	318	349	365	385		

19391609/DE – 06/2017

KZ37..

33 029 00 17

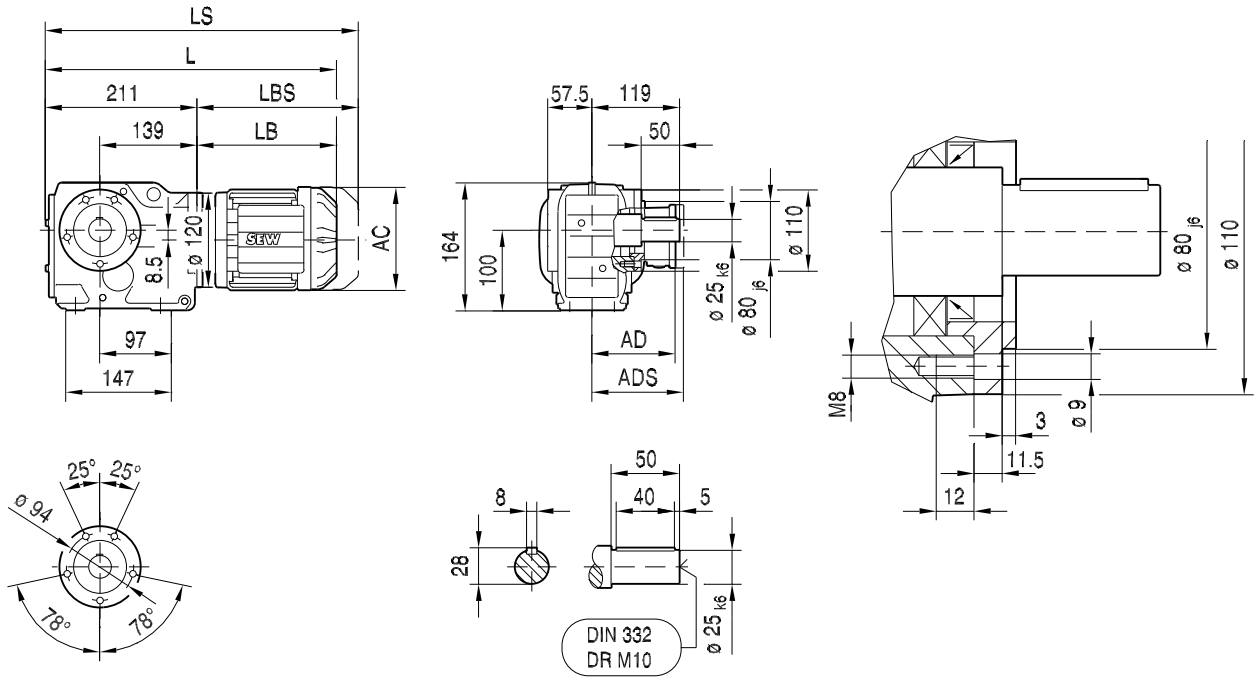

(→ 🗎 176)	DR71S	DR71M	DR80S	DR80M	DR90M	DR90L		
AC	139	139	156	156	179	179		
AD	119	119	128	128	140	140		
ADS	129	129	139	139	150	150		
L	413	438	448	479	483	503		
LS	481	506	529	560	576	596		
LB	202	227	237	268	272	292		
LBS	270	295	318	349	365	385		

19391609/DE – 06/2017

KT37..

33 030 00 17

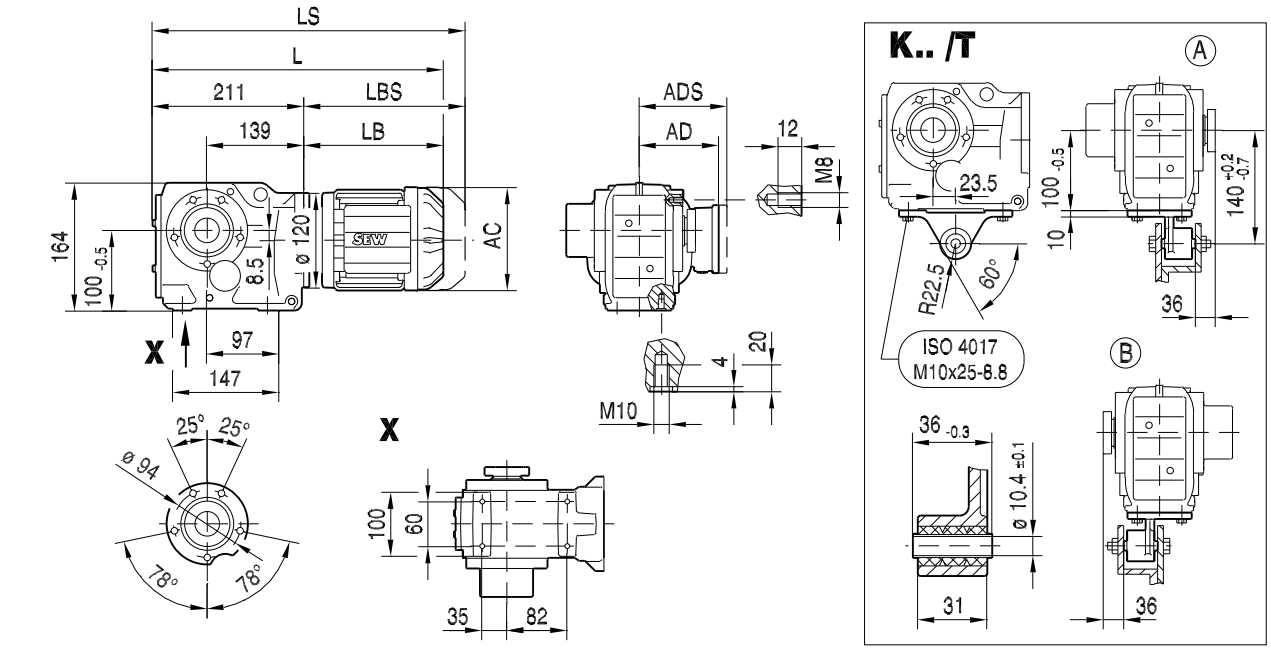

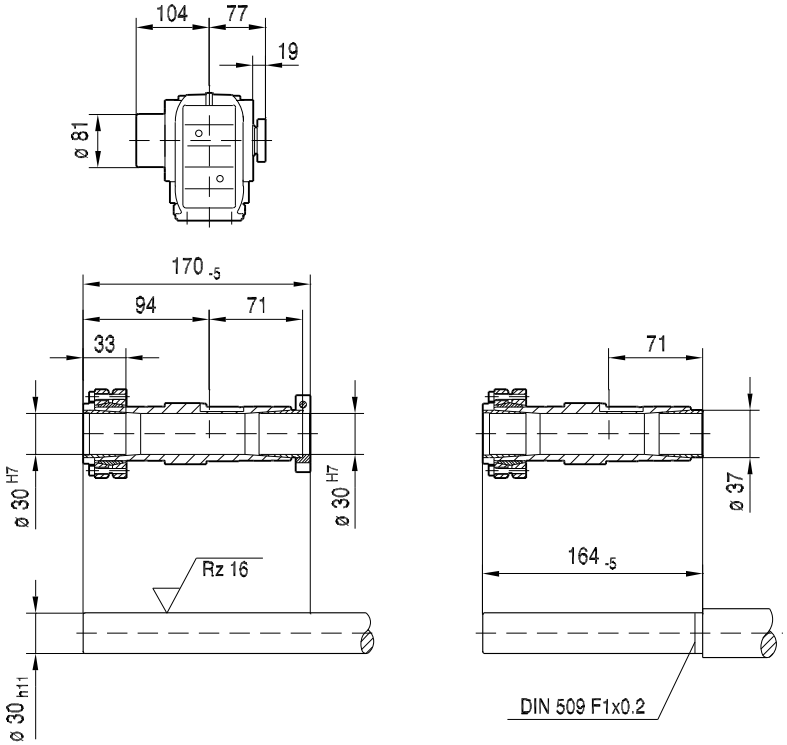

(→ 🗎 176)	DR71S	DR71M	DR80S	DR80M	DR90M	DR90L		
AC	139	139	156	156	179	179		
AD	119	119	128	128	140	140		
ADS	129	129	139	139	150	150		
L	413	438	448	479	483	503		
LS	481	506	529	560	576	596		
LB	202	227	237	268	272	292		
LBS	270	295	318	349	365	385		

19391609/DE – 06/2017

33 031 00 17

K39..

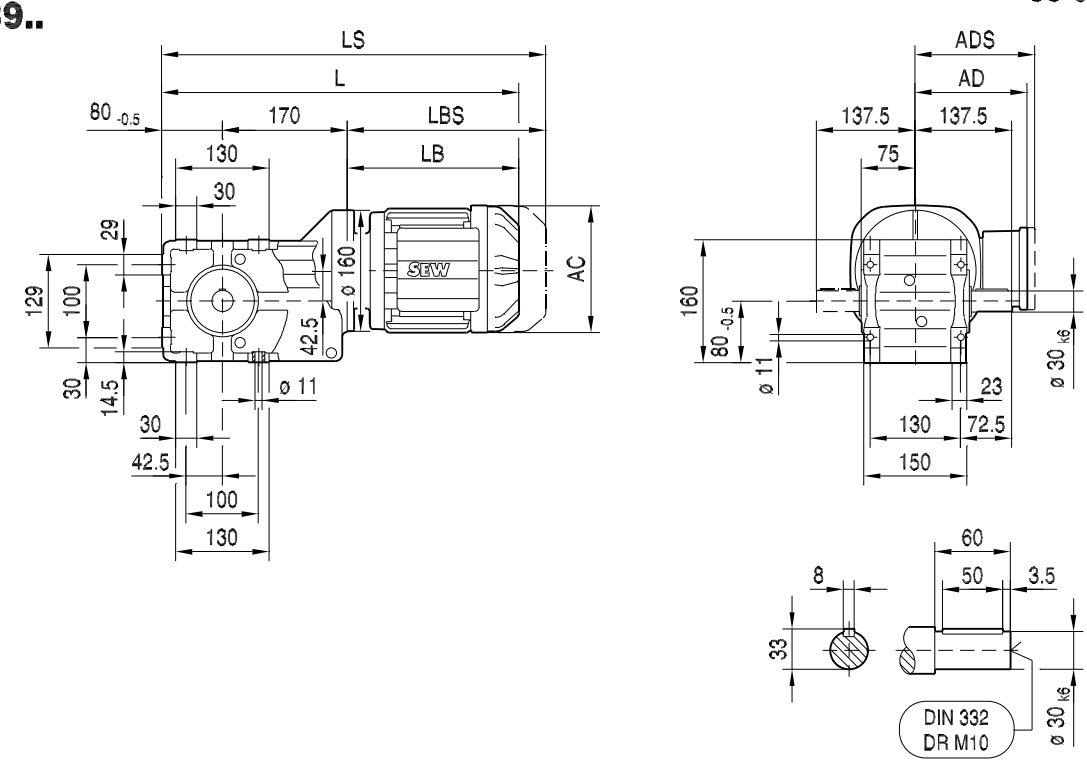

(→ 🗎 176)	DR71S	DR71M	DR80S	DR80M	DR90M	DR90L	DR100M	
AC	139	139	156	156	179	179	197	
AD	119	119	128	128	140	140	157	
ADS	129	129	139	139	150	150	158	
L	446	471	480	511	513	533	563	
LS	514	539	561	592	606	626	656	
LB	196	221	230	261	263	283	313	
LBS	264	289	311	342	356	376	406	

19391609/DE – 06/2017

33 032 00 17

KF39..

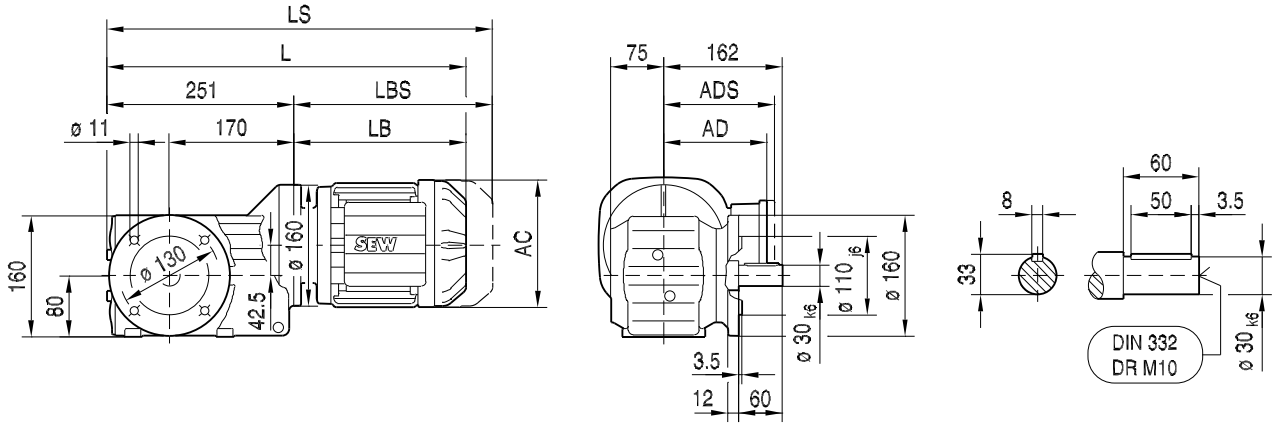

KAF39..

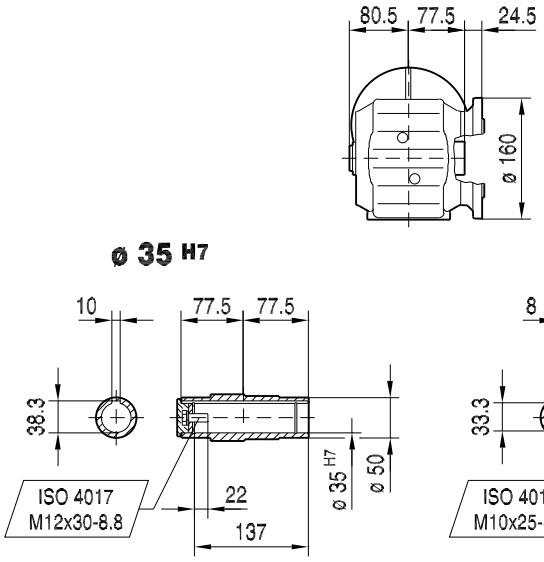

KHF39..

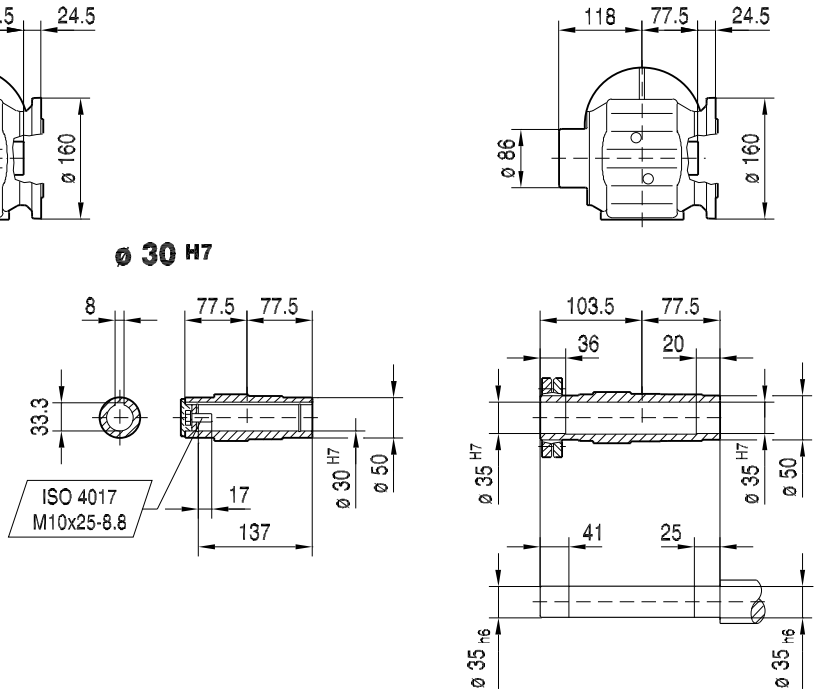

(→ 🗎 176)	DR71S	DR71M	DR80S	DR80M	DR90M	DR90L	DR100M	
AC	139	139	156	156	179	179	197	
AD	119	119	128	128	140	140	157	
ADS	129	129	139	139	150	150	158	
L	447	472	481	512	514	534	564	
LS	515	540	562	593	607	627	657	
LB	196	221	230	261	263	283	313	
LBS	264	289	311	342	356	376	406	

19391609/DE – 06/2017

33 033 00 17

KA39..

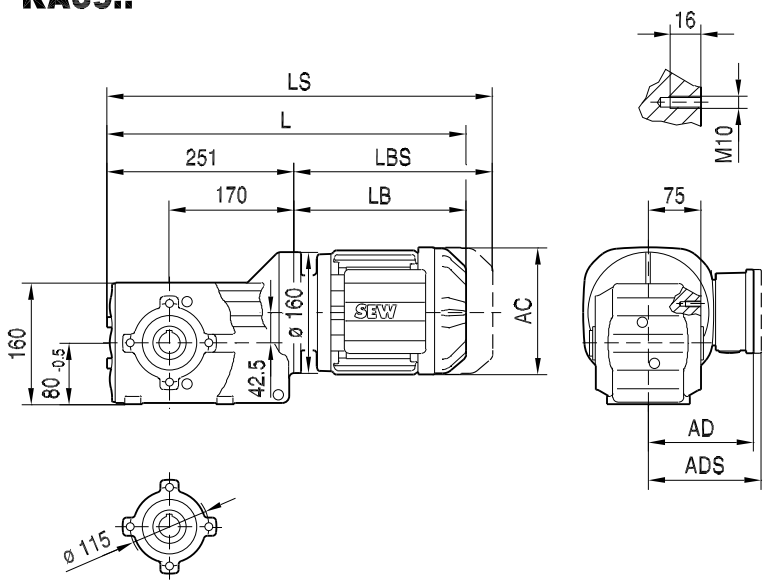

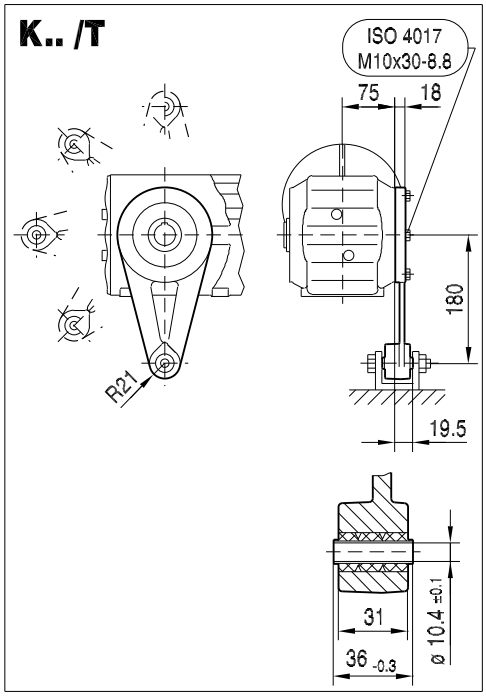

KA39..

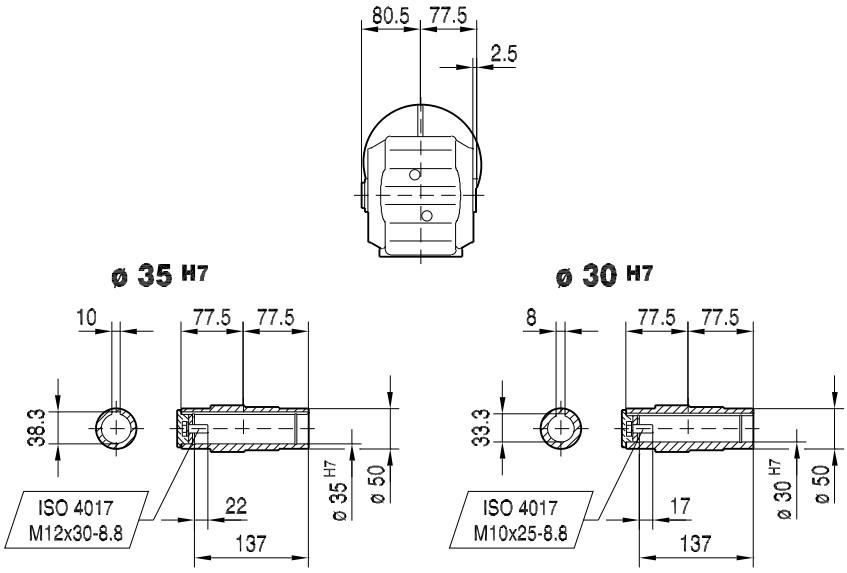

KH39..

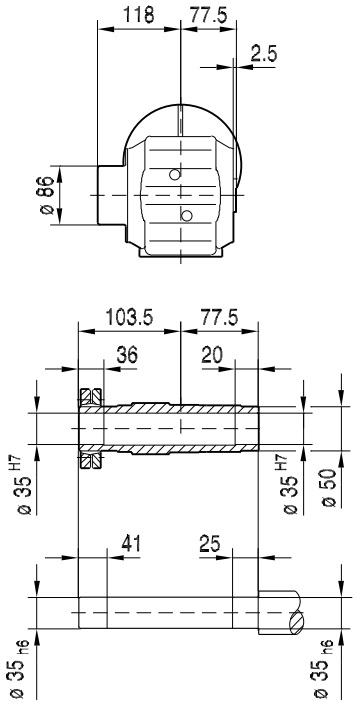

(→ 🗎 176)	DR71S	DR71M	DR80S	DR80M	DR90M	DR90L	DR100M	
AC	139	139	156	156	179	179	197	
AD	119	119	128	128	140	140	157	
ADS	129	129	139	139	150	150	158	
L	447	472	481	512	514	534	564	
LS	515	540	562	593	607	627	657	
LB	196	221	230	261	263	283	313	
LBS	264	289	311	342	356	376	406	

19391609/DE – 06/2017

33 034 00 17

KT39..

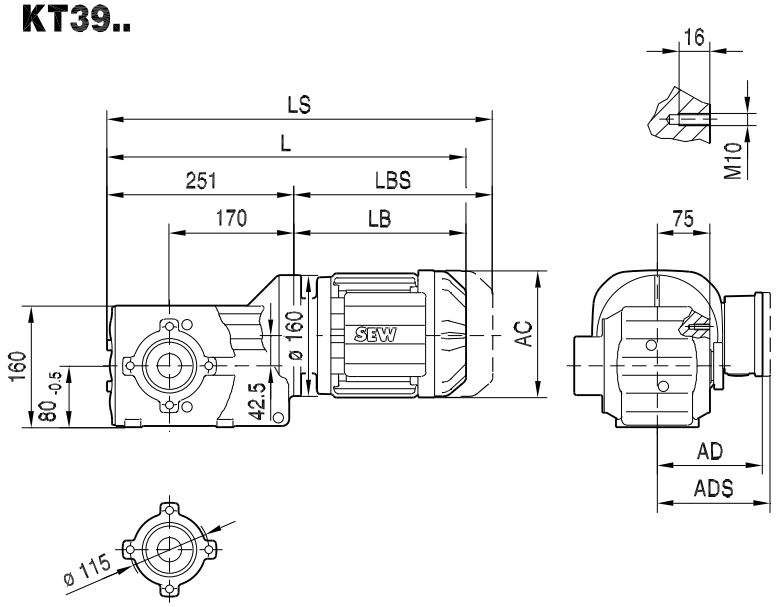

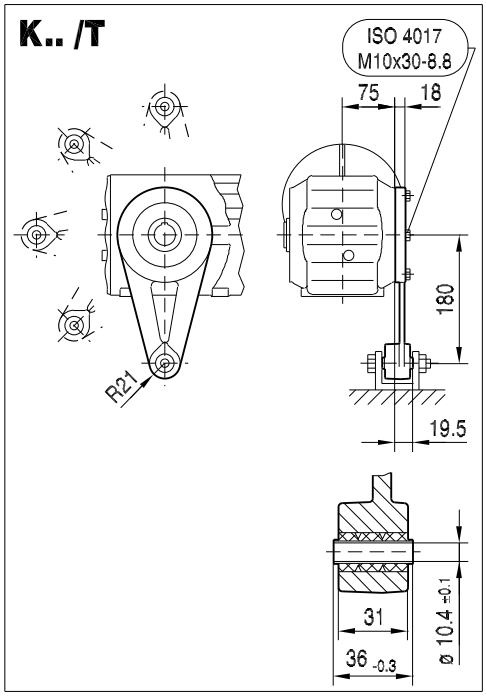

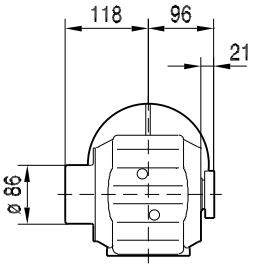

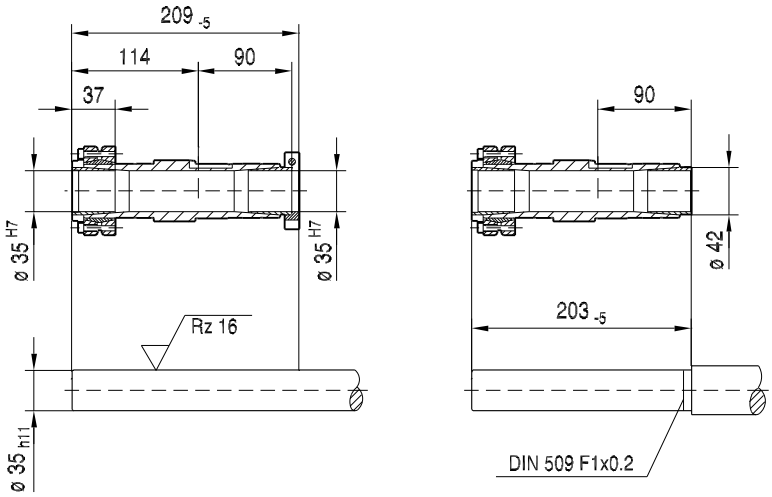

(→ 🗎 176)	DR71S	DR71M	DR80S	DR80M	DR90M	DR90L	DR100M	
AC	139	139	156	156	179	179	197	
AD	119	119	128	128	140	140	157	
ADS	129	129	139	139	150	150	158	
L	447	472	481	512	514	534	564	
LS	515	540	562	593	607	627	657	
LB	196	221	230	261	263	283	313	
LBS	264	289	311	342	356	376	406	

19391609/DE – 06/2017

33 035 00 17

K47..

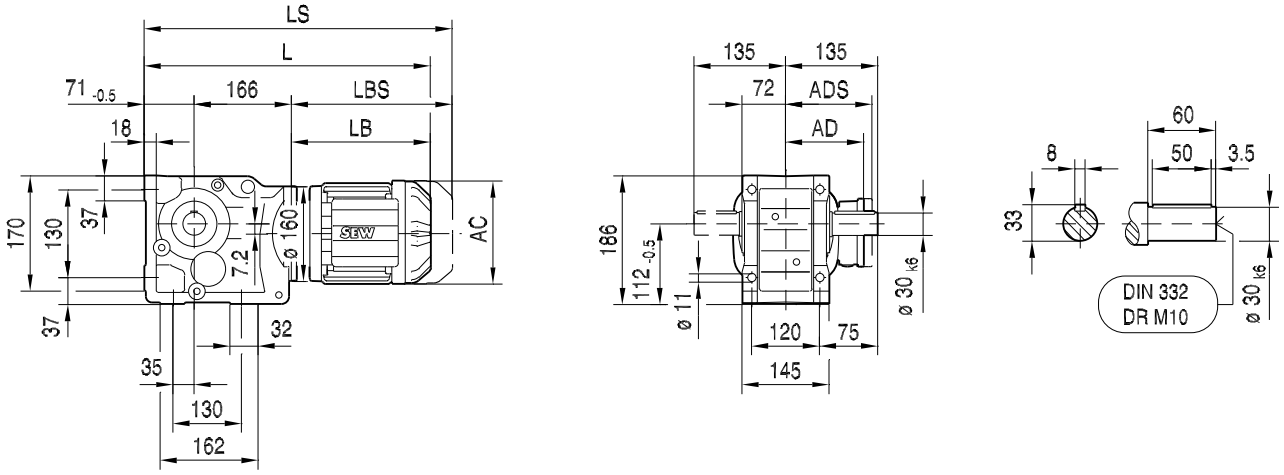

KA47B..

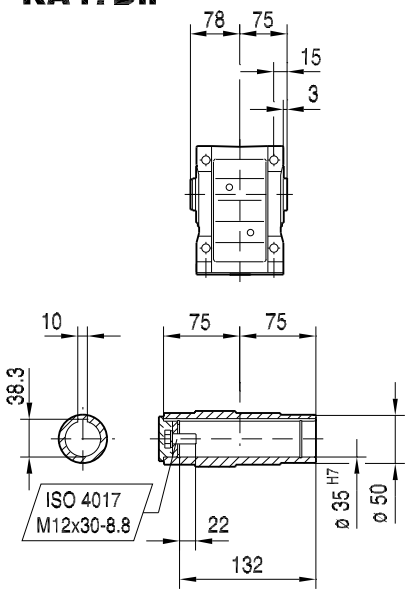

KH47B..

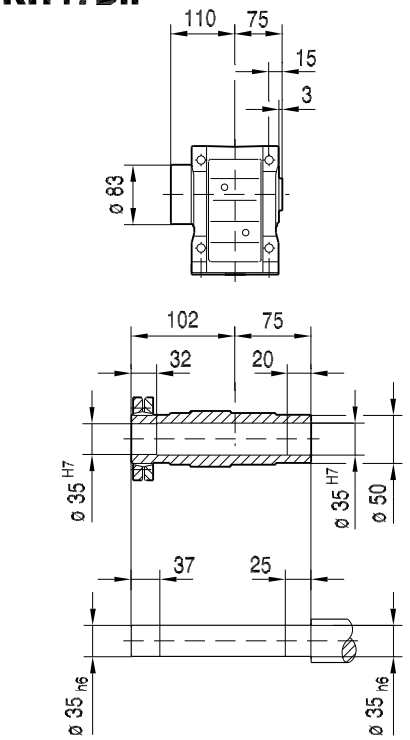

KV47B..

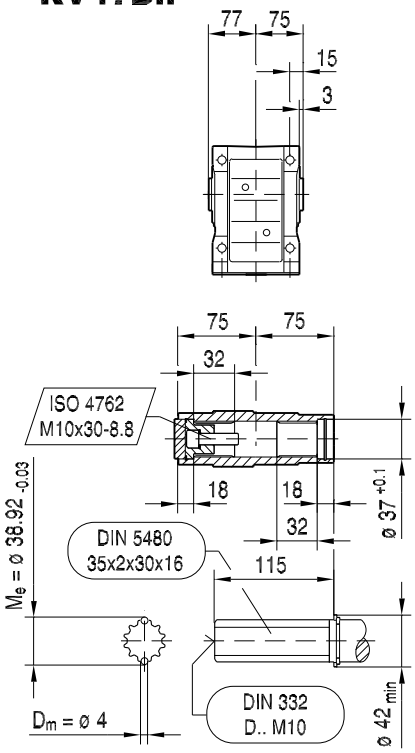

(→ 🗎 176)	DR71S	DR71M	DR80S	DR80M	DR90M	DR90L	DR100M	
AC	139	139	156	156	179	179	197	
AD	119	119	128	128	140	140	157	
ADS	129	129	139	139	150	150	158	
L	433	458	467	498	500	520	550	
LS	501	526	548	579	593	613	643	
LB	196	221	230	261	263	283	313	
LBS	264	289	311	342	356	376	406	

19391609/DE – 06/2017

33 036 00 17

KF47..

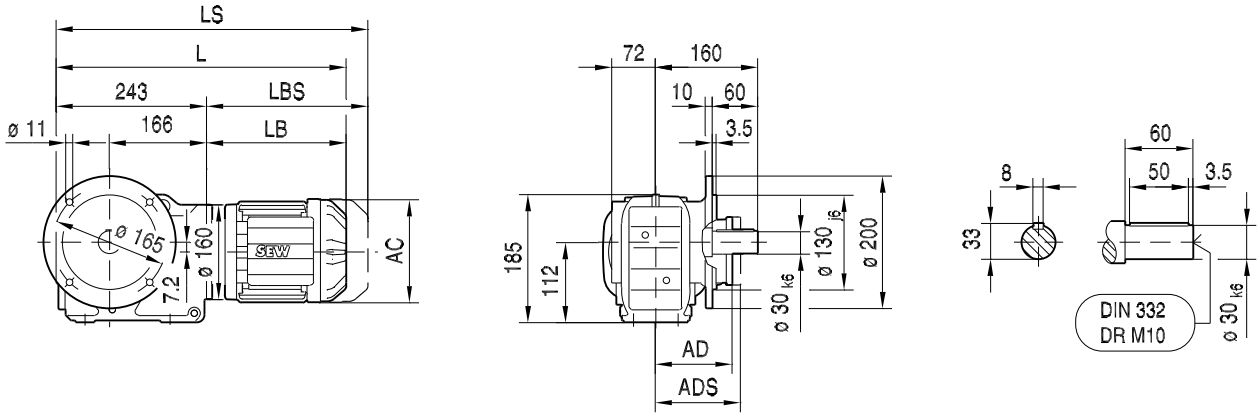

KAF47..

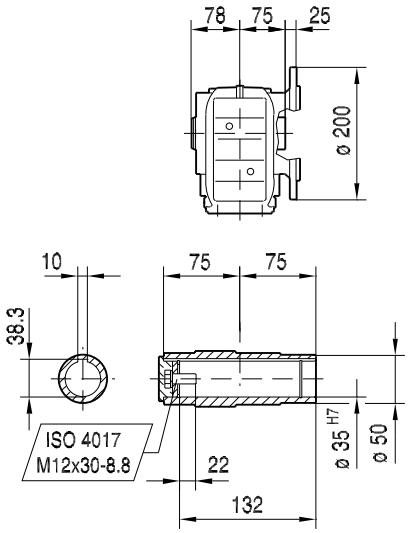

KHF47..

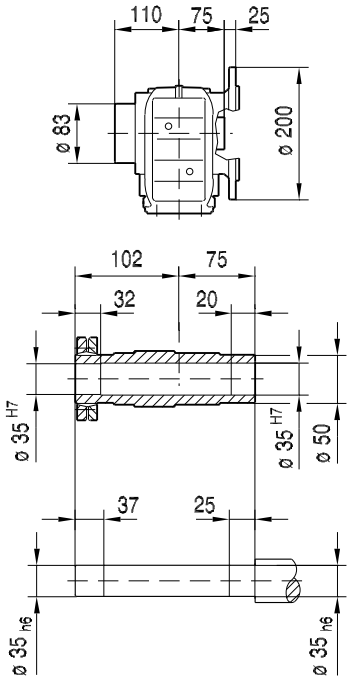

KVF47..

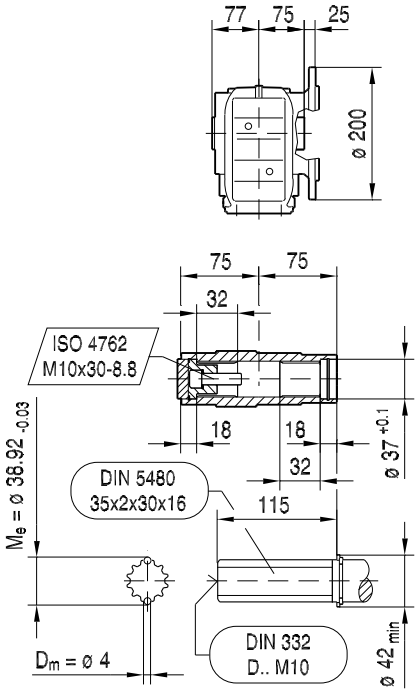

(→ 🗎 176)	DR71S	DR71M	DR80S	DR80M	DR90M	DR90L	DR100M	
AC	139	139	156	156	179	179	197	
AD	119	119	128	128	140	140	157	
ADS	129	129	139	139	150	150	158	
L	439	464	473	504	506	526	556	
LS	507	532	554	585	599	619	649	
LB	196	221	230	261	263	283	313	
LBS	264	289	311	342	356	376	406	

19391609/DE – 06/2017

33 037 00 17

KA47..

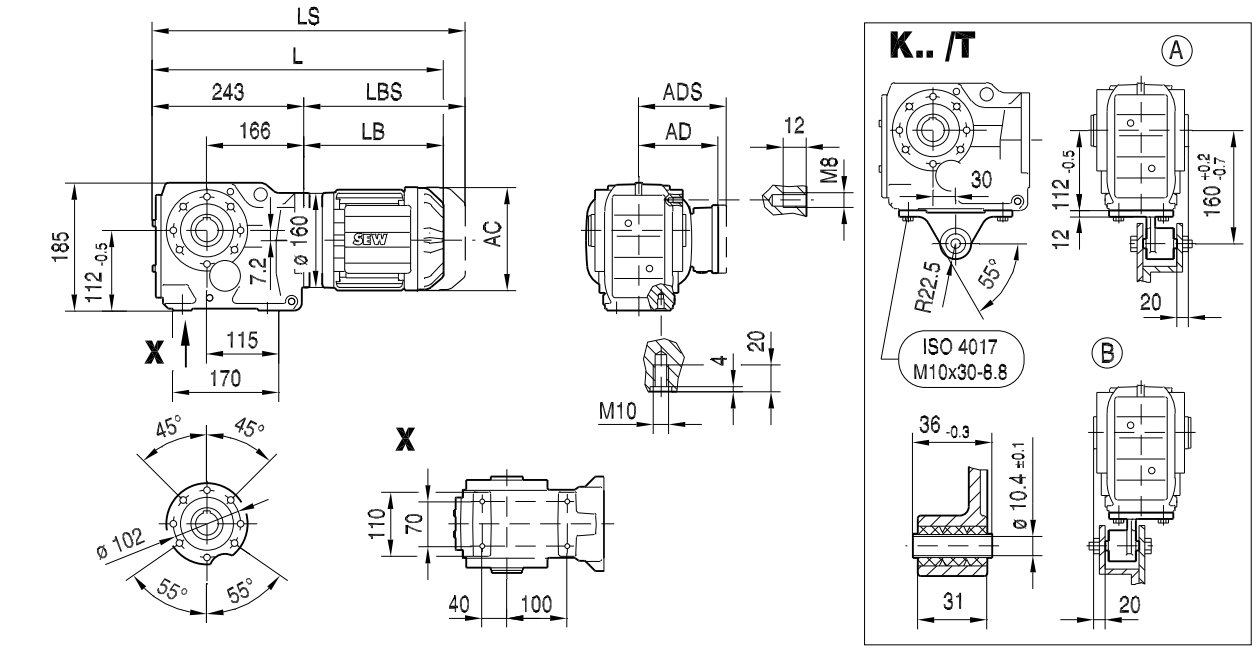

KA47..

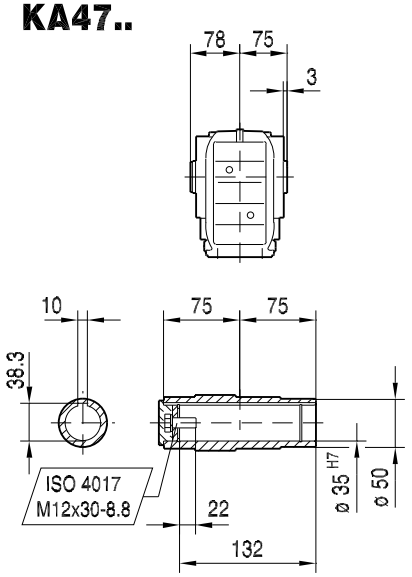

KH47..

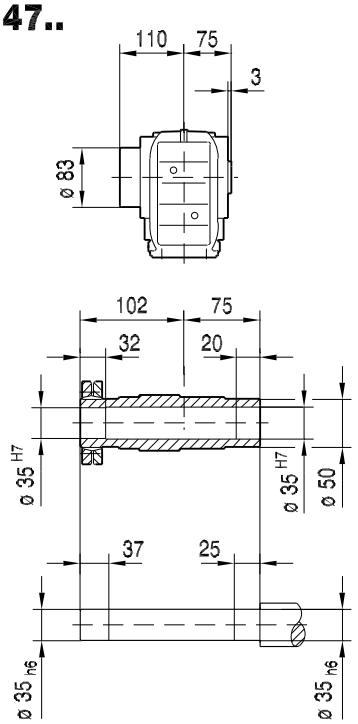

KV47..

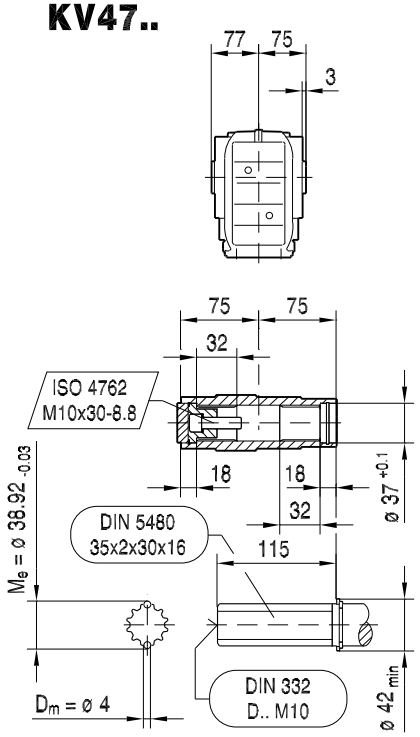

(→ 🗎 176)	DR71S	DR71M	DR80S	DR80M	DR90M	DR90L	DR100M	
AC	139	139	156	156	179	179	197	
AD	119	119	128	128	140	140	157	
ADS	129	129	139	139	150	150	158	
L	439	464	473	504	506	526	556	
LS	507	532	554	585	599	619	649	
LB	196	221	230	261	263	283	313	
LBS	264	289	311	342	356	376	406	

19391609/DE – 06/2017

33 038 00 17

KAZ47..

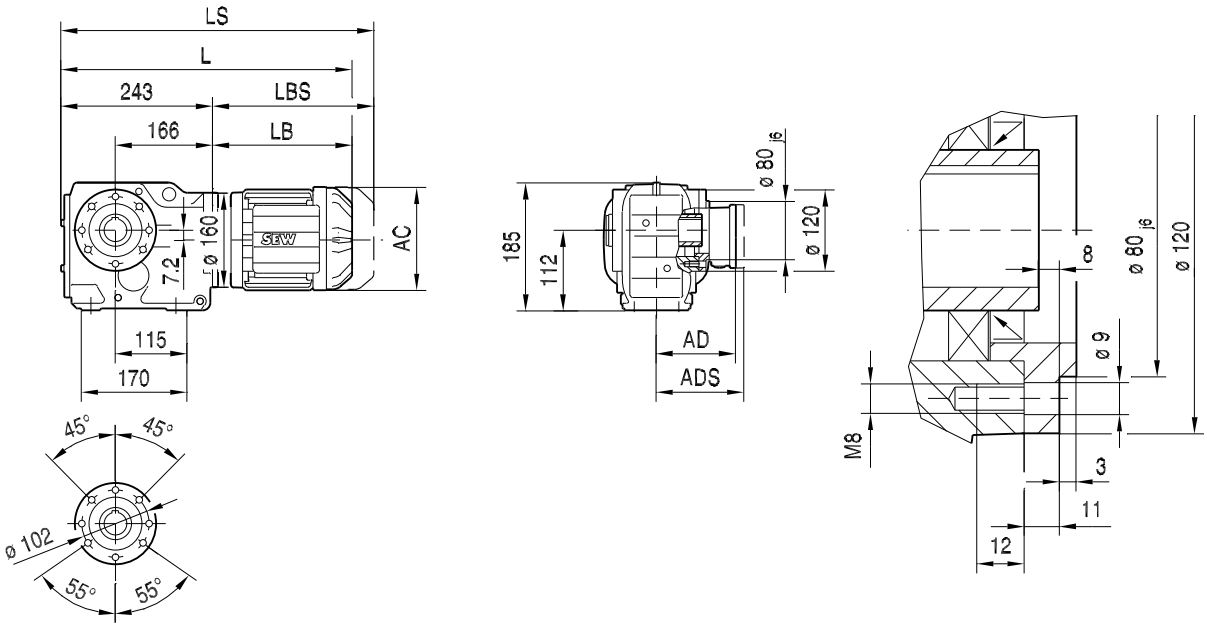

KAZ47..

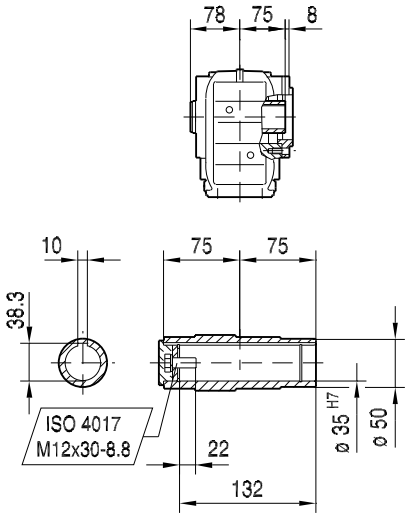

KHZ47..

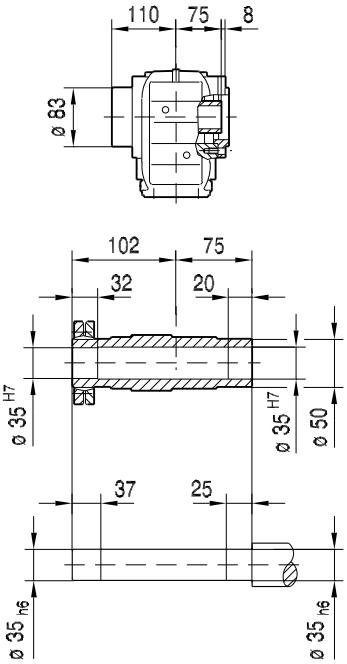

KVZ47..

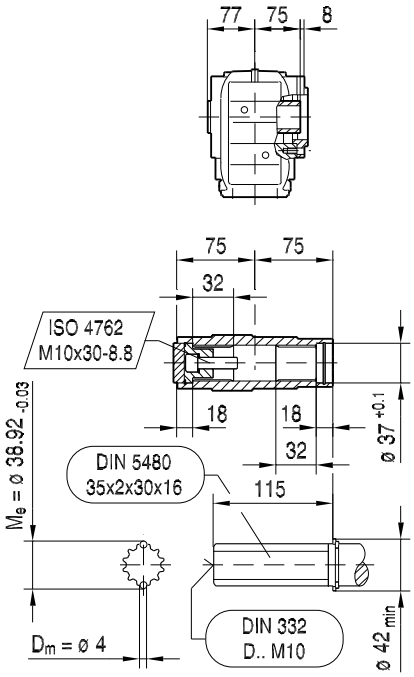

(→ 🗎 176)	DR71S	DR71M	DR80S	DR80M	DR90M	DR90L	DR100M	
AC	139	139	156	156	179	179	197	
AD	119	119	128	128	140	140	157	
ADS	129	129	139	139	150	150	158	
L	439	464	473	504	506	526	556	
LS	507	532	554	585	599	619	649	
LB	196	221	230	261	263	283	313	
LBS	264	289	311	342	356	376	406	

19391609/DE – 06/2017

KZ47..

33 039 00 17

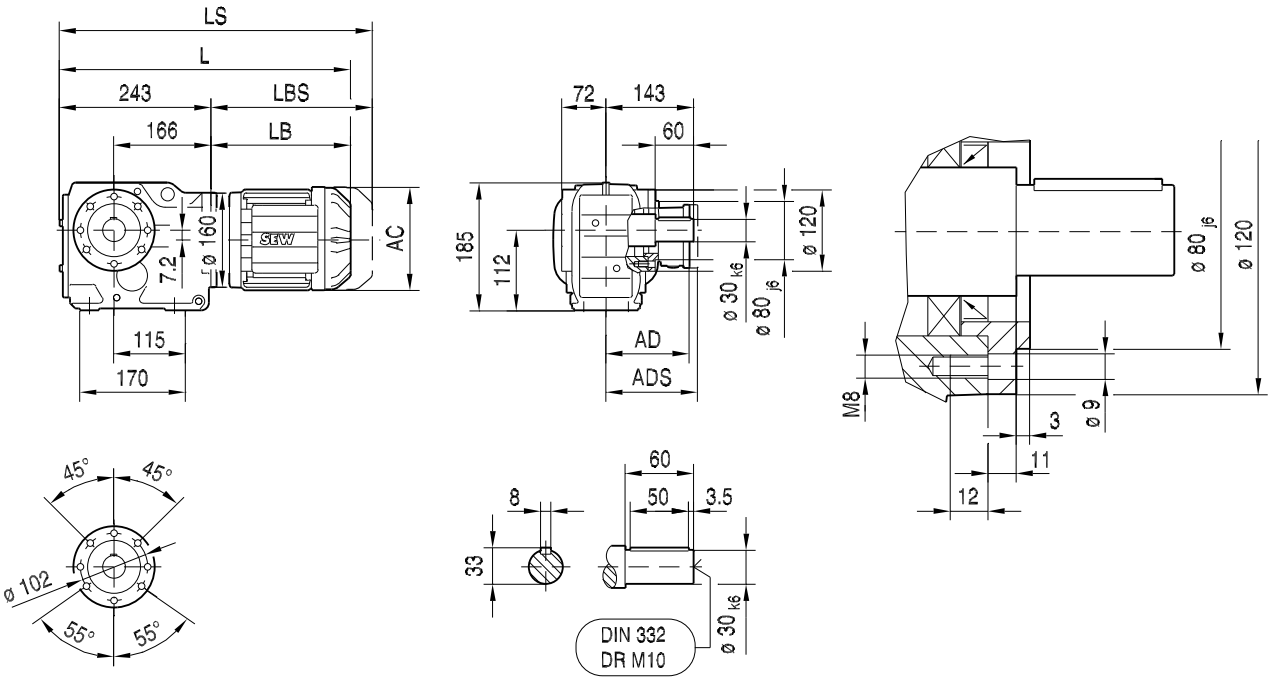

(→ 🗎 176)	DR71S	DR71M	DR80S	DR80M	DR90M	DR90L	DR100M	
AC	139	139	156	156	179	179	197	
AD	119	119	128	128	140	140	157	
ADS	129	129	139	139	150	150	158	
L	439	464	473	504	506	526	556	
LS	507	532	554	585	599	619	649	
LB	196	221	230	261	263	283	313	
LBS	264	289	311	342	356	376	406	

19391609/DE – 06/2017

KT47..

33 040 00 17

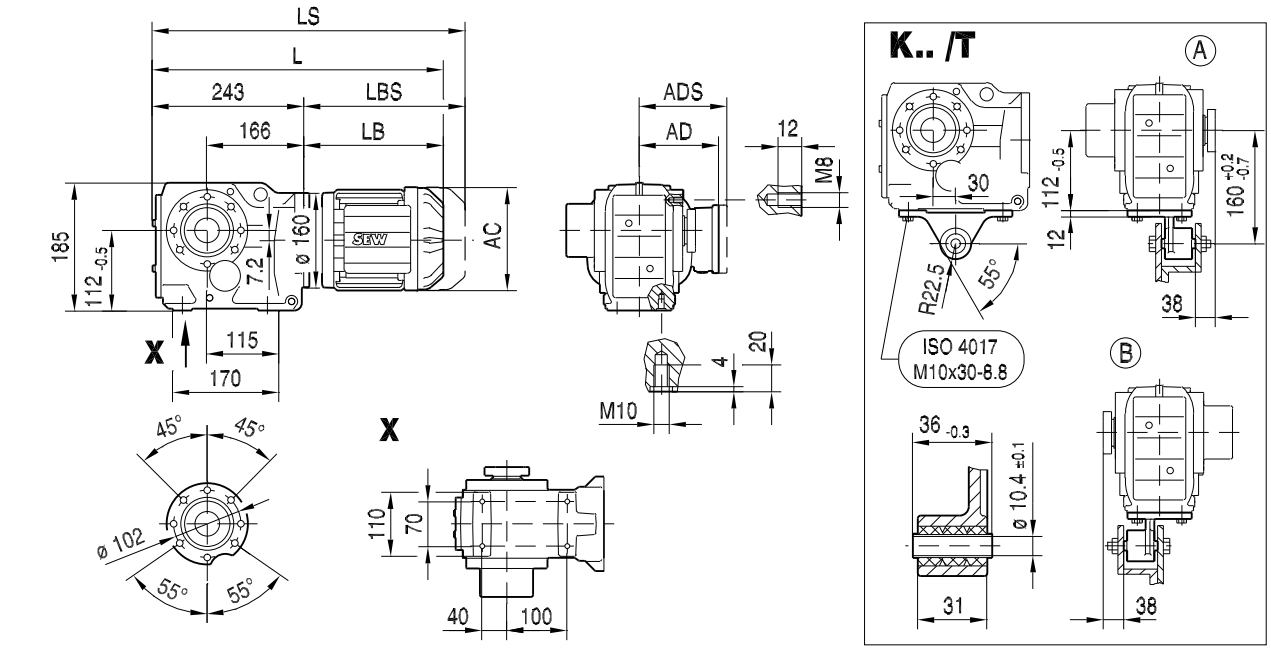

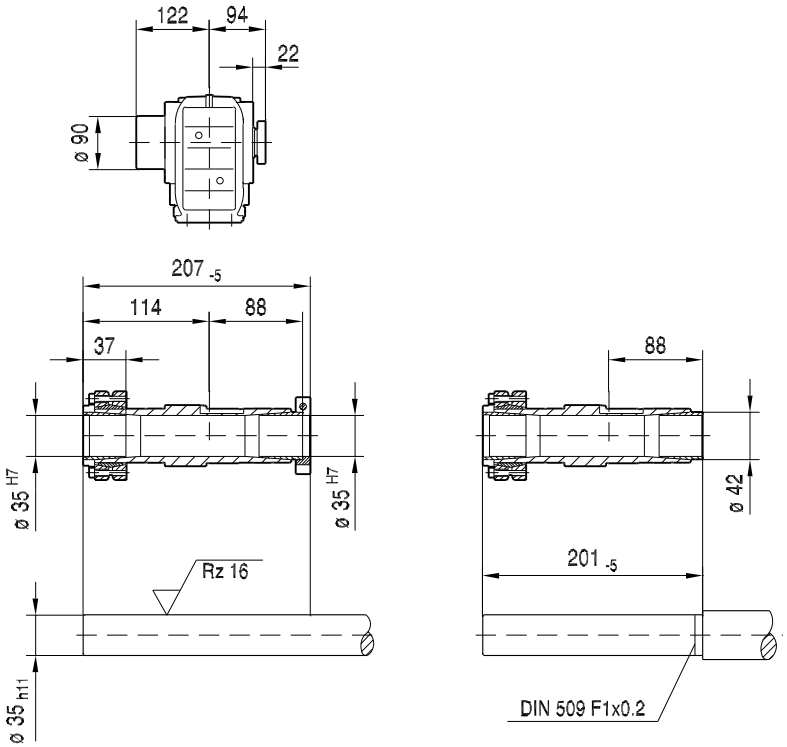

(→ 🗎 176)	DR71S	DR71M	DR80S	DR80M	DR90M	DR90L	DR100M	
AC	139	139	156	156	179	179	197	
AD	119	119	128	128	140	140	157	
ADS	129	129	139	139	150	150	158	
L	439	464	473	504	506	526	556	
LS	507	532	554	585	599	619	649	
LB	196	221	230	261	263	283	313	
LBS	264	289	311	342	356	376	406	

19391609/DE – 06/2017

K49..

33 041 00 17

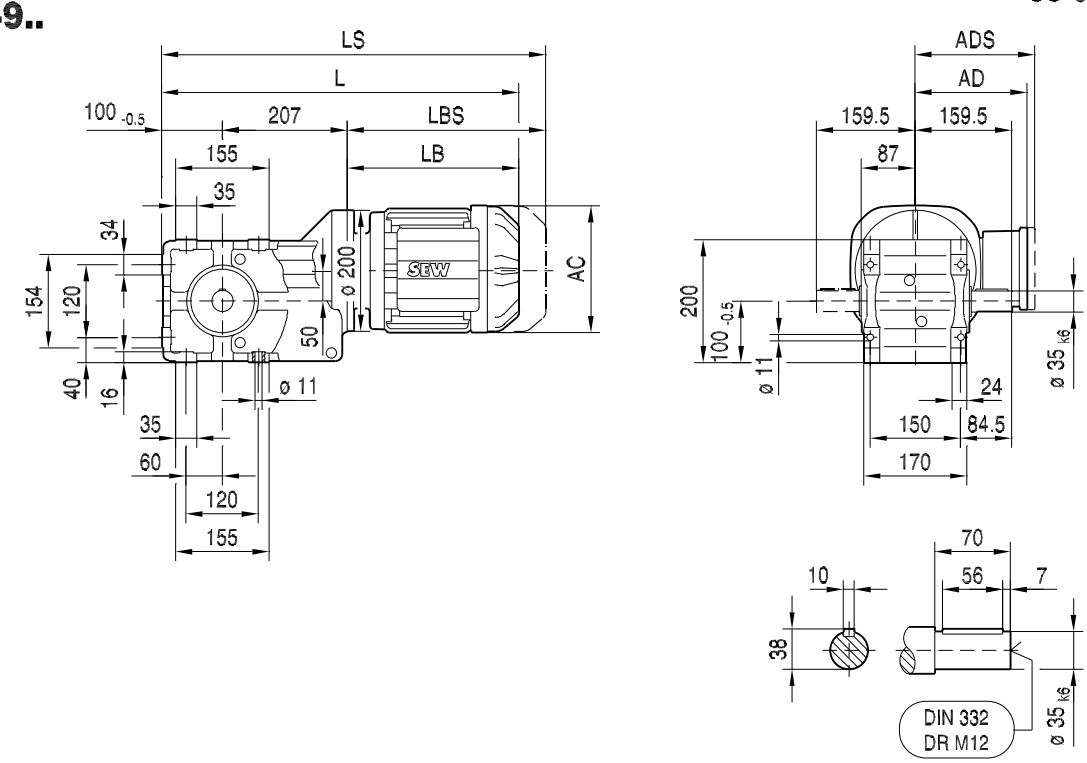

(→ 🗎 176)	DR71S	DR71M	DR80S	DR80M	DR90M	DR90L	DR100M	DR100L/LC
AC	139	139	156	156	179	179	197	197
AD	119	119	128	128	140	140	157	157
ADS	129	129	139	139	150	150	158	158
L	496	521	530	561	563	583	613	643
LS	564	589	611	642	656	676	706	736
LB	189	214	223	254	256	276	306	336
LBS	257	282	304	335	349	369	399	429

19391609/DE – 06/2017

33 042 00 17

KF49..

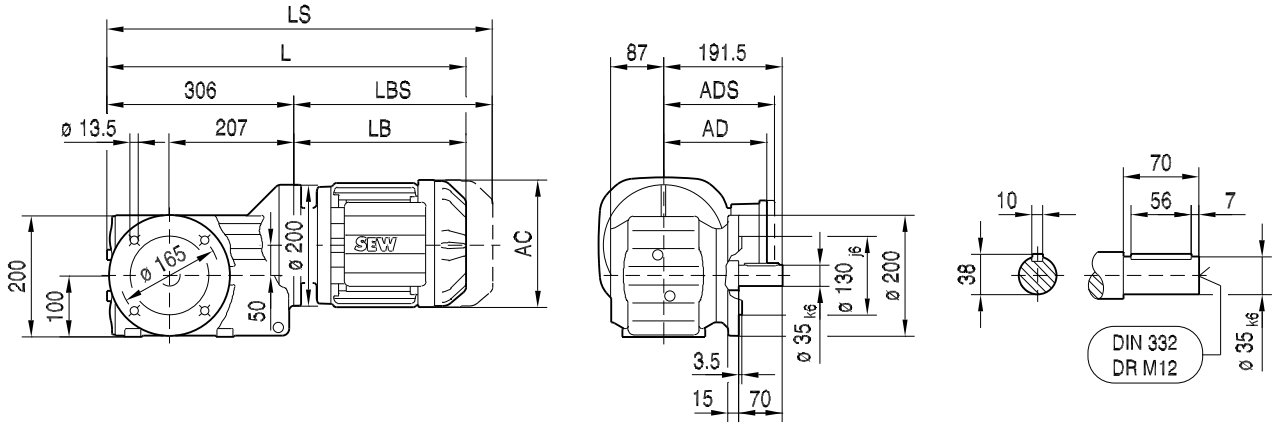

KAF49..

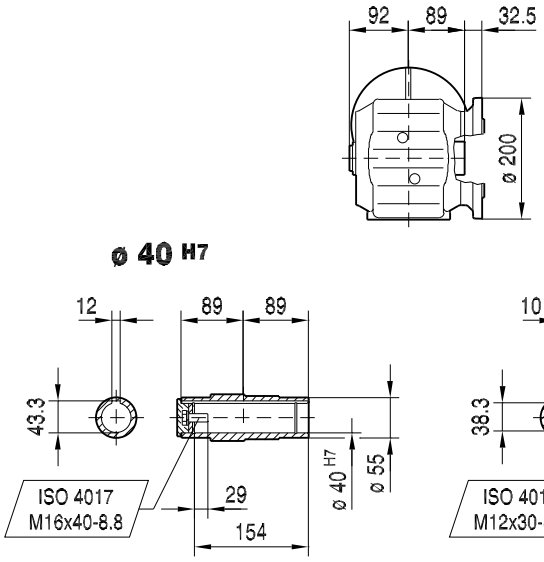

KHF49..

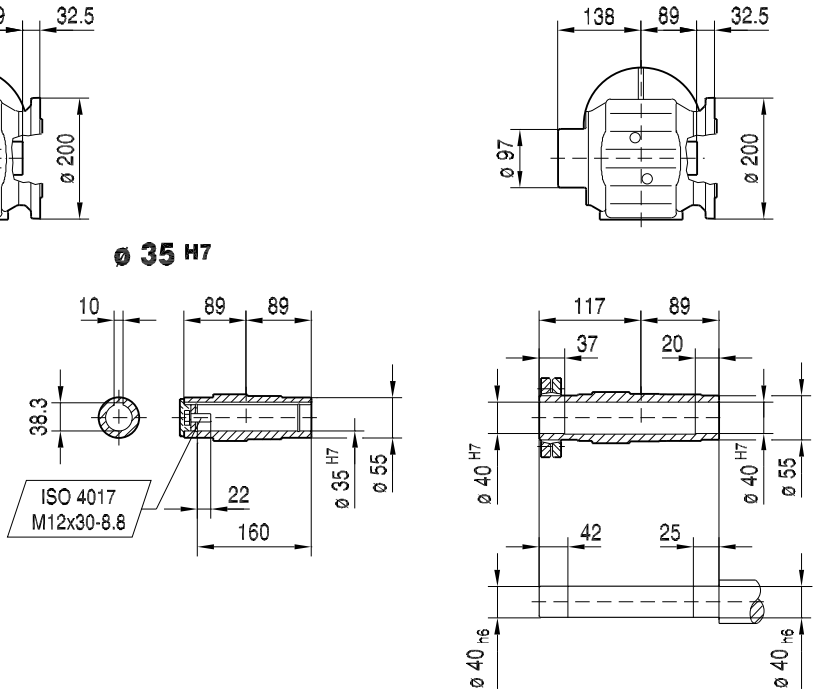

(→ 🗎 176)	DR71S	DR71M	DR80S	DR80M	DR90M	DR90L	DR100M	DR100L/LC
AC	139	139	156	156	179	179	197	197
AD	119	119	128	128	140	140	157	157
ADS	129	129	139	139	150	150	158	158
L	495	520	529	560	562	582	612	642
LS	563	588	610	641	655	675	705	735
LB	189	214	223	254	256	276	306	336
LBS	257	282	304	335	349	369	399	429

19391609/DE – 06/2017

33 043 00 17

KA49..

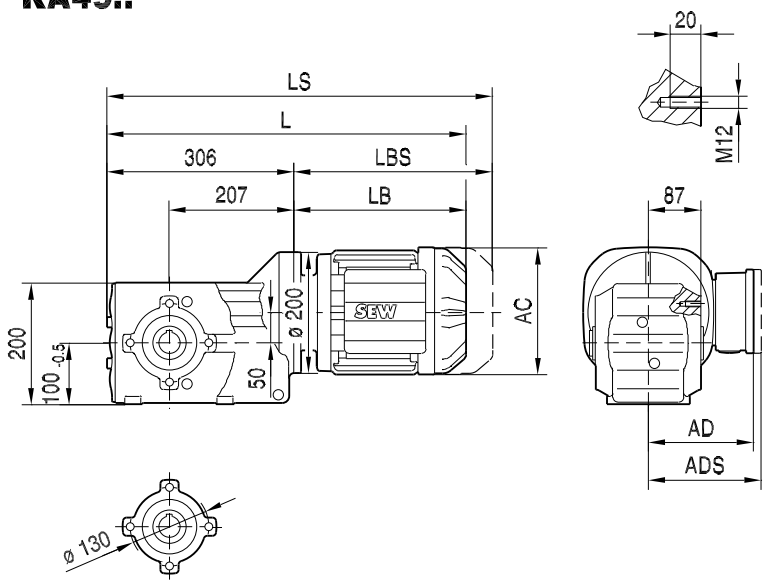

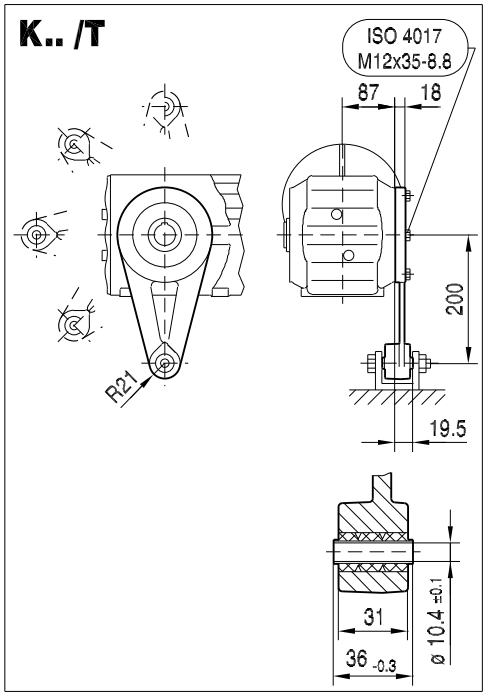

KA49..

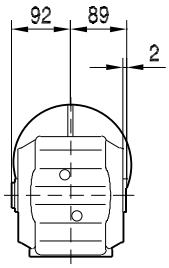

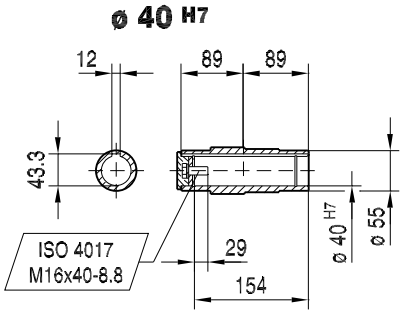

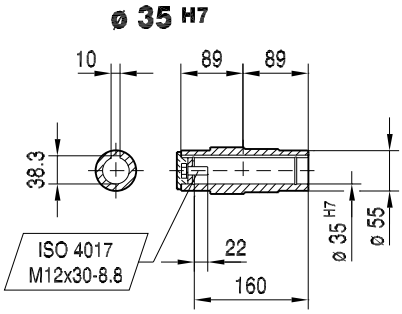

KH49..

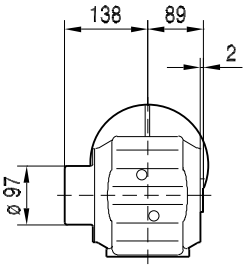

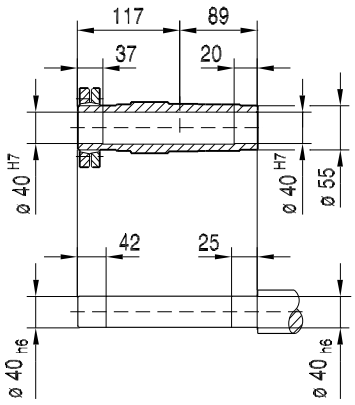

(→ 🗎 176)	DR71S	DR71M	DR80S	DR80M	DR90M	DR90L	DR100M	DR100L/LC
AC	139	139	156	156	179	179	197	197
AD	119	119	128	128	140	140	157	157
ADS	129	129	139	139	150	150	158	158
L	495	520	529	560	562	582	612	642
LS	563	588	610	641	655	675	705	735
LB	189	214	223	254	256	276	306	336
LBS	257	282	304	335	349	369	399	429

19391609/DE – 06/2017

33 044 00 17

KT49..

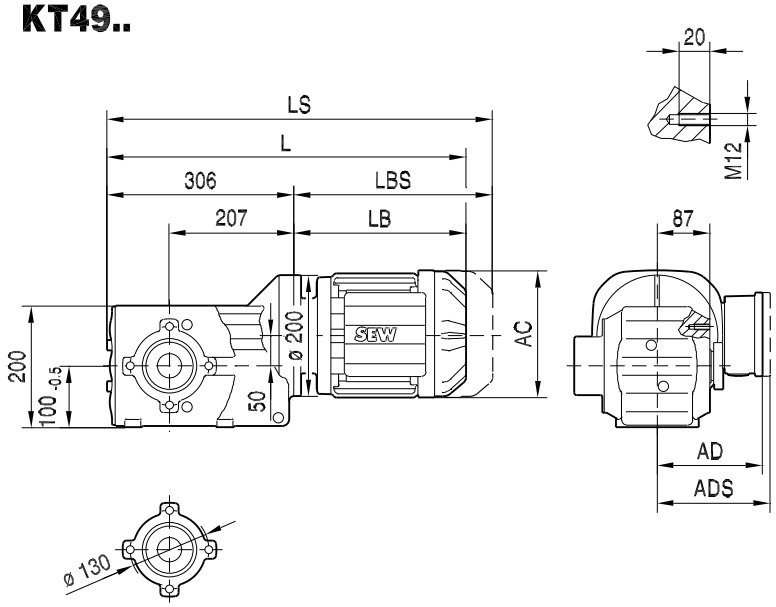

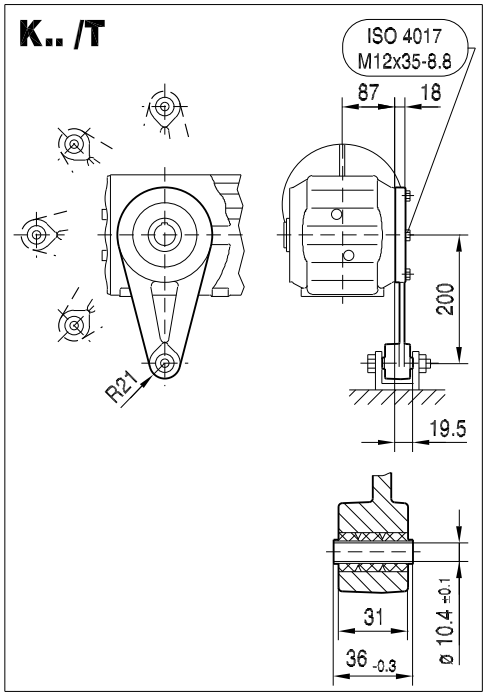

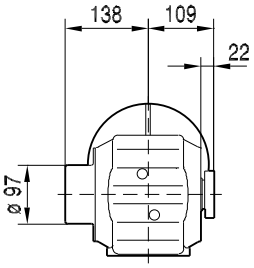

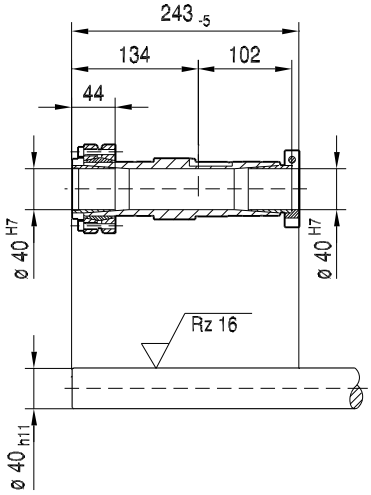

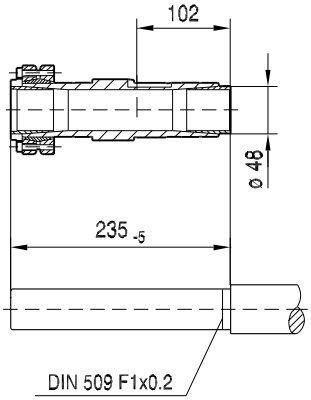

(→ 🗎 176)	DR71S	DR71M	DR80S	DR80M	DR90M	DR90L	DR100M	DR100L/LC
AC	139	139	156	156	179	179	197	197
AD	119	119	128	128	140	140	157	157
ADS	129	129	139	139	150	150	158	158
L	495	520	529	560	562	582	612	642
LS	563	588	610	641	655	675	705	735
LB	189	214	223	254	256	276	306	336
LBS	257	282	304	335	349	369	399	429

19391609/DE – 06/2017

33 045 00 17

K57..

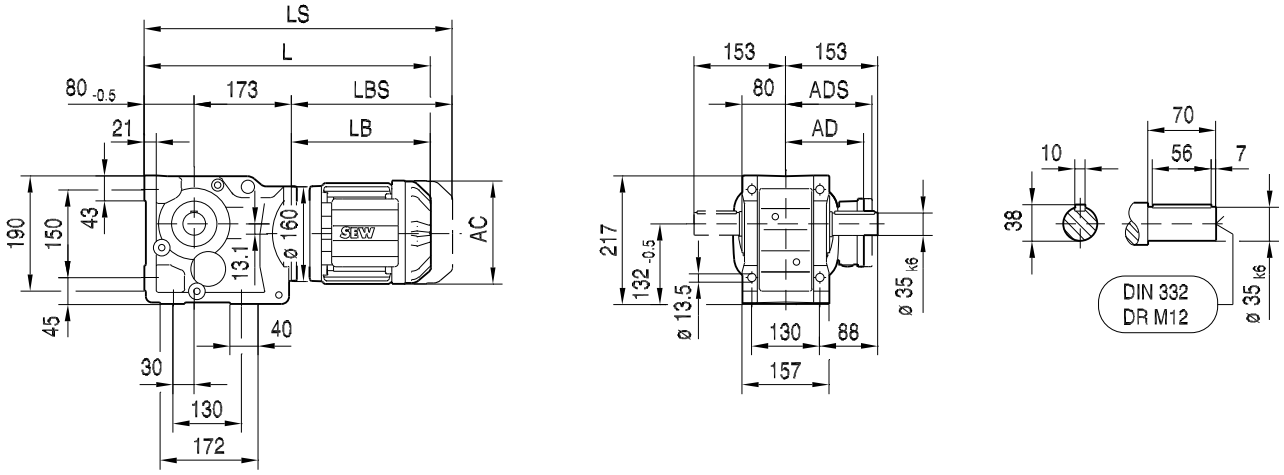

KA57B..

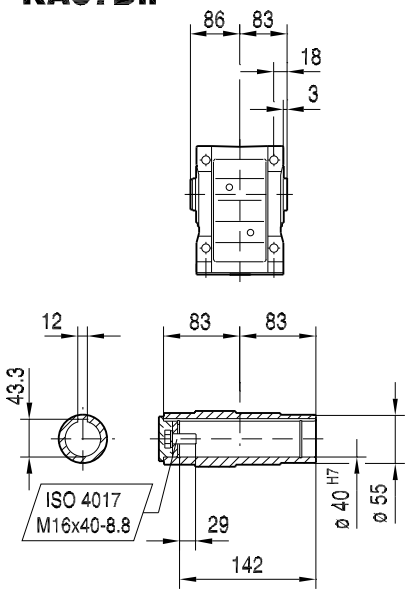

KH57B..

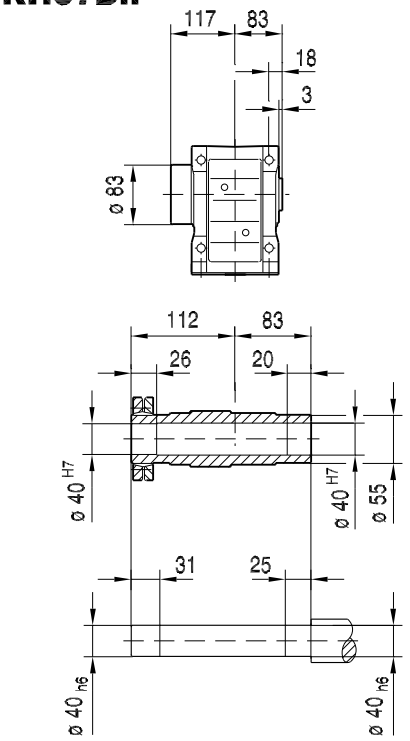

KV57B..

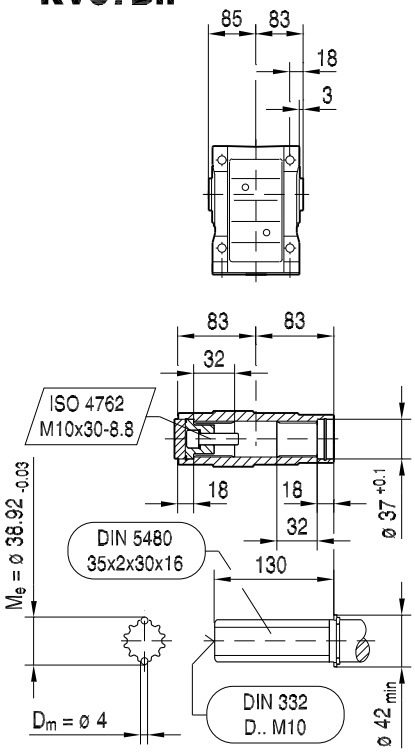

(→ 🗎 176)	DR71S	DR71M	DR80S	DR80M	DR90M	DR90L	DR100M	
AC	139	139	156	156	179	179	197	
AD	119	119	128	128	140	140	157	
ADS	129	129	139	139	150	150	158	
L	449	474	483	514	516	536	566	
LS	517	542	564	595	609	629	659	
LB	196	221	230	261	263	283	313	
LBS	264	289	311	342	356	376	406	

19391609/DE – 06/2017

33 046 00 17

KF57..

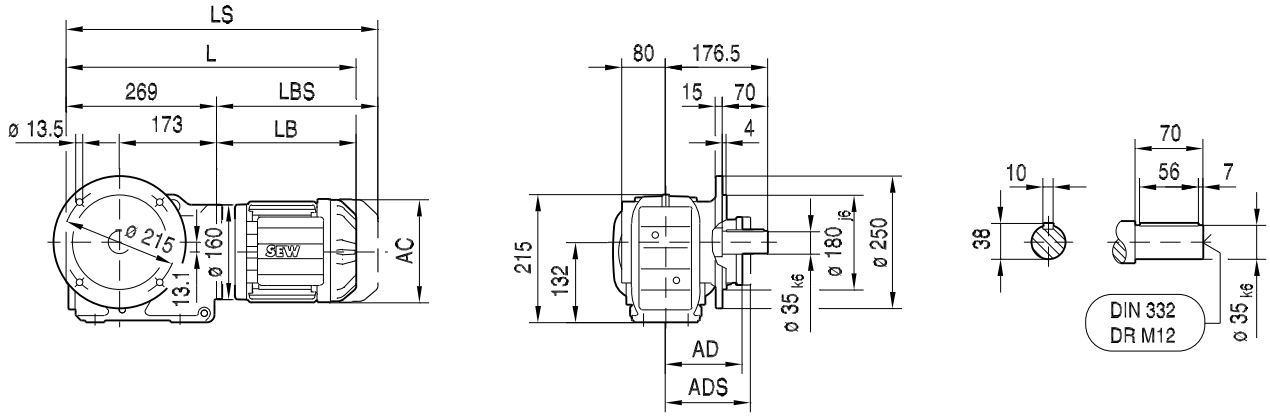

KAF57..

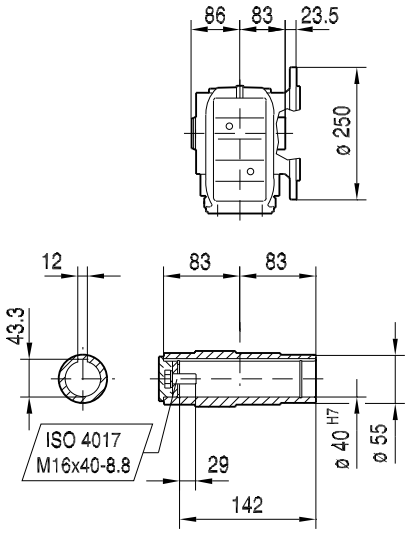

KHF57..

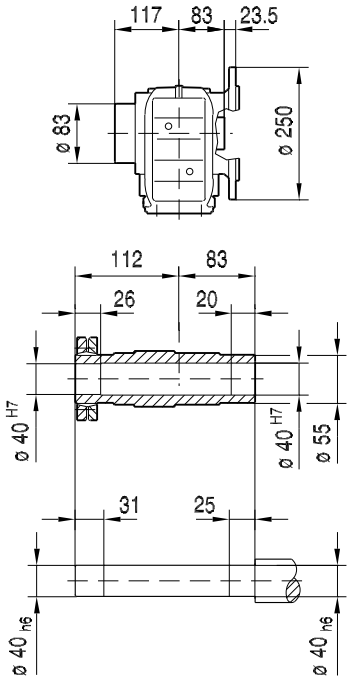

KVF57..

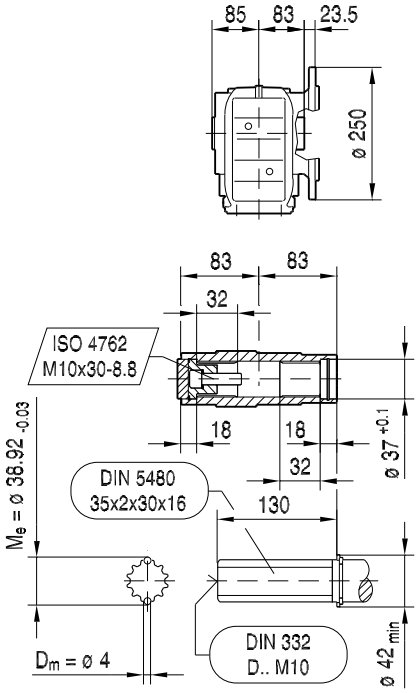

(→ 🗎 176)	DR71S	DR71M	DR80S	DR80M	DR90M	DR90L	DR100M	
AC	139	139	156	156	179	179	197	
AD	119	119	128	128	140	140	157	
ADS	129	129	139	139	150	150	158	
L	465	490	499	530	532	552	582	
LS	533	558	580	611	625	645	675	
LB	196	221	230	261	263	283	313	
LBS	264	289	311	342	356	376	406	

19391609/DE – 06/2017

33 047 00 17

KA57..

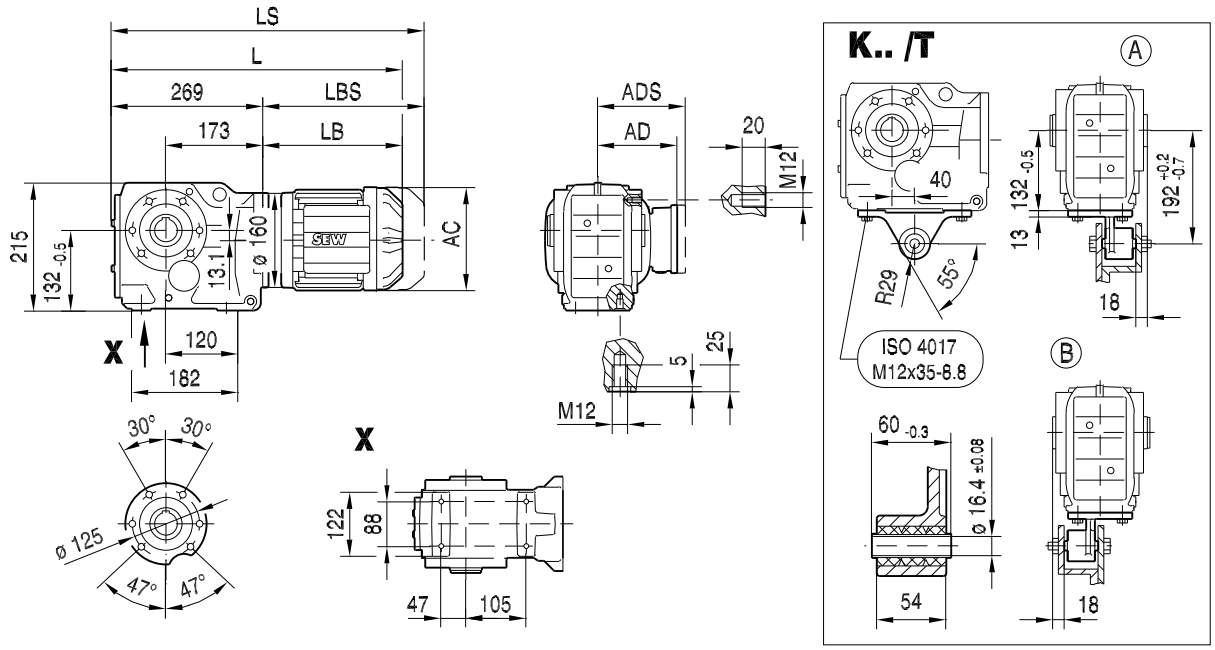

KA57..

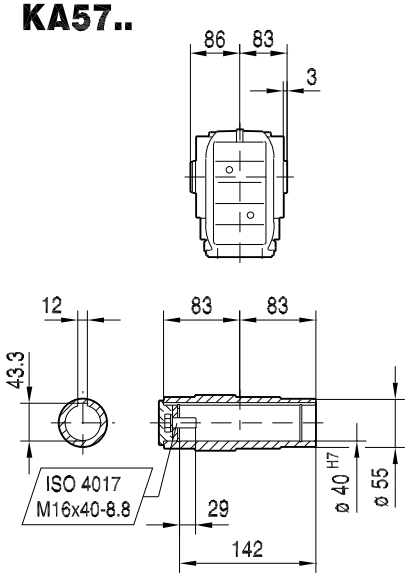

KH57..

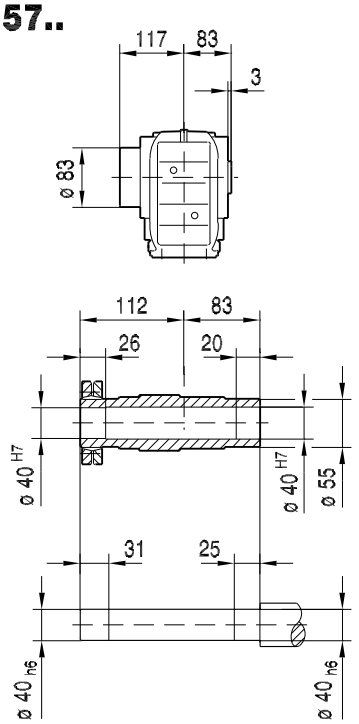

KV57..

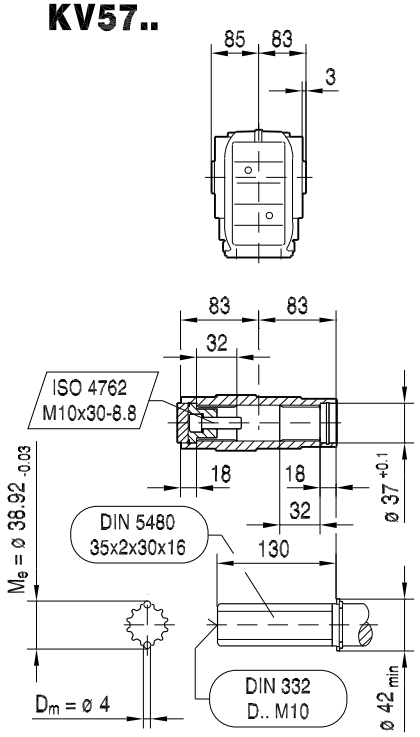

(→ 🗎 176)	DR71S	DR71M	DR80S	DR80M	DR90M	DR90L	DR100M	
AC	139	139	156	156	179	179	197	
AD	119	119	128	128	140	140	157	
ADS	129	129	139	139	150	150	158	
L	465	490	499	530	532	552	582	
LS	533	558	580	611	625	645	675	
LB	196	221	230	261	263	283	313	
LBS	264	289	311	342	356	376	406	

19391609/DE – 06/2017

33 048 00 17

KAZ57..

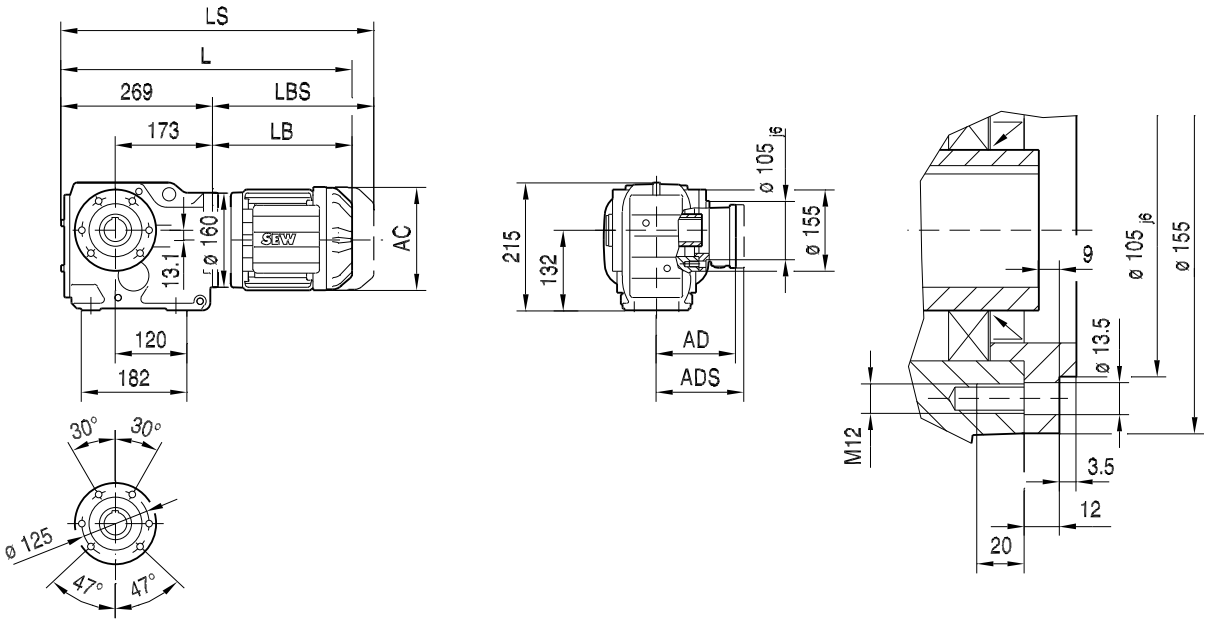

KAZ57..

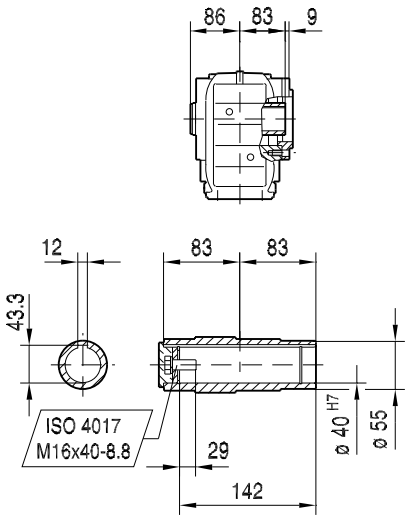

KHZ57..

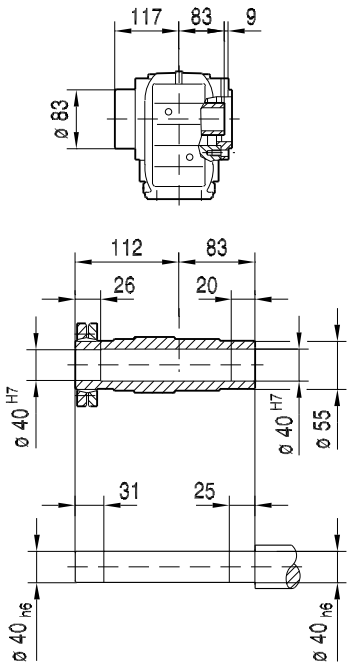

KVZ57..

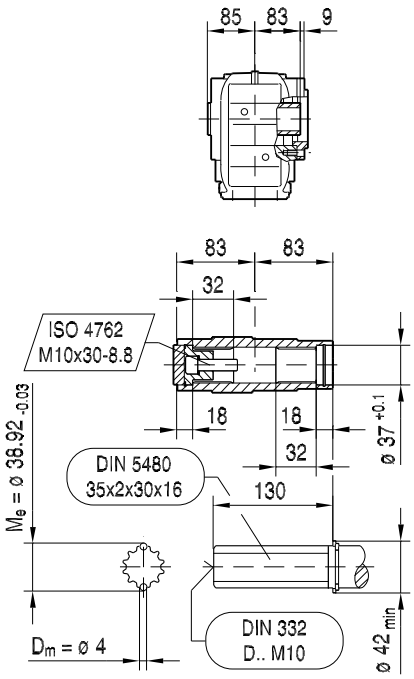

(→ 🗎 176)	DR71S	DR71M	DR80S	DR80M	DR90M	DR90L	DR100M	
AC	139	139	156	156	179	179	197	
AD	119	119	128	128	140	140	157	
ADS	129	129	139	139	150	150	158	
L	465	490	499	530	532	552	582	
LS	533	558	580	611	625	645	675	
LB	196	221	230	261	263	283	313	
LBS	264	289	311	342	356	376	406	

19391609/DE – 06/2017

KZ57..

33 049 00 17

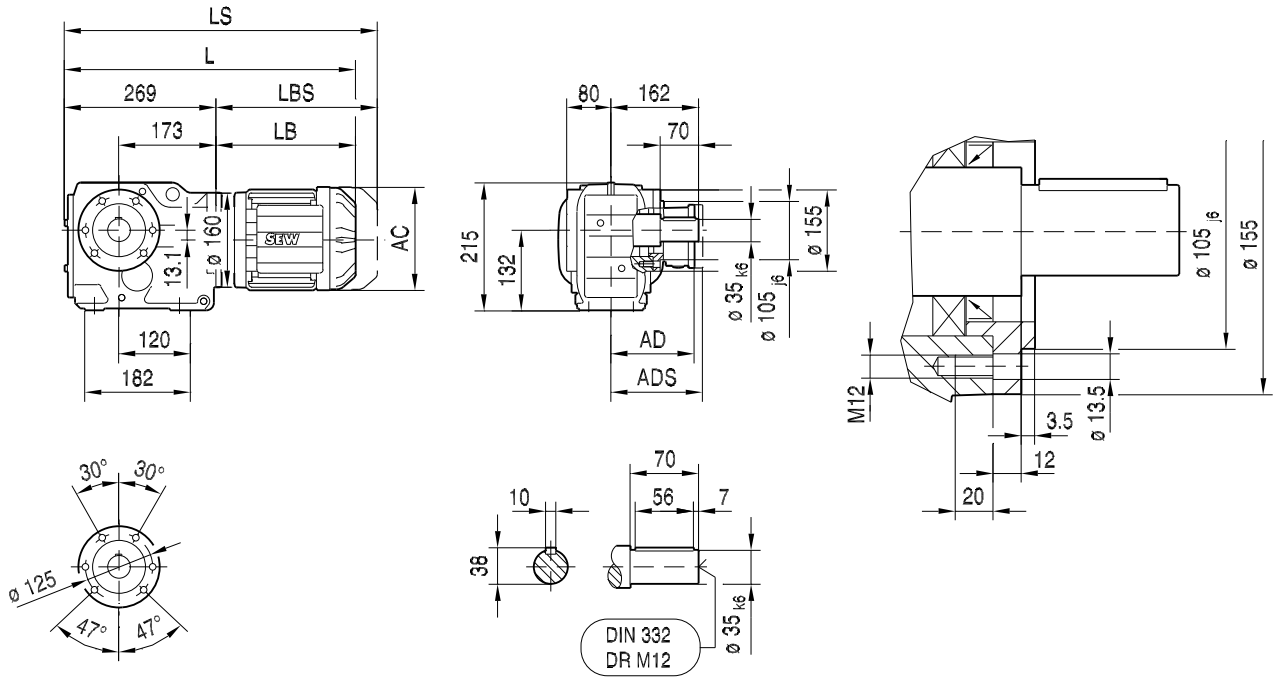

(→ 🗎 176)	DR71S	DR71M	DR80S	DR80M	DR90M	DR90L	DR100M	
AC	139	139	156	156	179	179	197	
AD	119	119	128	128	140	140	157	
ADS	129	129	139	139	150	150	158	
L	465	490	499	530	532	552	582	
LS	533	558	580	611	625	645	675	
LB	196	221	230	261	263	283	313	
LBS	264	289	311	342	356	376	406	

19391609/DE – 06/2017

KT57..

33 050 00 17

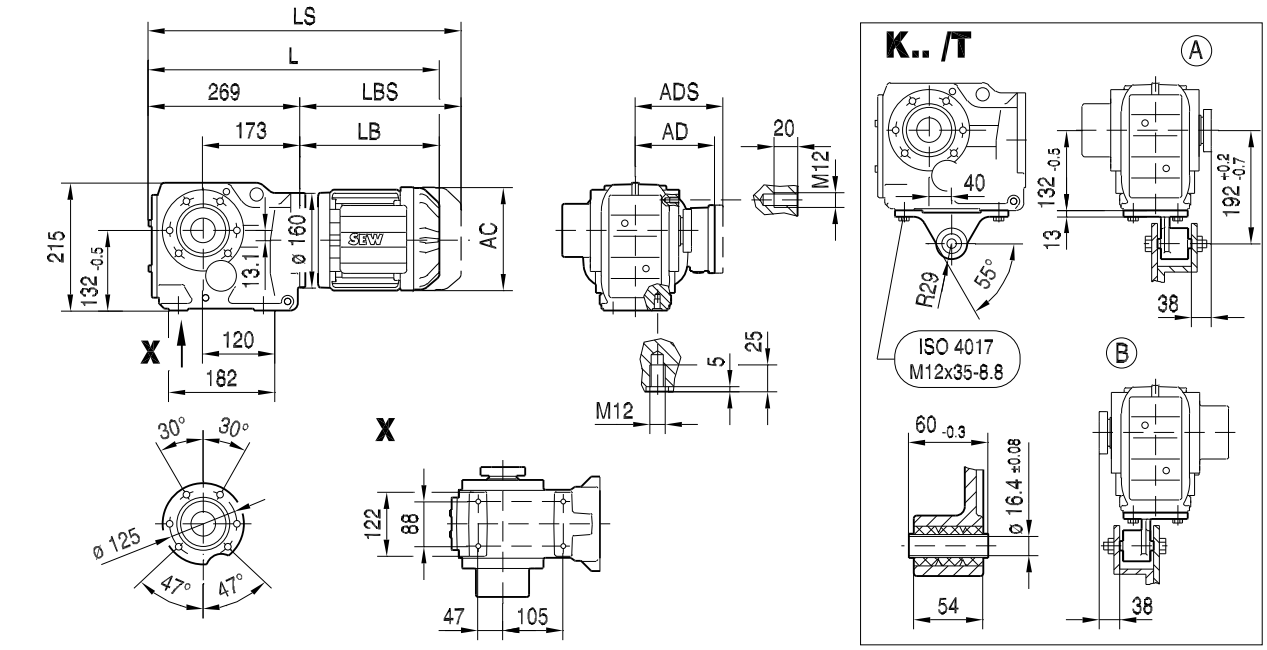

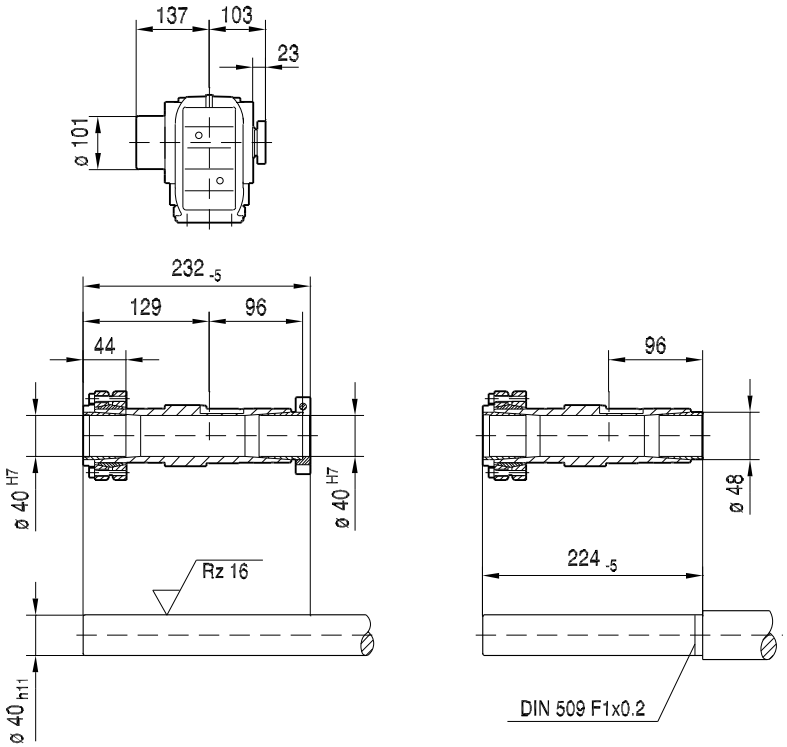

(→ 🗎 176)	DR71S	DR71M	DR80S	DR80M	DR90M	DR90L	DR100M	
AC	139	139	156	156	179	179	197	
AD	119	119	128	128	140	140	157	
ADS	129	129	139	139	150	150	158	
L	465	490	499	530	532	552	582	
LS	533	558	580	611	625	645	675	
LB	196	221	230	261	263	283	313	
LBS	264	289	311	342	356	376	406	

19391609/DE – 06/2017

33 051 00 17

K67..

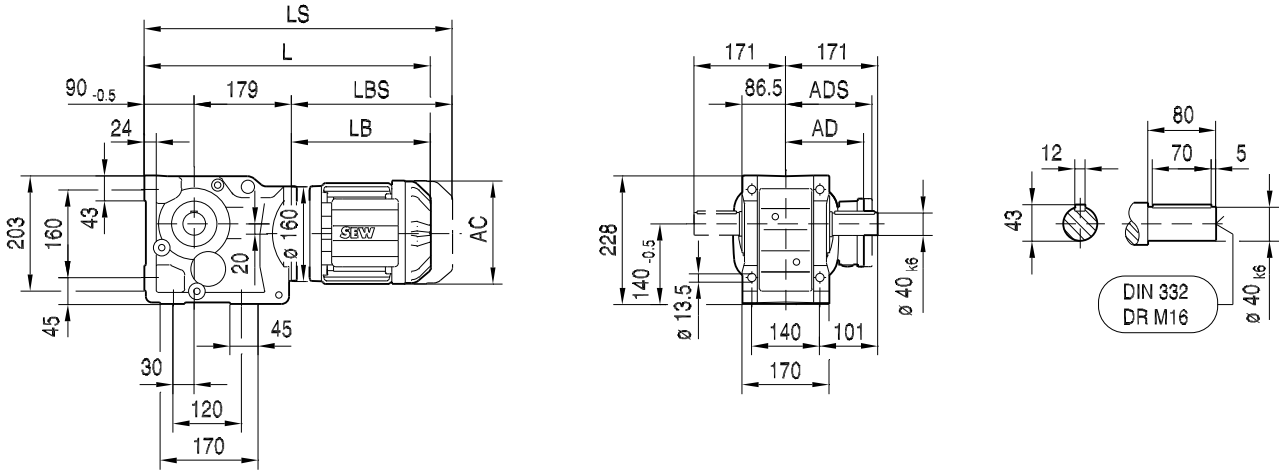

KA67B..

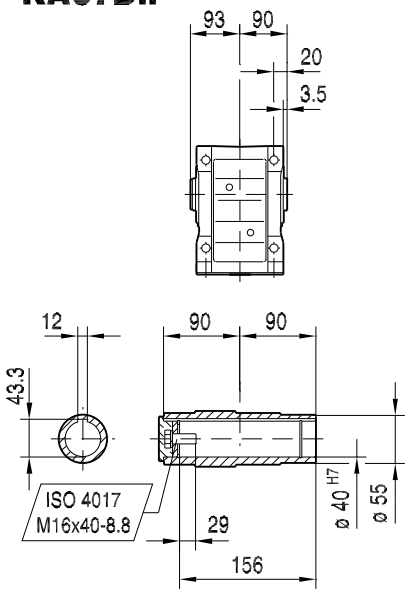

KH67B..

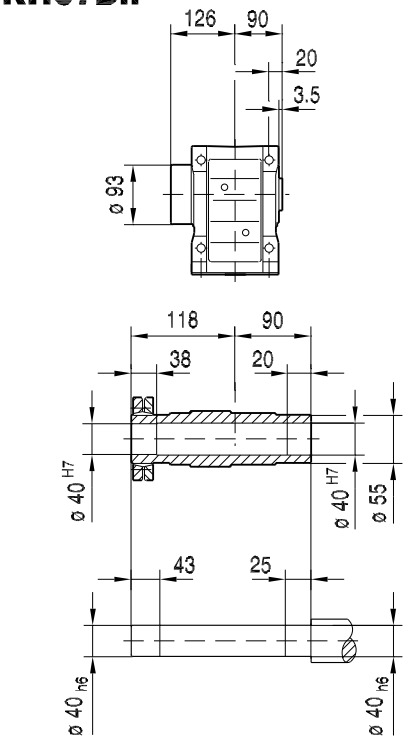

KV67B..

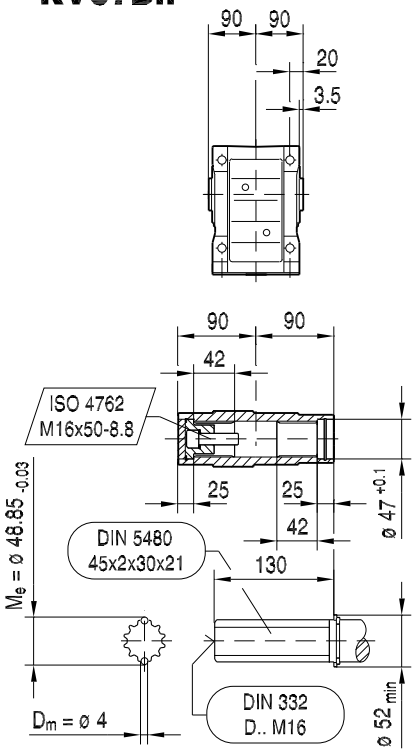

(→ 🗎 176)	DR71S	DR71M	DR80S	DR80M	DR90M	DR90L	DR100M	
AC	139	139	156	156	179	179	197	
AD	119	119	128	128	140	140	157	
ADS	129	129	139	139	150	150	158	
L	465	490	499	530	532	552	582	
LS	533	558	580	611	625	645	675	
LB	196	221	230	261	263	283	313	
LBS	264	289	311	342	356	376	406	

19391609/DE – 06/2017

33 052 00 17

KF67..

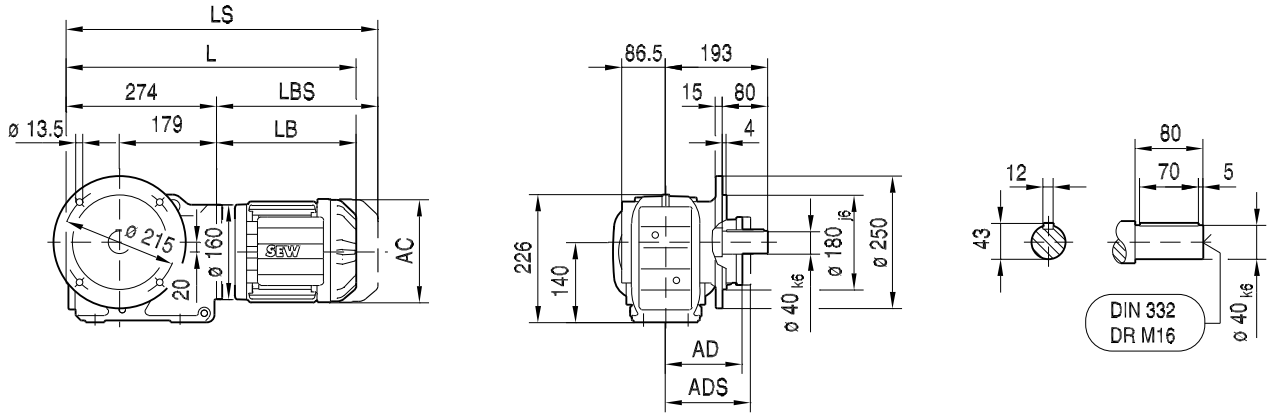

KAF67..

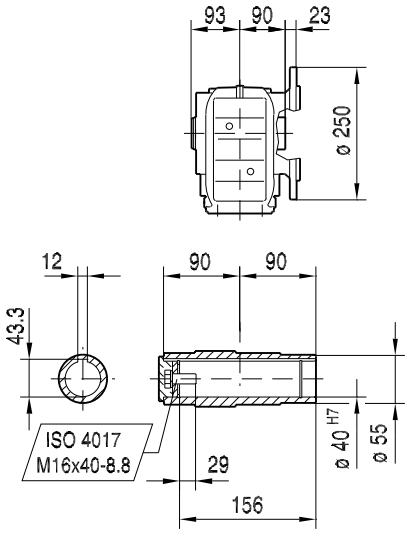

KHF67..

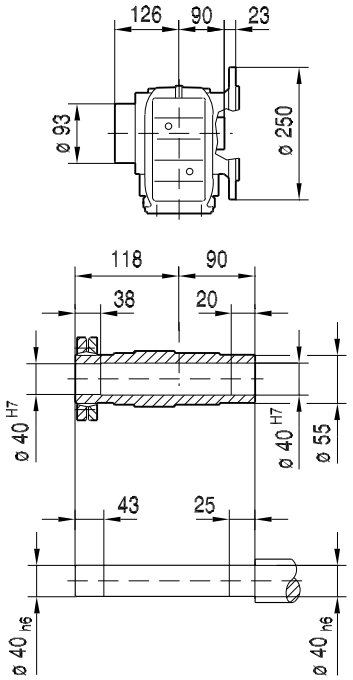

KVF67..

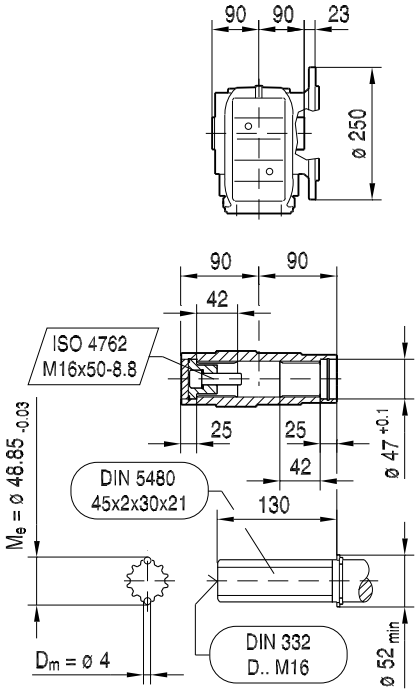

(→ 🗎 176)	DR71S	DR71M	DR80S	DR80M	DR90M	DR90L	DR100M	
AC	139	139	156	156	179	179	197	
AD	119	119	128	128	140	140	157	
ADS	129	129	139	139	150	150	158	
L	470	495	504	535	537	557	587	
LS	538	563	585	616	630	650	680	
LB	196	221	230	261	263	283	313	
LBS	264	289	311	342	356	376	406	

19391609/DE – 06/2017

33 053 00 17

KA67..

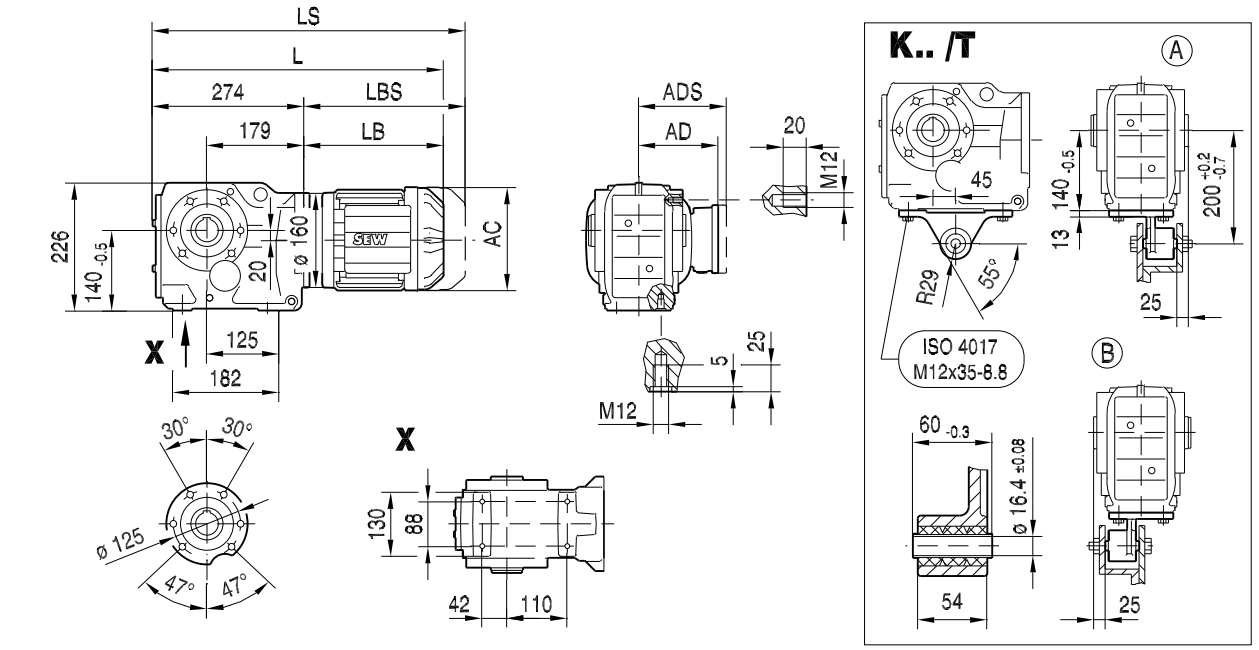

KA67..

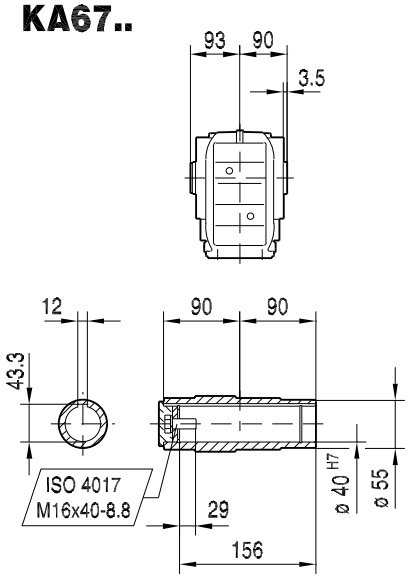

KH67..

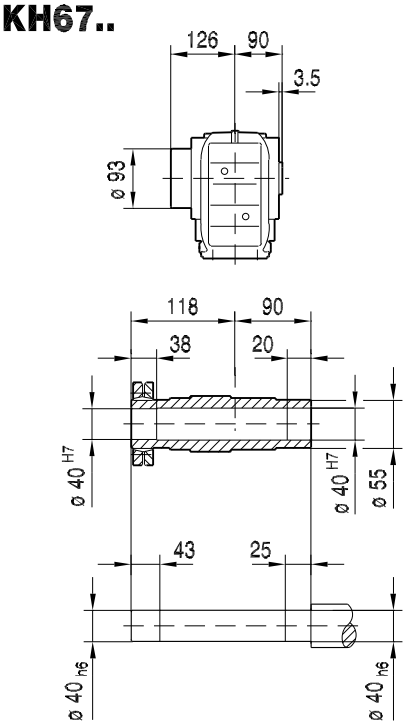

KV67..

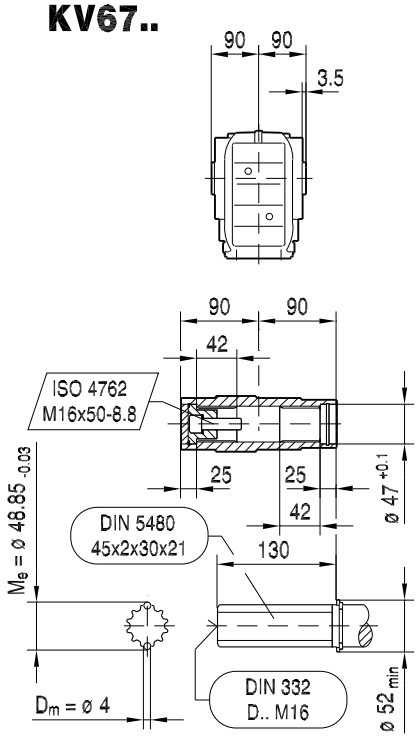

(→ 🗎 176)	DR71S	DR71M	DR80S	DR80M	DR90M	DR90L	DR100M	
AC	139	139	156	156	179	179	197	
AD	119	119	128	128	140	140	157	
ADS	129	129	139	139	150	150	158	
L	470	495	504	535	537	557	587	
LS	538	563	585	616	630	650	680	
LB	196	221	230	261	263	283	313	
LBS	264	289	311	342	356	376	406	

19391609/DE – 06/2017

33 054 00 17

KAZ67..

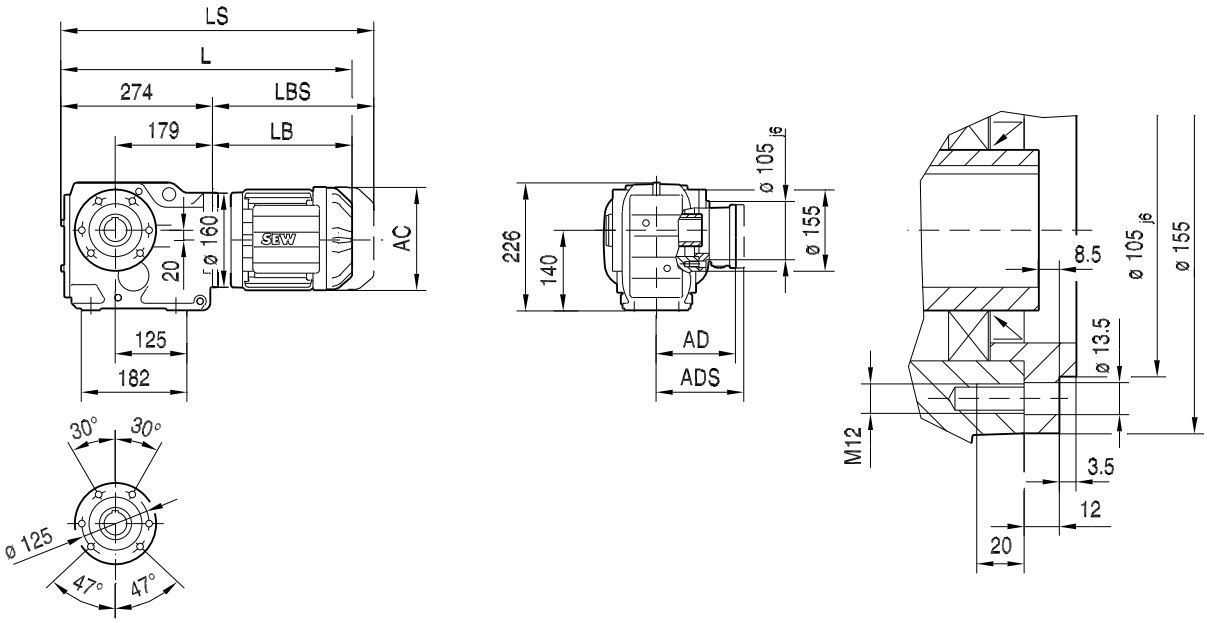

KAZ67..

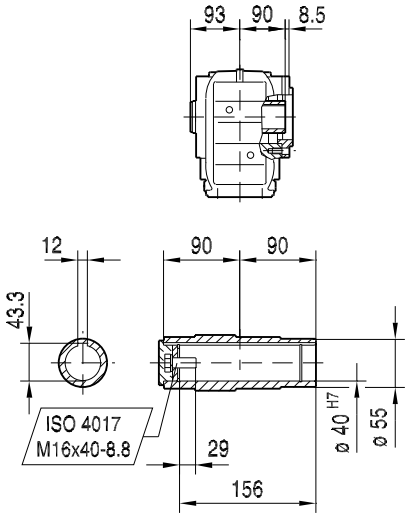

KHZ67..

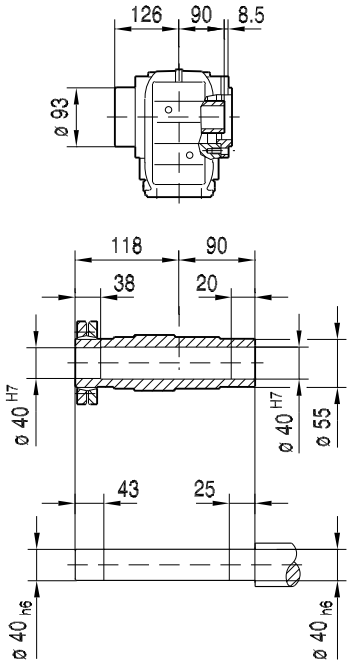

KVZ67..

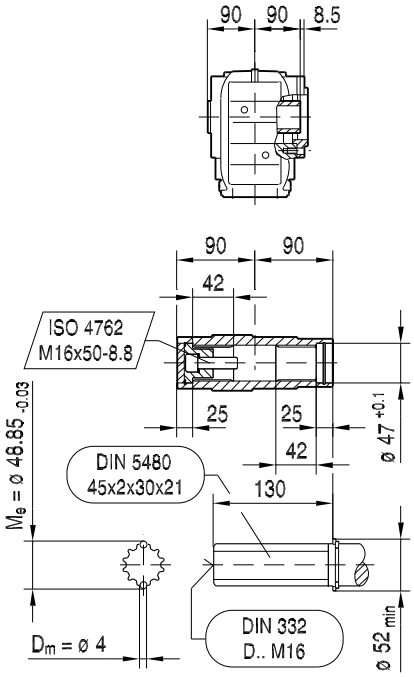

(→ 🗎 176)	DR71S	DR71M	DR80S	DR80M	DR90M	DR90L	DR100M	
AC	139	139	156	156	179	179	197	
AD	119	119	128	128	140	140	157	
ADS	129	129	139	139	150	150	158	
L	470	495	504	535	537	557	587	
LS	538	563	585	616	630	650	680	
LB	196	221	230	261	263	283	313	
LBS	264	289	311	342	356	376	406	

19391609/DE – 06/2017

KZ67..

33 055 00 17

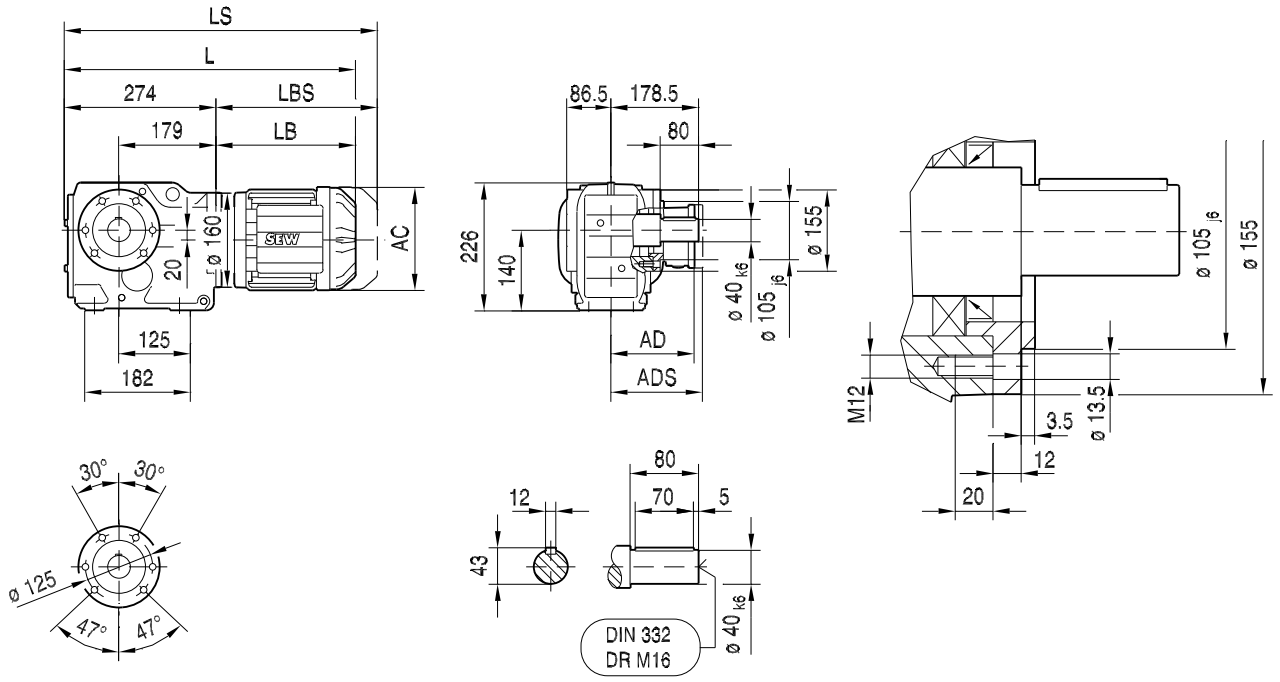

(→ 🗎 176)	DR71S	DR71M	DR80S	DR80M	DR90M	DR90L	DR100M	
AC	139	139	156	156	179	179	197	
AD	119	119	128	128	140	140	157	
ADS	129	129	139	139	150	150	158	
L	470	495	504	535	537	557	587	
LS	538	563	585	616	630	650	680	
LB	196	221	230	261	263	283	313	
LBS	264	289	311	342	356	376	406	

19391609/DE – 06/2017

KT67..

33 056 00 17

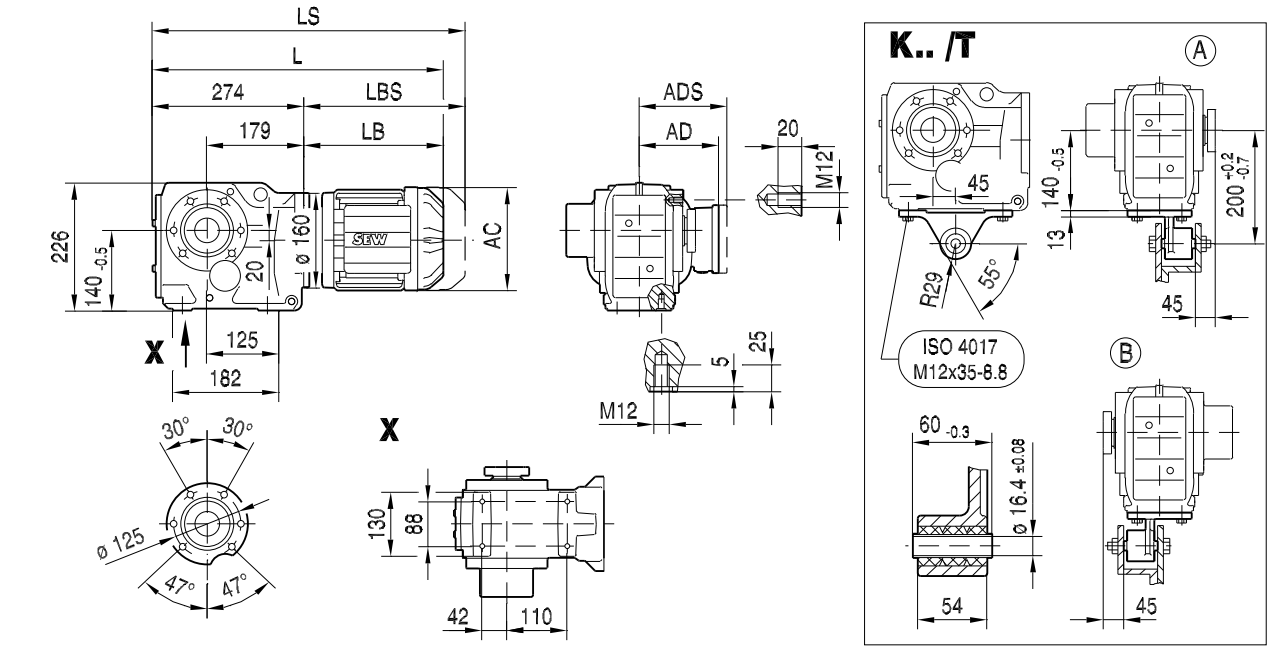

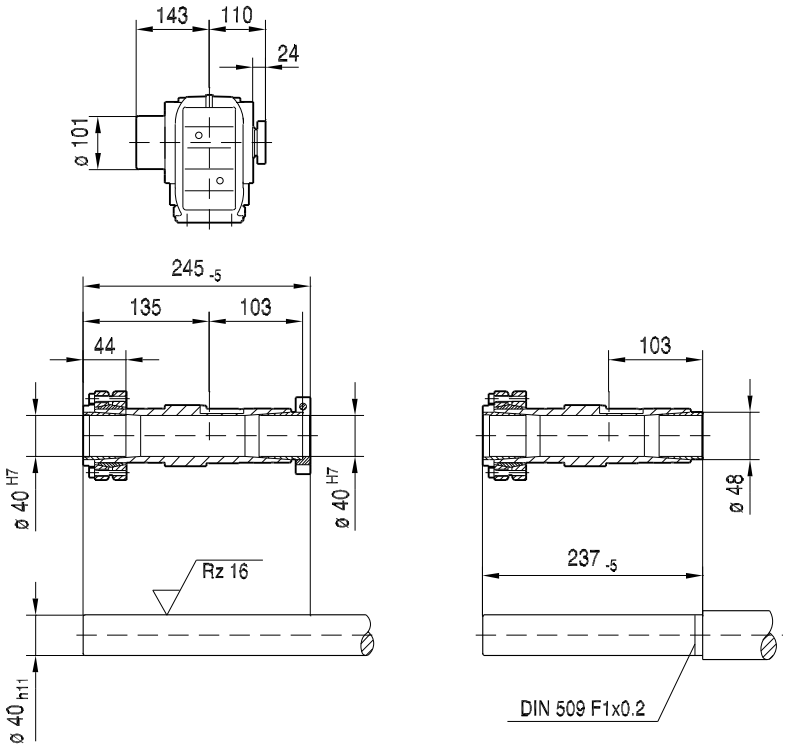

(→ 🗎 176)	DR71S	DR71M	DR80S	DR80M	DR90M	DR90L	DR100M	
AC	139	139	156	156	179	179	197	
AD	119	119	128	128	140	140	157	
ADS	129	129	139	139	150	150	158	
L	470	495	504	535	537	557	587	
LS	538	563	585	616	630	650	680	
LB	196	221	230	261	263	283	313	
LBS	264	289	311	342	356	376	406	

19391609/DE – 06/2017

33 057 00 17

K77..

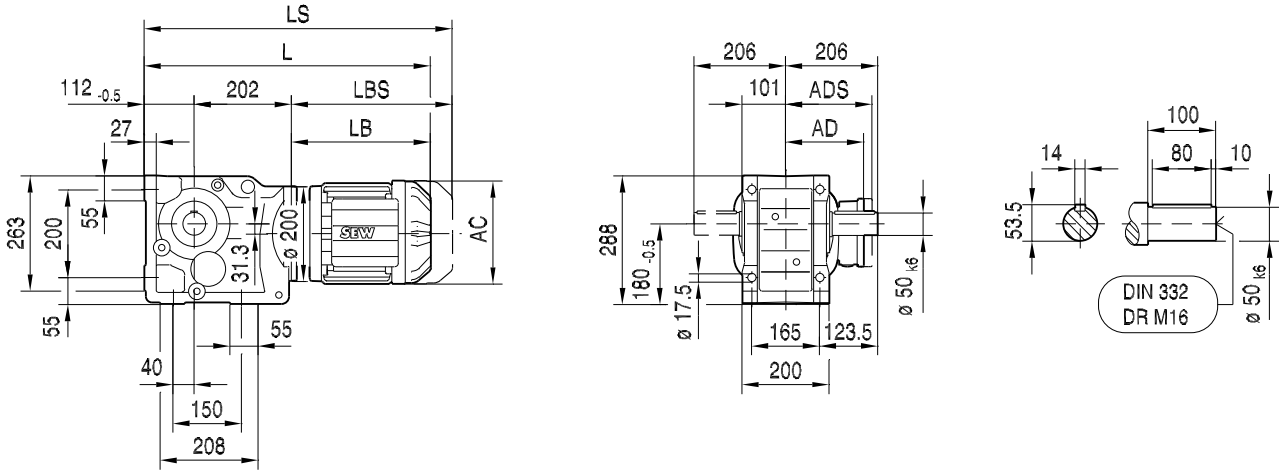

KA77B..

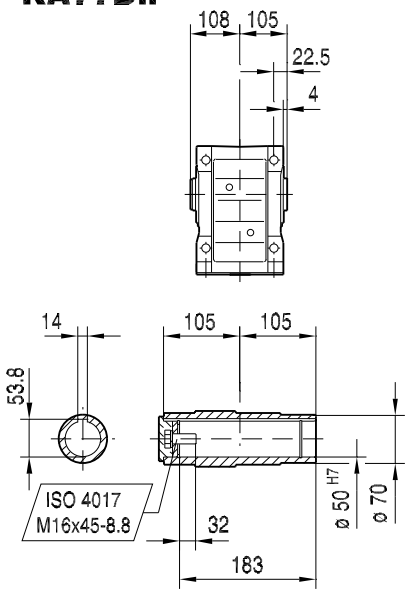

KH77B..

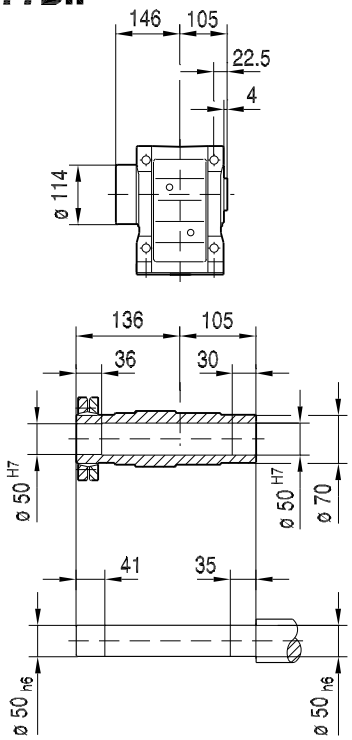

KV77B..

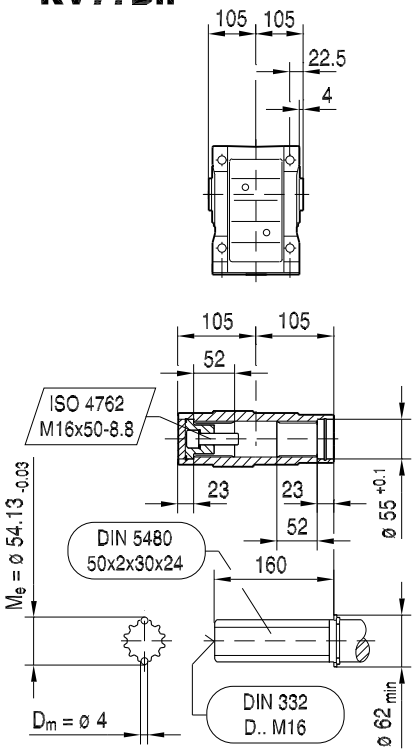

(→ 🗎 176)	DR71S	DR71M	DR80S	DR80M	DR90M	DR90L	DR100M	DR100L/LC
AC	139	139	156	156	179	179	197	197
AD	119	119	128	128	140	140	157	157
ADS	129	129	139	139	150	150	158	158
L	503	528	537	568	570	590	620	650
LS	571	596	618	649	663	683	713	743
LB	189	214	223	254	256	276	306	336
LBS	257	282	304	335	349	369	399	429

19391609/DE – 06/2017

33 058 00 17

KF77..

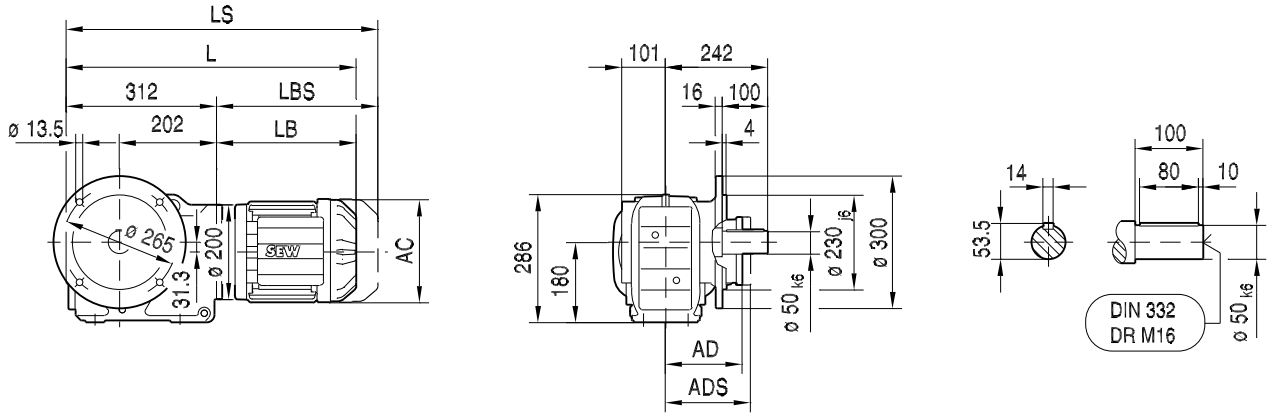

KAF77..

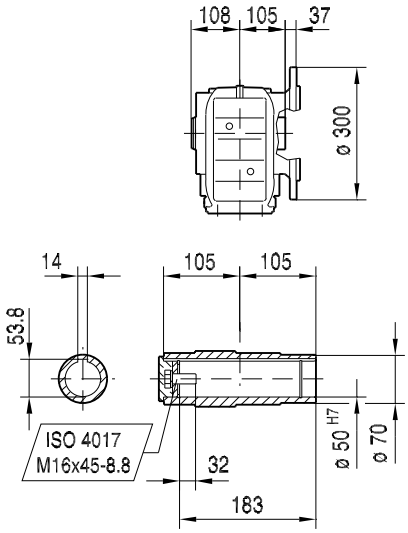

KHF77..

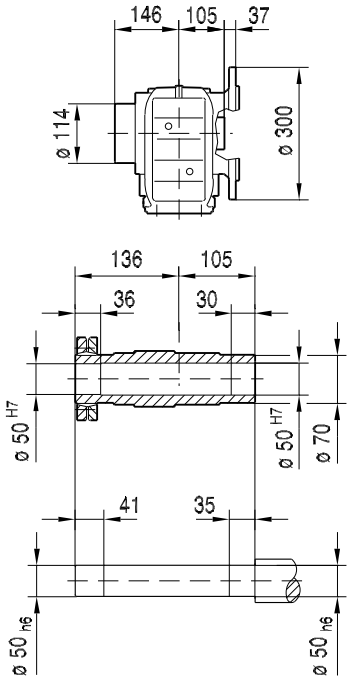

KVF77..

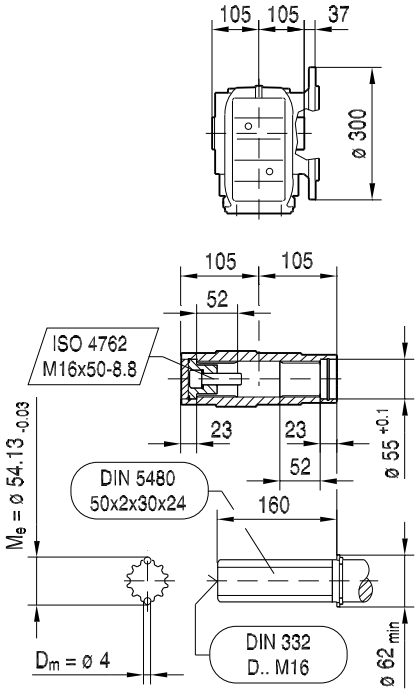

(→ 🗎 176)	DR71S	DR71M	DR80S	DR80M	DR90M	DR90L	DR100M	DR100L/LC
AC	139	139	156	156	179	179	197	197
AD	119	119	128	128	140	140	157	157
ADS	129	129	139	139	150	150	158	158
L	501	526	535	566	568	588	618	648
LS	569	594	616	647	661	681	711	741
LB	189	214	223	254	256	276	306	336
LBS	257	282	304	335	349	369	399	429

19391609/DE – 06/2017

33 059 00 17

KA77..

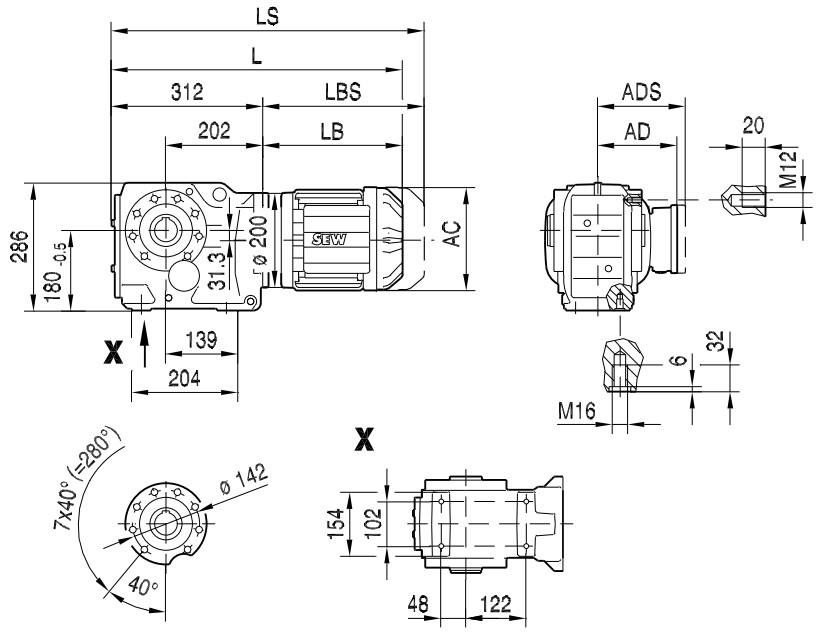

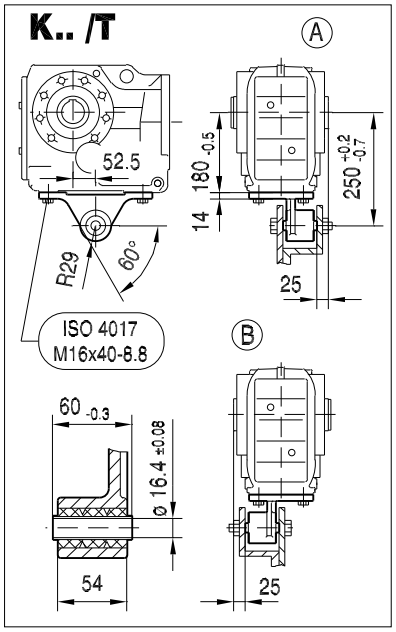

KA77..

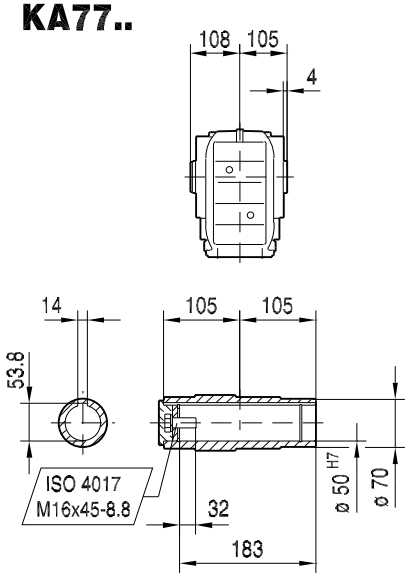

KH77..

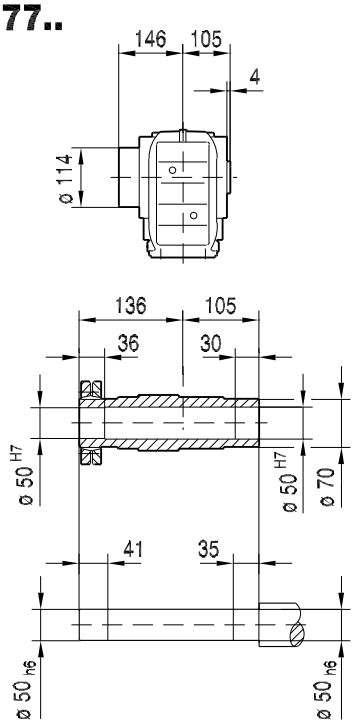

KV77..

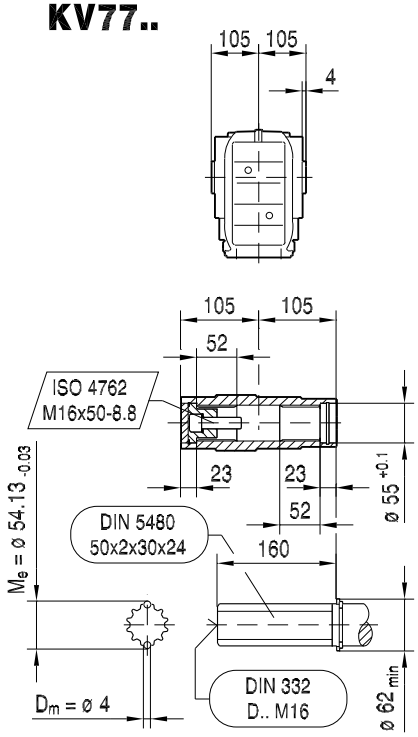

(→ 🗎 176)	DR71S	DR71M	DR80S	DR80M	DR90M	DR90L	DR100M	DR100L/LC
AC	139	139	156	156	179	179	197	197
AD	119	119	128	128	140	140	157	157
ADS	129	129	139	139	150	150	158	158
L	501	526	535	566	568	588	618	648
LS	569	594	616	647	661	681	711	741
LB	189	214	223	254	256	276	306	336
LBS	257	282	304	335	349	369	399	429

19391609/DE – 06/2017

KAZ77..

33 060 00 17

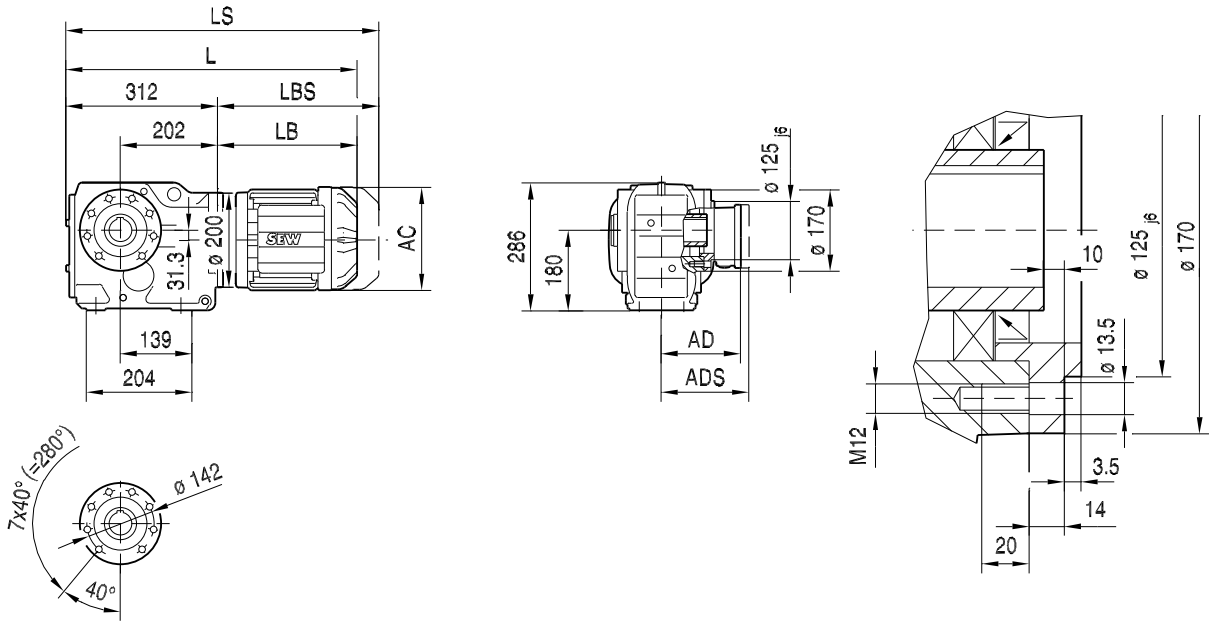

KAZ77..

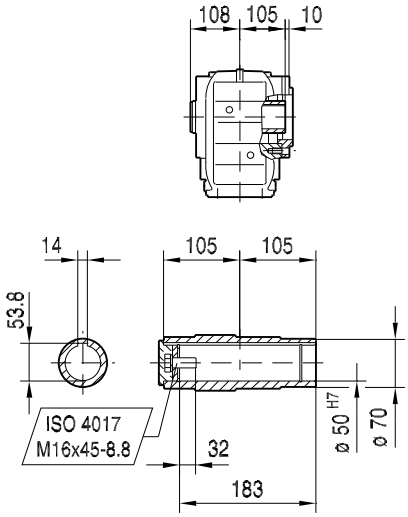

KHZ77..

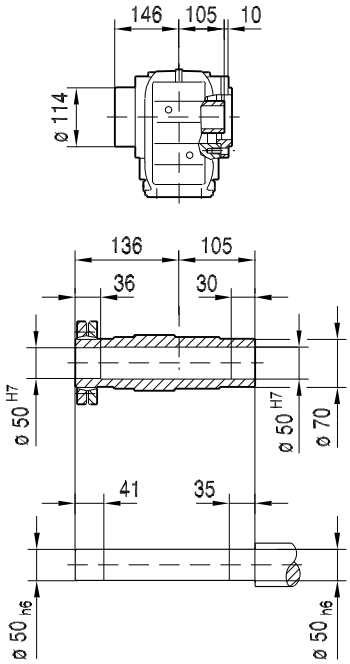

KVZ77..

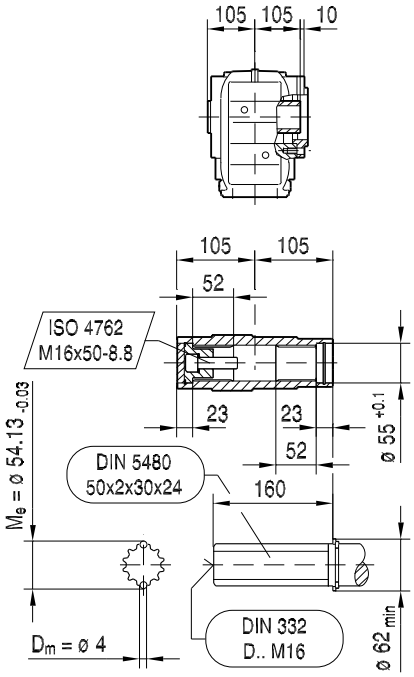

(→ 🗎 176)	DR71S	DR71M	DR80S	DR80M	DR90M	DR90L	DR100M	DR100L/LC
AC	139	139	156	156	179	179	197	197
AD	119	119	128	128	140	140	157	157
ADS	129	129	139	139	150	150	158	158
L	501	526	535	566	568	588	618	648
LS	569	594	616	647	661	681	711	741
LB	189	214	223	254	256	276	306	336
LBS	257	282	304	335	349	369	399	429

19391609/DE – 06/2017

KZ77..

33 061 00 17

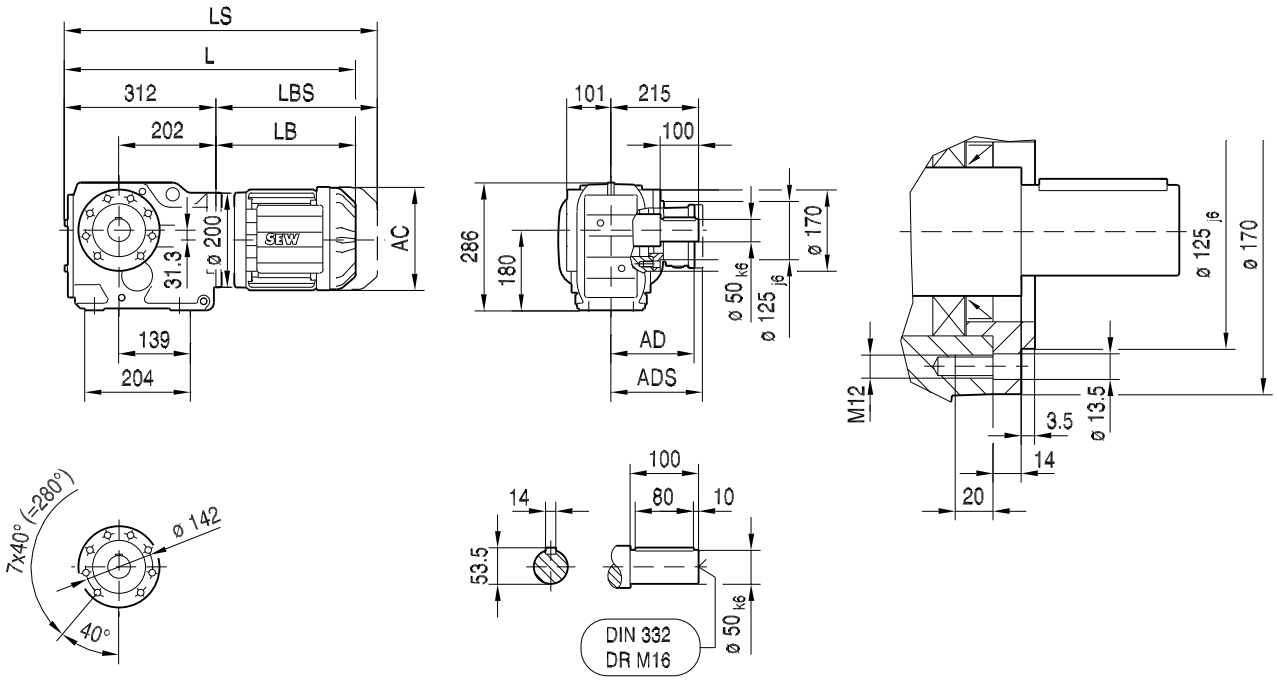

(→ 176)	DR71S	DR71M	DR80S	DR80M	DR90M	DR90L	DR100M	DR100L/LC
AC	139	139	156	156	179	179	197	197
AD	119	119	128	128	140	140	157	157
ADS	129	129	139	139	150	150	158	158
L	501	526	535	566	568	588	618	648
LS	569	594	616	647	661	681	711	741
LB	189	214	223	254	256	276	306	336
LBS	257	282	304	335	349	369	399	429

19391609/DE – 06/2017

KT77..

33 062 00 17

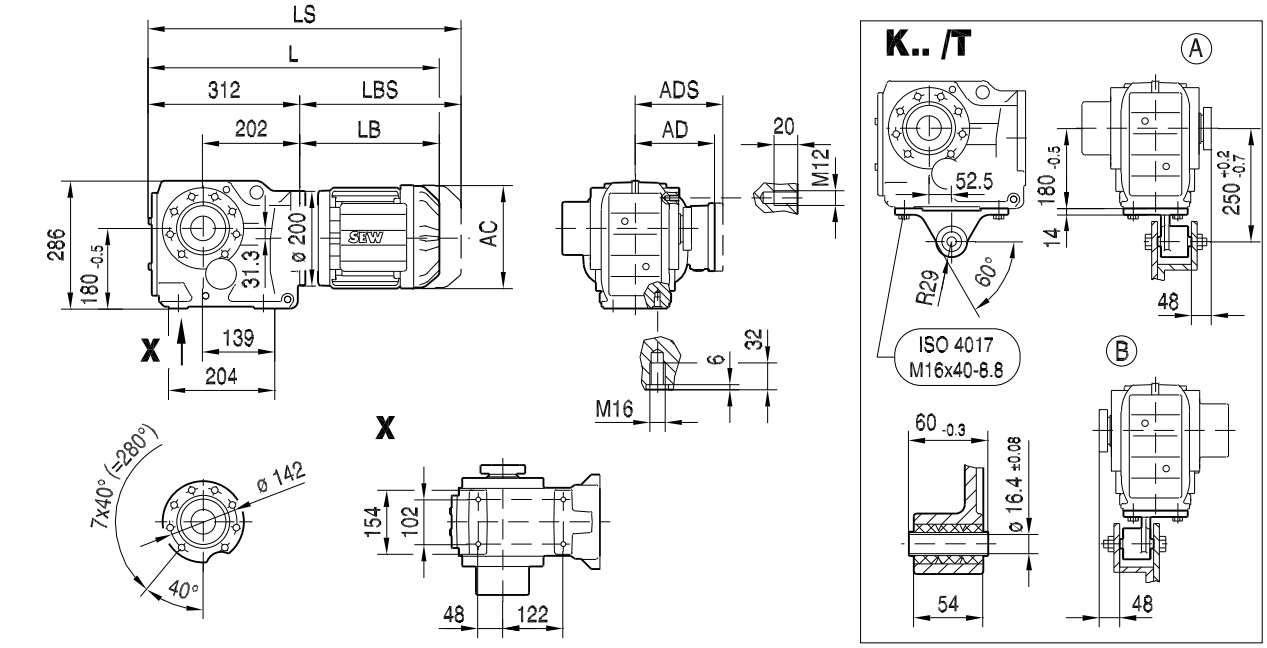

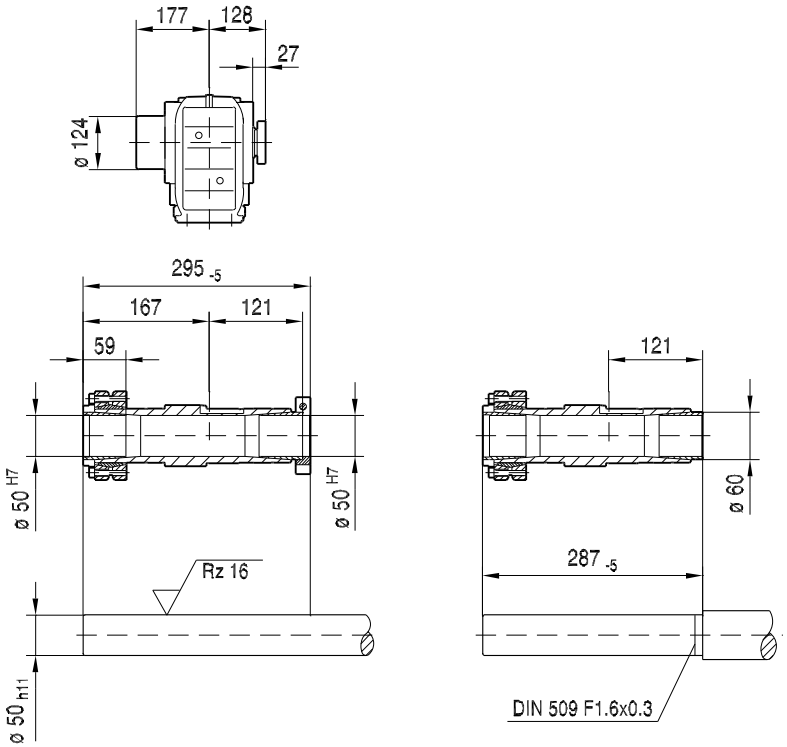

(→ 🗎 176)	DR71S	DR71M	DR80S	DR80M	DR90M	DR90L	DR100M	DR100L/LC
AC	139	139	156	156	179	179	197	197
AD	119	119	128	128	140	140	157	157
ADS	129	129	139	139	150	150	158	158
L	501	526	535	566	568	588	618	648
LS	569	594	616	647	661	681	711	741
LB	189	214	223	254	256	276	306	336
LBS	257	282	304	335	349	369	399	429

19391609/DE – 06/2017

33 063 00 17

K87..

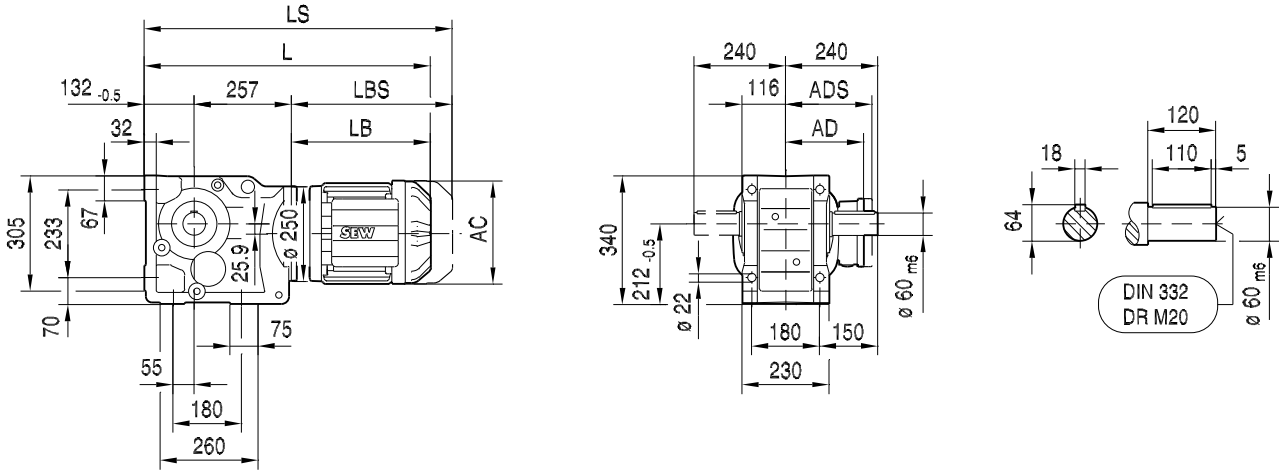

KA87B..

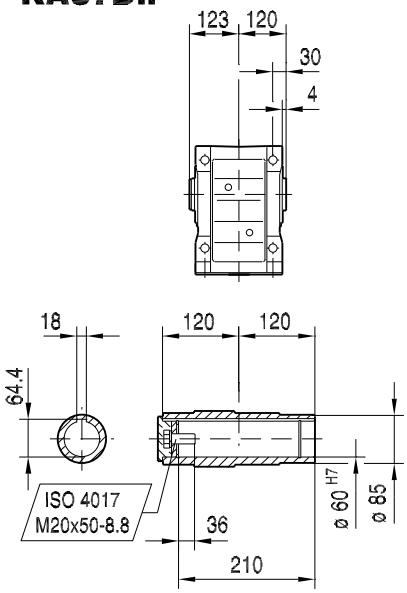

KH87B..

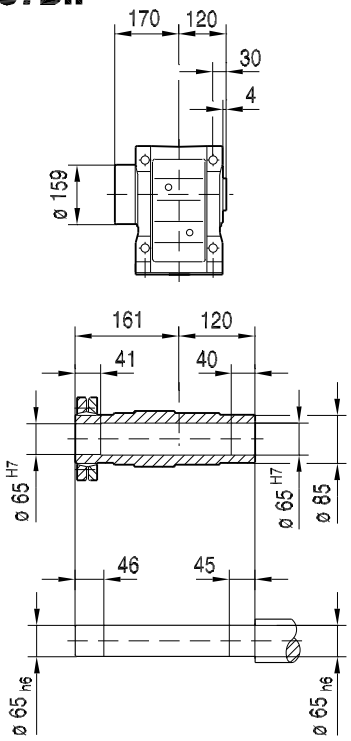

KV87B..

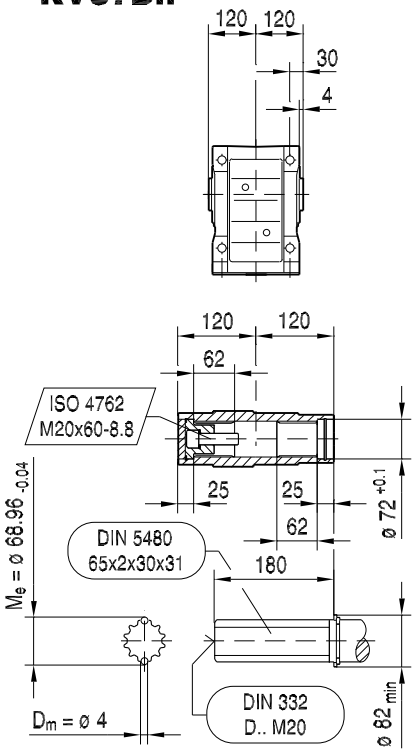

(→ 🗎 176)	DR71M	DR80S	DR80M	DR90M	DR90L	DR100M	DR100L/LC	
AC	139	156	156	179	179	197	197	
AD	119	128	128	140	140	157	157	
ADS	129	139	139	150	150	158	158	
L	598	607	638	640	660	690	720	
LS	666	688	719	733	753	783	813	
LB	209	218	249	251	271	301	331	
LBS	277	299	330	344	364	394	424	

19391609/DE – 06/2017

33 064 00 17

KF87..

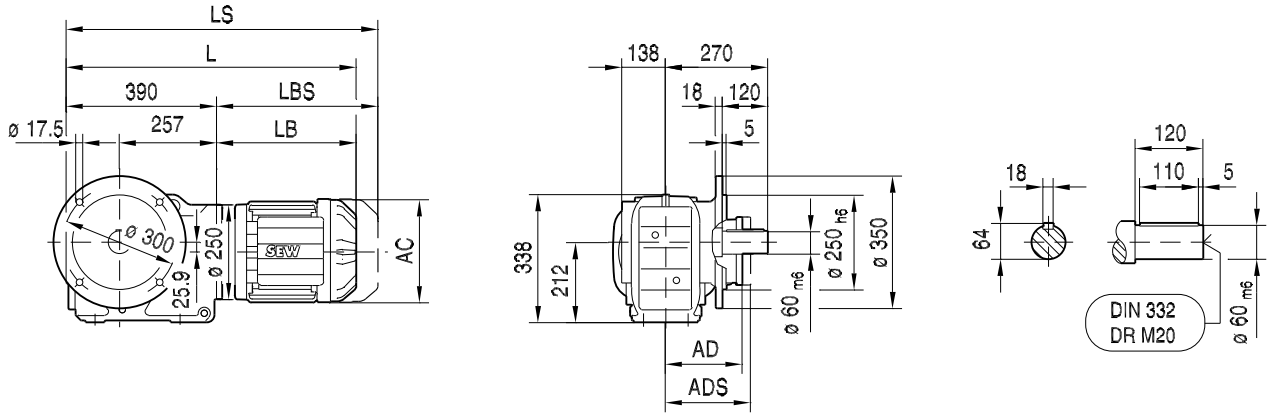

KAF87..

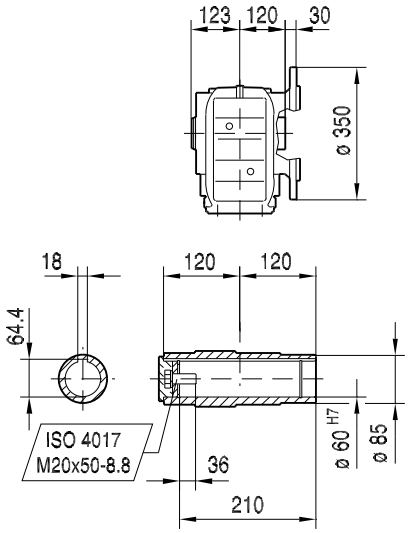

KHF87..

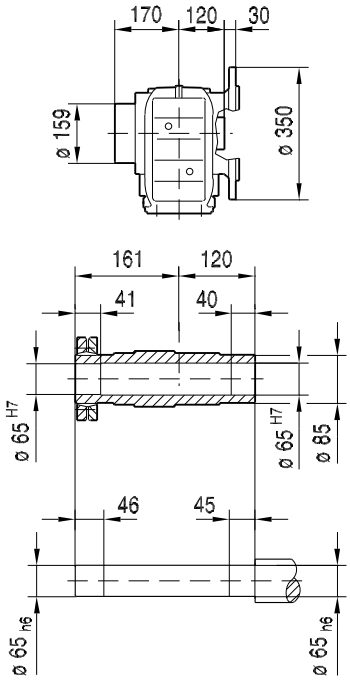

KVF87..

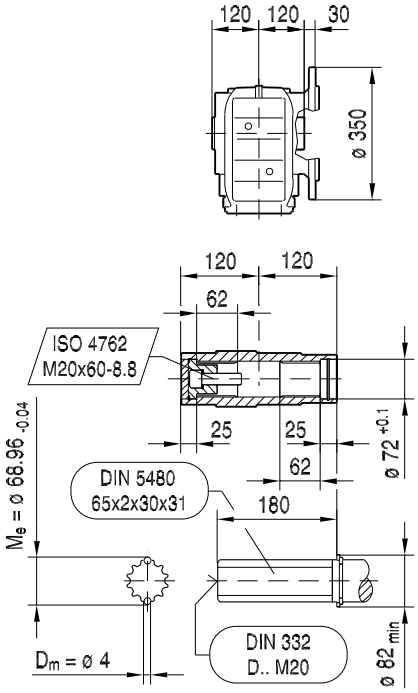

(→ 🗎 176)	DR71M	DR80S	DR80M	DR90M	DR90L	DR100M	DR100L/LC	
AC	139	156	156	179	179	197	197	
AD	119	128	128	140	140	157	157	
ADS	129	139	139	150	150	158	158	
L	599	608	639	641	661	691	721	
LS	667	689	720	734	754	784	814	
LB	209	218	249	251	271	301	331	
LBS	277	299	330	344	364	394	424	

19391609/DE – 06/2017

33 065 00 17

KA87..

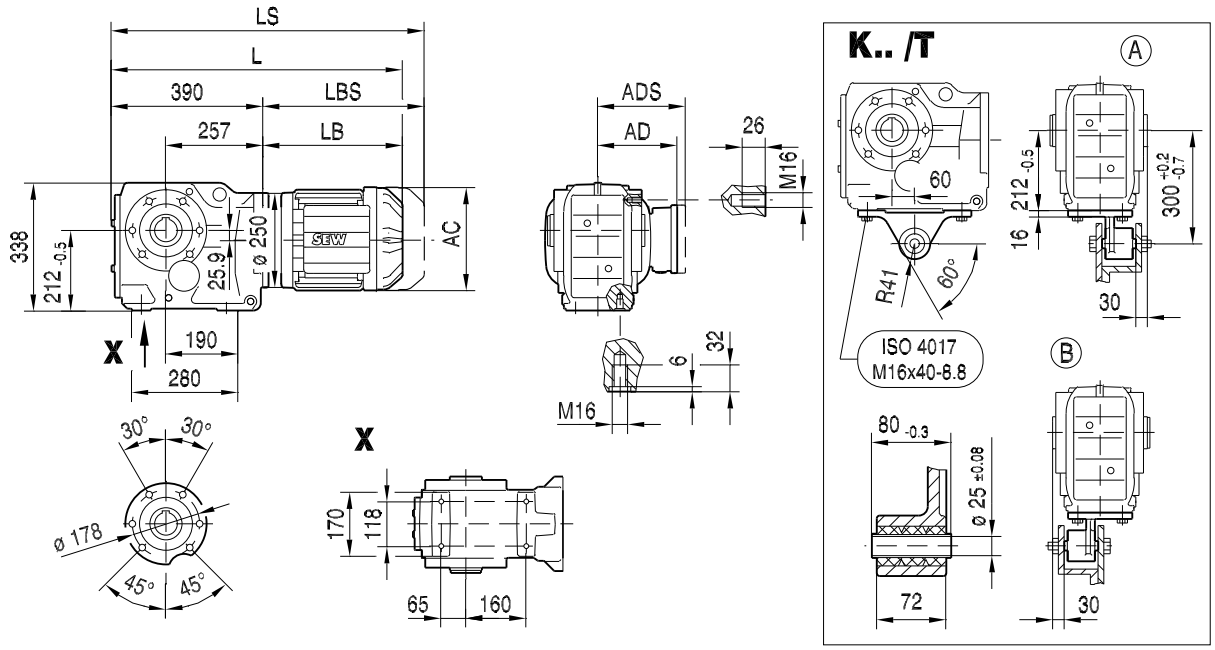

KA87..

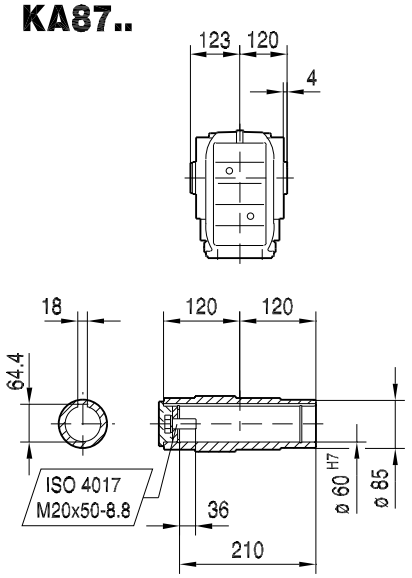

KH87..

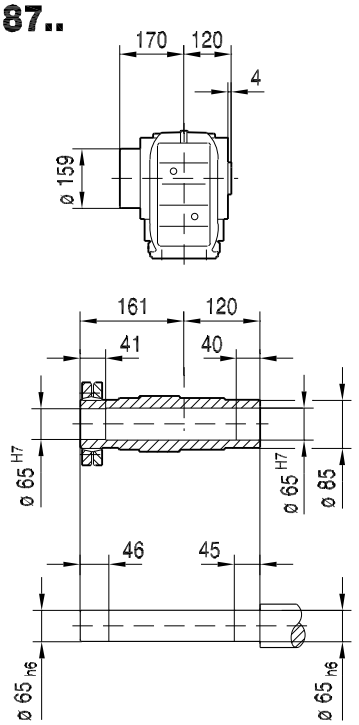

KV87..

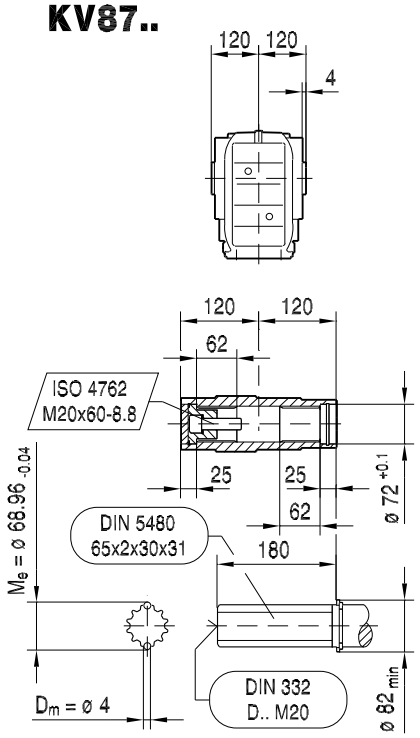

(→ 🗎 176)	DR71M	DR80S	DR80M	DR90M	DR90L	DR100M	DR100L/LC	
AC	139	156	156	179	179	197	197	
AD	119	128	128	140	140	157	157	
ADS	129	139	139	150	150	158	158	
L	599	608	639	641	661	691	721	
LS	667	689	720	734	754	784	814	
LB	209	218	249	251	271	301	331	
LBS	277	299	330	344	364	394	424	

19391609/DE – 06/2017

33 066 00 17

KAZ87..

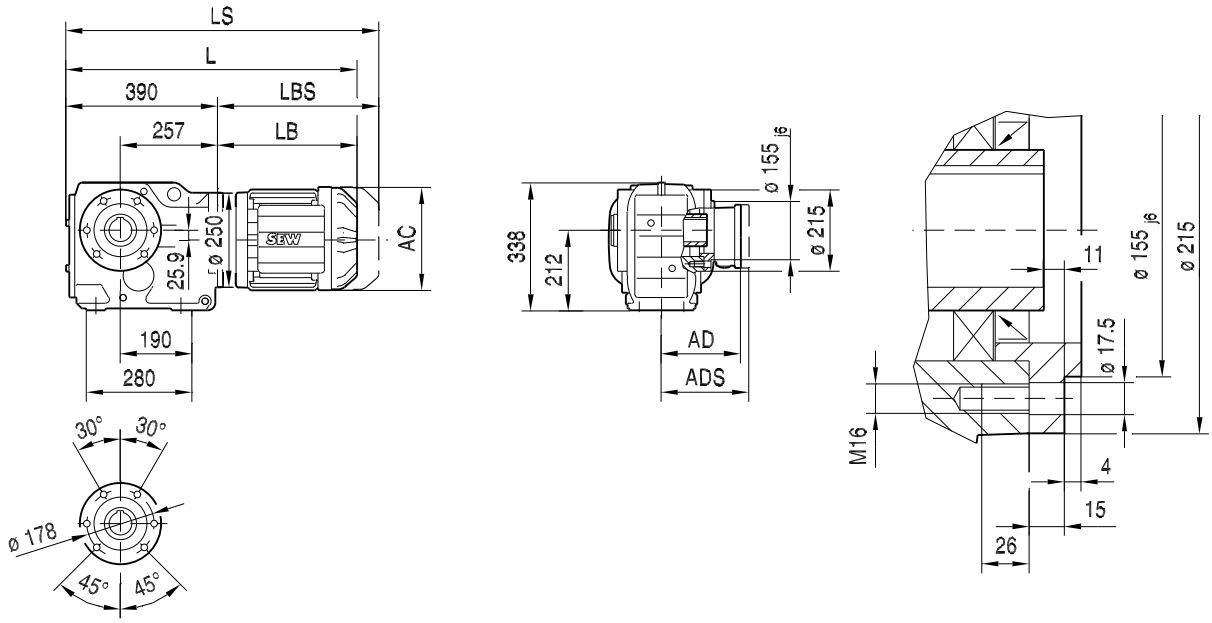

KAZ87..

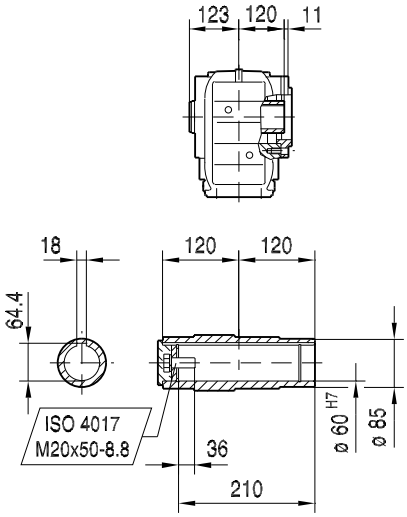

KHZ87..

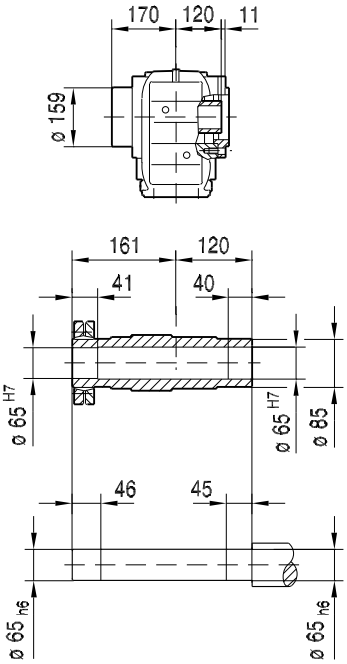

KVZ87..

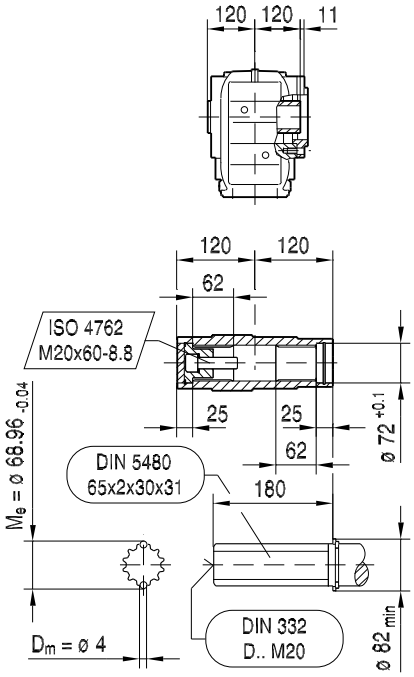

(→ 🗎 176)	DR71M	DR80S	DR80M	DR90M	DR90L	DR100M	DR100L/LC	
AC	139	156	156	179	179	197	197	
AD	119	128	128	140	140	157	157	
ADS	129	139	139	150	150	158	158	
L	599	608	639	641	661	691	721	
LS	667	689	720	734	754	784	814	
LB	209	218	249	251	271	301	331	
LBS	277	299	330	344	364	394	424	

19391609/DE – 06/2017

KZ87..

33 067 00 17

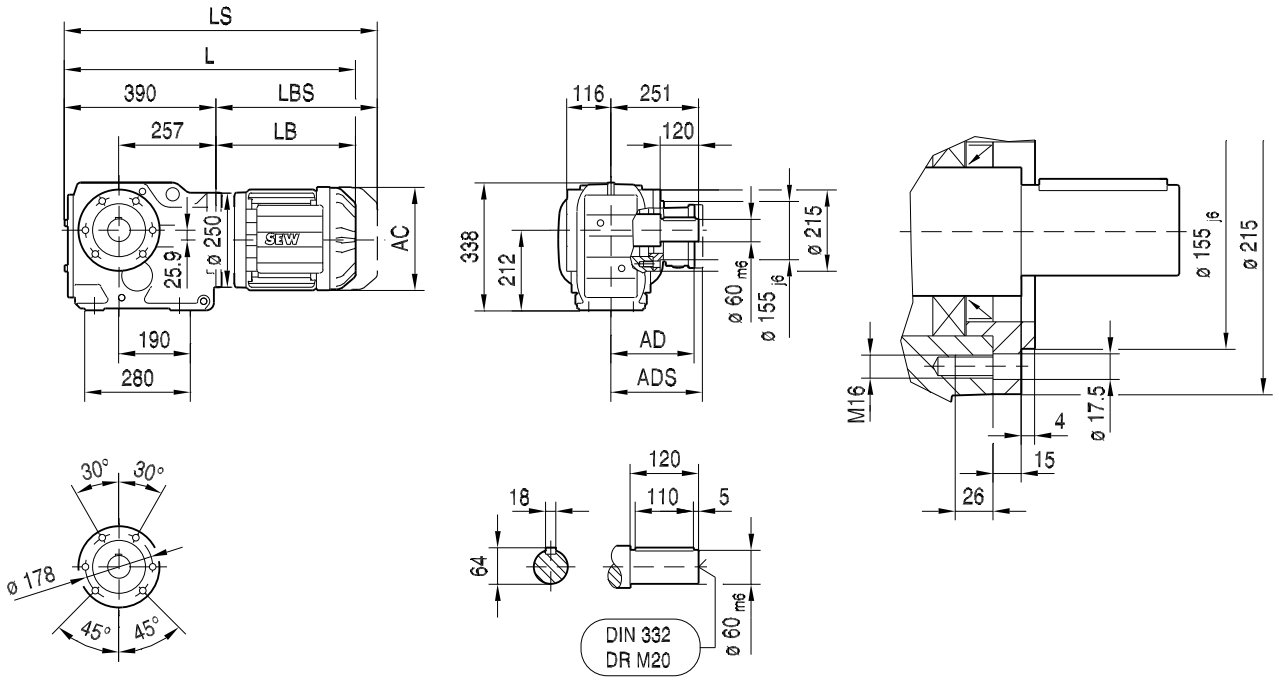

(→ 🗎 176)	DR71M	DR80S	DR80M	DR90M	DR90L	DR100M	DR100L/LC	
AC	139	156	156	179	179	197	197	
AD	119	128	128	140	140	157	157	
ADS	129	139	139	150	150	158	158	
L	599	608	639	641	661	691	721	
LS	667	689	720	734	754	784	814	
LB	209	218	249	251	271	301	331	
LBS	277	299	330	344	364	394	424	

19391609/DE – 06/2017

KT87..

33 068 00 17

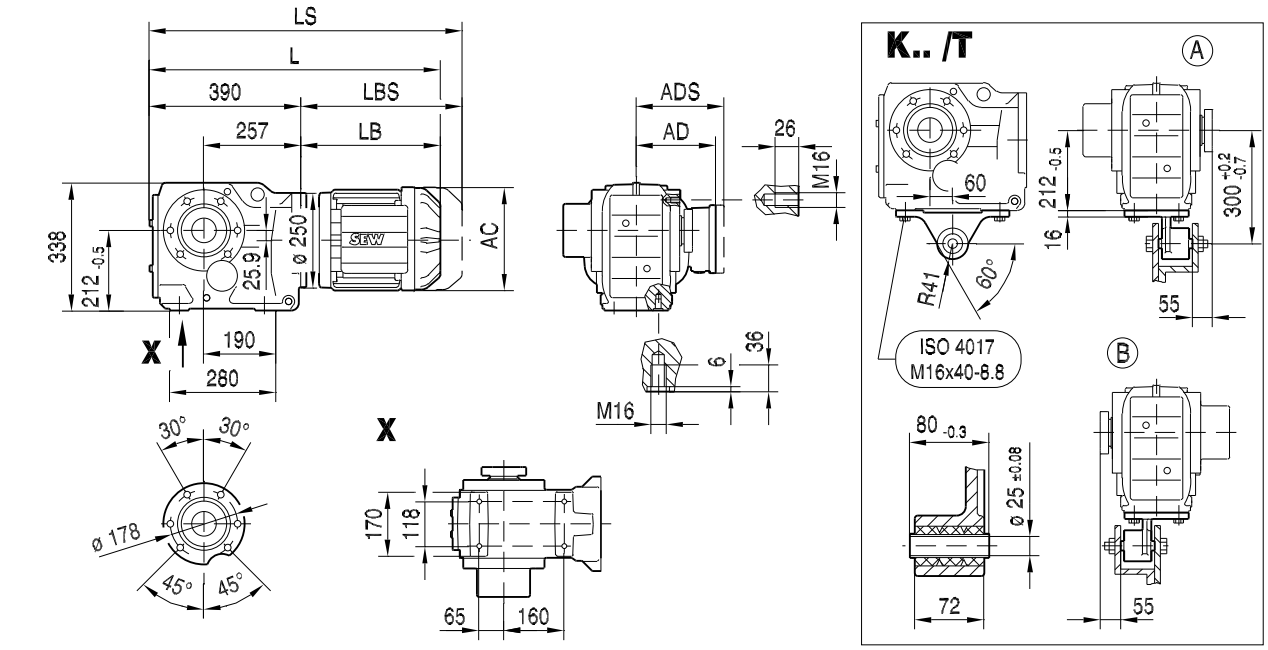

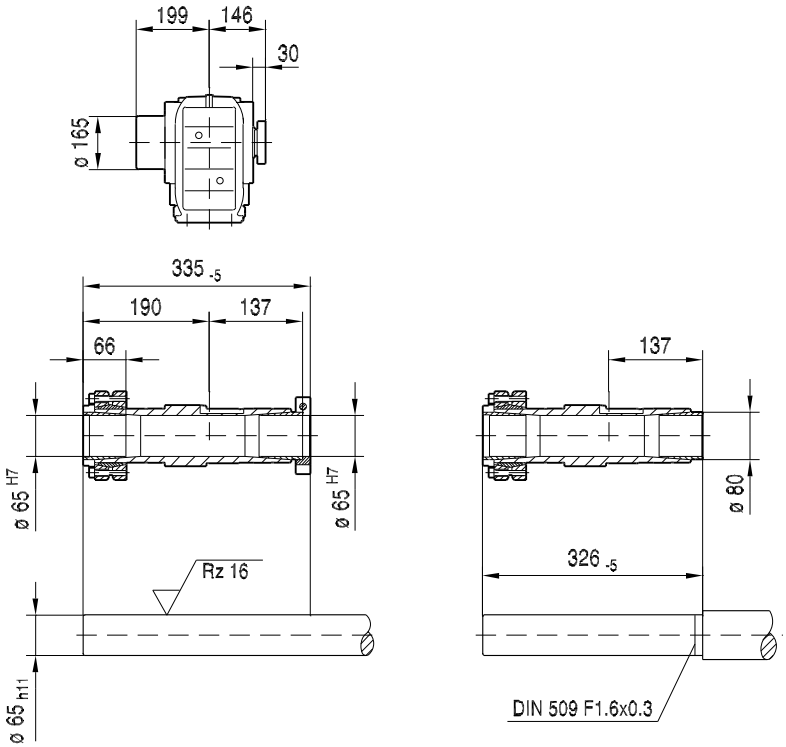

(→ 🗎 176)	DR71M	DR80S	DR80M	DR90M	DR90L	DR100M	DR100L/LC	
AC	139	156	156	179	179	197	197	
AD	119	128	128	140	140	157	157	
ADS	129	139	139	150	150	158	158	
L	599	608	639	641	661	691	721	
LS	667	689	720	734	754	784	814	
LB	209	218	249	251	271	301	331	
LBS	277	299	330	344	364	394	424	

19391609/DE – 06/2017

K97..

33 069 00 17

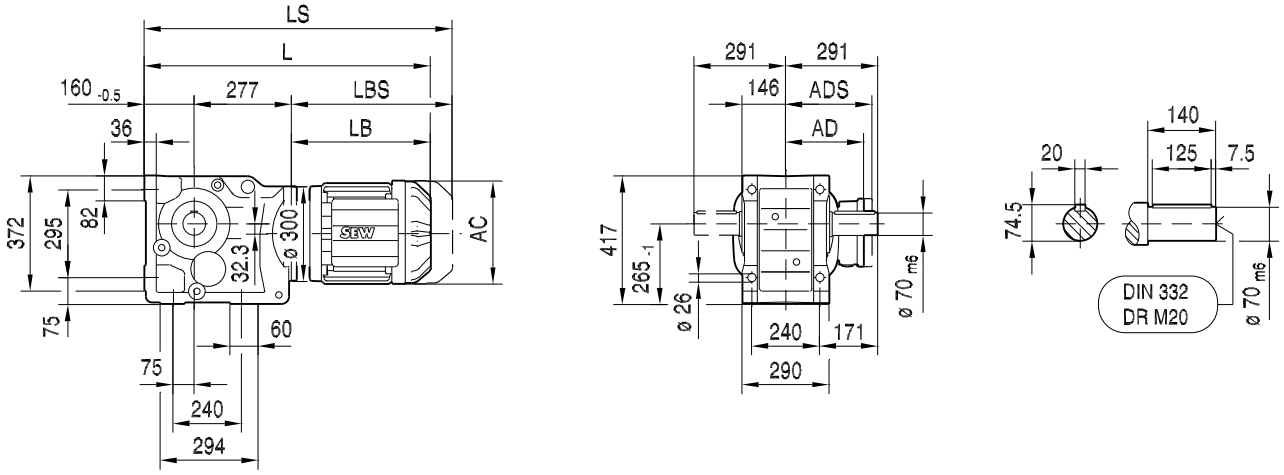

KA97B..

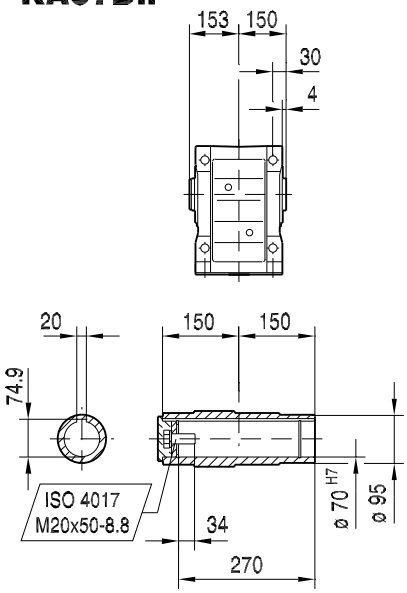

KH97B..

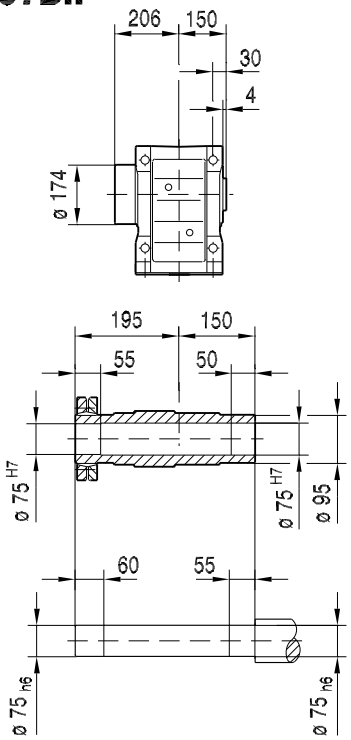

KV97B..

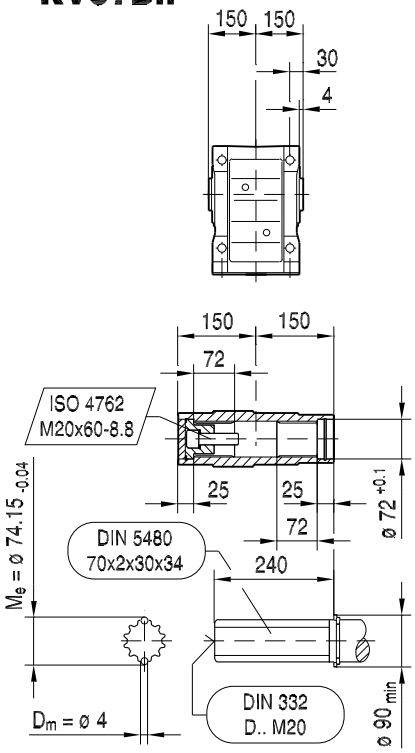

(→ 🗎 176)	DR80S	DR80M	DR90M	DR90L	DR100M	DR100L/LC		
AC	156	156	179	179	197	197		
AD	128	128	140	140	157	157		
ADS	139	139	150	150	158	158		
L	650	681	683	703	733	763		
LS	731	762	776	796	826	856		
LB	213	244	246	266	296	326		
LBS	294	325	339	359	389	419		

19391609/DE – 06/2017

KF97..

33 070 00 17

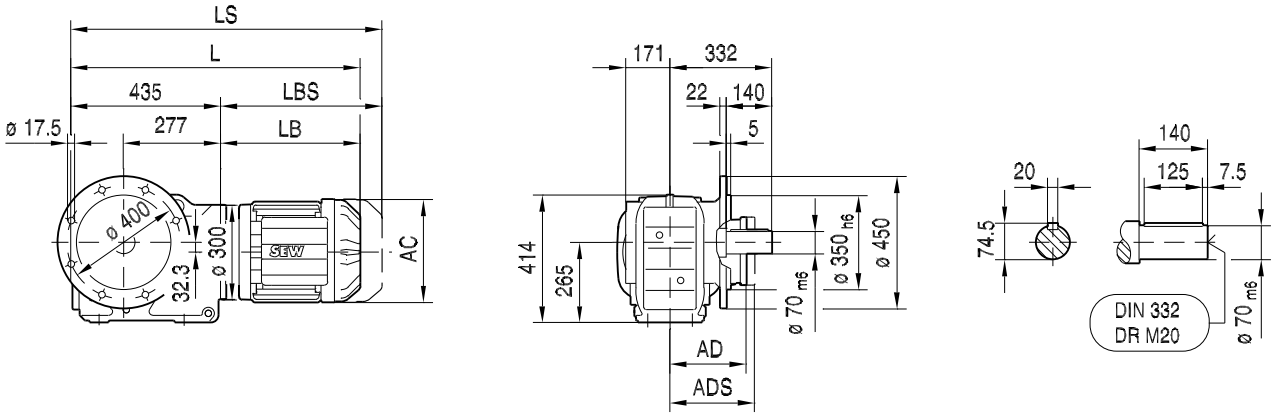

KAF97..

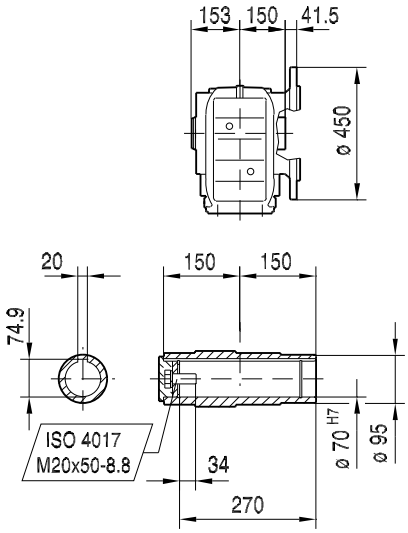

KHF97..

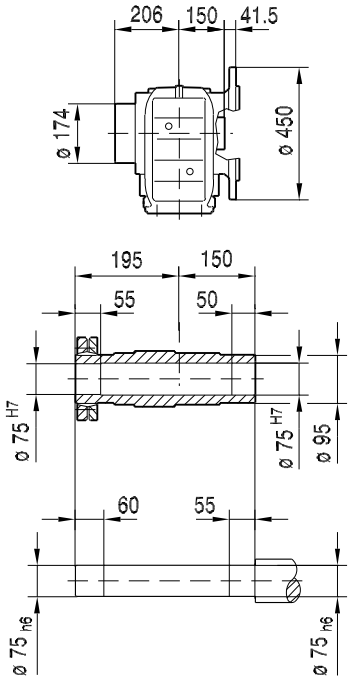

KVF97..

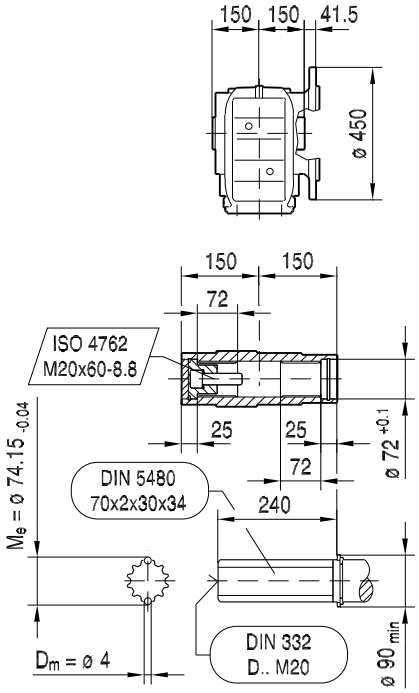

(→ 🗎 176)	DR80S	DR80M	DR90M	DR90L	DR100M	DR100L/LC		
AC	156	156	179	179	197	197		
AD	128	128	140	140	157	157		
ADS	139	139	150	150	158	158		
L	648	679	681	701	731	761		
LS	729	760	774	794	824	854		
LB	213	244	246	266	296	326		
LBS	294	325	339	359	389	419		

19391609/DE – 06/2017

33 071 00 17

KA97..

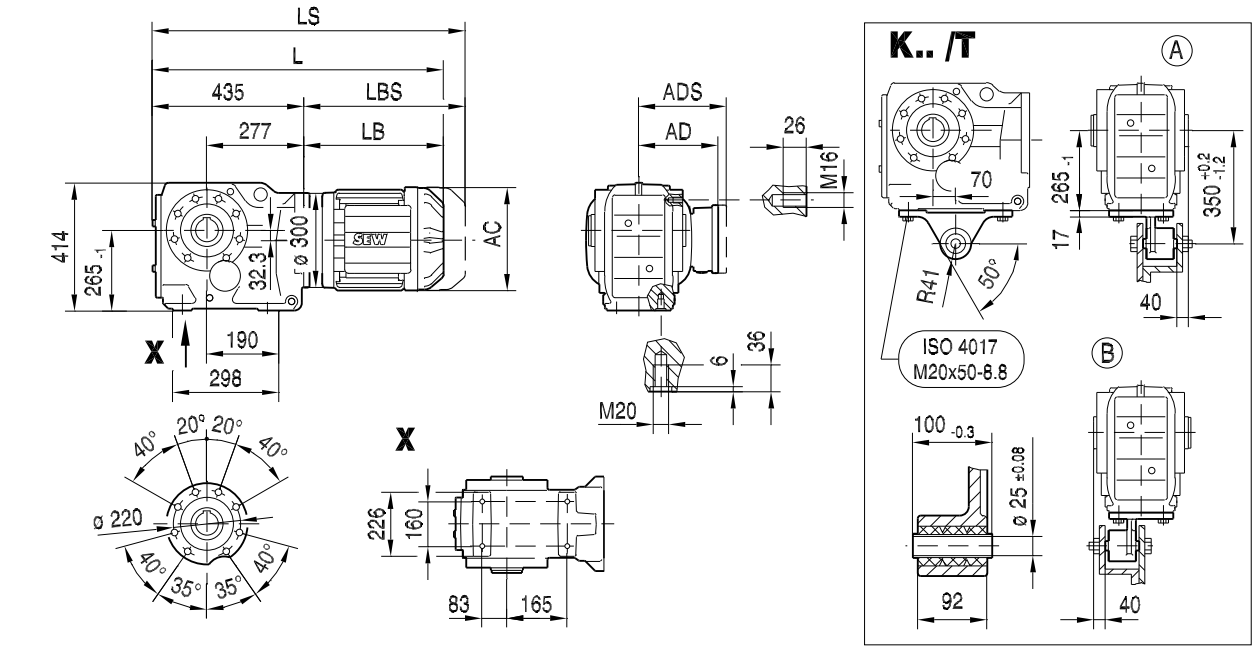

KA97..

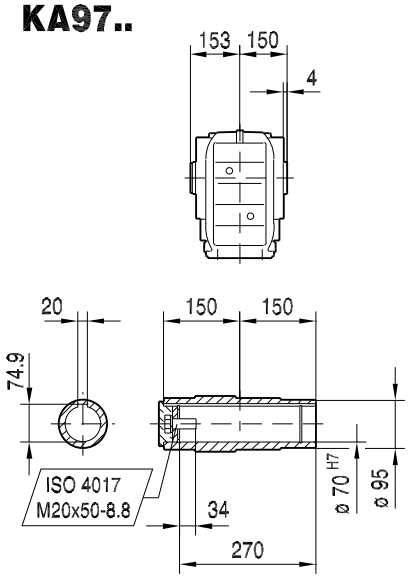

KH97..

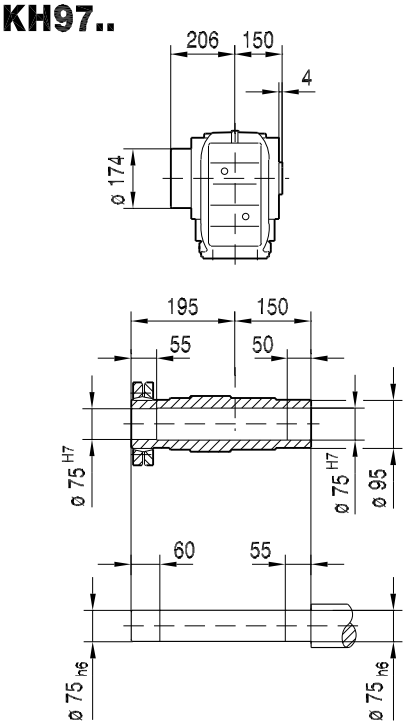

KV97..

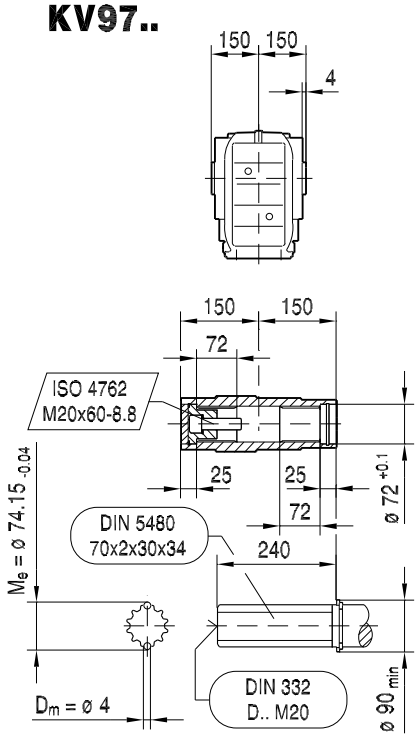

(→ 🗎 176)	DR80S	DR80M	DR90M	DR90L	DR100M	DR100L/LC		
AC	156	156	179	179	197	197		
AD	128	128	140	140	157	157		
ADS	139	139	150	150	158	158		
L	648	679	681	701	731	761		
LS	729	760	774	794	824	854		
LB	213	244	246	266	296	326		
LBS	294	325	339	359	389	419		

19391609/DE – 06/2017

33 072 00 17

KAZ97..

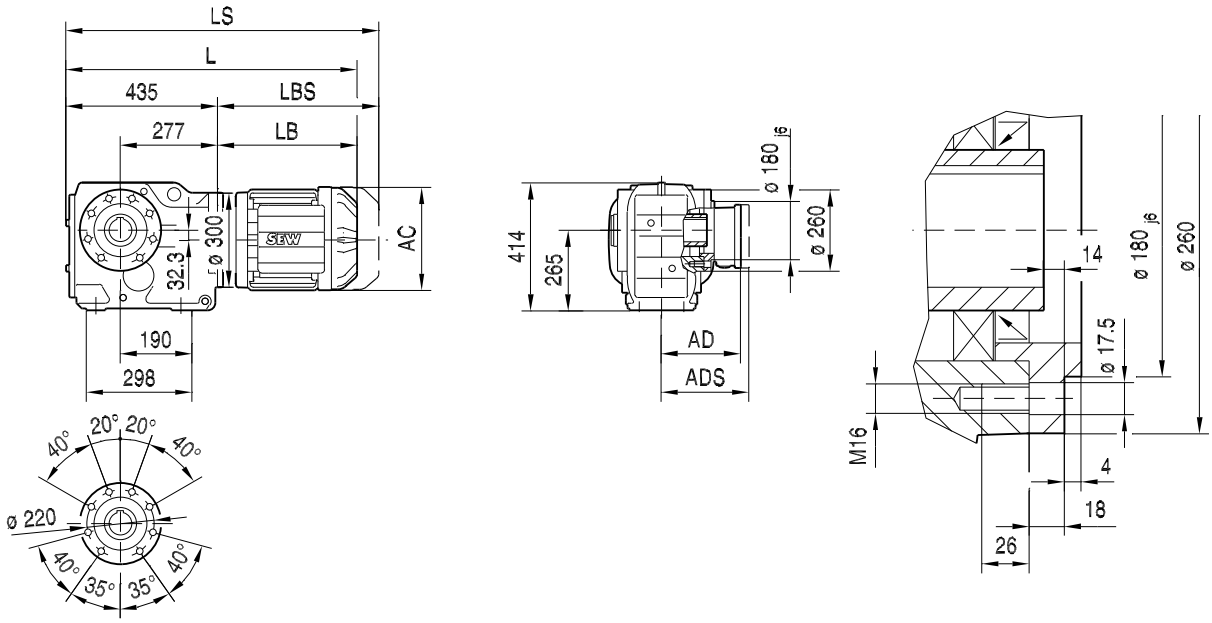

KAZ97..

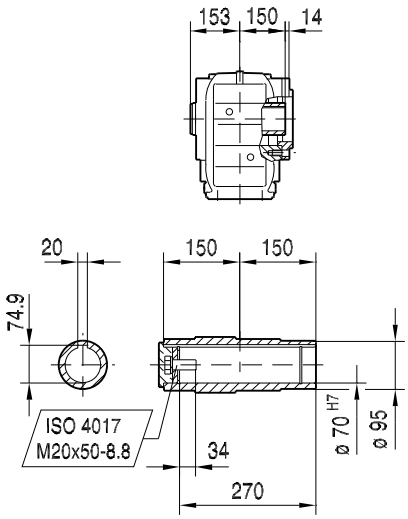

KHZ97..

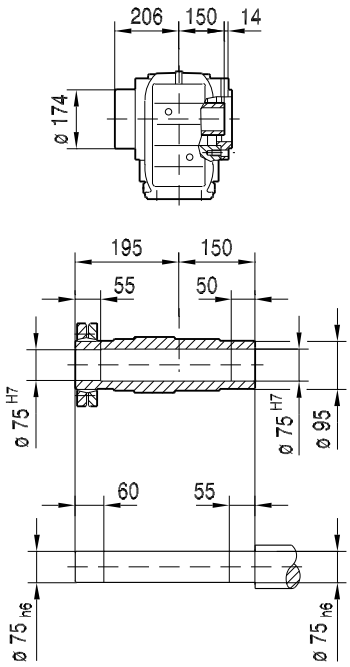

KVZ97..

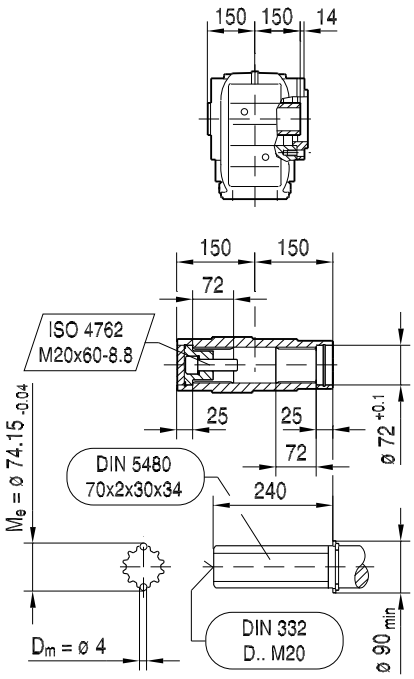

(→ 🗎 176)	DR80S	DR80M	DR90M	DR90L	DR100M	DR100L/LC		
AC	156	156	179	179	197	197		
AD	128	128	140	140	157	157		
ADS	139	139	150	150	158	158		
L	648	679	681	701	731	761		
LS	729	760	774	794	824	854		
LB	213	244	246	266	296	326		
LBS	294	325	339	359	389	419		

19391609/DE – 06/2017

KZ97..

33 073 00 17

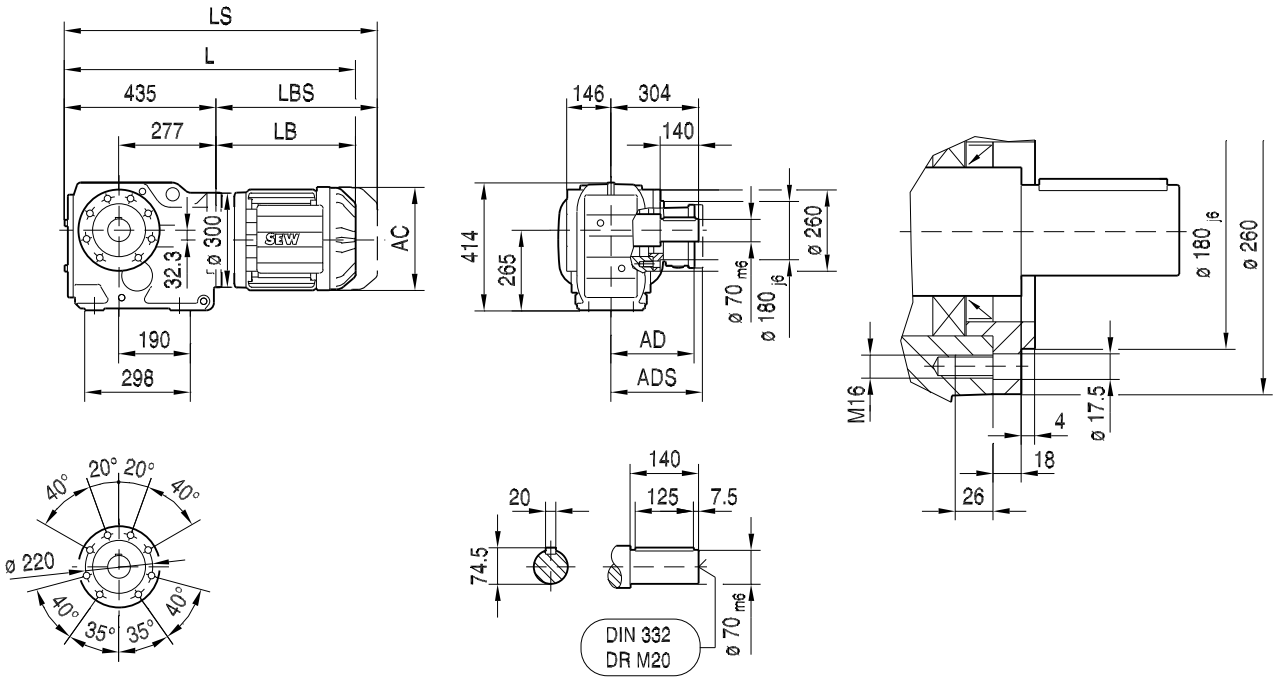

(→ 🗎 176)	DR80S	DR80M	DR90M	DR90L	DR100M	DR100L/LC		
AC	156	156	179	179	197	197		
AD	128	128	140	140	157	157		
ADS	139	139	150	150	158	158		
L	648	679	681	701	731	761		
LS	729	760	774	794	824	854		
LB	213	244	246	266	296	326		
LBS	294	325	339	359	389	419		

19391609/DE – 06/2017

KT97..

33 074 00 17

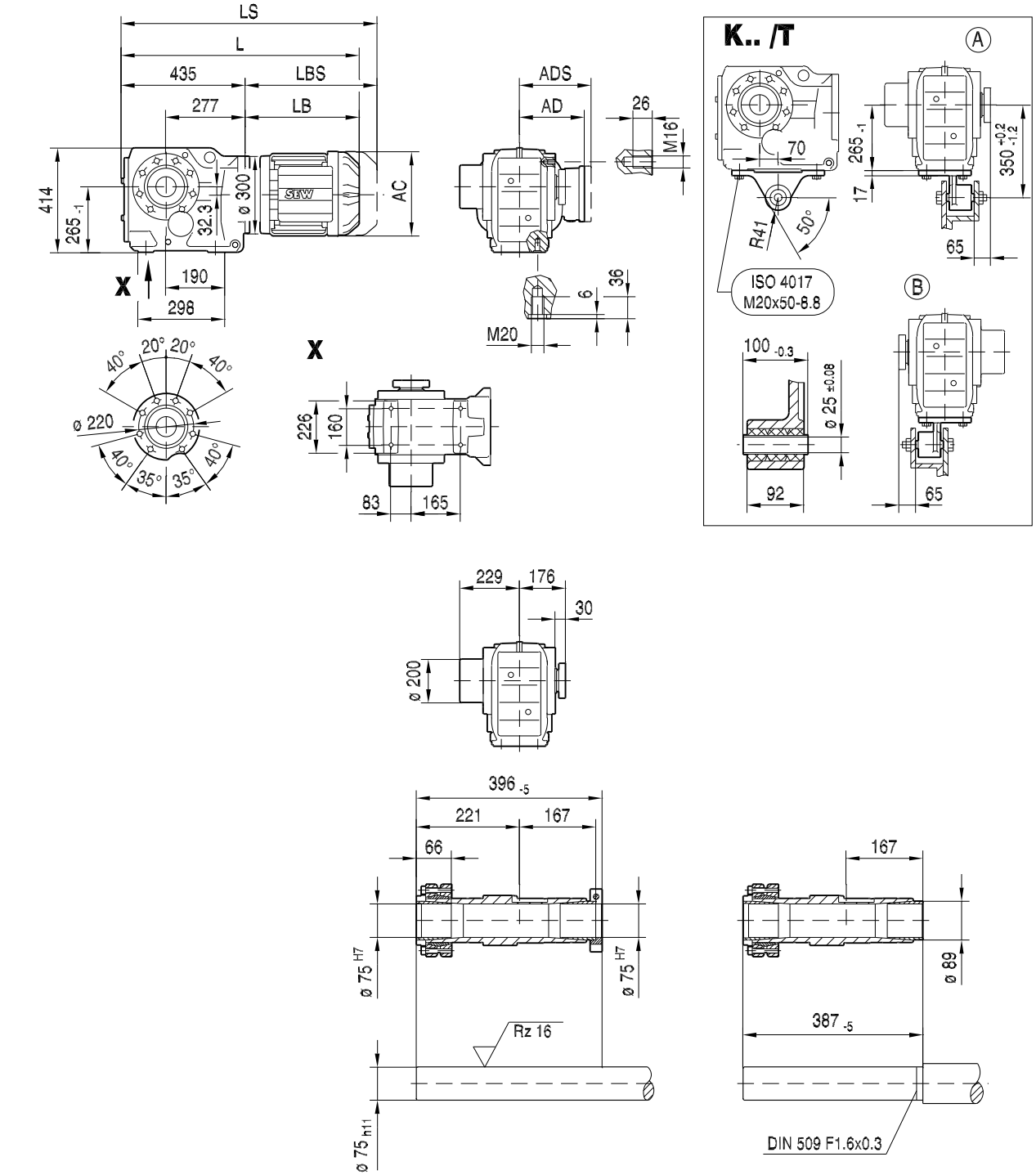

(→ 🗎 176)	DR80S	DR80M	DR90M	DR90L	DR100M	DR100L/LC		
AC	156	156	179	179	197	197		
AD	128	128	140	140	157	157		
ADS	139	139	150	150	158	158		
L	648	679	681	701	731	761		
LS	729	760	774	794	824	854		
LB	213	244	246	266	296	326		
LBS	294	325	339	359	389	419		

19391609/DE – 06/2017