SEW EURODRIVE

Manual

MOVIDRIVE® MDX61B

Safety Module MOVISAFE® DCS..B Option

Edition 04/2012

19263228 / EN

KKFU 144794 3
42G1

Contents

1 General Information ... 8
1.1 How to use this documentation ... 8
1.2 Structure of the safety notes ... 8
1.2.1 Meaning of signal words ... 8
1.2.2 Structure of the section safety notes ... 8
1.2.3 Structure of the embedded safety notes ... 8
1.3 Right to claim under warranty ... 9
1.4 Exclusion of liability ... 9
1.5 Copyright ... 9
1.6 Product names and trademarks ... 9
1.7 Other applicable documentation ... 9
2 Safety Notes ... 11
2.1 General information ... 11
2.2 Target group ... 11
2.3 Designated use ... 12
2.4 Transportation, storage ... 12
2.5 Installation ... 12
2.6 Electrical connection ... 13
2.7 Operation ... 13
2.8 Definitions ... 13
3 Integrated Safety Technology ... 14
3.1 Safety architecture of the DCS..B option ... 14
3.2 Safety functions ... 16
3.2.1 STO – Safe Torque Off ... 17
3.2.2 SS1(b) – Safe Stop 1 ... 18
3.2.3 SS1(c) – Safe Stop 1 ... 19
3.2.4 SS2(b) – Safe Stop 2 ... 20
3.2.5 SS2(c) – Safe Stop 2 ... 21
3.2.6 SOS – Safe Operating Stop ... 22
3.2.7 SLA – Safely Limited Acceleration ... 23
3.2.8 SAR – Safe Acceleration Range ... 24
3.2.9 SLS – Safely Limited Speed ... 25
3.2.10 SSR – Safe Speed Range ... 26
3.2.11 SDI – Safe Direction ... 27
3.2.12 SLI – Safely Limited Increment ... 28
3.2.13 SLP – Safely Limited Position ... 29
3.2.14 SCA – Safe Cam ... 30
3.2.15 SBC – Safe Brake Control ... 31
3.3 Restrictions ... 32

4 Unit Structure ... 33
4.1 Unit features and type designations ... 33
4.1.1 DCS21B ... 33
4.1.2 DCS31B ... 33
4.2 Nameplates ... 34
4.2.1 1st nameplate: DCS..B ... 34
4.2.2 2nd nameplate: MOVIDRIVE® B ... 34
4.3 Unit structure of DCS21B ... 35
4.4 Unit structure of DCS31B ... 36
5 Installation ... 37
5.1 General installation notes ... 37
5.2 Notes for use in MOVIDRIVE® B ... 37
5.3 Notes for using DH..B controllers ... 37
5.4 Installing the option MOVISAFE® DCS..B ... 38
5.4.1 Before you start ... 39
5.4.2 Basic procedure for installing/removing an option (MDX61B, sizes 1 – 7) ... 40
5.5 Connection and terminal description of the DCS..B option ... 41
5.5.1 Part numbers ... 41
5.5.2 Terminal description ... 42
5.6 Measures for electromagnetic compatibility (EMC) ... 43
5.6.1 Equipotential bonding ... 44
5.7 External DC 24 V supply ... 45
5.8 Connecting binary inputs DI1 to DI8 ... 46
5.8.1 Using pulse outputs ... 49
5.8.2 Single-channel sensor, not monitored ... 50
5.8.3 Single-channel sensor, monitored ... 51
5.8.4 Dual-channel sensor, not monitored ... 52
5.8.5 Dual-channel sensor, monitored ... 53
5.9 Connecting binary outputs ... 54
5.9.1 Single-pole switching binary output not monitored ... 58
5.9.2 Dual-channel switching binary output, monitored ... 60
5.9.3 Using binary outputs for switching safe stop of MOVIDRIVE® B ... 62
5.10 Connecting the position and velocity sensors ... 63
5.10.1 Before you start ... 63
5.10.2 General installation notes for encoders ... 65
5.10.3 Combination of various encoder types ... 65
5.10.4 Technical requirements on suitable encoder types ... 67

5.11 Connection options of an encoder system ... 68
5.11.1 Encoder signal split boxes ... 69
5.11.2 Connection cables for encoder signal split boxes ... 70
5.11.3 Cable sets for encoder signal split boxes ... 71
5.11.4 Split cables and adapter cables ... 72
5.11.5 Split cables for MOVISAFE® DCS..B with serial number ≥1500 ... 73
5.11.6 Split cables for MOVISAFE® DCS..B with serial number ≤1499 ... 73
6 Startup ... 74
6.1 General information on startup ... 74
6.1.1 Prerequisites ... 74
6.1.2 Startup steps for DCS21B ... 74
6.1.3 Startup steps for DCS31B ... 75
6.2 Parameter descriptions of parameter group P55x in MOVIDRIVE® B ... 76
6.2.1 P550 DCS safety module status ... 76
6.2.2 P551 Binary inputs DCS DI1 – DI8 ... 76
6.2.3 P552 Binary outputs DCS DO0_P – DO2_M ... 76
6.2.4 P553 DCS serial number ... 77
6.2.5 P554 CRC DCS ... 77
6.2.6 P555 Error response DCS / P556 Alarm response DCS ... 77
6.2.7 P557 DCS actual position source ... 77
6.3 Other parameters ... 77
6.3.1 P350/351 Direction of rotation reversal 1/2 ... 77
6.3.2 P890 Protocol SBus 2 ... 78
6.3.3 P894 Baud rate SBus 2 ... 78
6.3.4 P951 Counting direction ... 78
6.3.5 P952 Clock rate ... 78
6.4 Communication and establishing a connection ... 78
6.5 Operating states ... 79
6.6 Configuring the measuring sections ... 79
6.6.1 Conversion example ... 85
6.7 Fieldbus connection via PROFIsafe ... 89
6.7.1 Diagnostics of the PROFIsafe communication status ... 89
6.7.2 Setting the PROFIsafe address in the DCS21B option ... 91
6.7.3 Scaling the position values in the DCS21B option ... 92
6.7.4 PROFIsafe process image ... 93
7 Validation ... 96
7.1 Procedure ... 96
7.2 Configuration report for validation ... 96
7.2.1 Structure of the configuration report ... 96
7.2.2 Creating the configuration report ... 96
7.2.3 Entries in the configuration report ... 97
7.3 Determining/checking the response times for validation ... 98
7.4 Checking the performance level according to EN ISO 13849-1 ... 100

8 Maintenance ... 101
8.1 Modification/changes to the unit ... 101
8.2 Disposal ... 101
8.3 MOVIDRIVE® B unit replacement ... 102
8.3.1 Replacing the inverter ... 102
8.3.2 Replacing the DCS..B option ... 102
8.3.3 Replacing the battery of option DCS..B ... 103
8.3.4 Replacing an SSI absolute encoder ... 104
9 Diagnostics ... 107
9.1 Meaning of the status LED ... 107
9.1.1 Indication of the operating state ... 107
9.2 Error and alarm messages ... 108
9.2.1 List of error messages ... 109
9.2.2 List of alarm messages ... 118
9.2.3 List of ECS messages ... 125
10 Technical Data ... 129
10.1 General technical data ... 129
10.2 Characteristic safety values of MOVISAFE® DCS21B ... 129
10.3 Characteristic safety values of MOVISAFE® DCS31B ... 130
10.4 Plug connector ... 130
10.4.1 Pin assignment X80 ... 130
10.4.2 Pin assignment X81 ... 131
10.4.3 Pin assignment X82 ... 131
10.4.4 Pin assignment X83 ... 131
10.4.5 Pin assignment X84/X85 ... 132
10.4.6 Pin assignment X86 ... 133
10.4.7 Pin assignment X87 ... 133
11 Declaration of Conformity ... 134
11.1 Declaration of comformity for MOVIDRIVE® B with DCS..B option ... 134
12 Appendix ... 135
12.1 Comparison of safety functions ... 135
12.2 Description of input elements ... 135
12.2.1 General information ... 135
12.2.2 Operating mode switch ... 135
12.2.3 Light curtain ... 136
12.2.4 Emergency switch-off ... 136
12.2.5 Start/reset ... 136
12.2.6 Sensor ... 136
12.2.7 Door monitoring ... 137
12.2.8 Confirmation button ... 137
12.3 Encoder combinations ... 138

12.4 Technical data of SEW encoders ... 138
12.4.1 TTL incremental encoders ... 138
12.4.2 SIN/COS encoder ... 139
12.4.3 Combination encoders Hiperface® and SIN/COS ... 139
12.4.4 Combination encoders RS485 and SIN/COS ... 139
12.4.5 Combination encoder SSI and SIN/COS ... 139
12.4.6 Encoder values of MOVIDRIVE® B via backplane bus ... 140
12.5 Diagnostic values ... 140
12.5.1 Binary inputs ... 140
12.5.2 Binary outputs ... 141
12.5.3 Encoder interface ... 142
12.6 Typical response times ... 144
12.6.1 Typical response times of the DCS21B option ... 144
12.6.2 Typical response times of the DCS31B option ... 146
12.6.3 Calculating the response time of DCS..B with overspeed distance monitoring ... 147
12.7 Instruction list commands of the DCS31B option ... 149
12.8 Abbreviations used ... 150
Index ... 151

1 General Information

1.1 How to use this documentation

The documentation is an integral part of the product and contains important information on operation and service. Programming and parameterization is described in the online help of the MOVISAFE® Config software. The documentation is written for all employees who assemble, install, start up, and service this product.

The documentation must be accessible and legible. Make sure that persons responsible for the system and its operation as well as persons who work independently with the software and the connected units, have read through the documentation carefully and understood it. If you are unclear about any of the information in this documentation, or if you require further information, contact SEW-EURODRIVE.

1.2 Structure of the safety notes

1.2.1 Meaning of signal words

The following table shows the grading and meaning of the signal words for safety notes, notes on potential risks of damage to property, and other notes.

Signal word	Meaning	Consequences if disregarded
⚠ **DANGER**	Imminent danger	Severe or fatal injuries
⚠ **WARNING**	Possible dangerous situation	Severe or fatal injuries
⚠ **CAUTION**	Possible dangerous situation	Minor injuries
NOTICE	Possible damage to property	Damage to the drive system or its environment
INFORMATION	Useful information or tip: Simplifies the handling of the drive system.	

1.2.2 Structure of the section safety notes

Section safety notes do not apply to a specific action but to several actions pertaining to one subject. The symbols used either indicate a general hazard or a specific hazard.

This is the formal structure of a section safety note:

⚠ SIGNAL WORD

Type and source of danger.

Possible consequence(s) if disregarded.

- Measure(s) to prevent the danger.

1.2.3 Structure of the embedded safety notes

Embedded safety notes are directly integrated in the instructions just before the description of the dangerous action.

This is the formal structure of an embedded safety note:

- ⚠**SIGNAL WORD** Type and source of danger.

  Possible consequence(s) if disregarded.

  – Measure(s) to prevent the danger.

1.3 Right to claim under warranty

A requirement of fault-free operation and fulfillment of any rights to claim under limited warranty is that you adhere to the information in the documentation at hand. Therefore, read the documentation before you start working with the software and the connected devices from SEW-EURODRIVE.

Make sure that the documentation is available to persons responsible for the machinery and its operation as well as to persons who work independently on the devices. Also ensure that the documentation is legible.

1.4 Exclusion of liability

You must adhere to this documentation and the documentation of the connected devices from SEW-EURODRIVE to ensure safe operation and to achieve the specified product characteristics and performance features.

SEW-EURODRIVE assumes no liability for injury to persons or damage to equipment or property resulting from non-observance of the documentation. In such cases, any liability for defects is excluded.

1.5 Copyright

© 2008 - SEW-EURODRIVE. All rights reserved.

Copyright law prohibits the unauthorized duplication, modification, distribution, and use of this document, in whole or in part.

1.6 Product names and trademarks

All product names in this documentation are trademarks or registered trademarks of their respective titleholders.

1.7 Other applicable documentation

Observe the following applicable documents:

- "MOVIDRIVE® MDX60B/61B" operating instructions
- "MOVIDRIVE® MDX61B Fieldbus Interface DFS12B PROFIBUS DP-V1 with PROFIsafe" manual
- "MOVIDRIVE® MDX61B Fieldbus Interface DFS22B PROFINET IO with PROFIsafe" manual
- "Manual Encoder Signal Split Box DAE70B/71B" manual
- Online help of the MOVISAFE® Config DCS software
- Online help of the MOVISAFE® Assist software
- Configuration report of the MOVISAFE® Assist/Config software. Is used as acceptance protocol during validation.
- Certificate and characteristic safety values for the MOVISAFE® DCS..B safety module option.

Make sure you always use the latest documentation and software version.

Our documentation is available in various languages for download from the SEW homepage (www.sew-eurodrive.com). If you are unclear about any of the information in this documentation or if you require further information, consult SEW-EURODRIVE.

If required, you can order printed copies of the documentation from SEW-EURODRIVE.

2 Safety Notes

The following basic safety notes must be read carefully to prevent injury to persons and damage to property. The operator must ensure that the basic safety notes are read and observed. Make sure that persons responsible for the plant and its operation, as well as persons who work independently on the unit, have read through the operating instructions carefully and understood them. If you are unclear about any of the information in this documentation, or if you require further information, please contact SEW-EURODRIVE.

2.1 General information

Never install or start up damaged products. Submit a complaint to the shipping company immediately in the event of damage.

During operation, drive inverters can have live, bare and movable or rotating parts as well as hot surfaces, depending on their degree of protection.

Removing covers without authorization, improper use as well as incorrect installation or operation may result in severe injuries to persons or damage to property.

Refer to the documentation for additional information.

2.2 Target group

Only qualified personnel are authorized to install, start up, repair or service the units (observe IEC 60364 or CENELEC HD 384 or DIN VDE 0100 and IEC 60664 or DIN VDE 0110 as well as national accident prevention guidelines).

Qualified personnel in the context of these basic safety notes are all persons familiar with installation, assembly, startup, programming, parameterization and operation of the product who possess the necessary qualifications. In addition to that, they must be familiar with the relevant safety regulations and laws, especially with the requirements of EN ISO 13849-1 and all other standards, directives and laws specified in this documentation. The persons mentioned must have the authorization expressly issued by the company, to operate, program, configure, label and ground units, systems and circuits in accordance with the standards of safety technology.

Any activities regarding transportation, storage, operation, and disposal must be carried out by persons who have been instructed appropriately.

2.3 Designated use

The MOVISAFE® DCS21B option in combination with the DFS12B/22B option and the MOVISAFE® DCS31B option are designed for installation in MOVIDRIVE® MDX61B inverter sizes 1 to 7.

When installed in machines, startup of the MOVISAFE® DCS..B option (i.e. start of designated operation) is prohibited until it is determined that the machine complies with the local laws and directives. In the individual area of application, you must especially observe the Machinery Directive 2006/42/EC as well as the EMC Directive 2004/108/EC. The EMC test specifications EN 61000-4-2, EN 61000-4-3, EN 61000-4-4, EN 61000-4-6 and EN 61000-6-2 form the basis for this. EN 60204-1 must also be observed.

You must observe the technical data and information on the connection requirements as provided on the nameplate and in the documentation.

2.4 Transportation, storage

Observe the notes on transportation, storage and proper handling. Observe the climatic conditions as stated in the section "General technical data".

2.5 Installation

The units must be installed and cooled according to the regulations and specifications in the corresponding documentation.

Protect the MOVISAFE® DCS..B option from improper strain. Ensure that components are not deformed and/or insulation spaces are maintained, particularly during transportation. Avoid contact with electronic components and contacts.

The MOVISAFE® DCS..B option contains components that can easily be damaged by electrostatic energy and improper handling. Prevent mechanical damage or destruction of electric components (may pose health risk).

The following applications are prohibited unless explicitly permitted:

- Use in potentially explosive atmospheres.
- Use in areas exposed to harmful oils, acids, gases, vapors, dust, radiation, etc.
- Use in non-stationary applications.

2.6 Electrical connection

Observe the applicable national accident prevention guidelines when working on live MOVISAFE® DCS..B options (e.g. BGV A3).

Perform electrical installation according to the pertinent regulations (e.g. cable cross sections, fusing, protective conductor connection). For any additional information, refer to the applicable documentation.

You find notes on EMC compliant installation, such as shielding, grounding, arrangement of filters and routing of lines, in the documentation of the safety module. The manufacturer of the system or machine is responsible for maintaining the limits established by EMC legislation.

Preventive measures and protection devices must correspond to the regulations in force (e.g. EN 60204-1).

2.7 Operation

Systems into which MOVIDRIVE® MDX61 with MOVISAFE® DCS..B option is installed must be equipped with additional monitoring and protection devices, if necessary, according to the applicable safety regulations; e.g. the law governing technical equipment, accident prevention regulations, etc.

Keep all covers and doors closed during operation.

The fact that the status LED and other display elements are no longer illuminated does not indicate that the unit has been disconnected from the supply system and no longer carries any voltage.

Mechanical blocking or internal safety functions of the unit can cause a motor standstill. Eliminating the cause of the problem or performing a reset may result in the drive restarting automatically. If this is not permitted for the driven machine for safety reasons, disconnect the unit from the supply system before correcting the error.

2.8 Definitions

- The designation DCS..B is used as a generic term for all derivatives of the MOVISAFE® product series. If a particular design variant is referred to in the manual, the complete designation is used.
- The term "safe" used in this manual refers to the classification as a safe function according to EN ISO 13849-1.
- PROFIsafe is a technology standard for a safe fieldbus system.
- The "MOVISAFE® Assist" software is a parameterization interface for the MOVISAFE® DCS21B option.
- The "MOVISAFE® Config" software is a programming interface for the MOVISAFE® DCS31B option.

3 Integrated Safety Technology

The safety technology of the MOVISAFE® DCS..B option described below meets the following safety requirements:

- Performance level e according to EN ISO 13849-1.
- SIL 3 according to IEC 61508

INFORMATION

This product was certified by TÜV. Copies of the TÜV certificate are available from SEW-EURODRIVE.

3.1 Safety architecture of the DCS..B option

The internal structure of the DCS..B option consists of two separate channels with mutual comparison of results. High-quality diagnostic mechanisms for fault detection are executed in both channels.

The structure corresponds to the architecture and operating principle of category 4 according to EN ISO 13849-1.

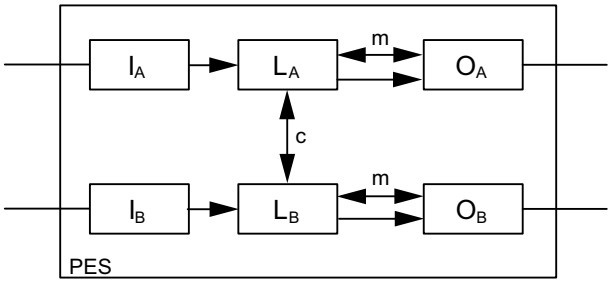

2405111435

PES = Programmable electronic system
I_A = Input channel A
I_B = Input channel B
L_A = Logic channel A
L_B = Logic channel B
O_A = Output channel A
O_B = Output channel B
c = Cross comparison
m = Monitoring

The means the overall architecture has the following structure:

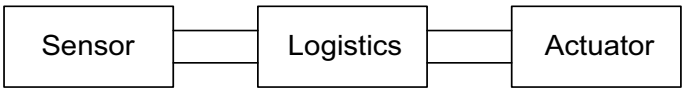

2408400907

Double reading of every input and diagnostics by cross comparison.

The specific safety technology characteristics of the respective component (sensor, actuator) are listed in the respective technical data chapters. To assess the overall system in terms of safety, you can use the characteristic safety values specified in the "Technical Data" chapter for the subsystem DCS..B (PES).

INFORMATION

- When using several sensors with different functions (e.g. position indicator access door + velocity detection) for a safety function (e.g. safety reduced speed when the access door is open), then these sensors have to be regarded as series connection in the safety-related assessment of the overall system. See also BGIA report 02/2008 "Functional Safety of Machine Controls – Application of EN ISO 13849".
- For fault exclusions, refer to the tables under D in the appendix of EN ISO 13849-2.

The examples shown in this manual and their characteristic architecture are decisive for the assignment to a category according to EN ISO 13849-1. The resulting maximally possible performance levels according to EN ISO 13849-1 depend on the following factors of the external components:

- Structure (simple or redundant)
- Measures against common cause failure (CCF)
- Diagnostics coverage (DC_{avg})
- Mean time to failure of a channel ($MTTF_d$)

3.2 Safety functions

This chapter describes the safety functions according to DIN EN 61800-5-2. Some safety functions in the MOVISAFE® DCS..B modules have further functionalities that exceed the definitions stipulated in the standard. In addition, further safety functions are available on the basis of the standard. These include, for example,

- functions for drive systems prone to slip,
- functions for reading the contacts of external switching devices and
- for the safe control of a brake system.

The MOVISAFE® Config software selects safety functions based on the configuration, the basic module used, and the encoder or combination of encoders. The safety functions can be configured and parameterized in the logic as required.

The following table gives an overview of the maximum number of safety functions with reference to the respective safety module.

Designation of the safety function		Maximum number of the safety function	
according to EN 61800-5-2	**with option DCS..B**	**DCS21B**	**DCS31B**
ECS	ECS	1	1
EMU	EMU	2	2
PDM	PDM	1	1
SAR	-	Implementation possible using SCA	
SBC	-	Implementation using safe output	
SCA	PSC	7	16
SDI	DMC	1	1
SEL	ELC	1	1
SLA	-	Integrated in SEL, SLP, SCA, SSX, SLS, SOS	
SLI	JSS	1	1
SLP	OLC	1	1
SLS	MSC	4	4
SOS	ZSC	1	1
SS1(c)	-	Implementation using timer and safe output	
SS2(c)	-	Requires SOS	
SSR	-	Implementation possible using SCA	
SSX[1)]	-	1	2
STO	-	Implementation using safe output	

1) The safety function SSX can be configured as SS1(b) or SS2(b)

3.2.1 STO – Safe Torque Off

When the STO function is activated, the drive inverter no longer supplies power to the motor. As a result, the drive cannot generate torque. This safety function corresponds to a non-controlled stop according to EN 60204-1, stop category 0.

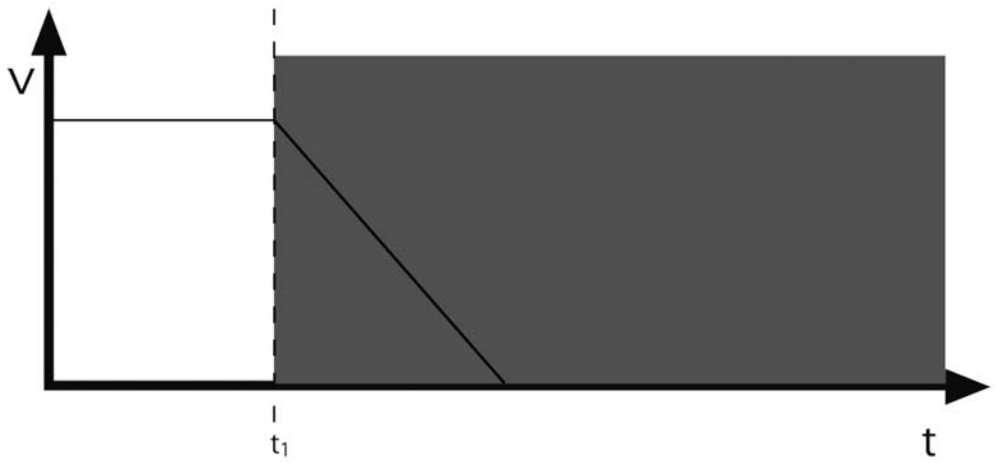

1970872331

Safety function trips

v = Velocity
t = Time
t_1 = Point of time when STO is triggered

INFORMATION

The STO function does not monitor the stopping of the drive.

Controlled standstill is preferred, if possible.

3.2.2 SS1(b) – Safe Stop 1

When the SS1(b) function is active, the inverter brings the motor to a standstill electrically. The deceleration is monitored. The STO safety function is triggered when the monitored deceleration is exceeded or when standstill is reached.

This safety function corresponds to a controlled stop of the drive according to EN 60204-1, stop category 1.

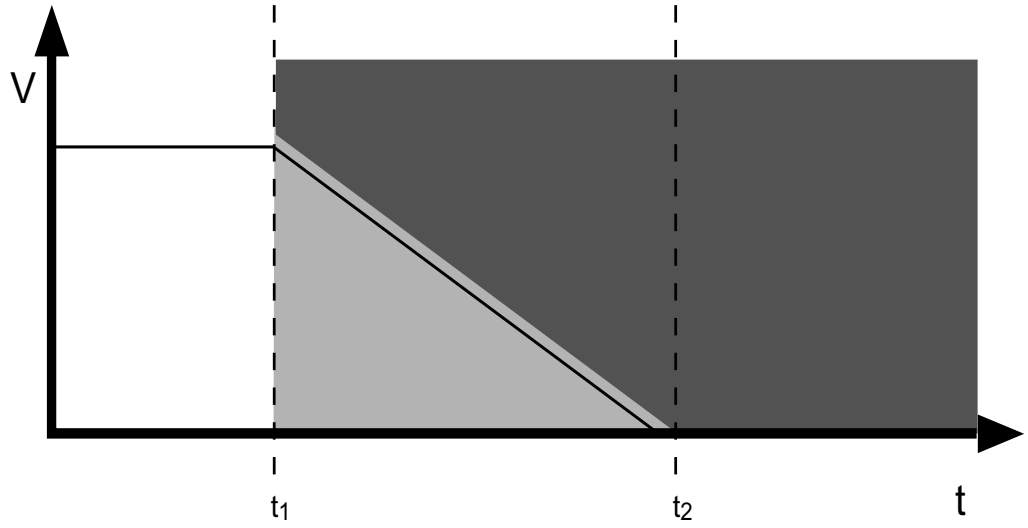

1970875019

Safety function monitors
Safety function trips

v = Velocity
t = Time
t_1 = Point of time when SS1(b) is activated and motor deceleration is triggered
t_2 = Point of time when STO is triggered

3.2.3 SS1(c) – Safe Stop 1

When the SS1(c) function is active, the inverter brings the motor to a standstill electrically. The STO safety function will be triggered after a specified, safety-relevant time.

This safety function corresponds to a controlled stop of the drive according to EN 60204-1, stop category 1.

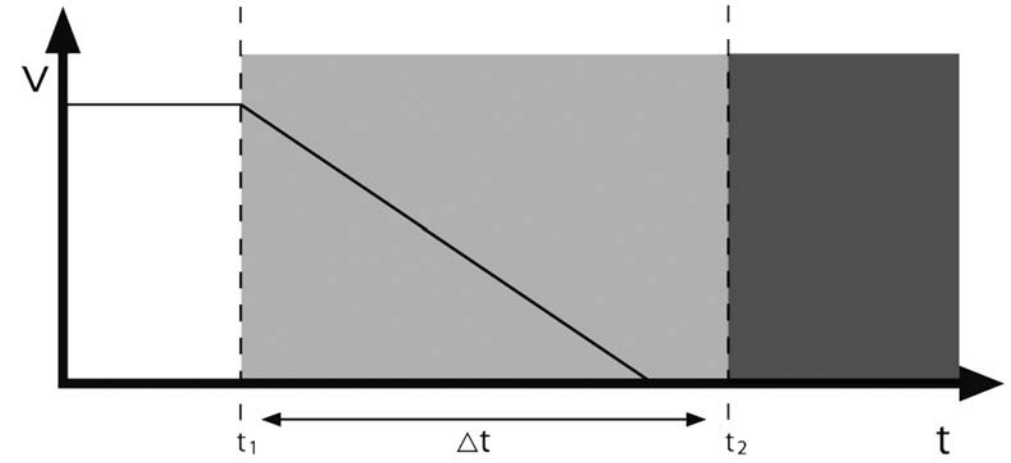

1970877451

Safety function monitors
Safety function trips

v = Velocity
t = Time
t_1 = Point of time when SS1(c) is activated and motor deceleration is triggered
t_2 = Point of time when STO is triggered
Δt = Safety-related period of time

INFORMATION

- The SS1(c) function does not monitor the stopping of the drive.
- The safety-relevant period of time Δt allows the drive to come to a stop. In the event of a fault, the drive does not come to a stop. It will not be de-energized until the time t_2 (STO).

3.2.4 SS2(b) – Safe Stop 2

When the SS2(b) function is active, the inverter brings the motor to a standstill electrically. The position must be safely monitored after standstill (SOS function according to EN 61800-5-2). The STO safety function will be triggered if the deceleration value until standstill is exceeded or if there is a movement at standstill. STO means that standstill has to be ensured by a mechanical brake.

This safety function corresponds to a controlled stop of the drive according to EN 60204-1, stop category 2.

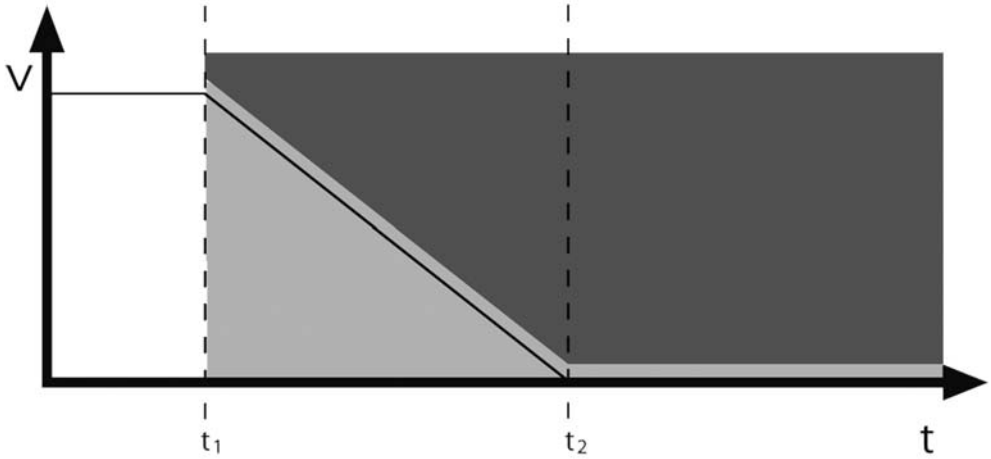

1970957067

Safety function monitors
Safety function trips

v = Velocity
t = Time
t_1 = Point of time when SS2(b) is activated and motor deceleration is triggered
t_2 = Point of time when SOS is triggered

3.2.5 SS2(c) – Safe Stop 2

When the SS2(c) function is active, the inverter brings the motor to a standstill electrically. At standstill, the drive inverter delivers the power to keep the motor in position. The position must be safely monitored after a specified, safety-relevant time has elapsed (SOS function according to EN 61800-5-2).

This safety function corresponds to a controlled stop of the drive according to EN 60204-1, stop category 2.

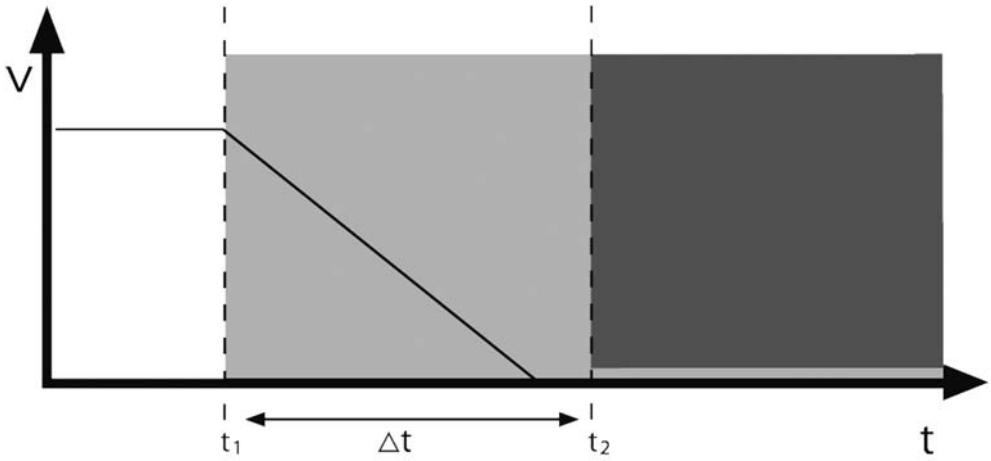

2175196299

Safety function monitors
Safety function trips

v = Velocity
t = Time
t_1 = Point of time when SS2(c) is activated and motor deceleration is triggered
t_2 = Point of time when SOS is triggered
Δt = Safety-related period of time

INFORMATION

- The SS1(c) function does not monitor the stopping of the drive.
- The safety-relevant period of time Δt allows the drive to come to a stop. In the event of a fault, the drive does not come to a stop. It will not be de-energized until the time t_2 (STO).

3.2.6 SOS – Safe Operating Stop

The SOS function prevents the motor from deviating from the stop position by more than a specified value. The drive inverter delivers the power to keep the motor in position. If the specified value is exceeded, the safety function will be disabled and an error response (usually STO or SS1) will be triggered.

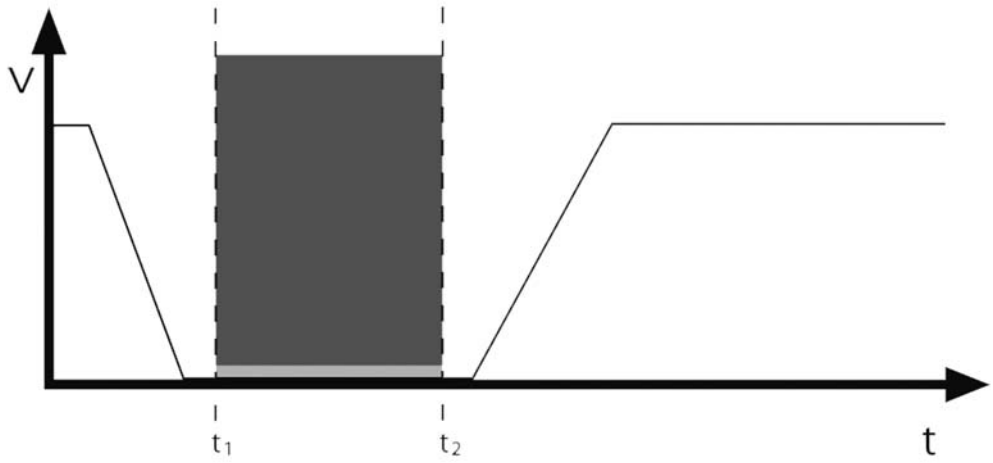

1970959499

Safety function monitors
Safety function trips

v = Velocity
t = Time
t_1 = Point of time when SOS is triggered
t_2 = Point of time when SOS is deactivated

3.2.7 SLA – Safely Limited Acceleration

The SLA function prevents a movement from exceeding a specified acceleration value. If the permitted acceleration limit is exceeded, the safety function will be disabled and an error response will be triggered (usually STO or SS1).

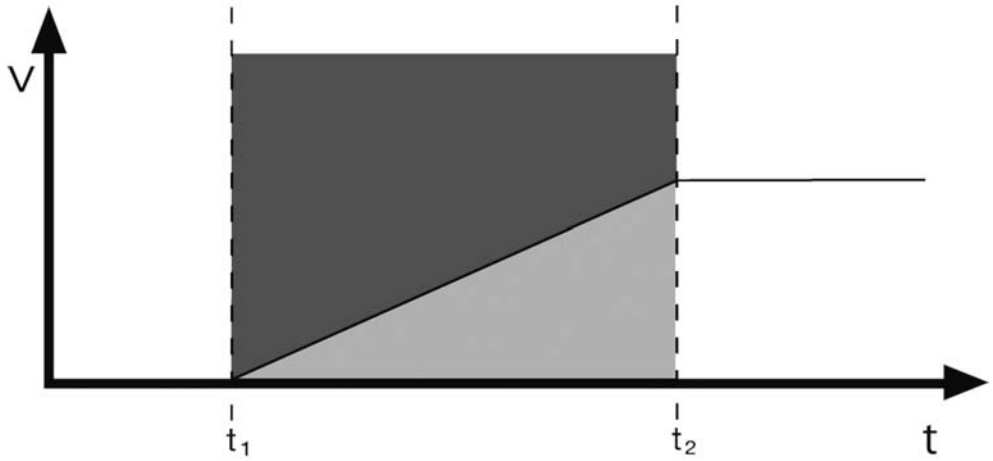

1970964363

Safety function monitors
Safety function trips

v = Velocity
t = Time
t_1 = Point of time when SLA is activated
t_2 = Point of time when SLA is deactivated

3.2.8 SAR – Safe Acceleration Range

The SAR function prevents the acceleration of the drive from exceeding a specified range. If the permitted acceleration range is exceeded, the safety function will be disabled and an error response will be triggered (usually STO or SS1).

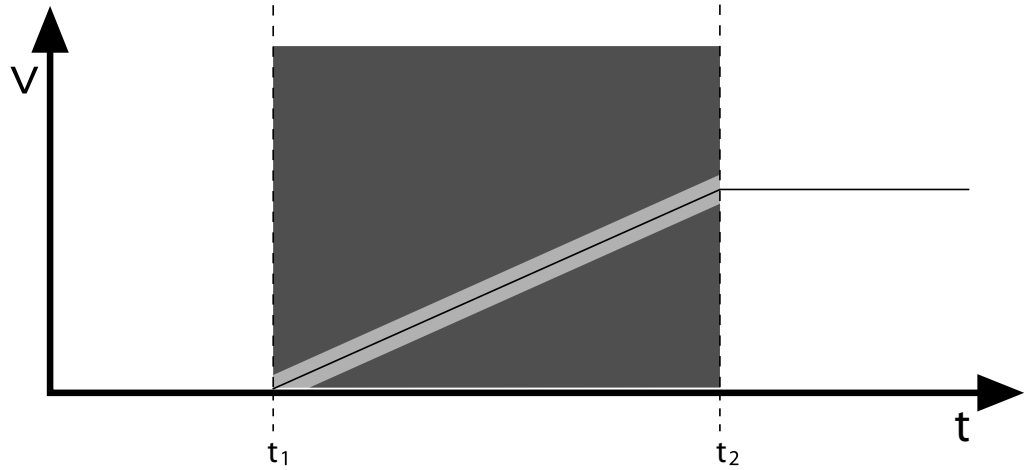

2405242379

Safety function monitors
Safety function trips

v = Velocity
t = Time
t_1 = Point of time when SAR is activated
t_2 = Point of time when SAR is deactivated

3.2.9 SLS – Safely Limited Speed

The SLS function prevents the drive from exceeding a specified velocity. If the permitted velocity is exceeded, the safety function will be disabled and an error response will be triggered (usually STO or SS1).

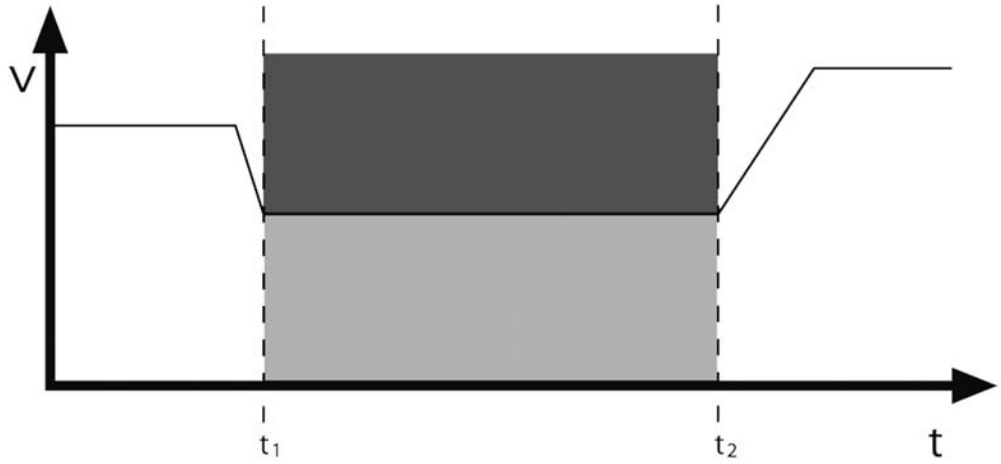

1970961931

Safety function monitors
Safety function trips

v = Velocity
t = Time
t_1 = Point of time when SLS is activated
t_2 = Point of time when SLS is deactivated

3.2.10 SSR – Safe Speed Range

The SSR function prevents the speed of the drive from exceeding a specified range. If the permitted velocity range is exceeded, the safety function will be disabled and an error response will be triggered (usually STO or SS1).

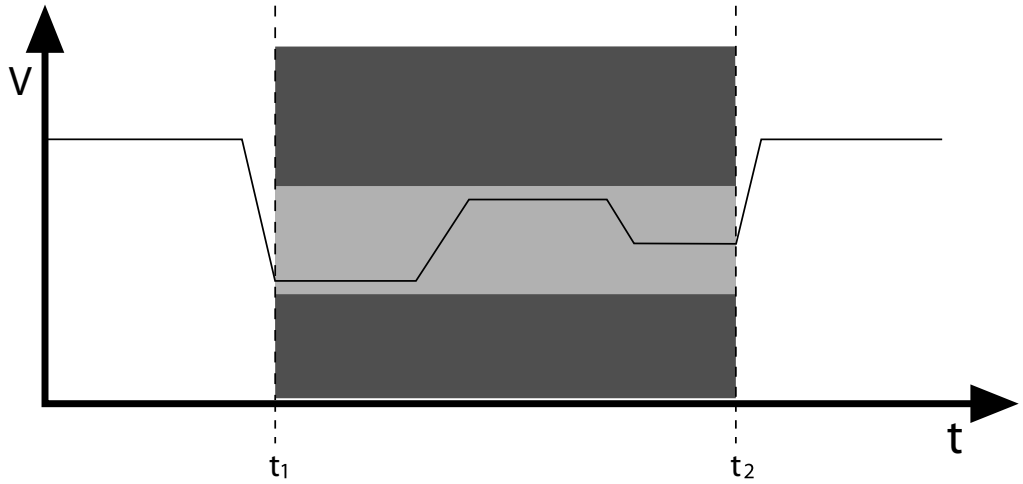

2405245835

Safety function monitors
Safety function trips

v = Velocity
t = Time
t_1 = Point of time when SSR is activated
t_2 = Point of time when SSR is deactivated

3.2.11 SDI – Safe Direction

The SDI function prevents movement in an unintended direction. If this condition is violated, the safety function will be disabled and an error message will be issued (usually STO or SS1).

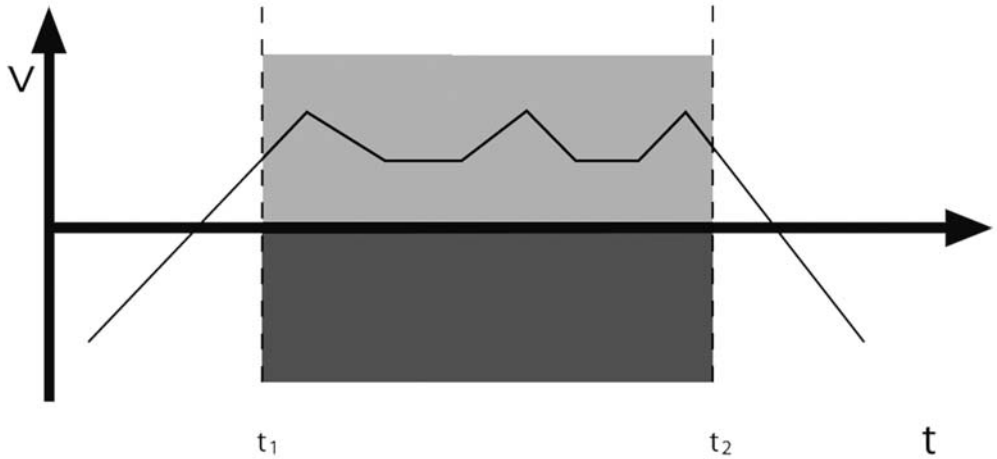

1970976651

Safety function monitors
Safety function trips

v = Velocity
t = Time
t_1 = Point of time when SDI is activated
t_2 = Point of time when SDI is deactivated

3.2.12 SLI – Safely Limited Increment

The SLI function prevents that a movement exceeds a specified increment. If the limit value of the increment is exceeded, the safety function will be disabled and an error message will be triggered (usually STO or SS1).

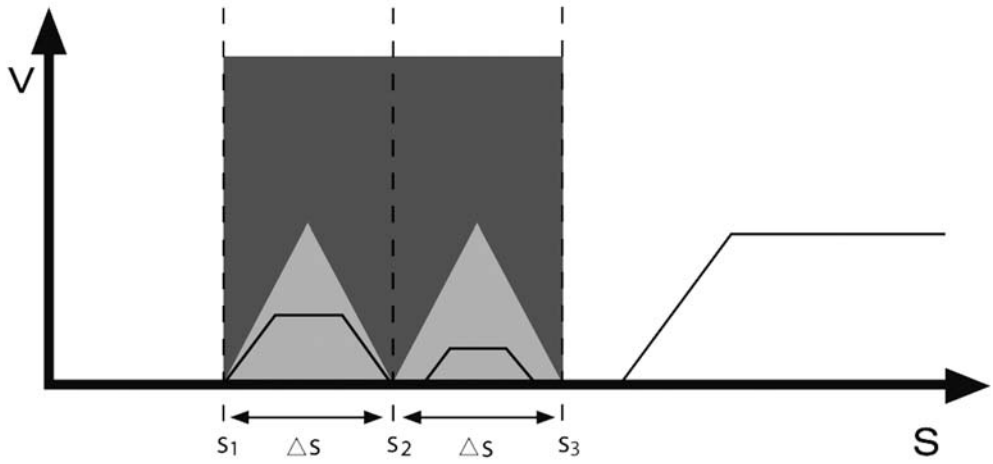

1970979467

Safety function monitors
Safety function trips

v = Velocity
S = Distance
s_1, s_2 = Point of time when SLI is activated
s_2, s_3 = Point of time when SLI is deactivated
Δs = Safe increment

3.2.13 SLP – Safely Limited Position

The SLP function prevents that a movement exceeds a specified absolute position. If the limit value of the absolute position is exceeded, the safety function will be disabled and an error message will be triggered (usually STO or SS1).

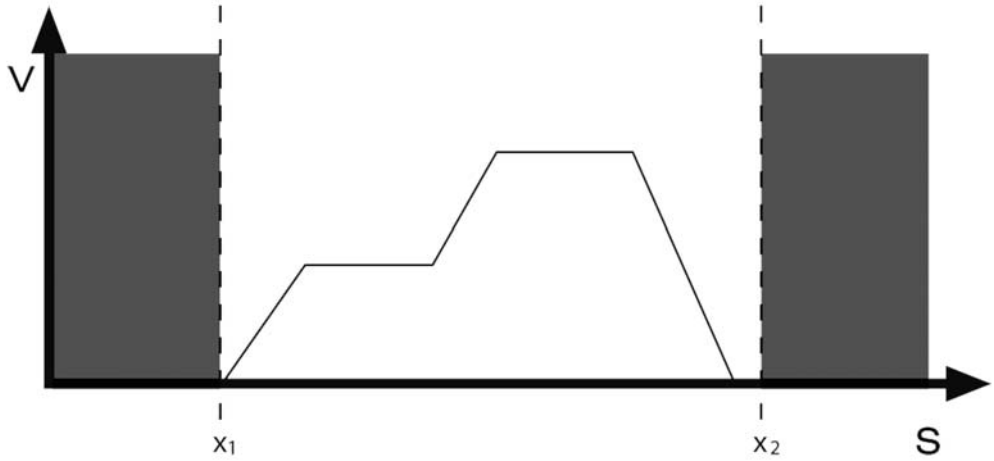

2177370379

Safety function trips

v = Velocity
t = Time
X_1 = Minimum (lower) absolute position
X_2 = Maximum (upper) absolute position

3.2.14 SCA – Safe Cam

The SCA function provides a safe signal to indicate whether the drive is located in a specific area or position range. This signal can be displayed or used for programming. Violation of the defined limit values will disable the safe signal.

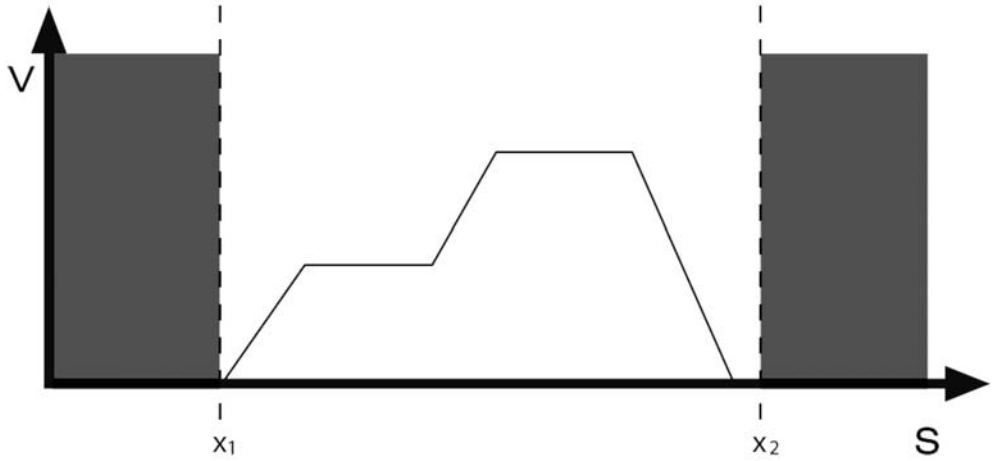

2177370379

Safety function trips

v = Velocity
s = Distance
x_1 = Lower limit of range
x_2 = Upper limit of range

INFORMATION

The SCA function need not be acknowledged

3.2.15 SBC – Safe Brake Control

The SBC function provides a safe output signal for controlling an external brake. This means no power is supplied to release the brake electrically.

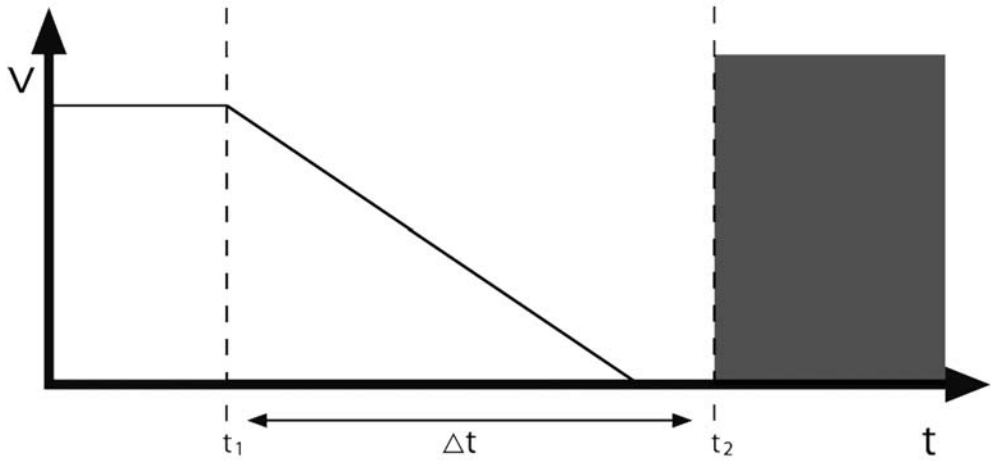

2278968587

Safety function interrupts the power supply to the brake

v = Velocity
t = Time
t_1 = Point of time when the drive is stopped
t_2 = Point of time when SBC is triggered
Δt = Safety-related period of time

3.3 Restrictions

INFORMATION

- The system/machine manufacturer must perform a system/machine-specific risk analysis. Using the MOVIDRIVE® B drive system must be considered for this purpose.
- The safety concept is only suitable for performing mechanical work on the system/machine components.
  Before carrying out work on the electrical section of the drive system, the supply voltage must be disconnected using an external maintenance switch/main switch.
- When the DC 24 V voltage supply is disconnected, mains voltage is still present on the drive inverter's DC link.
- When using a thermistor, protection against restart is not guaranteed when the thermistor is triggered. This must be taken into account during project planning for the system/machine. Suitable measures might have to be implemented in addition.
- The brake control integrated in MOVIDRIVE® B and the standard brake of brake-motors are not designed to be safety-relevant. They are not part of the above mentioned safety functions.
  If the brake control and/or the motor brake fails, the drive can coast for much longer (depending on the friction and inertia of the system). In case of regenerative loads (e.g. lifting axes, declining conveying lines), the drive can even accelerate. This must be taken into account for the risk analysis of the system/machine and prevented by additional safety-relevant measures (e.g. safety braking system), if required.
  MOVIDRIVE® B cannot be used without an additional brake system for application-specific safety functions that require active deceleration (braking) of the dangerous movement.
- When using the above described functions SS1(c)/SS2(c), the deceleration of the drive is not monitored with respect to safety. In the event of a fault, the drive might not be braked during the deceleration time, or it might even accelerate.
  In this case, the STO function is only activated after the set time delay has passed. The resulting danger must be taken into account for the risk analysis of the system/machine. Additional safety measures have to be implemented if required.

4 Unit Structure

4.1 Unit features and type designations

4.1.1 DCS21B

- Speed monitoring:
  - Speed monitoring
  - Standstill monitoring
  - Direction monitoring
  - Emergency stop monitoring
- Position monitoring:
  - Position range monitoring
  - Travel range monitoring
  - Target position monitoring
- 8 safe binary inputs
- 3 × 2 safe binary outputs
- 2 pulse outputs
- Encoder interface: SSI / TTL incremental / SIN/COS
- Diagnostic and configuration interface
- PROFIsafe fieldbus interface

INFORMATION

The DCS21B option can only be used in combination with the DFS12B or DFS22B fieldbus option.

4.1.2 DCS31B

- Velocity monitoring:
  - Speed monitoring
  - Standstill monitoring
  - Direction monitoring
  - Emergency stop monitoring
- Position monitoring:
  - Position range monitoring
  - Travel range monitoring
  - Target position monitoring
- 8 safe binary inputs
- 3 × 2 safe binary outputs
- 2 pulse outputs
- Encoder interface: SSI / TTL incremental / SIN/COS
- Diagnostic and configuration interface

4.2 Nameplates

MOVIDRIVE® MDX61B with installed DCS..B option is supplied with two nameplates.

4.2.1 1st nameplate: DCS..B

- The first nameplate (see following figure) is attached to the contact spring strip of the DCS..B option. It contains the following data:
  - Part number (P/N)
  - Serial number (S/N)
  - Production date (here: 46/08)
  - Version (here: 12-05)

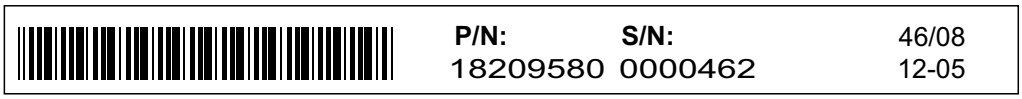

9007201225846795

4.2.2 2nd nameplate: MOVIDRIVE® B

- The second nameplate (see following figure) is attached to MOVIDRIVE® MDX61B. It contains the following information:
  - Type designation
  - Part number (P/N), serial number (S/N)
  - Input data, output data
  - Degree of protection (here: IP20)
  - Production date (here: 46/08)
  - Version (here: 12-05)
  - Permitted standards
  - Reference to the response times in the manual

1971108875

INFORMATION

If the DCS..B option is delivered separately, you must attach the supplied nameplate onto the outside of MOVIDRIVE® MDX61B.

4.3 Unit structure of DCS21B

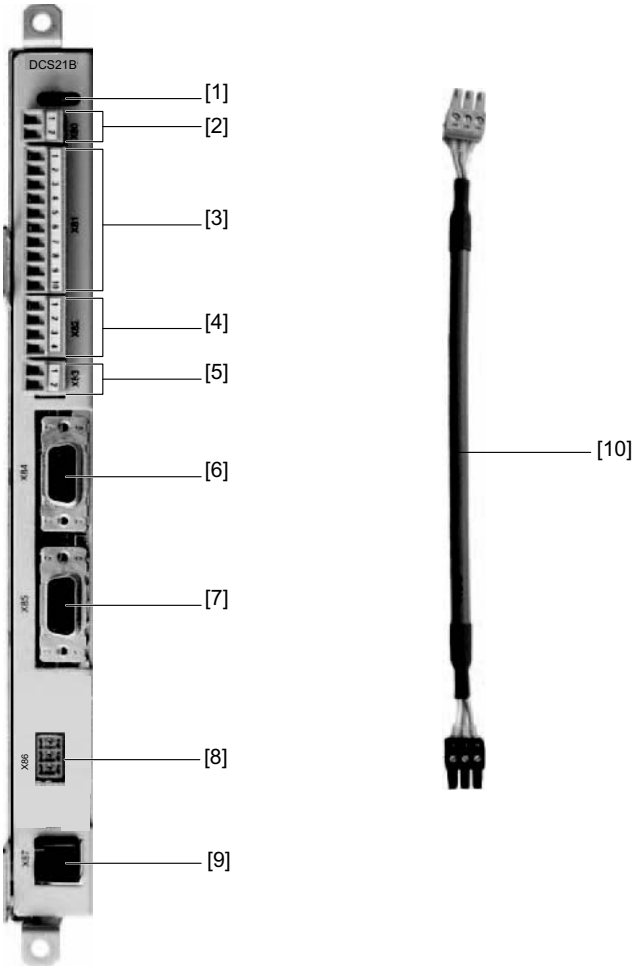

1971124363

[1] Status LEDs
[2] X80: Terminal for DC 24 V voltage supply
[3] X81: Terminal for binary inputs DI1 - DI8 and pulse signals P1, P2
[4] X82: Terminal for binary outputs DO0 / DO1
[5] X83: Terminal for binary output DO2
[6] X84: Socket for TTL incremental, SIN/COS or SSI absolute encoder
[7] X85: Socket for TTL incremental, SIN/COS or SSI absolute encoder
[8] X86: Socket for CAN interface
[9] X87: Socket for parameter setting and diagnostic interface
[10] Prefabricated cable DAE34B (part number: 1821 307 3) for CAN bus connection between DCS21B X86 and X31 of the DFS12B/DFS22B option.

4.4 Unit structure of DCS31B

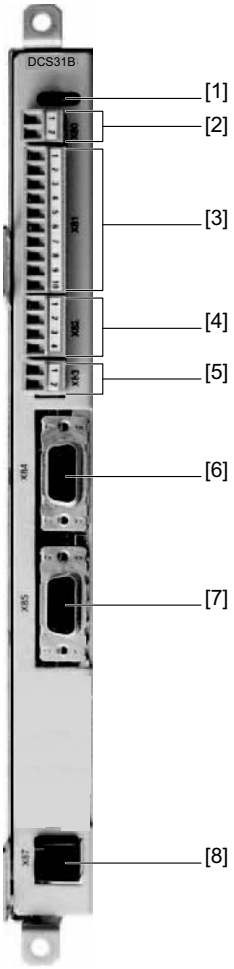

1971128203

[1] Status LEDs
[2] X80: Terminal for DC 24 V voltage supply
[3] X81: Terminal for binary inputs DI1 - DI8 and pulse signals P1, P2
[4] X82: Terminal for binary outputs DO0 / DO1
[5] X83: Terminal for binary output DO2
[6] X84: Socket for TTL incremental, SIN/COS or SSI absolute encoder
[7] X85: Socket for TTL incremental, SIN/COS or SSI absolute encoder
[8] X87: Socket for parameter setting and diagnostic interface

5 Installation

5.1 General installation notes

INFORMATION

- Route signal cables for addressing the binary inputs and contact monitoring separately from one another.
- Route power cables separately from signal cables.
- Use shielded, twisted pair cables with sufficient cable cross sections for all signal cables.

5.2 Notes for use in MOVIDRIVE® B

INFORMATION

MOVISAFE® DCS..B communicates with MOVIDRIVE® B via internal CAN bus. The baud rate in MOVIDRIVE® B is set to 500 kBaud and cannot be changed. This means a maximum transmission rate of 500 kBaud is available for other nodes on SBus 1 (e.g. DH..B controller).

5.3 Notes for using DH..B controllers

INFORMATION

- The DCS..B option cannot be used with the DHP11B controller.
- The DCS..B option can be used with the DHE41B controller if the IEC program of the DHE41B option was created with a version ≥ 2040.
- The DCS..B option can only be used with the DHF41B/DHR41B controller if
  - the DHF41B/DHR41B option is installed in the external housing UOH
  - the IEC program of the DHF41B/DHR41B option was created with a version ≥ 2040

  Options DCS..B and DHF41B/DHR41B cannot be installed at the same time in MOVIDRIVE® B because there is only one expansion slot.
- Note when operating the DH..B controller together with the DCS..B option: MOVISAFE® DCS..B communicates with MOVIDRIVE® B via internal CAN bus. The baud rate in MOVIDRIVE® B is set to 500 kBaud and cannot be changed. This means a maximum transmission rate of 500 kBaud is available for other nodes on SBus 1 (e.g. DH..B controller).

5.4 Installing the option MOVISAFE® DCS..B

INFORMATION

- Option DCS..B can only be installed in MOVIDRIVE® MDX61B sizes 1 to 7 but not in size 0.
- Option DCS21B can only be used in combination with the DFS12B/22B fieldbus interface option. Option DCS21B **must** be installed in the expansion slot, and option DFS12B/22B in the fieldbus slot (see following figure).
- The prefabricated cable DAE34B (part number 1821 307 3) is used for CAN bus connection between DCS21B X86 and X31 of the DFS12B/22B option.
  The scope of delivery of the DCS21B option includes the DAE34B.

MOVIDRIVE® MDX61B
BG1 - 7

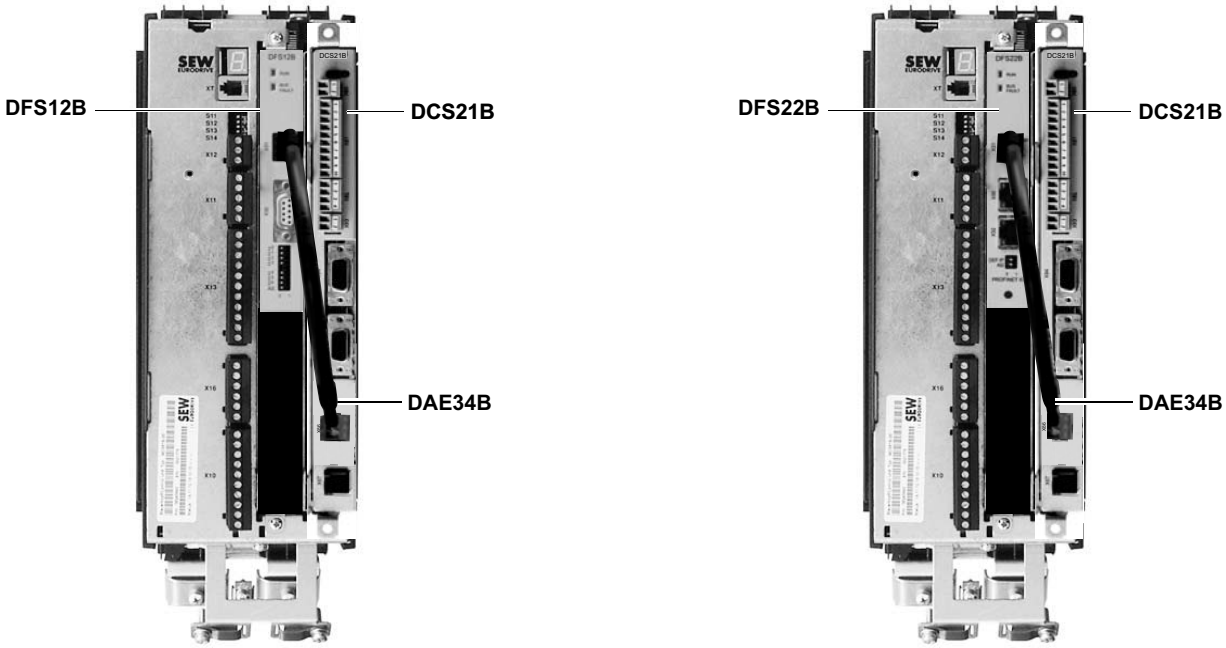

1991015307

5.4.1 Before you start

Observe the following notes before installing or removing an option:

NOTICE

Electrostatic charge.

Damage to electronic components.

- Disconnect the inverter from the power. Switch off the DC 24 V and the supply voltage.
- Before touching the option, take appropriate measures (discharge strap, conductive shoes, etc.) to protect it from electrostatic charge.

- **Before installing** the option, remove the keypad (see MOVIDRIVE® MDX60B/61B operating instructions, chapter "Removing/ installing the keypad") and the front cover (see MOVIDRIVE® MDX60B/61B operating instructions, chapter "Removing/installing the front cover").
- **After having installed** the option, remove the front cover (see MOVIDRIVE® MDX60B/61B operating instructions, chapter "Removing/ installing the front cover") and the keypad (see MOVIDRIVE® MDX60B/61B operating instructions, chapter "Removing/installing the keypad").
- Keep the option in its original packaging until immediately before you are ready to install it.
- Hold the option card by its edges only. Do not touch any of the components.

5.4.2 Basic procedure for installing/removing an option (MDX61B, sizes 1 – 7)

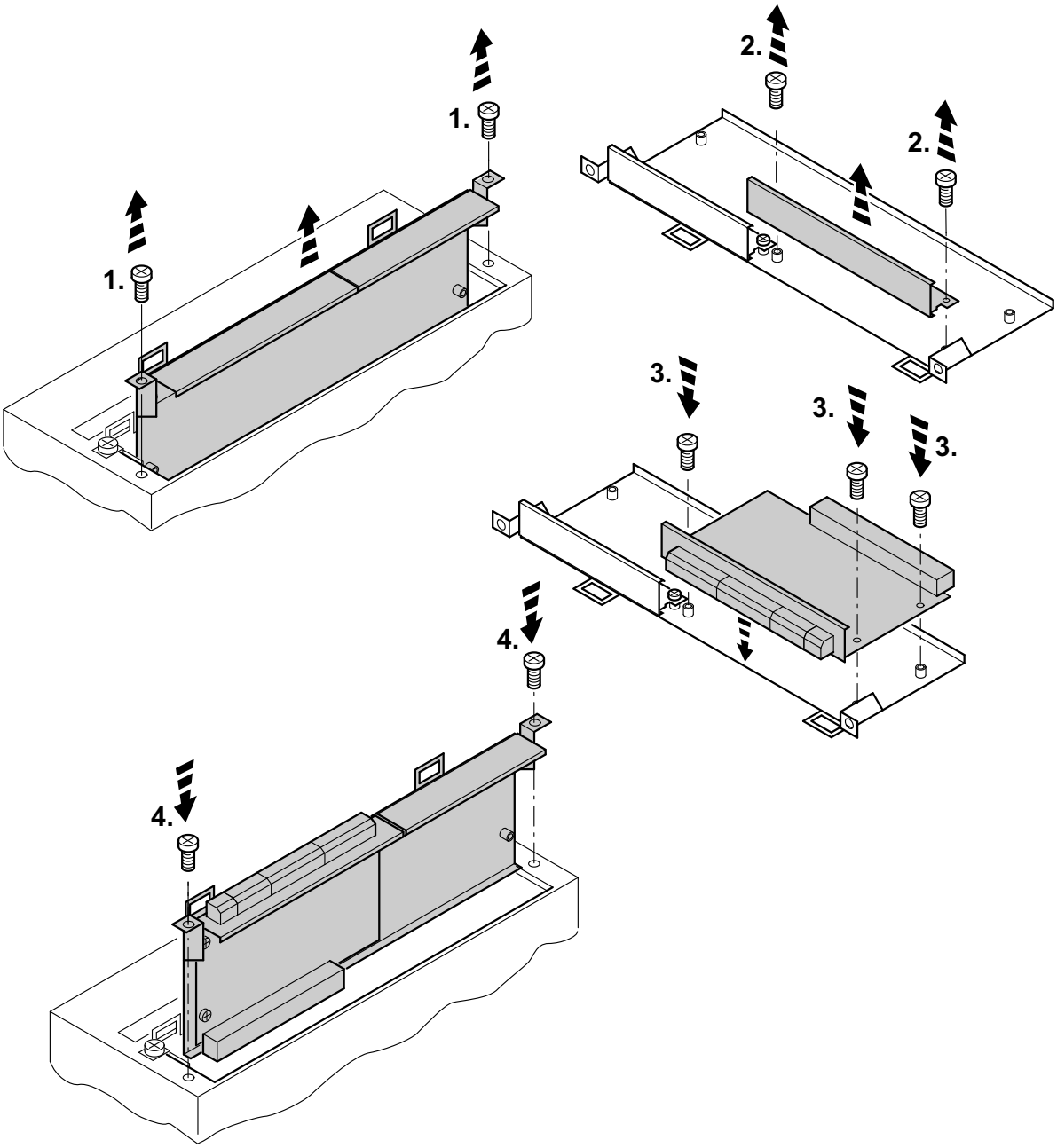

1971392907

1. Remove the retaining screws holding the card retaining bracket. Pull the card retaining bracket out evenly from the slot (do not twist).
2. Remove the retaining screws of the black cover plate on the card retaining bracket. Remove the black cover plate.
3. Position the option card onto the retaining bracket so that the retaining screws fit into the corresponding bores on the card retaining bracket.
4. Insert the retaining bracket with the installed option into the slot, pressing slightly so it is seated properly. Secure the option card retaining bracket with the retaining screws.
5. To remove the option, follow the instructions in reverse order.

5.5 Connection and terminal description of the DCS..B option

5.5.1 Part numbers

- DCS21B safety module option: 1 820 392 2
- DCS31B safety module option: 1 820 958 0

INFORMATION

- Option DCS..B can only be installed when using MOVIDRIVE® MDX61B sizes 1 to 7.
- The DCS..B option must be supplied with DC 24 V. The overall current consumption is DC 1.9 A.
- DCS21B can only be used in combination with the DFS12B/22B fieldbus interface. The DCS..B option must be inserted in the expansion slot.

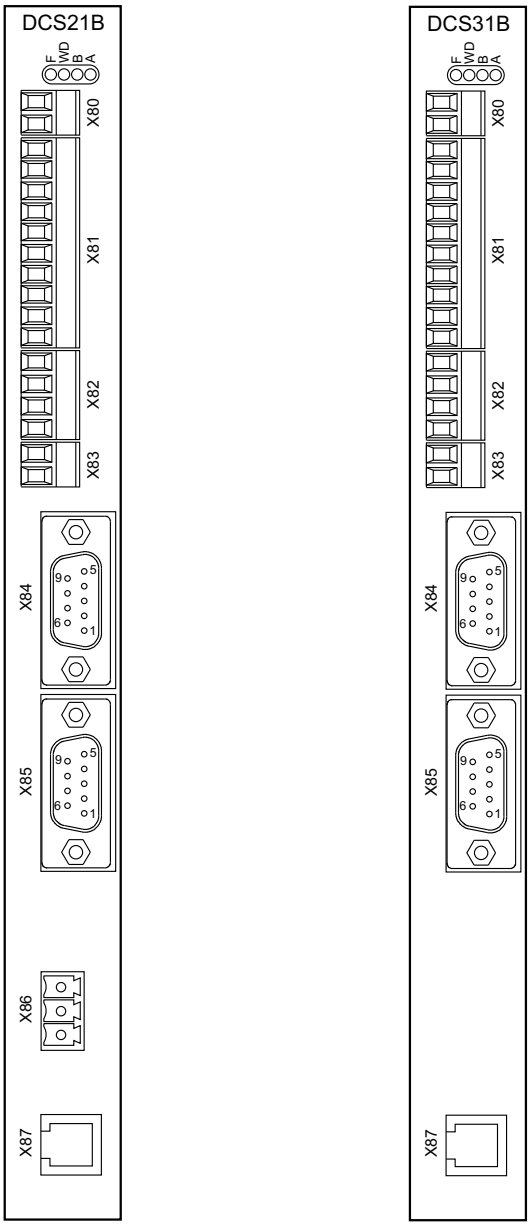

1971397643

5.5.2 Terminal description

Description	LED/ Terminal	Function
LED alarm/error **LED watchdog** **LED system B** **LED system A**	**LED F** **LED WD** **LED B** **LED A**	The LEDs indicate the status of the DCS..B option (see chapter "Diagnostics").
X80: Terminal for voltage supply (plug-in terminals)	**X80:1** **X80:2**	DC 24 V Reference potential 0V24
X81: Terminal for binary inputs (plug-in terminals)	**X81:1 P1** **X81:2 DI1** **X81:3 DI2** **X81:4 DI3** **X81:5 DI4** **X81:6 P2** **X81:7 DI5** **X81:8 DI6** **X81:9 DI7** **X81:10 DI8**	Pulse output 1 Binary input 1 Binary input 2 Binary input 3 Binary input 4 Pulse output 2 Binary input 5 Binary input 6 (only with DCS31B reserved for reset) Binary input 7 Binary input 8
X82: Terminal for binary outputs DO0, DO1 (plug-in terminals)	**X82:1 DO0_P** **X82:2 DO0_M** **X82:3 DO1_P** **X82:4 DO1_M**	HISIDE output 0 LOSIDE output 0 HISIDE output 1 LOSIDE output 1
X83: Terminal for binary input DO2 (plug-in terminals)	**X83:1 DO2_P** **X83:2 DO2_M**	HISIDE output 2 LOSIDE output 2
X84: Socket for TTL incremental, SIN/COS and absolute encoder **(encoder 1, D-sub 9 socket)**	**X84:1** **X84:2** **X84:3** **X84:4** **X84:5** **X84:6** **X84:7** **X84:8** **X84:9**	Assignment depends on connected encoder (see "Technical Data" chapter)
X85: Socket for TTL incremental, SIN/COS and absolute encoder **(encoder 2, D-sub 9 socket)**	**X85:1** **X85:2** **X85:3** **X85:4** **X85:5** **X85:6** **X85:7** **X85:8** **X85:9**	Assignment depends on connected encoder (see "Technical Data" chapter)
X86: Socket for CAN bus **(only DCS21B)**	**X86:1** **X86:2** **X86:3**	CAN High CAN Low DGND
X87: Socket for parameter setting and diagnostic interface **(RJ10 socket)**	**X87**	Service interface For point-to-point connection only

5.6 Measures for electromagnetic compatibility (EMC)

Option DCS..B is intended for industrial use (based on the EMC test specifications EN 61800-3). Prerequisite for safe installation is that the electromagnetic compatibility of the entire system is ensured by taking appropriate measures. The following measures ensure designated operation of the DCS..B option:

- Route voltage supply cables of the DCS..B option and "switching cables" of MOVIDRIVE® MDX61B separately from one another.
- Route signal cables and power cables of the inverter in separate cable ducts. The minimum distance between the cable ducts must be 10 mm.
- Use only shielded cables to connect the position and velocity sensors. The cable for transmitting signals must be suitable for RS485 standard (EIA).
- Make sure the shield is connected properly in the 9-pole D-sub connectors of the position and velocity sensors and on the sensor end of the cable. Use only metal or metalized connectors.
- Use only shielded motor cables.
- Ensure EMC-compliant installation of the inverter in the vicinity of the DCS..B option. Check the routing and design of the shielding for the motor cable and braking resistor connection.
- Connect the shield of the motor cable, encoder cable, and split cable at both sides (motor and MOVIDRIVE® B). The control cables to MOVIDRIVE® B must be shielded. The shield must be connected to MOVIDRIVE® B.
- Connect the shield of the hybrid motor cable with integrated TF also to the shield terminal of MOVIDRIVE® B.
- All contactors near the DCS.. option must be equipped with suitable suppressors.
- Use only shielded cables for safety-relevant control cables.
- The control cable between X83 of the DCS..B option and X17 of MOVIDRIVE® B must be connected to the shield terminal for signal cables of MOVIDRIVE® B.
- It is essential that you attach the shielding of the DC 24 V supply cable to the housing at both ends.

5.6.1 Equipotential bonding

For equipotential bonding, the DCS..B option must be connected as follows after it has been installed in MOVIDRIVE® B. Connect the tapped hole [1] with X80:2 of the DCS..B option. For the tapped hole [1], use a grounding screw with tooth lock washer (included in the scope of delivery) M4 x 8 or M4 x 10 (tightening torque: 1.4 - 1.6 Nm).

MOVIDRIVE® MDX61B
BG1 - 7

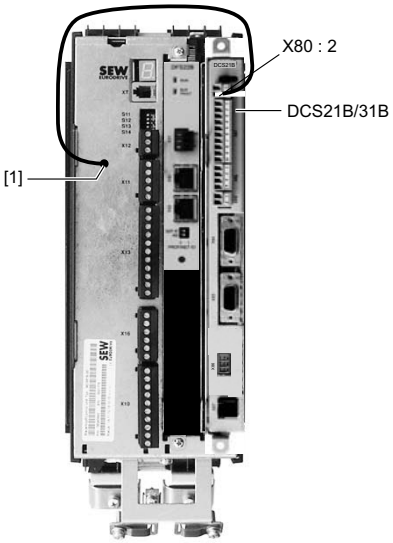

9007201226141323

INFORMATION

Proper operation cannot be guaranteed when the DCS..B option is installed in a MOVIDRIVE® B without tapped hole. SEW-EURODRIVE recommends to replace a MOVIDRIVE® B without tapped hole with a MOVIDRIVE® B with tapped hole.

5.7 External DC 24 V supply

Option DCS..B requires an external voltage supply of DC 24 V (SELV or PELV, EN 50178). The following conditions must be taken into account for project planning and installation of the power supply unit:

- It is essential that you observe the minimum and maximum tolerances of the supply voltage.

	Tolerance	
	Minimum (-15%)	**Maximum (+15%)**
Nominal voltage = DC 24 V	DC 24 V −15% = DC 20.4 V	DC 24 V +15% = DC 27.6 V

- To achieve a rather low residual ripple of the supply voltage, we recommend using a 3-phase power supply unit or an electronically controlled unit. The power supply unit must meet the requirements in EN 61000-4-11 (voltage dip).
- The external DC 24 V supply of the DCS..B option not only supplies internal electronic components but also the external velocity and position sensors. These have no separate short circuit protection.
- Always ensure safe electrical isolation against the voltage supply system (e.g. AC 230 V). For this purpose, select power supply units that meet EN 60742. When selecting the unit, make sure it has equipotential bonding between PE and DC 0 V on the secondary side.
- Protect option DCS..B externally with a 2 A fuse. Observe local regulations when dimensioning the connection cables.

INFORMATION

Without fuse, the DCS..B option can be destroyed in the event of a short circuit on one of the binary outputs (DO 0/1/2).

- Option DCS..B is immune to interference voltages up to DC 32 V.

5.8 Connecting binary inputs DI1 to DI8

Option DCS..B is equipped with 8 binary inputs (DI1 – DI8). They are suitable for connecting single or dual-channel sensors with or without pulsing.

INFORMATION

The following sample circuits assume that the switching elements are configured in accordance with the required performance level to EN ISO 13849-1 and that safety approval has been granted for the application in question.

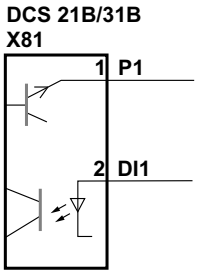

2408460299

The connected signals must have a "High" level of DC 24 V (DC +15 V to DC +30 V) and a "Low" level of DC 0 V (DC -3 V to DC +5 V). The inputs are equipped with input filters.

The unit-internal pulse voltages can be used to detect a cross fault in the connected signal lines. They can be connected with the binary inputs as described in chapter "Using pulse outputs P1 and P2".

No sensors with self-monitoring output (OSSD) can be connected to the binary inputs of option DCS..B.

In all operating states, an integrated diagnostic function cyclically tests whether the binary inputs and input filters are functioning properly. If an error is detected, the DCS..B option switches to alarm status and indicates this status (see chapter "Diagnostics").

INFORMATION

You must configure the binary input DI6 of the DCS31B option as reset input to be able to acknowledge any triggered safety function or alarm and error message. For the DCS21B option, you must send an acknowledgement via the safe fieldbus (PROFIsafe).

Depending on the required performance level, you can use binary inputs individually or combined in groups. The MOVISAFE® Config software interface provides various, predefined input elements for this purpose (see chapter "Description of input elements").

The DCS..B option has separate signal processing paths for every safety input (DI1 – DI8).

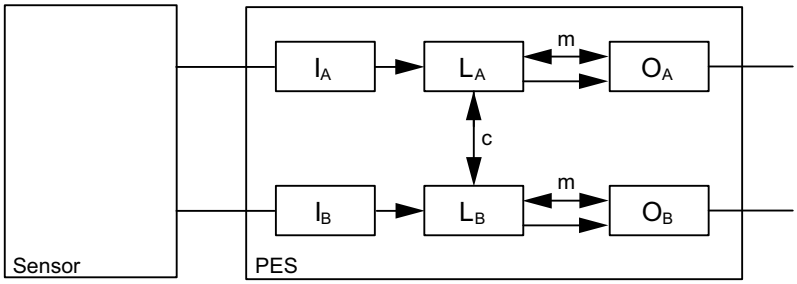

2408464139

PES = Programmable electronic system
I_A = Input channel A
I_B = Input channel B
L_A = Logic channel A
L_B = Logic channel B
O_A = Output channel A
O_B = Output channel B
c = Cross comparison
m = Monitoring

Example:

Signal processing in two channels and diagnostics by means of cross comparison in the DCS..B option (PES).

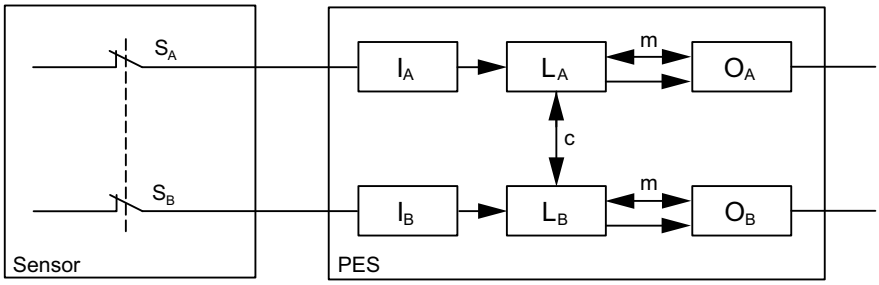

2408467211

PES = Programmable electronic system
I_A = Input channel A
I_B = Input channel B
L_A = Logic channel A
L_B = Logic channel B
S_A = Sensor channel A
S_B = Sensor channel B
O_A = Output channel A
O_B = Output channel B
c = Cross comparison
m = Monitoring

Example:

Double reading and signal processing in two channels and diagnostics by means of cross comparison in the DCS..B option (PES).

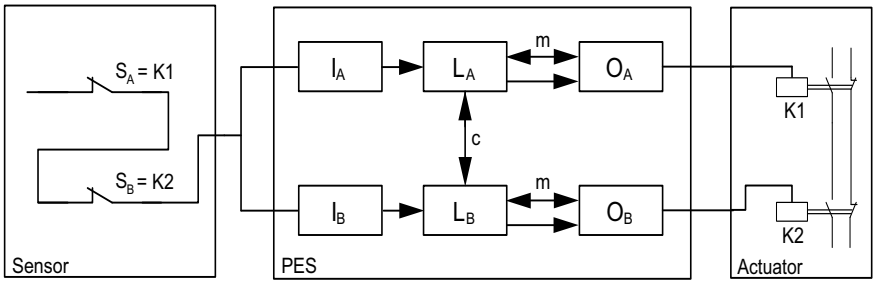

2408483979

PES = Programmable electronic system
I_A = Input channel A
I_B = Input channel B
L_A = Logic channel A
L_B = Logic channel B
S_A = Sensor channel A
S_B = Sensor channel B
O_A = Output channel A
O_B = Output channel B
c = Cross comparison
m = Monitoring

Option DCS..B ensures comprehensive diagnostic functions to achieve as high as possible DC values (**D**iagnostic **C**overage). These functions are executed permanently or optionally (cross fault monitoring by means of pulse detection). You can use the DC values for the input sensors given in chapter "Diagnostic values" for a safety-relevant evaluation of the overall system.

5.8.1 Using pulse outputs

The DCS..B option provides two pulse outputs P1 (X81:2) and P2 (X81:6) on the X81 terminal strip in addition to binary inputs DI1 to DI8. The P1 and P2 pulse outputs are switching DC 24 V outputs that are intended exclusively for monitoring the binary inputs (DI1 – DI8). The pulse outputs must not be used for other functions within the application. For project planning, note that the connected cables do not exceed the maximum length of 30 m and that the maximum permitted total current for the pulse outputs does not exceed 300 mA.

INFORMATION

Without using pulsing, the binary inputs can be connected as follows:

- With single-channel, self-monitoring sensors, you can establish structures up to category 2. This means you can achieve a performance level in accordance with EN ISO 13849-1.
- With dual-channel sensors without function test within 24 hours, you can establish structures up to category 3. This means you can achieve a performance level in accordance with EN ISO 13849-1.
- With dual-channel sensors and function test within 24 hours, you can establish structures up to category 4. This means you can achieve a performance level in accordance with EN ISO 13849-1.
  Note that external measures, especially suitable cable routing, are necessary to prevent a short circuit in the external wiring between different inputs and against the supply voltage of the DCS..B.

Each digital input of option DCS..B can be configured individually for the following signal sources:

- Digital input is assigned to pulse P1
- Digital input is assigned to pulse P2
- Digital input is assigned to DC 24 V continuous voltage

An alternating assignment is recommended (see below table).

Pulse outputs P1, P2	Pin	Assign-ment	Remark
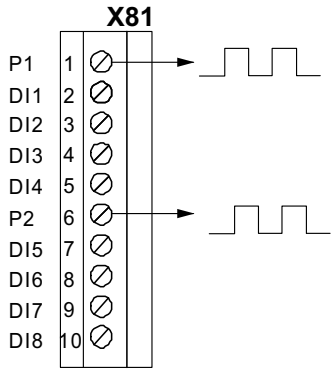 9007201226326155	X81:1	Pulse 1 output (P1)	
	X81.2	DI1	Pulse 2 assigned
	X81:3	DI2	Pulse 1 assigned
	X81:4	DI3	Pulse 2 assigned
	X81:5	DI4	Pulse 1 assigned
	X81:6	Pulse 2 output (P2)	
	X81:7	DI5	Pulse 1 assigned
	X81:8	DI6	Pulse 2 assigned
	X81:9	DI7	Pulse 1 assigned
	X81:10	DI8	Pulse 2 assigned

5.8.2 Single-channel sensor, not monitored

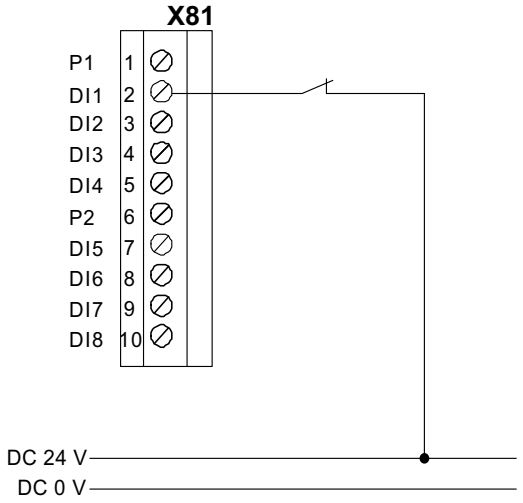

1971589259

INFORMATION

The single-channel sensor is connected to the DCS..B option without pulsing. Option DCS..B cannot detect a cross fault or an interrupted signal. Note that this configuration is **not permitted for safe applications** unless external measures are taken.

A category 1 structure according to EN ISO 13849-1 can be achieved with the circuit.

5.8.3 Single-channel sensor, monitored

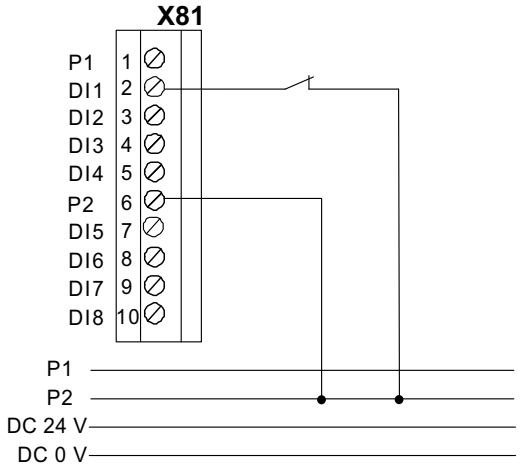

1971592587

When using a single-channel sensor with pulsing, the sensor must be connected to pulse output P1 or P2. The pulse must then be assigned on the DCS..B option.

The following faults are detected when using a single-channel sensor with pulsing:

- Short circuit against the DC 24 V supply voltage
- Short circuit against DC 0 V
- Cable interruption (power interruption is a safe state!)

However, a **short circuit in the cable between the two sensor connections is not detected**. A **short circuit between P2 and DI1** is **not detected** either.

INFORMATION

A **category 2 structure** according to EN ISO 13849-1 can be achieved if the short circuit between DI1 and P1, and the short circuit between the sensor connections can be excluded. Faults can be excluded in accordance with EN ISO 13849-2, table D8.

5.8.4 Dual-channel sensor, not monitored

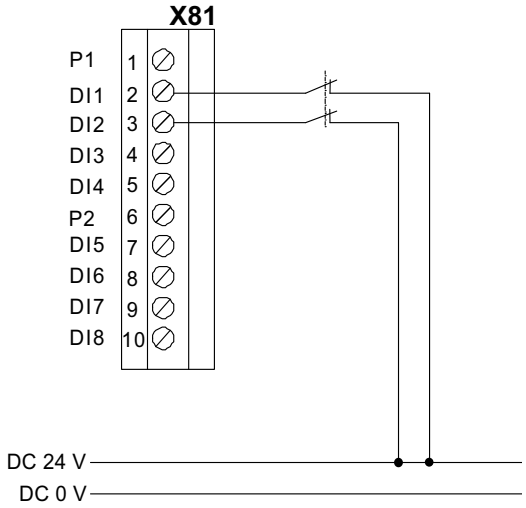

1971595787

Using dual-channel homogeneous sensors without pulsing can lead to problems. Short circuits cannot be detected in the supply line of the dual-channel sensor, e.g. in the cable. Safe operation can only be achieved by routing the cables separately and making sure the terminals cannot short circuit.

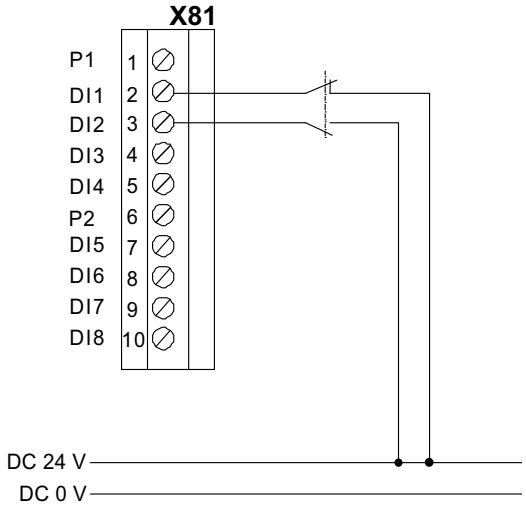

1972457611

The DCS..B option can operate safely with dual-channel diversified sensors without pulsing.

INFORMATION

A **category 3 structure** according to EN ISO 13849-1 can be achieved with both circuits.

5.8.5 Dual-channel sensor, monitored

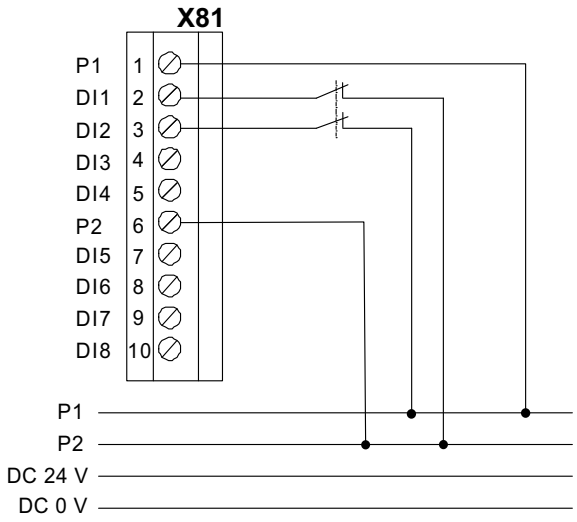

1972460299

All cross fault connections and connections to DC 24 V and DC 0 V can be detected when two independent pulse signals are used on a homogeneous sensor. Use only NC contacts for safety applications.

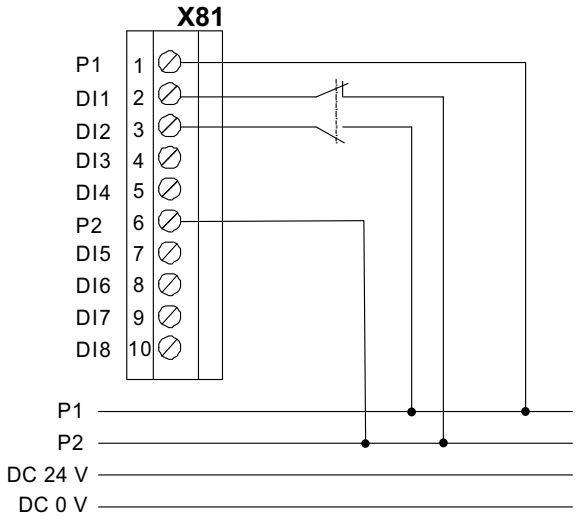

1972462987

Note that when connecting a diversified sensor (see above figure), only the NO contact is monitored regularly. As with the homogeneous sensor, all types of faults are detected in the supply line.

INFORMATION

A **category 4 structure** according to EN ISO 13849-1 can be achieved with both circuits.

5.9 Connecting binary outputs

Option DCS..B offers a total of 6 binary outputs. The 3 binary outputs DO0_P, DO1_P and DO2_P are positive switching, the 3 binary outputs DO0_M, DO1_M and DO2_M are negative switching.

INFORMATION

The following sample circuits assume that the switching elements are configured in accordance with the required performance level to EN ISO 13849-1 and that safety approval has been granted for the application in question.

DCS 21B/31B
X83

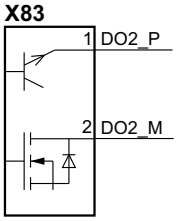

2060216459

Depending on the required performance level, you can use binary outputs individually or combined in groups.

Binary output	Remark
DO0_P and DO0_M	Up to performance level e
DO0_P	Only functional
DO0_M	
DO1_P and DO1_M	Up to performance level e
DO1_P	Only functional
DO1_M	
DO2_P and DO2_M	Up to performance level e
DO2_P	Only functional
DO2_M	

If the unit-internal diagnostic function is enabled, it will cyclically check the binary outputs for proper functioning. During this plausibility check, the binary output is switched to its inverse value for the duration of the check (< 500 µs). This means a P binary output is briefly switched to DC 0 V potential, and an M binary output is briefly switched to DC 24 V potential. If an error is detected, the DCS..B option switches to alarm/error state and indicates this state (see chapter "Diagnostics").

INFORMATION

The binary outputs of option DCS..B must not be connected to fast touch probe inputs because the diagnostic function might lead to unintentional switching operations.

These are, for example, binary inputs DI00 (X13:1, fixed assignment with "/Controller inhibit"), DI02 (X13:3) and DI03 (X13:4) of MOVIDRIVE® B.

Example: Signal pattern of binary outputs (e.g. DO0_P and DO0_M) combined in a group:

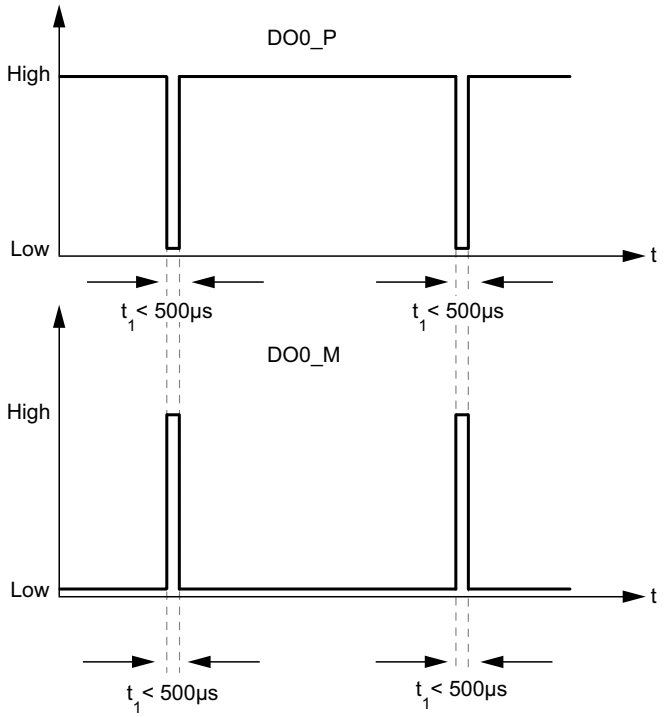

9007201568874379

Example: Signal pattern of an individual P binary output (e.g. DO0_P):

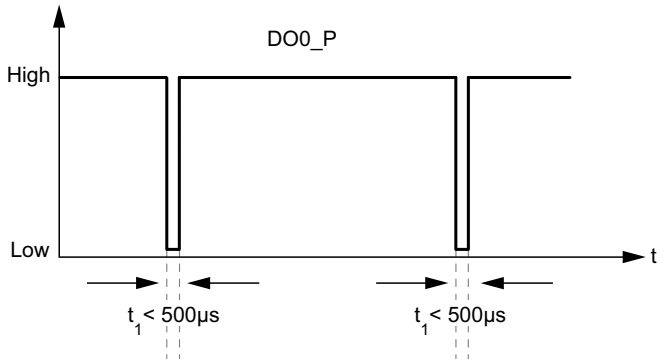

9007201568878603

The DCS..B option has separate signal processing paths for every safety output (DO0 – DO2).

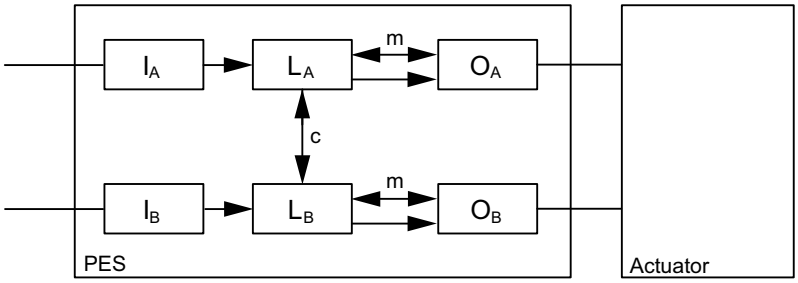

2411078411

PES = Programmable electronic system
I_A = Input channel A
I_B = Input channel B
L_A = Logic channel A
L_B = Logic channel B
O_A = Output channel A
O_B = Output channel B
c = Cross comparison
m = Monitoring

Example:

Signal processing in two channels and double output in the DCS..B option (PES).

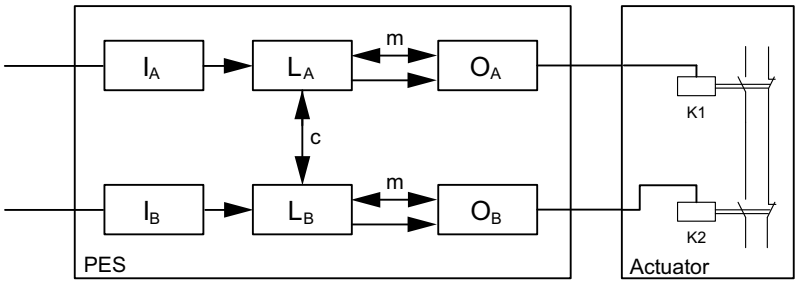

2411107595

PES = Programmable electronic system
I_A = Input channel A
I_B = Input channel B
L_A = Logic channel A
L_B = Logic channel B
O_A = Output channel A
O_B = Output channel B
c = Cross comparison
m = Monitoring
K1 = Actuator 1
K2 = Actuator 2

Binary output	Output voltage	Output current
DO0_P **DO0_M**	DC 24 V DC 0 V	0.1 A
DO1_P **DO1_M**	DC 24 V DC 0 V	
DO2_P **DO2_M**	DC 24 V DC 0 V	1.5 A

INFORMATION

- The total current load of the DCS..B option must not exceed DC 1.9 A. The output power of the binary outputs DO0/DO1 depends on the output power of the binary output DO2_P/M and the pulse outputs P1 and P2.
- For safety-relevant applications, use only external switching elements with a minimum holding current of > 1.2 mA.
- Cross and short circuits in the external wiring of the binary outputs are not detected. For safe outputs, cross faults and short circuit therefore have to be prevented according to EN ISO 13849-2 table D.4.

Option DCS..B ensures comprehensive diagnostic functions to achieve as high as possible diagnostic coverage values. Make sure that elements for switching amplification, such as relays, contactors, etc., are included in the switch-off circuit. You can use the DC values for the output sensors in chapter "Diagnostic values" for a safety-relevant evaluation of the overall system.

5.9.1 Single-pole switching binary output not monitored

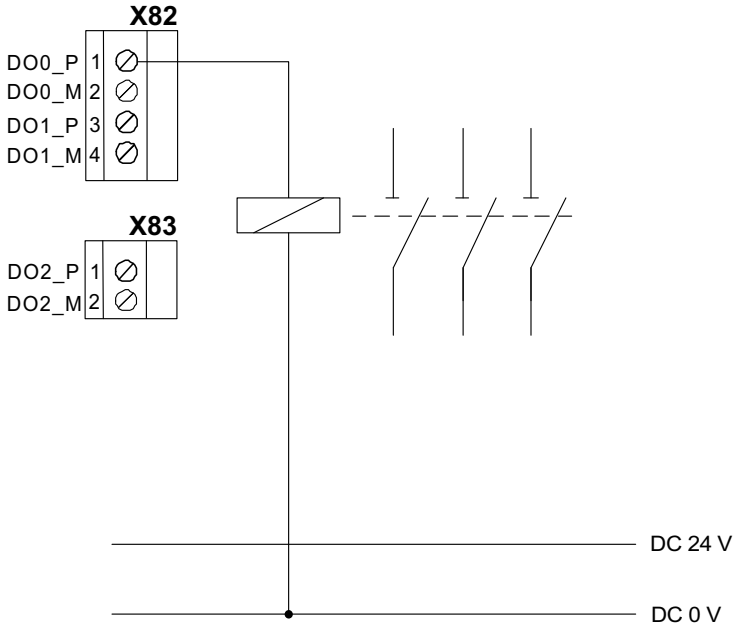

1973470091

You can use external contactors to connect multi-phase applications or in applications with an increased current consumption. Note that with single-pole connection without external monitoring, welding of one or more external contacts will not be detected by the DCS..B option.

INFORMATION

The following sample circuit is **not suitable** for safety applications.

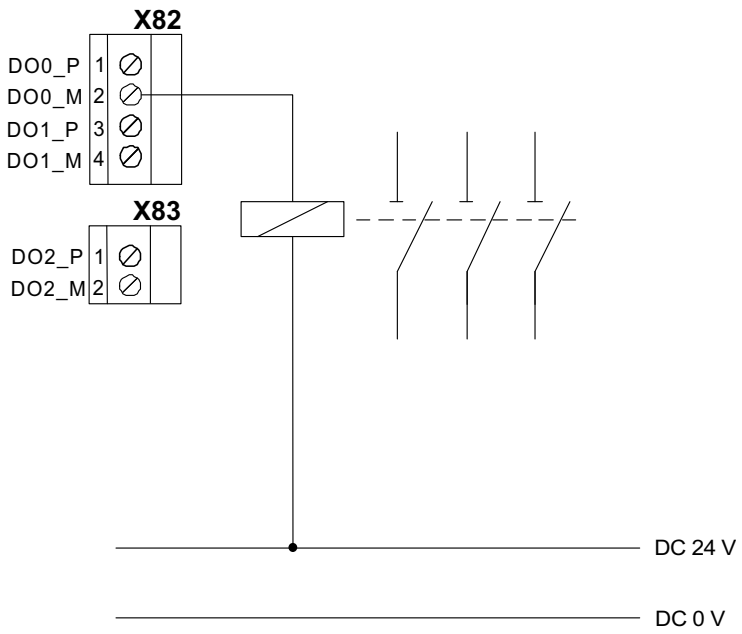

1973473291

Similar to the previous wiring example, the above sample circuit shows a single-pole M binary output without monitoring.

INFORMATION

The following sample circuit is **not suitable** for safety applications.

5.9.2 Dual-channel switching binary output, monitored

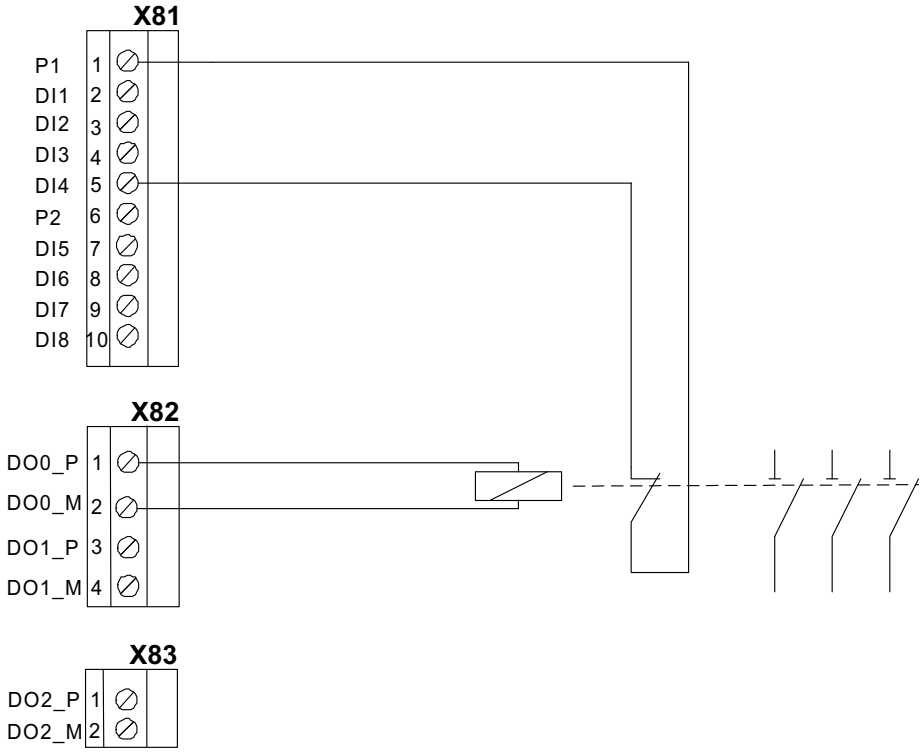

1973475979

The dual-channel wiring of an external power contactor can also be implemented with monitoring. The prerequisite for this solution is a switching element with monitored forced contacts and test contact (NC contact). The monitoring contact is fed via pulse output P1 and read via any input. The software of the EMU function block (Emergency Monitoring Unit) must be configured correctly for this solution to function properly.

INFORMATION

A **category 2 structure** according to EN ISO 13849-1 can be achieved with the circuit.

Category 3 and 4 structures

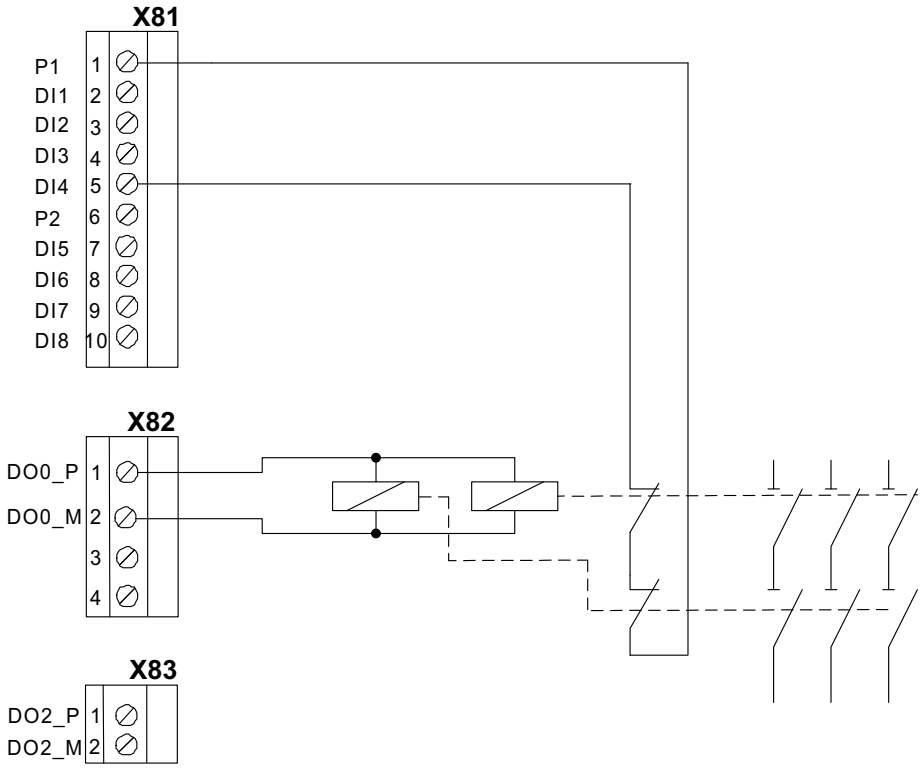

1973619467

To control several switching elements, two complementary binary outputs are connected as a group and control two external power contactors.

INFORMATION

Take into account the maximum output current of the binary outputs and the maximum current consumption of the contactors. A **category 4 structure** according to EN ISO 13849-1 can be achieved with the circuit.

5.9.3 Using binary outputs for switching safe stop of MOVIDRIVE® B

Binary outputs DO2_P and DO2_M can be used for control of the safe stop function (X17) of MOVIDRIVE® B.

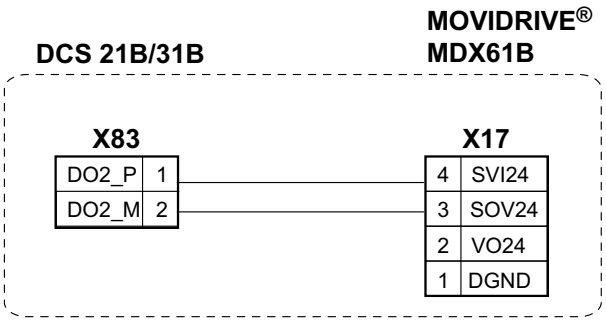

2060220171

The following wiring diagram shows the wiring of MOVIDRIVE® B with installed DCS..B option and safety-relevant BST brake module. For more detailed information about the BST option, refer to the document "Safety-Relevant BST Brake Module for Control Cabinet Installation".

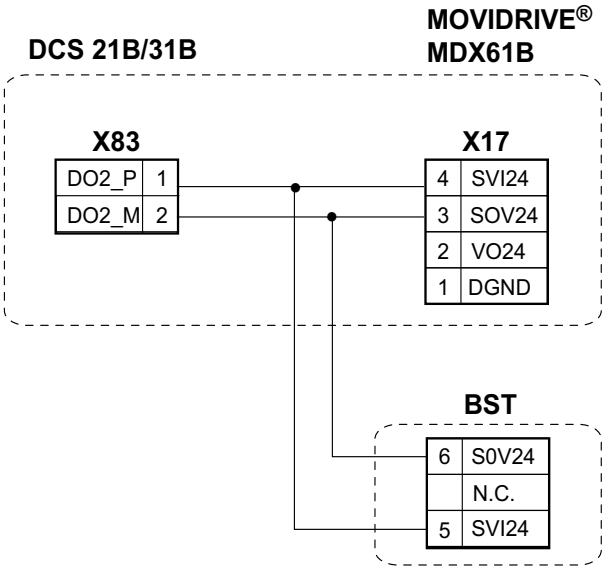

2060768779

INFORMATION

The output X83 of the DCS..B option can drive a maximum of two MOVIDRIVE® B and two safety-related BST brake modules independent of the required current.

5.10 Connecting the position and velocity sensors

5.10.1 Before you start

NOTICE

Do not plug in or remove encoder connections during operation.

Doing so can cause irreparable damage to the electrical components on the encoder.

Disconnect the connected encoders and the DCS..B option **before** plugging in or removing the encoder connections.

The DCS..B option has two encoder interfaces for connecting standard TTL incremental, sin/cos, and SSI absolute encoders.

TTL Incremental, sin/cos or SSI absolute encoders (binary or Gray code) can be connected and operated using the same encoder interface, and the encoder values of MOVIDRIVE® B can be used via backplane bus. The encoder parameters are set using the MOVISAFE® Assist/Config software interface.

Different safety levels can be achieved depending on the encoder type and combination. The following system view applies to the respective subsystem.

Example:

Dual-channel sensor system with separate signal processing in two channels, diagnostics by means of cross comparison in the DCS..B option (PES).

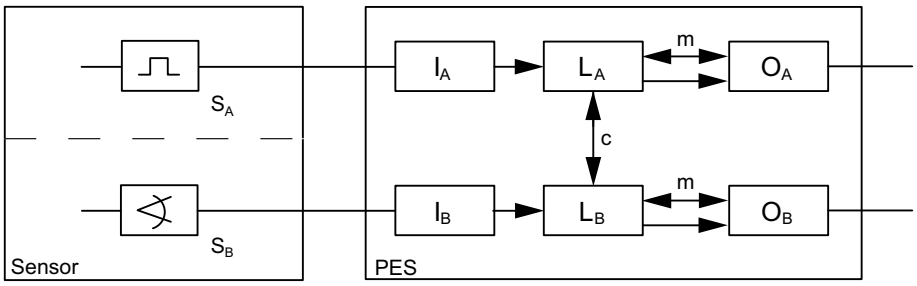

2408487691

PES = Programmable electronic system
I_A = Input channel A
I_B = Input channel B
L_A = Logic channel A
L_B = Logic channel B
O_A = Output channel A
O_B = Output channel B
c = Cross comparison
m = Monitoring
S_A = Sensor 1 channel A
S_B = Sensor 2 channel B

Example:

Sensor system with single- and dual-channel subsystem (e.g. incremental encoder, single-channel mechanics, dual-channel signal generation). Diagnostics by means of separate signal processing in two channels and cross comparison in the DCS..B option (PES) as well as further specific diagnostics.

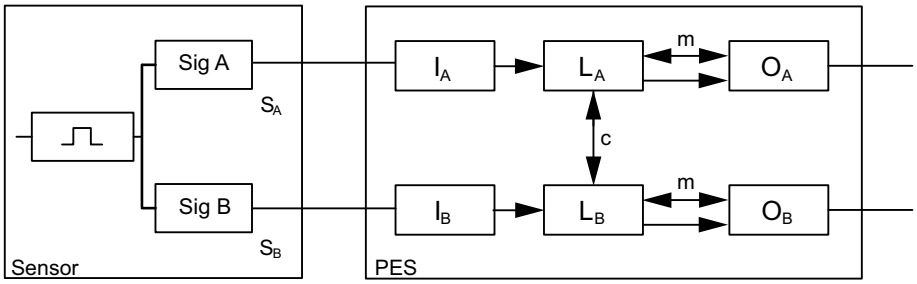

2408490635

PES = Programmable electronic system
I_A = Input channel A
I_B = Input channel B
L_A = Logic channel A
L_B = Logic channel B
O_A = Output channel A
O_B = Output channel B
c = Cross comparison
m = Monitoring
S_A = Sensor 1 channel A
S_B = Sensor 1 channel B
Sig_A = Signal track A of the incremental encoder
Sig_B = Signal track B of the incremental encoder

Depending on the selected encoder type and encoder combination, several diagnostic measures have been implemented in the DCS..B option to detect faults in the sensor system. They are activated automatically when selecting the encoder type in the MOVISAFE® Assist/Config software interface. You can use the diagnostic coverage values for the encoder sensors in chapter "Diagnostic values" for a safety-relevant evaluation of the overall system.

Observe the following notes:

- The DCS..B option usually supplies the connected sensors with voltage. This voltage is monitored by a diagnostic process. If the sensors are powered by an external voltage supply, you must include the possibility of a voltage supply failure in the error discussion for the overall system. Particularly with shared external voltage supplies, you must document that this fault will be detected when the minimum operating voltage of the encoder system is not maintained.
- The current consumption of the encoders in use should not exceed DC 300 mA. When using encoders with higher operating currents, the encoder voltage supply must be provided separately.
- Observe the notes in chapter "General installation notes for encoders".
- The connected encoders must not impact each other. This refers to both the electrical and mechanical part.

- If both encoders are connected to the monitoring system through shared mechanical parts, the connection must be positive and may not include any parts that are subject to wear (chains, toothed belts, etc.). However, if parts subject to wear are used, you must install additional monitoring systems to check the mechanical connection of the sensors (e.g. monitoring function for a toothed belt).
- If position processing is enabled, you must use at least one SSI absolute encoder. If you use only one SSI absolute encoder, connect it to X85 "Encoder 2".
- An internal number format is used in the input fields "Position", "Velocity" and "Acceleration" when the monitoring functions are configured. This can lead to rounding of the entered values.

5.10.2 General installation notes for encoders

- Maximum length of encoder cables:

  100 m (328 ft) with a capacitance per unit length ≤ 120 nF/km.
- Core cross section: 0.2 – 0.5 mm (AWG24 – AWG21)
- Use shielded cables with twisted pair conductors and make sure they are grounded on both ends over a large surface area:
  - At the encoder in the cable gland or in the encoder plug
  - At the inverter in the housing of the D-sub connector, or
  - At the metal clamp / strain relief at the bottom of the inverter
- Observe the notes in chapter "Measures for electromagnetic compatibility (EMC)".

5.10.3 Combination of various encoder types

You always have to provide the DCS..B option with two encoder signals. You can connect the encoders directly to the X84 and X85 terminals of the DCS..B option. You can also use the encoder values of MOVIDRIVE® B via the backplane bus. Whether one or two encoders are used for monitoring mainly depends on the required performance level and has to be assessed separately. Furthermore, measures have to be taken against a possible malfunction of an encoder system if the malfunction can negatively influence the application (example: position processing with only one SSI absolute encoder). Various encoder types can be combined depending on the specific application. Observe the following notes.

If you change the encoder configuration at a later date in the MOVISAFE® Assist/Config software interface, the existing parameters for the monitoring functions might no longer be compatible with the new encoder configuration. In this case, check the parameter settings and value ranges of all the monitoring functions in use.

Encoder 1	Encoder 2	Safe speed	Safe direction	Safe absolute position	Remark
Backplane bus inc.	TTL incremental	X			1-encoder system
Backplane bus inc.	TTL incremental	X	X		2-encoder system
Backplane bus inc.	SIN/COS	X	X		1-encoder system (via split cable)
Backplane bus inc.	SIN/COS	X	X		2-encoder system
Backplane bus inc.	SSI absolute	X	X	X	2-encoder system
SIN/COS	TTL incremental	X	X		
SIN/COS	SIN/COS	X	X		2-encoder system
SIN/COS	SSI absolute	X	X	X	
SIN/COS	Backplane bus abs.	X	X	X	
TTL incremental	TTL incremental	X	X		2-encoder system
TTL incremental	SIN/COS	X	X		
TTL incremental	SSI absolute	X	X	X	
TTL incremental	Backplane bus abs.	X	X	X	
SSI absolute	TTL incremental	X	X		
SSI absolute	SIN/COS	X	X		
SSI absolute	SSI absolute	X	X	X	2-encoder system
SSI absolute	Backplane bus abs.	X	X	X	2-encoder system

Position processing

- If position processing is enabled, at least one of the two encoder signals must come from an SSI absolute encoder. If you provide the DCS..B option with only one SSI absolute value, then it has to be assigned to "encoder 2".
- When using SSI absolute encoders it is important that velocities are calculated from the position signals. For this purpose, the encoder must have the respective resolution and reproducibility of the accuracy.

Process and diagnostic sensor

- In the DCS..B option, the two encoders are distinguished as process sensor and reference sensor. The process sensor is primarily used for all calculations. For information on which encoder is the process or reference sensor, refer to the "Encoder combinations" chapter.
- One encoder signal has the function of a process sensor, the other one the function of a reference sensor. The process sensor, i.e. usually "encoder 1" is used for all calculations in the DCS..B option.
- If position processing is used in the DCS..B option, "encoder 2" will be the process sensor. An exception is the combination with two SSI absolute encoders. In this case, "encoder 1" is the process sensor.
- During operation without position processing, the reference and process sensors are compared cyclically. The reference sensor is adjusted to the process sensor.

  Linear:

  – Every 2500 mm

  – Every 12.5 m

  Rotational:

  – Every 125 revolutions

  Not possible in combination with two SSI absolute encoders.

Master/slave mode with SSI absolute encoders

- SSI absolute encoders can be operated on the DCS..B option in master or slave mode.

  In master mode, the encoder is operated independently on the DCS..B option. In slave mode, only the encoder data are picked off via split cable for further processing (see chapter "Wiring diagrams for encoders and prefabricated cables").
- In master/slave mode, it is essential that encoder 1 is operated in master mode when using two absolute encoders on the DCS..B option.

Encoder values of MOVIDRIVE ®B

- You can make encoders connected to MOVIDRIVE® B accessible to the DCS..B option via the backplane bus of MOVIDRIVE® B.
- If an incremental value of MOVIDRIVE® B is to be used via the backplane bus, this has to be configured as "Encoder 1" in the software interface of MOVISAFE® Assist/Config. In MOVIDRIVE® B, parameter *P557 DCS actual position source* must be set to "Motor encoder (X15)".
- If an absolute value of MOVIDRIVE® B is to be used via the backplane bus, this has to be configured as "Encoder 2" in the software interface of MOVISAFE® Assist/Config. In MOVIDRIVE® B, parameter *P557 DCS actual position source* must be set to "Absolute encoder (X62)".

5.10.4 Technical requirements on suitable encoder types

SSI absolute encoder:

– SSI data interface with constant data length of 24 bits

– Binary or Gray code data format

– Signal level to RS422

– If the measuring channel is operated in master mode, the clock rate for "encoder 1" (X84) is approximately 100 kHz and for "encoder 2" (X85) approximately 80 kHz.

– If the measuring channel is operated in slave mode, the maximum external clock rate is 150 kHz.

– The pulse break between the clock pulse trains must be greater than 30 µs and less than 6 ms.

TTL incremental encoder:

– Signal level to RS422

– Measuring signal A/B track with 90 degree phase difference

– Maximum frequency of the input pulses: 200 kHz

SIN/COS encoder:

– AC 1 V_{pp}

– Measuring signal A/B track with 90 degree phase difference

– Maximum frequency of input pulses: 200 kHz

Encoder values of MOVIDRIVE® B via backplane bus:

– Both incremental and absolute encoder information can be sent via the backplane bus of MOVIDRIVE® B.

– The incremental encoder values of MOVIDRIVE® B that are sent to the DCS..B option via backplane bus of MOVIDRIVE® B (backplane bus inc.) can be used as "encoder 1".

– Absolute values of MOVIDRIVE® B that are sent to the DCS..B option via backplane bus of MOVIDRIVE® B (backplane bus abs.) can be used as "encoder 2".
– The number of pulses of the encoder values of MOVIDRIVE® via the backplane bus is always 4096 pulses per revolution after starting up the encoders in MOVIDRIVE® B.

INFORMATION

- If encoder values of MOVIDRIVE® B are used via the backplane bus, the DCS..B option triggers the A3303/3304 "Positioning detection plausibility" error message when the drive is referenced, as the value in MOVIDRIVE® B jumps briefly.
  This alarm message can be acknowledged by resetting the DCS..B option.
- For reasons of safety, signals that are sent to the DCS..B option via the backplane bus of MOVIDRIVE® B cannot be used as "encoder 1" and "encoder 2" simultaneously.

5.11 Connection options of an encoder system

An encoder system can be connected as follows:

- Using prefabricated cables
- Using the encoder signal split box DAE70B/71B

The following overview shows the connection options of an encoder system.

5.11.1 Encoder signal split boxes

Designation	Description	Connection	Part number	Symbol
DAE70B	Encoder signal split box for incremental encoders (INC)	• X26: TF temperature sensor • X70: Encoder connection • X71: MOVIDRIVE® B/MOVIAXIS® • X72: MOVISAFE® UCS..B/DCS..B	1824 379 7	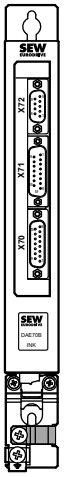 4916135051
DAE71B	Encoder signal split box for absolute encoders (SSI)	• X26: TF temperature sensor • X70: Encoder connection • X71: MOVIDRIVE® B/MOVIAXIS® • X72: MOVISAFE® UCS..B/DCS..B	1824 380 0	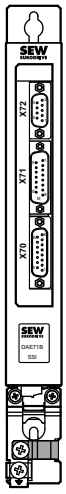 4916138507

5.11.2 Connection cables for encoder signal split boxes

The connection cables can be configured from 0.8 m to 6 m.

Designation	Description	Connection	Part number	Symbol
DAE80B	Connection between encoder signal split box and MOVIDRIVE® B	MOVIDRIVE® B: • DEH11B:X15 • DEH21B:X15 • DEU21B:X15	1813 265 0	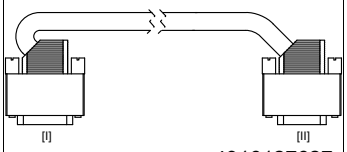 4916127627
DAE81B	Connection between encoder cable split box and MOVIAXIS®	MOVIAXIS®: • MXA:X13 • XGH11A:X63 • XGS11A:X64	1813 266 9	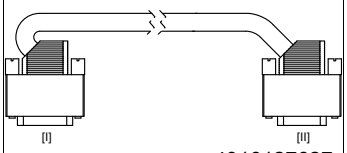 4916127627
DAE82B	Connection between encoder cable split box and MOVISAFE® UCS..B	MOVISAFE®: • UCS..B:X7 • UCS..B:X8	1813 112 3	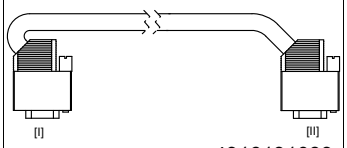 4916131083
DAE83B	Connection between encoder cable split box and MOVISAFE® DCS..B	MOVISAFE®: • DCS..B:X84 • DCS..B:X85	1813 111 5	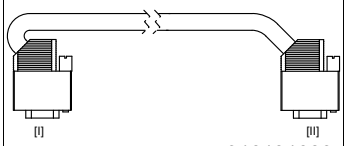 4916131083
DAE84B	Connection between encoder signal split box and MOVIDRIVE® B	MOVIDRIVE® B: • DEH21B:X62 • DIP11B:X62	1814 321 0	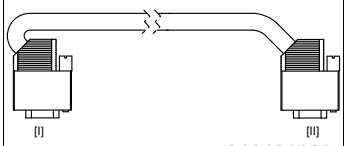 4916131083

5.11.3 Cable sets for encoder signal split boxes

The connection cables for the cable sets are delivered with a fixed length of 1.5 m.

Designation	Description	Connection	Part number	Symbol
Cable set 1	Cable set for encoder signal split box for MOVIDRIVE® B with DEH11B, DEH21B and DEU21B and MOVISAFE® UCS..B for splitting SIN/COS and TTL signals; with DEU21B also SSI signals	Includes following cables: • DAE80B • DAE82B	1824 690 7	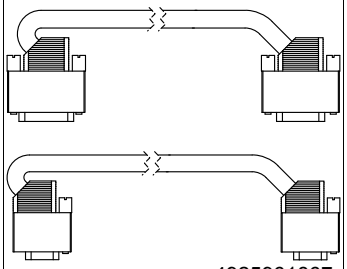
Cable set 2	Cable set for encoder signal split box for MOVIDRIVE® B with DEH11B, DEH21B and DEU21B and MOVISAFE® DCS..B for splitting SIN/COS and TTL signals; with DEU21B also SSI signals	Includes following cables: • DAE80B • DAE83B	1824 691 5	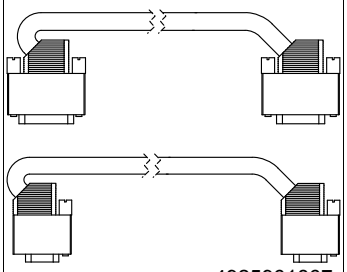
Cable set 3	Cable set for encoder signal split box for MOVIAXIS® and MOVISAFE® UCS..B for splitting SIN/COS, TTL and SSI signals	Includes following cables: • DAE81B • DAE82B	1824 692 3	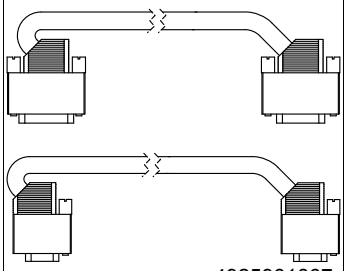
Cable set 4	Cable set for encoder signal split box for MOVIDRIVE® B with DIP11B and DEH21B and MOVISAFE® DCS..B for splitting SSI signals	Includes following cables: • DAE84B • DAE83B	2820 303 8	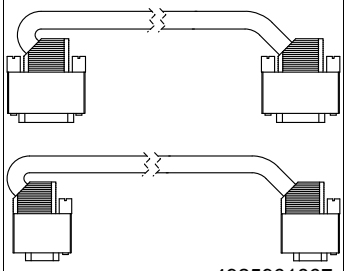
Cable set 5	Cable set for encoder signal split box for MOVIDRIVE® B with DIP11B and DEH21B and MOVISAFE® UCS..B for splitting SSI signals	Includes following cables: • DAE84B • DAE82B	2820 304 6	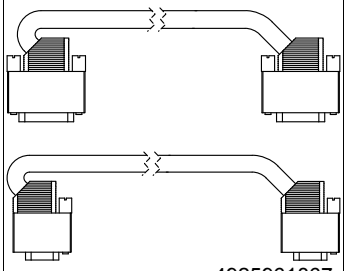

5.11.4 Split cables and adapter cables

The length of adapter cables and the B-side of the split cable can be configured from 0.6 to 6 m.

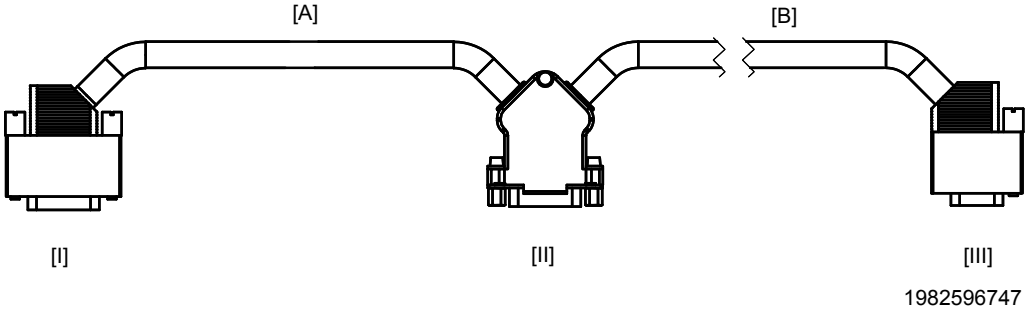

[A] A-side with fixed length (0.2 m)
[B] B-side with variable length (0.2 m to 6 m)
[I] Encoder card connection
[II] Encoder connection
[III] Connection of MOVISAFE® UCS..B

5.11.5 Split cables for MOVISAFE® DCS..B with serial number ≥ 1500

Designation	Description	Connection	Part number	Symbol
DAE40B	Connection of SIN/COS and TTL encoders (asynchronous motor)	MOVIDRIVE® B: • DEH11B:X14 • DER11B:X14	1811 447 4	4262727435
DAE41B	Splitting of SIN/COS and TTL encoders (synchronous motor)	MOVIDRIVE® B: • DEU11B:X14 • DEU21B:X14	1811 468 7	4262727435
DAE42B	Splitting of SIN/COS and TTL encoders (asynchronous motor)	MOVIDRIVE® B: • DEH11B:X15 • DER11B:X15 • DEU21B:X15	1811 602 7	4262727435
DAE43B	Splitting of SIN/COS and TT encoders (synchronous motor)	MOVIDRIVE® B: • DEH11B:X15 • DEH21B:X15	1811 467 9	4262727435
DAE44B	Splitting of SSI encoders	MOVIDRIVE® B: • DIP11B:X62 • DEH21B:X15	1810 625 0	4262727435
DAE45B	Splitting of SSI encoders	MOVIDRIVE® B: • DEU21B:X15	1811 709 0	4262727435
DAE46B	External encoder (built-in encoder EI7C, 15-pole)	Cable with D-sub 9 plug connectors with resistor network for level adjustment to TTL	1812 104 7	4262727435
DAE47B	Adapter for SIN/COS and TTL encoders	Cable (D-sub 15 to D-sub 9) with resistors	1811 604 3	4262731403
DAE48B	Adapter for SSI encoder	Cable (D-sub 9 to D-sub 9) with resistors	1811 917 4	4262731403
DAE49B	Adapter for SSI encoder	Cable (D-sub 15 to D-sub 9) with resistors	1811 710 4	4262731403

5.11.6 Split cables for MOVISAFE® DCS..B with serial number ≤1499

Designation	Description	Connection	Part number	Symbol
DAE31B	Splitting of SIN/COS and TTL encoders (asynchronous motor)	MOVIDRIVE® B: • DEH11B:X14 • DER11B:X14 • DEU21B:X14	1810 053 8	4262727435
DAE32B	Splitting of SSI encoders	MOVIDRIVE® B: • DIP11B:X62 • DEH21B:X62	1810 625 0	4262727435
DAE33B	Adapter for SIN/COS and TTL encoders	Cable (D-sub 15 to D-sub 9) with resistors	1821 307 3	4262727435

6 Startup

6.1 General information on startup

6.1.1 Prerequisites

- The following prerequisites must be fulfilled to ensure successful startup:
  - The system must be configured correctly
  - The MOVISAFE® Assist/Config software must be installed. The software is available on the MOVISAFE® software ROM, edition 04/2009, part number 1156 6604
  - MOVITOOLS® MotionStudio version 4.50 or higher
  - Firmware version of the MOVIDRIVE® MDX61B: 18220916.10 or higher

  For detailed project planning information, refer to the online help of the MOVISAFE® Assist/Config software.

  You find an explanation of the parameters in the online help of the MOVITOOLS® MotionStudio engineering software.
- Requirements for using the MOVISAFE® Assist/Config software:
  - Only for MOVISAFE® Config: Activation with a USB license dongle (part number 1058 5834)
  - Operating system: Microsoft Windows® 2000, XP, Vista
  - Required hard disk space: approx. 75 MB each
  - RAM: Min. 256 MB, recommended 512 MB or more
  - Required hardware components: Interface adapter UWS21A (RS232 to RS485) or interface adapter USB11A (USB to RS485). For more information on hardware components, refer to the MOVIDRIVE® MDX60B/61B catalog.

INFORMATION

- A detailed assessment is required for applications that are operated as group drive. This assessment can be checked by SEW-EURODRIVE in individual cases.
- Applications that consist of a drive train subject to slip must be assessed separately and in detail. This can be checked by SEW-EURODRIVE in individual cases.

6.1.2 Startup steps for DCS21B

- Ensure that the following points are correctly and have been designed according to the application:
  - Installation of the DCS21B option
  - Wiring
  - Terminal assignment
  - Safe disconnection
- Take suitable measures to prevent the motor from starting unintentionally. Take additional safety measures depending on the application to prevent possible injuries and damage to machines.
- Switch on the line voltage and the DC 24 V supply voltage, if applicable.
- Start up the drive with MOVIDRIVE® MDX61B as described in the "MOVIDRIVE® MDX60B/61B" operating instructions.
- GSD file: GSD_DFS11B/12B (for PROFIBUS).
- GSDML file: GSDML_DFS21B/22B (for PROFINET).

- Use parameters P555/P556 to set the response of option DCS21B to errors and alarms to "DISPLAY FAULT" (see chapter "Parameter descriptions"). The set error response will also be triggered in CONTROLLER INHIBIT inverter status.
- Set the parameters for option DCS21B according to your application.
- Program your fail-safe control according to your application.
- Set the parameters for fieldbus connection via PROFIsafe (see chapter "Fieldbus connection via PROFIsafe")
- Perform a validation (see chapter "Validation"). Create a configuration report (see chapter "Creating a configuration report").

6.1.3 Startup steps for DCS31B

- Make sure that
  - Installation of the DCS31B option
  - the cabling,
  - the terminal assignment and
  - safe disconnection

  have been configured correctly and are suited to the application.
- Take suitable measures to prevent the motor from starting unintentionally. Take additional safety measures depending on the application to prevent possible injuries and damage to machines.
- Switch on the line voltage and the DC 24 V supply voltage, if applicable.
- Start up the drive with MOVIDRIVE® MDX61B as described in the "MOVIDRIVE® MDX60B/61B" operating instructions.
- Use parameters P555/P556 to set the response of option DCS31B to errors and alarms to "DISPLAY FAULT" (see chapter "Parameter descriptions"). The set error response will also be triggered in CONTROLLER INHIBIT inverter status.
- Program the DCS31B option according to your application.
- Perform a validation (see chapter "Validation"). Create a configuration report (see chapter "Creating a configuration report").

6.2 Parameter descriptions of parameter group P55x in MOVIDRIVE® B

The parameter group *P55x DCS safety module* in MOVIDRIVE® B includes display and setting values that are specific to the DCS..B option. The factory setting is underlined.

6.2.1 P550 DCS safety module status

Display value that cannot be changed.

Parameter P550 shows the current status of the DCS..B option.

- No DCS: No DCS..B option detected.
- RUN: Normal operation.
- STOP: Operation of option DCS..B was stopped via programming interface.
- ALARM: The DCS..B option has issued an alarm.
- ERROR: The DCS..B option has issued an error.

  You have the following options to read the corresponding error or alarm message from the error memory of the DCS..B option:

  Via the XT service interface of MOVIDRIVE® B:

  – With the DBG60B keypad

  – With the MOVITOOLS® MotionStudio engineering software

  Via the X87 service interface of the DCS..B option with the MOVISAFE® Assist/ Config software interface.

6.2.2 P551 Binary inputs DCS DI1 – DI8

Display value that cannot be changed.

Parameter P551 shows the current status of the binary inputs of option DCS..B in the order DI1 – DI8.

6.2.3 P552 Binary outputs DCS DO0_P – DO2_M

Display value that cannot be changed.

Parameter P552 shows the current status of the binary outputs of option DCS..B in the following order:

- DO0_P
- DO0_M
- DO1_P
- DO1_M
- DO2_P
- DO2_M

6.2.4 P553 DCS serial number

Display value that cannot be changed.

Parameter P553 shows the serial number of option DCS..B. The displayed serial number must be identical with the serial number on the nameplate of the DCS..B option, which is attached to MOVIDRIVE® MDX61B. You have to enter the serial number in the configuration report (see chapter "Validation").

6.2.5 P554 CRC DCS

Display value that cannot be changed.

The parameter CRC DCS shows the CRC (cyclic redundancy check) of the program stored on the DCS..B option. You have to enter the CRC in the configuration report (see chapter "Validation").

6.2.6 P555 Error response DCS / P556 Alarm response DCS

Factory setting: IMM. STOP / FAULT

If option DCS..B signals an error (P555) or an alarm (P556), the inverter performs the set response (No response / Display error). As the safety-oriented switching off is performed by the DCS..B option or a higher-level safety controller, SEW-EURODRIVE recommends to set P555 and P556 to "Display error".

6.2.7 P557 DCS actual position source

Setting range: Motor encoder (X15) / Ext. Encoder (X14) / Absolute encoder (X62)

If the option "Backplane bus inc." or "Backplane bus abs." is set in the MOVISAFE® Assist/Config software interface, the setting in P557 determines which encoder signal is evaluated by the DCS..B option.

6.3 *Other parameters*

6.3.1 P350/351 Direction of rotation reversal 1/2

Setting range: ON / OFF

Direction of rotation reversal	Positive setpoint (positive direction of travel)	Negative setpoint (negative direction of travel)
OFF	Motor turns clockwise	Motor turns counterclockwise
ON	Motor turns counterclockwise	Motor turns clockwise

- ON: Above definition is reversed. The assignment of limit switches is maintained. When the motor turns in CLOCKWISE direction, the drive will be properly stopped once it hits the right limit switch. When using this parameter, it is important to carefully check that the limit switch is connected properly and the reference point and travel positions are defined correctly.

INFORMATION

Altering the "Direction of rotation reversal" parameter after the system has been referenced causes the system to lose its reference point for the absolute position. The result may be undesirable movements of the axis.

- OFF: The SEW definition applies.

6.3.2 P890 Protocol SBus 2

Setting range: DCS safety monitor / CANopen / DCS protocol

As soon as the MOVIDRIVE® MDX61B inverter detects the DCS..B option, the parameter is automatically set to "DCS safety monitor".

6.3.3 P894 Baud rate SBus 2

Setting range: 125 / 250 / 500 / 100 kBaud

P894 sets the transmission speed of SBus 2. As soon as the MOVIDRIVE® MDX61B inverter detects the DCS..B option, the parameter is automatically set to "500 kBaud". The total of the baud rates specified in P884/P894 must not exceed 1125 kBaud.

6.3.4 P951 Counting direction

Setting range: NORMAL / INVERTED

Defines the counting direction of the absolute encoder. The setting must be made so the counting direction of the motor encoder (X15) and the absolute encoder (X62) match.

6.3.5 P952 Clock rate

Setting range: 1 – 200%

Defines the clock rate at which absolute encoder information is transmitted from the encoder to the inverter. Clock rate = 100% corresponds to the nominal frequency of the encoder.

INFORMATION

Refer to the publication "MOVIDRIVE® MDX61B Absolute Encoder Cards DIP11B/DEH21B" for more information on project planning.

6.4 Communication and establishing a connection

The RS485 interface X87 of option DCS..B is implemented as RJ10 socket. It allows parameterization and diagnostics of the option using the Windows® based software interfaces MOVISAFE® Config and MOVISAFE® Assist.

The PC can be connected with the parameterization and diagnostic interface X87 of the DCS..B option using, for example, the interface adapter UWS21B (RS232 to RS485) or USB11A (USB to RS485). It is not possible to set parameters via the PROFIsafe fieldbus connection (PROFIBUS or PROFINET).

When using the DCS31B option, the logic is processed in RUN mode. When using the DCS21B option, the safety functions can be activated via PROFIsafe. Parameterization/programming is only possible in STOP mode. You can set the option back to RUN mode once you have sent the configuration and the message "Configuration successfully written to flash" has appeared.

6.5 Operating states

After each restart of the DCS..B option, the following operating states are run through and are displayed at the front status LEDs in fault-free operation.

DCS..B	Status LED
1991483403	• LED F: Alarm/error • LED WD: Watchdog • LED B: System B • LED A: System A

Operating state	LED display	Mode	Description
1	• LEDs "A" and "B" flash in sync (change every 1.2 s) • LED "WD" off • LED "F" off	STARTUP	Synchronization between both processor systems and check of the configuration/firmware data.
2		SEND CONFIG	Distribution of the configuration/firmware data and another check of this data. Range check of the configuration data.
3	• LEDs "A" and "B" flash in sync (change every 0.8 s) • LED "WD" off • LED "F" off	STARTUP BUS	Only for option DCS21B. The option waits until the safety controller re-integrates the option.
4	• LEDs "A" and "B" flash in sync (change every 0.4 s) • LED "WD" on • LED "F" off	RUN	Watchdog is active, i.e. all outputs can be switched.

INFORMATION

In operating states 1, 2 and 3, the outputs are automatically switched off by the firmware. In "RUN" mode (operating state "4"), the outputs are controlled by the implemented MOVISAFE® program or the program in the higher-level controller.

6.6 Configuring the measuring sections

The most important input parameters for the monitoring functions of the DCS..B option are:

- Position
- Velocity
- Acceleration

These input parameters are generated in a dual-channel from the connected encoder systems. To achieve performance level e according to EN ISO 13849-1, always two independent encoder systems are required. To achieve performance level d according to EN ISO 13849-1, one encoder system can be sufficient for certain applications.

Measuring sections A and B must be configured accordingly for internal signal processing. They are configured in the encoder screen of the MOVISAFE® Assist/Config software interface (see below figure).

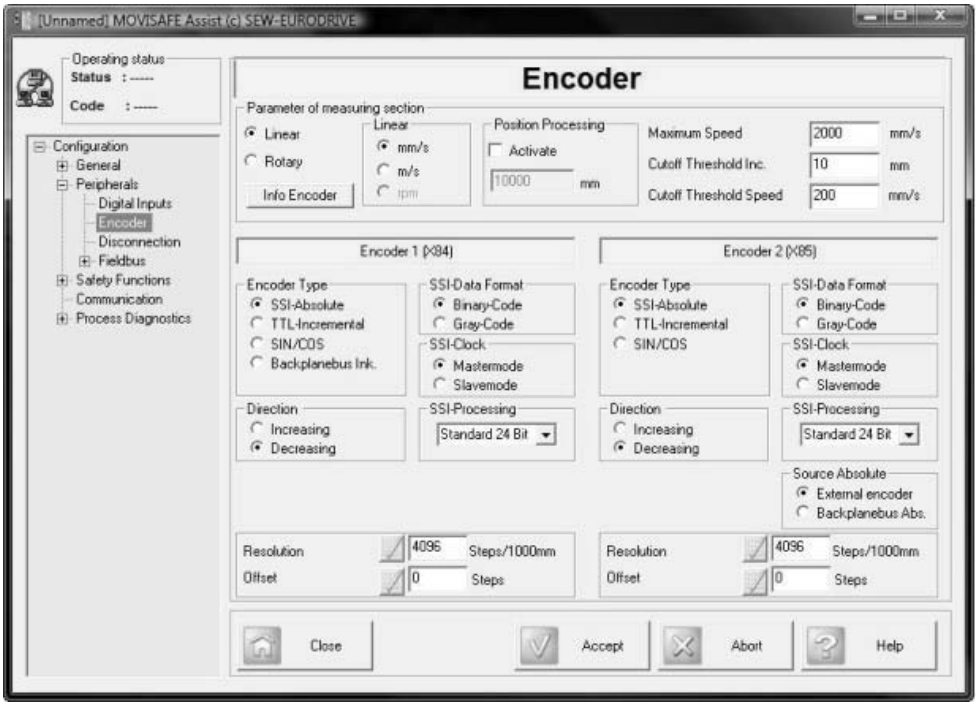

18014400483104651

Note the following parameters when configuring the measuring section:

- **Parameters of the measuring section**

  You can choose "linear" or "rotary" as the measuring section.

- **Units of the measuring section**

  For a linear measuring section, you can choose "mm/s" or "m/s" as the unit for speed. For a rotatory measuring section, you can choose "rev/s" or "rev/min" as the unit for speed.

  The selected resolution should correspond to the physics of the measuring section to prevent rounding problems in the configuration.

- **Position processing**

  The position processing of the DCS..B option can be selected by enabling the "Activate" checkbox. The measuring length determines the permitted position range for position processing. It is important that the present position of the drive is within the measuring length window. If this position range is left, the DCS..B option switches off and issues alarm A3307. The measuring length has a range of 1 - 1 000 000 and is normalized with the unit specified for the measuring section. "Encoder 2" is automatically defined as absolute encoder. If position processing is disabled, only monitoring functions with velocity processing are permitted for parameter setting. This means monitoring functions with position processing are disabled in the MOVISAFE® Assist/Config software.

- **Encoder information**

  To have selection data and result data of the encoder currently used displayed, press the [Info encoder] button. Selection and result data are not applied until you have confirmed the set parameters with [OK]. The displayed values (see below figure) are used by the technical support to configure the encoder. They are also used for the scaling calculation in the DCS..B option.

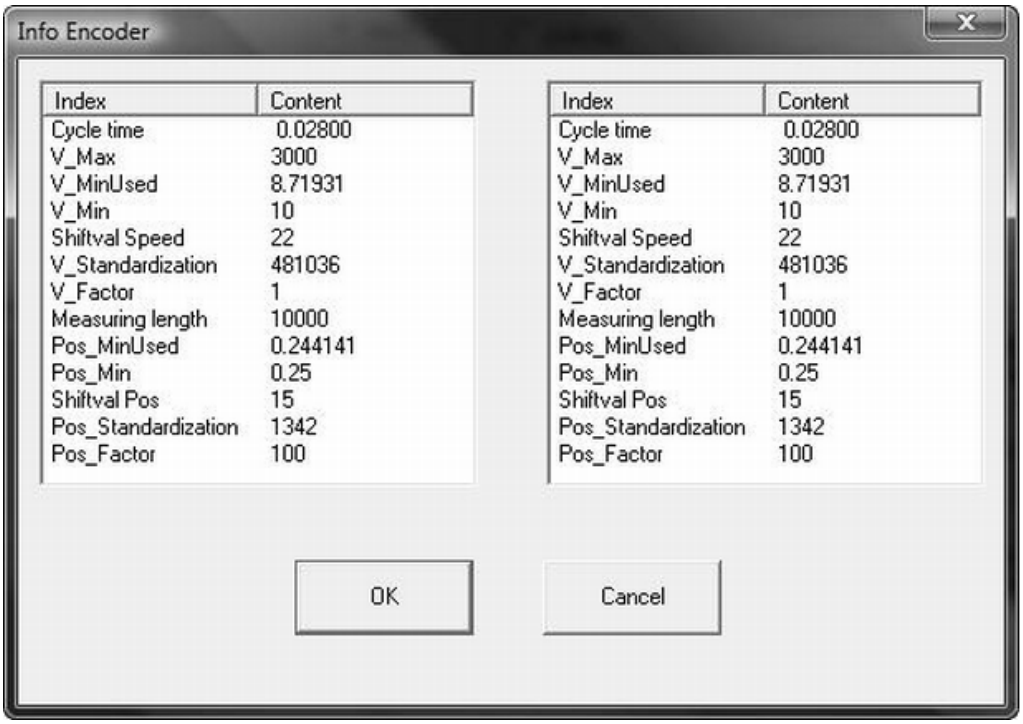

2061256459

Encoder information	Meaning/setting
Cycle time	Specifies the cycle time of the DCS..B option. • DCS31B = 0.025 s • DCS21B = 0.028 s
V_Max	Maximum speed value that can be entered during the parameterization of the safety functions. V_Max is defined as follows: "Encoder screen maximum velocity" × factor 1.5
V_MinUsed	Minimum speed for internal scaling calculation.
V_Min	Minimum speed value that can be entered during the parameterization of the safety functions.
Shiftval_Speed	Internal operand to scale the speed. Integer exponent to base 2.
V_Standardization	Scaling value for the velocity (internal calculation data)
V_Factor	Factor for calculating the velocity (scaling)
Measuring length	Measuring length to determine the position from the encoder screen. If no measuring length is activated, the following value is entered by default: • Linear = 10 000 mm (50 m) • Rotary = 500 revolutions
Pos_MinUsed	Minimum position for internal scaling calculation.
Pos_Min	Minimum position that can be entered for parameterizing the monitoring dialogs.
Shiftval_Pos	Internal operand to scale the position. Integer exponent to base 2.
Pos_Standardization	Scaling value for the position (internal calculation data).
Pos_Factor	Factor for position calculation (scaling).

- **Maximum velocity**

  In the "Maximum velocity" edit box, you can set the maximum velocity of the application in the set reference unit. It is used to determine internal calculations.

- **Safety-related cut-off thresholds**

  The basic check is to perform plausibility tests between the two measuring channels A and B of the DCS..B option to compare the current position and velocity values with the configurable thresholds.

  – The cut-off threshold "s" describes the tolerable position offset between encoder 1 and encoder 2 in the unit of the measuring section.

  – The cut-off threshold "v" describes the tolerable velocity offset between encoder 1 and encoder 2 in the unit of the velocity.

  Diagnostic functions are provided in the SCOPE function of the MOVISAFE® Assist/Config software interface to determine the optimum parameter values of this application.

- **Encoder type**

  The following encoder types are available:

  – SSI absolute

  – TTL incremental

  – SIN/COS

  – Backplane bus inc. (encoder values of MOVIDRIVE® B via backplane bus)

INFORMATION

If the option "Backplane bus inc." is selected, parameter P557 of MOVIDRIVE® B must be set to the correct encoder interface, see chapter "P557 DCS actual position source (page 77)".

- **Direction of rotation**

  In the "Direction" edit box, you can choose between the options "increasing" and "decreasing" to adjust different counting directions of the encoders.

- **SSI data format**

  The data format of the connected SSI absolute encoder can be selected as data format. Binary and Gray code data formats are supported.

- **SSI clock**

  In the "SSI clock" selection field, you can choose between "Master mode" and "Slave mode". The selection is only enabled for SSI absolute encoders.

  If the option "master mode" is enabled, the DCS..B pulses automatically. This option may only be used when the SSI absolute encoder is connected solely with the DCS..B option.

  "Slave mode" must be selected if the SSI absolute encoder is connected both with the DEH21B and DCS..B options. In this case, the DCS..B option monitors the signals and the DEH21B option pulses.

- **SSI processing**
  - The setting "Standard 24 bit" must be selected for all SSI absolute encoders with a data width of 24 bits.
  - The setting "WCS3B" must be set for the position encoding system from the company Pepperl + Fuchs because this encoder has a data width of only 19 bits.
- **Absolute value source**

  The "Source absolute" selection field is used to define the source for the absolute value of "encoder 2". "External encoder" means an SSI absolute encoder connected to terminal X85. "Backplane bus abs." means the absolute value of MOVIDRIVE® B via backplane bus.
  - "External encoder" setting:

    If an SSI absolute encoder is operated directly on the DCS..B option or via an encoder split cable, the physical resolution of the encoder also limits the maximally possible travel distance of the application. When using an SSI absolute encoder, this means that the DCS..B option can only evaluate the resolution of the SSI absolute encoder (24 bits) of "4096 increments/revolution × 4096 revolutions".
  - "Backplane bus abs" setting:

    If the absolute encoder is connected to MOVIDRIVE® B, for example for positioning, then the internal value of the encoder can be used for position processing. The advantage is that MOVIDRIVE® B can process the physical overflow of the encoder (> 24 bits). In this way, the posititon range of the DCS..B option is expanded from 24 bits to 31 bits with the same encoder.

    Example:

    For crane travel, the gear ratio i = 11 and the circumference of the drive wheel (250 mm) results in a resolution of 180224 increments/m.

$$\frac{Increments}{m} = \frac{1\,m}{Drive\ wheel\ circumf.} \times \frac{Encoder\ resolution}{Revolutions}$$

$$180224\ \frac{Increments}{m} = \frac{1\,m}{0.25\,m} \times 11 \times 4096\ \frac{Increments}{m}$$

4030466315

The maximum travel distance in the **"External encoder" setting** is determined as follows:

Maximum positioning range of the DCS..B option: $2^{24} - 1 = 16777215$ increments

$$Maximum\ travel\ distance = \frac{Max.\ positioning\ range}{\frac{Increments}{m}}$$

$$93.09\ m = \frac{16777215\ increments}{180224\ \frac{increments}{m}}$$

4030470155

The maximum travel distance in the **"Backplane bus abs." setting** is determined as follows:

Maximum positioning range of the DCS..B option: $2^{31} - 1 = 2147483647$ increments

$$\text{Maximum travel distance} = \frac{\text{Max. positioning range}}{\frac{\text{Increments}}{m}}$$

$$11915.63\ m = \frac{2147483647\ \text{increments}}{180224\ \frac{\text{increments}}{m}}$$

4030654347

INFORMATION

- If the "Backplane bus abs." selection field is selected, parameter P557 of MOVIDRIVE® B must be set to the correct encoder interface, see chapter "P557 DCS actual position source (page 77)".
- The "backplane bus abs." function may only be used when a second encoder signal is available for reference (see chapter "Combination of various encoder types").
- When connecting an absolute encoder to the DCS..B option via encoder split cable (terminal X84/X85), the encoder must provide the absolute value in SSI data format.
- When transmitting the absolute value via the backplane bus of MOVIDRIVE® B, all absolute encoders (data formats) can be used that are supported by MOVIDRIVE® B.

- **Resolution**

  In the "Resolution" edit box, you can enter the resolution of the encoder, or the value converted to the distance in steps per meter (linear system) or in steps per revolution (rotary system). Clicking on the "Calculation sheet" icon opens a conversion tool that will help you with the conversion (see chapter "Conversion example").

  Value range: 5 to 2×10^6

- **Offset**

  Entering an offset lets you scale the value of the SSI absolute encoder to the actual position of the application. Clicking the "Calculation sheet" icon opens a conversion tool to support you in calculating the offset.

  Value range: -1.67×10^7 to 1.67×10^7

  If the "Backplane bus abs." option is selected in the "Absolute value source" selection field, the offset of the DCS..B option can additionally be influenced by changing the offset on MOVIDRIVE® B.

INFORMATION

- Note that in both cases positions ≤ 0 are not permitted in the DCS..B option. An alarm will be issued resulting in disabling the DCS..B option.
- If the absolute value is obtained via the backplane bus, suitable measures have to be taken to ensure that the absolute position matches the actual position of the axis.

6.6.1 Conversion example

The ramp times of the MOVIDRIVE® B inverter are based on a setpoint step change of Δn = 3000 rpm. The acceleration value "a" is calculated using the following formula:

$$a = \frac{v}{t}$$

$$a = \frac{3000\left[1/\text{min}\right]}{\frac{t_{12}\left[\text{min}\right]}{60}}$$

2146440459

Example: In MOVITOOLS® MotionStudio, *P137 Emergency stop ramp* is set to 2 seconds.

$$a = \frac{3000\left[1/\text{min}\right]}{\frac{2\left[\text{min}\right]}{60}} = 90000\left[1/\text{min}^2\right]$$

2146443531

Conversion to $1/s^2$:

$$a = 90000\left[1/\text{min}^2\right] = \frac{90000\left[1/\text{min}^2\right]}{60\left[s\right]\times 60\left[s\right]} = 25\left[1/s^2\right]$$

2146367499

The values that are entered in the MOVISAFE® Assist/Config software interface are based on the measuring section. This means that the motor revolutions still have to be converted to the measuring section.

- **Rotary system:**

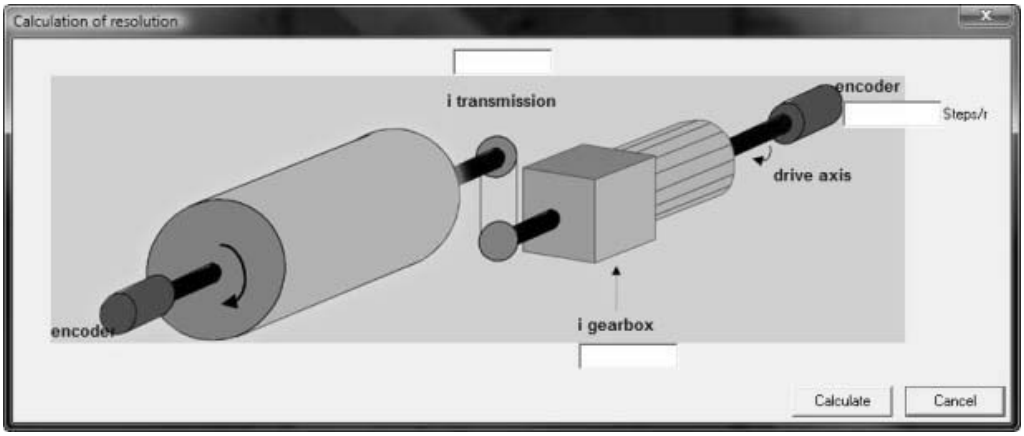

1981823755

Calculating the speed:

$$v = \frac{v_M}{i_G \times i_{VG}}$$

2146446603

v_M Motor speed [1/min] (rpm)
i_G Gear unit ratio
i_{VG} Gear ratio of the additional gear

Calculating the acceleration:

$$a = \frac{a_M}{i_G \times i_{VG}}$$

2146488075

a_M Motor acceleration
i_G Gear unit ratio
i_{VG} Gear ratio of the additional gear

- **Linear system:**

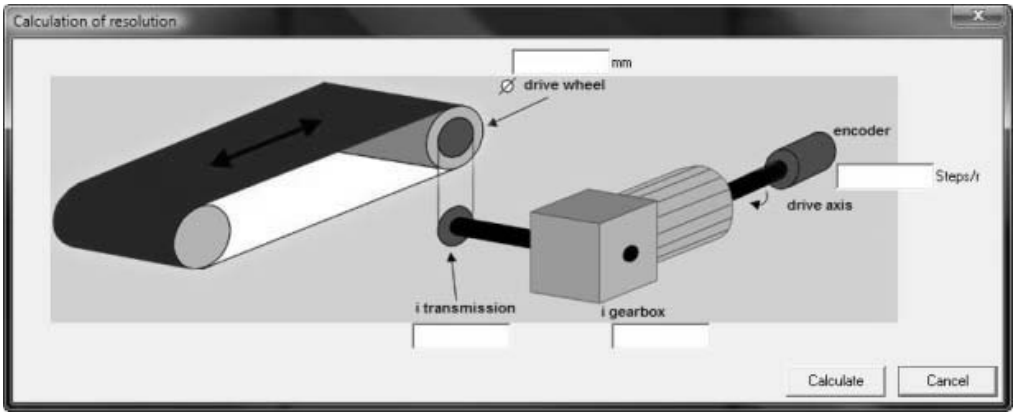

1981950475

Calculating the speed:

$$v = \frac{v_M}{i_G \times i_{VG}} \times D_A \times \pi$$

2146491147

v	Speed [m/min]
v_M	Motor speed [1/min] (rpm)
i_G	Gear unit ratio
i_{VG}	Gear ratio of the additional gear
D_A	Drive wheel diameter [m]

Calculating the acceleration:

$$a = \frac{a_M}{i_G \times i_{VG}} \times D_A \times \pi$$

2146494219

a	Acceleration [m/min^2]
a_M	Motor acceleration [1/min^2]
i_G	Gear unit ratio
i_{VG}	Gear ratio of the additional gear
D_A	Drive wheel diameter [m]

- **Conversion:**

  In many cases, the data in millimeters or minutes can exceed the input's value range. In this case, you have to scale the values from millimeters to meters (for linear systems) or from minutes to seconds (for rotary systems).

  Velocity:

$$v[m/s] = \frac{v[mm/s]}{1000}$$
$$v[U/\min] = v[U/s] \times 60$$

2146497291

Acceleration:

$$a\left[m/s^2\right] = \frac{a\left[mm/s^2\right]}{1000}$$
$$a\left[U/s^2\right] = \frac{a\left[U/\min^2\right]}{60 \times 60} = \frac{a\left[U/\min^2\right]}{3600}$$
$$a\left[U/\min^2\right] = a\left[U/s^2\right] \times 3600$$

2146525963

6.7 *Fieldbus connection via PROFIsafe*

Using the MOVISAFE® Assist parameter setting software lets you read PROFIsafe parameters and the PROFIsafe status during operation of the DCS12B option.

INFORMATION

Refer to the following publications for additional information:

- "MOVIDRIVE® MDX61B Fieldbus Interface DFS12B PROFIBUS DP-V1 with PROFIsafe" manual
- "MOVIDRIVE® MDX61B Fieldbus Interface DFS22B PROFINET IO with PROFIsafe" manual

6.7.1 Diagnostics of the PROFIsafe communication status

The PROFIsafe status can be read via [Process diagnostics] / [Safety bus] / [PROFIsafe] / [DiagPROFIsafe] (see below figure).

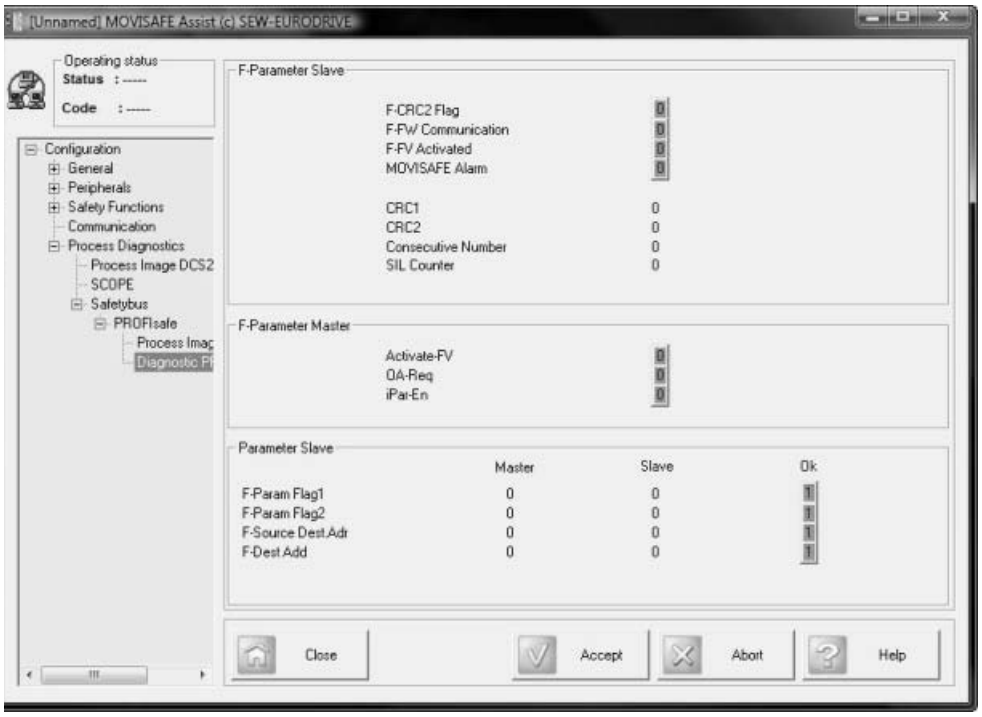

1984305419

"F-parameter slave" field

Layer F in the DCS21B option is shown in the "F-parameter slave" field.

F-parameter slave		
F-CRC2 flag	"0" on green background: OK	"1" on red background: Faulty CRC2
F-FW communication		"1" on red background: Timeout during data transmission
F-FV activated		"1" on red background: Device not in F-layer
MOVISAFE alarm		"1" on red background: Alarm message from DCS21B
CRC1	Current CRC of the parameter data.	
CRC2	Current CRC of the parameter and process data.	
Consecutive number	Counter for valid process data.	
SIL counter	Counter for second fault.	

"F-parameter master" field

Layer F of the master system is shown in the "F-parameter master" field.

F-parameter slave		
Activate FV	"0" on green background: OK	"1" on red background: The DCS21B option has not been properly integrated into the F-PLC program
OA-Req		"1" on red background: The DCS21B option expects re-integration
iPar-En		"1" on red background: The DCS21B option is not ready to receive data

"Parameter slave" field

This section provides a comparison of the parameter data stored in the DCS21B and the values configured in the safety controller.

A "1" on green background in the "OK" column indicates identical values.

F-parameter slave		
F-Param flag1	"1" on green background: OK	"0" on red background: CRC 1 of parameter channel not OK.
F-Param flag2		"0" on red background: CRC 2 of parameter channel is not OK.
F-Source Dest. Adr		"0" on red background: The F-address of the safety controller was not detected.
F-Dest Add		"0" on red background: The F-address of option DCS21B parameterized in the safety controller does not match the F-address of the DCS21B option.

6.7.2 Setting the PROFIsafe address in the DCS21B option

You can set the *F-Dest Add* by choosing [Peripherals] / [Fieldbus] / [PROFIsafe Parameter] from the menu.

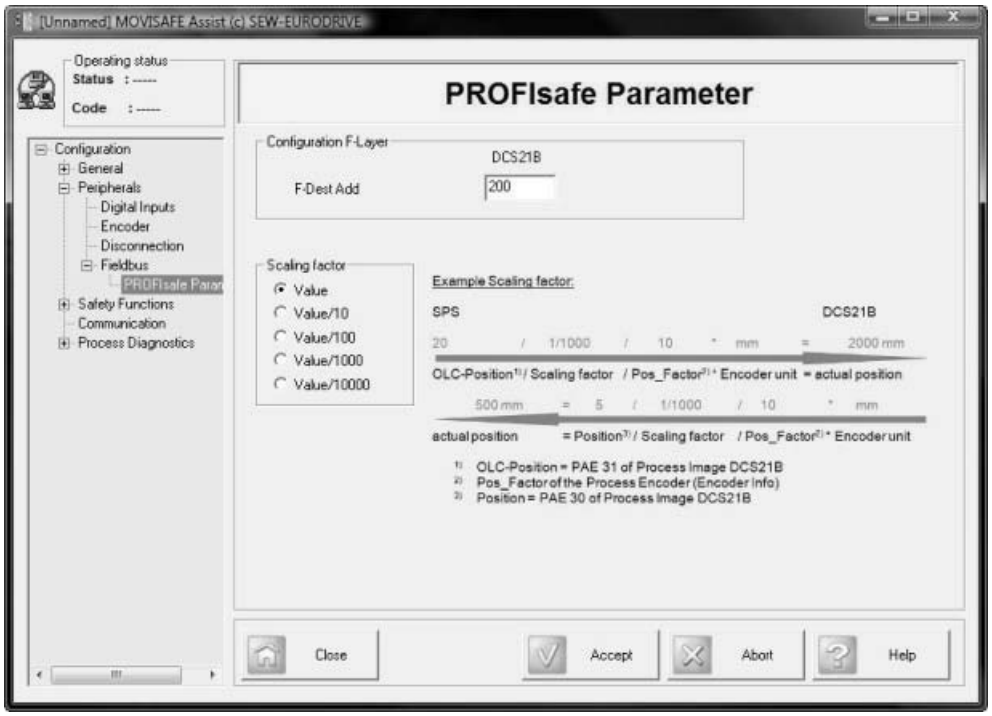

1984311179

INFORMATION

- To apply the changes, click the [Accept] button. The changes in the MOVISAFE® Assist parameter setting interface are offline settings.
- To have the changes available online in the DCS21B option, you will first have to transmit them to the DCS21B option.

6.7.3 Scaling the position values in the DCS21B option

With the DCS21B option, you can transmit the internal position to a safety controller. You can also have the safety controller specify target positions for the DCS21B option. For more information, refer to chapter "PROFIsafe process image".

Internally, the DCS21B option works with positions in a 32-bit number format. It might be necessary to limit the values to 16 bits for further processing depending on the safety controller in use. The DCS21B option lets you scale the current position values of the application or the target positions using a factor. The values can be scales with factors 1, 10, 100, 1000 or 10 000. In this case, all the values transmitted by the DCS21B option to the safety controller will be divided by this factor. Target positions sent from the safety controller to the DCS21B option will be multiplied by this factor.

As the DCS21B internally always works with the highest possible resolution, you have to take into account not only of the divisor factor when converting the position values but also the *Pos_Factor* (see encoder info field). For more information on the *Pos_Factor*, refer to chapter "Configuring the measuring sections".

Example

A maximum measuring distance of 100 000 mm (100 m) is to be monitored in an application. The value 100 000 mm can not be processed by the safety controller because this value can not be mapped to a 16-bit value (65536 dec).

Activating the scaling factor in the DCS21B option can rectify this.

Unit selected in the DCS21B option	=	mm
Max. measuring section	=	100 000 mm
Pos_Factor (encoder info field)	=	10
Scaling factor	=	1000
Higher-level controller	=	max. 16-bit values

- **Resolution in the DCS21B option**

$$Resolution\ DCS21B = \frac{Selected\ unit\ in\ the\ DCS21B}{Pos_Factor} = \frac{mm}{10}$$

4142690955

- **Max. position value to be transmitted**

$$Position\ DCS21B = \frac{Max.\ measuring\ section}{Resolution\ DCS21B} = \frac{100000\ mm}{\frac{1}{10}\ mm} = 1000000 \triangleq 1000000\ \frac{1}{10}\ mm$$

4142695947

As the safety controller can maximally process 16-bit values internally but the value to be transmitted is much greater, this value has to be adjusted accordingly using the scaling factor.

- **Position value to be transmitted after the scaling**

$$Position\ in\ controller = \frac{Position\ DCS21B}{Scaling\ factor} = \frac{1\,000\,000}{1000} = 10000$$

4142725643

The scaling factor used must also be taken into account to ensure that the safety controller uses the same unit as that of the DCS21B option to further process the position value.

Position = position in controller × scaling factor

Position = 10 000 × 1000 = 1 000 000 mm/10 = 100 000

INFORMATION

- The *Pos_Factor* for internal scaling depends on the chosen encoder settings. The factor is handled solely by the DCS21B option and can not be set separately.
- As scaling disregards decimal places, the accuracy of the transmitted values changes. Keep this in mind for further processing.

6.7.4 PROFIsafe process image

The status of the safety functions sent via PROFIsafe can be read in MOVISAFE® Config by choosing [Process Diagnostics] / [Safety Bus] / [PROFIsafe] / [Process Image] (see below figure).

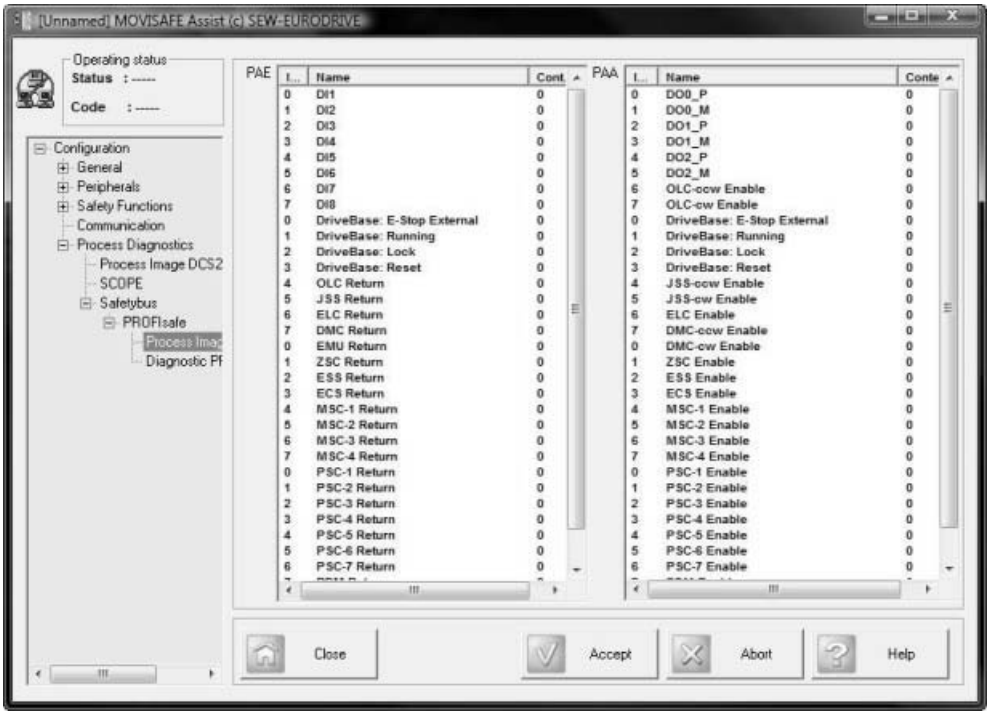

1984314251

The process image for PROFIsafe includes a subset of the process image of the DCS21B. The process input and output data have 64 bits each according to PROFIsafe requirements:

- 32 bits (data type: BOOLEAN) for input/output states and the safety functions
- 32 bits (data type: double integer) for position value

Process image inputs (PAE)

The following table shows the process image inputs (PAE) from perspective of the higher-level safety controller.

Index	Bit	Name	Content
0	0	DI1	Binary input 1 (terminal X81:2)
1	1	DI2	Binary input 2 (terminal X81:3)
2	2	DI3	Binary input 3 (terminal X81:4)
3	3	DI4	Binary input 4 (terminal X81:5)
4	4	DI5	Binary input 5 (terminal X81:7)
5	5	DI6	Binary input 6 (terminal X81:8)
6	6	DI7	Binary input 7 (terminal X81:9)
7	7	DI8	Binary input 8 (terminal X81:10)
8	0	DriveBase: E-Stop External	Emergency stop: All outputs of the DCS21B option are inactive • 1: Outputs enabled • 0: Outputs disabled
9	1	DriveBase: Running	Enable outputs for the drive • 1: Outputs enabled • 0: Outputs disabled
10	2	DriveBase: Lock	Enable outputs for operating the drive • 1: Outputs enabled • 0: Outputs disabled
11	3	DriveBase: Reset	Reset of alarm messages
12	4	OLC Return	Feedback from the OLC monitoring function
13	5	JSS Return	Feedback from the JSS monitoring function
14	6	ELC Return	Feedback from the ELC monitoring function
15	7	DMC Return	Feedback from the DMC monitoring function
16	0	EMU Return	Feedback from the EMU monitoring function
17	1	ZSC Return	Feedback from the ZSC monitoring function
18	2	ESS Return	Feedback from the ESS monitoring function
19	3	ECS Return	Feedback from the ECS monitoring function
20	4	PSC-1 Return	Feedback from the MSC-1 monitoring function
21	5	MSC-2 Return	Feedback from the MSC-2 monitoring function
22	6	MSC-3 Return	Feedback from the MSC-3 monitoring function
23	7	MSC-4 Return	Feedback from the MSC-4 monitoring function
24	0	PSC-1 Return	Feedback from the PSC-1 monitoring function
25	1	PSC-2 Return	Feedback from the PSC-2 monitoring function
26	2	PSC-3 Return	Feedback from the PSC-3 monitoring function
27	3	PSC-4 Return	Feedback from the PSC-4 monitoring function
28	4	PSC-5 Return	Feedback from the PSC-5 monitoring function
29	5	PSC-6 Return	Feedback from the PSC-6 monitoring function
30	6	PSC-7 Return	Feedback from the PSC-7 monitoring function
31	7	PDM Return	Feedback from the PDM monitoring function
32 – 47	0-15	Position	Position of the DCS (High)
48 – 63	0-15		Position of the DCS (Low)

Process image outputs (PAA)

The following table shows the process image outputs (PAA) from perspective of the higher-level safety controller.

Index	Bit	Name	Content
0	0	DO0_P	Connection 24 V output 0 (terminal X82:1)
1	1	DO0_M	Connection 0 V output 0 (terminal X82:2)
2	2	DO1_P	Connection 24 V output 1 (terminal X82:3)
3	3	DO1_M	Connection 0 V output 1 (terminal X82:4)
4	4	DO2_P	Connection 24 V output 2 (terminal X83:1)
5	5	DO2_M	Connection 0 V output 2 (terminal X83:2)
6	6	OLC-ccw Enable	Enable monitoring limit OLC target limit ccw
7	7	OLC-cw Enable	Enable monitoring limit OLC target limit cw
8	0	DriveBase: E-Stop External	Emergency stop: All outputs of the DCS21B option are inactive • 1: Outputs enabled • 0: Outputs disabled
9	1	DriveBase: Running	Enable outputs for the drive • 1: Outputs enabled • 0: Outputs disabled
10	2	DriveBase: Lock	Enable outputs for operating the drive • 1: Outputs enabled • 0: Outputs disabled
11	3	DriveBase: Reset	Reset of alarm messages
12	4	JSS-ccw Enable	Enable monitoring function JSS ccw
13	5	JSS-cw Enable	Enable monitoring function JSS cw
14	6	ELC Enable	Enable ELC monitoring function
15	7	DMC-ccw Enable	Enable monitoring function DMC ccw
16	0	DMC-cw Enable	Enable monitoring function DMC cw
17	1	ZSC Enable	Enable ZSC monitoring function
18	2	ESS Enable	Enable ESS monitoring function
19	3	ECS Enable	Enable ECS monitoring function
20	4	MSC-1 Enable	Enable MSC-1 monitoring function
21	5	MSC-2 Enable	Enable MSC-2 monitoring function
22	6	MSC-3 Enable	Enable MSC-3 monitoring function
23	7	MSC-4 Enable	Enable MSC-4 monitoring function
24	0	PSC-1 Enable	Enable PSC-1 monitoring function
25	1	PSC-2 Enable	Enable PSC-2 monitoring function
26	2	PSC-3 Enable	Enable PSC-3 monitoring function
27	3	PSC-4 Enable	Enable PSC-4 monitoring function
28	4	PSC-5 Enable	Enable PSC-5 monitoring function
29	5	PSC-6 Enable	Enable PSC-6 monitoring function
30	6	PSC-7 Enable	Enable PSC-7 monitoring function
31	7	PDM Enable	Enable PDM monitoring function
32 – 47	0-15	OLC Position	Target position of the OLC monitoring function (32-bit)
48 – 63	0-15		

7 Validation

To make sure that the implemented safety functions function correctly, the user must check and document the parameters and connections after startup and configuration. This is supported in the MOVISAFE® Assist/Config software in the form of a configuration report.

The concept for the DCS..B option is based on the following prerequisites: Parameter and PLC data stored in the flash memory of the DCS..B option cannot change automatically. Online tests and corresponding signatures ensure this by implementing basic measures on the DCS..B option. However, the configuration cannot be evaluated by the DCS..B option. This concerns the parameterization for the sensors, thresholds and limit values.

7.1 Procedure

After successful startup, the user must confirm that the data of the configuation report matches the parameters on the DCS..B option. The user must validate and protocol the values parameterized for the measuring section, sensors and monitoring functions individually by performing a function test. In addition, the user must validate and protocol the connection of each programmed PLC function in the DCS31B option by inspecting the code. SEW-EURODRIVE recommends to design the controller in such a way that the limit values of the DCS..B option can be tested.

7.2 Configuration report for validation

7.2.1 Structure of the configuration report

The file contains the following information:

- Three pages with header data that can be edited
- Encoder configuration
- Parameters of the monitoring functions
- The IL code of the programmed PLC functions (only for DCS31B)

7.2.2 Creating the configuration report

The MOVISAFE® Assist/Config software interface lets you generate an individual configuration report and save it as a text file (`.txt`). The text file is created using the file name and path of the current parameter/programming data set. Depending on the application software, the text file can be printed in DIN A4 landscape format.

7.2.3 Entries in the configuration report

Before you generate the configuration report, you can enter general information on the application (header data) which will then also appear in the configuration report. You can use the first page of the configuration report to enter general information on the system (system designation, customer, supplier, setup operator, etc.). On the second page of the configuration report, you can enter more detailed information about the system/ machine. This data is for information only, but the content and scope should be checked with the approval authorities/inspector. The last page of the configuration report contains the itemization for the safety check.

The MOVISAFE® Assist/Config software automatically enters the following information in the text file:

- Manufacturer: SEW-EURODRIVE GmbH & Co KG
- Type: MOVISAFE® DCS21B or MOVISAFE® DCS31B
- Parameterized values of the safety functions

All the other entries must be entered manually by the inspector:

- Date: of the day when the configuration data set was created
- CRC signature: of the verified data set
- Read-off serial number identical to the serial number on the nameplate

  The responsible inspector confirms that the read-off serial number of the DCS..B option is identical with the serial number of the nameplate on MOVIDRIVE® B.
- Identical with option:

  Here, the responsible inspector confirms that the CRC displayed on the software interface is identical with the one of the DCS..B option. This CRC signature consists of a five-digit number. This number is displayed in the connection dialog of the software interface when a connection has been established with the DCS..B option.
- Signature of the inspector
- Approval of the function

INFORMATION

- The correct program data and parameter data must be loaded to create the configuration report for validation.
- All listed parameters and program instructions must be validated on the system/machine and confirmed in writing on the configuration report
- The inspector must validate all the configured data in the printed configuration report. To do so he/she must verify all the set limit values of the monitoring functions used by performing a function test.
- When using the DCS31B option, the printed out IL code must be validated (see chapter "Appendix", subchapter "IL instruction list DCS31B option" (page 149)).
- An exception are macro functions. They will be validated when the certificate is obtained. This means only the connection of input elements has to be checked for the macro functions.

7.3 Determining/checking the response times for validation

The overall response times of the drive system have to be determined to calculate the coasting distance of the machine. For this purpose, all the response times of the affected components (electronic and mechanical) must be determined. The following example illustrates this.

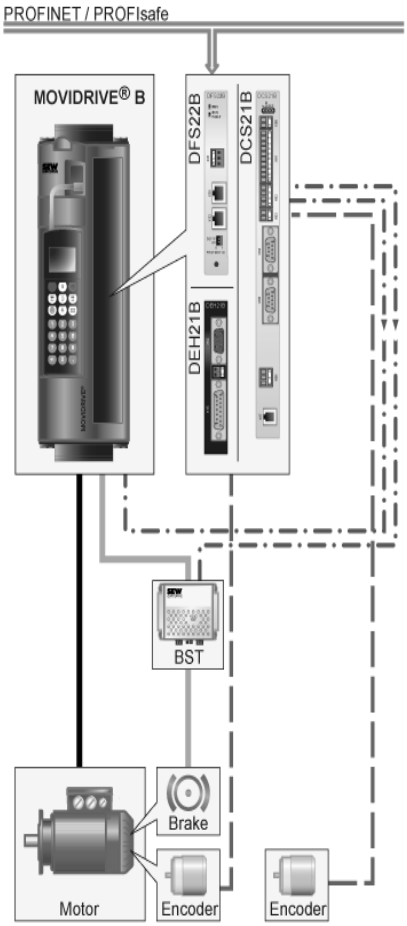

2409746059

The following components are used:

- MOVIDRIVE® B, size 1, with the following option cards:
  - DEH21B as encoder interface
  - DFS22B as communication interface with PROFINET and PROFIsafe
  - DCS21B as safety module
- Safety-related BST brake module
- DR motor with integrated BE brake and SIN/COS encoder
- Additional external SIN/COS encoder

The drive is to be monitored for safe speed (SLS safety function). If the velocity is exceeded, the drive is switched off immediately (STO safety function).

A sensor provides a signal for activating the SLS safety function (t_1). This signal is read locally in the DCS21B option and is reported to the safety controller via PROFIsafe (t_2 + t_{ps}). Next, the safety controller activates the SLS safety function in the DCS21B option via PROFIsafe (t_{R2}).

The DCS21B option reports the status of the SLS safety function to the safety controller via PROFIsafe. When the SLS safety function trips, a message is issued to the safety controller via PROFIsafe (t_{R3}). The safety controller then disables the relevant outputs of the DCS21B option via PROFIsafe (STO, t_{R4}). The following figure shows the chain of responses for determining the overall response time from the safety sensor to the actuator.

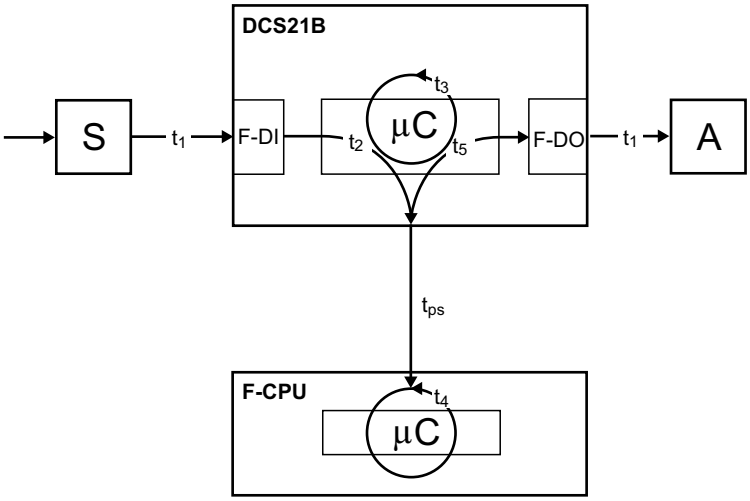

4153959947

DCS21B	Safety monitor
S	Safety sensor
F-DI	Safe input DCS21B
F-DO	Safe output DCS21B
A	Actuator
F CPU	Safety controller
µC	Micro-controller

Response time from safety sensor to receipt in safety controller		
t_1	Response time of the safety sensor	According to manufacturer's specifications
t_2	Internal response time of the safe input (NC contact)	84 ms
t_{ps}	PROFIsafe cycle time	According to specifications of the safety controller
t_{R1}	**Informationen pending in the F-CPU for further processing**	**Total**

Response time until the SLS safety function is activated in the DCS21B option		
t_4	Cycle time F-SPS (worst case = 2 cycles)	Determine from safety controller
t_{ps}	PROFIsafe cycle time	According to specifications of safety controller
t_3	Activation of a safety function	56 ms
t_{R2}	**SLS monitoring is activated**	**Total**

Response time of SLS from the time when it is triggered until receipt in the safety controller		
t_3	Response of SLS and status in PROFIsafe process image	112 ms
t_{ps}	PROFIsafe cycle time	According to specifications of the safety controller
t_{R3}	**Informationen pending in the F-CPU for further processing**	**Total**

Response time from safety controller to actuator		
t_4	Cycle time F-SPS (worst case = 2 cycles)	Determine from safety controller
t_{ps}	PROFIsafe cycle time	According to specifications of safety controller
t_5	Internal response time of the safe output	56 ms
t_6	Switching time of the actuator	According to manufacturer's specifications
t_{R4}	**Actuator switches after x ms**	**Total**

The total response time is calculated as follows:

$t_{response, max} = t_{R1} + t_{R2} + t_{R3} + t_{R4}$

INFORMATION

- The total response time becomes longer when using overspeed distance monitoring of the SLS safety function.
  For an example of how to calculate the response time of overspeed distance monitoring, refer to chapter "Calculating the response time with overspeed distance monitoring".
- The total response time becomes longer when using an SS1/SS2 safety function.
- To reduce the response time, the DCS21B option lets you directly disable the safe outputs depending on the status of a safety function. For more information, refer to the online help of MOVISAFE® Assist, section "Input screens".
- You find the response times of the various components in the technical data of the relevant component documentation.

7.4 Checking the performance level according to EN ISO 13849-1

It has to be checked whether the required performance level (PL_r), which was determined in the risk assessment, is achieved by the chosen system for each safety function used. SEW-EURODRIVE recommends to check the calculation using the SISTEMA software tool (free of charge) of the employer's liability insurance association. SEW-EURODRIVE provides a component library which can be used as basis for the calculation. SEW-EURODRIVE offers corresponding services to support the system check by calculation.

If you use another method to validate the performance level, you can use the characteristic safety values specified in the "Appendix" chapter.

8 Maintenance

8.1 Modification/changes to the unit

- Hardware changes

  Any changes to the DCS..B option can only be performed by SEW-EURODRIVE.
- Firmware modifications

  Only SEW-EURODRIVE is authorized to make changes to the firmware.
- Repair

  Only SEW-EURODRIVE is authorized to repair the DCS..B option.
- Warranty

INFORMATION

The safety certification and any right to claim under limited warranty become void if the user manipulates the unit internally (e.g. replacing components, welding parts).

8.2 Disposal

Observe the applicable national regulations.

Dispose of the following materials separately in accordance with the country-specific regulations in force, as:

- Electronics scrap
- Plastics
- Sheet metal
- Copper

8.3 MOVIDRIVE® B unit replacement

8.3.1 Replacing the inverter

When **replacing the inverter**, insert the DCS..B option of the original unit into the new inverter. Parameter and PLC data will not get lost. If you insert the memory card of the replaced MOVIDRIVE® B in the new MOVIDRIVE® B inverter, the new inverter will be recognized without having to take any additional measures.

8.3.2 Replacing the DCS..B option

When **replacing the DCS..B option**, the data of the replaced DCS..B must be loaded into the new option. The CRC (cyclic redundancy check) must be identical before and after the replacement (check using *P554 CRC DCS*, see chapter "Parameter descriptions of parameter group P55x (page 76) in MOVIDRIVE® B). If this is not the case or if no data can be copied from the DCS..B option, then acceptance/validation must be carried out again in any case. You need the MOVISAFE® Assist software to replace the option card.

INFORMATION

- If you want to replace a DCS..B option with a serial number ≤ 001499 with a current option card, then you also have to replace the encoder split cable. If you have not split the encoder signals, please refer to chapter "Connection options of an encoder system" to select the proper adapter cable.
- If you use a DCS..B option with a serial number ≤ 001499, not the entire scope of functions of the MOVISAFE® Assist/Config will be available. The option card will issue a fatal error during upload if you set the parameters for a function that is not supported.

Proceed as follows to replace the DCS..B option:

1. First you have to read off and write down the CRC of option DCS..B.

   You can read off parameter *P554 CRC DCS* on MOVIDRIVE® B using the DBG60B keypad or the MOVITOOLS® MotionStudio software.
2. Switch off the line voltage before replacing the DCS..B option. Do **not** switch off the DC 24 V supply voltage.
3. Remove terminal X17 from MOVIDRIVE® B to prevent MOVIDRIVE® B from enabling the motor or the brake unintentionally.
4. Connect the parameter setting and diagnostic interface X87 of the DCS..B option with your PC, see chapter "Communication and establishing a connection" (page 78).
5. Start the MOVISAFE® Assist parameter setting software.
6. Establish a connection. To do so, select the COM interface of your PC in the MOVISAFE® Assist parameter setting software (choose [Parameters] from the [General] menu). Establish a connection between DCS..B and MOVISAFE® Assist ([Communication] menu item, [Establish connection] button).
7. Switch to "STOP" mode ([Communication] menu item, [Stop mode] button).
8. Load the configuration data of the DCS..B option you want to replace to your PC. To do so, go to the [Communication] menu and press the [Load configuration] button.

9. Save the configuration data on your PC. To do so, go to the [Communication] menu and press the [Save...] button.
10. Disconnect the DC 24 V supply voltage.
11. Replace the DCS..B option, see chapter "Basic procedure for installing/removing an option card (MDX61B, sizes 1 – 7)" (page 40). Remove the insulating lug from the battery securing clip. Ensure proper contact of the battery securing clip with the battery.
12. Switch the DC 24 V supply voltage back on.
13. Perform steps 4 to 7 again.
14. Send the saved configuration to the DCS..B option. Load the configuration data from the PC file ([Communication] menu item, [Open…] button) and send it to the DCS..B option. To do so, go to the [Communication] menu and press the [Send configuration] button.
15. Switch to "RUN" mode ([Communication] menu item, [Run mode] button).
16. Check the current CRC value against the value you have written down in the first step.

    You can read off parameter *P554 CRC DCS* using the DBG60B keypad or the MOVITOOLS® MotionStudio software.
17. If the CRC is identical, plug terminal X17 onto MOVIDRIVE® B again.
18. Switch on the power supply voltage.

8.3.3 Replacing the battery of option DCS..B

The DCS..B option is equipped with a battery (type: BR2032) for storing encoder positions. When the capacity of the battery is used up, the alarm message A3303/A3304 will be issued after having restarted the DCS..B option and when position processing is enabled. The battery may only be replaced (after about 10 years) by a qualified electrician.

Proceed as follows to replace the battery of the DCS..B option:

1. Before replacing the battery, switch off the mains voltage **and** the DC 24 V supply voltage.
2. Remove the DCS..B option as described in chapter "Installing the option MOVISAFE® DCS..B".
3. Replace the battery. To do so, lift the battery securing clip and remove the old battery. Insert a new battery of the type BR2032. Check that the new battery is seated properly.
4. Install the DCS..B option again as described in chapter "Installing the option MOVISAFE® DCS..B".
5. Switch the DC 24 V supply voltage back on.
6. Make sure that the position of the SSI absolute encoder matches the position in the application. If not, reference the encoder.
7. Acknowledge the alarm message A3303/A3304.
8. Switch on the power supply voltage.

8.3.4 Replacing an SSI absolute encoder

The following cases are distinguished when replacing an SSI absolute encoder:

Position processing in the DCS..B option	Application
Not active	Simple velocity monitoring: • No encoder offset necessary
Active	Positions are monitored: • Necessary to adjust/recalculate the encoder offset (usually with rotative encoders)

Position processing inactive

Do the following to replace an SSI absolute encoder **without active position processing** in the DCS..B option:

1. Before replacing the encoder, switch off the mains voltage and the DC 24 V supply voltage.
2. Remove terminal X17 from MOVIDRIVE® B to prevent MOVIDRIVE® B from enabling the motor unintentionally.
3. Replace the encoder in the application. Make sure that the encoder type is the same.
4. Switch the DC 24 V supply voltage back on.
5. Connect the parameter setting and diagnostic interface X87 of the DCS..B option with your PC, see chapter "Communication and establishing a connection" (page 78).
6. Start the MOVISAFE® Assist/Config software and establish a connection.
7. Use the SCOPE function to check the transmitted position and velocity of your encoder.
8. Re-connect terminal X17 to MOVIDRIVE® B.
9. Switch on the power supply voltage.
10. Validate your entry.

Position processing active

Do the following to replace an SSI absolute encoder **with active position processing** in the DCS..B option:

1. Before replacing the encoder, switch off the mains voltage and the DC 24 V supply voltage.
2. Remove terminal X17 from MOVIDRIVE® B to prevent MOVIDRIVE® B from enabling the motor unintentionally.
3. Replace the encoder in the application. Make sure that the encoder type is the same.
4. Switch the DC 24 V supply voltage back on.
5. Connect the parameter setting and diagnostic interface X87 of the DCS..B option with your PC, see chapter "Communication and establishing a connection" (page 78).
6. Start the MOVISAFE® Assist/Config software and establish a connection.
7. Use the SCOPE function to check the transmitted position and velocity of your encoder. If the position is identical with the position in the application, no adjustments are necessary and you can proceed with step 16.
8. If the position is not identical, open the original program in the MOVISAFE® Assist/Config software. All subsequent changes cause the CRC to be calculated again.
9. Open the encoder screen and overwrite the entered encoder offset with "0".
10. Save this new configuration under another name.
11. Send the new configuration to the DCS..B option.
12. Use the SCOPE function to check the transmitted position of your encoder.
13. Open the encoder screen again. Use the offset calculation wizard to calculate the new offset of your replaced encoder for the application.
14. Send the new, adjusted configuration to the DCS..B option.
15. Use the SCOPE function to check the transmitted position and velocity of your encoder again.
16. Re-connect terminal X17 to MOVIDRIVE® B.
17. Switch on the power supply voltage.
18. Validate your entries.

INFORMATION

If you use the encoder values of MOVIDRIVE® B via the backplane bus, you can make the offset entries in MOVITOOLS® MotionStudio.

In any case, check the transmitted position and velocity of your encoder using the SCOPE function of the MOVISAFE® Assist/Config software.

Replacing the SSI absolute encoder ATM60

Do the following to replace the SSI absolute encoder ATM60 from Sick-Stegmann with active position processing in the DCS..B option:

1. Before replacing the encoder, switch off the mains voltage and the DC 24 V supply voltage.
2. Remove terminal X17 from MOVIDRIVE® B to prevent MOVIDRIVE® B from enabling the motor unintentionally.

3. Replace the encoder in the application. Make sure that this is the same encoder type (ATM60, Sick-Stegmann).
4. Switch the DC 24 V supply voltage and the mains voltage back on.
5. Switch the system to service mode.
6. Re-connect terminal X17 to MOVIDRIVE® B.
7. Move to the mechanical basic settings in safe jog mode (def. position, final position, or similar).
8. Switch off the power supply voltage.
9. Remove terminal X17 from MOVIDRIVE® B to prevent MOVIDRIVE® B from enabling the motor or the brake unintentionally.
10. Activate the electronic adjustment on the encoder ("set" signal or "set" button on the encoder housing).
11. Re-connect terminal X17 to MOVIDRIVE® B.
12. Switch on the power supply voltage.
13. Move the drive in safe jog mode and use the SCOPE function to check the transmitted position and velocity signals of your encoder.

9 Diagnostics

9.1 Meaning of the status LED

DCS..B	Status LED
1991483403	• LED F: Alarm/error • LED WD: Watchdog • LED B: System B • LED A: System A

9.1.1 Indication of the operating state

The status LEDs indicate the operating state of the DCS..B option.

Operating state	LED display	Mode	Description
1	• LEDs "A" and "B" flash in sync (change every 1.2 s) • LED "WD" off • LED "F" off	STARTUP	Synchronization between both processor systems and check of the configuration/firmware data.
2		SEND CONFIG	Distribution of the configuration/firmware data and another check of this data. Range check of the configuration data.
3	• LEDs "A" and "B" flash in sync (change every 0.8 s) • LED "WD" off • LED "F" off	STARTUP BUS	Only for option DCS21B. The option waits until the safety controller re-integrates the option.
4	• LEDs "A" and "B" flash in sync (change every 0.4 s) • LED "WD" on • LED "F" off	RUN	Watchdog is active, i.e. all outputs can be switched.
5	• LEDs "A" and "B" flash in sync (change every 2 s) • LED "WD" off • LED "F" off	STOP	In STOP mode, you can load parameter and program data to the DCS..B option.
6	• LEDs "A" and "B" flash in sync (change every 1.6 s) • LED "WD" on • LED "F" flashing	ALARM	Functional error caused by an external process. Both systems run cyclically and process all requests from the communication interfaces. The scanning of the external process continues as well.
7	• LEDs "A" and "B" flash in sync (change every 0.4 s) • LED "WD" off • LED "F" on	FAILURE	Fatal error in MOVISAFE® DCS..B program run. A cyclical program run is no longer possible for safety reasons.

INFORMATION

- In operating states 1, 2 and 3, the outputs are automatically switched off by the firmware. In "RUN" mode (operating state "4"), the outputs are controlled by the implemented MOVISAFE® program or the program in the higher-level controller.
- In operating states 6 and 7, all outputs are disabled. When option DCS..B is re-started, the outputs are enabled in "RUN" operating mode (display "4") and switched according to the logic used. If the reason for the alarm is still present (e.g. faulty encoder signals), an alarm is triggered that disables the outputs.

9.2 *Error and alarm messages*

The DCS..B option basically distinguishes between two types of messages according to the following assignment:

Message	Description	Impact on the system	Reset condition	
			DCS21B	DCS31B
Fatal error	The last active process is the operation of the 7-segment display via system A. System B is in stop mode.[1]	All outputs are disabled The option is passivated by PROFIsafe®	The DCS..B option is switched off and on again.	
Alarm	See "ALARM" operating state in the table "Indication of the operating state"		By re-integration via PROFIsafe	By parameterizable input
ECS	When using the ECS function in the programming interface, encoder alarm messages will be identified with "E" instead of "A".[1]	The ECS function block returns "0" as result	Drive base: reset via PROFIsafe	

1) Error detection in system A (odd-numbered) and system B (even-numbered).

INFORMATION

You can read the corresponding subcode of the error or alarm message of option DCS..B as follows:

- with MOVITOOLS® MotionStudio via the XT option slot on MOVIDRIVE® B
- with the DBG60B keypad (firmware status .13)
- via the X87 parameterization and diagnostic interface with the MOVISAFE® Assist/Config. software interface
- with a controller that is connected to the inverter via fieldbus. The parameter channel in PROFIBUS/PROFINET is necessary to read the subcodes of the error messages.

9.2.1 List of error messages

INFORMATION

If you receive error messages that are not described here, proceed as follows:

- Under what circumstances did the error occur?
- Save the current configuration set
- Document the error code and the suberror code
- Contact SEW-EURODRIVE Service

Fatal error code	**F1001, error 108, subcode 001**
Error message	Configuration data not loaded correctly to option DCS..B.
Cause	Connection interrupted while loading the program to the DCS..B option.
Remedy	Reload the configuration files. Then switch the DCS..B off and on again.

Fatal error code	**F1003, error 108, subcode 002**
Error message	Invalid configuration data for software version of the DCS..B option.
Cause	Option DCS..B was configured using a wrong software version.
Remedy	Parameterize the DCS..B option with the permitted MOVISAFE® software version. Next, switch DCS..B option off and on again.

Fatal error code	**F1007, error 108, subcode 003**
Error message	Unit was programmed with incorrect software interface.
Cause	Program or configuration data was loaded into the unit with an incorrect MOVISAFE® software.
Remedy	Check the DCS..B version and parameterize it again using a valid MOVISAFE® software. Then switch the DCS..B option off and on again.

Fatal error code	**F1401/1402, error 108, subcode 019/020**
Error message	Error while calculating configuration data.
Remedy	Replace the DCS..B option and send it together with error number to SEW Service for further inspection.

Fatal error code	**F1403/1404, error 108, subcode 021/022**
Error message	CRC of configuration data invalid.
Cause	Configuration data have not been uploaded correctly.
Remedy	Upload configuration data into unit.

Fatal error code	**F1405/1406, error 108, subcode 023/024**
Error message	Error during internal transmission of configuration data.
Remedy	Replace the DCS..B option and send it together with error number to SEW Service for further inspection.

Fatal error code	**F1501/1502, error 108, subcode 025/026**
Error message	Error while calculating firmware configuration data.
Remedy	Replace the DCS..B option and send it together with error number to SEW Service for further inspection.

Fatal error code	F1503/1504, error 108, subcode 027/028
Error message	CRC of firmware configuration data invalid.
Remedy	Replace the DCS..B option and send it together with error number to SEW Service for further inspection.

Fatal error code	F1505/1506, error 108, subcode 029/030
Error message	Error during internal transmission of firmware configuration data.
Remedy	Replace the DCS..B option and send it together with error number to SEW Service for further inspection.

Fatal error code	F1601, error 108, subcode 031
Error message	Faulty range check of device description.
Cause	Faulty configuration data of the device description.
Remedy	• Reload the configuration data. Next switch the DCS..B option off and on again. • Consult SEW Service for the proper MOVISAFE® software version.

Fatal error code	F1603, error 108, subcode 032
Error message	Faulty range check of access data.
Cause	Faulty configuration data of the device description.
Remedy	• Reload the configuration data. Next switch the DCS..B option off and on again. • Consult SEW Service for the proper MOVISAFE® software version.

Fatal error code	F1605, error 108, subcode 033
Error message	Faulty EMU range check.
Cause	Fault configuration data of the EMU function.
Remedy	• Undo the changes in the EMU configuration or enter new values. • Reload the configuration data. Next switch the DCS..B option off and on again. • If the error still persists, consult SEW Service for the proper MOVISAFE® software version.

Fatal error code	F1607, error 108, subcode 034
Error message	Faulty PSC range check.
Cause	Faulty configuration data of the PSC function.
Remedy	• Undo the changes in the PSC configuration or enter new values. • Reload the configuration data. Next switch the DCS..B option off and on again. • If the error still persists, consult SEW Service for the proper MOVISAFE® software version.

Fatal error code	F1609, error 108, subcode 035
Error message	Faulty ESS range check.
Cause	Faulty configuration data of the ESS function.
Remedy	• Undo the changes in the ESS configuration or enter new values. • Reload the configuration data. Next switch the DCS..B option off and on again. • If the error still persists, consult SEW Service for the proper MOVISAFE® software version.

Fatal error code	F1611, error 108, subcode 036
Error message	Faulty ELC range check.
Cause	Faulty configuration data of the ELC function.
Remedy	• Undo the changes in the ELC configuration or enter new values. • Reload the configuration data. Next switch the DCS..B option off and on again. • If the error still persists, consult SEW Service for the proper MOVISAFE® software version.

Fatal error code	F1613, error 108, subcode 037
Error message	Faulty OLC range check.
Cause	Faulty configuration data of the OLC function.
Remedy	• Undo the changes in the OLC configuration or enter new values. • Reload the configuration data. Next switch the DCS..B option off and on again. • If the error still persists, consult SEW Service for the proper MOVISAFE® software version.

Fatal error code	F1615, error 108, subcode 038
Error message	Faulty ZSC range check.
Cause	Faulty configuration data of the ZSC function.
Remedy	• Undo the changes in the ZSC configuration or enter new values. • Reload the configuration data. Next switch the DCS..B option off and on again. • If the error still persists, consult SEW Service for the proper MOVISAFE® software version.

Fatal error code	F1617, error 108, subcode 039
Error message	Faulty MSC range check.
Cause	Faulty configuration data of the MSC function.
Remedy	• Undo the changes in the MSC configuration or enter new values. • Reload the configuration data. Next switch the DCS..B option off and on again. • If the error still persists, consult SEW Service for the proper MOVISAFE® software version.

Fatal error code	F1619, error 108, subcode 040
Error message	Faulty DMC range check.
Cause	Faulty configuration data of the DMC function.
Remedy	• Undo the changes in the DMC configuration or enter new values. • Reload the configuration data. Next switch the DCS..B option off and on again. • If the error still persists, consult SEW Service for the proper MOVISAFE® software version.

Fatal error code	F1621, error 108, subcode 041
Error message	Faulty JSS range check.
Cause	Faulty configuration data of the JSS function.
Remedy	• Undo the changes in the JSS configuration or enter new values. • Reload the configuration data. Next switch the DCS..B option off and on again. • If the error still persists, consult SEW Service for the proper MOVISAFE® software version.

Fatal error code	F1623, error 108, subcode 042
Error message	Faulty PLC range check.
Cause	Incorrect IL application program.
Remedy	• Compile the application program again, load it, and switch the DCS..B option off and on again. • Consult SEW Service for the proper MOVISAFE® software version.

Fatal error code	F1625, error 108, subcode 043
Error message	Faulty shutdown channel range check.
Cause	Internal configuration data error.
Remedy	• Undo the changes in the disconnection (configuration) or enter new values. • Reload the configuration data. Next switch the DCS..B option off and on again. • If the error still persists, consult SEW Service for the proper MOVISAFE® software version.

Fatal error code	F1627, error 108, subcode 044
Error message	Faulty digital output range check.
Cause	Faulty configuration data of digital outputs.
Remedy	• Undo the changes in the disconnection matrix of the digital outputs or enter new values. • Reload the configuration data. Next switch the DCS..B option off and on again. • If the error still persists, consult SEW Service for the proper MOVISAFE® software version.

Fatal error code	F1629, error 108, subcode 045
Error message	Faulty digital input range check.
Cause	Faulty configuration data of digital inputs.
Remedy	• Undo the changes in the digital input configuration or enter new values. • Reload the configuration data. Next switch the DCSB option off and on again. • If the error still persists, consult SEW Service for the proper MOVISAFE® software version.

Fatal error code	F1633, error 108, subcode 046
Error message	Faulty encoder type range check.
Cause	Incorrectly configured encoder type.
Remedy	• Undo the changes in the encoder configuration or enter new values. • Reload the configuration data. Next switch the DCS..B option off and on again. • If the error still persists, consult SEW Service for the proper MOVISAFE® software version.

Fatal error code	F1635, error 108, subcode 047
Error message	Faulty encoder scaling range check.
Cause	Incorrectly configured encoder distance.
Remedy	• Undo changes made to the encoder distance (measuring length, resolution or max. speed) or enter new values. • Reload the configuration data. Next switch the DCS..B option off and on again. • If the error still persists, consult SEW Service for the proper MOVISAFE® software version.

Fatal error code	F1637, error 108, subcode 048
Error message	Faulty encoder position range check.
Cause	Incorrectly configured encoder distance.
Remedy	• Undo changes made to the encoder distance (measuring length, resolution or max. speed) or enter new values. • Reload the configuration data. Next switch the DCS..B option off and on again. • If the error still persists, consult SEW Service for the proper MOVISAFE® software version.

Fatal error code	F1639, error 108, subcode 049
Error message	Faulty PDM range check.
Cause	Faulty configuration data of the PDM function.
Remedy	• Undo the changes in the PDM configuration or enter new values. • Reload the configuration data. Next switch the DCS..B option off and on again. • If the error still persists, consult SEW Service for the proper MOVISAFE® software version.

Fatal error code	F2001/2002, error 108, subcode 050/051
Error message	Error during internal data transmission.
Remedy	Replace the DCS..B option and send it together with error number to SEW Service for further inspection.

Fatal error code	F2003/2004, error 108, subcode 052/053
Error message	Error during internal data transmission.
Remedy	Replace the DCS..B option and send it together with error number to SEW Service for further inspection.

Fatal error code	F3001/3002, error 108, subcode 054/055
Error message	Internal program error.
Remedy	Replace the DCS..B option and send it together with error number to SEW Service for further inspection.

Fatal error code	F3203/3204, error 108, subcode 004/005
Error message	Incorrect reference voltage.
Cause	• Incorrect reference voltage • Incorrect supply voltage of the DCS..B option • Faulty component on the DCS..B option
Remedy	• Check supply voltage of DCS..B option • Switch DCS..B option off and on again

Fatal error code	F3205/3206, error 108, subcode 006/007
Error message	Faulty system voltage.
Cause	• Faulty supply voltage of the DCS..B option • Faulty component on the DCS..B option
Remedy	• Check supply voltage of DCS..B option • Switch DCS..B option off and on again

Fatal error code	F3207/3208, error 108, subcode 008/009
Error message	Incorrect test voltage.
Cause	• Incorrect test voltage • Faulty supply voltage of the DCS..B option • Faulty component on the DCS..B option
Remedy	• Check supply voltage of DCS..B option • Switch DCS..B option off and on again

Fatal error code	F3210, error 108, subcode 010
Error message	Incorrect supply voltage.
Cause	• Incorrect DC 24 V supply of the DCS..B option • Faulty component on the DCS..B option
Remedy	• Check the supply voltage of the unit • Switch DCS..B option off and on again

Fatal error code	F3214, error 108, subcode 011
Error message	Ambient temperature of the unit is not in the defined range.
Cause	• Ambient temperature not within specified range • Faulty component on the DCS..B option
Remedy	• Check the ambient temperature • Switch DCS..B option off and on again

Fatal error code	F3306, error 108, subcode 012
Error message	Plausibility check for position changeover.
Cause	Position changeover during ZSC, JSS or DMC is permanently activated.
Remedy	• Check ZSC activation • Check JSS activation • Check DMC activation (only for monitoring via position)

Fatal error code	F3601/3602, error 108, subcode 056/057
Error message	Faulty watchdog test.
Remedy	Replace the DCS..B option and send it together with error number to SEW Service for further inspection.

Fatal error code	F3603, error 108, subcode 013
Error message	Faulty switching of the LOSIDE driver DO2_M.
Cause	Short-circuit of digital output DO2_M (X83:2).
Remedy	Check wiring at the digital output.

Fatal error code	F3604, error 108, subcode 014
Error message	Faulty switching of the HISIDE driver DO2_P.
Cause	Short-circuit of digital output DO2_P (X83:1).
Remedy	Check wiring at the digital output.

Fatal error code	F3605, error 108, subcode 015
Error message	Faulty switching of the LOSIDE driver DO0_M.
Cause	Short-circuit of digital output DO0_M (X82:2).
Remedy	Check wiring at the digital output.

Fatal error code	F3606, error 108, subcode 016
Error message	Faulty switching of the HISIDE driver DO0_P.
Cause	Short-circuit of digital output DO0_P (X82:1).
Remedy	Check wiring at the digital output.

Fatal error code	F3607, error 108, subcode 017
Error message	Faulty switching of the LOSIDE driver DO1_M.
Cause	Short-circuit of digital output DO1_M (X82:4).
Remedy	Check wiring at the digital output.

Fatal error code	F3608, error 108, subcode 018
Error message	Faulty switching of the HISIDE driver DO1_P.
Cause	Short-circuit of digital output DO1_P (X82:3).
Remedy	Check wiring at the digital output.

Fatal error code	F3701/3702, error 108, subcode 058/059
Error message	Faulty process data.
Remedy	Replace the DCS..B option and send it together with error number to SEW Service for further inspection.

Fatal error code	F6803/6804, error 108, subcode 062/063
Error message	Internal processing error in user program.
Remedy	Replace the DCS..B option and send it together with error number to SEW Service for further inspection.

Fatal error code	F6805/6806, error 108, subcode 064/065
Error message	Internal processing error in user program.
Remedy	Replace the DCS..B option and send it together with error number to SEW Service for further inspection.

Fatal error code	F6807/6808, error 108, subcode 066/067
Error message	Internal processing error in user program.
Remedy	Replace the DCS..B option and send it together with error number to SEW Service for further inspection.

Fatal error code	F6809/6810, error 108, subcode 068/069
Error message	Internal processing error of input element.
Remedy	• Reload the configuration data. Next switch the DCS..B option off and on again. • Consult SEW Service for the proper MOVISAFE® software version.

Fatal error code	F6811/6812, error 108, subcode 070/071
Error message	Internal processing error of input element.
Remedy	• Reload the configuration data. Next switch the DCS..B option off and on again. • Consult SEW Service for the proper MOVISAFE® software version.

Fatal error code	F6813/6814, error 108, subcode 072/073
Error message	Internal processing error in user program.
Remedy	Replace the DCS..B option and send it together with error number to SEW Service for further inspection.

Fatal error code	F7423/7424, error 108, subcode 101/102
Error message	Internal processing error PROFIsafe.
Remedy	Replace the DCS..B option and send it together with error number to SEW Service for further inspection.

Fatal error code	F7429/7430, error 108, subcode 103/104
Error message	Internal processing error PROFIsafe.
Remedy	Replace the DCS..B option and send it together with error number to SEW Service for further inspection.

Fatal error code	F7501/7502, error 108, subcode 105
Error message	Internal processing error PROFIsafe.
Remedy	Replace the DCS..B option and send it together with error number to SEW Service for further inspection.

Fatal error code	F8205/8206, error 108, subcode 074/075
Error message	Runtime error.
Remedy	Replace the DCS..B option and send it together with error number to SEW Service for further inspection.

Fatal error code	F8207/8208, error 108, subcode 076/077
Error message	Program error
Remedy	Replace the DCS..B option and send it together with error number to SEW Service for further inspection.

Fatal error code	F8213, error 108, subcode 080
Error message	Runtime error.
Remedy	Replace the DCS..B option and send it together with error number to SEW Service for further inspection.

Fatal error code	F8221/8222, error 108, subcode 085/086
Error message	Runtime error.
Remedy	Replace the DCS..B option and send it together with error number to SEW Service for further inspection.

Fatal error code	F8223/8224, error 108, subcode 087/088
Error message	Program error
Remedy	Replace the DCS..B option and send it together with error number to SEW Service for further inspection.

Fatal error code	F9001/9002, error 108, subcode 089/090
Error message	Internal CPU error.
Remedy	Replace the DCS..B option and send it together with error number to SEW Service for further inspection.

Fatal error code	F9003/9004, error 108, subcode 091/092
Error message	Internal CPU error.
Remedy	Replace the DCS..B option and send it together with error number to SEW Service for further inspection.

Fatal error code	F9005/9006, error 108, subcode 093/094
Error message	Internal CPU error.
Remedy	Replace the DCS..B option and send it together with error number to SEW Service for further inspection.

Fatal error code	F9007/9008, error 108, subcode 095/096
Error message	Internal RAM error.
Remedy	Replace the DCS..B option and send it together with error number to SEW Service for further inspection.

Fatal error code	F9009/9010, error 108, subcode 097/098
Error message	Internal flash error.
Remedy	Replace the DCS..B option and send it together with error number to SEW Service for further inspection.

Fatal error code	F9011/9012, error 108, subcode 099/100
Error message	Internal CPU error.
Remedy	Replace the DCS..B option and send it together with error number to SEW Service for further inspection.

9.2.2 List of alarm messages

INFORMATION

An alarm displayed on MOVIDRIVE® B must be reset with two time-delayed reset commands. A single reset command of MOVIDRIVE® B will trigger a subsequent error in the DCS..B option.

Alarm code	A2401, error 109, subcode 001
Alarm message	Communication error backplane bus MOVIDRIVE® B.
Cause	The DCS..B option does not receive any valid data from MOVIDRIVE® B.
Remedy	• Check hardware connection to MOVIDRIVE® B. • Check firmware version of MOVIDRIVE® B • Remove/install DCS..B

Alarm code	A3101/3102, error 109, subcode 002/003
Alarm message	Pulse 1 plausibility error at digital input DI1.
Cause	The configured pulse 1 voltage is not present at digital input DI1 (X81:2).
Remedy	• Check configuration of the DI1 digital input according to configuration and wiring diagram • Check wiring

Alarm code	A3103/3104, error 109, subcode 004/005
Alarm message	Pulse 1 plausibility error at digital input DI2.
Cause	The configured pulse 1 voltage is not present at digital input DI2 (X81:3).
Remedy	• Check configuration of the DI2 digital input according to configuration and wiring diagram • Check wiring

Alarm code	A3105/3106, error 109, subcode 006/007
Alarm message	Pulse 1 plausibility error at digital input DI3.
Cause	The configured pulse 1 voltage is not present at digital input DI3 (X81:4).
Remedy	• Check configuration of the DI3 digital input according to configuration and wiring diagram • Check wiring

Alarm code	A3107/3108, error 109, subcode 008/009
Alarm message	Pulse 1 plausibility error at digital input DI4.
Cause	The configured pulse 1 voltage is not present at digital input DI4 (X81:5).
Remedy	• Check configuration of the DI4 digital input according to configuration and wiring diagram • Check wiring

Alarm code	A3109/3110, error 109, subcode 010/011
Alarm message	Pulse 1 plausibility error at digital input DI5.
Cause	The configured pulse 1 voltage is not present at digital input DI5 (X81:7).
Remedy	• Check configuration of the DI5 digital input according to configuration and wiring diagram • Check wiring

Alarm code	A3111/3112, error 109, subcode 012/013
Alarm message	Pulse 1 plausibility error at digital input DI6.
Cause	The configured pulse 1 voltage is not present at digital input DI6 (X81:8).
Remedy	• Check configuration of the DI6 digital input according to configuration and wiring diagram • Check wiring

Alarm code	A3113/3114, error 109, subcode 014/015
Alarm message	Pulse 1 plausibility error at digital input DI7.
Cause	The configured pulse 1 voltage is not present at digital input DI7 (X81:9).
Remedy	• Check configuration of the DI7 digital input according to configuration and wiring diagram • Check wiring

Alarm code	A3115/3116, error 109, subcode 016/017
Alarm message	Pulse 1 plausibility error at digital input DI8.
Cause	The configured pulse 1 voltage is not present at digital input DI8 (X81:10).
Remedy	• Check configuration of the DI8 digital input according to configuration and wiring diagram • Check wiring

Alarm code	A3117/3118, error 109, subcode 018/019
Alarm message	Pulse 2 plausibility error at digital input DI1.
Cause	The configured pulse 2 voltage is not present at digital input DI1 (X81:2).
Remedy	• Check configuration of the DI1 digital input according to configuration and wiring diagram • Check wiring

Alarm code	A3119/3120, error 109, subcode 020/021
Alarm message	Pulse 2 plausibility error at digital input DI2.
Cause	The configured pulse 2 voltage is not present at digital input DI2 (X81:3).
Remedy	• Check configuration of the DI2 digital input according to configuration and wiring diagram • Check wiring

Alarm code	A3121/3122, error 109, subcode 022/023
Alarm message	Pulse 2 plausibility error at digital input DI3.
Cause	The configured pulse 2 voltage is not present at digital input DI3 (X81:4).
Remedy	• Check configuration of the DI3 digital input according to configuration and wiring diagram • Check wiring

Alarm code	A3123/3124, error 109, subcode 024/025
Alarm message	Pulse 2 plausibility error at digital input DI4.
Cause	The configured pulse 2 voltage is not present at digital input DI4 (X81:5).
Remedy	• Check configuration of the DI4 digital input according to configuration and wiring diagram • Check wiring

Alarm code	A3125/3126, error 109, subcode 026/027
Alarm message	Pulse 2 plausibility error at digital input DI5.
Cause	The configured pulse 2 voltage is not present at digital input DI5 (X81:7).
Remedy	• Check configuration of the DI5 digital input according to configuration and wiring diagram • Check wiring

Alarm code	A3127/3128, error 109, subcode 028/029
Alarm message	Pulse 2 plausibility error at digital input DI6.
Cause	The configured pulse 2 voltage is not present at digital input DI6 (X81:8).
Remedy	• Check configuration of the DI6 digital input according to configuration and wiring diagram • Check wiring

Alarm code	A3129/3130, error 109, subcode 030/031
Alarm message	Pulse 2 plausibility error at digital input DI7.
Cause	The configured pulse 2 voltage is not present at digital input DI7 (X81:9).
Remedy	• Check configuration of the DI7 digital input according to configuration and wiring diagram • Check wiring

Alarm code	A3131/3132, error 109, subcode 032/033
Alarm message	Pulse 2 plausibility error at digital input DI8.
Cause	The configured pulse 2 voltage is not present at digital input DI8 (X81:10).
Remedy	• Check configuration of the DI8 digital input according to configuration and wiring diagram • Check wiring

Alarm code	A3301/3302, error 109, subcode 034/035
Alarm message	Plausibility error in the speed detection.
Cause	The difference between the two velocity sensors is higher than the configured speed cut-off threshold.
Remedy	• Check track again with the data of the encoder configuration. • Check speed sensor • Use the SCOPE function to set speed signals so that they are congruent

Alarm code	A3303/3304, error 109, subcode 036/037
Alarm message	Plausibility error in the position acquisition
Cause	The difference between the two position signals is higher than the configured increment cut-off threshold.

Alarm code	A3303/3304, error 109, subcode 036/037
Remedy	• Check track with the configured data of the encoder setting • Check position signal • Are all signals connected correctly to the 9-pin encoder connector? • Check the encoder connector for correct wiring. • Use the SCOPE function to set positions signals so that they are congruent

Alarm code	A3307/3308, error 109, subcode 038/039
Alarm message	Plausibility error - incorrect position range.
Cause	The current position is outside the configured measurement range.
Remedy	• Check track with the configured data of the encoder setting • Check position signal, correct offset if necessary • Use the SCOPE function to read off the position and set in ratio to the configured values

Alarm code	A3309/3310, error 109, subcode 040/041
Alarm message	Plausibility error - incorrect speed.
Cause	The current speed exceeds the configured maximum speed.
Remedy	• The drive moves outside the permitted and configured speed range • Check the configuration (encoder screen: max. set speed) • Analyze the speed development using the SCOPE function

Alarm code	A3311/3312, error 109, subcode 042/043
Alarm message	Plausibility error - incorrect acceleration.
Cause	The current acceleration is outside the configured acceleration range. The drive has exceeded the permitted acceleration range
Remedy	• Check the configuration (encoder screen: max. set speed) • Analyze the speed/acceleration development using the SCOPE function

Alarm code	A3401/3402, error 109, subcode 044/045
Alarm message	Plausibility error in encoder interface (A3401 = encoder 1 and A3402 = encoder 2).
Cause	The wiring of the encoder does not correspond to the configured data.
Remedy	• Check encoder type and configuration (SSI/incremental) • Check the encoder connection/wiring • Check polarity of encoder data • Check function of the encoder

Alarm code	A3403/3404, error 109, subcode 046/047
Alarm message	Faulty encoder voltage supply (A3403 = encoder 1 and A3404 = encoder 2).
Cause	Encoder voltage supply not within defined range (min. DC 20 V / max. DC 29 V).
Remedy	• Overload in the supply voltage of the encoder; internal polyswitch fuse has tripped • Check supply voltage of DCS..B option

Alarm code	A3405/3406, error 109, subcode 048/049
Alarm message	Plausibility error of encoder interface (A3405 = encoder 1 and A3406 = encoder 2).
Cause	The wiring of the encoder does not correspond to the configured data. Reference voltage outside defined range

Alarm code	A3405/3406, error 109, subcode 048/049
Remedy	• Check encoder type and configuration (SSI/incremental) • Check the encoder connection/wiring • Check polarity of encoder data • Check function of the encoder • Check encoder supply voltage

Alarm code	A3407/3408, error 109, subcode 050/051
Alarm message	Difference level RS485 driver 1. Error: Faulty "B" or "Cycle" signal.
Cause	• No encoder connection • Incorrect encoder type is connected
Remedy	• Check the encoder connection. • Check encoder cabling

Alarm code	A3409/3410, error 109, subcode 052/053
Alarm message	Difference level RS485 driver 2. Error: Faulty "A" or "DATA" signal.
Cause	• No encoder connection • Incorrect encoder type is connected
Remedy	• Check the encoder connection. • Check encoder cabling

Alarm code	A3411/3412, error 109, subcode 054/055
Alarm message	Incremental counter plausibility check
Cause	• Incorrect encoder connection • Incorrect encoder type is connected
Remedy	• Check the encoder connection. • Check encoder cabling • Check software configuration

Alarm code	A3413/3414, error 109, subcode 056/057
Alarm message	Plausibility error in encoder interface (A3413 = encoder 1 and A3413 = encoder 2).
Cause	The wiring of the encoder does not correspond to the configured data.
Remedy	• Check encoder type and configuration (SSI/incremental) • Check the encoder connection/wiring • Check polarity of encoder data • Check function of the encoder

Alarm code	A3415/3416, error 109, subcode 058/059
Alarm message	Plausibility error SIN/COS encoder connection.
Cause	Incorrect encoder type connected.
Remedy	• Check encoder connection • Check the encoder connection

Alarm code	A3417/3418, error 109, subcode 060/061
Alarm message	Plausibility error - incremental encoder connection.
Cause	Incorrect encoder type connected.
Remedy	• Check encoder connection • Check the encoder connection

Alarm code	A3419/3420, error 109, subcode 062/063
Alarm message	Plausibility error - incremental encoder connection.
Cause	• Phase failure of the incremental or SIN/COS encoder. • Encoder is defective
Remedy	• Check encoder connection • Replace encoder

Alarm code	A3421/3422, error 109, subcode 064/065
Alarm message	Plausibility error - SSI encoder connection (master mode)
Cause	Connected encoder type does not correspond to the configuration.
Remedy	• Check encoder connection • Check connected encoder

Alarm code	A3423/3424, error 109, subcode 066/067
Alarm message	Plausibility error - SSI encoder connection (slave mode)
Cause	Connected encoder type does not correspond to the configuration.
Remedy	• Check encoder connection • Check connected encoder

Alarm code	A3609, error 109, subcode 068
Alarm message	Faulty switching behavior of the LOSIDE driver DO2_M.
Cause	DC 0 V short circuit at digital output DO2_M (X83:2).
Remedy	Check wiring at the digital output.

Alarm code	A3610, error 109, subcode 069
Alarm message	Faulty switching behavior of the HISIDE driver DO2_P.
Cause	DC 24 V short circuit at digital output DO2_P (X83:1).
Remedy	Check wiring at the digital output.

Alarm code	A3611, error 109, subcode 070
Alarm message	Faulty switching behavior of the LOSIDE driver DO0_M.
Cause	DC 0 V short circuit at digital output DO0_M (X82:2).
Remedy	Check wiring at the digital output.

Alarm code	A3612, error 109, subcode 071
Alarm message	Faulty switching behavior of the HISIDE driver DO0_P.
Cause	DC 24 V short circuit at digital output DO0_P (X82:1).
Remedy	Check wiring at the digital output.

Alarm code	A3613, error 109, subcode 072
Alarm message	Faulty switching behavior of the LOSIDE driver DO1_M.
Cause	DC 0 V short circuit at digital output DO1_M (X82:4).
Remedy	Check wiring at the digital output.

Alarm code	A3614, error 109, subcode 073
Alarm message	Faulty switching behavior of the HISIDE driver DO1_P.
Cause	DC 24 V short circuit at digital output DO1_P (X82:3).
Remedy	Check wiring at the digital output.

Alarm code	A3615, error 109, subcode 074
Alarm message	Undervoltage test WD for LOSIDE driver.
Cause	DC 0 V short circuit at on of the DC 0 V digital outputs (DO0_M, DO1_M, DO2_M).
Remedy	Check wiring at digital outputs.

Alarm code	A3616, error 109, subcode 075
Alarm message	Undervoltage test WD for HISIDE driver.
Cause	DC 24 V short circuit at on of the DC 24 V digital outputs (DO0_P, DO1_P, DO2_P).
Remedy	Check wiring at digital outputs.

Alarm code	A4001/4002, error 109, subcode 076/077
Alarm message	CCW and CW monitoring of DMC function activated simultaneously.
Cause	Multiple activation of the DMC function.
Remedy	It is important that only one "Enable" is activated in the control of the DMC function.

Alarm code	A4601/4602, error 109, subcode 078/079
Alarm message	CCW and CW monitoring range of the OLC function activated simultaneously.
Cause	Multiple activation of the OLC function.
Remedy	It is important that only one "Enable" is activated in the control of the OLC function.

Alarm code	A4901/4902, error 109, subcode 080/081
Alarm message	CCW and CW monitoring of the JSS function was activated simultaneously.
Cause	Multiple activation of the JSS function.
Remedy	It is important that only one "Enable" is activated in the control of the JSS function.

Alarm code	A6701/6702, error 109, subcode 082/083
Alarm message	Timeout error MET.
Cause	Input element with time monitoring is faulty.
Remedy	• Check wiring of input element • Input element faulty

Alarm code	A6703/6704, error 109, subcode 084/085
Alarm message	Timeout error MEZ.
Cause	Two-hand operation with time monitoring is faulty.
Remedy	• Check wiring of input element • Input element faulty

9.2.3 List of ECS messages

INFORMATION

When using the ECS function block, additional messages are issued which do not necessarily result in disabling all outputs.

Alarm code	E3301/3302, error 109, subcode 134/135
Alarm message	Plausibility error in the speed recording
Cause	The difference between the two velocity sensors is higher than the configured speed cut-off threshold.
Remedy	• Check track again with the data of the encoder configuration. • Check speed sensor • Use the SCOPE function to set speed signals so that they are congruent

Alarm code	E3303/3304, error 109, subcode 136/137
Alarm message	Plausibility error in the position acquisition
Cause	The difference between the two position signals is higher than the configured increment cut-off threshold.
Remedy	• Check the track with the configured data of the encoder setting • Check position signal • Are all signals connected correctly to the 9-pin encoder connector? • Check the encoder connector for correct wiring. • Use the SCOPE function to set positions signals so that they are congruent

Alarm code	E3307/3308, error 109, subcode 138/139
Alarm message	Plausibility error - incorrect position range.
Cause	The current position is outside the configured measurement range.
Remedy	• Check track with the configured data of the encoder setting • Check position signal, correct offset if necessary • Use the SCOPE function to read off the position and set in ratio to the configured values

Alarm code	E3309/3310, error 109, subcode 140/141
Alarm message	Plausibility error - incorrect speed.
Cause	The current speed exceeds the configured maximum speed.
Remedy	• The drive moves outside the permitted and configured speed range • Check the configuration (encoder screen: max. set speed) • Analyze the speed development using the SCOPE function

Alarm code	E3311/3312, error 109, subcode 142/143
Alarm message	Plausibility error - incorrect acceleration.
Cause	The current acceleration is outside the configured acceleration range. The drive has exceeded the permitted acceleration range
Remedy	• Check the configuration (encoder screen: max. set speed) • Analyze the speed/acceleration development using the SCOPE function

Alarm code	E3401/3402, error 109, subcode 144/145
Alarm message	Plausibility error in encoder interface (E3401 = encoder 1 and E3402 = encoder 2).
Cause	The wiring of the encoder does not correspond to the configured data.

Alarm code	E3401/3402, error 109, subcode 144/145
Remedy	• Check encoder type and configuration (SSI/incremental) • Check the encoder connection/wiring • Check polarity of encoder data • Check function of the encoder

Alarm code	E3403/3404, error 109, subcode 146/147
Alarm message	Faulty encoder voltage supply (E3403 = encoder 1 and E3404 = encoder 2).
Cause	Encoder voltage supply not within defined range (min. DC 20 V / max. DC 29 V).
Remedy	• Overload in the supply voltage of the encoder; internal polyswitch fuse has tripped • Check supply voltage of DCS..B option

Alarm code	E3405/3406, error 109, subcode 148/149
Alarm message	Plausibility error of encoder interface (E3405 = encoder 1 and E3406 = encoder 2).
Cause	The wiring of the encoder does not correspond to the configured data. Reference voltage outside defined range
Remedy	• Check encoder type and configuration (SSI/incremental) • Check the encoder connection/wiring • Check polarity of encoder data • Check function of the encoder • Check encoder supply voltage

Alarm code	E3407/3408, error 109, subcode 150/151
Alarm message	Difference level RS485 driver 1. Error: Faulty "B" or "Cycle" signal.
Cause	• No encoder connection • Incorrect encoder type is connected
Remedy	• Check encoder connection • Check encoder cabling

Alarm code	E3409/3410, error 109, subcode 152/153
Alarm message	Difference level RS485 driver 2. Error: Faulty "A" or "DATA" signal.
Cause	• No encoder connection • Incorrect encoder type is connected
Remedy	• Check encoder connection • Check encoder cabling

Alarm code	E3411/3412, error 109, subcode 154/155
Alarm message	Incremental counter plausibility check
Cause	• Incorrect encoder connection • Incorrect encoder type is connected
Remedy	• Check encoder connection • Check encoder cabling • Check software configuration

Alarm code	E3413/3414, error 109, subcode 156/157
Alarm message	Plausibility error in encoder interface (E3413 = encoder 1 and E3414 = encoder 2).
Cause	The wiring of the encoder does not correspond to the configured data.

Alarm code	E3413/3414, error 109, subcode 156/157
Remedy	• Check encoder type and configuration (SSI/incremental) • Check the encoder connection/wiring • Check polarity of encoder data • Check function of the encoder

Alarm code	E3415/3416, error 109, subcode 158/159
Alarm message	Plausibility error SIN/COS encoder connection.
Cause	Incorrect encoder type connected.
Remedy	• Check encoder connection • Check the encoder connection

Alarm code	E3417/3418, error 109, subcode 160/161
Alarm message	Plausibility error - incremental encoder connection.
Cause	Incorrect encoder type connected.
Remedy	• Check encoder connection • Check the encoder connection

Alarm code	E3419/3420, error 109, subcode 162/163
Alarm message	Plausibility error - incremental encoder connection.
Cause	• Phase failure of the incremental or SIN/COS encoder. • Encoder is defective
Remedy	• Check encoder connection • Replace encoder

Alarm code	E3421/3422, error 109, subcode 164/165
Alarm message	Plausibility error - SSI encoder connection (master mode)
Cause	Connected encoder type does not correspond to the configuration.
Remedy	• Check encoder connection • Check connected encoder

Alarm code	E3423/3424, error 109, subcode 166/167
Alarm message	Plausibility error - SSI encoder connection (slave mode)
Cause	Connected encoder type does not correspond to the configuration.
Remedy	• Check encoder connection • Check connected encoder

Alarm code	E4401/4402, error 109, subcode 186/187
Alarm message	EMU1 monitoring error
Cause	Faulty monitoring of the external disconnection channel
Remedy	• Check hardware connections • Pick-up or release time too short • Check switching contacts

Alarm code	E4403/4404, error 109, subcode 188/189
Alarm message	EMU2 monitoring error
Cause	Faulty monitoring of the external disconnection channel

Alarm code	E4403/4404, error 109, subcode 188/189
Remedy	• Check hardware connections • Pick-up or release time too short • Check switching contacts

10 Technical Data

10.1 General technical data

MOVISAFE® DCS..B	
Interference immunity	Meets EN 61800-3
Ambient temperature[1].	−10 °C to +80 °C
Climate class	3K3 (EN 60721-3-3)
Storage temperature	−10 °C to +80 °C
Degree of protection	IP00 (EN 60529)

1) Observe the maximum permitted ambient temperature of MOVIDRIVE® B

10.2 Characteristic safety values of MOVISAFE® DCS21B

	Characteristic values according to	
	EN 62061/IEC 61508	**EN ISO 13849-1**
Classification/underlying standards	SIL 3 according to IEC 61508	PL e
System structure	1oo2D	2 channels (corresponds to category 4)
Operating mode selection	"High demand" according to IEC 61508	
Probability of dangerous failure per hour (PFHd value)	1.83×10^{-9} 1/h	
Mission time/service life	Ambient temperature ≤ 35 °C: 20 years Ambient temperature > 35 °C: 10 years	
Proof test interval	Ambient temperature ≤ 35 °C: 20 years Ambient temperature > 35 °C: 10 years	-
Safe condition	Value "0" for all safety-oriented F-DO process values (output disabled)	
Safety function	• STO, SS1, SS2, SOS, SLA, SAR, SLS, SSR, SLP, SLI, SDI, SCA, SSM according to IEC 61800-5-2 • Safe binary inputs/outputs • PROFIsafe communication	

10.3 Characteristic safety values of MOVISAFE® DCS31B

	Characteristic values according to	
	EN 62061/IEC 61508	**EN ISO 13849-1**
Classification/underlying standards	SIL 3 according to IEC 61508	PL e
System structure	1oo2D	2 channels (corresponds to category 4)
Operating mode selection	"High demand" according to IEC 61508	
Probability of dangerous failure per hour (PFHd value)	1.83×10^{-9} 1/h	
Mission time/service life	Ambient temperature ≤ 35 °C: 20 years Ambient temperature > 35 °C: 10 years	
Proof test interval	Ambient temperature ≤ 35 °C: 20 years Ambient temperature > 35 °C: 10 years	-
Safe condition	Value "0" for all safety-oriented F-DO process values (output disabled)	
Safety function	• STO, SS1, SS2, SOS, SLA, SAR, SLS, SSR, SLP, SLI, SDI, SCA, SSM according to IEC 61800-5-2 • Safe binary inputs/outputs • Safe logic processing	

10.4 Plug connector

10.4.1 Pin assignment X80

Type: Phoenix terminal, 2-pole

X80 PIN	Assign-ment	Signal description	Specification
1	DC+24 V	DC 24 V voltage supply	DC 20 V to DC 29 V
2	0V24	0 V reference potential	

10.4.2 Pin assignment X81

Type: Phoenix terminal, 10-pole

X81 PIN	Assign-ment	Signal description	Specification
1	Pulse 1	Pulse output 1 for crossfault monitoring	DC 24 V, pulsed Clock frequency: • 214 Hz (DCS21B) • 240 Hz (DCS31B)
2	DI1	Input 1	DC 20 V to DC 29 V
3	DI2	Input 2	
4	DI3	Input 3	
5	DI4	Input 4	
6	Pulse 2	Pulse output 2 for crossfault monitoring	DC 24 V, pulsed Clock frequency: • 214 Hz (DCS21B) • 240 Hz (DCS31B)
7	DI5	Input 5	DC 20 V to DC 29 V
8	DI6	Input 6	
9	DI7	Input 7	
10	DI8	Input 8	

10.4.3 Pin assignment X82

Type: Phoenix terminal, 4-pole

X82 PIN	Assign-ment	Signal description	Specification
1	DO0_P	HISIDE output 0	DC 24 V, 0.1 A
2	DO0_M	LOSIDE output 0	DGND
3	DO1_P	HISIDE output 1	DC 24 V, 0.1 A
4	DO1_M	LOSIDE output 1	DGND

10.4.4 Pin assignment X83

Type: Phoenix terminal, 2-pole

X83 PIN	Assign-ment	Signal description	Specification
1	DO2_P	HISIDE output	DC 24 V, 1.5 A
2	DO2_M	LOSIDE output	DGND

10.4.5 Pin assignment X84/X85

Type: D-sub socket

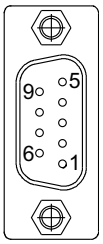

1984587275

Pin assignment X84/X85 (depending on technology):

X84/X85 PIN	TTL incremental	SIN/COS	SSI absolute Master mode	SSI absolute Slave mode
1	A	COS+	DATA+	DATA+
2	B	SIN+	N.C.	Pulse +
3	N.C.	N.C.	Pulse +	N.C.
4	N.C.	N.C.	N.C.	N.C.
5	GND	GND	GND	N.C.
6	$\overline{A}$	COS-	DATA-	DATA-
7	$\overline{B}$	SIN-	N.C.	Pulse -
8	N.C.	N.C.	Pulse -	N.C.
9	DC 24 V / 0.3 A	DC 24 V / 0.3 A	DC 24 V / 0.3 A	N.C.

INFORMATION

The internal resistance of encoder interface X84/X85 is adapted to a signal splitting between MOVIDRIVE® B and DCS..B option. With direct encoder connection, it might be necessary to adjust the load impedance (typically 120 Ω) as specified by the encoder supplier.

Specification of encoder interfaces

SSI absolute encoder	
Signal level	RS422
Data format	Binary code Gray code
Clock rate	Master mode X84: approx. 100 kHz Master mode X85: approx. 80 kHz Slave mode: max. 150 kHz
Pulse break between clock pulse trains	min. 30 µs – max. 6 ms

TTL incremental encoders	
Signal level	RS422
Measuring signal A/B track	90° phase difference
Max. input clock frequency	200 kHz

SIN/COS encoder	
Signal level	AC $1V_{pp}$
Measuring signal A/B track	90° phase difference
Max. input clock frequency	200 kHz

10.4.6 Pin assignment X86

Type: Phoenix terminal, 3-pole

X86 PIN	Assignment
1	CAN High
2	CAN Low
3	DGND

10.4.7 Pin assignment X87

Type: RJ10 plug connector

X87	Signal description	Specification
 2147805451	• Parameter setting and diagnostic interface • Point-to-point connection	Asynchronous, RS485 Baud rate: 38.4 kBaud Data bit: 8 Parity: None Stop bit: 1

11 Declaration of Conformity

11.1 Declaration of comformity for MOVIDRIVE® B with DCS..B option

EC Declaration of Conformity

SEW EURODRIVE

900020010

SEW-EURODRIVE GmbH & Co KG
Ernst-Blickle-Straße 42, D-76646 Bruchsal

declares under sole responsibility that the

frequency inverters of the series	**MOVIDRIVE® B**	
with built-in	**DCS21B** **DCS31B**	**PROFIsafe®**
are in conformity with		
Machinery Directive	**2006/42/EC**	**1)**
Low Voltage Directive	**2006/95/EC**	
EMC Directive	**2004/108/EC**	**4)**
applied harmonized standards	**EN 13849-1:2008** **EN 61800-5-1:2007** **EN 61800-3:2007**	**5)**

1) These products are intended for installation in machines. Startup is prohibited until it has been established that the machinery into which these products are to be incorporated complies with the provisions of the aforementioned Machinery Directive.

4) According to the EMC Directive, the listed products are not independently operable products. EMC assessment is only possible after these products have been integrated in an overall system. The assessment was verified for a typical system constellation, but not for the individual product.

5) All safety-relevant requirements of the product-specific documentation (operating instructions, manual, etc.) must be met over the entire product life cycle.

Bruchsal	11.12.09	Johann Soder	
Place	Date	Managing Director Technology	a) b)

a) Authorized representative for issuing this declaration on behalf of the manufacturer
b) Authorized representative for compiling the technical documents

2391067787

12 Appendix

12.1 Comparison of safety functions

The following table shows a comparison of normative safety functions according to EN 61800-5-2 and the MOVISAFE® Assist/Config software interface.

Function	Abbreviations in the EN 61800-5-2 standard		Abbreviations in MOVISAFE® Assist	
Safe Torque Off	STO	Safe Torque Off	SH	Safe stop
Safe stop 1 – stop category 1	SS1	Safe Stop 1	ESS	Emergency Stop Supervisor
Safe stop 2 – stop category 2	SS2	Safe Stop 2	ESS	Emergency Stop Supervisor
Safe operating stop	SOS	Safe Operating Stop	ZSC	Zero Speed Control
Safely limited acceleration	SLA	Safely Limited Acceleration	PSC	Position Speed Control
Safe acceleration range	SAR	Safe Accelera-tion Range	PSC	Position Speed Control
Safely limited speed	SLS	Safely limited speed	MSC	Maximum Speed Control
Safe speed range	SSR	Safe Speed Range	PSC	Position Speed Control
Safe speed monitoring	SSM	Safe Speed Monitor	PSC	Position Speed Control
Safe direction	SDI	Safe Direction	DMC	Direction Monitoring Control
Safely limited increment	SLI	Safely Limited Increment	JSS	Jogging Skip Supervisor
Safety limited position	SLP	Safely Limited Position	ELC	Emergency Limit Control
Safe cam	SCA	Safe Cam	PSC	Position Speed Control

12.2 Description of input elements

12.2.1 General information

The individual switches of the following input elements can be assigned to the binary inputs DI1 to DI8 as required.

12.2.2 Operating mode switch

Switch type	Remark	Classification according to EN ISO 13849-1	Classification according to IEC 61508
2 positions	Operating mode switch	PL e	SIL3
3 positions	Operating mode selection switch, monitored		

INFORMATION

Make sure that the safety program to be created disables the outputs of the DCS..B option (EN 60204-1) when changing the position of the operating mode switch.

12.2.3 Light curtain

Switch type	Remark	Classification according to EN ISO 13849-1	Classification according to IEC 61508
2 NC contacts	Light curtain for increased demands	PL e	SIL3
2 NC contacts, time-monitored	Light curtain, monitored		
1 NO contact + 1 NC contact	Light curtain for increased demands		
1 NO + 1 NC contact, time-monitored	Light curtain, monitored		

12.2.4 Emergency switch-off

Switch type	Remark	Classification according to EN ISO 13849-1	Classification according to IEC 61508
1 NC contact	Emergency switch-off, simple	PL d	SIL2
2 NC contacts	Emergency switch-off for increased demands	PL e	SIL3
2 NC contacts, time-monitored	Emergency switch-off, monitored		

12.2.5 Start/reset

Switch type	Comment	Classification according to EN ISO 13849-1	Classification according to IEC 61508
1 NO contact	Alarm reset, simple[1)]	-	-
1 NO contact	Logic reset, simple	PL d	SIL2
1 NO contact	Start monitoring, simple (special function)	-	-

1) The alarm/reset input is edge controlled and can always be operated with a DC 24 V voltage.

12.2.6 Sensor

Switch type	Remark	Classification according to EN ISO 13849-1	Classification according to IEC 61508
1 NC contact	Sensor input, simple	PL d	SIL2
1 NO contact	Sensor input, simple	PL d	SIL2
2 NC contacts	Sensor input for increased demands	PL e	SIL3
2 NC contacts, time-monitored	Sensor input, monitored	PL e	SIL3
1 NO contact + 1 NC contact	Sensor input for increased demands	PL e	SIL3
1 NO + 1 NC contact, time-monitored	Sensor input, monitored	PL e	SIL3

12.2.7 Door monitoring

Switch type	Remark	Classification according to EN ISO 13849-1	Classification according to IEC 61508
2 NC contacts	Door monitoring for increased demands	PL e	SIL3
2 NC contacts, time-monitored	Door monitoring, monitored	PL e	SIL3
1 NO contact + 1 NC contact	Door monitoring for increased demands	PL e	SIL3
1 NO + 1 NC contact, time-monitored	Door monitoring, monitored	PL e	SIL3
2 NO + 2 NC contacts	Door monitoring for increased demands	PL e	SIL3
2 NO + 2 NC contacts, time-monitored	Door monitoring, monitored	PL e	SIL3
3 NC contacts	Door monitoring for increased demands	PL e	SIL3
3 NC contacts, time-monitored	Door monitoring, monitored	PL e	SIL3

12.2.8 Confirmation button

Switch type	Remark	Classification according to EN ISO 13849-1	Classification according to IEC 61508
1 NC contact	Confirmation button, basic	PL d	SIL2
1 NO contact	Confirmation button, basic	PL d	SIL2
2 NC contacts	Confirmation button, increased demands	PL e	SIL3
2 NC contacts, time-monitored	Confirmation button, monitored	PL e	SIL3

12.3 Encoder combinations

The following table shows encoder combinations required for internal position and speed calculations.

Encoder 1	Encoder 2	Position processing	Process sensor	Reference sensor
TTL incremental	TTL incremental	Inactive	Encoder 1	Encoder 2
SIN/COS	TTL incremental	Inactive	Encoder 1	Encoder 2
Backplane bus inc.	TTL incremental	Inactive	Encoder 1	Encoder 2
TTL incremental	SIN/COS	Inactive	Encoder 1	Encoder 2
SIN/COS	SIN/COS	Inactive	Encoder 1	Encoder 2
Backplane bus inc.	SIN/COS	Inactive	Encoder 1	Encoder 2
TTL incremental	SSI absolute	Inactive	Encoder 1	Encoder 2
SIN/COS	SSI absolute	Inactive	Encoder 1	Encoder 2
Backplane bus inc.	SSI absolute	Inactive	Encoder 1	Encoder 2
SSI absolute	SSI absolute	Inactive	Encoder 1	Encoder 2
TTL incremental	Backplane bus abs.	Inactive	Encoder 1	Encoder 2
SIN/COS	Backplane bus abs.	Inactive	Encoder 1	Encoder 2
SSI absolute	Backplane bus abs.	Inactive	Encoder 1	Encoder 2
TTL incremental	SSI absolute	Active	Encoder 2	Encoder 1
SIN/COS	SSI absolute	Active	Encoder 2	Encoder 1
Backplane bus inc.	SSI absolute	Active	Encoder 2	Encoder 1
SSI absolute	SSI absolute	Active	Encoder 1	Encoder 2
TTL incremental	Backplane bus abs.	Active	Encoder 2	Encoder 1
SIN/COS	Backplane bus abs.	Active	Encoder 2	Encoder 1
SSI absolute	Backplane bus abs.	Active	Encoder 2	Encoder 1

12.4 Technical data of SEW encoders

12.4.1 TTL incremental encoders

Type designation	Supply voltage	Output signal
EH1R	DC 9 – 26 V	According to RS422 (1024 increments/revolution)
ES1R		
ES2R		
EV1R	DC 10 – 30 V	
ES7R		
EG7R		

12.4.2 SIN/COS encoder

Type designation	Supply voltage	Output signal
ES1S	DC 9 – 26 V	AC 1 V_{pp} SIN/COS (1024 increments/revolution)
ES2S		
EH1S		
EV1S	DC 10 – 30 V	
ES7S		
EG7S		
EH7S		

12.4.3 Combination encoders Hiperface® and SIN/COS

Type designation	Supply voltage	Output signal
AK0H	DC 12 V	AC 1 V_{pp} SIN/COS (128 increments/revolution)
ES1H		AC 1 V_{pp} SIN/COS (1024 increments/revolution)
AS1H		
ES3H		
AS3H		
ES4H		
AS4H		
EV1H		
AV1H		
Positive connection Hiperface® encoders: • AV6H • AF1H • EF1H		

12.4.4 Combination encoders RS485 and SIN/COS

Type designation	Supply voltage	Output signal
ES7W	DC 10 – 30 V	AC 1 V_{pp} SIN/COS (2048 increments/revolution)
EG7W		
AS7W		
AG7W		

12.4.5 Combination encoder SSI and SIN/COS

Type designation	Supply voltage	Output signal
AV1Y	DC 10 – 30 V	• AC 1 V_{pp} SIN/COS (512 increments/revolution) • SSI Gray code (4096 × 4096 increments)
AS7Y		• AC 1 V_{pp} SIN/COS (2048 increments/revolution) • SSI Gray code (4096 × 4096 increments)
AG7Y		

12.4.6 Encoder values of MOVIDRIVE® B via backplane bus

Type designation	Supply voltage	Output signal
Backplane bus inc.	-	4096 increments/revolution
Backplane bus abs.	-	Max. $2^{31} - 1$ increments

12.5 Diagnostic values

The diagnostic values specify the DC value that can be assumed for calculating the performance level.

12.5.1 Binary inputs

INFORMATION

- Refer to the manufacturer's specifications ($MTTF_d$, FIT numbers, etc.) for the safety-relevant evaluation of the sensor subsystem.
- The DC values listed in the table should be applied conservatively to ensure compliance with the boundary conditions ("Comment" column).
- Fault exclusions are permitted according to the relevant standards. The specified boundary conditions must be permanently ensured.
- If several sensor systems are required for an individual safety function to work properly, their partial value must be combined correctly according to the selected method.

General assessment of the diagnostics coverage (DC) for binary inputs according to EN ISO 13849-1.

Measure	DC value	Comment	Use
Cyclical test pulse by changing the input signals dynamically.	90%	Only effective if pulse assignment is active.	Cross fault monitoring for single-channel sensors.
Cross comparison of input signals with dynamic test if short circuits cannot be detected (with multiple inputs/outputs).	90%	Cyclical change of input signals required, for example by regular acknowledgement.	Monitoring of dual-channel sensors.
Cross comparison of input signals and intermediate results in the logic (L) and temporal monitoring of the logical program run as well as detection of static failures and short circuits (with multiple inputs/outputs).	99%	Cyclical change of input signals required, for example by regular acknowledgement.	Monitoring of dual-channel sensors.
Plausibility check, for example using the NO and NC contacts of positively-driven relays.	99%	Only effective in conjunction with active monitoring function for input element (EMU function).	Monitoring of dual-channel, complementary sensors.

12.5.2 Binary outputs

INFORMATION

- For a safety assessment of the output subsystem when using external elements in the switch-off circuit, e.g. for switching amplification, the manufacturer's specification ($MTTF_d$, FIT values, B_{10d} value, etc.) must be used.
- The DC values listed in the table should be applied conservatively to ensure compliance with the boundary conditions ("Comment" column).
- Fault exclusions are permitted according to the relevant standards. The specified boundary conditions must be permanently ensured.
- When using elements to amplify signals in safety circuits, the the function of these elements must be monitored using suitable feedback contacts, etc. (see wiring examples). Suitable feedback contacts are contacts that are connected with the contacts in the cut-off circuit in a forced-switching manner.

General assessment of the diagnostics coverage (DC) for binary outputs according to EN ISO 13849-1.

Measure	DC value	Comment	Use
Cross comparison of output signals and intermediate results in the logic (L) and temporal monitoring of the logical program run as well as detection of static failures and short circuits (with multiple inputs/outputs).	99%	When using elements to amplify switching (external relays or contactors), the measure is only effective together with the feedback function of switch contacts (EMU function).	Monitoring of outputs with direct function as safety circuit, or monitoring of safety circuits with elements to amplify switching in conjunction with feedback function of their outputs.

12.5.3 Encoder interface

General assessment of the diagnostics coverage (DC) for sensors for position and/or velocity detection according to EN ISO 13849-1.

Measure	DC value	Comment	Use
Cross comparison of input signals and intermediate results in the logic (L) and temporal monitoring of the logical program run as well as detection of static failures and short circuits (with multiple inputs/outputs).	99%	Use only for: • Two-channel sensor systems (2 separate sensors) • Dual-channel sub-system of sensors (incremental encoders) • Diagnostics for the single- and dual-channel subsystem of specifically suited sensor systems (SIN/COS encoders, Resolvers) • Dynamic opera-tion/no standstill monitoring	Monitoring of dual-channel sensor systems or the relevant subsystem of sensors for dynamic opera-tion. Do not use for standstill monitoring!
Cross comparison of input signals without dynamic test.	60 – 99%	The DC value depends on the following factors: frequency of the dynamic state, which is standstill or movement, and the quality of the monitoring measure (60 – 90 % for incremental encoders, 95 – 99 % for SIN/COS encoders)	Monitoring of dual-channel sensor systems or sub-system of sensors for non-dynamic operation. To be used in particular for standstill monitoring!
Monitoring of some sensor characteristics (response time, range of analog signals, such as electrical resistance, capacitance)	60%	Diagnostics of specific sensor characteristics. Only for use with velocity and position sensors (see chapter "Connecting posi-tion and velocity sensors")	Monitoring of the single-channel subsystem of single-channel sensors.

Encoder combinations with resulting diagnostics coverage (DC) according to EN ISO 13849-1.

Encoder 1	Encoder 2	Comment	Fault exclusion	DC value		
				Single-channel subsys-tem	Dual-channel sub-system, dynamic	Dual-channel subsystem, non-dynamic (standstill monitoring)
Backplane bus inc.	Incremental	1-encoder system (via split cable	Fault exclu-sion mech. shaft break-age, positive encoder shaft connection required	60%	99%	60 – 99%
Backplane bus inc.	Incremental	2-encoder system	-	-	99%	90 – 95%
Backplane bus inc.	SIN/COS	1-encoder system (via split cable)	Fault exclu-sion mech. shaft break-age, positive encoder shaft connection required	90%	99%	90 – 95%
Backplane bus inc.	SIN/COS	2-encoder system	-	-	99%	95 – 99%
SIN/COS	SIN/COS	2-encoder system	-	-	99%	99%
Backplane bus abs.	SSI	-	-	-	99%	90 – 95%
Incremen-tal	SSI	-	-	-	99%	90 – 95%
SIN/COS	SSI	-	-	-	99%	95 – 99%
SSI	SSI	2-encoder system	-	-	99%	80 – 95%
SIN/COS	Incremental	-	-	-	99%	95 – 99%
SIN/COS	Backplane bus abs.	-	-	-	99%	95 – 99%
SSI	Backplane bus abs.	2-encoder system	-	-	99%	80 – 95%

12.6 Typical response times

12.6.1 Typical response times of the DCS21B option

The following table lists the response times of the DCS21B options.

For the PROFIsafe application, the cycle time (T_cycle) is 28 ms. The specified response times correspond to the maximum runtime for the specific application **within the DCS21B option.** For bus applications, the processing time for safety control and, depending on the application, additional, application-specific response times for sensors and actuators, must be added to calculate the total run time. For calculating the runtime in the safety control, refer to the technical documentation of the manufacturer.

INFORMATION

If the "overspeed distance monitoring" filter is used, the response time will increase depending on the set distance.

Function	Response time [ms]	Explanation
PROFIsafe bus timeout (minimum timeout interval)	125	The minimum timeout interval for the bus is 125 ms. If a general bus error is assumed (e.g. corrupt data, interrupted communication), all outputs of the DCS21B option are disabled once the specified time has elapsed. The same applies to the connection from the DCS21B to the safety controller. **Note: The timeout interval of the bus system can be scaled to any higher value in the safety controller (e.g. S7) under "HW Config". The timeout interval must be used for calculating the response time of the DCS21B option.**
Reading-in a digital **NC contact** and transfer to the safety controller via PROFIsafe.	84	The DCS21B recognizes the opening of a live contact within one cycle. Two more cycles are required for transmission to the safe bus system.
Reading-in a digital **NO contact** and transfer to the safety controller via PROFIsafe.	112	For a NO contact to be recognized as active ("1"), an active signal level must be present at the input for **an entire clock cycle** of the DCS21B option. In the worst case, sampling will take two cycles to make relevant information available for internal processing. Two more cycles are required for transfer to the bus; this means the total number of cycles is 4.
Response of an already activated **monitoring function** using local disconnection for position and speed processing • Observe the note at the end of this table	56	For a monitoring function that has already been activated via PROFIsafe, the DCS21B option needs **one** cycle to calculate the current speed value. During the next cycle, the result is entered in the system image once the monitoring function was calculated. If **local disconnection** has been activated (available in the DCS21B option), a programmed output is operated within the same cycle, if required. **Note: When using local disconnection and ENABLE via the bus system, the specified time is the relevant response time.**

Function	Response time [ms]	Explanation
Response of an already activated **monitoring function** using local disconnection for acceleration processing • Observe the note at the end of this table	84	For a monitoring function that has already been activated via PROFIsafe, the DCS21B option needs two cycles to calculate the current acceleration value. During the next cycle, the result is entered in the system image once the monitoring function was calculated. If **local disconnection** has been activated (available in the DCS21B option), a programmed output is operated within the same cycle, if required. **Note: When using local disconnection and ENABLE via the bus system, the specified time is the relevant response time.**
Response of an already activated **monitoring function** including transmission to PROFIsafe for position and speed processing	112	For a monitoring function that has already been activated via PROFIsafe, the DCS21B option needs **one** cycle to calculate the current speed value. During the next cycle, the result is entered in the system image once the monitoring function was calculated. Two more cycles are required for sending the result to the safety controller via PROFIsafe.
Response of an already activated **monitoring function** including transmission to PROFIsafe for acceleration processing	140	For a monitoring function that has already been activated via PROFIsafe, the DCS21B option needs **two** cycles to calculate the current acceleration value. During the next cycle, the result is entered in the system image once the monitoring function was calculated. Two more cycles are required for sending the result to the safety controller via PROFIsafe.
Activation of an ENABLE input of a monitoring function for transmission via PROFIsafe	56	Two cycles are required to transfer information from the PROFIsafe input telegram and to enter it in the process image.
Activation of an output for transfer via PROFIsafe	56	Two cycles are required for reading off output information from the PROFIsafe input telegram and for entry in the process image. After the information has been entered in the process image, the output is enabled/disabled within the same cycle.

INFORMATION

If local switch-off is used with SS1 deceleration time, the outputs remain switched until the time has elapsed. Take this fact into account in the risk assessment.

12.6.2 Typical response times of the DCS31B option

The following table lists the response times of the DCS31B option.

The calculation of response times is based on the cycle time of the system. The cycle time (T_cycle) of the DCS31B option is 25 ms. The specified response times correspond to the maximum run time for the specific application **within the DCS31B option.** Depending on the application, additional application-specific response times for the sensors and actuators used have to be added to get the total run time.

INFORMATION

If the "overspeed distance monitoring" filter is used, the response time will increase depending on the set distance.

Function	Response time [ms]	Explanation
Reading-in a digital NC contact and further processing by the internal safety controller	58	The DCS31B option recognizes an NC contact within one cycle. Another cycle is needed for further processing including the switching of an output.
Reading-in a digital NO contact and further processing by the internal safety controller	75	For a NO contact to be recognized as active ("1"), an active signal level must be present at the input for **an entire clock cycle** of the DCS31B option. In the worst case, sampling will take two cycles to make relevant information available for internal processing. As another cycle is needed for processing the input signal, this results in a total signal run time of three cycles. **Note:** Try to avoid using NO contacts in safety circuits!
Response of an already activated **monitoring function** including logic processing for position and speed processing	50	For a monitoring function that has already been activated via ENABLE, the DCS31B option needs one cycle to calculate the current speed value. In the next cycle, the information is further processed and output by the PLC after the monitoring function has been calculated. This can lead, for example, to the switching of an output once the programmed logic has been performed.
Response of an already activated **monitoring function** including logic processing for acceleration processing	75	For a monitoring function that has already been activated via ENABLE, the DCS31B option needs two cycles to calculate the current acceleration value. In the next cycle, the information is further processed and output by the PLC after the monitoring function has been calculated. This can lead, for example, to the switching of an output once the programmed logic has been performed.
Response of a **monitoring function** activated by an external input including processing of the safety controller when using a **NC contact.**	83	The input signal processing lasts one scan cycle. Another cycle is needed to set the ENABLE input for the required monitoring function. In the next cycle, the monitoring function and behavior of the result is calculated and, if necessary, the output is activated.
Response of a **monitoring function** activated by an external input including processing of the safety controller when using a **NO contact.**	100	For processing the digital input signal, two cycles are required in the worst case. Another cycle is needed for setting the ENABLE input of the required monitoring function. In the next cycle, the monitoring function and processing of the result is calculated and, if necessary, the output is activated.

12.6.3 Calculating the response time of DCS..B with overspeed distance monitoring

If the "overspeed distance monitoring" function (MSC) is used for speed monitoring, the total response time of the DCS..B option will increase. Two cases are distinguished.

1. Faulty acceleration beyond the monitored velocity.

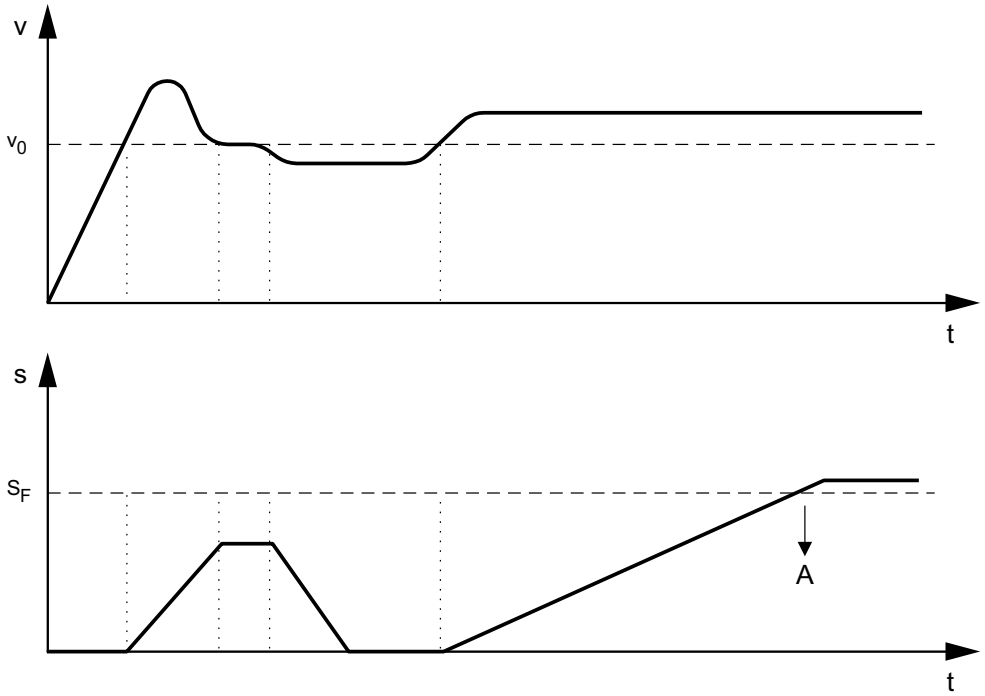

4033391243

$$t_R = \sqrt{\frac{2 \times s_F}{a}} + 2 \times t_{DCS}$$

2437366027

A = Alarm is triggered
v_0 = Monitored velocity (MSC)
t_R = Response time of the DCS..B option
s_F = Permitted distance for overspeed distance monitoring
a = Acceleration of the drive
t_{DCS} = Cycle time of the DCS..B option

2. Constant travel above the monitored velocity.

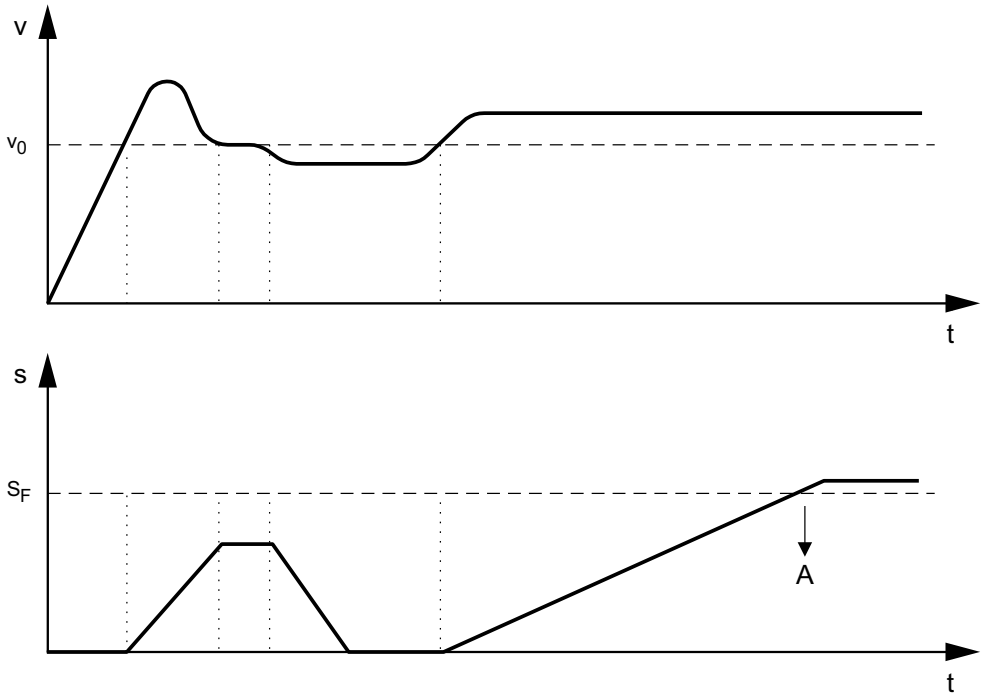

4033391243

$$t_R = \frac{s_F}{v_{Max} - v_0} + 2 \times t_{DCS}$$

2437368075

A = Alarm is triggered
v_0 = Monitored velocity (MSC)
t_R = Response time of the DCS..B option
s_F = Permitted distance for overspeed distance monitoring
a = Acceleration of the drive
t_{DCS} = Cycle time of the DCS..B option

12.7 Instruction list commands of the DCS31B option

Operator	Operand	Description
LD	All input and output operands	Sets current result equal to operand.
LD NOT	All input and output operands	Sets the current result equal to the inverted value of the operand.
ST	Only output operands	Saves current result to operand address.
AND	All input and output operands	Boolean AND.
AND NOT	All input and output operands	Negated Boolean AND.
OR	All input and output operands	Boolean OR.
OR NOT	All input and output operands	Negated Boolean OR.
XOR	All input and output operands	Boolean exclusive OR.
NOT	All input and output operands	Inverted value of the accumulator.
SET FLAG	PLC_FLAG in output image	Sets flag.
RESET FLAG	PLC_FLAG in output image	Reset flag.
SET	All input and output operands	Sets operands to "1".
RESET	All input and output operands	Sets operands to "0".
MACRO_INFO	Macro element description	Operand field: 2 bytes for identification macro.
MACRO_CRC	CRC of the previous macro field	Operand field: 1st operand: CRC_LO (8 bits) 2nd operand: CRC_HI (8 bits)
INFO	Info field	Operand field: 1st operand: reserved free 2nd operand: reserved free

12.8 Abbreviations used

Abbreviation	Meaning
IL	Instruction list
BG	German association for statutory accident insurance and prevention
IFA	German central institute for labor protection
CLK	Clock
DC	Diagnostic Coverage
DI	Digital Input (binary input)
DIN	German institute for standardization
DMC	Direction Monitoring Control
DO	Digital Output (binary output)
EMU	Emergency Monitoring Unit
EMC	Electromagnetic Compatibility
ELC	Emergency Limit Control
EN	European standard
ESS	Emergency Stop Supervisor
IP20	Degree of protection for housing
ISO	International Organization for Standardization
JSS	Jogging Skip Supervision
MSC	Maximum Speed Control
OLC	Operational Limit Control
OSSD	Output Signal Switching Device
P1, P2	Pulse output 1, 2
PAA	Process image of the outputs
PAE	Process image of the inputs
PELV	Protective Extra Low Voltage
PES	Programmable Electronic System
PDM	Position Deviation Mode
PLC	Programmable Logic Controller
PSC	Position Speed Control
SELV	Safety Extra Low Voltage
SSI	Synchronous Serial Interface
TTL	Transistor-Transistor Logic
ZSC	Zero Speed Control

Index

A

Abbreviations 150
Alarm messages, list 118
Appendix 135
  Abbreviations 150
  Comparison of safety functions 135
  Declaration of conformity for MOVISAFE® 134
  Encoder combinations 138
  IL command list of the DCS31B option 149
  Safety characteristics of DCS21B/31B 130
  Technical data of SEW encoders 138

C

Checking the performance level according to EN ISO 13849-1 100
Combination of various encoder types 65
Communication and establishment of a connection via X87 78
Comparison of safety functions 135
Configuration report 96
  Create 96
  Entries 97
  Structure 96
Configuring measuring sections
  Conversion example 85
Configuring the measuring sections 79
Confirmation button 137
Connecting binary inputs DI1 to DI8 46
  Dual-channel sensor, monitored 53
  Dual-channel sensor, not monitored 52
  Single-channel sensor, monitored 51
  Single-channel sensor, not monitored 50
  Using clock outputs P1 and P2 49
Connecting binary outputs 54
  Dual-channel switching binary output with external monitoring 60
  Single-pole switching binary output without monitoring 58
  Using binary outputs DO2_P and DO2_M 62
Connecting position and velocity sensors
  General installation notes 65
Connecting the position and velocity sensors 63
  Combination of various encoder types 65
Connection and terminal description of the DCS21B/31B option 41
Connection of position and velocity sensors
  Technical requirements on suitable encoder types 67
Copyright 9

D

DCS21B
  Part number 41
  Response times 144
  Startup steps 74
  Unit features 33
  Unit structure 35
DCS31B
  IL command list 149
  Part number 41
  Response times 146
  Startup steps 75
  Unit features 33
  Unit structure 36
Declaration of conformity for MOVISAFE® 134
Description of input elements 135
Designated use 12
Determining/checking the response times for validation 98
Diagnostic values 140
  Binary inputs 140
  Binary outputs 141
  Encoder interface 142
Diagnostics 107
  Alarm messages, list 118
  ECS messages, list 125
  Error messages, list 109
  Meaning of status LEDs 107
Diagnostics of the PROFIsafe communication status 89
Diagnostics of the PROFIsafe process image 93
  Process image inputs (PAE) 93
  Process image outputs (PAA) 95
Disposal 101
Door monitoring 137

E

ECS messages, list 125
Emergency switch-off 136
Encoder combinations 138
Error and alarm messages 108

Error messages, list 109
Exclusion of liability 9
External DC 24 V supply 45

F

Fieldbus connection via PROFIsafe.....89
Diagnostics of the PROFIsafe communication status 89
Diagnostics of the PROFIsafe process image ...93
Scaling the position values in the DCS21B option 92
Setting the PROFIsafe address in the DCS21B option 91

G

General information 8
Applicable documentation.....9
Copyright.....9
General installation notes 37
General installation notes for encoders.....65
General notes
Exclusion of liability.....9
Structure of the safety notes 8

H

How to use the operating instructions.....8

I

IL command list of the DCS31B option 149
Indicate operating state.....107
Indication of the operating state.....107
Input elements
Confirmation button.....137
Door monitoring 137
Emergency switch-off.....136
Light curtain 136
Operating mode switch 135
Sensor.....136
Start/reset 136
Input elements, description 135
Installation.....37
Connecting binary outputs 54
Connecting the position and velocity sensors....63
Connection and terminal description of the DCS21B/31B option.....41
External DC 24 V supply.....45
General installation notes 37
Installing the option card MOVISAFE® DCS21B/31B 37
Measures for electromagnetic compatibility (EMC) 43
Notes for use in the MOVI-PLC® controller 37
Notes for using the MOVI-PLC® controller 37
Installing the option card MOVISAFE® DCS21B/31B 37
Integrated safety technology.....14
Restrictions.....32
Safety architecture of the DCS21B/31B option..14
Safety functions 16

L

Liability.....9
Liability for defects 9
Light curtain 136

M

Maintenance 101
Disposal.....101
Modification/changes to the unit 101
MOVIDRIVE® B unit replacement 102
Replacing an SSI absolute encoder 104
Replacing the battery of option DCS21B/31B..103
Meaning of signal words 8
Meaning of the status LED 107
Indication of operating state.....107
Measures for electromagnetic compatibility (EMC) 43
Equipotential bonding 44
Modification/changes to the unit 101
MOVIDRIVE® B unit replacement.....102
Replacing the DCS21B/31B option.....102, 103
MOVIDRIVE® unit replacement B
Replacing the inverter.....102

N

Nameplates.....34
First nameplate on DCS21B/31B.....34
Second nameplate on MOVIDRIVE® B 34
Notes for use in the MOVI-PLC® controller 37
Notes for using the MOVI-PLC® controller 37

O

Operating instructions, use 8
Operating mode switch 135
Operating states....79
Other applicable documentation 9

P

Parameter description of parameter group P55x 76
  P552 Binary outputs DCS DO0_P - DO2_M....76
Parameter descriptions
  P350/351 Direction of rotation reversal 1/2....77
  P890 Protocol SBus 2....78
  P894 Baud rate SBus 2 78
  P951 Counting direction....78
  P952 Clock rate 78
Parameter descriptions of parameter group P55x
  P550 DCS safety module status 76
  P551 Binary inputs DCS DI1 - DI8....76
  P553 DCS serial number 77
  P554 CRC DCS 77
  P555 DCS error response / P556 DCS alarm response 77
  P557 DCS actual position source 77
Process image inputs (PAE) 93
Process image outputs (PAA)....95
Product names....9
P350/351 Direction of rotation reversal 1/2....77
P550 DCS safety module status 76
P551 Binary inputs DCS DI1 - DI8....76
P552 Binary outputs DCS DO0_P - DO2_M....76
P553 DCS serial number 77
P554 CRC DCS 77
P555 Error response DCS / P556 alarm response DCS....77
P557 DCS actual position source 77
P890 Protocol SBus 2....78
P894 Baud rate SBus 2 78
P951 Counting direction....78
P952 Clock rate 78

R

Replacing an SSI absolute encoder....104
Replacing the absolute encoder (SSI) 104
Replacing the battery of option DCS21B/31B....103
Replacing the DCS21B/31B option....102
Replacing the inverter 102
Response times
  DCS21B....144
  DCS21B/31B with overspeed distance monitoring 146
  DCS31B....146

S

Safe Brake Control (SBC)....31
Safe Cam (SCA) 30
Safe Direction (SDI)....26, 27
Safe Operating Stop (SOS) 22
Safe Stop 1 (SS1b)....18
Safe Stop 1 (SS1c) 19
Safe Stop 2 (SS2b)....20
Safe Stop 2 (SS2c) 21
Safe torque off (STO) 17
Safely Limited Acceleration (SLA) 23, 24
Safely Limited Increment (SLI) 28
Safely Limited Position (SLP) 29
Safely Limited Speed (SLS)....25
Safety architecture of the DCS21B/31B option....14
Safety characteristics of DCS21B/31B 130
Safety function
  Safe Brake Control (SBC)....31
  Safe Cam (SCA) 30
  Safe Direction (SDI)....26, 27
  Safe torque off (STO) 17
  Safely Limited Acceleration (SLA) 23, 24
  Safely Limited Position (SLP) 29
  Safely Limited Speed (SLS)....25
Safety functions 16
  Safe Operating Stop (SOS) 22
  Safe Stop 1 (SS1b)....18
  Safe Stop 1 (SS1c) 19
  Safe Stop 2 (SS2b)....20
  Safe Stop 2 (SS2c) 21
  Safely Limited Increment (SLI) 28
Safety notes....11
  Definitions 13
  Designated use....12
  Electrical connection....13
  General information 11
  Installation....12
  Operation 13
  Structure of the embedded safety notes....8
  Structure of the section safety notes 8
  Target group 11
Scaling the position values in DCS21B 92
Sensor 136

Setting the PROFIsafe address in the DCS21B option 91
Signal word, meaning 8
Startup 74
Communication and establishment of a connection via X87....78
Fieldbus connection via PROFIsafe....89
General information 74
Operating states....79
Prerequisites 74
Startup steps DCS21B....74
Startup steps DCS31B....75
Start/reset 136
Structure of the safety notes 8
Structure of the section safety notes....8

T

Technical data....129
Plug connectors 130
Technical data of SEW encoders....138
Combination encoders Hiperface® and SIN/COS)....139
Combination encoders SSI and SIN/COS 139
Encoder values of MOVIDRIVE® B via backplane bus....140
Incremental encoders (TTL)....138
RS485 encoders and SIN/COS 139
SIN/COS encoder 139
Technical requirements on suitable encoder types 67
Terminal description DCS21B/31B 42
Trademarks....9
Type designations and unit features....33

U

Unit features
DCS21B....33
DCS31B....33
Unit structure 33
DCS21B....35
DCS31B....36
Type designations and unit features....33

V

Validation 96
Checking the performance level according to EN ISO 13849-1....100
Configuration report....96
Determining and checking response times....98
Procedure 96

SEW-EURODRIVE
Driving the world

SEW-EURODRIVE GmbH & Co KG
P.O. Box 3023
D-76642 Bruchsal/Germany
Phone +49 7251 75-0
Fax +49 7251 75-1970
sew@sew-eurodrive.com

→ **www.sew-eurodrive.com**